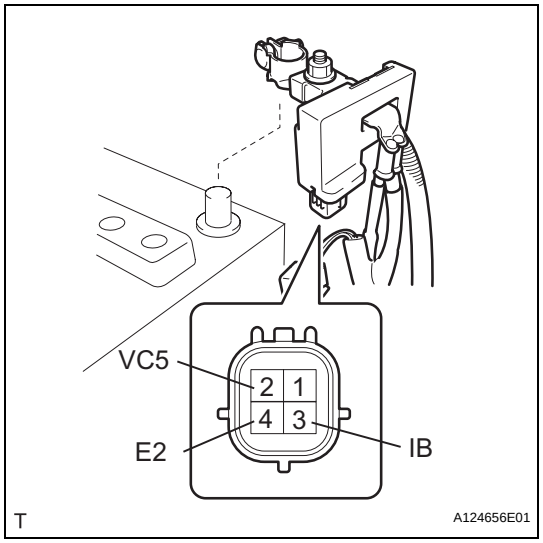

BATTERY CURRENT SENSOR

ON-VEHICLE INSPECTION

1. CHECK BATTERY CURRENT SENSOR ASSEMBLY

(a) Measure the resistance of the sensor.

Standard resistance

Tester Connection	Specified Condition
2 (VC5) - 4 (E2)	3 to 10 kΩ
2 (VC5) - 3 (IB)	Below 0.5 kΩ
3 (IB) - 4 (E2)	3 to 10 kΩ

If the result is not as specified, replace the sensor assembly.

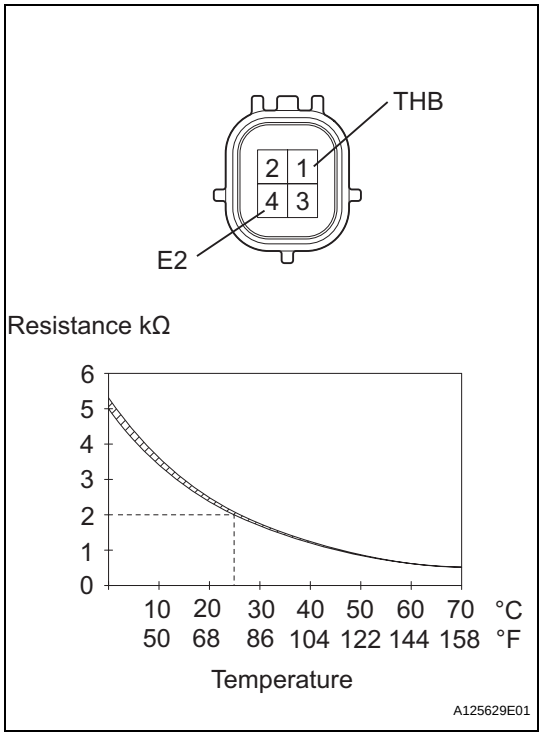

(b) Measure the resistance of the sensor.

Standard resistance

Tester Connection	Condition	Specified Condition
1 (THB) - 4 (E2)	20 to 30°C (68 to 86°F)	1.5 to 2.5 kΩ

If the result is not as specified, replace the sensor assembly.

SYSTEM DIAGRAM

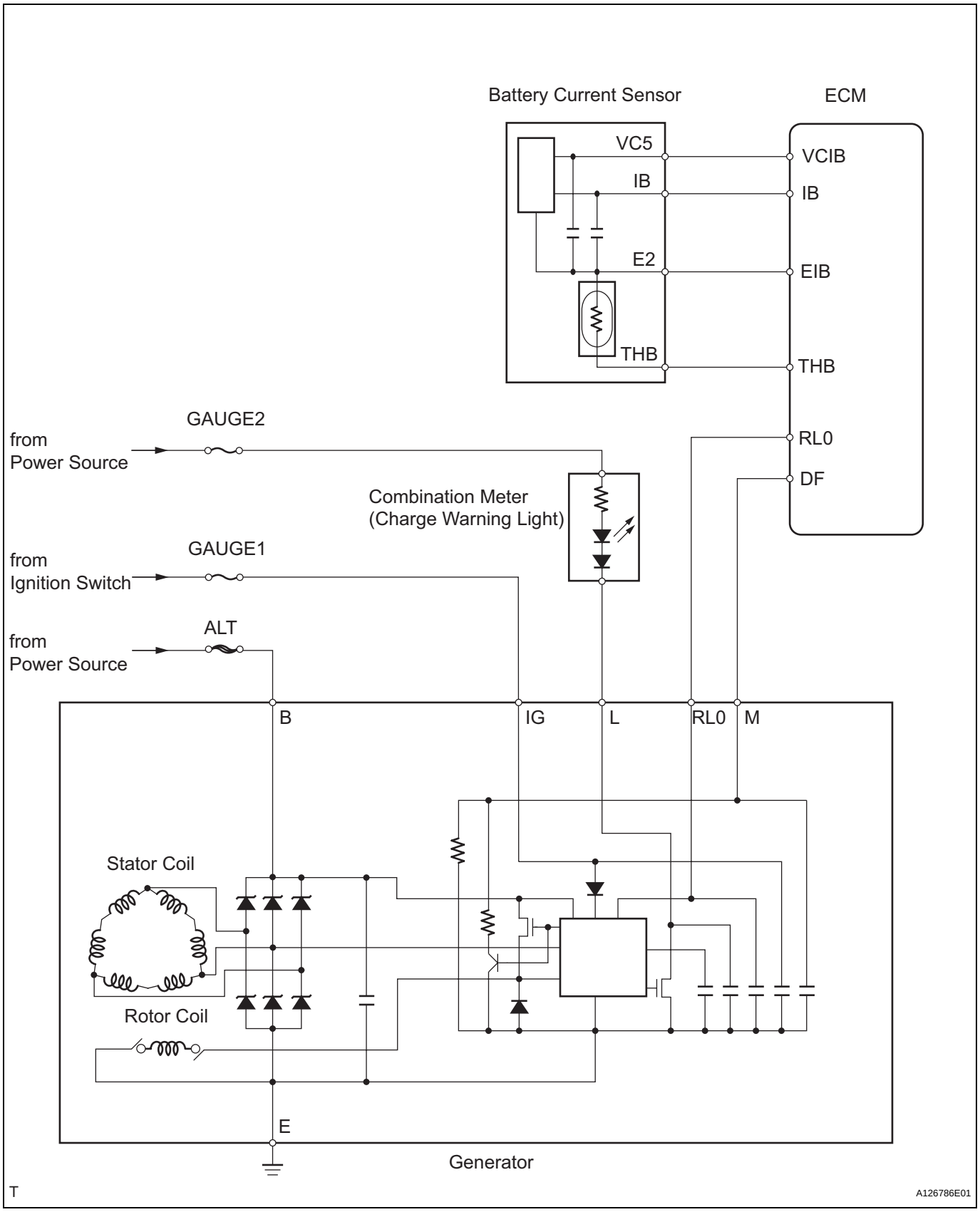

CH

ON-VEHICLE INSPECTION

1. CHECK BATTERY CONDITION

NOTICE:

If the battery is weak or if the engine is difficult to start, perform the following procedures.

(a) Check the battery for damage and deformation. If severe damage, deformation or leakage is found, replace the battery.

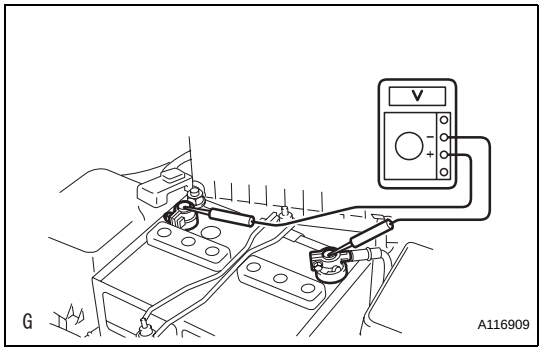

(b) Check the electrolyte quantity of each cell.

(1) For maintenance-free batteries:

- If the electrolyte quantity is below the lower line, replace the battery.
- If the electrolyte quantity is above the lower line, check the battery voltage when cranking the engine. If the voltage is less than 9.6 V, recharge or replace the battery.

HINT:

Before checking the battery voltage, turn off all the electrical systems (headlights, blower motor, rear defogger, etc.).

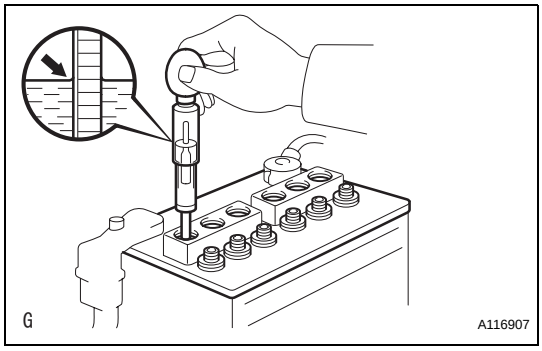

(2) For non-maintenance-free batteries:

- If the electrolyte quantity is below the lower line, add distilled water to each cell. Then, recharge the battery and check the electrolyte's specific gravity.

Standard specific gravity:

1.25 to 1.29 at 20°C (68°F)

If the electrolyte quantity is above the lower line, check the battery voltage when cranking the engine. If the voltage is less than 9.6 V, recharge or replace the battery.

HINT:

Before checking the battery voltage, turn off all the electrical systems (headlights, blower motor, rear defogger, etc.).

2. INSPECT BATTERY TERMINAL AND FUSE

(a) Visually check the battery terminals.

(1) Check that the battery terminals are not loose or corroded.

(b) Measure the resistance of the H-fuses and fuses.

Standard resistance:

Below 1 Ω

If the results are not as specified, replace the fuses as necessary.

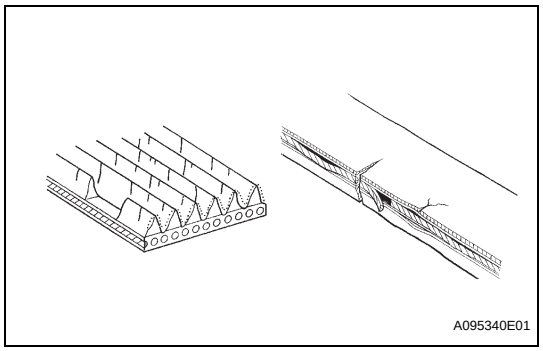

3. INSPECT V-RIBBED BELT

(a) Visually check the belt for excessive wear, frayed cords, etc.
If any defects are found, replace the V-ribbed belt.
HINT:
Cracks on the rib side of the belt are considered acceptable. If the belt has chunks missing from the ribs, it should be replaced.

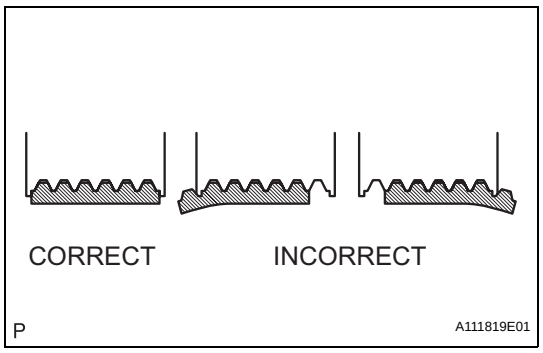

(b) Check that the belt fits properly in the ribbed grooves.
HINT:
Confirm by hand that the belt has not slipped out of the grooves on the bottom of the pulley.

4. INSPECT GENERATOR WIRING

(a) Visually check the generator wiring.
  (1) Check that the wiring is in good condition.

5. CHECK FOR ABNORMAL NOISES

(a) Listen for abnormal noises from the generator.
  (1) Check that no abnormal noises are heard from the generator while the engine is running.

6. INSPECT CHARGE WARNING LIGHT CIRCUIT

(a) Turn the ignition switch ON. Check that the charge warning light comes on.
(b) Start the engine and check that the light goes off.
If the light does not operate as specified, troubleshoot the charge warning light circuit.

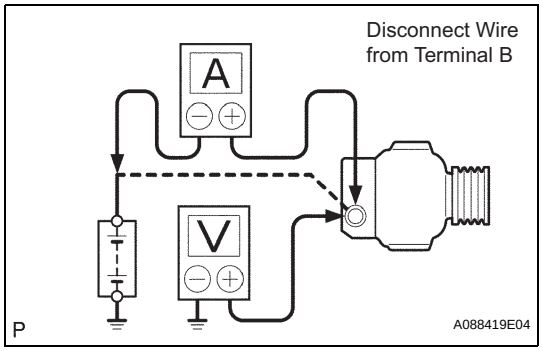

7. INSPECT CHARGING CIRCUIT WITHOUT LOAD

(a) Connect a voltmeter and ammeter to the charging circuit as follows.
  (1) Disconnect the wire from terminal B of the generator, then connect it to the negative (-) lead of an ammeter.
  (2) Connect the positive (+) lead of the ammeter to terminal B of the generator.
  (3) Connect the positive (+) lead of a voltmeter to terminal B of the generator.
  (4) Ground the negative (-) lead of the voltmeter.
(b) Check the charging circuit.
  (1) Keep the engine speed at 2,000 rpm and check the reading on the ammeter and voltmeter.
  Standard amperage:
  10 A or less
  Standard voltage:
  12.1 to 15.4 V
  If the result is not as specified, replace the generator.
  HINT:
  If the battery is not fully charged, the ammeter reading will sometimes be more than the standard amperage.

8. INSPECT CHARGING CIRCUIT WITH LOAD

(a) With the engine running at 2,000 rpm, turn the high beam headlights ON and turn the heater blower switch to the "HI" position.

(b) Check the reading on the ammeter.

Standard amperage:

30 A or more

If the ammeter reading is less than the standard amperage, repair the generator.

HINT:

If the battery is fully charged, the indication will sometimes be less than the standard amperage. If this is the case, add more electrical load (operate the wipers, rear window defogger, etc.) and check the reading on the ammeter again.

CHARGING SYSTEM

PRECAUTION

1. **Check that the battery cables are connected to the correct terminals.**
2. **Disconnect the battery cables if a quick charge is given to the battery.**
3. **Do not perform tests with a high voltage insulation resistance tester.**
4. **Never disconnect the battery while the engine is running.**
5. **Check that the charging cable is tightly connected onto terminal B of the generator and the fuse box.**
6. **Do not check whether the generator generates current or not while terminal F is connected to the other terminals.**

PARTS LOCATION

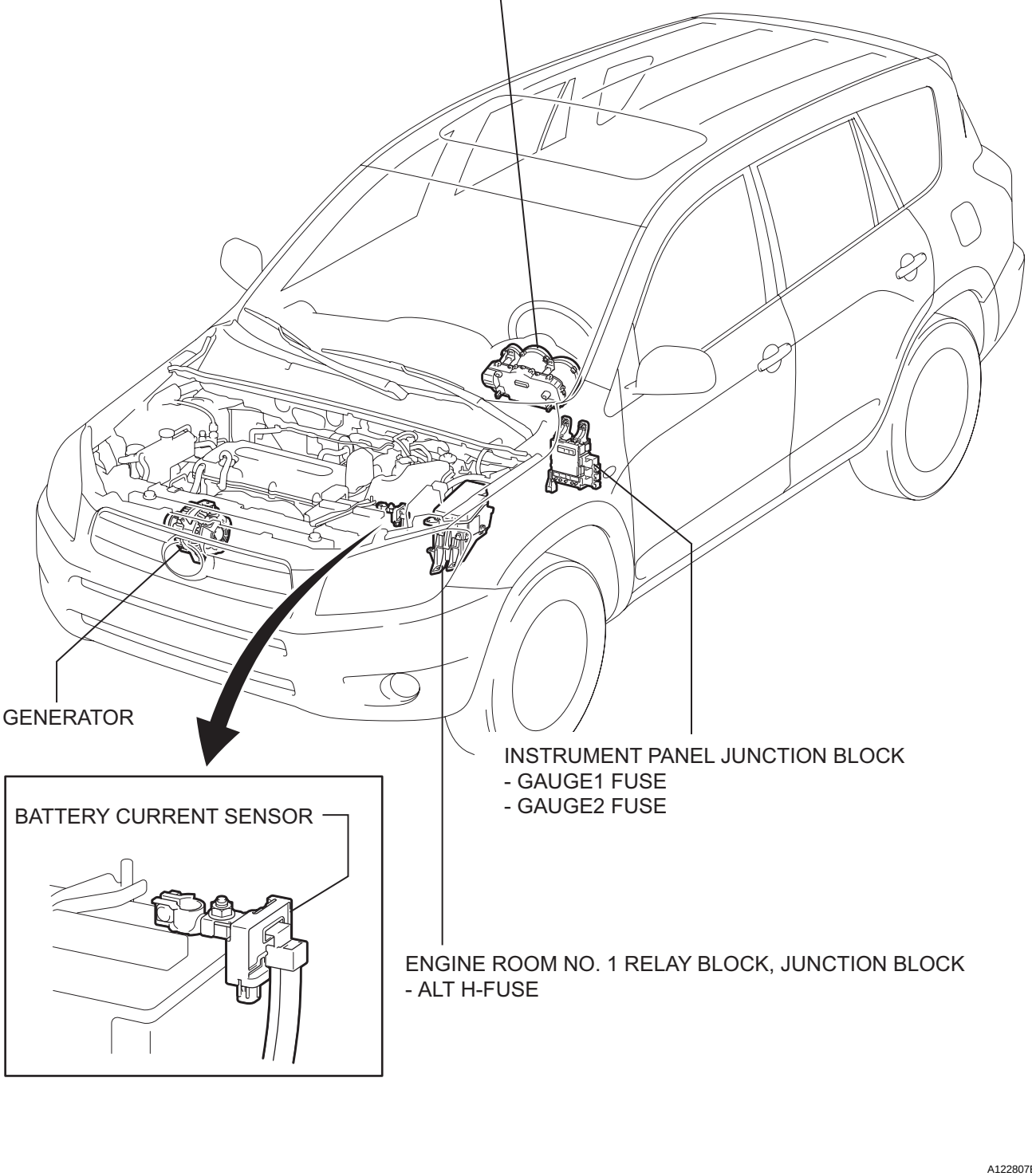

CH

REMOVAL

1. DISCONNECT CABLE FROM NEGATIVE BATTERY TERMINAL

CAUTION:

Wait at least 90 seconds after disconnecting the cable from the negative (-) battery terminal to prevent airbag and seat belt pretensioner activation.

2. REMOVE FAN AND GENERATOR V BELT

(a) Remove the belt (see page EM-6).

3. REMOVE GENERATOR ASSEMBLY

(a) Disconnect the generator connector.
(b) Remove the terminal cap.
(c) Remove the nut and disconnect the generator wire.
(d) Remove the bolt and wire harness clamp bracket.
(e) Remove the wire harness clamps.

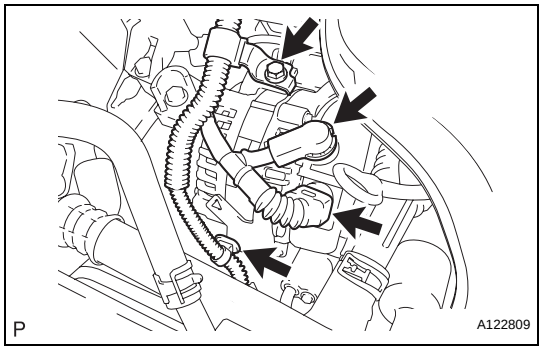

(f) Remove the 2 bolts and generator.

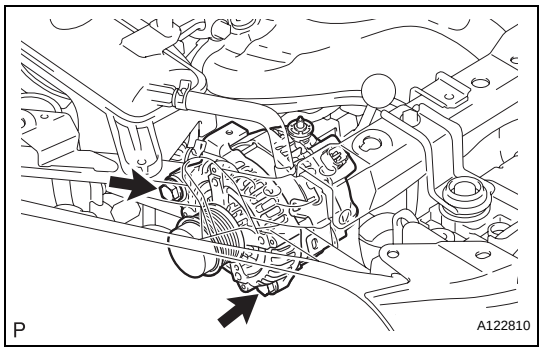

DISASSEMBLY

1. REMOVE GENERATOR PULLEY WITH CLUTCH

(a) Remove the cap from the pulley.
  (1) Using a screwdriver, puncture the center of the cap and pry it off.
  NOTICE:
  Do not reuse the cap.

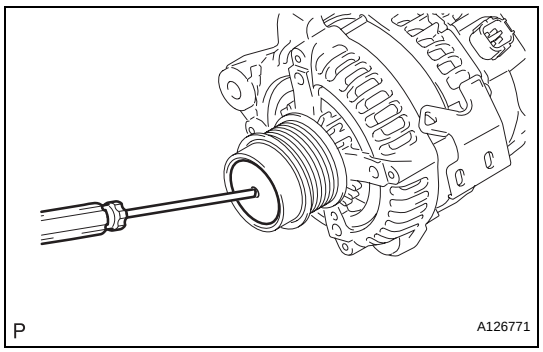

(b) Install SST to the pulley and vise as shown in the illustration.
  SST 09820-63020
(c) Mount SST (A) in a vise.

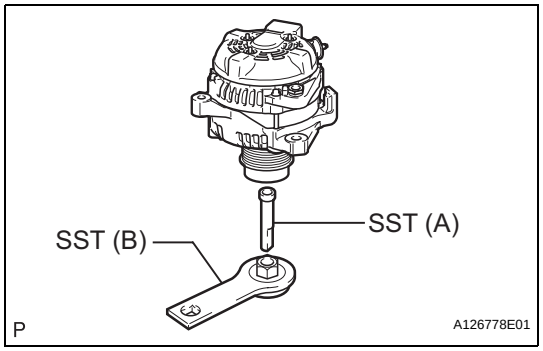

CH

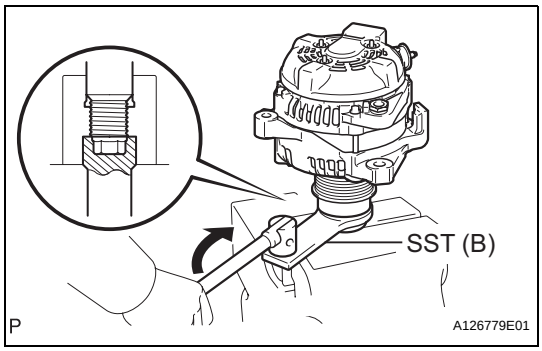

(d) Turn SST (B) clockwise to loosen the pulley.
(e) Remove the pulley.

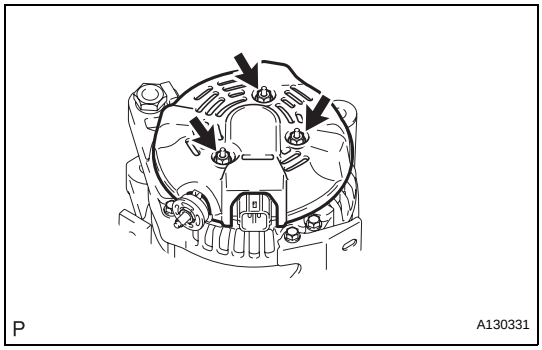

2. REMOVE GENERATOR BRUSH HOLDER ASSEMBLY
(a) Remove the 3 nuts and generator rear end cover.

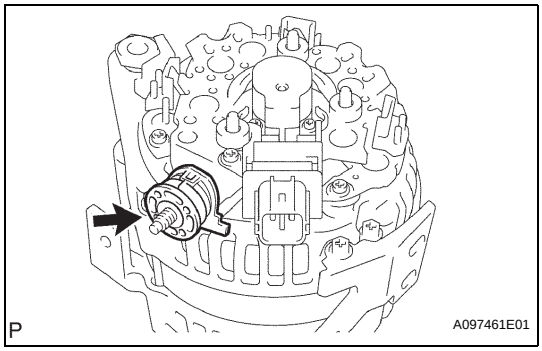

(b) Remove the terminal insulator.

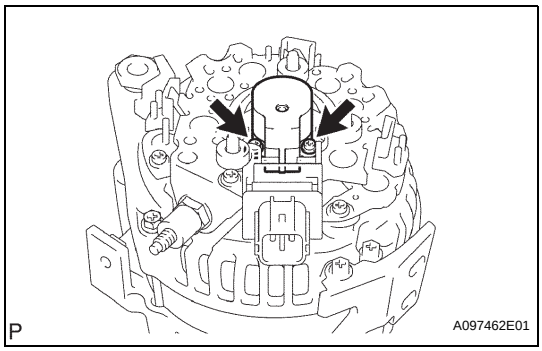

(c) Remove the 2 screws and generator brush holder.

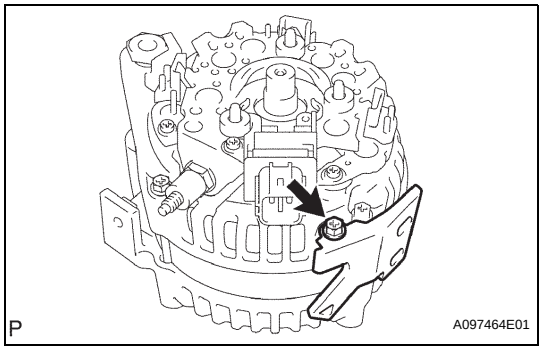

3. REMOVE GENERATOR ROTOR ASSEMBLY
(a) Remove the bolt and cord clip.

CH

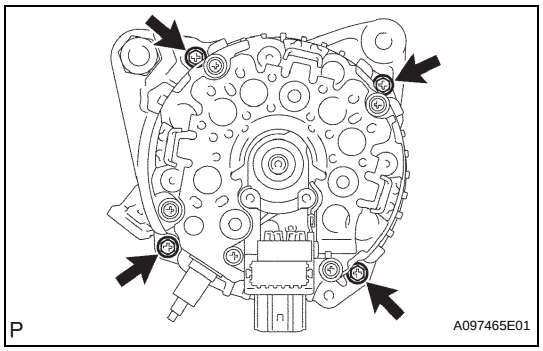

(b) Remove the 4 bolts.

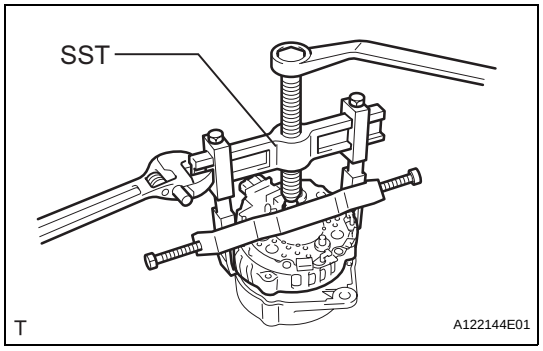

(c) Using SST, remove the coil.
SST 09950-40011 (09951-04020, 09952-04010, 09953-04020, 09954-04010, 09955-04071, 09957-04010)

(d) Remove the washer.

(e) Remove the generator rotor.

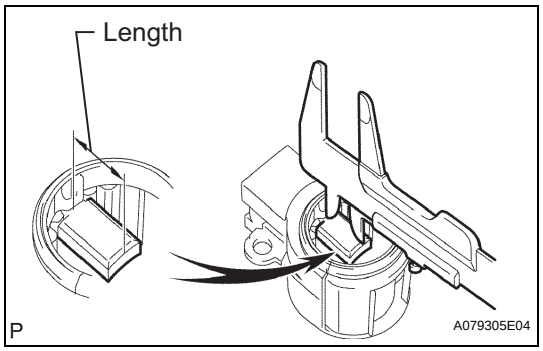

INSPECTION

1. INSPECT GENERATOR BRUSH HOLDER ASSEMBLY

(a) Using a vernier caliper, measure the brush length.
Standard length:
9.5 to 11.5 mm (0.374 to 0.453 in.)
Minimum length:
4.5 mm (0.177 in.)
If the brush length is less than the minimum, replace the generator brush holder assembly.

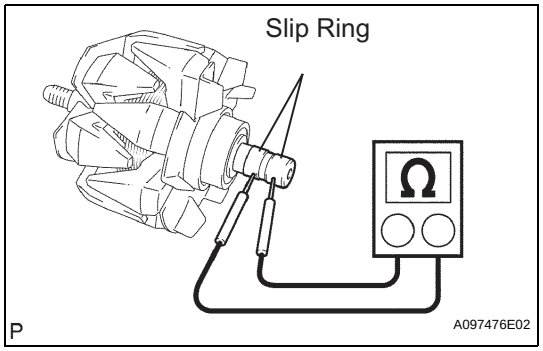

2. INSPECT GENERATOR ROTOR ASSEMBLY

(a) Check the resistance.

(1) Measure the resistance between the slip rings.
Standard resistance:
2.3 to 2.7 Ω at 20°C (68°F)
If the result is not as specified, replace the generator rotor assembly.

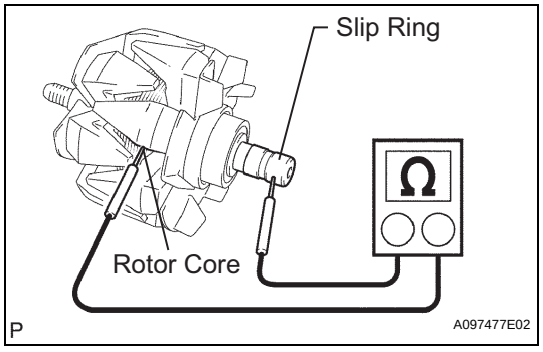

(2) Measure the resistance between the slip ring and rotor core.
Standard resistance:
1 MΩ or higher
If the result is not as specified, replace the generator rotor assembly.

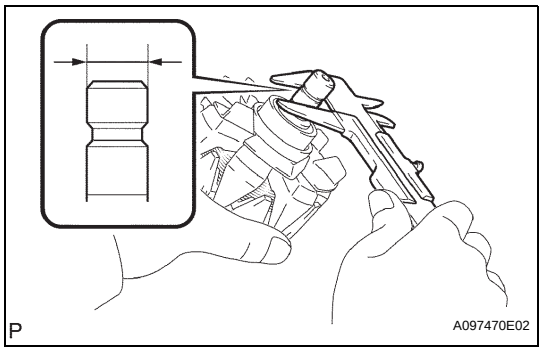

(b) Check the slip ring diameter.
(1) Using a vernier caliper, measure the slip ring diameter.
Standard diameter:
14.2 to 14.4 mm (0.559 to 0.567 in.)
Minimum diameter:
14 mm (0.551 in.)
If the diameter is less than the minimum, replace the generator rotor assembly.

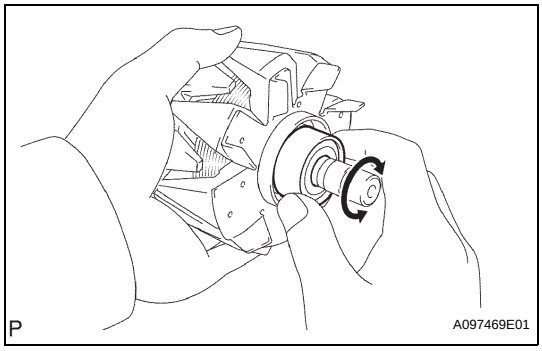

(c) Check the appearance.
(1) Check that the bearing is not rough or worn.
OK:
The bearing rotates smoothly.
If the result is not as specified, replace the generator rotor assembly.

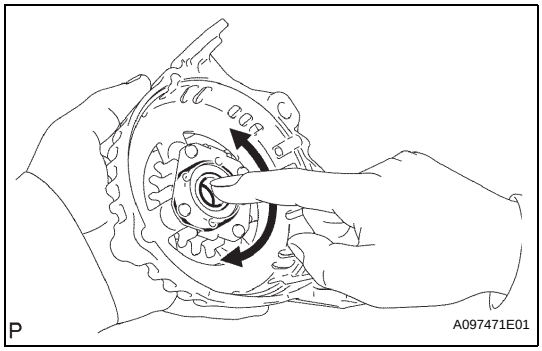

3. INSPECT GENERATOR DRIVE END FRAME BEARING
(a) Check that the bearing is not rough or worn.
OK:
The bearing rotates smoothly.
If the bearing does not rotate smoothly, replace the bearing.

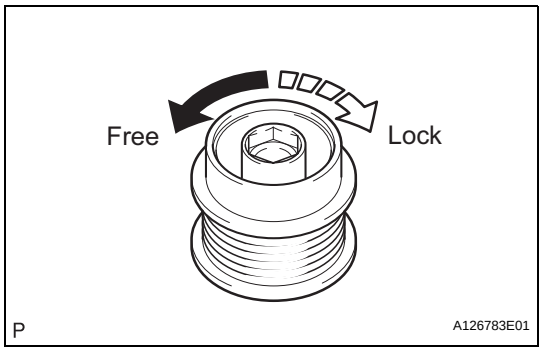

4. INSPECT GENERATOR PULLEY WITH CLUTCH
(a) Hold the center of the pulley, and confirm that the outer ring turns counterclockwise and does not turn clockwise.
If the result is not as specified, replace the generator pulley with clutch.

REPLACEMENT

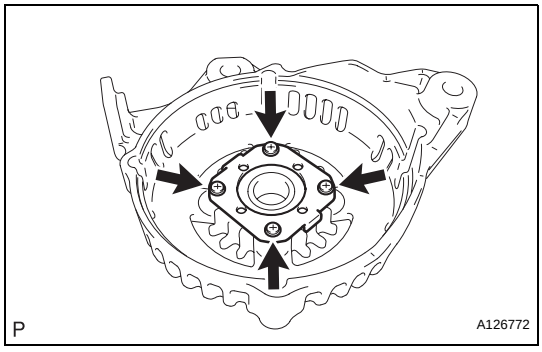

1. REPLACE GENERATOR DRIVE END FRAME BEARING
(a) Remove the 4 screws and bearing retainer.

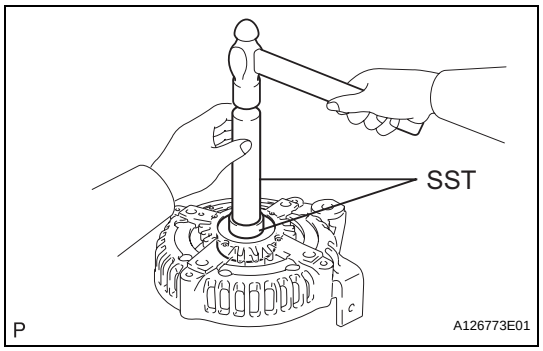

(b) Using SST and a hammer, tap out the bearing.
SST 09950-60010 (09951-00250), 09950-70010 (09951-07100)

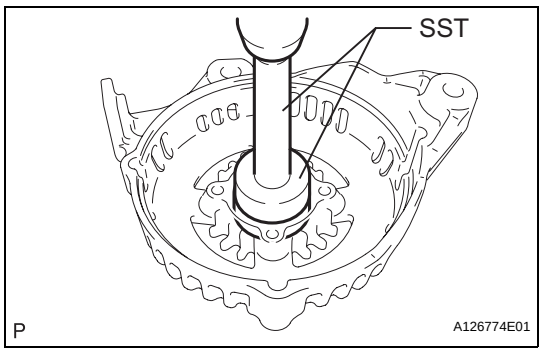

(c) Using SST and a press, press in a new bearing.
SST 09950-60010 (09951-00250), 09950-70010 (09951-07100)

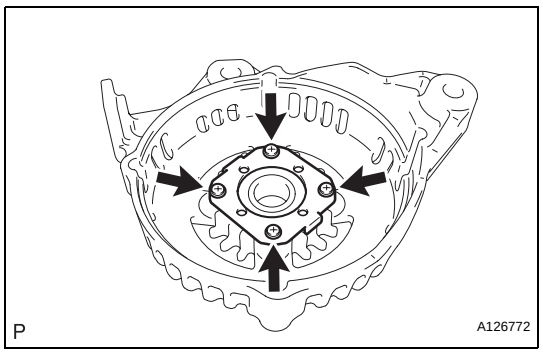

(d) Install the bearing retainer with the 4 screws.
Torque: 2.3 N*m (23 kgf*cm, 20 in.*lbf)

REASSEMBLY

1. INSTALL GENERATOR ROTOR ASSEMBLY

(a) Install the washer onto the generator rectifier end frame.

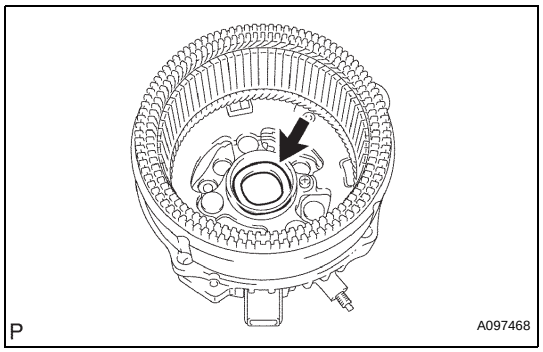

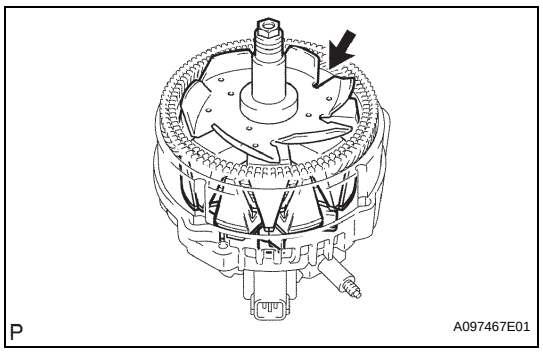

(b) Install the generator rotor onto the generator rectifier end frame.

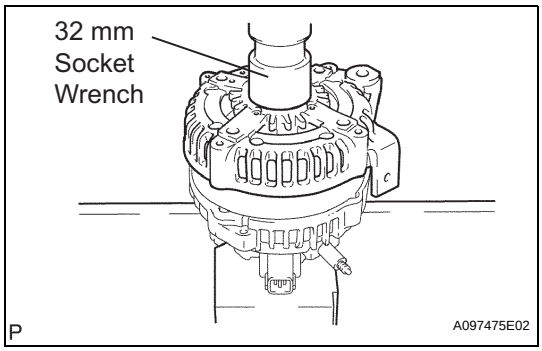

(c) Using a 32 mm socket wrench and press, slowly push the generator drive end frame onto the generator rectifier end frame.

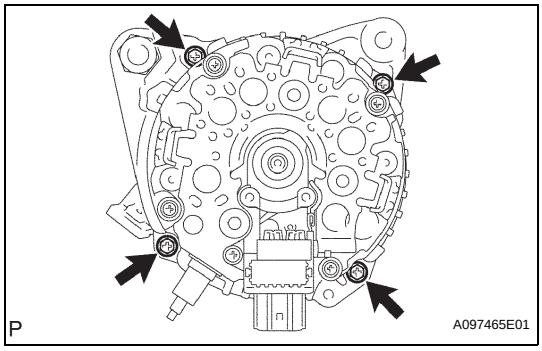

(d) Tighten the 4 bolts.
Torque: 5.8 N*m (59 kgf*cm, 51 in.*lbf)

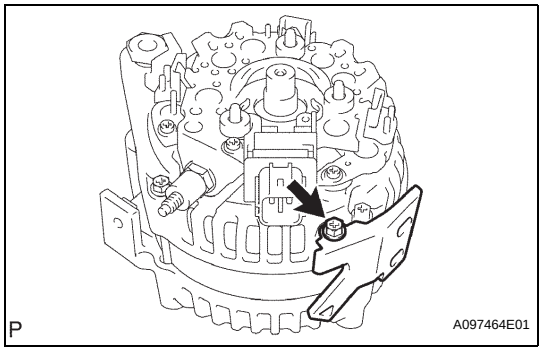

(e) Install the cord clip with the bolt.
Torque: 4.6 N*m (47 kgf*cm, 41 in.*lbf)

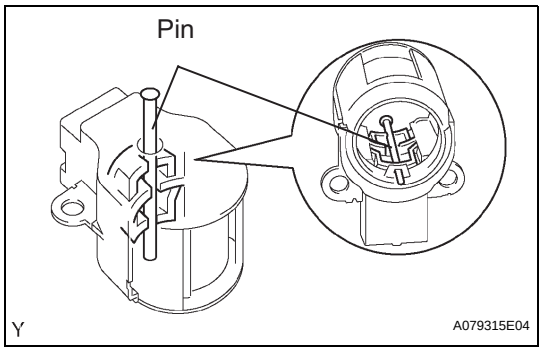

2. INSTALL GENERATOR BRUSH HOLDER ASSEMBLY

(a) While pushing the 2 brushes into the generator brush holder, insert a 1.0 mm (0.039 in.) pin into the generator brush holder.

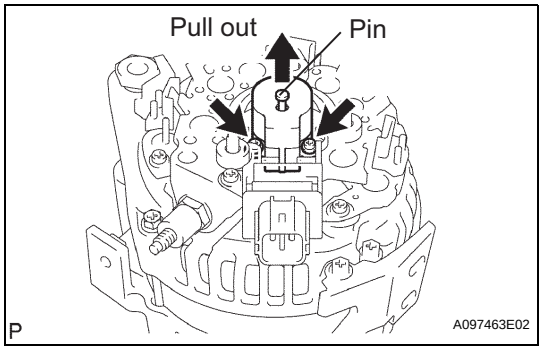

(b) Install the generator brush holder with the 2 screws.
Torque: 1.8 N*m (18 kgf*cm, 16 in.*lbf)

(c) Pull the pin out of the generator brush holder.

CH

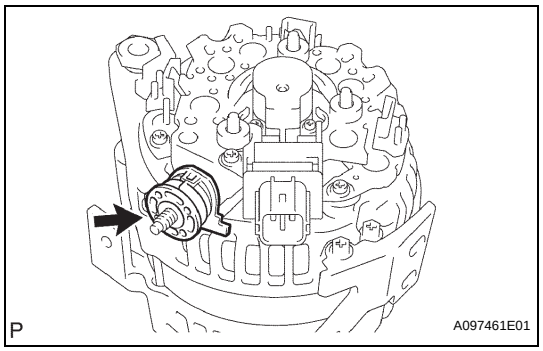

(d) Install the terminal insulator onto the generator rectifier end frame.

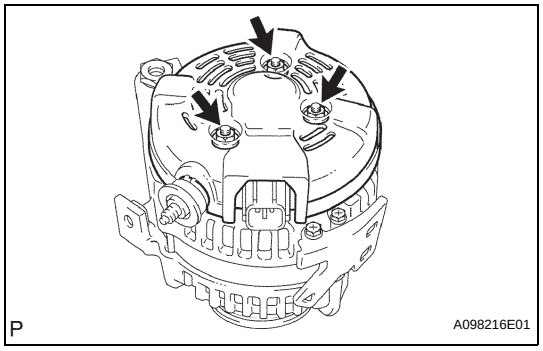

(e) Install the generator rear end cover with the 3 nuts.
Torque: 4.6 N*m (47 kgf*cm, 41 in.*lbf)

3. INSTALL GENERATOR PULLEY WITH CLUTCH

(a) Install the pulley by hand.

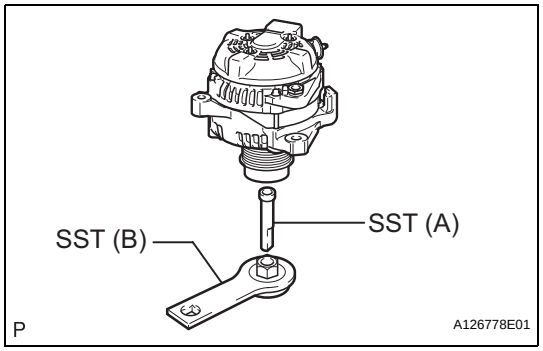

(b) Install SST to the pulley and vise as shown in the illustration.
SST 09820-63020

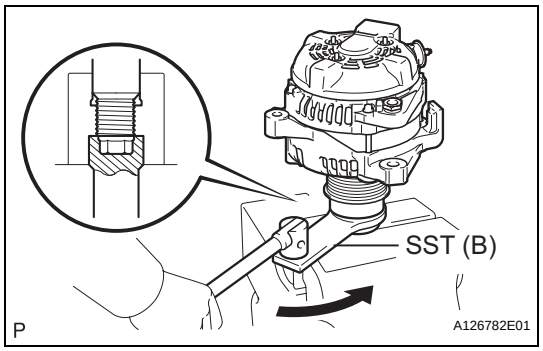

(c) Turn SST (B) counterclockwise to tighten the pulley.
Torque: 111 N*m (1125 kgf*cm, 81 ft.*lbf)

(d) Install a new cap to the pulley.

(e) Check that the generator pulley rotates smoothly.

INSTALLATION

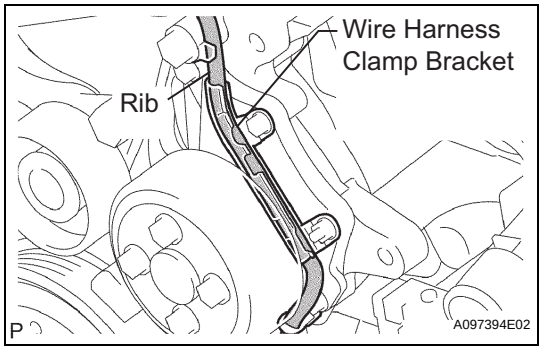

1. INSTALL GENERATOR ASSEMBLY

(a) Confirm that the wire harness of the crankshaft position sensor is secured to the wire harness clamp bracket through the back of the rib of the timing chain cover.

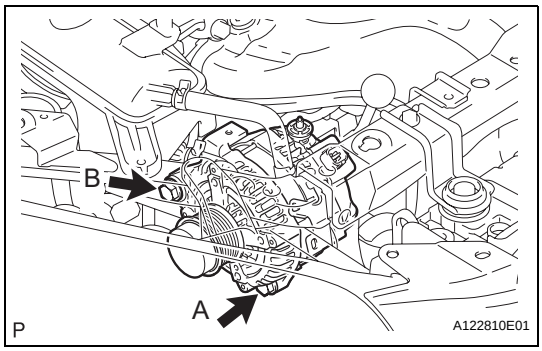

(b) Install the generator with the 2 bolts.
Torque: 21 N*m (215 kgf*cm, 16 ft.*lbf) for bolt A
52 N*m (530 kgf*cm, 38 ft.*lbf) for bolt B

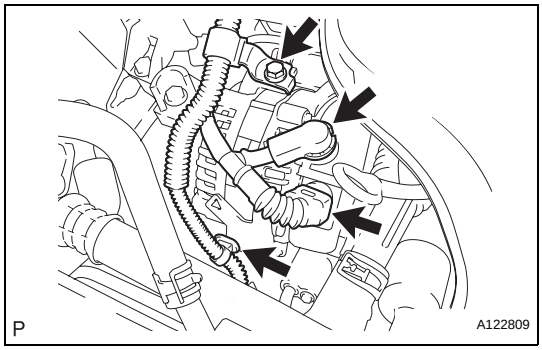

(c) Install the wire harness clamp.
(d) Install the wire harness clamp bracket with the bolt.
Torque: 8.4 N*m (85 kgf*cm, 74 in.*lbf)
(e) Connect the generator wire with the nut.
Torque: 9.8 N*m (100 kgf*cm, 7 ft.*lbf)
(f) Install the terminal cap.
(g) Connect the generator connector.

2. INSTALL FAN AND GENERATOR V BELT
(a) Install the belt (see page EM-7).

3. CONNECT CABLE TO NEGATIVE BATTERY TERMINAL

GENERATOR

COMPONENTS

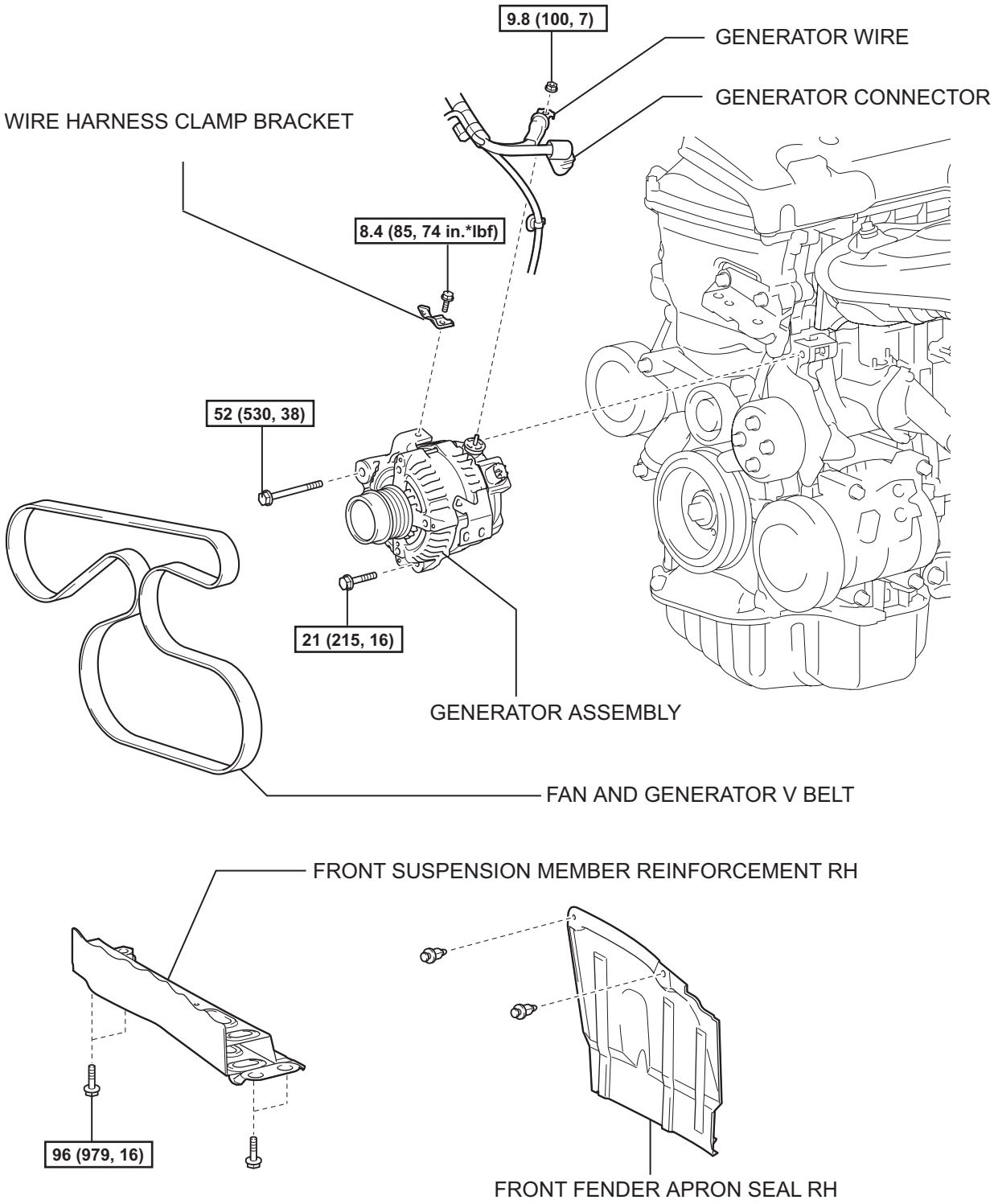

CH

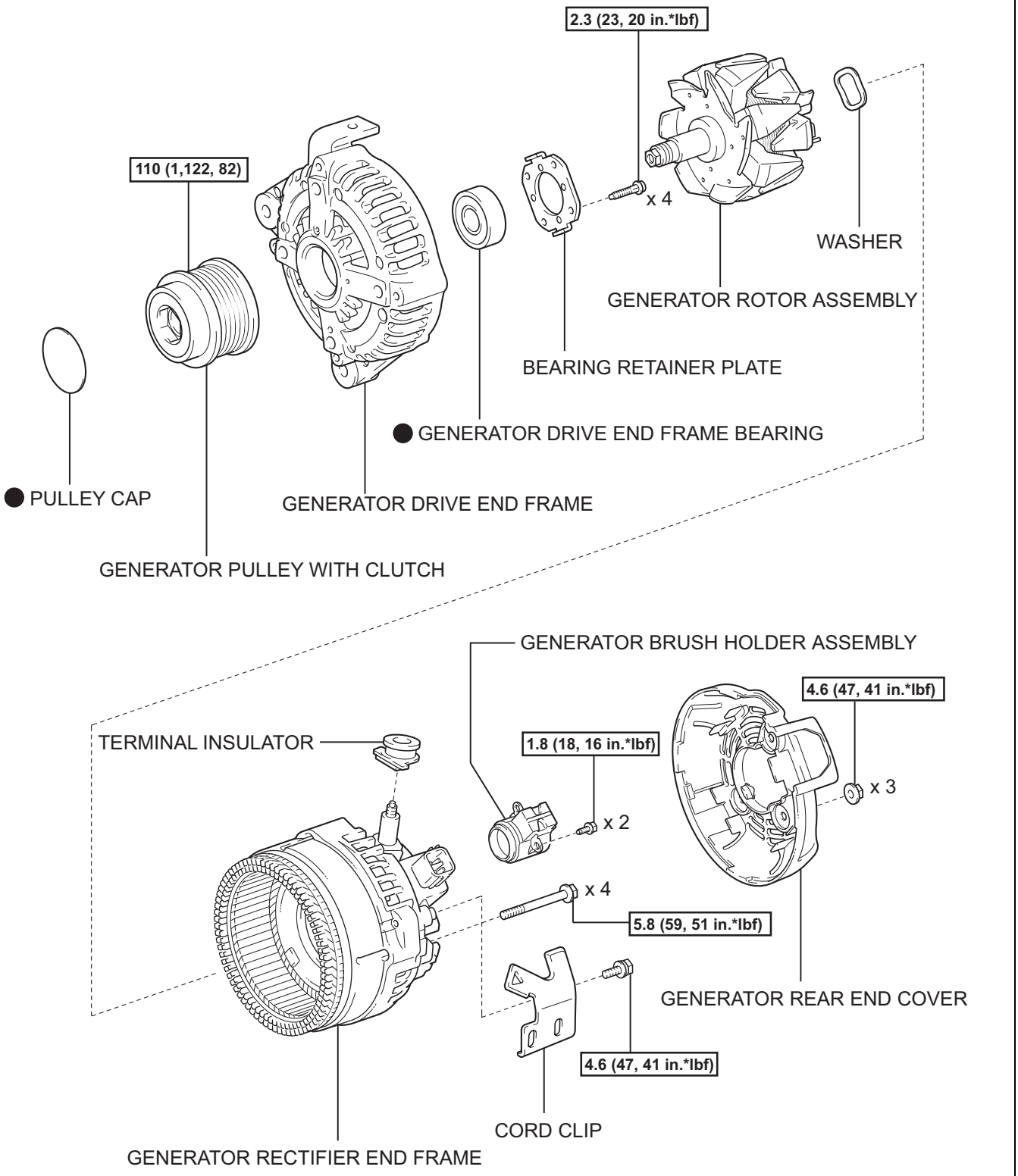

N*m (kgf*cm, ft.*lbf) : Specified torque

● Non-reusable part

P

A124643E01

CH

COOLANT

REPLACEMENT

1. REMOVE NO. 1 ENGINE UNDER COVER

2. DRAIN ENGINE COOLANT

(a) Loosen the radiator drain cock plug.
HINT:
Collect the coolant in a container and dispose of it according to the regulations in your area.

(b) Remove the radiator reservoir cap.
CAUTION:
Do not remove the radiator reservoir cap while the engine and radiator are still hot.
Pressurized, hot engine coolant and steam may be released and cause serious burns.

(c) Loosen the cylinder block drain cock plug.

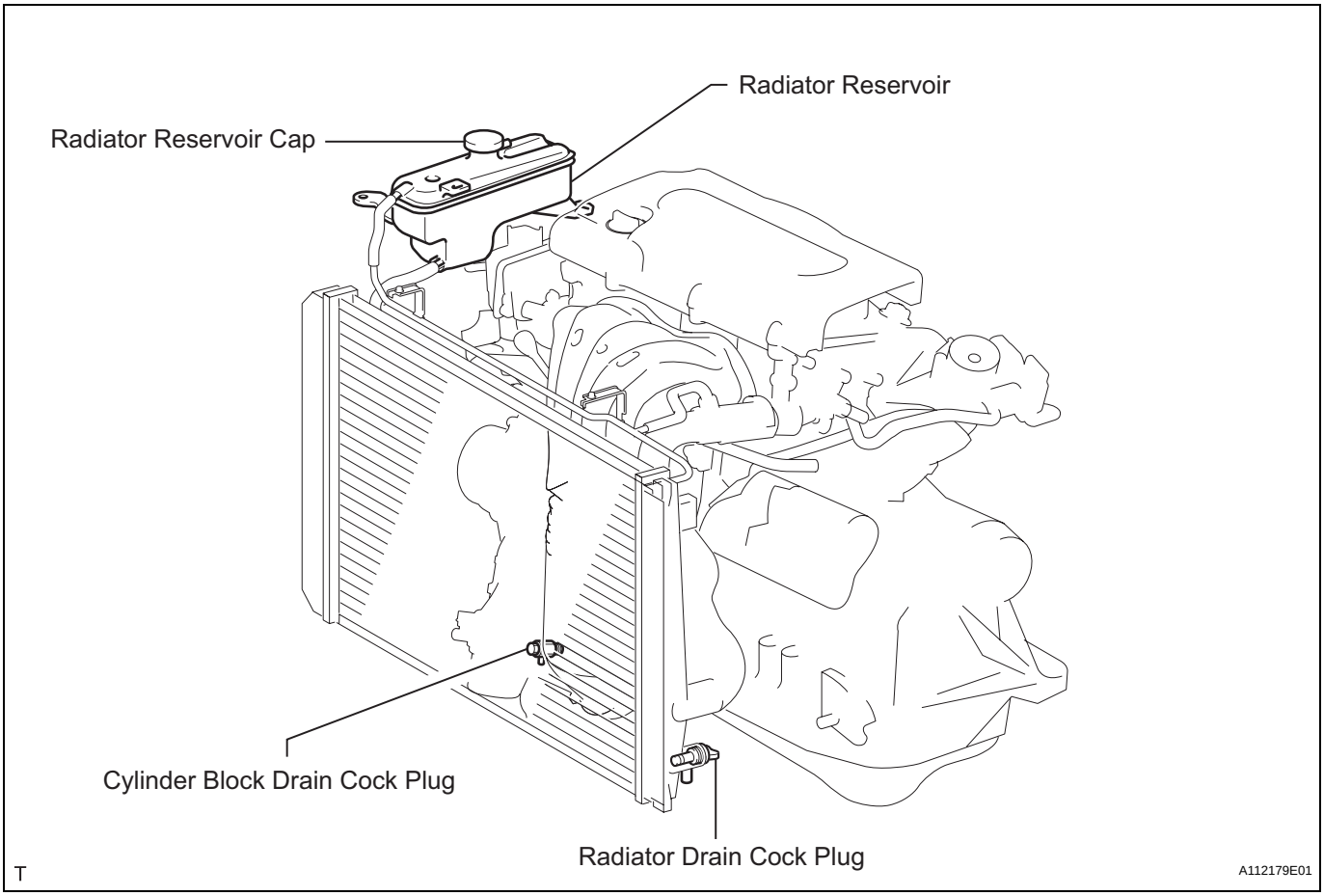

3. ADD ENGINE COOLANT

(a) Tighten the radiator drain cock plug by hand.

(b) Tighten the cylinder block drain cock plug.
Torque: 12.7 N*m (130 kgf*cm, 10 ft.*lbf)

(c) Add TOYOTA Super Long Life Coolant (SLLC) to the radiator reservoir filler opening.

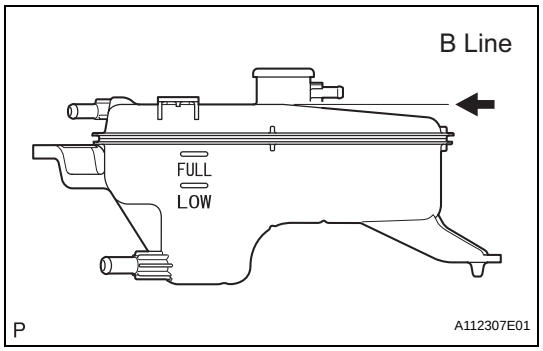

(d) Continue adding TOYOTA SLLC until it is filled to the B line at the base of the reservoir's filler neck.
HINT:
The B line is the lower edge of the inner wall of the filler neck.
Standard capacity:
6.8 liters (7.2 Us qts, 5.9 Imp. qts)
HINT:
TOYOTA vehicles are filled with TOYOTA SLLC at the factory. In order to avoid damage to the engine cooling system and other technical problems, only use TOYOTA SLLC or similar high quality ethylene glycol based non-silicate, non-amine, non-nitrite, non-borate coolant with long-life hybrid organic acid technology (coolant with long-life hybrid organic acid technology consists of a combination of low phosphates and organic acids).
NOTICE:
Never use water as a substitute for engine coolant.

(e) Press the No. 1 and No. 2 radiator hoses several times by hand, and then check the level of the coolant. If the coolant level drops below the B line, add TOYOTA SLLC to the B line.

(f) Install the radiator reservoir cap.

(g) Start the engine and warm it up until the cooling fan operates.

(1) Set the air conditioning as follows while warming up the engine.

Item	Specified Condition
Manual Air Conditioning System	Fan speed: Any setting except OFF Temperature: Toward WARM Air conditioning switch: OFF
Automatic Air Conditioning System	Temperature: Toward MAX Air conditioning switch: OFF

(2) Maintain the engine speed at 2,000 to 2,500 rpm and warm up the engine until the cooling fan operates.
NOTICE:
- **Make sure that the radiator reservoir still has some coolant in it.**
- **Pay attention to the needle of the water temperature meter. Make sure that the needle does not show an abnormally high temperature.**
- **If there is not enough coolant, the engine may burn out or overheat.**
- **Immediately after starting the engine, if the radiator reservoir does not have any coolant, perform the following: 1) stop the engine, 2) wait until the coolant has cooled down, and 3) add coolant until the coolant is filled to the B line.**

- **Run the engine at 2,000 rpm until the coolant level has stabilized.**

(h) Press the No. 1 and No. 2 radiator hoses several times by hand to bleed air.
CAUTION:
When pressing the radiator hoses:
- **Wear protective gloves.**
- **Be careful as the radiator hoses are hot.**
- **Keep your hands away from the radiator fan.**

(i) Stop the engine and wait until the coolant cools down to ambient temperature.

(j) Check that the coolant level is between the FULL and LOW line.
If the coolant level is below the LOW line, repeat all of the procedures above.
If the coolant level is above the FULL line, drain coolant so that the coolant level is between the FULL and LOW line.

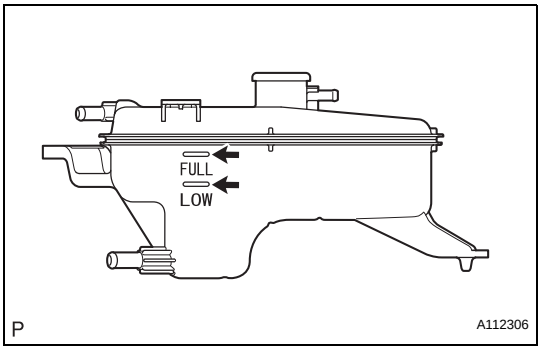

4. CHECK FOR ENGINE COOLANT LEAKS

5. INSTALL NO. 1 ENGINE UNDER COVER

REMOVAL

1. **DISCONNECT CABLE FROM NEGATIVE BATTERY TERMINAL**
   CAUTION:
   Wait at least 90 seconds after disconnecting the cable from the negative (-) battery terminal to prevent airbag and seat belt pretensioner activation.
2. **REMOVE RADIATOR ASSEMBLY**
   (a) Remove the radiator (see page CO-29).

DISASSEMBLY

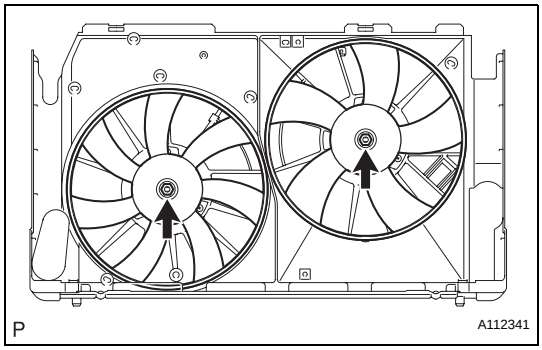

1. **REMOVE FAN**
   (a) Remove the 2 nuts and 2 fans.

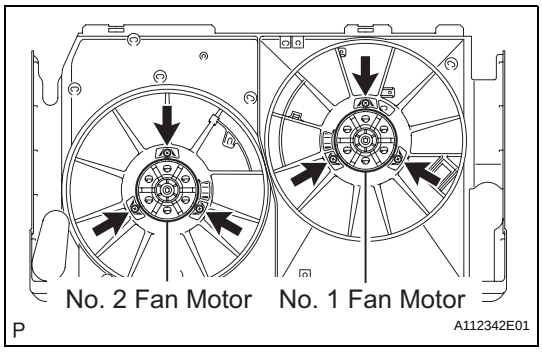

2. **REMOVE NO. 1 COOLING FAN MOTOR**
   (a) Remove the 3 screws and fan motor.
3. **REMOVE NO. 2 COOLING FAN MOTOR**
   (a) Remove the 3 screws and fan motor.

CO

REASSEMBLY

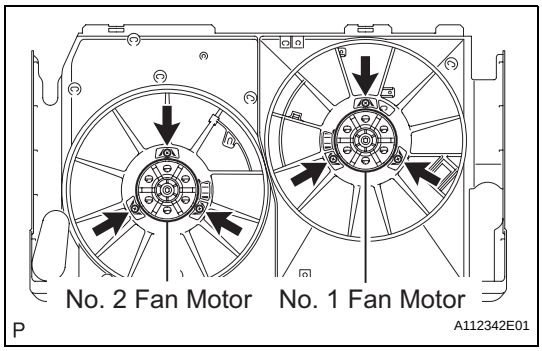

1. **INSTALL NO. 2 COOLING FAN MOTOR**
   (a) Install the fan motor with the 3 screws.
   Torque: 3.9 N*m (40 kgf*cm, 35 in.*lbf)
2. **INSTALL NO. 1 COOLING FAN MOTOR**
   (a) Install the fan motor with the 3 screws.
   Torque: 3.9 N*m (40 kgf*cm, 35 in.*lbf)

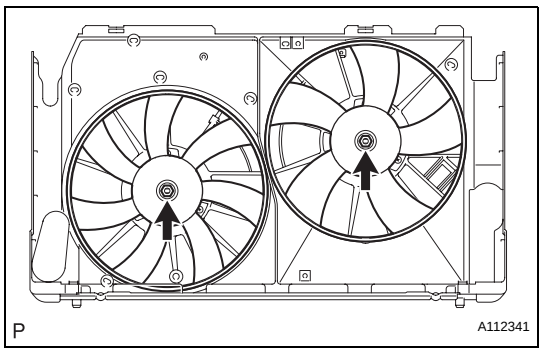

3. **INSTALL FAN**
   (a) Install the 2 fans with the 2 nuts.
   Torque: 6.3 N*m (64 kgf*cm, 55 in.*lbf)
   (b) Check the fan motor operation.

INSTALLATION

1. **INSTALL RADIATOR ASSEMBLY**
   (a) Install the radiator (see page CO-32).
2. **CONNECT CABLE TO NEGATIVE BATTERY TERMINAL**
3. **ADD ENGINE COOLANT (See page CO-6)**
4. **CHECK FOR ENGINE COOLANT LEAKS (See page CO-1)**

COOLING FAN MOTOR

COMPONENTS

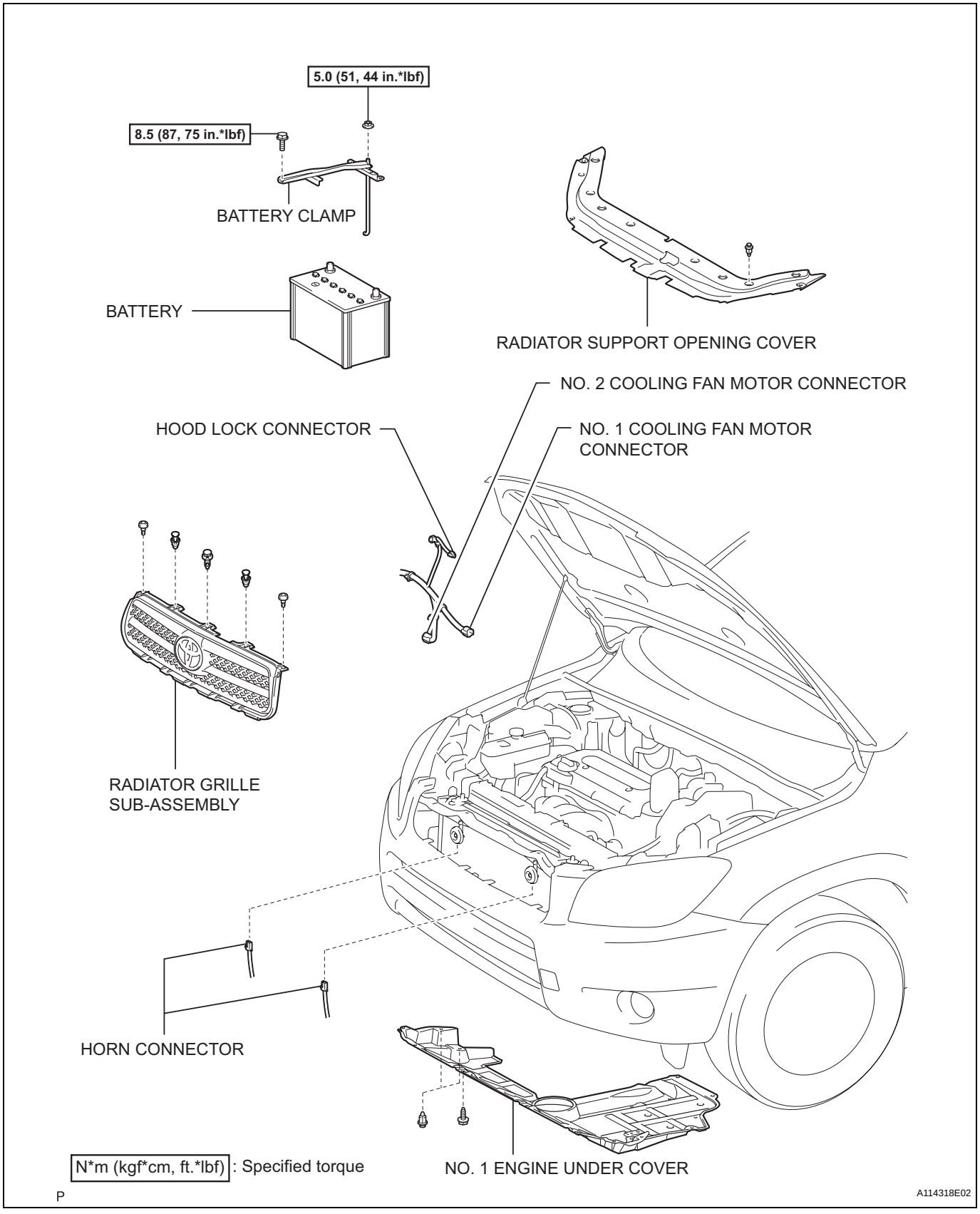

CO

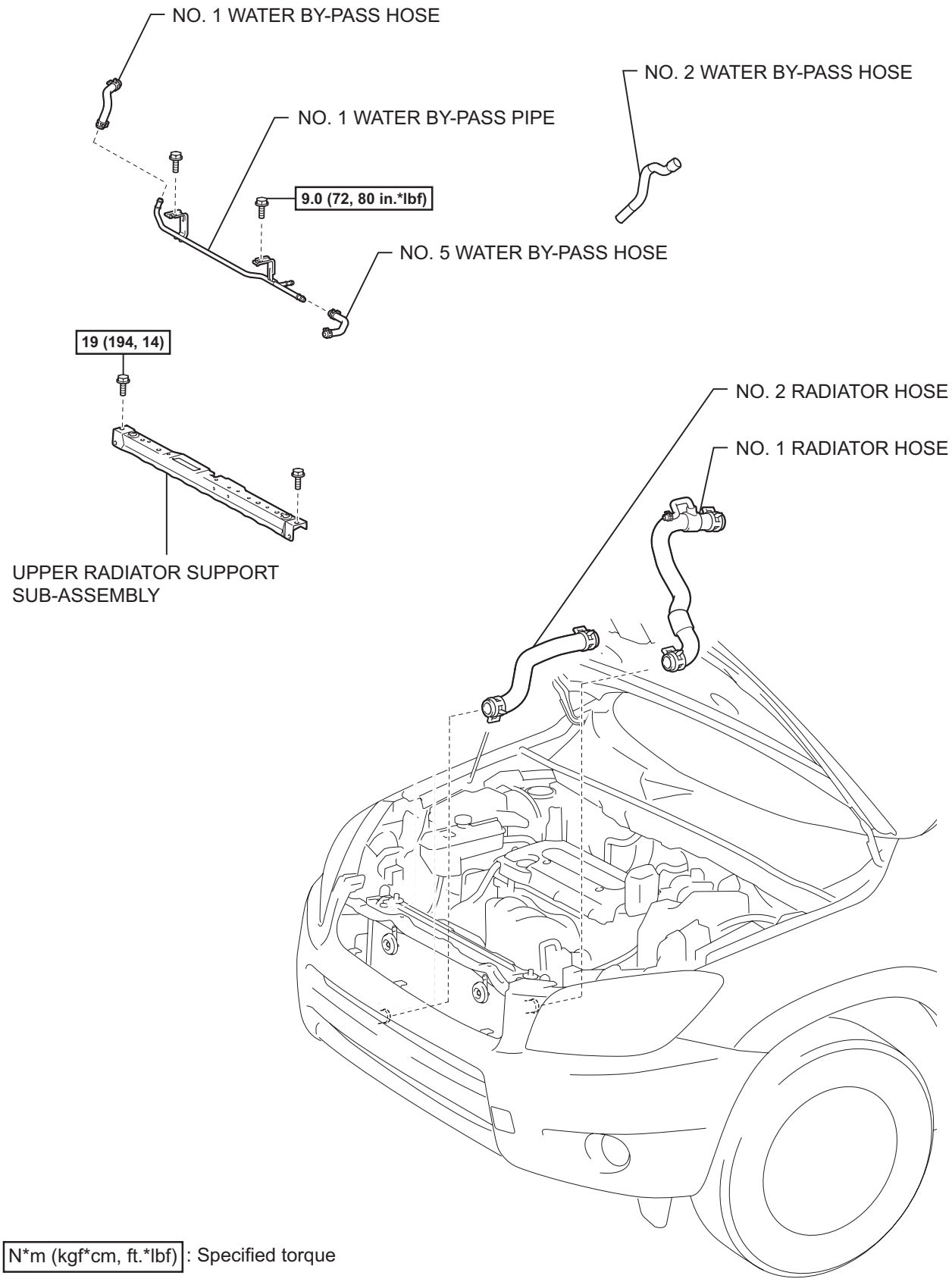
NO. 1 WATER BY-PASS HOSE
NO. 2 WATER BY-PASS HOSE
NO. 1 WATER BY-PASS PIPE
9.0 (72, 80 in.*lbf)
NO. 5 WATER BY-PASS HOSE
19 (194, 14)
NO. 2 RADIATOR HOSE
NO. 1 RADIATOR HOSE
UPPER RADIATOR SUPPORT SUB-ASSEMBLY
N*m (kgf*cm, ft.*lbf) : Specified torque
A114319E02

CO

P

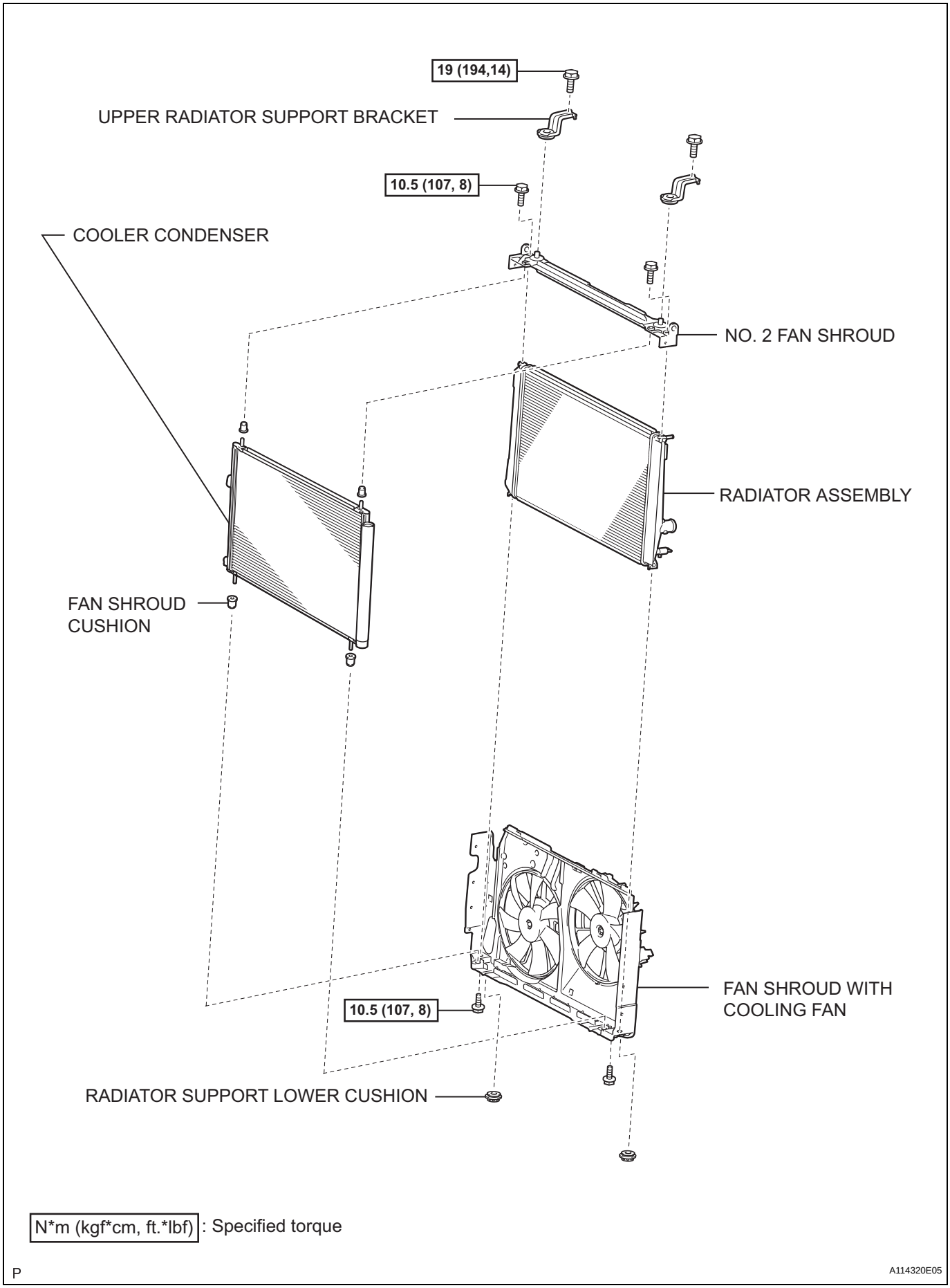
19 (194,14)
UPPER RADIATOR SUPPORT BRACKET
10.5 (107, 8)
COOLER CONDENSER
NO. 2 FAN SHROUD
RADIATOR ASSEMBLY
FAN SHROUD
CUSHION
FAN SHROUD WITH
COOLING FAN
10.5 (107, 8)
RADIATOR SUPPORT LOWER CUSHION
N*m (kgf*cm, ft.*lbf): Specified torque
P
A114320E05

CO

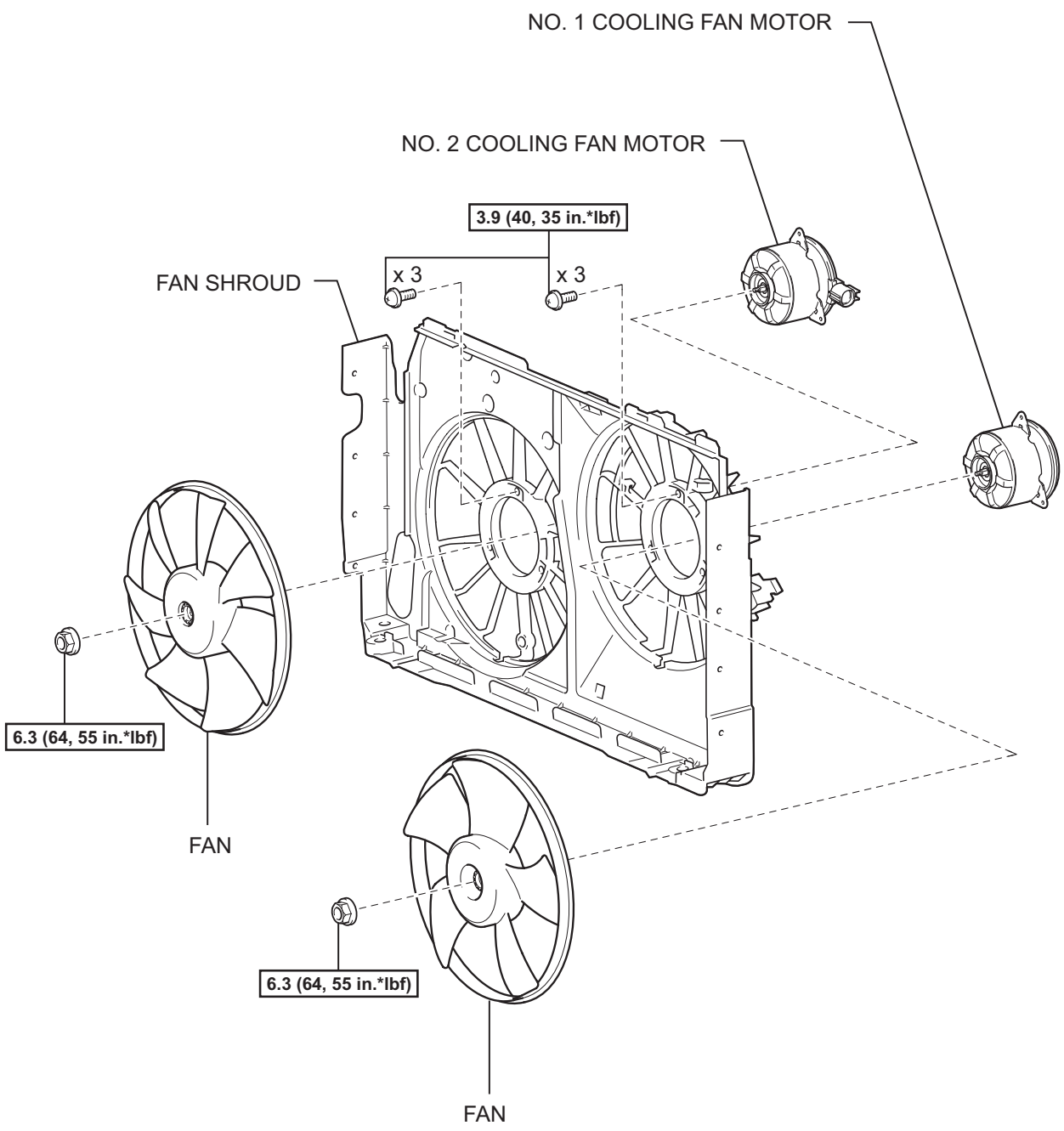

N*m (kgf*cm, ft.*lbf) : Specified torque

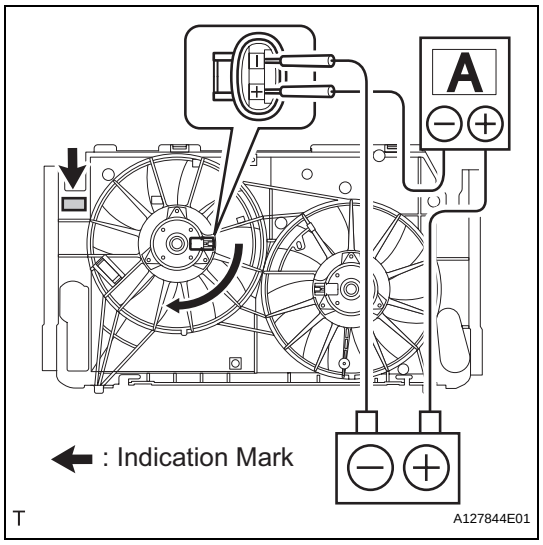

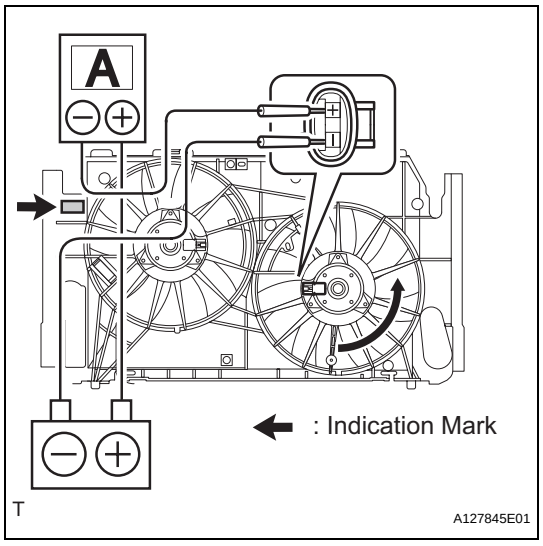

ON-VEHICLE INSPECTION

1. INSPECT NO. 1 COOLING FAN MOTOR

(a) Disconnect the No. 1 fan connector.

(b) Connect the battery and ammeter to the No. 1 fan motor connector.

(c) Check that the No. 1 fan rotates smoothly, and then check the reading on the ammeter.

Standard amperage

Indication Mark	Motor Type	Condition	Specified Condition
B, C	160 W	At 20°C (68°F)	11.7 to 14.7 A

HINT:

Refer to the illustration for the indication mark location.

If the result is not as specified, replace the No. 1 cooling fan motor.

(d) Reconnect the No. 1 fan motor connector.

2. INSPECT NO. 2 COOLING FAN MOTOR

(a) Disconnect the No. 2 fan connector.

(b) Connect the battery and ammeter to the No. 2 fan motor connector.

(c) Check that the No. 2 fan rotates smoothly, and then check the reading on the ammeter.

Standard amperage

Indication Mark	Motor Type	Condition	Specified Condition
B	120 W	At 20°C (68°F)	8.4 to 10.4 A
C	160 W	At 20°C (68°F)	11.7 to 14.7 A

HINT:

Refer to the illustration for the indication mark location.

If the result is not as specified, replace the No. 2 cooling fan motor.

(d) Reconnect the No. 2 fan motor connector.

COOLING FAN RELAY

ON-VEHICLE INSPECTION

1. DISCONNECT CABLE FROM NEGATIVE BATTERY TERMINAL

CAUTION:

Wait at least 90 seconds after disconnecting the cable from the negative (-) battery terminal to prevent airbag and seat belt pretensioner activation.

2. REMOVE ENGINE ROOM NO. 2 RELAY BLOCK COVER

3. INSPECT NO. 1 FAN RELAY (Marking: FAN NO. 1)

(a) Remove the relay from the engine room No. 2 relay block.

(b) Measure the resistance of the relay.

Standard resistance

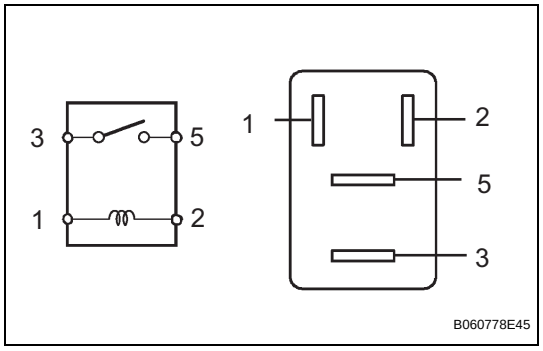

Tester Connection	Specified Condition
3 - 5	10 Ω or higher
3 - 5	Below 1 Ω (when battery voltage is applied to terminals 1 and 2)

If the result is not as specified, replace the relay.

(c) Install the relay.

4. INSPECT NO. 2 FAN RELAY (Marking: FAN NO. 2)

(a) Remove the relay from the engine room No. 2 relay block.

(b) Measure the resistance of the relay.

Standard resistance

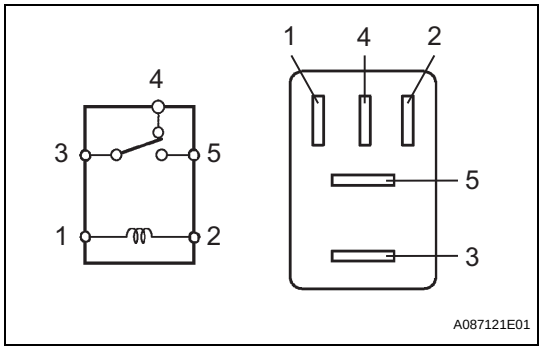

Tester Connection	Specified Condition
3 - 4	Below 1 Ω
3 - 5	10 Ω or higher
3 - 4	10 Ω or higher (when battery voltage is applied to terminals 1 and 2)
3 - 5	Below 1 Ω (when battery voltage is applied to terminals 1 and 2)

If the result is not as specified, replace the relay.

(c) Install the relay.

5. INSPECT NO. 3 FAN RELAY (Marking: FAN NO. 3)

(a) Remove the relay from the engine room No. 2 relay block.

(b) Measure the resistance of the relay.

Standard resistance

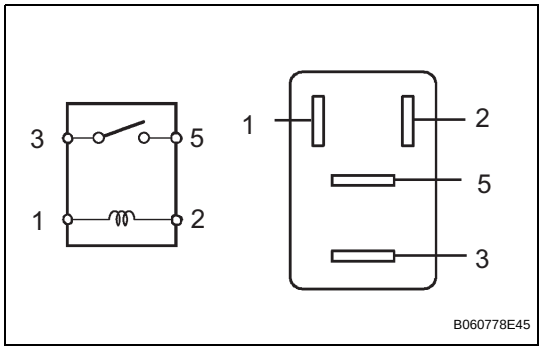

Tester Connection	Specified Condition
3 - 5	10 Ω or higher
3 - 5	Below 1 Ω (when battery voltage is applied to terminals 1 and 2)

If the result is not as specified, replace the relay.

CO

(c) Install the relay.

6. **INSTALL ENGINE ROOM NO. 2 RELAY BLOCK COVER**

7. **CONNECT CABLE TO NEGATIVE BATTERY TERMINAL**

ON-VEHICLE INSPECTION

HINT:
It is normal for the cooling fan to sometimes rotate when the ignition switch is turned from ACC to ON.

1. CHECK COOLING FAN OPERATION AT LOW TEMPERATURES (Below 94°C (201°F))

(a) Turn the ignition switch ON with the A/C switch OFF.

(b) Check that the cooling fan stops.
If it does not, check the cooling fan relays and engine coolant temperature sensor, and then check for disconnection of the connector or a wire break between the cooling fan relay and engine coolant temperature sensor.

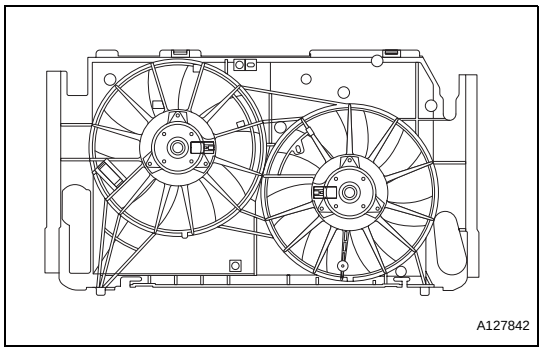

(c) Disconnect the engine coolant temperature sensor connector.

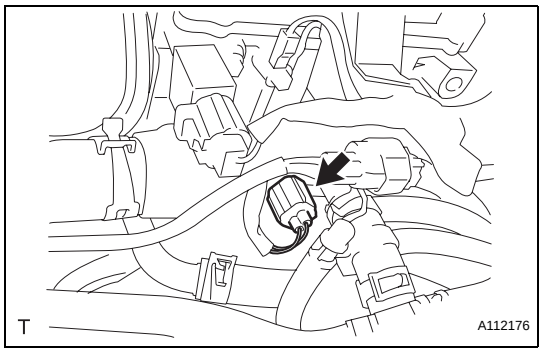

(d) Check that the cooling fan rotates.
If it does not, check the fuses, cooling fan relays, ECM and cooling fan, and then check for an open circuit between the cooling fan relay and engine coolant temperature sensor.

(e) Reconnect the engine coolant temperature sensor connector.

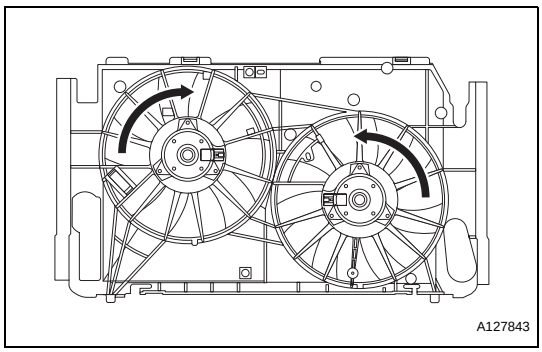

2. CHECK COOLING FAN OPERATION AT HIGH TEMPERATURES (Above 96°C (205°F))

(a) Start the engine, and then raise the coolant temperature to above 96°C (205°F).
HINT:
Coolant temperature is the value detected by the engine coolant temperature sensor on the cylinder head.

(b) Check that the A/C switch is OFF.

CO

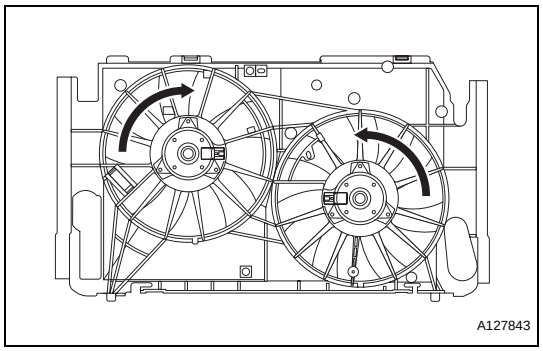

(c) Check that the cooling fan rotates.
If it does not, check the engine coolant temperature sensor, cooling fan, harness or connector.

COOLING FAN SYSTEM

PARTS LOCATION

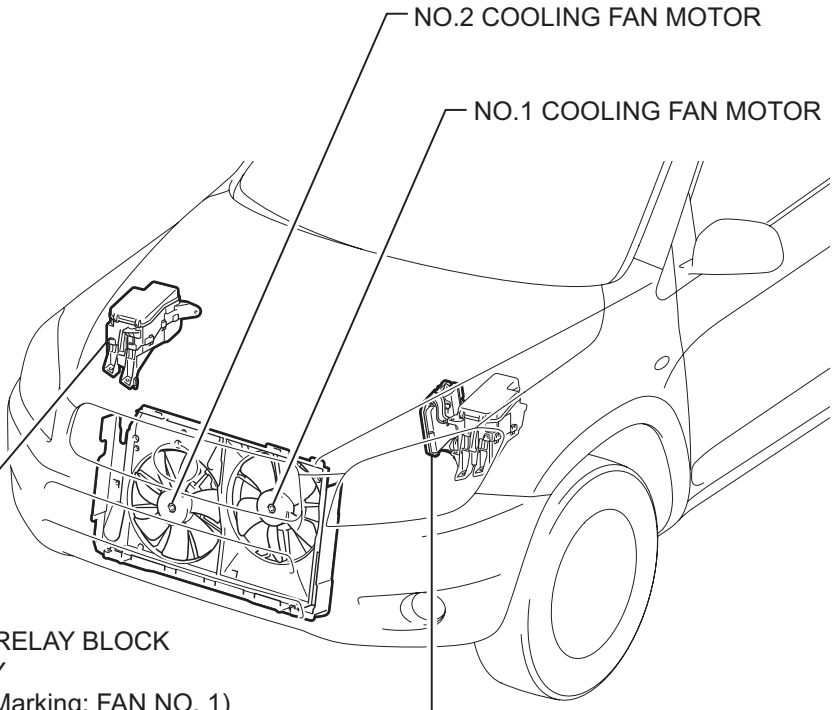

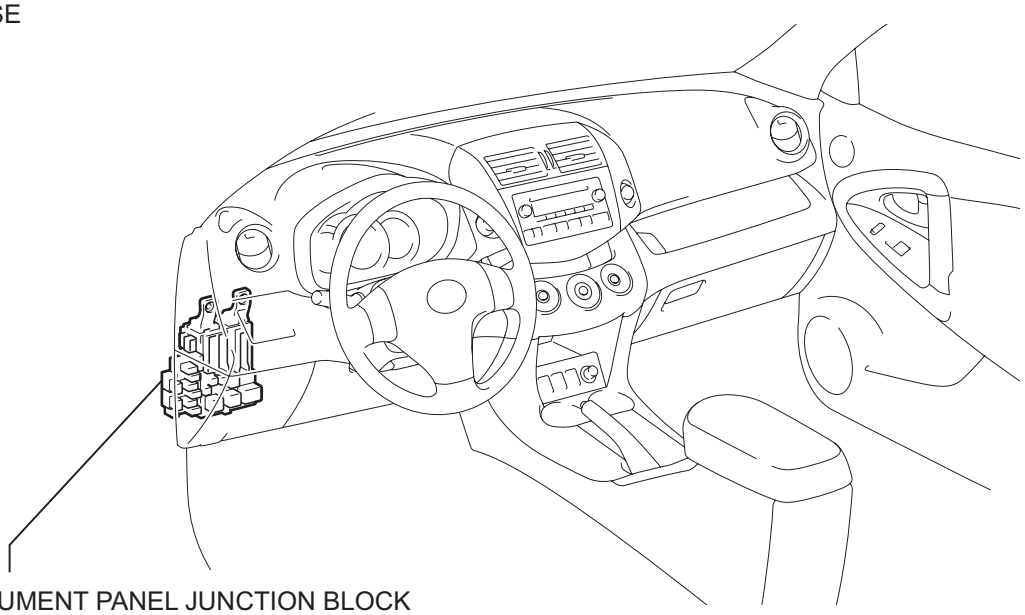

P

A114322E04

SYSTEM DIAGRAM

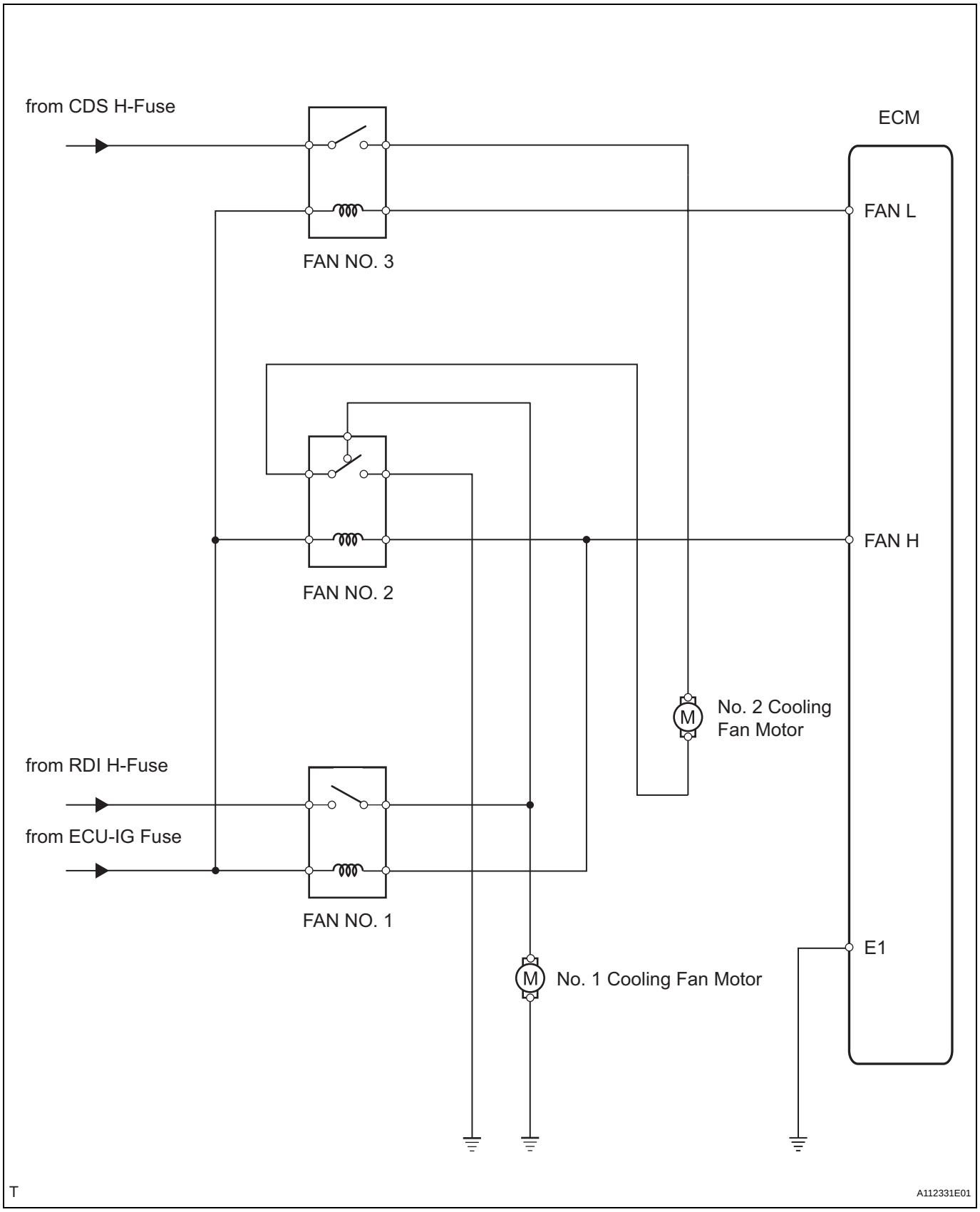

CO

COOLING SYSTEM

ON-VEHICLE INSPECTION

1. CHECK COOLING SYSTEM FOR LEAKS

(a) Remove the radiator reservoir cap.

CAUTION:
To avoid the danger of being burned, do not remove the radiator reservoir cap while the engine and radiator are still hot. Thermal expansion will cause hot engine coolant and steam to blow out from the radiator reservoir.

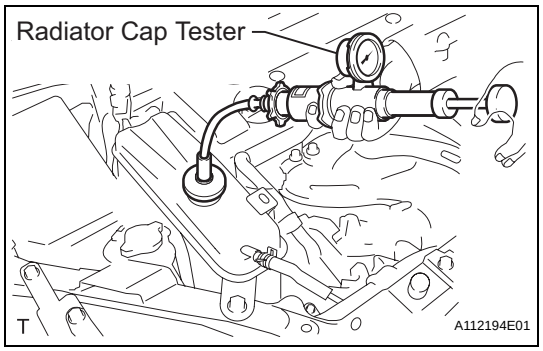

(b) Fill the radiator and reservoir with coolant, and then attach a radiator cap tester.

(c) Warm up the engine.

(d) Pump the radiator cap tester to 118 kPa (1.2 kgf/cm^2, 17.1 psi), and then check that the pressure does not drop.
If the pressure drops, check the hoses, radiator and water pump for leakage.
If there are no signs of external coolant leaks, check the heater core, cylinder block and head.

(e) Reinstall the radiator reservoir cap.

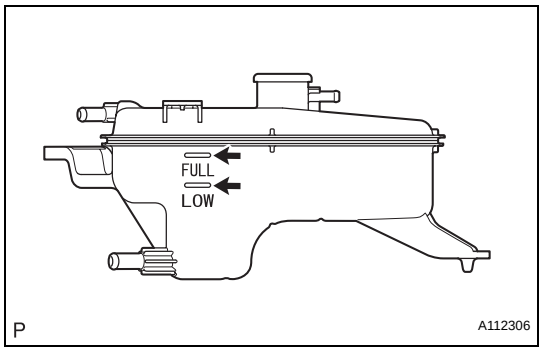

2. CHECK ENGINE COOLANT LEVEL OF RESERVOIR

(a) The engine coolant should be between the LOW and FULL lines when the engine is cold.
If low, check for leakage and add TOYOTA Super Long Life Coolant (SLLC) or similar high quality ethylene glycol based non-silicate, non-amine, non-nitrite, and non-borate coolant with long-life hybrid organic acid technology up to the FULL line.

3. CHECK ENGINE COOLANT QUALITY

(a) Remove the radiator reservoir cap.

CAUTION:
To avoid the danger of being burned, do not remove the radiator reservoir cap while the engine and radiator are still hot. Thermal expansion will cause hot engine coolant and steam to blow out from the radiator.

(b) Check for any excessive deposits of rust or scale around the radiator reservoir cap and radiator filler hole; the coolant should be free of oil.
If excessively dirty, replace the coolant.

(c) Install the radiator reservoir cap.

REMOVAL

1. **DISCONNECT CABLE FROM NEGATIVE BATTERY TERMINAL**
   CAUTION:
   Wait at least 90 seconds after disconnecting the cable from the negative (-) battery terminal to prevent airbag and seat belt pretensioner activation.
2. **REMOVE RADIATOR SUPPORT OPENING COVER**
3. **REMOVE BATTERY CLAMP**
   (a) Remove the bolt, nut and clamp.
4. **REMOVE BATTERY**
5. **REMOVE NO. 1 ENGINE UNDER COVER**
6. **DRAIN ENGINE COOLANT (See page CO-6)**
7. **REMOVE RADIATOR GRILLE SUB-ASSEMBLY (See page ET-6)**
8. **DISCONNECT HOOD LOCK SWITCH CONNECTOR**

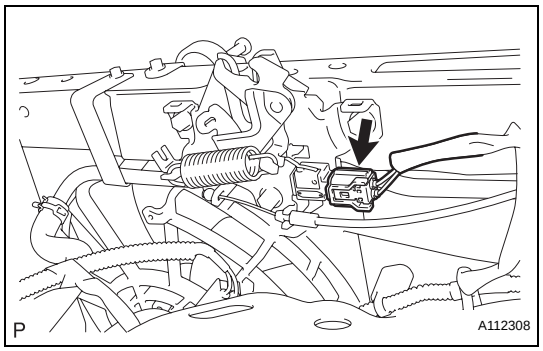

9. **DISCONNECT NO. 1 WATER BY-PASS HOSE**
   (a) Disconnect the hose from the radiator reservoir.
10. **DISCONNECT NO. 5 WATER BY-PASS HOSE**
    (a) Disconnect the hose from the radiator.
11. **REMOVE NO. 1 WATER BY-PASS PIPE**
    (a) Disconnect the pipe from the No. 1 radiator hose.
    (b) Remove the 2 bolts and the pipe.

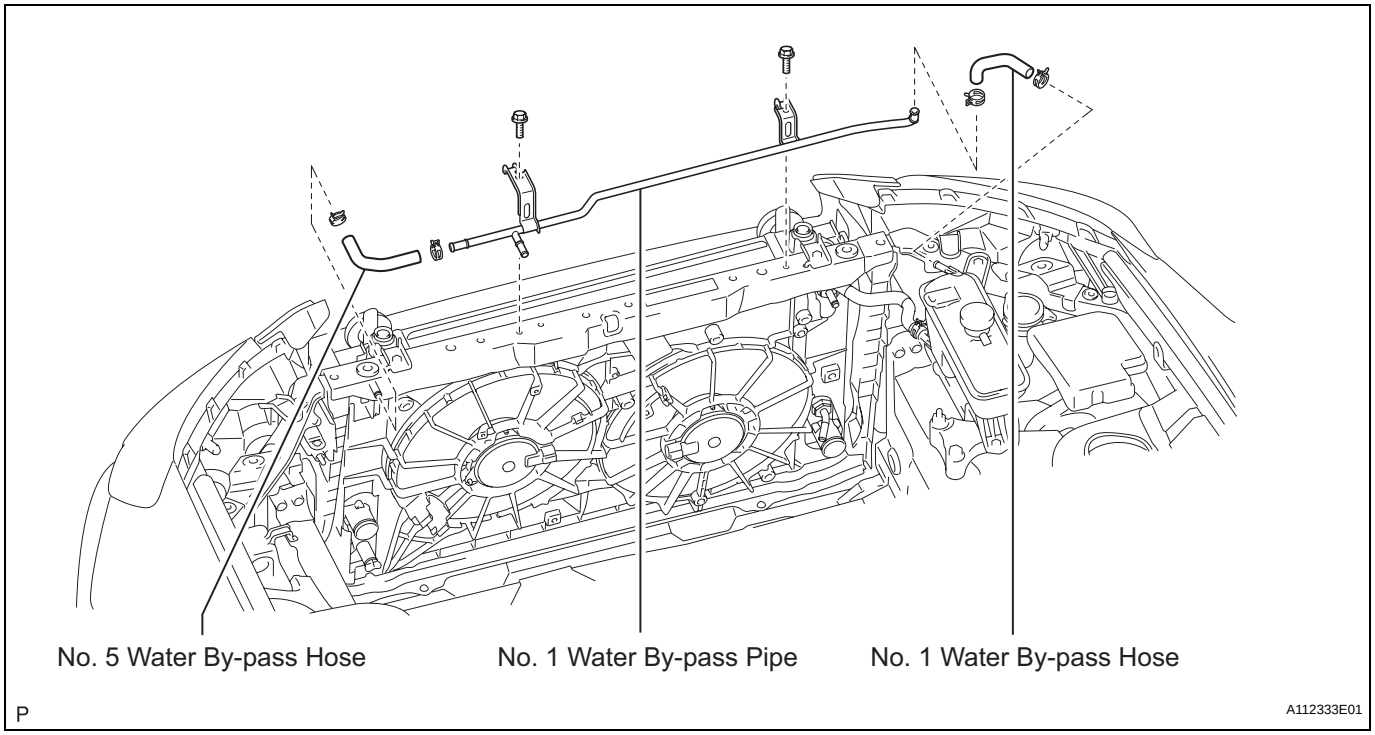

12. **DISCONNECT COOLING FAN MOTOR HARNESS**
    (a) Disconnect the 2 fan motor connectors from the 2 fan motors.

CO

(b) Detach the 5 harness clamps from the fan shroud and upper radiator support.

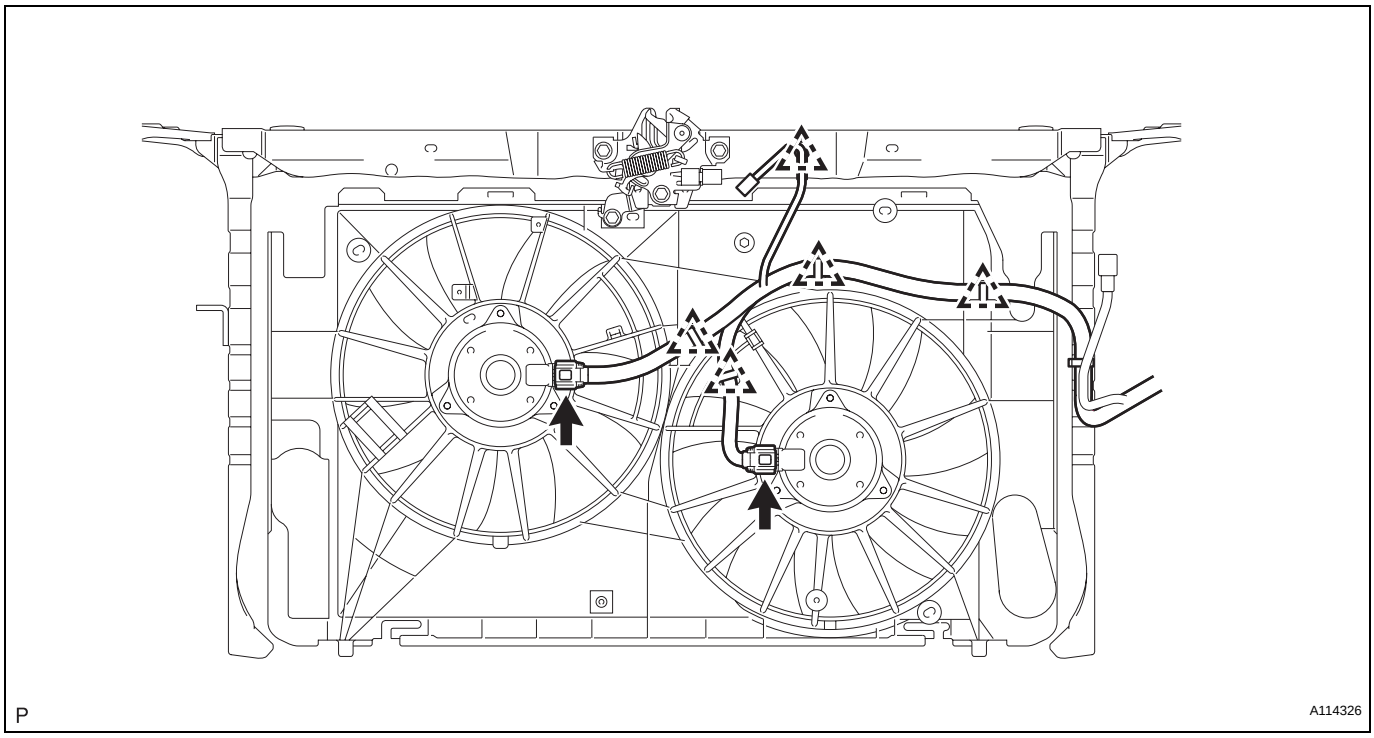

13. DISCONNECT HORN CONNECTOR

(a) Disconnect the 2 horn connectors.

14. REMOVE UPPER RADIATOR SUPPORT BRACKET

(a) Remove the 2 bolts and the 2 upper radiator support brackets.

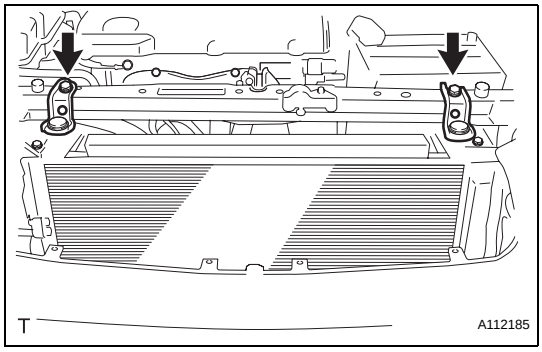

15. REMOVE NO. 2 FAN SHROUD

(a) Remove the 2 bolts.

(b) Detach the 2 claws and No. 2 shroud.

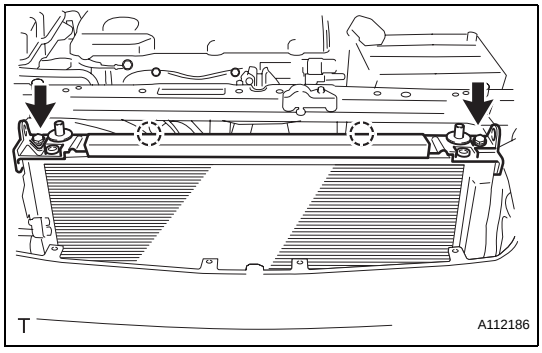

CO

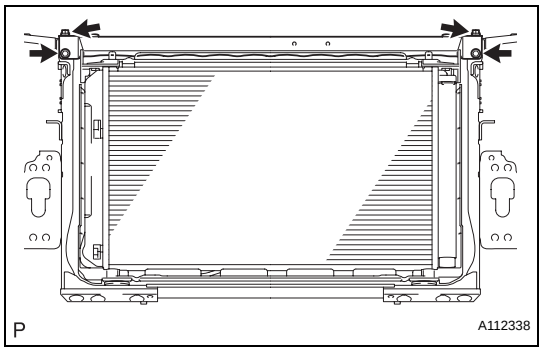

16. REMOVE UPPER RADIATOR SUPPORT SUB-ASSEMBLY

(a) Remove the 4 bolts and upper radiator support with hood lock.

17. DISCONNECT NO. 1 RADIATOR HOSE

18. DISCONNECT NO. 2 RADIATOR HOSE

19. DISCONNECT NO. 2 WATER BY-PASS HOSE

Disconnect the by-pass hose from the radiator reservoir and radiator.

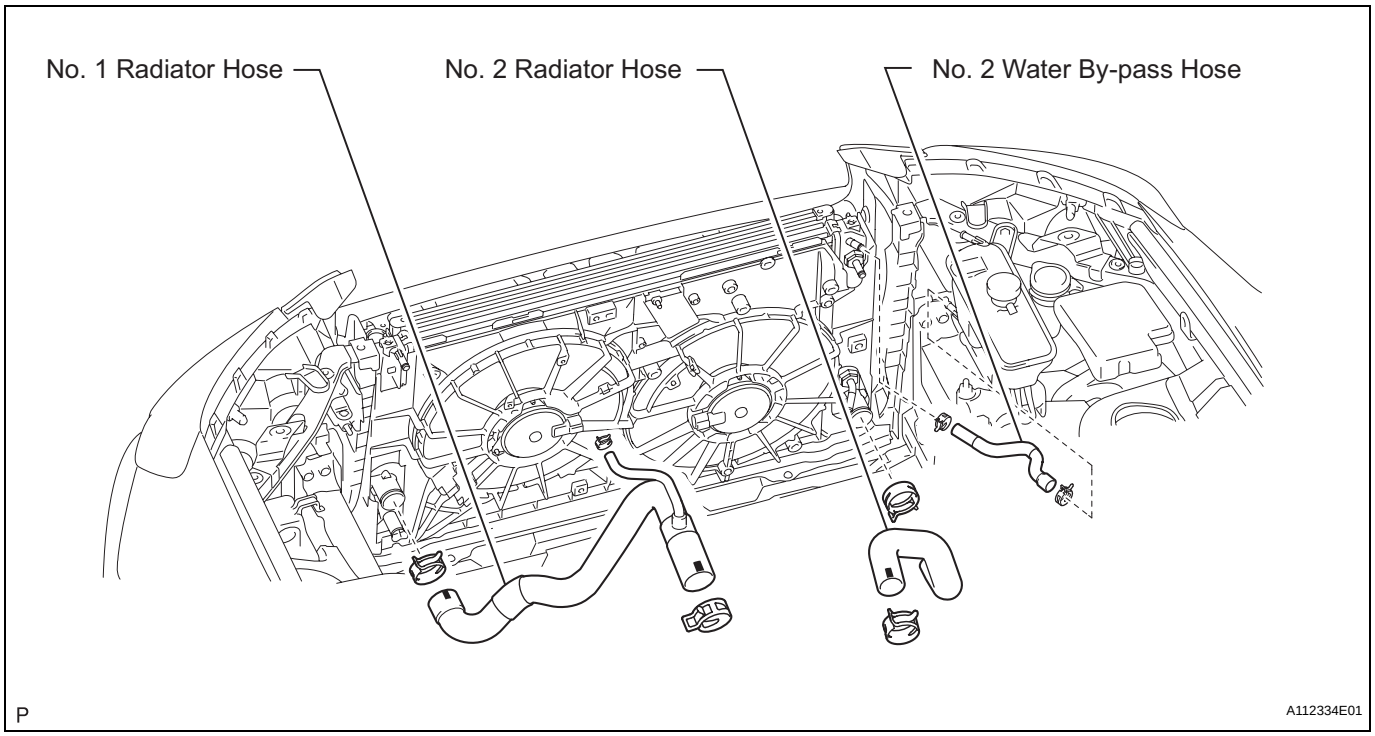

CO

20. REMOVE RADIATOR ASSEMBLY

(a) Separate the cooler condenser from the radiator.
HINT:
After detaching the condenser, make sure that all 4 fan shroud cushions are present.

(b) Remove the radiator with the 2 radiator support lowers.
HINT:
After detaching the radiator, make sure that both radiator support lowers are present.

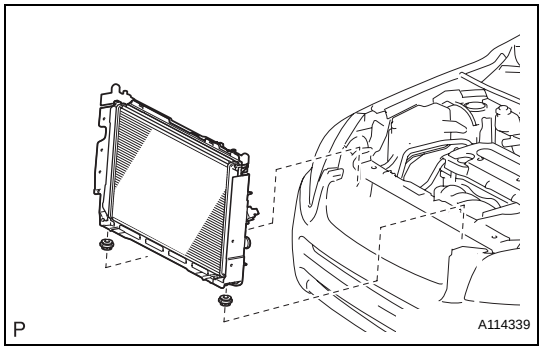

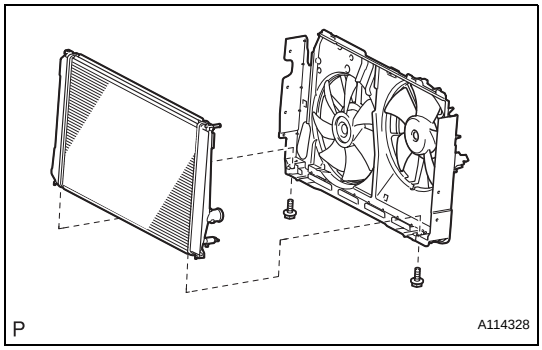

21. REMOVE FAN SHROUD WITH COOLING FAN

(a) Remove the 2 bolts and radiator from the fan shroud.

INSTALLATION

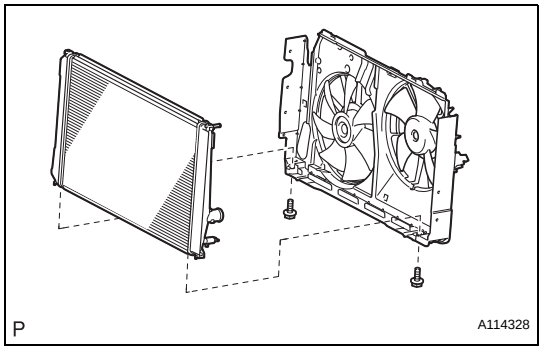

1. INSTALL FAN SHROUD WITH COOLING FAN

(a) Install the fan shroud with cooling fan with the 2 bolts to the radiator.
Torque: 10.5 N*m (107 kgf*cm, 8 ft.*lbf)

2. INSTALL RADIATOR ASSEMBLY

(a) Install the 4 fan shroud cushions to the cooler condenser.

(b) Set the cooler condenser to the fan shroud.

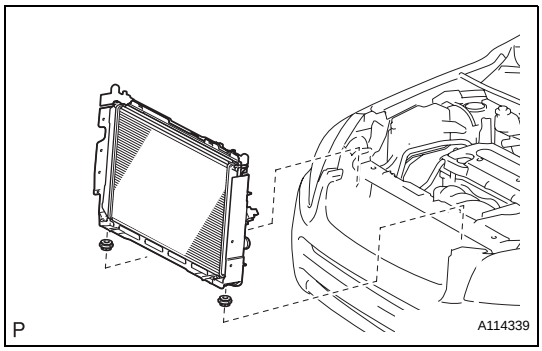

(c) Install the 2 radiator support lower cushions to the fan shroud.

(d) Install the radiator with cooler condenser and fan shroud to the radiator support lower.

CO

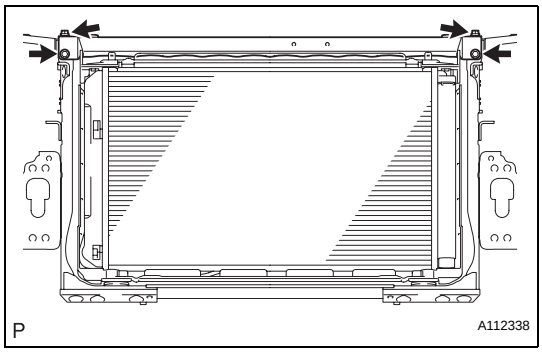

3. INSTALL UPPER RADIATOR SUPPORT SUB-ASSEMBLY

(a) Install the upper radiator support with the 4 bolts.
Torque: 19 N*m (194 kgf*cm, 14 ft.*lbf)

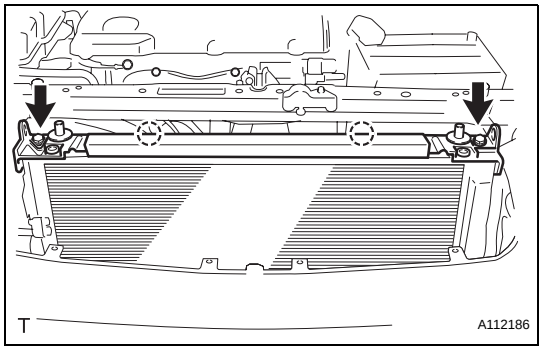

4. INSTALL NO. 2 FAN SHROUD

(a) Attach the 2 claws to install the No. 2 fan shroud and install the 2 bolts.
Torque: 10.5 N*m (107 kgf*cm, 8 ft.*lbf)

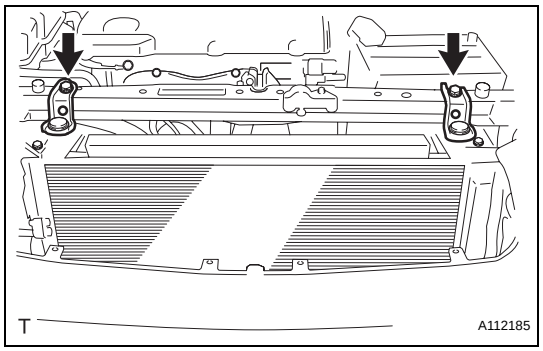

5. INSTALL UPPER RADIATOR SUPPORT BRACKET

(a) Install the bracket with the 2 bolts.
Torque: 19 N*m (194 kgf*cm, 14 ft.*lbf)

6. CONNECT HORN CONNECTOR

(a) Connect the 2 horn connectors.

7. CONNECT NO. 2 WATER BY-PASS HOSE

(a) Connect the by-pass hose to the radiator and radiator reservoir.
HINT:
The direction of the hose clamp is indicated in the illustration.

8. CONNECT NO. 2 RADIATOR HOSE

HINT:
The direction of the hose clamp is indicated in the illustration.

9. CONNECT NO. 1 RADIATOR HOSE

HINT:
The direction of the hose clamp is indicated in the illustration.

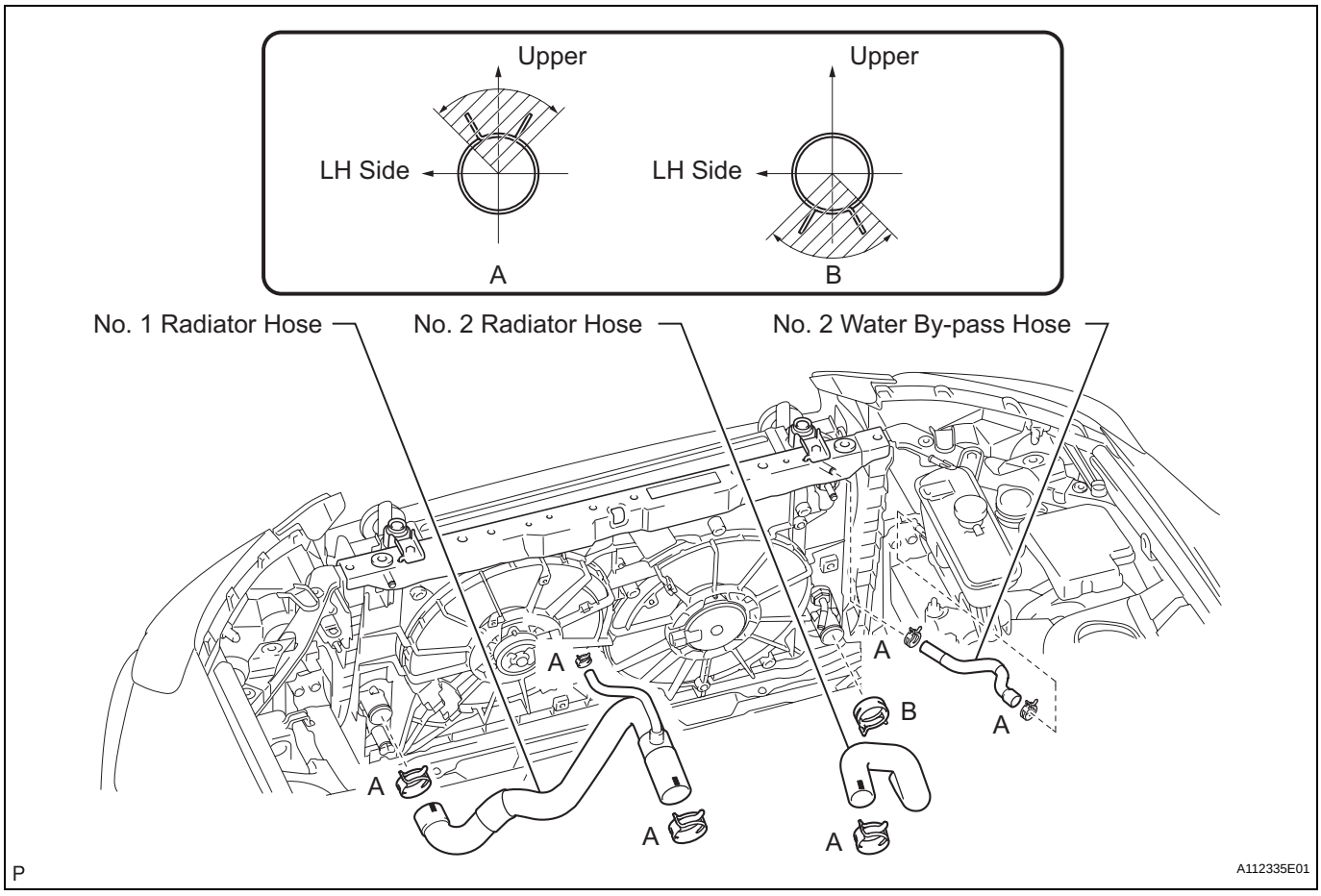

10. CONNECT COOLING FAN MOTOR HARNESS

(a) Attach the harness with the 5 clamps.

(b) Connect the 2 fan motor connectors.

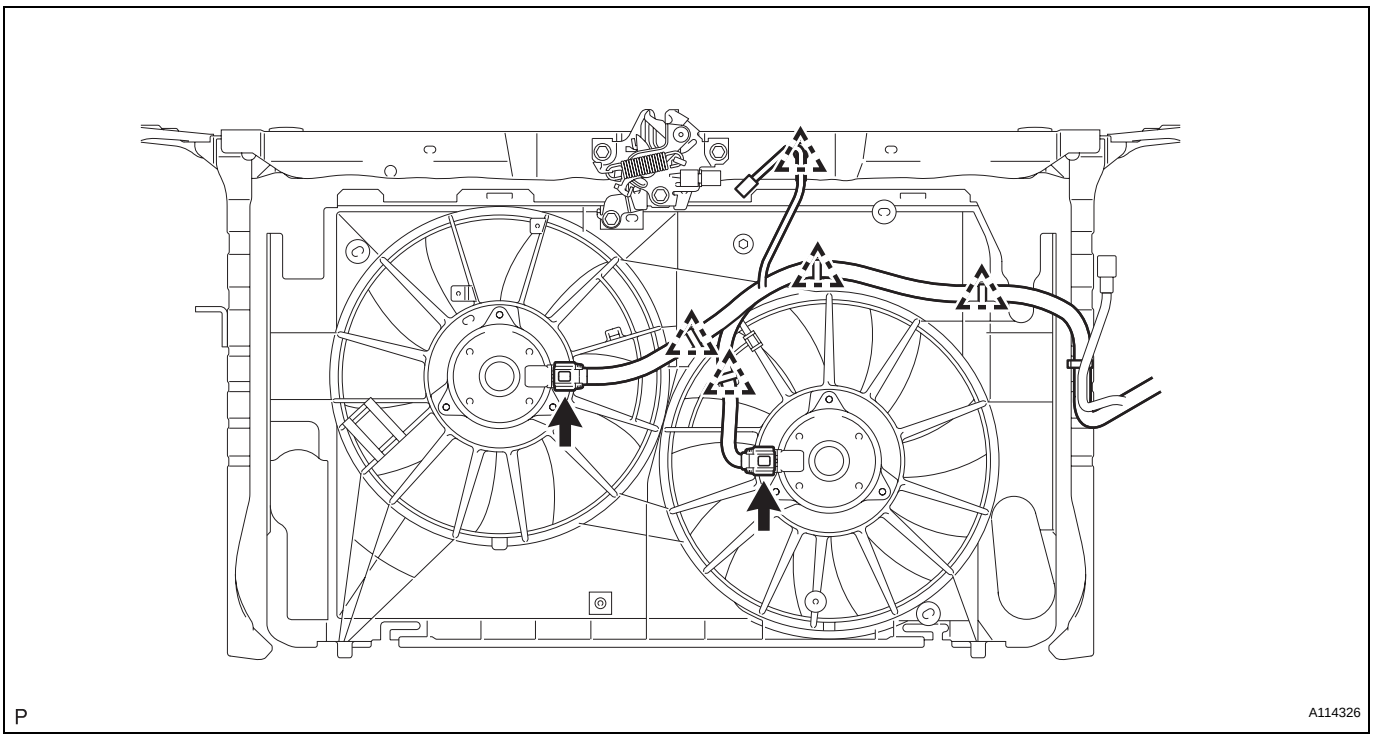

11. INSTALL NO. 1 WATER BY-PASS PIPE

(a) Install the by-pass pipe with the 2 bolts to the upper radiator support.
Torque: 9.0 N*m (92 kgf*cm, 80 in.*lbf)

(b) Connect the No. 1 radiator hose to the pipe.
HINT:
The direction of the hose clamp is indicated in the lustration.

12. CONNECT NO. 5 WATER BY-PASS HOSE

(a) Connect the by-pass hose to the radiator.
HINT:
The direction of the hose clamp is indicated in the lustration.

13. CONNECT NO. 1 WATER BY-PASS HOSE

(a) Connect the by-pass hose to the radiator and radiator reservoir.
HINT:
The direction of the hose clamp is indicated in the illustration.

CO

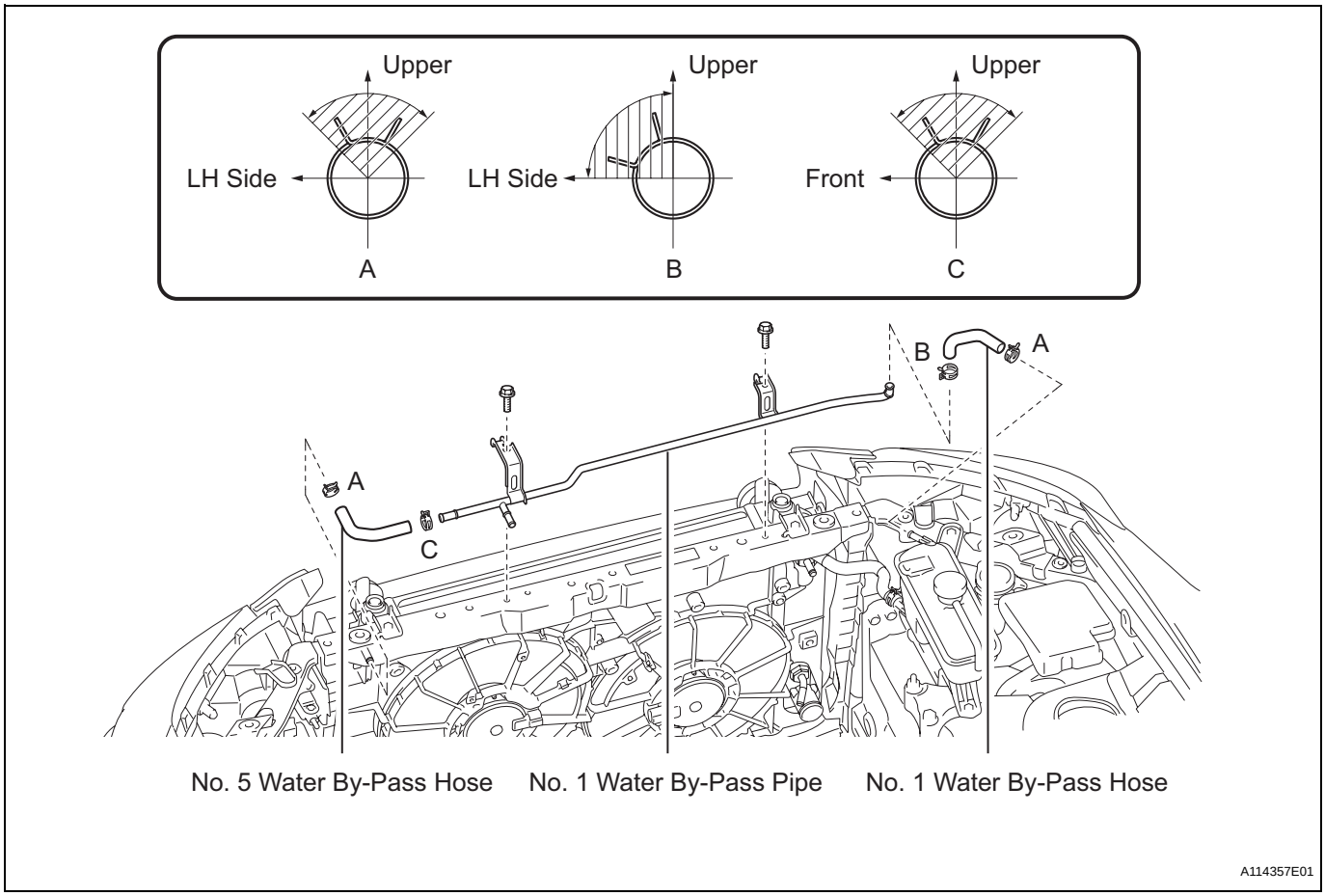

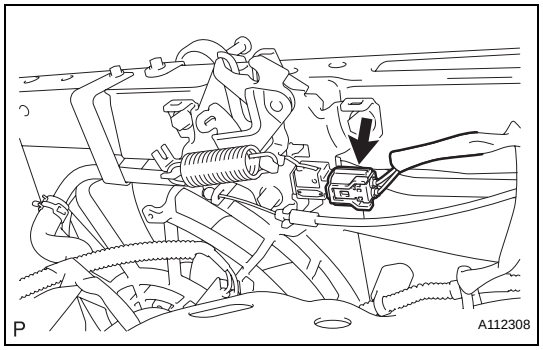

14. **CONNECT HOOD LOCK SWITCH CONNECTOR**

15. **INSTALL RADIATOR GRILLE SUB-ASSEMBLY (See page ET-10)**

16. **INSTALL BATTERY**

17. **INSTALL BATTERY CLAMP**
    (a) Attach the hook of the battery clamp to the battery bracket.
    (b) Temporarily tighten the nut and install the bolt.
    (c) Adjust the battery clamp's position.
    (d) Fully tighten the bolt and nut.
    Torque: 8.5 N*m (87 kgf*cm, 75 in.*lbf) for bolt
    5.0 N*m (51 kgf*cm, 44 in.*lbf) for nut

18. **CONNECT CABLE TO NEGATIVE BATTERY TERMINAL**

19. **ADD ENGINE COOLANT (See page CO-6)**

20. **CHECK FOR ENGINE COOLANT LEAKS (See page CO-1)**

21. **INSTALL RADIATOR SUPPORT OPENING COVER**

RADIATOR

COMPONENTS

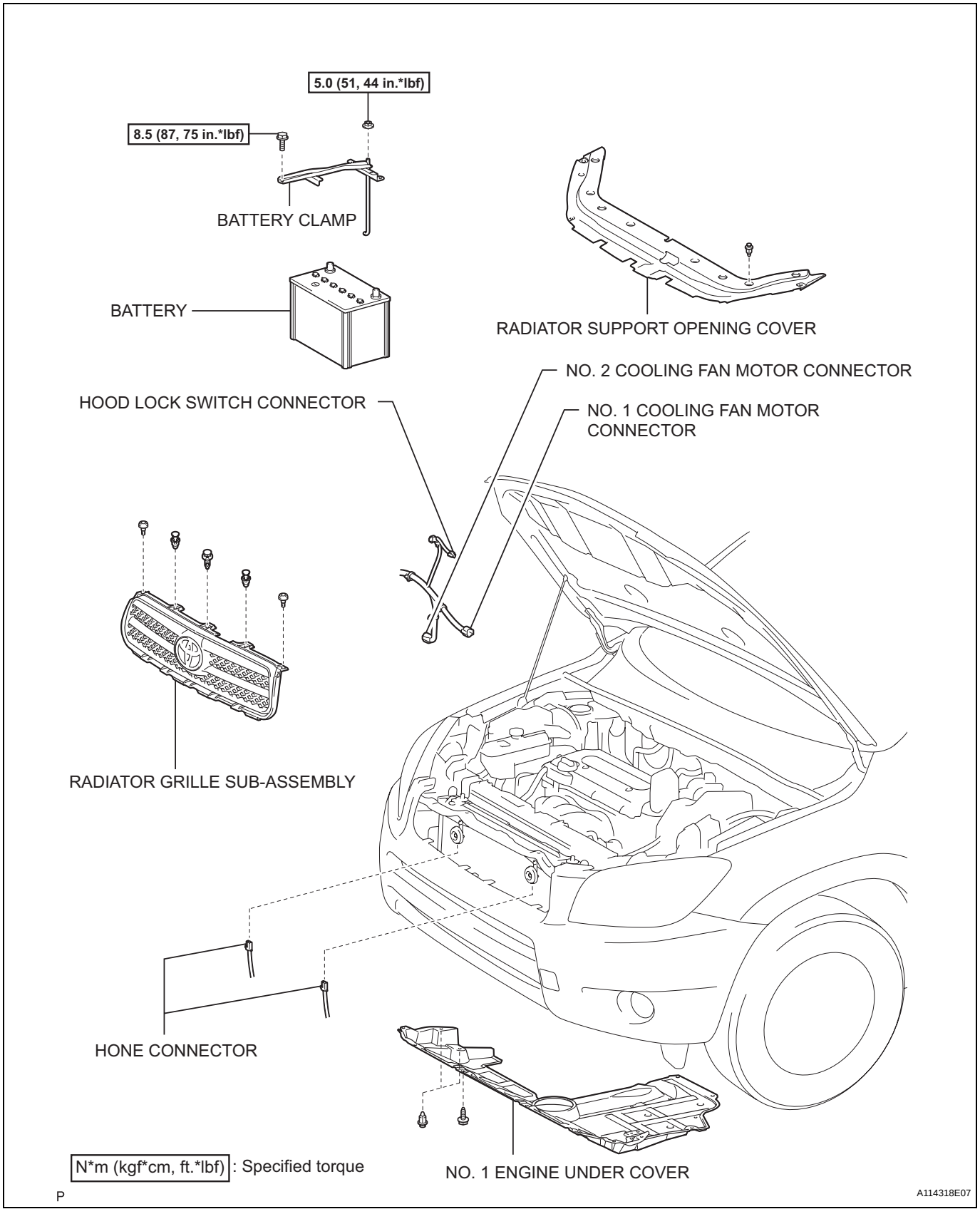

CO

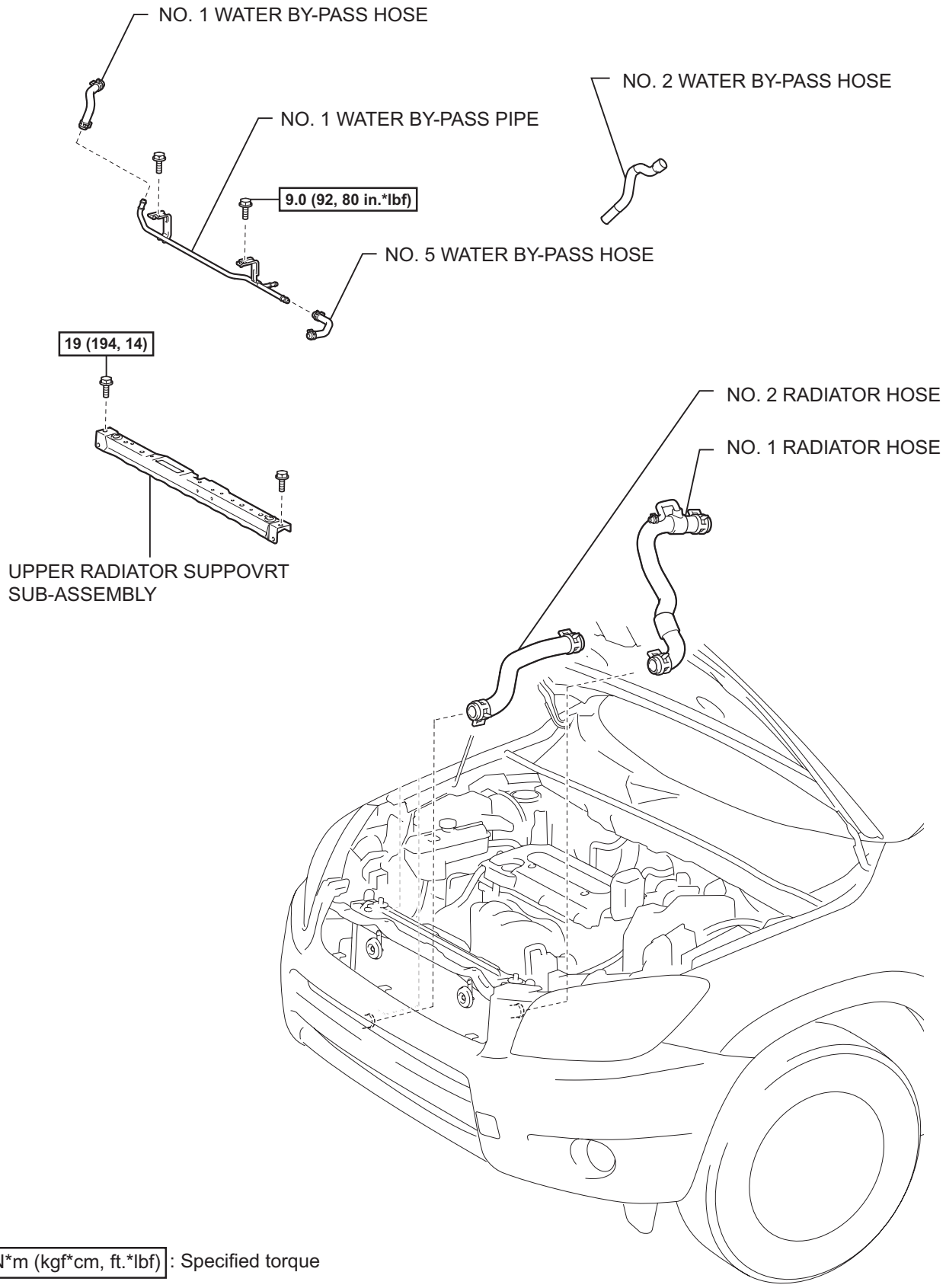
NO. 1 WATER BY-PASS HOSE
NO. 2 WATER BY-PASS HOSE
NO. 1 WATER BY-PASS PIPE
9.0 (92, 80 in.*lbf)
NO. 5 WATER BY-PASS HOSE
19 (194, 14)
NO. 2 RADIATOR HOSE
NO. 1 RADIATOR HOSE
UPPER RADIATOR SUPPOVRT SUB-ASSEMBLY
N*m (kgf*cm, ft.*lbf) : Specified torque
A114319E05

CO

P

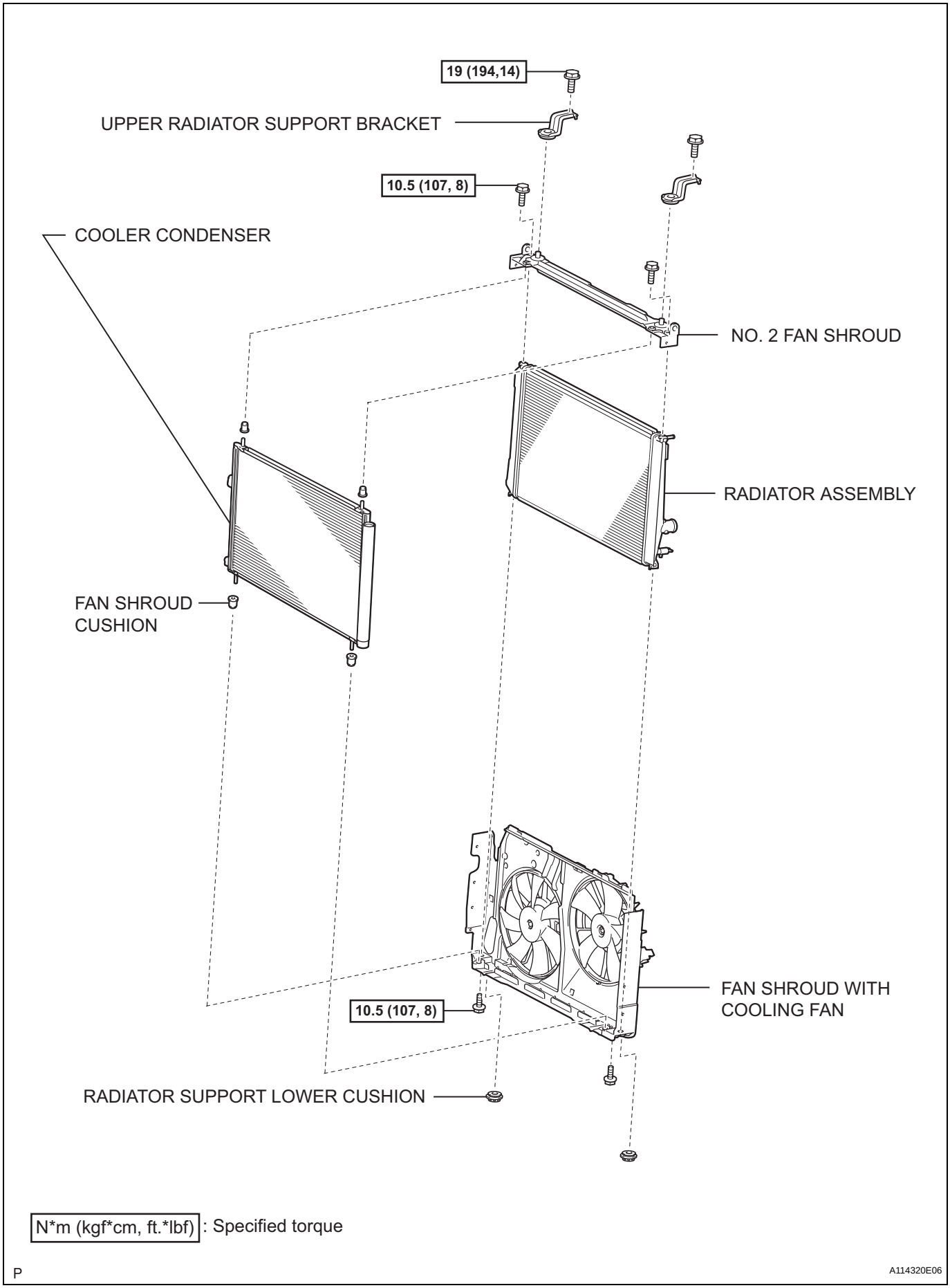
19 (194,14)
UPPER RADIATOR SUPPORT BRACKET
10.5 (107, 8)
COOLER CONDENSER
NO. 2 FAN SHROUD
RADIATOR ASSEMBLY
FAN SHROUD CUSHION
FAN SHROUD WITH COOLING FAN
10.5 (107, 8)
RADIATOR SUPPORT LOWER CUSHION
N*m (kgf*cm, ft.*lbf): Specified torque
P
A114320E06

CO

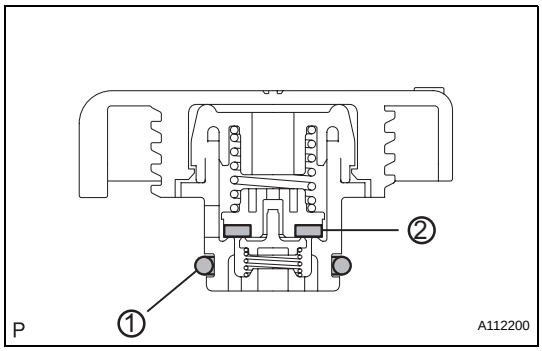

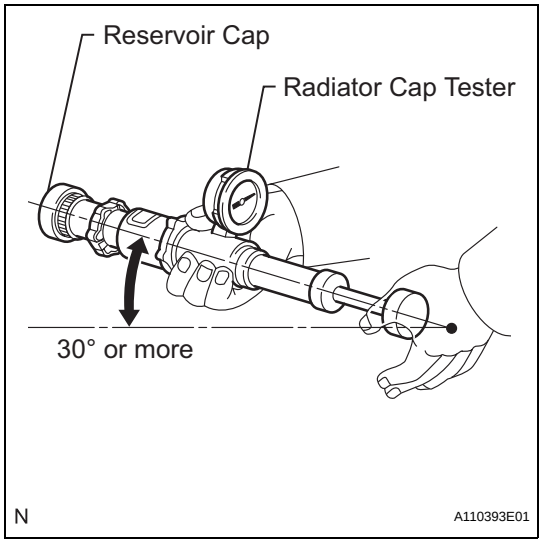

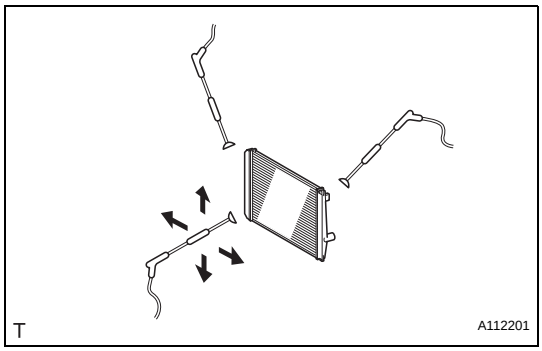

ON-VEHICLE INSPECTION

1. CHECK RADIATOR RESERVOIR CAP SUB-ASSEMBLY

(a) Measure the valve opening pressure.

(1) If there are water stains or foreign matter on O-ring 1, clean it with water and finger scouring.

(2) Check that O-ring 1 is not deformed, cracked or swollen.

(3) Apply engine coolant to O-ring 1 and rubber packing 2 before using a radiator cap tester.

(4) When using the cap tester, tilt it more than 30 degrees.

(5) Pump the cap tester several times, and check the maximum pressure*.

Pump speed:

1 pump per second

*: Even if the cap cannot maintain the maximum pressure, it is not a defect.

Judgment criterion

Item	Specified Condition
Standard value (for brand-new cap)	93.3 to 122.7 kPa (0.95 to 1.25 kgf/cm^2, 13.5 to 17.8 psi)
Minimum standard value (after using cap)	78.5 kPa (0.8 kgf/cm^2, 11.4 psi)

If the maximum pressure is less than the minimum standard value, replace the radiator reservoir cap sub-assembly.

ON-VEHICLE CLEANING

1. INSPECT RADIATOR ASSEMBLY

(a) Check that the radiator and condenser are not blocked with leaves, dirt, or insects. Clean the hose connections.

If the fins are blocked, wash them with water or a steam cleaner.

NOTICE:

- **If the distance between the steam cleaner and core is too close, the fins may be damaged.**
- **Keep the following injection distance.**

Standard injection distance

Injection Pressure	Specified Condition
2,942 to 4,903 kPa (30 to 50 kgf/cm^2, 427 to 711 psi)	300 mm (11.81 in.)
4,903 to 7,845 kPa (50 to 80 kgf/cm^2, 711 to 1,138 psi)	500 mm (19.69 in.)

- **If the fins are bent, straighten them with a screwdriver or pliers.**
- **Never apply water directly onto the electronic components.**

(b) Dry the fins with compressed air.

CO

INSTALLATION

1. INSTALL THERMOSTAT

(a) Install a new gasket onto the thermostat.

(b) Install the thermostat with the jiggle valve upward.
HINT:
The jiggle valve may be set to within 10° on either side of the prescribed position.

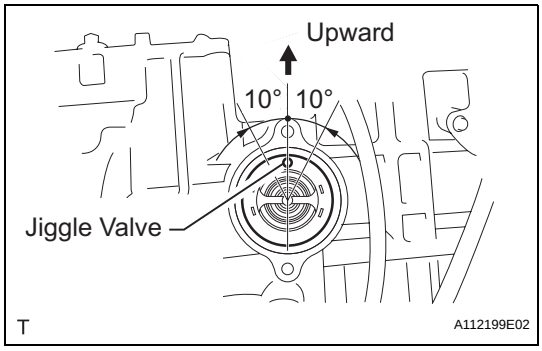

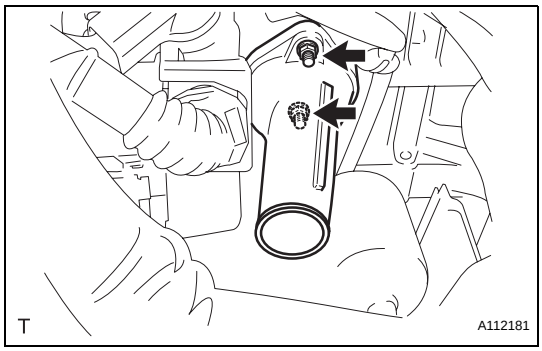

2. INSTALL WATER INLET

(a) Install the water inlet with the 2 nuts.
Torque: 9.0 N*m (92 kgf*cm, 80 in.*lbf)

3. CONNECT NO. 2 RADIATOR HOSE

4. ADD ENGINE COOLANT (See page CO-6)

5. CHECK FOR ENGINE COOLANT LEAKS (See page CO-1)

6. INSTALL RADIATOR SUPPORT OPENING COVER

7. INSTALL NO. 1 ENGINE UNDER COVER

THERMOSTAT

COMPONENTS

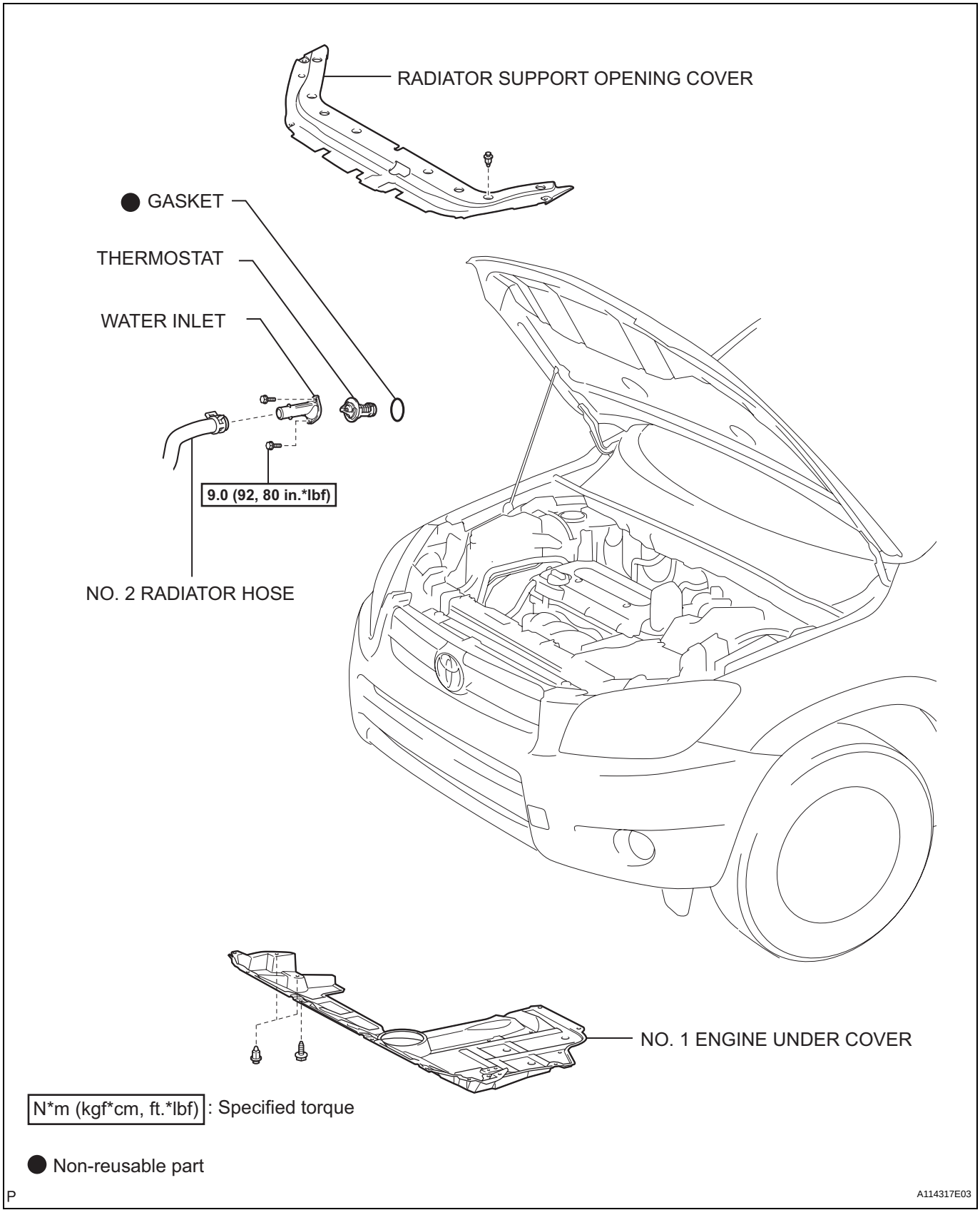

CO

REMOVAL

1. **REMOVE NO. 1 ENGINE UNDER COVER**
2. **DRAIN ENGINE COOLANT (See page CO-6)**
3. **REMOVE RADIATOR SUPPORT OPENING COVER**
4. **DISCONNECT NO. 2 RADIATOR HOSE**
5. **REMOVE WATER INLET**
   (a) Remove the 2 nuts and disconnect the water inlet from the cylinder block.
6. **REMOVE THERMOSTAT**
   (a) Remove the gasket from the thermostat.

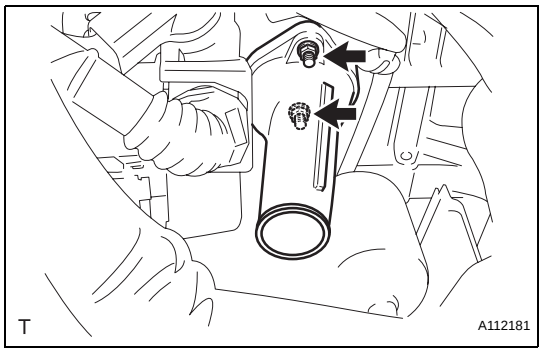

INSPECTION

1. **INSPECT THERMOSTAT**
   HINT:
   The valve opening temperature is inscribed on the thermostat.

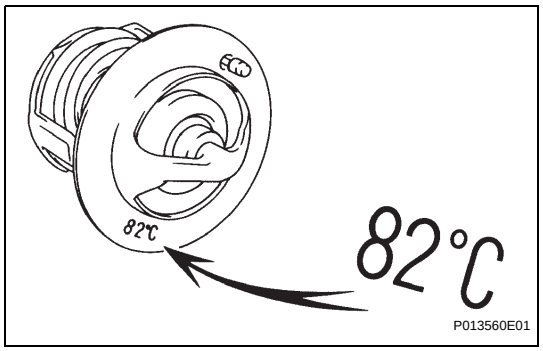

(a) Immerse the thermostat in water, and then gradually heat the water.
(b) Check the valve opening temperature of the thermostat.
Standard valve opening temperature:
80 to 84°C (176 to 183°F)
If the valve opening temperature is not as specified, replace the thermostat.

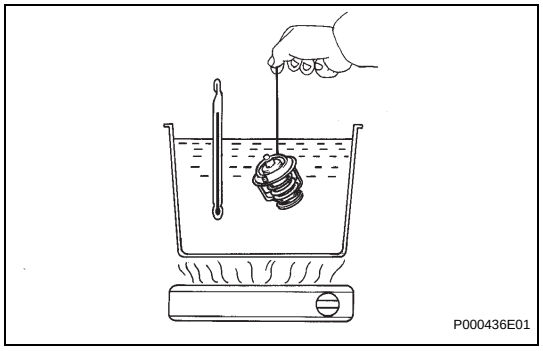

(c) Check the valve lift.
Standard valve lift:
10 mm (0.39 in.) or more at 95°C (203°F)
If the valve lift is not as specified, replace the thermostat.
(d) Check that the valve is fully closed when the thermostat is at low temperatures (below 77°C (171°F).
If it is not fully closed, replace the thermostat.

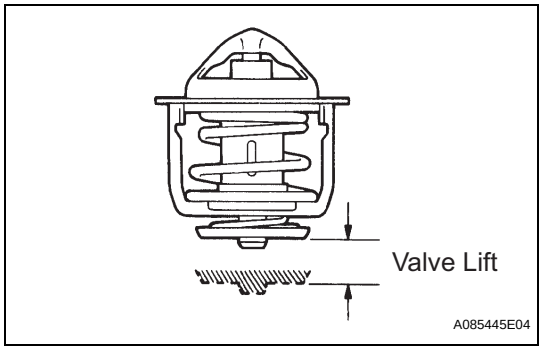

CO

REMOVAL

1. **DISCONNECT CABLE FROM NEGATIVE BATTERY TERMINAL**
   CAUTION:
   Wait at least 90 seconds after disconnecting the cable from the negative (-) battery terminal to prevent airbag and seat belt pretensioner activation.
2. **REMOVE NO. 1 ENGINE UNDER COVER**
3. **REMOVE FRONT FENDER APRON RH**
4. **REMOVE RADIATOR SUPPORT OPENING COVER**
5. **DRAIN ENGINE COOLANT (See page CO-6)**
6. **REMOVE FRONT SUSPENSION MEMBER REINFORCEMENT RH (See page EM-6)**
7. **REMOVE FAN AND GENERATOR V BELT (See page EM-6)**
8. **REMOVE GENERATOR ASSEMBLY (See page CH-9)**
9. **REMOVE WATER PUMP PULLEY**
   (a) Using SST, remove the 4 bolts and water pump pulley.
   SST 09960-10010 (09962-01000, 09963-00700)

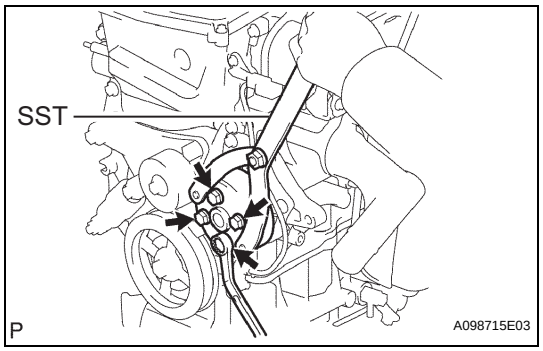

10. **REMOVE WATER PUMP ASSEMBLY**
    (a) Remove the clamp of the crankshaft position sensor from the water pump.
    (b) Disconnect the wire of the crankshaft position sensor from the clamp bracket.

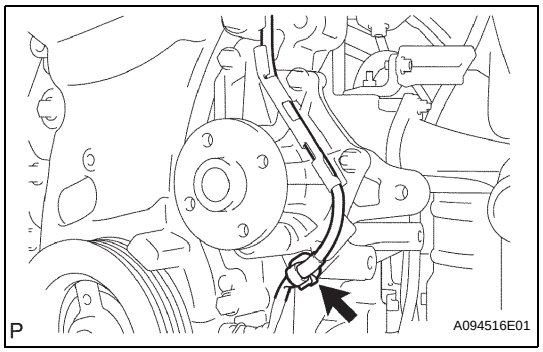

    (c) Remove the 4 bolts, 2 nuts and clamp bracket.

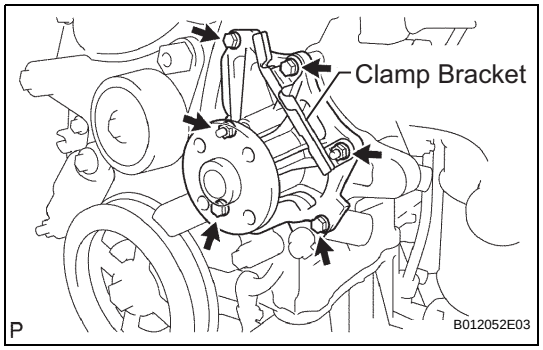

CO

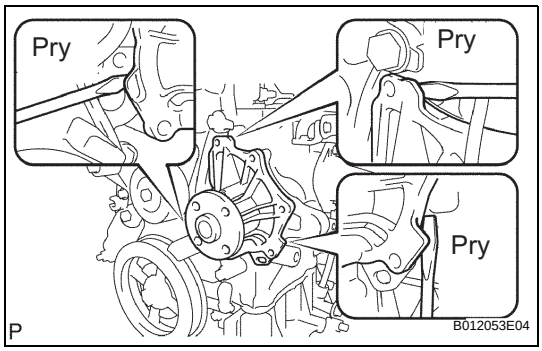

(d) Using a screwdriver, pry between the water pump and cylinder block, and then remove the water pump.
NOTICE:
Be careful not to damage the contact surfaces of the water pump and cylinder block.

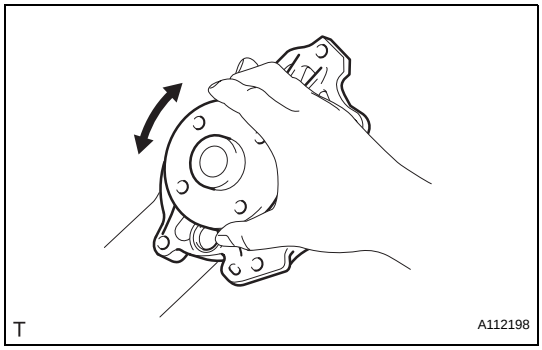

INSPECTION

1. INSPECT WATER PUMP ASSEMBLY

(a) Visually check the drain hole for coolant leakage.
If leakage is found, replace the water pump assembly.

(b) Turn the pulley, and then check that the water pump bearing moves smoothly without making a "click" noise.
If it does not move smoothly, replace the water pump assembly.

INSTALLATION

1. INSTALL WATER PUMP ASSEMBLY

(a) Remove any old seal packing material from the contact surface.

(b) Apply a continuous line of seal packing as shown in the illustration.

Seal packing:
Toyota Genuine Seal Parking Black, Three Bond 1207B or equivalent
Standard seal diameter:
2.2 to 2.5 mm (0.09 to 0.10 in.)
NOTICE:
- **Remove any oil from the contact surface.**
- **The parts must be set within 3 minutes after applying seal packing. Otherwise, the material must be removed and reapplied.**

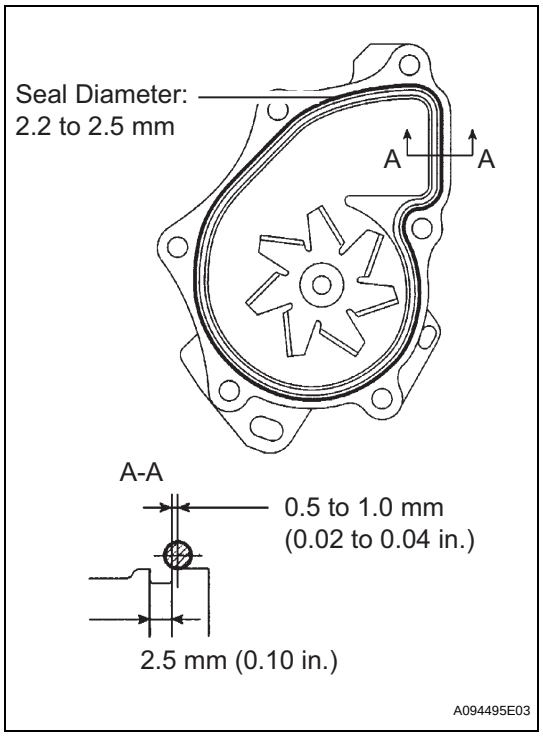

(c) Install the water pump and clamp bracket with the 4 bolts and 2 nuts.
Torque: 9.0 N*m (92 kgf*cm, 80 in.*lbf)

(d) Install the wire of the crankshaft position sensor onto the clamp bracket.

(e) Install the clamp of the crankshaft position sensor onto the water pump.

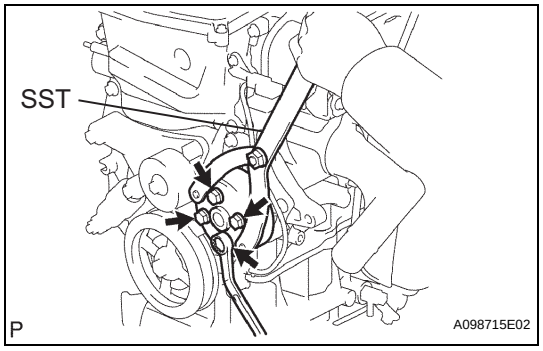

2. INSTALL WATER PUMP PULLEY

(a) Using SST, install the water pump pulley with the 4 bolts.
SST 09960-10010 (09962-01000, 09963-00700)
Torque: 26 N*m (265 kgf*cm, 19 ft.*lbf)

3. INSTALL GENERATOR ASSEMBLY (See page CH-15)

4. INSTALL FAN AND GENERATOR V BELT (See page EM-7)

5. INSTALL FRONT SUSPENSION MEMBER REINFORCEMENT RH (See page EM-7)

6. CONNECT CABLE TO NEGATIVE BATTERY TERMINAL

7. ADD ENGINE COOLANT (See page CO-6)

8. CHECK FOR ENGINE COOLANT LEAKS (See page CO-1)

9. INSTALL RADIATOR SUPPORT OPENING COVER

10. INSTALL FRONT FENDER APRON RH

11. INSTALL NO. 1 ENGINE UNDER COVER

WATER PUMP

COMPONENTS

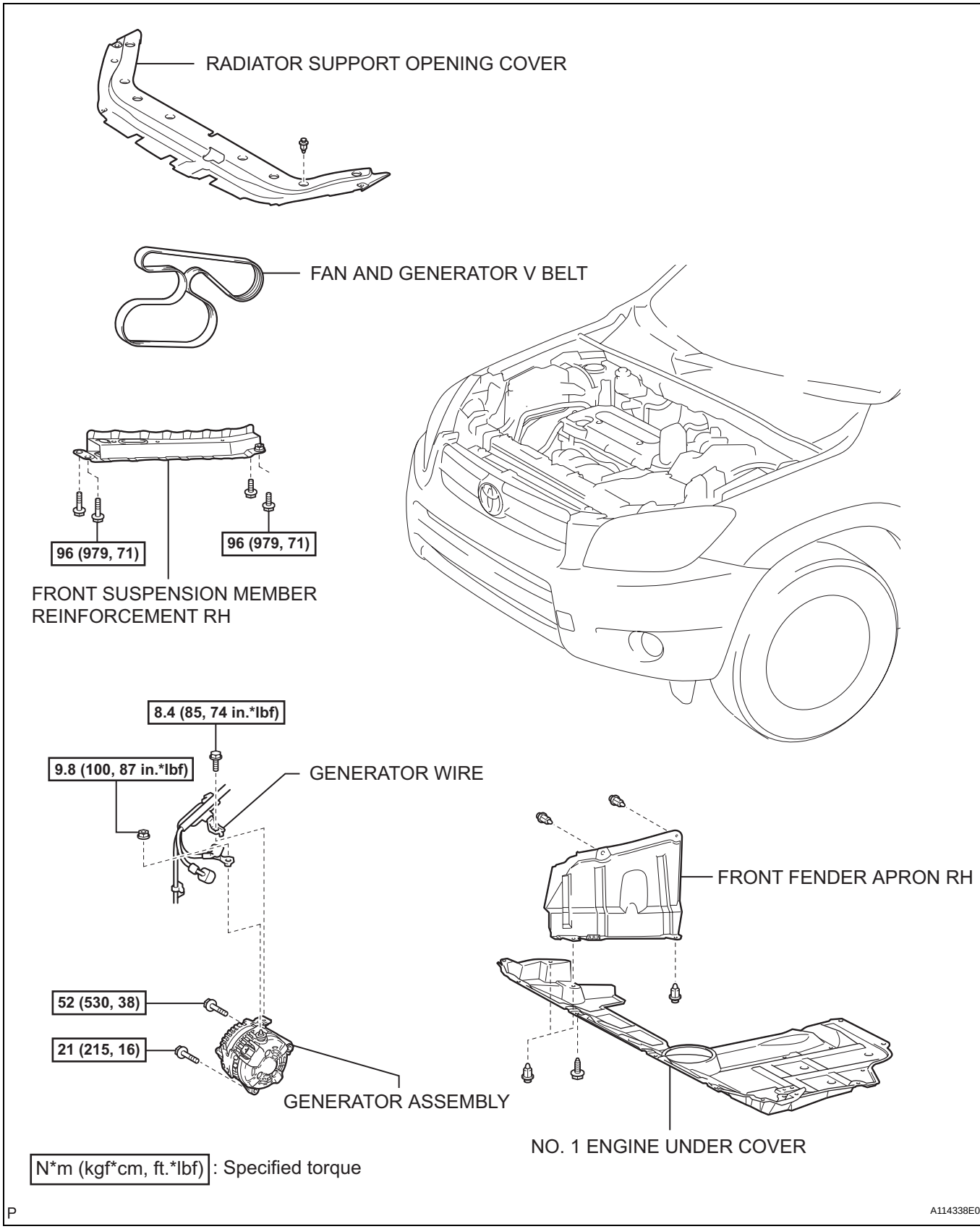

CO

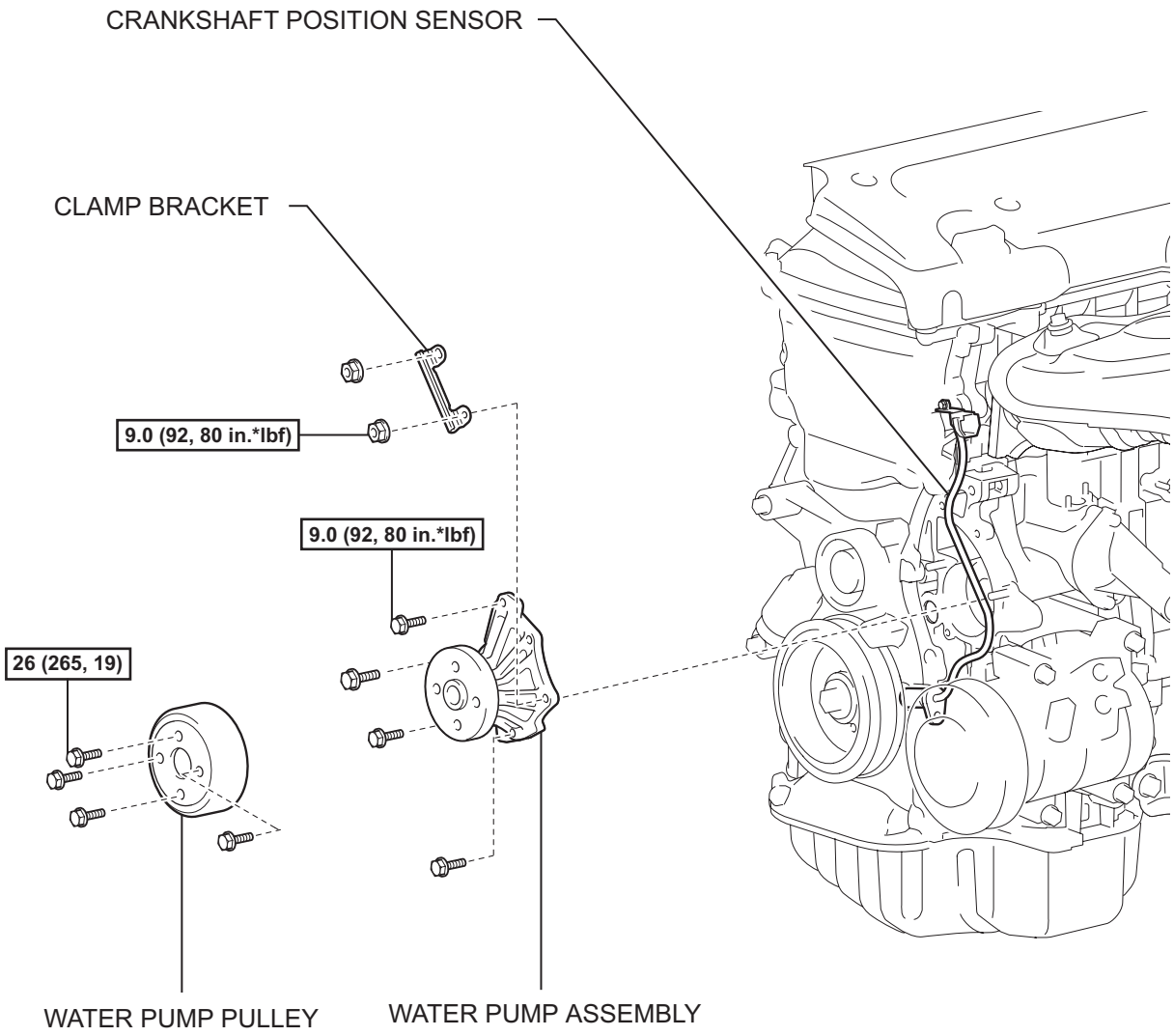

N*m (kgf*cm, ft.*lbf) : Specified torque

A114324E03

REMOVAL

1. **DISCONNECT CABLE FROM NEGATIVE BATTERY TERMINAL**
   CAUTION:
   Wait at least 90 seconds after disconnecting the cable from the negative (-) battery terminal to prevent airbag and seat belt pretensioner activation.
2. **REMOVE AIR FUEL RATIO SENSOR (for Bank 1 Sensor 1)**
   (a) Disconnect the sensor connector.
   (b) Using SST, remove the sensor from the exhaust manifold.
   SST 09224-00010

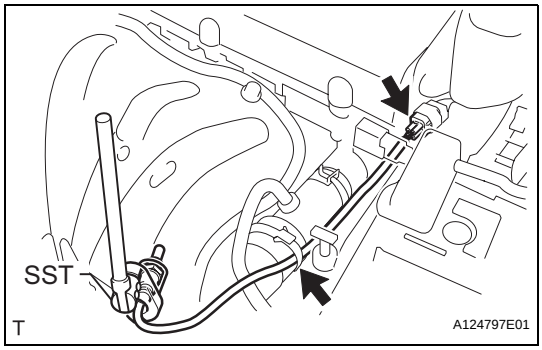

INSPECTION

1. **INSPECT AIR FUEL RATIO SENSOR (for Bank 1 Sensor 1)**
   (a) Measure the resistance of the sensor.
   Standard resistance

Tester Connection	Specified Condition
1 (HA1A) - 2 (+B)	1.8 to 3.4 Ω at 20°C (68°F)
1 (HA1A) - 4 (A1A-)	10 kΩ or higher

   If the resistance is not as specified, replace the sensor.

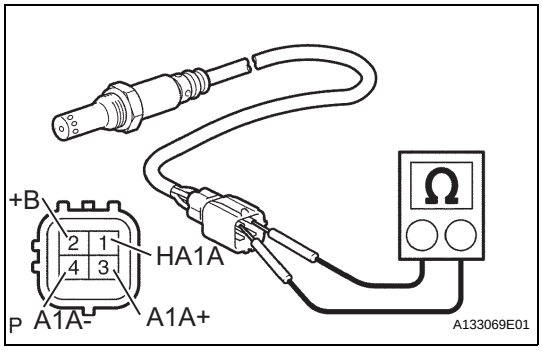

INSTALLATION

1. **INSTALL AIR FUEL RATIO SENSOR (for Bank 1 Sensor 1)**
   (a) Using SST, install the sensor to the exhaust manifold.
   SST 09224-00010
   Torque: 40 N*m (408 kgf*cm, 30 ft.*lbf) for use with SST
   44 N*m (449 kgf*cm, 32 ft.*lbf) for use without SST
   HINT:
   - Use a torque wrench with a fulcrum length of 30 cm (11.81 in.).
   - Make sure SST and wrench are connected in a straight line.

   (b) Connect the sensor connector.
2. **CONNECT CABLE TO NEGATIVE BATTERY TERMINAL**
3. **CHECK FOR EXHAUST GAS LEAKS**

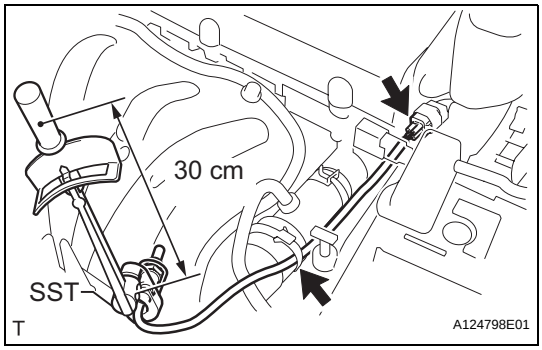

AIR FUEL RATIO SENSOR

COMPONENTS

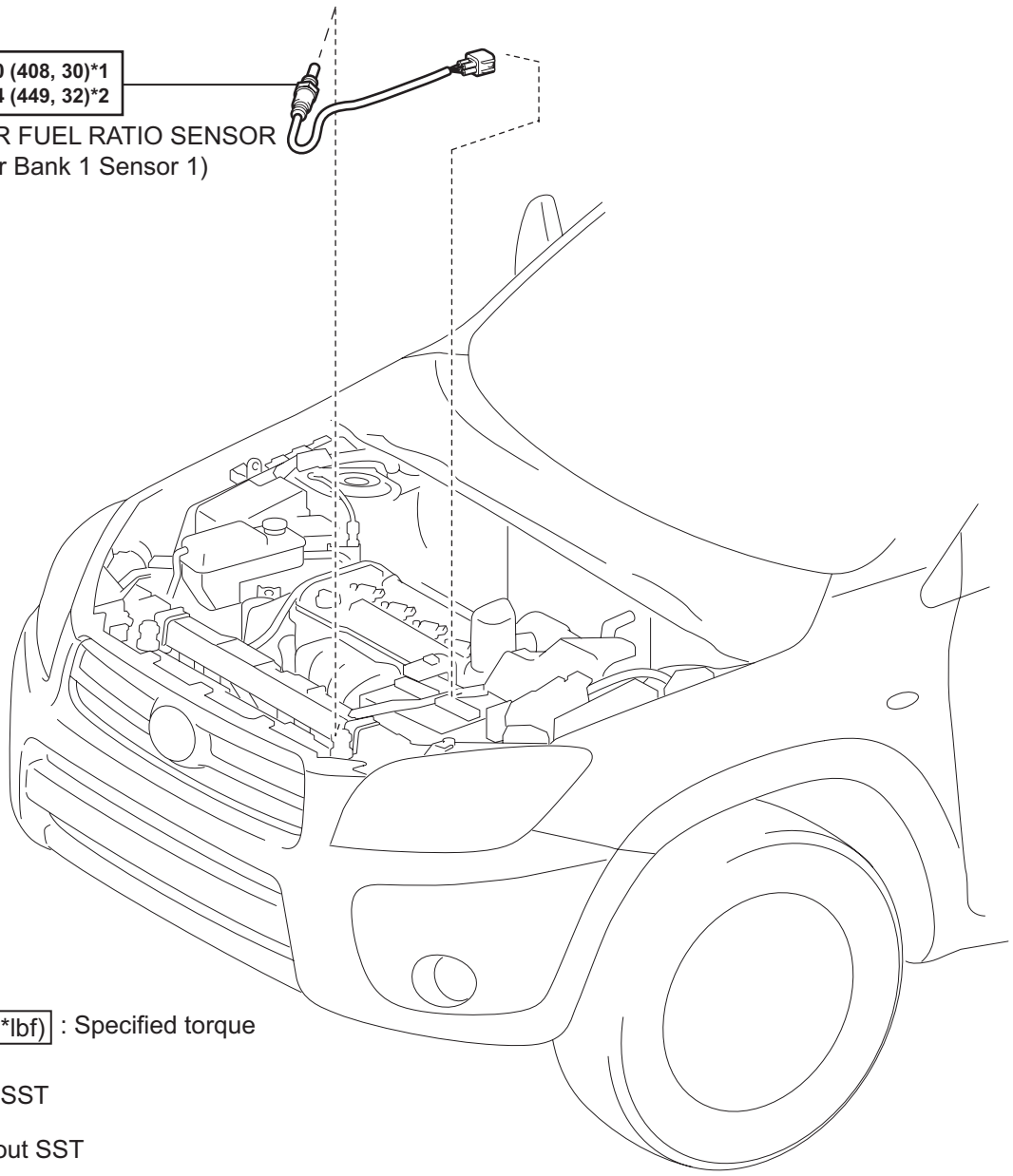

EC

N*m (kgf*cm, ft.*lbf) : Specified torque

*1: For use with SST

*2: For use without SST

T

A124796E01

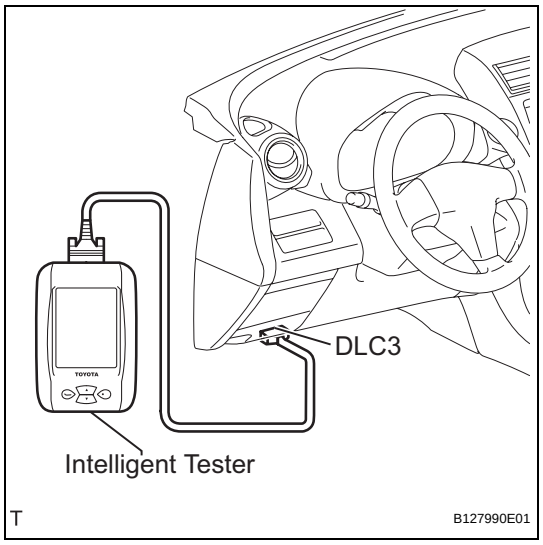

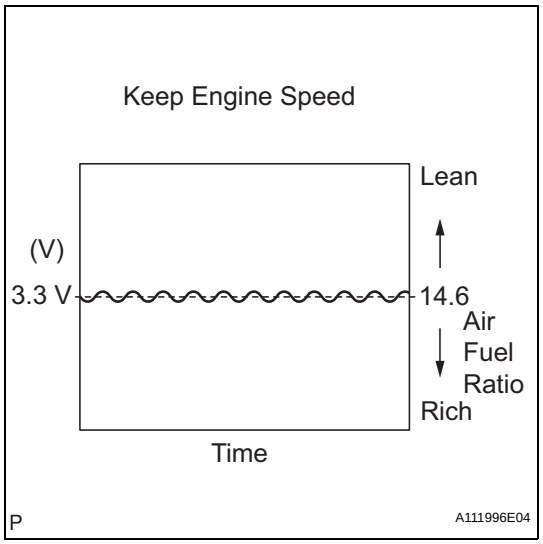

ON-VEHICLE INSPECTION

1. CHECK AIR FUEL RATIO COMPENSATION SYSTEM

(a) Connect the intelligent tester to the DLC3.

(b) Turn the ignition switch ON.

(c) Select the following menu items: Data List / A/FS B1 S1 and O2S B1 S2.

(d) Warm up the A/F sensor with the engine speed at 2,500 rpm for approximately 2 minutes.

(e) Keep the engine speed at 2,500 rpm and confirm that the display of "A/FS B1 S1" is as shown in the illustration.

HINT:

- The illustration may slightly differ from the display on the intelligent tester.
- Only the intelligent tester displays the waveform of the A/F sensor.

(f) Confirm that the display of "O2S B1 S2" changes between 0 to 1 V with the engine speed at 2,500 rpm.

OK:

The voltage output oscillates more than 8 times in 10 seconds.

NOTICE:

- **Perform the check immediately after warming the engine up.**
- **If the voltage variation could not be verified, warm up the A/F sensor again. If it could not be verified even after warming up the sensor again, check for DTCs (see page ES-292).**

EC

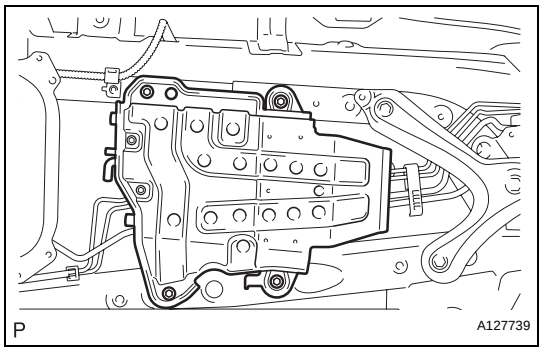

(b) Remove the 4 bolts, clip and canister.

INSPECTION

1. INSPECT CANISTER

(a) Visually check the canister for cracks or damage.
If cracks or damage is found, replace the canister.

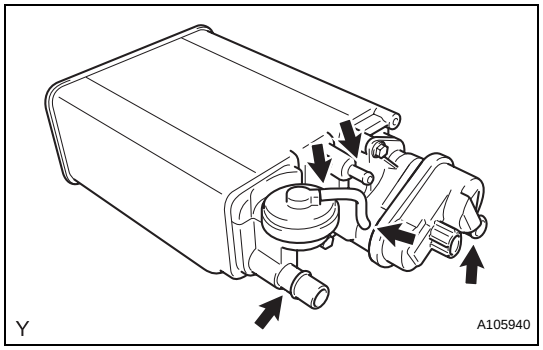

(b) Check the canister operation.

(1) While holding the purge port closed, blow air 0.39 kPa (4.0 kgf/cm^2, 3 mmHg) into the vent port, and check that air flows from the air inlet port.
If the result is not as specified, replace the canister.

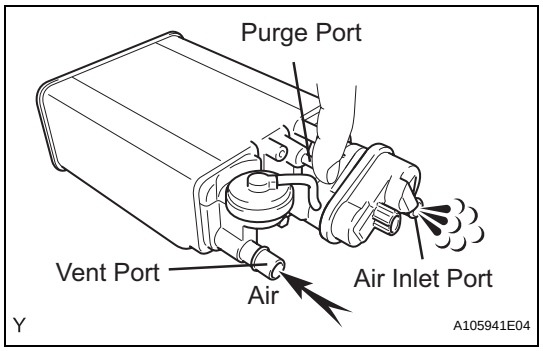

(2) While holding the air inlet port closed, blow air 0.39 kPa (4.0 kgf/cm^2, 3 mmHg) into the vent port, and check that air flows from the purge port.
If the result is not as specified, replace the canister.

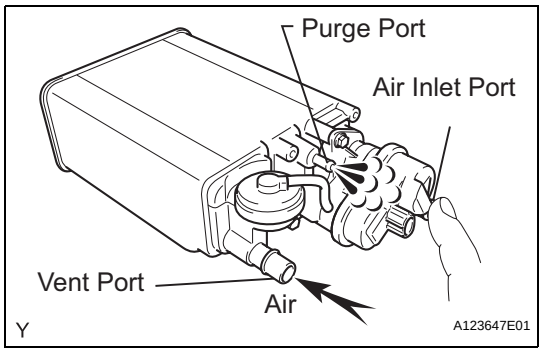

(3) While holding the air inlet port closed, apply vacuum 3.43 kPa (35.0 kgf/cm^2, 25.7 mmHg) to the vent port, and check that air is sucked into the purge port.
If the result is not as specified, replace the canister.

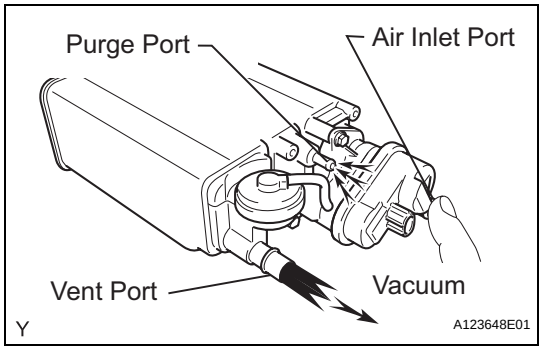

EC

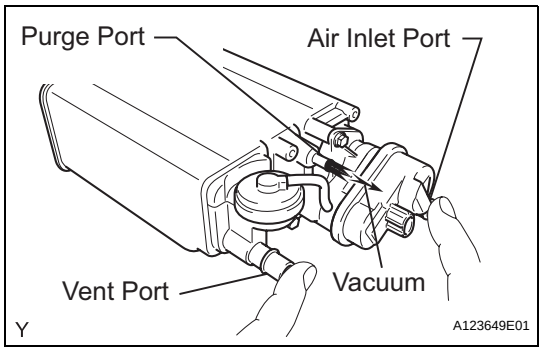

(c) Check the air tightness.
(1) While holding the vent and air inlet ports closed, apply vacuum 3.43 kPa (35.0 kgf/cm^2, 25.7 mmHg) to the purge port, and check that the vacuum is maintained for 1 minute.
If the result is not as specified, replace the canister.

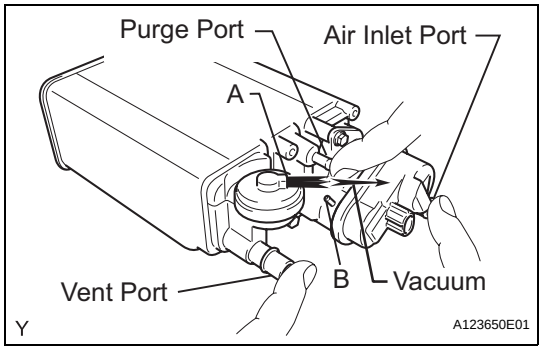

(d) Check the diaphragm.
(1) Remove the air hose between ports A and B.
(2) While holding the vent, purge and air inlet ports closed, apply vacuum 1.42 kPa (14.5 kgf/cm^2, 10.6 mmHg) to port A, and check that air is not sucked into port B.

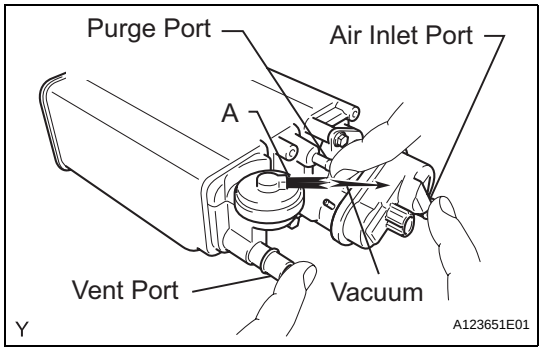

EC

(3) While holding the vent, purge and air inlet ports closed, apply vacuum 1.42 kPa (14.5 kgf/cm^2, 10.6 mmHg) to port A, and measure how long it takes for the vacuum to drop.
Vacuum drop time:
10 seconds or more
If the result is not as specified, replace the canister.

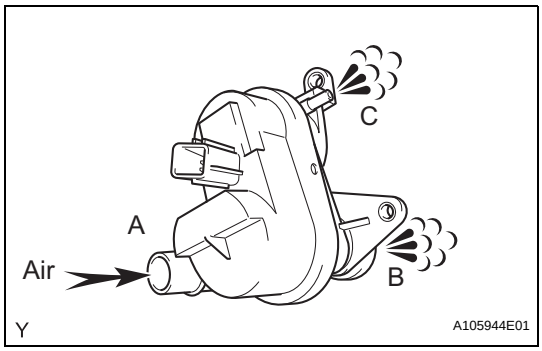

(e) Check the leak detection pump.
(1) Check that air flows from port A to port B and C.
If the result is not as specified, replace the canister.

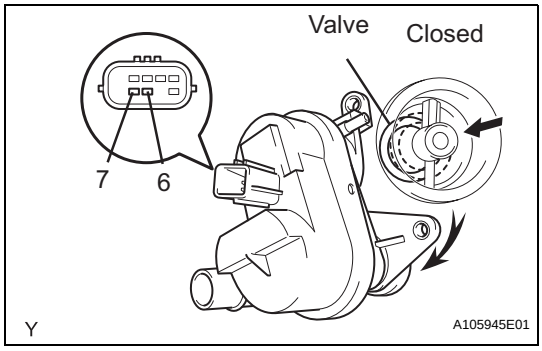

(2) Connect the positive (+) lead of the battery to terminal 7 and the negative (-) lead to terminal 6.
(3) Check that the valve is closed.
If the result is not as specified, replace the canister.
(4) Install the canister pump module.

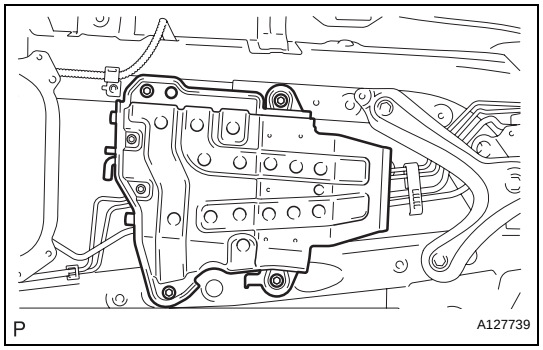

INSTALLATION

1. INSTALL CANISTER

(a) Install the canister with the 4 bolts and clip.
Torque: 20 N*m (204 kgf*cm, 15 ft.*lbf)

(b) Connect the air inlet line tube to the canister (leak detection pump).

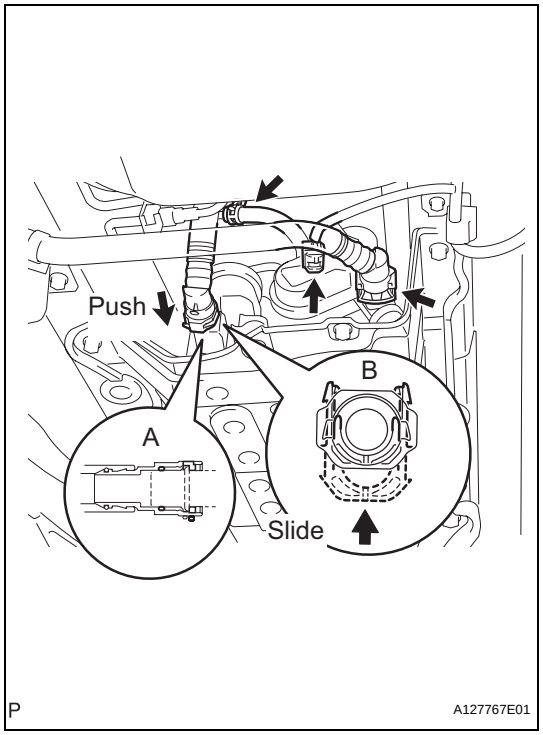

(c) Install the vent line tube.

(1) Connect the pipe to the fuel tube connector, as shown in A in the illustration. Then push up the retainer to lock the claws, as shown in B in the illustration.
NOTICE:
- **Check that there are no scratches or foreign objects around the connected part of the fuel tube connector and pipe before performing this work.**
- **After connecting the fuel tank vent tube, check that the fuel tank vent tube is securely connected by pulling the fuel tube connector and pipe.**

(d) Connect the purge line hose.
HINT:
Install the hose to the canister, and then attach the retainer.

(e) Connect the connector to the canister (leak detection pump).

2. CONNECT CABLE TO NEGATIVE BATTERY TERMINAL

EC

CANISTER

COMPONENTS

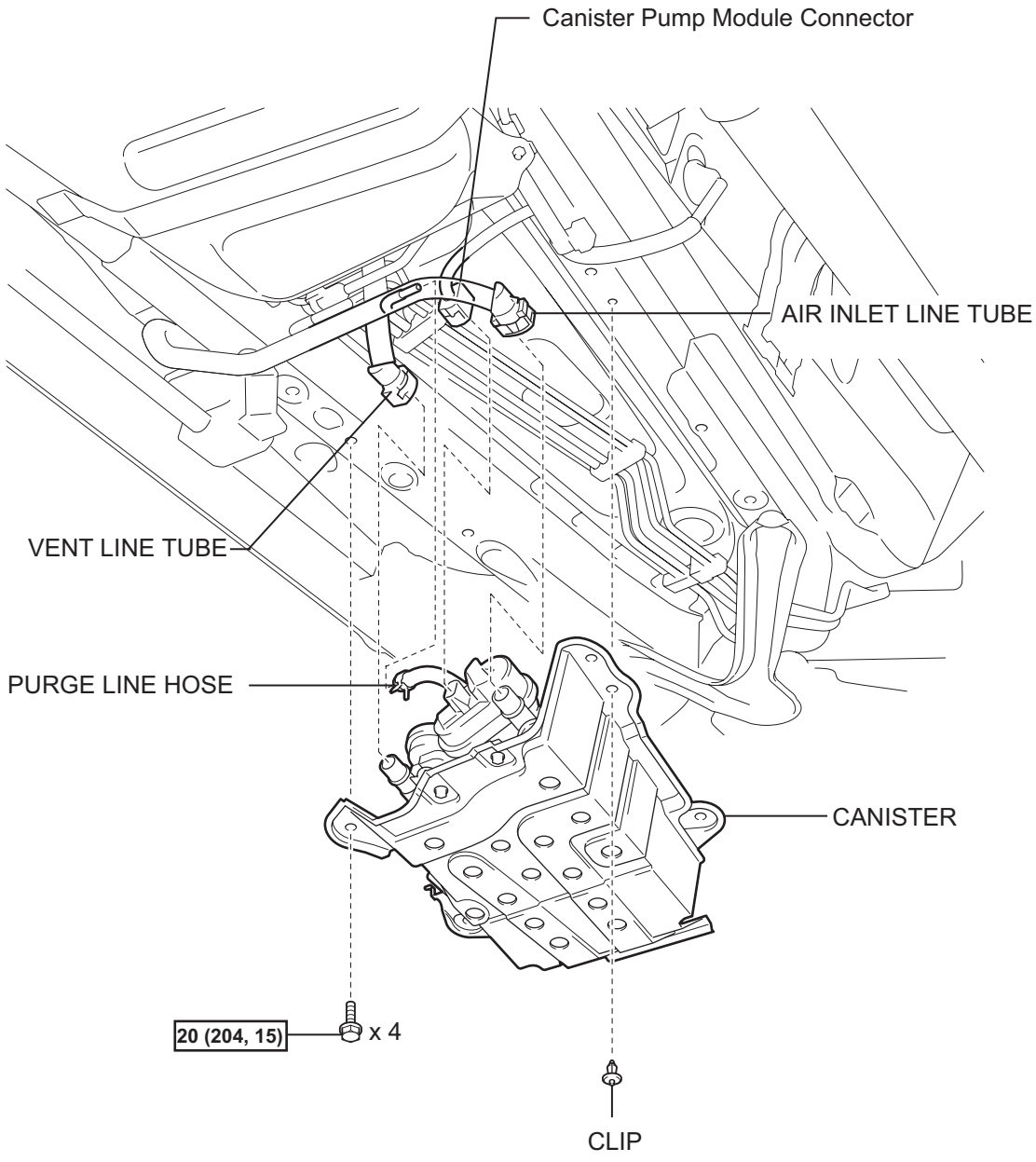

N*m (kgf*cm, ft.*lbf) : Specified torque

P

A127737E01

REMOVAL

1. DISCONNECT CABLE FROM NEGATIVE BATTERY TERMINAL

CAUTION:

Wait at least 90 seconds after disconnecting the cable from the negative (-) battery terminal to prevent airbag and seat belt pretensioner activation.

2. REMOVE CANISTER

(a) Disconnect the 2 tubes, hose and connector.

(1) Using a screwdriver, pry up the retainer.
HINT:
Do not remove the retainer.

(2) Disconnect the purge line hose.

(3) Disconnect the air inlet line tube from the canister.

(4) Disconnect the vent line tube from the canister (leak detection pump).

(5) Disconnect the connector from the canister (leak detection pump).

NOTICE:

- **Remove any dirt or foreign objects on the fuel tube connector before performing this work.**

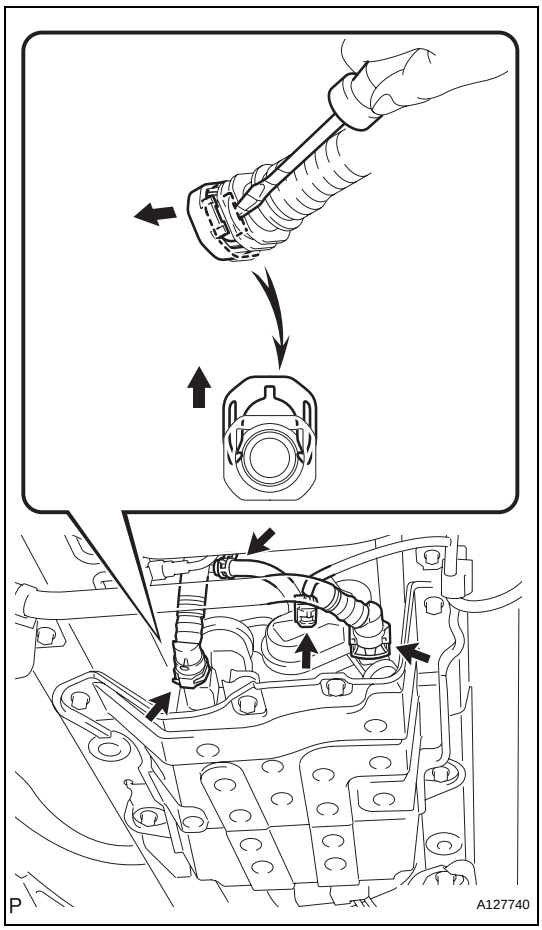

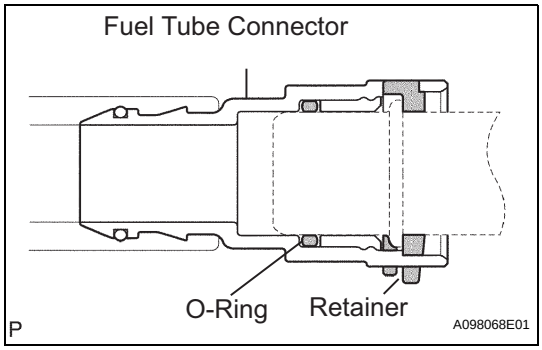

- **Do not allow any scratches or foreign objects on the parts when disconnecting as the fuel tube connector has the O-ring that seals the pipe.**
- **Perform this work by hand. Do not use any tools.**
- **Do not forcibly bend, twist or turn the nylon tube.**
- **Protect the disconnected part by covering it with a plastic bag after disconnecting the fuel tank vent hose.**
- **If the fuel tube connector and pipe are stuck, push and pull to release them.**

EC

SYSTEM DIAGRAM

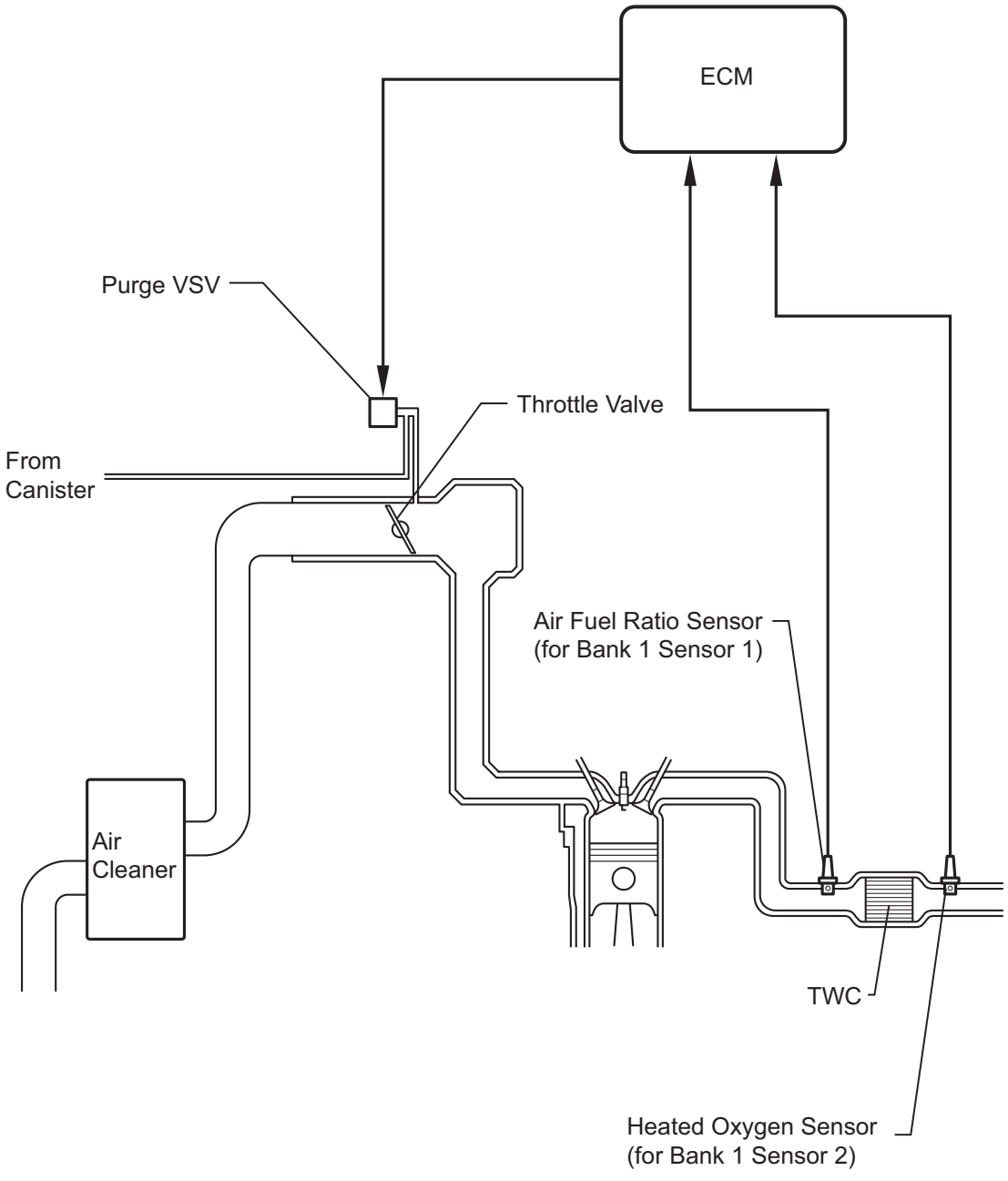

N

A116883E04

EC

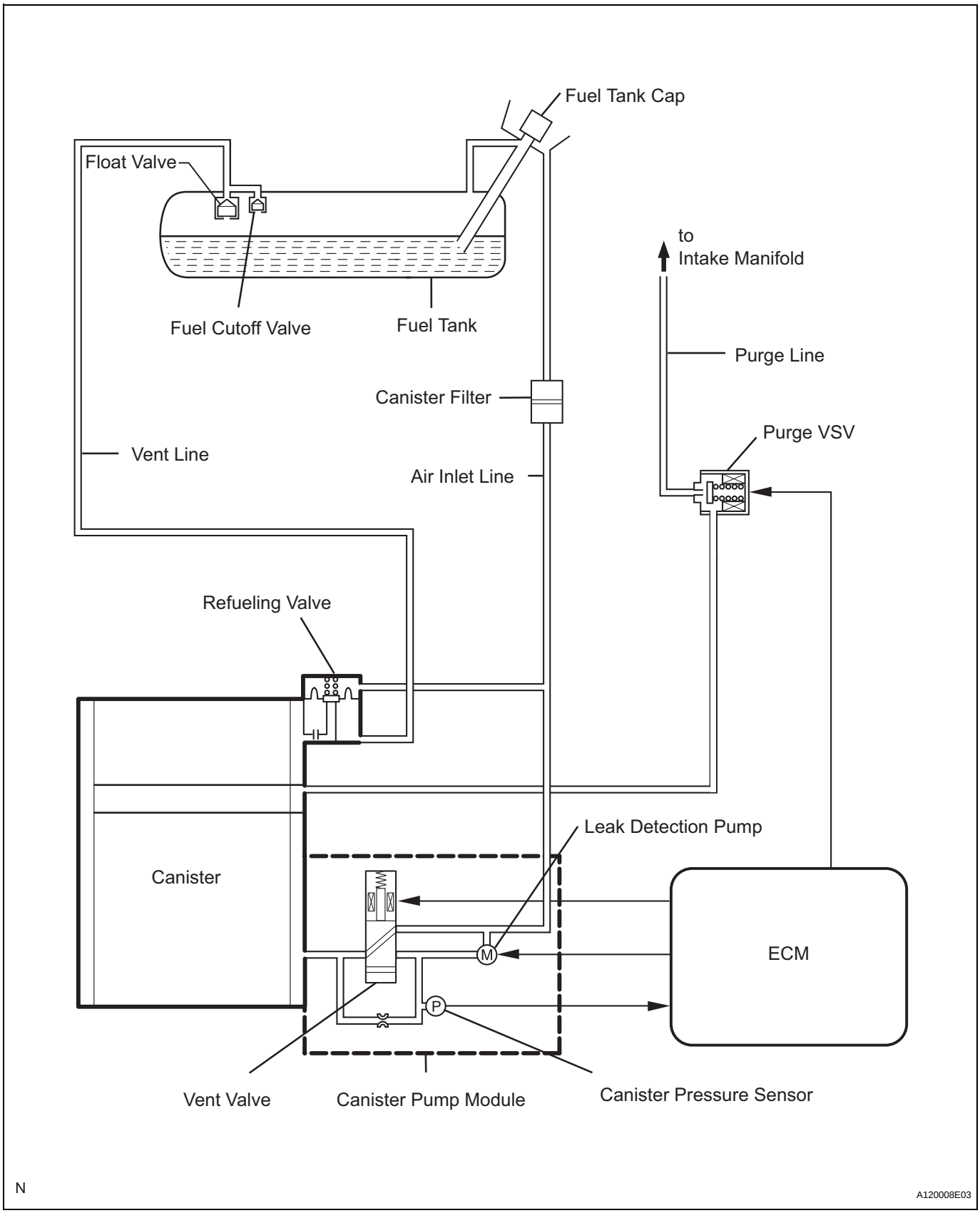
Fuel Tank Cap
Float Valve
to
Intake Manifold
Fuel Cutoff Valve
Fuel Tank
Purge Line
Canister Filter
Purge VSV
Vent Line
Air Inlet Line
Refueling Valve
Leak Detection Pump
Canister
ECM
M
P
Vent Valve
Canister Pump Module
Canister Pressure Sensor
N
A120008E03

EC

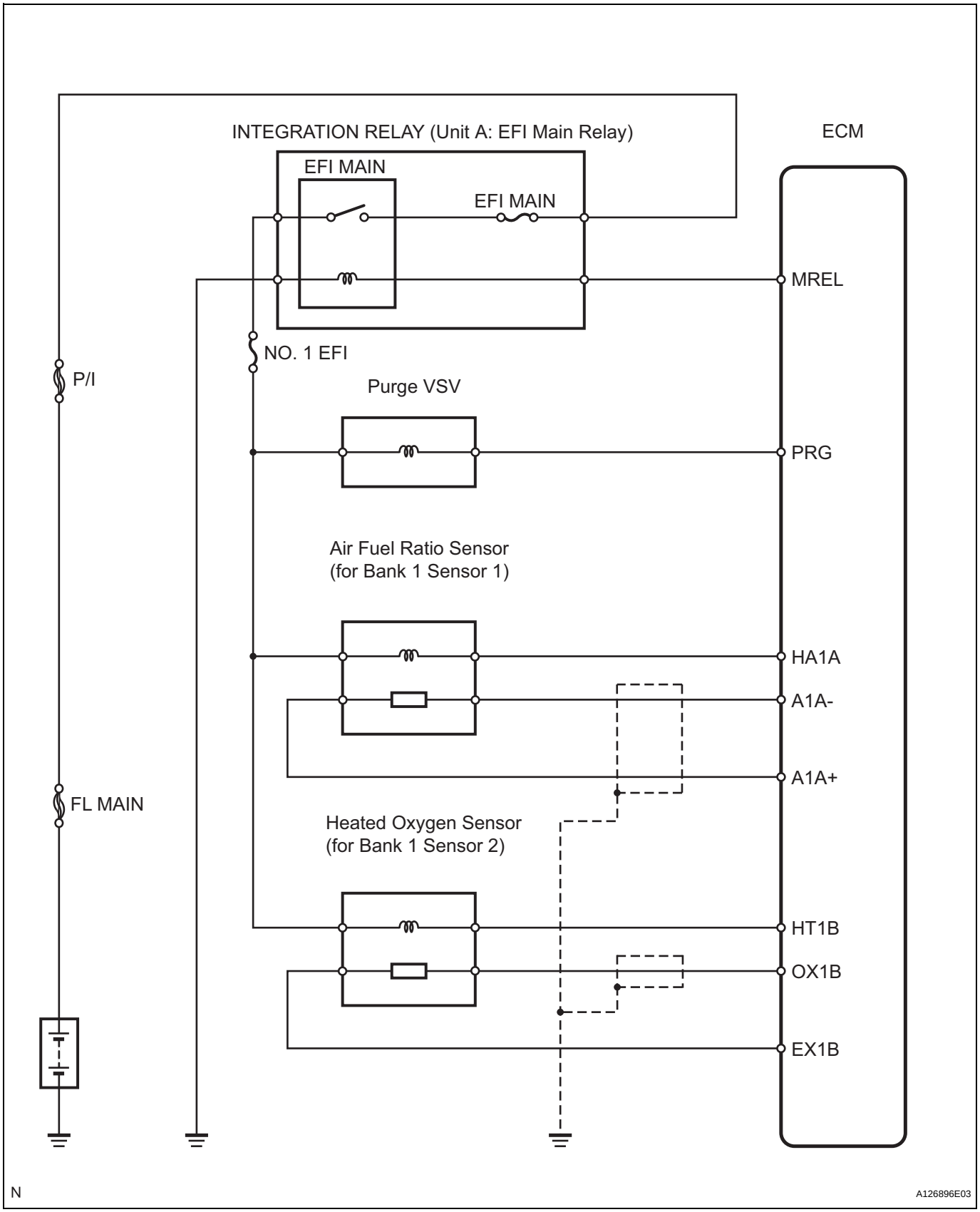
INTEGRATION RELAY (Unit A: EFI Main Relay)
ECM
EFI MAIN
EFI MAIN
MREL
NO. 1 EFI
P/I
Purge VSV
PRG
Air Fuel Ratio Sensor
(for Bank 1 Sensor 1)
HA1A
A1A-
A1A+
FL MAIN
Heated Oxygen Sensor
(for Bank 1 Sensor 2)
HT1B
OX1B
EX1B
N
A126896E03

EC

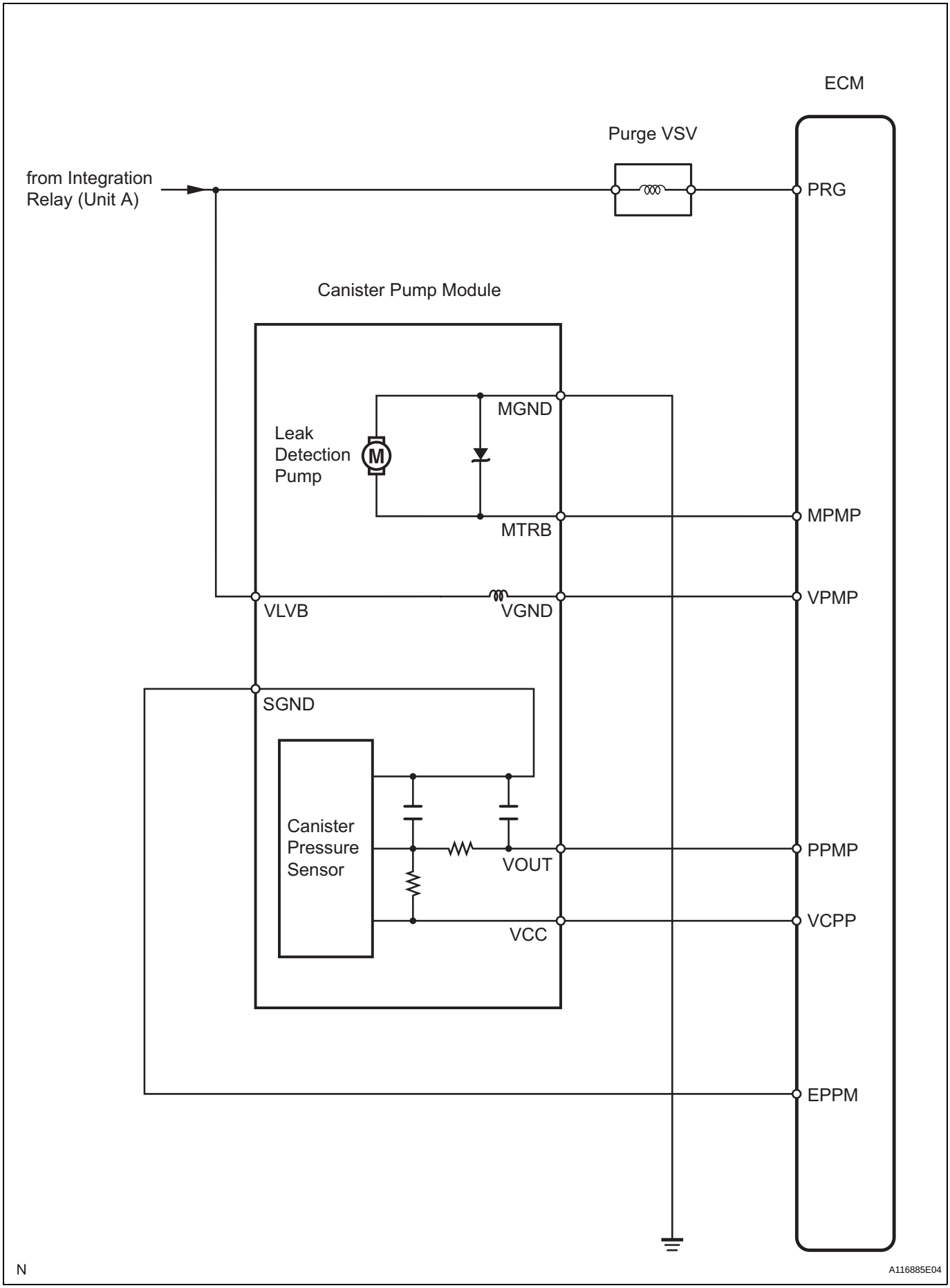
ECM
Purge VSV
from Integration Relay (Unit A)
PRG
Canister Pump Module
MGND
Leak Detection Pump
M
MPMP
MTRB
VPMP
VLVB
VGND
SGND
Canister Pressure Sensor
PPMP
VOUT
VCPP
VCC
EPPM
N
A116885E04

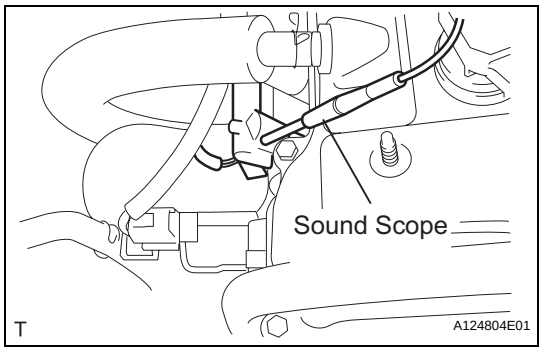

ON-VEHICLE INSPECTION

1. CHECK FUEL CUT RPM

(a) Increase the engine speed to at least 3,500 rpm.

(b) Use a sound scope to check for injector operating noise.

(c) Check that the operating sounds stop momentarily and then resume when the throttle lever is released.

HINT:

Measure with the A/C OFF.

Fuel return rpm:

1,400 rpm

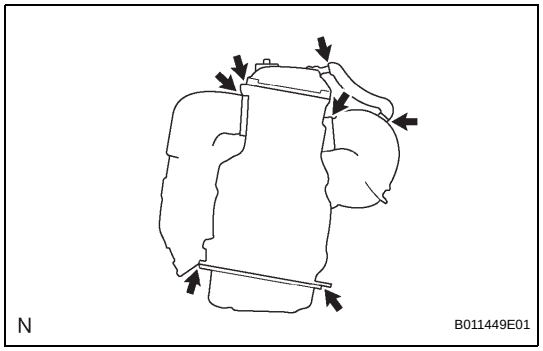

2. CHECK FOR LEAKS

(a) Visually check that the hoses, connections and gaskets have no cracks, leaks or damage.

NOTICE:

- **Detachment or other problems with the engine oil dipstick, filler cap, PCV hose and other components may cause the engine to run improperly.**
- **Disconnection, looseness or cracks in the parts of the air induction system between the throttle body and cylinder head will allow air suction and cause an engine failure or engine malfunctions.**

If the result is not as specified, replace parts as necessary.

3. CHECK LINE AND CONNECTORS

(a) Visually check for loose connections, sharp bends or damage.

4. CHECK FUEL TANK ASSEMBLY

(a) Visually check for deformation, cracks or fuel leakage.

5. CHECK FUEL TANK AND VENT LINE

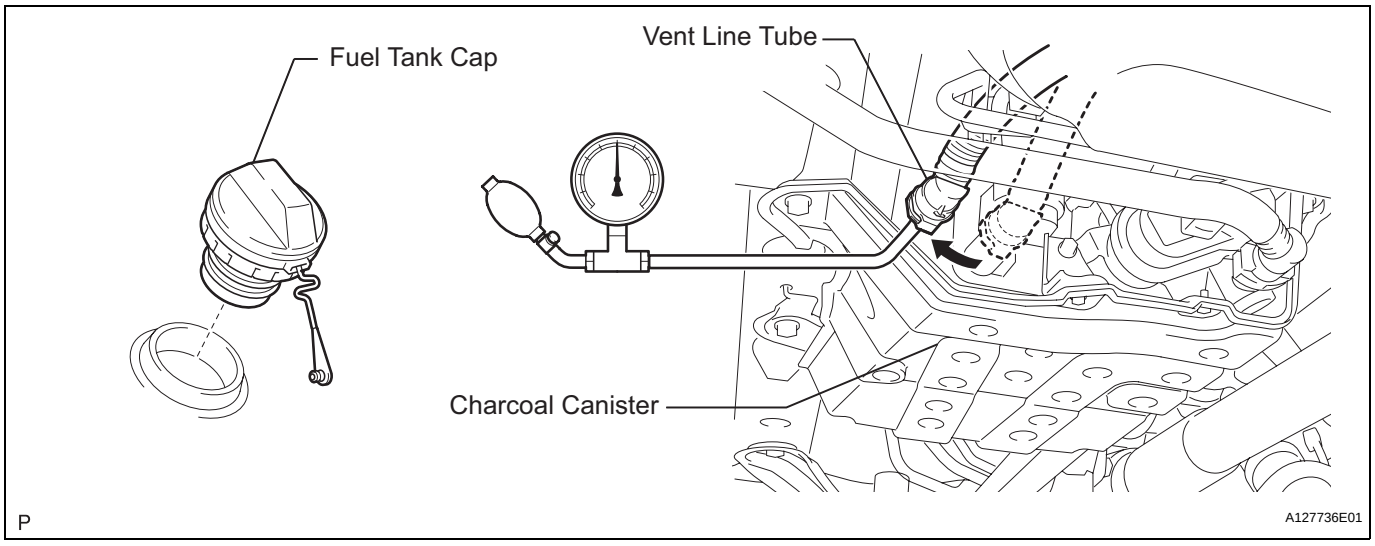

(a) Disconnect the vent line tube from the canister.

(b) Connect a pressure gauge to the vent line tube.

EC

(c) Apply 4 kPa (41 kgf/cm^2, 30 mmHg) of pressure to the vent line of the fuel tank.
HINT:
Perform this inspection with the fuel tank less than 90% full. When the fuel tank is full, the fuel cutoff valve closes and pressure is released through the 1.5 mm orifice. As a result, when the fuel tank cap is removed, the pressure does not decrease smoothly.

(d) Check that the fuel tank pressure is maintained for some time, and does not decrease immediately.
HINT:
If the pressure decreases immediately, one of the following may be the cause:
- The fuel tank cap is not completely tightened.
- The fuel tank cap is damaged.
- Air is leaking from the vent line.
- The fuel tank is damaged.

(e) When the fuel tank cap is removed, check that pressure is released smoothly.
HINT:
If the pressure does not drop, replace the fuel tank assembly.

(f) Reconnect the vent line tube to the canister.

EC

6. CHECK AIR INLET LINE

(a) Disconnect the air inlet line hose from the charcoal canister.

(b) Check that air flows freely into the air inlet line.
HINT:
If air does not flow freely into the air inlet line, repair or replace it.

(c) Reconnect the air inlet line hose to the charcoal canister.

EMISSION CONTROL SYSTEM

PARTS LOCATION

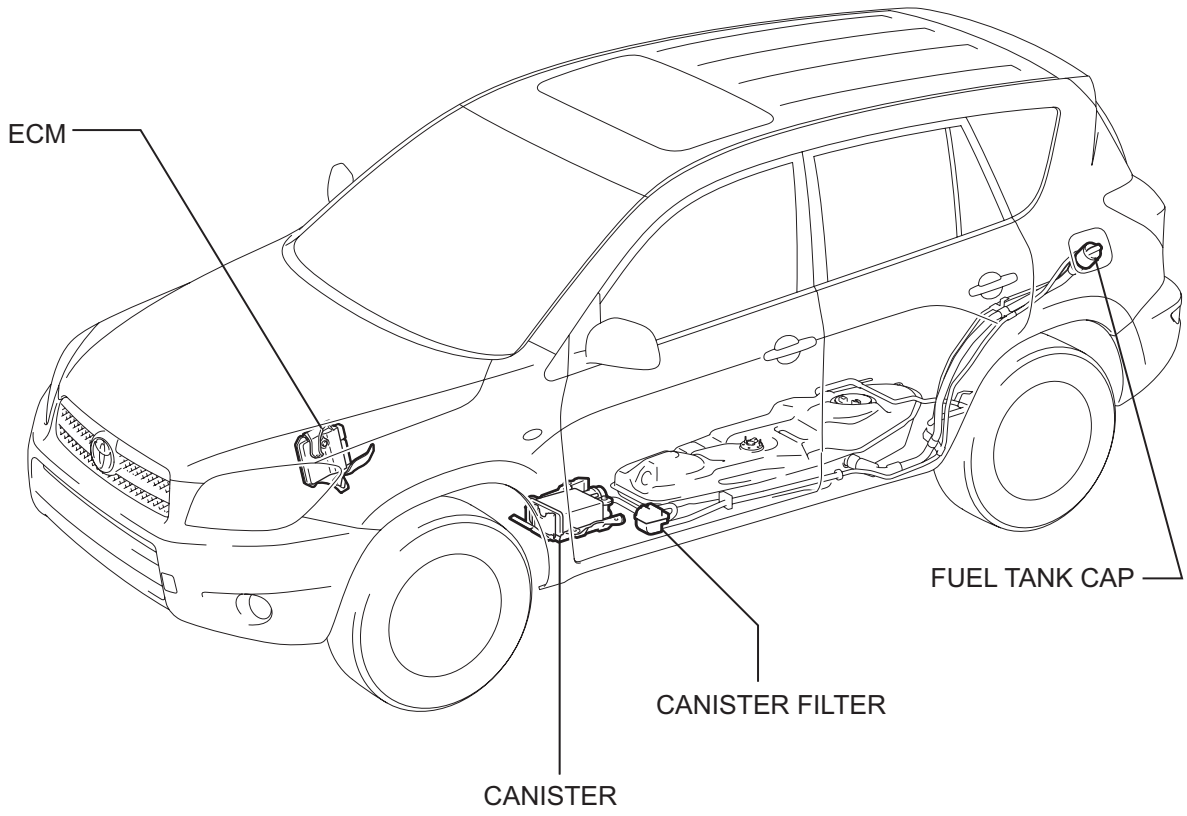

P

A127735E01

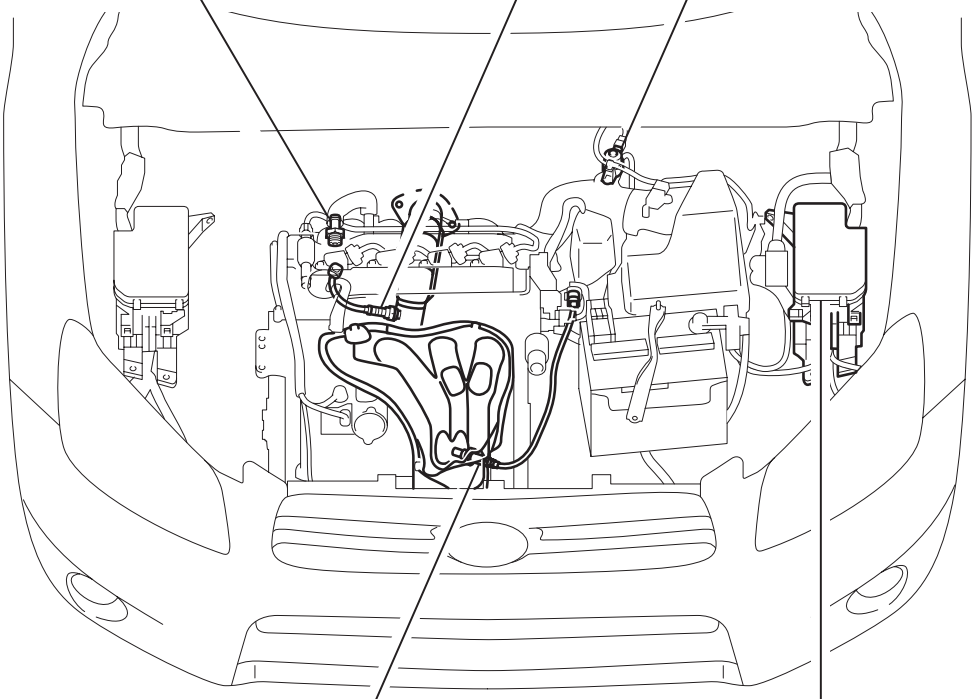

EC

T

A124850E02

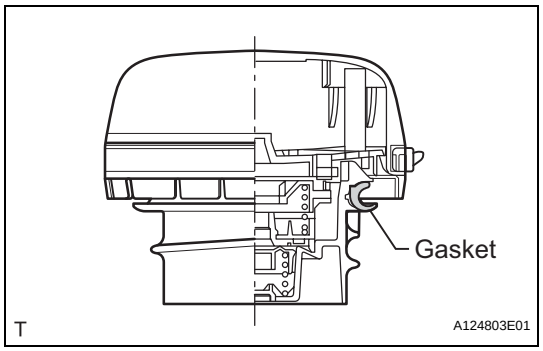

FUEL TANK CAP

INSPECTION

1. INSPECT FUEL TANK CAP ASSEMBLY

(a) Visually check that the cap and gasket are not deformed or damaged.
If the result is not as specified, replace the cap assembly or gasket.

HEATED OXYGEN SENSOR

COMPONENTS

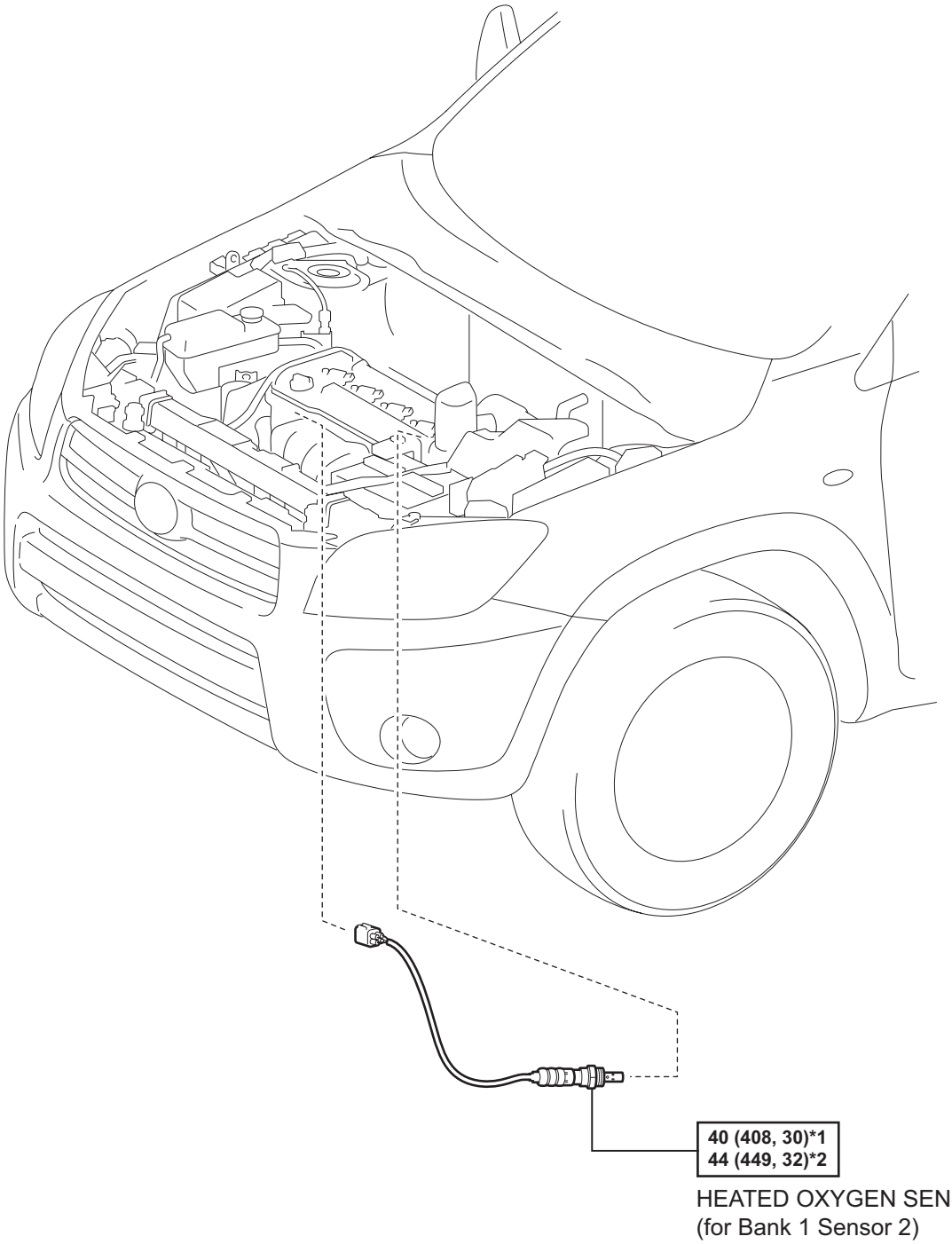

N*m (kgf*cm, ft.*lbf) : Specified torque

*1: For use with SST

*2: For use without SST

T

A132408E01

EC

REMOVAL

1. **DISCONNECT CABLE FROM NEGATIVE BATTERY TERMINAL**
   CAUTION:
   Wait at least 90 seconds after disconnecting the cable from the negative (-) battery terminal to prevent airbag and seat belt pretensioner activation.

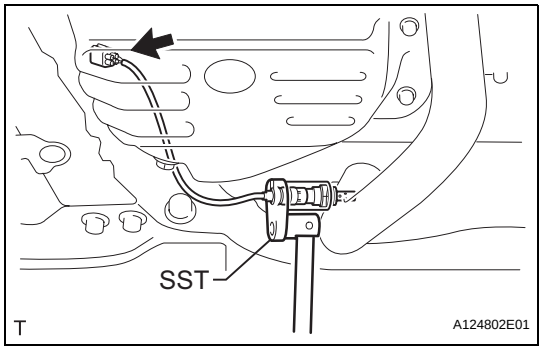

2. **REMOVE HEATED OXYGEN SENSOR (for Bank 1 Sensor 2)**
   (a) Disconnect the sensor connector.
   (b) Using SST, remove the sensor from the front exhaust pipe.
   SST 09224-00010

INSPECTION

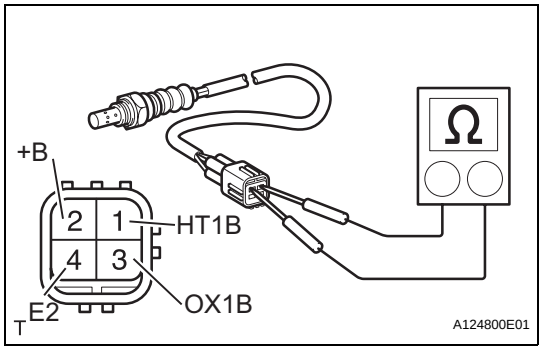

1. **INSPECT HEATED OXYGEN SENSOR (for Bank 1 Sensor 2)**
   (a) Measure the resistance of the sensor.
   Standard resistance

Tester Connection	Specified Condition
1 (HT1B) - 2 (+B)	11 to 16 Ω at 20°C (68°F)
1 (HT1B) - 4 (E2)	10 kΩ or higher

   If the resistance is not as specified, replace the sensor.

INSTALLATION

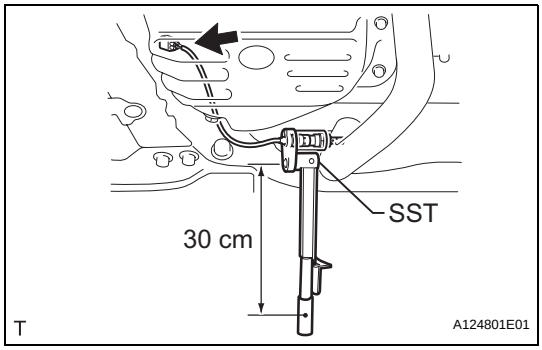

1. **INSTALL HEATED OXYGEN SENSOR (for Bank 1 Sensor 2)**
   (a) Using SST, install the sensor to the front exhaust pipe.
   SST 09224-00010
   Torque: 40 N*m (408 kgf*cm, 30 ft.*lbf) for use with SST
   44 N*m (449 kgf*cm, 32 ft.*lbf) for use without SST
   HINT:
   - Use a torque wrench with a fulcrum length of 30 cm (11.81 in.).
   - Make sure SST and wrench are connected in a straight line.

   (b) Connect the sensor connector.

2. **CONNECT CABLE TO NEGATIVE BATTERY TERMINAL**

3. **CHECK FOR EXHAUST GAS LEAKS**

VACUUM SWITCHING VALVE

COMPONENTS

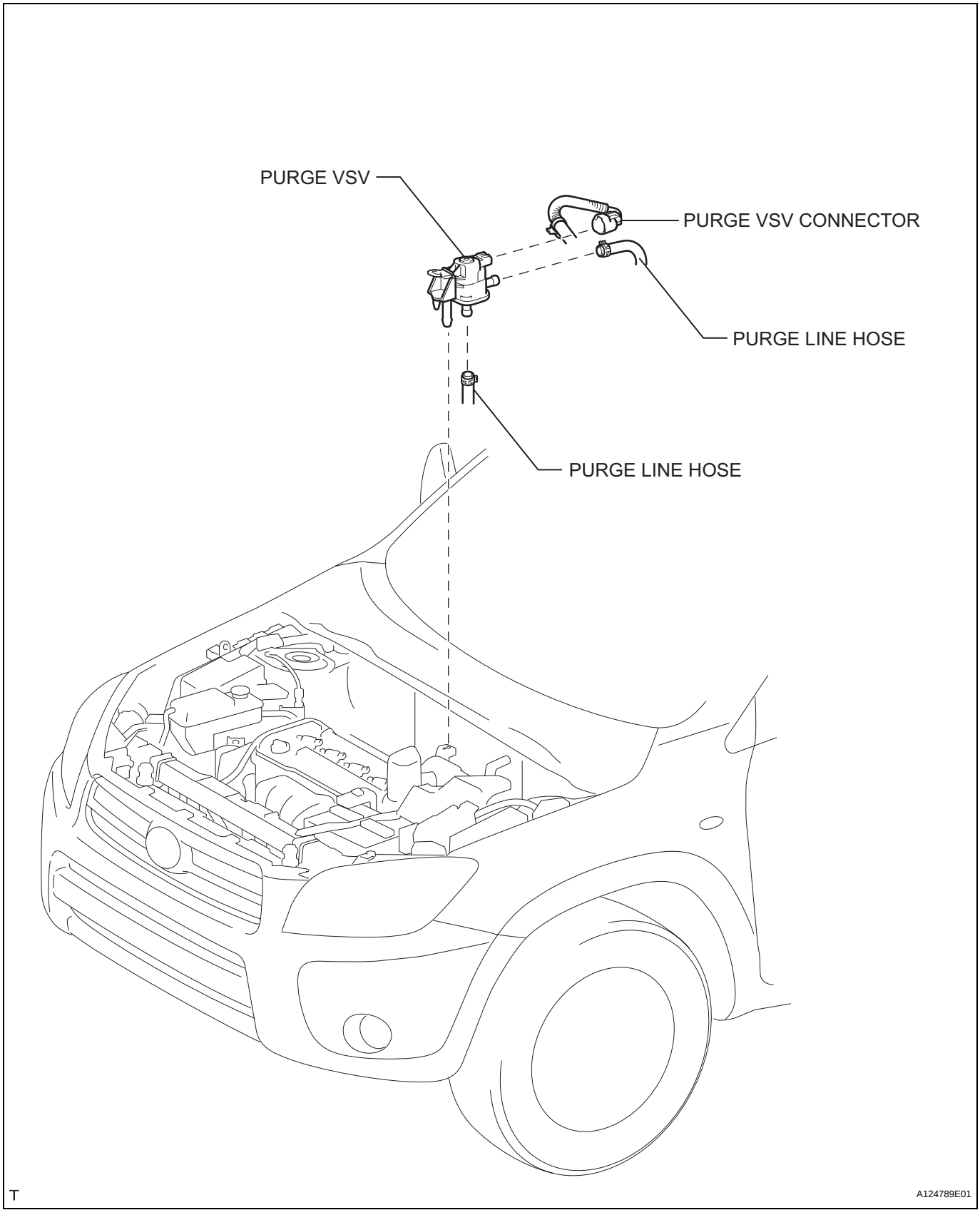

EC

REMOVAL

1. DISCONNECT CABLE FROM NEGATIVE BATTERY TERMINAL

CAUTION:

Wait at least 90 seconds after disconnecting the cable from the negative (-) battery terminal to prevent airbag and seat belt pretensioner activation.

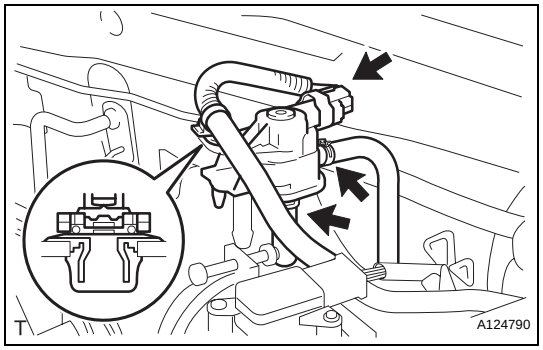

2. REMOVE PURGE VSV

(a) Disconnect the purge VSV connector.
(b) Disconnect the wire harness clamp.
(c) Disconnect the 2 purge line hoses from the purge VSV.
(d) Remove the purge VSV from the air cleaner hose.

INSPECTION

1. INSPECT PURGE VSV

(a) Measure the resistance of the purge VSV.

Standard resistance

Tester Connection	Specified Condition
1 - 2	23 to 26 Ω at 20°C (68°F)
1 - Body ground 2 - Body ground	10 MΩ or higher

If the result is not as specified, replace the purge VSV.

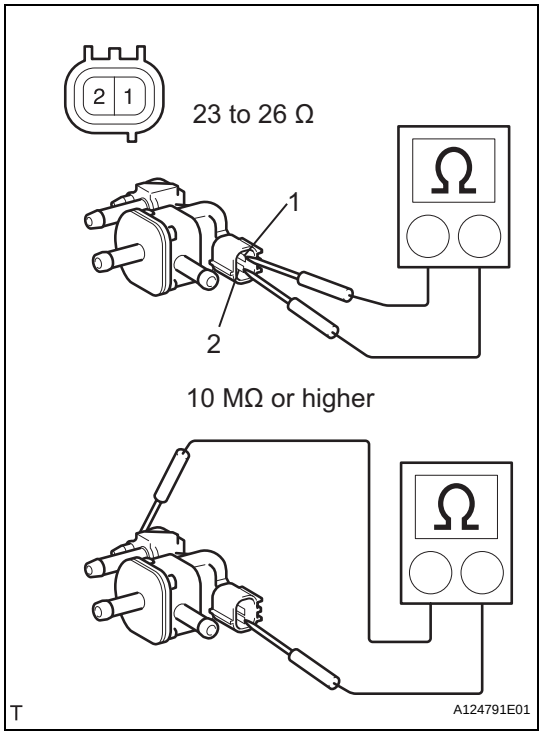

(b) Check the operation of the purge VSV.
(1) Check that air does not flow from port E to port F.

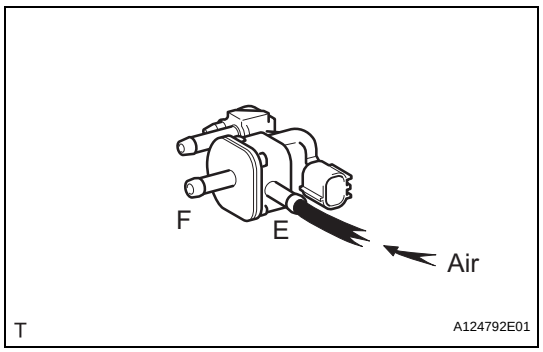

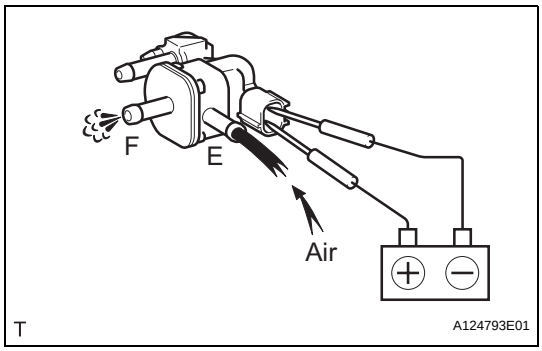

(2) Apply battery voltage across terminals.
(3) Check that air flows from port E to port F.
If the result is not as specified, replace the purge VSV.

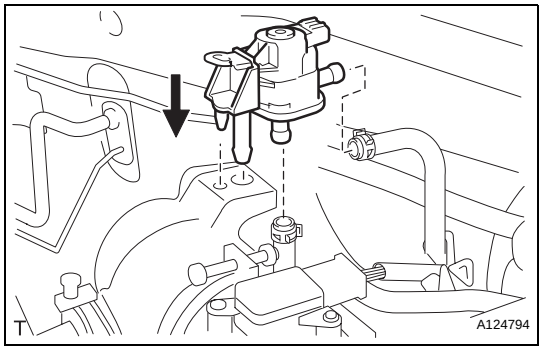

INSTALLATION

1. INSTALL PURGE VSV

(a) Install the purge VSV onto the air cleaner hose.

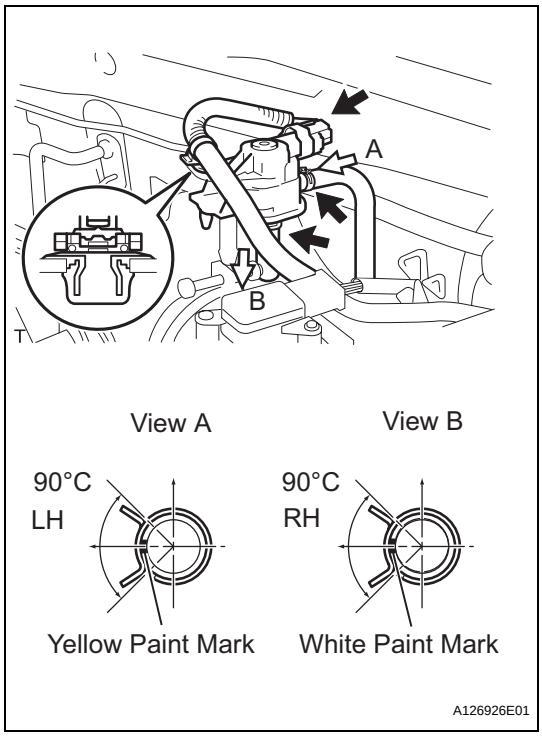

(b) Connect the 2 purge line hoses to the purge VSV.
(c) Connect the wire harness clamp.
(d) Connect the purge VSV connector.

2. CONNECT CABLE TO NEGATIVE BATTERY TERMINAL

EC

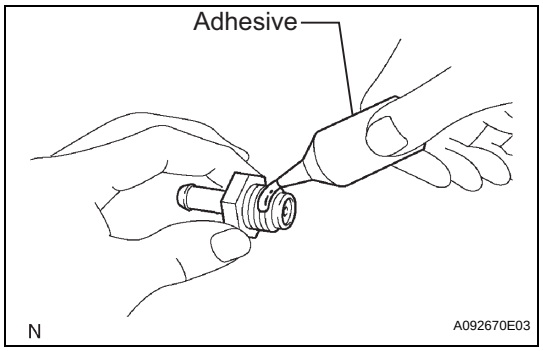

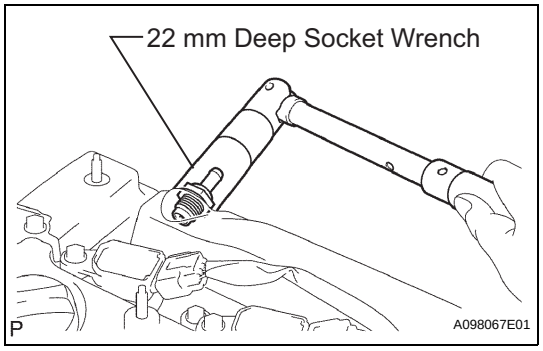

INSTALLATION

1. INSTALL VENTILATION VALVE SUB-ASSEMBLY

(a) Apply adhesive to 2 or 3 threads of the ventilation valve.

Adhesive:

Toyota genuine adhesive 1324, three bond 1324 or equivalent

(b) Using a 22 mm deep socket wrench, install the ventilation valve.

Torque: 19 N*m (194 kgf*cm, 14 ft.*lbf)

(c) Connect the ventilation hose.

2. INSTALL NO. 1 ENGINE COVER (See page EM-43)

3. CHECK FOR ENGINE OIL LEAKS

EC

VENTILATION VALVE

COMPONENTS

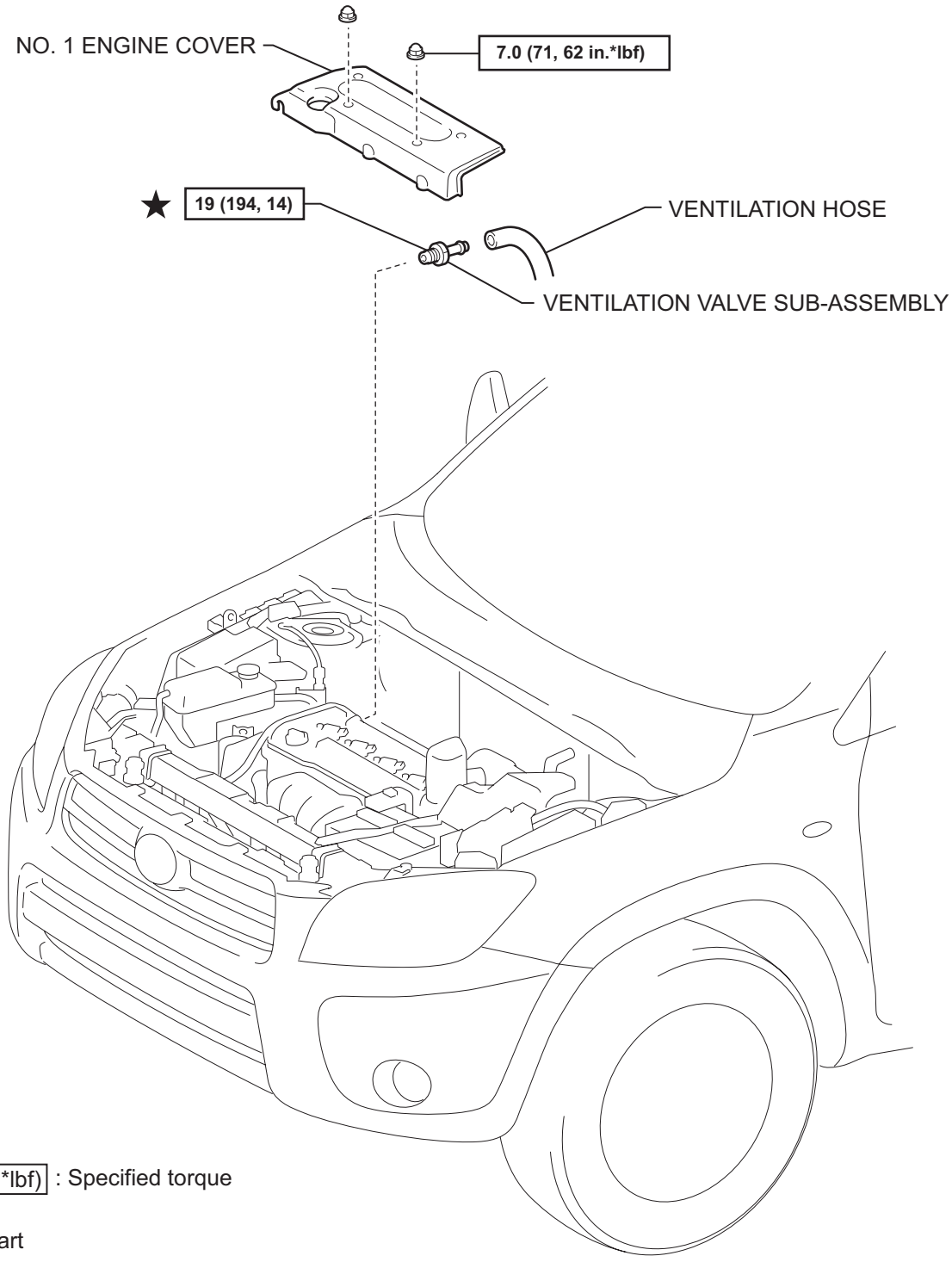

EC

T

REMOVAL

1. **REMOVE NO. 1 ENGINE COVER (See page EM-22)**
2. **REMOVE VENTILATION VALVE SUB-ASSEMBLY**
   (a) Disconnect the ventilation hose from the ventilation valve.

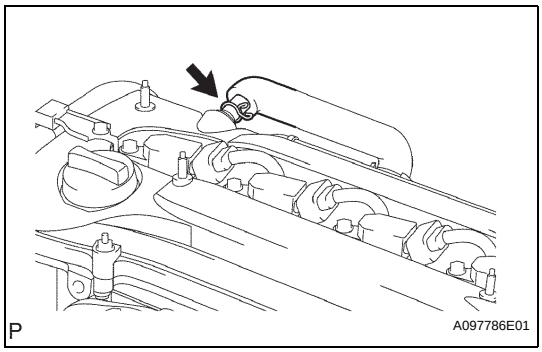

   (b) Using a 22 mm deep socket wrench, remove the ventilation valve.

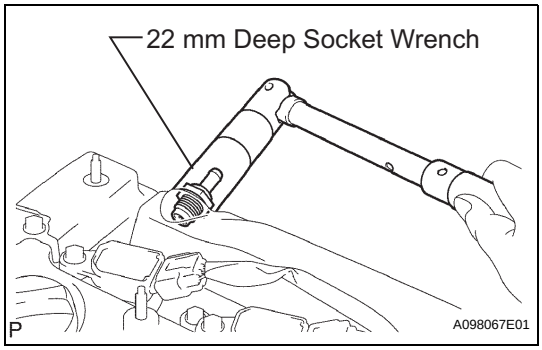

INSPECTION

1. **INSPECT VENTILATION VALVE SUB-ASSEMBLY**
   (a) Install a clean hose to the ventilation valve.
   (b) Check the ventilation valve operation.
      (1) Blow air into the cylinder head side, and check that air passes through easily.
      CAUTION:
      Do not suck air through the valve.
      Petroleum substances inside the valve are hazardous to your health.

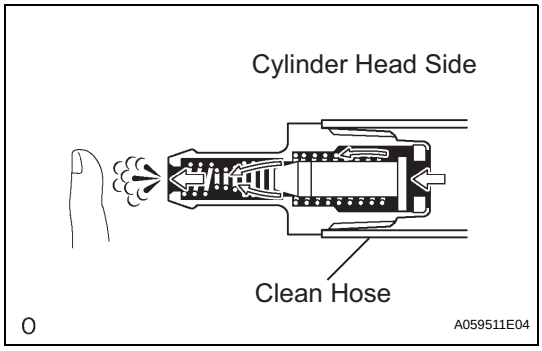

      (2) Blow air into the intake manifold side, and check that air passes through with difficulty.
      If the result is not as specified, replace the ventilation valve sub-assembly.

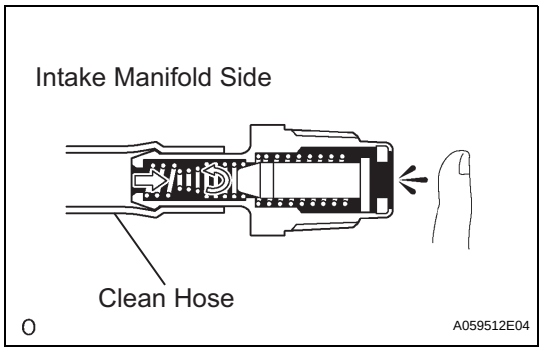

   (c) Remove the clean hose from the ventilation valve.

EC

ES

REMOVAL

1. **DISCONNECT CABLE FROM NEGATIVE BATTERY TERMINAL**
   CAUTION:
   Wait at least 90 seconds after disconnecting the cable from the negative (-) battery terminal to prevent airbag and seat belt pretensioner activation.

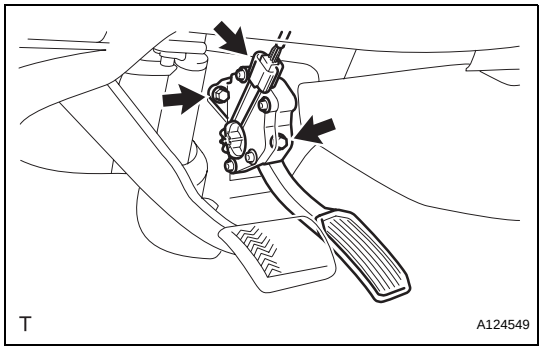

2. **REMOVE ACCELERATOR PEDAL ROD**
   (a) Disconnect the accelerator pedal position sensor connector.
   (b) Remove the 2 bolts and accelerator pedal rod.

INSTALLATION

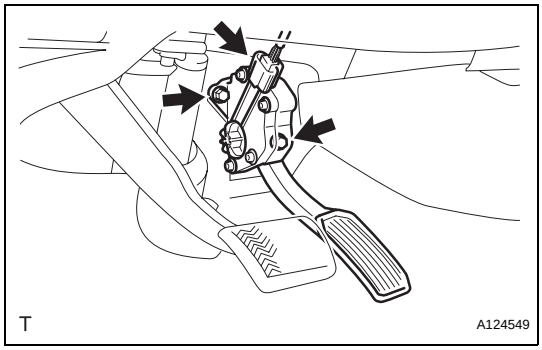

1. **INSTALL ACCELERATOR PEDAL ROD**
   (a) Install the accelerator pedal rod with the 2 bolts.
   Torque: 5.4 N*m (55 kgf*cm, 48 in.*lbf)
   (b) Connect the accelerator pedal position sensor connector.

2. **CONNECT CABLE TO NEGATIVE BATTERY TERMINAL**

ACCELERATOR PEDAL ROD

COMPONENTS

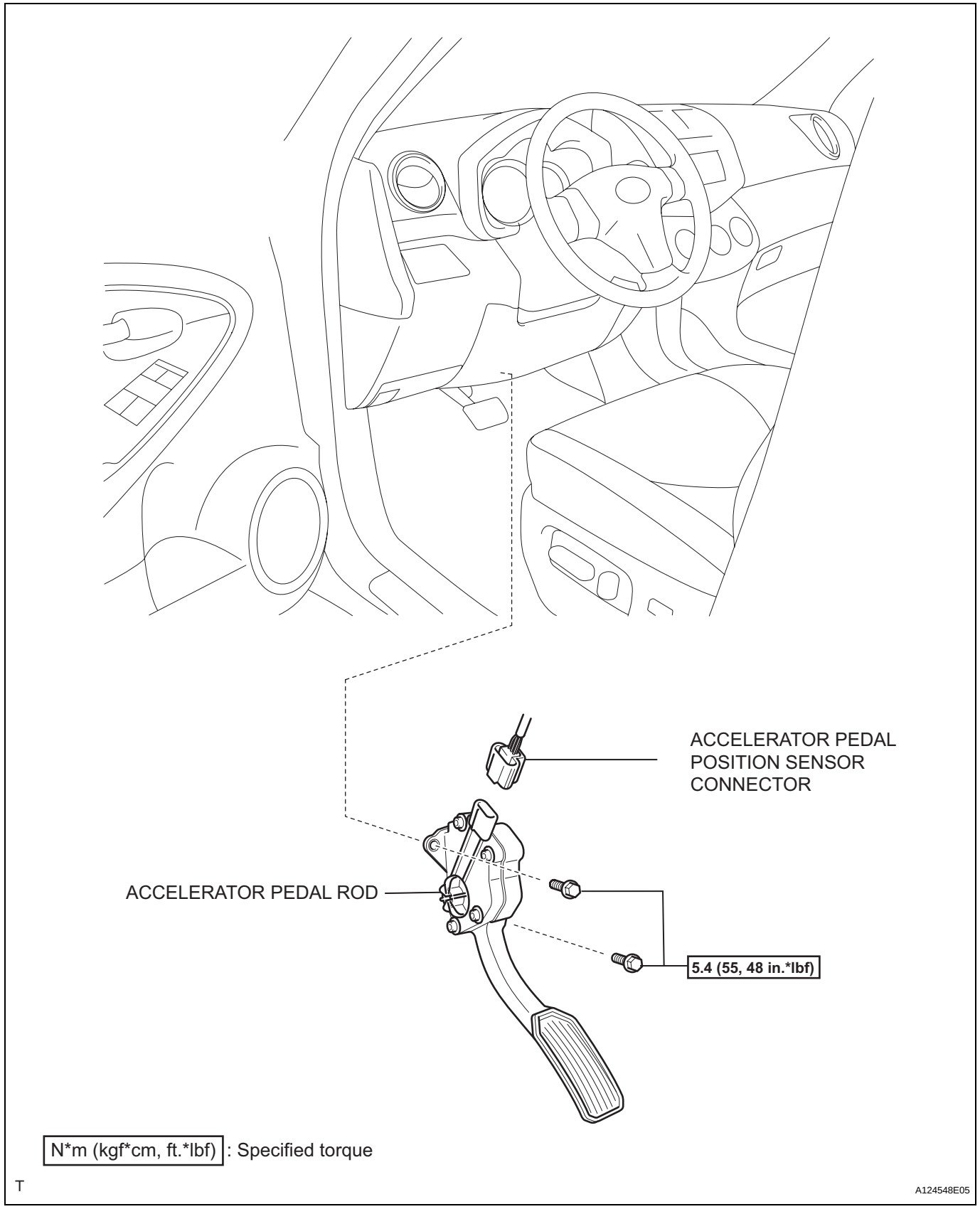

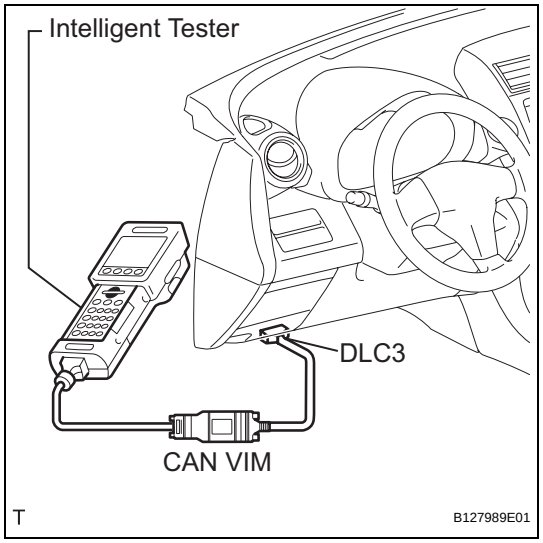

ON-VEHICLE INSPECTION

1. CHECK ACCELERATOR PEDAL ROD

(a) Check the voltage.

(1) Connect the intelligent tester to the DLC3.

(2) Turn the ignition switch ON.

(3) Turn the intelligent tester ON.

(4) Select the menu items: DIAGNOSIS / ENHANCED OBD II / DATA LIST / ALL / ACCEL POS #1, ACCEL POS #2.

(5) Operate the accelerator pedal, and then check that the ACCEL POS #1 and ACCEL POS #2 values are within the specifications.

Standard voltage (ACCEL POS #1)

Accelerator Pedal Condition	Specified Condition
Released	0.5 to 1.1 V
Depressed	2.5 to 4.5 V

Standard voltage (ACCEL POS #2)

Accelerator Pedal Condition	Specified Condition
Released	1.2 to 2.0 V
Depressed	3.4 to 5.0 V

If the result is not as specified, check the accelerator pedal rod, wire harness or ECM.

REMOVAL

1. **DISCONNECT CABLE FROM NEGATIVE BATTERY TERMINAL**
   CAUTION:
   Wait at least 90 seconds after disconnecting the cable from the negative (-) battery terminal to prevent airbag and seat belt pretensioner activation.
2. **REMOVE NO. 1 ENGINE COVER (See page ES-410)**
3. **REMOVE AIR CLEANER CAP (See page ES-411)**
4. **REMOVE CAMSHAFT POSITION SENSOR**
   (a) Disconnect the sensor connector.
   (b) Remove the bolt and sensor.

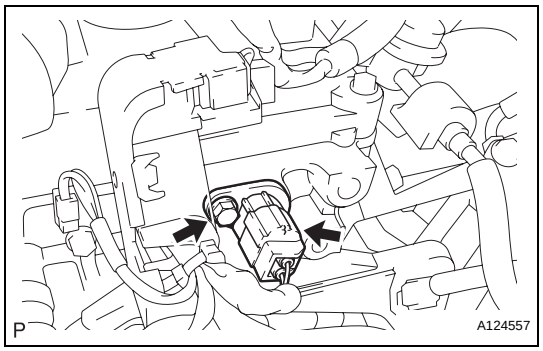

INSPECTION

1. **INSPECT CAMSHAFT POSITION SENSOR**
   (a) Measure the resistance of the sensor.
   Standard resistance

Tester Connection	Specified Condition
1 (G+) - 2 (G-)	835 to 1,400 Ω at Cold
1 (G+) - 2 (G-)	1,060 to 1,645 Ω at Hot

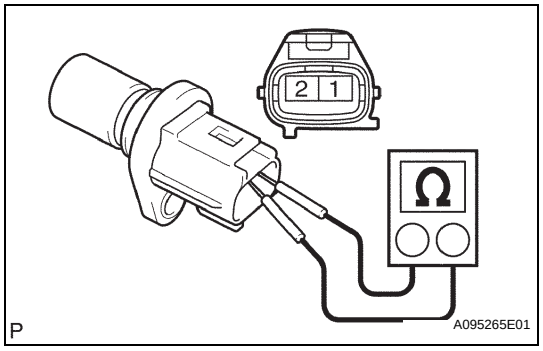

NOTICE:
Cold and Hot mean the temperature of the coils themselves. Cold is from -10 to 50°C (14 to 122 °F) and Hot is from 50 to 100°C (122 to 212°F).
If the result is not as specified, replace the camshaft position sensor.

INSTALLATION

1. **INSTALL CAMSHAFT POSITION SENSOR**
   NOTICE:
   Make sure that the O-ring is not cracked or jammed when installing it.
   (a) Apply a light coat of engine oil to the O-ring of the sensor.

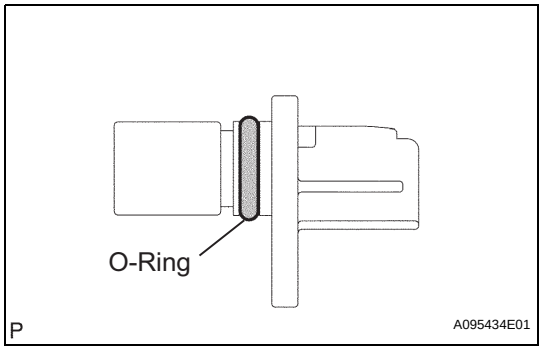

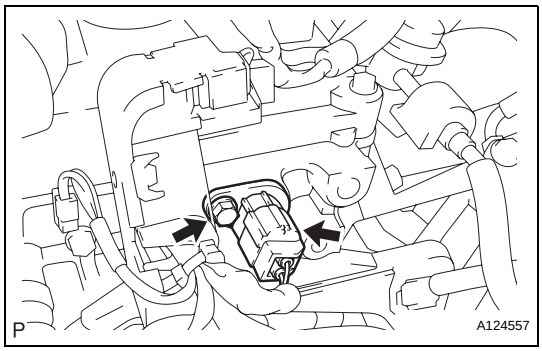

(b) Install the sensor with the bolt.
Torque: 9.0 N*m (90 kgf*cm, 80 in.*lbf)
(c) Connect the sensor connector.

2. **INSTALL AIR CLEANER CAP (See page ES-413)**
3. **CONNECT CABLE TO NEGATIVE BATTERY TERMINAL**
4. **CHECK FOR ENGINE OIL LEAKAGE**
5. **INSTALL NO. 1 ENGINE COVER (See page ES-414)**

CAMSHAFT POSITION SENSOR

COMPONENTS

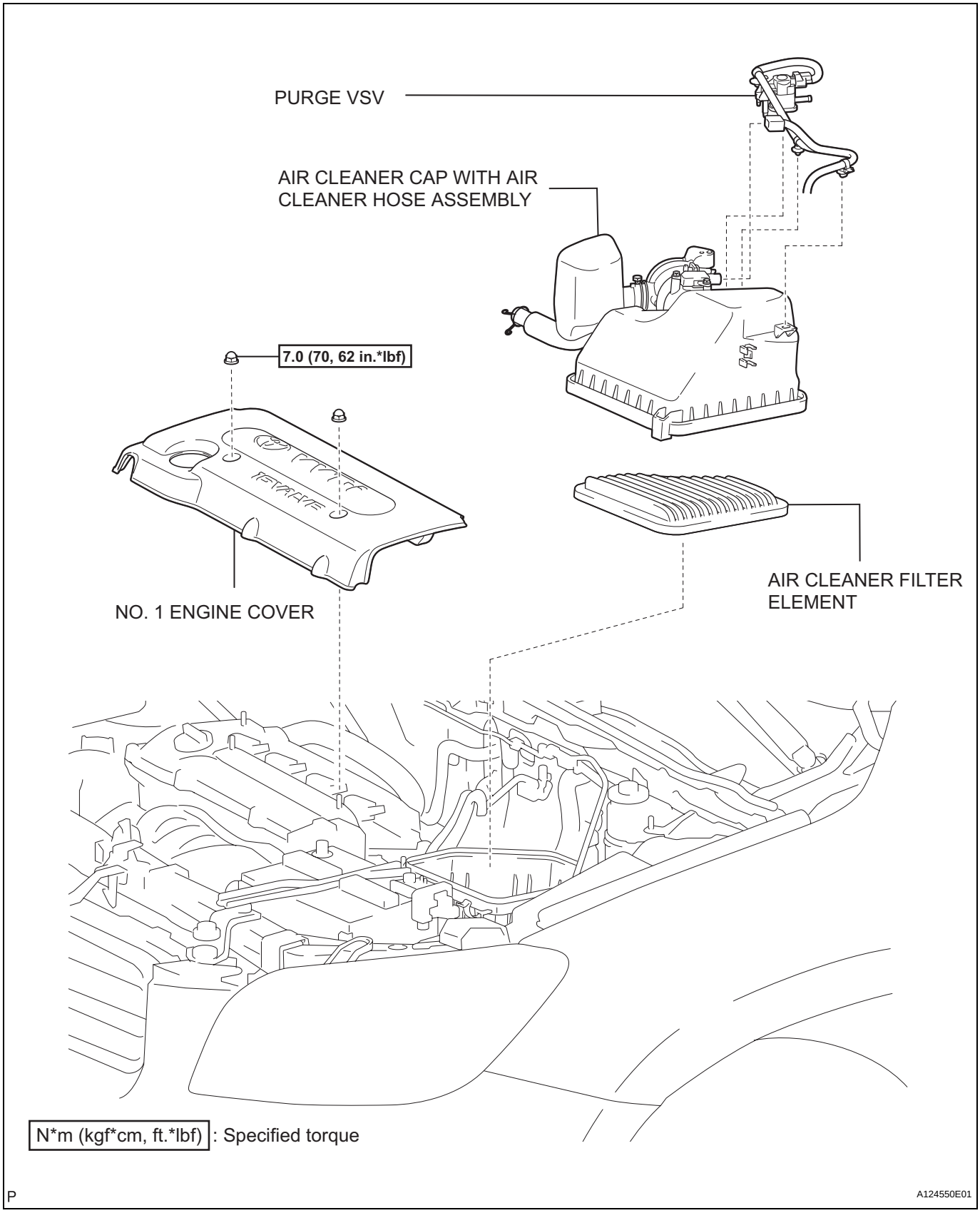

ES

ES

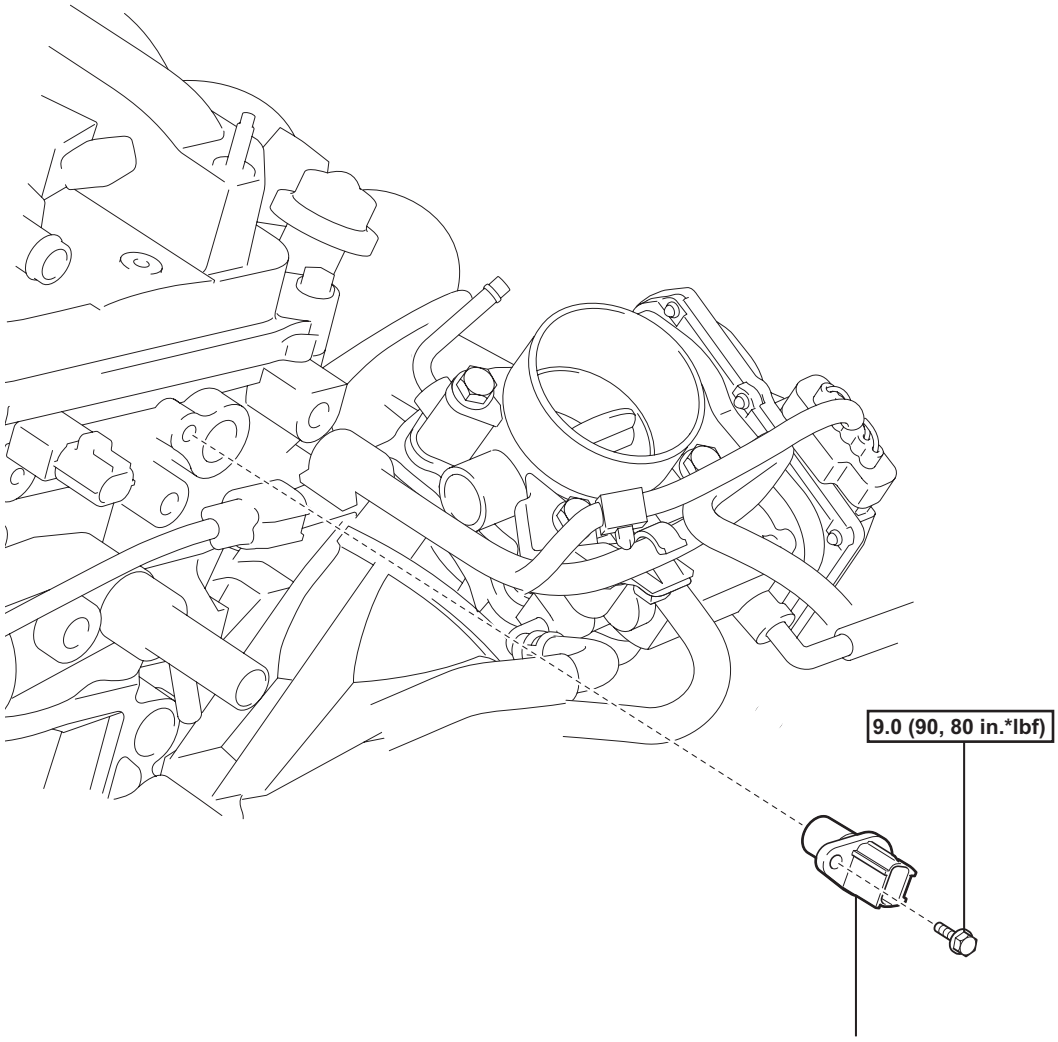

N*m (kgf*cm, ft.*lbf) : Specified torque

P

A124551E01

ES

REMOVAL

1. **DISCONNECT CABLE FROM NEGATIVE BATTERY TERMINAL**
   CAUTION:
   Wait at least 90 seconds after disconnecting the cable from the negative (-) battery terminal to prevent airbag and seat belt pretensioner activation.
2. **REMOVE NO. 1 ENGINE COVER (See page ES-410)**
3. **REMOVE CAMSHAFT TIMING OIL CONTROL VALVE ASSEMBLY**
   (a) Disconnect the oil control valve connector.
   (b) Remove the bolt and oil control valve.

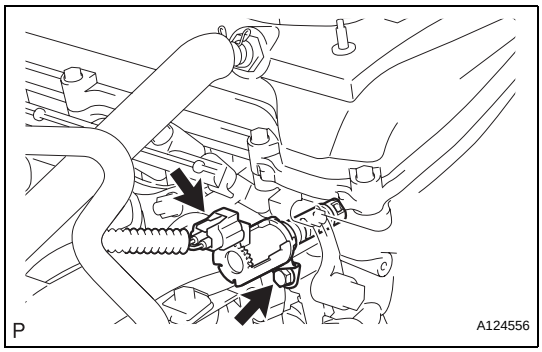

INSPECTION

1. **INSPECT CAMSHAFT TIMING OIL CONTROL VALVE ASSEMBLY**
   (a) Measure the resistance of the oil control valve.
   Standard resistance

Tester Connection	Specified Condition
1 (+B) - 2 (GND)	6.9 to 7.9 Ω at 20°C (68°F)

   If the result is not as specified, replace the oil control valve assembly.

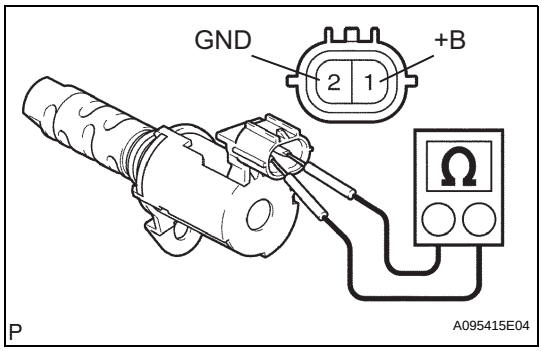

   (b) Check the operation.
      (1) Apply battery voltage across the terminals and check that the spool valve operates.
      NOTICE:
      Check that the spool valve is not stuck.
      HINT:
      The spool valve may not return if foreign objects are caught in it. This may cause subtle pressure leaks to the advance side, and a DTC may be set.

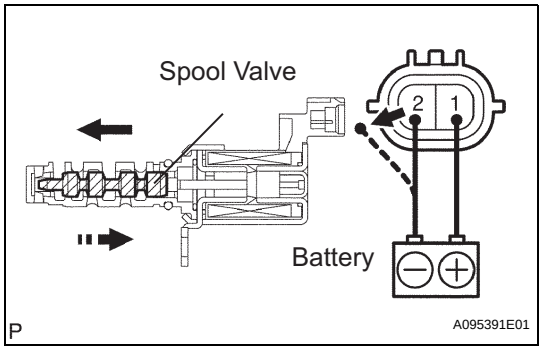

INSTALLATION

1. **INSTALL CAMSHAFT TIMING OIL CONTROL VALVE ASSEMBLY**
   (a) Apply a light coat of engine oil to the O-ring of the oil control valve.

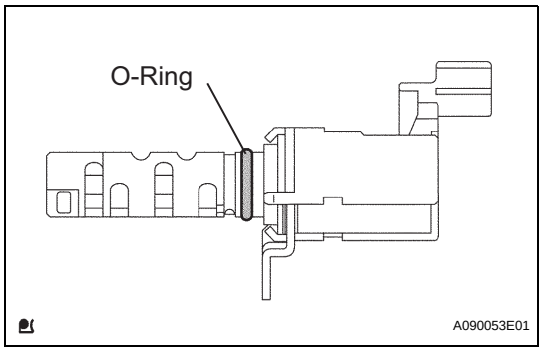

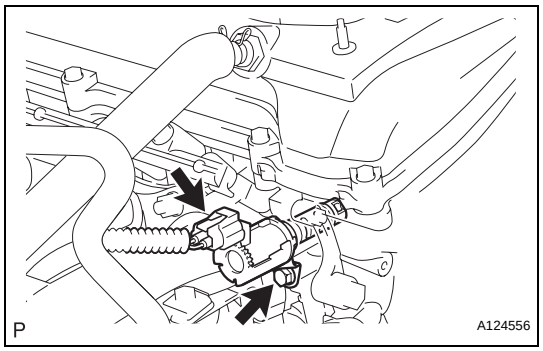

(b) Install the oil control valve with the bolt.
Torque: 9.0 N*m (92 kgf*cm, 80 in.*lbf)
NOTICE:
Make sure that the O-ring is not cracked or jammed.

(c) Connect the oil control valve connector.

2. CONNECT CABLE TO NEGATIVE BATTERY TERMINAL

3. CHECK FOR ENGINE OIL LEAKS

(a) Start the engine, and check that there are no oil leaks.

4. INSTALL NO. 1 ENGINE COVER (See page ES-414)

CAMSHAFT TIMING OIL CONTROL VALVE ASSEMBLY

COMPONENTS

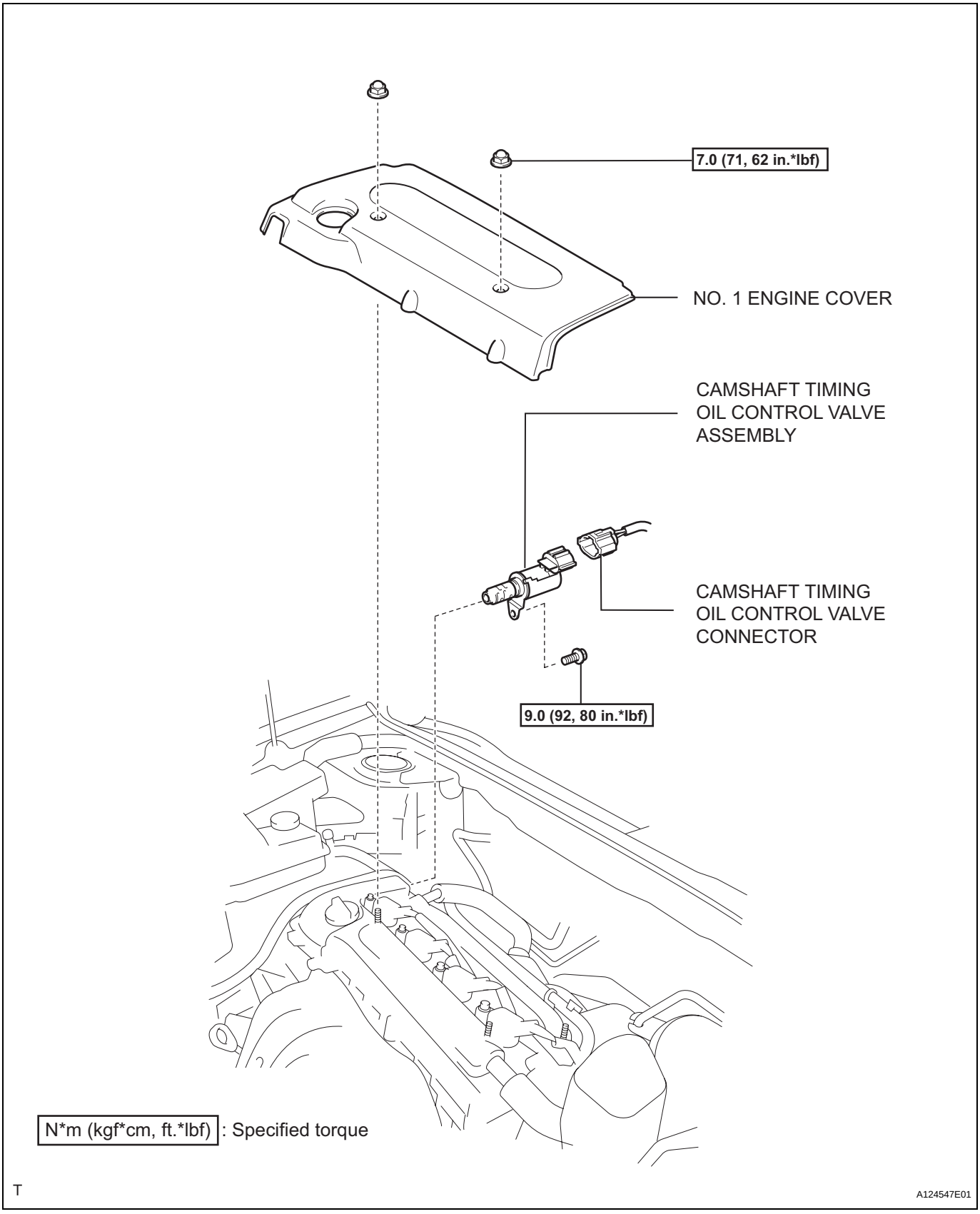

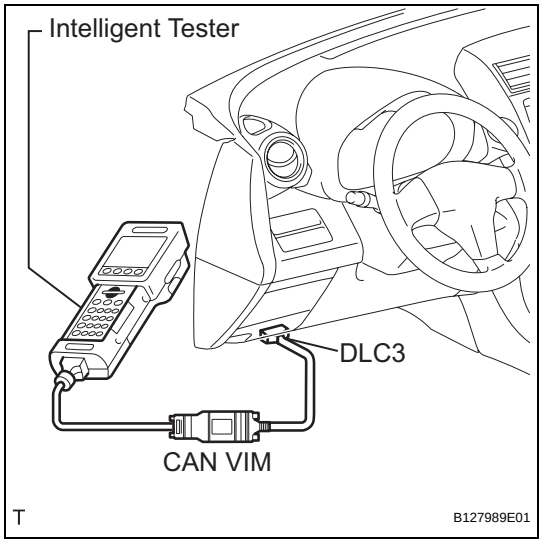

ON-VEHICLE INSPECTION

1. CHECK CAMSHAFT TIMING OIL CONTROL VALVE ASSEMBLY

(a) Check the operation.

(1) Connect the intelligent tester to the DLC3.

(2) Turn the ignition switch ON.

(3) Turn the intelligent tester main switch ON.

(4) Start and warm up the engine.

(5) Select the menu items: DIAGNOSIS / ENHANCED OBD II / ACTIVE TEST / VVT CTRL B1.

(6) Operate the OCV using the intelligent tester, and then check the engine speed.

Standard condition

Tester Operation	Specified Condition
OCV is OFF	**Normal engine speed**
OCV is ON	**Rough idling or engine stalls**

If the operation is not as specified, check the oil control valve, wire harness and ECM.

CIRCUIT OPENING RELAY

ON-VEHICLE INSPECTION

1. DISCONNECT CABLE FROM NEGATIVE BATTERY TERMINAL

CAUTION:

Wait at least 90 seconds after disconnecting the cable from the negative (-) battery terminal to prevent airbag and seat belt pretensioner activation.

2. INSPECT INSTRUMENT PANEL JUNCTION BLOCK

NOTICE:

The circuit opening relay is built into the instrument panel junction block.

(a) Measure the resistance between the terminals.

ES

Instrument Panel Junction Block (Front View)

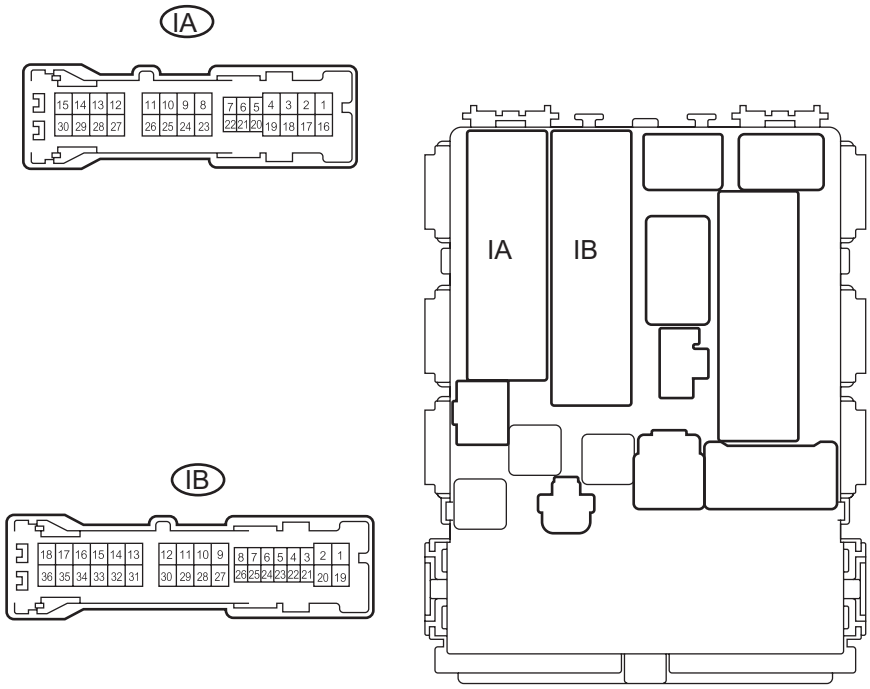

H

E114510E25

Standard resistance

Tester Connection	Specified Condition
1B-11 - 1A-8	10 kΩ or higher
1B-11 - 1A-8	Below 1 Ω (when battery voltage is applied to terminals 1E-5 and 1D-1)

If the result is not as specified, replace the instrument panel junction block.

3. CONNECT CABLE TO NEGATIVE BATTERY TERMINAL

CRANKSHAFT POSITION SENSOR

COMPONENTS

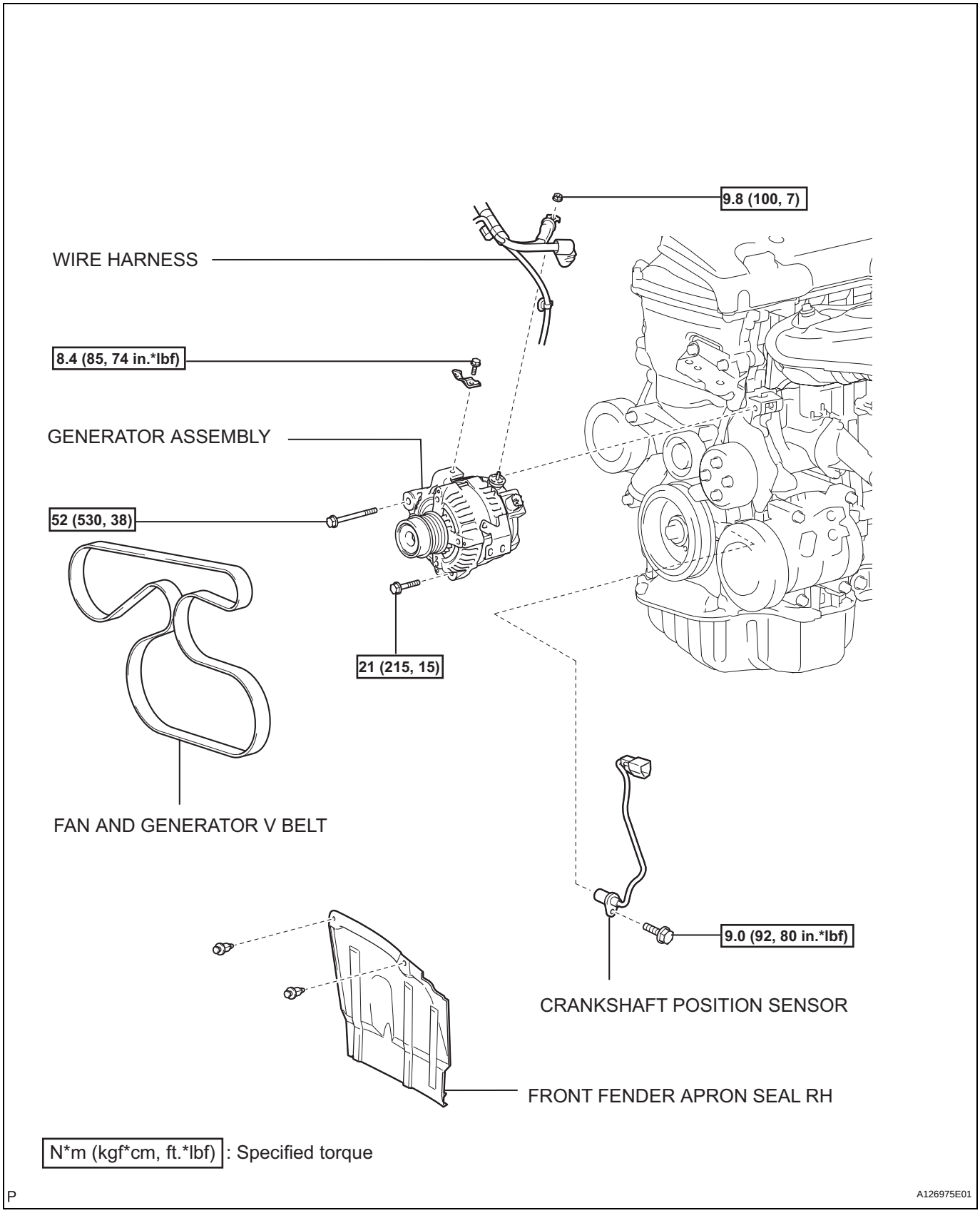

ES

ES

REMOVAL

1. **DISCONNECT CABLE FROM NEGATIVE BATTERY TERMINAL**
   CAUTION:
   Wait at least 90 seconds after disconnecting the cable from the negative (-) battery terminal to prevent airbag and seat belt pretensioner activation.
2. **REMOVE GENERATOR ASSEMBLY**
   (a) Remove the generator assembly from the vehicle (see page CH-9).
3. **REMOVE CRANKSHAFT POSITION SENSOR**
   (a) Disconnect the sensor connector.
   (b) Remove the connector clamp.
   (c) Remove the wire harness from the wire harness clamp bracket.
   (d) Remove the wire harness clamp.
   (e) Remove the bolt and sensor.

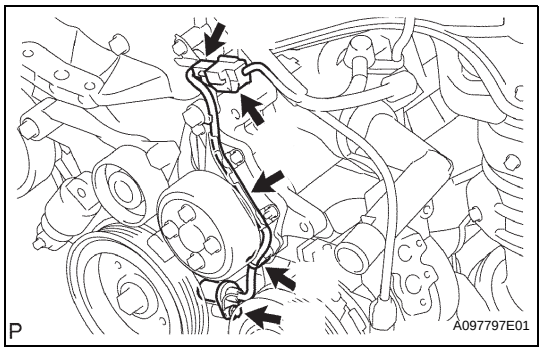

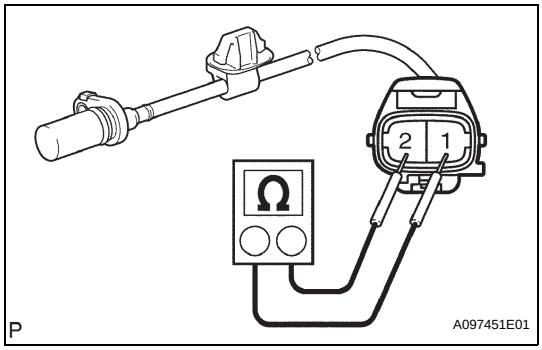

INSPECTION

1. **INSPECT CRANKSHAFT POSITION SENSOR**
   (a) Measure the resistance of the sensor.
   Standard resistance

Tester Connection	Specified Condition
1 (NE+) - 2 (NE-)	985 to 1,600 Ω at Cold
1 (NE+) - 2 (NE-)	1,265 to 1,890 Ω at Hot

NOTICE:
Cold and Hot mean the temperature of the coils themselves. Cold is from -10 to 50°C (14 to 122°F) and Hot is from 50 to 100°C (122 to 212°F).
If the result is not as specified, replace the crankshaft position sensor.

INSTALLATION

1. **INSTALL CRANKSHAFT POSITION SENSOR**
   NOTICE:
   Make sure that the O-ring is not cracked or jammed when installing it.
   (a) Apply a light coat of engine oil to the O-ring of the sensor.

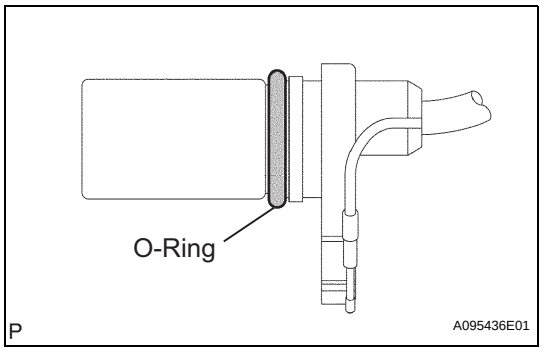

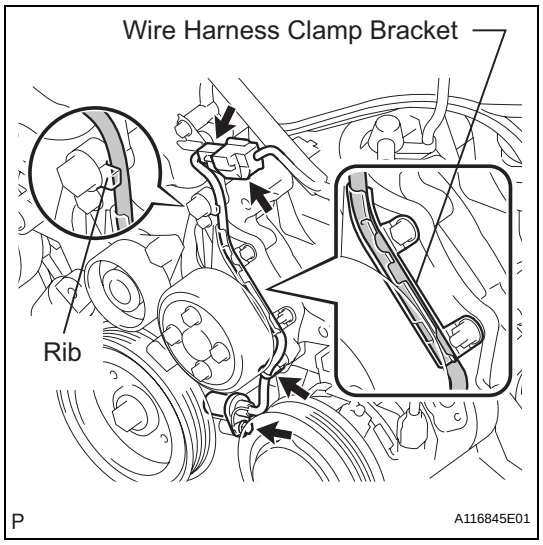

(b) Install the sensor with the bolt.
Torque: 9.0 N*m (90 kgf*cm, 80 in.*lbf)
(c) Install the wire harness clamp.
(d) Install the connector clamp.
(e) Connect the sensor connector.
(f) Confirm that the wire harness of the sensor is secured to the wire harness clamp bracket through the back of the rib of the timing chain cover.

2. INSTALL GENERATOR ASSEMBLY

(a) Install the generator to the vehicle (see page CH-15).

3. CONNECT CABLE TO NEGATIVE BATTERY TERMINAL

4. CHECK FOR ENGINE OIL LEAKAGE

ES

REMOVAL

1. **DISCONNECT CABLE FROM NEGATIVE BATTERY TERMINAL**
   CAUTION:
   Wait at least 90 seconds after disconnecting the cable from the negative (-) battery terminal to prevent airbag and seat belt pretensioner activation.
2. **REMOVE AIR CLEANER CAP (See page ES-411)**
3. **REMOVE AIR CLEANER CASE**
   (a) Disconnect the harness clamp.
   (b) Remove the 3 bolts and air cleaner case.

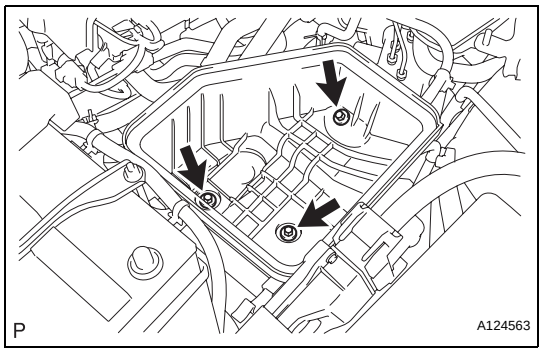

4. **REMOVE ECM**
   (a) Remove the 3 bolts of the ECM with bracket.

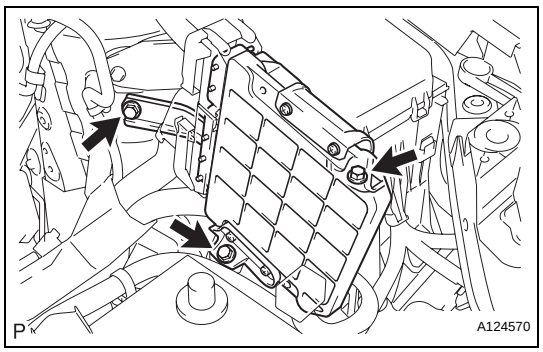

   (b) Disconnect the 2 ECM connectors.
   NOTICE:
   After disconnecting the connector, make sure that dirt, water and other foreign matter does not contact the connecting part of the connector.
      (1) Raise the 2 levers while pushing the locks on the 2 levers, and disconnect the 2 ECM connectors.
   (c) Remove the ECM with bracket.

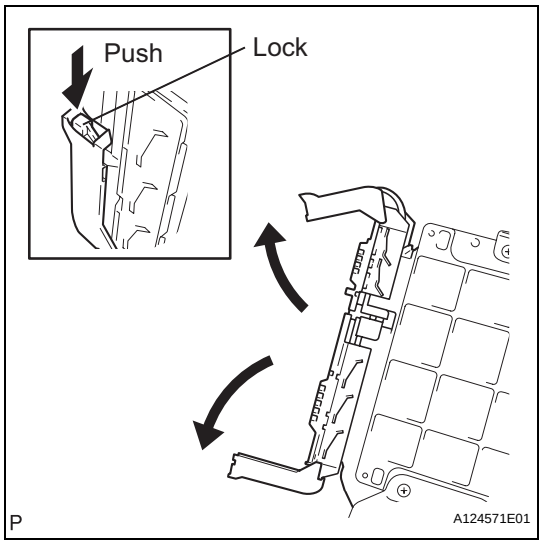

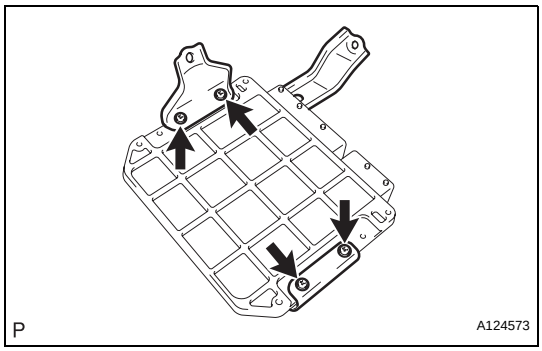

(d) Remove the 4 screws and 2 ECM brackets.

INSTALLATION

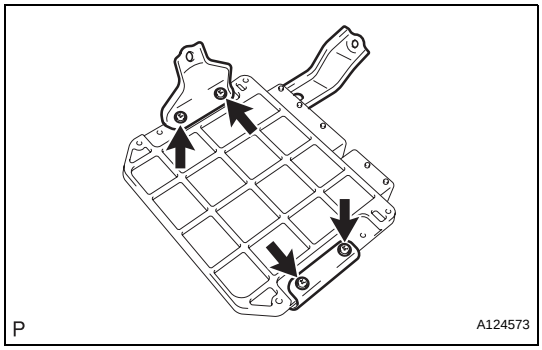

1. INSTALL ECM

(a) Install the 2 brackets to the ECM with the 4 screws.
Torque: 3.0 N*m (30 kgf*cm, 27 in.*lbf)

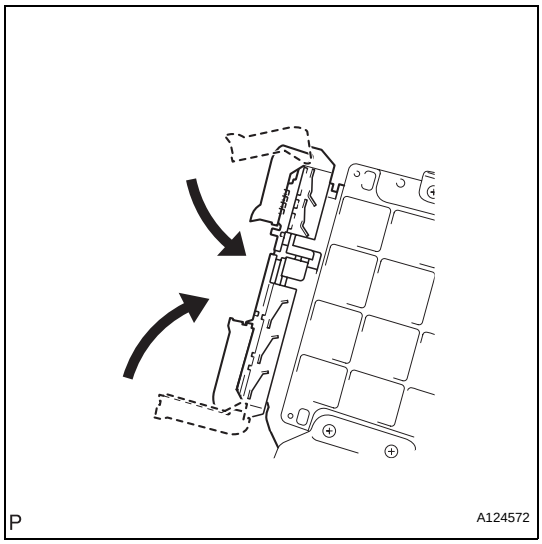

(b) Connect the 2 ECM connectors.
NOTICE:
When connecting the connector, make sure that dirt, water and other foreign matter does not become stuck between the connector and other part.
(1) Connect the 2 ECM connectors and lower the 2 levers.
NOTICE:
Make sure that the 2 levers are securely lowered.

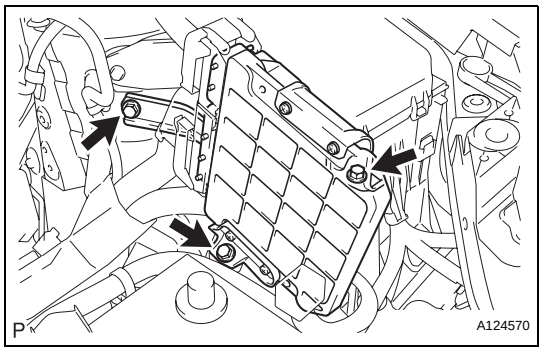

(c) Install the ECM with the 3 bolts.
Torque: 6.5 N*m (66 kgf*cm, 57 in.*lbf)

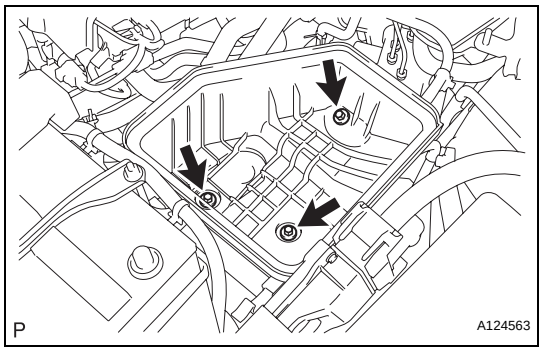

2. INSTALL AIR CLEANER CASE

(a) Install the air cleaner case with the 3 bolts.
Torque: 5.0 N*m (51 kgf*cm, 44 in.*lbf)

(b) Connect the harness clamp.

3. INSTALL AIR CLEANER CAP (See page ES-413)

4. CONNECT CABLE TO NEGATIVE BATTERY TERMINAL

5. PERFORM REGISTRATION

(a) When replacing the ECM, the Vehicle Identification Number (VIN) must be input into the replacement ECM (see page ES-13).

(b) When replacing the ECM, perform the vehicle stability control system recognition in the ECM (see page CC-12).

6. RESET MEMORY

(a) When replacing the ECM, perform the RESET MEMORY procedure (A/T initialization) (see page AX-18).

ECM

COMPONENTS

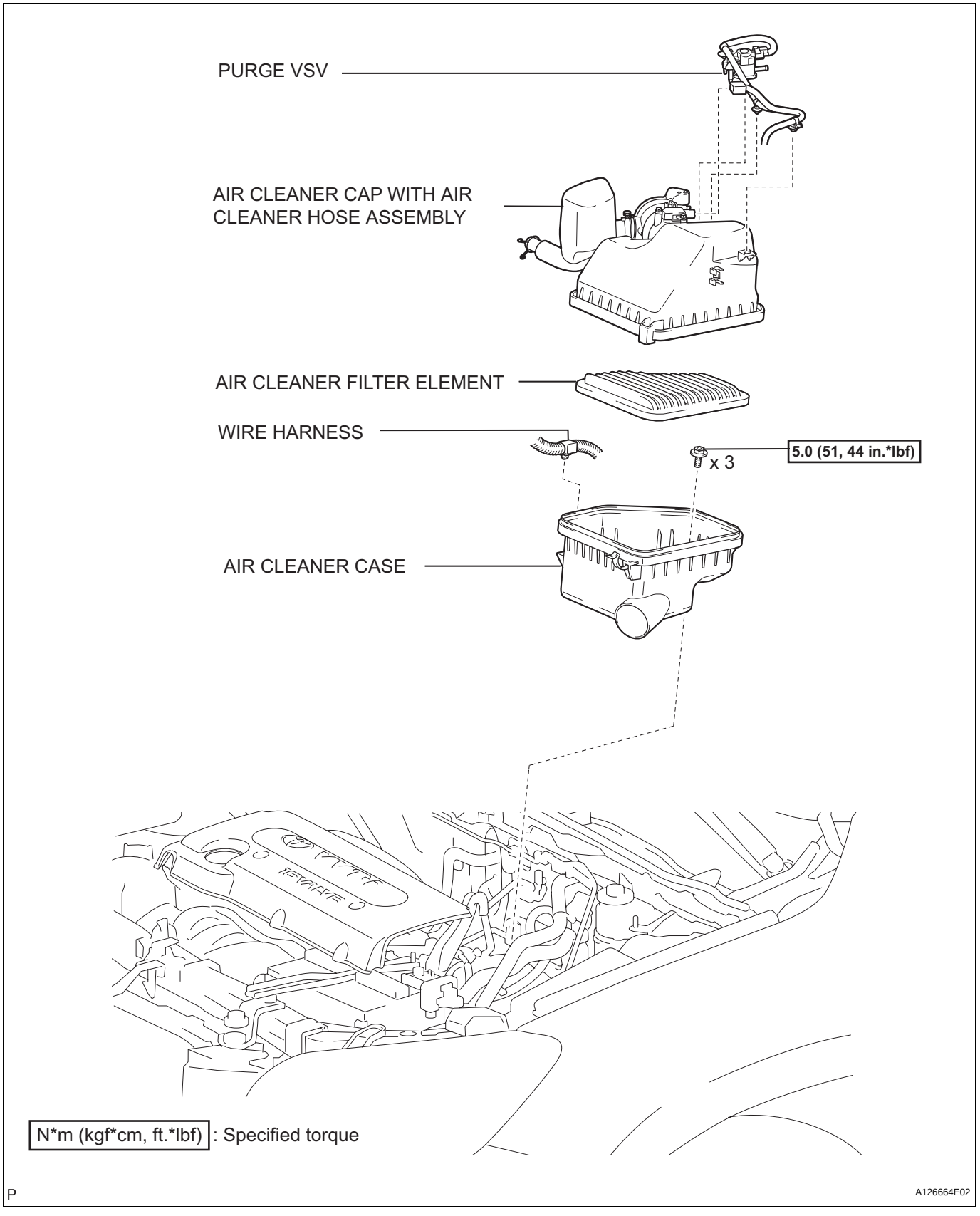

ES

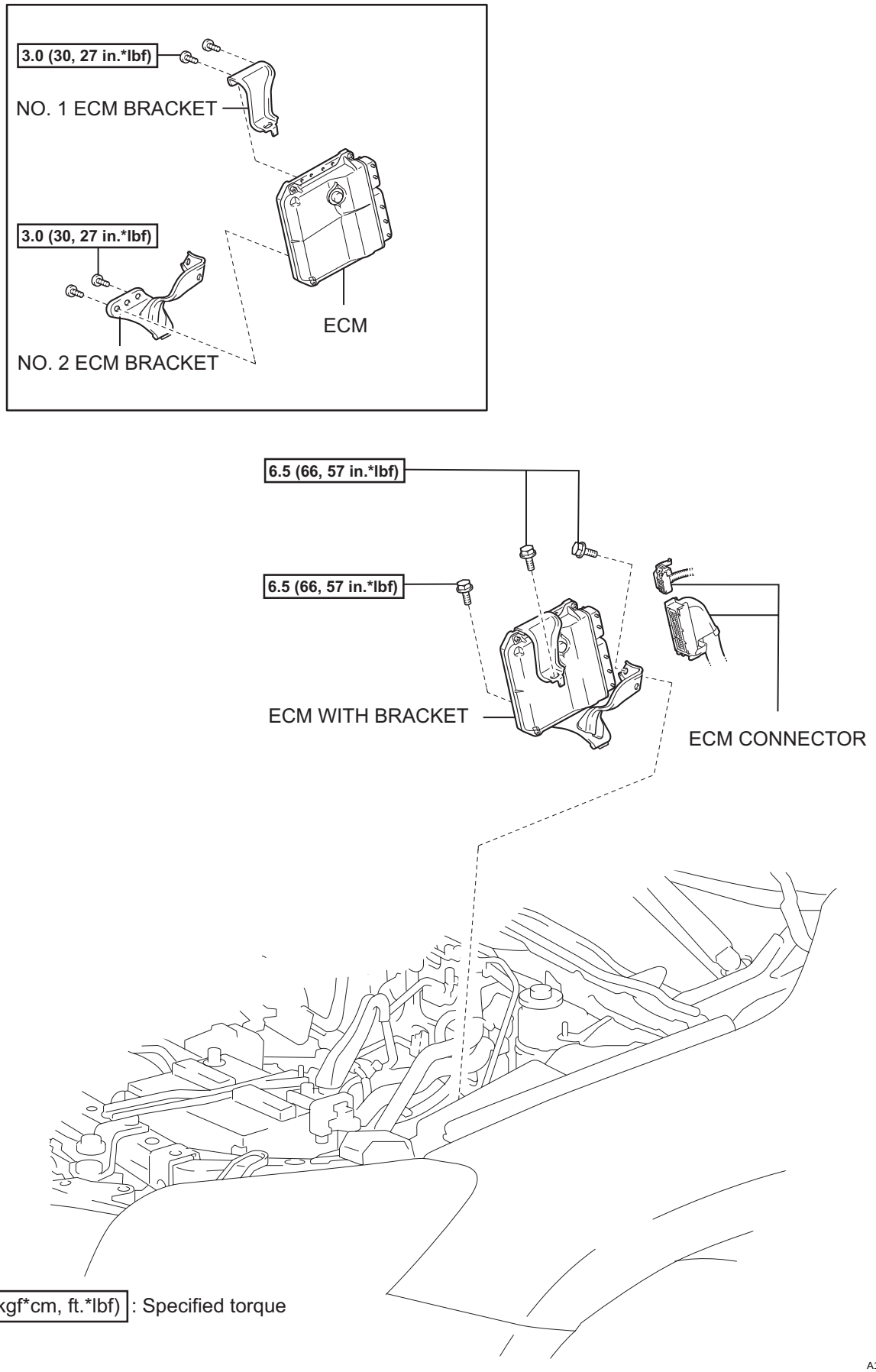
3.0 (30, 27 in.*lbf)
NO. 1 ECM BRACKET
3.0 (30, 27 in.*lbf)
ECM
NO. 2 ECM BRACKET
6.5 (66, 57 in.*lbf)
6.5 (66, 57 in.*lbf)
ECM WITH BRACKET
ECM CONNECTOR
N*m (kgf*cm, ft.*lbf) : Specified torque
P
A126673E01

ES

REMOVAL

1. **DRAIN ENGINE COOLANT (See page CO-6)**
2. **DISCONNECT CABLE FROM NEGATIVE BATTERY TERMINAL**
   CAUTION:
   Wait at least 90 seconds after disconnecting the cable from the negative (-) battery terminal to prevent airbag and seat belt pretensioner activation.
3. **REMOVE AIR CLEANER CAP (See page ES-411)**
4. **REMOVE AIR CLEANER CASE (See page ES-429)**
5. **REMOVE ENGINE COOLANT TEMPERATURE SENSOR**
   (a) Disconnect the sensor connector.
   (b) Using SST, remove the sensor and gasket.
   SST 09817-33190

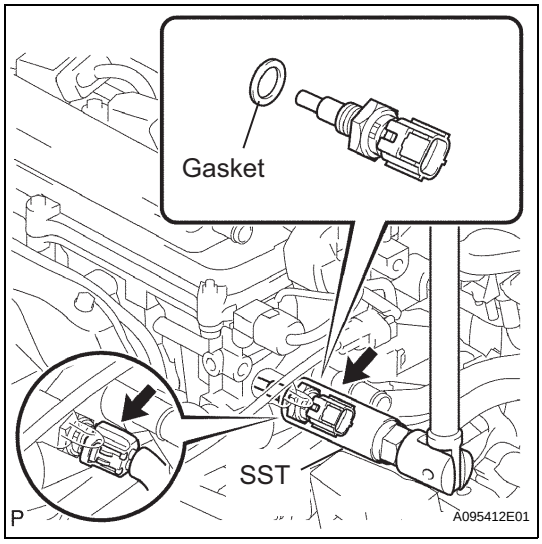

INSPECTION

1. INSPECT ENGINE COOLANT TEMPERATURE SENSOR

(a) Measure the resistance of the sensor.

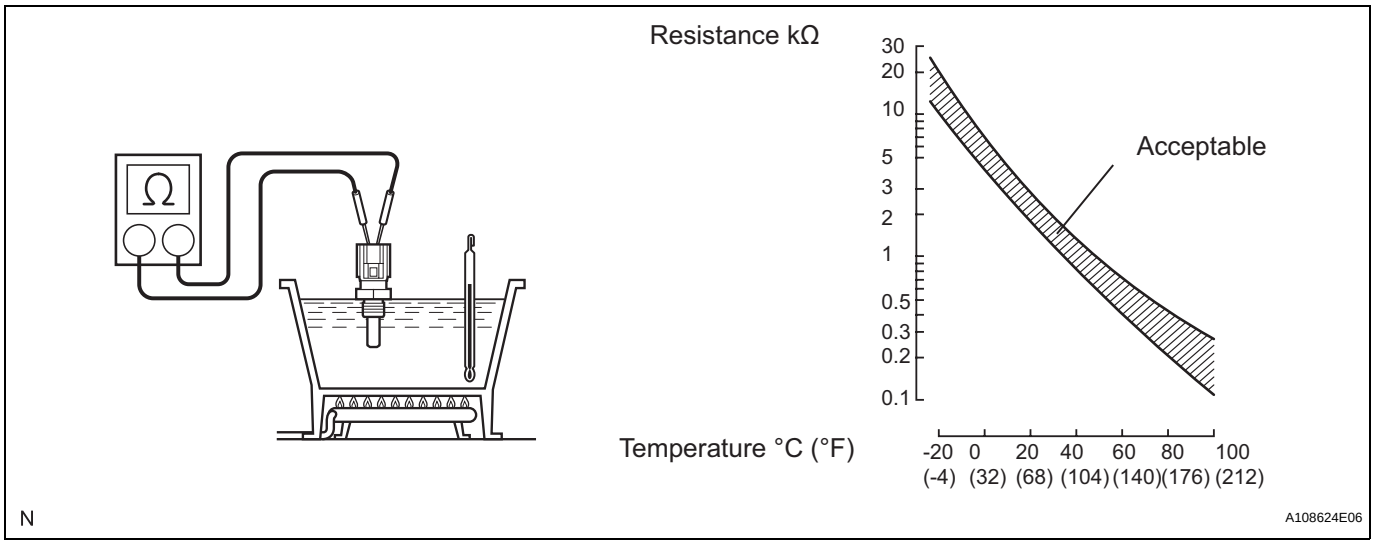

Standard resistance

Tester Connection	Specified Condition
1 (E2) - 2 (THW)	2.32 to 2.59 kΩ at 20°C (68°F)
1 (E2) - 2 (THW)	0.310 to 0.326 kΩ at 80°C (176°F)

NOTICE:
If checking the sensor in water, be careful not to allow water to contact the terminals. After checking, wipe the water off the sensor.

If the result is not as specified, replace the sensor.

INSTALLATION

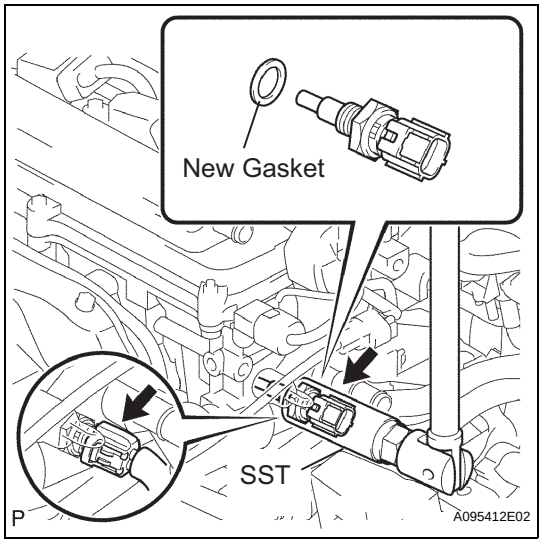

1. INSTALL ENGINE COOLANT TEMPERATURE SENSOR

(a) Install a new gasket onto the sensor.

(b) Using SST, install the sensor.

SST 09817-33190

Torque: 19.6 N*m (200 kgf*cm, 14 ft.*lbf)

(c) Connect the sensor connector.

2. INSTALL AIR CLEANER CASE (See page ES-431)

3. INSTALL AIR CLEANER CAP (See page ES-413)

4. CONNECT CABLE TO NEGATIVE BATTERY TERMINAL

5. ADD ENGINE COOLANT (See page CO-6)

6. CHECK FOR COOLANT LEAKAGE (See page CO-1)

ENGINE COOLANT TEMPERATURE SENSOR

COMPONENTS

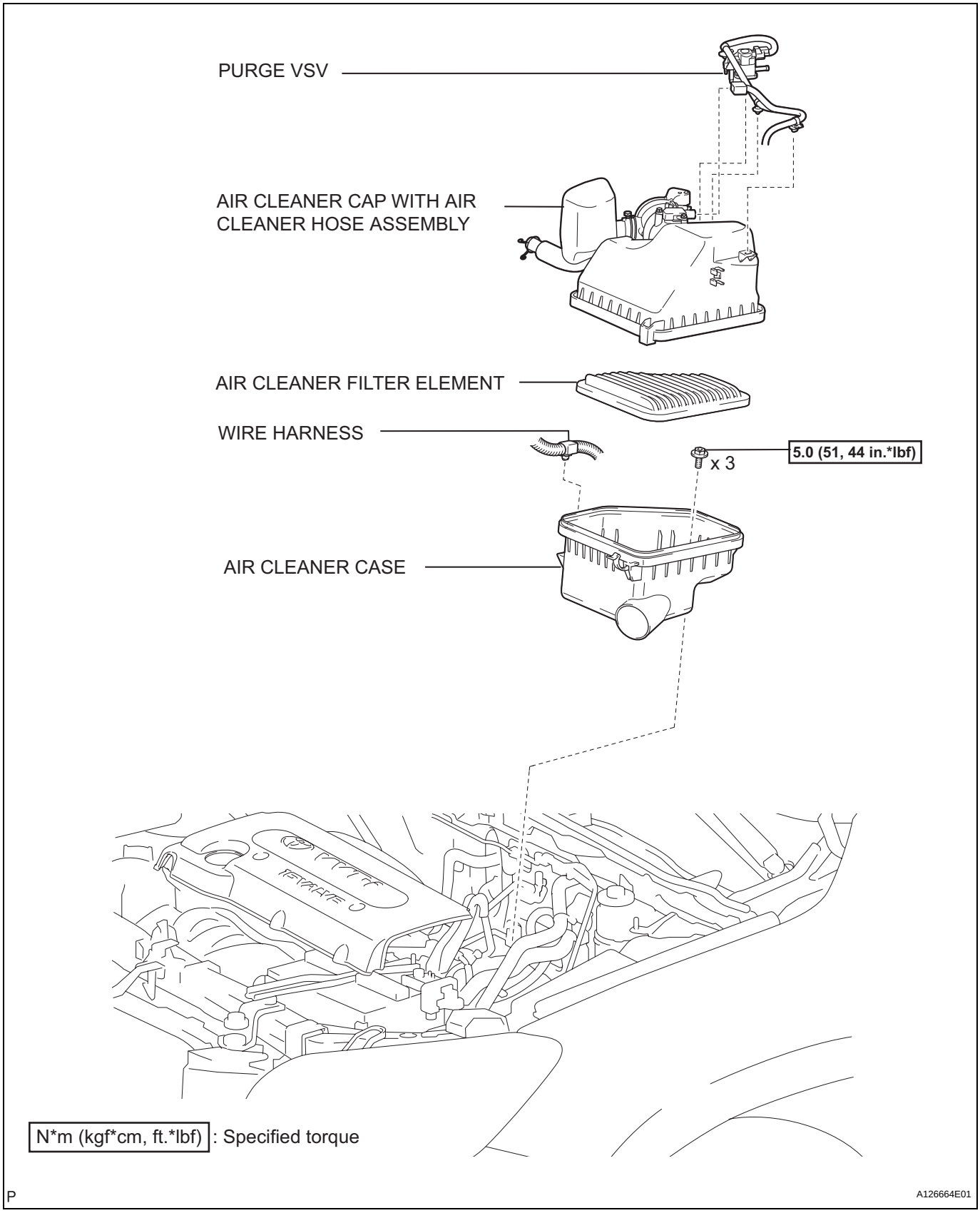

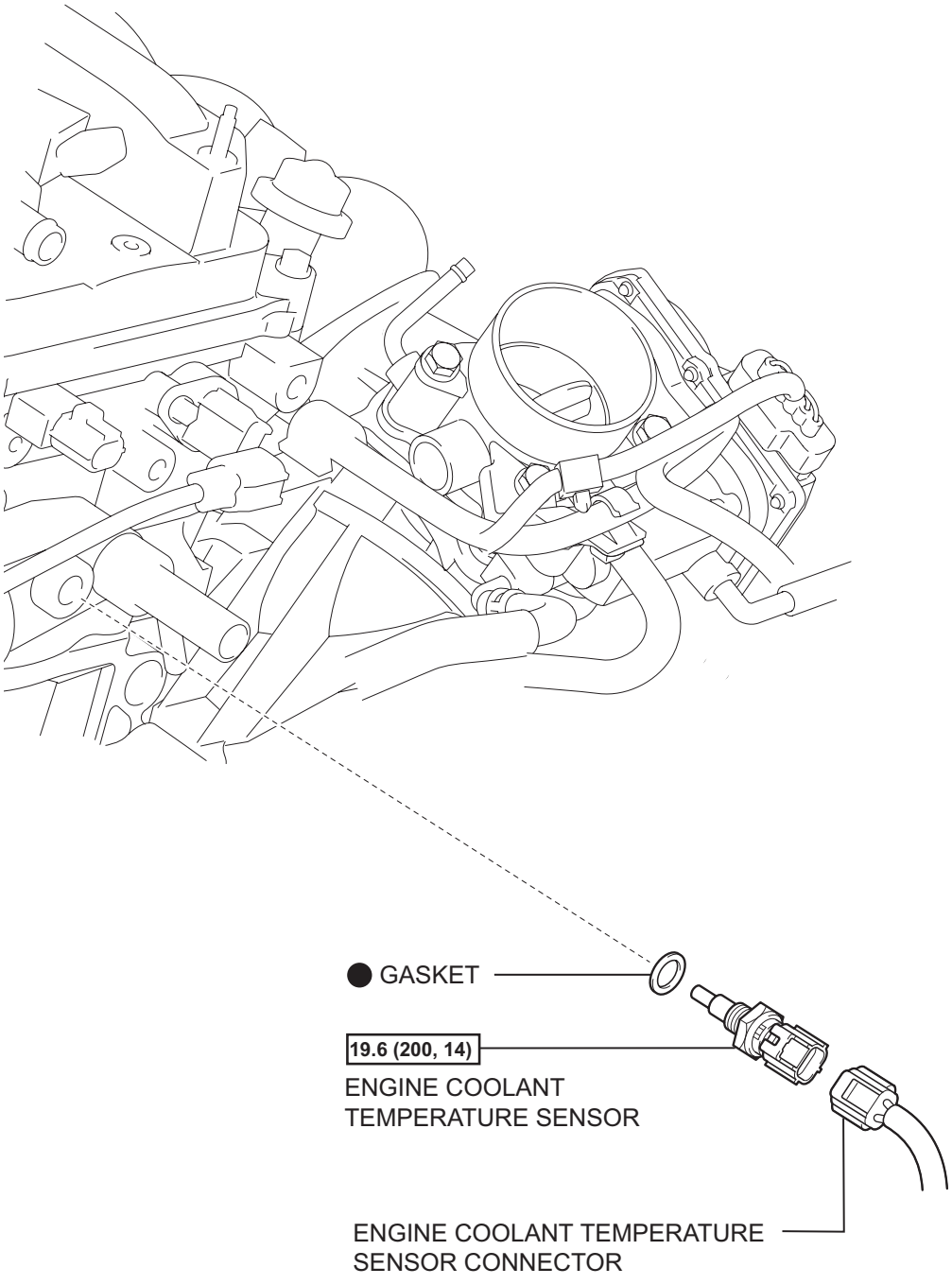

N*m (kgf*cm, ft.*lbf) : Specified torque

● Non-reusable part

P

A124555E01

IG1 RELAY

ON-VEHICLE INSPECTION

1. DISCONNECT CABLE FROM NEGATIVE BATTERY TERMINAL

CAUTION:

Wait at least 90 seconds after disconnecting the cable from the negative (-) battery terminal to prevent airbag and seat belt pretensioner activation.

2. REMOVE IG1 RELAY

(a) Remove the IG1 relay from the instrument panel junction block.

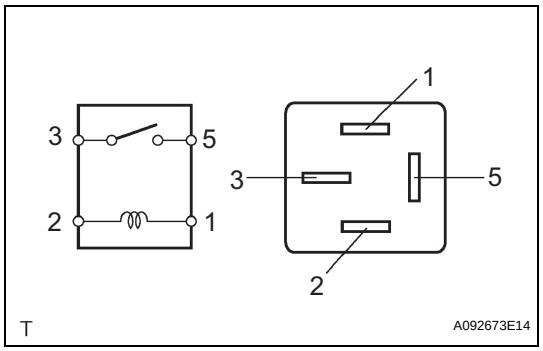

3. INSPECT RELAY

(a) Measure resistance of the IG1 relay.

Standard resistance

Tester Connection	Specified Condition
3 - 5	10 kΩ or higher
3 - 5	Below 1 Ω (when battery voltage is applied to terminals 1 and 2)

If the result is not as specified, replace the relay.

4. INSTALL IG1 RELAY

5. CONNECT CABLE TO NEGATIVE BATTERY TERMINAL

IG2 RELAY

ON-VEHICLE INSPECTION

1. DISCONNECT CABLE FROM NEGATIVE BATTERY TERMINAL

CAUTION:
Wait at least 90 seconds after disconnecting the cable from the negative (-) battery terminal to prevent airbag and seat belt pretensioner activation.

2. REMOVE IG2 RELAY

(a) Remove the No. 1 engine room relay block cover.
(b) Remove the IG2 relay from the engine room relay block.

3. INSPECT IG2 RELAY

(a) Measure the resistance of the IG2 relay.
Standard resistance

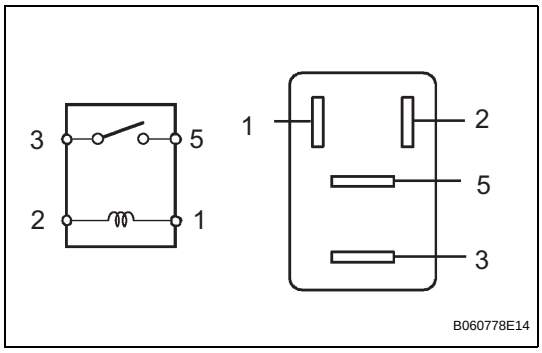

Tester Connection	Specified Condition
3 - 5	10 kΩ or higher
3 - 5	Below 1 Ω (when battery voltage is applied to terminals 1 and 2)

If the result is not as specified, replace the relay.

4. INSTALL IG2 RELAY

5. CONNECT CABLE TO NEGATIVE BATTERY TERMINAL

INTEGRATION RELAY

ON-VEHICLE INSPECTION

1. DISCONNECT CABLE FROM NEGATIVE BATTERY TERMINAL

CAUTION:

Wait at least 90 seconds after disconnecting the cable from the negative (-) battery terminal to prevent airbag and seat belt pretensioner activation.

2. INSPECT INTEGRATION RELAY

NOTICE:

- **The EFI relay is built into the integration relay (unit A: EFI MAIN).**
- **Some relays are built into the integration relay. The integration relay cannot be disassembled. If there is a malfunction in the circuit of the integration relay, replace the integration relay.**

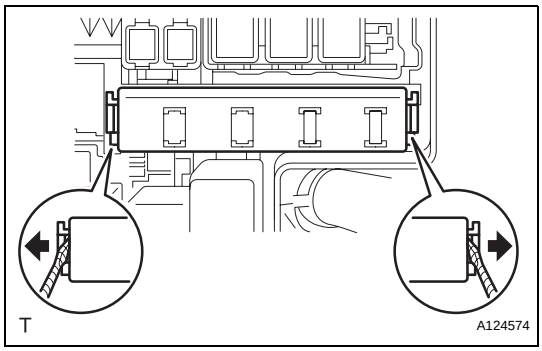

(a) Using a screwdriver, detach the 2 claws and disconnect the integration relay from the No. 1 engine room junction block.

HINT:

Tape the screwdriver tip before use.

(b) Disconnect the 3 connectors from the integration relay.

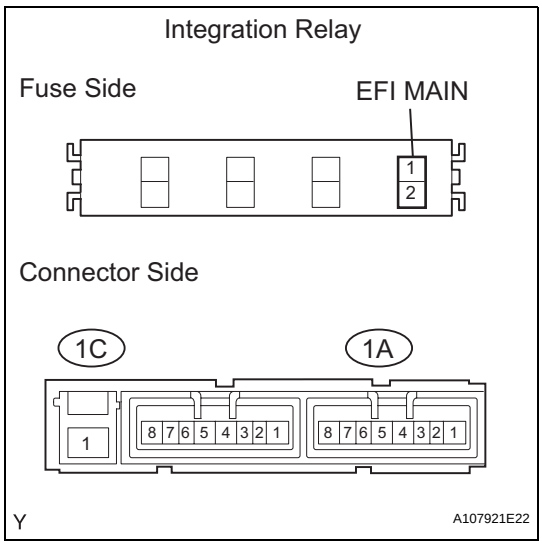

(c) Inspect the EFI relay.

(1) Check the resistance of the EFI MAIN fuse.

If the result is not as specified, replace the EFI MAIN fuse.

(2) Measure the resistance of the integration relay.

Standard resistance

Tester Connection	Specified Condition
1A-4 - 1C-1	10 kΩ or higher
1A-4 - 1A-1	
1A-4 - 1C-1	Below 1 Ω (when battery voltage is applied to terminals 1A-3 and 1A-2)
1A-4 - 1A-1	

If the result is not as specified, replace the integration relay.

3. CONNECT CABLE TO NEGATIVE BATTERY TERMINAL

REMOVAL

1. **DISCHARGE FUEL SYSTEM PRESSURE (See page FU-9)**
2. **DRAIN COOLANT (See page CO-6)**
3. **DISCONNECT CABLE FROM NEGATIVE BATTERY TERMINAL**
   CAUTION:
   Wait at least 90 seconds after disconnecting the cable from the negative (-) battery terminal to prevent airbag and seat belt pretensioner activation.
4. **REMOVE NO. 1 ENGINE COVER (See page ES-410)**
5. **REMOVE AIR CLEANER CAP (See page ES-411)**
6. **REMOVE THROTTLE BODY (See page ES-412)**
7. **REMOVE FUEL DELIVERY PIPE (See page FU-10)**
8. **DISCONNECT FUEL TUBE**
9. **REMOVE HEATER WATER INLET HOSE**
   (a) Remove the hose clamp.
   (b) Remove the heater water inlet hose from the heater radiator unit and cylinder head.
10. **REMOVE HEATER WATER OUTLET HOSE**
    (a) Remove the heater water outlet hose from the heater radiator unit and water by-pass pipe.
11. **REMOVE INTAKE MANIFOLD**
    (a) Disconnect the union to check valve hose from the brake booster.
    (b) Disconnect the camshaft timing oil control valve connector.
    (c) Remove the wire harness clamp.
    (d) Remove the union to check valve hose from the vacuum hose clamp.
    (e) Remove the 5 bolts, 2 nuts and intake manifold.

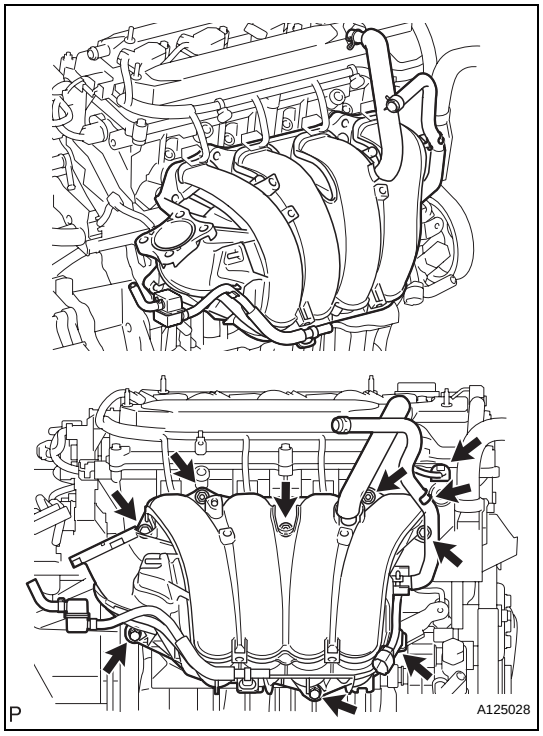

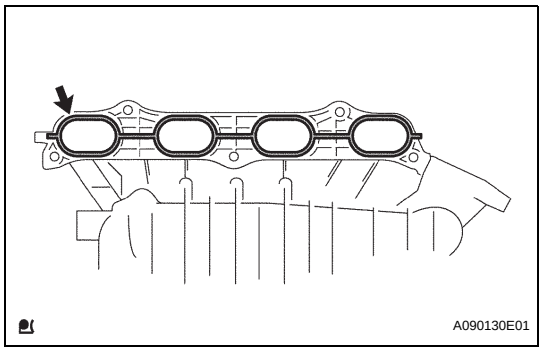

(f) Remove the gasket from the intake manifold.

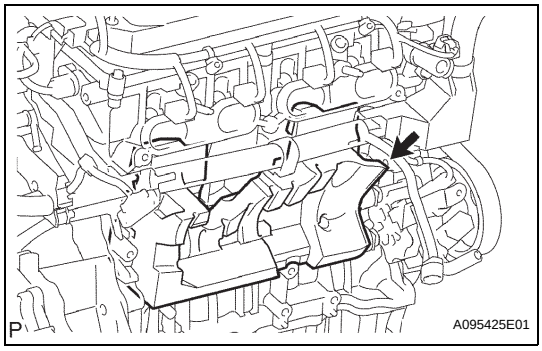

12. REMOVE INTAKE MANIFOLD INSULATOR

(a) Remove the intake manifold insulator from the cylinder block.

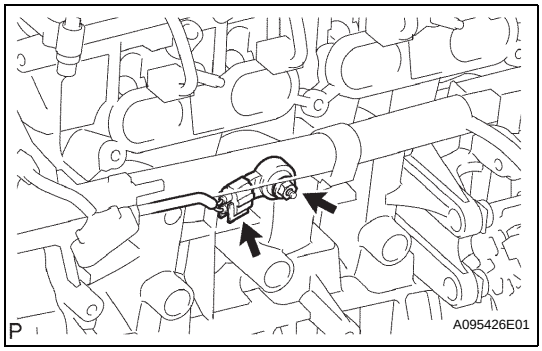

13. REMOVE KNOCK SENSOR

(a) Disconnect the sensor connector.
(b) Remove the nut and sensor.

INSPECTION

1. INSPECT KNOCK SENSOR

(a) Measure the resistance of the sensor.
Standard resistance

Tester Connection	Specified Condition
1 (Ground) - 2 (Output)	120 to 280 kΩ at 20°C (68°F)

If the result is not as specified, replace the knock sensor.

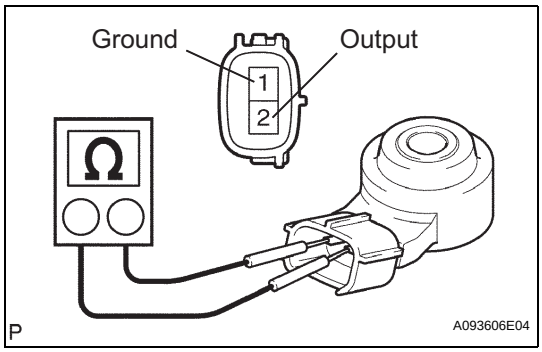

INSTALLATION

1. INSTALL KNOCK SENSOR

(a) Install the sensor with the nut.
Torque: 20 N*m (205 kgf*cm, 15 ft.*lbf)
NOTICE:
Make sure that the knock sensor is in the correct position.
(b) Connect the sensor connector.

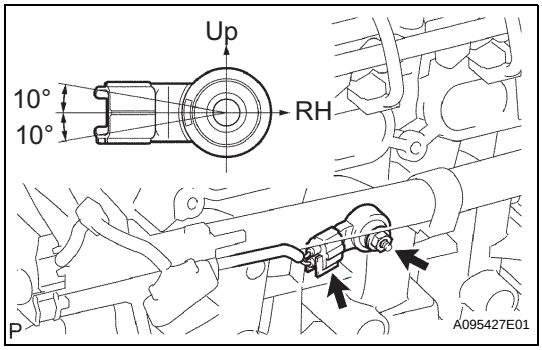

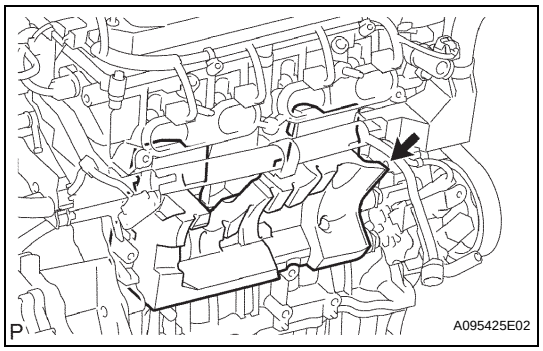

2. INSTALL INTAKE MANIFOLD INSULATOR

(a) Install the intake manifold insulator onto the cylinder block.

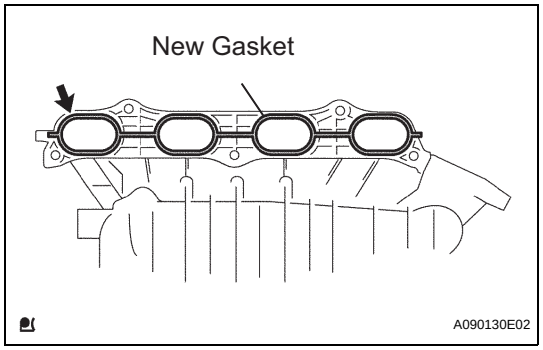

3. INSTALL INTAKE MANIFOLD

(a) Install a new gasket into the intake manifold.

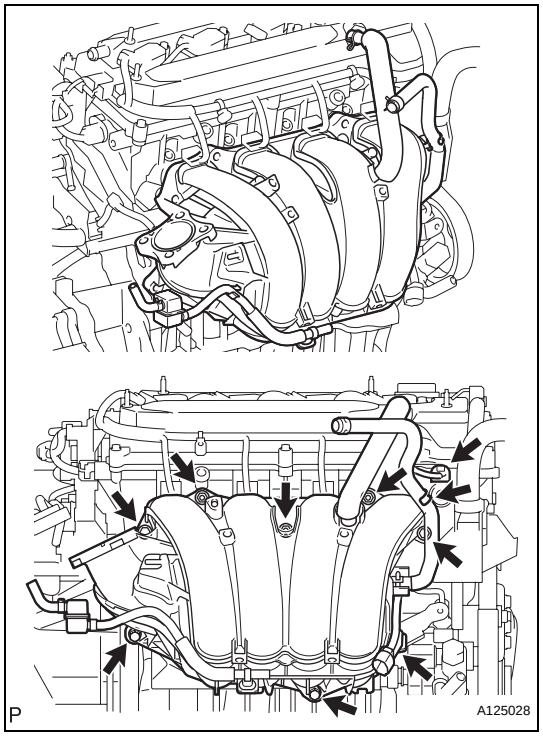

(b) Install the intake manifold with the 5 bolts and 2 nuts.
Torque: 30 N*m (305 kgf*cm, 22 ft.*lbf)

(c) Fit the union to check valve hose into the vacuum hose clamp.

(d) Install the wire harness clamp.

(e) Connect the camshaft timing oil control valve connector.

(f) Connect the union to check valve hose to the brake booster.

4. CONNECT HEATER WATER OUTLET HOSE

(a) Install the heater water outlet hose to the water by-pass pipe and heater radiator unit.

5. CONNECT HEATER WATER INLET HOSE

(a) Install the heater water inlet hose to the cylinder head and heater radiator unit.

(b) Install the hose clamp.

6. INSTALL FUEL TUBE

7. INSTALL FUEL DELIVERY PIPE (See page FU-13)

8. INSTALL THROTTLE BODY (See page ES-413)

9. INSTALL AIR CLEANER CAP (See page ES-413)

10. CONNECT CABLE TO NEGATIVE BATTERY TERMINAL

11. ADD ENGINE COOLANT (See page CO-6)

12. CHECK FOR ENGINE COOLANT LEAKAGE (See page CO-1)

13. CHECK FOR FUEL LEAKAGE (See page FU-14)

14. INSTALL NO. 1 ENGINE COVER (See page ES-414)

KNOCK SENSOR

COMPONENTS

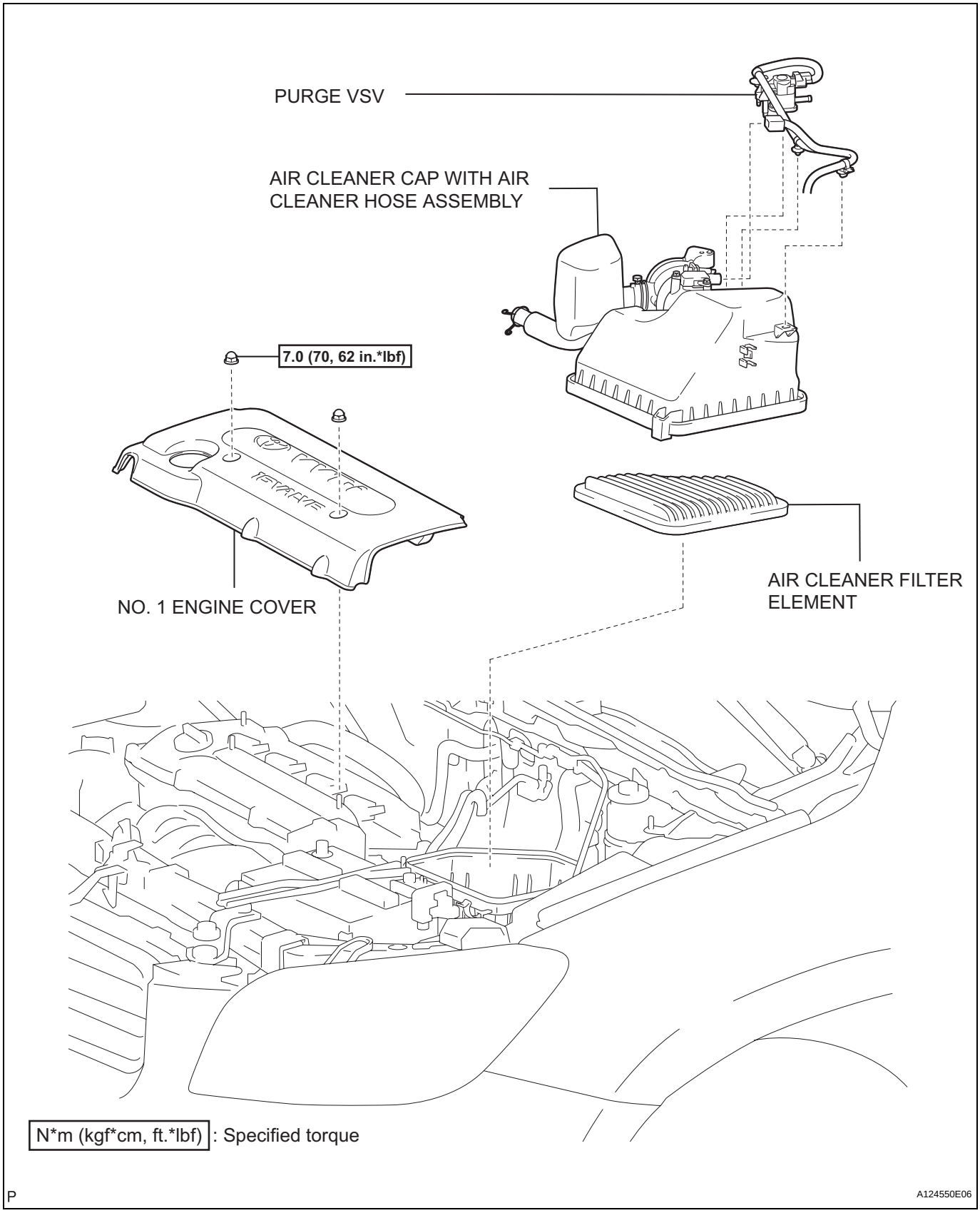

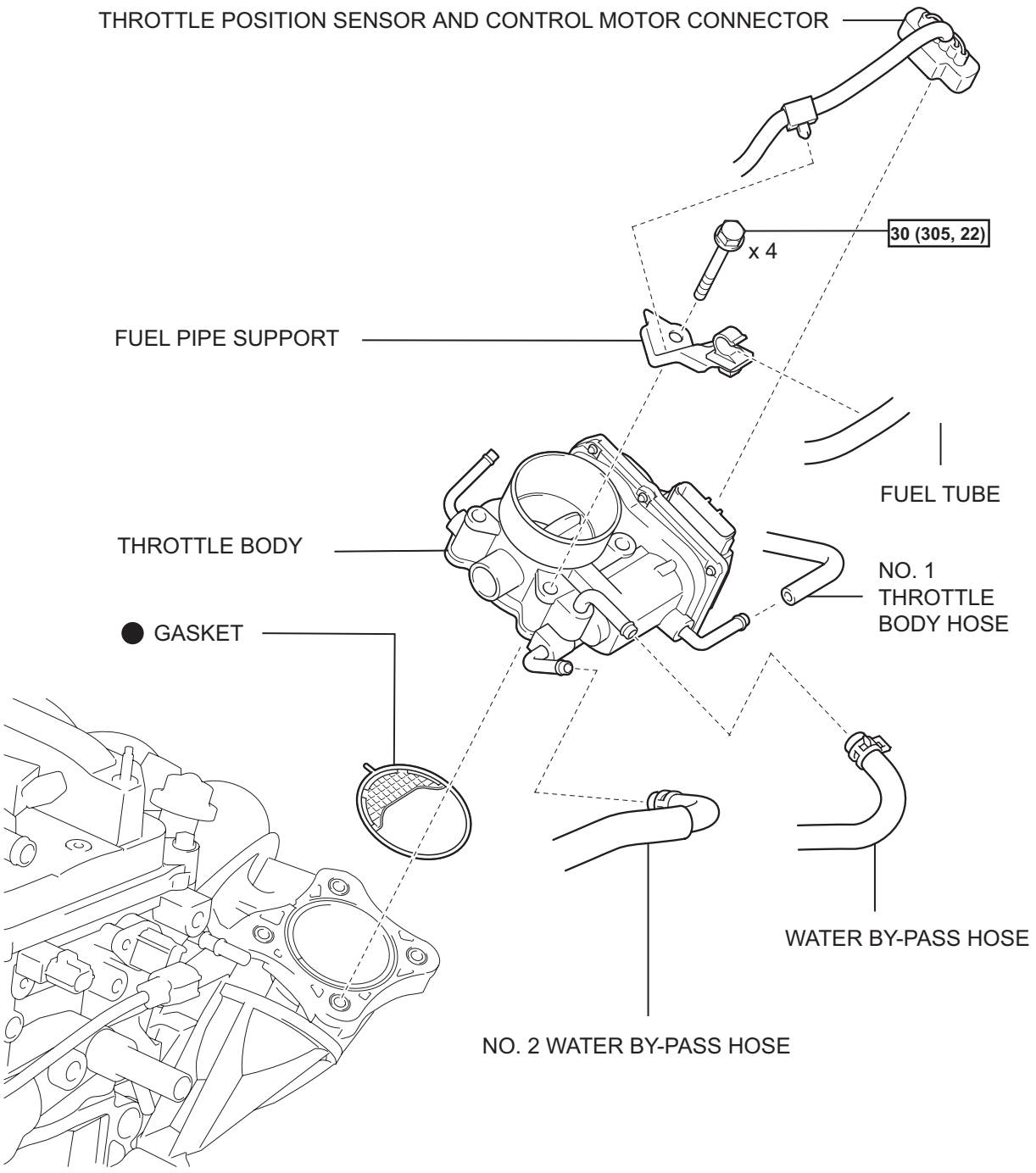

N*m (kgf*cm, ft.*lbf) : Specified torque

● Non-reusable part

P

A124552E03

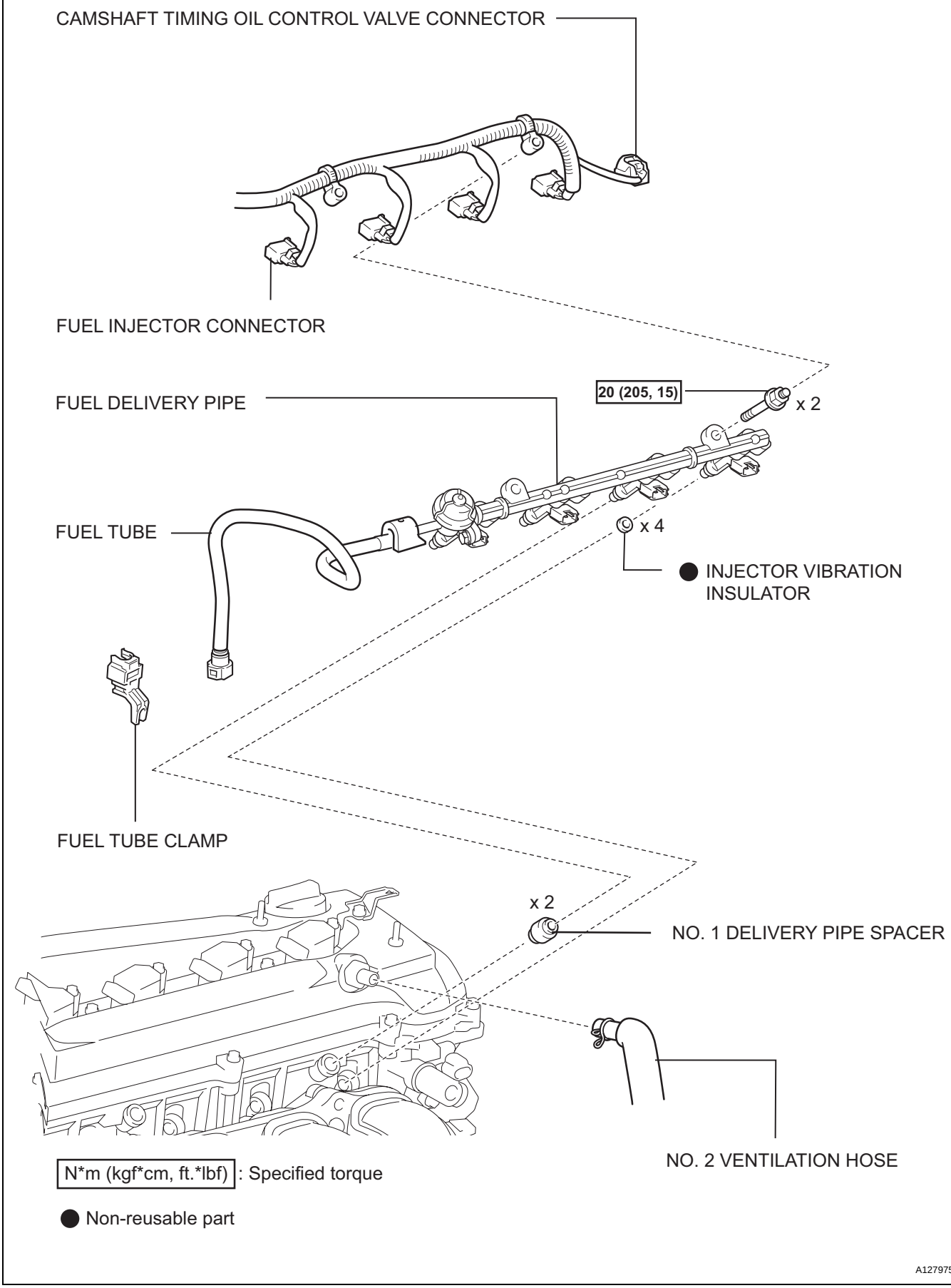
CAMSHAFT TIMING OIL CONTROL VALVE CONNECTOR
FUEL INJECTOR CONNECTOR
FUEL DELIVERY PIPE
20 (205, 15)
x 2
FUEL TUBE
x 4
● INJECTOR VIBRATION INSULATOR
FUEL TUBE CLAMP
x 2
NO. 1 DELIVERY PIPE SPACER
NO. 2 VENTILATION HOSE
N*m (kgf*cm, ft.*lbf) : Specified torque
● Non-reusable part
A127975E01

ES

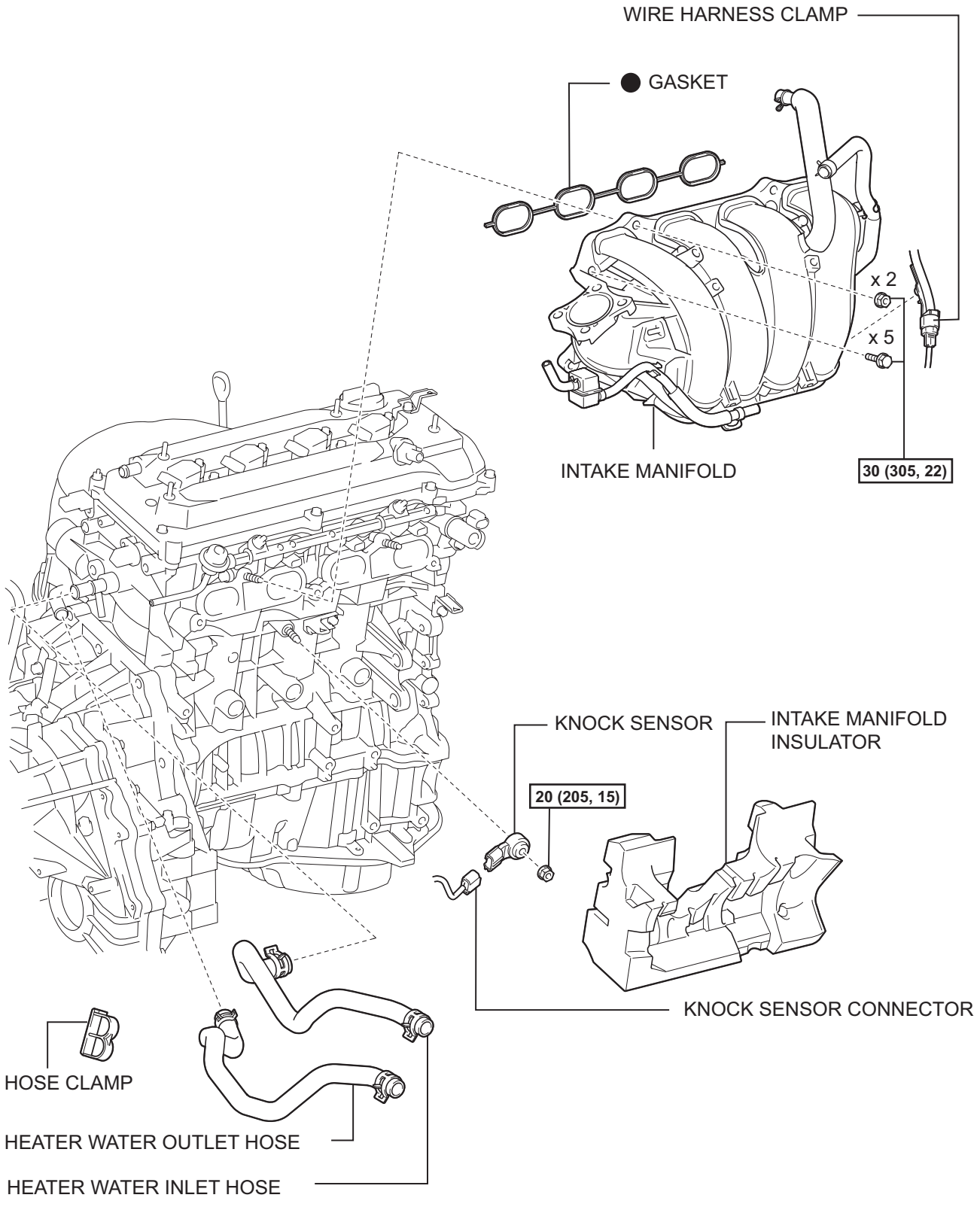

N*m (kgf*cm, ft.*lbf) : Specified torque

● Non-reusable part

P

A125027E01

REMOVAL

1. DISCONNECT CABLE FROM NEGATIVE BATTERY TERMINAL

CAUTION:

Wait at least 90 seconds after disconnecting the cable from the negative (-) battery terminal to prevent airbag and seat belt pretensioner activation.

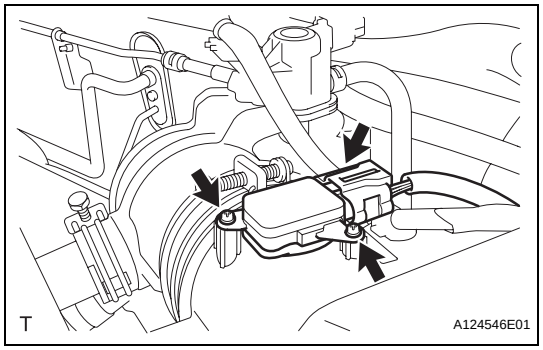

2. REMOVE MASS AIR FLOW METER

(a) Disconnect the mass air flow meter connector.

(b) Remove the 2 screws and mass air flow meter.

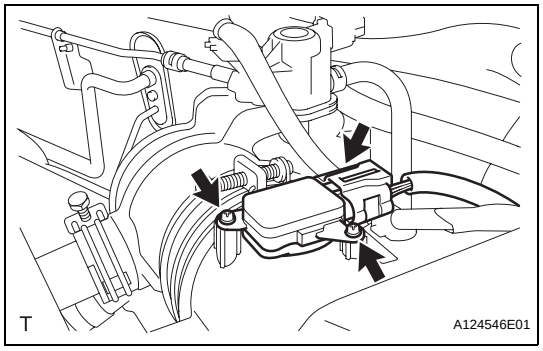

INSTALLATION

1. INSTALL MASS AIR FLOW METER

(a) Install the mass air flow meter with the 2 screws.

NOTICE:

Make sure that the O-ring is not cracked or jammed when installing it.

(b) Connect the mass air flow meter connector.

2. CONNECT CABLE TO BATTERY NEGATIVE TERMINAL

MASS AIR FLOW METER

COMPONENTS

ES

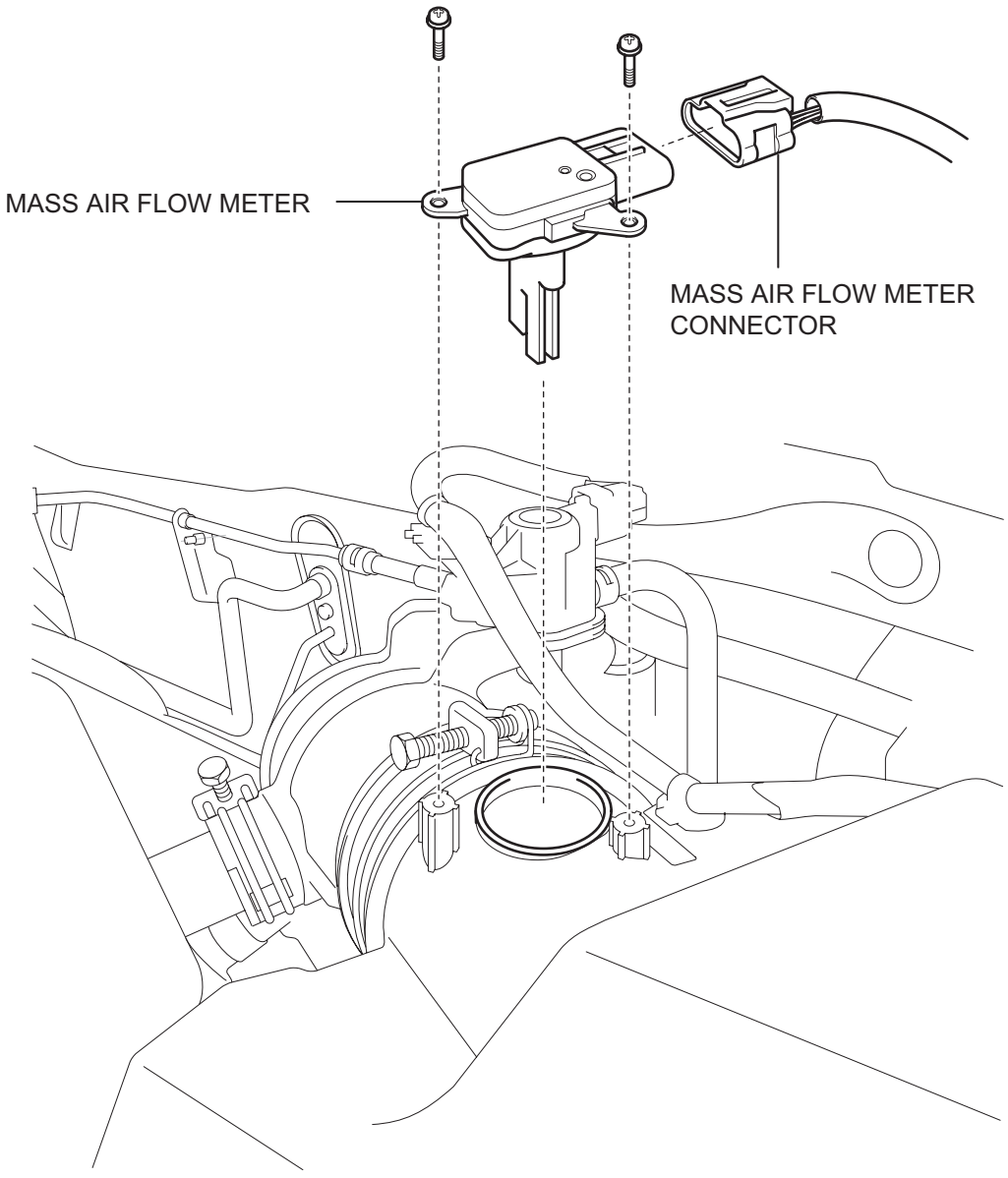

T

A124545E01

ON-VEHICLE INSPECTION

NOTICE:

- **Perform the MAF meter inspection according to the procedures below.**
- **Only replace the MAF meter when both the LONG FT#1 value and MAF value in the DATA LIST (with the engine stopped) are not within the normal operating range.**

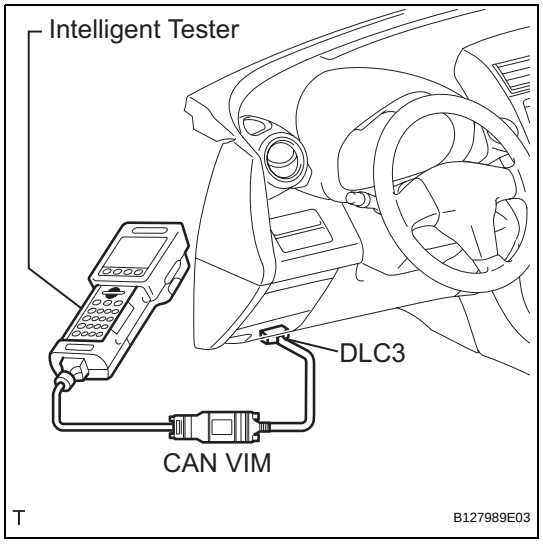

1. INSPECT MASS AIR FLOW METER

(a) Perform confirmation driving pattern.

(1) Connect the intelligent tester to the DLC3.

(2) Turn the ignition switch ON.

(3) Turn the tester ON.

(4) Clear the DTCs (see page ES-35).

(5) Start the engine and warm it up with all accessory switches OFF until the engine coolant temperature is 75°C (167°F) or more.

(6) Drive the vehicle at 50 km/h (31 mph) or more for 3 to 5 minutes*1.

(7) Allow the engine to idle for 2 minutes*2.

(8) Perform steps *1 and *2 at least 3 times.

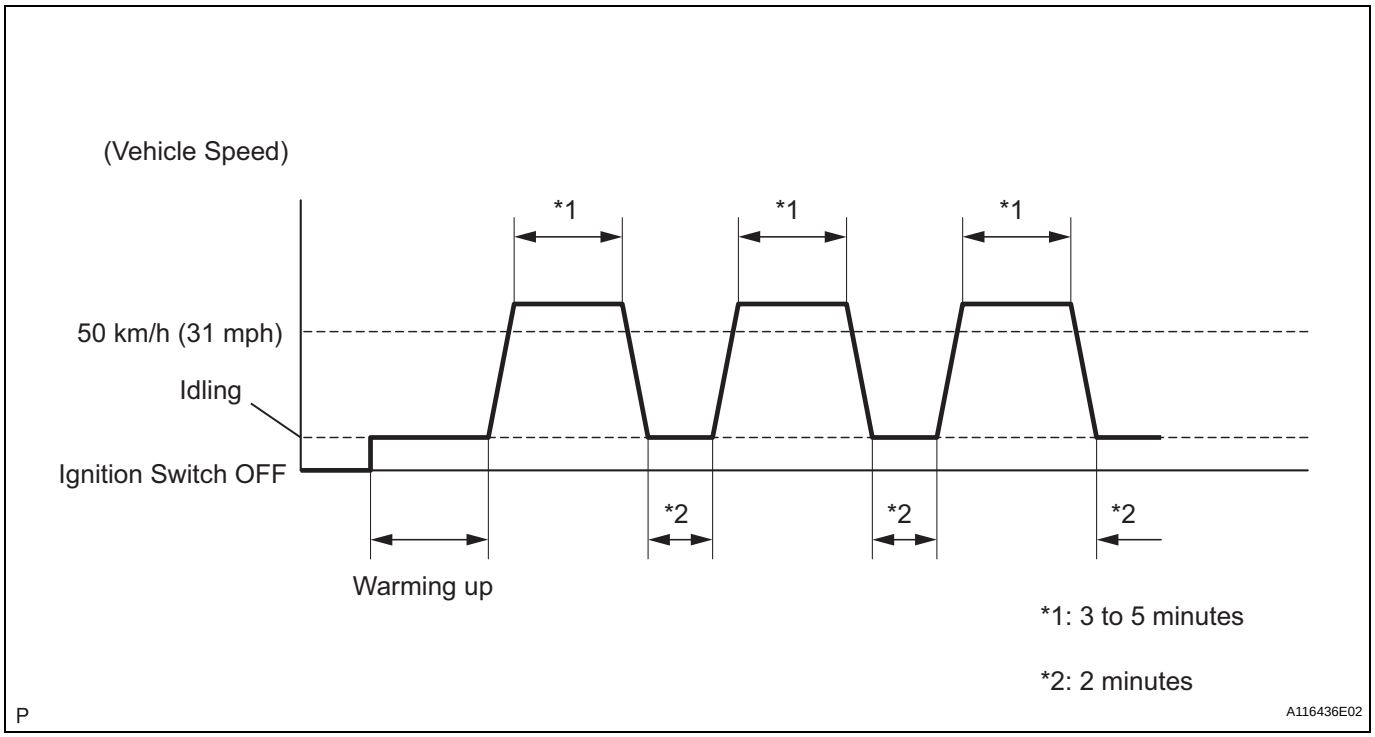

(b) Read the value using the intelligent tester (LONG FT#1).

(1) Select the following menu items: DIAGNOSIS / ENHANCED OBD II / DATA LIST / PRIMARY / LONG FT#1.

(2) Read the values displayed on the tester.

Standard value:

Within -15 to +15%

If the result is not within the specified range, perform the inspection below.

(c) Read the value using the intelligent tester (MAF).

NOTICE:

- **Turn off the engine.**
- **Perform the inspection with the vehicle indoors and on a level surface.**
- **Perform the inspection of the MAF meter while it is installed to the air cleaner case (installed to the vehicle).**
- **During the test, do not use the exhaust air duct to perform suction on the exhaust pipe.**

(1) Turn the ignition switch to ACC.

(2) Turn the ignition switch ON (do not run the engine).

(3) Turn the tester ON.

(4) Select the following menu items: DIAGNOSIS / ENHANCED OBD II / DATA LIST / PRIMARY / MAF.

(5) Wait 30 seconds, and read the values on the intelligent tester.

Standard condition:

Less than 0.45 g/sec.

- If the result is not as specified, replace the MAF meter.
- If the result is within the specified range, inspect the cause of the extremely rich or lean air-fuel ratio (see page ES-147).

ES

PARTS LOCATION

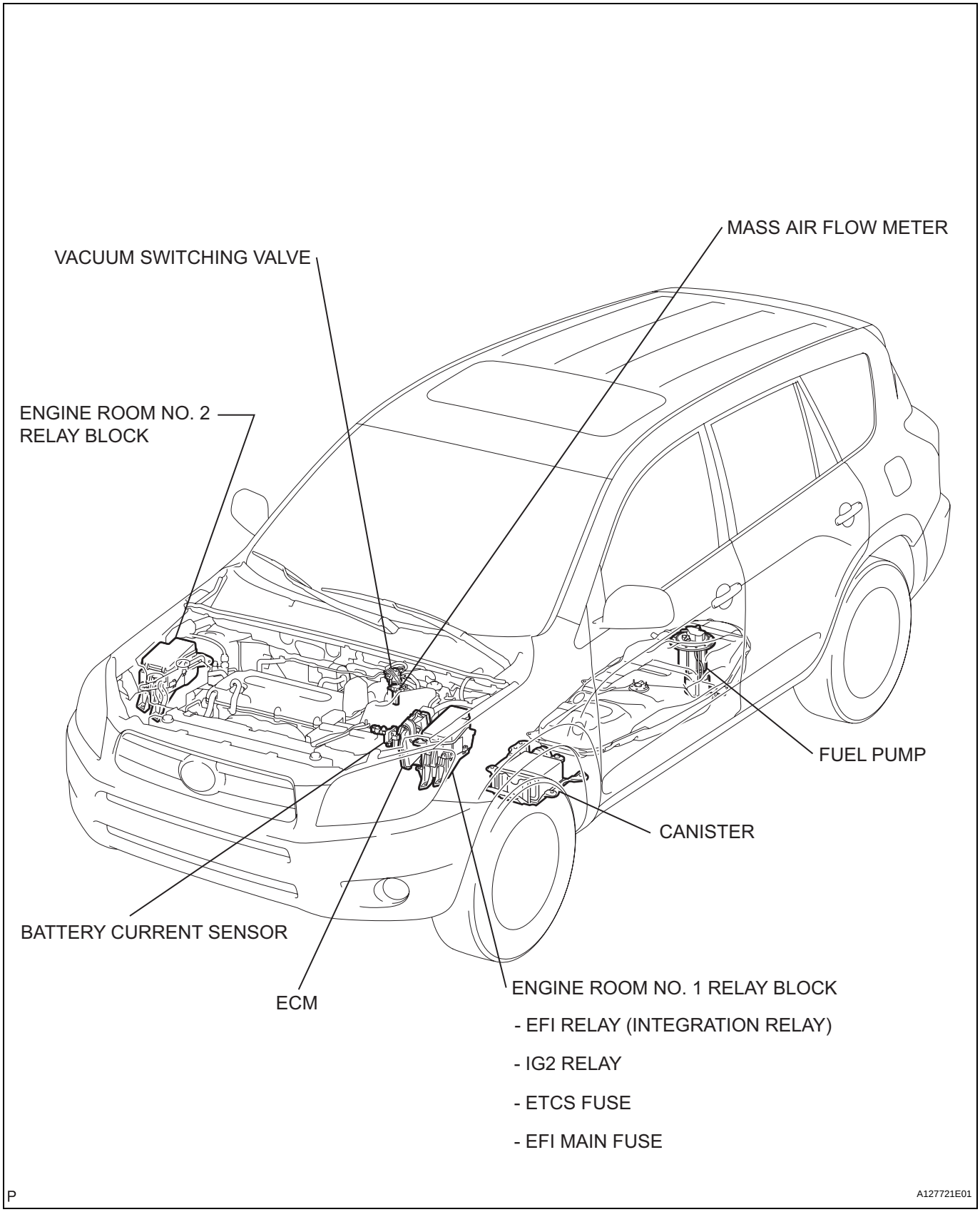

ES

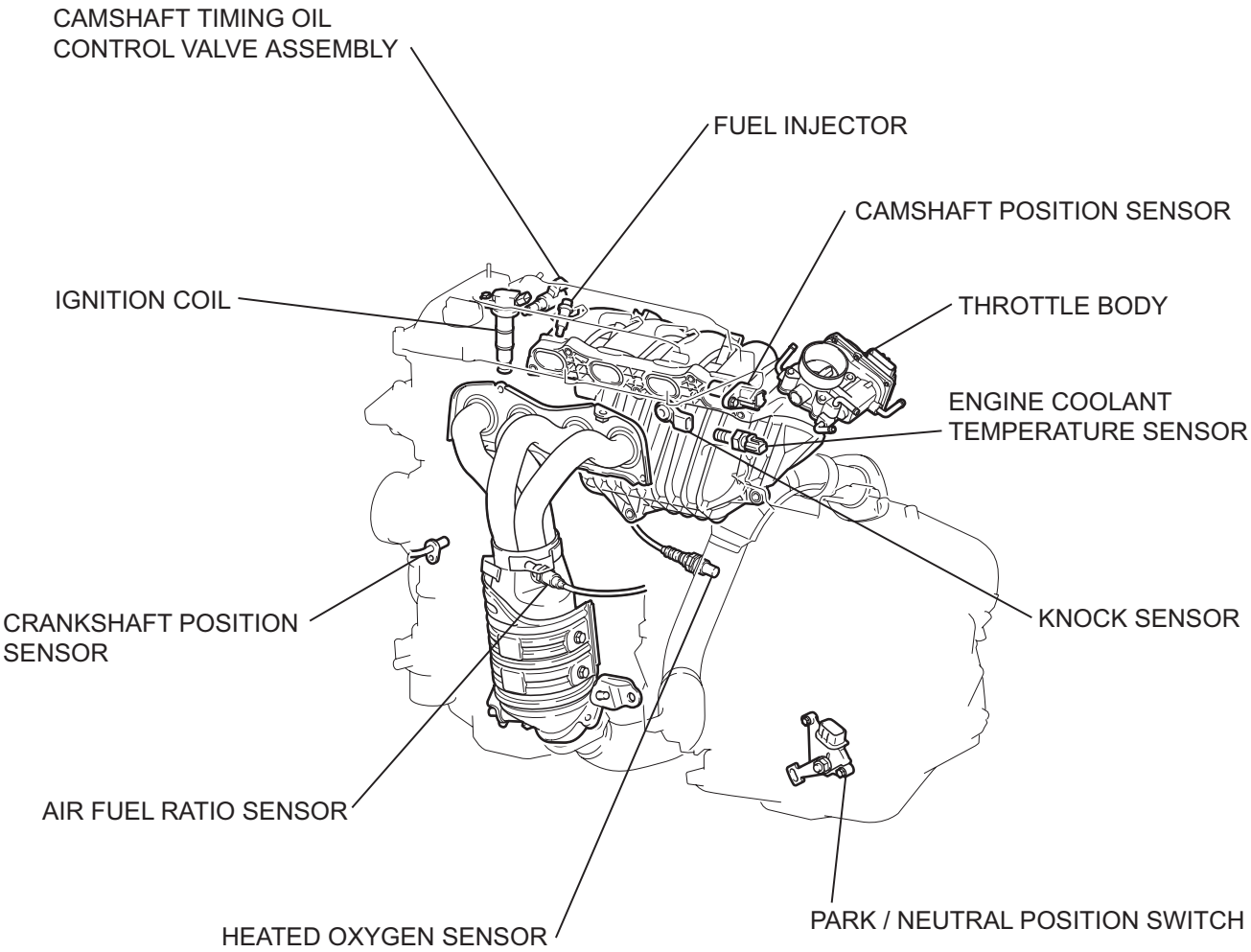

P

A126861E03

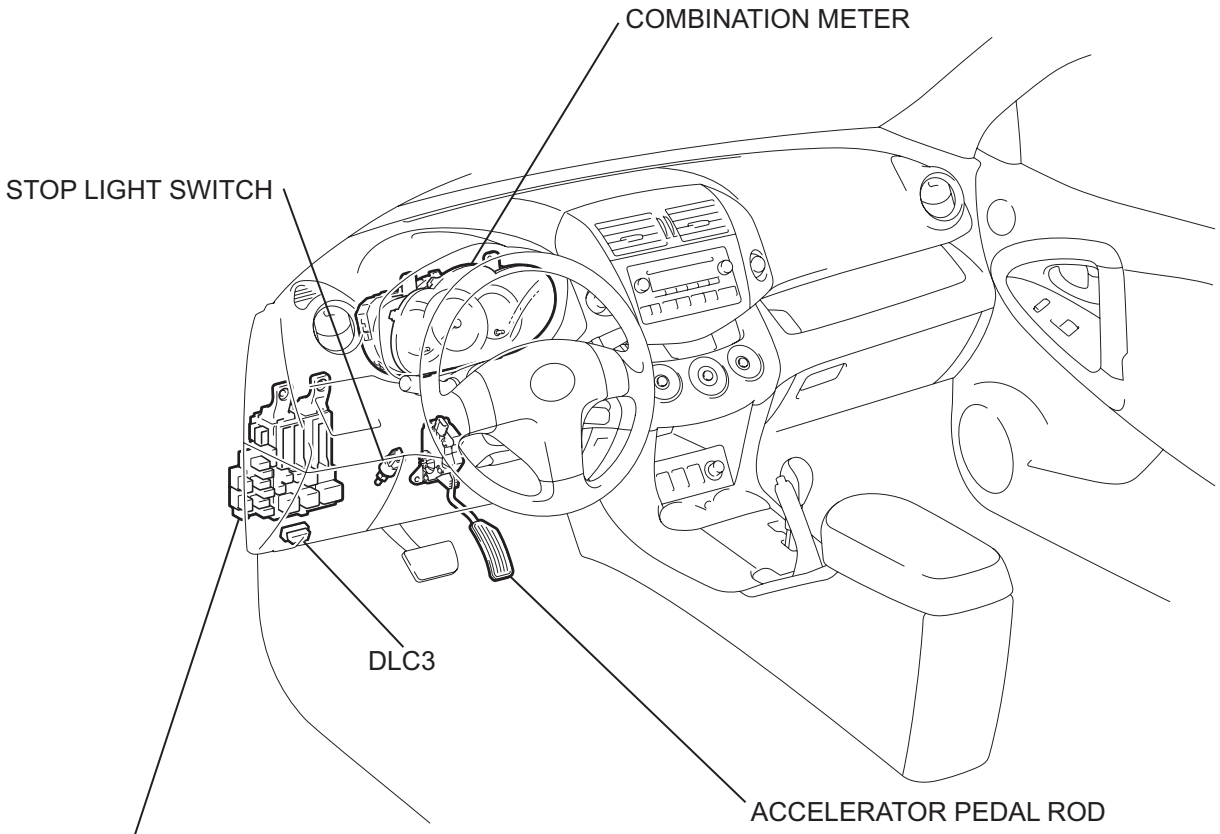

INSTRUMENT PANEL JUNCTION BLOCK

- STARTER RELAY (ST)
- CIRCUIT OPENING RELAY (C/OPN)
- IGN FUSE
- STOP FUSE

P

A127722E01

SYSTEM DIAGRAM

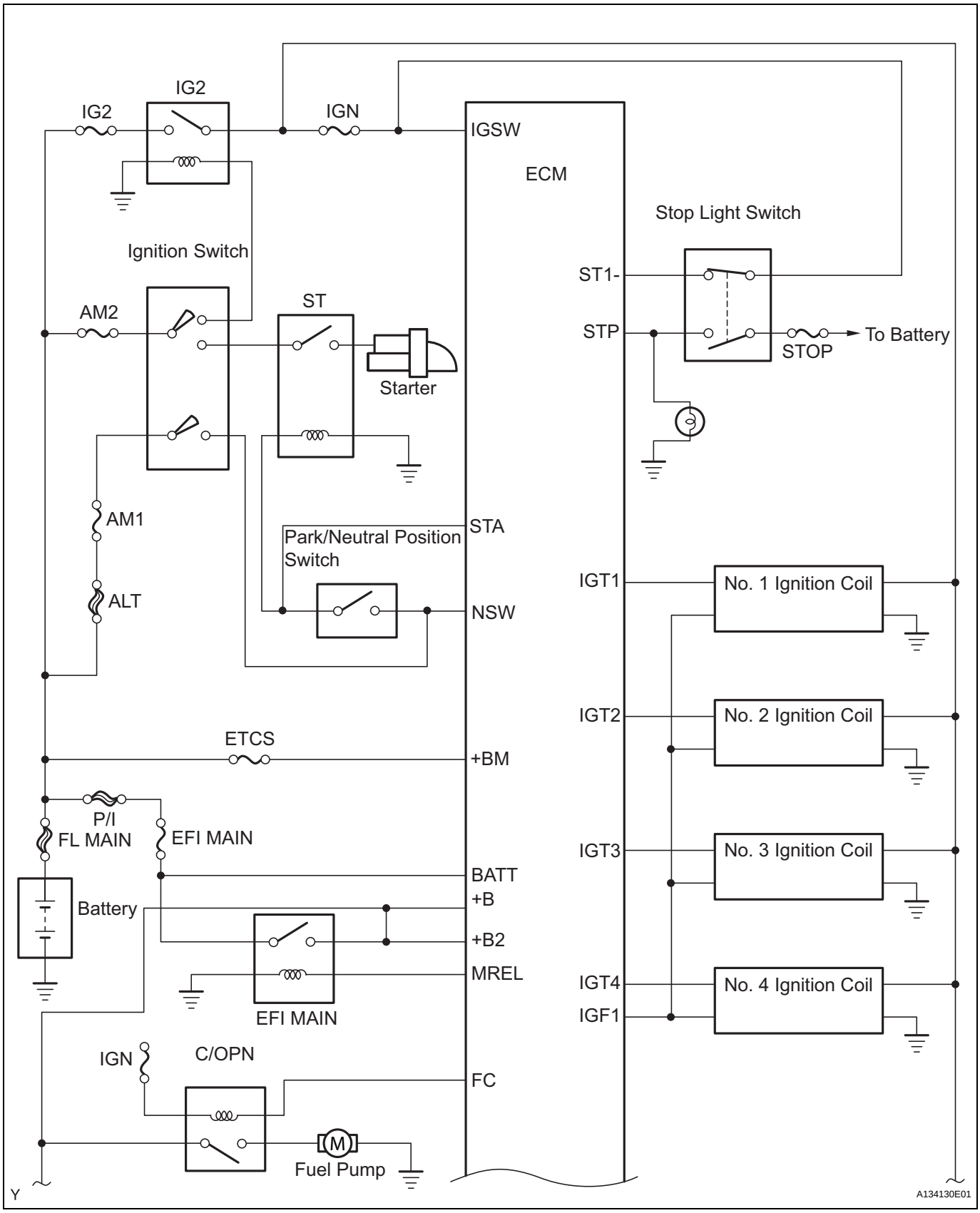

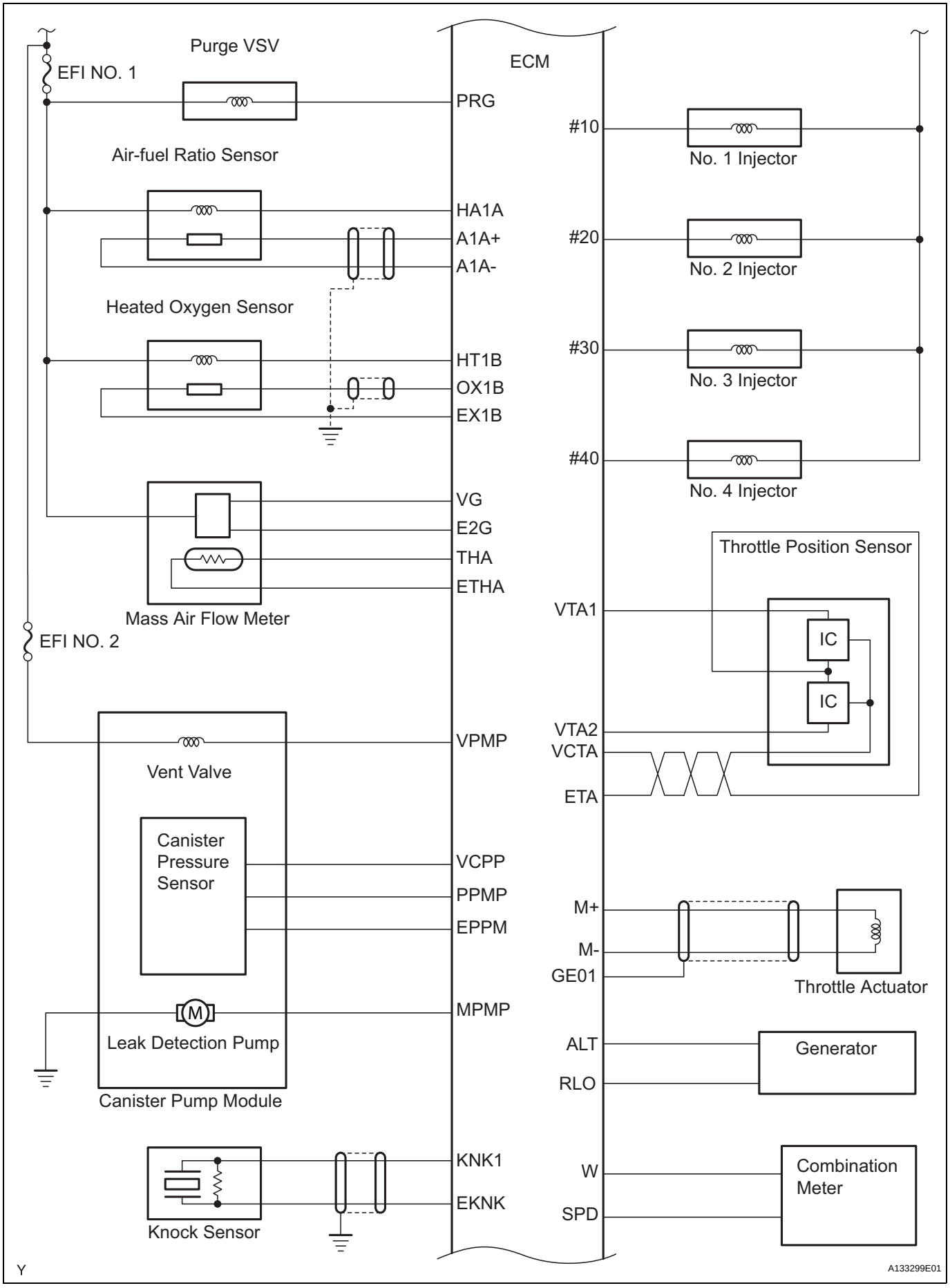
Purge VSV
EFI NO. 1
ECM
PRG
#10
No. 1 Injector
Air-fuel Ratio Sensor
HA1A
A1A+
A1A-
#20
No. 2 Injector
Heated Oxygen Sensor
HT1B
OX1B
EX1B
#30
No. 3 Injector
#40
No. 4 Injector
VG
E2G
THA
ETHA
Throttle Position Sensor
Mass Air Flow Meter
EFI NO. 2
VTA1
IC
IC
VPMP
VTA2
VCTA
ETA
Vent Valve
Canister Pressure Sensor
VCPP
PPMP
EPPM
M+
M-
GE01
Throttle Actuator
MPMP
Leak Detection Pump
ALT
Generator
RLO
Canister Pump Module
KNK1
EKNK
W
Combination Meter
SPD
Knock Sensor
Y
A133299E01

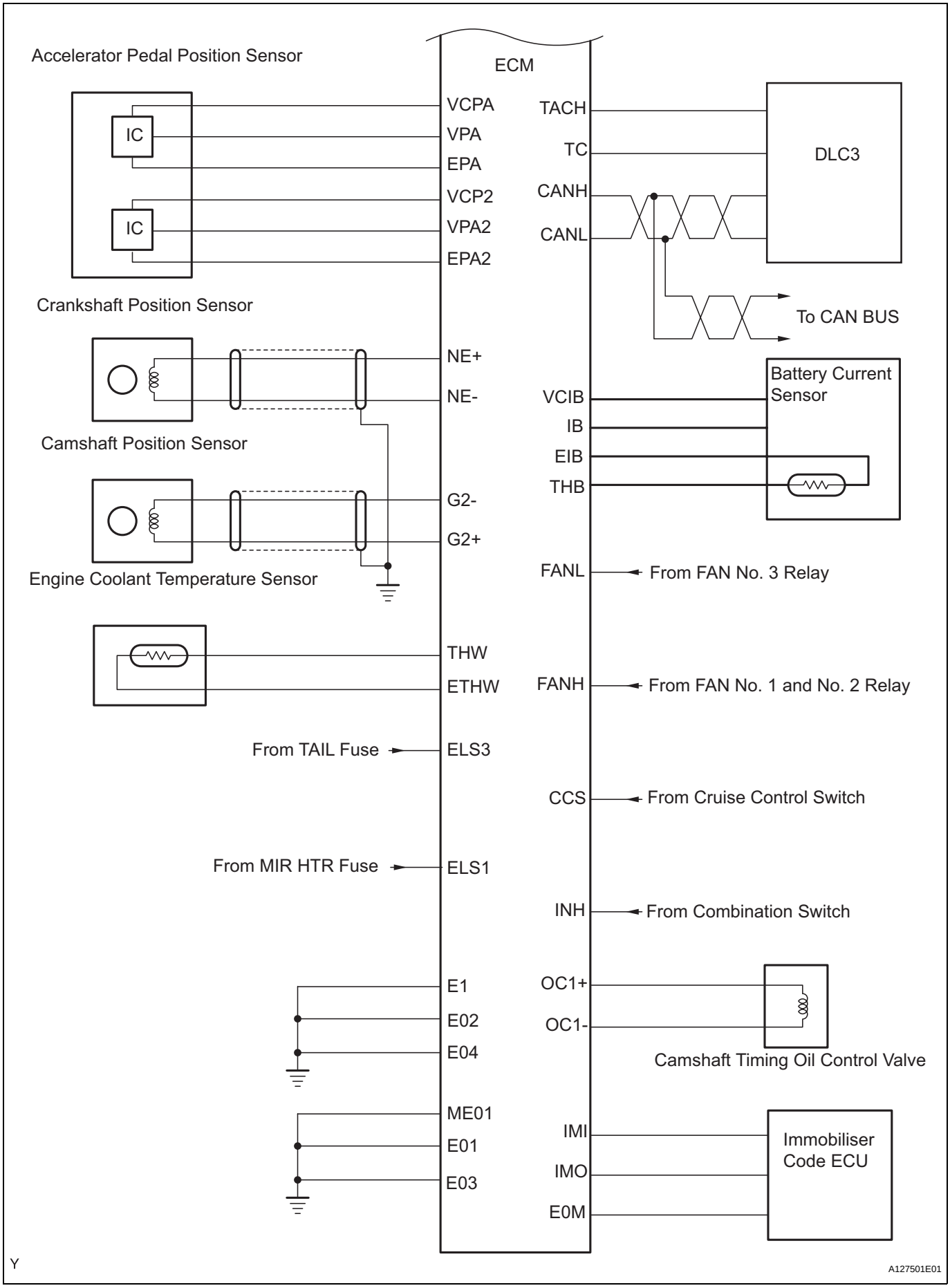
Accelerator Pedal Position Sensor
IC
IC
Crankshaft Position Sensor
Camshaft Position Sensor
Engine Coolant Temperature Sensor
ECM
VCPA
VPA
EPA
VCP2
VPA2
EPA2
NE+
NE-
G2-
G2+
THW
ETHW
From TAIL Fuse
ELS3
From MIR HTR Fuse
ELS1
E1
E02
E04
ME01
E01
E03
TACH
TC
CANH
CANL
DLC3
To CAN BUS
VCIB
IB
EIB
THB
Battery Current Sensor
FANL
From FAN No. 3 Relay
FANH
From FAN No. 1 and No. 2 Relay
CCS
From Cruise Control Switch
INH
From Combination Switch
OC1+
OC1-
Camshaft Timing Oil Control Valve
IMI
IMO
E0M
Immobiliser Code ECU
Y
A127501E01

HOW TO PROCEED WITH TROUBLESHOOTING

HINT:
*: Use the intelligent tester.

1	VEHICLE BROUGHT TO WORKSHOP

NEXT

2	CUSTOMER PROBLEM ANALYSIS

NEXT

3	CONNECT INTELLIGENT TESTER TO DLC3*

HINT:
If the display indicates a communication fault in the tester, inspect the DLC3.

NEXT

4	CHECK DTC AND FREEZE FRAME DATA*

HINT:
Record or print DTCs and freeze frame data, if necessary.

NEXT

5	CLEAR DTC AND FREEZE FRAME DATA*

NEXT

6	CONDUCT VISUAL INSPECTION

NEXT

7	SET CHECK MODE DIAGNOSIS*

NEXT

8	CONFIRM PROBLEM SYMPTOMS

HINT:
If the engine does not start, first perform the "CHECK DTC" procedures and "CONDUCT BASIC INSPECTION" procedures below.

Result	Proceed to
Malfunction does not occur	A
Malfunction occurs	B

B → GO TO STEP 10

A

9	SIMULATE SYMPTOMS

NEXT

10	CHECK DTC*

Result	Proceed to
Malfunction code	A
No code	B

B → GO TO STEP 12

A

11	REFER TO DTC CHART

NEXT

GO TO STEP 14

12	CONDUCT BASIC INSPECTION

Result	Proceed to
Malfunctioning parts not confirmed	A
Malfunctioning parts confirmed	B

B → GO TO STEP 17

A

13	REFER TO PROBLEM SYMPTOMS TABLE

Result	Proceed to
Malfunctioning circuit confirmed	A
Malfunctioning parts confirmed	B

B → GO TO STEP 17

A

14	CHECK ECM POWER SOURCE CIRCUIT

ES

NEXT

15	CONDUCT CIRCUIT INSPECTION

Result	Proceed to
Malfunction not confirmed	A
Malfunction confirmed	B

B → GO TO STEP 18

A

16	CHECK FOR INTERMITTENT PROBLEMS

NEXT

GO TO STEP 18

17	CONDUCT PARTS INSPECTION

NEXT

18	IDENTIFY PROBLEM

NEXT

19	ADJUST AND/OR REPAIR

NEXT

20	CONDUCT CONFIRMATION TEST

NEXT

END

CHECK FOR INTERMITTENT PROBLEMS

HINT:
Inspect the vehicle's ECM using check mode. Intermittent problems are easier to detect with the intelligent tester when the ECM is in check mode. In check mode, the ECM uses 1 trip detection logic, which is more sensitive to malfunctions than normal mode (default), which uses 2 trip detection logic.

1. Clear the DTCs (see page ES-35).
2. Switch the ECM from normal mode to check mode using the intelligent tester (see page ES-38).
3. Perform a simulation test.
4. Check and wiggle the harness(es), connector(s) and terminal(s).

BASIC INSPECTION

When a malfunction is not confirmed by the DTC check, troubleshooting should be carried out in all circuits considered to be possible causes of the problem. In many cases, by carrying out the basic engine check shown in the following flowchart, the location of the problem can be found quickly and efficiently. Therefore, using this check is essential when engine troubleshooting.

ES

1 CHECK BATTERY VOLTAGE

NOTICE:
Conduct this check with the engine stopped and ignition switch OFF.

Result	Proceed to
11 V or more	OK
Below 11 V	NG

NG → **CHARGE OR REPLACE BATTERY**

OK

2 CHECK WHETHER ENGINE WILL CRANK

NG → **PROCEED TO PROBLEM SYMPTOMS TABLE**

OK

3 CHECK WHETHER ENGINE STARTS

NG → **GO TO STEP 6**

OK

4 CHECK AIR FILTER

(a) Visually check that the air filter is not excessively contaminated with dirt or oil.

NG → **REPLACE AIR FILTER**

OK

5 CHECK IDLING SPEED

NG → **TROUBLESHOOT IDLING SPEED AND PROCEED TO NEXT STEP**

OK

6	CHECK FUEL PRESSURE

NG → TROUBLESHOOT FUEL PRESSURE AND PROCEED TO NEXT STEP

OK

7	CHECK FOR SPARK

NG → TROUBLESHOOT SPARK AND PROCEED TO NEXT STEP

OK

PROCEED TO PROBLEM SYMPTOMS TABLE

REGISTRATION

NOTICE:
The Vehicle Identification Number (VIN) must be input into the replacement ECM.
HINT:
The VIN is a 17-digit alphanumeric number. The intelligent tester is required to register the VIN.

1. DESCRIPTION

This registration section consists of 3 parts: Input Instructions, Read VIN and Write VIN.

(a) Input Instructions: Explains the general VIN input instructions when using the intelligent tester.

(b) Read VIN: Explains the VIN reading process in a flowchart. This process allows the VIN stored in the ECM to be read in order to confirm that the two VINs, provided with the vehicle and stored in the vehicle's ECM, are the same.

(c) Write VIN: Explains the VIN writing process in a flowchart. This process allows the VIN to be input into the ECM. If the ECM is changed, or the vehicle VIN and ECM VIN do not match, the VIN can be registered or overwritten in the ECM by following this procedure.

2. INPUT INSTRUCTIONS

(a) Intelligent tester
The arrow buttons (UP, DOWN, RIGHT and LEFT) and numerical buttons (0 to 9) are used to input the VIN.

(b) Cursor Operation
To move the cursor around the tester screen, press the RIGHT and LEFT buttons.

(c) Alphabetical Character Input
(1) Press the UP and DOWN buttons to select the desired alphabetical character.
(2) After selection, the cursor should move.

(d) Numeric Character Input
(1) Press the numerical button corresponding to the number that you want to input.
(2) After input, the cursor should move.
HINT:
Numerical characters can also be selected by using the UP and DOWN buttons.

(e) Correction
(1) When correcting the input character(s), put the cursor onto the character using the RIGHT and LEFT buttons.
(2) Select or input the correct character using the UP/DOWN buttons, or the numerical buttons.

(f) Finishing Input Operation
(1) Make sure that the input VIN matches the vehicle VIN after input.
(2) Press the ENTER button on the tester.

3. READ VIN

(a) Confirm the vehicle VIN.
(b) Connect the intelligent tester to the DLC3.
(c) Turn the ignition switch ON.
(d) Turn the tester ON.
(e) Select the following menu items: DIAGNOSIS / ENHANCED OBD II/ VIN.

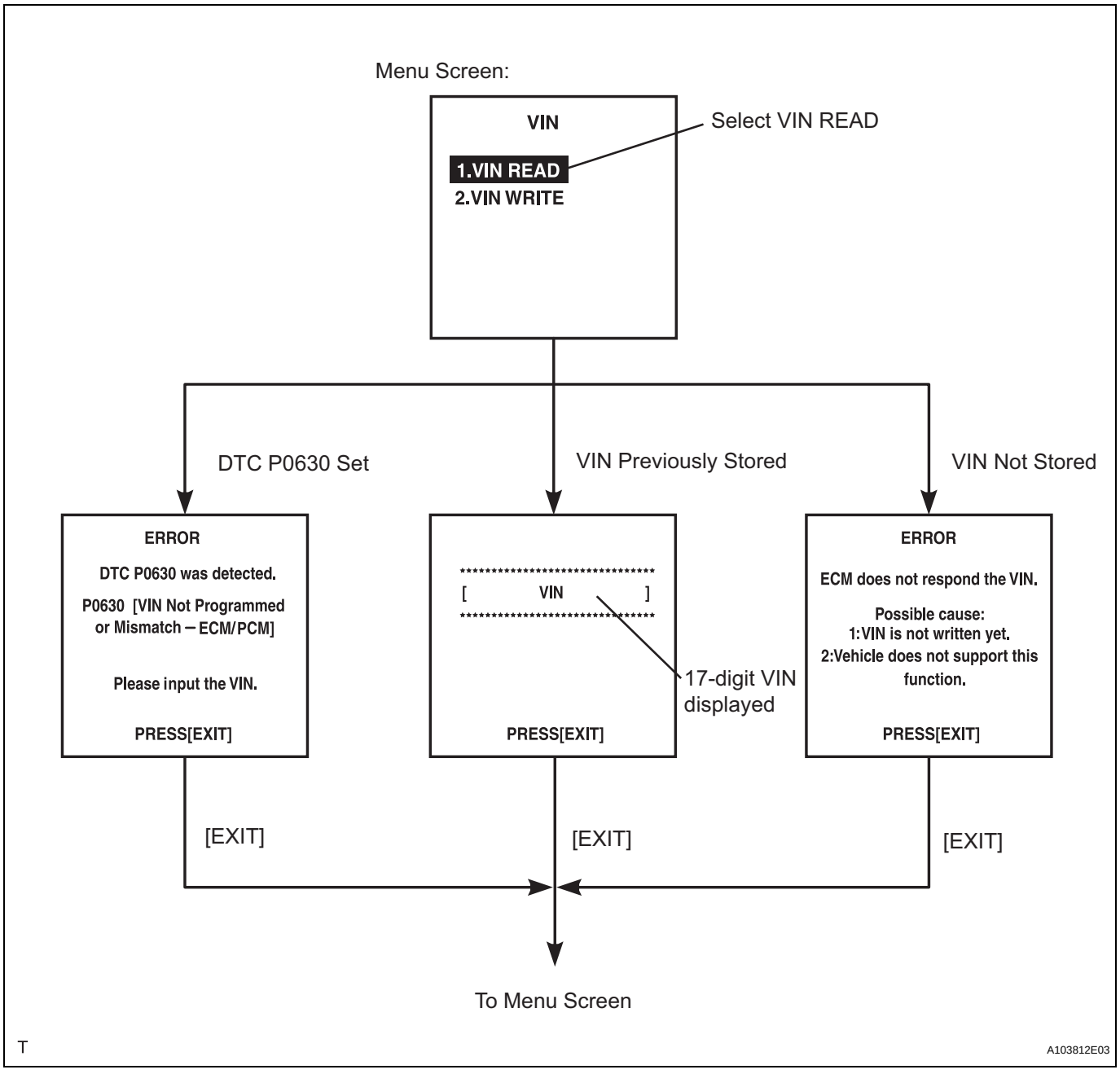

4. WRITE VIN

(a) Confirm the vehicle VIN.
(b) Connect the intelligent tester to the DLC3.
(c) Turn the ignition switch ON.
(d) Turn the tester ON.

(e) Select the following menu items: DIAGNOSIS / ENHANCED OBD II/ VIN.

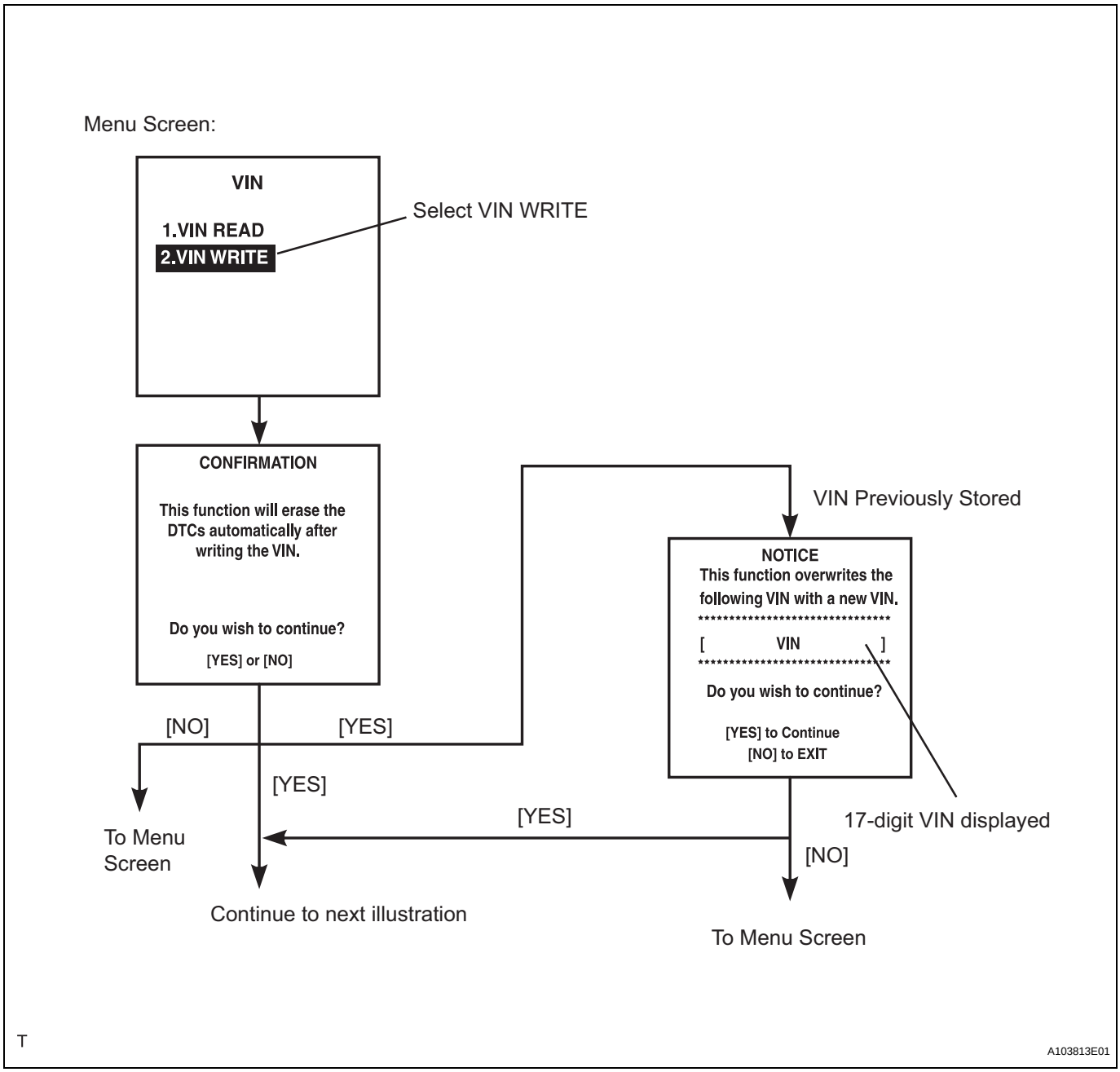

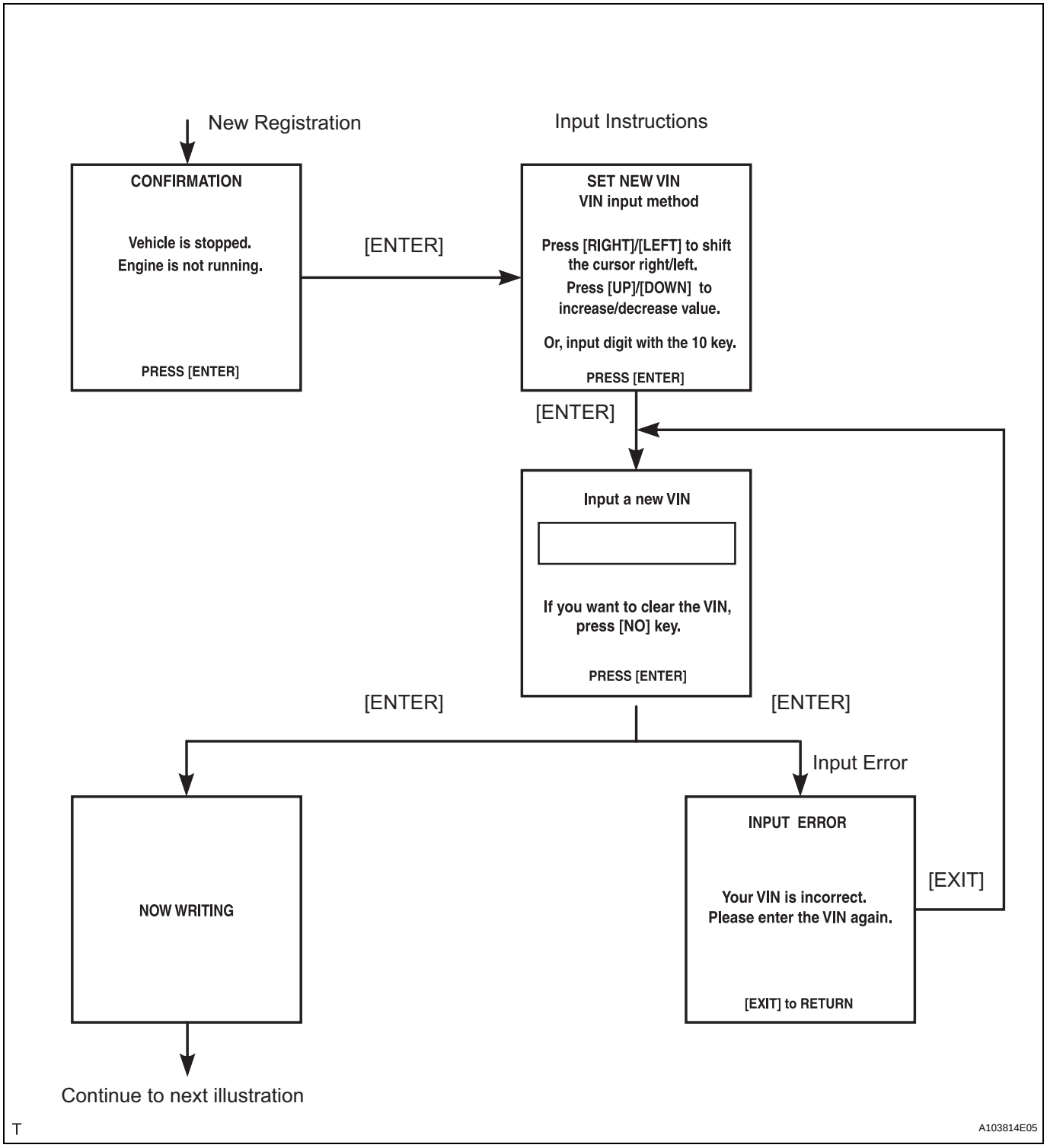
New Registration
Input Instructions
CONFIRMATION
Vehicle is stopped.
Engine is not running.
PRESS [ENTER]
[ENTER]
SET NEW VIN
VIN input method
Press [RIGHT]/[LEFT] to shift the cursor right/left.
Press [UP]/[DOWN] to increase/decrease value.
Or, input digit with the 10 key.
PRESS [ENTER]
[ENTER]
Input a new VIN
If you want to clear the VIN, press [NO] key.
PRESS [ENTER]
[ENTER]
[ENTER]
Input Error
NOW WRITING
INPUT ERROR
Your VIN is incorrect.
Please enter the VIN again.
[EXIT] to RETURN
[EXIT]
Continue to next illustration
T
A103814E05

ES

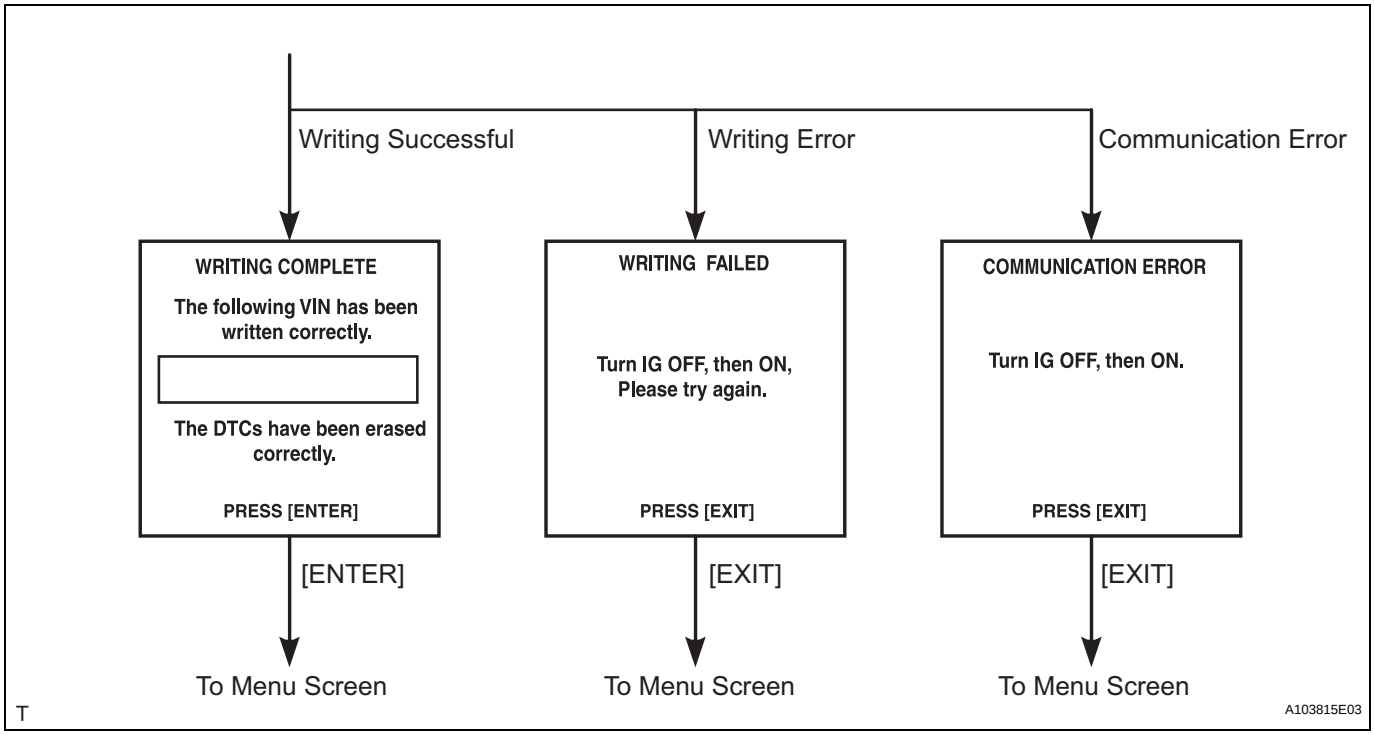
Writing Successful
Writing Error
Communication Error
WRITING COMPLETE
The following VIN has been written correctly.
The DTCs have been erased correctly.
PRESS [ENTER]
WRITING FAILED
Turn IG OFF, then ON, Please try again.
PRESS [EXIT]
COMMUNICATION ERROR
Turn IG OFF, then ON.
PRESS [EXIT]
[ENTER]
[EXIT]
[EXIT]
To Menu Screen
To Menu Screen
To Menu Screen
A103815E03

ES

CHECKING MONITOR STATUS

The purpose of the monitor result (mode 06) is to allow access to the results of on-board diagnostic monitoring tests of specific components/systems that are not continuously monitored. Examples are catalysts, evaporative emissions (EVAP) and thermostats.

The monitor result allows the OBD II scan tool to display the monitor status, test value, minimum test limit and maximum test limit. These data are displayed after the vehicle has been driven to run the monitor.

When the test value is not between the minimum and maximum test limits, the ECM (PCM) interprets this as a malfunction. If the test value is on the borderline of the test limits, the component is likely to malfunction in the near future.

Perform the following instruction to view the monitor status. Although this instruction refers to the Lexus/Toyota diagnostic tester, it can be checked using a generic OBD II scan tool. Refer to your scan tool operator's manual for specific procedural information.

1. PERFORM MONITOR DRIVE PATTERN

(a) Connect the intelligent tester to the DLC3.

(b) Turn the ignition switch and the tester ON.

(c) Clear the DTCs (see page ES-35).

(d) Run the vehicle in accordance with the applicable drive pattern described in READINESS MONITOR DRIVE PATTERN (see page ES-19). Do not turn the ignition switch OFF.

NOTE:

The test results will be lost if the ignition switch is turned OFF.

2. ACCESS MONITOR RESULT

(a) Select the following items from the intelligent tester menus: DIAGNOSIS, ENHANCED OBD II, MONITOR INFO and MONITOR RESULT. The monitor status appears after the component name.

- INCMP: The component has not been monitored yet.
- PASS: The component is functioning normally.
- FAIL: The component is malfunctioning.

(b) Confirm that the component is either PASS or FAIL.

(c) Select the component and press ENTER. The accuracy test value appears if the monitor status is either PASS or FAIL.

3. CHECK COMPONENT STATUS

(a) Compare the test value with the minimum test limit (MIN LIMIT) and maximum test limit (MAX LIMIT).

(b) If the test value is between the minimum and maximum test limits, the component is functioning normally. If not, the component is malfunctioning. The test value is usually not near the test limits. If the test value is near the test limits, the component is likely to malfunction in the near future.
HINT:
The monitor result might on rare occasions be PASS even if the malfunction indicator lamp (MIL) is illuminated. This indicates the system malfunctioned on a previous driving cycle. This might be caused by an intermittent problem.

4. MONITOR RESULT INFORMATION

If you use a generic scan tool, multiply the test value by the scaling value listed below.

A/F Sensor (Sensor 1)

Monitor ID	Test ID	Scaling	Unit	Description
$01	$8E	Multiply by 0.001	V	A/F sensor deterioration level
$01	$91	Multiply by 0.004	mA	A/F sensor current

HO2 Sensor (Sensor 2)

Monitor ID	Test ID	Scaling	Unit	Description
$02	$07	Multiply by 0.001	V	Minimum sensor voltage
$02	$08	Multiply by 0.001	V	Maximum sensor voltage
$02	$8F	Multiply by 0.0003	g	Maximum oxygen storage capacity

Catalyst

Monitor ID	Test ID	Scaling	Unit	Description
$21	$A9	Multiply by 0.0003	No dimension	Oxygen storage capacity of catalyst

EVAP

Monitor ID	Test ID	Scaling	Unit	Description
$3D	$C9	Multiply by 0.001	kPa	Test value for small leak (P0456)
$3D	$CA	Multiply by 0.001	kPa	Test value for gross leak (P0455)
$3D	$CB	Multiply by 0.001	kPa	Test value for leak detection pump stuck OFF (P2401)
$3D	$CD	Multiply by 0.001	kPa	Test value for leak detection pump stuck ON (P2402)
$3D	$CE	Multiply by 0.001	kPa	Test value for vent valve stuck OFF (P2420)
$3D	$CF	Multiply by 0.001	kPa	Test value for vent valve stuck ON (P2419)
$3D	$D0	Multiply by 0.001	kPa	Test value for reference orifice low flow (P043E)
$3D	$D1	Multiply by 0.001	kPa	Test value for reference orifice high flow (P043F)
$3D	$D4	Multiply by 0.001	kPa	Test value for purge VSV stuck closed (P0441)
$3D	$D5	Multiply by 0.001	kPa	Test value for purge VSV stuck open (P0441)
$3D	$D7	Multiply by 0.001	kPa	Test value for purge flow insufficient (P0441)

Misfire

Monitor ID	Test ID	Scaling	Unit	Description
$A1	$0B	Multiply by 1	Time	Exponential Weighted Moving Average (EWMA) misfire for all cylinders: EWMA = Total misfire counts for last driving cycle * 0.1 + Last EWMA * 0.9 Misfire counts for last 10 driving cycles - Total
$A1	$0C	Multiply by 1	Time	Ignition switch ON: Total misfire counts for last driving cycle Engine running: Total misfire counts for current driving cycle Misfire counts for last or current driving cycle - all cylinders

Monitor ID	Test ID	Scaling	Unit	Description
$A2	$0B	Multiply by 1	Time	Exponential Weighted Moving Average (EWMA) misfire for cylinder 1: EWMA = Total misfire counts for last driving cycle * 0.1 + Last EWMA * 0.9 Misfire counts for last 10 driving cycles - Total
$A2	$0C	Multiply by 1	Time	Ignition switch ON: Total misfire counts for last driving cycle Engine running: Total misfire counts for current driving cycle Misfire counts for last or current driving cycle - cylinder 1
$A3	$0B	Multiply by 1	Time	Exponential Weighted Moving Average (EWMA) misfire for cylinder 2: EWMA = Total misfire counts for last driving cycle * 0.1 + Last EWMA * 0.9 Misfire counts for last 10 driving cycles - Total
$A3	$0C	Multiply by 1	Time	Ignition switch ON: Total misfire counts for last driving cycle Engine running: Total misfire counts for current driving cycle Misfire counts for last or current driving cycle - cylinder 2
$A4	$0B	Multiply by 1	Time	Exponential Weighted Moving Average (EWMA) misfire for cylinder 3: EWMA = Total misfire counts for last driving cycle * 0.1 + Last EWMA * 0.9 Misfire counts for last 10 driving cycles - Total
$A4	$0C	Multiply by 1	Time	Ignition switch ON: Total misfire counts for last driving cycle Engine running: Total misfire counts for current driving cycle Misfire counts for last or current driving cycle - cylinder 3
$A5	$0B	Multiply by 1	Time	Exponential Weighted Moving Average (EWMA) misfire for cylinder 4: EWMA = Total misfire counts for last driving cycle * 0.1 + Last EWMA * 0.9 Misfire counts for last 10 driving cycles - Total
$A5	$0C	Multiply by 1	Time	Ignition switch ON: Total misfire counts for last driving cycle Engine running: Total misfire counts for current driving cycle Misfire counts for last or current driving cycle - cylinder 4

READINESS MONITOR DRIVE PATTERN

1. PURPOSE OF READINESS TESTS

- The On-Board Diagnostic (OBD II) system is designed to monitor the performance of emission related components, and indicate any detected abnormalities with DTC (Diagnostic Trouble Codes). Since various components need to be monitored during different driving conditions, the OBD II system is designed to run separate monitoring programs called Readiness Monitors.
- The intelligent tester's software must be version 9.0 or newer to view the Readiness Monitor Status. To view the status, select the following menu items: DIAGNOSIS / ENHANCED OBD II / MONITOR INFO / MONITOR STATUS.
- When the Readiness Monitor status reads COMPL (complete), the necessary conditions have been met for running the performance tests for that Readiness Monitor.
- A generic OBD II scan tool can also be used to view the Readiness Monitor status.

HINT:

Many state Inspection and Maintenance (I/M) programs require a vehicle's Readiness Monitor status to show COMPL before beginning emission tests.

The Readiness Monitor will be reset to INCMPL (incomplete) if:

- The ECM has lost battery power or blown a fuse.
- DTCs have been cleared.
- The conditions for running the Readiness Monitor have not been met.

If the Readiness Monitor status shows INCMPL, follow the appropriate Readiness Monitor Drive Pattern to change the status to COMPL.

CAUTION:

Strictly observe posted speed limits, traffic laws, and road conditions when performing these drive patterns.

NOTICE:

These drive patterns represent the fastest method of satisfying all conditions necessary to achieve complete status for each specific Readiness Monitor.

In the event of a drive pattern being interrupted (possibly due to factors such as traffic conditions), the drive pattern can be resumed. In most cases, the Readiness Monitor will still achieve complete status upon completion of the drive pattern.

To ensure completion of the Readiness Monitors, avoid sudden changes in vehicle load and speed (driving up and down hills and/or sudden acceleration).

2. CATALYST MONITOR (ACTIVE AIR-FUEL RATIO CONTROL TYPE)

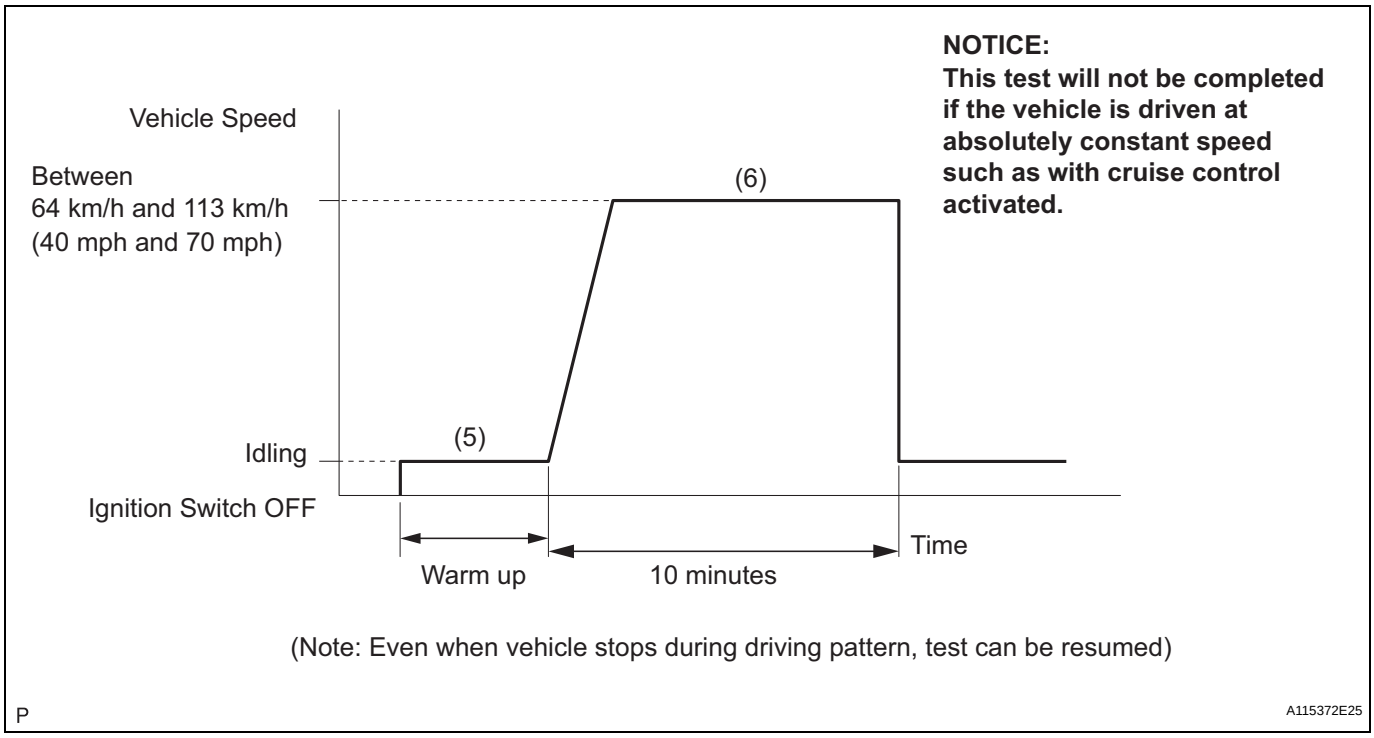

(a) Preconditions
The monitor will not run unless:
- The MIL is OFF.

(b) Drive Pattern
(1) Connect the intelligent tester to the DLC3.
(2) Turn the ignition switch ON.
(3) Turn the tester ON.
(4) Clear DTCs (if set) (see page ES-35).
(5) Start the engine and warm it up.
(6) Drive the vehicle at between 40 mph and 70 mph (64 km/h and 113 km/h) for at least 10 minutes.

(c) Monitor Status
Check the Readiness Monitor status displayed on the tester.
If the status does not switch to COMPL (complete), extend the driving time.

3. EVAP SYSTEM MONITOR (KEY OFF TYPE)

(a) Preconditions
The monitor will not run unless:
– The fuel tank is less than 90% full.
– The altitude is less than 8,000 ft. (2,450 m).
– The vehicle is stationary.
– The engine coolant temperature is between 4.4°C and 35°C (40°F and 95°F).
– The intake air temperature is between 4.4°C and 35°C (40°F and 95°F).
– Vehicle was driven in a city area (or on freeway) for 10 minutes or more.

(b) Monitor Conditions
(1) Turn the ignition switch OFF and wait for 6 hours.
HINT:
Do not start the engine until checking Readiness Monitor status. If the engine is started, the step described above must be repeated.

(c) Monitor Status
(1) Connect the intelligent tester to the DLC3.
(2) Turn the ignition switch ON.
(3) Turn the tester ON.
(4) Check the Readiness Monitor status displayed on the tester.

ES

If the status does not switch to COMPL (complete), restart the engine, make sure that the preconditions have been met, and then perform the Monitor Conditions again.

4. AIR-FUEL RATIO (A/F) AND HEATED OXYGEN (HO2) SENSOR MONITORS (ACTIVE AIR-FUEL RATIO CONTROL TYPE)

Monitor Drive Pattern

ECT: 75°C (167°F) or more

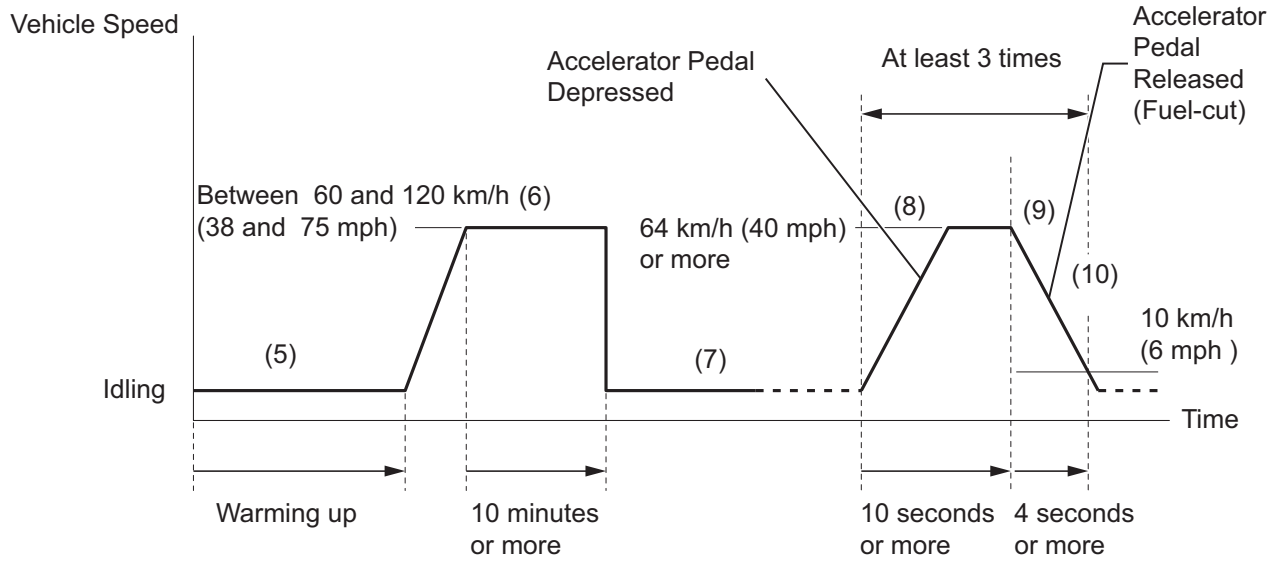

P A115374E04

(a) Preconditions
The monitor will not run unless:
– 2 minutes or more have elapsed since the engine was started.
– The Engine Coolant Temperature (ECT) is 75°C (167°F) or more.
– Cumulative driving time at a vehicle speed of 48 km/h (30 mph) or more exceeds 6 minutes.

– Air-fuel ratio feedback control is performed.

(b) Drive Pattern for front A/F sensor and HO2 sensor
(1) Connect the intelligent tester to the DLC3.
(2) Turn the ignition switch ON.
(3) Turn the tester ON.
(4) Clear DTCs (see page ES-35).
(5) Start the engine, and warm it up until the ECT reaches 75°C (167°F) or higher.
(6) Drive the vehicle at between 60 km/h (38 mph) and 120 km/h (75 mph) for at least 10 minutes.
(7) Change the transmission to 2nd gear.
(8) Accelerate the vehicle to 64 km/h (40 mph) or more by depressing the accelerator pedal for at least 10 seconds.
(9) Soon after performing step (8) above, release the accelerator pedal for at least 4 seconds without depressing the brake pedal, in order to execute fuel-cut control.
(10) Allow the vehicle to decelerate until the vehicle speed declines to less than 10 km/h (6 mph).
(11) Repeat steps from (8) through (10) above at least 3 times in one driving cycle.

(c) Monitor Status
(1) Check the Readiness Monitor status displayed on the tester.
(2) If the status does not switch to COMPL (complete), make sure that the preconditions have been met, and then perform steps from (5) through (11) in the Drive Pattern above.

5. AIR-FUEL RATIO (A/F) AND HEATED OXYGEN (HO2) SENSOR HEATER MONITORS (FRONT A/F AND REAR HO2 SENSOR TYPE)

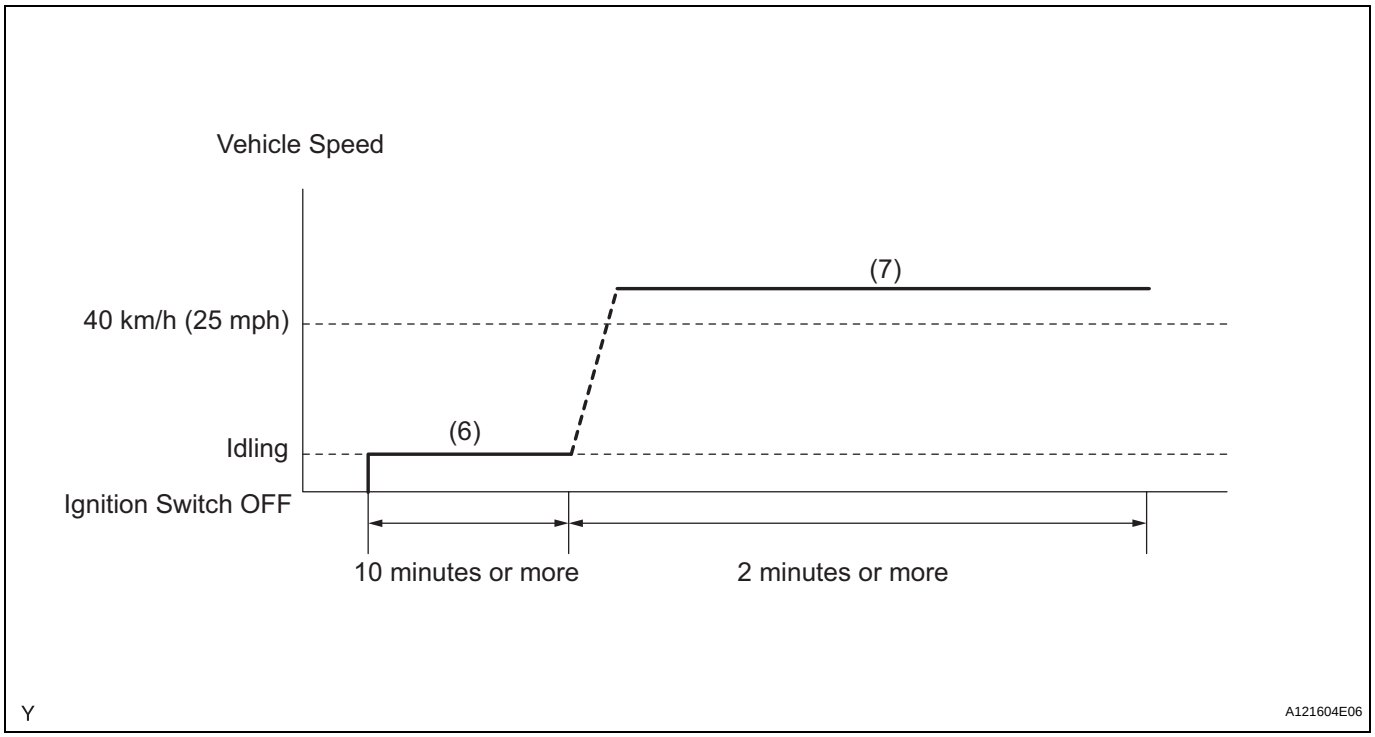

(a) Preconditions
The monitor will not run unless:
– The MIL is OFF.

(b) Drive Pattern
(1) Connect the intelligent tester to the DLC3.
(2) Turn the ignition switch ON.
(3) Turn the tester ON.
(4) Clear DTCs (if set) (see page ES-35).
(5) Start the engine.
(6) Allow the engine to idle for 10 minutes or more.
(7) Drive the vehicle at 40 km/h (25 mph) or more for at least 2 minutes.

(c) Monitor Status
(1) Check the Readiness Monitor status displayed on the tester.
If the status does not switch to COMPL (complete), make sure that the preconditions have been met, and repeat steps from (5) to (7) described in the Drive Pattern above.

PROBLEM SYMPTOMS TABLE

HINT:
Use the table below to help determine the cause of the problem symptom. The potential causes of the symptoms are listed in order of probability in the "Suspected area" column of the table. Check each symptom by checking the suspected areas in the order they are listed. Replace parts as necessary.

SFI system

Symptom	Suspected area	See page
Engine does not crank (Does not start)	1. Battery	CH-4
	2. Starter	ST-8
	3. Starter relay	ST-16
	4. Park/neutral position switch	AX-108
	5. Immobiliser system	EI-3
No initial combustion (Does not start)	1. ECM power source circuit	ES-366
	2. Crankshaft position sensor	ES-402
	3. Camshaft position sensor	ES-399
	4. Ignition system	IG-4
	5. Fuel pump control circuit	ES-378
	6. ECM	ES-26
	7. VC output circuit	ES-373
Engine cranks normally but difficult to start	1. Fuel pump control circuit	ES-378
	2. Compression	EM-3
Difficult to start with cold engine	1. Ignition system	IG-4
	2. Spark plug	IG-7
	3. Fuel pump control circuit	ES-378
	4. Injector	FU-11
Difficult to start with warm engine	1. Injector	FU-11
	2. Ignition system	IG-4
	3. Spark plug	IG-7
	4. Fuel pump control circuit	ES-378
High engine idle speed	1. Electronic throttle control system	ES-265
	2. A/C signal circuit	-
	3. ECM power source circuit	ES-366
Low engine idle speed (Poor idling)	1. Electronic throttle control system	ES-265
	2. A/C signal circuit	-
	3. Fuel pump control circuit	ES-378
	4. Air induction system	EC-7
	5. PCV hose	EC-7
Rough idling	1. Compression	EM-3
	2. Spark plug	IG-7
	3. Injector	FU-11
	4. Ignition system	IG-4
	5. Fuel pump control circuit	ES-378
	6. Electronic throttle control system	ES-265
	7. Air induction system	EC-7
	8. PCV hose	EC-7
	9. Mass air flow meter	ES-391

Symptom	Suspected area	See page
Idle hunting	1. Electronic throttle control system	ES-265
	2. Air induction system	EC-7
	3. ECM power source circuit	ES-366
Hesitation/Poor acceleration	1. Fuel pump control circuit	ES-378
	2. Spark plug	IG-7
	3. Ignition system	IG-4
	4. Injector	FU-11
	5. Mass air flow meter	ES-391
	6. Electronic throttle control system	ES-265
	7. Air induction system	EC-7
	8. Compression	EM-3
Surging (Poor driveability)	1. Spark plug	IG-7
	2. Fuel pump control circuit	ES-378
	3. Ignition system	IG-4
	4. Injector	FU-11
	5. Mass air flow meter	ES-391
	6. Variable valve timing system	ES-66
	7. Compression	EM-3
Engine stalls soon after starting	1. Fuel pump control circuit	ES-378
	2. Spark plug	IG-7
	3. Ignition system	IG-4
	4. Injector	FU-11
	5. Variable valve timing system	ES-66
	6. Electronic throttle control system	ES-265
	7. Air induction system	EC-7
	8. PCV hose	EC-7
	9. Compression	EM-3
Engine stalls only during A/C operation	1. A/C signal circuit	-
	2. ECM	ES-26
Unable/difficult to refuel	1. Refueling valve (canister)	-

TERMINALS OF ECM

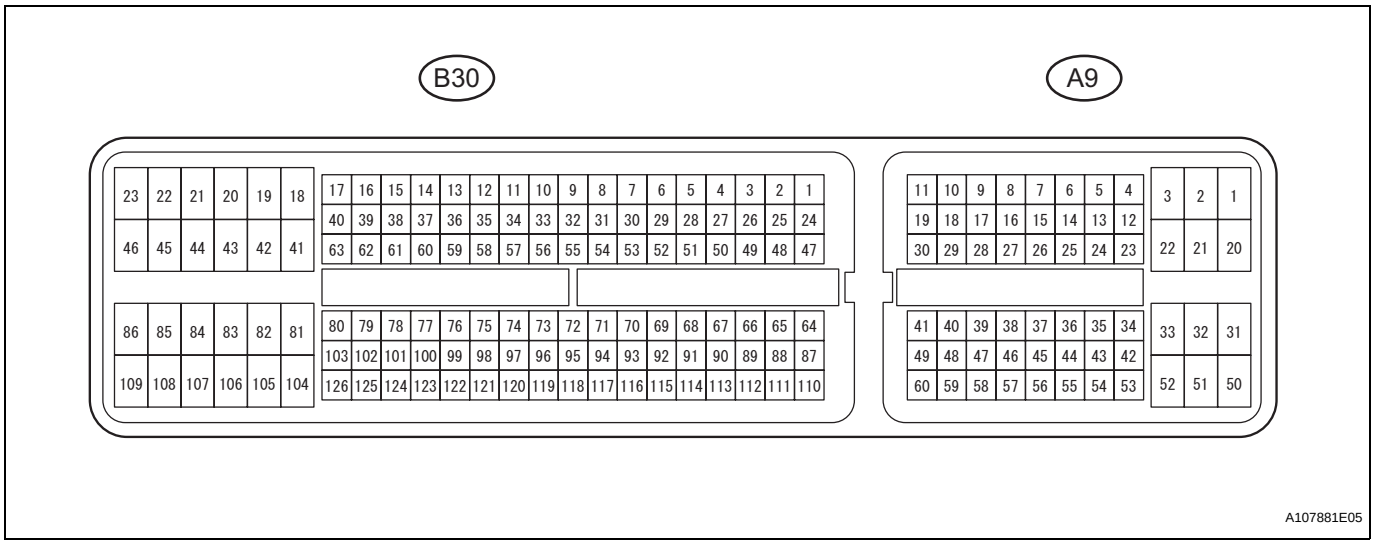

A107881E05

HINT:
The standard normal voltage between each pair of ECM terminals is shown in the table below. The appropriate conditions for checking each pair of terminals are also indicated. The result of checks should be compared with the standard normal voltage for that pair of terminals, displayed in the Specified Condition column. The illustration above can be used as a reference to identify the ECM terminal locations.

Symbols (Terminal No.)	Wiring Colors	Terminal Descriptions	Conditions	Specified Conditions
BATT (A9-20) - E1 (B30-104)	W - BR	Battery (for measuring battery voltage and for ECM memory)	Always	9 to 14 V
+BM (A9-3) - E1 (B30-104)	LG - BR	Power source of throttle actuator	Always	9 to 14 V
IGSW (A9-28) - E1 (B30-104)	B - BR	Ignition switch	Ignition switch ON	9 to 14 V
+B (A9-2) - E1 (B30-104)	B - BR	Power source of ECM	Ignition switch ON	9 to 14 V
+B2 (A9-1) - E1 (B30-104)	B - BR	Power source of ECM	Ignition switch ON	9 to 14 V
OC1+ (B30-100) - OC1- (B30-123)	BR - L	Camshaft timing oil control valve (OCV)	Idling	Pulse generation (see waveform 1)
MREL (A9-44) - E1 (B30-104)	O - BR	EFI relay	Ignition switch ON	9 to 14 V
VG (B30-118) - E2G (B30-116)	R - LG	Mass air flow meter	Idling, Shift lever position P or N, A/C switch OFF	0.5 to 3.0 V
THA (B30-65) - ETHA (B30-88)	W - BR	Intake air temperature sensor	Idling, Intake air temperature 20°C (68°F)	0.5 to 3.4 V
THW (B30-97) - ETHW (B30-96)	GR - BR	Engine coolant temperature sensor	Idling, Engine coolant temperature 80°C (176°F)	0.2 to 1.0 V
VCTA (B30-67) - ETA (B30-91)	Y - BR	Power source of throttle position sensor (specific voltage)	Ignition switch ON	4.5 to 5.5 V
VTA1 (B30-115) - ETA (B30-91)	G - BR	Throttle position sensor (for engine control)	Ignition switch ON, Throttle valve fully closed	0.5 to 1.1 V
			Ignition switch ON, Throttle valve fully open	3.3 to 4.9 V
VTA2 (B30-114) - ETA (B30-91)	L - BR	Throttle position sensor (for sensor malfunction detection)	Ignition switch ON, Throttle valve fully closed	2.1 to 3.1 V
			Ignition switch ON, Throttle valve fully open	4.6 to 5.0 V

ES

Symbols (Terminal No.)	Wiring Colors	Terminal Descriptions	Conditions	Specified Conditions
VPA (A9-55) - EPA (A9-59)	W - Y	Accelerator pedal position sensor (for engine control)	Ignition switch ON, Accelerator pedal released	0.5 to 1.1 V
			Ignition switch ON, Accelerator pedal fully depressed	2.6 to 4.5 V
VPA2 (A9-56) - EPA2 (A9-60)	R - O	Accelerator pedal position sensor (for sensor malfunctioning detection)	Ignition switch ON, Accelerator pedal released	1.2 to 2.0 V
			Ignition switch ON, Accelerator pedal fully depressed	3.4 to 5.0 V
VCPA (A9-57) - EPA (A9-59)	B - Y	Power source of accelerator pedal position sensor (for VPA)	Ignition switch ON	4.5 to 5.5 V
VCP2 (A9-58) - EPA2 (A9-60)	L - O	Power source of accelerator pedal position sensor (for VPA2)	Ignition switch ON	4.5 to 5.5 V
HA1A (B30-109) - E04 (B30-46)	L - W-B	A/F sensor heater	Idling	Below 3.0 V
			Ignition switch ON	9 to 14 V
A1A+ (B30-112) - E1 (B30-104)	B -BR	A/F sensor	Ignition switch ON	3.3 V*
A1A- (B30-113) - E1 (B30-104)	R - BR	A/F sensor	Ignition switch ON	3.0 V*
HT1B (B30-47) - E03 (B30-86)	R - W-B	Heated oxygen sensor heater	Idling	Below 3.0 V
			Ignition switch ON	9 to 14 V
OX1B (B30-64) - EX1B (B30-87)	B - BR	Heated oxygen sensor	Engine speed maintained at 2,500 rpm for 2 minutes after warming up sensor	Pulse generation (see waveform 2)
#10 (B30-108) - E01 (B30-45) #20 (B30-107) - E01 (B30-45) #30 (B30-106) - E01 (B30-45) #40 (B30-105) - E01 (B30-45)	L - W-B G - W-B B - W-B W - W-B	Injector	Ignition switch ON	9 to 14 V
			Idling	Pulse generation (see waveform 3)
KNK1 (B30-110) - EKNK (B30-111)	B - W	Knock sensor	Engine speed maintained at 4,000 after warming up engine	Pulse generation (see waveform 4)
G2+ (B30-99) - G2- (B30-98)	L - Y	Camshaft position sensor	Idling	Pulse generation (see waveform 5)
NE+ (B30-122) - NE- (B30-121)	W - B	Crankshaft position sensor	Idling	Pulse generation (see waveform 5)
IGT1 (B30-85) - E1 (B30-104) IGT2 (B30-84) - E1 (B30-104) IGT3 (B30-83) - E1 (B30-104) IGT4 (B30-82) - E1 (B30-104)	R - BR P - BR G - BR L - BR	Ignition coil (ignition signal)	Idling	Pulse generation (see waveform 6)
IGF1 (B30-81) - E1 (B30-104)	W - BR	Ignition coil (ignition confirmation signal)	Ignition switch ON	4.5 to 5.5 V
			Idling	Pulse generation (see waveform 6)
PRG (B30-49) - E1 (B30-104)	G - BR	Purge VSV	Ignition switch ON	9 to 14 V
			Idling	Pulse generation (see waveform 7)
SPD (A9-8) - E1 (B30-104)	V - BR	Speed signal from combination meter	Driving at 20 km/h (12 mph)	Pulse generation (see waveform 8)
STA (A9-48) - E1 (B30-104)	LG - BR	Starter signal	Cranking	5.5 V or more
STAR (B30-52) - E1 (B30-104)	W - BR	Starter relay control	Ignition switch ON	Below 1.5 V
			Cranking	6.0 V or more
STP (A9-36) - E1 (B30-104)	L - BR	Stop light switch	Brake pedal depressed	7.5 to 14 V
			Brake pedal released	Below 1.5 V
ST1- (A9-35) - E1 (B30-104)	GR - BR	Stop light switch (opposite to STP terminal)	Ignition switch ON, Brake pedal depressed	Below 1.5 V
			Ignition switch ON, Brake pedal released	7.5 to 14 V
M+ (B30-42) - ME01 (B30-43)	B - W-B	Throttle actuator	Idling with warm engine	Pulse generation (see waveform 9)

Symbols (Terminal No.)	Wiring Colors	Terminal Descriptions	Conditions	Specified Conditions
M- (B30-41) - ME01 (B30-43)	W - W-B	Throttle actuator	Idling with warm engine	Pulse generation (see waveform 10)
FC (A9-7) - E1 (B30-104)	W - BR	Fuel pump control	Ignition switch ON	9 to 14 V
			Idling	Below 1.5 V
W (A9-24) - E1 (B30-104)	R - BR	MIL	Ignition switch ON	Below 1.5 V
			Idling	9 to 14 V
TC (A9-27) - E1 (B30-104)	G - BR	Terminal TC of DLC3	Ignition switch ON	9 to 14 V
TACH (A9-15) - E1 (B30-104)	GR - BR	Engine speed	Idling	Pulse generation (see waveform 11)
VPMP (A9-42) - E1 (B30-104)	W - BR	Vent valve (built into canister pump module)	Ignition switch ON	9 to 14 V
MPMP (A9-34) - E1 (B30-104)	B - BR	Leak detection pump (built into canister pump module)	Leak detection pump OFF	Below 3 V
			Leak detection pump ON	9 to 14 V
VCPP (B30-70) - EPPM (B30-94)	Y - BR	Power source for canister pressure sensor (specific voltage)	Ignition switch ON	4.5 to 5.5 V
PPMP (B30-71) - EPPM (B30-94)	V - BR	Canister pressure sensor (built into canister pump module)	Ignition switch ON	3 to 3.6 V
ELS1 (A9-31) - E1 (B30-104)	O - BR	Electric load	Taillight switch ON	7.5 to 14 V
			Taillight switch OFF	Below 1.5 V
ELS3 (A9-33) - E1 (B30-104)	G - BR	Electric load	Defogger switch ON	7.5 to 14 V
			Defogger switch OFF	Below 1.5 V
FANL (A9-21) - E1 (B30-104)	R - BR	Fan No. 1 relay	Ignition switch ON	9 to 14 V
			Idling with A/C ON, or high engine coolant temperature	Below 1.5 V
FANH (A9-22) - E1 (B30-104)	W - BR	Fan No. 2 relay	Idling with high engine coolant temperature	Below 1.5 V
ALT (B30-50) - E1 (B30-104)	B - BR	Generator	Ignition switch ON	9 to 14 V
CANH (A9-41) - E1 (B30-104)	Y - BR	CAN communication line	Ignition switch ON	Pulse generation (see waveform 12)
CANL (A9-49) - E1 (B30-104)	W - BR	CAN communication line	Ignition switch ON	Pulse generation (see waveform 13)
VCIB (B30-69) - EIB (B30-92)	R - BR	Battery current sensor	Ignition switch ON	4.5 to 5.5 V
IB (B30-68) - EIB (B30-92)	B - BR	Battery current sensor	Ignition switch ON	0.5 to 2.5 V
THB (B30-120) - EIB (B30-92)	LG - BR	Battery temperature sensor	Ignition switch ON, Battery temperature -30 to 80°C (-22 to 176°F)	0.5 to 4.5 V
RLO (B30-51) - E1 (B30-104)	GR - BR	Generator	After engine warmed up, during charging control, vehicle driven at constant speed	Pulse generation (see waveform 14)
RLO (B30-51) - E1 (B30-104)	GR - BR	Generator	After engine warmed up, during charging control, vehicle accelerated	Pulse generation (see waveform 15)
RLO (B30-51) - E1 (B30-104)	GR - BR	Generator	After engine warmed up, during charging control, vehicle decelerated	Pulse generation (see waveform 16)

HINT:
*: The ECM terminal voltage is constant regardless of the output voltage from the sensor.

ES

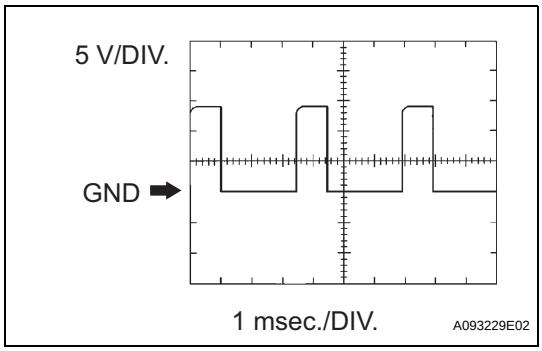

1. WAVEFORM 1
Camshaft timing oil control valve (OCV)

ECM Terminal Names	Between OC1+ and OC1-
Tester Ranges	5 V/DIV., 1 msec./DIV.
Conditions	Idling

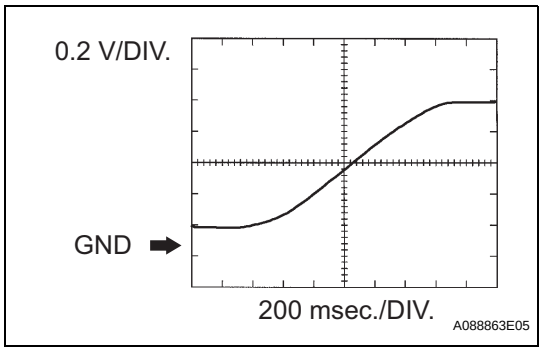

2. WAVEFORM 2
Heated oxygen sensor

ECM Terminal Names	Between OX1B and EX1B
Tester Ranges	0.2 V/DIV., 200 msec./DIV.
Conditions	Engine speed maintained at 2,500 rpm for 2 minutes after warming up sensor

HINT:
In DATA LIST, item O2S B1 S2 shows the ECM input values from the heated oxygen sensor.

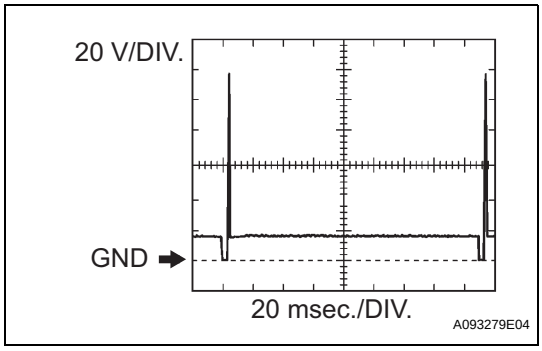

3. WAVEFORM 3
Injector No. 1 (to No. 4) injection signal

ECM Terminal Names	Between #10 (to #40) and E01
Tester Ranges	20 V/DIV., 20 msec./DIV.
Conditions	Idling

HINT:
The wavelength becomes shorter as the engine rpm increases.

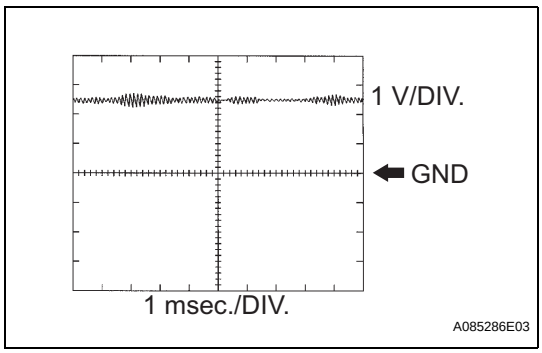

4. WAVEFORM 4
Knock sensor

ECM Terminal Names	Between KNK1 and EKNK
Tester Ranges	1 V/DIV., 1 msec./DIV.
Conditions	Engine speed maintained at 4,000 rpm after warming up engine

HINT:
- The wavelength becomes shorter as the engine rpm increases.
- The waveforms and amplitudes displayed differ slightly depending on the vehicle.

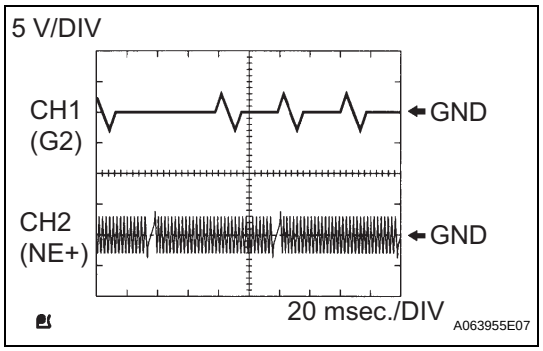

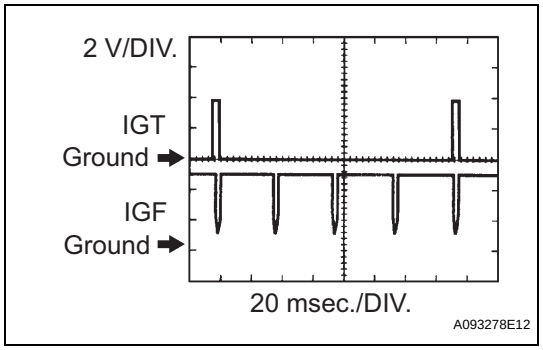

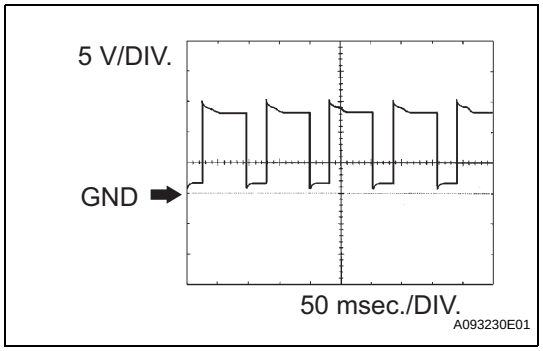

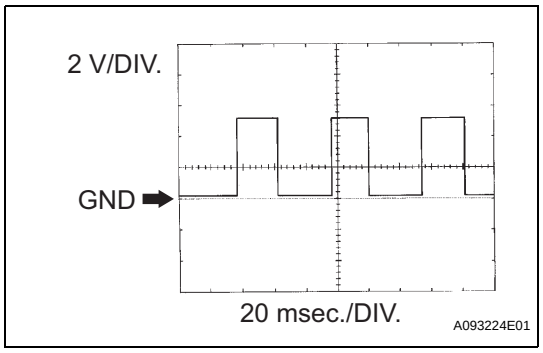

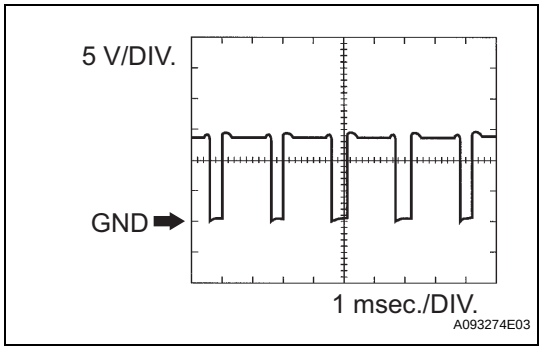

5. WAVEFORM 5
Crankshaft position sensor and Camshaft position sensor

ECM Terminal Names	CH1: Between G2+ and G2- CH2: Between NE+ and NE-
Tester Ranges	5 V/DIV., 20 msec./DIV.
Conditions	Idling

HINT:
The wavelength becomes shorter as the engine rpm increases.

6. WAVEFORM 6
Igniter IGT signal (from ECM to igniter) and Igniter IGF signal (from igniter to ECM)

ECM Terminal Names	Between IGT (1 to 4) and E1 Between IGF1 and E1
Tester Ranges	2 V/DIV., 20 msec./DIV.
Conditions	Idling

HINT:
The wavelength becomes shorter as the engine rpm increases.

7. WAVEFORM 7
Purge VSV

ECM Terminal Names	Between PRG and E1
Tester Ranges	5 V/DIV., 50 msec./DIV.
Conditions	Idling

HINT:
If the waveform is not similar to the illustration, check the waveform again after idling for 10 minutes or more.

8. WAVEFORM 8
Vehicle speed signal

ECM Terminal Names	Between SPD and E1
Tester Ranges	2 V/DIV., 20 msec./DIV.
Conditions	Driving at 20 km/h (12 mph)

HINT:
The wavelength becomes shorter as the vehicle speed increases.

9. WAVEFORM 9
Throttle actuator positive terminal

ECM Terminal Names	Between M+ and ME01
Tester Ranges	5 V/DIV., 1 msec./DIV.
Conditions	Idling with warm engine

HINT:
The duty ratio varies depending on the throttle actuator operation.

ES

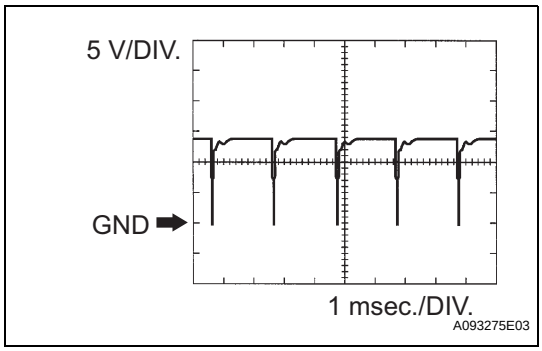

10. WAVEFORM 10
Throttle actuator negative terminal

ECM Terminal Names	Between M- and ME01
Tester Ranges	5 V/DIV., 1 msec./DIV.
Conditions	Idling with warm engine

HINT:
The duty ratio varies depending on the throttle actuator operation.

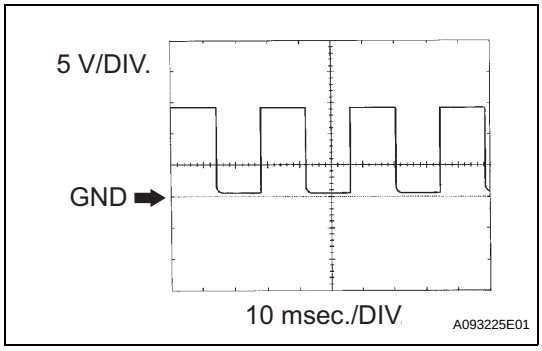

11. WAVEFORM 11
Engine speed signal

ECM Terminal Names	Between TACH and E1
Tester Ranges	5 V/DIV., 10 msec./DIV.
Conditions	Idling

HINT:
The wavelength becomes shorter as the engine rpm increases.

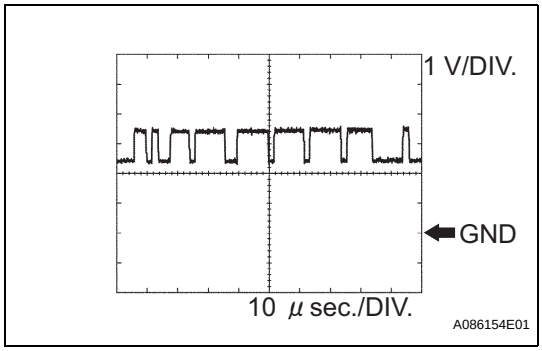

12. WAVEFORM 12
CAN communication signal

ECM Terminal Names	Between CANH and E1
Tester Ranges	1 V/DIV., 10 μsec./DIV.
Conditions	Engine stops and ignition switch ON

HINT:
The waveform varies depending on the CAN communication signal.

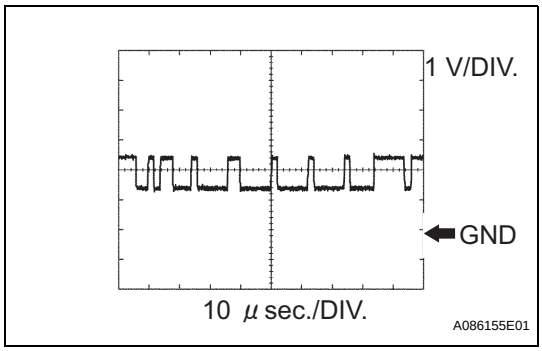

13. WAVEFORM 13
CAN communication signal

ECM Terminal Names	Between CANL and E1
Tester Ranges	1 V/DIV., 10 μsec./DIV.
Conditions	Engine stops and ignition switch ON

HINT:
The waveform varies depending on the CAN communication signal.

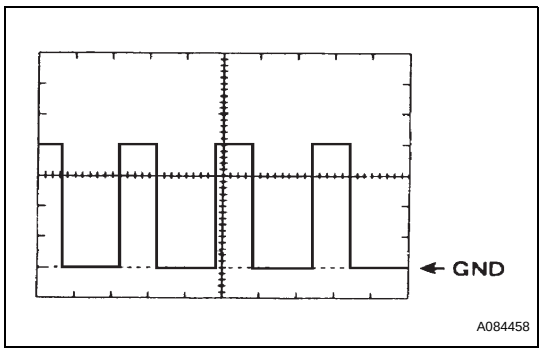

14. WAVEFORM 14
Generator

ECM Terminal Names	Between RLO and E1
Tester Ranges	2 V/DIV., 50 msec./DIV.
Conditions	After engine warmed up, during charging control, vehicle driven at constant speed

HINT:
A constant value is not output, as the duty ratio varies depending on the electrical load and battery condition.

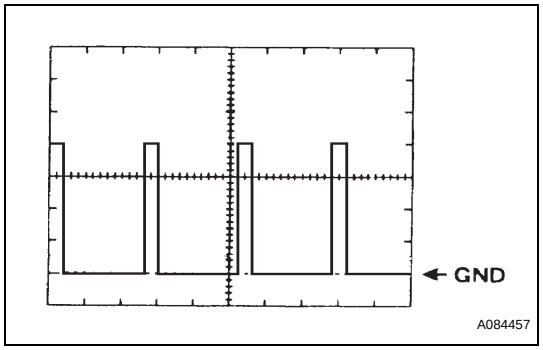

15. WAVEFORM 15
Generator

ECM Terminal Names	Between RLO and E1
Tester Ranges	2 V/DIV., 50 msec./DIV.
Conditions	After engine warmed up, during charging control, vehicle accelerated

HINT:
A constant value is not output, as the duty ratio varies depending on the electrical load and battery condition.

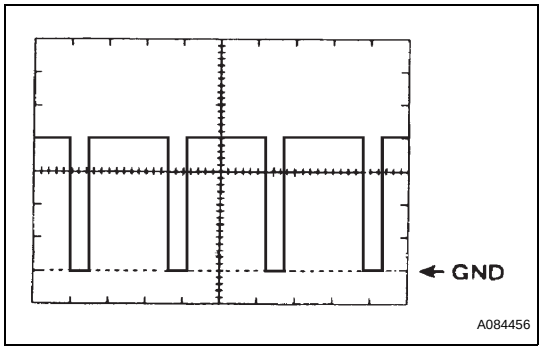

16. WAVEFORM 16
Generator

ECM Terminal Names	Between RLO and E1
Tester Ranges	2 V/DIV., 50 msec./DIV.
Conditions	After engine warmed up, during charging control, vehicle decelerated

HINT:
A constant value is not output, as the duty ratio varies depending on the electrical load and battery condition.

ES

ES

DIAGNOSIS SYSTEM

1. DESCRIPTION

When troubleshooting OBD II (On-Board Diagnostics) vehicles, the intelligent tester (complying with SAE J1987) must be connected to the DLC3 (Data Link Connector 3) of the vehicle. Various data in the vehicle's ECM (Engine Control Module) can be then read.

OBD II regulations require that the vehicle's on-board computer illuminate the MIL (Malfunction Indicator Lamp) on the instrument panel when the computer detects a malfunction in:

(a) The emission control system components.
(b) The powertrain control components (which affect vehicle emissions).
(c) The computer itself.

In addition, if the applicable DTCs (Diagnostic Trouble Codes) prescribed by SAE J2012 are not recorded on 3 consecutive trips, the MIL turns off automatically but the DTCs remain recorded in the ECM memory.

To check DTCs, connect the intelligent tester to the DLC3. The tester displays DTCs, freeze frame data, and a variety of the engine data. The DTCs and freeze frame data can be erased with the tester (see page ES-35).

In order to enhance OBD function on vehicles and develop the Off-Board diagnosis system, CAN (Controller Area Network) communication is introduced in this system. It minimizes the gap between technician skills and vehicle technology. CAN is a network, which uses a pair of data transmission lines, spanning multiple computers and sensors. It allows high speed communication between the systems and simplifies the wire harness connection.

Since this system is equipped with the CAN communication, connecting the CAN VIM (Vehicle Interface Module) to the intelligent tester is necessary to display any information from the ECM. (Also the communication between the intelligent tester and the ECM uses CAN communication signals.) When confirming the DTCs and any data of the ECM, connect the CAN VIM between the DLC3 and the intelligent tester.

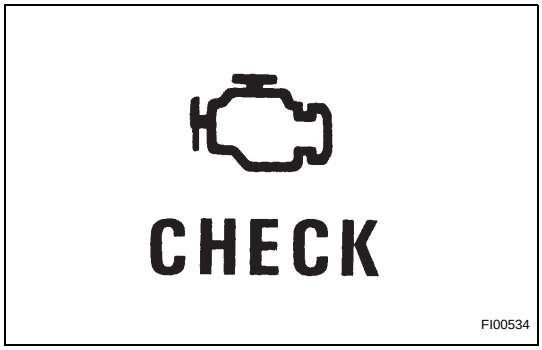

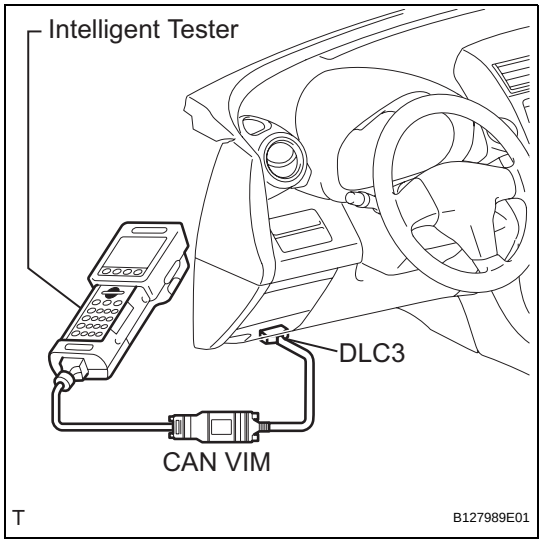

2. NORMAL MODE AND CHECK MODE

The diagnosis system operates in normal mode during normal vehicle use. In normal mode, 2 trip detection logic is used to ensure accurate detection of malfunctions. Check mode is also available as an option for technicians. In check mode, 1 trip detection logic is used for simulating malfunction symptoms and increasing the system's ability to detect malfunctions, including intermittent problems (intelligent tester only) (see page ES-38).

3. 2 TRIP DETECTION LOGIC

When a malfunction is first detected, the malfunction is temporarily stored in the ECM memory (1st trip). If the same malfunction is detected during the next subsequent drive cycle, the MIL is illuminated (2nd trip).

4. FREEZE FRAME DATA

Freeze frame data records the engine conditions (fuel system, calculated engine load, engine coolant temperature, fuel trim, engine speed, vehicle speed, etc.) when malfunctions are detected. When troubleshooting, freeze frame data can help determine if the vehicle was moving or stationary, if the engine was warmed up or not, if the air-fuel ratio was lean or rich, and other data from the time the malfunction occurred.

5. DLC3 (Data Link Connector 3)

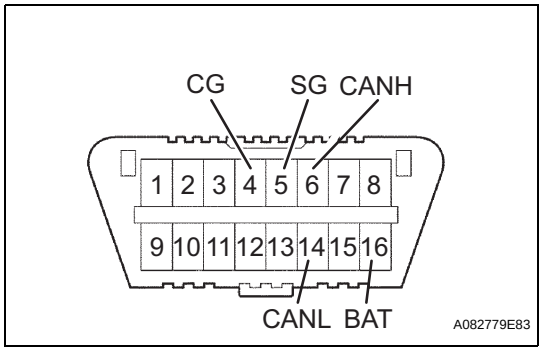

Symbols	Terminal No.	Names	Reference terminal	Results	Condition
SIL	7	Bus "+" line	5 - Signal ground	Pulse generation	During transmission
CG	4	Chassis ground	Body ground	1 Ω or less	Always
SG	5	Signal ground	Body ground	1 Ω or less	Always
BAT	16	Battery positive	Body ground	9 to 14 V	Always
CANH	6	CAN "High" line	14 - CANL	54 to 69 Ω	Ignition switch OFF*
			Battery positive	6 kΩ or higher	Ignition switch OFF*
			4 - CG	200 Ω or higher	Ignition switch OFF*
CANL	14	CAN "Low" line	Battery positive	6 kΩ or higher	Ignition switch OFF*
			4 - CG	200 Ω or higher	Ignition switch OFF*

CAUTION:

***: Before measuring the resistance, leave the vehicle as is for at least 1 minute and do not operate the ignition switch, any other switches or the doors.**

If the result is not as specified, the DLC3 may have a malfunction. Repair or replace the harness and connector.

HINT:

The DLC3 is the interface prepared for reading various data from the vehicle's ECM. After connecting the cable of the intelligent tester to the CAN VIM, turn the ignition switch ON and turn the tester ON. If a communication failure message is displayed on the tester screen (on the tester: UNABLE TO CONNECT TO VEHICLE), a problem exists in either the vehicle or tester. In order to identify the location of the problem, connect the tester to another vehicle.

If communication is normal: Inspect the DLC3 on the original vehicle.
If communication is still not possible: The problem is probably in the tester itself. Consult the Service Department listed in the instruction manual.

6. BATTERY VOLTAGE

Standard battery voltage:

11 to 14 V

If the voltage is below 11 V, replace or recharge the battery before proceeding.

7. MIL (Malfunction Indicator Lamp)

(a) The MIL is illuminated when the ignition switch is first turned ON (the engine is not running).

(b) The MIL should turn OFF when the engine is started. If the MIL remains illuminated, the diagnosis system has detected a malfunction or abnormality in the system.
HINT:
If the MIL is not illuminated when the ignition switch is first turned ON, check the MIL circuit (see page ES-386).

8. ALL READINESS

For the vehicle, using the intelligent tester allows readiness codes corresponding to all DTCs to be read. When diagnosis (normal or malfunctioning) has been complete, readiness codes are set. Select the following menu items on the intelligent tester: ENHANCED OBD II / MONITOR STATUS.

DTC CHECK / CLEAR

NOTICE:
When the diagnosis system is changed from normal mode to check mode or vice versa, all DTCs and freeze frame data recorded in normal mode are erased. Before changing modes, always check and make a note of any DTCs and freeze frame data.

HINT:

- DTCs which are stored in the ECM can be displayed on the intelligent tester. The intelligent tester can display current and pending DTCs.
- Some DTCs are not set if the ECM does not detect the same malfunction again during a second consecutive driving cycle. However, such malfunctions, detected on only one occasion, are stored as pending DTCs.

1. CHECK DTC (Using intelligent tester)

(a) Connect the intelligent tester to the DLC3.
(b) Turn the ignition switch ON.
(c) Turn the tester ON.
(d) Select the following menu items: DIAGNOSIS / ENHANCED OBD II / DTC INFO / CURRENT CODES or PENDING CODES.
(e) Check the DTC(s) and freeze frame data, and then write them down.
(f) Check the details of the DTC(s) (see page ES-51).

2. CLEAR DTC (Using intelligent tester)

(a) Connect the intelligent tester to the DLC3.
(b) Turn the ignition switch ON.
(c) Turn the tester ON.
(d) Select the following menu items: DIAGNOSIS / ENHANCED OBD II / DTC INFO / CLEAR CODES.
(e) Press the YES button.

3. CLEAR DTC (Without using intelligent tester)

(a) Perform either of the following operations.
(1) Disconnect the cable from the negative (-) battery terminal for more than 1 minute.
(2) Remove the EFI and ETCS fuses from the engine room relay block (located inside the engine compartment) for more than 1 minute.

FREEZE FRAME DATA

1. DESCRIPTION

Freeze frame data records the engine conditions (fuel system, calculated load, engine coolant temperature, fuel trim, engine speed, vehicle speed, etc.) when a malfunction is detected. When troubleshooting, it can help determine if the vehicle was running or stopped, the engine was warmed up or not, the air-fuel ratio was Lean or Rich, and other data from the time the malfunction occurred.

HINT:

If it is impossible to duplicate the problem even though a DTC is detected, confirm the freeze frame data.

The ECM records engine conditions in the form of freeze frame data every 0.5 seconds. Using the intelligent tester, 5 separate sets of freeze frame data can be checked.

– 3 data sets before the DTC was set.
– 1 data set when the DTC was set.
– 1 data set after the DTC was set.

These data sets can be used to simulate the condition of the vehicle around the time of the occurrence of the malfunction. The data may assist in identifying the cause of the malfunction, and in judging whether it was temporary or not.

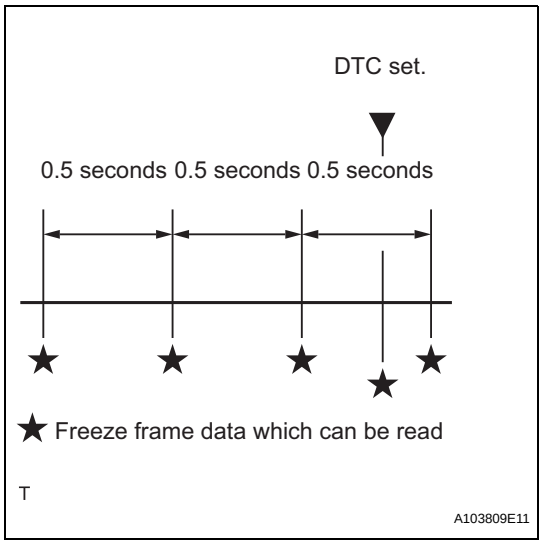

2. LIST OF FREEZE FRAME DATA

LABEL (Intelligent Tester Display)	Measurement Item	Diagnostic Note
INJECTOR	Injection period of No. 1 cylinder	-
IGN ADVANCE	Ignition advance	-
CALC LOAD	Calculated load	Calculated load by ECM
VEHICLE LOAD	Vehicle load	-
MAF	Mass air flow volume	If approximately 0.0 g/sec.: • Mass air flow meter power source circuit open or short • VG circuit open or short If 160.0 g/sec. or more: • E2G circuit open
ENGINE SPD	Engine speed	-
VEHICLE SPD	Vehicle speed	Speed indicated on speedometer
COOLANT TEMP	Engine coolant temperature	If -40°C (-40°F), sensor circuit open If 140°C (284°F) or more, sensor circuit shorted
INTAKE AIR	Intake air temperature	If -40°C (-40°F), sensor circuit open If 140°C (284°F) or more, sensor circuit shorted
AIR-FUEL RATIO	Ratio compared to stoichiometric level	-
PURGE DENSITY	Learning value of purge density	-
EVAP PURGE FLOW	Ratio of evaporative purge flow to intake air volume	-
EVAP PURGE VSV	EVAP purge VSV duty ratio	-
KNOCK CRRT VAL	Correction learning value of knocking	-

LABEL (Intelligent Tester Display)	Measurement Item	Diagnostic Note
KNOCK FB VAL	Feedback value of knocking	-
ACCEL POS #1	Absolute Accelerator Pedal Position (APP) No.1	-
ACCEL POS #2	Absolute APP No. 2	-
THROTTLE POS	Throttle sensor positioning	-
THROTTLE POS	Throttle position	-
THROTTLE POS #2	Throttle sensor positioning #2	-
THROTTLE MOT	Throttle motor	-
O2S B1 S2	Heated oxygen sensor output	Performing INJ VOL or A/F CONTROL function of ACTIVE TEST enables technician to check output voltage of sensor
AFS B1 S1	A/F sensor output	Performing INJ VOL or A/F CONTROL function of ACTIVE TEST enables technician to check output voltage of sensor
TOTAL FT #1	Total fuel trim	-
SHORT FT #1	Short-term fuel trim	Short-term fuel compensation used to maintain air-fuel ratio at stoichiometric air-fuel ratio
LONG FT #1	Long-term fuel trim	Overall fuel compensation carried out in long-term to compensate a continual deviation of short-term fuel trim from central valve
FUEL SYS #1	Fuel system status	• OL (Open Loop): Has not yet satisfied conditions to go closed loop • CL (Closed Loop): Using A/F sensor as feedback for fuel control • OL DRIVE: Open loop due to driving conditions (fuel enrichment) • OL FAULT: Open loop due to detected system fault • CL FAULT: Closed loop but A/F sensor, which used for fuel control malfunctioning
O2FT B1 S2	Fuel trim at heated oxygen sensor	-
AF FT B1 S1	Fuel trim at A/F sensor	-
AFS B1 S1	A/F sensor current	-
CAT TEMP B1S1	Estimated catalyst temperature (sensor 1)	-
CAT TEMP B1S2	Estimated catalyst temperature (sensor 2)	-
S O2S B1S2	Sub heated oxygen sensor impedance (sensor 2)	-
INI COOL TEMP	Engine coolant temperature at engine start	-
INI INTAKE TEMP	Intake air temperature at engine start	-
INJ VOL	Injection volume	-
STARTER SIG	Starter switch (STSW) signal	-
PS SW	Power steering signal	-
PS SIGNAL	Power steering signal (history)	Signal status usually ON until ignition switch turned OFF
CTP SW	Closed throttle position switch	-
A/C SIGNAL	A/C signal	-
PNP SW (NSW)	Park/Neutral Position (PNP) switch signal	-
ELECT LOAD SIG	Electrical load signal	-
STOP LIGHT SW	Stop light switch	-
BATTERY VOLTAGE	Battery voltage	-
ATM PRESSURE	Atmosphere pressure	-
EVAP (Purge) VSV	EVAP Purge VSV	-
FUEL PUMP/SPD	Fuel pump/speed status	-

LABEL (Intelligent Tester Display)	Measurement Item	Diagnostic Note
VVT CTRL B1	VVT control status	-
VACUUM PUMP	Key-off EVAP system leak detection pump status	(see page ES-333)
EVAP VENT VAL	Key-off EVAP system vent valve status	-
FAN MOTOR	Electric fan motor	-
TC/TE1	TC and CG (TE1) terminals of DLC3	-
ENG SPEED #1	Engine rpm during No. 1 cylinder fuel cut	Output only when FUEL CUT #1 is performed using ACTIVE TEST
ENG SPEED #2	Engine rpm during No. 2 cylinder fuel cut	Output only when FUEL CUT #2 is performed using ACTIVE TEST
ENG SPEED #3	Engine rpm during No. 3 cylinder fuel cut	Output only when FUEL CUT #3 is performed using ACTIVE TEST
ENG SPEED #4	Engine rpm during No. 4 cylinder fuel cut	Output only when FUEL CUT #4 is performed using ACTIVE TEST
ENG SPEED ALL	Average of engine rpm values during fuel cut of No. 1 to No. 4 cylinders	Output only when ACTIVE TEST is performed
VVTL AIM ANGL#1	VVT aim angle	-
VVT CHNG ANGL#1	VVT angle	-
VVT OCV DUTY B1	VVT OCV operation duty	-
FC IDL	Fuel cut idle	ON: when throttle valve fully closed and engine speed over 3,500 rpm
FC TAU	Fuel cut during very light load	Fuel cut being performed under very light load to prevent engine combustion from becoming incomplete
IGNITION	Ignition counter	-
CYL #1	Cylinder #1 misfire	Only displayed during idling
CYL #2	Cylinder #2 misfire	Only displayed during idling
CYL #3	Cylinder #3 misfire	Only displayed during idling
CYL #4	Cylinder #4 misfire	Only displayed during idling
CYL ALL	All cylinders misfire	Only displayed during idling
MISFIRE RPM	Engine speed when misfire occurred	-
MISFIRE LOAD	Engine load when misfire occurred	-
MISFIRE MARGIN	Margin to detect engine misfire	-
MIL ON RUN DIST	Distance after DTC is detected	-
ENG RUN TIME	Accumulated engine running time	-
TIME DTC CLEAR	Cumulative time after DTC cleared	-
DIST DTC CLEAR	Accumulated distance from DTC cleared	-
WU CYC DTC CLEAR	Warm-up cycle after DTC cleared	-

CHECK MODE PROCEDURE

HINT:
Intelligent tester only:
Compared to normal mode, check mode is more sensitive to malfunctions. Therefore, check mode can detect the malfunctions that cannot be detected by normal mode.
NOTICE:
All the stored DTCs and freeze frame data are erased if: 1) the ECM is changed from normal mode to check mode or vice versa; or 2) the ignition switch is turned from ON to ACC or OFF while in check mode. Before changing modes, always check and make a note of any DTCs and freeze frame data.

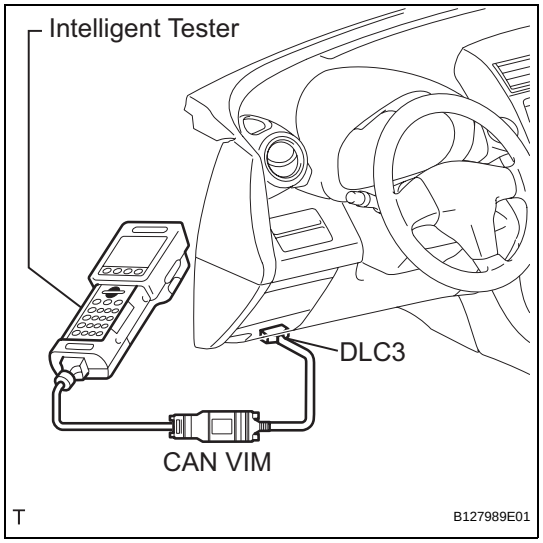

1. CHECK MODE PROCEDURE (Using intelligent tester)

(a) Check and ensure the following conditions:
  (1) Battery positive voltage 11 V or more.
  (2) Throttle valve fully closed.
  (3) Transmission in the P or N position.
  (4) A/C switch OFF.
(b) Turn the ignition switch OFF.
(c) Connect the intelligent tester to the DLC3.
(d) Turn the ignition switch ON.
(e) Turn the tester ON.
(f) Select the following menu items: DIAGNOSIS / ENHANCED OBD II/ CHECK MODE.
(g) Switch the ECM from normal mode to check mode.

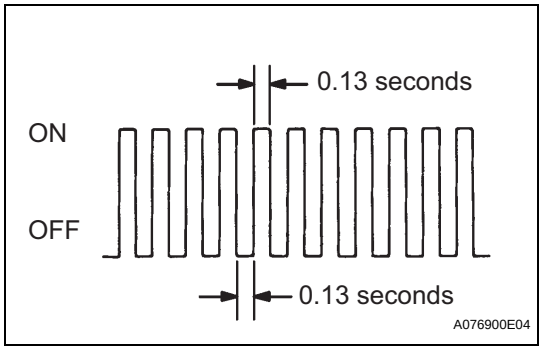

(h) Make sure the MIL flashes as shown in the illustration.
(i) Start the engine.
(j) Make sure the MIL turns off.
(k) Simulate the conditions of the malfunction described by the customer.
(l) Check DTCs and freeze frame data using the tester.

FAIL-SAFE CHART

If any of the following DTCs are set, the ECM enters fail-safe mode to allow the vehicle to be driven temporarily.

DTCs	Components	Fail-Safe Operations	Fail-Safe Deactivation Conditions
P0031 and P0032	Air-Fuel Ratio (A/F) Sensor Heater	ECM turns off A/F sensor heater.	Ignition switch OFF
P0037 and P0038	Heated Oxygen (HO2) Sensor Heater	ECM turns off HO2 sensor heater.	Ignition switch OFF
P0100, P0102 and P0103	Mass Air Flow (MAF) Meter	ECM calculates ignition timing according to engine speed and throttle valve position.	Pass condition detected
P0110, P0112 and P0113	Intake Air Temperature (IAT) Sensor	ECM estimates IAT to be 20°C (68°F).	Pass condition detected
P0115, P0117 and P0118	Engine Coolant Temperature (ECT) Sensor	ECM estimates ECT to be 80°C (176°F).	Pass condition detected
P0120, P0121, P0122, P0123, P0220, P0222, P0223, P0604, P0606, P0607, P0657, P2102, P2103, P2111, P2112, P2118, P2119 and P2135	Electronic Throttle Control System (ETCS)	ECM cuts off throttle actuator current and throttle valve returned to 6° throttle position by return spring. ECM then adjusts engine output by controlling fuel injection (intermittent fuel-cut) and ignition timing in accordance with accelerator pedal opening angle to allow vehicle to continue at minimal speed*.	Pass condition detected and then ignition switch turned OFF
P0327 and P0328	Knock Sensor	ECM sets ignition timing to maximum retard.	Ignition switch OFF
P0351 to P0354	Igniter	ECM cuts fuel.	Pass condition detected
P1550, P1551, P1552 and P1602	Generator	Alternator command is fixed.	Pass condition detected
P2120, P2121, P2122, P2123, P2125, P2127, P2128 and P2138	Accelerator Pedal Position (APP) Sensor	APP sensor has 2 sensor circuits: Main and Sub. If either circuit malfunctions, ECM controls engine using other circuit. If both circuits malfunction, ECM regards accelerator pedal as being released. As result, throttle valve closed and engine idles.	Pass condition detected and then ignition switch turned OFF

HINT:

*: The vehicle can be driven slowly when the accelerator pedal is depressed firmly and slowly. If the accelerator pedal is depressed quickly, the vehicle may speed up and slow down erratically.

DATA LIST / ACTIVE TEST

1. DATA LIST

HINT:

By reading the DATA LIST displayed on an intelligent tester, values can be checked, including those of the switches, sensors, and actuators, without removing any parts. Reading the DATA LIST as the first step of troubleshooting is one method of shortening diagnostic time.

NOTICE:

In the table below, the values listed under Normal Condition are for reference only. Do not depend solely on these values when determining whether or not a part is faulty.

(a) Warm up the engine.
(b) Turn the ignition switch OFF.
(c) Connect the intelligent tester to the DLC3.
(d) Turn the ignition switch ON.
(e) Turn the tester ON.
(f) Select the following menu items: DIAGNOSIS / ENHANCED OBD II / DATA LIST.
(g) Check the values by referring to the table below.

ECM:

Intelligent Tester Display	Measurement: Range (Display)	Normal Condition*1	Diagnostic Note
INJECTOR	Injection period of No. 1 cylinder: Min.: 0 ms, Max.: 32.64 ms	1.0 to 3.0 ms: Idling	-
IGN ADVANCE	Ignition timing advance for No. 1 cylinder: Min.: -64 deg, Max.: 63.5 deg	BTDC 0 to 14 deg: Idling	-
CALC LOAD	Calculated load by ECM: Min.: 0 %, Max.: 100 %	• 10 to 30 %: Idling • 10 to 30 %: Running without load at 2,500 rpm	Load value
VEHICLE LOAD	Vehicle load: Min.: 0 %, Max.: 25,700 %	Actual vehicle load	Load percentage in terms of maximum intake air flow amount
MAF	Air flow rate from Mass Air Flow (MAF) meter: Min.: 0 g/sec., Max.: 655.35 g/sec.	1 to 3 g/sec.: Idling 2 to 6 g/sec.: Running without load at 2,500 rpm	If value approximately 0.0 g/sec.: • MAF meter power source circuit open • VG circuit open or short If value 160.0 g/sec. or more: • E2G circuit open
ENGINE SPD	Engine speed: Min.: 0 rpm, Max.: 16,383.75 rpm	650 to 750 rpm: Idling	-
VEHICLE SPD	Vehicle speed: Min.: 0 km/h, Max.: 255 km/h	Actual vehicle speed	Speed indicated on speedometer
COOLANT TEMP	Engine coolant temperature: Min.: -40°C, Max.: 140°C	80 to 100°C (176 to 212°F): After warming up	• If -40°C (-40°F): sensor circuit open • If 140°C (284°F) or more: sensor circuit shorted
INTAKE AIR	Intake air temperature: Min.: -40°C, Max.: 140°C	Equivalent to ambient air temperature	• If -40°C (-40°F): sensor circuit open • If 140°C (284°F) or more: sensor circuit shorted
AIR-FUEL RATIO	Ratio compared to stoichiometric level: Min.: 0, Max.: 1.999	0.8 to 1.2: Idling	• Less than 1 (0 to 0.999) = Lean • Stoichiometric air-fuel ratio = 1 • Greater than 1 (1.001 to 1.999) = Rich

Intelligent Tester Display	Measurement: Range (Display)	Normal Condition*1	Diagnostic Note
PURGE DENSITY	Learning value of purge density: Min.: -50, Max.: 350	-40 to 10: Idling	-
EVAP PURGE FLOW	Ratio of evaporative purge flow to intake air volume: Min.: 0 %, Max.: 102.4 %	0 to 10 %: Idling	-
EVAP PURGE VSV	EVAP (PURGE) VSV control duty: Min.: 0 %, Max.: 100 %	10 to 50 %: Idling	Order signal from ECM
VAPOR PRES PUMP	Vapor pressure: Min.: 33.853 kPa, Max.: 125.596 kPa	Approximately 100 kPa: Ignition switch ON	EVAP system pressure monitored by canister pressure sensor
VAPOR PRES CALC	Vapor pressure (calculated): Min.: -5.632 kPa, Max.: 715.264 kPa	Approximately 100 kPa: Ignition switch ON	EVAP system pressure monitored by canister pressure sensor
KNOCK CRRT VAL	Knock correction learning value: Min: -64°CA, Max.: 1,984°CA	0 to 20°CA: Driving at 70 km/h (44 mph)	Service data
KNOCK FB VAL	Knock feedback value: Min: -64°CA, Max.: 1,984°CA	-20 to 0°CA: Driving at 70 km/h (44 mph)	Service data
CLUTCH	Clutch current: Min.: 0 A, Max.: 2.49 A	-	-
EVAP VAPOR PRES	EVAP vapor pressure: Min.: 0 kPa, Max.: 327.675 kPa	Approximately 100 kPa: Ignition switch ON	EVAP system pressure monitored by canister pressure sensor
ACCEL POS #1	Absolute Accelerator Pedal Position (APP) No. 1: Min.: 0 %, Max.: 100 %	10 to 22 %: Accelerator pedal released 52 to 90 %: Accelerator pedal fully depressed	Read value with ignition switch ON (Do not start engine)
ACCEL POS #2	Absolute APP No. 2: Min.: 0 %, Max.: 100 %	24 to 40 %: Accelerator pedal released 68 to 100 %: Accelerator pedal fully depressed	Read value with ignition switch ON (Do not start engine)
ACCEL POS #1	APP sensor No. 1 voltage: Min.: 0 V, Max.: 4.98 V	-	ETCS freeze data
ACCEL POS #2	APP sensor No. 2 voltage: Min.: 0 V, Max.: 4.98 V	-	ETCS freeze data
ACCEL POS #1	APP sensor No. 1 voltage: Min.: 0 V, Max.: 5 V	0.5 to 1.1 V: Accelerator pedal released 2.6 to 4.5 V: Accelerator pedal fully depressed	Read value with ignition switch ON (Do not start engine)
ACCEL POS #2	APP sensor No. 2 voltage: Min.: 0 V, Max.: 5 V	1.2 to 2.0 V: Accelerator pedal released 3.4 to 5.0 V: Accelerator pedal fully depressed	Read value with ignition switch ON (Do not start engine)
ACCEL IDL POS	Whether or not accelerator pedal position sensor detecting idle: ON or OFF	ON: Idling	-
THRTL LEARN VAL	Throttle valve fully closed (learned value): Min.: 0 V, Max.: 5 V	0.4 to 0.8 V	-
ACCEL SSR #1 AD	APP sensor No. 1 voltage (AD): Min.: 0 V, Max.: 4.98 V	-	ETCS service data
ACCEL LRN VAL#1	Accelerator fully closed learning value No. 1: Min.: 0 deg, Max.: 124.512 deg	-	ETCS service data
ACCEL LRN VAL#2	Accelerator fully closed learning value No. 2: Min.: 0 deg, Max.: 124.512 deg	-	ETCS service data
FAIL #1	Whether or not fail safe function executed: ON or OFF	ON: ETCS has failed	-
FAIL #2	Whether or not fail safe function executed: ON or OFF	ON: ETCS has failed	-

Intelligent Tester Display	Measurement: Range (Display)	Normal Condition*1	Diagnostic Note
ST1	Brake pedal signal: ON or OFF	ON: Brake pedal depressed	-
SYS GUARD JUDGE	System guard: ON or OFF	-	ETCS service data
OPN MALFUNCTION	Open side malfunction: ON or OFF	-	ETCS service data
THROTTLE POS	Throttle position sensor: Min.: 0%, Max.: 100 %	• 10 to 22 %: Throttle fully closed • 66 to 98 %: Throttle fully open	• Calculated value based on VTA1 • Read value with ignition switch ON (Do not start engine)
THROTTL IDL POS	Whether or not throttle position sensor detecting idle: ON or OFF	ON: Idling	-
THRTL REQ POS	Throttle requirement position: Min.: 0 V, Max.: 5 V	0.5 to 1.0 V: Idling	-
THROTTLE POS	Throttle position: Min.: 0 %, Max.: 100 %	• 0 %: Throttle fully closed • 50 to 80 %: Throttle fully open	• Recognition value for throttle opening angle on ECM • Read value with ignition switch ON (Do not start engine)
THROTTLE POS #2	Throttle position No. 2 sensor: Min.: 0 %, Max.: 100 %	• 42 to 62 %: Throttle fully closed • 92 to 100 %: Throttle fully open	• Calculated value based on VTA2 • Read value with ignition switch ON (Do not start engine)
THROTTLE POS #1	Throttle position sensor No. 1 output voltage: Min.: 0 V, Max.: 4.98 V	-	ETCS freeze data
THROTTLE POS #2	Throttle position sensor No. 2 output voltage: Min.: 0 V, Max.: 4.98 V	-	ETCS freeze data
THROTTLE POS #1	Throttle position sensor No. 1 output voltage: Min.: 0 V, Max.: 5 V	• 0.5 to 1.1 V: Throttle fully closed • 3.3 to 4.9 V: Throttle fully open	Read value with ignition switch ON (Do not start engine)
THROTTLE POS #2	Throttle position sensor No. 2 output voltage: Min.: 0 V, Max.: 5 V	• 2.1 to 3.1 V: Throttle fully closed • 4.6 to 5.0 V: Throttle fully open	Read value with ignition switch ON (Do not start engine)
THRTL COMND VAL	Throttle position command value: Min.: 0 V, Max.: 4.9804 V	0.5 to 4.9 V	Read value with ignition switch ON (Do not start engine)
THROTTLE SSR #1	Throttle sensor opener position No. 1: Min.: 0 V, Max.: 4.9804 V	-	ETCS service data
THROTTLE SSR #2	Throttle sensor opener position No. 2: Min.: 0 V, Max.: 4.9804 V	-	ETCS service data
THRTL SSR #1 AD	Throttle position sensor No. 1 output voltage (AD): Min.: 0 V, Max.: 4.9804 V	0.5 to 4.9 V	Read value with ignition switch ON (Do not start engine)
THROTTLE MOT	Whether or not throttle actuator control permitted: ON or OFF	ON: Idling	Read value with ignition switch ON (Do not start engine)
THROTTLE MOT	Throttle actuator current: Min.: 0 A, Max.: 80 A	0 to 3.0 A: Idling	-
THROTTLE MOT	Throttle actuator: Min.: 0 %, Max.: 100 %	0.5 to 40 %: Idling	-
THROTTLE MOT	Throttle actuator current: Min.: 0 A, Max.: 19.92 A	0 to 3.0 A: Idling	-

Intelligent Tester Display	Measurement: Range (Display)	Normal Condition*1	Diagnostic Note
THROTL OPN DUTY	Throttle actuator opening duty ratio: Min.: 0 %, Max.: 100 %	0 to 40 %: During idling	• When accelerator pedal depressed, duty ratio increased • Read value with ignition switch ON (Do not start engine)
THROTL CLS DUTY	Throttle actuator closed duty ratio: Min.: 0 %, Max.: 100 %	0 to 40 %: During idling	• When accelerator pedal released quickly, duty ratio increased • Read value with ignition switch ON (Do not start engine)
THRTL MOT (OPN)	Throttle actuator duty ratio (open): Min.: 0 %, Max.: 100 %	0 to 40 %: During idling	ETCS service data
THRTL MOT (CLS)	Throttle actuator duty ratio (closed): Min.: 0 %, Max.: 100 %	0 to 40 %: During idling	ETCS service data
O2S B1 S2	Heated oxygen sensor output voltage for sensor 2: Min.: 0 V Max.: 1.275 V	0.1 to 0.9 V: Driving at 70 km/h (44 mph)	Performing INJ VOL or A/F CONTROL function of ACTIVE TEST enables technician to check output voltage of sensor
AFS B1 S1	A/F sensor output voltage for sensor 1: Min.: 0 V Max.: 7.999 V	2.8 to 3.8 V: Idling	Performing INJ VOL or A/F CONTROL function of ACTIVE TEST enables technician to check output voltage of sensor
TOTAL FT #1	Total fuel trim value for fuel system: Min.: -0.5, Max.: 0.496	-0.2 to 0.2	-
SHORT FT #1	Short-term fuel trim: Min.: -100 %, Max.: 99.2 %	-20 to 20 %	Short-term fuel compensation used to maintain air-fuel ratio at stoichiometric air-fuel ratio
LONG FT #1	Long-term fuel trim: Min.: -100 %, Max.: 99.2 %	-20 to 20 %	Overall fuel compensation carried out in long-term to compensate continual deviation of short-term fuel trim from central value
FUEL SYS #1	Fuel system status: OL or CL or OL DRIVE or OL FAULT or CL FAULT	CL: Idling after warming up	• OL (Open Loop): Has not yet satisfied conditions to go closed loop • CL (Closed Loop): Using A/F sensor as feedback for fuel control • OL DRIVE: Open loop due to driving conditions (fuel enrichment) • OL FAULT: Open loop due to detected system fault • CL FAULT: Closed loop but A/F sensor, which used for fuel control malfunctioning
O2FT B1 S2	Short-term fuel trim associated with sensor 2: Min.: -100 %, Max.: 99.2 %	-	-
AF FT B1 S1	Short-term fuel trim associated with sensor 1: Min.: 0, Max.: 1.999	• Value less than 1 (0.000 to 0.999) =Lean • Stoichiometric air-fuel ratio=1 • Value greater than 1 (1.001 to 1.999) = Rich	-
AFS B1 S1	A/F sensor current: Min.: -128 mA, Max.: 127.99 mA	-	-
CAT TEMP B1S1	Estimated catalyst temperature (sensor 1): Min.: -40°C, Max.: 6,513.5°C	-	-

Intelligent Tester Display	Measurement: Range (Display)	Normal Condition*1	Diagnostic Note
CAT TEMP B1S2	Estimated catalyst temperature (sensor 2): Min.: -40°C, Max.: 6,513.5°C	-	-
S O2S B1S2	Sub heated oxygen sensor impedance (sensor2): Min.: 0 Ω, Max.: 21247.68 Ω	-	-
INI COOL TEMP	Engine coolant temperature at engine start: Min.: -40°C, Max.: 120°C	Close to ambient air temperature	-
INI INTAKE TEMP	Intake air temperature at engine start: Min.: -40°C, Max.: 120°C	Close to ambient air temperature	-
INJ VOL	Injection volume (Cylinder 1): Min.: 0 ml, Max.: 2.048 ml	0 to 0.15 ml: Idling	Quantity of fuel injection volume for 10 times
STARTER SIG	Starter switch (STSW) signal: ON or OFF	ON: Cranking	-
PS SW	Power steering signal: ON or OFF	ON: Power steering operation	-
PS SIGNAL	Power steering signal (history): ON or OFF	ON: When steering wheel first turned after battery terminals connected	Signal status usually ON until battery terminals disconnected
CTP SW	Closed throttle position switch: ON or OFF	• ON: Throttle fully closed • OFF: Throttle open	-
A/C SIGNAL	A/C signal: ON or OFF	ON: A/C ON	-
PNP SW [NSW]	PNP switch status: ON or OFF	ON: P or N position	-
ELECT LOAD SIG	Electrical load signal: ON or OFF	ON: Headlights or defogger turned ON	-
STOP LIGHT SW	Stop light switch: ON or OFF	ON: Brake pedal depressed	-
+BM	Whether or not electric throttle control system power inputted: ON or OFF	ON: Ignition switch ON and system normal	-
+BM VOLTAGE	+BM voltage: Min.: 0, Max.: 19.922	9 to 14 (V): Ignition switch ON and system normal	ETCS service data
BATTERY VOLTAGE	Battery voltage: Min.: 0 V, Max.: 65.535 V	9 to 14 V: Ignition switch ON	-
ACTUATOR POWER	Actuator power supply: ON or OFF	ON: Idling	ETCS service data
ATM PRESSURE	Atmospheric pressure: Min.: 0 kPa, Max.: 255 kPa	Approximately 100 kPa: Ignition switch ON	-
BATTERY CURRENT	Battery current: Min.: -100 A, Max.: 100 A	-	-
BATTERY TEMP	Battery temperature: Min.: -45 °C, Max.: 156.4 °F	-	-
ALT OUTPUT DUTY	Generator output duty ratio: Min.: 0 %, Max.: 100 %	-	During charge control
ALT V NORMAL	Request voltage when regulator not under forced activation: Min.: 0 V, Max.: 20 V	Battery electrolyte temperature varies (12.5 to 14.8 V) while driving: After engine start	Alternator regulator output voltage is out put When performing Active Test, value is 0V
ALT V TST	Request voltage when regulator under forced activation: Min.: 0 V, Max.: 20 V	Request instruction voltage value: After engine start	Charging control service data When not performing Active Test, value is 0V
EVAP (Purge) VSV	Purge VSV status: ON or OFF	-	-
FUEL PUMP / SPD	Fuel pump status: ON or OFF	ON: Engine running	Active Test support data

ES

Intelligent Tester Display	Measurement: Range (Display)	Normal Condition*1	Diagnostic Note
VVT CTRL B1	VVT control (bank 1) status: ON or OFF	-	-
VACUUM PUMP	Key-off EVAP system leak detection pump status: ON or OFF	-	Active Test support data
EVAP VENT VAL	Key-off EVAP system vent valve status: ON or OFF	-	Active Test support data
FAN MOTOR	Electric fan motor: ON or OFF	ON: Electric fan motor operating	-
TC/TE1	TC and CG (TE1) terminal of DLC3: ON or OFF	-	Active Test support data
ENG SPEED #1	Engine rpm during No. 1 cylinder fuel cut: Min.: 0 rpm, Max.: 25,600 rpm	-	Output only when FUEL CUT #1 is performed using ACTIVE TEST
ENG SPEED #2	Engine rpm during No. 2 cylinder fuel cut: Min.: 0 rpm, Max.: 25,600 rpm	-	Output only when FUEL CUT #2 is performed using ACTIVE TEST
ENG SPEED #3	Engine rpm during No. 3 cylinder fuel cut: Min.: 0 rpm, Max.: 25,600 rpm	-	Output only when FUEL CUT #3 is performed using ACTIVE TEST
ENG SPEED #4	Engine rpm during No. 4 cylinder fuel cut: Min.: 0 rpm, Max.: 25,600 rpm	-	Output only when FUEL CUT #4 is performed using ACTIVE TEST
ENG SPEED ALL	Average of engine rpm values during fuel cut of No. 1 to No. 4 cylinders: Min.: 0 rpm, Max.: 25,600 rpm	-	Output only when ACTIVE TEST is performed
VVTL AIM ANGL#1*2	VVT aim angle: Min.: 0 %, Max.: 100 %	0 to 100 %	VVT duty signal value during intrusive operation
VVT CHNG ANGL#1*2	VVT angle: Min.: 0°FR, Max.: 60°FR	0 to 56°FR	Displacement angle during intrusive operation
VVT OCV DUTY B1*2	VVT OCV operation duty: Min.: 0 %, Max.: 100 %	0 to 100 %	Requested duty value for intrusive operation
FC IDL	Fuel cut idle: ON or OFF	ON: Fuel cut operation	FC IDL = "ON" when throttle valve fully closed and engine speed over 3,500 rpm
FC TAU	Fuel cut TAU (Fuel cut during very light load): ON or OFF	ON: Fuel cut operating	Fuel cut being performed under very light load to prevent engine combustion from becoming incomplete
IGNITION	Ignition counter: Min.: 0, Max.: 800	0 to 800	-
CYL #1, #2, #3, #4	Misfire of cylinder 1 to 4: Min.: 0, Max.: 255	0	-
CYL ALL	All cylinders misfire: Min.: 0, Max.: 255	0	-
MISFIRE RPM	Engine speed when misfire occur: Min.: 0 rpm, Max.: 6,375 rpm	-	-
MISFIRE LOAD	Engine load when misfire occur: Min.: 0 g/rev, Max.: 3.98 g/rev	-	-
MISFIRE MARGIN	Margin to detect engine misfire: Min.: -100 %, Max.: 99.22 %	-100 to 99.22 %	Misfire detecting margin
#CODES	Number of codes: Min.: 0, Max.: 255	-	Number of detected DTCs
CHECK MODE	Check mode: ON or OFF	ON: Check mode ON	(see page ES-38)

Intelligent Tester Display	Measurement: Range (Display)	Normal Condition*1	Diagnostic Note
SPD TEST	Check mode result for vehicle speed sensor: COMPL or INCMPL	-	-
MISFIRE TEST	Check mode result for misfire monitor: COMPL or INCMPL	-	-
OXS1 TEST	Check mode result for HO2 sensor: COMPL or INCMPL	-	-
A/F SSR TEST B1	Check mode result for air-fuel ratio sensor: COMPL or INCMPL	-	-
MIL	MIL status: ON or OFF	ON: MIL ON	-
MIL ON RUN DIST	MIL ON run distance: Min.: 0 km, Max.: 65,535 km	Distance after DTC detected	-
MIL ON RUN TIME	Running time from MIL ON: Min.: 0 minutes, Max.: 65,535 minutes	Equivalent to running time after MIL ON	-
ENG RUN TIME	Engine run time: Min.: 0 seconds, Max.: 65,535 seconds	Time after engine start	-
TIME DTC CLEAR	Time after DTC cleared: Min.: 0 minutes, Max.: 65,535 minutes	Equivalent to time after DTCs erased	-
DIST DTC CLEAR	Distance after DTC cleared: Min.: 0 km, Max.: 65,535 km	Equivalent to drive distance after DTCs erased	-
WU CYC DTC CLEAR	Warm-up cycle after DTC cleared: Min.: 0, Max.: 255	-	Number of warm-up cycles after DTC cleared
OBD CERT	OBD requirement	OBD2	-
#CARB CODES	Emission related DTCs	-	Number of emission related DTCs
COMP MON	Comprehensive component monitor: NOT AVL or AVAIL	-	-
FUEL MON	Fuel system monitor: NOT AVL or AVAIL	-	-
MISFIRE MON	Misfire monitor: NOT AVL or AVAIL	-	-
O2S (A/FS) HTR	O2S (A/FS) heater monitor: NOT AVL or AVAIL	-	-
O2S (A/FS) HTR	O2S (A/FS) heater monitor: COMPL or INCMPL	-	-
O2S (A/FS) MON	O2S (A/FS) monitor: NOT AVL or AVAIL	-	-
O2S (A/FS) MON	O2S (A/FS) monitor: COMPL or INCMPL	-	-
EVAP MON	EVAP monitor: NOT AVL or AVAIL	-	-
EVAP MON	EVAP monitor: COMPL or INCMPL	-	-
CAT MON	Catalyst monitor: NOT AVL or AVAIL	-	-
CAT MON	Catalyst monitor: COMPL or INCMPL	-	-
CCM ENA	Comprehensive component monitor: UNABLE or ENABLE	-	-

Intelligent Tester Display	Measurement: Range (Display)	Normal Condition*1	Diagnostic Note
CCM CMPL	Comprehensive component monitor: COMPL or INCMPL	-	-
FUEL ENA	Fuel system monitor: UNABLE or ENABLE	-	-
FUEL CMPL	Fuel system monitor: COMPL or INCMPL	-	-
MISFIRE ENA	Misfire monitor: UNABLE or ENABLE	-	-
MISFIRE CMPL	Misfire monitor: COMPL or INCMPL	-	-
HTR ENA	O2S (A/FS) heater monitor: UNABLE or ENABLE	-	-
HTR CMPL	O2S (A/FS) heater monitor: COMPL or INCMPL	-	-
O2S (A/FS) ENA	O2S (A/FS) monitor: UNABLE or ENABLE	-	-
O2S (A/FS) CMPL	O2S (A/FS) monitor: COMPL or INCMPL	-	-
EVAP ENA	EVAP monitor: UNABLE or ENABLE	-	-
EVAP CMPL	EVAP monitor: COMPL or INCMPL	-	-
CAT ENA	Catalyst monitor: UNABLE or ENABLE	-	-
CAT CMPL	Catalyst monitor: COMPL or INCMPL	-	-
MODEL CODE	Identifying model code	ACA3#	-
ENGINE TYPE	Identifying engine type	2AZFE	-
CYLINDER NUMBER	Identifying cylinder number: Min.: 0, Max.: 255	4	-
TRANSMISSION	Identifying transmission type	4AT	-
DESTINATION	Identifying destination	A (America)	-
MODEL YEAR	Identifying model year: Min.: 1900, Max.: 2155	200#	-
SYSTEM	Identifying engine system	GASLIN (gasoline engine)	-

HINT:

- *1: If no idling conditions are specified, the transmission gear selector lever should be in the N or P position, and the A/C switch and all accessory switches should be OFF.
- *2: DATA LIST values are only displayed when performing the following ACTIVE TEST: VVT B1. For other ACTIVE TESTs, the DATA LIST value will be 0.

2. ACTIVE TEST

HINT:

Performing an ACTIVE TEST enables components including the relays, VSV (Vacuum Switching Valve) and actuators, to be operated without removing any parts. The ACTIVE TEST can be performed with the intelligent tester. Performing the ACTIVE TEST as the first step of troubleshooting is one method of shortening diagnostic time.

DATA LIST can be displayed during ACTIVE TEST.

(a) Connect the intelligent tester to the DLC3.

(b) Turn the ignition switch ON.

(c) Turn the tester ON.
(d) Select the following menu items: DIAGNOSIS / ENHANCED OBD II / ACTIVE TEST.
(e) Perform the ACTIVE TEST by referring to the table below.

ECM:

Intelligent Tester Displays	Test Details	Control Ranges	Diagnostic Notes
INJ VOL	Change injection volume	Between -12.5 and 24.8 %	• All injectors tested at same time • Perform test at less than 3,000 rpm • Injection volume can be changed in 0.1 % graduations within control range
A/F CONTROL	Change injection volume	Decrease by 12.5 % or increase by 24.8 %	• Perform test at less than 3,000 rpm • A/F CONTROL enables checking and graphing of A/F (Air-Fuel Ratio) sensor and Heated Oxygen (HO2) sensor voltage outputs • To conduct test, select following menu items: ACTIVE TEST / A/F CONTROL / USER DATA / AFS B1S1 and O2S B1S2; then press YES and ENTER followed by F4.
EVAP VSV (ALONE)	Activate purge VSV control	ON/OFF	-
VVT B1	Control VVT (bank 1)	-128 to 127 % This value added to present OCV control duty 100 %: Maximum advance -100 %: Maximum retard	Engine stall or rough idle when VVT actuator operated by 100 %. Test possible while vehicle stopped and engine idling
VVT CTRL B1	Turn on and off OCV (Oil Control Valve)	ON/OFF	• Engine stalls or idles roughly when OCV turned ON • Normal engine running or idling when OCV OFF • Test possible while vehicle stopped and engine idling
FUEL PUMP / SPD	Activate fuel pump (C/OPN Relay)	ON/OFF	Test possible when engine stopped
TC/TE1	Turn on and off TC and TE1 connection	ON/OFF	• ON: TC and TE1 connected • OFF: TC and TE1 disconnected
FC IDL PROHBT	Prohibit idling fuel cut control	ON/OFF	-
COOLING FAN	Control electric cooling fan	ON/OFF	-
ETCS OPEN SLOW	Throttle actuator	ON: Throttle valve opens slowly	Test possible when following conditions met: • Engine stopped • Shift position in P • Fully depressing accelerator pedal (APP: 59° or more)
ETCS CLOSE SLOW	Throttle actuator	ON: Throttle valve closes slowly	
ETCS OPEN FAST	Throttle actuator	ON: Throttle valve opens fast	
ETCS CLOSE FAST	Throttle actuator	ON: Throttle valve closes fast	
FUEL CUT #1	Cylinder #1 injector fuel cut	ON/OFF	Test possible during vehicle stopping and engine idling ON: All cylinder injector fuel cut and ignition stop
FUEL CUT #2	Cylinder #2 injector fuel cut	ON/OFF	
FUEL CUT #3	Cylinder #3 injector fuel cut	ON/OFF	
FUEL CUT #4	Cylinder #4 injector fuel cut	ON/OFF	
FUEL CUT ALL	All cylinder injector fuel cut	ON/OFF	ON: All cylinder injector fuel cut
VACUUM PUMP	Leak detection pump	ON/OFF	-
VENT VALVE	Vent valve	ON/OFF	-

ES

Intelligent Tester Displays	Test Details	Control Ranges	Diagnostic Notes
ALT VOL	Request output voltage of generator regulator during forced activation	Between 12.5 and 14.8 V	Engine running
COMPRESS CHECK	All cylinder injector fuel cut and ignition stop	ON/OFF	*

HINT:
*: When cranking the engine, each cylinder measures the engine rpm.
In this ACTIVE TEST, the fuel and ignition of all cylinders is cut, and cranking occurs for approximately 10 seconds. Then, each cylinder measures the engine rpm. If a cylinder's engine rpm is higher than the others, that cylinder's compression pressure is compared to the others, and whether or not the compression pressure is low can be determined.

1. Warm up the engine.
2. Turn the ignition switch OFF.
3. Connect the intelligent tester to the DLC3.
4. Turn the ignition switch ON and turn the intelligent tester ON.
5. Select the following menu items: DIAGNOSIS / ENHANCED OBD II / ACTIVE TEST / COMPRESS CHECK.
   HINT:
   If the results are not displayed normally, select the display items from the DATA LIST before performing the ACTIVE TEST. Select the following menu items: DIAGNOSIS / ENHANCED OBD II / DATA LIST / USER DATA / ENG SPEED #1 and ENG SPEED #2, ENG SPEED #3, ENG SPEED #4 (Press the YES button to change the ENG SPEED #1 to #4 is YES) and then press the ENTER button.

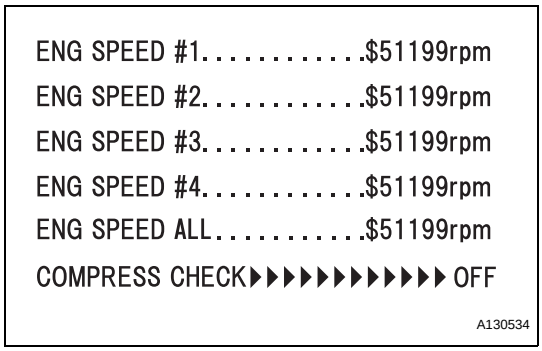

6. While the engine is not running, press the RIGHT or LEFT button to change the COMPRESS CHECK to ON.
   HINT:
   After performing the above procedure, the ACTIVE TEST's COMPRESS CHECK will start. Fuel injection for all cylinders is prohibited, and the each cylinder's engine rpm measurement will enter standby.
7. Fully open the throttle.
8. Crank the engine for about 10 seconds.
9. Monitor the engine speed (ENG SPEED #1 to #4) displayed on the tester.
   HINT:
   At first, the tester's display will show each cylinder's engine rpm measurement to be extremely high. After approximately 10 seconds of engine cranking, each cylinder's engine rpm measurement will change to the actual engine rpm.
   NOTICE:
   - **After the ACTIVE TEST's COMPRESS CHECK is turned ON, it will automatically turn off after 255 seconds.**

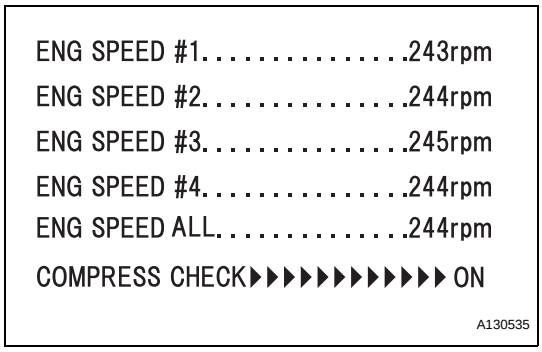

- **When the COMPRESS CHECK test is OFF and the engine is cranked, the engine will start.**
- **If the COMPRESS CHECK test needs to be performed after it is turned ON and performed once, press EXIT to return to the ACTIVE TEST menu screen. Then perform the COMPRESS CHECK test again.**
- **Use a fully-charged battery.**

3. SYSTEM CHECK

HINT:

Performing a SYSTEM CHECK enables the system, which consists of multiple actuators, to be operated without removing any parts. In addition, it can show whether or not any DTCs are set, and can detect potential malfunctions in the system. The SYSTEM CHECK can be performed with the intelligent tester.

(a) Connect the intelligent tester to the DLC3.
(b) Turn the ignition switch ON.
(c) Turn the tester ON.
(d) Select the following menu items: DIAGNOSIS / ENHANCED OBD II / SYSTEM CHECK.
(e) Perform the SYSTEM CHECK by referring to the table below.

ECM:

Intelligent Tester Display	Test Detail	Recommended Fuel Temperature	Diagnostic Note
EVAP SYS CHECK (AUTO OPERATION)	Perform 5 steps in order to operate EVAP key-off monitor automatically	35°C (95°F) or less	• If no DTCs in PENDING CODE after performing this test, system functioning normally • Refer to EVAP system
EVAP SYS CHECK (MANUAL OPERATION)	Perform 5 steps in order to operate EVAP key-off monitor manually	35°C (95°F) or less	• Used to detect malfunctioning parts • Refer to EVAP system

DIAGNOSTIC TROUBLE CODE CHART

HINT:
Parameters listed in the chart may be different than your readings depending on the type of instrument and other factors.
If any DTCs are displayed during a check mode DTC check, check the circuit for the DTCs listed in the table below. For details of each DTC, refer to the page indicated.

DTC No.	Detection Item	Trouble Areas	MIL	Memory	See page
P0010	Camshaft Position "A" Actuator Circuit (Bank 1)	- Open or short in Oil Control Valve (OCV) circuit - OCV - ECM	Comes on	DTC stored	ES-62
P0011	Camshaft Position "A" - Timing Over-Advanced or System Performance (Bank 1)	- Valve timing - OCV - OCV filter - Camshaft timing gear assembly - ECM	Comes on	DTC stored	ES-66
P0012	Camshaft Position "A" - Timing Over-Retarded (Bank 1)	- Same as DTC P0011	Comes on	DTC stored	ES-66
P0016	Crankshaft Position - Camshaft Position Correlation (Bank 1 Sensor A)	- Mechanical system (Timing chain has jumped tooth or chain stretched) - ECM	Comes on	DTC stored	ES-72
P0031	Oxygen (A/F) Sensor Heater Control Circuit Low (Bank 1 Sensor 1)	- Open in Air-Fuel Ratio (A/F) sensor heater circuit - A/F sensor heater (sensor 1) - Integration relay (EFI MAIN relay) - ECM	Comes on	DTC stored	ES-74
P0032	Oxygen (A/F) Sensor Heater Control Circuit High (Bank 1 Sensor 1)	- Short in A/F sensor heater circuit - A/F sensor heater (sensor 1) - Integration relay (EFI MAIN relay) - ECM	Comes on	DTC stored	ES-74
P0037	Oxygen Sensor Heater Control Circuit Low (Bank 1 Sensor 2)	- Open in Heated Oxygen (HO2) sensor heater circuit - HO2 sensor heater (sensor 2) - Integration relay (EFI MAIN relay) - ECM	Comes on	DTC stored	ES-80
P0038	Oxygen Sensor Heater Control Circuit High (Bank 1 Sensor 2)	- Short in HO2 sensor heater circuit - HO2 sensor heater (sensor 2) - Integration relay (EFI MAIN relay) - ECM	Comes on	DTC stored	ES-80

DTC No.	Detection Item	Trouble Areas	MIL	Memory	See page
P0100	Mass or Volume Air Flow Circuit	- Open or short in Mass Air Flow (MAF) meter circuit - MAF meter - ECM	Comes on	DTC stored	ES-86
P0101	Mass Air Flow Circuit Range / Performance Problem	- MAF meter - Air induction system - PCV hose connections	Comes on	DTC stored	ES-93
P0102	Mass or Volume Air Flow Circuit Low Input	- Open or short in MAF meter circuit - MAF meter - ECM	Comes on	DTC stored	ES-86
P0103	Mass or Volume Air Flow Circuit High Input	- Open or short in MAF meter circuit - MAF meter - ECM	Comes on	DTC stored	ES-86
P0110	Intake Air Temperature Circuit Malfunction	- Open or short in Intake Air Temperature (IAT) sensor circuit - IAT sensor (built into MAF meter) - ECM	Comes on	DTC stored	ES-96
P0111	Intake Air Temperature Sensor Gradient Too High	- Mass air flow meter assembly	Comes on	DTC stored	ES-102
P0112	Intake Air Temperature Circuit Low Input	- Short in IAT sensor circuit - IAT sensor (built into MAF meter) - ECM	Comes on	DTC stored	ES-96
P0113	Intake Air Temperature Circuit High Input	- Open in IAT sensor circuit - IAT sensor (built into MAF meter) - ECM	Comes on	DTC stored	ES-96
P0115	Engine Coolant Temperature Circuit Malfunction	- Open or short in Engine Coolant Temperature (ECT) sensor circuit - ECT sensor - ECM	Comes on	DTC stored	ES-105
P0116	Engine Coolant Temperature Circuit Range / Performance Problem	- Thermostat - ECT sensor	Comes on	DTC stored	ES-111
P0117	Engine Coolant Temperature Circuit Low Input	- Short in ECT sensor circuit - ECT sensor - ECM	Comes on	DTC stored	ES-105
P0118	Engine Coolant Temperature Circuit High Input	- Open in ECT sensor circuit - ECT sensor - ECM	Comes on	DTC stored	ES-105
P0120	Throttle Pedal Position Sensor / Switch "A" Circuit Malfunction	- Throttle Position (TP) sensor (built into throttle body) - ECM	Comes on	DTC stored	ES-114
P0121	Throttle / Pedal Position Sensor / Switch "A" Circuit Range / Performance Problem	- TP sensor (built into throttle body)	Comes on	DTC stored	ES-121

DTC No.	Detection Item	Trouble Areas	MIL	Memory	See page
P0122	Throttle / Pedal Position Sensor / Switch "A" Circuit Low Input	- TP sensor (built into throttle body) - Short in VTA1 circuit - Open in VC circuit - ECM	Comes on	DTC stored	ES-114
P0123	Throttle / Pedal Position Sensor / Switch "A" Circuit High Input	- TP sensor (built into throttle body) - Open in VTA1 circuit - Open in E2 circuit - Short between VC and VTA1 circuits - ECM	Comes on	DTC stored	ES-114
P0125	Insufficient Coolant Temperature for Closed Loop Fuel Control	- Cooling system - ECT sensor - Thermostat	Comes on	DTC stored	ES-123
P0128	Coolant Thermostat (Coolant Temperature Below Thermostat Regulating Temperature)	- Thermostat - Cooling system - ECT sensor - ECM	Comes on	DTC stored	ES-126
P0136	Oxygen Sensor Circuit Malfunction (Bank 1 Sensor 2)	- Open or short in HO2 sensor (sensor 2) circuit - HO2 sensor (sensor 2) - HO2 sensor heater (sensor 2) - Air-Fuel Ratio (A/F) sensor (sensor 1) - Integration relay (EFI MAIN relay) - Gas leakage from exhaust system	Comes on	DTC stored	ES-129
P0137	Oxygen Sensor Circuit Low Voltage (Bank 1 Sensor 2)	- Open in HO2 sensor (sensor 2) circuit - HO2 sensor (sensor 2) - HO2 sensor heater (sensor 2) - Integration relay (EFI MAIN relay) - Gas leakage from exhaust system	Comes on	DTC stored	ES-129
P0138	Oxygen Sensor Circuit High Voltage (Bank 1 Sensor 2)	- Short in HO2 sensor (sensor 2) circuit - HO2 sensor (sensor 2) - ECM internal circuit malfunction	Comes on	DTC stored	ES-129
P0141	Oxygen Sensor Heater Circuit Malfunction (Bank 1 Sensor 2)	- Open or short in HO2 sensor heater circuit - HO2 sensor heater (sensor 2) - Integration relay (EFI MAIN relay) - ECM	Comes on	DTC stored	ES-80

DTC No.	Detection Item	Trouble Areas	MIL	Memory	See page
P0171	System Too Lean (Bank 1)	- Air induction system - Injector blockage - MAF meter - ECT sensor - Fuel pressure - Gas leakage from exhaust system - Open or short in A/F sensor (sensor 1) circuit - A/F sensor (sensor 1) - A/F sensor heater (sensor 1) - Integration relay (EFI MAIN relay) - A/F sensor heater and EFI MAIN relay circuits - PCV hose connections - PCV valve and hose - ECM	Comes on	DTC stored	ES-147
P0172	System Too Rich (Bank 1)	- Injector leakage or blockage - MAF meter - ECT sensor - Ignition system - Fuel pressure - Gas leakage from exhaust system - Open or short in A/F sensor (sensor 1) circuit - A/F sensor (sensor 1) - A/F sensor heater (sensor 1) - Integration relay (EFI MAIN relay) - A/F sensor heater and EFI MAIN relay circuits - ECM	Comes on	DTC stored	ES-147
P0220	Throttle / Pedal Position Sensor / Switch "B" Circuit	- TP sensor (built into throttle body) - ECM	Comes on	DTC stored	ES-114
P0222	Throttle / Pedal Position Sensor / Switch "B" Circuit Low Input	- TP sensor (built into throttle body) - Short in VTA2 circuit - Open in VC circuit - ECM	Comes on	DTC stored	ES-114
P0223	Throttle / Pedal Position Sensor / Switch "B" Circuit High Input	- TP sensor (built into throttle body) - Open in VTA2 circuit - Open in E2 circuit - Short between VC and VTA2 circuits - ECM	Comes on	DTC stored	ES-114

DTC No.	Detection Item	Trouble Areas	MIL	Memory	See page
P0300	Random / Multiple Cylinder Misfire Detected	- Open or short in engine wire harness - Connector connection - Vacuum hose connection - Ignition system - Injector - Fuel pressure - MAF meter - ECT sensor - Compression pressure - Valve clearance - Valve timing - PCV valve and hose - PCV hose connections - Air induction system - ECM	Comes on/Blinks*	DTC stored	ES-156
P0301	Cylinder 1 Misfire Detected	- Same as DTC P0300	Comes on/Blinks*	DTC stored	ES-156
P0302	Cylinder 2 Misfire Detected	- Same as DTC P0300	Comes on/Blinks*	DTC stored	ES-156
P0303	Cylinder 3 Misfire Detected	- Same as DTC P0300	Comes on/Blinks*	DTC stored	ES-156
P0304	Cylinder 4 Misfire Detected	- Same as DTC P0300	Comes on/Blinks*	DTC stored	ES-156
P0327	Knock Sensor 1 Circuit Low Input (Bank 1 or Single Sensor)	- Short in knock sensor circuit - Knock sensor - ECM	Comes on	DTC stored	ES-168
P0328	Knock Sensor 1 Circuit High Input (Bank 1 or Single Sensor)	- Open in knock sensor circuit - Knock sensor - ECM	Comes on	DTC stored	ES-168
P0335	Crankshaft Position Sensor "A" Circuit	- Open or short in Crankshaft Position (CKP) sensor circuit - CKP sensor - CKP sensor plate - ECM	Comes on	DTC stored	ES-172
P0339	Crankshaft Position Sensor "A" Circuit Intermittent	- Same as DTC P0335	-	DTC stored	ES-172
P0340	Camshaft Position Sensor "A" Circuit (Bank 1 or Single Sensor)	- Open or short in Camshaft Position (CMP) sensor circuit - CMP sensor - Camshaft - Jumped tooth of timing chain - ECM	Comes on	DTC stored	ES-178
P0351	Ignition Coil "A" Primary / Secondary Circuit	- Ignition system - Open or short in IGF1 or IGT circuit (1 to 4) between ignition coil with igniter and ECM - No. 1 to No. 4 ignition coils with igniters - ECM	Comes on	DTC stored	ES-183

DTC No.	Detection Item	Trouble Areas	MIL	Memory	See page
P0352	Ignition Coil "B" Primary / Secondary Circuit	- Same as DTC P0351	Comes on	DTC stored	ES-183
P0353	Ignition Coil "C" Primary / Secondary Circuit	- Same as DTC P0351	Comes on	DTC stored	ES-183
P0354	Ignition Coil "D" Primary / Secondary Circuit	- Same as DTC P0351	Comes on	DTC stored	ES-183
P0420	Catalyst System Efficiency Below Threshold (Bank 1)	- Front exhaust pipe (with Three-Way Catalytic Converter) - Gas leakage from exhaust system - A/F sensor (sensor 1) - HO2 sensor (sensor 2)	Comes on	DTC stored	ES-191
P043E	Evaporative Emission System Reference Orifice Clog Up	- Canister pump module (Reference orifice, leak detection pump, vent valve) - Connector/wire harness (Canister pump module - ECM) - EVAP system hose (pipe from air inlet port to canister pump module, canister filter, fuel tank vent hose) - ECM	Comes on	DTC stored	ES-198
P043F	Evaporative Emission System Reference Orifice High Flow	- Same as DTC P043E	Comes on	DTC stored	ES-198
P0441	Evaporative Emission Control System Incorrect Purge Flow	- Purge VSV - Connector/wire harness (Purge VSV - ECM) - Canister pump module - Leakage from EVAP system - Leakage from EVAP line (Purge VSV - Intake manifold) - ECM	Comes on	DTC stored	ES-203
P0450	Evaporative Emission Control System Pressure Sensor / Switch	- Canister pump module - EVAP system hose (pipe from air inlet port to canister pump module, canister filter, fuel tank vent hose) - ECM	Comes on	DTC stored	ES-210

DTC No.	Detection Item	Trouble Areas	MIL	Memory	See page
P0451	Evaporative Emission Control System Pressure Sensor Range / Performance	- Canister pump module - Connector/wire harness (Canister pump module - ECM) - EVAP system hose (pipe from air inlet port to canister pump module, canister filter, fuel tank vent hose) - ECM	Comes on	DTC stored	ES-210
P0452	Evaporative Emission Control System Pressure Sensor / Switch Low Input	- Same as DTC P0451	Comes on	DTC stored	ES-210
P0453	Evaporative Emission Control System Pressure Sensor / Switch High Input	- Same as DTC P0451	Comes on	DTC stored	ES-210
P0455	Evaporative Emission Control System Leak Detected (Gross Leak)	- Fuel cap (loose) - Leakage from EVAP line (Canister - Fuel tank) - Leakage from EVAP line (Purge VSV - Canister) - Canister pump module - Leakage from fuel tank - Leakage from canister	Comes on	DTC stored	ES-220
P0456	Evaporative Emission Control System Leak Detected (Very Small Leak)	- Same as DTC P0455	Comes on	DTC stored	ES-220
P0500	Vehicle Speed Sensor "A"	- Open or short in speed signal circuit - Vehicle speed sensor - Combination meter - ECM - Skid control ECU	Comes on	DTC stored	ES-224
P0504	Brake Switch "A" / "B" Correlation	- Short in stop light switch signal circuit - STOP fuse - IGN fuse - Stop light switch - ECM	-	DTC stored	ES-229
P0505	Idle Control System Malfunction	- ETCS (Electronic Throttle Control System) - Air induction system - PCV hose connections - ECM	Comes on	DTC stored	ES-233

DTC No.	Detection Item	Trouble Areas	MIL	Memory	See page
P050A	Cold Start Idle Air Control System Performance	- Throttle body assembly - MAF meter - Air induction system - PCV hose connections - VVT system - Air cleaner filter element - ECM	Comes on	DTC stored	ES-237
P050B	Cold Start Ignition Timing Performance	- Same as DTC P050A	Comes on	DTC stored	ES-237
P0516	Battery Temperature Sensor Circuit Low	- Battery current sensor - Short in battery current sensor - ECM	-	DTC stored	ES-243
P0517	Battery Temperature Sensor Circuit High	- Battery current sensor - Open in battery current sensor - ECM	-	DTC stored	ES-243
P0560	System Voltage	- Open in back up power source circuit - Battery - Battery terminals - EFI MAIN fuse - ECM	Comes on	DTC stored	ES-245
P0604	Internal Control Module Random Access Memory (RAM) Error	- ECM	Comes on	DTC stored	ES-249
P0606	ECM / PCM Processor	- ECM	Comes on	DTC stored	ES-249
P0607	Control Module Performance	- ECM	Comes on	DTC stored	ES-249
P0617	Starter Relay Circuit High	- Park/Neutral Position (PNP) switch - ST relay circuit - Ignition switch - ECM	Comes on	DTC stored	ES-251
P0630	VIN not Programmed or Mismatch - ECM / PCM	- ECM	Comes on	DTC stored	ES-256
P0657	Actuator Supply Voltage Circuit / Open	- ECM	Comes on	DTC stored	ES-249
P0724	Brake Switch "B" Circuit High	- Short in stop light switch circuit - Stop light switch - ECM	Comes on	DTC stored	ES-258
P1550	Battery Current Sensor Circuit	- Short in battery current sensor circuit - Battery current sensor - ECM	-	DTC stored	ES-261
P1551	Battery Current Sensor Circuit Low	- Short in battery current sensor circuit - Battery current sensor - ECM	-	DTC stored	ES-261

DTC No.	Detection Item	Trouble Areas	MIL	Memory	See page
P1552	Battery Current Sensor Circuit High	- Short in battery current sensor circuit - Battery current sensor - ECM	-	DTC stored	ES-261
P1602	Deterioration of Battery	- Battery - ECM back-up power source circuit	-	DTC stored	ES-264
P2102	Throttle Actuator Control Motor Circuit Low	- Open in throttle actuator circuit - Throttle actuator - ECM	Comes on	DTC stored	ES-265
P2103	Throttle Actuator Control Motor Circuit High	- Short in throttle actuator circuit - Throttle actuator - Throttle valve - Throttle body assembly - ECM	Comes on	DTC stored	ES-265
P2111	Throttle Actuator Control System - Stuck Open	- Throttle actuator - Throttle body assembly - Throttle valve	Comes on	DTC stored	ES-269
P2112	Throttle Actuator Control System - Stuck Closed	- Same as DTC P2111	Comes on	DTC stored	ES-269
P2118	Throttle Actuator Control Motor Current Range / Performance	- Open in ETCS power source circuit - Battery - Battery terminals - ETCS fuse - ECM	Comes on	DTC stored	ES-272
P2119	Throttle Actuator Control Throttle Body Range / Performance	- ETCS - ECM	Comes on	DTC stored	ES-279
P2120	Throttle / Pedal Position Sensor / Switch "D" Circuit	- Accelerator Pedal Position (APP) sensor - ECM	Comes on	DTC stored	ES-282
P2121	Throttle / Pedal Position Sensor / Switch "D" Circuit Range / Performance	- APP sensor - ECM	Comes on	DTC stored	ES-289
P2122	Throttle / Pedal Position Sensor / Switch "D" Circuit Low Input	- APP sensor - Open in VCP1 circuit - Open or ground short in VPA circuit - ECM	Comes on	DTC stored	ES-282
P2123	Throttle / Pedal Position Sensor / Switch "D" Circuit High Input	- APP sensor - Open in EPA circuit - ECM	Comes on	DTC stored	ES-282
P2125	Throttle / Pedal Position Sensor / Switch "E" Circuit	- APP sensor - ECM	Comes on	DTC stored	ES-282
P2127	Throttle / Pedal Position Sensor / Switch "E" Circuit Low Input	- APP sensor - Open in VCP2 circuit - Open or ground short in VPA2 circuit - ECM	Comes on	DTC stored	ES-282

DTC No.	Detection Item	Trouble Areas	MIL	Memory	See page
P2128	Throttle / Pedal Position Sensor / Switch "E" Circuit High Input	- APP sensor - Open in EPA2 circuit - ECM	Comes on	DTC stored	ES-282
P2135	Throttle / Pedal Position Sensor / Switch "A" / "B" Voltage Correlation	- Short between VTA1 and VTA2 circuits - TP sensor (built into throttle body) - ECM	Comes on	DTC stored	ES-114
P2138	Throttle / Pedal Position Sensor / Switch "D" / "E" Voltage Correlation	- Short between VPA and VPA2 circuits - APP sensor - ECM	Comes on	DTC stored	ES-282
P2195	Oxygen (A/F) Sensor Signal Stuck Lean (Bank 1 Sensor 1)	- Open or short in A/F sensor (sensor 1) circuit - A/F sensor (sensor 1) - A/F sensor heater (sensor 1) - Integration relay (EFI MAIN relay) - A/F sensor heater and EFI MAIN relay circuits - ECM	Comes on	DTC stored	ES-292
P2196	Oxygen (A/F) Sensor Signal Stuck Rich (Bank 1 Sensor 1)	- Same as DTC P2195	Comes on	DTC stored	ES-292
P2238	Oxygen (A/F) Sensor Pumping Current Circuit Low (Bank 1 Sensor 1)	- Open or short in A/F sensor (sensor 1) circuit - A/F sensor (sensor 1) - A/F sensor heater (sensor 1) - Integration relay (EFI MAIN relay) - A/F sensor heater and EFI MAIN relay circuits - ECM	Comes on	DTC stored	ES-306
P2239	Oxygen (A/F) Sensor Pumping Current Circuit High (Bank 1 Sensor 1)	- Same as DTC P2238	Comes on	DTC stored	ES-306
P2252	Oxygen (A/F) Sensor Reference Ground Circuit Low (Bank 1 Sensor 1)	- Same as DTC P2238	Comes on	DTC stored	ES-306
P2253	Oxygen (A/F) Sensor Reference Ground Circuit High (Bank 1 Sensor 1)	- Same as DTC P2238	Comes on	DTC stored	ES-306

DTC No.	Detection Item	Trouble Areas	MIL	Memory	See page
P2401	Evaporative Emission Leak Detection Pump Stuck OFF	- Canister pump module (Reference orifice, leak detection pump, vent valve) - Connector/wire harness (Canister pump module - ECM) - EVAP system hose (pipe from air inlet port to canister pump module, canister filter, fuel tank vent hose) - ECM	Comes on	DTC stored	ES-312
P2402	Evaporative Emission Leak Detection Pump Stuck ON	- Same as DTC P2401	Comes on	DTC stored	ES-312
P2419	Evaporative Emission System Switching Valve Control Circuit Low	- Canister pump module (Reference orifice, leak detection pump, vent valve) - Connector/wire harness (Canister pump module - ECM) - EVAP system hose (pipe from air inlet port to canister pump module, canister filter, fuel tank vent hose) - ECM	Comes on	DTC stored	ES-318
P2420	Evaporative Emission System Switching Valve Control Circuit High	- Canister pump module (Reference orifice, leak detection pump, vent valve) - Connector/wire harness (Canister pump module - ECM) - ECM	Comes on	DTC stored	ES-318
P2610	ECM / PCM Internal Engine Off Timer Performance	- ECM	Comes on	DTC stored	ES-324
P2A00	A/F Sensor Circuit Slow Response (Bank 1 Sensor 1)	- Open or short in A/F sensor circuit - A/F sensor - ECM	Comes on	DTC stored	ES-326

HINT:
*: MIL flashes when a catalyst damaged misfire is detected.

DTC	P0010	Camshaft Position "A" Actuator Circuit (Bank 1)

DESCRIPTION

The Variable Valve Timing (VVT) system includes the ECM, OCV and VVT controller. The ECM sends a target duty-cycle control signal to the OCV. This control signal regulates the oil pressure supplied to the VVT controller. Camshaft timing control is performed according to engine operating conditions such as the intake air volume, throttle valve position and engine coolant temperature. The ECM controls the OCV, based on the signals transmitted by several sensors. The VVT controller regulates the intake camshaft angle using oil pressure through the OCV. As a result, the relative positions of the camshaft and crankshaft are optimized, the engine torque and fuel economy improve, and the exhaust emissions decrease under overall driving conditions. The ECM detects the actual intake valve timing using signals from the camshaft and crankshaft position sensors, and performs feedback control. This is how the target intake valve timing is verified by the ECM.

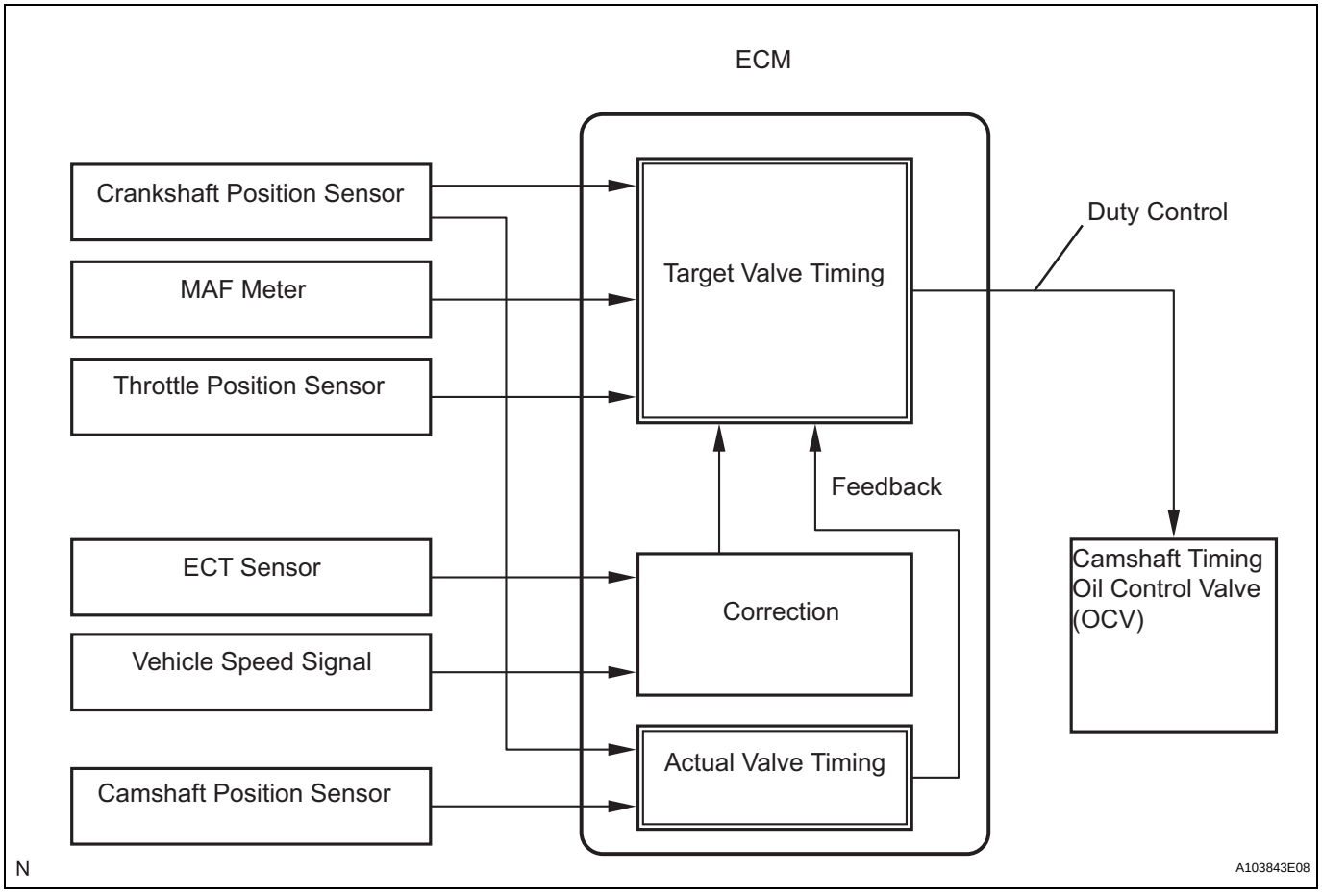

DTC No.	DTC Detection Conditions	Trouble Areas
P0010	Open or short in OCV circuit (1 trip detection logic)	• Open or short in OCV circuit • OCV • ECM

HINT:

This DTC relates to the Oil Control Valve (OCV).

MONITOR DESCRIPTION

The ECM optimizes the valve timing using the VVT system to control the intake camshaft. The VVT system includes the ECM, the OCV and the VVT controller. The ECM sends a target duty-cycle control signal to the OCV. This control signal regulates the oil pressure supplied to the VVT controller. The VVT controller can advance or retard the intake camshaft.
After the ECM sends the target duty-cycle control signal to the OCV, the ECM monitors the OCV current to establish an actual duty-cycle. The ECM determines the existence of a malfunction and sets the DTC when the actual duty-cycle ratio varies from the target duty-cycle ratio.

MONITOR STRATEGY

Related DTCs	P0010: VVT OCV range check
Required Sensors/Components (Main)	VVT OCV
Required Sensors/Components (Related)	-
Frequency of Operation	Continuous
Duration	1 second
MIL Operation	Immediate
Sequence of Operation	None

TYPICAL ENABLING CONDITIONS

Monitor runs whenever following DTCs not present	None
All of following conditions met	-
Starter	OFF
Ignition switch	ON
Time after ignition switch OFF to ON	0.5 seconds or more

TYPICAL MALFUNCTION THRESHOLDS

One of following conditions met	-
A. All of following conditions met	-
Battery voltage	11 to 13 V
Target duty ratio	Less than 70 %
Output signal duty ratio	100 %
B. All of following conditions met	-
Battery voltage	13 V or more
Target duty ratio	Less than 80 %
Output signal duty ratio	100 %
C. Both of following conditions met	-
Current cut status	Not cut
Output signal duty ratio	3 % or less

COMPONENT OPERATING RANGE

VVT OCV duty ratio	3 to 100 %

WIRING DIAGRAM



ES

INSPECTION PROCEDURE

HINT:
Read freeze frame data using the intelligent tester. Freeze frame data records the engine condition when malfunctions are detected. When troubleshooting, freeze frame data can help determine if the vehicle was moving or stationary, if the engine was warmed up or not, if the air-fuel ratio was lean or rich, and other data from the time the malfunction occurred.

1	PERFORM ACTIVE TEST USING INTELLIGENT TESTER (OPERATE OCV)

(a) Connect the intelligent tester to the DLC3.
(b) Start the engine and turn the tester ON.
(c) Warm up the engine.
(d) On the tester, select the following menu items: DIAGNOSIS / ENHANCED OBD II / ACTIVE TEST / VVT CTRL B1.
(e) Check the engine speed while operating the Oil Control Valve (OCV) using the tester.

OK

Tester Operations	Specified Conditions
OCV OFF	Normal engine speed
OCV ON	Engine idles roughly or stalls (soon after OCV switched from OFF to ON)

OK → CHECK FOR INTERMITTENT PROBLEMS

NG

2	INSPECT CAMSHAFT TIMING OIL CONTROL VALVE ASSEMBLY

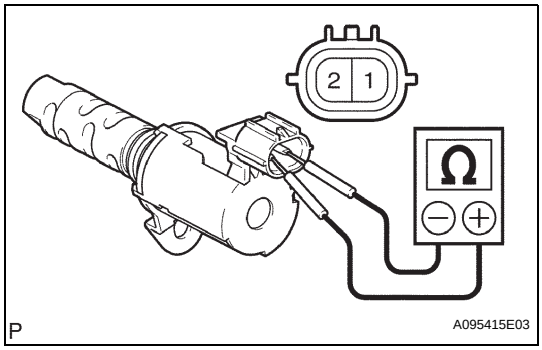

(a) Disconnect the B17 OCV connector.
(b) Measure the resistance between the terminals of the OCV.
Standard resistance:
6.9 to 7.9 Ω at 20°C (68°F)
(c) Reconnect the OCV connector.

NG → **REPLACE CAMSHAFT TIMING OIL CONTROL VALVE ASSEMBLY**

OK

3	CHECK HARNESS AND CONNECTOR (OCV - ECM)

Wire Harness Side:

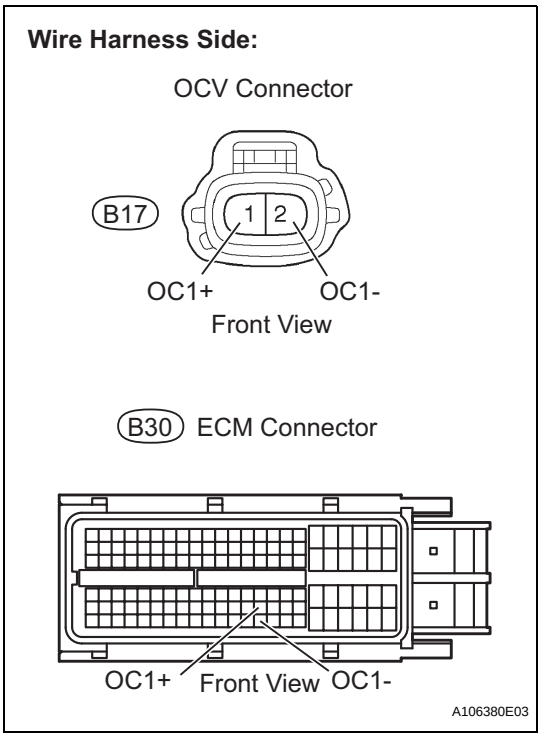

(a) Disconnect the B17 OCV connector.
(b) Disconnect the B30 ECM connector.
(c) Measure the resistance of the wire harness side connectors.
Standard resistance (check for open)

Tester Connections	Specified Conditions
B17-1 (OC1+) - B30-100 (OC1+)	Below 1 Ω
B17-2 (OC1-) - B30-123 (OC1-)	Below 1 Ω

Standard resistance (check for short)

Tester Connections	Specified Conditions
B17-1 (OC1+) or B30-100 (OC1+) - Body ground	10 kΩ or higher
B17-2 (OC1-) or B30-123 (OC1-) - Body ground	10 kΩ or higher

(d) Reconnect the OCV connector.
(e) Reconnect the ECM connector.

NG → **REPAIR OR REPLACE HARNESS OR CONNECTOR**

OK

REPLACE ECM

DTC	P0011	Camshaft Position "A" - Timing Over-Advanced or System Performance (Bank 1)

DTC	P0012	Camshaft Position "A" - Timing Over-Retarded (Bank 1)

DESCRIPTION

The VVT system includes the ECM, Oil Control Valve (OCV) and VVT controller. The ECM sends a target duty-cycle control signal to the OCV. This control signal regulates the oil pressure supplied to the VVT controller. Camshaft timing control is performed according to engine operating conditions such as the intake air volume, throttle valve position and engine coolant temperature. The ECM controls the OCV, based on the signals transmitted by several sensors. The VVT controller regulates the intake camshaft angle using oil pressure through the OCV. As a result, the relative positions of the camshaft and crankshaft are optimized, the engine torque and fuel economy improve, and the exhaust emissions decrease under overall driving conditions. The ECM detects the actual intake valve timing using signals from the camshaft and crankshaft position sensors, and performs feedback control. This is how the target intake valve timing is verified by the ECM.

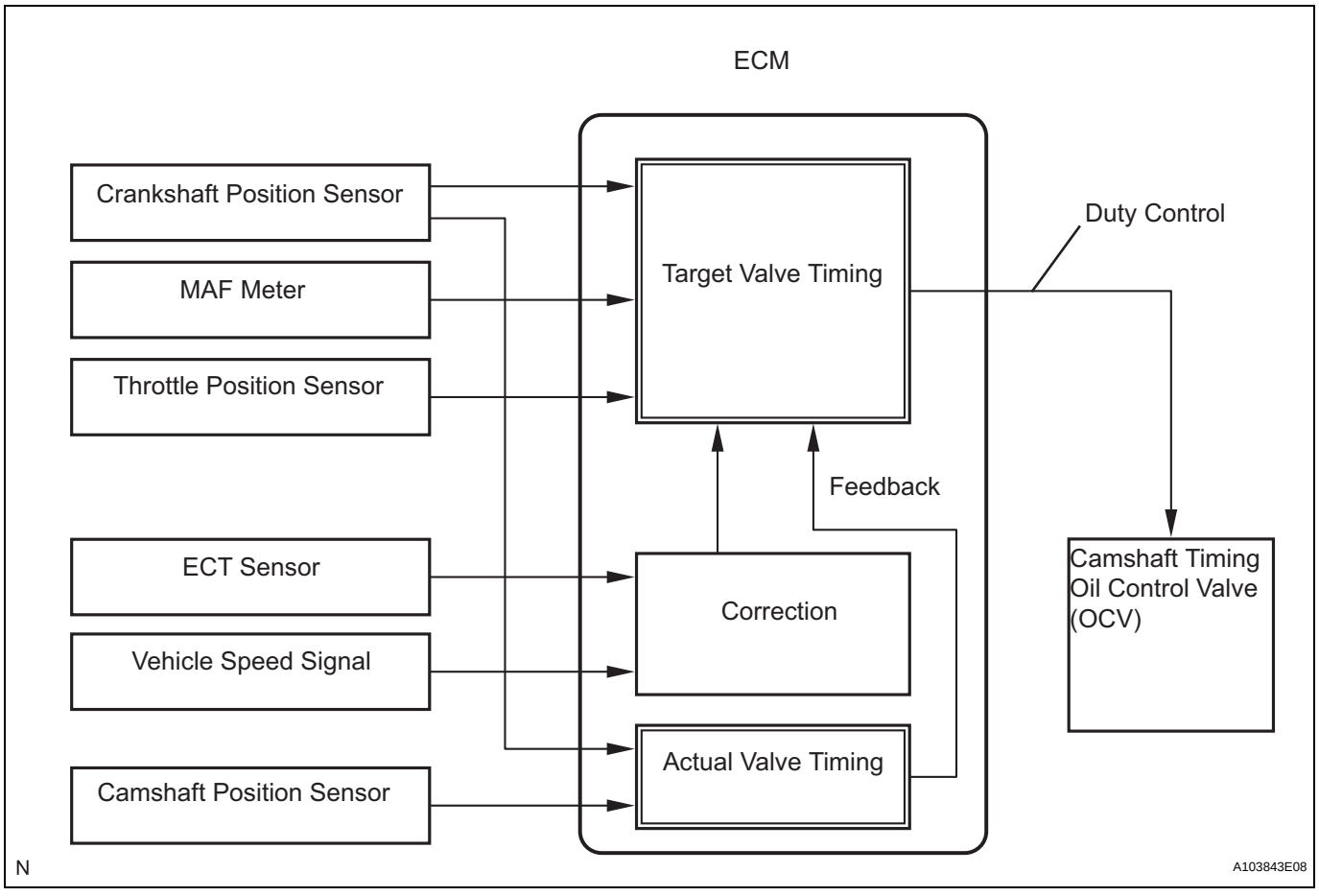

DTC No.	DTC Detection Conditions	Trouble Areas
P0011	Advanced camshaft timing: With warm engine and engine speed of between 550 rpm and 4,000 rpm, all conditions (1), (2) and (3) met (1 trip detection logic): 1. Difference between target and actual intake valve timings more than 5°CA (Crankshaft Angle) for 4.5 seconds 2. Current intake valve timing fixed (timing changes less than 5°CA in 5 seconds) 3. Variations in VVT controller timing more than 19°CA of maximum delayed timing (malfunction in advance timing)	• Valve timing • OCV • OCV filter • Camshaft timing gear assembly • ECM
P0012	Retarded camshaft timing: With warm engine and engine speed of between 550 rpm and 4,000 rpm, all conditions (1), (2) and (3) met (2 trip detection logic): 1. Difference between target and actual intake valve timings more than 5°CA (Crankshaft Angle) for 4.5 seconds 2. Current intake valve timing fixed (timing changes less than 5°CA in 5 seconds) 3. Variations in VVT controller timing 19°CA or less of maximum delayed timing (malfunction in retarded timing)	• Valve timing • OCV • OCV filter • Camshaft timing gear assembly • ECM

ES

MONITOR DESCRIPTION

The ECM optimizes the intake valve timing using the VVT (Variable Valve Timing) system to control the intake camshaft. The VVT system includes the ECM, the Oil Control Valve (OCV) and the VVT controller. The ECM sends a target duty-cycle control signal to the OCV. This control signal regulates the oil pressure supplied to the VVT controller. The VVT controller can advance or retard the intake camshaft. If the difference between the target and actual intake valve timings is large, and changes in the actual intake valve timing are small, the ECM interprets this as the VVT controller stuck malfunction and sets a DTC.

Example:

A DTC is set when the following conditions 1, 2 and 3 are met:

1. The difference between the target and actual intake valve timing is more than 5°CA (Crankshaft Angle) and the condition continues for more than 4.5 seconds.
2. It takes 5 seconds or more to change the valve timing by 5°CA.
3. After above conditions 1 and 2 are met, the OCV is forcibly activated 63 times or more.

DTC P0011 (Advanced Cam Timing) is subject to 1 trip detection logic.

DTC P0012 (Retarded Cam Timing) is subject to 2 trip detection logic.

These DTCs indicate that the VVT controller cannot operate properly due to OCV malfunctions or the presence of foreign objects in the OCV.

The monitor will run if all of the following conditions are met:

– The engine is warm (the engine coolant temperature is 75°C [167°F] or more).
– The vehicle has been driven at more than 64 km/h (40 mph) for 3 minutes.
– The engine has idled for 3 minutes.

MONITOR STRATEGY

Related DTCs	P0011: Advanced camshaft timing P0012: Retarded camshaft timing
Required Sensors/Components (Main)	VVT OCV and VVT Actuator
Required Sensors/Components (Related)	Crankshaft position sensor, camshaft position sensor and Engine coolant temperature sensor
Frequency of Operation	Once per driving cycle
Duration	Within 10 seconds
MIL Operation	Advanced camshaft timing: Immediate Retarded camshaft timing: 2 driving cycles
Sequence of Operation	None

TYPICAL ENABLING CONDITIONS

Monitor runs whenever following DTCs not present	P0100 - P0103 (MAF meter) P0115 - P0118 (ECT sensor) P0125 (Insufficient ECT for closed loop) P0335 (CKP sensor) P0340 (CMP sensor) P0351 - P0354 (Igniter)
Battery voltage	11 V or more
Engine RPM	550 to 4,000 rpm
ECT	75°C (167°F) to 100°C (212°F)

TYPICAL MALFUNCTION THRESHOLDS

Advanced camshaft timing:

All of following conditions met	-
Crank angle between reference position and actual intake camshaft angle	67°CA or more
Valve timing	No change at advanced valve timing

Retard camshaft timing:

All of following conditions met	-
Crank angle between reference point and actual intake camshaft angle	Less than 67°CA
Valve timing	No change at retarded valve timing

If the difference between the target and actual camshaft timings is greater than the specified value, the ECM operates the VVT actuator.
Then, the ECM monitors the camshaft timing change for 5 seconds.

WIRING DIAGRAM

Refer to DTC P0010 (see page ES-64).

INSPECTION PROCEDURE

NOTICE:
DTC P0011 or P0012 may be set when foreign objects in the engine oil are caught in some parts of the system. The DTC will remain set even if the system returns to normal after a short time. Foreign objects are filtered out by the oil filter.
HINT:
If DTC P0011 or P0012 is present, check the VVT (Variable Valve Timing) system.
Read freeze frame data using the intelligent tester. Freeze frame data records the engine condition when malfunctions are detected. When troubleshooting, freeze frame data can help determine if the vehicle was moving or stationary, if the engine was warmed up or not, if the air-fuel ratio was lean or rich, and other data from the time the malfunction occurred.

1	**CHECK ANY OTHER DTCS OUTPUT (IN ADDITION TO DTC P0011 OR P0012)**

(a) Connect the intelligent tester to the DLC3.
(b) Turn the ignition switch ON and turn the tester ON.
(c) Select the following menu items: DIAGNOSIS / ENHANCED OBD II / DTC INFO / CURRENT CODES.
(d) Read DTCs.

Result

Display (DTC Output)	Proceed To

P0011 or P0012	A
P0011 or P0012 and other DTCs	B

HINT:
If any DTCs other than P0011 or P0012 are output, troubleshoot those DTCs first.

B → GO TO DTC CHART

A

2 PERFORM ACTIVE TEST USING INTELLIGENT TESTER (OPERATE OCV)

(a) Connect the intelligent tester to the DLC3.
(b) Start the engine and turn the tester ON.
(c) Warm up the engine.
(d) On the tester, select the following menu items: DIAGNOSIS / ENHANCED OBD II / ACTIVE TEST / VVT CTRL B1.
(e) Check the engine speed while operating the Oil Control Valve (OCV) using the tester.

OK

Tester Operations	Specified Conditions
OCV OFF	Normal engine speed
OCV ON	Engine idles roughly or stalls (soon after OCV switched from OFF to ON)

NG → Go to step 4

OK

3 CHECK WHETHER DTC OUTPUT RECURS (DTC P0011 OR P0012)

(a) Connect the intelligent tester to the DLC3.
(b) Turn the ignition switch ON and turn the tester ON.
(c) Clear DTCs (see page ES-35).
(d) Start the engine and warm it up.
(e) Switch the ECM from normal mode to check mode using the tester.
(f) Drive the vehicle for more than 10 minutes.
(g) Read DTCs using the tester.
OK:
No DTC output.

NG → Go to step 4

OK

END

4 CHECK VALVE TIMING (CHECK FOR LOOSE AND JUMPED TEETH ON TIMING CHAIN)

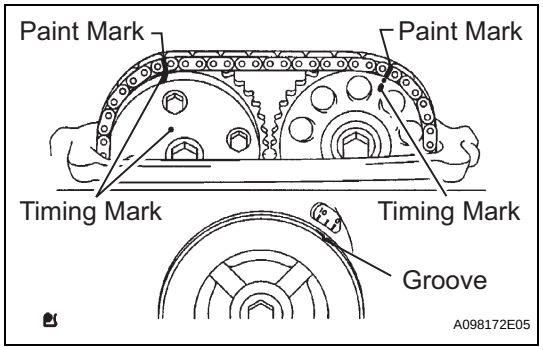

(a) Remove the cylinder head cover.
(b) Turn the crankshaft pulley, and align its groove with the timing mark "0" on the timing chain cover.
(c) Check that the timing marks on the camshaft timing sprocket and camshaft timing gear are facing upward as shown in the illustration.
If not, turn the crankshaft 1 revolution (360°), then align the marks as above.
OK:
Timing marks on camshaft timing gears are aligned as shown in the illustration.
(d) Reinstall the cylinder head cover.

NG → **ADJUST VALVE TIMING**

OK

5 INSPECT CAMSHAFT TIMING OIL CONTROL VALVE ASSEMBLY (OCV)

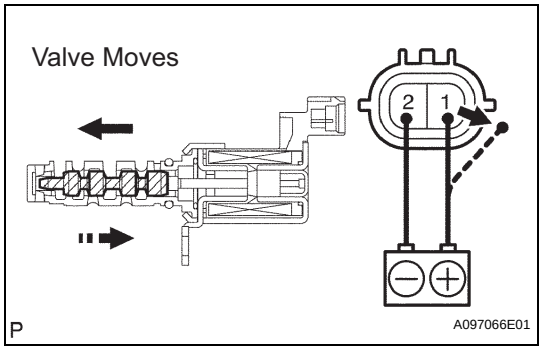

(a) Remove the OCV.
(b) Measure the resistance between the terminals of the OCV.
Standard resistance:
6.9 to 7.9 Ω at 20°C (68°F)
(c) Apply the positive battery voltage to terminal 1 and negative battery voltage to terminal 2. Check the valve operation.
OK:
Valve moves quickly.
(d) Reinstall the OCV.

NG → **REPLACE CAMSHAFT TIMING OIL CONTROL VALVE ASSEMBLY**

OK

6 INSPECT OIL CONTROL VALVE FILTER

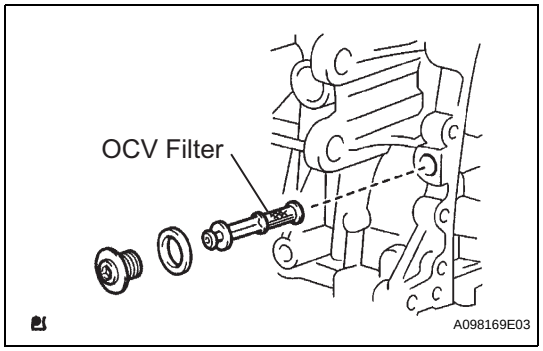

(a) Remove the generator.
(b) Remove the OCV filter.
(c) Check that the filter is not clogged.
OK:
Filter is not clogged.
(d) Reinstall the OCV filter.
(e) Reinstall the generator.

NG → **CLEAN OIL CONTROL VALVE FILTER**

ES

OK

7	REPLACE CAMSHAFT TIMING GEAR ASSEMBLY

NEXT

8	CHECK WHETHER DTC OUTPUT RECURS

(a) Connect the intelligent tester to the DLC3.
(b) Turn the ignition switch ON and turn the tester ON.
(c) Clear DTCs (see page ES-35).
(d) Start the engine and warm it up.
(e) Switch the ECM from normal mode to check mode using the tester.
(f) Drive the vehicle for more than 10 minutes.
(g) Read output DTCs using the tester.
Standard:
No DTC output.
HINT:
DTC P0011 or P0012 is output when foreign objects in engine oil are caught in some parts of the system. These codes will stay registered even if the system returns to normal after a short time. These foreign objects are then captured by the oil filter, thus eliminating the source of the problem.

OK → **SYSTEM OK**

NG

REPLACE ECM

DTC	P0016	Crankshaft Position - Camshaft Position Correlation (Bank 1 Sensor A)

DESCRIPTION

In the VVT (Variable Valve Timing) system, the appropriate intake valve open and close timing is controlled by the ECM. The ECM performs intake valve control by performing the following: 1) controlling the camshaft and camshaft timing oil control valve, and operating the camshaft timing gear; and 2) changing the relative positions of the gaps between the camshaft and crankshaft.

DTC No.	DTC Detection Conditions	Trouble Areas
P0016	Deviation in crankshaft and camshaft position sensor signals (2 trip detection logic)	• Mechanical system (Timing chain has jumped tooth or chain stretched) • ECM

ES

MONITOR DESCRIPTION

The ECM optimizes the valve timing by using the VVT (Variable Valve Timing) system to control the intake camshaft. The VVT system includes the ECM, the Oil Control Valve (OCV) and the VVT controller.
The ECM sends a target duty-cycle control signal to the OCV. This control signal regulates the oil pressure supplied to the VVT controller. The VVT controller can advance or retard the intake camshaft.
The ECM calibrates the intake valve timing by setting the intake camshaft to the most retarded angle while the engine is idling. The ECM closes the OCV to retard the cam. The ECM stores this value as the VVT learning value. When the difference between the target and actual intake valve timings is 5°CA (Crankshaft Angle) or less, the ECM stores it.
If the VVT learning value matches the following conditions, the ECM determines the existence of a malfunction in the VVT system, and sets the DTC.

- VVT learning value: Less than 25°CA, or more than 51°CA.
- Above condition continues for 18 seconds or more.

This DTC indicates that the angle between the intake camshaft and the crankshaft is incorrect due to factors such as the timing chain having jumped a tooth.
This monitor begins to run after the engine has idled for 5 minutes.

MONITOR STRATEGY

Related DTCs	P0016: Camshaft timing misalignment at idling
Required Sensors/Components	VVT actuator
Required Sensors/Components	Camshaft position sensor, Crankshaft position sensor
Frequency of Operation	Once per driving cycle
Duration	Within 1 minute
MIL Operation	2 driving cycles
Sequence of Operation	None

TYPICAL ENABLING CONDITIONS

Monitor runs whenever following DTCs not present	P0011 (VVT system 1 - advance) P0012 (VVT system 1 - retarded) P0115 - P0118 (ECT sensor)
Engine RPM	550 to 1,000 rpm

TYPICAL MALFUNCTION THRESHOLDS

One of following conditions met	-
VVT learning value when camshaft maximum retarded	Less than 27.8°CA
VVT learning value when camshaft maximum retarded	More than 48°CA

WIRING DIAGRAM

Refer to DTC P0335 (see page ES-172).

INSPECTION PROCEDURE

HINT:

Read freeze frame data using the intelligent tester. Freeze frame data records the engine condition when malfunctions are detected. When troubleshooting, freeze frame data can help determine if the vehicle was moving or stationary, if the engine was warmed up or not, if the air-fuel ratio was lean or rich, and other data from the time the malfunction occurred.

ES

1	**CHECK VALVE TIMING (CHECK FOR LOOSE AND JUMPED TOOTH OF TIMING CHAIN) (See page ES-77)**

NG → **Go to step 3**

OK

2	**REPLACE ECM**

NEXT → **Go to step 4**

3	**ADJUST VALVE TIMING**

NEXT

4	**CHECK WHETHER DTC OUTPUT RECURS**

NOTICE:

After replacing the ECM or adjusting intake valve timing, confirm that the DTC output does not recur.

(a) Connect the intelligent tester to the DLC3.
(b) Turn the ignition switch ON.
(c) Turn the tester ON.
(d) Clear DTCs (see page ES-35).
(e) Switch the ECM from normal mode to check mode using the tester (see page ES-38).
(f) Start the engine and warm it up.
(g) Allow the engine to idle for 1 minute or more, and then drive the vehicle for 1 minute or more.
(h) Confirm that no DTC is set, using the tester.

OK:

No DTC output

NEXT

END

DTC	P0031	Oxygen (A/F) Sensor Heater Control Circuit Low (Bank 1 Sensor 1)

DTC	P0032	Oxygen (A/F) Sensor Heater Control Circuit High (Bank 1 Sensor 1)

HINT:
- Although the DTC titles say oxygen sensor, these DTCs relate to the Air-Fuel Ratio (A/F) sensor.
- Sensor 1 refers to the sensor mounted in front of the Three-Way Catalytic Converter (TWC) and located near the engine assembly.

ES

DESCRIPTION

Refer to DTC P2195 (see page ES-292).
HINT:
- When either of these DTCs is set, the ECM enters fail-safe mode. The ECM turns off the A/F sensor heater in fail-safe mode. Fail-safe mode continues until the ignition switch is turned OFF.
- The ECM provides a pulse width modulated control circuit to adjust the current through the heater. The A/F sensor heater circuit uses a relay on the B+ side of the circuit.

Reference (System Diagram of Sensor 1):

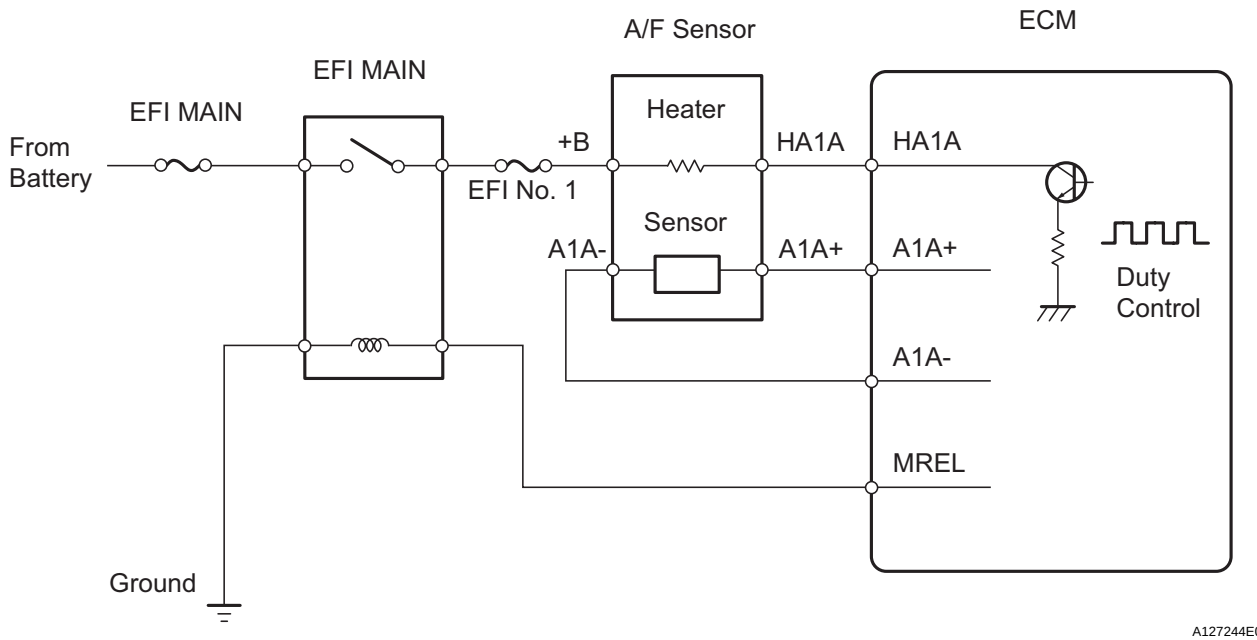

DTC No.	DTC Detection Conditions	Trouble Areas
P0031	Air-Fuel Ratio (A/F) sensor heater current less than 0.8 A (1 trip detection logic)	• Open in A/F sensor heater circuit • A/F sensor heater (sensor 1) • Integration relay (EFI MAIN relay) • ECM
P0032	Air-Fuel Ratio (A/F) sensor heater current more than 10 A (1 trip detection logic)	• Short in A/F sensor heater circuit • A/F sensor heater (sensor 1) • Integration relay (EFI MAIN relay) • ECM

MONITOR DESCRIPTION

The ECM uses information from the Air-Fuel Ratio (A/F) sensor to regulate the air-fuel ratio and keep it close to the stoichiometric level. This maximizes the ability of the Three-Way Catalytic Converter (TWC) to purify the exhaust gases.

The A/F sensor detects oxygen levels in the exhaust gas and transmits the information to the ECM. The inner surface of the sensor element is exposed to the outside air. The outer surface of the sensor element is exposed to the exhaust gas. The sensor element is made of platinum coated zirconia and includes an integrated heating element.

The zirconia element generates a small voltage when there is a large difference in the oxygen concentrations between the exhaust gas and outside air. The platinum coating amplifies this voltage generation.

The A/F sensor is more efficient when heated. When the exhaust gas temperature is low, the sensor cannot generate useful voltage signals without supplementary heating. The ECM regulates the supplementary heating using a duty-cycle approach to adjust the average current in the sensor heater element. If the heater current is outside the normal range, the signal transmitted by the A/F sensor becomes inaccurate, as a result, the ECM is unable to regulate air-fuel ratio properly.

When the current in the A/F sensor heater is outside the normal operating range, the ECM interprets this as a malfunction in the sensor heater and sets a DTC.

Example:

The ECM sets DTC P0032 when the current in the A/F sensor heater is more than 10 A. Conversely, when the heater current is less than 0.8 A, DTC P0031 is set.

MONITOR STRATEGY

Related DTCs	P0031: A/F sensor heater open/short (Low electrical current) P0032: A/F sensor heater open/short (High electrical current)
Required Sensors/Components (Main)	A/F sensor heater
Required Sensors/Components (Related)	-
Frequency of Operation	Continuous
Duration	10 seconds
MIL Operation	Immediate
Sequence of Operation	None

TYPICAL ENABLING CONDITIONS

All:

Monitor runs whenever following DTCs not present	None

P0031:

Battery voltage	10.5 V or more
A/F sensor heater duty-cycle ratio	50 % or more
Time after engine start	10 seconds or more

P0032:

Time after engine start	10 seconds or more

TYPICAL MALFUNCTION THRESHOLDS

P0031:

A/F sensor heater current	Less than 0.8 A

P0032:

A/F sensor heater current	More than 10 A

COMPONENT OPERATING RANGE

A/F sensor heater current	0.9 to 9.9 A

WIRING DIAGRAM

Refer to DTC P2195 (see page ES-296).

INSPECTION PROCEDURE

HINT:

Read freeze frame data using the intelligent tester. Freeze frame data records the engine condition when malfunctions are detected. When troubleshooting, freeze frame data can help determine if the vehicle was moving or stationary, if the engine was warmed up or not, if the air-fuel ratio was lean or rich, and other data from the time the malfunction occurred.

1 INSPECT AIR-FUEL RATIO SENSOR (HEATER RESISTANCE)

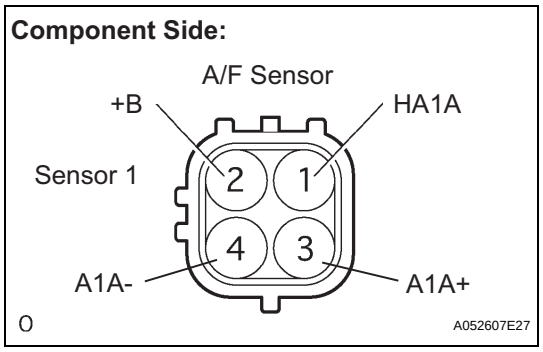

(a) Disconnect the B7 A/F sensor connector.

(b) Measure the resistance of the A/F sensor connector.

Standard resistance

Tester Connections	Specified Conditions
1 (HA1A) - 2 (+B)	1.8 Ω to 3.4 Ω at 20°C (68°F)
1 (HA1A) - 4 (A1A-)	10 kΩ or higher

(c) Reconnect the A/F sensor connector.

NG → **REPLACE AIR-FUEL RATIO SENSOR**

OK

2 CHECK TERMINAL VOLTAGE (+B OF A/F SENSOR)

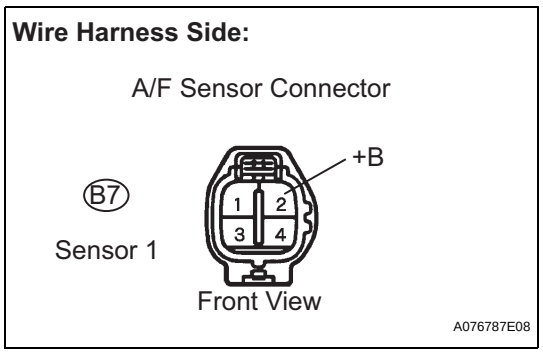

(a) Disconnect the B7 A/F sensor connector.

(b) Turn the ignition switch ON.

(c) Measure the voltage between the terminals of the B7 A/F sensor connector and body ground.

Standard voltage

Tester Connections	Specified Conditions
B7-2 (+B) - Body ground	9 to 14 V

(d) Reconnect the A/F sensor connector.

OK → **Go to step 5**

NG

3	INSPECT INTEGRATION RELAY (EFI MAIN RELAY)

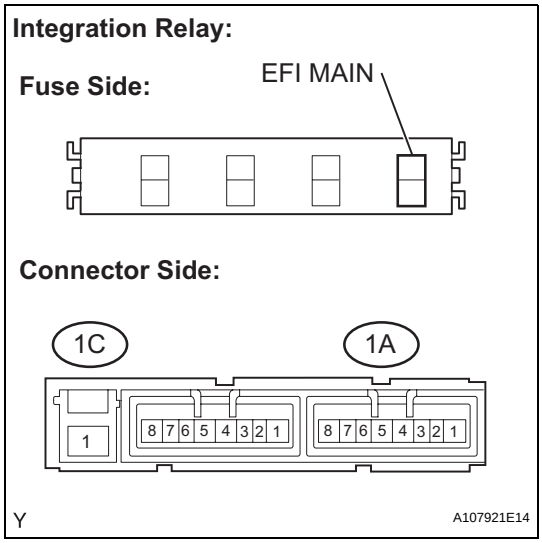

(a) Remove the integration relay from the engine room No. 1 relay block.

(b) Inspect the EFI MAIN fuse.
  (1) Remove the EFI MAIN fuse from the integration relay.
  (2) Measure the EFI MAIN fuse resistance.
    Standard resistance:
    Below 1 Ω
  (3) Reinstall the EFI MAIN fuse.

(c) Inspect the EFI MAIN relay.
  (1) Measure the EFI MAIN relay resistance.
    Standard resistance

Tester Connections	Specified Conditions
1C-1 - 1A-4	10 kΩ or higher
	Below 1 Ω (Apply battery voltage between terminals 1A-2 and 1A-3)

(d) Reinstall the integration relay.

NG → **REPLACE INTEGRATION RELAY**

OK

4	CHECK HARNESS AND CONNECTOR (A/F SENSOR - EFI RELAY)

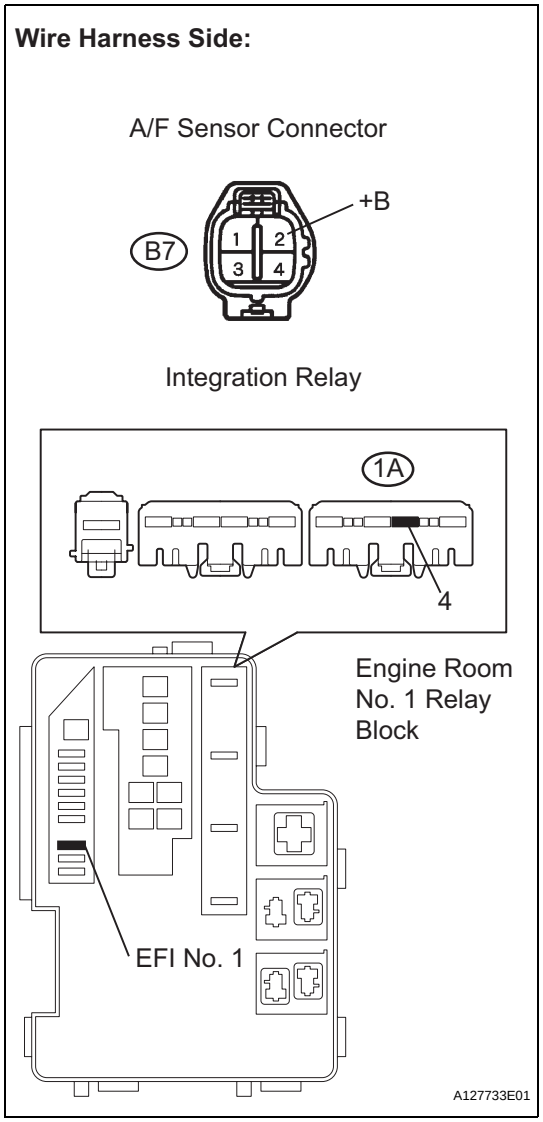

(a) Check the EFI No. 1 fuse.
(b) Disconnect the B7 A/F sensor connector.
(c) Remove the integration relay from the engine room No. 1 relay block.
(d) Check the resistance.

Standard resistance (Check for open)

Tester Connections	Specified Conditions
B7-2 (+B) - 1A-4 (Engine room No. 1 R/B)	Below 1 Ω

Standard resistance (Check for short)

Tester Connections	Specified Conditions
B7-2 (+B) or 1A-4 (Engine room No. 1 R/B) - Body ground	10 kΩ or higher

(e) Reconnect the A/F sensor connector.
(f) Reinstall the integration relay.

NG → **REPAIR OR REPLACE HARNESS OR CONNECTOR**

OK

CHECK ECM POWER SOURCE CIRCUIT

ES

5	CHECK HARNESS AND CONNECTOR (A/F SENSOR - ECM)

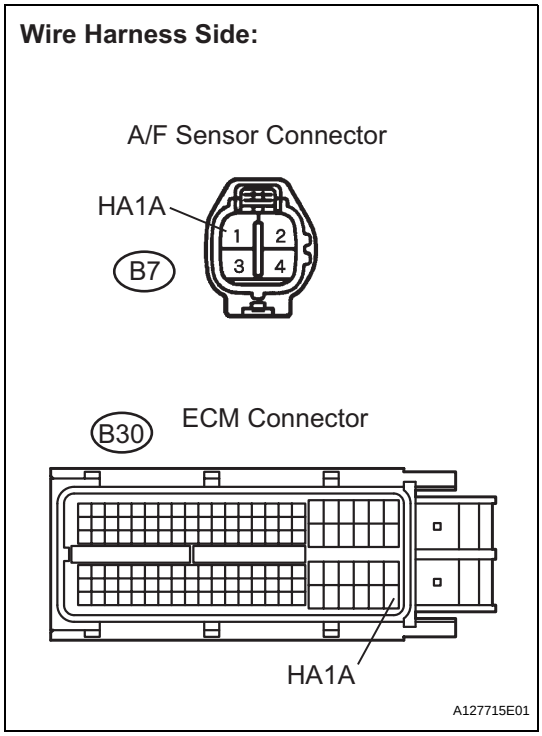

(a) Disconnect the B7 A/F sensor connector.
(b) Disconnect the B30 ECM connector.
(c) Measure the resistance.

Standard resistance (Check for open)

Tester Connections	Specified Conditions
B7-1 (HA1A) - B30-109 (HA1A)	Below 1 Ω

Standard resistance (Check for short)

Tester Connections	Specified Conditions
B7-1 (HA1A) or B30-109 (HA1A) - Body ground	10 kΩ or higher

(d) Reconnect the A/F sensor connector.
(e) Reconnect the ECM connector.

NG → **REPAIR OR REPLACE HARNESS OR CONNECTOR**

OK

6	CHECK WHETHER DTC OUTPUT RECURS

(a) Connect the intelligent tester to the DLC3.
(b) Turn the ignition switch ON.
(c) Turn the tester ON.
(d) Clear DTCs (see page ES-35).
(e) Start the engine.
(f) Allow the engine to idle for 1 minute or more.
(g) Select the following menu items: DIAGNOSIS / ENHANCED OBD II / DTC INFO / CURRENT CODES.
(h) Read DTCs.

Result

Display (DTC Output)	Proceed To
No output	A
P0031 or P0032	B

B → **REPLACE ECM**

A

CHECK FOR INTERMITTENT PROBLEMS

DTC	P0037	Oxygen Sensor Heater Control Circuit Low (Bank 1 Sensor 2)

DTC	P0038	Oxygen Sensor Heater Control Circuit High (Bank 1 Sensor 2)

DTC	P0141	Oxygen Sensor Heater Circuit Malfunction (Bank 1 Sensor 2)

DESCRIPTION

Refer to DTC P0136 (see page ES-129).

HINT:

- When any of these DTCs are set, the ECM enters fail-safe mode. The ECM turns off the Heated Oxygen (HO2) Sensor heater in fail-safe mode. Fail-safe mode continues until the ignition switch is turned OFF.
- The ECM provides a pulse width modulated control circuit to adjust the current through the heater. The HO2 sensor heater circuit uses a relay on the B+ side of the circuit.

Reference (System Diagram of Sensor 2):

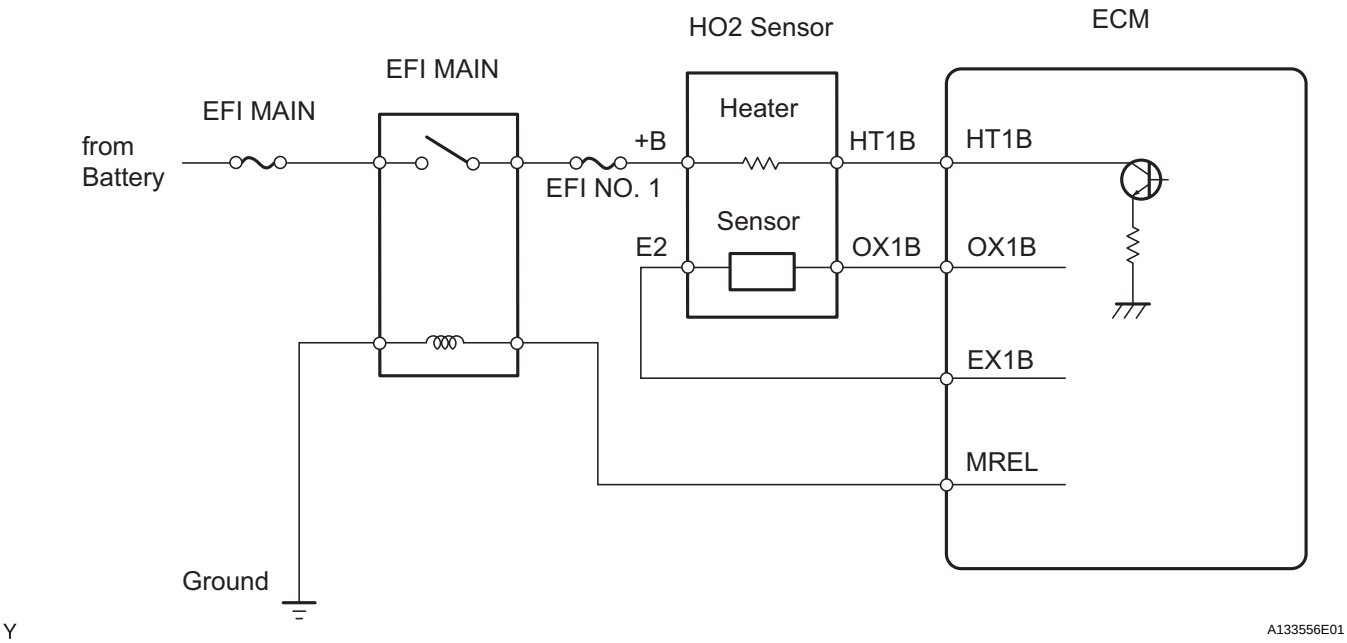

DTC No.	DTC Detection Conditions	Trouble Areas
P0037	Heated Oxygen (HO2) sensor heater current less than 0.3 A (1 trip detection logic)	• Open in HO2 sensor heater circuit • HO2 sensor heater (sensor 2) • Integration relay (EFI MAIN relay) • ECM
P0038	Heated Oxygen (HO2) sensor heater current more than 2 A (1 trip detection logic)	• Short in HO2 sensor heater circuit • HO2 sensor heater (sensor 2) • Integration relay (EFI MAIN relay) • ECM
P0141	Cumulative heater resistance correction value exceeds threshold (2 trip detection logic)	• Open or short in HO2 sensor heater circuit • HO2 sensor heater (sensor 2) • Integration relay (EFI MAIN relay) • ECM

MONITOR DESCRIPTION

The sensing position of the Heated Oxygen (HO2) sensor has a zirconia element which is used to detect the oxygen concentration in the exhaust gas. If the zirconia element is at the appropriate temperature, and the difference between the oxygen concentrations surrounding the inside and outside surfaces of the sensor is large, the zirconia element generates voltage signals. In order to increase the oxygen concentration detecting capacity of the zirconia element, the ECM supplements the heat from the exhaust with heat from a heating element inside the sensor.

Heated oxygen sensor heater range check (P0037 and P0038):

The ECM monitors the current applied to the O2 sensor heater to check the heater for malfunctions. If the current is below the threshold value, the ECM determines that there is an open circuit in the heater. If the current is above the threshold value, the ECM determines that there is a short circuit in the heater.

ES

The ECM constantly monitors the current applied to the heater. If the ECM detects an open or short circuit, the ECM turns the MIL on and sets a DTC.

If a malfunction is detected, the ECM cuts off the current applied to the heater.

Example:

The ECM sets DTC P0038 when the current in the HO2 sensor heater is more than 2 A. Conversely, when the heater current is less than 0.3 A, DTC P0037 is set.

Heated oxygen sensor heater performance (P0141):

After the accumulated heater ON time exceeds 100 seconds, the ECM calculates the heater resistance using the battery voltage and the current applied to the heater.

If the resistance is above the threshold value, the ECM determines that there is a malfunction in the HO2 sensor heater and set DTC P0141.

MONITOR STRATEGY

Related DTCs	P0037: Heated oxygen sensor heater range check (Low electrical current) P0038: Heated oxygen sensor heater range check (High electrical current) P0141: Heated oxygen sensor heater performance
Required Sensors/Components (Main)	Heated oxygen sensor heater
Required Sensors/Components (Related)	-
Frequency of Operation	Continuous: P0037 and P0038 Once per driving cycle: P0141
Duration	1 second: P0037 and P0038 10 seconds: P0141
MIL Operation	Immediate: P0037 and P0038 2 driving cycles: P0141
Sequence of Operation	None

TYPICAL ENABLING CONDITIONS

All:

Monitor runs whenever following DTCs not present	None

P0037:

Battery voltage	10.5 to 20 V

P0038:

Battery voltage	10.5 to 20 V

P0141 (Heater performance monitor check):

All of following conditions met:	-
Battery voltage	10.5 V or more
Fuel cut	OFF
Time after fuel cut ON to OFF	30 seconds or more

Accumulated heater ON time	100 seconds or more

TYPICAL MALFUNCTION THRESHOLDS

P0037:

Heater current	Less than 0.3 A

P0038:

Heater current	More than 2 A

P0141 (Heater performance monitor check):

Accumulated heater resistance	Varies with sensor element temperature (Example: More than 23 Ω)

COMPONENT OPERATING RANGE

Heated Oxygen (HO2) sensor heater current	0.4 to 1 A (when engine idles, HO2 sensor warmed up and battery voltage 11 to 14 V)

WIRING DIAGRAM

Refer to DTC P0136 (see page ES-136).

CONFIRMATION DRIVING PATTERN

These DTCs are detected when the engine idles for 110 seconds or more.

INSPECTION PROCEDURE

HINT:
Sensor 2 refers to the sensor mounted behind the Three-Way Catalytic Converter (TWC) and located far from the engine assembly.
Read freeze frame data using the intelligent tester. Freeze frame data records the engine condition when malfunctions are detected. When troubleshooting, freeze frame data can help determine if the vehicle was moving or stationary, if the engine was warmed up or not, if the air-fuel ratio was lean or rich, and other data from the time the malfunction occurred.

1 INSPECT HEATED OXYGEN SENSOR (HEATER RESISTANCE)

Component Side :

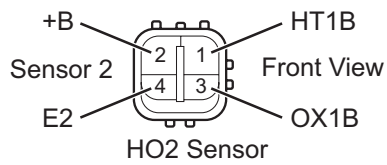

A115661E02

(a) Disconnect the B19 Heated Oxygen (HO2) sensor connector.
(b) Measure the resistance of the HO2 sensor connector.
Standard resistance

Tester Connections	Specified Conditions
1 (HT1B) - 2 (+B)	11 to 16 Ω at 20°C (68°F)
1 (HT1B) - 4 (E2)	10 kΩ or higher

(c) Reconnect the HO2 sensor connector.

NG → **REPLACE HEATED OXYGEN SENSOR**

OK

2	CHECK TERMINAL VOLTAGE (+B OF HO2 SENSOR)

Wire Harness Side:

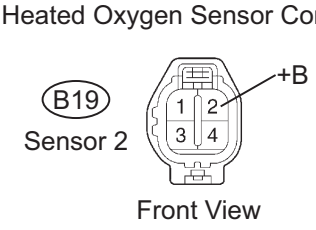

A072895E07

(a) Disconnect the B19 HO2 sensor connector.
(b) Turn the ignition switch ON.
(c) Measure the voltage between the terminals of the B19 HO2 sensor connector and body ground.

Standard voltage

Tester Connections	Specified Conditions
B19-2 (+B) - Body ground	9 to 14 V

(d) Reconnect the HO2 sensor connector.

OK → **Go to step 5**

NG

3	INSPECT INTEGRATION RELAY (EFI MAIN RELAY) (See page ES-84)

NG → **REPLACE INTEGRATION RELAY**

OK

4	CHECK HARNESS AND CONNECTOR (HO2 SENSOR - EFI RELAY)

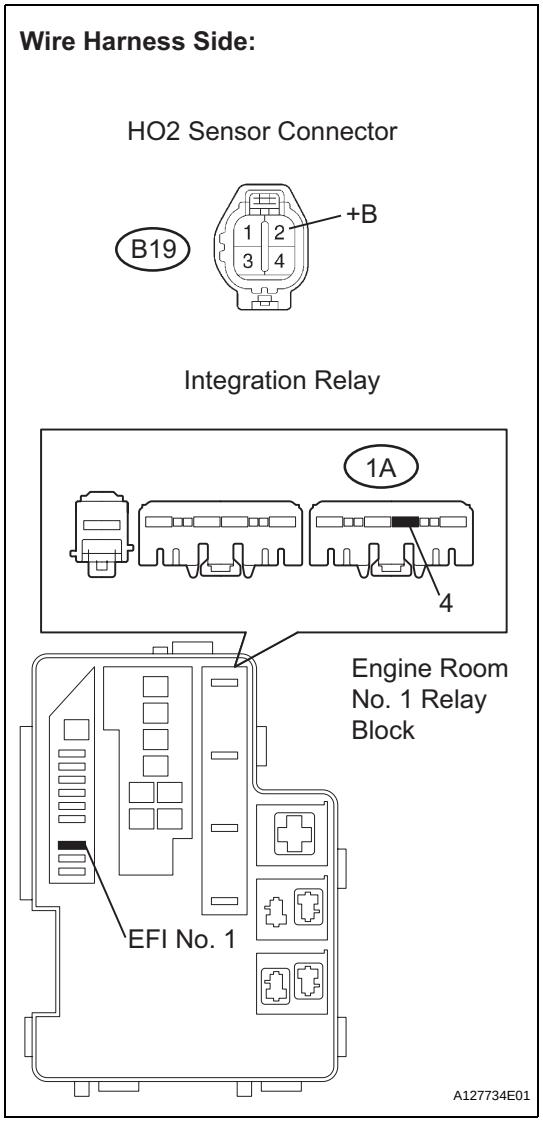

(a) Check the EFI No. 1 fuse.
(b) Disconnect the B19 HO2 sensor connector.
(c) Remove the integration relay from the engine room No. 1 relay block.
(d) Check the resistance.

Standard resistance (Check for open)

Tester Connections	Specified Conditions
B19-2 (+B) - 1A-4 (Engine room No. 1 R/B)	Below 1 Ω

Standard resistance (Check for short)

Tester Connections	Specified Conditions
B19-2 (+B) or 1A-4 (Engine room No. 1 R/B) - Body ground	10 kΩ or higher

(e) Reconnect the HO2 sensor connector.
(f) Reinstall the integration relay.

NG → **REPAIR OR REPLACE HARNESS OR CONNECTOR**

OK

CHECK ECM POWER SOURCE CIRCUIT

ES

5 CHECK HARNESS AND CONNECTOR (HO2 SENSOR - ECM)

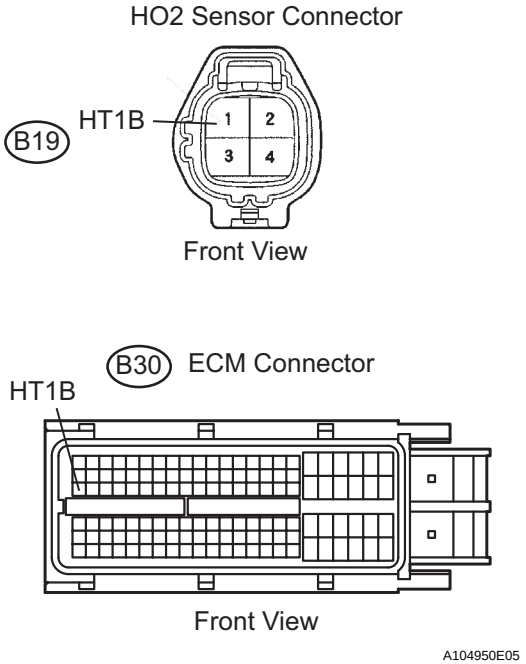

(a) Disconnect the B19 HO2 sensor connector.
(b) Disconnect the B30 ECM connector.
(c) Measure the resistance.

Standard resistance (Check for open)

Tester Connections	Specified Conditions
B19-1 (HT1B) - B30-47 (HT1B)	Below 1 Ω

Standard resistance (Check for short)

Tester Connections	Specified Conditions
B19-1 (HT1B) or B30-47 (HT1B) - Body ground	10 kΩ or higher

(d) Reconnect the HO2 sensor connector.
(e) Reconnect the ECM connector.

NG → **REPAIR OR REPLACE HARNESS OR CONNECTOR**

OK

6 CHECK WHETHER DTC OUTPUT RECURS

(a) Connect the intelligent tester to the DLC3.
(b) Turn the ignition switch ON.
(c) Turn the tester ON.
(d) Clear DTCs (see page ES-35).
(e) Start the engine.
(f) Allow the engine to idle for 2 minutes or more.
(g) Select the following menu items: DIAGNOSIS / ENHANCED OBD II / DTC INFO / CURRENT CODES.
(h) Read DTCs.

Result

Display (DTC Output)	Proceed To
No output	A
P0037, P0038 and/or P0141	B

B → **REPLACE ECM**

A

CHECK FOR INTERMITTENT PROBLEMS

DTC	P0100	Mass or Volume Air Flow Circuit

DTC	P0102	Mass or Volume Air Flow Circuit Low Input

DTC	P0103	Mass or Volume Air Flow Circuit High Input

DESCRIPTION

The Mass Air Flow (MAF) meter is a sensor that measures the amount of air flowing through the throttle valve.

The ECM uses this information to determine the fuel injection time and to provide the appropriate air-fuel ratio.

Inside the MAF meter, there is a heated platinum wire which is exposed to the flow of intake air.

By applying a specific electrical current to the wire, the ECM heats it to a given temperature. The flow of incoming air cools both the wire and an internal thermistor, affecting their resistance. To maintain a constant current value, the ECM varies the voltage applied to these components in the MAF meter. The voltage level is proportional to the airflow through the sensor, and the ECM uses it to calculate the intake air volume.

The circuit is constructed so that the platinum hot wire and the temperature sensor create a bridge circuit, and the power transistor is controlled so that the potentials of A and B remain equal to maintain the predetermined temperature.

HINT:

When any of these DTCs are set, the ECM enters fail-safe mode. During fail-safe mode, the ignition timing is calculated by the ECM, according to the engine RPM and throttle valve position. Fail-safe mode continues until a pass condition is detected.

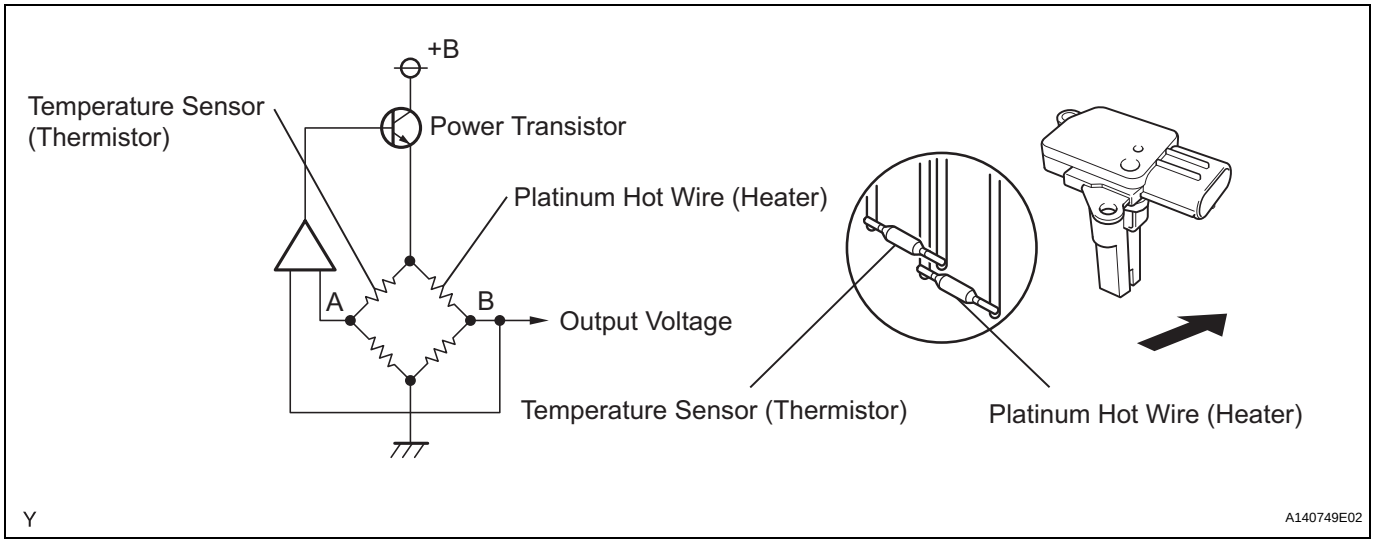

DTC No.	DTC Detection Conditions	Trouble Areas
P0100	MAF meter voltage less than 0.2 V, or more than 4.9 V for 3 seconds (1 trip detection logic)	• Open or short in MAF meter circuit • MAF meter • ECM
P0102	MAF meter voltage less than 0.2 V for 3 seconds (1 trip detection logic)	• Open or short in MAF meter circuit • MAF meter • ECM
P0103	MAF meter voltage more than 4.9 V for 3 seconds (1 trip detection logic)	• Open or short in MAF meter circuit • MAF meter • ECM

HINT:
When any of these DTCs are set, check the air-flow rate by selecting the following menu items on the intelligent tester: DIAGNOSIS / ENHANCED OBD II/ DATA LIST / PRIMARY / MAF.

Mass Air Flow Rate (g/sec.)	Malfunctions
Approximately 0.0	• Open in Mass Air Flow (MAF) meter power source circuit • Open or short in VG circuit
271.0 or more	• Open in E2G circuit

MONITOR DESCRIPTION

If there is a defect in the MAF meter or an open or short circuit, the voltage level deviates from the normal operating range. The ECM interprets this deviation as a malfunction in the MAF meter and sets a DTC.
Example:
When the sensor output voltage remains less than 0.2 V, or more than 4.9 V, for more than 3 seconds, the ECM sets a DTC.
If the malfunction is not repaired successfully, a DTC is set 3 seconds after the engine is next started.

MONITOR STRATEGY

Related DTCs	P0100: MAF meter range check (Fluctuating) P0102: MAF meter range check (Low voltage) P0103: MAF meter range check (High voltage)
Required Sensors/Components (Main)	MAF meter
Required Sensors/Components (Related)	Crankshaft position sensor
Frequency of Operation	Continuous
Duration	3 seconds
MIL Operation	Immediate: Engine RPM less than 4,000 rpm 2 driving cycles: Engine RPM 4,000 rpm or more
Sequence of Operation	None

TYPICAL ENABLING CONDITIONS

Monitor runs whenever following DTCs not present	None

TYPICAL MALFUNCTION THRESHOLDS

P0100:

MAF meter voltage	Less than 0.2 V, or more than 4.9 V

P0102:

MAF meter voltage	Less than 0.2 V

P0103:

MAF meter voltage	More than 4.9 V

COMPONENT OPERATING RANGE

MAF meter voltage	Between 0.4 V and 2.2 V

WIRING DIAGRAM

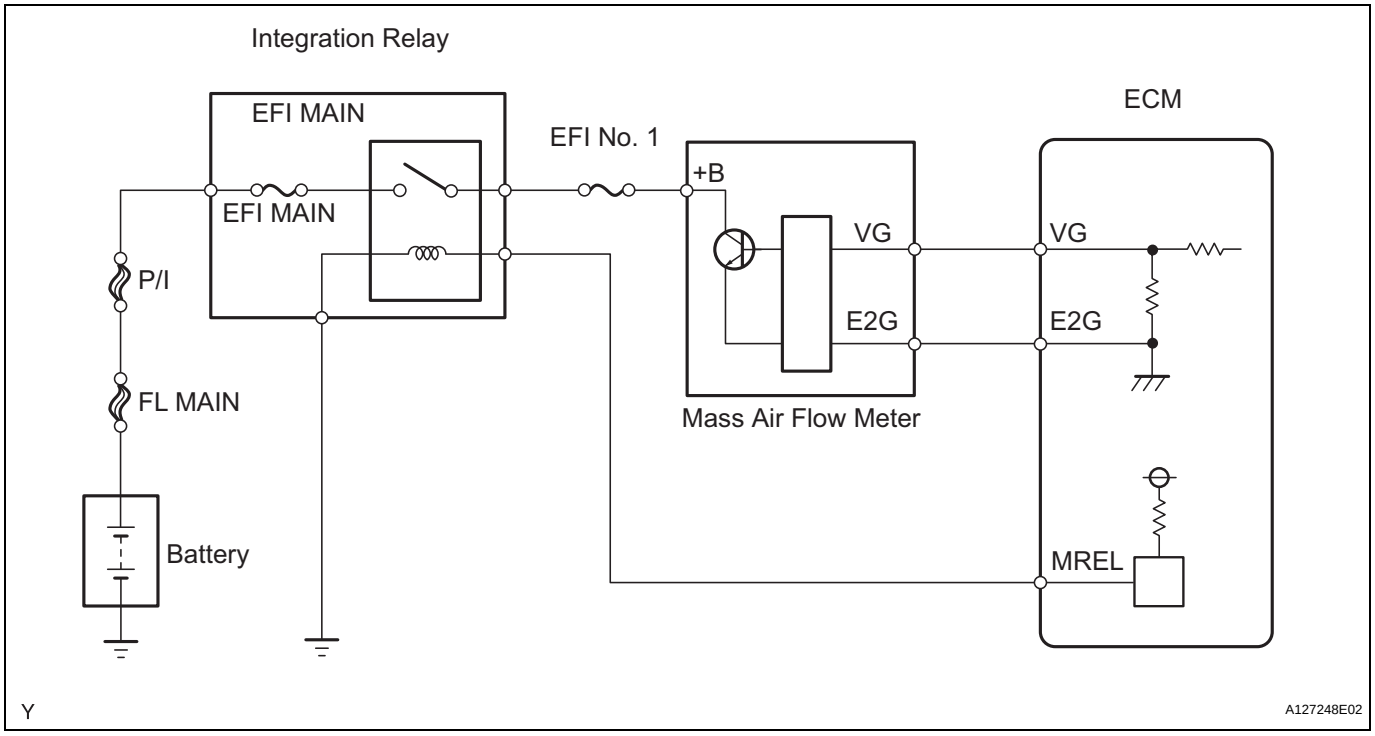

INSPECTION PROCEDURE

HINT:
Read freeze frame data using the intelligent tester. Freeze frame data records the engine condition when malfunctions are detected. When troubleshooting, freeze frame data can help determine if the vehicle was moving or stationary, if the engine was warmed up or not, if the air-fuel ratio was lean or rich, and other data from the time the malfunction occurred.

1	READ VALUE USING INTELLIGENT TESTER (MASS AIR FLOW RATE)

(a) Connect the intelligent tester to the DLC3.
(b) Start the engine.
(c) Turn the tester ON.
(d) Select the following menu items: DIAGNOSIS / ENHANCED OBD II / DATA LIST / PRIMARY / MAF.
(e) Read the values displayed on the tester.

Result

Mass Air Flow Rate (g/sec.)	Proceed To
0.0	A
271.0 or more	B
Between 1.0 and 270.0 (*1)	C

HINT:
*1: The value must change when the throttle valve is open or closed with the engine running.

B	Go to step 6
C	CHECK FOR INTERMITTENT PROBLEMS

A

2 INSPECT MASS AIR FLOW METER (POWER SOURCE VOLTAGE)

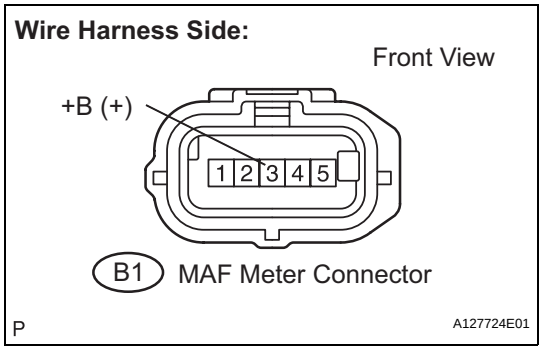

(a) Disconnect the B1 Mass Air Flow (MAF) meter connector.
(b) Turn the ignition switch ON.
(c) Measure the voltage between the terminal of the wire harness side connector and body ground.
Standard voltage

Tester Connections	Specified Conditions
B1-3 (+B) - Body ground	9 to 14 V

(d) Reconnect the MAF meter connector.

NG → **Go to step 5**

OK

3 INSPECT MASS AIR FLOW METER (VG VOLTAGE)

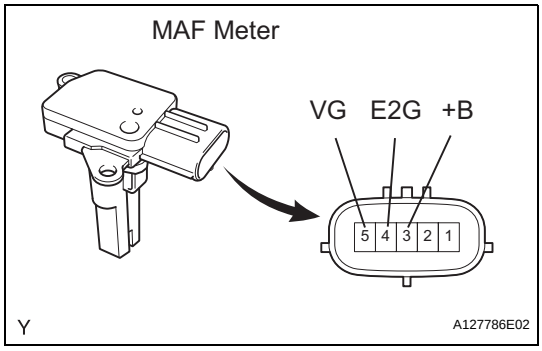

(a) Output voltage inspection.
(1) Apply battery voltage across terminals +B and E2G.
(2) Connect the positive (+) tester probe to terminal VG, and negative (-) tester probe to terminal E2G.
(3) Measure the voltage.
Standard voltage

Tester Connections	Specified Conditions
5 (VG) - 4 (E2G)	0.2 to 4.9 V

NG → **REPLACE MASS AIR FLOW METER**

OK

4	CHECK HARNESS AND CONNECTOR (MASS AIR FLOW METER - ECM)

Wire Harness Side:

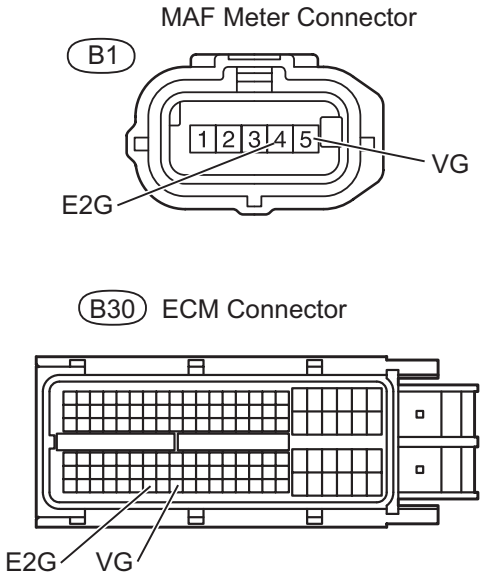

(a) Disconnect the B1 MAF meter connector.
(b) Disconnect the B30 ECM connector.
(c) Measure the resistance.

Standard resistance (Check for open)

Tester Connections	Specified Conditions
B1-5 (VG) - B30-118 (VG)	Below 1 Ω
B1-4 (E2G) - B30-116 (E2G)	Below 1 Ω

Standard resistance (Check for short)

Tester Connections	Specified Conditions
B1-5 (VG) or B30-118 (VG) - Body ground	10 kΩ or higher

(d) Reconnect the MAF meter connector.
(e) Reconnect the ECM connector.

NG → **REPAIR OR REPLACE HARNESS OR CONNECTOR**

OK

REPLACE ECM

ES

5	CHECK HARNESS AND CONNECTOR (MASS AIR FLOW METER - INTEGRATION RELAY)

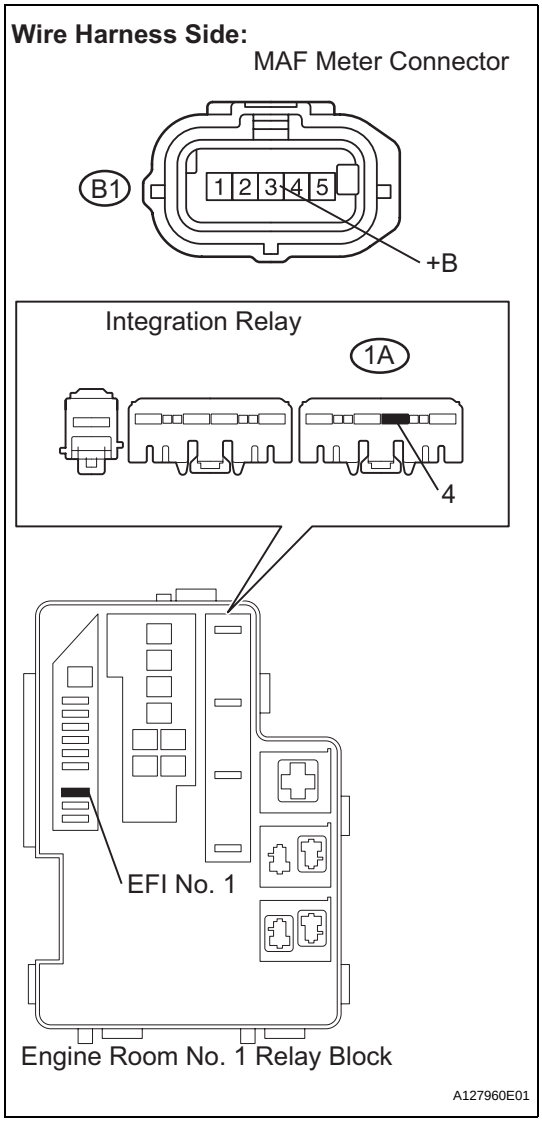

(a) Check the EFI No. 1 fuse.
(b) Disconnect the B1 MAF meter connector.
(c) Remove the integration relay from the engine room No. 1 relay block.
(d) Check the resistance.

Standard resistance (Check for open)

Tester Connections	Specified Conditions
B1-3 (+B) - 1A-4	Below 1 Ω

Standard resistance (Check for short)

Tester Connections	Specified Conditions
B1-3 (+B) or 1A-4 - Body ground	10 kΩ or higher

(e) Reconnect the MAF meter connector.
(f) Reinstall the integration relay.

NG → **REPAIR OR REPLACE HARNESS OR CONNECTOR**

OK

CHECK ECM POWER SOURCE CIRCUIT

6 CHECK HARNESS AND CONNECTOR (SENSOR GROUND)

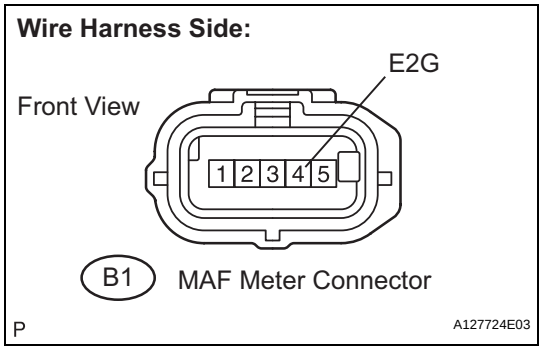

(a) Disconnect the B1 MAF meter connector.
(b) Measure the resistance.
Standard resistance

Tester Connections	Specified Conditions
B1-4 (E2G) - Body ground	Below 1 Ω

OK → **REPLACE MASS AIR FLOW METER**

NG

7 CHECK HARNESS AND CONNECTOR (MASS AIR FLOW METER - ECM)

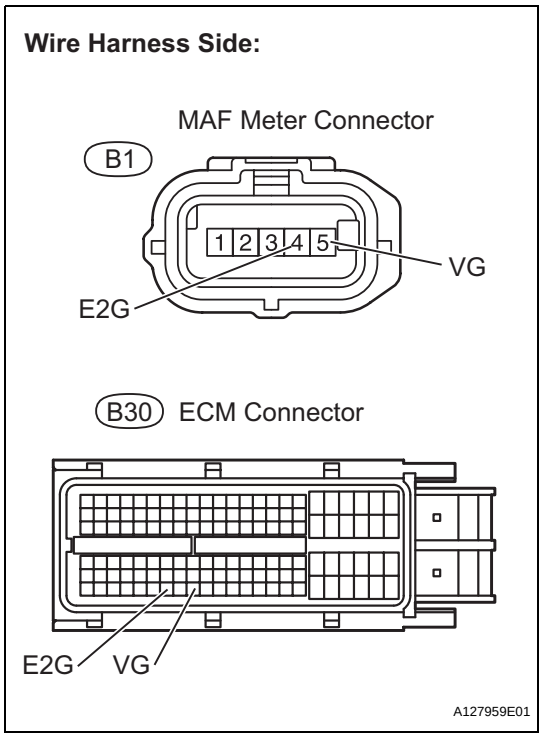

(a) Disconnect the B1 MAF meter connector.
(b) Disconnect the B30 ECM connector.
(c) Measure the resistance.
Standard resistance (Check for open)

Tester Connections	Specified Conditions
B1-5 (VG) - B30-118 (VG)	Below 1 Ω
B1-4 (E2G) - B30-116 (E2G)	Below 1 Ω

Standard resistance (Check for short)

Tester Connections	Specified Conditions
B1-5 (VG) or B30-118 (VG) - Body ground	10 kΩ or higher

(d) Reconnect the MAF meter connector.
(e) Reconnect the ECM connector.

NG → **REPAIR OR REPLACE HARNESS OR CONNECTOR**

OK

REPLACE ECM

ES

DTC	P0101	Mass Air Flow Circuit Range / Performance Problem

DESCRIPTION

Refer to DTC P0100 (see page ES-86).

DTC No.	DTC Detection Conditions	Trouble Areas
P0101	Conditions (a), (b), (c), (d) and (e) continue for more than 10 seconds (2 trip detection logic): (a) Engine running (b) Engine coolant temperature 70°C (158°F) or higher (c) Throttle Position (TP) sensor voltage 0.24 V or more (d) Average engine load value ratio less than 0.85, or more than 1.15 (varies with estimated engine load) Average engine load value ratio = Average engine load based on MAF meter output / Average engine load estimated from driving conditions (e) Average air-fuel ratio less than -20 %, or more than 20 %	• Mass Air Flow (MAF) meter • Air induction system • PCV hose connections

ES

MONITOR DESCRIPTION

The MAF meter is a sensor that measures the amount of air flowing through the throttle valve. The ECM uses this information to determine the fuel injection time and to provide an appropriate air-fuel ratio. Inside the MAF meter, there is a heated platinum wire which is exposed to the flow of intake air. By applying a specific electrical current to the wire, the ECM heats it to a specific temperature. The flow of incoming air cools both the wire and an internal thermistor, affecting their resistance. To maintain a constant current value, the ECM varies the voltage applied to these components of the MAF meter. The voltage level is proportional to the airflow through the sensor, and the ECM uses it to calculate the intake air volume.
The ECM monitors the average engine load value ratio to check the MAF meter for malfunctions. The average engine load value ratio is obtained by comparing the average engine load calculated from the MAF meter output to the average engine load estimated from the driving conditions, such as the engine speed and the throttle opening angle. If the average engine load value ratio is below the threshold value, the ECM determines that the intake air volume is low, and if the average engine load value ratio is above the threshold value, the ECM determines that the intake air volume is high.
If this is detected in 2 consecutive driving cycles, the MIL is illuminated and a DTC is set.

MONITOR STRATEGY

Related DTCs	P0101: Mass air flow meter rationality
Required Sensors/Components (Main)	Mass air flow meter
Required Sensors/Components (Related)	Crankshaft Position (CKP) sensor, Engine Coolant Temperature (ECT) sensor and Throttle Position (TP) sensor
Frequency of Operation	Continuous
Duration	10 seconds
MIL Operation	2 driving cycles
Sequence of Operation	None

TYPICAL ENABLING CONDITIONS

Monitor runs whenever following DTCs not present	P0115 - P0118 (ECT sensor) P0120 - P0223, P2135 (TP sensor) P0125 (Insufficient ECT for closed loop) P0335 (CKP sensor) P0340 (CMP sensor)
Throttle position (TP sensor voltage)	0.24 V or more
Engine	Running
Battery voltage	10.5 V or more

Engine coolant temperature	70°C (158°F) or more
IAT sensor circuit	OK
ECT sensor circuit	OK
CKP sensor circuit	OK
TP sensor circuit	OK
Canister pressure sensor circuit	OK
EVAP leak detection pump	OK
EVAP vent valve	OK

TYPICAL MALFUNCTION THRESHOLDS

Both of following conditions 1 and 2 met	-
1. Averaged engine load value ratio	Less than 0.85, or more than 1.15 (varies with estimated engine load)
2. Averaged air-fuel ratio	Less than -20 %, or more than 20 %

ES

WIRING DIAGRAM

Refer to DTC P0100 (see page ES-88).

CONFIRMATION DRIVING PATTERN

HINT:
Performing this confirmation pattern will activate the mass air flow performance monitor.

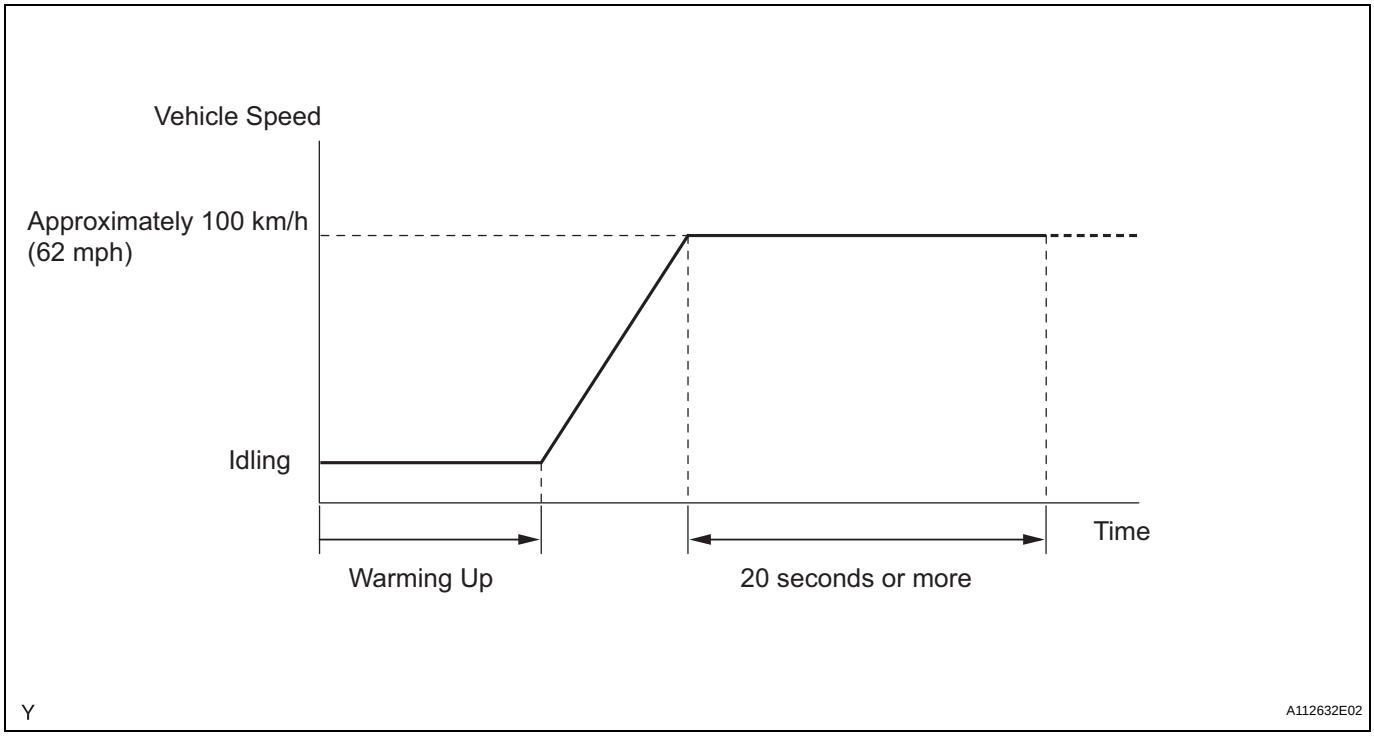

1. Connect the intelligent tester to the DLC3.
2. Turn the ignition switch ON.
3. Turn the tester ON.
4. Clear DTCs (see page ES-35).
5. Start the engine, and warm it up until the engine coolant temperature reaches 70°C (158°F) or higher.
6. Drive the vehicle at approximately 100 km/h (62 mph) for 20 seconds or more.
7. On the tester, select the following menu items: DIAGNOSIS / ENHANCED OBD II / DTC INFO / PENDING CODES and check if any DTCs (any pending DTCs) are set.

INSPECTION PROCEDURE

HINT:
Read freeze frame data using the intelligent tester. Freeze frame data records the engine condition when malfunctions are detected. When troubleshooting, freeze frame data can help determine if the vehicle was moving or stationary, if the engine was warmed up or not, if the air-fuel ratio was lean or rich, and other data from the time the malfunction occurred.

1 CHECK ANY OTHER DTCS OUTPUT (IN ADDITION TO DTC P0101)

(a) Connect the intelligent tester to the DLC3.
(b) Turn the ignition switch ON.
(c) Turn the tester ON.
(d) Select the following menu items: DIAGNOSIS / ENHANCED OBD II / DTC INFO / CURRENT CODES.
(e) Read DTCs.

Result

Display (DTC Output)	Proceed To
P0101	A
P0101 and other DTCs	B

HINT:
If any DTCs other than P0101 are output, troubleshoot those DTCs first.

B → **GO TO DTC CHART**

A

2 CHECK AIR INDUCTION SYSTEM

(a) Check the air induction system for vacuum leakage.
OK:
No leakage from air induction system.

NG → **REPAIR OR REPLACE AIR INDUCTION SYSTEM**

OK

3 CHECK PCV HOSE CONNECTIONS

OK:
PCV hose is connected correctly and is not damaged.

NG → **REPAIR OR REPLACE PCV HOSE**

OK

REPLACE MASS AIR FLOW METER

DTC	P0110	Intake Air Temperature Circuit Malfunction

DTC	P0112	Intake Air Temperature Circuit Low Input

DTC	P0113	Intake Air Temperature Circuit High Input

DESCRIPTION

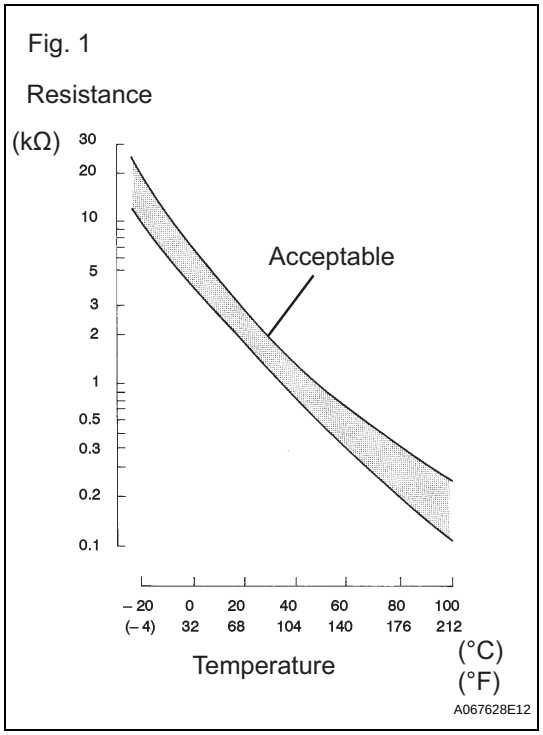

The Intake Air Temperature (IAT) sensor, mounted on the Mass Air Flow (MAF) meter, monitors the IAT. The IAT sensor has a built-in thermistor with a resistance that varies according to the temperature of the intake air. When the IAT is low, the resistance of the thermistor increases. When the temperature is high, the resistance drops. These variations in resistance are transmitted to the ECM as voltage changes (see Fig. 1).

The IAT sensor is powered by a 5 V supply from the THA terminal of the ECM, via resistor R.

Resistor R and the IAT sensor are connected in series. When the resistance value of the IAT sensor changes, according to changes in the IAT, the voltage at terminal THA also varies. Based on this signal, the ECM increases the fuel injection volume when the engine is cold to improve drivability.

HINT:

When any of DTCs P0110, P0112 and P0113 are set, the ECM enters fail-safe mode. During fail-safe mode, the IAT is estimated to be 20°C (68°F) by the ECM. Fail-safe mode continues until a pass condition is detected.

DTC No.	DTC Detection Conditions	Trouble Areas
P0110	Open or short in IAT sensor circuit for 0.5 seconds (1 trip detection logic)	• Open or short in IAT sensor circuit • IAT sensor (built into MAF meter) • ECM
P0112	Short in IAT sensor circuit for 0.5 seconds (1 trip detection logic)	• Short in IAT sensor circuit • IAT sensor (built into MAF meter) • ECM
P0113	Open in IAT sensor circuit for 0.5 seconds (1 trip detection logic)	• Open in IAT sensor circuit • IAT sensor (built into MAF meter) • ECM

HINT:
When any of these DTCs are set, check the IAT by selecting the following menu items on the intelligent tester: DIAGNOSIS / ENHANCED OBD II / DATA LIST / PRIMARY / INTAKE AIR.

Temperature Displayed	Malfunctions
-40°C (-40°F)	Open circuit
140°C (284°F) or higher	Short circuit

MONITOR DESCRIPTION

The ECM monitors the sensor voltage and uses this value to calculate the IAT. When the sensor output voltage deviates from the normal operating range, the ECM interprets this as a malfunction in the IAT sensor and sets a DTC.

ES

Example:
If the sensor output voltage is more than 4.91 V for 0.5 seconds or more, the ECM determines that there is an open in the IAT sensor circuit, and sets DTC P0113. Conversely, if the output voltage is less than 0.18 V for 0.5 seconds or more, the ECM determines that there is a short in the sensor circuit, and sets DTC P0112.
If the malfunction is not repaired successfully, a DTC is set 0.5 seconds after the engine is next started.

MONITOR STRATEGY

Related DTCs	P0110: IAT sensor range check (Fluctuating) P0112: IAT sensor range check (Low voltage) P0113: IAT sensor range check (High voltage)
Required Sensors/Components (Main)	IAT sensor
Required Sensors/Components (Related)	-
Frequency of Operation	Continuous
Duration	0.5 seconds
MIL Operation	Immediate
Sequence of Operation	None

TYPICAL ENABLING CONDITIONS

Monitor runs whenever following DTCs not present	None

TYPICAL MALFUNCTION THRESHOLDS

P0110:

IAT sensor voltage	Less than 0.18 V, or more than 4.91 V

P0112:

IAT sensor voltage [IAT]	Less than 0.18 V [More than 140°C (284°F)]

P0113:

IAT sensor voltage [IAT]	More than 4.91 V [Less than -40°C (-40°F)]

COMPONENT OPERATING RANGE

IAT sensor voltage [IAT]	0.18 to 4.91 V [-40°C to 140°C (-40°F to 284°F)]

WIRING DIAGRAM

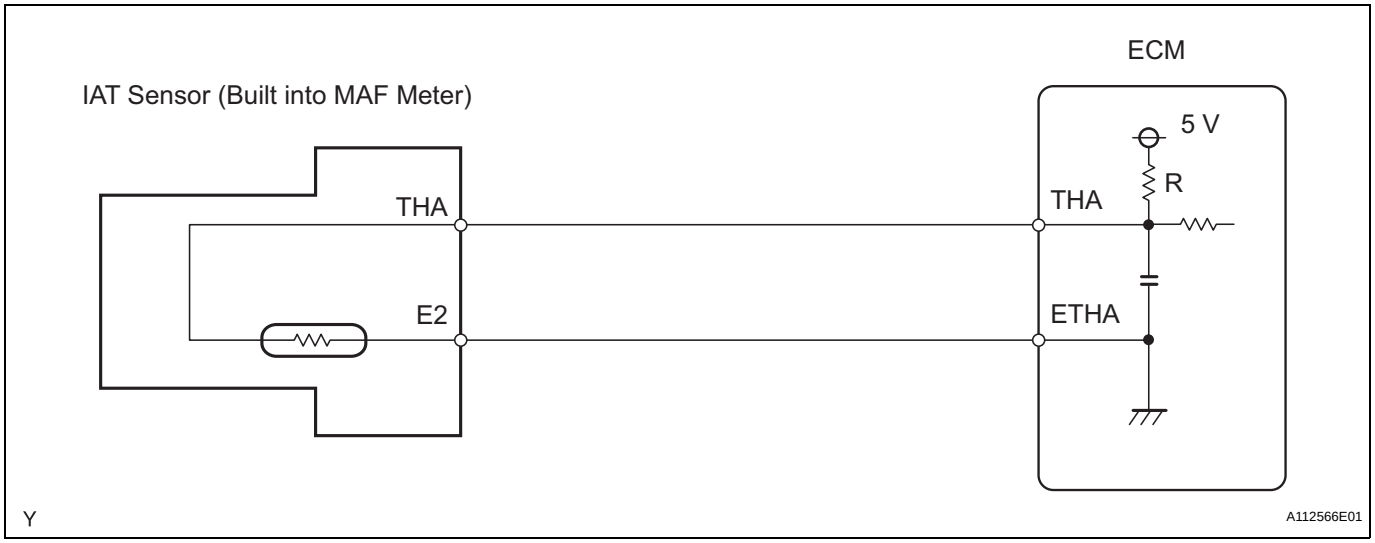

ES

INSPECTION PROCEDURE

HINT:
Read freeze frame data using the intelligent tester. Freeze frame data records the engine condition when malfunctions are detected. When troubleshooting, freeze frame data can help determine if the vehicle was moving or stationary, if the engine was warmed up or not, if the air-fuel ratio was lean or rich, and other data from the time the malfunction occurred.

1	READ OUTPUT DTC

(a) Connect the intelligent tester to the DLC3.
(b) Turn the ignition switch ON and turn the intelligent tester ON.
(c) Select the following menu items: DIAGNOSIS / ENHANCED OBD II / DTC INFO / CURRENT CODES.
(d) Read DTCs.

Result

Display (DTC Output)	Proceed to
P0110	A
P0112	B
P0113	C

B → **Go to step 6**

C → **Go to step 3**

A

2	READ VALUE USING INTELLIGENT TESTER (INTAKE AIR TEMPERATURE)

(a) Connect the intelligent tester to the DLC3.
(b) Turn the ignition switch ON.
(c) Turn the tester ON.

(d) Select the following menu items: DIAGNOSIS / ENHANCED OBD II / DATA LIST / PRIMARY / INTAKE AIR.
(e) Read the value displayed on the tester.
Standard:
Same as actual Intake Air Temperature (IAT).

Result

Temperature Displayed	Proceed To
-40°C (-40°F)	A
140°C (284°F) or higher	B
Same as actual IAT	C

HINT:
- If there is an open circuit, the intelligent tester indicates -40°C (-40°F).
- If there is a short circuit, the intelligent tester indicates 140°C (284°F) or higher.

B → **Go to step 5**

C → **CHECK FOR INTERMITTENT PROBLEMS**

A

3 READ VALUE USING INTELLIGENT TESTER (CHECK FOR OPEN IN WIRE HARNESS)

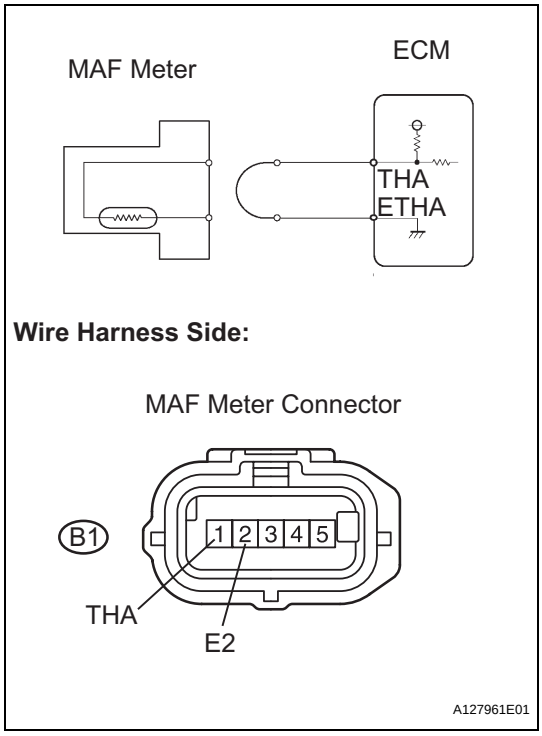

(a) Disconnect the B1 Mass Air Flow (MAF) meter connector.
(b) Connect terminals THA and E2 of the MAF meter wire harness side connector.
(c) Connect the intelligent tester to the DLC3.
(d) Turn the ignition switch ON.
(e) Turn the tester ON.
(f) Select the following menu items: DIAGNOSIS / ENHANCED OBD II / DATA LIST / PRIMARY / INTAKE AIR.
(g) Read the value displayed on the tester.
Standard value:
140°C (284°F) or higher
(h) Reconnect the MAF meter connector.

OK → **CONFIRM GOOD CONNECTION TO SENSOR. IF OK, REPLACE MASS AIR FLOW METER**

NG

4 CHECK HARNESS AND CONNECTOR (MASS AIR FLOW METER - ECM)

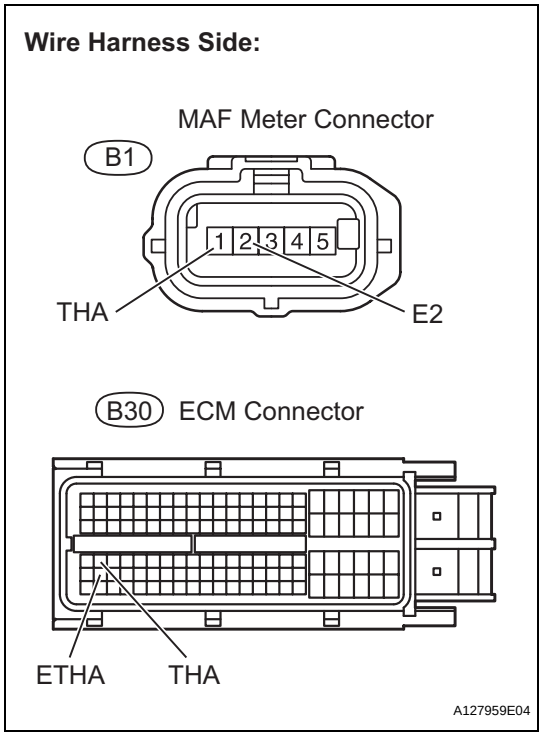

(a) Disconnect the B1 MAF meter connector.
(b) Disconnect the B30 ECM connector.
(c) Measure the resistance.
Standard resistance

Tester Connections	Specified Conditions
B1-1 (THA) - B30-65 (THA)	Below 1 Ω
B1-2 (E2) - B30-88 (ETHA)	Below 1 Ω

(d) Reconnect the MAF meter connector.
(e) Reconnect the ECM connector.

ES

NG → **REPAIR OR REPLACE HARNESS OR CONNECTOR**

OK

CONFIRM GOOD CONNECTION TO ECM. IF OK, REPLACE ECM

5 READ VALUE USING INTELLIGENT TESTER (CHECK FOR SHORT IN WIRE HARNESS)

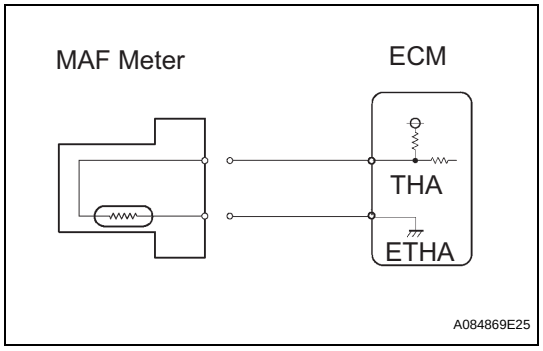

(a) Disconnect the B1 MAF meter connector.
(b) Connect the intelligent tester to the DLC3.
(c) Turn the ignition switch ON.
(d) Turn the tester ON.
(e) Select the following menu items: DIAGNOSIS / ENHANCED OBD II / DATA LIST / PRIMARY / INTAKE AIR.
(f) Read the value displayed on the tester.
Standard value:
-40°C (-40°F)
(g) Reconnect the MAF meter connector.

OK → **REPLACE MASS AIR FLOW METER**

NG

6	CHECK HARNESS AND CONNECTOR (MASS AIR FLOW METER - ECM)

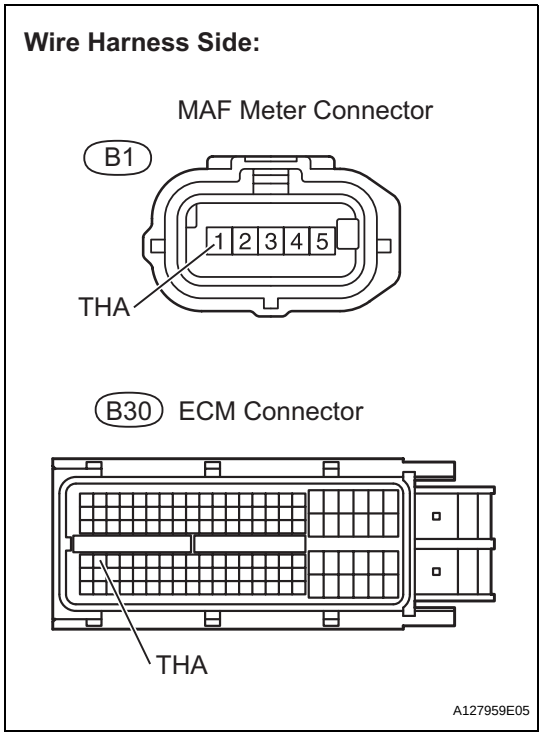

(a) Disconnect the B1 MAF meter connector.
(b) Disconnect the B30 ECM connector.
(c) Measure the resistance.

Standard resistance

Tester Connections	Specified Conditions
B1-1 (THA) or B30-65 (THA) - Body ground	10 kΩ or higher

(d) Reconnect the MAF meter connector.
(e) Reconnect the ECM connector.

NG → **REPAIR OR REPLACE HARNESS OR CONNECTOR**

OK

REPLACE ECM

ES

DTC	P0111	Intake Air Temperature Sensor Gradient Too High

DESCRIPTION

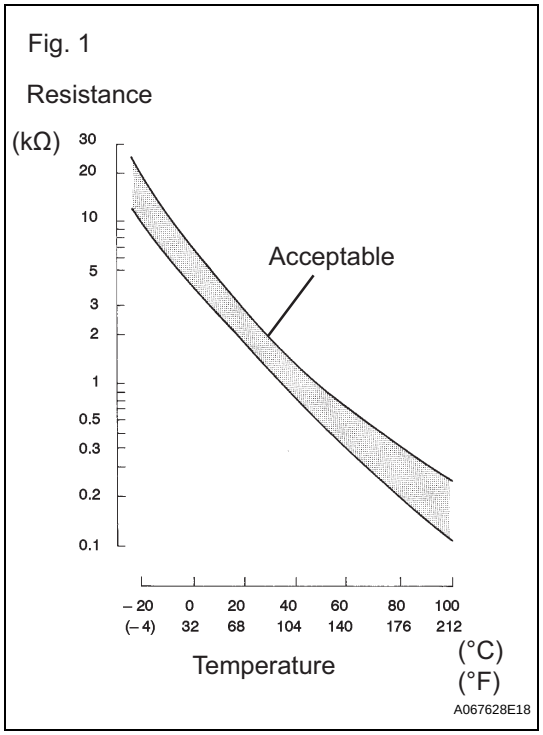

The Intake Air Temperature (IAT) sensor, mounted on the Mass Air Flow (MAF) meter, monitors the IAT. The IAT sensor has a built-in thermistor with a resistance that varies according to the temperature of the intake air. When the IAT is low, the resistance of the thermistor increases. When the temperature is high, the resistance drops. These variations in resistance are transmitted to the ECM as voltage changes (See Fig. 1).

The IAT sensor is powered by a 5 V supply from the THA terminal of the ECM, via resistor R. Resistor R and the IAT sensor are connected in series. When the resistance value of the IAT sensor changes, according to changes in the IAT, the voltage at terminal THA also varies. Based on this signal, the ECM increases the fuel injection volume when the engine is cold to improve driveability.

DTC No.	DTC Detection Condition	Trouble Area
P0111	When either condition below is met: 1. The intake air temperature rise is large, from the previous trip warm-up to the following trip (2 trip detection logic). 2. When the change in the intake air temperature after engine start is less than the threshold value.	Mass air flow meter assembly

MONITOR DESCRIPTION

The ECM performs OBD II monitoring based on the values from the intake air temperature sensor. If there is no change of the sensor value within the normal range, the ECM will not be able to perform OBD II monitoring or will misdiagnose that there is a malfunction in the sensor. The ECM detects the stuck intake air temperature sensor value by performing monitoring after the ignition switch is turned OFF or the engine is started (short soak or long soak).

MONITOR STRATEGY

Related DTCs	P0111: Intake air temperature sensor rationality (After engine stop) P0111: Intake air temperature sensor rationality (After cold engine start)
Required Sensors/Components (Main)	Intake Air Temperature (IAT) sensor
Required Sensors/Components (Sub)	-
Frequency of Operation	Once per driving cycle
Duration	5 hours or more
MIL Operation	2 driving cycles
Sequence of Operation	None

TYPICAL ENABLING CONDITIONS

All:

Monitor runs whenever following DTCs are not present	None

After engine stop:

Time after engine start	10 seconds or more
Battery voltage	10.5 V or more
ECT sensor circuit	OK
ECT change since engine	Less than 180°C (356°F)
ECT before engine stop	70°C (158°F) or more
Time that MAF is low before engine stop	70 minutes
Accumulated MAF amount before engine stop	3,451 g or more
Key-off duration	30 minutes

After cold engine start:

Key-off duration	5 hours
Time after engine start	10 seconds or more
ECT sensor circuit	OK
ECT	70°C (158°F) or more
Accumulated MAF amount	3,451 g or more
One of the following conditions 1 or 2 is met:	-
1. Duration while engine load is low	120 seconds or more
2. Duration while engine load is high	10 seconds or more

TYPICAL MALFUNCTION THRESHOLDS

After engine stop:

IAT change	Less than 1°C (2°F)

After cold engine start:

IAT change	Less than 1°C (2°F)

WIRING DIAGRAM

Refer to DTC P0110 (see page ES-88).

INSPECTION PROCEDURE

1	**CHECK ANY OTHER DTCS OUTPUT (IN ADDITION TO DTC P0111)**

(a) Connect the intelligent tester to the DLC3.

(b) Turn the ignition switch ON.
(c) Turn the tester ON.
(d) Enter the following menus: DIAGNOSIS / ENHANCED OBD II / DTC INFO / CURRENT CODES.
(e) Read DTCs.

Result

Display (DTC Output)	Proceed to
P0111 and other DTCs	A
P0111	B

HINT:
If any DTCs other than P0111 are output, troubleshoot those DTCs first.

B → **REPLACE MASS AIR FLOW METER**

A → **GO TO DTC CHART**

DTC	P0115	Engine Coolant Temperature Circuit Malfunction

DTC	P0117	Engine Coolant Temperature Circuit Low Input

DTC	P0118	Engine Coolant Temperature Circuit High Input

DESCRIPTION

A thermistor, whose resistance value varies according to the ECT, is built into the Engine Coolant Temperature (ECT) sensor.

ES

The structure of the sensor and its connection to the ECM are the same as those of the Intake Air Temperature (IAT) sensor.

HINT:

When any of DTCs P0115, P0117 and P0118 are set, the ECM enters fail-safe mode. During fail-safe mode, the ECT is estimated to be 80°C (176°F) by the ECM. Fail-safe mode continues until a pass condition is detected.

DTC No.	DTC Detection Conditions	Trouble Areas
P0115	Open or short in ECT sensor circuit for 0.5 seconds (1 trip detection logic)	• Open or short in ECT sensor circuit • ECT sensor • ECM
P0117	Short in ECT sensor circuit for 0.5 seconds (1 trip detection logic)	• Short in ECT sensor • ECT sensor • ECM
P0118	Open in ECT sensor circuit for 0.5 seconds (1 trip detection logic)	• Open in ECT sensor circuit • ECT sensor • ECM

HINT:

When any of these DTCs are set, check the ECT by selecting the following menu items on the intelligent tester: DIAGNOSIS / ENHANCED OBD II / DATA LIST / PRIMARY / COOLANT TEMP.

Temperature Displayed	Malfunctions
-40°C (-40°F)	Open circuit
140°C (284°F) or higher	Short circuit

MONITOR DESCRIPTION

The Engine Coolant Temperature (ECT) sensor is used to monitor the ECT. The ECT sensor has a thermistor with a resistance that varies according to the temperature of the engine coolant. When the coolant temperature is low, the resistance in the thermistor increases. When the temperature is high, the resistance drops. These variations in resistance are reflected in the output voltage from the sensor. The ECM monitors the sensor voltage and uses this value to calculate the ECT. When the sensor output voltage deviates from the normal operating range, the ECM interprets this as a fault in the ECT sensor and sets a DTC.

Example:

If the sensor output voltage is more than 4.91 V for 0.5 seconds or more, the ECM determines that there is an open in the ECT sensor circuit, and sets DTC P0118. Conversely, if the voltage output is less than 0.14 V for 0.5 seconds or more, the ECM determines that there is a short in the sensor circuit, and sets DTC P0117.

If the malfunction is not repaired successfully, a DTC is set 0.5 seconds after the engine is next started.

MONITOR STRATEGY

Related DTCs	P0115: ECT sensor range check (Fluctuating) P0117: ECT sensor range check (Low voltage) P0118: ECT sensor range check (High voltage)
Required Sensors/Components (Main)	ECT sensor
Required Sensors/Components (Related)	-
Frequency of Operation	Continuous
Duration	0.5 seconds
MIL Operation	Immediate
Sequence of Operation	None

TYPICAL ENABLING CONDITIONS

Monitor runs whenever following DTCs not present	None

TYPICAL MALFUNCTION THRESHOLDS

P0115:

ECT sensor voltage	Less than 0.14 V, or more than 4.91 V

P0117:

ECT sensor voltage [ECT]	Less than 0.14 V [More than 140°C (284°F)]

P0118:

ECT sensor voltage [ECT]	More than 4.91 V [Less than -40°C (-40°F)]

COMPONENT OPERATING RANGE

ECT sensor voltage [ECT]	0.14 to 4.91 V [-40°C to 140°C (-40°F to 284°F)]

WIRING DIAGRAM

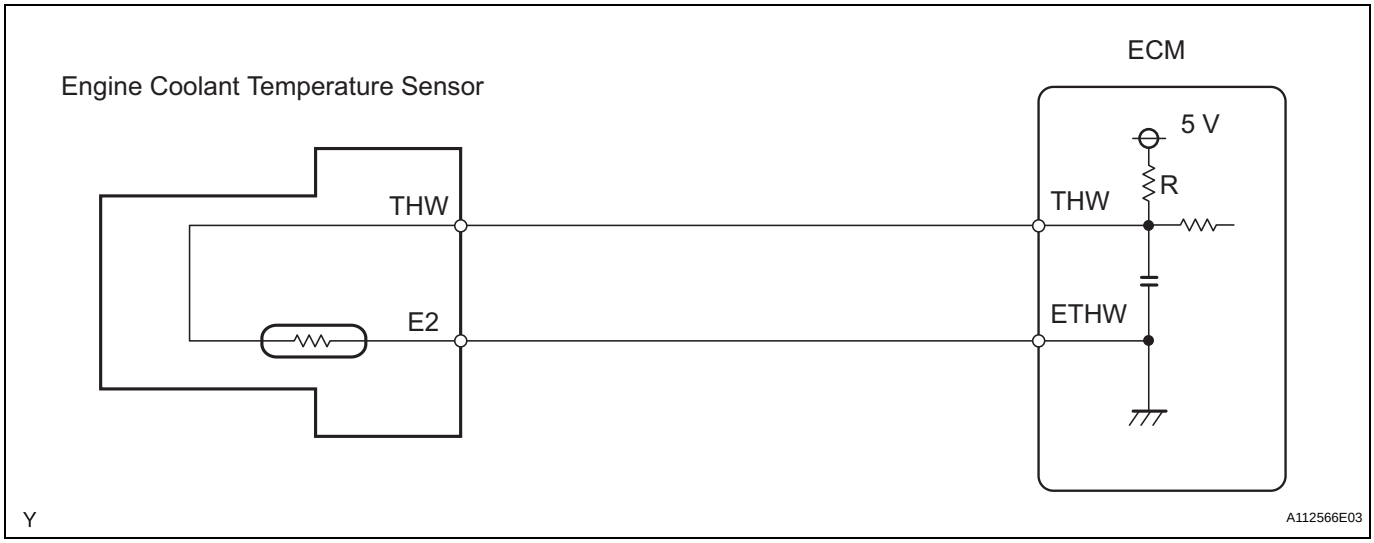

INSPECTION PROCEDURE

HINT:
Read freeze frame data using the intelligent tester. Freeze frame data records the engine condition when malfunctions are detected. When troubleshooting, freeze frame data can help determine if the vehicle was moving or stationary, if the engine was warmed up or not, if the air-fuel ratio was lean or rich, and other data, from the time the malfunction occurred.

1	READ OUTPUT DTC

(a) Connect the intelligent tester to the DLC3.
(b) Turn the ignition switch ON and turn the intelligent tester ON.
(c) Select the following menu items: DIAGNOSIS / ENHANCED OBD II / DTC INFO / CURRENT CODES.
(d) Read DTCs.

Result

Display (DTC Output)	Proceed to
P0115	A
P0117	B
P0118	C

B → **Go to step 5**

C → **Go to step 3**

A

2	READ VALUE USING INTELLIGENT TESTER (ENGINE COOLANT TEMPERATURE)

(a) Connect the intelligent tester to the DLC3.
(b) Turn the ignition switch ON.
(c) Turn the tester ON.
(d) Select the following menu items: DIAGNOSIS / ENHANCED OBD II / DATA LIST / PRIMARY / COOLANT TEMP.
(e) Read the value displayed on the tester.

Standard value:
Between 80°C and 100°C (167°F and 212°F) with warm engine.

Result

Temperature Displayed	Proceed To
-40°C (-40°F)	A
140°C (284°F) or higher	B
Between 80°C and 100°C (176°F and 212°F)	C

HINT:
- If there is an open circuit, the intelligent tester indicates -40°C (-40°F).
- If there is a short circuit, the intelligent tester indicates 140°C (284°F) or higher.

B → **Go to step 5**

C → CHECK FOR INTERMITTENT PROBLEMS

A

3 READ VALUE USING INTELLIGENT TESTER (CHECK FOR OPEN IN WIRE HARNESS)

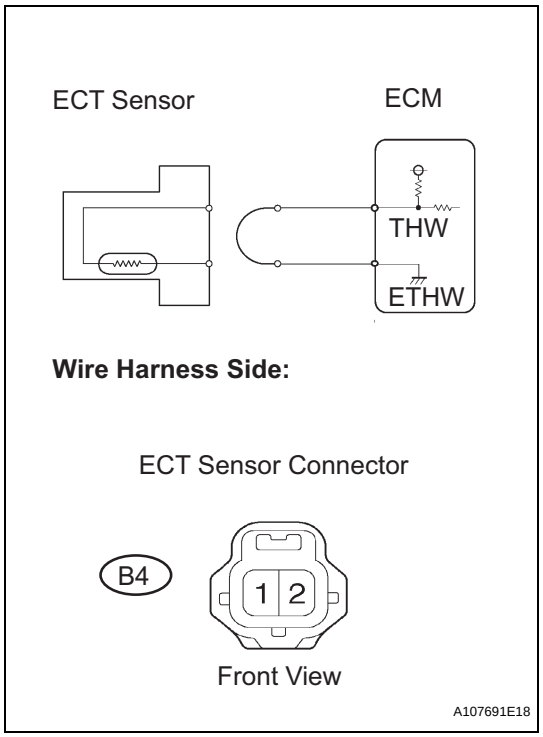

(a) Disconnect the B4 Engine Coolant Temperature (ECT) sensor connector.
(b) Connect terminals 1 and 2 of the ECT sensor connector on the wire harness side.
(c) Connect the intelligent tester to the DLC3.
(d) Turn the ignition switch ON.
(e) Turn the tester ON.
(f) Select the following menu items: DIAGNOSIS / ENHANCED OBD II / DATA LIST / PRIMARY / COOLANT TEMP.
(g) Read the value displayed on the tester.
Standard value:
140°C (284°F) or higher.
(h) Reconnect the ECT sensor connector.

OK → **CONFIRM GOOD CONNECTION TO SENSOR. IF OK, REPLACE ENGINE COOLANT TEMPERATURE SENSOR**

NG

ES

4	CHECK HARNESS AND CONNECTOR (ENGINE COOLANT TEMPERATURE SENSOR - ECM)

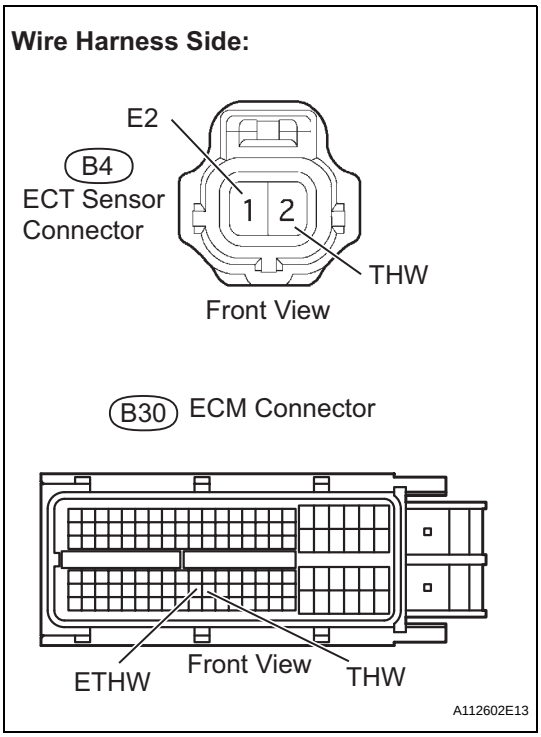

(a) Disconnect the B4 ECT sensor connector.
(b) Disconnect the B30 ECM connector.
(c) Measure the resistance.
Standard resistance

Tester Connections	Specified Conditions
B4-2 (THW) - B30-97 (THW)	Below 1 Ω
B4-1 (E2) - B30-96 (ETHW)	Below 1 Ω

(d) Reconnect the ECT sensor connector.
(e) Reconnect the ECM connector.

NG → **REPAIR OR REPLACE HARNESS OR CONNECTOR**

OK

GOOD CONNECTION TO ECM. IF OK, REPLACE ECM

5	READ VALUE USING INTELLIGENT TESTER (CHECK FOR SHORT IN WIRE HARNESS)

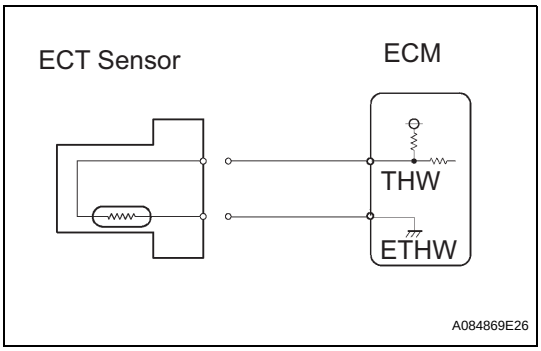

(a) Disconnect the B4 ECT sensor connector.
(b) Connect the intelligent tester to the DLC3.
(c) Turn the ignition switch ON.
(d) Turn the tester ON.
(e) Select the following menu items: DIAGNOSIS / ENHANCED OBD II / DATA LIST / PRIMARY / COOLANT TEMP.
(f) Read the value displayed on the tester.
Standard value:
-40°C (-40°F)
(g) Reconnect the ECT sensor connector.

OK → **REPLACE ENGINE COOLANT TEMPERATURE SENSOR**

NG

6	CHECK HARNESS AND CONNECTOR (ENGINE COOLANT TEMPERATURE SENSOR - ECM)

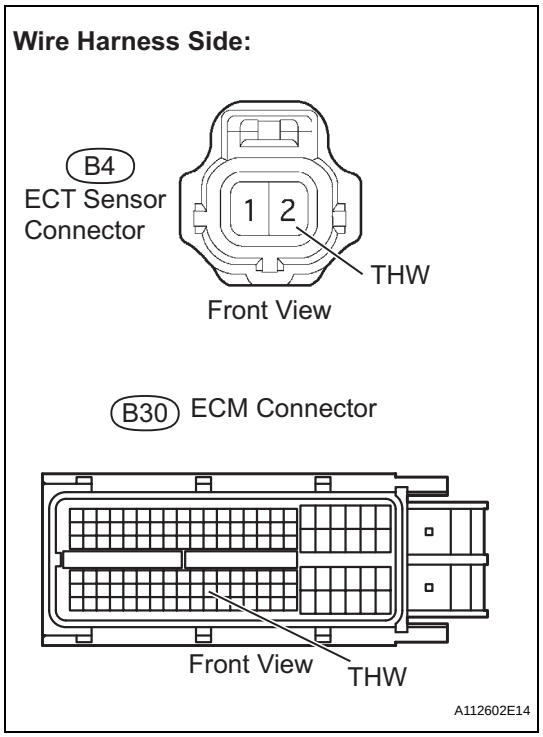

(a) Disconnect the B4 ECT sensor connector.
(b) Disconnect the B30 ECM connector.
(c) Measure the resistance.

Standard resistance

Tester Connections	Specified Conditions
B4-2 (THW) or B30-97 (THW) - Body ground	10 kΩ or higher

(d) Reconnect the ECT sensor connector.
(e) Reconnect the ECM connector.

NG → **REPAIR OR REPLACE HARNESS OR CONNECTOR**

OK

REPLACE ECM

ES

DTC	P0116	Engine Coolant Temperature Circuit Range / Performance Problem

DESCRIPTION

Refer to DTC P0115 (see page ES-105).

DTC No.	DTC Detection Conditions	Trouble Areas
P0116	When either of following conditions met (2 trip detection logic): • When cold engine started and engine warmed up, Engine Coolant Temperature (ECT) sensor value does not change. • After warmed up engine started, ECT sensor value does not change when engine stopped and then next cold engine start performed.	• Thermostat • ECT sensor

ES

MONITOR DESCRIPTION

Engine coolant temperature (ECT) sensor cold start monitor

When a cold engine start is performed and then the engine is warmed up, if the ECT sensor value does not change, it is determined that a malfunction has occurred. If this is detected in 2 consecutive driving cycles, the MIL is illuminated and a DTC is set.

ECT sensor soak monitor

After a warmed up engine is started, if the ECT sensor value does not change when the engine is stopped and then the next cold engine start is performed, it is determined that a malfunction has occurred. If this is detected in 2 consecutive driving cycles, the MIL is illuminated and a DTC is set.

MONITOR STRATEGY

Related DTCs	P0116: Engine coolant temperature (ECT) sensor cold start monitor P0116: ECT sensor soak monitor
Required Sensors/Components (Main)	ECT sensor
Required Sensors/Components (Related)	None
Frequency of Operation	Once per driving cycle
Duration	5 hours or more
MIL Operation	2 driving cycles
Sequence of Operation	None

TYPICAL ENABLING CONDITIONS

ECT Sensor cold start monitor:

Monitor runs whenever following DTCs not present	P0100 to P0103: Mass Air Flow (MAF) meter P0110 to P0113: Intake Air Temperature (IAT) sensor
Battery voltage	10.5 V or more
Time after engine start	1 second or more
ECT at engine start	Less than 60°C (140°F)
IAT sensor circuit	OK
Soak time	5 hours or more
Accumulated MAF	604.75 g or more
Engine	Running
Fuel cut	OFF
Difference between ECT at engine start and IAT	Less than 40°C (72°F)

ECT Sensor soak monitor:

Monitor runs whenever following DTCs not present	P0100 to P0103: MAF meter P0110 to P0113: IAT sensor

Battery voltage	10.5 V or more
Engine	Running
Soak time	5 hours or more
Either (a) or (b) condition met	-
(a) ECT	60°C (140°F) or more
(b) Accumulated MAF	1128.55 g or more

TYPICAL MALFUNCTION THRESHOLDS

ECT Sensor cold start monitor:

ECT sensor value change	Less than 5°C (9°F)

ECT Sensor soak monitor:

Difference between current ECT sensor value and previous ECT sensor value when engine stopped	Less than 5°C (9°F)

ES

COMPONENT OPERATING RANGE

ECT	ECT sensor value changes in accordance with actual ECT

INSPECTION PROCEDURE

HINT:

- If any of DTCs P0115, P0117, P0118 or P0125 are set simultaneously with DTC P0116, the ECT sensor may have an open or a short circuit. Troubleshoot those DTCs first.
- Read freeze frame data using the intelligent tester. Freeze frame data records the engine condition when malfunctions are detected. When troubleshooting, freeze frame data can help determine if the vehicle was moving or stationary, if the engine was warmed up or not, if the air-fuel ratio was lean or rich, and other data from the time the malfunction occurred.

1	CHECK ANY OTHER DTCS OUTPUT (IN ADDITION TO DTC P0116)

(a) Connect the intelligent tester to the DLC3.
(b) Turn the ignition switch ON.
(c) Turn the tester ON.
(d) Select the following menu items: DIAGNOSIS / ENHANCED II / DTC INFO / CURRENT CODES.
(e) Read the DTC.

Result

Display (DTC Output)	Proceed To
P0116	A
P0116 and other DTCs	B

B → GO TO DTC CHART

A

2	INSPECT THERMOSTAT

(a) Remove the thermostat (see page CO-15).
(b) Measure the valve opening temperature of the thermostat.

Standard value:
80°C to 84°C (176°F to 183°F)

HINT:
In addition to the above check, confirm that the valve is completely closed when the temperature is below the standard.

(c) Reinstall the thermostat (see page CO-15).

NG → **REPLACE THERMOSTAT**

OK

REPLACE ENGINE COOLANT TEMPERATURE SENSOR

DTC	P0120	Throttle / Pedal Position Sensor / Switch "A" Circuit Malfunction
DTC	P0122	Throttle / Pedal Position Sensor / Switch "A" Circuit Low Input
DTC	P0123	Throttle / Pedal Position Sensor / Switch "A" Circuit High Input
DTC	P0220	Throttle / Pedal Position Sensor / Switch "B" Circuit
DTC	P0222	Throttle / Pedal Position Sensor / Switch "B" Circuit Low Input
DTC	P0223	Throttle / Pedal Position Sensor / Switch "B" Circuit High Input
DTC	P2135	Throttle / Pedal Position Sensor / Switch "A" / "B" Voltage Correlation

HINT:
These DTCs relate to the Throttle Position (TP) sensor.

DESCRIPTION

The TP sensor is mounted on the throttle body, and detects the opening angle of the throttle valve. This sensor is a non-contact type. It uses Hall-effect elements in order to yield accurate signals even in extreme driving conditions, such as at high speeds as well as very low speeds.
The TP sensor has two sensor circuits which each transmits a signal, VTA1 and VTA2. VTA1 is used to detect the throttle valve angle and VTA2 is used to detect malfunctions in VTA1. The sensor signal voltages vary between 0 V and 5 V in proportion to the throttle valve opening angle, and are transmitted to the VTA terminals of the ECM.
As the valve closes, the sensor output voltage decreases and as the valve opens, the sensor output voltage increases. The ECM calculates the throttle valve opening angle according to these signals and controls the throttle actuator in response to driver inputs. These signals are also used in calculations such as air-fuel ratio correction, power increase correction and fuel-cut control.

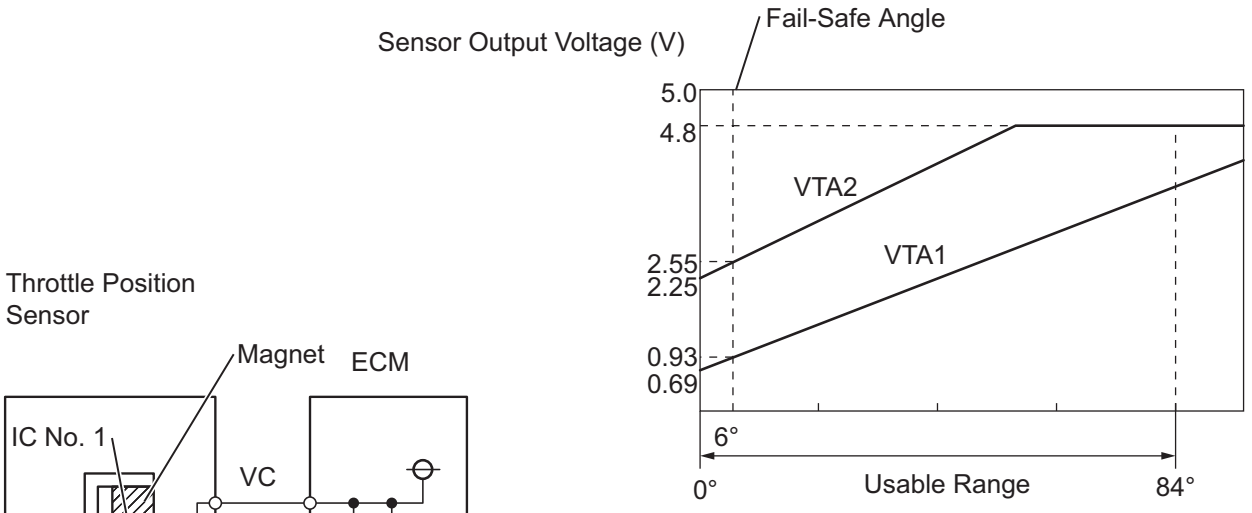

Note:

The throttle valve opening angle detected by the sensor terminal VTA1 is expressed as a percentage.

Between 10 % and 22 %: Throttle valve fully closed

Between 66 % and 98 %: Throttle valve fully open

Approximately 19 %: Fail-safe angle (6°)

A122493E04

DTC No.	DTC Detection Conditions	Trouble Areas
P0120	Output voltage of VTA1 quickly fluctuates beyond lower and upper malfunction thresholds for 2 seconds when accelerator pedal depressed (1 trip detection logic)	• Throttle Position (TP) sensor (built into throttle body) • ECM
P0122	Output voltage of VTA1 0.2 V or less for 2 seconds when accelerator pedal depressed (1 trip detection logic)	• TP sensor (built into throttle body) • Short in VTA1 circuit • Open in VC circuit • ECM
P0123	Output voltage of VTA1 4.535 V or more for 2 seconds when accelerator pedal depressed (1 trip detection logic)	• TP sensor (built into throttle body) • Open in VTA1 circuit • Open in E2 circuit • Short between VC and VTA1 circuits • ECM
P0220	Output voltage of VTA2 quickly fluctuates beyond lower and upper malfunction thresholds for 2 seconds when accelerator pedal depressed (1 trip detection logic)	• TP sensor (built into throttle body) • ECM

DTC No.	DTC Detection Conditions	Trouble Areas
P0222	Output voltage of VTA2 1.75 V or less for 2 seconds when accelerator pedal depressed (1 trip detection logic)	• TP sensor (built into throttle body) • Short in VTA2 circuit • Open in VC circuit • ECM
P0223	Output voltage of VTA2 4.8 V or more, and VTA1 between 0.2 V and 2.02 V for 2 seconds when accelerator pedal depressed (1 trip detection logic)	• TP sensor (built into throttle body) • Open in VTA2 circuit • Open in E2 circuit • Short between VC and VTA2 circuits • ECM
P2135	Either condition (a) or (b) met (1 trip detection logic): (a) Difference between output voltages of VTA1 and VTA2 0.02 V or less for 0.5 seconds or more (b) Output voltage of VTA1 0.2 V or less, and VTA2 1.75 V or less, for 0.4 seconds or more	• Short between VTA1 and VTA2 circuits • TP sensor (built into throttle body) • ECM

ES

HINT:

- When any of these DTCs are set, check the throttle valve opening angle by selecting the following menu items the intelligent tester: DIAGNOSIS / ENHANCED OBD II / DATA LIST / ETCS / THROTTLE POS #1 AND THROTTLE POS #2.
- THROTTLE POS #1 denotes the VTA1 signal, and THROTTLE POS #2 denotes the VTA2 signal.

Reference (Normal Condition)

Tester Display	Accelerator Pedal Fully Released	Accelerator Pedal Fully Depressed
THROTTLE POS #1	**0.5 to 1.1 V**	**3.3 to 4.9 V**
THROTTLE POS #2	**2.1 to 3.1 V**	**4.6 to 5.0 V**

MONITOR DESCRIPTION

The ECM uses the Throttle Position (TP) sensor to monitor the throttle valve opening angle. There are several checks that the ECM performs to confirm the proper operation of the TP sensor.

- A specific voltage difference is expected between the sensor terminals, VTA1 and VTA2, for each throttle valve opening angle. If the difference between VTA1 and VTA2 is incorrect, the ECM interprets this as a malfunction in the sensor, and sets a DTC.
- VTA1 and VTA2 each have a specific voltage range. If VTA1 or VTA2 is outside the normal operating range, the ECM interprets this as a malfunction in the sensor, and sets a DTC.
- VTA1 and VTA2 should never be close to the same voltage level. If VTA1 is within 0.02 V of VTA2, the ECM determines that there is a short circuit in the sensor, and sets a DTC.

If the malfunction is not repaired successfully, a DTC is set 10 seconds after the engine is next started.

MONITOR STRATEGY

Related DTCs	P0120: Throttle position sensor 1 range check (Fluctuating) P0122: Throttle position sensor 1 range check (Low voltage) P0123: Throttle position sensor 1 range check (High voltage) P0220: Throttle position sensor 2 range check (Fluctuating) P0222: Throttle position sensor 2 range check (Low voltage) P0223: Throttle position sensor 2 range check (High voltage) P2135: Throttle position sensor range check (Correlation)
Required Sensors/Components (Main)	Throttle position sensor
Required Sensors/Components (Related)	-
Frequency of Operation	Continuous
Duration	2 seconds: P0120, P0122, P0123, P0220, P0222 and P0223 (Accelerator pedal ON) 10 seconds: P0120, P0122, P0123, P0220, P0222 and P0223 (Accelerator pedal OFF) 0.5 seconds: P2135 Case 1 0.4 seconds: P2135 Case 2
MIL Operation	Immediate
Sequence of Operation	None

TYPICAL ENABLING CONDITIONS

Monitor runs whenever following DTCs not present	None
Either of following condition A or B met	-
A. Ignition switch ON	0.012 seconds or more
B. Electronic throttle actuator power	ON

TYPICAL MALFUNCTION THRESHOLDS

P0120:

VTA1 voltage	0.2 V or less, or 4.535 V or more

ES

P0122:

VTA1 voltage	0.2 V or less

P0123:

VTA1 voltage	4.535 V or more

P0220:

VTA2 voltage	1.75 V or less, or 4.8 V or more

P0222:

VTA2 voltage	1.75 V or less

P0223:

VTA2 voltage when VTA1 0.2 V or more, and 2.02 V or less	4.8 V or more

P2135 Case 1:

Difference between VTA1 and VTA2 voltages	0.02 V or less

P2135 Case 2:

VTA1 voltage	0.2 V or less
VTA2 voltage	1.75 V or less

COMPONENT OPERATING RANGE

VTA1 voltage	0.69 to 4.05 V
VTA2 voltage	2.25 to 4.8 V

FAIL-SAFE

When any of these DTCs, as well as other DTCs relating to ETCS (Electronic Throttle Control System) malfunctions, are set, the ECM enters fail-safe mode. During fail-safe mode, the ECM cuts the current to the throttle actuator off, and the throttle valve is returned to a 6° throttle angle by the return spring. The ECM then adjusts the engine output by controlling the fuel injection (intermittent fuel-cut) and ignition timing, in accordance with the accelerator pedal opening angle, to allow the vehicle to continue at a minimal speed. If the accelerator pedal is depressed firmly and gently, the vehicle can be driven slowly. Fail-safe mode continues until a pass condition is detected, and the ignition switch is then turned OFF.

WIRING DIAGRAM

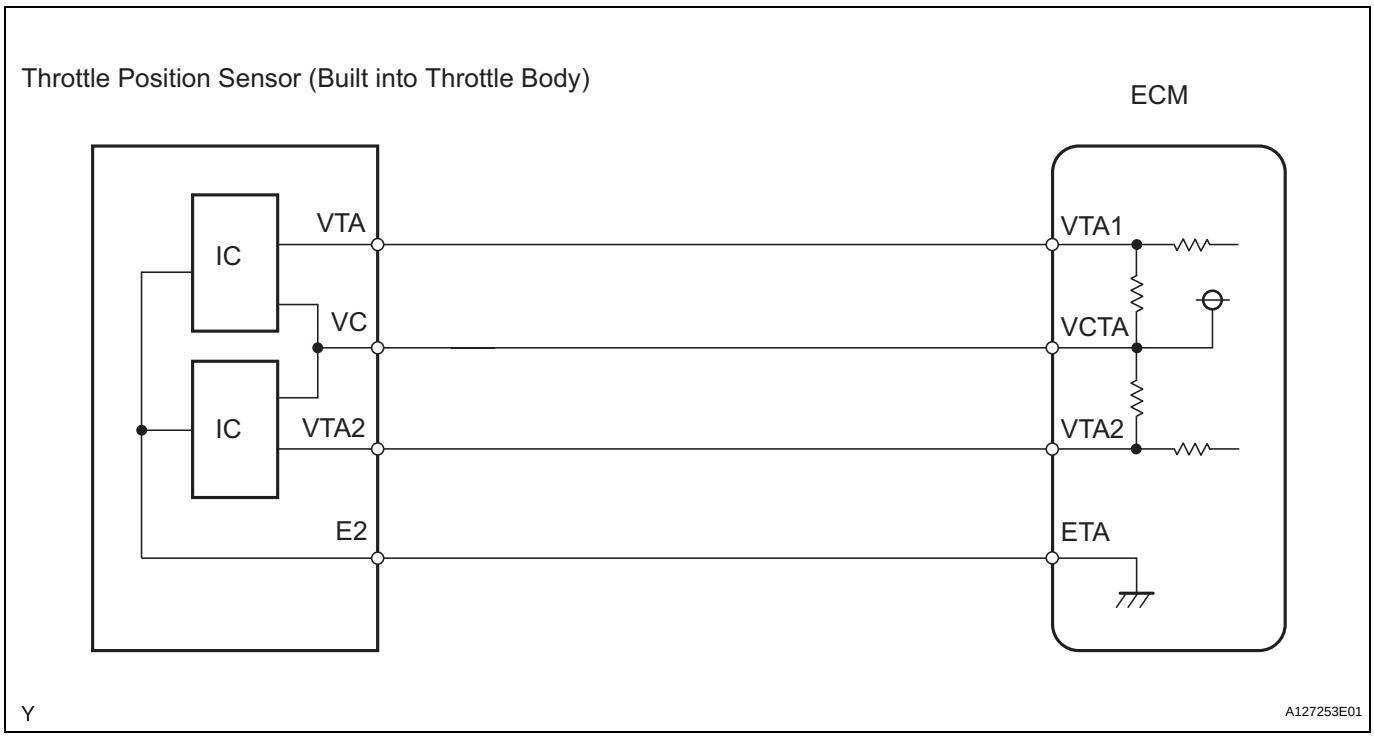

INSPECTION PROCEDURE

HINT:

Read freeze frame data using the intelligent tester. Freeze frame data records the engine condition when malfunctions are detected. When troubleshooting, freeze frame data can help determine if the vehicle was moving or stationary, if the engine was warmed up or not, if the air-fuel ratio was lean or rich, and other data from the time the malfunction occurred.

1	READ VALUE USING INTELLIGENT TESTER (THROTTLE POS #1 AND THROTTLE POS #2)

(a) Connect the intelligent tester to the DLC3.
(b) Turn the ignition switch ON and turn the tester ON.
(c) Select the following menu items: DIAGNOSIS / ENHANCED OBD II / DATA LIST / ETCS / THROTTLE POS #1 and THROTTLE POS #2.
(d) Check the values displayed on the tester.

Result

TP#1 (VTA1) When Accelerator Pedal Released	TP#2 (VTA2) When Accelerator Pedal Released	TP#1 (VTA1) When Accelerator Pedal Depressed	TP#2 (VTA2) When Accelerator Pedal Depressed	Trouble Areas	Proceed To
0 V to 0.2 V	0 V to 0.2 V	0 V to 0.2 V	0 V to 0.2 V	VC circuit open	A
4.5 V to 5.0 V	4.5 V to 5.0 V	4.5 V to 5.0 V	4.5 V to 5.0 V	E2 circuit open	
0 V to 0.2 V, or 4.5 V to 5.0 V	2.4 V to 3.4 V (Fail-safe)	0 V to 0.2 V, or 4.5 V to 5.0 V	2.4 V to 3.4 V (Fail-safe)	VTA1 circuit open or ground short	
0.7 V to 1.3 V (Fail-safe)	0 V to 0.2 V, or 4.5 V to 5.0 V	0.7 V to 1.3 V (Fail-safe)	0 V to 0.2 V, or 4.5 V to 5.0 V	VTA2 circuit open or ground short	
0.5 V to 1.1 V	2.1 V to 3.1 V	3.3 V to 4.9 V (Not fail-safe)	4.6 V to 5.0 V (Not fail-safe)	TP sensor circuit normal	B

HINT:
TP#1 denotes THROTTLE POS #1, and TP#2 denotes THROTTLE POS #2.

B → Go to step 5

A

2 CHECK HARNESS AND CONNECTOR (THROTTLE POSITION SENSOR - ECM)

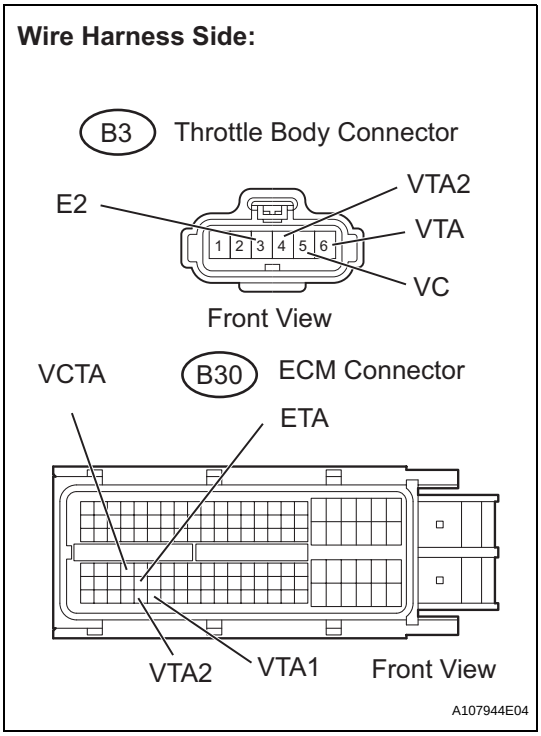

(a) Disconnect the B3 throttle body connector.
(b) Disconnect the B30 ECM connector.
(c) Measure the resistance.

Standard resistance (Check for open)

Tester Connections	Specified Conditions
B3-5 (VC) - B30-67 (VCTA)	Below 1 Ω
B3-6 (VTA) - B30-115 (VTA1)	Below 1 Ω
B3-4 (VTA2) - B30-114 (VTA2)	Below 1 Ω
B3-3 (E2) - B30-91 (ETA)	Below 1 Ω

Standard resistance (Check for short)

Tester Connections	Specified Conditions
B3-5 (VC) or B30-67 (VCTA) - Body ground	10 kΩ or higher
B3-6 (VTA) or B30-115 (VTA1) - Body ground	10 kΩ or higher
B3-4 (VTA2) or B30-114 (VTA2) - Body ground	10 kΩ or higher

(d) Reconnect the throttle body connector.
(e) Reconnect the ECM connector.

NG → REPAIR OR REPLACE HARNESS OR CONNECTOR

OK

3 INSPECT ECM (VC VOLTAGE)

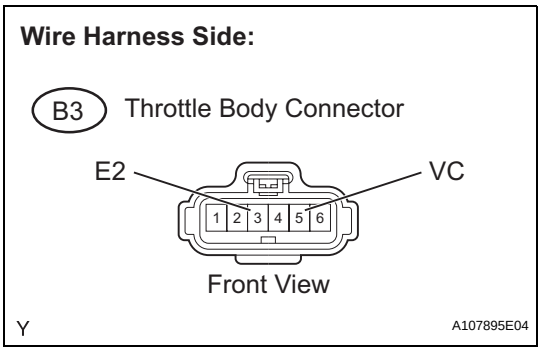

(a) Disconnect the B3 throttle body connector.
(b) Turn the ignition switch ON.
(c) Measure the voltage between the terminals of the throttle body connector.

Standard voltage

Tester Connections	Specified Conditions
B3-5 (VC) - B3-3 (E2)	4.5 to 5.5 V

(d) Reconnect the throttle body connector.

NG → REPLACE ECM

OK

4	REPLACE THROTTLE BODY ASSEMBLY

NEXT

5	CHECK WHETHER DTC OUTPUT RECURS (THROTTLE POSITION SENSOR DTCS)

(a) Connect the intelligent tester to the DLC3.
(b) Turn the ignition switch ON and turn the tester ON.
(c) Clear DTCs (see page ES-35).
(d) Start the engine.
(e) Allow the engine to idle for 15 seconds or more.
(f) Select the following menu items: DIAGNOSIS / ENHANCED OBD II / DTC INFO / CURRENT CODES.
(g) Read DTCs.

ES

Result

Display (DTC Output)	Proceed To
P0120, P0122, P0123, P0220, P0222, P0223, and/or P2135	A
No output	B

B → SYSTEM OK

A

REPLACE ECM

DTC	P0121	Throttle / Pedal Position Sensor / Switch "A" Circuit Range / Performance Problem

HINT:
This DTC relates to the Throttle Position (TP) sensor.

DESCRIPTION

Refer to DTC P0120 (see page ES-114).

DTC No.	DTC Detection Conditions	Trouble Areas
P0121	Difference between VTA1 and VTA2 voltages less than 0.8 V, or more than 1.6 V for 2 seconds (1 trip detection logic)	TP sensor (built into throttle body)

ES

MONITOR DESCRIPTION

The ECM uses the TP sensor to monitor the throttle valve opening angle.
This sensor transmits two signals: VTA1 and VTA2. VTA1 is used to detect the throttle opening angle and VTA2 is used to detect malfunctions in VTA1. The ECM performs several checks to confirm the proper operation of the TP sensor and VTA1.
For each throttle opening angle, a specific voltage difference is expected between the outputs of VTA1 and VTA2. If the output voltage difference between the two signals deviates from the normal operating range, the ECM interprets this as a malfunction of the TP sensor. The ECM illuminates the MIL and sets the DTC.
If the malfunction is not repaired successfully, the DTC is set 2 seconds after the engine is next started.

MONITOR STRATEGY

Related DTCs	P0121: TP sensor rationality
Required Sensors/Components (Main)	TP sensor
Required Sensors/Components (Related)	-
Frequency of Operation	Continuous
Duration	Within 2 seconds
MIL Operation	Immediate
Sequence of Operation	None

TYPICAL ENABLING CONDITIONS

Monitor runs whenever following DTCs not present	P0120 - P0223, P2135 (TP sensor)
Either of following conditions A or B set	-
A. Ignition switch	ON
B. Electric throttle motor power	ON

TYPICAL MALFUNCTION THRESHOLDS

Difference in voltage between VAT1 and VTA2 TP sensor 1 - [TP sensor 2 x 0.8 (corrected by learning value)]	Less than 0.8 V, or more than 1.6 V

FAIL-SAFE

When this DTC, as well as other DTCs relating to ETCS (Electronic Throttle Control System) malfunctions, is set, the ECM enters fail-safe mode. During fail-safe mode, the ECM cuts the current to the throttle actuator off, and the throttle valve is returned to a 6° throttle angle by the return spring. The ECM then adjusts the engine output by controlling the fuel injection (intermittent fuel-cut) and ignition timing, in accordance with the accelerator pedal opening angle, to allow the vehicle to continue at a minimal speed. If the accelerator pedal is depressed firmly and gently, the vehicle can be driven slowly. Fail-safe mode continues until a pass condition is detected, and the ignition switch is then turned OFF.

INSPECTION PROCEDURE

HINT:

Read freeze frame data using the intelligent tester. Freeze frame data records the engine condition when malfunctions are detected. When troubleshooting, freeze frame data can help determine if the vehicle was moving or stationary, if the engine was warmed up or not, if the air-fuel ratio was lean or rich, and other data from the time the malfunction occurred.

ES

1	CHECK ANY OTHER DTCS OUTPUT (IN ADDITION TO DTC P0121)

(a) Connect the intelligent tester to the DLC3.
(b) Turn the ignition switch ON.
(c) Turn the tester ON.
(d) Select the following menu items: DIAGNOSIS / ENHANCED OBD II / DTC INFO / CURRENT CODES.
(e) Read DTCs.

Result

Display (DTC output)	Proceed To
P0121	A
P0121 and other DTCs	B

B → GO TO DTC CHART

A

REPLACE THROTTLE BODY ASSEMBLY

DTC	P0125	Insufficient Coolant Temperature for Closed Loop Fuel Control

DESCRIPTION

Refer to DTC P0115 (see page ES-105).

DTC No.	DTC Detection Conditions	Trouble Areas
P0125	Engine Coolant Temperature (ECT) does not reach closed-loop enabling temperature for 20 minutes (this period varies with engine start ECT) (2 trip detection logic)	• ECT sensor • Cooling system • Thermostat

ES

MONITOR DESCRIPTION

The resistance of the ECT sensor varies in proportion to the actual ECT. The ECT supplies a constant voltage to the sensor and monitors the signal output voltage of the sensor. The signal voltage output varies according to the changing resistance of the sensor. After the engine is started, the ECT is monitored through this signal. If the ECT sensor indicates that the engine is not yet warm enough for closed-loop fuel control, despite a specified period of time having elapsed since the engine was started, the ECM interprets this as a malfunction in the sensor or cooling system and sets the DTC.
Example:
The ECT is 0°C (32°F) at engine start. After about 1 minute running time, the ECT sensor still indicates that the engine is not warm enough to begin closed-loop fuel (air-fuel ratio feedback) control. The ECM interprets this as a malfunction in the sensor or cooling system and sets the DTC.

MONITOR STRATEGY

Related DTCs	P0125: Insufficient engine coolant temperature for closed-loop fuel control
Required Sensors/Components (Main)	Thermostat, cooling system
Required Sensors/Components (Related)	Engine coolant temperature sensor and mass air flow meter
Frequency of Operation	Once per driving cycle
Duration	72.38 seconds or more: Engine coolant temperature at engine start 1.7°C (35°F) or more 122.73 seconds or more: Engine coolant temperature at engine start -9.45° to 1.7°C (15° to 35°F) 20 minutes or more: Engine coolant temperature at engine start less than -9.45°C (15°F)
MIL Operation	2 driving cycles
Sequence of Operation	None

TYPICAL ENABLING CONDITIONS

Monitor runs whenever following DTCs not present	P0100 - P0103 (MAF meter) P0110 - P0113 (IAT sensor) P0115 - P0118 (ECT sensor)
Thermostat failure	Not detected

TYPICAL MALFUNCTION THRESHOLDS

Time until actual engine coolant temperature reaches closed-loop fuel control enabling temperature	72.38 seconds or more: Engine coolant temperature at engine start 1.7°C (35°F) or more 122.73 seconds or more: Engine coolant temperature at engine start -9.45° to 1.7°C (15° to 35°F) 20 minutes or more: Engine coolant temperature at engine start less than -9.45°C (15°F)

WIRING DIAGRAM

Refer to DTC P0115 (see page ES-106).

INSPECTION PROCEDURE

HINT:

- If any of DTCs P0115, P0116, P0117 or P0118 are set simultaneously with DTC P0125, the Engine Coolant Temperature (ECT) sensor may have an open or a short circuit. Troubleshoot those DTCs first.
- Read freeze frame data using the intelligent tester. Freeze frame data records the engine condition when malfunctions are detected. When troubleshooting, freeze frame data can help determine if the vehicle was moving or stationary, if the engine was warmed up or not, if the air-fuel ratio was lean or rich, and other data from the time the malfunction occurred.

ES

1	CHECK ANY OTHER DTCS OUTPUT (IN ADDITION TO DTC P0125)

(a) Connect the intelligent tester to the DLC3.
(b) Turn the ignition switch ON.
(c) Turn the tester ON.
(d) Select the following menu items: DIAGNOSIS / ENHANCED OBD II / DTC INFO / CURRENT CODES.
(e) Read DTCs.

Result

Display (DTC Output)	Proceed To
P0125	A
P0125 and other DTCs	B

HINT:
If any DTCs other than P0125 are output, troubleshoot those DTCs first.

B → GO TO DTC CHART

A

2	INSPECT THERMOSTAT

(a) Remove the thermostat (see page CO-15).
(b) Check the valve opening temperature of the thermostat.
Standard value:
80 to 84°C (176 to 183°F)
HINT:
In addition to the above check, confirm that the valve is completely closed when the temperature is below the standard.
(c) Reinstall the thermostat (see page CO-15).

NG → REPLACE THERMOSTAT

OK

3	CHECK COOLING SYSTEM

(a) Check for defects in the cooling system that might cause the system to be too cold, such as abnormal radiator fan operation or any modifications.

NG → **REPAIR OR REPLACE COOLING SYSTEM**

OK

REPLACE ENGINE COOLANT TEMPERATURE SENSOR

DTC	P0128	Coolant Thermostat (Coolant Temperature Below Thermostat Regulating Temperature)

HINT:
This DTC relates to the thermostat.

DESCRIPTION

This DTC is set when the Engine Coolant Temperature (ECT) does not reach 75°C (167°F) despite sufficient engine warm-up time having elapsed.

DTC No.	DTC Detection Conditions	Trouble Areas
P0128	Conditions (a), (b) and (c) met for 5 seconds (2 trip detection logic): (a) Cold start (b) Engine warmed up (c) ECT less than 75°C (167°F)	• Thermostat • Cooling system • ECT sensor • ECM

ES

MONITOR DESCRIPTION

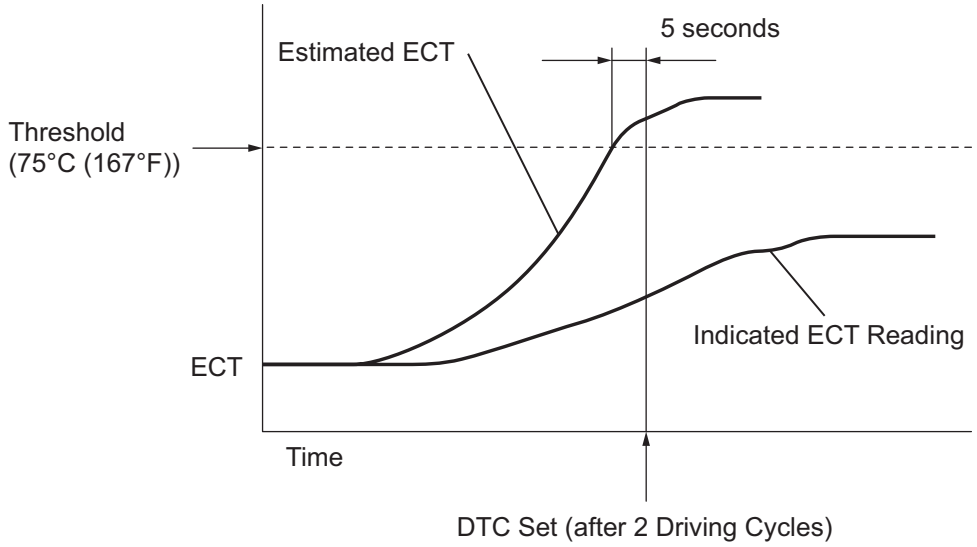

Y A121605E02

The ECM estimates the ECT based on the starting temperature, engine loads, and engine speeds. The ECM then compares the estimated temperature with the actual ECT. When the estimated ECT reaches 75°C (167°F), the ECM checks the actual ECT. If the actual ECT is less than 75°C (167°F), the ECM interprets this as a malfunction in the thermostat or the engine cooling system and sets the DTC.

MONITOR STRATEGY

Related DTCs	P0128: Coolant Thermostat
Required Sensors/Components (Main)	Thermostat

Required Sensors/Components (Related)	Engine Coolant Temperature (ECT) sensor, Intake Air Temperature (IAT) sensor, Vehicle speed sensor
Frequency of Operation	Once per driving cycle
Duration	900 seconds
MIL Operation	2 driving cycles
Sequence of Operation	None

TYPICAL ENABLING CONDITIONS

Monitor runs whenever following DTCs not present	P0010 (VVT OCV) P0011 (VVT System 1 - Advance) P0012 (VVT System 1 - Retard) P0031, P0032 (A/F sensor heater - Sensor 1) P0100 - P0103 (MAF meter) P0110 - P0113 (IAT sensor) P0115 - P0118 (ECT sensor) P0125 (Insufficient ECT for Closed Loop) P0171, P0172 (Fuel system) P0300 - P0304 (Misfire) P0335 (CKP sensor) P0340 (CMP sensor) P0351 - P0354 (Igniter) P0500 (VSS) P2196 (A/F sensor - rationality) P2A00 (A/F sensor - slow response)
Battery voltage	11 V or more
Either of following conditions 1 or 2 met:	-
1. All of following conditions met:	-
• ECT at engine start - IAT at engine start	-15°C to 7°C (-27°F to 12.6°F)
• ECT at engine start	-10°C to 56°C (14°F to 133°F)
• IAT at engine start	-10°C to 56°C (14°F to 133°F)
2. All of following conditions met:	-
• ECT at engine start - IAT at engine start	More than 7°C (12.6 °F)
• ECT at engine start	56°C (133°F) or less
• IAT at engine start	-10°C (14°F) or more
Accumulated time at 128 km/h (80 mph) or more of vehicle speed	Less than 20 seconds

TYPICAL MALFUNCTION THRESHOLDS

Duration that both following conditions (a) and (b) met	5 seconds or more
(a) Estimated ECT	75°C (167°F) or more
(b) ECT sensor output	Below 75°C (167°F)

INSPECTION PROCEDURE

HINT:

Read freeze frame data using the intelligent tester. Freeze frame data records the engine condition when malfunctions are detected. When troubleshooting, freeze frame data can help determine if the vehicle was moving or stationary, if the engine was warmed up or not, if the air-fuel ratio was lean or rich, and other data from the time the malfunction occurred.

1	**CHECK ANY OTHER DTCS OUTPUT (IN ADDITION TO DTC P0128)**

(a) Connect the intelligent tester to the DLC3.
(b) Turn the ignition switch ON.
(c) Turn the tester ON.

(d) Select the following menu items: DIAGNOSIS / ENHANCED OBD II / DTC INFO / CURRENT CODES.
(e) Read DTCs.

Result

Display (DTC Output)	Proceed To
P0128	A
P0128 and other DTCs	B

HINT:
If any DTCs other than P0128 are output, troubleshoot those DTCs first.

B → **GO TO DTC CHART**

A

2 CHECK COOLING SYSTEM

(a) Check for defects in the cooling system that might cause the system to be too cold, such as abnormal radiator fan operation or any modifications.

NG → **REPAIR OR REPLACE COOLING SYSTEM**

OK

3 INSPECT THERMOSTAT

(a) Remove the thermostat (see page CO-15).
(b) Measure the valve opening temperature of the thermostat.
Standard value:
80 to 84°C (176 to 183°F)
HINT:
In addition to the above check, confirm that the valve is completely closed when the temperature is below the standard.
(c) Reinstall the thermostat (see page CO-15).

NG → **REPLACE THERMOSTAT**

OK

REPLACE ECM

ES

DTC	P0136	Oxygen Sensor Circuit Malfunction (Bank 1 Sensor 2)

DTC	P0137	Oxygen Sensor Circuit Low Voltage (Bank 1 Sensor 2)

DTC	P0138	Oxygen Sensor Circuit High Voltage (Bank 1 Sensor 2)

ES

DESCRIPTION

In order to obtain a high purification rate of the carbon monoxide (CO), hydrocarbon (HC) and nitrogen oxide (NOx) components in the exhaust gas, a TWC is used. For the most efficient use of the TWC, the air-fuel ratio must be precisely controlled so that it is always close to the stoichiometric air-fuel level. For the purpose of helping the ECM to deliver accurate air-fuel ratio control, a Heated Oxygen (HO2) sensor is used.

The HO2 sensor is located behind the TWC, and detects the oxygen concentration in the exhaust gas. Since the sensor is integrated with the heater that heats the sensing portion, it is possible to detect the oxygen concentration even when the intake air volume is low (the exhaust gas temperature is low).

When the air-fuel ratio becomes lean, the oxygen concentration in the exhaust gas is rich. The HO2 sensor informs the ECM that the post-TWC air-fuel ratio is lean (low voltage, i.e. less than 0.45 V). Conversely, when the air-fuel ratio is richer than the stoichiometric air-fuel level, the oxygen concentration in the exhaust gas becomes lean. The HO2 sensor informs the ECM that the post-TWC air-fuel ratio is rich (high voltage, i.e. more than 0.45 V). The HO2 sensor has the property of changing its output voltage drastically when the air-fuel ratio is close to the stoichiometric level.

The ECM uses the supplementary information from the HO2 sensor to determine whether the air-fuel ratio after the TWC is rich or lean, and adjusts the fuel injection time accordingly. Thus, if the HO2 sensor is working improperly due to internal malfunctions, the ECM is unable to compensate for deviations in the primary air-fuel ratio control.

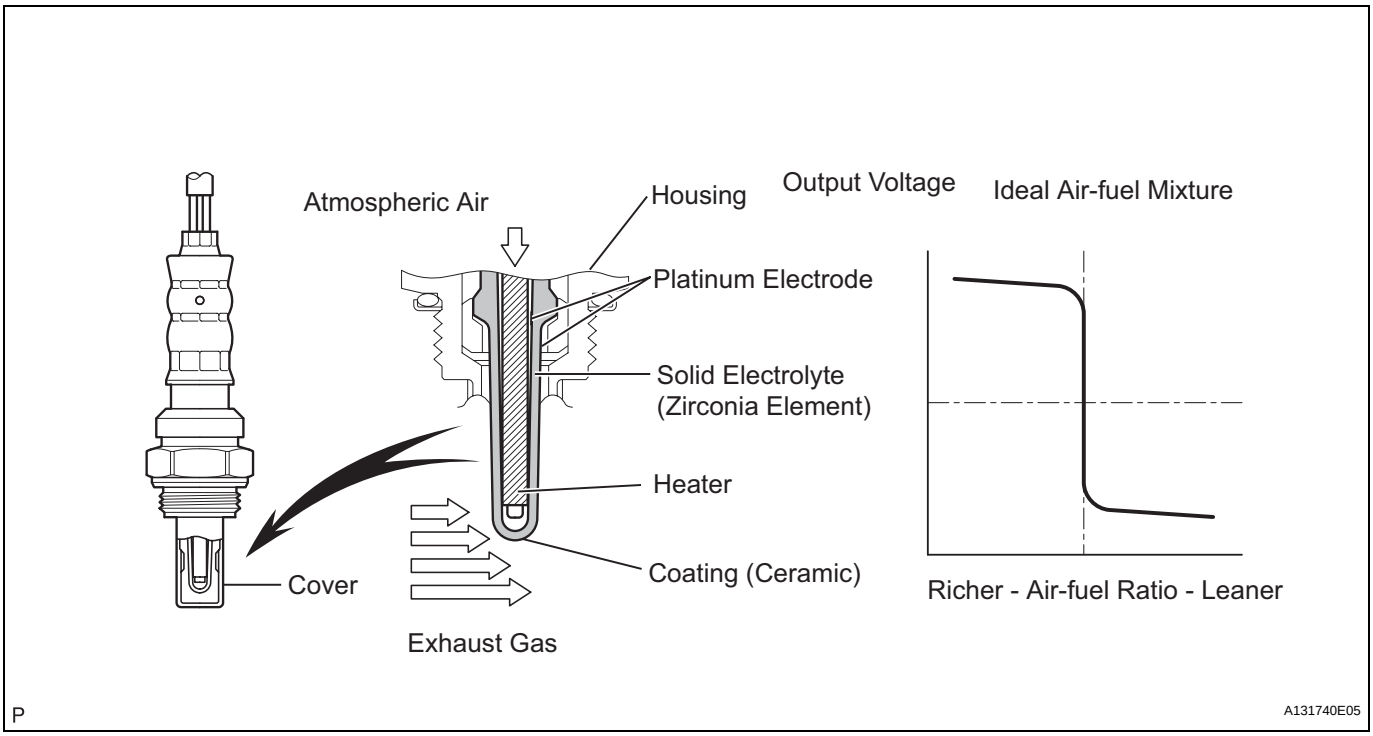

DTC No.	DTC Detection Conditions	Trouble Areas
P0136	• Abnormal voltage output: During active air-fuel ratio control, following conditions (a) and (b) met for certain period of time (2 trip detection logic): (a) Heated Oxygen (HO2) sensor voltage does not decrease to less than 0.59 V (b) HO2 sensor voltage does not increase to more than 0.21 V • Low impedance: Sensor impedance less than 5 Ω for more than 30 seconds when ECM presumes sensor to be warmed up and operating normally (2 trip detection logic)	• Open or short in HO2 sensor (sensor 2) circuit • HO2 sensor (sensor 2) • HO2 sensor heater (sensor 2) • Air-fuel Ratio (A/F) sensor (sensor 1) • Integration relay (EFI MAIN relay) • Gas leakage from exhaust system
P0137	• Low voltage (open): During active air-fuel ratio control, following conditions (a) and (b) met for certain period of time (2 trip detection logic): (a) HO2 sensor voltage output less than 0.21 V (b) Target air-fuel ratio rich • High impedance: Sensor impedance 15 kΩ or more for more than 90 seconds when ECM presumes sensor to be warmed up and operating normally (2 trip detection logic)	• Open in HO2 sensor (sensor 2) circuit • HO2 sensor (sensor 2) • HO2 sensor heater (sensor 2) • Integration relay (EFI MAIN relay) • Gas leakage from exhaust system
P0138	• High voltage (short): During active air-fuel ratio control, following conditions (a) and (b) met for certain period of time (2 trip detection logic): (a) HO2 sensor voltage output more than 0.59 V (b) Target air-fuel ratio lean • Extremely high voltage (short): HO2 sensor voltage output exceeds 1.2 V for more than 10 seconds (2 trip detection logic)	• Short in HO2 sensor (sensor 2) circuit • HO2 sensor (sensor 2) • ECM internal circuit malfunction

ES

MONITOR DESCRIPTION

Active Air-Fuel Ratio Control

The ECM usually performs air-fuel ratio feedback control so that the Air-Fuel Ratio (A/F) sensor output indicates a near stoichiometric air-fuel level. This vehicle includes active air-fuel ratio control in addition to regular air-fuel ratio control. The ECM performs active air-fuel ratio control to detect any deterioration in the Three-Way Catalytic Converter (TWC) and Heated Oxygen (HO2) sensor malfunctions (refer to the diagram below).

Active air-fuel ratio control is performed for approximately 15 to 20 seconds while driving with a warm engine. During active air-fuel ratio control, the air-fuel ratio is forcibly regulated to become lean or rich by the ECM. If the ECM detects a malfunction, one of the following DTCs is set: DTC P0136 (abnormal voltage output), P0137 (open circuit) and P0138 (short circuit).

Abnormal Voltage Output of HO2 Sensor (DTC P0136)

While the ECM is performing active air-fuel ratio control, the air-fuel ratio is forcibly regulated to become rich or lean. If the sensor is not functioning properly, the voltage output variation is small. For example, when the HO2 sensor voltage does not decrease to less than 0.21 V and does not increase to more than 0.59 V during active air-fuel ratio control, the ECM determines that the sensor voltage output is abnormal and sets DTC P0136.

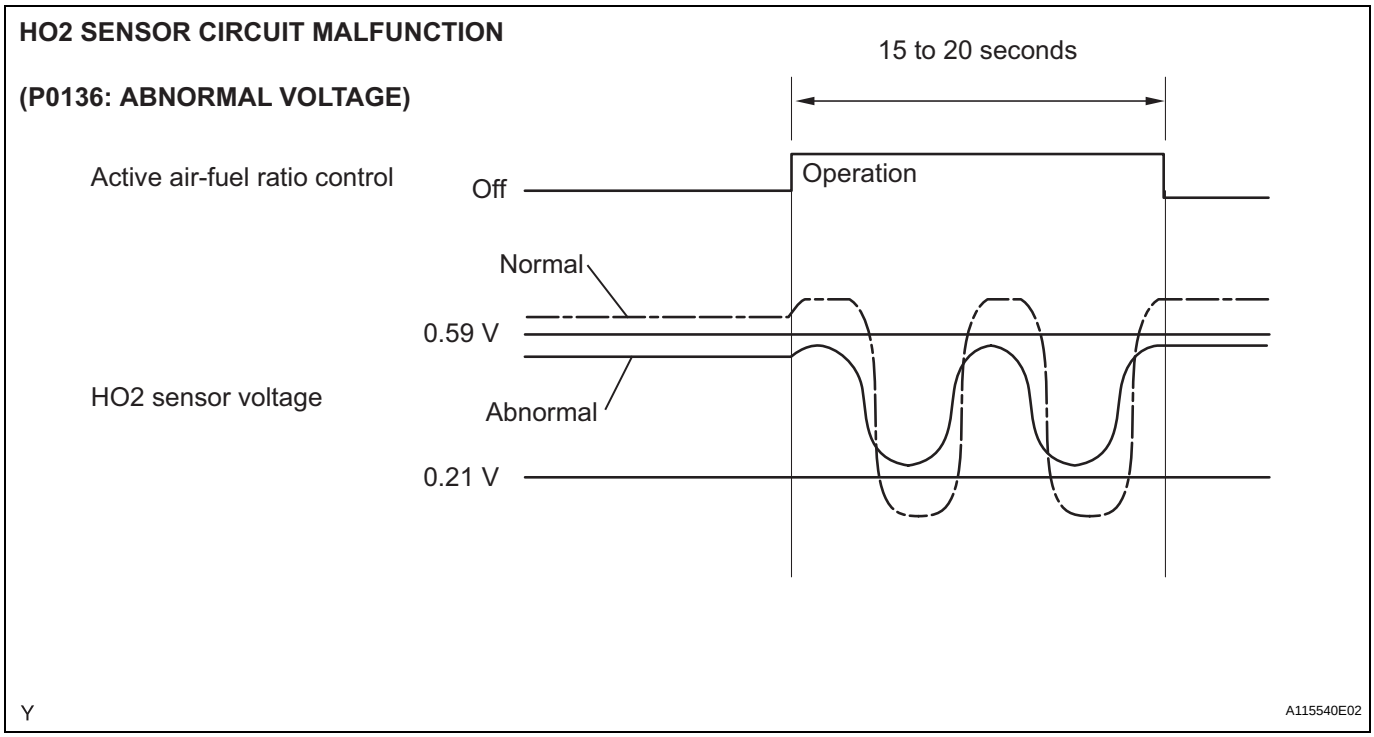

Open or Short in Heated Oxygen (HO2) Sensor Circuit (DTC P0137 or P0138)

During active air-fuel ratio control, the ECM calculates the Oxygen Storage Capacity (OSC)* of the Three-Way Catalytic Converter (TWC) by forcibly regulating the air-fuel ratio to become rich or lean. If the HO2 sensor has an open or short, or the voltage output of the sensor decreases significantly, the OSC indicates an extraordinarily high value. Even if the ECM attempts to continue regulating the air-fuel ratio to become rich or lean, the HO2 sensor output does not change.

While performing active air-fuel ratio control, when the target air-fuel ratio is rich and the HO2 sensor voltage output is 0.21 V or less (lean), the ECM interprets this as an abnormally low sensor output voltage and sets DTC P0137. When the target air-fuel ratio is lean and the voltage output is 0.59 V or more (rich) during active air-fuel ratio control, the ECM determines that the sensor voltage output is abnormally high, and sets DTC P0138.

HINT:

DTC P0138 is also set if the HO2 sensor voltage output is more than 1.2 V for 10 seconds or more.

*: The TWC has the capability to store oxygen. The OSC and the emission purification capacity of the TWC are mutually related. The ECM determines whether the catalyst has deteriorated based on the calculated OSC value (see page ES-191).

HO2 SENSOR CIRCUIT LOW VOLTAGE

(P0137: OPEN)

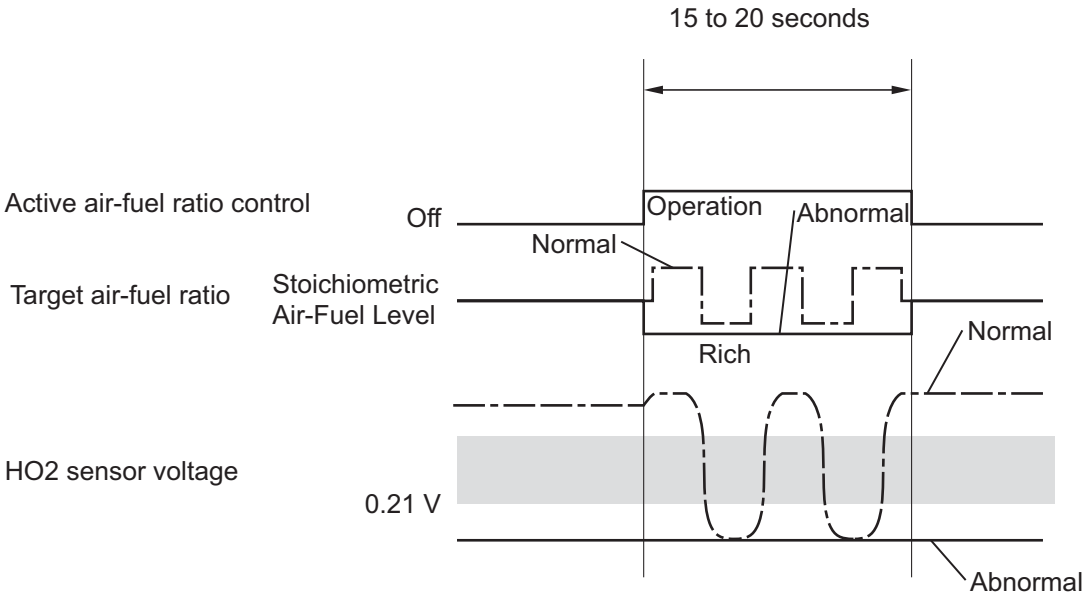

HO2 SENSOR CIRCUIT HIGH VOLTAGE

(P0138: SHORT)

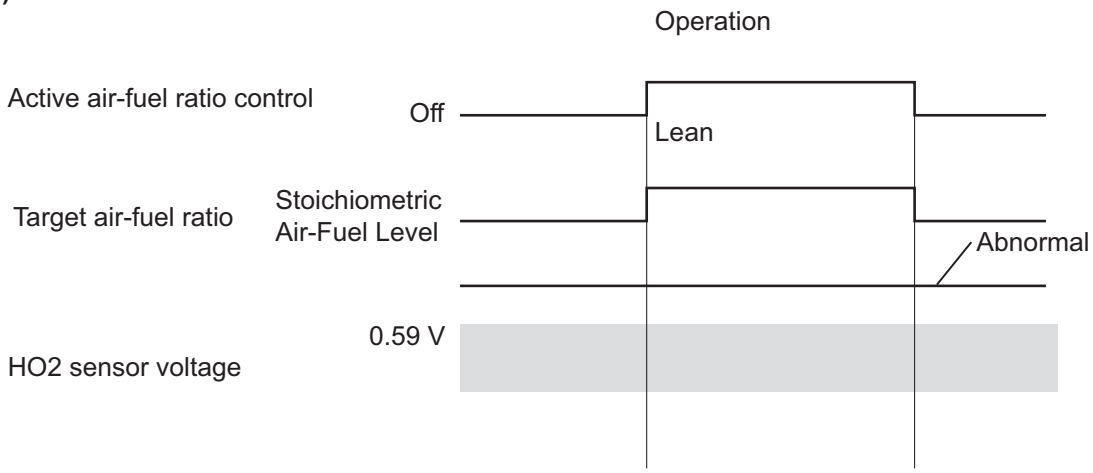

Y

A115541E02

ES

High or Low Impedance of Heated Oxygen (HO2) Sensor (DTC P0136 or P0137)

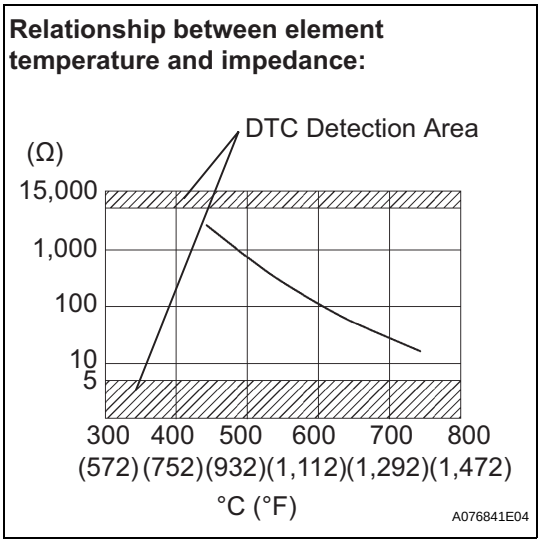

During normal air-fuel ratio feedback control, there are small variations in the exhaust gas oxygen concentration. In order to continuously monitor the slight variations in the HO2 sensor signal while the engine is running, the impedance* of the sensor is measured by the ECM. The ECM determines that there is a malfunction in the sensor when the measured impedance deviates from the standard range.
*: The effective resistance in an alternating current electrical circuit.
HINT:

- The impedance cannot be measured using an ohmmeter.
- DTC P0136 indicates the deterioration of the HO2 sensor. The ECM sets this DTC by calculating the impedance of the sensor when the typical enabling conditions are satisfied (2 driving cycles).
- DTC P0137 indicates an open or short circuit in the HO2 sensor (2 driving cycles). The ECM sets this DTC when the impedance of the sensor exceeds the threshold 15 kΩ.

MONITOR STRATEGY

Related DTCs	P0136: Heated oxygen sensor output voltage (Abnormal voltage output) P0136: Heated oxygen sensor impedance (Low) P0137: Heated oxygen sensor output voltage (Low voltage) P0137: Heated oxygen sensor impedance (High) P0138: Heated oxygen sensor output voltage (High voltage) P0138: Heated oxygen sensor output voltage (Extremely high)
Required Sensors/Components (Main)	Heated oxygen sensor
Required Sensors/Components (Related)	Crankshaft position sensor, engine coolant temperature sensor, mass air flow meter and throttle position sensor
Frequency of Operation	Once per driving cycle: Active air-fuel ratio control detection Continuous: Other
Duration	20 seconds: Active air-fuel ratio control detection 90 seconds: Heated oxygen sensor impedance (High) 30 seconds: Heated oxygen sensor impedance (Low) 10 seconds: Output voltage (Stuck high)
MIL Operation	2 driving cycles
Sequence of Operation	None

TYPICAL ENABLING CONDITIONS

All:

Monitor runs whenever following DTCs not present	P0031, 32 (A/F Sensor heater - Sensor 1) P0037, 38 (O2 Sensor heater - Sensor 2) P0100 - P0103 (MAF meter) P0110 - P0113 (IAT sensor) P0115 - P0118 (ECT sensor) P0120 - P0223, P2135 (TP sensor) P0125 (Insufficient ECT for Closed Loop) P0171, P0172 (Fuel system) P0300 - P0304 (Misfire) P0335 (CKP sensor) P0340 (CMP sensor) P0455, P0456 (EVAP system) P0500 (VSS) P2196 (A/F Sensor - rationality) P2A00 (A/F Sensor - slow response)

ES

Heated Oxygen Sensor Output Voltage (Abnormal Voltage Output, High Voltage and Low Voltage):

Active air-fuel ratio control	Executing
Active air-fuel ratio control begins when all of following conditions met:	-
Battery voltage	11 V or more
Engine coolant temperature	75°C (167°F) or more
Idling	OFF
Engine RPM	Less than 4,000 rpm
A/F sensor status	Activated
Fuel system status	Closed loop
Fuel cut	OFF
Engine load	10 to 80 %
Shift position	4th

Heated Oxygen Sensor Impedance (Low):

Battery voltage	11 V or more
Estimated rear HO2 sensor temperature	Less than 700°C (1,292°F)
ECM monitor	Completed
DTC P0606	Not set

Heated Oxygen Sensor Impedance (High):

Battery voltage	11 V or more
Estimated rear HO2 sensor temperature	450°C (842°F) or more
ECM monitor	Completed
DTC P0606	Not set

Heated Oxygen Sensor Output Voltage (Extremely High):

Battery voltage	11 V or more
Time after engine start	2 seconds or more

TYPICAL MALFUNCTION THRESHOLDS

Heated Oxygen Sensor Output Voltage (Abnormal Voltage Output):

Either of following conditions met:	1 or 2
1. All of following conditions (a), (b) and (c) met	-
(a) Commanded air-fuel ratio	14.3 or less
(b) Rear HO2 sensor voltage	0.21 to 0.59 V
(c) OSC (Oxygen Storage Capacity of Catalyst)	2 g or more
2. All of following conditions (d), (e) and (f) met	-
(d) Commanded air-fuel ratio	14.9 or more

(e) Rear HO2 sensor voltage	0.21 to 0.59 V
(f) OSC	2 g or more

Heated Oxygen Sensor Output Voltage (Low):

All of following conditions (a), (b) and (c) met	-
(a) Commanded air-fuel ratio	14.3 or less
(b) Rear HO2 sensor voltage	Less than 0.21 V
(c) OSC	2 g or more

Heated Oxygen Sensor Output Voltage (High):

All of following conditions (a), (b) and (c) met	-
(a) Commanded air-fuel ratio	14.9 or more
(b) Rear HO2 sensor voltage	More than 0.59 V
(c) OSC	2 g or more

ES

Heated Oxygen Sensor Impedance (Low):

Duration of following condition met	30 seconds or more
Heated oxygen sensor impedance	Less than 5 Ω

Heated Oxygen Sensor Impedance (High):

Duration of following condition met	90 seconds or more
Heated oxygen sensor impedance	15 kΩ or more

Heated Oxygen Sensor Output Voltage (Extremely High):

Duration of following condition met	10 seconds or more
Heated oxygen sensor voltage	1.2 V or more

COMPONENT OPERATING RANGE

Duration of following condition met	30 seconds or more
Heated oxygen sensor voltage	Varies between 0.1 and 0.9 V

MONITOR RESULT

Refer to CHECKING MONITOR STATUS (see page ES-17).

WIRING DIAGRAM

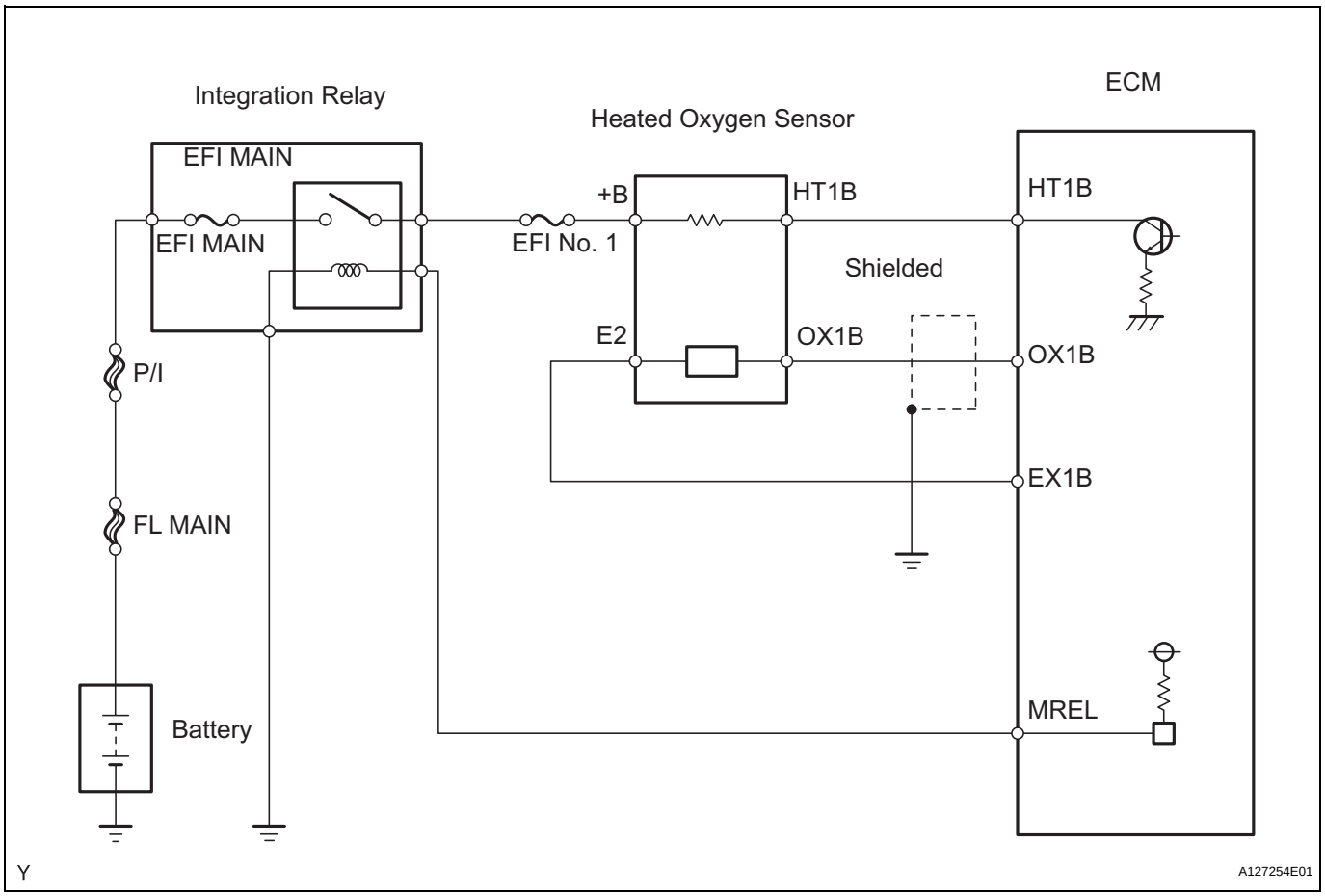

CONFIRMATION DRIVING PATTERN

HINT:

- This confirmation driving pattern is used in the "PERFORM CONFIRMATION DRIVING PATTERN" procedure of the following diagnostic troubleshooting procedure.
- Performing this confirmation pattern will activate the Heated Oxygen (HO2) sensor monitor. (The catalyst monitor is performed simultaneously.) This is very useful for verifying the completion of a repair.

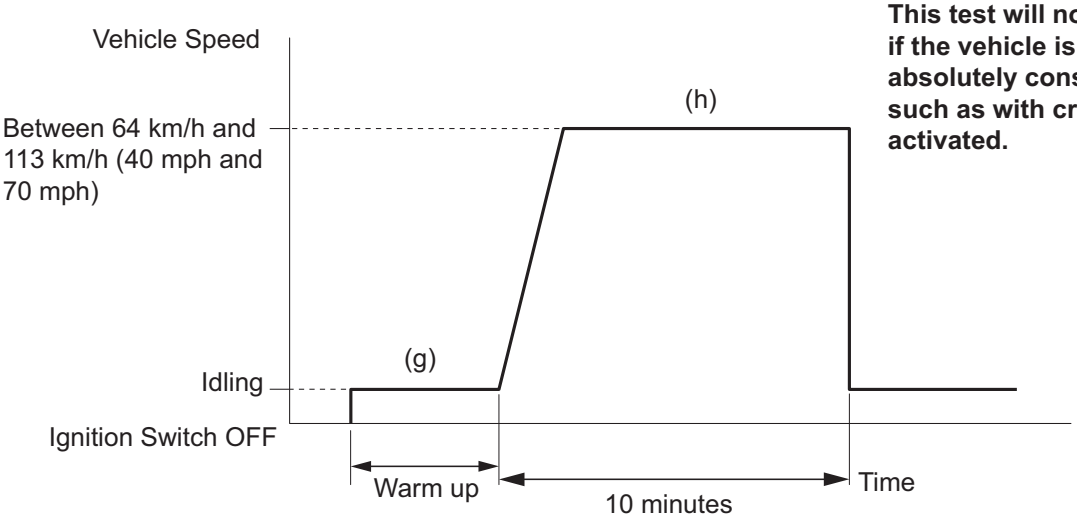

NOTICE:
This test will not be completed if the vehicle is driven at absolutely constant speed such as with cruise control activated.

(Note: Even if vehicle stops during driving pattern, test can be resumed)

P

A115372E26

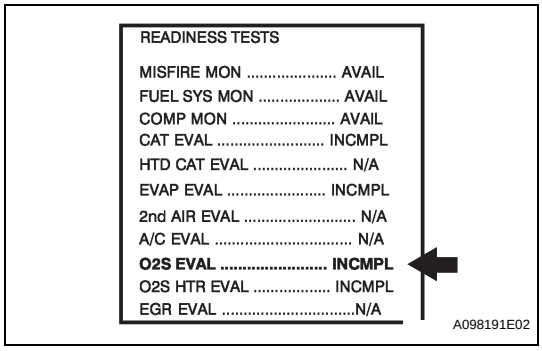

A098191E02

(a) Connect the intelligent tester to the DLC3.
(b) Turn the ignition switch ON.
(c) Turn the tester ON.
(d) Clear DTCs (if set) (see page ES-35).
(e) Select the following menu items: DIAGNOSIS / CARB OBD II / READINESS TESTS.
(f) Check that O2S EVAL is INCMPL (incomplete).
(g) Start the engine and warm it up.
(h) Drive the vehicle at between 64 km/h and 113 km/h (40 mph and 70 mph) for at least 10 minutes.
(i) Note the state of the Readiness Tests items. Those items will change to COMPL (complete) as the O2S EVAL monitor operates.
(j) On the tester, select the following menu items: DIAGNOSIS / ENHANCED OBD II / DTC INFO / PENDING CODES and check if any DTCs (any pending DTCs) are set.
HINT:
If O2S EVAL does not change to COMPL, and any pending DTCs fail to set, extend the driving time.

INSPECTION PROCEDURE

HINT:
Sensor 2 refers to the sensor mounted behind the Three-Way Catalytic Converter (TWC) and located far from the engine assembly.
HINT:
Intelligent tester only:

Malfunctioning areas can be identified by performing the A/F CONTROL function provided in the ACTIVE TEST. The A/F CONTROL function can help to determine whether the Air-Fuel Ratio (A/F) sensor, Heated Oxygen (HO2) sensor and other potential trouble areas are malfunctioning.
The following instructions describe how to conduct the A/F CONTROL operation using the intelligent tester.
(a) Connect the intelligent tester to the DLC3.
(b) Start the engine and turn the tester ON.
(c) Warm up the engine at an engine speed of 2,500 rpm for approximately 90 seconds.
(d) On the tester, select the following menu items: DIAGNOSIS / ENHANCED OBD II / ACTIVE TEST / A/F CONTROL.
(e) Perform the A/F CONTROL operation with the engine idling (press the RIGHT or LEFT button to change the fuel injection volume).
(f) Monitor the voltage outputs of the A/F and HO2 sensors (AFS B1 S1 and O2S B1 S2) displayed on the tester.

HINT:
- The A/F CONTROL operation lowers the fuel injection volume by 12.5 % or increases the injection volume by 25 %.
- The sensors react in accordance with increases and decreases in the fuel injection volume.

Standard

Tester Display (Sensor)	Injection Volumes	Status	Voltages
AFS B1 S1 (A/F)	+25 %	Rich	Less than 3.0
	-12.5 %	Lean	More than 3.35
O2S B1 S2 (HO2)	+25 %	Rich	More than 0.5
	-12.5 %	Lean	Less than 0.4

NOTICE:
The A/F sensor has an output delay of a few seconds and the HO2 sensor has a maximum output delay of approximately 20 seconds.

Case	A/F Sensor (Sensor 1) Output Voltage		HO2 Sensor (Sensor 2) Output Voltage		Main Suspected Trouble Areas
1	Injection Volume +25 % -12.5 %		Injection Volume +25 % -12.5 %		-
	Output Voltage More than 3.35 V Less than 3.0 V		Output Voltage More than 0.5 V Less than 0.4 V		
2	Injection Volume +25 % -12.5 %		Injection Volume +25 % -12.5 %		• A/F sensor • A/F sensor heater • A/F sensor circuit
	Output Voltage Almost no reaction	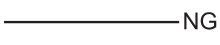	Output Voltage More than 0.5 V Less than 0.4 V		
3	Injection Volume +25 % -12.5 %		Injection Volume +25 % -12.5 %		• HO2 sensor • HO2 sensor heater • HO2 sensor circuit
	Output Voltage More than 3.35 V Less than 3.0 V		Output Voltage Almost no reaction	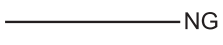	

Case	A/F Sensor (Sensor 1) Output Voltage		HO2 Sensor (Sensor 2) Output Voltage		Main Suspected Trouble Areas
4	Injection volume +25 % -12.5 %		Injection Volume +25 % -12.5 %		• Injector • Fuel pressure • Gas leakage from exhaust system (Air-fuel ratio extremely lean or rich)
	Output Voltage Almost no reaction	NG	Output Voltage Almost no reaction	NG	

Following the A/F CONTROL procedure enables technicians to check and graph the voltage outputs of both the A/F and HO2 sensors.
To display the graph, select the following menu items on the tester: DIAGNOSIS / ENHANCED OBD II / ACTIVE TEST / A/F CONTROL / USER DATA / AFS B1 S1 and O2S B1 S2; then press the YES button and then the ENTER button followed by the F4 button.
HINT:

- Read freeze frame data using the intelligent tester. Freeze frame data records the engine condition when malfunctions are detected. When troubleshooting, freeze frame data can help determine if the vehicle was moving or stationary, if the engine was warmed up or not, if the air-fuel ratio was lean or rich, and other data from the time the malfunction occurred.
- If the OX1B wire from the ECM connector is short-circuited to the +B wire, DTC P0138 will be set.

1 READ OUTPUT DTC

(a) Connect the intelligent tester to the DLC3.
(b) Turn the ignition switch ON and turn the tester ON.
(c) Select the following menu items: DIAGNOSIS / ENHANCED OBD II / DTC INFO / CURRENT CODES.
(d) Read DTCs.

Result

Display (DTC output)	Proceed To
P0138	A
P0137	B
P0136	C

B → Go to step 14

C → Go to step 7

A

2 READ VALUE USING INTELLIGENT TESTER (OUTPUT VOLTAGE OF HEATED OXYGEN SENSOR)

(a) Connect the intelligent tester to the DLC3.
(b) Turn the ignition switch ON and turn the tester ON.
(c) Select the following menu items: DIAGNOSIS / ENHANCED OBD II / DATA LIST / PRIMARY / O2S B1 S2.
(d) Allow the engine to idle.
(e) Read the Heated Oxygen (HO2) sensor output voltage while idling.

Result

HO2 Sensor Output Voltages	Proceed To
More than 1.2 V	A
Less than 1.0 V	B

B → Go to step 5

A

3 CHECK HARNESS AND CONNECTOR (CHECK FOR SHORT)

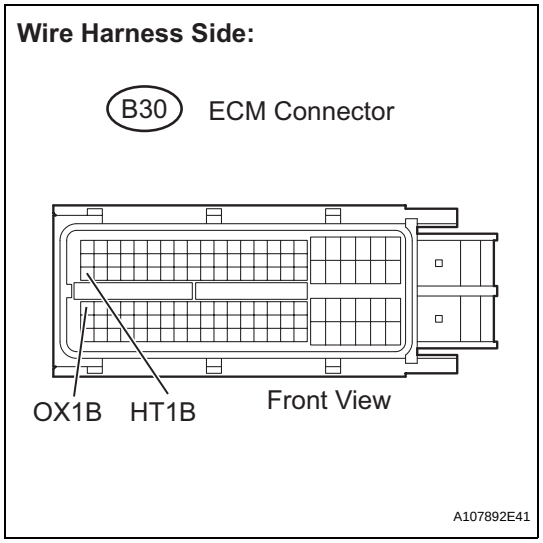

(a) Turn the ignition switch OFF and wait for 5 minutes.
(b) Disconnect the B30 ECM connector.
(c) Measure the resistance.
Standard resistance

Tester Connections	Specified Conditions
B30-47 (HT1B) - B30-64 (OX1B)	10 kΩ or higher

(d) Reconnect the ECM connector.

OK → REPLACE ECM

NG

4 INSPECT HEATED OXYGEN SENSOR (CHECK FOR SHORT)

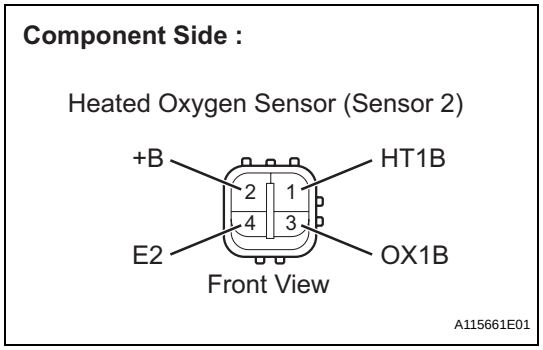

(a) Disconnect the B19 HO2 sensor connector.
(b) Measure the resistance.
Standard resistance

Tester Connections	Specified Conditions
2 (+B) - 4 (E2)	10 kΩ or higher
2 (+B) - 3 (OX1B)	10 kΩ or higher

(c) Reconnect the HO2 sensor connector.

NG → REPLACE HEATED OXYGEN SENSOR

OK

REPAIR OR REPLACE HARNESS OR CONNECTOR

5	PERFORM CONFIRMATION DRIVING PATTERN

NEXT

6	CHECK WHETHER DTC OUTPUT RECURS (DTC P0138)

(a) On the intelligent tester, select the following menu items: DIAGNOSIS / ENHANCED OBD II / DTC INFO / CURRENT CODES.
(b) Read DTCs.

ES

Result

Display (DTC Output)	Proceed To
P0138	A
No output	B

B → CHECK FOR INTERMITTENT PROBLEMS

A

REPLACE HEATED OXYGEN SENSOR

7	READ VALUE USING INTELLIGENT TESTER (OUTPUT VOLTAGE OF HEATED OXYGEN SENSOR)

(a) Connect the intelligent tester to the DLC3.
(b) Turn the ignition switch ON and turn the tester ON.
(c) Start the engine.
(d) Select the following menu items: DIAGNOSIS / ENHANCED OBD II / DATA LIST / PRIMARY / O2S B1 S2
(e) After warming up the engine, run the engine at an engine speed of 2,500 rpm for 3 minutes.
(f) Read the output voltage of the HO2 sensor when the engine rpm is suddenly increased.
HINT:
Quickly accelerate the engine to 4,000 rpm 3 times using the accelerator pedal.
Standard voltage:
Fluctuates between 0.4 V or less and 0.5 V or more.

NG → Go to step 14

OK

8	PERFORM CONFIRMATION DRIVING PATTERN

NEXT

9	CHECK WHETHER DTC OUTPUT RECURS (DTC P0136)

(a) On the intelligent tester, select the following menu items: DIAGNOSIS / ENHANCED OBD II / DTC INFO / CURRENT CODES.
(b) Read DTCs.

Result

Display (DTC Output)	Proceed To
P0136	A
No output	B

B → CHECK FOR INTERMITTENT PROBLEMS

A

10	REPLACE HEATED OXYGEN SENSOR

NEXT

11	PERFORM CONFIRMATION DRIVING PATTERN

NEXT

12	CHECK WHETHER DTC OUTPUT RECURS (DTC P0136)

(a) On the intelligent tester, select the following menu items: DIAGNOSIS / ENHANCED OBD II / DTC INFO / CURRENT CODES.
(b) Read DTCs.

Result

Display (DTC Output)	Proceed To
P0136	A
No output	B

B → REPAIR COMPLETE

A

13	PERFORM ACTIVE TEST USING INTELLIGENT TESTER (INJECTION VOLUME)

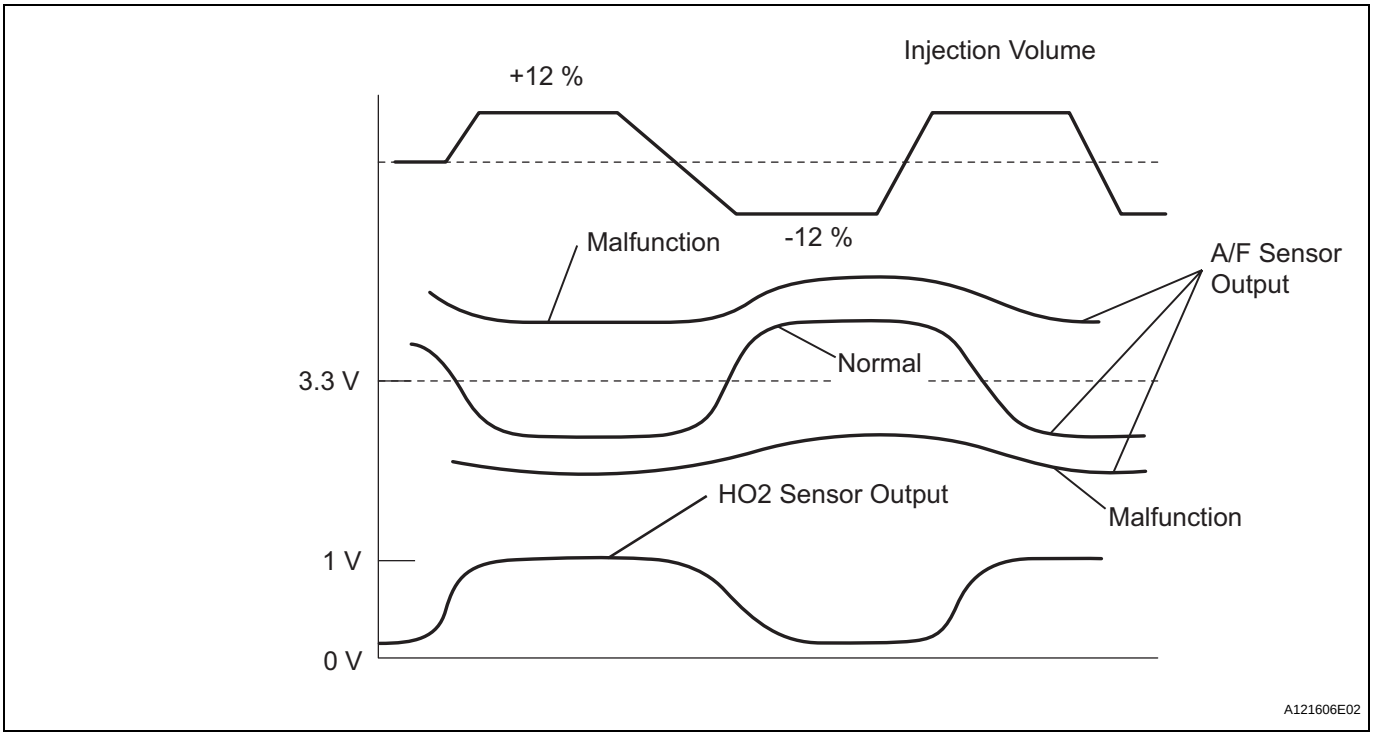

(a) Connect the intelligent tester to the DLC3.
(b) Start the engine and turn the tester ON.
(c) Warm up the engine.
(d) Select the following menu items: DIAGNOSIS / ENHANCED OBD II / ACTIVE TEST / INJ VOL.
(e) Change the fuel injection volume using the tester, monitoring the voltage output of Air-Fuel Ratio (A/F) and HO2 sensors displayed on the tester.

HINT:

- Change the fuel injection volume within the range of -12 % and +12 %. The injection volume can be changed in 1 % graduations within the range.
- The A/F sensor is displayed as AFS B1 S1, and the HO2 sensor is displayed as O2S B1 S2, on the intelligent tester.

Result

Tester Display (Sensor)	Voltage Variations	Proceed To
AFS B1 S1 (A/F)	Alternates between more and less than 3.3 V	OK
	Remains at more than 3.3 V	NG
	Remains at less than 3.3 V	NG

HINT:
A normal HO2 sensor voltage (O2S B1 S2) reacts in accordance with increases and decreases in fuel injection volumes. When the A/F sensor voltage remains at either less or more than 3.3 V despite the HO2 sensor indicating a normal reaction, the A/F sensor is malfunctioning.

NG	REPLACE AIR-FUEL RATIO SENSOR

OK

CHECK AND REPAIR EXTREMELY RICH OR LEAN ACTUAL AIR-FUEL RATIO (INJECTOR, FUEL PRESSURE, GAS LEAKAGE FROM EXHAUST SYSTEM, ETC.)

14	CHECK FOR EXHAUST GAS LEAK

OK:
No gas leakage.

NG → REPAIR OR REPLACE EXHAUST GAS LEAKAGE POINT

OK

15	INSPECT HEATED OXYGEN SENSOR (HEATER RESISTANCE) (See page ES-89)

NG → REPLACE HEATED OXYGEN SENSOR

OK

16	INSPECT INTEGRATION RELAY (EFI RELAY) (See page ES-84)

NG → REPLACE INTEGRATION RELAY (EFI RELAY)

OK

17	CHECK HARNESS AND CONNECTOR (HEATED OXYGEN SENSOR - ECM)

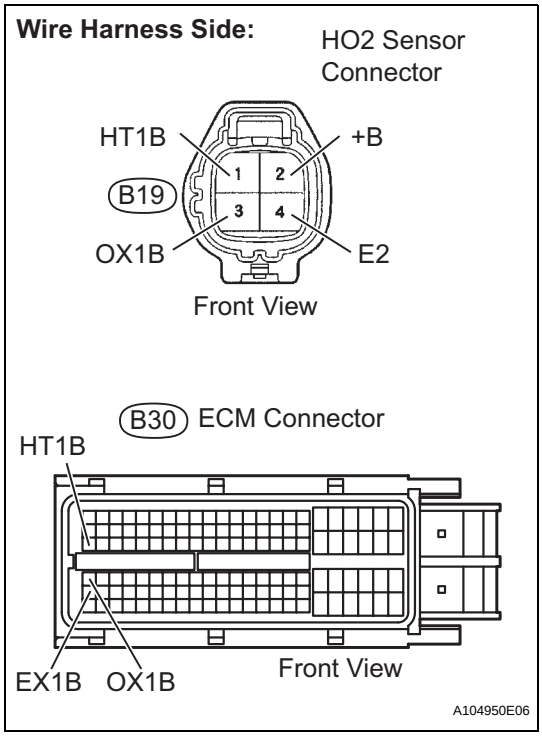

(a) Disconnect the B19 HO2 sensor connector.
(b) Turn the ignition switch ON.
(c) Measure the voltage between the +B terminal of the HO2 sensor connector and body ground.

Standard voltage

Tester Connections	Specified Conditions
B19-2 (+B) - Body ground	9 to 14 V

(d) Turn the ignition switch OFF.
(e) Disconnect the B30 ECM connector.
(f) Measure the resistance.

Standard resistance (Check for open)

Tester Connections	Specified Conditions
B19-1 (HT1B) - B30-47 (HT1B)	Below 1 Ω
B19-3 (OX1B) - B30-64 (OX1B)	Below 1 Ω
B19-4 (E2) - B30-87 (EX1B)	Below 1 Ω

Standard resistance (Check for short)

Tester Connections	Specified Conditions
B19-1 (HT1B) or B30-47 (HT1B) - Body ground	10 kΩ or higher
B19-3 (OX1B) or B30-64 (OX1B) - Body ground	10 kΩ or higher
B19-4 (E2) or B30-87 (EX1B) - Body ground	10 kΩ or higher

(g) Reconnect the HO2 sensor connector.
(h) Reconnect the ECM connector.

Reference (System Diagram of Sensor 2):

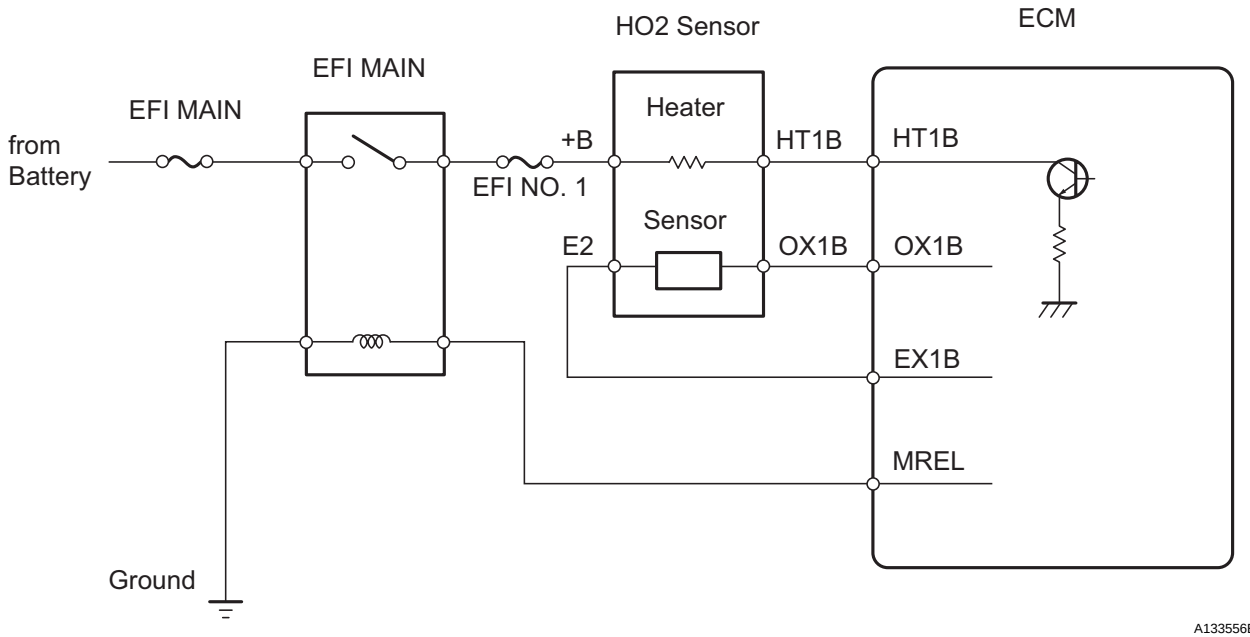

NG → REPAIR OR REPLACE HARNESS OR CONNECTOR

OK

REPLACE HEATED OXYGEN SENSOR

DTC	P0171	System Too Lean (Bank 1)

DTC	P0172	System Too Rich (Bank 1)

DESCRIPTION

The fuel trim is related to the feedback compensation value, not to the basic injection time. The fuel trim consists of both the short-term and the long-term fuel trims.

The short-term fuel trim is fuel compensation that is used to constantly maintain the air-fuel ratio at stoichiometric levels. The signal from the Air-Fuel Ratio (A/F) sensor indicates whether the air-fuel ratio is rich or lean compared to the stoichiometric ratio. This triggers a reduction in the fuel injection volume if the air-fuel ratio is rich and an increase in the fuel injection volume if it is lean.

ES

Factors such as individual engine differences, wear over time and changes in operating environment cause short-term fuel trim to vary from the central value. The long-term fuel trim, which controls overall fuel compensation, compensates for long-term deviations in the fuel trim from the central value caused by the short-term fuel trim compensation.

If both the short-term and long-term fuel trims are lean or rich beyond predetermined values, it is interpreted as a malfunction, and the ECM illuminates the MIL and sets a DTC.

DTC No.	DTC Detection Conditions	Trouble Areas
P0171	With warm engine and stable air-fuel ratio feedback, fuel trim considerably in error to lean side (2 trip detection logic)	• Air induction system • Injector blockage • Mass Air Flow (MAF) meter • Engine Coolant Temperature (ECT) sensor • Fuel pressure • Gas leakage from exhaust system • Open or short in A/F sensor (sensor 1) circuit • A/F sensor (sensor 1) • A/F sensor heater (sensor 1) • Integration relay (EFI MAIN relay) • A/F sensor heater and EFI MAIN relay circuits • PCV valve and hose • PCV hose connections • ECM
P0172	With warm engine and stable air-fuel ratio feedback, fuel trim considerably in error to rich side (2 trip detection logic)	• Injector leakage or blockage • MAF meter • ECT sensor • Ignition system • Fuel pressure • Gas leakage from exhaust system • Open or short in A/F sensor (sensor 1) circuit • A/F sensor (sensor 1) • A/F sensor heater (sensor 1) • Integration relay (EFI MAIN relay) • A/F sensor heater and EFI MAIN relay circuits • ECM

HINT:

- When DTC P0171 is set, the actual air-fuel ratio is on the lean side. When DTC P0172 is set, the actual air-fuel ratio is on the rich side.
- If the vehicle runs out of fuel, the air-fuel ratio is lean and DTC P0171 may be set. The MIL is then illuminated.
- When the total of the short-term and long-term fuel trim values is within 20 % (and the engine coolant temperature is more than 75°C [167°F]), the system is functioning normally.

MONITOR DESCRIPTION

Under closed-loop fuel control, fuel injection volumes that deviate from those estimated by the ECM cause changes in the long-term fuel trim compensation value. The long-term fuel trim is adjusted when there are persistent deviations in the short-term fuel trim values. Deviations from the ECM's estimated fuel injection volumes also affect the average fuel trim learning value, which is a combination of the average short-term fuel trim (fuel feedback compensation value) and the average long-term fuel trim (learning value of the air-fuel ratio). If the average fuel trim learning value exceeds the malfunction threshold, the ECM interprets this as a fault in the fuel system and sets a DTC.
Example:
The average fuel trim learning value is +35 % or more or -35 % or less, the ECM interprets this as a fuel system malfunction.

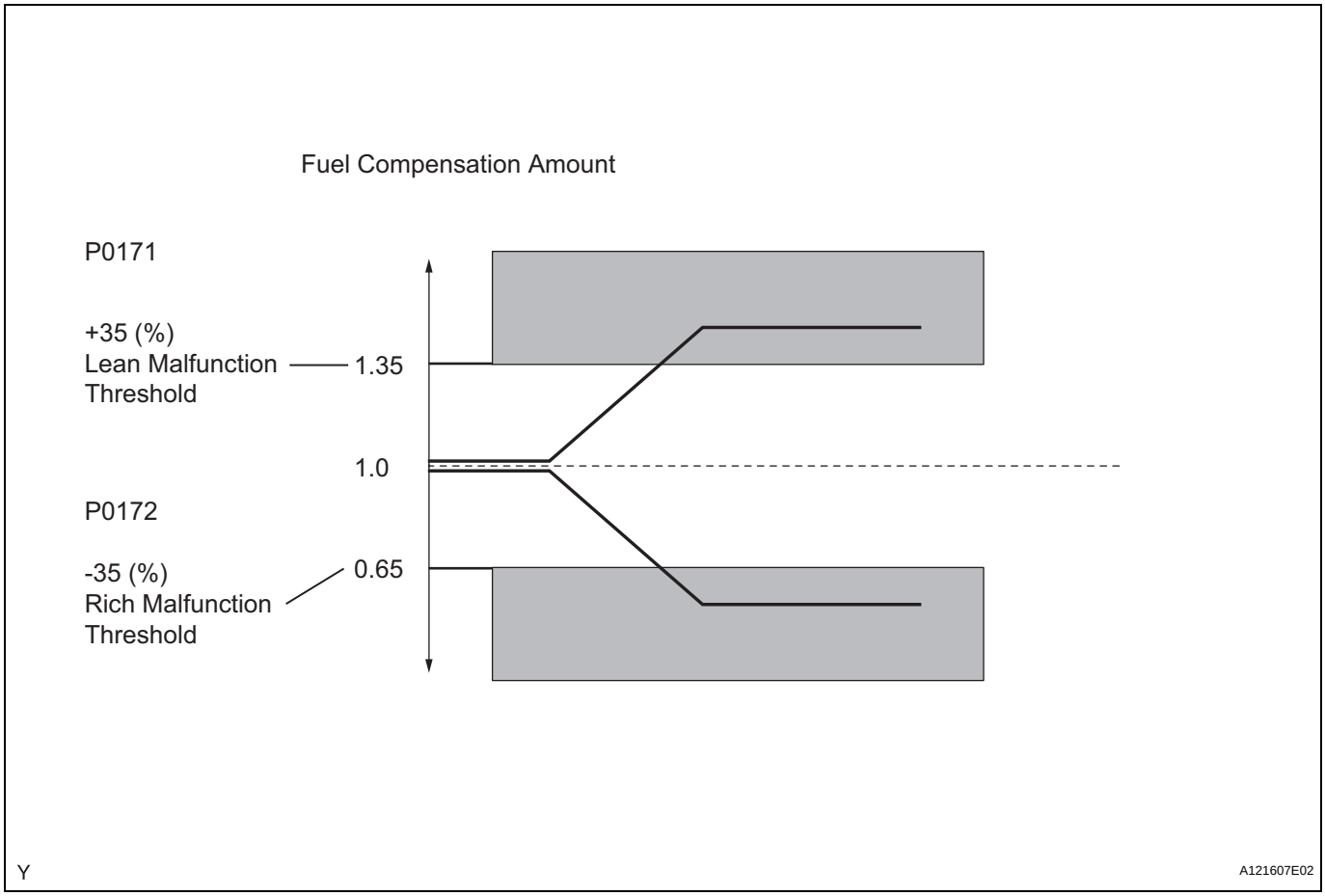

MONITOR STRATEGY

Related DTCs	P0171: Fuel trim lean P0172: Fuel trim rich
Required Sensors/Components (Main)	Fuel system
Required Sensors/Components (Related)	A/F sensor, Mass air flow meter, Crankshaft position sensor
Frequency of Operation	Continuous
Duration	Within 10 seconds
MIL Operation	2 driving cycles
Sequence of Operation	None

TYPICAL ENABLING CONDITIONS

Monitor runs whenever following DTCs not present	P0010 (VVT OCV) P0011 (VVT System 1 - Advance) P0012 (VVT System 1 - Retard) P0031, P0032 (A/F sensor heater - Sensor 1) P0100 - P0103 (MAF meter) P0115 - P0118 (ECT sensor) P0120 - P0223, P2135 (TP sensor) P0125 (Insufficient ECT for Closed Loop) P0335 (CKP sensor) P0340 (CMP sensor) P0351 - P0354 (Igniter) P0500 (VSS)
Fuel system status	Closed loop
Battery voltage	11 V or more
Either of following conditions 1 or 2 set	-
1. Engine RPM	Below 1,100 rpm
2. Intake air amount per revolution	0.22 g/rev or more
Catalyst monitor	Not executed

ES

TYPICAL MALFUNCTION THRESHOLDS

Purge-cut	Executing
Either of following conditions 1 or 2 met	-
1. Average of short-term fuel trim and long-term fuel trim	35 % or more (varies with ECT)
2. Average of short-term fuel trim and long-term fuel trim	-35 % or less (varies with ECT)

WIRING DIAGRAM

Refer to DTC P2195 (see page ES-296).

INSPECTION PROCEDURE

HINT:

- Read freeze frame data using the intelligent tester. Freeze frame data records the engine condition when malfunctions are detected. When troubleshooting, freeze frame data can help determine if the vehicle was moving or stationary, if the engine was warmed up or not, if the air-fuel ratio was lean or rich, and other data from the time the malfunction occurred.
- A low A/F sensor voltage could be caused by a rich air-fuel mixture. Check for conditions that would cause the engine to run rich.
- A high A/F sensor voltage could be caused by a lean air-fuel mixture. Check for conditions that would cause the engine to run lean.

1	**CHECK ANY OTHER DTCS OUTPUT (IN ADDITION TO DTC P0171 OR P0172)**

(a) Connect the intelligent tester to the DLC3.
(b) Turn the ignition switch ON and turn the tester ON.
(c) Select the following menu items: DIAGNOSIS / ENHANCED OBD II / DTC INFO / CURRENT CODES.
(d) Read DTCs.

Result

Display (DTC Output)	Proceed To
P0171 or P0172	A
P0171 or P0172 and other DTCs	B

HINT:
If any DTCs other than P0171 or P0172 are output, troubleshoot those DTCs first.

B → **GO TO DTC CHART**

A

2 PERFORM ACTIVE TEST USING INTELLIGENT TESTER (A/F CONTROL)

(a) Connect the intelligent tester to the DLC3.
(b) Start the engine and turn the tester ON.
(c) Warm up the engine at an engine speed of 2,500 rpm for approximately 90 seconds.
(d) On the tester, select the following menu items: DIAGNOSIS / ENHANCED OBD II / ACTIVE TEST / A/F CONTROL.
(e) Perform the A/F CONTROL operation with the engine in an idling condition (press the RIGHT or LEFT button to change the fuel injection volume).
(f) Monitor the output voltages of A/F and HO2 sensors (AFS B1S1 and O2S B1S2) displayed on the tester.

Result:

The A/F sensor reacts in accordance with increases and decreases in the fuel injection volume:
+25 % = Rich output:
Less than 3.0 V
-12.5 % = Lean output:
More than 3.35 V

NOTICE:

The A/F sensor has an output delay of a few seconds and the HO2 sensor has a maximum output delay of approximately 20 seconds.

Case	A/F Sensor (Sensor 1) Output Voltage		HO2 Sensor (Sensor 2) Output Voltage		Main Suspected Trouble Areas
1	Injection Volume +25 % -12.5 %		Injection Volume +25 % -12.5 %		-
	Output Voltage More than 3.35 V Less than 3.0 V		Output Voltage More than 0.5 V Less than 0.4 V		
2	Injection Volume +25 % -12.5 %		Injection Volume +25 % -12.5 %		• A/F sensor • A/F sensor heater • A/F sensor circuit
	Output Voltage Almost no reaction		Output Voltage More than 0.5 V Less than 0.4 V		

Case	A/F Sensor (Sensor 1) Output Voltage		HO2 Sensor (Sensor 2) Output Voltage		Main Suspected Trouble Areas
3	Injection volume +25 % -12.5 %		Injection Volume +25 % -12.5 %		Extremely rich or lean actual air-fuel ratio • Injector leakage or blockage • Gas leakage from exhaust system • Fuel pressure • MAF meter • ECT sensor • Air induction system • PCV hose connections
	Output Voltage Almost no reaction		Output Voltage Almost no reaction		

ES

Following the A/F CONTROL procedure enables technicians to check and graph the voltage outputs of both the A/F and HO2 sensors.
To display the graph, select the following menu items on the tester: DIAGNOSIS / ENHANCED OBD II / ACTIVE TEST / A/F CONTROL / USER DATA / AFS B1S1 and O2S B1S2; then press the YES button and then the ENTER button followed by the F4 button.

Result

Result	Proceed To
Case 1	C
Case 2	B
Case 3	A

B → **Go to step 11**

C → **Go to step 15**

A

3 READ VALUE USING INTELLIGENT TESTER (MAF)

(a) Connect the intelligent tester to the DLC3.
(b) Turn the ignition switch ON and turn the tester ON.
(c) Select the following menu items: DIAGNOSIS / ENHANCED OBD II / DATA LIST / PRIMARY / MAF and COOLANT TEMP.
(d) Allow the engine to idle until the COOLANT TEMP reaches 75°C (167°F) or more.
(e) Read the MAF with the engine in an idling condition and at an engine speed of 2,500 rpm.
Standard:
MAF while engine idling: Between 1 g/sec. and 3 g/sec. (shift position: N, A/C: OFF).
MAF at engine speed of 2,500 rpm: Between 2 g/sec. and 6 g/sec. (shift position: N, A/C: OFF).

NG → **REPLACE MASS AIR FLOW METER**

OK

4	READ VALUE USING INTELLIGENT TESTER (COOLANT TEMP)

(a) Connect the intelligent tester to the DLC3.
(b) Turn the ignition switch ON and turn the tester ON.
(c) Select the following menu items: DIAGNOSIS / ENHANCED OBD II / DATA LIST / PRIMARY / COOLANT TEMP.
(d) Read the COOLANT TEMP twice, when the engine is both cold and warmed up.
Standard:
With cold engine: Same as ambient air temperature.
With warm engine: Between 75°C and 100°C (167°F and 212°F).

NG → **REPLACE ENGINE COOLANT TEMPERATURE SENSOR**

OK

5	CHECK PCV HOSE CONNECTIONS

(a) Check for PCV hose connections.
OK:
PCV hose is connected correctly and is not damaged.

NG → **REPAIR OR REPLACE PCV HOSE**

OK

6	CHECK AIR INDUCTION SYSTEM

(a) Check the air induction system for vacuum leakage.
OK:
No leakage from air induction system.

NG → **REPAIR OR REPLACE AIR INDUCTION SYSTEM**

OK

7	CHECK FOR SPARKS AND IGNITION (See page ES-171)

NG → **REPAIR OR REPLACE IGNITION SYSTEM**

OK

8	CHECK FOR EXHAUST GAS LEAK

(a) Check for exhaust gas leakage.

OK:
No gas leakage.

NG → **REPAIR OR REPLACE EXHAUST SYSTEM**

OK

9	CHECK FUEL PRESSURE

(a) Check the fuel pressure (see page FU-6).
Standard pressure:
304 to 343 kPa (3.1 to 3.5 kgf/cm^2, 44.1 to 49.7 psi)

NG → **REPAIR OR REPLACE FUEL SYSTEM**

OK

10	INSPECT FUEL INJECTOR (INJECTION AND VOLUME)

(a) Check the injection volume (see page FU-11).
Standard injection volume:
45 to 58 cm^3 (2.9 to 3.5 cu in.) per 15 seconds

NG → **REPLACE FUEL INJECTOR**

OK

11	INSPECT AIR-FUEL RATIO SENSOR (HEATER RESISTANCE) (See page ES-83)

NG → **REPLACE AIR-FUEL RATIO SENSOR**

OK

12	INSPECT INTEGRATION RELAY (EFI RELAY) (See page ES-84)

NG → **REPLACE INTEGRATION RELAY**

OK

13	CHECK HARNESS AND CONNECTOR (A/F SENSOR - ECM) (See page ES-310)

NG → **REPAIR OR REPLACE HARNESS OR CONNECTOR**

OK

14	REPLACE AIR-FUEL RATIO SENSOR

NEXT

15	PERFORM CONFIRMATION DRIVING PATTERN

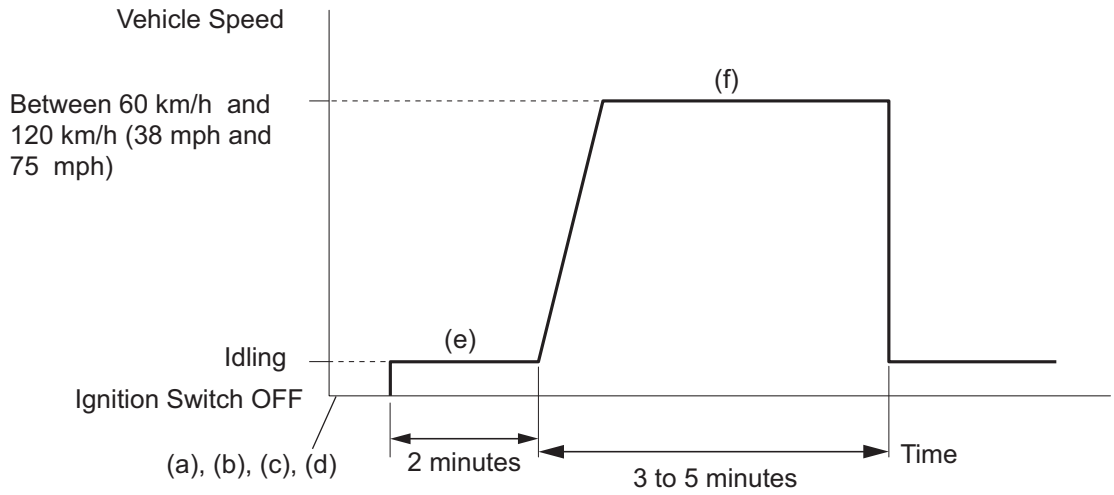

(a) Connect the intelligent tester to the DLC3.
(b) Turn the ignition switch ON and turn the tester ON.
(c) Clear DTCs (see page ES-35).
(d) Switch the ECM from normal mode to check mode using the tester (see page ES-38).
(e) Start the engine and warm it up with all the accessories switched OFF.
(f) Drive the vehicle at between 60 km/h and 120 km/h (38 mph and 75 mph) and at an engine speed of between 1,400 rpm and 3,200 rpm for 3 to 5 minutes.
HINT:
If the system is still malfunctioning, the MIL will be illuminated during step (f).
NOTICE:
If the conditions in this test are not strictly followed, no malfunction will be detected.

NEXT

16	CHECK WHETHER DTC OUTPUT RECURS (DTC P0171 OR P0172)

(a) On the intelligent tester, select the following menu items: DIAGNOSIS / ENHANCED OBD II / DTC INFO / CURRENT CODES.
(b) Read DTCs.

Result

Display (DTC Output)	Proceed To
No output	A
P0171 or P0172	B

B → Go to step 3

A → END

DTC	P0300	Random / Multiple Cylinder Misfire Detected

DTC	P0301	Cylinder 1 Misfire Detected

DTC	P0302	Cylinder 2 Misfire Detected

DTC	P0303	Cylinder 3 Misfire Detected

DTC	P0304	Cylinder 4 Misfire Detected

DESCRIPTION

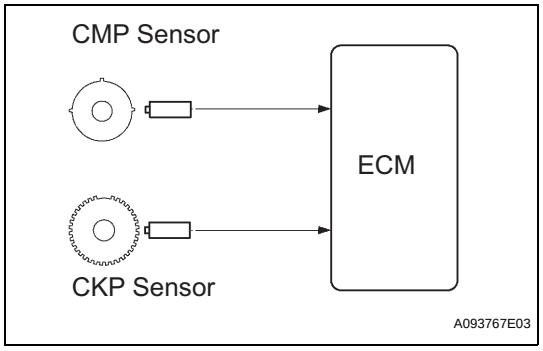

When the engine misfires, high concentrations of hydrocarbons (HC) enter the exhaust gas. Extremely high HC concentration levels can cause increases in exhaust emission levels. High concentrations of HC can also cause increases in the Three-Way Catalytic Converter (TWC) temperature, which may cause damage to the TWC. To prevent these increases in emissions and to limit the possibility of thermal damage, the ECM monitors the misfire rate. When the temperature of the TWC reaches the point of thermal degradation, the ECM blinks the MIL. To monitor misfires, the ECM uses both the Camshaft Position (CMP) sensor and the Crankshaft Position (CKP) sensor. The CMP sensor is used to identify any misfiring cylinders and the CKP sensor is used to measure variations in the crankshaft rotation speed. Misfires are counted as when the crankshaft rotation speed variations exceed predetermined thresholds. If the misfire rate exceeds the threshold level, and could cause emission deterioration, the ECM illuminates the MIL and sets a DTC.

DTC No.	DTC Detection Conditions	Trouble Areas
P0300	Simultaneous misfiring of several cylinders detected (2 trip detection logic)	• Open or short in engine wire harness • Connector connection • Vacuum hose connections • Ignition system • Injector • Fuel pressure • Mass Air Flow (MAF) meter • Engine Coolant Temperature (ECT) sensor • Compression pressure • Valve clearance • Valve timing • PCV valve and hose • PCV hose connections • Air induction system • ECM
P0301 P0302 P0303 P0304	Misfiring of specific cylinder detected (2 trip detection logic)	

When DTCs for misfiring cylinders are randomly set, but DTC P0300 is not set, it indicates that misfires have been detected in different cylinders at different times. DTC P0300 is only set when several misfiring cylinders are detected at the same time.

MONITOR DESCRIPTION

The ECM illuminates the MIL and sets a DTC when either of the following conditions, which could cause emission deterioration, is detected (2 trip detection logic).

- Within the first 1,000 crankshaft revolutions of the engine starting, an excessive misfiring rate (approximately 20 to 50 misfires per 1,000 crankshaft revolutions) occurs once.
- After the first 1,000 crankshaft revolutions, an excessive misfiring rate (approximately 20 to 50 misfires per 1,000 crankshaft revolutions) occurs 4 times in sequential crankshaft revolutions.

The ECM flashes the MIL and sets a DTC when either of the following conditions, which could cause Three-Way Catalytic Converter (TWC) damage, is detected (2 trip detection logic).

- In every 200 crankshaft revolutions at a high engine rpm, the threshold misfiring percentage is recorded once.
- In every 200 crankshaft revolutions at a normal engine rpm, the threshold misfiring percentage is recorded 3 times.

ES

MONITOR STRATEGY

Related DTCs	P0300: Multiple cylinder misfire P0301: Cylinder 1 misfire P0302: Cylinder 2 misfire P0303: Cylinder 3 misfire P0304: Cylinder 4 misfire
Required Sensors/Components (Main)	Crankshaft position sensor and Camshaft position sensor
Required Sensors/Components (Related)	Engine coolant temperature and intake air temperature sensors and Mass air flow meter
Frequency of Operation	Continuous
Duration	1,000 to 4,000 crankshaft revolutions: Emission related misfire 200 to 600 crankshaft revolutions: Catalyst damaged misfire
MIL Operation	2 driving cycles: Emission related misfire MIL flashes immediately: Catalyst damaged misfire
Sequence of Operation	None

TYPICAL ENABLING CONDITIONS

Misfire:

Monitor runs whenever following DTCs not present	P0100 - P0103 (MAF meter) P0110 - P0113 (IAT sensor) P0115 - P0118 (ECT sensor) P0120 - P0223, P2135 (TP sensor) P0125 (Insufficient ECT for Closed Loop) P0327, P0328 (Knock sensor) P0335 (CKP sensor) P0340 (CMP sensor) P0500 (VSS)
Battery voltage	8 V or more
VVT system	Not operated by scan tool
Engine RPM	400 to 6,400 rpm
Either of following conditions (a) or (b) met	-
(a) ECT at engine start	More than -7°C (19°F)
(b) ECT	More than 20°C (68°F)
Fuel cut	OFF

Monitor period of emission-related-misfire:

First 1,000 revolutions after engine start, or Check Mode	Crankshaft 1,000 revolutions
Except above	Crankshaft 1,000 revolutions x 4

Monitor period of catalyst-damaged-misfire (MIL blinks):

All of following conditions 1, 2 and 3 met	Crankshaft 200 revolutions x 3
1. Driving cycles	1st

2. Check mode	OFF
3. Engine RPM	Less than 2,300 rpm
Except above	Crankshaft 200 revolutions

TYPICAL MALFUNCTION THRESHOLDS

Monitor period of emission-related-misfire:

Misfire rate	1.3 % or more

Monitor period of catalyst-damaged-misfire (MIL blinks):

Number of misfire per 200 revolutions	118 or more (varies with intake air amount and RPM)

MONITOR RESULT

Refer to CHECKING MONITOR STATUS (see page ES-17).

WIRING DIAGRAM

Wiring diagram of the ignition system.

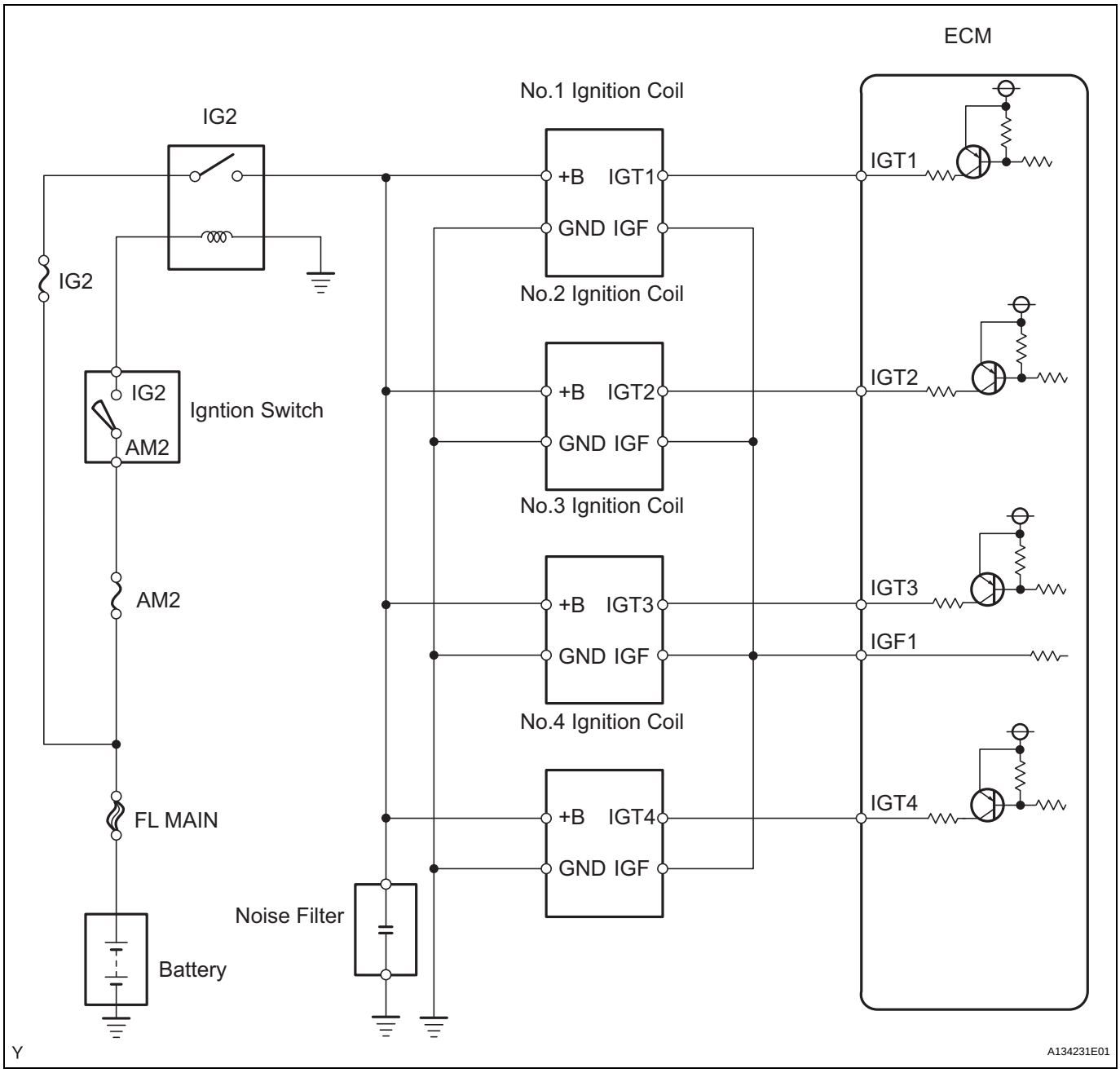

Wiring diagram of the injector circuit.

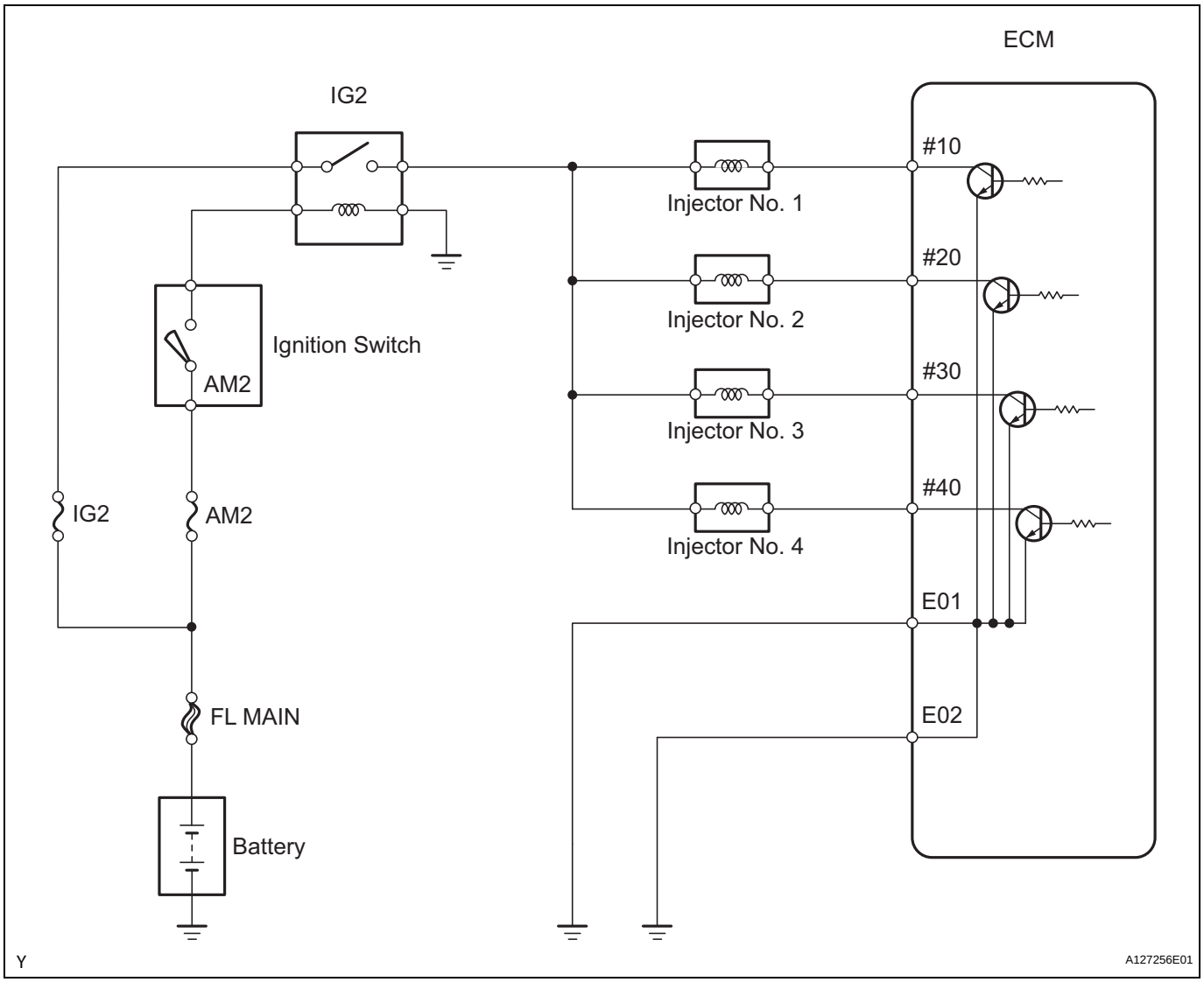

CONFIRMATION DRIVING PATTERN

1. Connect the intelligent tester to the DLC3.
2. Turn the ignition switch ON.
3. Turn the tester ON.
4. Record the DTC(s) and freeze frame data.
5. Using the tester, switch the ECM from normal mode to check mode (see page ES-38).
6. Read the misfire counts of each cylinder (CYL #1 to #4) with the engine in an idling condition. If any misfire count is displayed, skip the following confirmation driving pattern.
7. Drive the vehicle several times with the conditions, such as engine rpm and engine load, shown in MISFIRE RPM and MISFIRE LOAD in the DATA LIST.
   HINT:
   In order to store misfire DTCs, it is necessary to drive the vehicle for the period of time shown in the table below, with the MISFIRE RPM and MISFIRE LOAD in the DATA LIST.

Engine RPM	Duration
Idling	3.5 minutes or more
1,000	3 minutes or more
2,000	1.5 minutes or more
3,000	1 minute or more

8. Check whether misfires have occurred by checking DTCs and freeze frame data.
   HINT:
   Do not turn the ignition switch OFF until the stored DTC(s) and freeze frame data have been recorded. When the ECM returns to normal mode (default), the stored DTC(s), freeze frame data and other data will be erased.
9. Record the DTC(s), freeze frame data and misfire counts.
10. Turn the ignition switch OFF and wait for at least 5 seconds.

INSPECTION PROCEDURE

HINT:

- If any DTCs other than misfire DTCs are output, troubleshoot those DTCs first.
- Read freeze frame data using the intelligent tester. Freeze frame data records the engine condition when malfunctions are detected. When troubleshooting, freeze frame data can help determine if the vehicle was moving or stationary, if the engine was warmed up or not, if the air-fuel ratio was lean or rich, and other data from the time the malfunction occurred.
- If the misfire does not recur when the vehicle is brought to the workshop, reproduce the conditions stored in the freeze frame data.
- If the misfire still cannot be reproduced even though the conditions stored in the freeze frame data have been duplicated, one of the following factors is considered to be a possible cause of the problem:
  (a) The fuel level is low.
  (b) Improper fuel is used.
  (c) The spark plugs are dirty.
  (d) The problem is complex due to multiple factors.
- After finishing repairs, check that no misfires occur in each cylinder (CYL #1, #2, #3 and #4).
- Be sure to confirm that no misfiring cylinder DTCs are set again by conducting the confirmation driving pattern, after the repairs.
- For 6 and 8 cylinder engines, the ECM intentionally does not set the specific misfiring cylinder DTCs at high engine RPM. If misfires only occur during high engine RPM driving, only DTC P0300 is set.
  In the event of DTC P0300 being present, perform the following operations:
  (a) Clear the DTC (see page ES-35).
  (b) Start the engine and conduct the confirmation driving pattern.
  (c) Read the misfiring rates of each cylinder or DTC(s) using the tester.
  (d) Repair the cylinder(s) that has a high misfiring rate or is indicated by the DTC.
  (e) After finishing repairs, conduct the confirmation driving pattern again, in order to verify that DTC P0300 is not set.
- When either SHORT FT #1 or LONG FT #1 in the freeze frame data is outside the range of +-20 %, the air-fuel ratio may be rich (-20 % or less) or lean (+20 % or more).
- When the COOLANT TEMP in the freeze frame data is less than 75°C (167°F), the misfires occurred only while warming up the engine.

1	CHECK ANY OTHER DTCS OUTPUT (IN ADDITION TO MISFIRE DTCS)

(a) Connect the intelligent tester to the DLC3.
(b) Turn the ignition switch ON.
(c) Turn the tester ON.
(d) Select the following menu items: DIAGNOSIS / ENHANCED OBD II / DTC INFO / CURRENT CODES.
(e) Read DTCs.

Result

Display (DTC Output)	Proceed To
P0300, P0301, P0302, P0303 and/or P0304	A
P0300, P0301, P0302, P0303 and/or P0304 and other DTCs	B

HINT:
If any DTCs other than P0300, P0301, P0302, P0303 and P0304 are output, troubleshoot those DTCs first.

B → GO TO DTC CHART

A

2	READ VALUE USING INTELLIGENT TESTER (MISFIRE RPM AND MISFIRE LOAD)

(a) Connect the intelligent tester the DLC3.
(b) Turn the ignition switch to ON and turn the tester ON.
(c) Select the following menu items: DIAGNOSIS / ENHANCED OBD II / DATA LIST / MISFIRE / MISFIRE RPM and MISFIRE LOAD.
(d) Read and note the MISFIRE RPM and MISFIRE LOAD (engine load) values.
HINT:
The MISFIRE RPM and MISFIRE LOAD indicate the vehicle conditions under which the misfire occurred.

NEXT

3	CHECK PCV HOSE CONNECTIONS

OK:
PCV hose is connected correctly and is not damaged.

NG → REPAIR OR REPLACE PCV HOSE

OK

4	CHECK MISFIRE COUNT (CYL #1, #2, #3 AND #4)

(a) Connect the intelligent tester to the DLC3.
(b) Turn the ignition switch ON.
(c) Turn the tester ON.
(d) Clear DTCs (see page ES-35).
(e) Select the following menu items: DIAGNOSIS / ENHANCED OBD II / DATA LIST / MISFIRE / CYL #1, #2, #3 and #4.
(f) Allow the engine to idle.
(g) Read each value for CYL #1 to #4 displayed on the tester. If no misfire counts occur in any cylinders, perform the following procedures:
  (1) Shift the gear selector lever to the D position.
  (2) Check the CYL #1 to #4.
  (3) If misfire counts are still not displayed, perform steps (h) and (i) and then check the misfire counts again.
(h) Drive the vehicle with the MISFIRE RPM and MISFIRE LOAD noted in the "READ VALUE USING INTELLIGENT TESTER (MISFIRE RPM AND MISFIRE LOAD)" procedures above.

(i) Read the CYL #1 to #4 or DTCs displayed on the tester.

Result

Misfire Count	Proceed To
Most misfires occur in only 1 or 2 cylinders	A
3 cylinders or more have equal misfire counts	B

HINT:

- If it is difficult to reproduce misfires for each cylinder, check the DATA LIST item called MISFIRE MARGIN. Try to find vehicle driving conditions that lower the MISFIRE MARGIN value. Values above 30 % are considered normal.
- If the freeze frame data's record of the ECT is below 75°C (167°F), the misfire may be detected only when the engine is cold.
- If the freeze frame data's record of the ENGINE RUN TIME is below 120 seconds, the misfire may be detected immediately after the engine is started.

B → **Go to step 14**

A

5	PERFORM ACTIVE TEST USING INTELLIGENT TESTER (FUEL CUT #1 TO #4)

(a) Allow the engine to idle.
(b) Select the following menu items: DIAGNOSIS / ENHANCED OBD II / ACTIVE TEST / FUEL CUT#1 (to #4).
(c) If a cylinder has a high misfire count, cut fuel to that cylinder. Compare the misfire count of the cylinder before fuel cut and after fuel cut.

Result

Misfire Count in Each Cylinder	Proceed To
Misfire count of cylinder before fuel cut and after fuel cut roughly same	A
Misfire count of cylinder before fuel cut lower than after fuel cut	B

NOTICE:
This ACTIVE TEST cannot be performed while the vehicle is being driven.

HINT:
If the misfire count of the cylinder before and after the fuel cut are roughly the same, the cylinder is misfiring.
If the misfire count of the cylinder before the fuel cut is lower than after the fuel cut, the cylinder misfires sometimes.

B → **Go to step 11**

A

6 CHECK SPARK PLUG

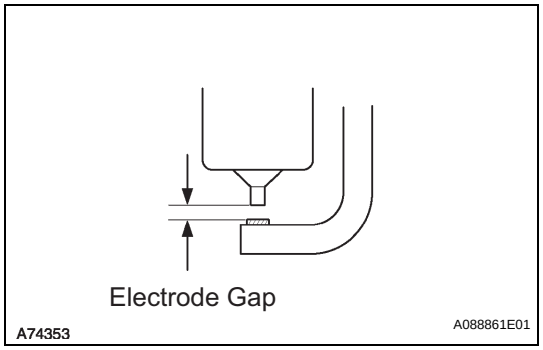

(a) Remove the ignition coil and the spark plug of the misfiring cylinder.
(b) Measure the spark plug electrode gap.
Standard gap:
1.0 to 1.1 mm (0.039 to 0.043 in.)
(c) Check the electrode for carbon deposits.
Recommended spark plug:

Manufacturers	Products
DENSO	SK20R11
NGK	IFR6A11

ES

NOTICE:
If the electrode gap is larger than standard, replace the spark plug. Do not adjust the electrode gap.

NG → **REPLACE SPARK PLUG**

OK

7 CHECK FOR SPARKS AND IGNITION

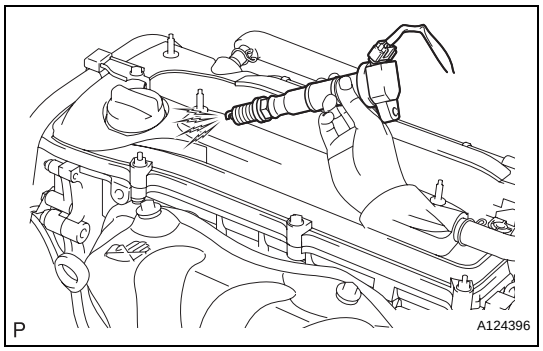

(a) Remove the ignition coil from the cylinder head.
(b) Install the spark plug onto the ignition coil.
(c) Connect the intelligent tester to the DLC3.
(d) Turn the ignition switch ON and turn the tester ON.
(e) Select the following menu items: DIAGNOSIS / ENHANCED OBD II / ACTIVE TEST / FUEL CUT ALL.
(f) Attach the spark plug assembly to the cylinder head.
(g) Perform the FUEL CUT ALL operation (press the RIGHT or LEFT button to change the ON).
NOTICE:
When FUEL CUT ALL is OFF and the engine is cranked, fuel injection will occur.
(h) Crank the engine for less than 2 seconds and check the spark.
OK:
Sparks jump across electrode gap.
(i) Install the ignition coil.

NG → **Go to step 9**

OK

8 CHECK CYLINDER COMPRESSION PRESSURE OF MISFIRING CYLINDER

(a) Measure the cylinder compression pressure of the misfiring cylinder.

OK → **Go to step 10**

NG

CHECK ENGINE TO DETERMINE CAUSE OF LOW COMPRESSION

9 **CHANGE NORMAL SPARK PLUG AND CHECK SPARK OF MISFIRING CYLINDER**

(a) Change the installed spark plug to a spark plug that functions normally.
(b) Perform a spark test.
CAUTION:
Always disconnect all injector connectors.
NOTICE:
Do not crank the engine for more than 2 seconds.
(1) Install the spark plug to the ignition coil and connect the ignition coil connector.
(2) Disconnect the injector connector.
(3) Ground the spark plug.
(4) Check if sparks occur while the engine is being cranked.
OK:
Sparks jump across electrode gap.

NG → **REPLACE IGNITION COIL ASSEMBLY THEN CONFIRM THAT THERE IS NO MISFIRE**

OK

REPLACE SPARK PLUG

10 **INSPECT ECM TERMINAL OF MISFIRING CYLINDER (#10, #20, #30, AND /OR #40 VOLTAGE)**

Wire Harness Side:

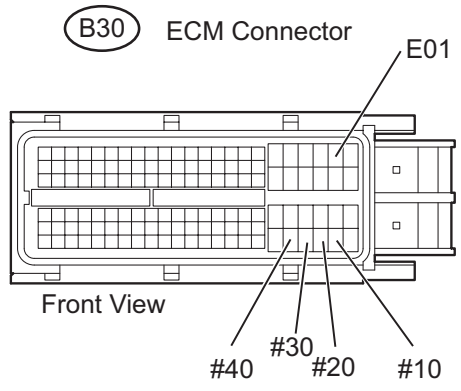

A107892E42

(a) Disconnect the B30 ECM connector.
(b) Turn the ignition switch ON.
(c) Measure the voltage between the terminals of the ECM connector.
Standard voltage

Tester Connections	Specified Conditions
B30-108 (#10) - B30-45 (E01)	9 to 14 V
B30-107 (#20) - B30-45 (E01)	9 to 14 V
B30-106 (#30) - B30-45 (E01)	9 to 14 V
B30-105 (#40) - B30-45 (E01)	9 to 14 V

OK → **Go to step 12**

NG

11	CHECK HARNESS AND CONNECTOR (INJECTOR - ECM)

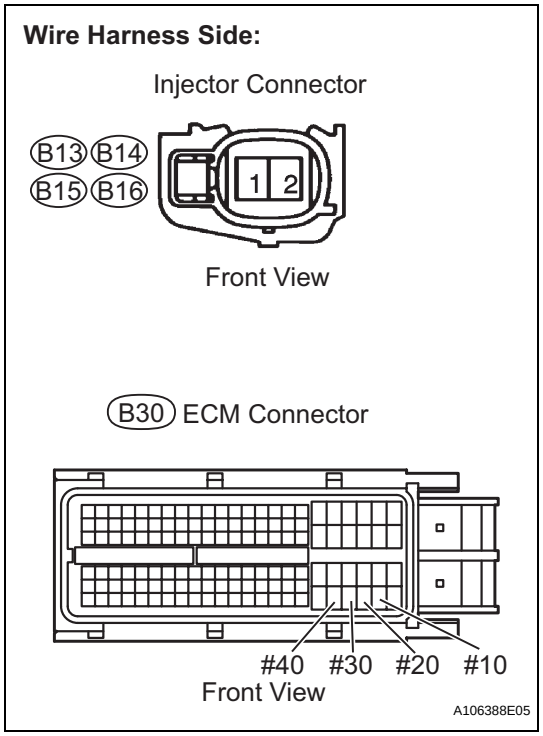

(a) Disconnect the injector connector (of the misfiring cylinder).
(b) Disconnect the B30 ECM connector.
(c) Turn the ignition switch ON.
(d) Measure the resistance and voltage between the injector and the ECM connector terminals.

Standard voltage

Cylinder	Tester Connections	Specified Conditions
No. 1	B16-1 - Ground	9 to 14 V
No. 2	B15-1 - Ground	9 to 14 V
No. 3	B14-1 - Ground	9 to 14 V
No. 4	B13-1 - Ground	9 to 14 V

Standard resistance

Cylinder	Tester Connections	Specified Conditions
No. 1	B16-2 - Ground	10 kΩ or higher
	B16-2 - B30-108 (#10)	Below 1 Ω
No. 2	B15-2 - Ground	10 kΩ or higher
	B15-2 - B30-107 (#20)	Below 1 Ω
No. 3	B14-2 - Ground	10 kΩ or higher
	B14-2 - B30-106 (#30)	Below 1 Ω
No. 4	B13-2 - Ground	10 kΩ or higher
	B13-2 - B30-105 (#40)	Below 1 Ω

(e) Reconnect the injector connector.
(f) Reconnect the ECM connector.

NG → **REPAIR OR REPLACE HARNESS OR CONNECTOR**

OK ↓

12	CHECK FUEL INJECTOR OF MISFIRING CYLINDER

(a) Check the injector injection (whether fuel volume is high or low, and whether injection pattern is poor).

NG → **REPLACE FUEL INJECTOR ASSEMBLY**

OK ↓

13	CHECK VALVE CLEARANCE OF MISFIRING CYLINDER

NG → **ADJUST VALVE CLEARANCE**

OK ↓

14	CHECK AIR INDUCTION SYSTEM

(a) Check the air induction system for vacuum leakage.
OK:
No leakage from air induction system.

NG → **REPAIR OR REPLACE AIR INDUCTION SYSTEM**

OK ↓

ES

15	CHECK VALVE TIMING (See page ES-77)

NG → **ADJUST VALVE TIMING**

OK ↓

16	CHECK FUEL PRESSURE

(a) Check the fuel pressure (see page FU-6).

NG → **CHECK AND REPLACE FUEL PUMP, PRESSURE REGULATOR, FUEL PIPE LINE AND FILTER**

OK ↓

17	READ VALUE USING INTELLIGENT TESTER (COOLANT TEMP) (See page ES-159)

NG → **REPLACE ENGINE COOLANT TEMPERATURE SENSOR**

OK ↓

18	READ VALUE USING INTELLIGENT TESTER (MAF) (See page ES-158)

NG → **REPLACE MASS AIR FLOW METER**

OK ↓

CHECK FOR INTERMITTENT PROBLEMS

DTC	P0327	Knock Sensor 1 Circuit Low Input (Bank 1 or Single Sensor)

DTC	P0328	Knock Sensor 1 Circuit High Input (Bank 1 or Single Sensor)

DESCRIPTION

Flat type knock sensors (non-resonant type) have structures that can detect vibrations over a wide band of frequencies: between approximately 6 kHz and 15 kHz.

A knock sensor is fitted onto the engine block to detect engine knocking.

The knock sensor contains a piezoelectric element which generates a voltage when it becomes deformed. The voltage is generated when the engine block vibrates due to knocking. Any occurrence of engine knocking can be suppressed by delaying the ignition timing.

ES

DTC No.	DTC Detection Conditions	Trouble Areas
P0327	Output voltage of knock sensor less than 0.5 V (1 trip detection logic)	• Short in knock sensor circuit • Knock sensor • ECM
P0328	Output voltage of knock sensor more than 4.5 V (1 trip detection logic)	• Open in knock sensor circuit • Knock sensor • ECM

HINT:

When any of DTCs P0327 and P0328 are set, the ECM enters fail-safe mode. During fail-safe mode, the ignition timing is delayed to its maximum retardation. Fail-safe mode continues until the ignition switch is turned OFF.

Reference: Inspection using an oscilloscope

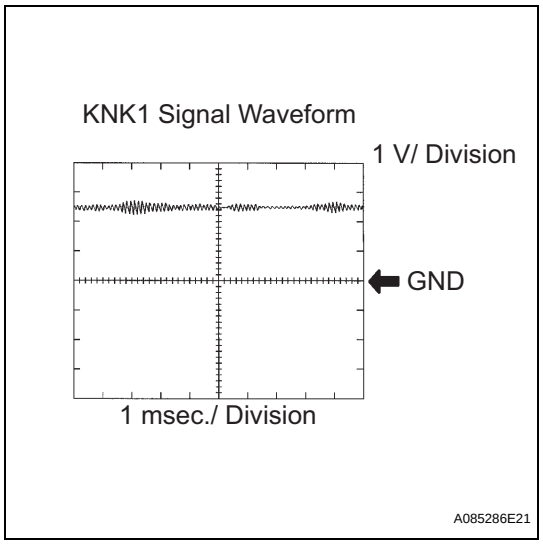

The correct waveform is as shown.

Items	Contents
Terminals	KNK1 - EKNK
Equipment Settings	1 V/Division 1 msec./Division
Conditions	Keep engine speed at 4,000 rpm with warm engine

MONITOR DESCRIPTION

If the output voltage transmitted by the knock sensor remains low or high for more than 1 second, the ECM interprets this as a malfunction in the sensor circuit, and sets a DTC.
The monitor for DTCs P0327 and P0328 begins to run when 5 seconds have elapsed since the engine was started.
If the malfunction is not repaired successfully, either DTC P0327 or P0328 is set 5 seconds after the engine is next started.

MONITOR STRATEGY

Related DTCs	P0327: Knock sensor range check (Low voltage) P0328: Knock sensor range check (High voltage)
Required Sensors/Components (Main)	Knock sensor
Required Sensors/Components (Related)	-
Frequency of Operation	Continuous
Duration	1 second
MIL Operation	Immediate
Sequence of Operation	None

ES

TYPICAL ENABLING CONDITIONS

Monitor runs whenever following DTCs not present	None
Battery voltage	10.5 V or more
Time after engine start	5 seconds or more

TYPICAL MALFUNCTION THRESHOLDS

Knock Sensor Range Check (Low voltage) P0327:

Knock sensor voltage	Less than 0.5 V

Knock Sensor Range Check (High voltage) P0328:

Knock sensor voltage	More than 4.5 V

WIRING DIAGRAM

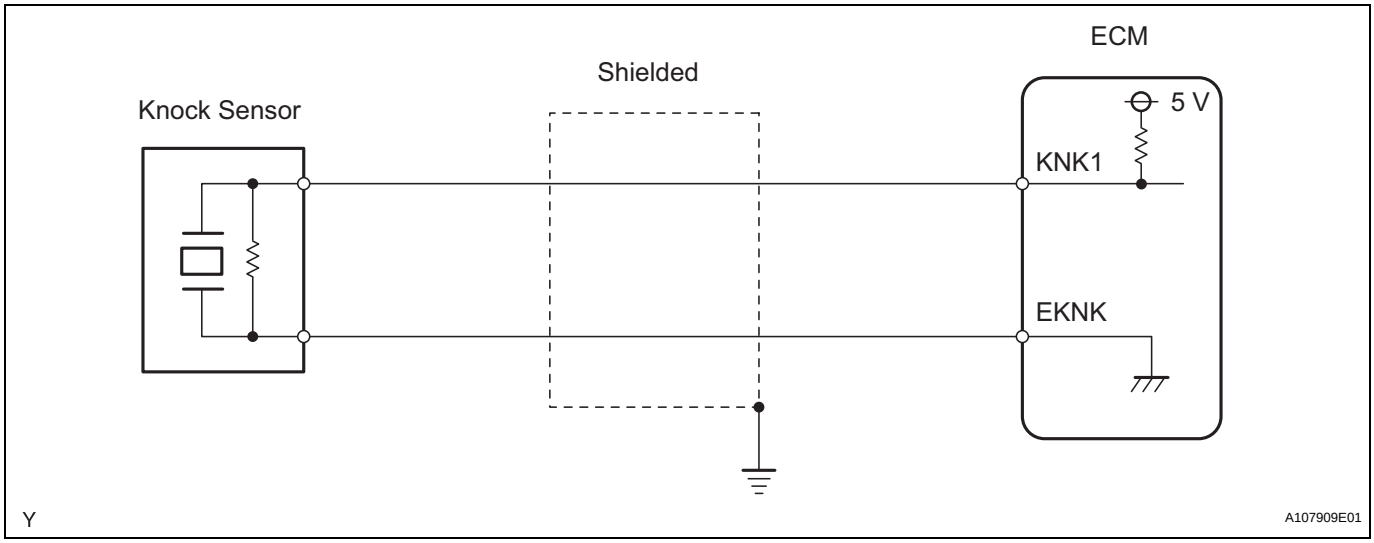

INSPECTION PROCEDURE

HINT:
Read freeze frame data using the intelligent tester. Freeze frame data records the engine condition when malfunctions are detected. When troubleshooting, freeze frame data can help determine if the vehicle was moving or stationary, if the engine was warmed up or not, if the air-fuel ratio was lean or rich, and other data from the time the malfunction occurred.

1	READ VALUE USING INTELLIGENT TESTER (KNOCK FB VAL)

(a) Connect the intelligent tester to the DLC3.
(b) Start the engine and turn the tester ON.
(c) Warm up the engine.
(d) Select the following menu items: DIAGNOSIS / ENHANCED OBD II / DATA LIST / USER DATA / KNOCK FB VAL.
(e) Read the values displayed on the tester while driving the vehicle.
Standard:
The values change.
HINT

Malfunction does not occur	Knock Feedback Values change
Malfunctions occur	Knock Feedback Values do not change

HINT:
The knock feedback value change can be confirmed by running the engine at high load, for example, by activating the air conditioning system and revving up the engine.

OK → **CHECK FOR INTERMITTENT PROBLEMS**

NG

2	CHECK HARNESS AND CONNECTOR (ECM - KNOCK SENSOR)

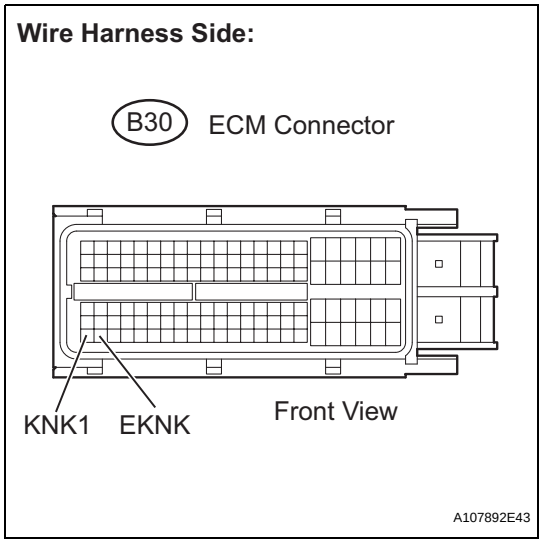

(a) Disconnect the B30 ECM connector.
(b) Measure the resistance between the terminals.
Standard

Tester Connections	Specified Conditions
B30-110 (KNK1) - B30-111 (EKNK)	120 to 280 kΩ at 20°C (68°F)

(c) Reconnect the ECM connector.

NG → **Go to step 4**

OK

3	INSPECT ECM (KNK1 VOLTAGE)

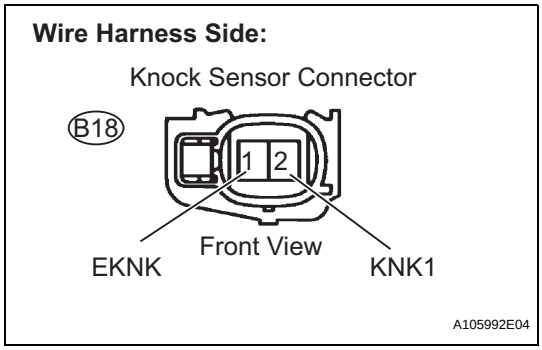

(a) Disconnect the B18 knock sensor connector.
(b) Turn the ignition switch ON.
(c) Measure the voltage between the knock sensor terminals.

Standard voltage

Tester Connections	Specified Conditions
B18-2 (KNK1) - B18-1 (EKNK)	4.5 to 5.5 V

(d) Reconnect the knock sensor connector.

NOTICE:
Fault may be intermittent. Check the wire harness and connectors carefully and retest.

NG → **REPLACE ECM**

OK

CHECK FOR INTERMITTENT PROBLEMS

4	INSPECT KNOCK SENSOR

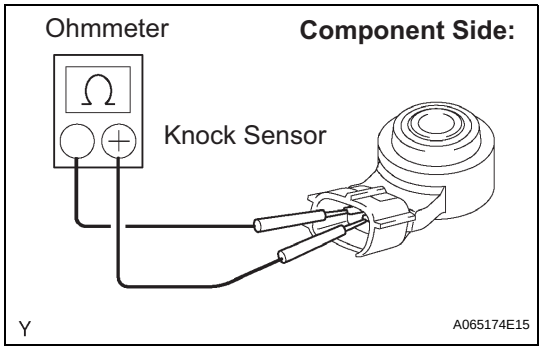

(a) Remove the knock sensor.
(b) Measure the resistance between the terminals.

Standard resistance

Tester Connections	Specified Conditions
2 (KNK1) - 1 (EKNK)	120 to 280 kΩat 20°C (68°F)

(c) Reinstall the knock sensor.

NG → **REPLACE KNOCK SENSOR**

OK

REPAIR OR REPLACE HARNESS OR CONNECTOR

DTC	P0335	Crankshaft Position Sensor "A" Circuit

DTC	P0339	Crankshaft Position Sensor "A" Circuit Intermittent

DESCRIPTION

The Crankshaft Position (CKP) sensor system consists of a CKP sensor plate and a pickup coil.
The sensor plate has 34 teeth and is installed on the crankshaft. The pickup coil is made of wound copper wire, an iron core and magnet. The sensor plate rotates and, as each tooth passes through the pickup coil, a pulse signal is created. The pickup coil generates 34 signals per engine revolution. Based on these signals, the ECM calculates the crankshaft position and engine RPM. Using these calculations, the fuel injection time and ignition timing are controlled.

ES

DTC No.	DTC Detection Conditions	Trouble Areas
P0335	When either condition below is met: • No CKP sensor signal to ECM while cranking (1 trip detection logic) • No CKP sensor signal to ECM at engine speed of 600 rpm or more (1 trip detection logic)	• Open or short in CKP sensor circuit • CKP sensor • CKP sensor plate • ECM
P0339	Under conditions (a), (b) and (c), no CKP sensor signal to ECM for 0.05 seconds or more (1 trip detection logic): (a) Engine speed 1,000 rpm or more (b) Starter signal OFF (c) 3 seconds or more have elapsed since starter signal switched from ON to OFF	• Open or short in CKP sensor circuit • CKP sensor • CKP sensor plate • ECM

Reference: Inspection using an oscilloscope.

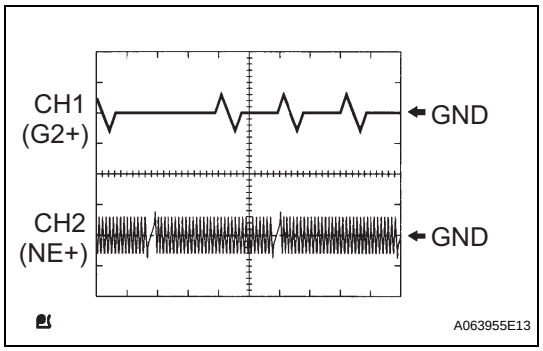

HINT:
- The correct waveform is as shown.
- G2+ stands for the Camshaft Position (CMP) sensor signal, and NE+ stands for the CKP sensor signal.
- Grounding failure of the shielded wire may cause noise in waveforms.

Items	Contents
Terminals	CH1: G2+ - G2- CH2: NE+ - NE-
Equipment Settings	5 V/Division, 20 msec./Division
Conditions	Cranking or idling

MONITOR DESCRIPTION

If there is no signal from the CKP sensor despite the engine revolving, the ECM interprets this as a malfunction of the sensor.
If the malfunction is not repaired successfully, a DTC is set 10 seconds after the engine is next started.

MONITOR STRATEGY

Related DTCs	P0335: CKP sensor range check or rationality
Required Sensors/Components (Main)	CKP sensor
Required Sensors/Components (Related)	CMP sensor
Frequency of Operation	Continuous
Duration	3 times
MIL Operation	Immediate
Sequence of Operation	None

TYPICAL ENABLING CONDITIONS

All:

Monitor runs whenever following DTCs not present	None

Case 1:

Time after starter OFF to ON	0.3 seconds or more
Number of CMP sensor signal pulse	6 times
Battery voltage	7 V or more
CMP sensor circuit failure	Not detected
Ignition switch	ON

Case 2:

Starter	OFF
Engine speed	600 rpm or more
Time after starter from ON to OFF	3 seconds or more

TYPICAL MALFUNCTION THRESHOLDS

Case 1:

Number of CKP sensor signal pulse	132 or less, and 174 or more

Case 2:

Engine speed signal	No signal

COMPONENT OPERATING RANGE

CKP sensor	• CKP sensor output voltage fluctuates while crankshaft revolving • 34 CKP sensor signals per crankshaft revolution

WIRING DIAGRAM

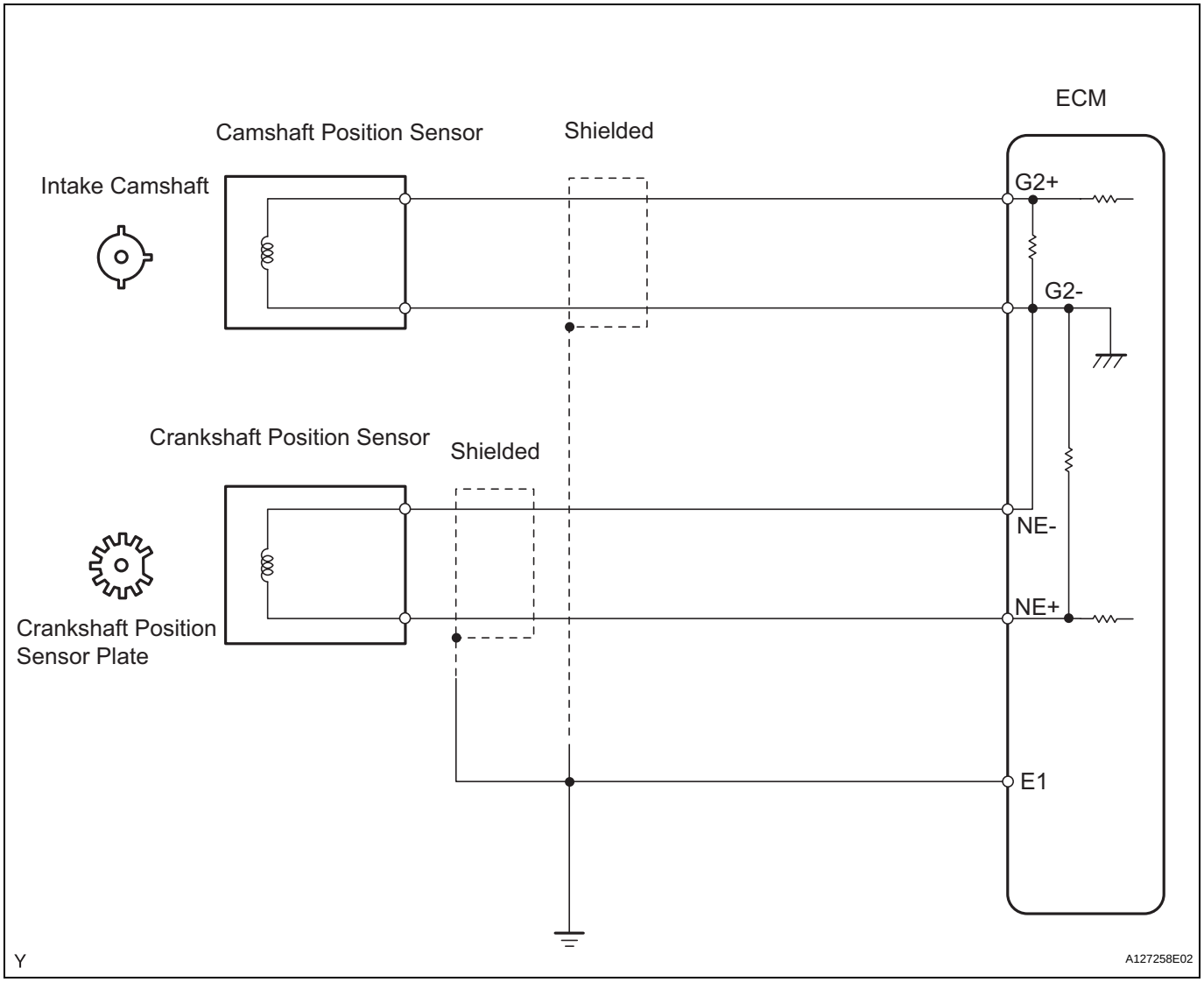

INSPECTION PROCEDURE

HINT:

- If no problem is found through this diagnostic troubleshoot procedure, troubleshoot the engine mechanical systems.
- Check the engine speed. The engine speed can be checked by using the intelligent tester. To check, follow the operation below:
  (a) Connect the intelligent tester to the DLC3.
  (b) Start the engine.
  (c) Turn the tester ON
  (d) Select the following menu items: DIAGNOSIS / ENHANCED OBD II / DATA LIST / PRIMARY / ENGINE SPD.
  The engine speed may be indicated as zero despite the engine revolving normally. This is caused by a lack of NE signals from the Crankshaft Position (CKP) sensor. Alternatively, the engine speed may be indicated as lower than the actual engine speed if the CKP sensor output voltage is insufficient.
- Read freeze frame data using the intelligent tester. Freeze frame data records the engine condition when malfunctions are detected. When troubleshooting, freeze frame data can help determine if the vehicle was moving or stationary, if the engine was warmed up or not, if the air-fuel ratio was lean or rich, and other data from the time the malfunction occurred.

1	READ VALUE USING INTELLIGENT TESTER (ENGINE SPD)

(a) Connect the intelligent tester to the DLC3.
(b) Turn the ignition switch ON.
(c) Turn the tester ON.
(d) Select the following menu items: DIAGNOSIS / ENHANCED OBD II / DATA LIST / PRIMARY / ENGINE SPD.
(e) Start the engine.
(f) Read the values displayed on the tester while the engine is running.

Standard:

Correct values are displayed.

HINT:

- To check the engine speed change, display the graph on the tester.
- If the engine does not start, check the engine speed while cranking.
- If the engine speed indicated on the tester remains zero (0), there may be an open or short in the Crankshaft Position (CKP) sensor circuit.

OK → **CHECK FOR INTERMITTENT PROBLEMS**

NG

2	INSPECT CRANKSHAFT POSITION SENSOR (RESISTANCE)

Component Side:

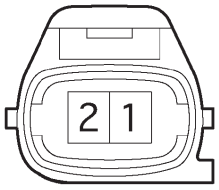

CKP Sensor

G037727E07

(a) Disconnect the B22 CKP sensor connector.
(b) Measure the resistance between terminals 1 and 2.

Standard resistance

Tester Connections	Conditions	Specified Conditions
1 - 2	Cold	985 to 1,600 Ω
1 - 2	Hot	1,265 to 1,890 Ω

HINT:

Terms cold and hot refer to the temperature of the sensor. Cold means approximately -10 to 50°C (14 to 122°F). Hot means approximately 50 to 100°C (122 to 212°F).

(c) Reconnect the CKP sensor connector.

NG → **REPLACE CRANKSHAFT POSITION SENSOR**

OK

3 CHECK HARNESS AND CONNECTOR (CRANKSHAFT POSITION SENSOR - ECM)

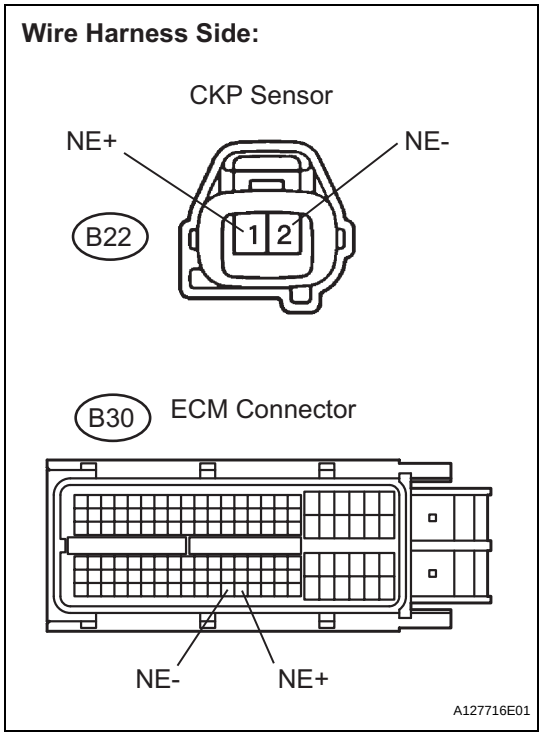

(a) Disconnect the B22 CKP sensor connector.
(b) Disconnect the B30 ECM connector.
(c) Measure the resistance.

Standard resistance (Check for open)

Tester Connections	Specified Conditions
B22-1 (NE+) - B30-122 (NE+)	Below 1 Ω
B22-2 (NE-) - B30-121 (NE-)	Below 1 Ω

Standard resistance (Check for short)

Tester Connections	Specified Conditions
B22-1 (NE+) or B30-122 (NE+) - Body ground	10 kΩor higher
B22-2 (NE-) or B30-121 (NE-) - Body ground	10 kΩor higher

(d) Reconnect the ECM connector.
(e) Reconnect the CKP sensor connector.

NG → **REPAIR OR REPLACE HARNESS OR CONNECTOR**

OK

4 CHECK SENSOR INSTALLATION (CRANKSHAFT POSITION SENSOR)

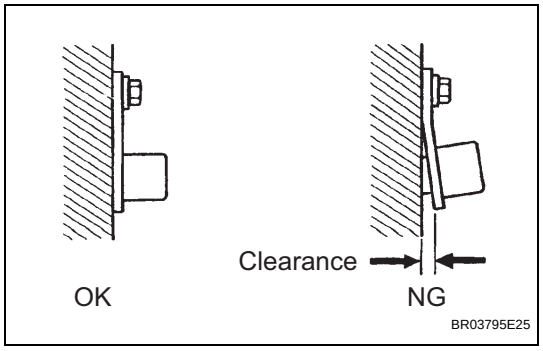

(a) Check the CKP sensor installation.

OK:

Sensor is installed correctly.

NG → **SECURELY REINSTALL SENSOR**

OK

5 CHECK CRANKSHAFT POSITION SENSOR PLATE (TEETH OF SENSOR PLATE)

(a) Check the teeth of the sensor plate.

OK:

Sensor plate does not have any cracks or deformation.

NG → **REPLACE CRANKSHAFT POSITION SENSOR PLATE**

OK

6	REPLACE CRANKSHAFT POSITION SENSOR

NEXT

7	CHECK WHETHER DTC OUTPUT RECURS

(a) Connect the intelligent tester to the DLC3.
(b) Turn the ignition switch ON.
(c) Turn the tester ON.
(d) Clear DTCs (see page ES-35).
(e) Start the engine.
(f) Select the following menu items: DIAGNOSIS / ENHANCED OBD II / DTC INFO / CURRENT CODES.
(g) Read DTCs.

Result

Display (DTC Output)	Proceed To
No output	A
P0335 or P0339	B

HINT:
If the engine does not start, replace the ECM.

B → REPLACE ECM

A

END

DTC	P0340	Camshaft Position Sensor "A" Circuit (Bank 1 or Single Sensor)

DESCRIPTION

The Camshaft Position (CMP) sensor consists of a magnet and an iron core which is wrapped with copper wire, and is installed onto the cylinder head. When the camshaft rotates, each of 3 teeth on the camshaft passes through the CMP sensor. This activates the internal magnet in the sensor, generating a voltage in the copper wire. The camshaft rotation is synchronized with the crankshaft rotation. When the crankshaft turns twice, the voltage is generated 3 times in the CMP sensor. The generated voltage in the sensor acts as a signal, allowing the ECM to locate the camshaft position. This signal is then used to control ignition timing, fuel injection timing, and the VVT system.

DTC No.	DTC Detection Conditions	Trouble Areas
P0340	Case 1 • No Camshaft Position (CMP) sensor signal to ECM while cranking (2 trip detection logic) Case 2 • Camshaft/Crankshaft misalignment detected at engine speed of 600 rpm or more (1 trip detection logic)	• Open or short in CMP sensor circuit • CMP sensor • Camshaft • Jumped tooth of timing chain • ECM

HINT:
DTC P0340 indicates a malfunction relating to the CMP sensor (+) circuit (the wire harness between the ECM and CMP sensor, and the CMP sensor itself).
Reference: Inspection using an oscilloscope

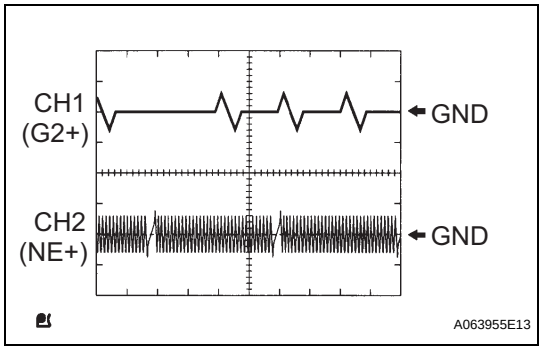

HINT:
- The correct waveform is as shown in the illustration.
- G2+ stands for the CMP sensor signal, and NE+ stands for the Crankshaft Position (CKP) sensor signal.
- Grounding failure of the shielded wire may cause noise in waveforms.

Items	Contents
Terminals	CH1: G2+ - G2- CH2: NE+ - NE-
Equipment Settings	5 V/Division, 20 ms/Division
Conditions	Cranking or idling

MONITOR DESCRIPTION

If no signal is transmitted by the CMP sensor despite the engine revolving, or the rotation of the camshaft and the crankshaft is not synchronized, the ECM interprets this as a malfunction of the sensor.
If the malfunction is not repaired successfully, a DTC is set 10 seconds after the engine is next started.

MONITOR STRATEGY

Related DTCs	P0340: Camshaft position sensor range check P0340: Camshaft position/crankshaft position misalignment

Required Sensors/Components (Main)	Camshaft Position (CMP) sensor
Required Sensors/Components (Related)	Crankshaft Position (CKP) sensor
Frequency of Operation	Continuous
Duration	4 seconds: CMP sensor range check 5 seconds: Camshaft position/crankshaft position misalignment
MIL Operation	2 driving cycles: CMP sensor range check Immediate: Camshaft position/crankshaft position misalignment
Sequence of Operation	None

TYPICAL ENABLING CONDITIONS

All:

Monitor runs whenever following DTCs not present	None

Camshaft Position Sensor Range Check:

Starter	ON
Minimal battery voltage while starter ON	Less than 11 V

Camshaft Position/Crankshaft Position Misalignment:

Engine speed	600 rpm or more
Starter	OFF

TYPICAL MALFUNCTION THRESHOLDS

Camshaft Position Sensor Range Check:

CMP sensor signal	No signal

Camshaft Position/Crankshaft Position Misalignment:

Camshaft position and crankshaft position phase	Misaligned

COMPONENT OPERATING RANGE

CMP sensor	• CMP sensor output voltage fluctuates while camshaft revolving • 3 CMP sensor signals per 2 crankshaft revolutions

WIRING DIAGRAM

Refer to DTC P0335 (see page ES-174).

INSPECTION PROCEDURE

HINT:

Read freeze frame data using the intelligent tester. Freeze frame data records the engine condition when malfunctions are detected. When troubleshooting, freeze frame data can help determine if the vehicle was moving or stationary, if the engine was warmed up or not, if the air-fuel ratio was lean or rich, and other data from the time the malfunction occurred.

1 INSPECT CAMSHAFT POSITION SENSOR (RESISTANCE)

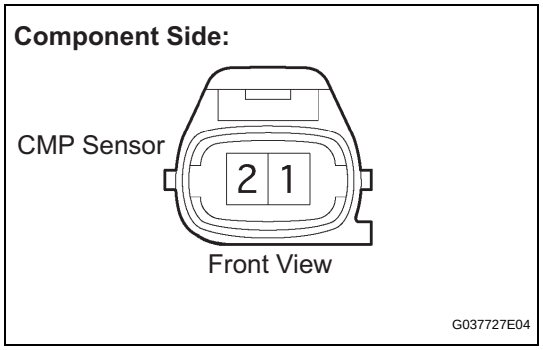

(a) Disconnect the B6 Camshaft Position (CMP) sensor connector.
(b) Measure the resistance between terminals 1 and 2.
Standard resistance

Tester Connections	Conditions	Specified Conditions
1 - 2	Cold	1,630 to 2,740 Ω
1 - 2	Hot	2,065 to 3,225 Ω

HINT:
Terms cold and hot refer to the temperature of the sensor. Cold means approximately -10° to 50°C (14 °to 122°F). Hot means approximately 50° to 100°C (122°to 212°F).

(c) Reconnect the CMP sensor connector.

NG → **REPLACE CAMSHAFT POSITION SENSOR**

OK

2 CHECK HARNESS AND CONNECTOR (CAMSHAFT POSITION SENSOR - ECM)

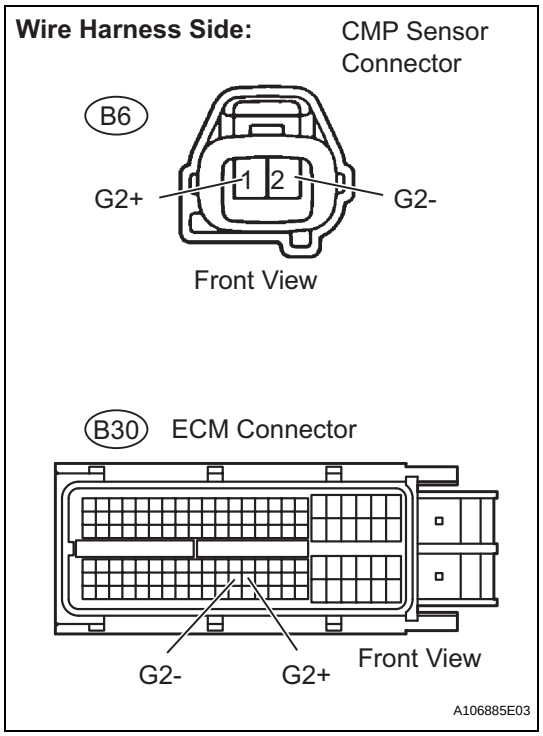

(a) Disconnect the B6 CMP sensor connector.
(b) Disconnect the B30 ECM connector.
(c) Measure the resistance.
Standard resistance (Check for open)

Tester Connections	Specified Conditions
B6-1 (G2+) - B30-99 (G2+)	Below 1 Ω
B6-2 (G2-) - B30-98 (G2-)	Below 1 Ω

Standard resistance (Check for short)

Tester Connections	Specified Conditions
B6-1 (G2+) or B30-99 (G2+) - Body ground	10 kΩor higher
B6-2 (G2-) or B30-98 (G2-) - Body ground	10 kΩor higher

(d) Reconnect the ECM connector.
(e) Reconnect the CMP sensor connector.

NG → **REPAIR OR REPLACE HARNESS OR CONNECTOR**

OK

3	CHECK SENSOR INSTALLATION (CAMSHAFT POSITION SENSOR)

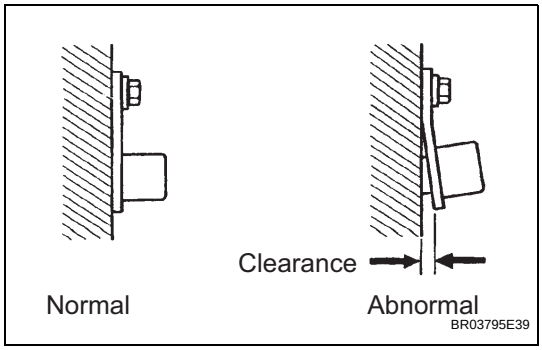

(a) Check the CMP sensor installation.
OK:
Sensor is installed correctly.

NG → **SECURELY REINSTALL SENSOR**

OK

4	CHECK VALVE TIMING (See page ES-77)

NG → **ADJUST VALVE TIMING**

OK

5	CHECK CAMSHAFT

(a) Check the teeth of the camshaft.
OK:
Camshaft teeth do not have any cracks or deformation.

NG → **REPLACE CAMSHAFT**

OK

6	REPLACE CAMSHAFT POSITION SENSOR

NEXT

7	CHECK WHETHER DTC OUTPUT RECURS

(a) Connect the intelligent tester to the DLC3.
(b) Turn the ignition switch ON.
(c) Turn the tester ON.
(d) Clear DTCs (see page ES-35).
(e) Start the engine.
(f) Select the following menu items: DIAGNOSIS / ENHANCED OBD II / DTC INFO / PENDING CODES.
(g) Read DTCs.

Result

Display (DTC Output)	Proceed To
No output	A

Display (DTC Output)	Proceed To
P0340	B

HINT:
If the engine does not start, replace the ECM.

B → **REPLACE ECM**

A

END

DTC	P0351	Ignition Coil "A" Primary / Secondary Circuit

DTC	P0352	Ignition Coil "B" Primary / Secondary Circuit

DTC	P0353	Ignition Coil "C" Primary / Secondary Circuit

DTC	P0354	Ignition Coil "D" Primary / Secondary Circuit

DESCRIPTION

HINT:

ES

- These DTCs indicate malfunctions relating to the primary circuit.
- If DTC P0351 is set, check No. 1 ignition coil with igniter circuit.
- If DTC P0352 is set, check No. 2 ignition coil with igniter circuit.
- If DTC P0353 is set, check No. 3 ignition coil with igniter circuit.
- If DTC P0354 is set, check No. 4 ignition coil with igniter circuit.

A Direct Ignition System (DIS) is used on this vehicle.

The DIS is a 1-cylinder ignition system in which each cylinder is ignited by one ignition coil and one spark plug is connected to the end of each secondary wiring. A powerful voltage, generated in the secondary wiring, is applied directly to each spark plug. The sparks of the spark plugs pass from the center electrode to the ground electrodes.

The ECM determines the ignition timing and transmits the ignition (IGT) signals to each cylinder. Using the IGT signal, the ECM turns the power transistor inside the igniter on and off. The power transistor, in turn, switches on and off the current to the primary coil. When the current to the primary coil is cut off, a powerful voltage is generated in the secondary coil. This voltage is applied to the spark plugs, causing them to spark inside the cylinders. As the ECM cuts the current to the primary coil, the igniter sends back an ignition confirmation (IGF) signal to the ECM, for each cylinder ignition.

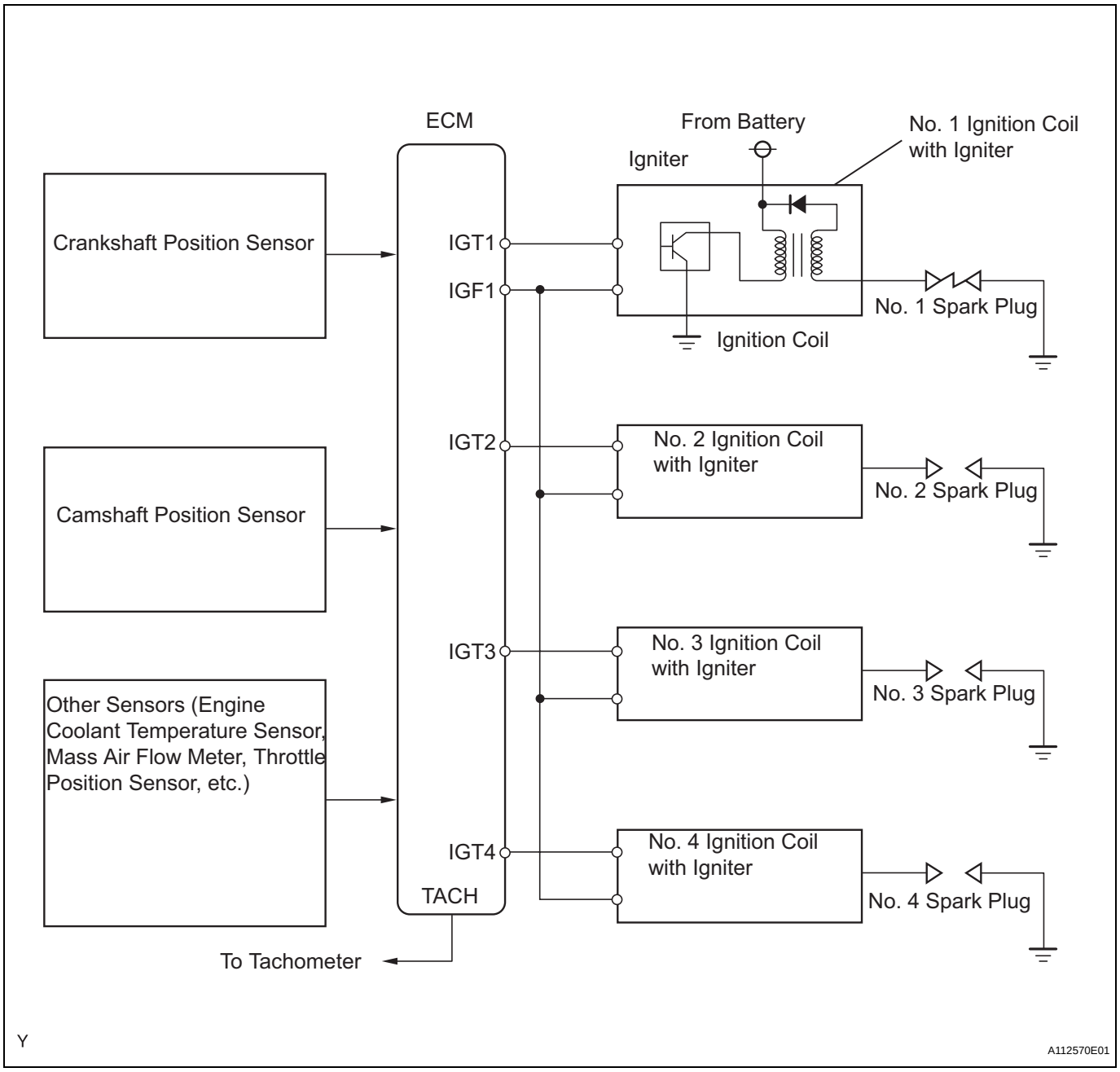

DTC No.	DTC Detection Conditions	Trouble Areas
P0351 P0352 P0353 P0354	No IGF signal to ECM while engine running (1 trip detection logic)	• Ignition system • Open or short in IGF1 or IGT circuit (1 to 4) between ignition coil with igniter and ECM • No. 1 to No. 4 ignition coils with igniters • ECM

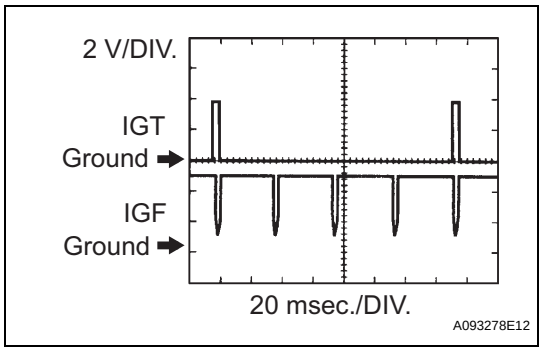

Reference: Inspection using an oscilloscope.
While cranking or idling the engine, check the waveform between terminals IGT (1 to 4) and E1, and IGF1 and E1 of the ECM connector.

ES

Items	Contents
Terminals	CH1: IGT1, IGT2, IGT3, IGT4 - E1 CH2: IGF1 - E1
Equipment Settings	2 V/Division 20 msec./Division
Conditions	Cranking or idling

MONITOR DESCRIPTION

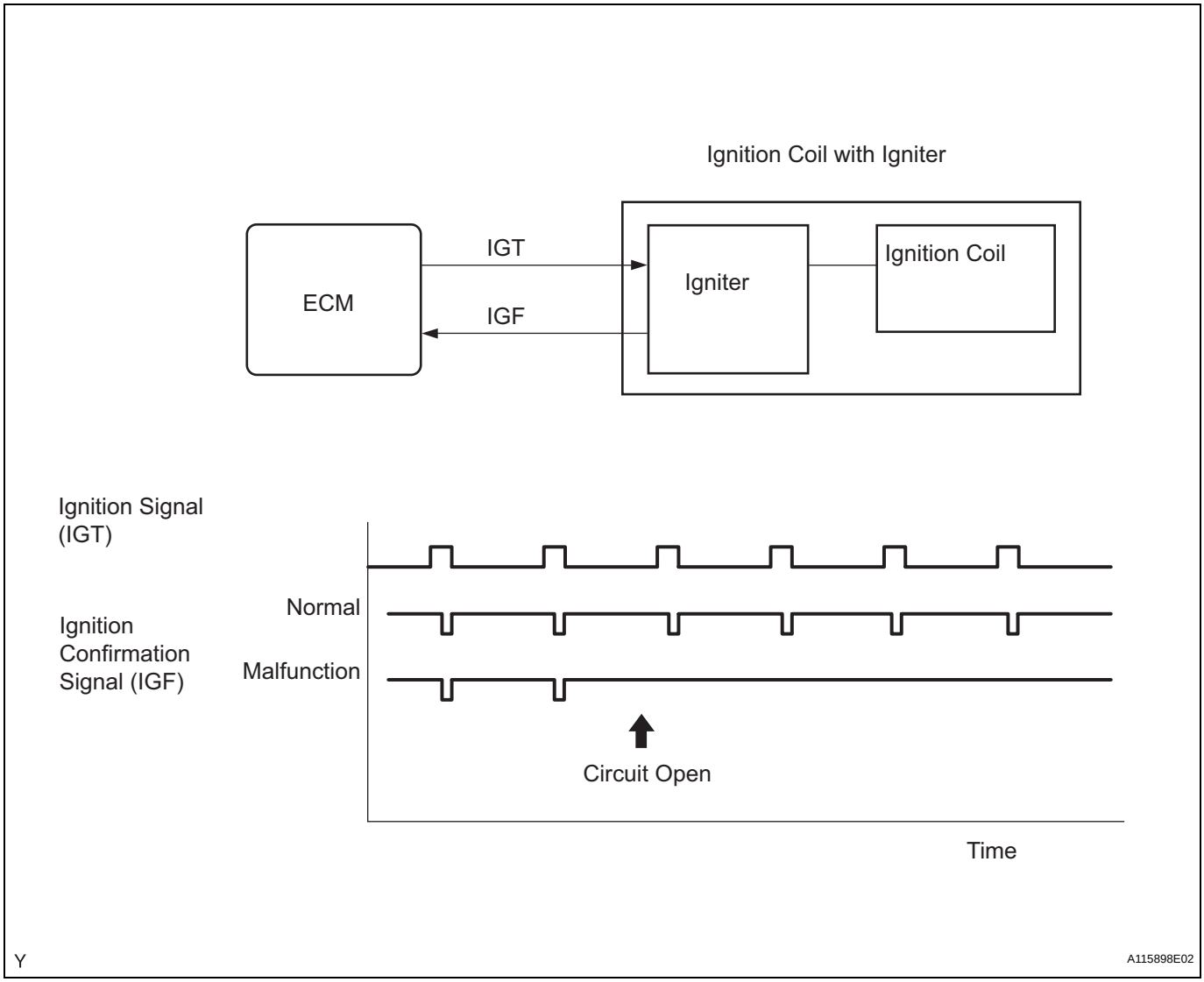

If the ECM does not receive any IGF signals despite transmitting the IGT signal, it interprets this as a fault in the igniter and sets a DTC.
If the malfunction is not repaired successfully, a DTC is set 1 second after the engine is next started.

MONITOR STRATEGY

Related DTCs	P0351: Igniter (cylinder 1) malfunction P0352: Igniter (cylinder 2) malfunction P0353: Igniter (cylinder 3) malfunction P0354: Igniter (cylinder 4) malfunction
Required Sensors/Components (Main)	Igniter
Required Sensors/Components (Related)	Crankshaft position sensor
Frequency of Operation	Continuous
Duration	0.512 seconds
MIL Operation	Immediate
Sequence of Operation	None

TYPICAL ENABLING CONDITIONS

Monitor runs whenever following DTCs not present	None
Either of following conditions A or B met	-

A. Engine RPM	1,500 rpm or less
B. Starter	OFF
Either of following conditions C or D met	-
C. Both of following conditions (a) and (b) met	-
(a) Engine speed	500 rpm or less
(b) Battery voltage	6 V or more
D. All of following conditions (a), (b) and (c) met	-
(a) Engine speed	More than 500 rpm
(b) Battery voltage	10 V or more
(c) Number of sparks after CPU reset	5 sparks or more

TYPICAL MALFUNCTION THRESHOLDS

IGF signal	ECM does not receive any IGF signal despite ECM sending IGT signal to igniter

COMPONENT OPERATING RANGE

IGF signal	Igniter transmits IGF signal when it receives IGT signal from ECM

WIRING DIAGRAM

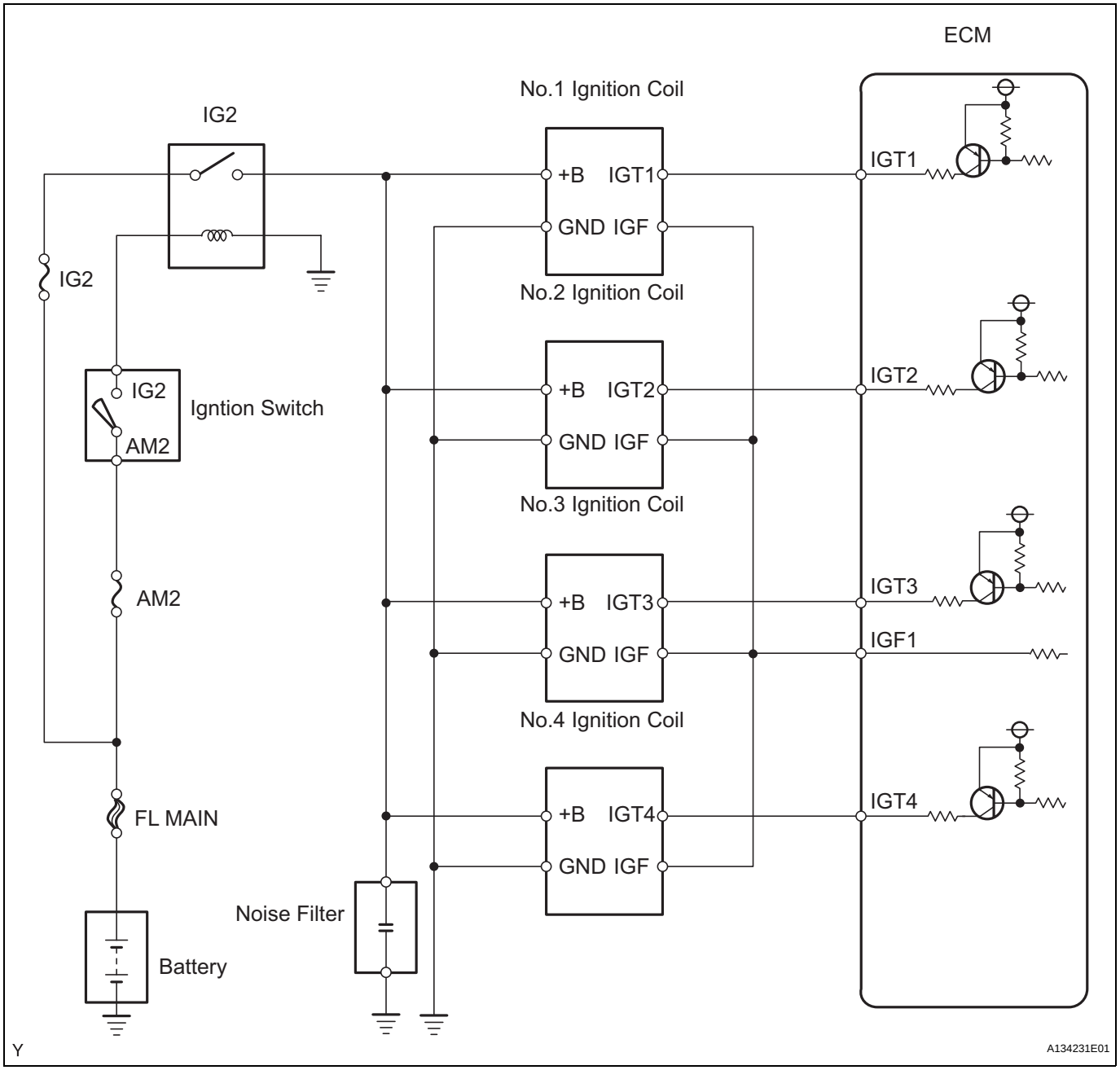

INSPECTION PROCEDURE

HINT:

Read freeze frame data using the intelligent tester. Freeze frame data records the engine condition when malfunctions are detected. When troubleshooting, freeze frame data can help determine if the vehicle was moving or stationary, if the engine was warmed up or not, if the air-fuel ratio was lean or rich, and other data from the time the malfunction occurred.

1 INSPECT IGNITION COIL ASSEMBLY (POWER SOURCE)

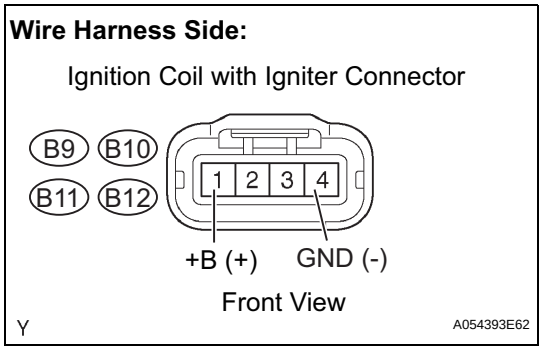

(a) Disconnect the ignition coil with igniter connector.
(b) Measure the resistance.

Standard resistance (Check for open)

Tester Connections	Specified Conditions
B9-4 (GND) - Body ground	Below 1 Ω
B10-4 (GND) - Body ground	Below 1 Ω
B11-4 (GND) - Body ground	Below 1 Ω
B12-4 (GND) - Body ground	Below 1 Ω

(c) Turn the ignition switch ON.
(d) Measure the voltage between the terminals of the wire harness side connector.

Standard voltage

Tester Connections	Specified Conditions
B9-1 (+B) - B9-4 (GND)	9 to 14 V
B10-1 (+B) - B10-4 (GND)	9 to 14 V
B11-1 (+B) - B11-4 (GND)	9 to 14 V
B12-1 (+B) - B12-4 (GND)	9 to 14 V

(e) Reconnect the ignition coil with igniter connector.

NG → **REPAIR OR REPLACE HARNESS OR CONNECTOR**

OK

2 CHECK HARNESS AND CONNECTOR (IGNITION COIL ASSEMBLY - ECM)

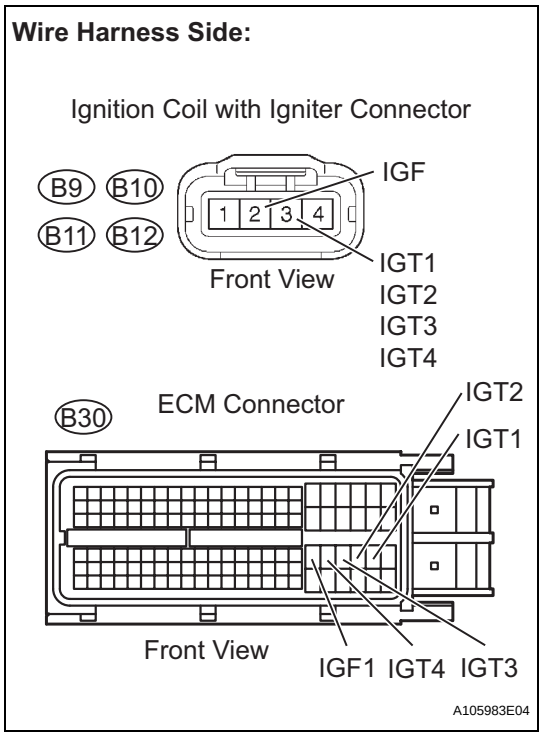

(a) Disconnect the ignition coil with connector.
(b) Disconnect the B30 ECM connector.
(c) Measure the resistance.

Standard resistance (Check for open)

Tester Connections	Specified Conditions
B9-2 (IGF) - B30-81 (IGF1)	Below 1 Ω
B10-2 (IGF) - B30-81 (IGF1)	Below 1 Ω
B11-2 (IGF) - B30-81 (IGF1)	Below 1 Ω
B12-2 (IGF) - B30-81 (IGF1)	Below 1 Ω

Standard resistance (Check for open)

Tester Connections	Specified Conditions
B12-3 (IGT1) - B30-85 (IGT1)	Below 1 Ω
B11-3 (IGT2) - B30-84 (IGT2)	Below 1 Ω
B10-3 (IGT3) - B30-83 (IGT3)	Below 1 Ω
B9-3 (IGT4) - B30-82 (IGT4)	Below 1 Ω

Standard resistance (Check for short)

Tester Connections	Specified Conditions
B9-2 (IGF) or B30-81 (IGF1) - Body ground	10 kΩor higher

Tester Connections	Specified Conditions
B10-2 (IGF) or B30-81 (IGF1) - Body ground	10 kΩor higher
B11-2 (IGF) or B30-81 (IGF1) - Body ground	10 kΩor higher
B12-2 (IGF) or B30-81 (IGF1) - Body ground	10 kΩor higher

Standard resistance (Check for short)

Tester Connections	Specified Conditions
B12-3 (IGT1) or B30-85 (IGT1) - Body ground	10 kΩor higher
B11-3 (IGT2) or B30-84 (IGT2) - Body ground	10 kΩor higher
B10-3 (IGT3) or B30-83 (IGT3) - Body ground	10 kΩor higher
B9-3 (IGT4) or B30-82 (IGT4) - Body ground	10 kΩor higher

(d) Reconnect the ECM connector.
(e) Reconnect the ignition coil with igniter connector.

NG → **REPAIR OR REPLACE HARNESS OR CONNECTOR**

OK

3 CHECK WHETHER DTC OUTPUT RECURS (DTC P0351, P0352, P0353 OR P0354)

(a) Connect the intelligent tester to the DLC3.
(b) Turn the ignition switch ON and turn the tester ON.
(c) Clear DTCs (see page ES-35).
(d) Shuffle arrangement of the ignition coils with igniters (among No. 1 to No. 4 cylinders).
NOTICE:
Do not shuffle the connectors.
(e) Perform a simulation test.
(f) Check DTCs displayed on the tester.

Result

Display (DTC Output)	Proceed To
Same DTC output	A
Different ignition coil DTC output	B

B → **REPLACE IGNITION COIL ASSEMBLY**

A

REPLACE ECM

DTC	P0420	Catalyst System Efficiency Below Threshold (Bank 1)

MONITOR DESCRIPTION

The ECM uses sensors mounted in front of and behind the Three-Way Catalytic Converter (TWC) to monitor its efficiency.
The first sensor, the Air-Fuel Ratio (A/F) sensor, sends pre-catalyst information to the ECM. The second sensor, the Heated Oxygen (HO2) sensor, sends post-catalyst information to the ECM.
In order to detect any deterioration in the TWC, the ECM calculates the Oxygen Storage Capacity (OSC) of the TWC. This calculation is based on the voltage output of the HO2 sensor while performing active air-fuel ratio control, rather than the conventional detecting method, which uses the locus ratio.
The OSC value is an indication of the oxygen storage capacity of the TWC. When the vehicle is being driven with a warm engine, active air-fuel ratio control is performed for approximately 15 to 20 seconds. When it is performed, the ECM deliberately sets the air-fuel ratio to lean or rich levels. If the rich-lean cycle of the HO2 sensor is long, the OSC becomes greater. There is a direct correlation between the OSCs of the HO2 sensor and the TWC.
The ECM uses the OSC value to determine the state of the TWC. If any deterioration has occurred, it illuminates the MIL and sets the DTC.

DTC No.	DTC Detection Conditions	Trouble Areas
P0420	OSC value smaller than standard value under active air-fuel ratio control (2 trip detection logic)	• Front exhaust pipe (with TWC) • Gas leakage from exhaust system • Air-Fuel Ratio (A/F) sensor (sensor 1) • Heated Oxygen (HO2) sensor (sensor 2)

MONITOR STRATEGY

Related DTCs	P0420: Catalyst Deterioration
Required Sensors/Components (Main)	A/F sensor and HO2 sensor
Required Sensors/Components (Related)	Intake air temperature sensor, mass air flow meter, crankshaft position sensor and engine coolant temperature sensor
Frequency of Operation	Once per driving cycle
Duration	About 30 seconds
MIL Operation	2 driving cycles
Sequence of Operation	None

TYPICAL ENABLING CONDITIONS

Monitor runs whenever following DTCs not present	P0011 (VVT System 1 - Advance) P0012 (VVT System 1 - Retard) P0031, 32 (A/F Sensor heater - Sensor 1) P0037, 38 (O2 Sensor heater - Sensor 2) P0100 - P0103 (MAF meter) P0115 - P0118 (ECT sensor) P0120 - P0223, P2135 (TP sensor) P0125 (Insufficient ECT for Closed Loop) P0136 (O2 Sensor - Sensor 2) P0171, P0172 (Fuel system) P0300 - P0304 (Misfire) P0335 (CKP sensor) P0340 (CMP sensor) P0351 - P0354 (Igniter) P0500 (VSS) P2196 (A/F Sensor - rationality) P2A00 (A/F Sensor - slow response)
Battery voltage	11 V or more
Intake air temperature	-10°C (14°F) or more

Engine coolant temperature	75°C (167°F) or more
Atmospheric pressure	76 kPa (570 mmHg) or more
Idling	OFF
Engine RPM	Less than 4,000 rpm
A/F sensor status	Activated
Fuel system status	Closed loop
Engine load	10 to 80 %
All of following conditions (a), (b) and (c) met	-
(a) Mass air flow rate	2.5 to 40 g/sec.
(b) Estimated front catalyst temperature	650° to 840°C (1,202° to 1,544°F)
(c) Estimated rear catalyst temperature	400° to 770°C (752° to 1,418°F)
Rear HO2 sensor heater monitor	Completed
Shift position	4th

ES

TYPICAL MALFUNCTION THRESHOLDS

Oxygen Storage Capacity (OSC) of Three-Way Catalytic Converter (TWC)	Less than 0.07 g

MONITOR RESULT

Refer to CHECKING MONITOR STATUS (see page ES-17).

CONFIRMATION DRIVING PATTERN

HINT:

Performing this confirmation pattern will activate the catalyst monitor. This is very useful for verifying the completion of a repair.

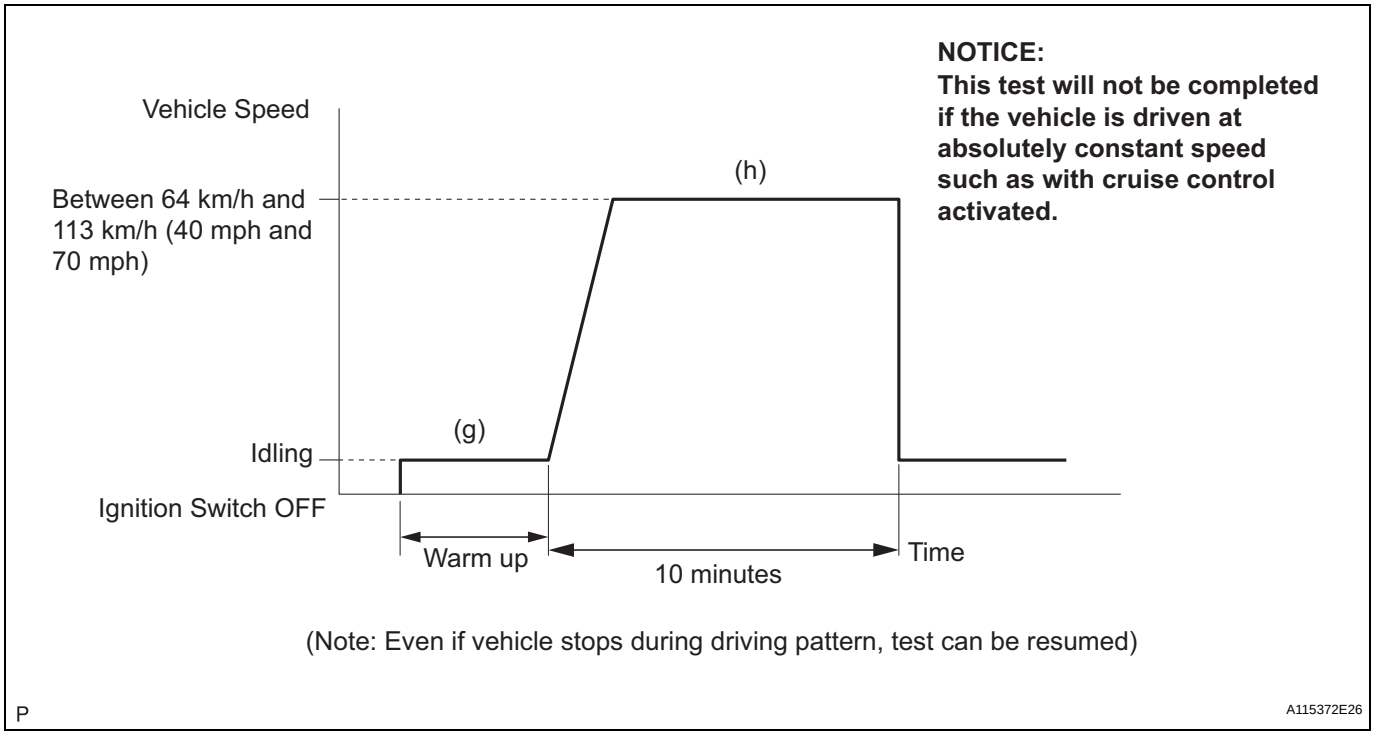

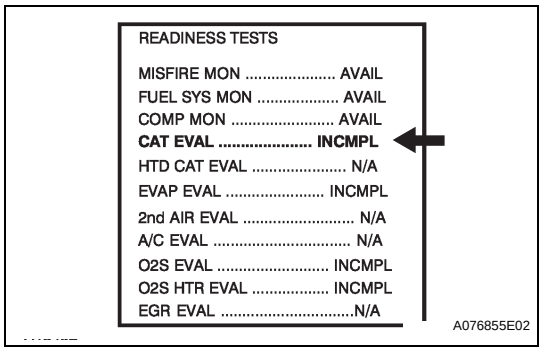

(a) Connect the intelligent tester to the DLC3.
(b) Turn the ignition switch ON.
(c) Turn the tester ON.
(d) Clear DTCs (if set) (see page ES-35).
(e) Select the following menu items: DIAGNOSIS / ENHANCED OBD II / DATA LIST / USER DATA / CAT CMPL.
(f) Check that CAT CMPL is INCMPL (incomplete).
(g) Start the engine and warm it up.
(h) Drive the vehicle at between 64 km/h and 113 km/h (40 mph and 70 mph) for at least 10 minutes.
(i) Note the state of the Readiness Tests items. Those items will change to COMPL (complete) as CAT CMPL monitor operates.
(j) On the tester, select the following menu items: DIAGNOSIS / ENHANCED OBD II / DTC INFO / PENDING CODES and check if any DTCs (any pending DTCs) are set.
HINT:
If CAT CMPL does not change to COMPL, and any pending DTCs fail to set, extend the driving time.

CONDITIONING FOR SENSOR TESTING

HINT:
Perform the operation with the engine speeds and time durations described below prior to checking the waveforms of the A/F and HO2 sensors. This is in order to activate the sensors sufficiently to obtain the appropriate inspection results.

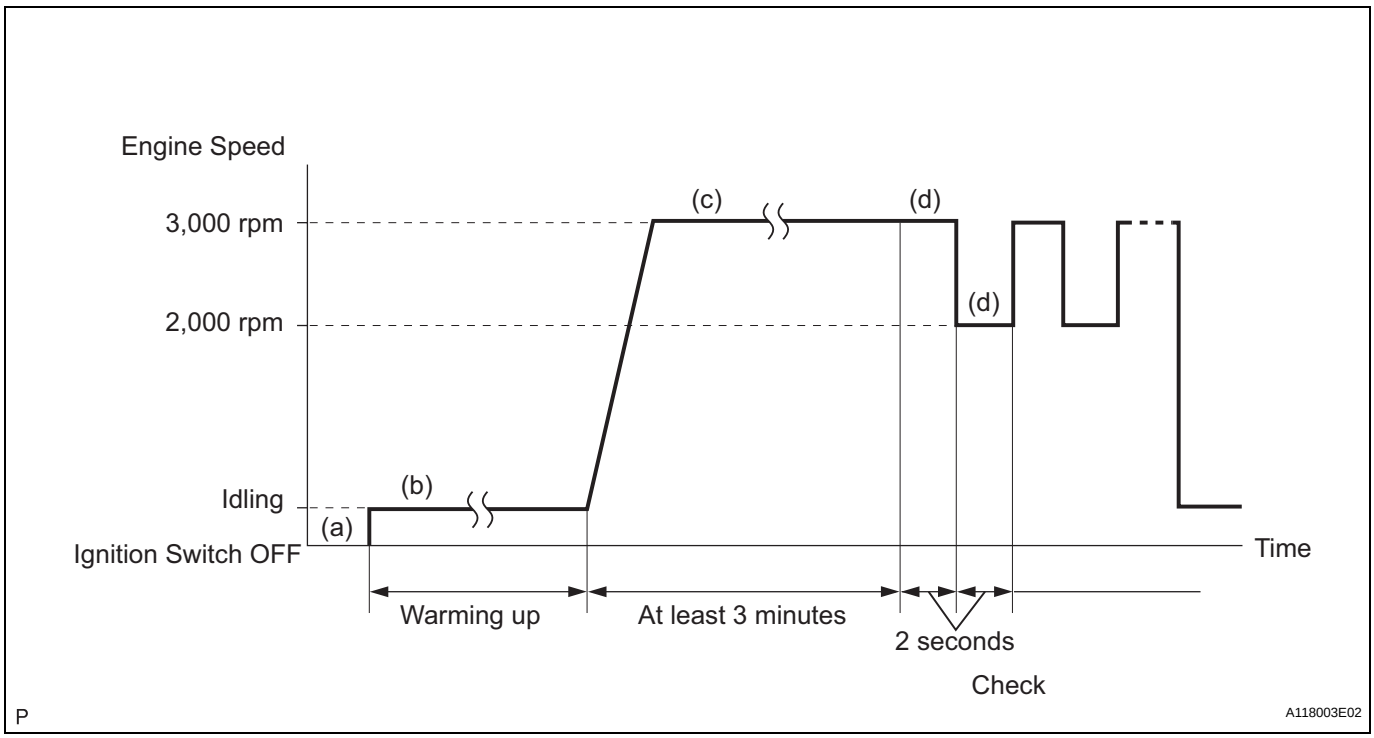

(a) Connect the intelligent tester to the DLC3.

(b) Start the engine and warm it up with all the accessories switched OFF, until the engine coolant temperature stabilizes.
(c) Run the engine at an engine speed of between 2,500 rpm and 3,000 rpm for at least 3 minutes.
(d) While running the engine at 3,000 rpm and 2,000 rpm alternating at 2 second intervals, check the waveforms of the A/F and HO2 sensors using the tester.
HINT:

- If either voltage output of the Air-Fuel Ratio (A/F) or Heated Oxygen (HO2) sensor does not fluctuate, or there is a noise in the waveform of either sensor, the sensor may be malfunctioning.
- If the voltage outputs of both the sensors remain lean or rich, the air-fuel ratio may be extremely lean or rich. In such cases, perform the following A/F CONTROL using the intelligent tester.
- If the Three-Way Catalytic Converter (TWC) has deteriorated, the HO2 sensor (located behind the TWC) voltage output fluctuates up and down frequently, even under normal driving conditions (active air-fuel ratio control is not performed).

ES

Voltage output when active air-fuel ratio control not performed:

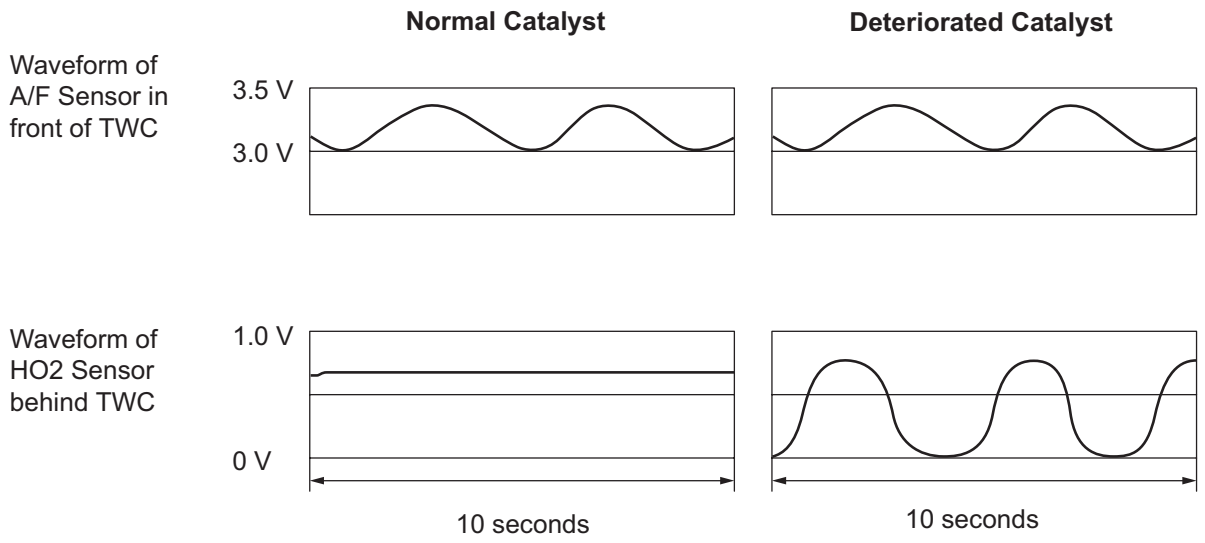

INSPECTION PROCEDURE

HINT:
Read freeze frame data using the intelligent tester. Freeze frame data records the engine condition when malfunctions are detected. When troubleshooting, freeze frame data can help determine if the vehicle was moving or stationary, if the engine was warmed up or not, if the air-fuel ratio was lean or rich, and other data from the time the malfunction occurred.

1	CHECK ANY OTHER DTCS OUTPUT (IN ADDITION TO DTC P0420)

(a) Connect the intelligent tester to the DLC3.
(b) Turn the ignition switch ON and turn the tester ON.
(c) Select the following menu items: DIAGNOSIS / ENHANCED OBD II / DTC INFO / CURRENT CODES.
(d) Read DTCs.

Result

Display (DTC Output)	Proceed To
P0420	A

Display (DTC Output)	Proceed To
P0420 and other DTCs	B

HINT:
If any DTCs other than P0420 are output, troubleshoot those DTCs first.

B → GO TO DTC CHART

A

2 PERFORM ACTIVE TEST USING INTELLIGENT TESTER (A/F CONTROL)

ES

(a) Connect the intelligent tester to the DLC3.
(b) Start the engine and turn the tester ON.
(c) Warm up the engine at an engine speed of 2,500 rpm for approximately 90 seconds.
(d) On the tester, select the following menu items: DIAGNOSIS / ENHANCED OBD II / ACTIVE TEST / A/F CONTROL.
(e) Perform the A/F CONTROL operation with the engine in an idling condition (press the RIGHT or LEFT button to change the fuel injection volume).
(f) Monitor the voltage outputs of the A/F and HO2 sensors (AFS B1 S1 and O2S B1 S2) displayed on the tester.

Result:

A/F sensor reacts in accordance with increases and decreases in fuel injection volume:
+25 % = Rich output:
Less than 3.0 V
-12.5 % = Lean output:
More than 3.35 V

NOTICE:
The A/F sensor has an output delay of a few seconds and the HO2 sensor has a maximum output delay of approximately 20 seconds.

Case	A/F Sensor (Sensor 1) Output Voltage		HO2 Sensor (Sensor 2) Output Voltage		Main Suspected Trouble Areas
1	Injection Volume +25 % -12.5 %		Injection Volume +25 % -12.5 %		• Catalyst • Exhaust gas leakage
	Output Voltage More than 3.35 V Less than 3.0 V		Output Voltage More than 0.5 V Less than 0.4 V		
2	Injection Volume +25 % -12.5 %		Injection Volume +25 % -12.5 %		• A/F sensor • A/F sensor heater • A/F sensor circuit
	Output Voltage Almost no reaction		Output Voltage More than 0.5 V Less than 0.4 V		

Case	A/F Sensor (Sensor 1) Output Voltage		HO2 Sensor (Sensor 2) Output Voltage		Main Suspected Trouble Areas
3	Injection Volume +25 % -12.5 %		Injection Volume +25 % -12.5 %		• HO2 sensor • HO2 sensor heater • HO2 sensor circuit
	Output Voltage More than 3.35 V Less than 3.0 V		Output Voltage Almost no reaction		
4	Injection volume +25 % -12.5 %		Injection Volume +25 % -12.5 %		Extremely rich or lean actual air-fuel ratio • Injector • Fuel pressure • Gas leakage from exhaust system
	Output Voltage Almost no reaction		Output Voltage Almost no reaction		

ES

Following the A/F CONTROL procedure enables technicians to check and graph the voltage outputs of both the A/F and HO2 sensors.
To display the graph, select the following menu items on the tester: DIAGNOSIS / ENHANCED OBD II / ACTIVE TEST / A/F CONTROL / USER DATA / AFS B1 S1 and O2S B1 S2; then press the YES button and then the ENTER button followed by the F4 button.

Result

Result	Proceed To
Case 1	A
Case 2	B
Case 3	C
Case 4	D

B → **REPLACE AIR-FUEL RATIO SENSOR**

C → **Go to step 4**

D → **CHECK CAUSE OF EXTREMELY RICH OR LEAN ACTUAL AIR-FUEL RATIO, REPLACE FAULTY AREA AND GO TO NEXT STEP**

A

3 CHECK FOR EXHAUST GAS LEAKAGE

OK:
No gas leakage.

NG → **REPAIR OR REPLACE EXHAUST GAS LEAKAGE POINT**

OK

REPLACE THREE-WAY CATALYTIC CONVERTER (BOTH FRONT AND REAR CATALYSTS (FRONT EXHAUST PIPE))

4	CHECK FOR EXHAUST GAS LEAKAGE

OK:
No gas leakage.

NG → **REPAIR OR REPLACE EXHAUST GAS LEAKAGE POINT**

OK

REPLACE HEATED OXYGEN SENSOR

DTC	P043E	Evaporative Emission System Reference Orifice Clog Up

DTC	P043F	Evaporative Emission System Reference Orifice High Flow

DTC SUMMARY

DTCs	Monitoring Items	Malfunction Detection Conditions	Trouble Areas	Detection Timings	Detection Logic
P043E	Reference orifice clogged	P043E, P043F, P2401, P2402 and P2419 present when one of following conditions met during key-off EVAP monitor: • EVAP pressure just after reference pressure measurement greater than -1 kPa-g (-7.5 mmHg-g) • Reference pressure less than -4.85 kPa-g (-36.4 mmHg-g) • Reference pressure greater than -1.057 kPa-g (-7.93 mmHg-g) • Reference pressure not saturated • Reference pressure difference between first and second 0.7 kPa-g (5.25 mmHg-g) or more HINT: Typical example values	• Canister pump module (Reference orifice, leak detection pump, vent valve) • Connector/wire harness (Canister pump module - ECM) • EVAP system hose (pipe from air inlet port to canister pump module, canister filter, fuel tank vent hose) • ECM	While ignition switch OFF	2 trip
P043F	Reference orifice high-flow		• Canister pump module (Reference orifice, leak detection pump, vent valve) • Connector/wire harness (Canister pump module - ECM) • EVAP system hose (pipe from air inlet port to canister pump module, canister filter, fuel tank vent hose) • ECM	While ignition switch OFF	2 trip

HINT:
The reference orifice is located inside the canister pump module.

DESCRIPTION

The description can be found in the EVAP (Evaporative Emission) System (see page ES-335).

INSPECTION PROCEDURE

Refer to the EVAP System (see page ES-340).

MONITOR DESCRIPTION

5 hours* after the ignition switch is turned OFF, the leak detection pump creates negative pressure (vacuum) in the EVAP system. The ECM monitors for leaks and actuator malfunctions based on the EVAP pressure.
HINT:
*: If the engine coolant temperature is not below 35°C (95°F) 5 hours after the ignition switch is turned OFF, the monitor check starts 2 hours later. If it is still not below 35°C (95°F) 7 hours after the ignition switch is turned OFF, the monitor check starts 2.5 hours later.

Sequence	Operations	Descriptions	Duration
-	ECM activation	Activated by soak timer 5, 7 or 9.5 hours after ignition switch turned OFF.	-

Sequence	Operations	Descriptions	Duration
A	Atmospheric pressure measurement	Vent valve turned OFF (vent) and EVAP system pressure measured by ECM in order to register atmospheric pressure. If pressure in EVAP system not between 76 kPa-a and 110 kPa-a (570 mmHg-a and 825 mmHg-a), ECM cancels EVAP system monitor.	10 seconds
B	First reference pressure measurement	In order to determine reference pressure, leak detection pump creates negative pressure (vacuum) through reference orifice and then ECM checks if leak detection pump and vent valve operate normally.	60 seconds
C	EVAP system pressure measurement	Vent valve turned ON (closed) to shut EVAP system. Negative pressure (vacuum) created in EVAP system, and EVAP system pressure then measured. Write down measured value as it will be used in leak check. If EVAP pressure does not stabilize within 15 minutes, ECM cancels EVAP system monitor.	15 minutes*
D	Purge VSV monitor	Purge VSV opened and then EVAP system pressure measured by ECM. Large increase indicates normality.	10 seconds
E	Second reference pressure measurement	After second reference pressure measurement, leak check performed by comparing first and second reference pressure. If stabilized system pressure higher than second reference pressure, ECM determines that EVAP system leaking.	60 seconds
F	Final check	Atmospheric pressure measured and then monitoring result recorded by ECM.	-

*: If only a small amount of fuel is in the fuel tank, it takes longer for the EVAP pressure to stabilize.

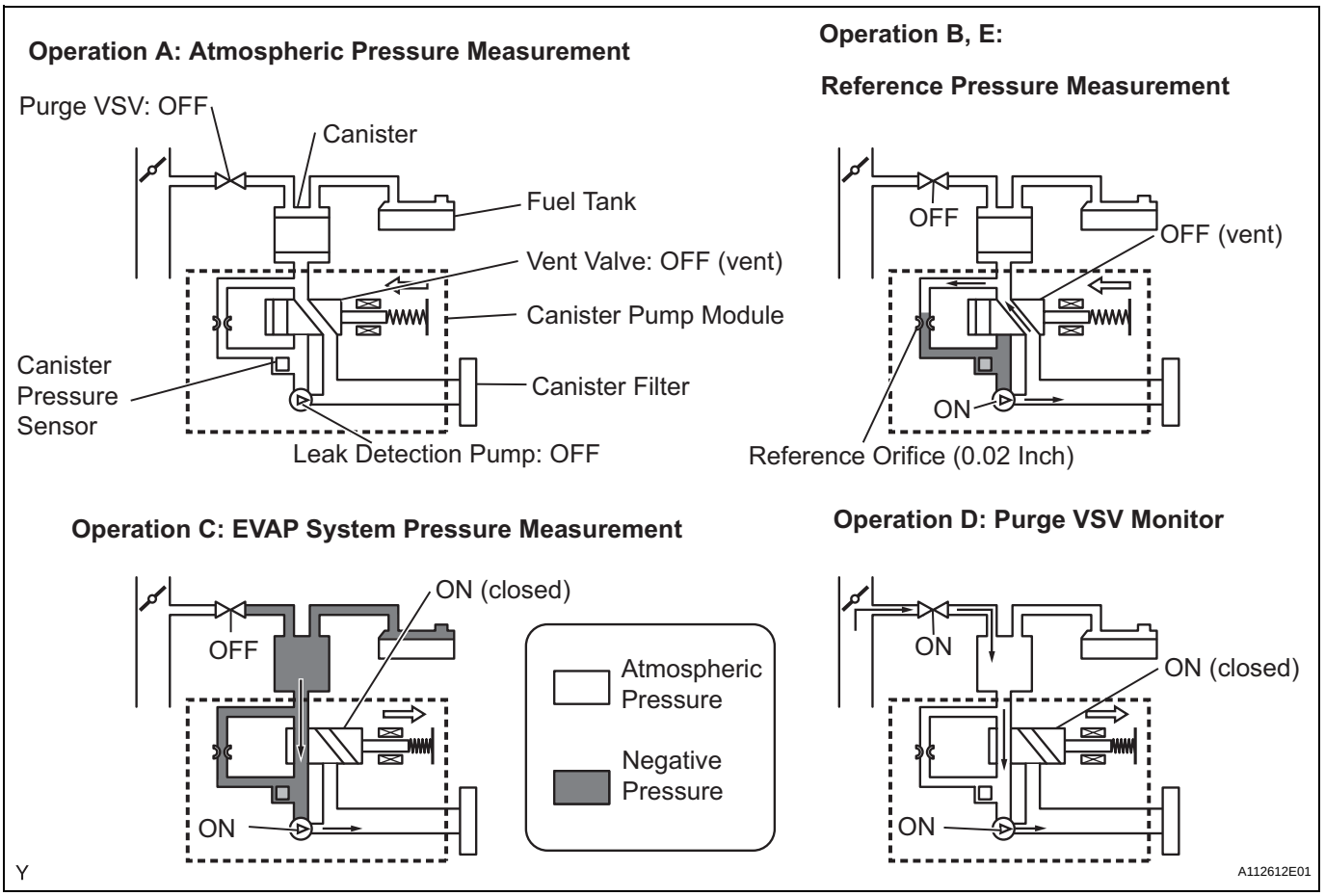

(a) P043E: Reference orifice clogged

In operation B, the leak detection pump creates negative pressure (vacuum) through the reference orifice. The EVAP system pressure is then measured by the ECM, using the canister pressure sensor, to determine the reference pressure. If the pressure is lower than -4.85 kPa-g (-36.4 mmHg-g), the ECM interprets this as a clog malfunction in the reference orifice, and stops the EVAP system monitor. The ECM then illuminates the MIL and sets the DTC (2 trip detection logic).

EVAP Pressure when Reference Orifice Clogged:

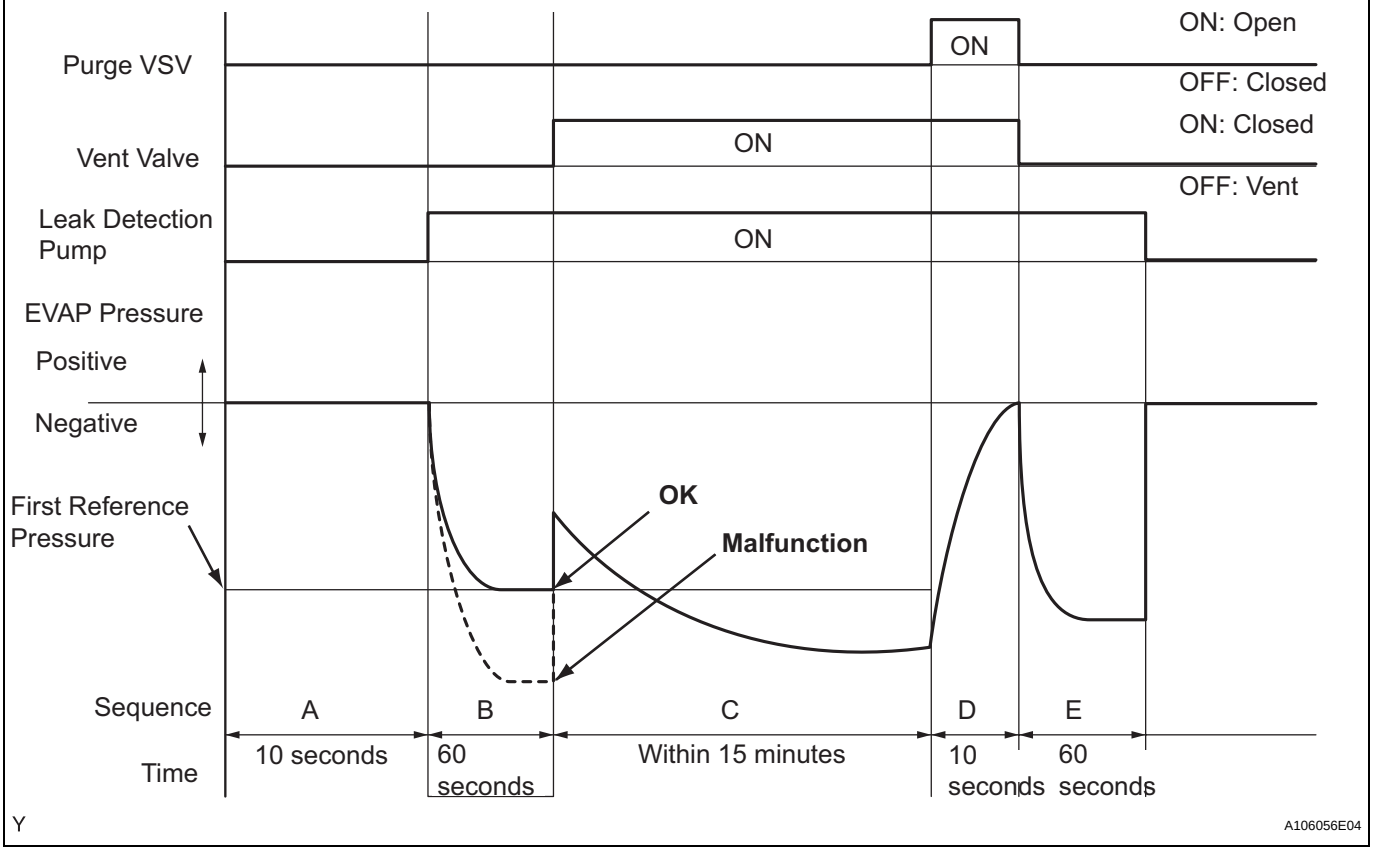

(b) P043F: Reference orifice high-flow

In operation B, the leak detection pump creates negative pressure (vacuum) through the reference orifice. The EVAP system pressure is then measured by the ECM using the canister pressure sensor to determine the reference pressure. If the pressure is higher than -1.057 kPa-g (-7.93 mmHg-g), the ECM interprets this as a high-flow malfunction in the reference orifice, and stops the EVAP system monitor. The ECM then illuminates the MIL and sets the DTC (2 trip detection logic).

EVAP Pressure when Reference Orifice High-flow Malfunction:

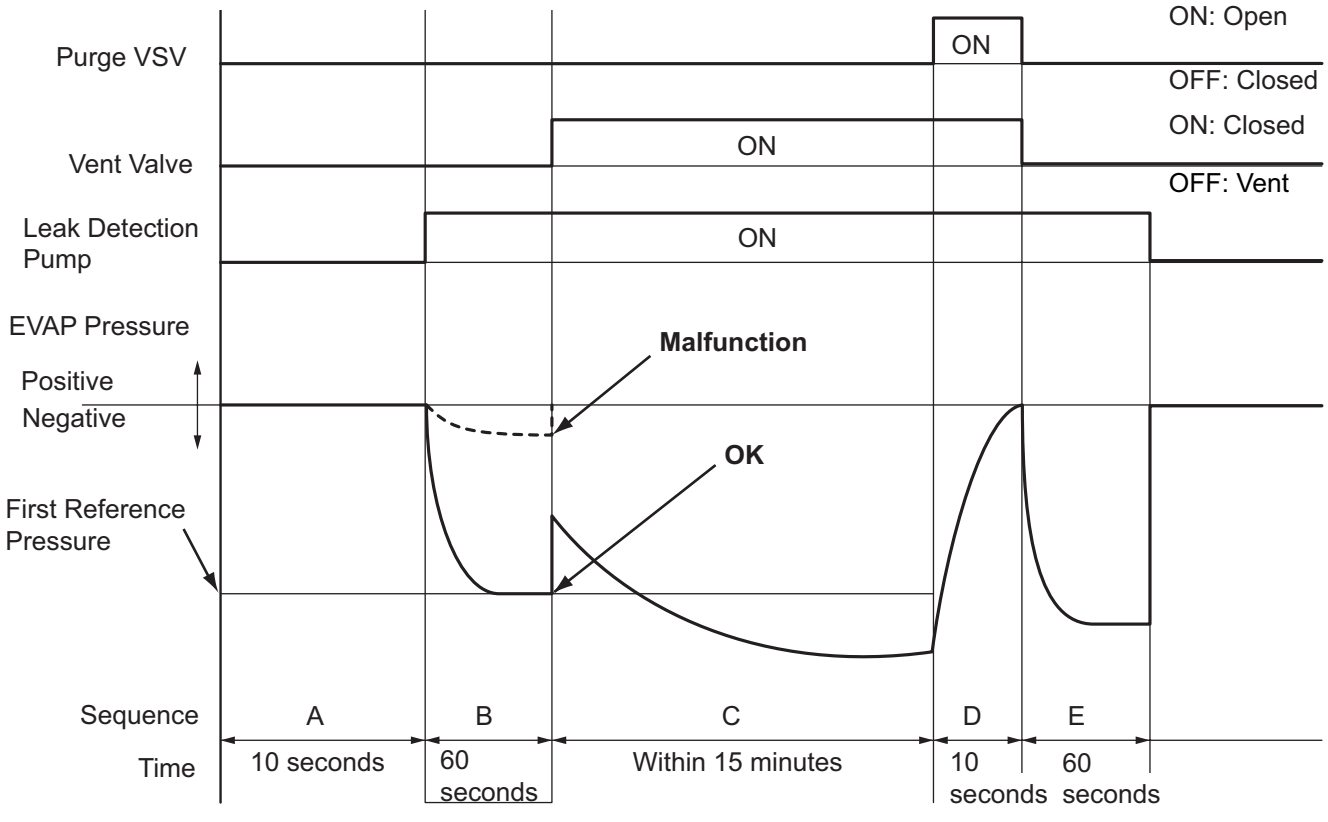

ES

MONITOR STRATEGY

Required Sensors/Components	Canister pump module
Frequency of Operation	Once per driving cycle
Duration	Within 2 minutes
MIL Operation	2 driving cycles
Sequence of Operation	None

TYPICAL ENABLING CONDITIONS

Monitor runs whenever following DTCs not present	None
EVAP key-off monitor runs when all of following conditions met	-
Atmospheric pressure	70 to 110 kPa-a (525 to 825 mmHg-a)
Battery voltage	10.5 V or more
Vehicle speed	Below 4 km/h (2.5 mph)
Ignition switch	OFF
Time after key off	5 or 7 or 9.5 hours
Canister pressure sensor malfunction (P0450, P0451, P0452 and P0453)	Not detected
Purge VSV	Not operated by scan tool
Vent valve	Not operated by scan tool
Leak detection pump	Not operated by scan tool
Both of following conditions met before key off	Conditions 1 and 2
1. Duration that vehicle driven	5 minutes or more
2. EVAP purge operation	Performed

ECT	4.4° to 35°C (40° to 95°F)
IAT	4.4° to 35°C (40° to 95°F)

1. Key-off monitor sequence 1 to 8

1. Atmospheric pressure measurement

Next sequence run if following condition set	-
Atmospheric pressure change	Less than 0.3 kPa-g (2.25 mmHg-g) in 1 second

2. First reference pressure measurement

Next sequence run if all of following conditions set	Condition 1, 2 and 3
1. EVAP pressure just after reference pressure measurement start	-1 kPa-g (-7.5 mmHg-g) or less
2. Reference pressure	-4.85 to -1.057 kPa-g (-36.4 to -7.93 mmHg-g)
3. Reference pressure	Saturated within 60 seconds

3. Vent valve stuck closed check

Next sequence run if following condition set	-
EVAP pressure change after vent valve ON (closed)	0.3 kPa-g (2.25 mmHg-g) or more

4. Vacuum introduction

Next sequence run if following condition set	-
EVAP pressure	Saturated within 15 minutes

5. Purge VSV stuck closed check

Next sequence run if following condition set	-
EVAP pressure change after purge VSV ON (open)	0.3 kPa-g (2.25 mmHg-g) or more

6. Second reference pressure measurement

Next sequence run if all of following conditions set	Condition 1, 2, 3 and 4
1. EVAP pressure just after reference pressure	-1 kPa-g (-7.5 mmHg-g) or less
2. Reference pressure	-4.85 to -1.057 kPa-g (-36.4 to -7.93 mmHg-g)
3. Reference pressure	Saturated within 60 seconds
4. Reference pressure difference between first and second	Less than 0.7 kPa-g (5.25 mmHg-g)

7. Leak check

Next sequence run if following condition set	-
EVAP pressure when vacuum introduction complete	Second reference pressure or less

8. Atmospheric pressure measurement

EVAP monitor complete if following condition set	-
Atmospheric pressure difference between sequence 1 and 8	Within 0.3 kPa-g (2.25 mmHg-g)

TYPICAL MALFUNCTION THRESHOLDS

"Saturated" indicates that the EVAP pressure change is less than 0.286 kPa-g (2.14 mmHg-g) in 60 seconds.

One of following conditions met	-
EVAP pressure just after reference pressure measurement start	More than -1 kPa-g (-7.5 mmHg-g)
Reference pressure	Less than -4.85 kPa-g (-36.4 mmHg-g)
Reference pressure	-1.057 kPa-g (-7.93 mmHg-g) or more
Reference pressure	Not saturated within 60 seconds
Reference pressure difference between first and second	0.7 kPa-g (5.25 mmHg-g) or more

MONITOR RESULT

Refer to CHECKING MONITOR STATUS (see page ES-17).

DTC	P0441	Evaporative Emission Control System Incorrect Purge Flow

DTC SUMMARY

DTC	Monitoring Items	Malfunction Detection Conditions	Trouble Areas	Detection Timings	Detection Logic
P0441	Purge VSV (Vacuum Switching Valve) stuck open	Leak detection pump creates negative pressure (vacuum) in EVAP system and EVAP system pressure measured. Reference pressure measured at start and at end of leak check. If stabilized pressure higher than [second reference pressure x 0.2], ECM determines that purge VSV stuck open.	• Purge VSV • Connector/wire harness (Purge VSV - ECM) • ECM • Canister pump module • Leakage from EVAP system	While ignition switch OFF	2 trip
	Purge VSV stuck closed	After EVAP leak check performed, purge VSV turned ON (open), and atmospheric air introduced into EVAP system. Reference pressure measured at start and at end of check. If pressure does not return to near atmospheric pressure, ECM determines that purge VSV stuck closed.	• Purge VSV • Connector/wire harness (Purge VSV - ECM) • ECM • Canister pump module • Leakage from EVAP system	While ignition switch OFF	2 trip
	Purge flow	While engine running, following conditions successively met: • Negative pressure not created in EVAP system when purge VSV turned ON (open) • EVAP system pressure change less than 0.5 kPa-g (3.75 mmHg-g) when vent valve turned ON (closed) • Atmospheric pressure change before and after purge flow monitor less than 0.1 kPa-g (0.75 mmHg-g)	• Purge VSV • Connector/wire harness (Purge VSV - ECM) • Leakage from EVAP line (Purge VSV - Intake manifold) • ECM	While engine running	2 trip

DESCRIPTION

The description can be found in the EVAP (Evaporative Emission) System (see page ES-335).

INSPECTION PROCEDURE

Refer to the EVAP System (see page ES-340).

MONITOR DESCRIPTION

The two monitors, Key-Off and Purge Flow, are used to detect malfunctions relating to DTC P0441. The Key-Off monitor is initiated by the ECM internal timer, known as the soak timer, 5 hours* after the ignition switch is turned OFF. The purge flow monitor runs while the engine is running.

1. KEY-OFF MONITOR

   5 hours* after the ignition switch is turned OFF, the leak detection pump creates negative pressure (vacuum) in the EVAP system. The ECM monitors for leaks and actuator malfunctions based on the EVAP pressure.

   HINT:

   *: If the engine coolant temperature is not below 35°C (95°F) 5 hours after the ignition switch is turned OFF, the monitor check starts 2 hours later. If it is still not below 35°C (95°F) 7 hours after the ignition switch is turned OFF, the monitor check starts 2.5 hours later.

Sequence	Operations	Descriptions	Duration
-	ECM activation	Activated by soak timer 5, 7 or 9.5 hours after ignition switch turned OFF.	-

Sequence	Operations	Descriptions	Duration
A	Atmospheric pressure measurement	Vent valve turned OFF (vent) and EVAP system pressure measured by ECM in order to register atmospheric pressure. If pressure in EVAP system not between 76 kPa-a and 110 kPa-a (570 mmHg-a and 825 mmHg-a), ECM cancels EVAP system monitor.	10 seconds
B	First reference pressure measurement	In order to determine reference pressure, leak detection pump creates negative pressure (vacuum) through reference orifice and then ECM checks if leak detection pump and vent valve operate normally.	60 seconds
C	EVAP system pressure measurement	Vent valve turned ON (closed) to shut EVAP system. Negative pressure (vacuum) created in EVAP system, and EVAP system pressure then measured. Write down measured value as it will be used in leak check. If EVAP pressure does not stabilize within 15 minutes, ECM cancels EVAP system monitor.	15 minutes*
D	Purge VSV monitor	Purge VSV opened and then EVAP system pressure measured by ECM. Large increase indicates normality.	10 seconds
E	Second reference pressure measurement	After second reference pressure measurement, leak check performed by comparing first and second reference pressure. If stabilized system pressure higher than second reference pressure, ECM determines that EVAP system leaking.	60 seconds
F	Final check	Atmospheric pressure measured and then monitoring result recorded by ECM.	-

*: If only a small amount of fuel is in the fuel tank, it takes longer for the EVAP pressure to stabilize.

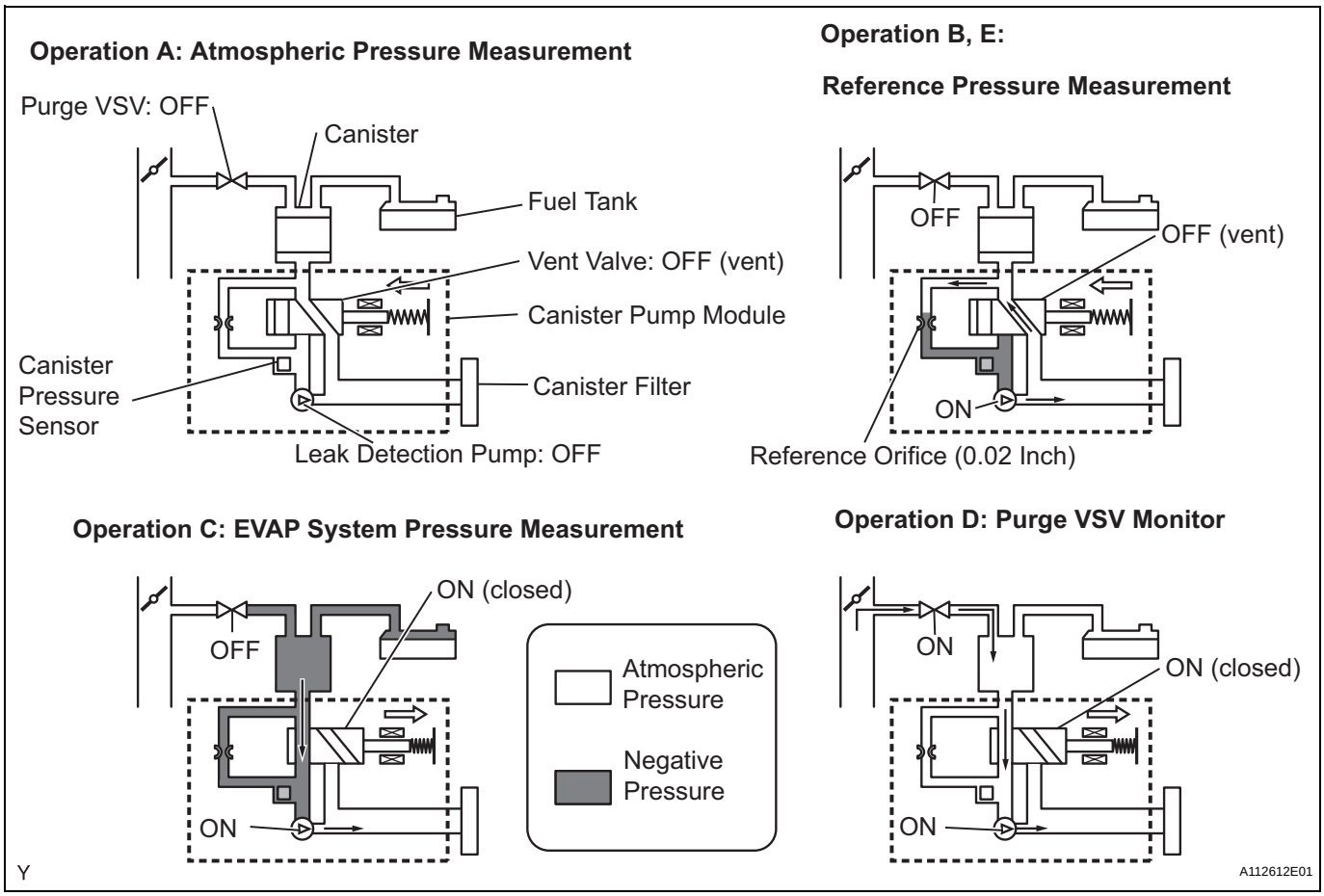

(a) Purge VSV stuck open

In operation C, the leak detection pump creates negative pressure (vacuum) in the EVAP system. The EVAP system pressure is then measured by the ECM using the canister pressure sensor. If the stabilized system pressure is higher than [second reference pressure x 0.2], the ECM interprets this as the purge VSV (Vacuum Switching Valve) being stuck open. The ECM illuminates the MIL and sets the DTC (2 trip detection logic).

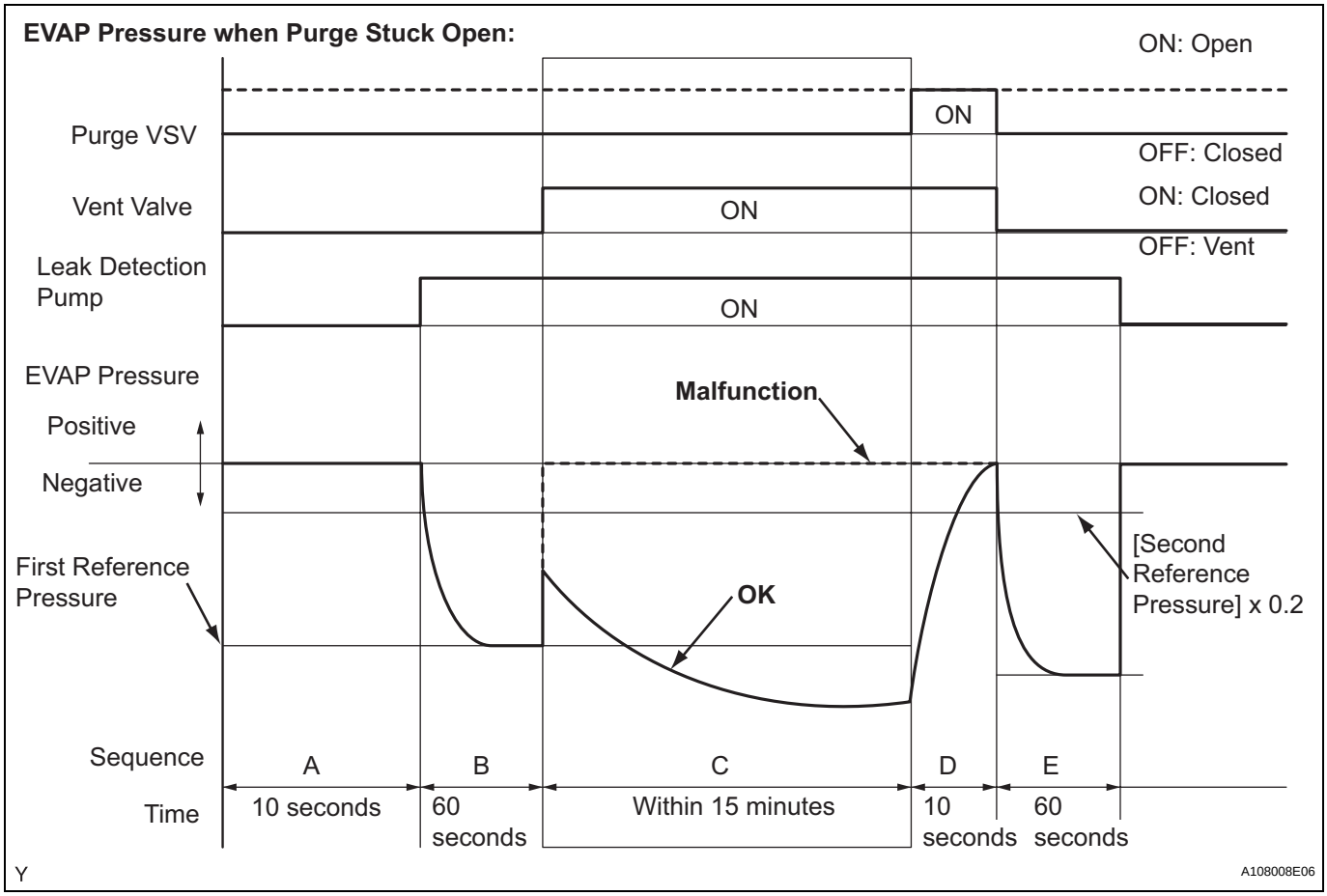

(b) Purge VSV stuck closed

In operation D, the canister pressure sensor measures the EVAP system pressure. The pressure measurement for purge VSV monitor is begun when the purge VSV is turned ON (open) after the EVAP leak check. When the measured pressure indicates an increase of 0.3 kPa-g (2.25 mmHg-g) or more, the purge VSV is functioning normally. If the pressure does not increase, the ECM interprets this as the purge VSV being stuck closed. The ECM illuminates the MIL and sets the DTC (2 trip detection logic).

EVAP Pressure when Purge VSV Stuck Closed:

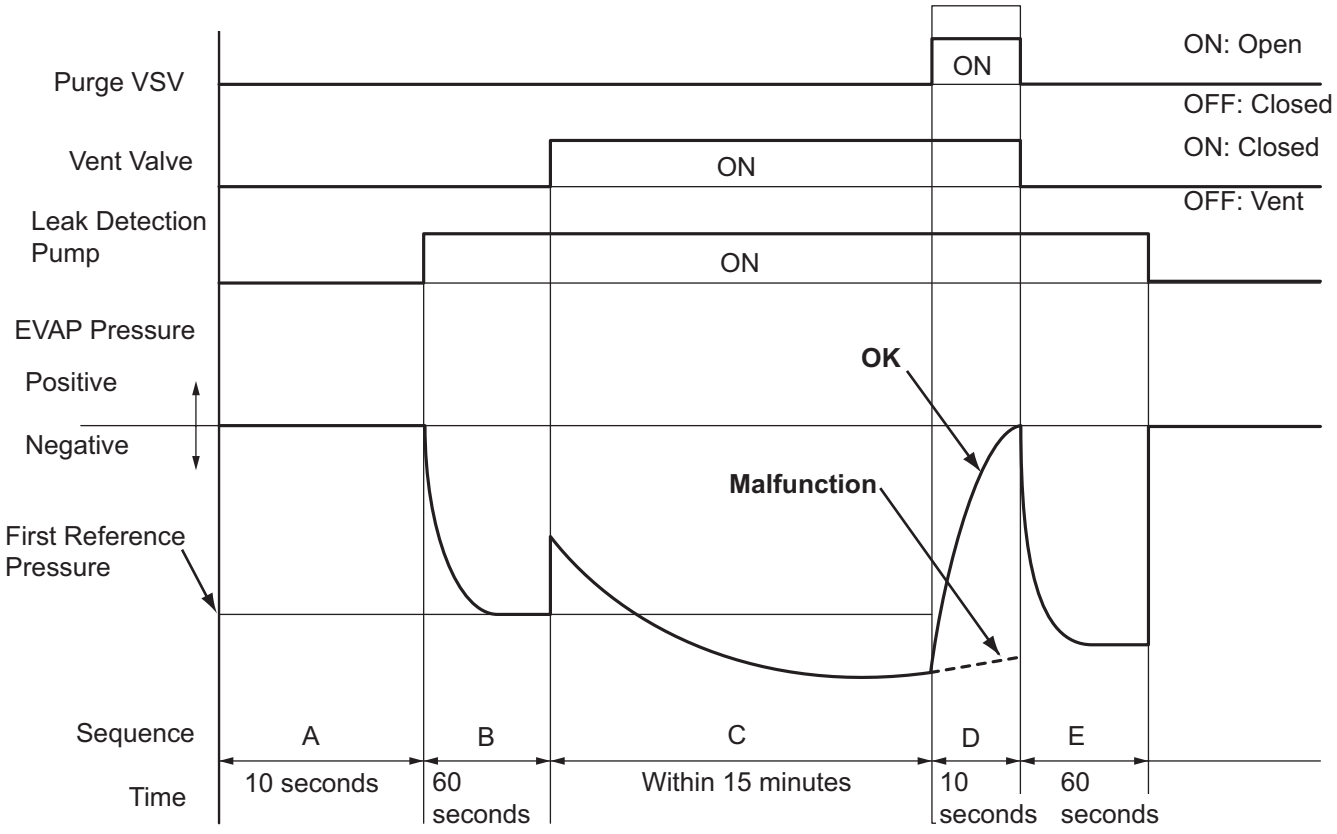

2. PURGE FLOW MONITOR

EVAP Pressure During Purge Flow Monitor:

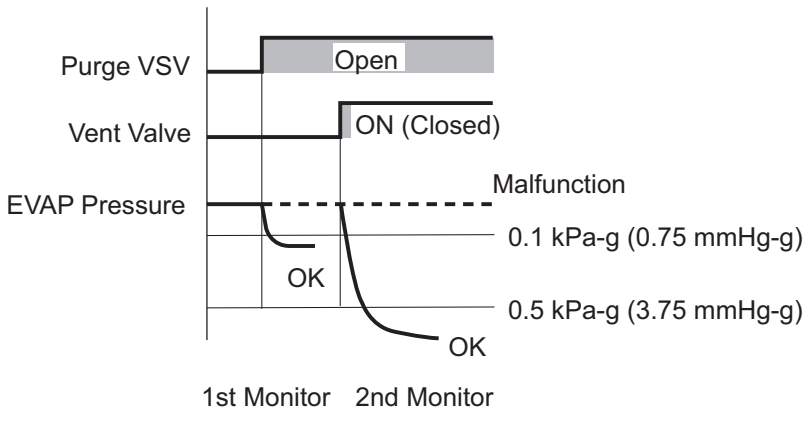

The purge flow monitor consists of the two step monitors. The 1st monitor is conducted every time and the 2nd monitor is activated if necessary.

- The 1st monitor
  While the engine is running and the purge VSV is ON (open), the ECM monitors the purge flow by measuring the EVAP pressure change. If negative pressure is not created, the ECM begins the 2nd monitor.
- The 2nd monitor
  The vent valve is turned ON (closed) and the EVAP pressure is then measured. If the variation in the pressure is less than 0.5 kPa-g (3.75 mmHg-g), the ECM interprets this as the purge VSV being stuck closed, and illuminates the MIL and sets DTC P0441 (2 trip detection logic).

Atmospheric pressure check:
In order to ensure reliable malfunction detection, the variation between the atmospheric pressures, before and after conduction of the purge flow monitor, is measured by the ECM.

OBD II MONITOR SPECIFICATIONS

1. Key-off Monitor

Monitor Strategy

Required Sensors/Components	Purge VSV and canister pump module
Frequency of Operation	Once per driving cycle
Duration	Within 15 minutes (varies with fuel in tank)
MIL Operation	2 driving cycles
Sequence of Operation	None

Typical Enabling Conditions

EVAP key-off monitor runs when all of following conditions met	-
Atmospheric pressure	70 to 110 kPa-a (525 to 825 mmHg-a)
Battery voltage	10.5 V or more
Vehicle speed	Below 4 km/h (2.5 mph)
Ignition switch	OFF
Time after key off	5 or 7 or 9.5 hours
Canister pressure sensor malfunction (P0450, P0451, P0452 and P0453)	Not detected
Purge VSV	Not operated by scan tool
Vent valve	Not operated by scan tool
Leak detection pump	Not operated by scan tool
Both of following conditions met before key off	Conditions 1 and 2
1. Duration that vehicle driven	5 minutes or more
2. EVAP purge operation	Performed
ECT	4.4° to 35°C (40° to 95°F)
IAT	4.4°to 35°C (40° to 95°F)

2. Key-off monitor sequence 1 to 8

1. Atmospheric pressure measurement

Next sequence run if following condition set	-
Atmospheric pressure change	Less than 0.3 kPa-g (2.25 mmHg-g) in 1 second

2. First reference pressure measurement

Next sequence run if all of following conditions set	Condition 1, 2 and 3
1. EVAP pressure just after reference pressure measurement start	-1 kPa-g (-7.5 mmHg-g) or less
2. Reference pressure	-4.85 to -1.057 kPa-g (-36.4 to -7.93 mmHg-g)
3. Reference pressure	Saturated within 60 seconds

3. Vent valve stuck closed check

Next sequence run if following condition set	-
EVAP pressure change after vent valve ON (closed)	0.3 kPa-g (2.25 mmHg-g) or more

4. Vacuum introduction

Next sequence run if following condition set	-
EVAP pressure	Saturated within 15 minutes

5. Purge VSV stuck closed check

Next sequence run if following condition set	-
EVAP pressure change after purge VSV ON (open)	0.3 kPa-g (2.25 mmHg-g) or more

6. Second reference pressure measurement

Next sequence run if all of following conditions set	Condition 1, 2, 3 and 4
1. EVAP pressure just after reference pressure	-1 kPa-g (-7.5 mmHg-g) or less
2. Reference pressure	-4.85 to -1.057 kPa-g (-36.4 to -7.93 mmHg-g)
3. Reference pressure	Saturated within 60 seconds
4. Reference pressure difference between first and second	Less than 0.7 kPa-g (5.25 mmHg-g)

7. Leak check

Next sequence run if following condition set	-
EVAP pressure when vacuum introduction complete	Second reference pressure or less

8. Atmospheric pressure measurement

EVAP monitor complete if following condition set	-
Atmospheric pressure difference between sequence 1 and 8	Within 0.3 kPa-g (2.25 mmHg-g)

Typical Malfunction Thresholds

Purge VSV stuck open:	-
EVAP pressure when vacuum introduction complete	Higher than reference pressure x 0.2

Purge VSV stuck closed:	-
EVAP pressure change after purge VSV ON (open)	Less than 0.3 kPa-g (2.25 mmHg-g)

OBD II MONITOR SPECIFICATIONS

1. Purge Flow Monitor

Monitor Strategy

Required Sensors/Components	Purge VSV and canister pump module
Frequency of Operation	Once per driving cycle
Duration	Within 10 minutes
MIL Operation	2 driving cycles
Sequence of Operation	None

Typical Enabling Conditions

Monitor runs whenever following DTCs not present	P0011 (VVT System 1 - Advance) P0012 (VVT System 1 - Retard) P0100 - P0103 (MAF meter) P0110 - P0113 (IAT sensor) P0115 - P0118 (ECT sensor) P0120 - P0223, P2135 (TP sensor) P0125 (Insufficient ECT for Closed Loop) P0171, P0172 (Fuel system) P0300 - P0304 (Misfire) P0335 (CKP sensor) P0340 (CMP sensor) P0351 - P0354 (Igniter) P0450 - P0453 (EVAP press sensor) P0500 (VSS)
Engine	Running
ECT	4.4°C (40°F) or more
IAT	4.4°C (40°F) or more

Canister pressure sensor malfunction	Not detected
Purge VSV	Not operated by scan tool
EVAP system check	Not operated by scan tool
Battery voltage	10 V or more
Purge duty cycle	8 % or more

Typical Malfunction Thresholds

Both of following conditions met	Conditions 1 and 2
1. EVAP pressure change when purge operation started	Less than 0.1 kPa-g (0.75 mmHg-g)
2. EVAP pressure change during purge operation when vent valve closed	Less than 0.5 kPa-g (3.75 mmHg-g)

ES

MONITOR RESULT

Refer to CHECKING MONITOR STATUS (see page ES-17).

DTC	P0450	Evaporative Emission Control System Pressure Sensor / Switch

DTC	P0451	Evaporative Emission Control System Pressure Sensor Range / Performance

DTC	P0452	Evaporative Emission Control System Pressure Sensor / Switch Low Input

DTC	P0453	Evaporative Emission Control System Pressure Sensor / Switch High Input

DTC SUMMARY

DTC	Monitoring Items	Malfunction Detection Conditions	Trouble Areas	Detection Timings	Detection Logic
P0450	Canister pressure sensor voltage fluctuation abnormal	Sensor output voltage rapidly fluctuates beyond upper and lower malfunction thresholds for 0.5 seconds.	• Canister pump module • EVAP system hose (pipe from air inlet port to canister pump module, canister filter, fuel tank vent hose) • ECM	• EVAP monitoring (ignition OFF) • Ignition ON	1 trip
P0451	Canister pressure sensor noise	Sensor output voltage fluctuates frequently within certain time period.	• Canister pump module • Connector/wire harness (Canister pump module - ECM) • EVAP system hose (pipe from air inlet port to canister pump module, canister filter, fuel tank vent hose) • ECM	• EVAP monitoring (ignition OFF) • Engine running	2 trip
	Canister pressure sensor signal becomes fixed/flat	Sensor output voltage does not vary within certain time period.	• Canister pump module • Connector/wire harness (Canister pump module - ECM) • EVAP system hose (pipe from air inlet port to canister pump module, canister filter, fuel tank vent hose) • ECM	• EVAP monitoring (ignition OFF)	2 trip
P0452	Canister pressure sensor low input	EVAP pressure less than 42.1 kPa for 0.5 seconds.	• Canister pump module • Connector/wire harness (Canister pump module - ECM) • EVAP system hose (pipe from air inlet port to canister pump module, canister filter, fuel tank vent hose) • ECM	• Ignition ON • EVAP monitoring (ignition OFF)	1 trip

DTC	Monitoring Items	Malfunction Detection Conditions	Trouble Areas	Detection Timings	Detection Logic
P0453	Canister pressure sensor high input	EVAP pressure more than 123.8 kPa for 0.5 seconds.	• Canister pump module • Connector/wire harness (Canister pump module - ECM) • EVAP system hose (pipe from air inlet port to canister pump module, canister filter, fuel tank vent hose) • ECM	• Ignition ON • EVAP monitoring (ignition OFF)	1 trip

HINT:
The canister pressure sensor is built into the canister pump module.

ES

DESCRIPTION

The description can be found in the EVAP (Evaporative Emission) System (see page ES-335).

MONITOR DESCRIPTION

Canister Pressure Sensor Specification:

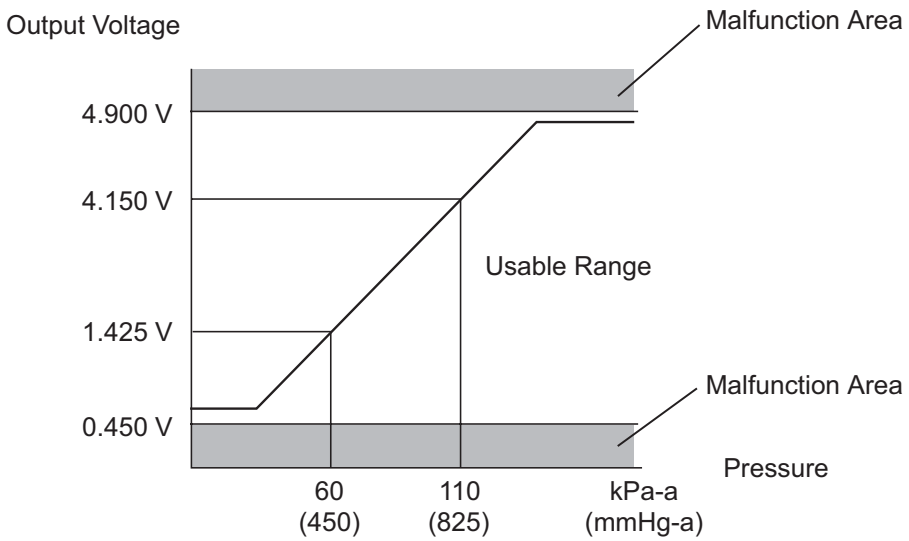

HINT:

Standard atmospheric pressure is 101.3 kPa-a (760 mmHg-a)

A115543E05

1. DTC P0450: Canister pressure sensor abnormal fluctuation
   If the canister pressure sensor output [pressure] rapidly fluctuates between less than 42.1 kPa-a (315.9 mmHg-a) and more than 123.8 kPa-a (928.4 mmHg-a), the ECM interprets this as an open or short circuit malfunction in the canister pressure sensor or its circuit, and stops the EVAP (Evaporative Emission) system monitor. The ECM then illuminates the MIL and sets the DTC (1 trip detection logic).

2. DTC P0451: Canister pressure sensor noise or fixed/flat
   If the canister pressure sensor voltage output fluctuates rapidly for 10 seconds, the ECM stops the EVAP system monitor. The ECM interprets this as noise from the canister pressure sensor, and stops the EVAP system monitor. The ECM then illuminates the MIL and sets the DTC.
   Alternatively, if the sensor voltage output does not change for 10 seconds, the ECM interprets this as the sensor being fixed/flat, and stops the monitor. The ECM then illuminates the MIL and sets the DTC. (Both the malfunctions are detected by 2 trip detection logic).
3. DTC P0452: Canister pressure sensor voltage low
   If the canister pressure sensor output [pressure] is below 42.1 kPa-a (315.9 mmHg-a), the ECM interprets this as an open or short circuit malfunction in the canister pressure sensor or its circuit, and stops the EVAP system monitor. The ECM then illuminates the MIL and sets the DTC (1 trip detection logic).
4. DTC P0453: Canister pressure sensor voltage high
   If the canister pressure sensor output [pressure] is 123.8 kPa-a (928.4 mmHg-a) or more, the ECM interprets this as an open or short circuit malfunction in the canister pressure sensor or its circuit, and stops the EVAP system monitor. The ECM then illuminates the MIL and sets the DTC (1 trip detection logic).

MONITOR STRATEGY

Required Sensors/Components	Canister pump module
Frequency of Operation	Once per driving cycle: P0451 sensor fixed/flat Continuous: P0451 sensor noise, P0450, P0452 and P0453
Duration	0.5 seconds: P0450, P0452 and P0453 2 minutes: P0451
MIL Operation	Immediate: P0450, P0452 and P0453 2 driving cycles: P0451
Sequence of Operation	None

TYPICAL ENABLING CONDITIONS

P0451 (Noise monitor):

Monitor runs whenever following DTCs not present	None
Atmospheric pressure (absolute pressure)	70 to 110 kPa-a (525 to 825 mmHg-a)
Battery voltage	10.5 V or more
Intake air temperature	4.4°to 35°C (40° to 95°F)
Canister pressure sensor malfunction (P0450, P0452, 0453)	Not detected
Either of following conditions met	A or B
A. Engine condition	Running
B. Time after key off	5 or 7 or 9.5 hours

P0451 (Fixed/flat monitor):

Monitor runs whenever following DTCs not present	None
Battery voltage	10.5 V or more
Intake air temperature	4.4°to 35°C (40° to 95°F)
Canister pressure sensor malfunction (P0450, P0452, 0453)	Not detected
Atmospheric pressure (absolute pressure)	70 to 110 kPa-a (525 to 825 mmHg-a)
Time after key off	5 or 7 or 9.5 hours

P0450, P0452 and P0453:

Monitor runs whenever following DTCs not present	None
Either of following conditions met	(a) or (b)
(a) Ignition switch	ON
(b) Soak timer	ON

TYPICAL MALFUNCTION THRESHOLDS

P0450: Canister pressure sensor chattering

EVAP pressure	Less than 42.1 kPa-a (315.9 mmHg-a), or more than 123.8 kPa-a (928.4 mmHg-a)

P0451: Canister pressure sensor noise

Frequency that EVAP pressure change 0.3 kPa-g (2.25 mmHg-g) or more	10 times or more in 10 seconds

P0451: Canister pressure sensor fixed/flat

EVAP pressure change during reference pressure	Less than 0.65 kPa-g (4.87 mmHg-g)

P0452: Canister pressure sensor low voltage

EVAP pressure	Less than 42.1 kPa-a (315.9 mmHg-a)

P0453: Canister pressure sensor high voltage

EVAP pressure	More than 123.8 kPa-a (928.4 mmHg-a)

WIRING DIAGRAM

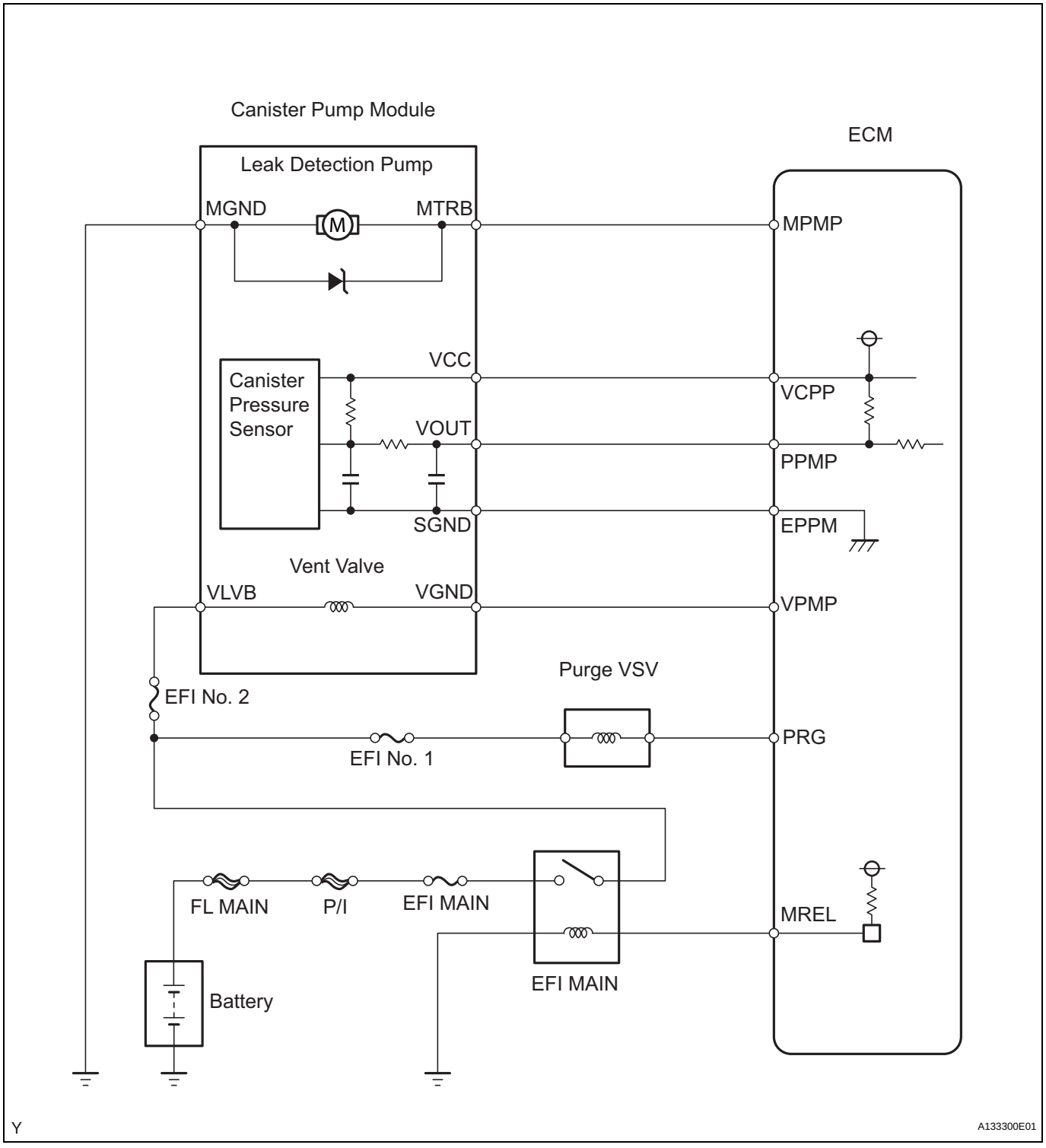

ES

INSPECTION PROCEDURE

NOTICE:

- **When a vehicle is brought into the workshop, leave it as it is. Do not change the vehicle condition. For example, do not tighten the fuel cap.**
- **Do not disassemble the canister pump module.**
- **The intelligent tester is required to conduct the following diagnostic troubleshooting procedure.**

1	CONFIRM DTC AND EVAP PRESSURE

(a) Connect the intelligent tester to the DLC3.
(b) Turn the ignition switch ON (do not start the engine).
(c) Turn the tester ON.
(d) Select the following menu items: DIAGNOSIS / ENHANCED OBD II / DTC INFO / CURRENT CODES.
(e) Read DTCs.
(f) Select the following menu items: DIAGNOSIS / ENHANCED OBD II / DATA LIST / EVAP / EVAP VAPOR PRESS.
(g) Read the EVAP (Evaporative Emission) pressure displayed on the tester.

ES

Result

Display (DTC Output)	Test Results	Suspected Trouble Areas	Proceed To
P0451	-	Canister pressure sensor	C
P0452	Less than 45 kPa-a (430 mmHg-a)	• Wire harness/connector (ECM - Canister pressure sensor) • Canister pressure sensor • Short in ECM circuit	A
P0453	More than 120 kPa-a (900 mmHg-a)	• Wire harness/connector (ECM - Canister pressure sensor) • Canister pressure sensor • Open in ECM circuit	B

B → Go to step 4

C → GO TO EVAP SYSTEM

A

2	CHECK HARNESS AND CONNECTOR (CANISTER PUMP MODULE - ECM)

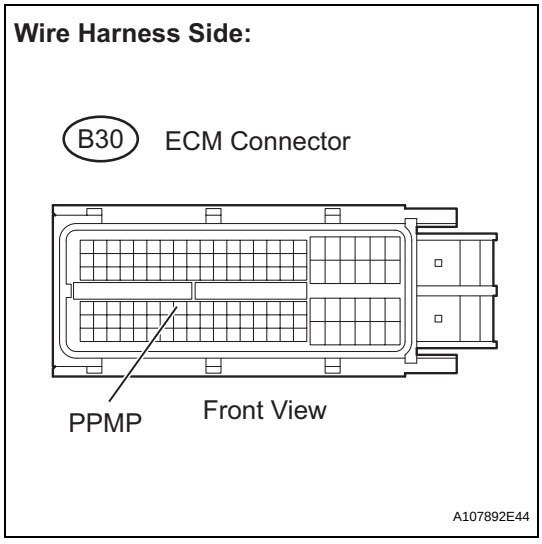

(a) Turn the ignition switch OFF.
(b) Disconnect the B30 ECM connector.
(c) Measure the resistance between PPMP terminal of the ECM connector and the body ground.

Result

Test Results	Suspected Trouble Areas	Proceed To
10 Ω or less	• Wire harness/connector (ECM - Canister pressure sensor) • Short in canister pressure sensor circuit	A
10 kΩ or more	• Wire harness/connector (ECM - Canister pressure sensor) • Short in ECM circuit	B

(d) Reconnect the ECM connector.

B → **Go to step 7**

A

3 CHECK HARNESS AND CONNECTOR (CANISTER PUMP MODULE - ECM)

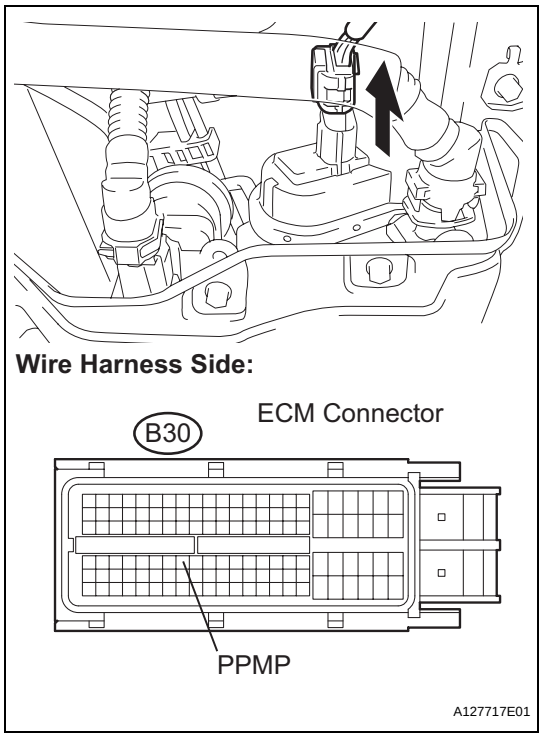

(a) Disconnect the S3 canister pump module connector.
(b) Disconnect the B30 ECM connector.
(c) Measure the resistance between PPMP terminal of the ECM connector and the body ground.

Result

Test Results	Suspected Trouble Areas	Proceed To
10 kΩ or more	Short in canister pressure sensor circuit	A
10 Ω or less	Short in wire harness/connector (ECM - Canister pressure sensor)	B

(d) Reconnect the canister pump module connector.
(e) Reconnect the ECM connector.

A → **Go to step 5**

B → **Go to step 6**

4	CHECK HARNESS AND CONNECTOR (CANISTER PUMP MODULE - ECM)

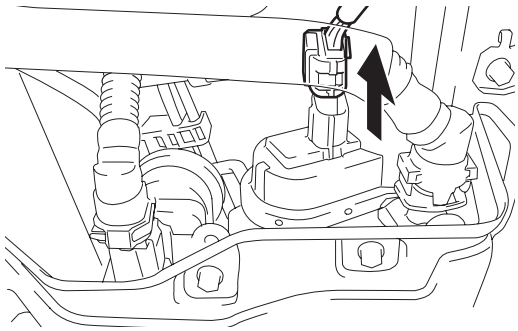

Wire Harness Side:

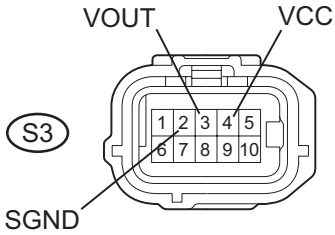

Canister Pump Module Connector

A127718E01

(a) Disconnect the S3 canister pump module connector.
(b) Turn the ignition switch ON.
(c) Measure the voltage and resistance of the canister connector.

Standard

Tester Connections	Specified Conditions
S3-4 (VCC) - Body ground	4.5 to 5.5 V
S3-3 (VOUT) - Body ground	4.5 to 5.5 V
S3-2 (SGND) - Body ground	100 Ω or less

Result

Test Results	Suspected Trouble Areas	Proceed To
Voltage and resistance within standard ranges	Open in canister pressure sensor circuit	A
Voltage and resistance outside standard ranges	Open in wire harness/connector (ECM - Canister pressure sensor)	B

(d) Reconnect the canister pump module connector.

A	Go to step 5
B	Go to step 6

5	REPLACE CHARCOAL CANISTER ASSEMBLY

(a) Replace the canister assembly (see page EC-10).
NOTICE:
When replacing the canister, check the canister pump module interior and related pipes for water, fuel and other liquids. If liquids are present, check for disconnections and/or cracks in the following: 1) the pipe from the air inlet port to the canister pump module; 2) the canister filter; and 3) the fuel tank vent hose.

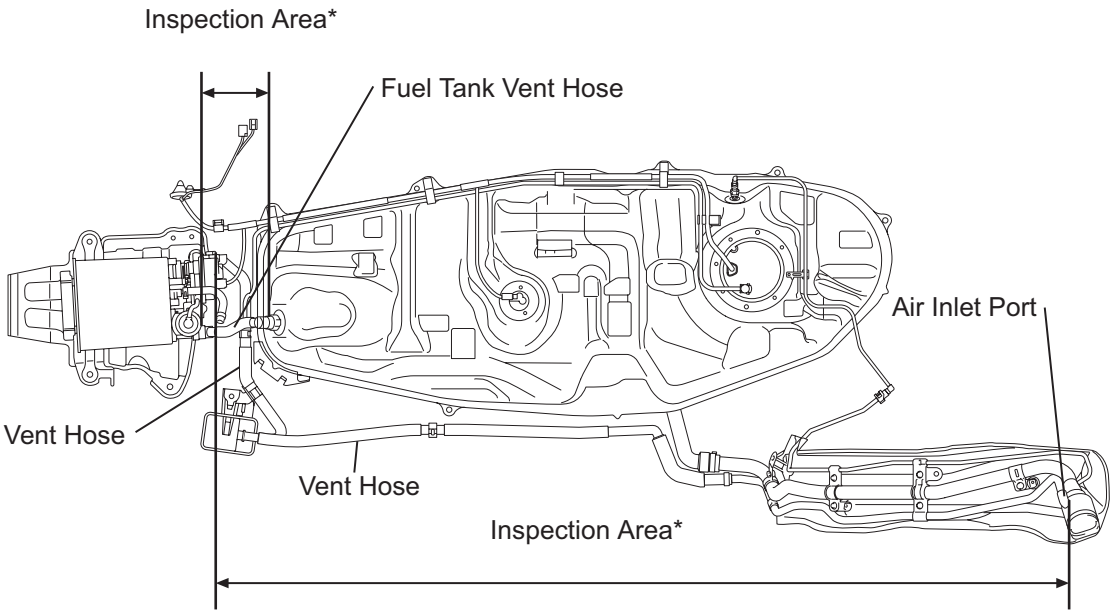

*: Check for disconnection and/or cracks

P A127720E01

NEXT → Go to step 8

6	REPAIR OR REPLACE HARNESS OR CONNECTOR

HINT:
If the exhaust tailpipe has been removed, go to the next step before reinstalling it.

NEXT → Go to step 8

7	REPLACE ECM

(a) Replace the ECM (see page ES-429).

NEXT → Go to step 8

8	CHECK WHETHER DTC OUTPUT RECURS (AFTER REPAIR)

(a) Connect the intelligent tester to the DLC3.
(b) Turn the ignition switch ON and turn the tester ON.
(c) Wait for at least 60 seconds.
(d) On the tester, select the following menu items: DIAGNOSIS / ENHANCED OBD II / DTC INFO / PENDING CODES.

HINT:
If no pending DTCs are displayed on the tester, the repair has been successfully completed.

NEXT

COMPLETED

DTC	P0455	Evaporative Emission Control System Leak Detected (Gross Leak)

DTC	P0456	Evaporative Emission Control System Leak Detected (Very Small Leak)

DTC SUMMARY

DTCs	Monitoring Items	Malfunction Detection Conditions	Trouble Areas	Detection Timings	Detection Logic
P0455	EVAP gross leak	Leak detection pump creates negative pressure (vacuum) in EVAP system and EVAP system pressure measured. Reference pressure measured at start and at end of leak check. If stabilized pressure higher than [second reference pressure x 0.2], ECM determines that EVAP system has large leak.	• Fuel cap (loose) • Leakage from EVAP line (Canister - Fuel tank) • Leakage from EVAP line (Purge VSV - Canister) • Canister pump module • Leakage from fuel tank • Leakage from canister	While ignition switch OFF	2 trip
P0456	EVAP small leak	Leak detection pump creates negative pressure (vacuum) in EVAP system and EVAP system pressure measured. Reference pressure measured at start and at end of leak check. If stabilized pressure higher than second reference pressure, ECM determines that EVAP system has small leak.	• Fuel cap (loose) • Leakage from EVAP line (Canister - Fuel tank) • Leakage from EVAP line (Purge VSV - Canister) • Canister pump module • Leakage from fuel tank • Leakage from canister	While ignition switch OFF	2 trip

ES

DESCRIPTION

The description can be found in the EVAP (Evaporative Emission) System (see page ES-335).

INSPECTION PROCEDURE

Refer to the EVAP System (see page ES-340).

MONITOR DESCRIPTION

5 hours* after the ignition switch is turned OFF, the leak detection pump creates negative pressure (vacuum) in the EVAP system. The ECM monitors for leaks and actuator malfunctions based on the EVAP pressure.

HINT:

*: If the engine coolant temperature is not below 35°C (95°F) 5 hours after the ignition switch is turned OFF, the monitor check starts 2 hours later. If it is still not below 35°C (95°F) 7 hours after the ignition switch is turned OFF, the monitor check starts 2.5 hours later.

Sequence	Operations	Descriptions	Duration
-	ECM activation	Activated by soak timer 5, 7 or 9.5 hours after ignition switch turned OFF.	-
A	Atmospheric pressure measurement	Vent valve turned OFF (vent) and EVAP system pressure measured by ECM in order to register atmospheric pressure. If pressure in EVAP system not between 76 kPa-a and 110 kPa-a (570 mmHg-a and 825 mmHg-a), ECM cancels EVAP system monitor.	10 seconds
B	First reference pressure measurement	In order to determine reference pressure, leak detection pump creates negative pressure (vacuum) through reference orifice and then ECM checks if leak detection pump and vent valve operate normally.	60 seconds
C	EVAP system pressure measurement	Vent valve turned ON (closed) to shut EVAP system. Negative pressure (vacuum) created in EVAP system, and EVAP system pressure then measured. Write down measured value as it will be used in leak check. If EVAP pressure does not stabilize within 15 minutes, ECM cancels EVAP system monitor.	15 minutes*

Sequence	Operations	Descriptions	Duration
D	Purge VSV monitor	Purge VSV opened and then EVAP system pressure measured by ECM. Large increase indicates normality.	10 seconds
E	Second reference pressure measurement	After second reference pressure measurement, leak check performed by comparing first and second reference pressure. If stabilized system pressure higher than second reference pressure, ECM determines that EVAP system leaking.	60 seconds
F	Final check	Atmospheric pressure measured and then monitoring result recorded by ECM.	-

*: If only a small amount of fuel is in the fuel tank, it takes longer for the EVAP pressure to stabilize.

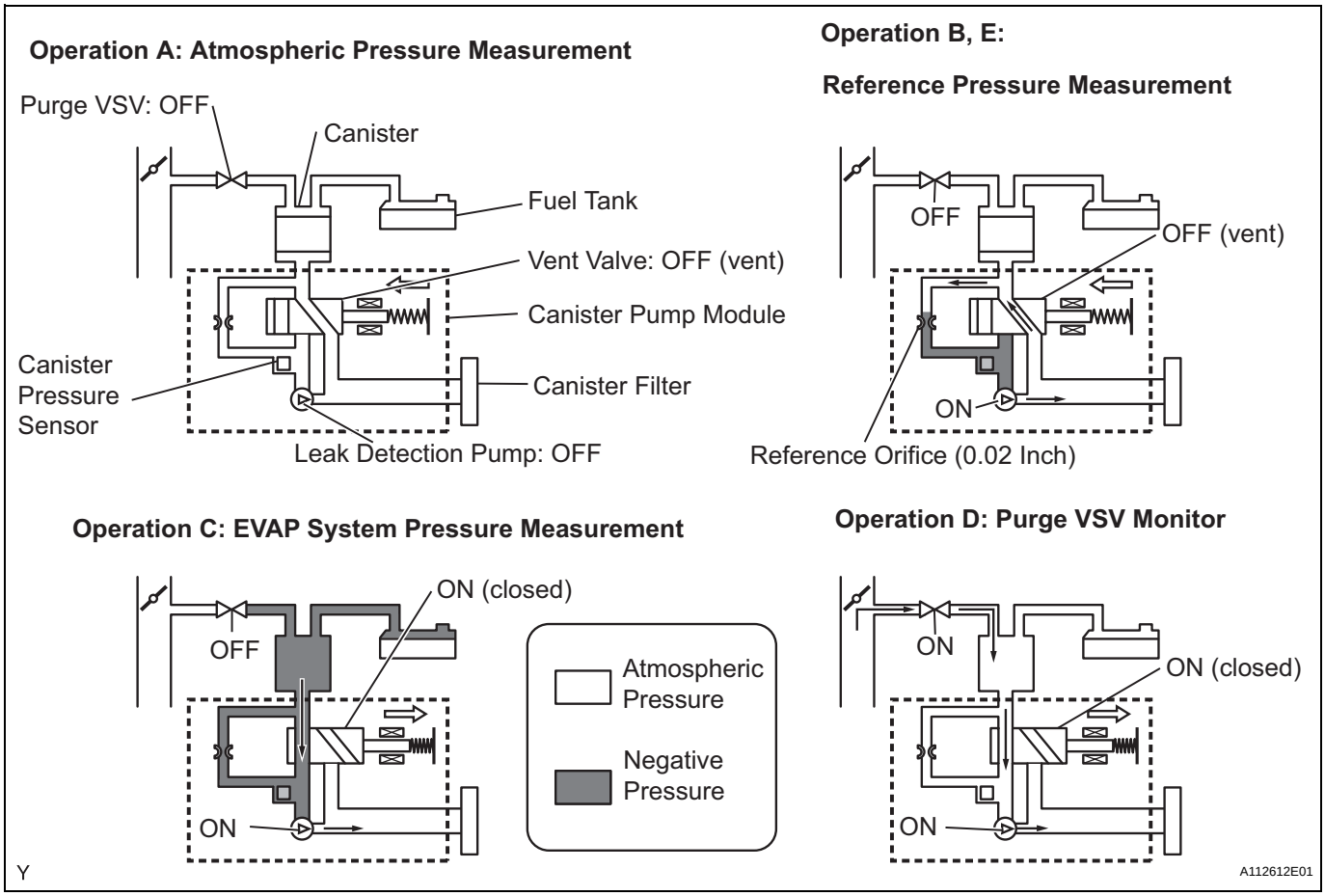

(a) P0455: EVAP gross leak

In operation C, the leak detection pump creates negative pressure (vacuum) in the EVAP system and the EVAP system pressure is measured. If the stabilized system pressure is higher than [second reference pressure x 0.2] (near atmospheric pressure), the ECM determines that the EVAP system has a large leakage, illuminates the MIL and sets the DTC (2 trip detection logic).

(b) P0456: EVAP very small leak

In operation C, the leak detection pump creates negative pressure (vacuum) in the EVAP system and the EVAP system pressure is measured. If the stabilized system pressure is higher than the second reference pressure, the ECM determines that the EVAP system has a small leakage, illuminates the MIL and sets the DTC (2 trip detection logic).

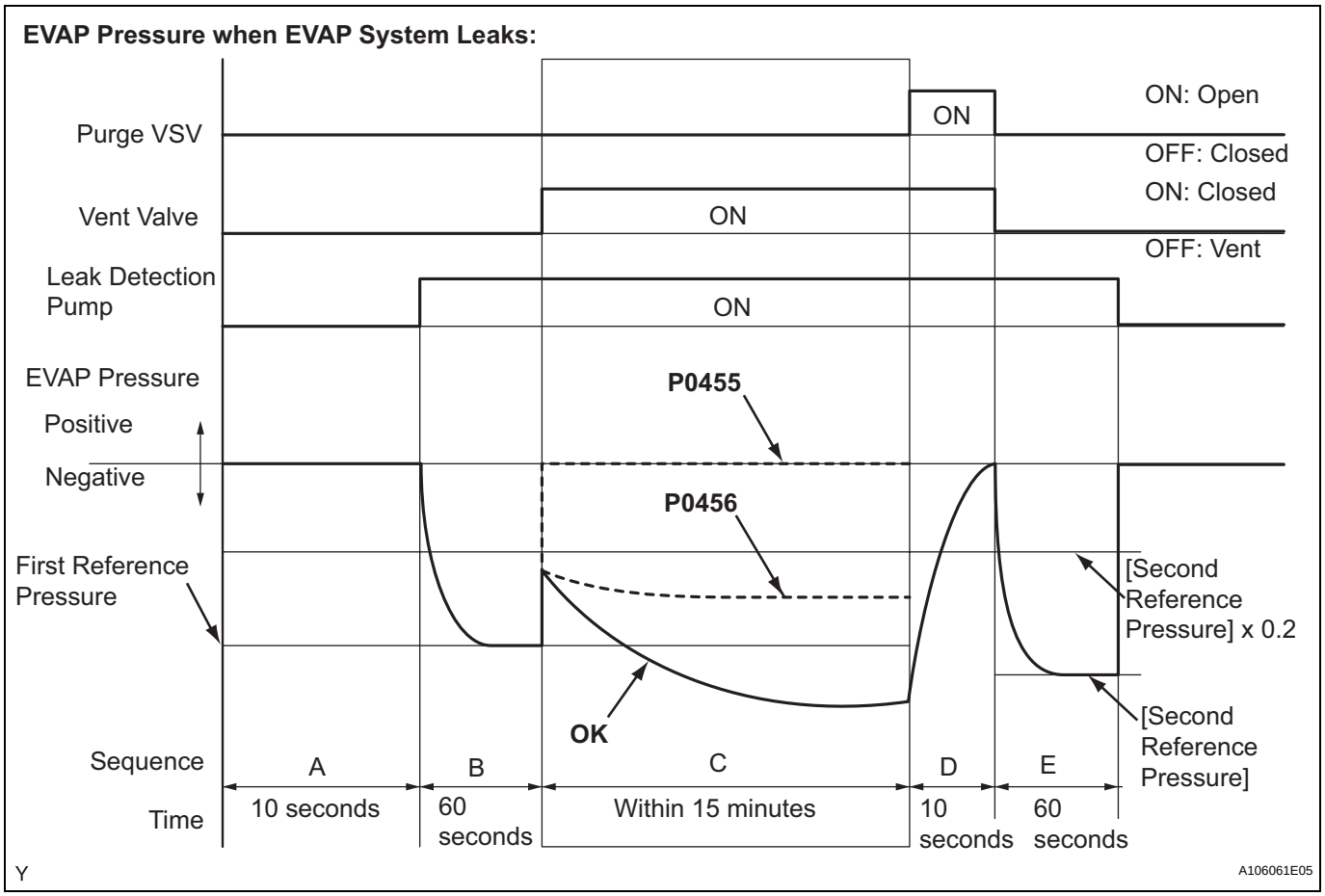

MONITOR STRATEGY

Required Sensors/Components	Purge VSV and canister pump module
Frequency of Operation	Once per driving cycle
Duration	Within 15 minutes (varies with amount of fuel in tank)
MIL Operation	2 driving cycles
Sequence of Operation	None

TYPICAL ENABLING CONDITIONS

Monitor runs whenever following DTCs not present	None
EVAP key-off monitor runs when all of following conditions met	-
Atmospheric pressure	70 to 110 kPa-a (525 to 825 mmHg-a)
Battery voltage	10.5 V or more
Vehicle speed	Below 4 km/h (2.5 mph)
Ignition switch	OFF
Time after key off	5 or 7 or 9.5 hours
Canister pressure sensor malfunction (P0450, P0451, P0452 and P0453)	Not detected
Purge VSV	Not operated by scan tool
Vent valve	Not operated by scan tool

Leak detection pump	Not operated by scan tool
Both of following conditions met before key off	Conditions 1 and 2
1. Duration that vehicle driven	5 minutes or more
2. EVAP purge operation	Performed
ECT	4.4° to 35°C (40° to 95°F)
IAT	4.4°to 35°C (40° to 95°F)

1. Key-off monitor sequence 1 to 8

1. Atmospheric pressure measurement

Next sequence run if following condition set	-
Atmospheric pressure change	Less than 0.3 kPa-g (2.25 mmHg-g) in 1 second

2. First reference pressure measurement

Next sequence run if all of following conditions set	Condition 1, 2 and 3
1. EVAP pressure just after reference pressure measurement start	-1 kPa-g (-7.5 mmHg-g) or less
2. Reference pressure	-4.85 to -1.057 kPa-g (-36.4 to -7.93 mmHg-g)
3. Reference pressure	Saturated within 60 seconds

3. Vent valve stuck closed check

Next sequence run if following condition set	-
EVAP pressure change after vent valve ON (closed)	0.3 kPa-g (2.25 mmHg-g) or more

4. Vacuum introduction

Next sequence run if following condition set	-
EVAP pressure	Saturated within 15 minutes

5. Purge VSV stuck closed check

Next sequence run if following condition set	-
EVAP pressure change after purge VSV ON (open)	0.3 kPa-g (2.25 mmHg-g) or more

6. Second reference pressure measurement

Next sequence run if all of following conditions set	Condition 1, 2, 3 and 4
1. EVAP pressure just after reference pressure	-1 kPa-g (-7.5 mmHg-g) or less
2. Reference pressure	-4.85 to -1.057 kPa-g (-36.4 to -7.93 mmHg-g)
3. Reference pressure	Saturated within 60 seconds
4. Reference pressure difference between first and second	Less than 0.7 kPa-g (5.25 mmHg-g)

7. Leak check

Next sequence run if following condition set	-
EVAP pressure when vacuum introduction complete	Second reference pressure or less

8. Atmospheric pressure measurement

EVAP monitor complete if following condition set	-
Atmospheric pressure difference between sequence 1 and 8	Within 0.3 kPa-g (2.25 mmHg-g)

TYPICAL MALFUNCTION THRESHOLDS

P0455: EVAP gross leak

EVAP pressure when vacuum introduction complete	Higher than reference pressure x 0.2

P0456: EVAP small leak

EVAP pressure when vacuum introduction complete	Between reference pressure and reference pressure x 0.2

MONITOR RESULT

Refer to CHECKING MONITOR STATUS (see page ES-17).

DTC	P0500	Vehicle Speed Sensor "A"

DESCRIPTION

The speed sensor detects the wheel speed and sends the appropriate signals to the skid control ECU. The skid control ECU converts these wheel speed signals into a 4-pulse signal and outputs it to the ECM via the combination meter. The ECM determines the vehicle speed based on the frequency of these pulse signals.

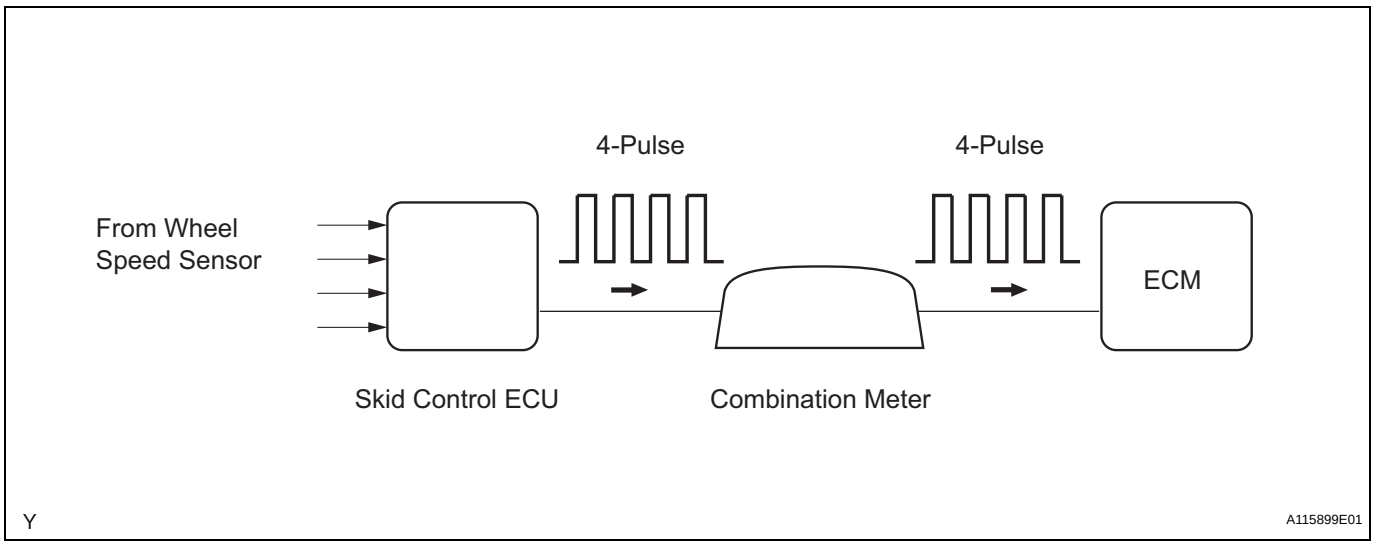

DTC No.	DTC Detection Conditions	Trouble Areas
P0500	While vehicle being driven, no vehicle speed sensor signal transmitted to ECM (1 trip detection logic)	• Open or short in speed signal circuit • Vehicle speed sensor • Combination meter • ECM • Skid control ECU

MONITOR DESCRIPTION

The ECM assumes that the vehicle is being driven, when the indicated engine speed is more than 2,300 rpm and 30 seconds have elapsed since the Park/Neutral Position (PNP) switch was turned OFF. If there is no speed signal from the combination meter, despite these conditions being met, the ECM interprets this as a malfunction in the speed signal circuit. The ECM then illuminates the MIL and sets the DTC.

MONITOR STRATEGY

Related DTCs	P0500: Vehicle speed sensor "A" pulse input error
Required Sensors/Components (Main)	Vehicle Speed Sensor (VSS), Combination meter and Skid control ECU
Required Sensors/Components (Related)	Park/Neutral Position (PNP) switch, Engine Coolant Temperature (ECT) sensor, Crankshaft Position (CKP) sensor, Throttle Position (TP) sensor and Mass Air Flow (MAF) meter
Frequency of Operation	Continuous
Duration	2 seconds
MIL Operation	Immediate
Sequence of Operation	None

TYPICAL ENABLING CONDITIONS

Monitor runs whenever following DTCs not present	P0120 - P0223, P2135 (TP sensor)
Either of following conditions (a) or (b) met:	-

(a) Following conditions 1 and 2 met:	-
1. ECT and ECT sensor	20°C (68°F) or more, and sensor does not malfunction (P0115 or P0116)
2. Time after PNP switch turned OFF	10 seconds or more
(b) Following conditions 1 and 2 met:	-
1. ECT and ECT sensor	Less than 20°C (68°F), and sensor malfunction (P0115 or P0116)
2. Time after PNP switch turned OFF	30 seconds or more
Time after ignition switch turned ON	More than 0.5 seconds

TYPICAL MALFUNCTION THRESHOLDS

Vehicle speed sensor signal	No pulse input

ES

WIRING DIAGRAM

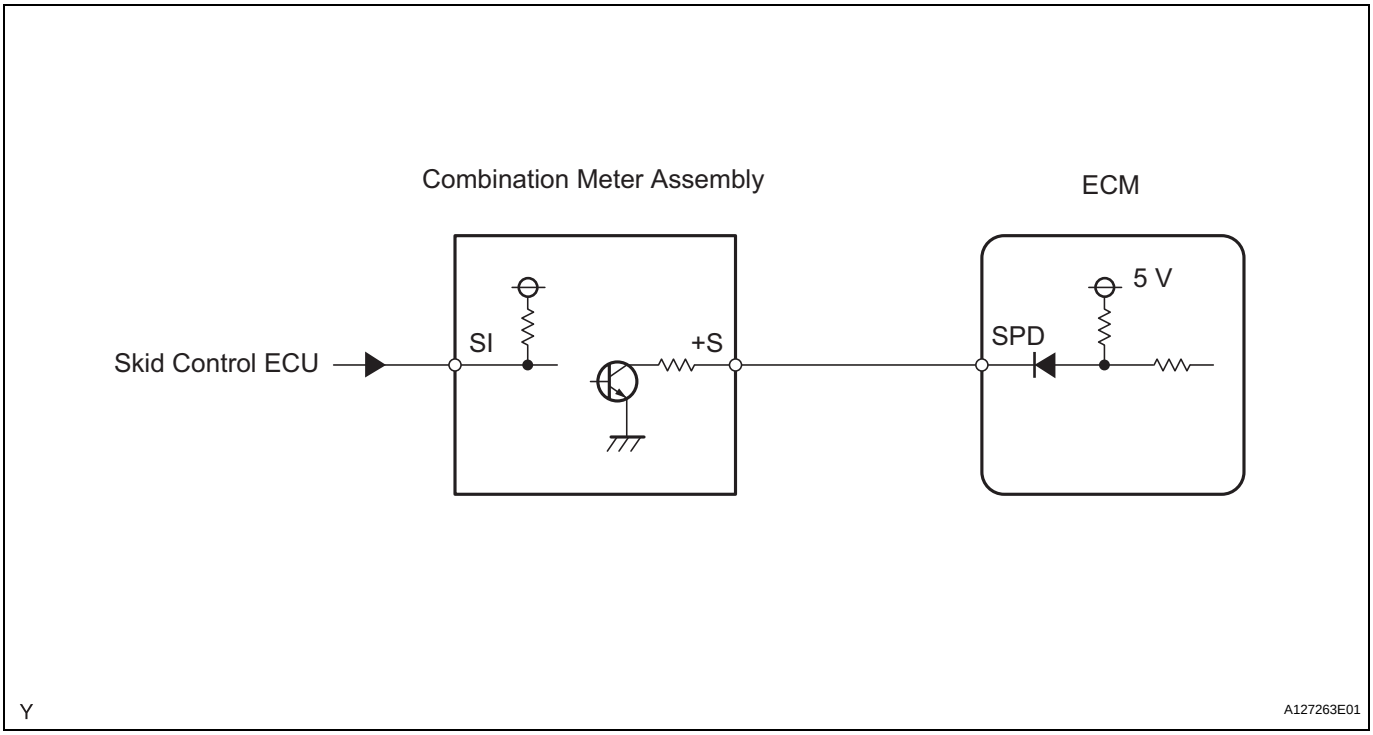

INSPECTION PROCEDURE

HINT:
Read freeze frame data using the intelligent tester. Freeze frame data records the engine condition when malfunctions are detected. When troubleshooting, freeze frame data can help determine if the vehicle was moving or stationary, if the engine was warmed up or not, if the air-fuel ratio was lean or rich, and other data from the time the malfunction occurred.

1	**CHECK OPERATION OF SPEEDOMETER**

(a) Drive the vehicle and check whether the operation of the speedometer in the combination meter is normal.
HINT:
- The vehicle speed sensor is operating normally if the speedometer reading is normal.

- If the speedometer does not operate, check it by following the procedure described in Speedometer Malfunction (see page ME-41).

NG → **GO TO MALFUNCTION IN SPEEDOMETER**

OK

2 READ VALUE USING INTELLIGENT TESTER (VEHICLE SPD)

(a) Connect the intelligent tester to the DLC3.
(b) Turn the ignition switch ON.
(c) Turn the tester ON.
(d) Select the following menu items: DIAGNOSIS / ENHANCED OBD II / DATA LIST / PRIMARY / VEHICLE SPD.
(e) Drive the vehicle.
(f) Read the value displayed on the tester.
OK:
Vehicle speeds displayed on tester and speedometer display are equal.

OK → **CHECK FOR INTERMITTENT PROBLEMS**

NG

3 CHECK COMBINATION METER ASSEMBLY (+S VOLTAGE)

Wire Harness Side:

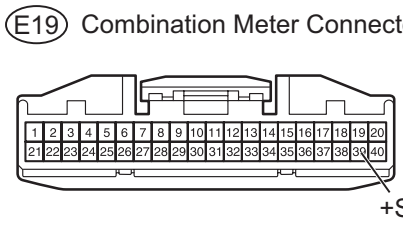

(a) Disconnect the E19 combination meter connector.
(b) Turn the ignition switch ON.
(c) Measure the voltage between the terminal of the combination meter and the body ground.
Standard voltage

Tester Connections	Specified Conditions
E19-39 (+S) - Body ground	4.5 to 5.5 V

(d) Reconnect the combination meter connector.

NG → **Go to step 5**

OK

4 CHECK COMBINATION METER ASSEMBLY (SPD SIGNAL WAVEFORM)

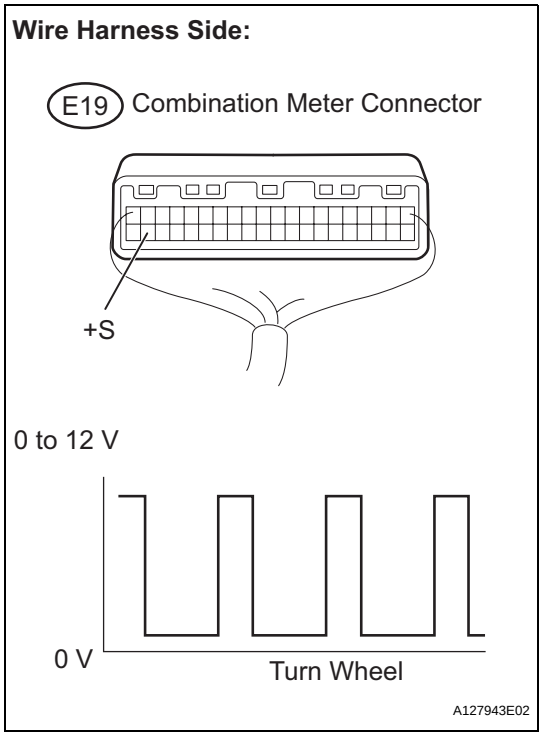

(a) Shift the transmission gear selector lever to the neutral position.
(b) Jack up the vehicle.
(c) Turn the ignition switch ON.
(d) Check the voltage between the terminal of the combination meter and the body ground while the wheel is turned slowly.

Standard voltage

Tester Connections	Specified Conditions
E19-39 (+S) - Body ground	Voltage generated intermittently

HINT:
The output voltage should fluctuate up and down, similarly to the diagram, when the wheel is turned slowly.

NG → **REPLACE COMBINATION METER ASSEMBLY**

OK

5 CHECK HARNESS AND CONNECTOR (COMBINATION METER ASSEMBLY - ECM)

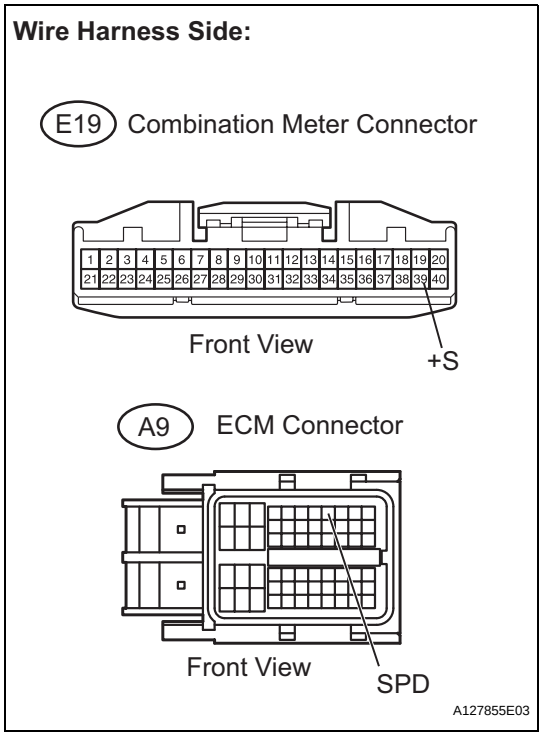

(a) Disconnect the E19 combination meter connector.
(b) Disconnect the A9 ECM connector.
(c) Check the resistance.

Standard resistance (check for open)

Tester Connections	Specified Conditions
E19-39 (+S) - A9-8 (SPD)	Below 1 Ω

Standard resistance (check for short)

Tester Connections	Specified Conditions
E19-39 (+S) or A9-8 (SPD) - Body ground	10 kΩ or higher

(d) Reconnect the combination meter connector.
(e) Reconnect the ECM connector.

NG → **REPAIR OR REPLACE HARNESS OR CONNECTOR**

OK

REPLACE ECM

DTC	P0504	Brake Switch "A" / "B" Correlation

DESCRIPTION

The stop light switch is a duplex system that transmits two signals: STP and ST1-. These two signals are used by the ECM to monitor whether or not the brake system is working properly. If the signals, which indicate the brake pedal is being depressed and released, are detected simultaneously, the ECM interprets this as a malfunction in the stop light switch and sets the DTC.

HINT:

The normal conditions are as shown in the table below. The signals can be read using the intelligent tester.

Signals	Brake Pedal Released	In Transition	Brake Pedal Depressed
STP	OFF	ON	ON
ST1-	ON	ON	OFF

DTC No.	DTC Detection Conditions	Trouble Areas
P0504	Conditions (a), (b) and (c) continue for 0.5 seconds or more (1 trip detection logic): (a) Ignition switch ON (b) Brake pedal released (c) STP signal OFF when ST1- signal OFF	• Short in stop light switch signal circuit • STOP fuse • IGN fuse • Stop light switch • ECM

WIRING DIAGRAM

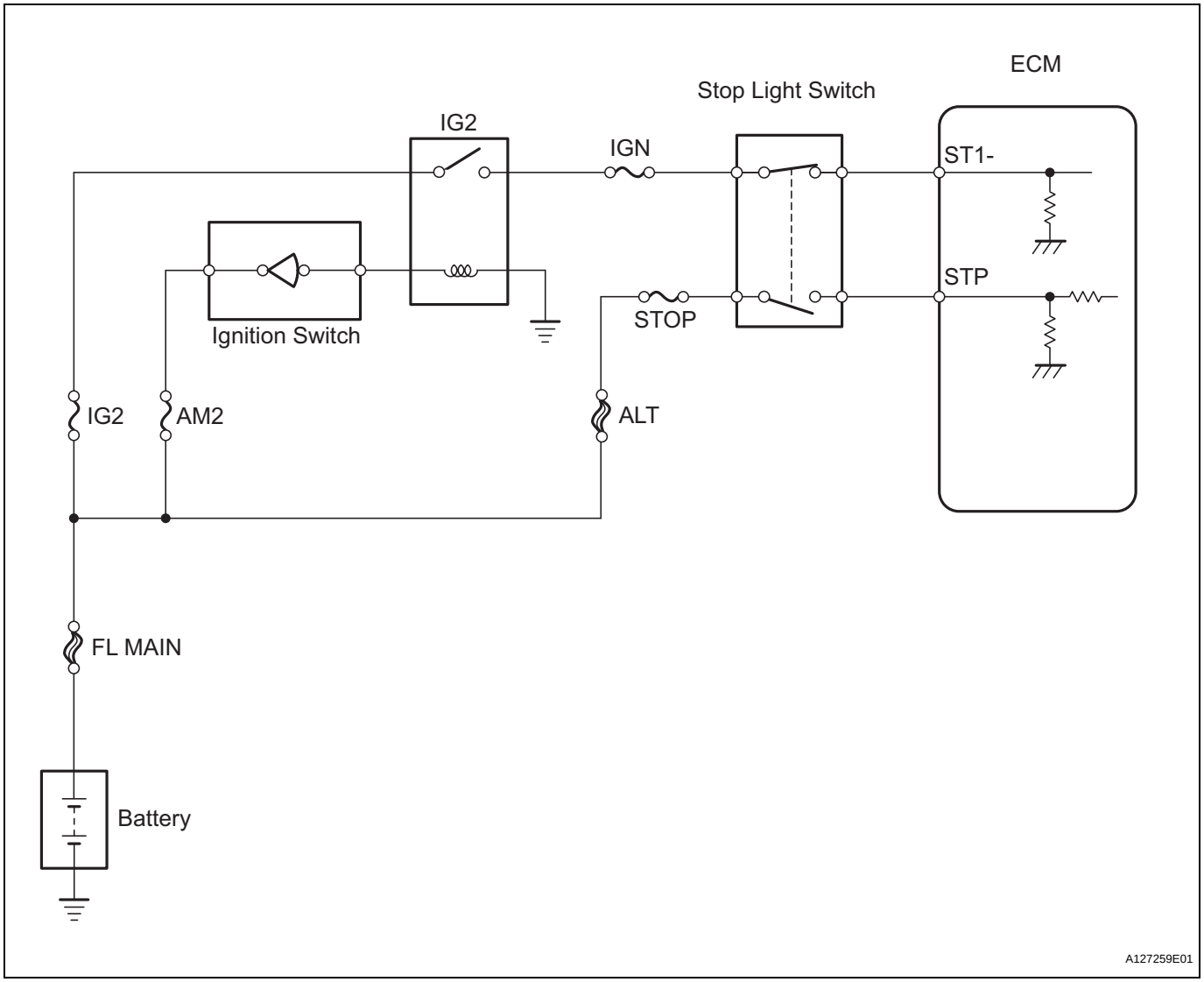

ES

INSPECTION PROCEDURE

HINT:

- Read freeze frame data using the intelligent tester. Freeze frame data records the engine condition when malfunctions are detected. When troubleshooting, freeze frame data can help determine if the vehicle was moving or stationary, if the engine was warmed up or not, if the air-fuel ratio was lean or rich, and other data from the time the malfunction occurred.
- STP signal conditions can be checked using the intelligent tester.
  (a) Connect the intelligent tester to the DLC3.
  (b) Turn the ignition switch ON.
  (c) Turn the tester ON.
  (d) Select the following menu items: DIAGNOSIS / ENHANCED OBD II / DATA LIST / PRIMARY / STOP LIGHT SW.
  (e) Check the STP signal when the brake pedal is depressed and released.

Brake Pedal Operation	Specified Conditions
Depressed	STP signal ON
Released	STP signal OFF

1 CHECK STOP LIGHT SWITCH ASSEMBLY (TERMINAL B VOLTAGE)

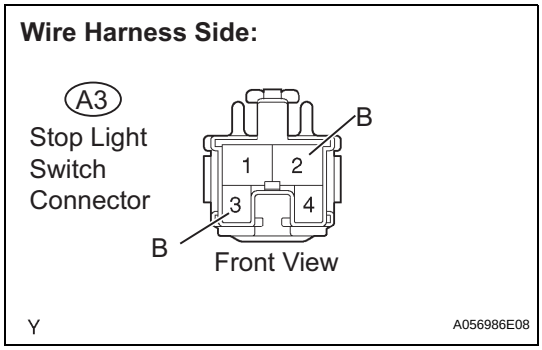

(a) Disconnect the A3 stop light switch connector.
(b) Turn the ignition switch ON.
(c) Measure the voltage between the terminals of the A3 stop light switch connector and body ground.

Standard voltage

Tester Connections	Specified Conditions
A3-2 (B) - Body ground	9 to 14 V
A3-3 (B) - Body ground	9 to 14 V

(d) Reconnect the stop light switch connector.

NG → **Go to step 4**

OK

2 INSPECT STOP LIGHT SWITCH ASSEMBLY

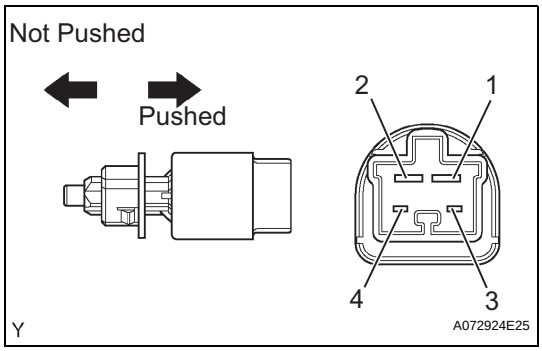

(a) Remove the stop light switch.
(b) Check the resistance.

Standard resistance

Tester Connections	Switch Positions	Specified Conditions
1 - 2	Switch pin not pushed	Below 1 Ω
	Switch pin pushed	10 kΩ or higher
3 - 4	Switch pin not pushed	10 kΩ or higher
	Switch pin pushed	Below 1 Ω

(c) Reinstall the stop light switch.

NG → **REPLACE STOP LIGHT SWITCH ASSEMBLY**

OK

3 CHECK ECM (STP AND ST1 - VOLTAGE)

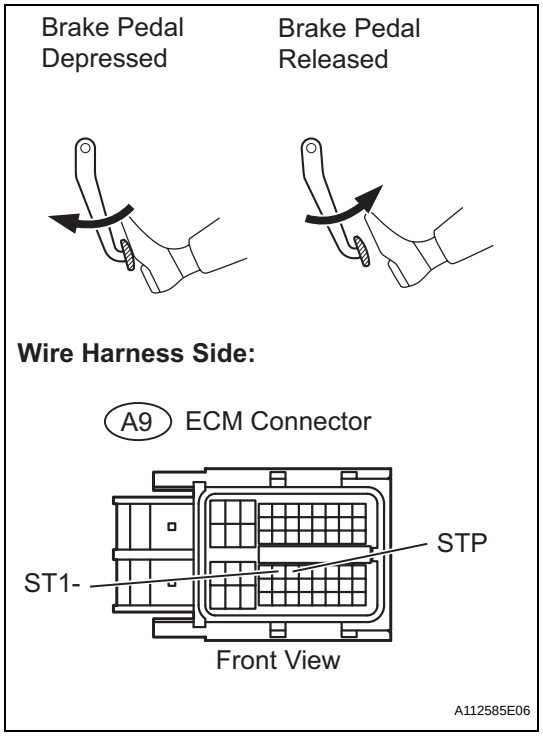

(a) Disconnect the A9 ECM connector.
(b) Turn the ignition switch ON.
(c) Measure the voltage between the terminals ST1- and STP of the A9 ECM connector and body ground.
Standard voltage

Tester Connections	Brake Pedal Operations	Specified Conditions
A9-35 (ST1-) - Body ground	Released	9 to 14 V
	Depressed	0 to 3 V
A9-36 (STP) - Body ground	Released	0 to 3 V
	Depressed	9 to 14 V

(d) Reconnect the ECM connector.

NG → **REPAIR OR REPLACE HARNESS OR CONNECTOR**

OK

REPLACE ECM

4 INSPECT FUSE (STOP AND IGN FUSE)

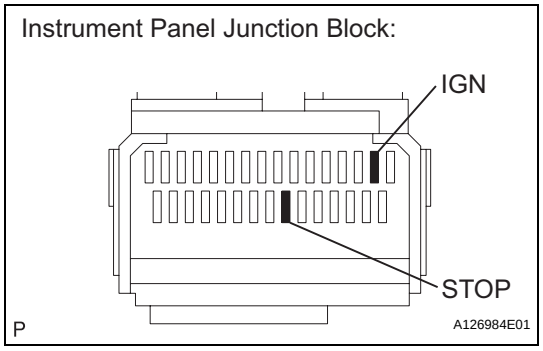

(a) Remove the STOP and IGN fuses from the instrument panel junction block.
(b) Measure the resistance.
Standard resistance:
Below 1 Ω
(c) Reinstall the STOP and IGN fuses.

NG → **CHECK FOR SHORTS IN ALL HARNESSES AND CONNECTORS CONNECTED TO FUSE AND REPLACE FUSE**

OK

REPAIR OR REPLACE HARNESS OR CONNECTOR

ES

DTC	P0505	Idle Control System Malfunction

DESCRIPTION

The idling speed is controlled by the ETCS (Electronic Throttle Control System). The ETCS is comprised of: 1) the one valve type throttle body; 2) the throttle actuator, which operates the throttle valve; 3) the Throttle Position (TP) sensor, which detects the opening angle of the throttle valve; 4) the Accelerator Pedal Position (APP) sensor, which detects the accelerator pedal position; and 5) the ECM, which controls the ETCS. Based on the target idling speed, the ECM controls the throttle actuator to provide the proper throttle valve opening angle.

DTC No.	DTC Detection Conditions	Trouble Areas
P0505	Idling speed continues to vary greatly from target idling speed (2 trip detection logic)	• ETCS • Air induction system • PCV hose connections • ECM

ES

MONITOR DESCRIPTION

The ECM monitors the idling speed and idling air flow volume to conduct Idle Speed Control (ISC). The ECM determines that the ISC system is malfunctioning if the following conditions apply:

- The learned idling air flow volume remains at the maximum or minimum volume 5 times or more during a drive cycle.
- After driving at 10 km/h (6.25 mph) or more, the actual engine idling speed varies from the target idling speed by between 100 rpm and 200 rpm, 5 times or more during a drive cycle.

Example:

If the actual idling speed varies from the target idling speed by more than 200 rpm* 5 times during a drive cycle, the ECM illuminates the MIL and sets the DTC.

HINT:

*: Threshold idling speed varies with engine load.

Example:

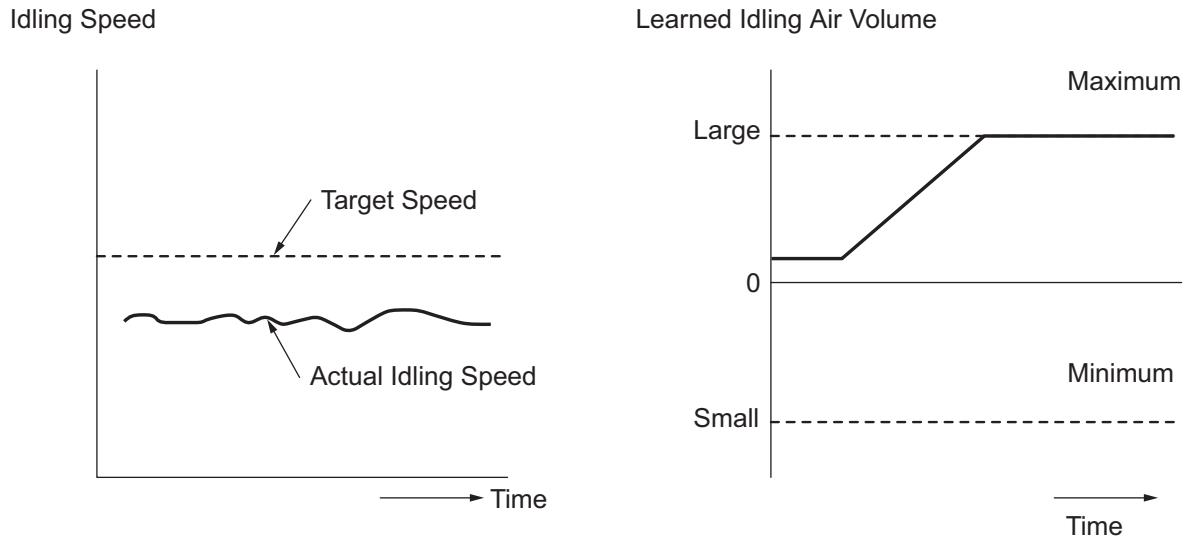

Y

A121611E02

ES

MONITOR STRATEGY

Related DTCs	P0505: ISC function
Required Sensors/Components (Main)	ETCS
Required Sensors/Components (Related)	Crankshaft position sensor, Engine coolant temperature sensor, and Vehicle speed sensor
Frequency of Operation	Once per driving cycle: Functional check Continuous: Range check
Duration	10 minutes: Functional check 10 seconds: Range check
MIL Operation	2 driving cycles: Functional check Immediate: Range check
Sequence of Operation	None

TYPICAL ENABLING CONDITIONS

Engine	Running

TYPICAL MALFUNCTION THRESHOLDS

Either of following conditions 1 or 2 met	-
1. Frequency that both of following conditions (a) and (b) set	5 times or more
(a) Engine rpm - Target engine rpm	Less than -100 rpm, or more than 150 rpm
(b) Vehicle condition	Stop after vehicle was driven by 10 km/h (6.25 mph) or more
2. Frequency that both of following conditions (c) and (d) set	Once
(c) Engine rpm - Target engine rpm	Less than -100 rpm, or more than 150 rpm

(d) IAC flow rate learning value	1.3 L/sec. or less, or 6 L/sec. or more

INSPECTION PROCEDURE

HINT:

- The following conditions may also cause DTC P0505 to be set:
  (a) The floor carpet overlapping slightly onto the accelerator pedal, causing the accelerator pedal to be slightly depressed and therefore the throttle valve position to be slightly open.
  (b) The accelerator pedal being not fully released.
- Read freeze frame data using the intelligent tester. Freeze frame data records the engine condition when malfunctions are detected. When troubleshooting, freeze frame data can help determine if the vehicle was moving or stationary, if the engine was warmed up or not, if the air-fuel ratio was lean or rich, and other data from the time the malfunction occurred.

ES

1 CHECK ANY OTHER DTCS OUTPUT (IN ADDITION TO DTC P0505)

(a) Connect the intelligent tester to the DLC3.
(b) Turn the ignition switch ON.
(c) Turn the tester ON.
(d) Select the following the menu items: DIAGNOSIS / ENHANCED OBD II / DTC INFO / CURRENT CODES.
(e) Read DTCs.

Result

Display (DTC Output)	Proceed To
P0505	A
P0505 and other DTCs	B

HINT:
If any DTCs other than P0505 are output, troubleshoot those DTCs first.

B → **GO TO DTC CHART**

A

2 CHECK PCV HOSE CONNECTIONS

OK:
PCV hose is connected correctly and is not damaged.

NG → **REPAIR OR REPLACE PCV HOSE**

OK

3 CHECK AIR INDUCTION SYSTEM

(a) Check the air induction system for vacuum leakage.
OK:
No leakage from air induction system.

NG → **REPAIR OR REPLACE AIR INDUCTION SYSTEM**

OK

4	CHECK THROTTLE VALVE

(a) Check the throttle valve condition.
OK:
Throttle valve is not contamainated with foreign objects and moves smoothly.

NG → **REPLACE THROTTLE BODY ASSEMBLY**

OK

REPLACE ECM

DTC	P050A	Cold Start Idle Air Control System Performance

DTC	P050B	Cold Start Ignition Timing Performance

DESCRIPTION

The Electronic Throttle Control System (ETCS) controls the engine idling speed. The ETCS operates the throttle actuator to open and close the throttle valve, and adjusts the intake air amount to achieve the target idling speed.
In addition, the ECM retards the ignition timing and the ETCS increases the intake air amount to quickly increase the catalyst temperature at cold start to reduce emissions.

ES

DTC No.	DTC Detection Conditions	Trouble Areas
P050A	Accumulated intake air amount during 10 seconds of idling after cold start is less than threshold (2 trip detection logic)	• Throttle body assembly • Mass air flow meter • Air induction system • PCV hose connections • VVT system • Air cleaner filter element • ECM
P050B	Ignition timing retard value insufficient for 5 seconds or more during 10 seconds of P050A monitoring duration at cold start (2 trip detection logic)	• Throttle body assembly • Mass air flow meter • Air induction system • PCV hose connections • VVT system • Air cleaner filter element • ECM

MONITOR DESCRIPTION

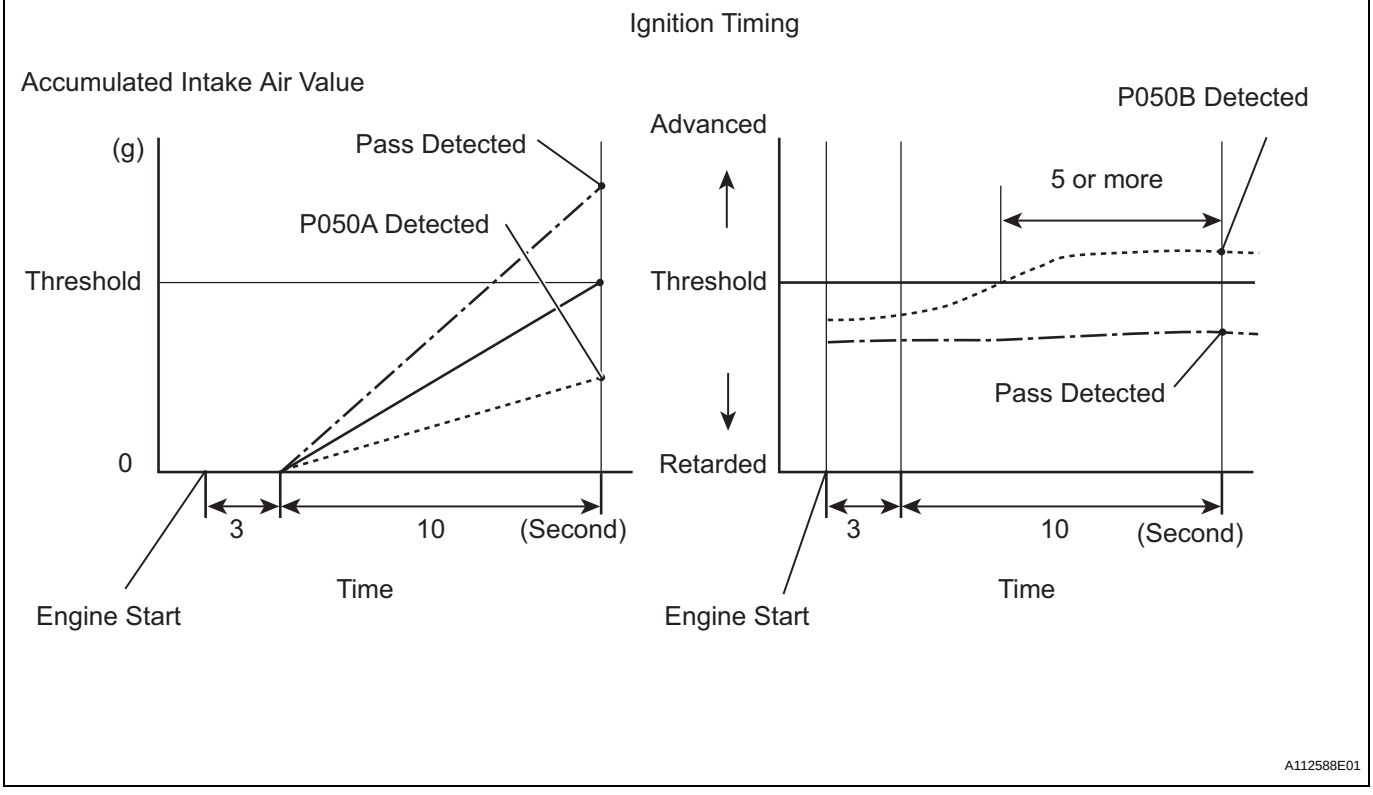

The ECM monitors the intake air amount during idling and the ignition timing.
When the Engine Coolant Temperature (ECT) is between -10°C and 50 °C (14°F and 122°F), the ECM calculates the idling intake air amount for 10 seconds, beginning 3 seconds after the engine starts.
When the accumulated value is below the threshold, the ECM interprets this as a malfunction in the Idle Speed Control (ISC) system at cold start.
The ECM also monitors the ignition timing at cold start, and judges it to be incorrect when it is advanced to the same value for a warm engine for 5 seconds or more of the 10 second monitoring period.
Example:
P050A is detected when all conditions below are met (2 trip detection logic).
1. The ECT is between -10°C and 50 °C (14°F and 122°F) when the engine starts.
2. The engine idles for 13 seconds after engine start.
3. The accumulated intake air amount is below the threshold.

The ECM sets the DTC and illuminates the MIL 13 seconds after the engine is next started.

NOTICE:

When the negative battery terminal is disconnected during inspection or repairs, the ISC learning values are cleared. The ISC learning must be performed by warming up the engine and idling for 5 minutes with the ECT at 75°C (167°F) or more because DTCs cannot be detected with the ISC learning values cleared.

MONITOR STRATEGY

Related DTCs	P050A: Idle speed control problem at cold P050B: Idle ignition timing problem at cold
Required Sensors/Components (Main)	Mass air flow meter
Required Sensors/Components (Related)	Engine Coolant Temperature (ECT) sensor, Throttle position sensor, Vehicle speed sensor
Frequency of Operation	Once per driving cycle
Duration	10 seconds
MIL Operation	2 driving cycles
Sequence of Operation	None

TYPICAL ENABLING CONDITIONS

P050A:

Battery voltage	8 V or more
Time after engine start	3 seconds or more
Starter	OFF
ECT at engine start	-10°C (14°F) or more
ECT	-10°C to 50°C (14°F to 122°F)
Engine idling time	3 seconds or more
Fuel-cut	OFF
Vehicle speed	Less than 3 km/h (1.875 mph)
Time after shift position changed (A/T)	1 second or more
Atmospheric pressure	76 kPa (570 mmHg) or more

P050B:

Battery voltage	8 V or more
Time after engine start	3 seconds or more
Starter	OFF
ECT at engine start	-10°C (14°F) or more
ECT	-10°C to 50°C (14°F to 122°F)
Engine idling time	3 seconds or more
Fuel-cut	OFF
Vehicle speed	Less than 3 km/h (1.875 mph)

TYPICAL MALFUNCTION THRESHOLDS

P050A:

Accumulated air flow amount (A/T)	Varies with ECT (Example: Less than 1.44 g)

P050B:

Accumulated time when ignition timing retard value insufficient	5 seconds or more

INSPECTION PROCEDURE

HINT:
Read freeze frame data using the intelligent tester. Freeze frame data records the engine condition when malfunctions are detected. When troubleshooting, freeze frame data can help determine if the vehicle was moving or stationary, if the engine was warmed up or not, if the air-fuel ratio was lean or rich, and other data from the time the malfunction occurred.

ES

1	CHECK ANY OTHER DTCS OUTPUT (IN ADDITION TO DTC P050A AND/OR P050B)

(a) Connect the intelligent tester to the DLC3.
(b) Turn the ignition switch ON.
(c) Turn the tester ON.
(d) Select the following the menu items: DIAGNOSIS / ENHANCED OBD II / DTC INFO / CURRENT CODES.
(e) Read the DTCs.

Result

Display (DTC Output)	Proceed To
P050A and/or P050B	A
P050A and/or P050B and other DTCs	B

HINT:
If any DTCs other than P050A and P050B are output, troubleshoot those DTCs first.

B → GO TO DTC CHART

A

2	READ VALUE USING INTELLIGENT TESTER (FUEL TRIM)

HINT:
Calculate the total fuel trim values to check the characteristic deviation of the mass air flow meter.
(a) Connect the intelligent tester to the DLC3.
(b) Turn the ignition switch ON.
(c) Turn the tester ON.
(d) Select the following menu items: DIAGNOSIS / ENHANCED OBD II / DATA LIST / PRIMARY / SHORT FT #1 and LONG FT #1.
(e) Read the values displayed on the tester.
(f) Add together the SHORT FT #1 and LONG FT #1 values to obtain the total FUEL TRIM.
OK:
Total of SHORT FT #1 and LONG FT #1 values is between -20 % and 20 %.

OK → Go to step 12

NG

3	PERFORM ACTIVE TEST USING INTELLIGENT TESTER (OPERATE OCV)

(a) Connect the intelligent tester to the DLC3.
(b) Start the engine and turn the tester ON.
(c) Warm up the engine.
(d) Select the following menu items: DIAGNOSIS / ENHANCED OBD II / ACTIVE TEST / VVT CTRL B1.
(e) Check the engine speed while operating the Oil Control Valve (OCV) using the tester.

OK

Tester Operations	Specified Conditions
OCV OFF	Normal engine speed
OCV ON	Engine idles roughly or stalls (soon after OCV switched from OFF to ON)

NG → Go to step 8

OK

4	CHECK PCV HOSE CONNECTIONS

OK:
PCV hose is connected correctly and is not damaged.

NG → Go to step 9

OK

5	CHECK AIR INDUCTION SYSTEM

(a) Check the air induction system for vacuum leakage.
OK:
No leakage from air induction system.

NG → Go to step 10

OK

6	CHECK AIR CLEANER FILTER ELEMENT SUB-ASSEMBLY

(a) Visually check that the air cleaner filter element is not excessively contaminated with dirt or oil.
OK:
Air cleaner filter element is not excessively contaminated with dirt or oil.

NG → Go to step 11

OK

7	REPLACE MASS AIR FLOW METER

NEXT → Go to step 15

8	CHECK AND REPAIR VVT SYSTEM

NEXT → Go to step 15

ES

9	REPAIR OR REPLACE PCV HOSE

NEXT → Go to step 15

10	REPAIR OR REPLACE AIR INDUCTION SYSTEM

NEXT → Go to step 15

11	REPLACE AIR CLEANER FILTER ELEMENT SUB-ASSEMBLY

NEXT → Go to step 15

12	CHECK THROTTLE VALVE

(a) Check for deposits around the throttle valve and throttle valve condition.

OK:

No deposits around throttle valve and throttle valve moves smoothly.

NG → Go to step 14

OK

13	REPLACE ECM

NEXT → Go to step 15

14	REPAIR OR REPLACE THROTTLE BODY ASSEMBLY

NEXT → Go to step 15

15	CHECK WHETHER DTC OUTPUT RECURS (DTC P050A AND/OR P050B)

NOTICE:
In this operation, the engine must be cold (the same level as the engine coolant temperature recorded in the freeze frame data).

(a) Connect the intelligent tester to the DLC3.
(b) Turn the ignition switch ON.
(c) Turn the tester ON.
(d) Clear DTCs (see page ES-35).
(e) Switch the ECM from normal mode to check mode using the tester (see page ES-38).
(f) Start the engine to idle for a minute.
OK:
Stable fast idling.
(g) Read DTCs.
OK:
No DTC output.

ES

NEXT

END

DTC	P0516	Battery Temperature Sensor Circuit Low

DTC	P0517	Battery Temperature Sensor Circuit High

DESCRIPTION

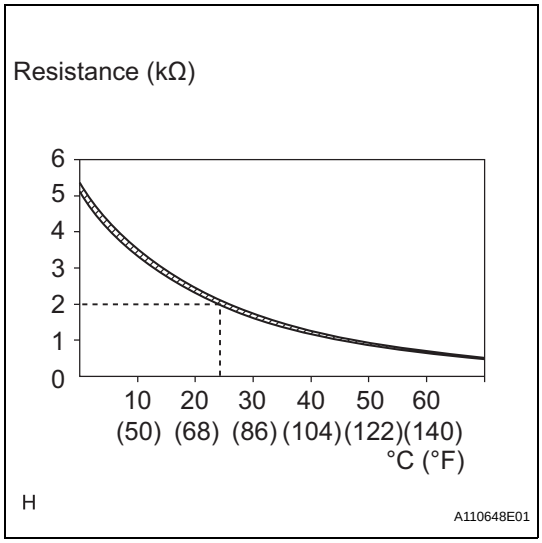

The battery temperature sensor installed on the battery current sensor detects battery temperature.
A thermistor is integrated into the battery temperature sensor, and the resistance in the battery temperature sensor changes according to the battery temperature.
The resistance of the thermistor in the battery temperature sensor decreases as the battery temperature increases. The resistance increases as the temperature decreases.
The battery temperature sensor is connected to the ECM. The ECM supplies 5 V from the THB terminal to the battery temperature sensor through resistor R.
The battery temperature sensor and resistor R are connected in series. This results in fluctuations in the voltage supplied from the THB terminal when the resistance changes according to the battery temperature.
The ECM determines the battery temperature according to fluctuations in voltage. When the battery temperature is high, the ECM determines to reduce the amount of current supplied from the generator in order to protect the battery.

DTC No.	DTC Detection Condition	Trouble Area
P0516	Battery temperature sensor output value is 0.2 V or less for 0.5 seconds or more with the ignition switch ON (1 trip detection logic)	• Battery temperature sensor • Short in battery temperature sensor circuit • ECM
P0517	Battery temperature sensor output value is 4.8 V or more for 0.5 seconds or more with the ignition switch ON (1 trip detection logic)	• Battery temperature sensor • Open in battery temperature sensor circuit • ECM

WIRING DIAGRAM

Refer to DTC P1550 (see page ES-262)

INSPECTION PROCEDURE

1 INSPECT BATTERY CURRENT SENSOR

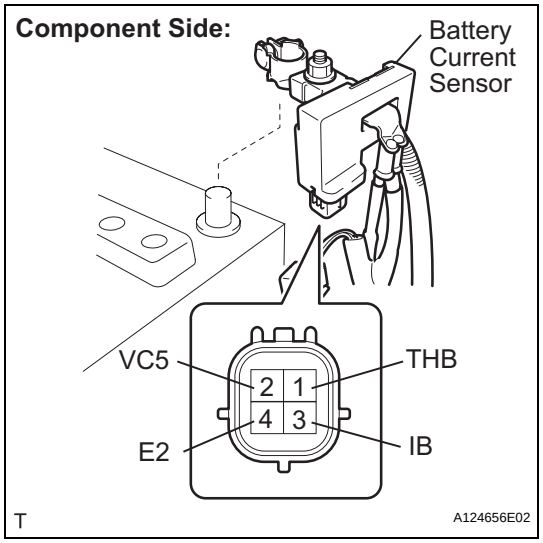

(a) Disconnect the B29 battery current sensor connector.
(b) Measure the resistance.

Standard resistance

Tester Connection	Condition	Specified Condition
1 (THB) - 4 (E2)	24 to 26°C (75.2 to 78.8°F)	1.91 to 2.065 kΩ

NG → **REPLACE BATTERY CURRENT SENSOR**

OK

2 CHECK HARNESS AND CONNECTOR (BATTERY CURRENT SENSOR - ECM)

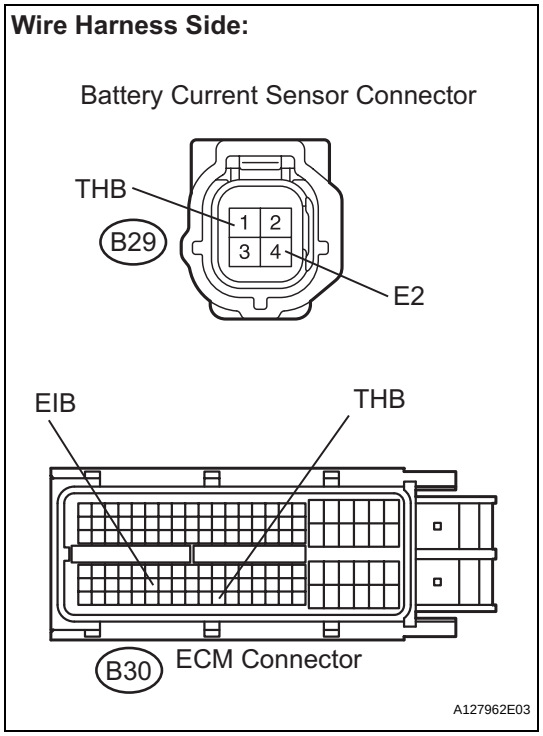

(a) Disconnect the B29 battery current sensor connector.
(b) Disconnect the B30 ECM connectors.
(c) Measure the resistance of the wire harness side connectors.

Standard resistance (Check for open)

Tester Connection	Specified Condition
B29-1 (THB) - B30-120 (THB)	Below 1 Ω
B29-4 (E2) - B30-92 (EIB)	Below 1 Ω

Standard resistance (Check for short)

Tester Connection	Specified Condition
B29-1 (THB) or B30-120 (THB) - Body ground	10 kΩ or higher

NG → **REPAIR OR REPLACE HARNESS AND CONNECTOR**

OK

REPLACE ECM

ES

DTC	P0560	System Voltage

DESCRIPTION

The battery supplies electricity to the ECM even when the ignition switch is in the OFF position. This power allows the ECM to store data such as DTC history, freeze frame data and fuel trim values. If the battery voltage falls below a minimum level, the memory is cleared and the ECM determines that there is a malfunction in the power supply circuit. When the engine is next started, the ECM illuminates the MIL and sets the DTC.

DTC No.	DTC Detection Conditions	Trouble Areas
P0560	Open in ECM back up power source circuit (1 trip detection logic)	• Open in back up power source circuit • Battery • Battery terminals • EFI MAIN fuse • ECM

ES

HINT:
If DTC P0560 is set, the ECM does not store other DTCs or the data stored in the ECM are partly erased.

MONITOR STRATEGY

Related DTCs	P0560: ECM system voltage
Required Sensors/Components (Main)	ECM
Required Sensors/Components (Related)	-
Frequency of Operation	Continuous
Duration	3 seconds
MIL Operation	Immediate (MIL illuminated after next engine start)
Sequence of Operation	None

TYPICAL ENABLING CONDITIONS

Monitor runs whenever following DTCs not present	None

TYPICAL MALFUNCTION THRESHOLDS

ECM power source	Less than 3.5 V

WIRING DIAGRAM

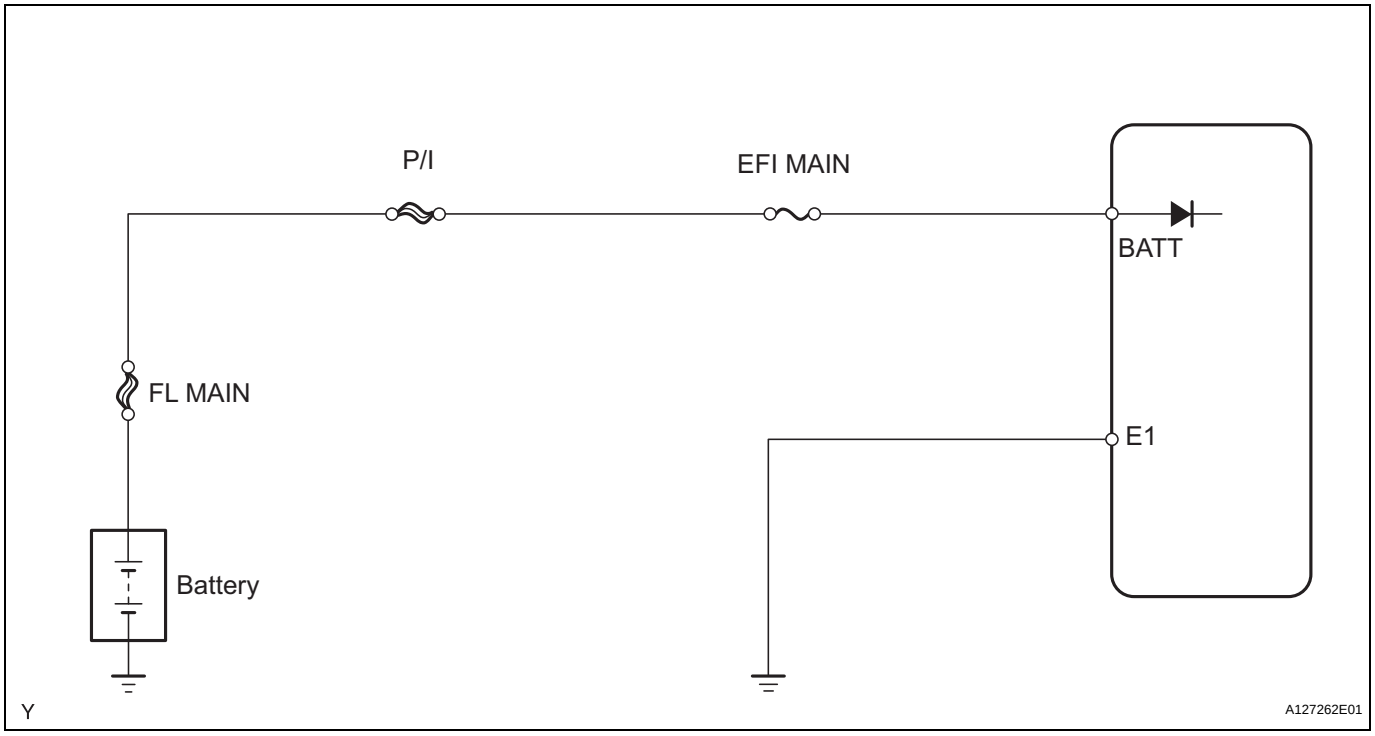

ES

INSPECTION PROCEDURE

HINT:
Read freeze frame data using the intelligent tester. Freeze frame data records the engine condition when malfunctions are detected. When troubleshooting, freeze frame data can help determine if the vehicle was moving or stationary, if the engine was warmed up or not, if the air-fuel ratio was lean or rich, and other data from the time the malfunction occurred.

1	CHECK FUSE (EFI MAIN AND P/I)

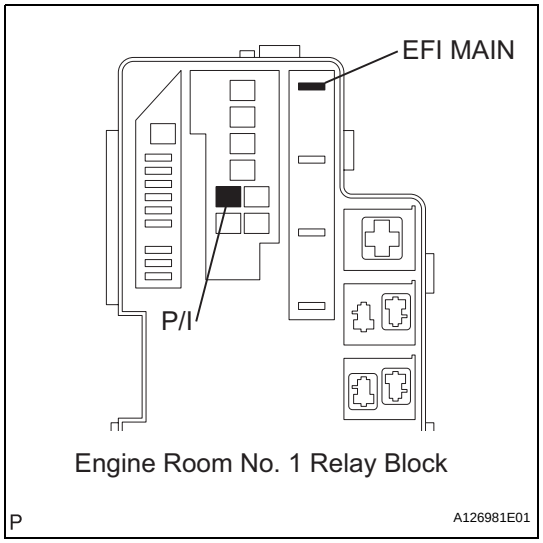

(a) Remove the EFI MAIN fuse and P/I fuse from the engine room No. 1 relay block.
(b) Measure the resistance of the EFI MAIN fuse and P/I fuse.
Standard resistance:
Below 1 Ω
(c) Reinstall the EFI MAIN fuse and P/I fuse.

NG → **CHECK FOR SHORTS IN ALL HARNESSES AND CONNECTORS CONNECTED TO FUSE AND REPLACE FUSE**

OK

2	CHECK HARNESS AND CONNECTOR (ECM - EFI MAIN FUSE, EFI MAIN FUSE - BATTERY)

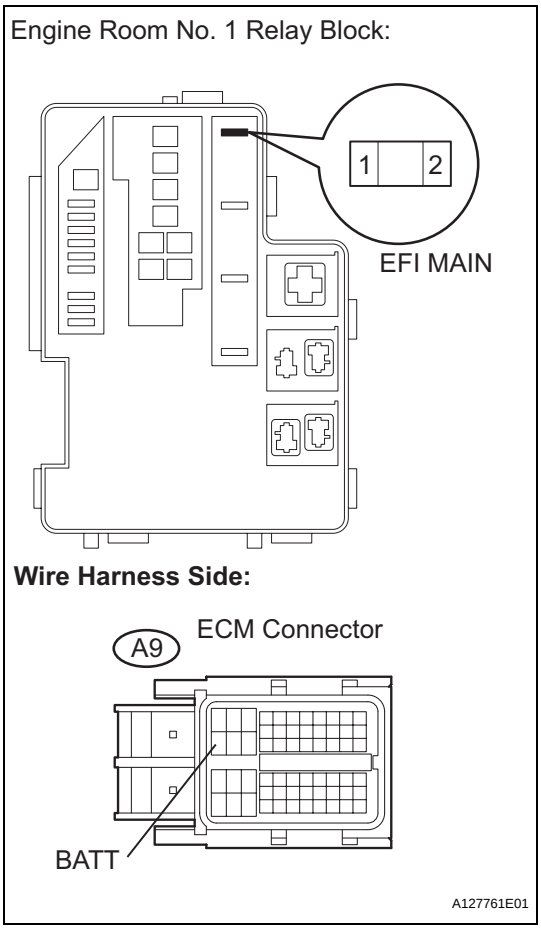

(a) Check the harness and the connector between the EFI MAIN fuse and ECM.
  (1) Remove the EFI MAIN fuse from the engine No. 1 room relay block.
  (2) Disconnect the A9 ECM connector.
  (3) Measure the resistance.
  Standard resistance (Check for open)

Tester Connections	Specified Conditions
2 (EFI MAIN fuse) - A9-20 (BATT)	Below 1 Ω

Standard resistance (Check for short)

Tester Connections	Specified Conditions
2 (EFI MAIN fuse) or A9-20 (BATT) - Body ground	10 kΩ or higher

  (4) Reconnect the ECM connector.
  (5) Reinstall the EFI MAIN fuse.

(b) Check the harness and the connector between the EFI MAIN fuse and battery.
  (1) Remove the EFI MAIN fuse from the engine room No. 1 relay block.
  (2) Disconnect the positive battery terminal.
  (3) Check the resistance.
  Standard resistance (Check for open)

Tester Connections	Specified Conditions
Battery positive terminal - 1 (EFI MAIN fuse)	Below 1 Ω

Standard resistance (Check for short)

Tester Connections	Specified Conditions
Battery positive terminal or 1 (EFI MAIN fuse) - Body ground	10 kΩ or higher

  (4) Reconnect the positive battery terminal.
  (5) Reinstall the EFI MAIN fuse.

NG → **REPAIR OR REPLACE HARNESS OR CONNECTOR**

OK

3	INSPECT BATTERY

(a) Check that the battery is not depleted.
  OK:
  Battery is not depleted

NG → **REPLACE BATTERY**

OK

4 **CHECK BATTERY TERMINAL**

(a) Check that the battery terminals are not loose or corroded.
OK:
Battery terminals are not loose or corroded

NG → **REPAIR OR REPLACE BATTERY TERMINAL**

OK ↓

5 **CHECK WHETHER DTC OUTPUT RECURS**

(a) Connect the intelligent tester to the DLC3.
(b) Turn the ignition switch ON and turn the tester ON.
(c) Clear DTCs (see page ES-35).
(d) Turn the ignition switch OFF and turn the tester OFF.
(e) Start the engine and turn the tester ON.
(f) Select the following menu items: DIAGNOSIS / ENHANCED OBD II / DTC INFO / CURRENT CODES.
(g) Read DTCs.

Result

Display (DTC Output)	Proceed To
P0560	A
No output	B

B → **CHECK FOR INTERMITTENT PROBLEMS**

A ↓

REPLACE ECM

DTC	P0604	Internal Control Module Random Access Memory (RAM) Error

DTC	P0606	ECM / PCM Processor

DTC	P0607	Control Module Performance

DTC	P0657	Actuator Supply Voltage Circuit / Open

DESCRIPTION

The ECM continuously monitors its own internal memory status, internal circuits, and output signals transmitted to the throttle actuator. This self-check ensures that the ECM is functioning properly. If any malfunction is detected, the ECM sets the appropriate DTC and illuminates the MIL.
The ECM memory status is diagnosed by internal mirroring of the main CPU and the sub CPU to detect Random Access Memory (RAM) errors. The two CPUs also perform continuous mutual monitoring. The ECM illuminates the MIL and sets a DTC if: 1) outputs from the two CPUs are different or deviate from the standards, 2) the signals sent to the throttle actuator deviate from the standards, 3) a malfunction is found in the throttle actuator supply voltage, and 4) any other ECM malfunction is found.

DTC No.	DTC Detection Conditions	Trouble Areas
P0604 P0606 P0607 P0657	ECM internal error (1 trip detection logic)	ECM

MONITOR STRATEGY

Related DTCs	P0604: ECM RAM error P0606: ECM range check P0607: ECM CPU malfunction P0657: ETCS power supply
Required Sensors/Components (Main)	ECM
Required Sensors/Components (Related)	-
Frequency of Operation	Once per driving cycle: P0657 Continuous: P0604, P0606 and P0607
Duration	Within 1 second
MIL Operation	Immediate
Sequence of Operation	None

TYPICAL ENABLING CONDITIONS

Monitor runs whenever following DTCs not present	None

TYPICAL MALFUNCTION THRESHOLDS

ECM RAM errors (P0604):

RAM mirror check	Fail

ECM CPU range check (P0606):

Either of following conditions met:	-
Difference between throttle valve position of main CPU and throttle valve position of sub CPU	0.3 V or more
Difference between accelerator pedal position of main CPU and accelerator pedal position of sub CPU	0.3 V or more

ECM CPU malfunction (P0607):

Either A or B met	-
A. All of following conditions (a), (b) and (c) met	-
(a) CPU reset	1 time or more
(b) Learned TP - learned APP	0.4 V or more
(c) Electronic throttle actuator	OFF
B. CPU reset	2 times or more

ETCS power supply (P0657):

ETCS power supply when ignition switch turned ON	7 V or more

INSPECTION PROCEDURE

ES

Read freeze frame data using the intelligent tester. Freeze frame data records the engine condition when malfunctions are detected. When troubleshooting, freeze frame data can help determine if the vehicle was moving or stationary, if the engine was warmed up or not, if the air-fuel ratio was lean or rich, and other data from the time the malfunction occurred.

1	**CHECK ANY OTHER DTCS OUTPUT (IN ADDITION TO DTC P0604, P0606, P0607 or P0657)**

(a) Connect the intelligent tester to the DLC3.
(b) Turn the ignition switch ON.
(c) Turn the tester ON.
(d) Select the following menu items: DIAGNOSIS / ENHANCED OBD II / DTC INFO / CURRENT CODES.
(e) Read DTCs.

Result

Display (DTC Output)	Proceed To
P0604, P0606, P0607 or P0657	A
P0604, P0606, P0607 or P0657 and other DTCs	B

B → **GO TO DTC CHART**

A →

REPLACE ECM

DTC	P0617	Starter Relay Circuit High

DESCRIPTION

While the engine is being cranked, the positive battery voltage is applied to terminal STA of the ECM. If the ECM detects the Starter Control (STA) signal while the vehicle is being driven, it determines that there is a malfunction in the STA circuit. The ECM then illuminates the MIL and sets the DTC.
This monitor runs when the vehicle is driven at 20 km/h (12.4 mph) for over 20 seconds.

DTC No.	DTC Detection Conditions	Trouble Areas
P0617	When conditions (a), (b) and (c) met, positive (+B) battery voltage 10.5 V or more applied to ECM for 20 seconds (1 trip detection logic) (a) Vehicle speed 20 km/h (12.4 mph) or more (b) Engine speed 1,000 rpm or more (c) STA signal ON	• Park/Neutral Position (PNP) switch • Starter relay circuit • Ignition switch • ECM

ES

MONITOR STRATEGY

Related DTCs	P0617: Starter signal
Required Sensors/Components (Main)	STARTER relay, PNP switch, Clutch start switch and Ignition switch
Required Sensors/Components (Related)	Vehicle Speed Sensor (VSS), Crankshaft Position (CKP) sensor
Frequency of Operation	Continuous
Duration	20 seconds
MIL Operation	Immediate
Sequence of Operation	None

TYPICAL ENABLING CONDITIONS

Monitor runs whenever following DTCs not present	None
Battery voltage	10.5 V or more
Vehicle speed	20 km/h (12.43 mph) or more
Engine speed	1,000 rpm or more

TYPICAL MALFUNCTION THRESHOLDS

Starter signal	ON

WIRING DIAGRAM

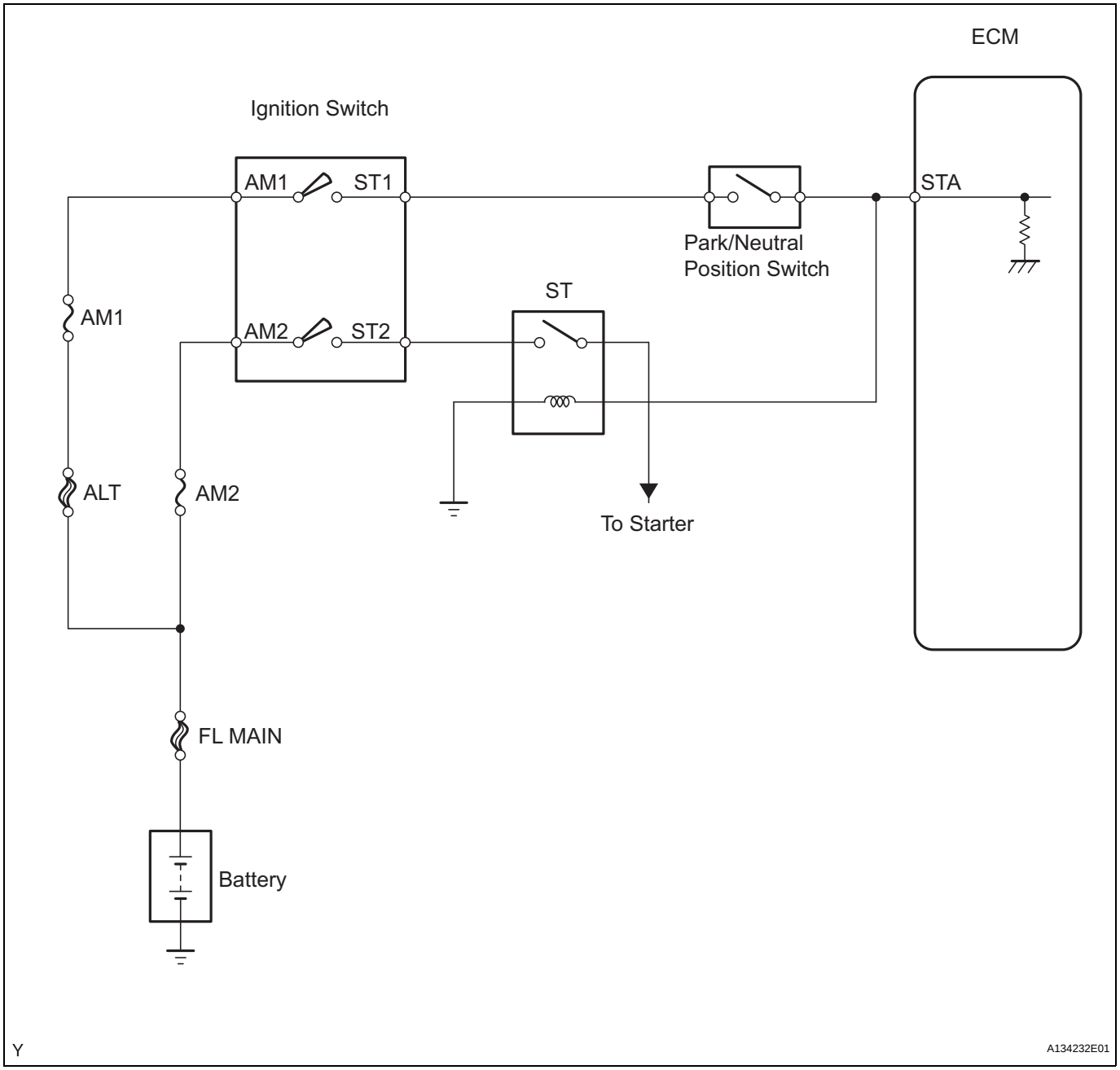

INSPECTION PROCEDURE

HINT:

- The following troubleshooting flowchart is based on the premise that the engine is cranked normally. If the engine will not crank, proceed to the problem symptoms table (see page ES-24).
- Read freeze frame data using the intelligent tester. Freeze frame data records the engine condition when malfunctions are detected. When troubleshooting, freeze frame data can help determine if the vehicle was moving or stationary, if the engine was warmed up or not, if the air-fuel ratio was lean or rich, and other data from the time the malfunction occurred.

1	**READ VALUE USING INTELLIGENT TESTER (STARTER SIGNAL)**

(a) Connect the intelligent tester to the DLC3.
(b) Turn the ignition switch ON and turn the tester ON.

(c) Select the following menu items: DIAGNOSIS / ENHANCED OBD II / DATA LIST / PRIMARY / STARTER SIG.
(d) Check the value displayed on the tester when the ignition switch is turned to the ON and START positions.

OK

Ignition Switch Positions	STARTER SIG
ON	OFF
START	ON

OK → **CHECK FOR INTERMITTENT PROBLEMS**

NG

ES

2 INSPECT PARK/NEUTRAL POSITION SWITCH ASSEMBLY

Component Side:

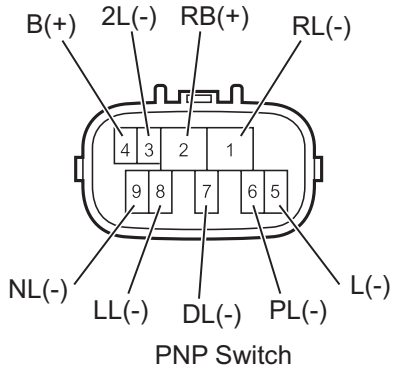

(a) Disconnect the B26 PNP switch connector.
(b) Measure the resistance when the transmission gear selector lever is moved to each position.

Standard resistance

Gear Selector Lever Positions	Tester Connections	Specified Conditions
P	2 - 6, 4 - 5	Below 1 Ω
R	1 - 2	Below 1 Ω
N	2 - 9, 4 - 5	Below 1 Ω
D	2 - 7	Below 1 Ω
2	2 - 3	Below 1 Ω
L	2 - 8	Below 1 Ω

(c) Reconnect the PNP switch connector.

OK → **Go to step 5**

NG

3 REPLACE PARK/NEUTRAL POSITION SWITCH ASSEMBLY

NEXT

4 READ VALUE USING INTELLIGENT TESTER (STARTER SIGNAL)

(a) Connect the intelligent tester to the DLC3.
(b) Turn the ignition switch ON and turn the tester ON.
(c) Select the following menu items: DIAGNOSIS / ENHANCED OBD II / DATA LIST / PRIMARY / STARTER SIG.
(d) Check the value displayed on the tester when the ignition switch is turned to the ON and START positions.

OK

Ignition Switch Positions	STARTER SIG
ON	OFF

Ignition Switch Positions	STARTER SIG
START	ON

OK → SYSTEM OK

NG

5 INSPECT IGNITION OR STARTER SWITCH ASSEMBLY

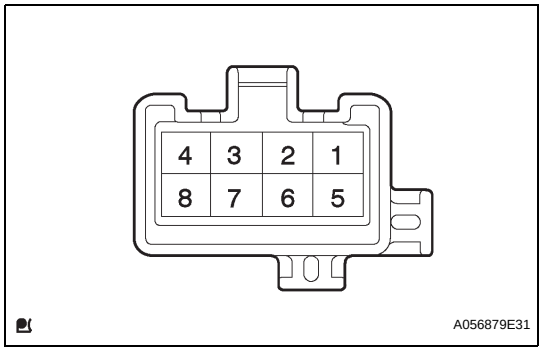

(a) Disconnect the E3 ignition switch connector.
(b) Check the resistance.
Standard resistance

Tester Connections	Ignition Switch Positions	Specified Conditions
All Terminals	LOCK	10 kΩ or higher
2 - 3	ACC	Below 1 Ω
2 - 3, 2 - 4, 6 - 7	ON	
1 - 2, 2 - 4, 6 - 7, 7 - 8	START	

(c) Reconnect the ignition switch connector.

OK → Go to step 7

NG

6 REPLACE IGNITION OR STARTER SWITCH ASSEMBLY

NEXT

7 READ VALUE USING INTELLIGENT TESTER (STARTER SIGNAL)

(a) Connect the intelligent tester to the DLC3.
(b) Turn the ignition switch ON and turn the tester ON.
(c) Select the following menu items: DIAGNOSIS / ENHANCED OBD II / DATA LIST / PRIMARY / STARTER SIG.
(d) Check the value displayed on the tester when the ignition switch is turned to the ON and START positions.

OK

Ignition Switch Positions	STARTER SIG
ON	OFF
START	ON

OK → SYSTEM OK

NG

8	REPAIR OR REPLACE HARNESS OR CONNECTOR (PNP SWITCH - STA TERMINAL OF ECM)

NEXT

9	CHECK WHETHER DTC OUTPUT RECURS

(a) Connect the intelligent tester to the DLC3.
(b) Turn the ignition switch ON.
(c) Turn the tester ON.
(d) Clear DTCs (see page ES-35).
(e) Drive the vehicle at more than 20 km/h (12.43 mph) for over 20 seconds.
(f) Select the following menu items: DIAGNOSIS / ENHANCED OBD II / DTC INFO / CURRENT CODES.
(g) Read DTCs.

Result

Display (DTC Output)	Proceed To
P0617	A
No DTC	B

B → SYSTEM OK

A

REPLACE ECM

DTC	P0630	VIN not Programmed or Mismatch - ECM / PCM

DESCRIPTION

DTC P0630 is set when the Vehicle Identification Number (VIN) is not stored in the Engine Control Module (ECM) or the input VIN is incorrect. Input the VIN with the intelligent tester.

DTC No.	DTC Detection Conditions	Trouble Areas
P0630	• VIN not stored in ECM • Input VIN incorrect (1 trip detection logic)	ECM

MONITOR STRATEGY

Related DTCs	P0630: VIN not programmed
Required Sensors/Components (Main)	ECM
Required Sensors/Components (Related)	-
Frequency of Operation	Continuous
Duration	0.325 seconds
MIL Operation	Immediate
Sequence of Operation	None

TYPICAL ENABLING CONDITIONS

Battery voltage	8 V or more
Ignition switch	ON
Starter	OFF

TYPICAL MALFUNCTION THRESHOLDS

VIN code	Not programmed

COMPONENT OPERATING RANGE

VIN code	Programmed

INSPECTION PROCEDURE

1	READ CURRENT DTC

(a) Connect the intelligent tester to the DLC3.
(b) Turn the ignition switch ON and turn the tester ON.
(c) Select the following menu items: DIAGNOSIS / ENHANCED OBD II / DTC INFO / CURRENT CODES.
(d) Read DTCs.

Result

Display (DTC Output)	Proceed To
P0630	A
P0630 and other DTCs	B

If any DTCs other than P0630 are output, troubleshoot those DTCs first.

NOTICE:
If P0630 is set, the VIN must be input to the ECM using the intelligent tester. However, all DTCs are cleared automatically by the tester when the VIN is input. If DTCs other than P0630 are set, check them first.

B	GO TO DTC CHART

A

2	INPUT VIN WITH INTELLIGENT TESTER

(a) Refer to the REGISTRATION (see page ES-14).

ES

NEXT

END

DTC	P0724	Brake Switch "B" Circuit High

DESCRIPTION

The purpose of this circuit is to prevent the engine from stalling while driving in the lock-up condition when the brakes are suddenly applied.
When the brake pedal is depressed, this switch sends a signal to the ECM. Then the ECM cancels the operation of the lock-up clutch while braking is in progress.

DTC No.	DTC Detection Condition	Trouble Area
P0724	Stop light switch remains ON even when vehicle is driven in GO (30 km/h (18.63 mph) or more) and STOP (less than 3 km/h (1.86 mph)) pattern 5 times (2 trip detection logic)	• Short in stop light switch signal circuit • Stop light switch • ECM

MONITOR DESCRIPTION

This DTC indicates that the stop light switch remains ON. When the stop light switch remains ON during GO and STOP driving, the ECM interprets this as a fault in the stop light switch. Then the MIL illuminates and the ECM stores the DTC. The vehicle must GO (30 km/h (18.63 mph) or more) and STOP (less than 3 km/h (1.86 mph)) 5 times for 2 driving cycles in order for the DTC to be output.

MONITOR STRATEGY

Related DTCs	P0724: Stop light switch/Range check/Rationality
Required sensors/Components	Stop light switch, Vehicle speed sensor
Frequency of operation	Continuous
Duration	GO and STOP 5 times
MIL operation	2 driving cycles
Sequence of operation	None

TYPICAL ENABLING CONDITIONS

The monitor will run whenever this DTC is not present.	None
Battery voltage	8 V or more
Starter	OFF
Ignition switch	ON
GO (Vehicle speed is 30 km/h (18.63 mph) or more)	Once
STOP (Vehicle speed is less than 3 km/h (1.86 mph))	Once

TYPICAL MALFUNCTION THRESHOLDS

Brake switch	Stuck ON

WIRING DIAGRAM

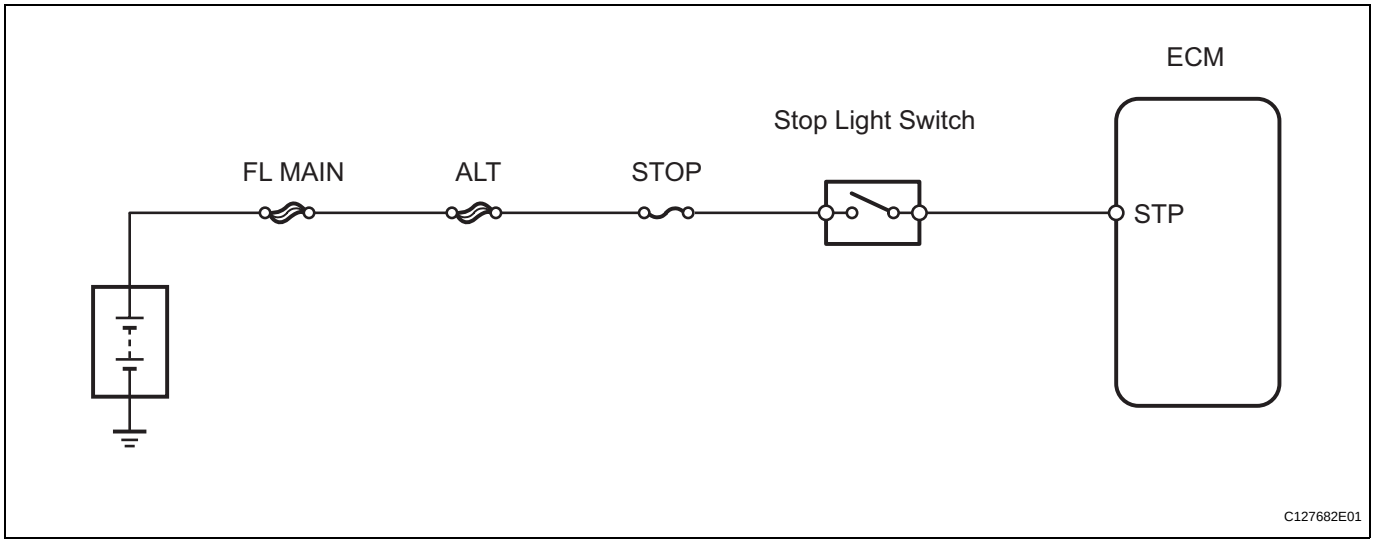

ES

INSPECTION PROCEDURE

HINT:
Using the intelligent tester's DATA LIST allows switch, sensor, actuator and other item values to be read without removing any parts. Reading the DATA LIST early in troubleshooting is one way to save time.
NOTICE:
In the table below, the values listed under "Normal Condition" are reference values. Do not depend solely on these reference values when deciding whether a part is faulty or not.

1. Warm up the engine.
2. Turn the ignition switch OFF.
3. Connect the intelligent tester to the CAN VIM. Then connect the CAN VIM to the DLC3.
4. Turn the ignition switch ON.
5. Turn the intelligent tester ON.
6. Enter the following menus: DIAGNOSIS / ENHANCED OBD II / DATA LIST.
7. Follow the instructions on the tester and read the DATA LIST.

Item	Measurement Item/ Range (Display)	Normal Condition	Diagnostic Note
STOP LIGHT SW	Stop light switch status/ ON or OFF	• Brake pedal is depressed: ON • Brake pedal is released: OFF	-

1	INSPECT STOP LIGHT SWITCH

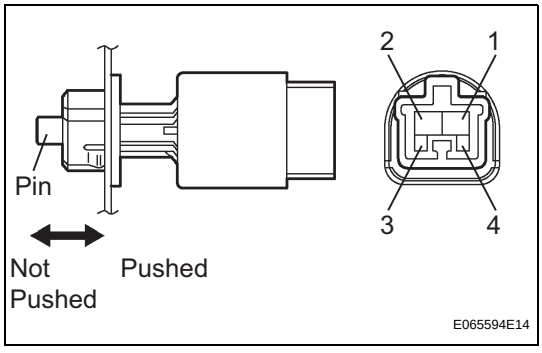

(a) Remove the A3 stop light switch.
(b) Measure the resistance of the switch.
Standard resistance

Tester Connection	Switch Condition	Specified Condition
1 - 2	Pin pushed (pedal released)	Below 1 Ω
1 - 2	Pin not pushed (pedal depressed)	10 kΩ or higher
3 - 4	Pin pushed (pedal released)	10 kΩ or higher
3 - 4	Pin not pushed (pedal depressed)	Below 1 Ω

NG → REPLACE STOP LIGHT SWITCH

OK

2 CHECK WIRE HARNESS (ECM - BATTERY)

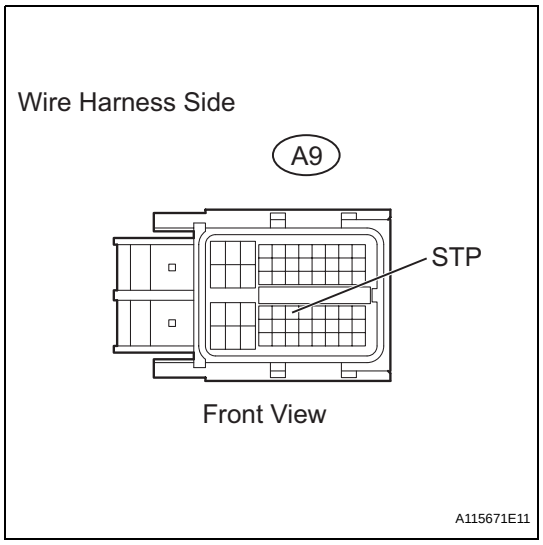

(a) Measure the voltage of the wire harness side connector.
Standard voltage

Tester Connection	Condition	Specified Condition
A9-36 (STP) - Body ground	Brake pedal is depressed	10 to 14 V
A9-36 (STP) - Body ground	Brake pedal is released	Below 1 V

NG → REPAIR OR REPLACE HARNESS AND CONNECTOR

OK

REPLACE ECM

ES

DTC	P1550	Battery Current Sensor Circuit

DTC	P1551	Battery Current Sensor Circuit Low

DTC	P1552	Battery Current Sensor Circuit High

DESCRIPTION

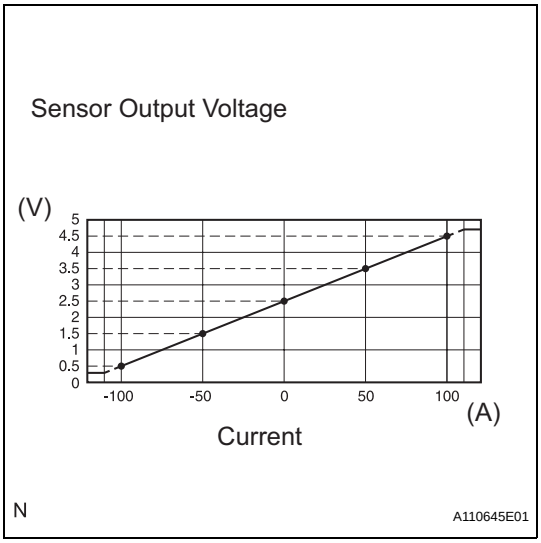

The battery current sensor installed on the positive (+) battery terminal detects the amount of current supplied from the generator.
The battery current sensor changes current to voltage (at the positive (+) battery terminal) and sends it to the ECM. The ECM controls the voltage of the generator based on the signals from the battery current sensor.

DTC No.	DTC Detection Condition	Trouble Area
P1550	The following condition continues for 10 seconds or more with the ignition switch ON (1 trip detection logic): • Difference between the maximum and minimum current values of the battery current sensor is 1 A or less	• Open or short in battery current sensor circuit • Battery current sensor assembly • ECM
P1551	Battery current sensor output value is 0.2 V or less for 0.5 seconds or more with the ignition switch ON (1 trip detection logic):	• Short in battery current sensor circuit • Battery current sensor assembly • ECM
P1552	Battery current sensor output value is 4.8 V or more for 0.5 seconds or more with the ignition switch ON (1 trip detection logic):	• Open in battery current sensor circuit • Battery current sensor assembly • ECM

WIRING DIAGRAM

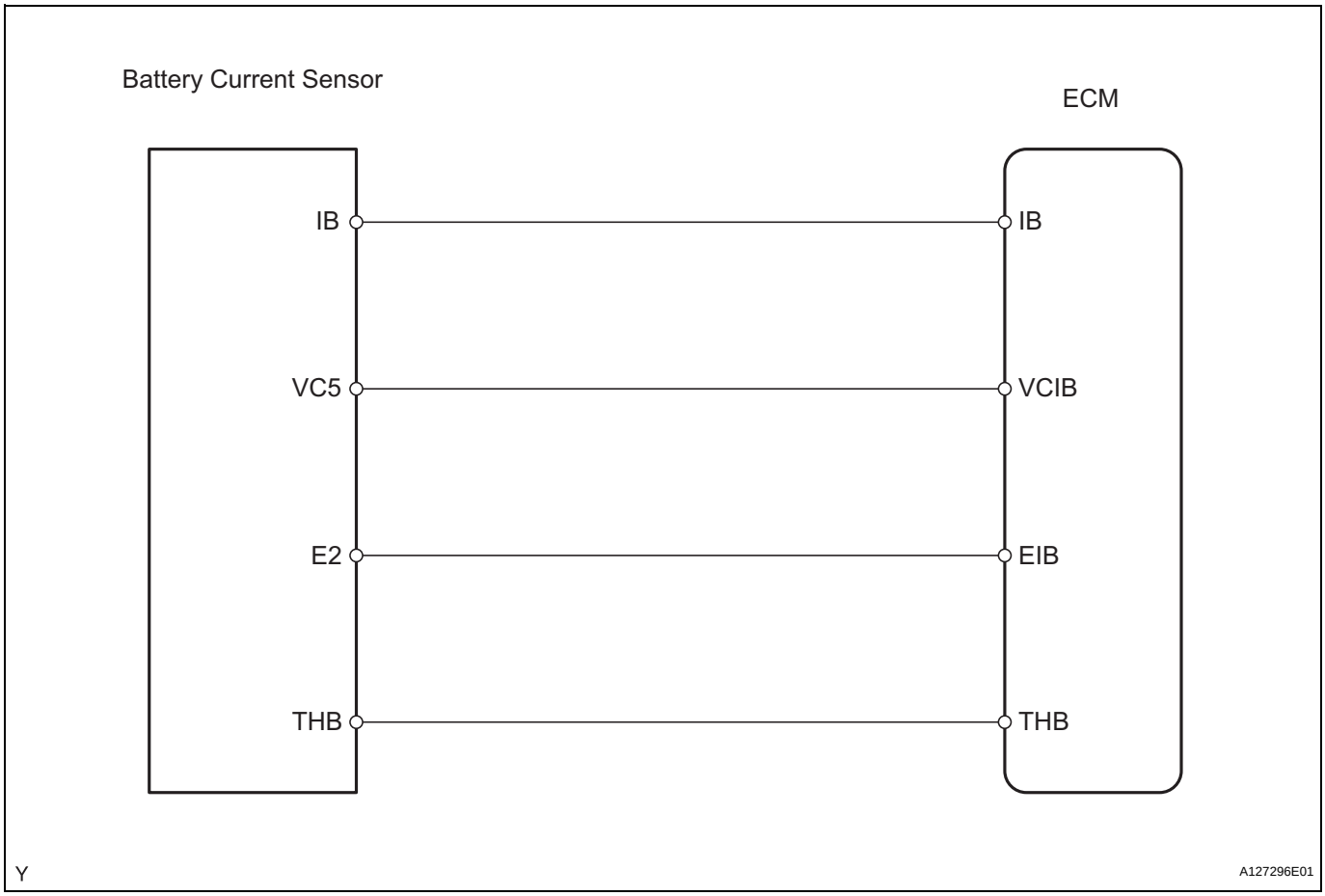

INSPECTION PROCEDURE

HINT:

- If different DTCs that are related to a different system are output simultaneously while terminal E2 is used as a ground terminal, terminal E2 may be open.
- Read freeze frame data using the intelligent tester. Freeze frame data records the engine conditions when malfunctions are detected. When troubleshooting, freeze frame data can help determine if the vehicle was running or stopped, if the engine was warmed up or not, if the air-fuel ratio was lean or rich, and other data from the time the malfunction occurred.

1	INSPECT BATTERY CURRENT SENSOR ASSEMBLY

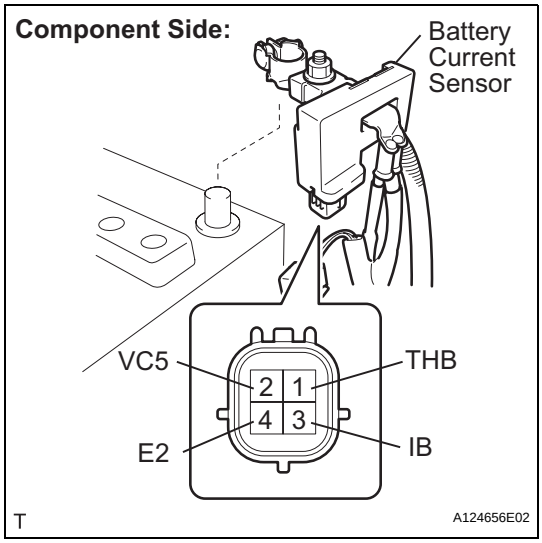

(a) Disconnect the B29 battery current sensor connector.
(b) Measure the resistance of the battery current sensor.

Standard resistance

Tester Connection	Specified Condition
2 (VC5) - 4 (E2)	3 to 10 kΩ
2 (VC5) - 3 (IB)	Below 0.5 kΩ
3 (IB) - 4 (E2)	3 to 10 kΩ

HINT:
The resistance differs according to the tester type.

NG → **REPLACE BATTERY CURRENT SENSOR ASSEMBLY**

OK

2	CHECK HARNESS AND CONNECTOR (BATTERY CURRENT SENSOR - ECM)

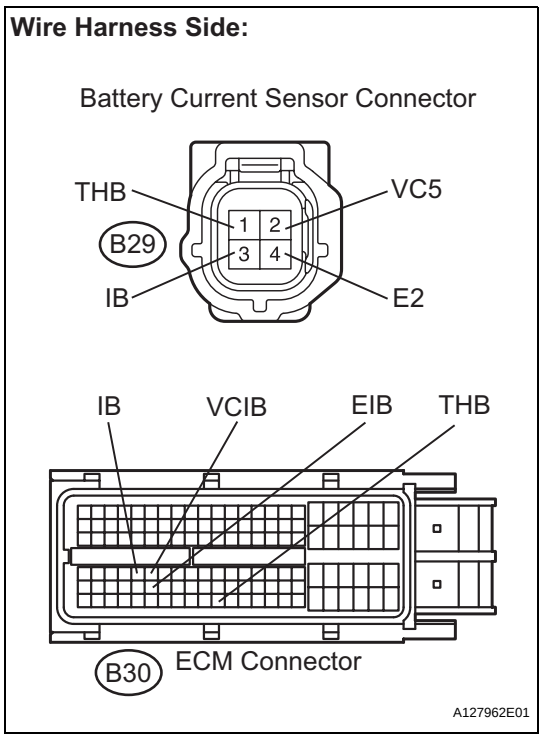

(a) Disconnect the B29 battery current sensor connector.
(b) Disconnect the B30 ECM connectors.
(c) Measure the resistance of the wire harness side connectors.

Standard resistance (Check for open)

Tester Connection	Specified Condition
B29-3 (IB) - B30-68 (IB)	Below 1 Ω
B29-2 (VC5) - B30-69 (VCIB)	Below 1 Ω
B29-4 (E2) - B30-92 (EIB)	Below 1 Ω
B29-1 (THB) - B30-120 (THB)	Below 1 Ω

Standard resistance (Check for short)

Tester Connection	Specified Condition
B29-3 (IB) or B30-68 (IB) - Body ground	10 kΩ or higher
B29-2 (VC5) or B30-69 (VCIB) - Body ground	10 kΩ or higher
B29-1 (THB) or B30-120 (THB) - Body ground	10 kΩ or higher

NG → **REPAIR OR REPLACE HARNESS AND CONNECTOR**

OK

REPLACE ECM

DTC	P1602	Deterioration of Battery

DESCRIPTION

The ECM determines the battery power according to the voltage of the BATT terminal while the engine is running (not cranking).

DTC No.	DTC Detection Condition	Trouble Area
P1602	Battery power is 0 % (1 trip detection logic)	• Battery • ECM back-up power source circuit

INSPECTION PROCEDURE

ES

1	INSPECT BATTERY

(a) Inspect the battery specific gravity.
  (1) Check the specific gravity of each cell.
    Standard gravity:
    1.25 to 1.29 at 20°C (68°F)

(b) Inspect the battery voltage.
  (1) After the vehicle is driven for 20 minutes, stop the engine.
  (2) Turn the ignition switch ON, and turn on the headlights, blower fan and defogger for 1 minute.
  (3) Turn the ignition switch OFF.
  (4) Measure the battery voltage.
    Standard voltage:
    9.6 V or more

NG → **REPLACE BATTERY**

OK

CHECK ECU POWER SOURCE CIRCUIT

DTC	P2102	Throttle Actuator Control Motor Circuit Low

DTC	P2103	Throttle Actuator Control Motor Circuit High

DESCRIPTION

The throttle actuator is operated by the ECM and opens and closes the throttle valve using gears.
The opening angle of the throttle valve is detected by the Throttle Position (TP) sensor, which is mounted on the throttle body. The TP sensor provides feedback to the ECM. This feedback allows the ECM to appropriately control the throttle actuator and monitor the throttle opening angle as the ECM responds to driver inputs.
HINT:
This ETCS (Electronic Throttle Control System) does not use a throttle cable.

DTC No.	DTC Detection Conditions	Trouble Areas
P2102	Conditions (a) and (b) continue for 2.0 seconds (1 trip detection logic): (a) Throttle actuator duty ratio 80 % or more (b) Throttle actuator current 0.5 A or less	• Open in throttle actuator circuit • Throttle actuator • ECM
P2103	Either of following conditions met (1 trip detection logic): • Hybrid IC diagnosis signal failure • Hybrid IC current limiter port failure	• Short in throttle actuator circuit • Throttle actuator • Throttle valve • Throttle body assembly • ECM

MONITOR DESCRIPTION

The ECM monitors the electrical current through the electronic actuator, and detects malfunctions and open circuits in the throttle actuator based on this value. If the current is outside the standard range, the ECM determines that there is a malfunction in the throttle actuator. In addition, if the throttle valve does not function properly (for example, stuck on), the ECM determines that there is a malfunction. The ECM then illuminates the MIL and sets a DTC.
Example:
When the electrical current is less than 0.5 A and the throttle actuator duty ratio exceeds 80 %, the ECM interprets this as the current being outside the standard range, and illuminates the MIL and sets a DTC. If the malfunction is not repaired successfully, a DTC is set when the engine is quickly revved to a high rpm several times after the engine has idled for 5 seconds after engine start.

MONITOR STRATEGY

Related DTCs	P2102: Throttle actuator current (low current) P2103: Throttle actuator current (high current)
Required Sensors/Components (Main)	Throttle actuator (throttle body)
Required Sensors/Components (Related)	None
Frequency of Operation	Continuous
Duration	2 seconds: P2102 0.1 seconds or 0.6 seconds: P2103
MIL Operation	Immediate
Sequence of Operation	None

TYPICAL ENABLING CONDITIONS

Monitor runs whenever following DTCs not present	None

P2102:

Throttle actuator	Activated
Duty-cycle ratio to open throttle actuator	80 % or more

Throttle actuator power supply	8 V or more

P2103:

Throttle actuator	Activated
Throttle actuator power supply	8 V or more
Battery voltage	8 V or more
Starter	OFF

TYPICAL MALFUNCTION THRESHOLDS

P2102:

Throttle actuator current	Less than 0.5 A

P2103:

Hybrid IC current limiter port	Fail

ES

FAIL-SAFE

When either of these DTCs, or other DTCs relating to ETCS (Electronic Throttle Control System) malfunctions, are set, the ECM enters fail-safe mode. During fail-safe mode, the ECM cuts the current to the throttle actuator off, and the throttle valve is returned to a 6° throttle angle by the return spring. The ECM then adjusts the engine output by controlling the fuel injection (intermittent fuel-cut) and ignition timing, in accordance with the accelerator pedal opening angle, to allow the vehicle to continue at a minimal speed. If the accelerator pedal is depressed firmly and gently, the vehicle can be driven slowly. Fail-safe mode continues until a pass condition is detected, and the ignition switch is then turned OFF.

WIRING DIAGRAM

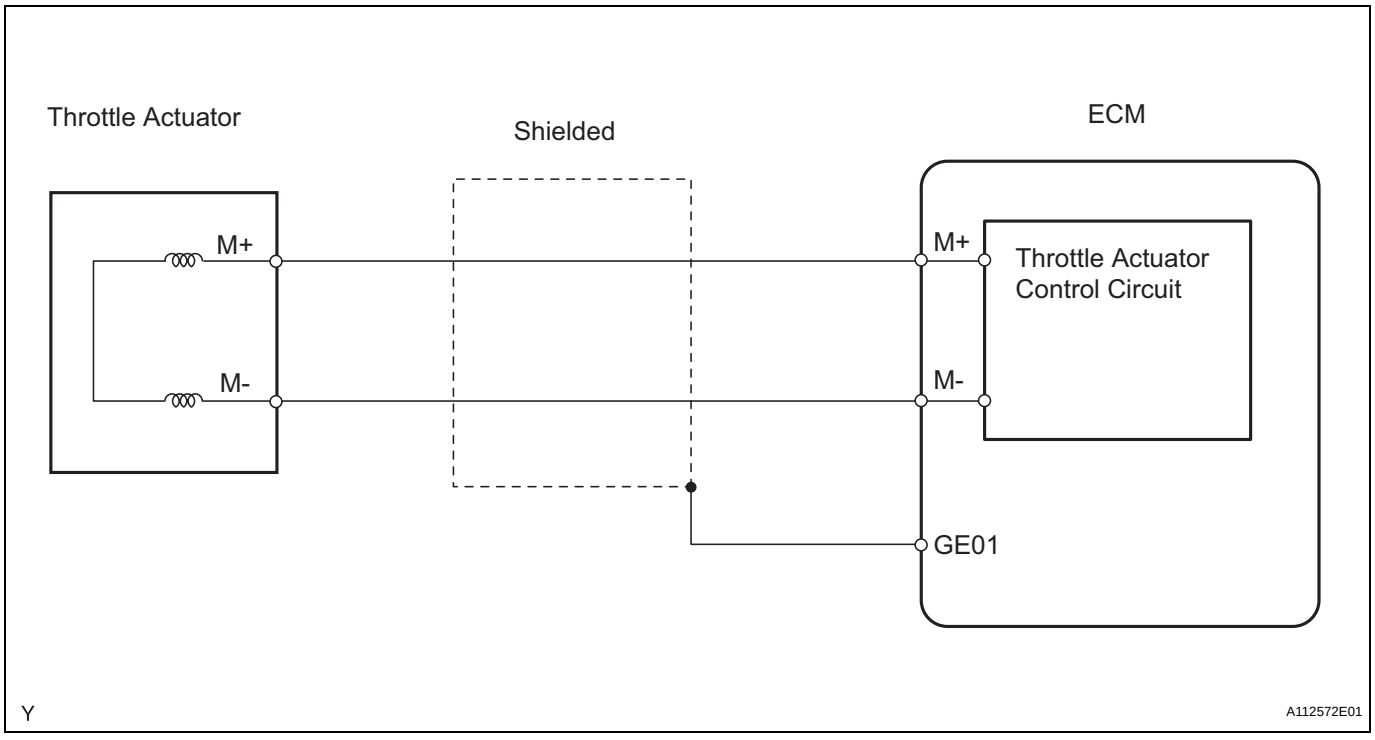

INSPECTION PROCEDURE

HINT:

- Read freeze frame data using the intelligent tester. Freeze frame data records the engine condition when malfunctions are detected. When troubleshooting, freeze frame data can help determine if the vehicle was moving or stationary, if the engine was warmed up or not, if the air-fuel ratio was lean or rich, and other data from the time the malfunction occurred.
- The throttle actuator current (THROTTLE MOT) and the throttle actuator duty ratio (THROTL OPN DUTY / THROTL CLS DUTY) can be read using the intelligent tester. However, the ECM shuts off the throttle actuator current when the ETCS malfunctions.

1 INSPECT THROTTLE BODY (RESISTANCE OF THROTTLE ACTUATOR)

ES

Component Side:

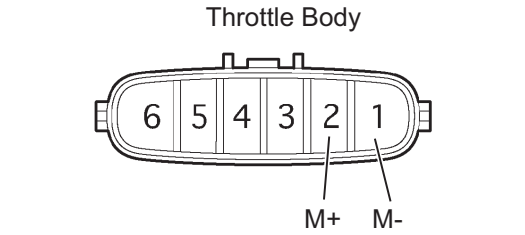

(a) Disconnect the B3 throttle body connector.
(b) Measure the resistance of the throttle actuator.
Standard resistance

Tester Connections	Specified Conditions
2 (M+) - 1 (M-)	0.3 to 100 Ω at 20°C (68°F)

(c) Reconnect the throttle body connector.

NG → **REPLACE THROTTLE BODY ASSEMBLY**

OK

2 CHECK HARNESS AND CONNECTOR (THROTTLE ACTUATOR - ECM)

Wire Harness Side:

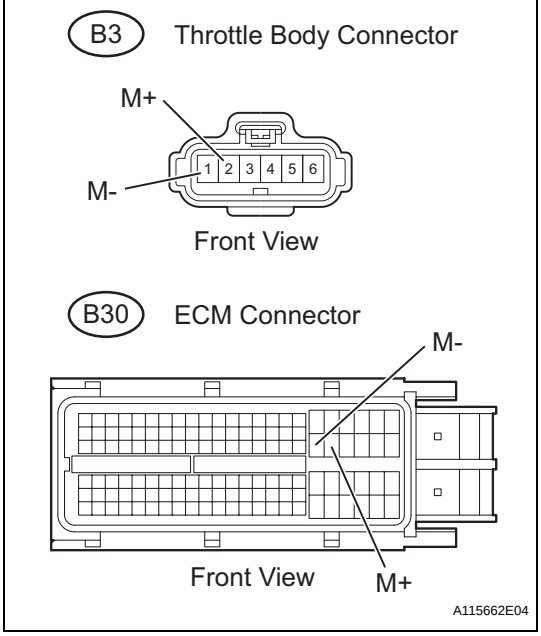

(a) Disconnect the B3 throttle body connector.
(b) Disconnect the B30 ECM connector.
(c) Measure the resistance.
Standard resistance (Check for open)

Tester Connections	Specified Conditions
B3-2 (M+) - B30-42 (M+)	Below 1 Ω
B3-1 (M-) - B30-41 (M-)	Below 1 Ω

Standard resistance (Check for short)

Tester Connections	Specified Conditions
B3-2 (M+) or B30-42 (M+) - Body ground	10 kΩ or higher
B3-1 (M-) or B30-41 (M-) - Body ground	10 kΩ or higher

(d) Reconnect the throttle body connector.
(e) Reconnect the ECM connector.

NG → **REPAIR OR REPLACE HARNESS OR CONNECTOR**

OK

3	INSPECT THROTTLE BODY ASSEMBLY

(a) Check for foreign objects between the throttle valve and the housing.
OK:
No foreign objects between throttle valve and housing.

NG → **REMOVE FOREIGN OBJECT AND CLEAN THROTTLE BODY**

OK

4	INSPECT THROTTLE VALVE

(a) Check if the throttle valve opens and closes smoothly.
OK:
Throttle valve opens and closes smoothly.

NG → **REPLACE THROTTLE BODY ASSEMBLY**

OK

REPLACE ECM

DTC	P2111	Throttle Actuator Control System - Stuck Open

DTC	P2112	Throttle Actuator Control System - Stuck Closed

DESCRIPTION

The throttle actuator is operated by the ECM, and opens and closes the throttle valve using gears. The opening angle of the throttle valve is detected by the Throttle Position (TP) sensor, which is mounted on the throttle body. The TP sensor provides feedback to the ECM in order that it can control the throttle actuator, and therefore the throttle valve, appropriately in response to driver inputs.

HINT:

ES

This ETCS (Electronic Throttle Control System) does not use a throttle cable.

DTC No.	DTC Detection Conditions	Trouble Areas
P2111	Throttle actuator does not close when signaled by ECM (1 trip detection logic)	• Throttle actuator • Throttle body assembly • Throttle valve
P2112	Throttle actuator does not open when signaled by ECM (1 trip detection logic)	• Throttle actuator • Throttle body assembly • Throttle valve

MONITOR DESCRIPTION

The ECM determines that there is a malfunction in the ETCS when the throttle valve remains at a fixed angle despite a high drive current from the ECM. The ECM illuminates the MIL and sets a DTC.

If the malfunction is not repaired successfully, a DTC is set when the accelerator pedal is fully depressed and released quickly (to fully open and close the throttle valve) after the engine is next started.

MONITOR STRATEGY

Related DTCs	P2111: Throttle actuator stuck open P2112: Throttle actuator stuck closed
Required Sensors/Components (Main)	Throttle actuator
Required Sensors/Components (Related)	-
Frequency of Operation	Continuous
Duration	0.5 seconds
MIL Operation	Immediate
Sequence of Operation	None

TYPICAL ENABLING CONDITIONS

All:

Monitor runs whenever following DTCs not present	None

P2111 (Throttle actuator stuck open):

All of following conditions met	-
Throttle actuator current	2 A or more
Duty cycle to close throttle	80 % or more

P2112 (Throttle actuator stuck closed):

All of following conditions met	-
Throttle actuator current	2 A or more
Duty cycle to open throttle	80 % or more

TYPICAL MALFUNCTION THRESHOLDS

P2111 (Throttle actuator stuck open):

TP sensor voltage change	No change

P2112 (Throttle actuator stuck closed):

TP sensor voltage change	No change

FAIL-SAFE

When either of these DTCs, or other DTCs relating to ETCS (Electronic Throttle Control System) malfunctions, are set, the ECM enters fail-safe mode. During fail-safe mode, the ECM cuts the current to the throttle actuator off, and the throttle valve is returned to a 6° throttle angle by the return spring. The ECM then adjusts the engine output by controlling the fuel injection (intermittent fuel-cut) and ignition timing, in accordance with the accelerator pedal opening angle, to allow the vehicle to continue at a minimal speed. If the accelerator pedal is depressed firmly and gently, the vehicle can be driven slowly. Fail-safe mode continues until a pass condition is detected, and the ignition switch is then turned OFF.

WIRING DIAGRAM

Refer to DTC P2102 (see page ES-266).

INSPECTION PROCEDURE

HINT:

Read freeze frame data using the intelligent tester. Freeze frame data records the engine condition when malfunctions are detected. When troubleshooting, freeze frame data can help determine if the vehicle was moving or stationary, if the engine was warmed up or not, if the air-fuel ratio was lean or rich, and other data from the time the malfunction occurred.

1	CHECK ANY OTHER DTCS OUTPUT (IN ADDITION TO DTC P2111 OR P2112)

(a) Connect the intelligent tester to the DLC3.
(b) Turn the ignition switch ON.
(c) Turn the tester ON.
(d) Select the following menu items: DIAGNOSIS / ENHANCED OBD II / DTC INFO / CURRENT CODES.
(e) Read DTCs.

Result

Display (DTC Output)	Proceed To
P2111 or P2112	A
P2111 or P2112 and other DTCs	B

HINT:

If any DTCs other than P2111 or P2112 are output, troubleshoot those DTCs first.

B → GO TO DTC CHART

A

2	INSPECT THROTTLE BODY ASSEMBLY (VISUALLY CHECK THROTTLE VALVE)

(a) Check for contamination between the throttle valve and the housing. If necessary, clean the throttle body. And check that the throttle valve moves smoothly.

OK:
Throttle valve is not contaminated with foreign objects and moves smoothly.

NG → **REPLACE THROTTLE BODY ASSEMBLY**

OK

3 CHECK WHETHER DTC OUTPUT RECURS (DTC P2111 OR P2112)

(a) Connect the intelligent tester to the DLC3.
(b) Turn the ignition switch ON.
(c) Turn the tester ON.
(d) Clear DTCs (see page ES-35).
(e) Start the engine, and fully depress and release the accelerator pedal quickly (to fully open and close the throttle valve).
(f) Select the following menu items: DIAGNOSIS / ENHANCED OBD II / DTC INFO / CURRENT CODES.
(g) Read DTCs.

Result

Display (DTC Output)	Proceed To
No DTC	A
P2111 or P2112	B

B → **REPLACE ECM**

A

CHECK FOR INTERMITTENT PROBLEMS

DTC	P2118	Throttle Actuator Control Motor Current Range / Performance

DESCRIPTION

The ETCS (Electronic Throttle Control System) has a dedicated power supply circuit. The voltage (+BM) is monitored and when it is low (less than 4 V), the ECM determines that there is a malfunction in the ETCS and cuts off the current to the throttle actuator.
When the voltage becomes unstable, the ETCS itself becomes unstable. For this reason, when the voltage is low, the current to the throttle actuator is cut. If repairs are made and the system returns to normal, turn the ignition switch OFF. The ECM then allows the current to flow to the throttle actuator so that it can be restarted.
HINT:
The ETCS does not use a throttle cable.

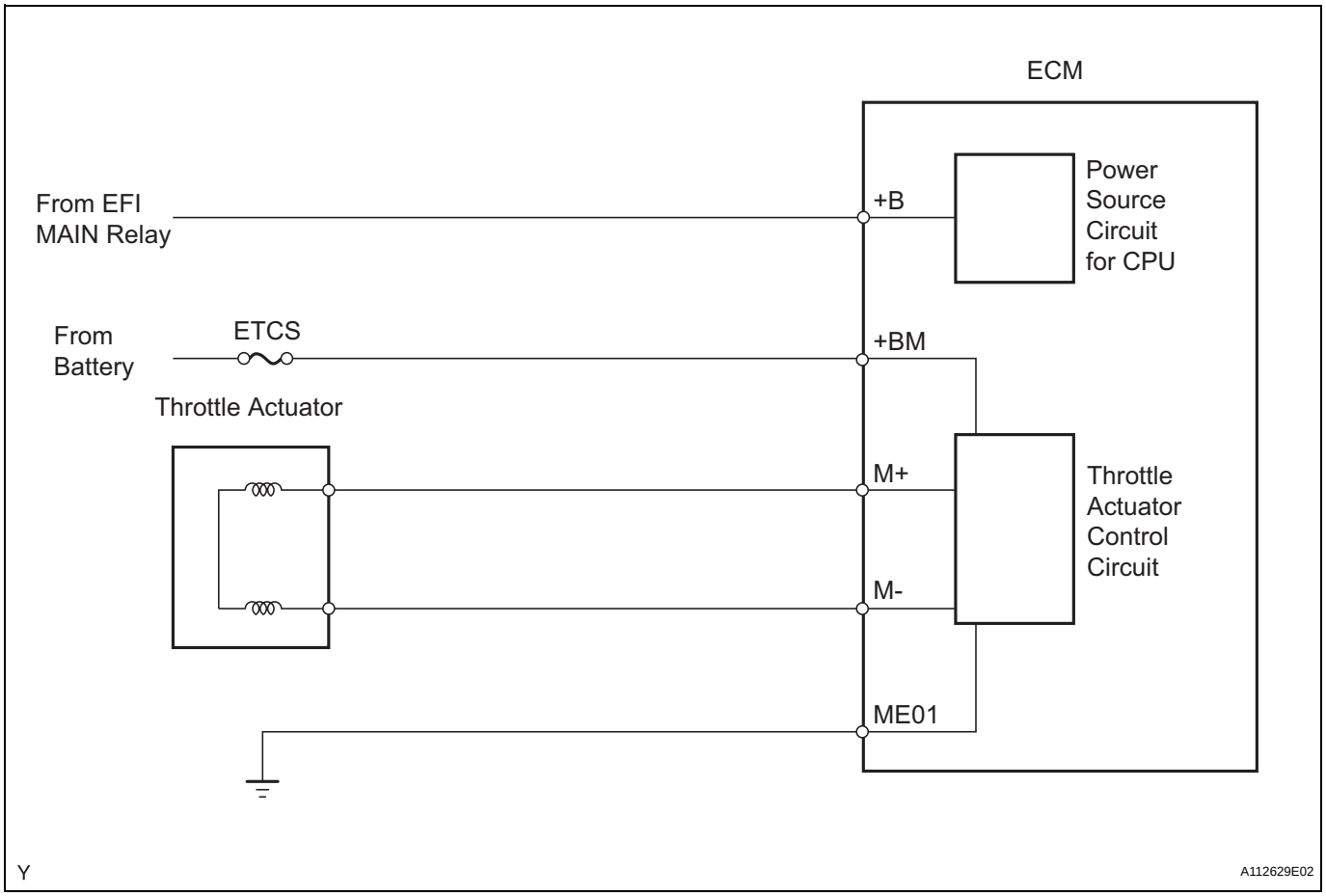

DTC No.	DTC Detection Conditions	Trouble Areas
P2118	Open in ETCS power source (+BM) circuit (1 trip detection logic)	• Open in ETCS power source circuit • Battery • Battery terminals • ETCS fuse • ECM

MONITOR DESCRIPTION

The ECM monitors the battery supply voltage applied to the throttle actuator.
When the power supply voltage (+BM) drops below 4 V for 0.8 seconds or more, the ECM interprets this as an open in the power supply circuit (+BM). The ECM illuminates the MIL and sets the DTC.
If the malfunction is not repaired successfully, the DTC is set 5 seconds after the engine is next started.

MONITOR STRATEGY

Related DTCs	P2118: Throttle actuator power supply
Required Sensors/Components (Main)	Throttle actuator, throttle valve, ETCS fuse
Required Sensors/Components (Related)	None
Frequency of Operation	Continuous
Duration	0.8 seconds
MIL Operation	Immediate
Sequence of Operation	None

TYPICAL ENABLING CONDITIONS

Monitor runs whenever following DTCs not present	None
Battery voltage	8 V or more
Electronic throttle actuator power	ON

TYPICAL MALFUNCTION THRESHOLDS

Throttle actuator power supply voltage (+BM)	Less than 4 V

COMPONENT OPERATING RANGE

Throttle actuator power supply voltage (+BM)	9 to 14 V

FAIL-SAFE

When this DTC, or other DTCs relating to ETCS (Electronic Throttle Control System) malfunctions, are set, the ECM enters fail-safe mode. During fail-safe mode, the ECM cuts the current to the throttle actuator off, and the throttle valve is returned to a 6° throttle angle by the return spring. The ECM then adjusts the engine output by controlling the fuel injection (intermittent fuel-cut) and ignition timing, in accordance with the accelerator pedal opening angle, to allow the vehicle to continue at a minimal speed. If the accelerator pedal is depressed firmly and gently, the vehicle can be driven slowly.
Fail-safe mode continues until a pass condition is detected, and the ignition switch is then turned OFF.

WIRING DIAGRAM

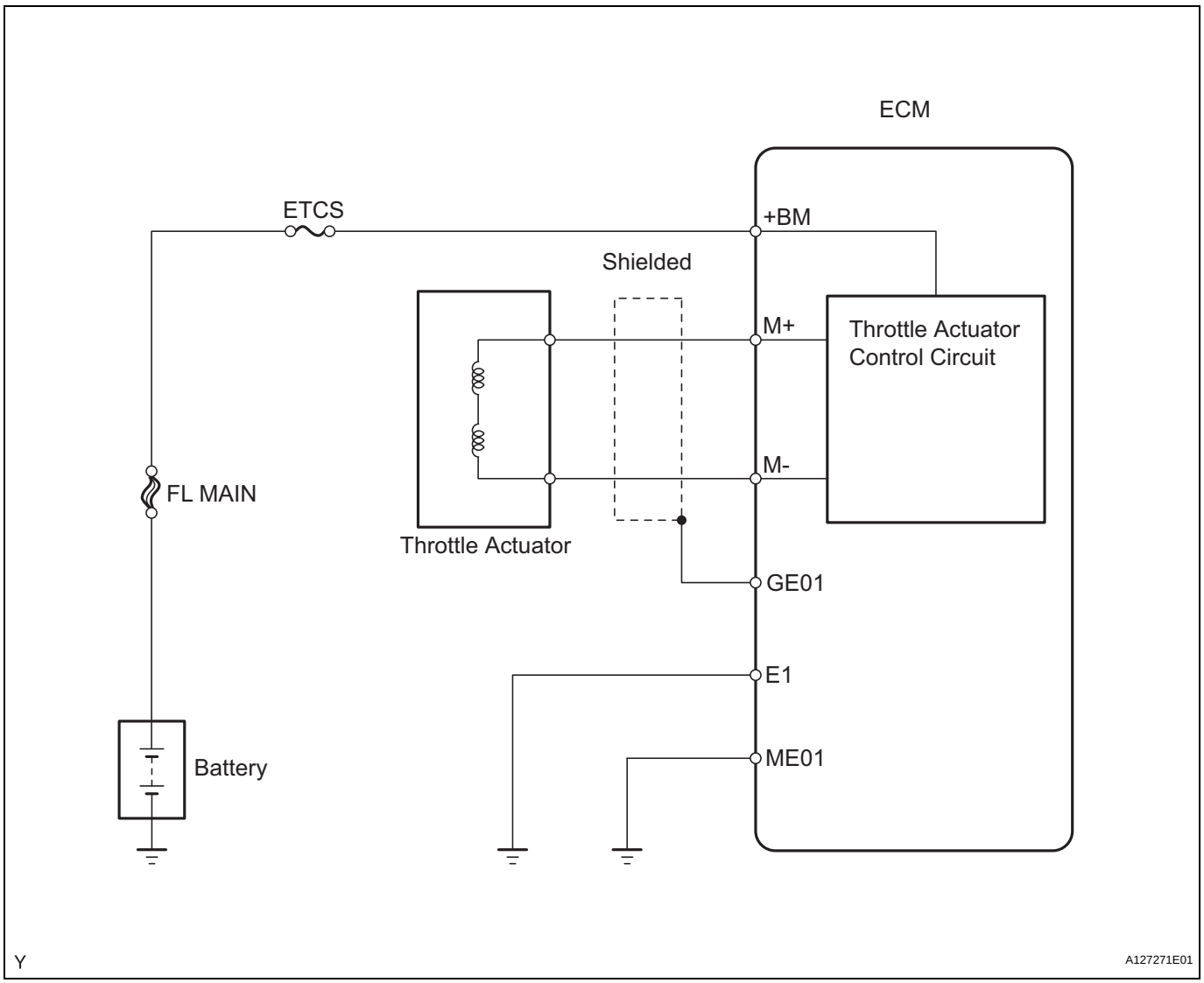

ES

INSPECTION PROCEDURE

HINT:

Read freeze frame data using the intelligent tester. Freeze frame data records the engine condition when malfunctions are detected. When troubleshooting, freeze frame data can help determine if the vehicle was moving or stationary, if the engine was warmed up or not, if the air-fuel ratio was lean or rich, and other data from the time the malfunction occurred.

1	READ VALUE USING INTELLIGENT TESTER (+BM VOLTAGE)

(a) Connect the intelligent tester to the DLC3.
(b) Turn the ignition switch ON.
(c) Turn the tester ON.
(d) Select the following menu items: DIAGNOSIS / ENHANCED OBD II / DATA LIST / +BM VOLTAGE.
(e) Read the value displayed on the tester.
Standard voltage:
9 to 14 V

OK → Go to step 5

NG

2	CHECK FUSE (ETCS FUSE)

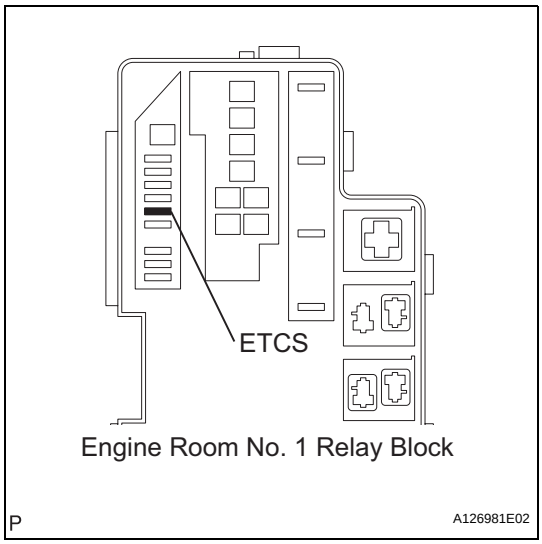

(a) Remove the ETCS fuse from the engine room No. 1 relay block.
(b) Measure the ETCS fuse resistance.
Standard resistance:
Below 1 Ω
(c) Reinstall the ETCS fuse.

NG → **CHECK FOR SHORTS IN ALL HARNESSES AND CONNECTORS CONNECTED TO FUSE AND REPLACE FUSE**

OK

ES

3	CHECK HARNESS AND CONNECTOR (ECM - ETCS FUSE, ETCS FUSE - BATTERY)

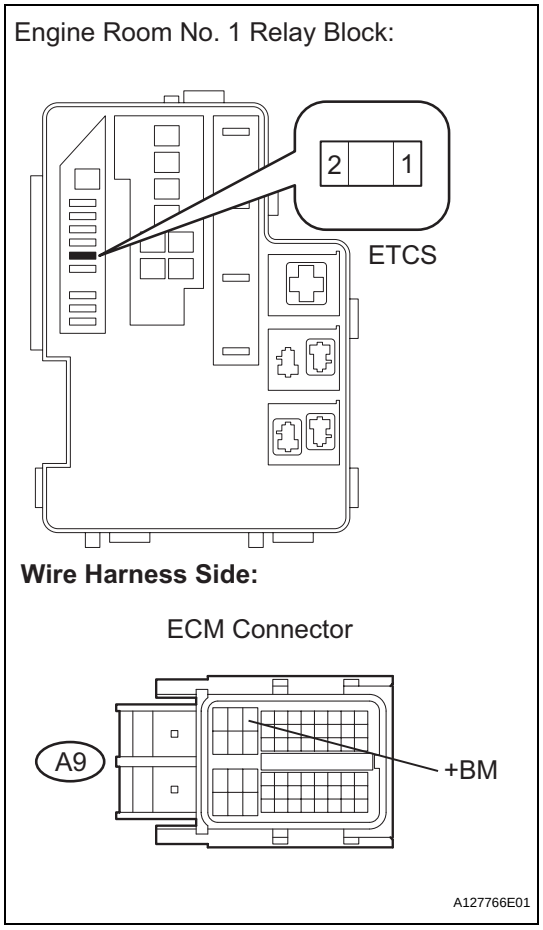

(a) Check the harness and connector between the ETCS fuse and ECM.
  (1) Remove the ETCS fuse from the engine room No. 1 relay block.
  (2) Disconnect the A9 ECM connector.
  (3) Measure the resistance.

Standard resistance (Check for open)

Tester Connections	Specified Conditions
2 (ETCS fuse) - A9-3 (+BM)	Below 1 Ω

Standard resistance (Check for short)

Tester Connections	Specified Conditions
2 (ETCS fuse) or A9-3 (+BM) - Body ground	10 kΩ or higher

  (4) Reinstall the ETCS fuse.
  (5) Reconnect the ECM connector.

(b) Check the harness and connector between the ETCS fuse and positive battery cable.
  (1) Remove the ETCS fuse from the engine room No. 1 relay block.
  (2) Disconnect the cable from the positive (+) battery terminal.
  (3) Check the resistance.

Standard resistance (Check for open)

Tester Connections	Specified Conditions
Positive battery cable - 1 (ETCS fuse)	Below 1 Ω

Standard resistance (Check for short)

Tester Connections	Specified Conditions
Positive battery cable or 1 (ETCS fuse) - Body ground	10 kΩ or higher

  (4) Reinstall the ETCS fuse.
  (5) Reconnect the cable to the positive (+) battery terminal.

NG → **REPAIR OR REPLACE HARNESS OR CONNECTOR**

OK

ES

4	INSPECT ECM (+BM VOLTAGE)

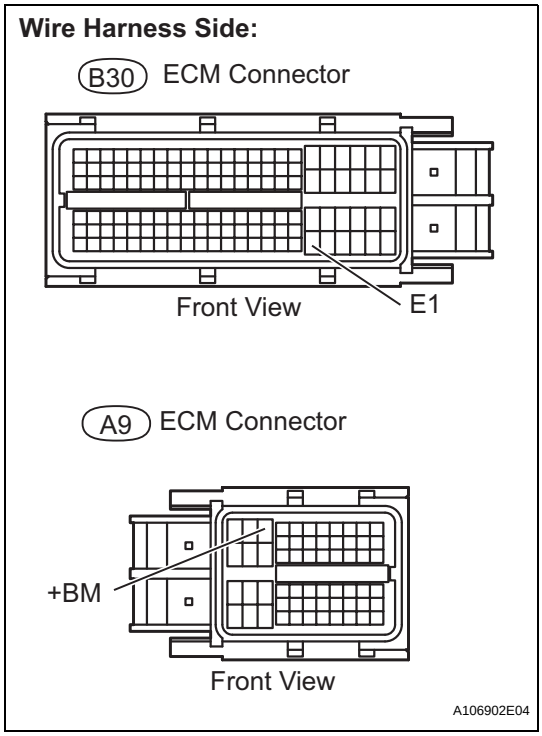

(a) Disconnect the A9 and B30 ECM connectors.
(b) Measure the voltage between the terminals of the A9 and B30 ECM connectors.
Standard voltage

Tester Connections	Specified Conditions
A9-3 (+BM) - B30-104 (E1)	9 to 14 V

(c) Reconnect the ECM connectors.

NG → **REPAIR OR REPLACE HARNESS OR CONNECTOR (TERMINAL E1 - BODY GROUND)**

OK

REPLACE ECM

5	INSPECT BATTERY

(a) Check that the battery is not depleted.
OK:
Battery is not depleted

NG → **REPLACE BATTERY**

OK

6	CHECK BATTERY TERMINAL

(a) Check that the battery terminals and ECM ground are not loose or corroded.
OK:
Battery terminals and ECM ground are not loose or corroded

NG → **REPAIR OR REPLACE BATTERY TERMINAL**

OK

CHECK FOR INTERMITTENT PROBLEMS

DTC	P2119	Throttle Actuator Control Throttle Body Range / Performance

DESCRIPTION

The Electronic Throttle Control System (ETCS) is composed of the throttle actuator, Throttle Position (TP) sensor, Accelerator Pedal Position (APP) sensor, and ECM. The ECM operates the throttle actuator to regulate the throttle valve in response to driver inputs. The TP sensor detects the opening angle of the throttle valve, and provides the ECM with feedback so that the throttle valve can be appropriately controlled by the ECM.

DTC No.	DTC Detection Conditions	Trouble Areas
P2119	Throttle valve opening angle continues to vary greatly from target opening angle (1 trip detection logic)	• ETCS • ECM

ES

MONITOR DESCRIPTION

The ECM determines the actual opening angle of the throttle valve from the TP sensor signal. The actual opening angle is compared to the target opening angle commanded by the ECM. If the difference between these two values is outside the standard range, the ECM interprets this as a malfunction in the ETCS. The ECM then illuminates the MIL and sets the DTC.
If the malfunction is not repaired successfully, the DTC is set when the accelerator pedal is quickly released (to close the throttle valve) after the engine speed reaches 5,000 rpm by the accelerator pedal being fully depressed (fully open the throttle valve).

MONITOR STRATEGY

Related DTCs	P2119: ETCS malfunction
Required Sensors/Components (Main)	Throttle actuator
Required Sensors/Components (Related)	-
Frequency of Operation	Continuous
Duration	Within 1 second
MIL Operation	Immediate
Sequence of Operation	None

TYPICAL ENABLING CONDITIONS

Monitor runs whenever following DTCs not present	None

TYPICAL MALFUNCTION THRESHOLDS

Either of following conditions A or B met	-
A. Difference between commanded closed throttle position and current closed throttle position	0.3 V or more for 1 second
B. Difference between commanded open throttle position and current open throttle position	0.3 V or more for 0.6 seconds

FAIL-SAFE

When this DTC, or other DTCs relating to ETCS (Electronic Throttle Control System) malfunctions, are set, the ECM enters fail-safe mode. During fail-safe mode, the ECM cuts the current to the throttle actuator off, and the throttle valve is returned to a 6° throttle angle by the return spring. The ECM then adjusts the engine output by controlling the fuel injection (intermittent fuel-cut) and ignition timing, in accordance with the accelerator pedal opening angle, to allow the vehicle to continue at a minimal speed. If the accelerator pedal is depressed firmly and gently, the vehicle can be driven slowly.

Fail-safe mode continues until a pass condition is detected, and the ignition switch is then turned to OFF.

WIRING DIAGRAM

Refer to DTC P2102 (see page ES-266).

INSPECTION PROCEDURE

HINT:
Read freeze frame data using the intelligent tester. Freeze frame data records the engine condition when malfunctions are detected. When troubleshooting, freeze frame data can help determine if the vehicle was moving or stationary, if the engine was warmed up or not, if the air-fuel ratio was lean or rich, and other data from the time the malfunction occurred.

ES

1	CHECK ANY OTHER DTCS OUTPUT (IN ADDITION TO DTC P2119)

(a) Connect the intelligent tester to the DLC3.
(b) Turn the ignition switch ON.
(c) Turn the tester ON.
(d) Select the following menu items: DIAGNOSIS / ENHANCED OBD II / DTC INFO / CURRENT CODES.
(e) Read DTCs.

Result

Display (DTC Output)	Proceed To
P2119	A
P2119 and other DTCs	B

HINT:
If any DTCs other than P2119 are output, troubleshoot those DTCs first.

B → GO TO DTC CHART

A

2	CHECK WHETHER DTC OUTPUT RECURS (DTC P2119)

(a) Connect the intelligent tester to the DLC3.
(b) Turn the ignition switch ON.
(c) Turn the tester ON.
(d) Clear DTCs (see page ES-35).
(e) Allow the engine to idle for 15 seconds.
CAUTION:
Exercise extreme care and take precautions in steps (f) and (g) below. Failure to do so may result in the vehicle unexpectedly rolling away.
(f) Securely apply the parking brake and move the gear selector lever to the D position.
(g) While depressing the brake pedal securely, fully depress the accelerator pedal for 5 seconds.
(h) On the tester, select the following menu items: DIAGNOSIS / ENHANCED OBD II / DTC INFO / CURRENT CODES.

(i) Read DTCs.
HINT:
The output voltage of the throttle position sensor can be checked during step (g) using the intelligent tester. Variations in the output voltage indicate that the throttle actuator is in operation. To check the output voltage using the intelligent tester, select the following menu items: DIAGNOSIS / ENHANCED OBD II / DATA LIST / ETCS / THROTTLE POS #1.
OK:
No DTC output.

NG → **REPLACE THROTTLE BODY ASSEMBLY**

ES

OK

CHECK FOR INTERMITTENT PROBLEMS

DTC	P2120	Throttle / Pedal Position Sensor / Switch "D" Circuit
DTC	P2122	Throttle / Pedal Position Sensor / Switch "D" Circuit Low Input
DTC	P2123	Throttle / Pedal Position Sensor / Switch "D" Circuit High Input
DTC	P2125	Throttle / Pedal Position Sensor / Switch "E" Circuit
DTC	P2127	Throttle / Pedal Position Sensor / Switch "E" Circuit Low Input
DTC	P2128	Throttle / Pedal Position Sensor / Switch "E" Circuit High Input
DTC	P2138	Throttle / Pedal Position Sensor / Switch "D" / "E" Voltage Correlation

HINT:
These DTCs relate to the Accelerator Pedal Position (APP) sensor.

DESCRIPTION

HINT:
This ETCS (Electronic Throttle Control System) does not use a throttle cable.
The APP sensor is mounted on the accelerator pedal bracket and has 2 sensor circuits: VPA (main) and VPA2 (sub). This sensor is a non-contact type It uses Hall-effect elements in order to yield accurate signals even in extreme driving conditions, such as at high speeds as well as very low speeds. The voltage, which is applied to terminals VPA and VPA2 of the ECM, varies between 0 V and 5 V in proportion to the operating angle of the accelerator pedal (throttle valve). A signal from VPA indicates the actual accelerator pedal opening angle (throttle valve opening angle) and is used for engine control. A signal from VPA2 conveys the status of the VPA circuit and is used to check the APP sensor itself.
The ECM monitors the actual accelerator pedal opening angle (throttle valve opening angle) through the signals from VPA and VPA2, and controls the throttle actuator according to these signals.

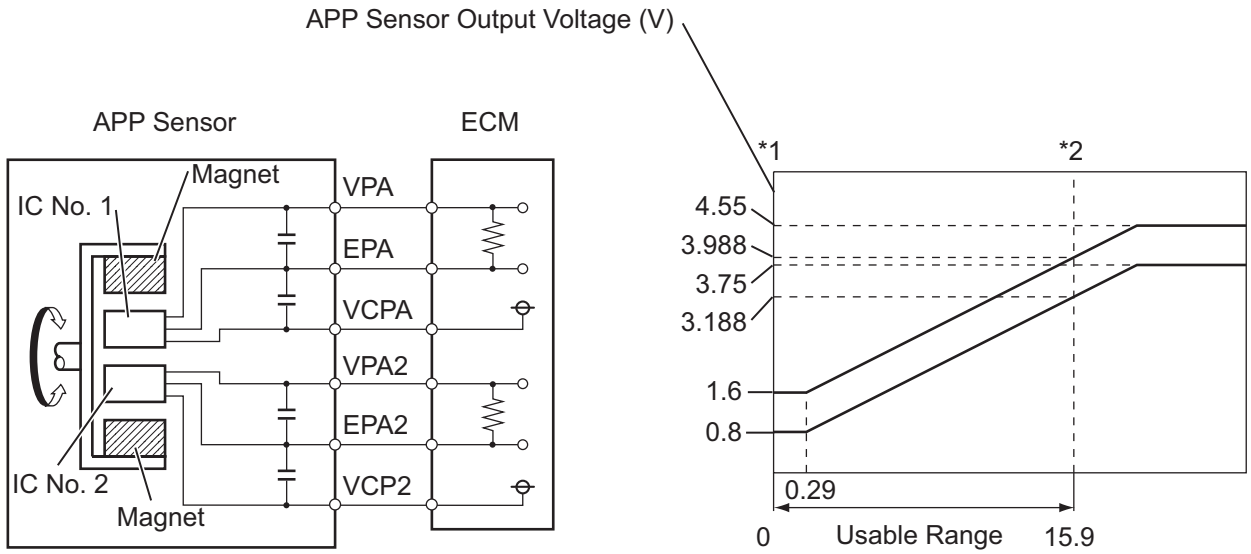

Y

A112620E03

DTC No.	DTC Detection Conditions	Trouble Areas
P2120	VPA fluctuates rapidly beyond upper and lower malfunction thresholds for 0.5 seconds or more (1 trip detection logic)	• APP sensor • ECM
P2122	VPA 0.4 V or less for 0.5 seconds or more when accelerator pedal fully released (1 trip detection logic)	• APP sensor • Open in VCP1 circuit • Open or ground short in VPA circuit • ECM
P2123	VPA 4.8 V or more for 2.0 seconds or more (1 trip detection logic)	• APP sensor • Open in EPA circuit • ECM
P2125	VPA2 fluctuates rapidly beyond upper and lower malfunction thresholds for 0.5 seconds or more (1 trip detection logic)	• APP sensor • ECM
P2127	VPA2 1.2 V or less for 0.5 seconds or more when accelerator pedal fully released (1 trip detection logic)	• APP sensor • Open in VCP2 circuit • Open or ground short in VPA2 circuit • ECM
P2128	Conditions (a) and (b) continue for 2.0 seconds or more (1 trip detection logic): (a) VPA2 4.8 V or more (b) VPA between 0.4 V and 3.45 V	• APP sensor • Open in EPA2 circuit • ECM
P2138	Condition (a) or (b) continues for 2.0 seconds or more (1 trip detection logic): (a) Difference between VPA and VPA2 0.02 V or less (b) VPA 0.4 V or less and VPA2 1.2 V or less	• Short between VPA and VPA2 circuits • APP sensor • ECM

HINT:
When any of these DTCs are set, check the APP sensor voltage by selecting the following menu items on the intelligent tester: DIAGNOSIS / ENHANCED OBD II / DATA LIST / PRIMARY / ACCEL POS #1 and ACCEL POS #2.

Trouble Areas	ACCEL POS #1 When AP Released	ACCEL POS #2 When AP Released	ACCEL POS #1 When AP Depressed	ACCEL POS #2 When AP Depressed
VCP circuit open	0 to 0.2 V	0 to 0.2 V	0 to 0.2 V	0 to 0.2 V
Open or ground short in VPA circuit	0 to 0.2 V	1.2 to 2.0 V	0 to 0.2 V	3.4 to 5.0 V
Open or ground short in VPA2 circuit	0.5 to 1.1 V	0 to 0.2 V	2.6 to 4.5 V	0 to 0.2 V
EPA circuit open	4.5 to 5.0 V	4.5 to 5.0 V	4.5 to 5.0 V	4.5 to 5.0 V
Normal condition	0.5 to 1.1 V	1.2 to 2.0 V	2.6 to 4.5 V	3.4 to 5.0 V

HINT:
- Accelerator pedal positions are expressed as voltages.
- AP denotes for Accelerator Pedal.

ES

MONITOR DESCRIPTION

When either output voltage of VPA or VPA2 deviates from the standard range, or the difference between the output voltages of the 2 sensor circuits is less than the threshold, the ECM determines that there is a malfunction in the APP sensor. The ECM then illuminates the MIL and sets a DTC.
Example:
When the output voltage of VPA drops below 0.4 V for more than 0.5 seconds when the accelerator pedal is fully depressed, DTC P2122 is set.
If the malfunction is not repaired successfully, a DTC is set 2 seconds after the engine is next started.

MONITOR STRATEGY

Related DTCs	P2120: APP sensor 1 range check (fluctuating) P2122: APP sensor 1 range check (low voltage) P2123: APP sensor 1 range check (high voltage) P2125: APP sensor 2 range check (fluctuating) P2127: APP sensor 2 range check (low voltage) P2128: APP sensor 2 range check (high voltage) P2138: APP sensor range check (correlation)
Required Sensors/Components (Main)	APP sensor
Required Sensors/Components (Related)	-
Frequency of Operation	Continuous
Duration	0.5 seconds: P2120, P2122, P2125 and P2127 2.0 seconds: P2123, P2128 and P2138
MIL Operation	Immediate
Sequence of Operation	None

TYPICAL ENABLING CONDITIONS

Monitor runs whenever following DTCs not present	None
Either of following conditions 1 or 2 met:	-
1. Ignition switch	ON
2. Throttle actuator power	ON

TYPICAL MALFUNCTION THRESHOLDS

P2120:

Either of following conditions 1 or 2 met:	-
1. VPA voltage when VPA2 voltage 0.04 V or more	0.4 V or less
2. VPA voltage	4.8 V or more

P2122:

VPA voltage when VPA2 voltage 0.04 V or more	0.4 V or less

P2123:

VPA voltage	4.8 V or more

P2125:

Either of following conditions 1 or 2 met:	-
1. VPA2 voltage when VPA voltage 0.04 V or more	1.2 V or less
2. VPA2 voltage when VPA 0.4 to 3.45 V	4.8 V or more

P2127:

VPA2 voltage when VPA voltage 0.04 V or more	1.2 V or less

P2128:

VPA2 voltage when VPA 0.4 to 3.45 V	4.8 V or more

P2138:

Either of following conditions A or B met:	-
Condition A	-
Difference between VPA and VPA 2 voltages	0.02 V or less
Condition B	-
VPA voltage	0.4 V or less
VPA2 voltage	1.2 V or less

COMPONENT OPERATING RANGE

VPA voltage	0.5 V to 4.5 V
VPA2 voltage	1.2 V to 5.0 V
Difference between VPA and VPA2 voltages	More than 0.02 V

FAIL-SAFE

When any of DTCs P2120, P2121, P2122, P2123, P2125, P2127, P2128 and P2138 are set, the ECM enters fail-safe mode. If either of the 2 sensor circuit malfunctions, the ECM uses the remaining circuit to calculate the accelerator pedal position to allow the vehicle to continue driving. If both of the circuits malfunction, the ECM regards the accelerator pedal as being released. As a result, the throttle valve is closed and the engine idles.
Fail-safe mode continues until a pass condition is detected, and the ignition switch is turned OFF.

WIRING DIAGRAM

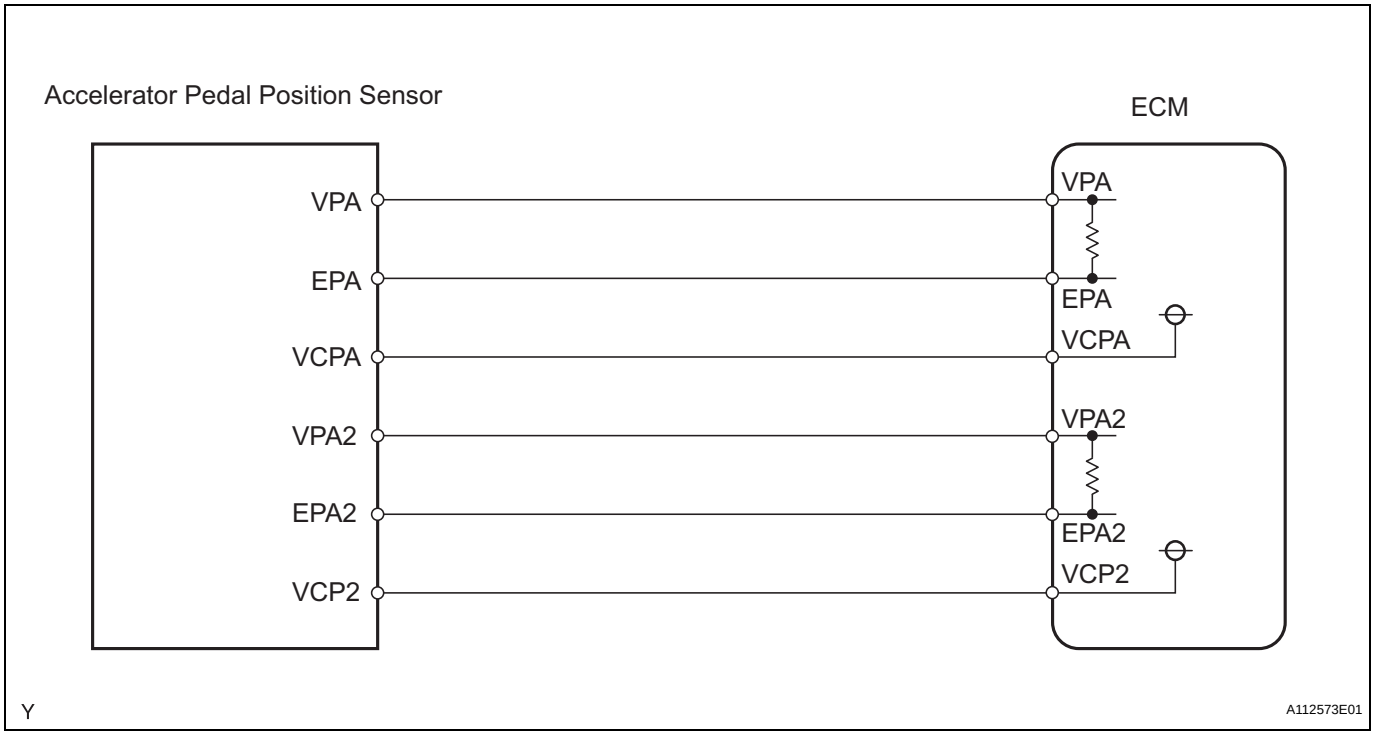

INSPECTION PROCEDURE

HINT:

Read freeze frame data using the intelligent tester. Freeze frame data records the engine condition when malfunctions are detected. When troubleshooting, freeze frame data can help determine if the vehicle was moving or stationary, if the engine was warmed up or not, if the air-fuel ratio was lean or rich, and other data from the time the malfunction occurred.

1	READ VALUE USING INTELLIGENT TESTER (ACCEL POS #1 AND ACCEL POS #2)

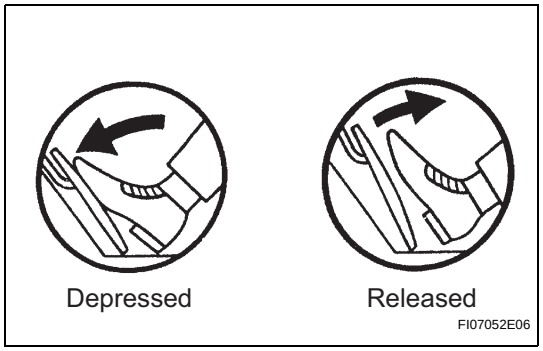

(a) Connect the intelligent tester to the DLC3.
(b) Turn the ignition switch ON and turn the tester ON.
(c) Select the following menu items: DIAGNOSIS / ENHANCED OBD II / DATA LIST / ETCS / ACCEL POS #1 and ACCEL POS #2.
(d) Read the value displayed on the tester.

Standard voltage

Accelerator Pedal Operations	ACCEL POS #1	ACCEL POS #2
Released → Depressed → Released	0.5 to 4.5 V	1.2 to 5.0 V
	Difference between ACCEL POS #1 and ACCEL POS #2 is greater than 0.02 V	Difference between ACCEL POS #1 and ACCEL POS #2 is greater than 0.02 V

OK → **Go to step 5**

NG

2	CHECK HARNESS AND CONNECTOR (ACCELERATOR PEDAL POSITION SENSOR - ECM)

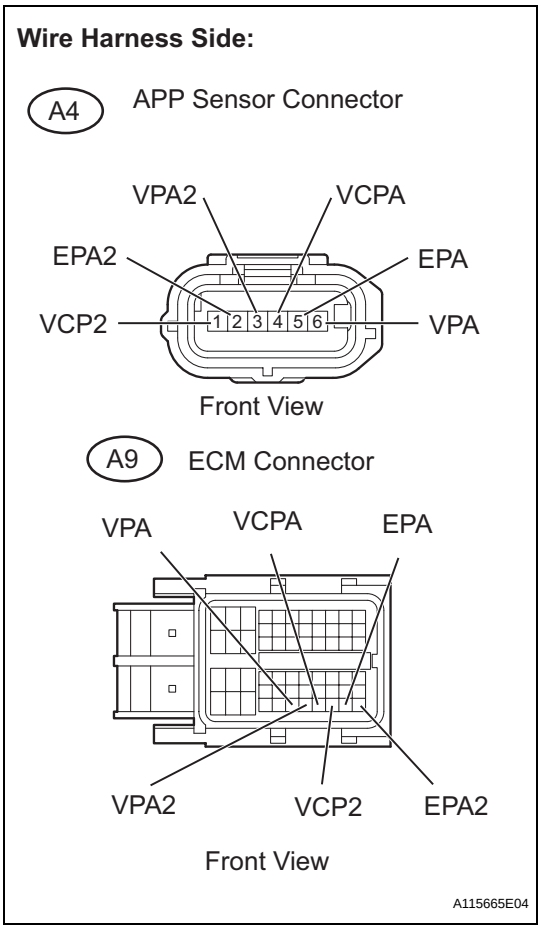

(a) Disconnect the A4 Accelerator Pedal Position (APP) sensor connector.
(b) Disconnect the A9 ECM connector.
(c) Measure the resistance.

Standard resistance (Check for open)

Tester Connections	Specified Conditions
A4-6 (VPA) - A9-55 (VPA)	Below 1 Ω
A4-5 (EPA) - A9-59 (EPA)	Below 1 Ω
A4-4 (VCPA) - A9-57 (VCPA)	Below 1 Ω
A4-3 (VPA2) - A9-56 (VPA2)	Below 1 Ω
A4-2 (EPA2) - A9-60 (EPA2)	Below 1 Ω
A4-1 (VCP2) - A9-58 (VCP2)	Below 1 Ω

Standard resistance (Check for short)

Tester Connections	Specified Conditions
A4-6 (VPA) or A9-55 (VPA) - body ground	10 kΩ or higher
A4-5 (EPA) or A9-59 (EPA) - body ground	10 kΩ or higher
A4-4 (VCPA) or A9-57 (VCPA) - body ground	10 kΩ or higher
A4-3 (VPA2) or A9-56 (VPA2) - body ground	10 kΩ or higher
A4-2 (EPA2) or A9-60 (EPA2) - body ground	10 kΩ or higher
A4-1 (VCP2) or A9-58 (VCP2) - body ground	10 kΩ or higher

(d) Reconnect the APP sensor connector.
(e) Reconnect the ECM connector.

NG → **REPAIR OR REPLACE HARNESS OR CONNECTOR**

OK

3	CHECK ECM (VCPA AND VCP2 VOLTAGE)

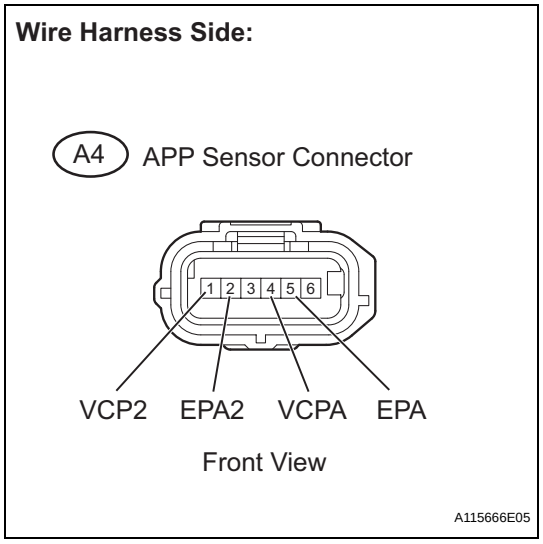

(a) Disconnect the A4 APP sensor connector.
(b) Turn the ignition switch ON.
(c) Measure the voltage between the terminals of the A4 APP sensor connector.

Standard voltage

Tester Connections	Specified Conditions
A4-4 (VCPA) - A4-5 (EPA)	4.5 to 5.5 V
A4-1 (VCP2) - A4-2 (EPA2)	4.5 to 5.5 V

(d) Reconnect the APP sensor connector.

NG → REPLACE ECM

OK

4	REPLACE ACCELERATOR PEDAL ASSEMBLY

NEXT

5	CHECK WHETHER DTC OUTPUT RECURS (ACCELERATOR PEDAL POSITION SENSOR DTCS)

(a) Connect the intelligent tester to the DLC3.
(b) Turn the ignition switch ON and turn the tester ON.
(c) Clear DTCs (see page ES-35).
(d) Start the engine.
(e) Allow the engine to idle for 15 seconds.
(f) Select the following menu items: DIAGNOSIS / ENHANCED OBD II / DTC INFO / CURRENT CODES.
(g) Read DTCs.

Result

Display (DTC Output)	Proceed To
P2120, P2122, P2123, P2125, P2127, P2128, and/or P2138	A
No output	B

B → SYSTEM OK

A

REPLACE ECM

DTC	P2121	Throttle / Pedal Position Sensor / Switch "D" Circuit Range / Performance

DESCRIPTION

HINT:

Refer to DTC P2120 (see page ES-282).

DTC No.	DTC Detection Conditions	Trouble Areas
P2121	Difference between VPA and VPA2 less than 0.4 V, or more than 1.2 V for 0.5 seconds (1 trip detection logic)	• Accelerator Pedal Position (APP) sensor • ECM

ES

MONITOR DESCRIPTION

When the difference between the output voltages of VPA and VPA2 deviates from the standard, the ECM determines that the Accelerator Pedal Position (APP) sensor is malfunctioning. The ECM turns on the MIL and the DTC is set.

MONITOR STRATEGY

Related DTCs	P2121: APP sensor rationality
Required Sensors/Components (Main)	APP sensor
Required Sensors/Components (Related)	-
Frequency of Operation	Continuous
Duration	0.5 seconds
MIL Operation	Immediate
Sequence of Operation	None

TYPICAL ENABLING CONDITIONS

Monitor runs whenever following DTCs not present	None
Either of following conditions 1 or 2 met:	-
1. Ignition switch	ON
2. Throttle actuator power	ON

TYPICAL MALFUNCTION THRESHOLDS

Difference between VPA voltage (learned value) and VPA2 voltage (learned value)	Less than 0.4 V, or more than 1.2 V

FAIL-SAFE

The APP sensor has two (main and sub) sensor circuits. If a malfunction occurs in either of the sensor circuits, the ECM detects the abnormal signal voltage difference between the two sensor circuits and switches to limp mode. In limp mode, the functioning circuit is used to calculate the accelerator pedal opening angle to allow the vehicle to continue driving. If both circuits malfunction, the ECM regards the opening angle of the accelerator pedal as being fully closed. In this case, the throttle valve remains closed as if the engine is idling.

If a pass condition is detected and then the ignition switch is turned OFF, the fail-safe operation stops and the system returns to a normal condition.

WIRING DIAGRAM

Refer to DTC P2120 (see page ES-286).

INSPECTION PROCEDURE

HINT:
Read freeze frame data using the intelligent tester. Freeze frame data records the engine condition when malfunctions are detected. When troubleshooting, freeze frame data can help determine if the vehicle was moving or stationary, if the engine was warmed up or not, if the air-fuel ratio was lean or rich, and other data from the time the malfunction occurred.

1 CHECK ANY OTHER DTCS OUTPUT (IN ADDITION TO DTC P2121)

(a) Connect the intelligent tester to the DLC3.
(b) Turn the ignition switch ON.
(c) Turn the tester ON.
(d) Select the following menu items: DIAGNOSIS / ENHANCED OBD II / DTC INFO / CURRENT CODES.
(e) Read DTCs.

Result

Display (DTC Output)	Proceed To
P2121	A
P2121 and other DTCs	B

HINT:
If any DTCs other than P2121 are output, troubleshoot those DTCs first.

B → **GO TO DTC CHART**

A

2 READ VALUE USING INTELLIGENT TESTER (ACCEL POS #1 AND ACCEL POS #2)

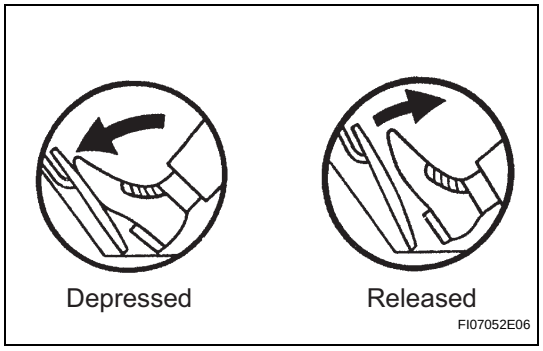

(a) Connect the intelligent tester to the DLC3.
(b) Turn the ignition switch ON and turn the tester ON.
(c) Select the following menu items: DIAGNOSIS / ENHANCED OBD II / DATA LIST / PRIMARY / ACCEL POS #1 and ACCEL POS #2.
(d) Read the values displayed on the tester.

Standard voltage

Accelerator Pedal Operations	ACCEL POS #1	ACCEL POS #2
Released	0.5 to 1.1 V	1.2 to 2.0 V
Depressed	2.6 to 4.5 V	3.4 to 5.0 V

OK → **CHECK FOR INTERMITTENT PROBLEMS**

NG

3 REPLACE ACCELERATOR PEDAL ASSEMBLY

NEXT

4	CHECK WHETHER DTC OUTPUT RECURS (DTC P2121)

(a) Connect the intelligent tester to the DLC3.
(b) Turn the ignition switch o ON and turn the tester ON.
(c) Clear DTCs (see page ES-35).
(d) Start the engine.
(e) Allow the engine to idle for 15 seconds.
(f) Select the following menu items: DIAGNOSIS / ENHANCED OBD II / DTC INFO / CURRENT CODES.
(g) Read DTCs.

Result

ES

Display (DTC Output)	Proceed To
P2121	A
No output	B

B → SYSTEM OK

A → REPLACE ECM

DTC	P2195	Oxygen (A/F) Sensor Signal Stuck Lean (Bank 1 Sensor 1)

DTC	P2196	Oxygen (A/F) Sensor Signal Stuck Rich (Bank 1 Sensor 1)

HINT:
- Although the DTC titles say oxygen sensor, these DTCs relate to the Air-Fuel Ratio (A/F) sensor.
- Sensor 1 refers to the sensor mounted in front of the Three-Way Catalytic Converter (TWC) and located near the engine assembly.

ES

DESCRIPTION

The A/F sensor generates a voltage* that corresponds to the actual air-fuel ratio. This sensor voltage is used to provide the ECM with feedback so that it can control the air-fuel ratio. The ECM determines the deviation from the stoichiometric air-fuel ratio level, and regulates the fuel injection time. If the A/F sensor malfunctions, the ECM is unable to control the air-fuel ratio accurately.

The A/F sensor is of the planar type and is integrated with the heater, which heats the solid electrolyte (zirconia element). This heater is controlled by the ECM. When the intake air volume is low (the exhaust gas temperature is low), a current flows into the heater to heat the sensor, in order to facilitate accurate air-fuel ratio detection. In addition, the sensor and heater portions are narrower than the conventional type. The heat generated by the heater is conducted to the solid electrolyte through the alumina, therefore the sensor activation is accelerated.

In order to obtain a high purification rate of the carbon monoxide (CO), hydrocarbon (HC) and nitrogen oxide (NOx) components in the exhaust gas, a TWC is used. For the most efficient use of the TWC, the air-fuel ratio must be precisely controlled so that it is always close to the stoichiometric level.

*: Value changes inside the ECM. Since the A/F sensor is the current output element, a current is converted into a voltage inside the ECM. Any measurements taken at the A/F sensor or ECM connectors will show a constant voltage.

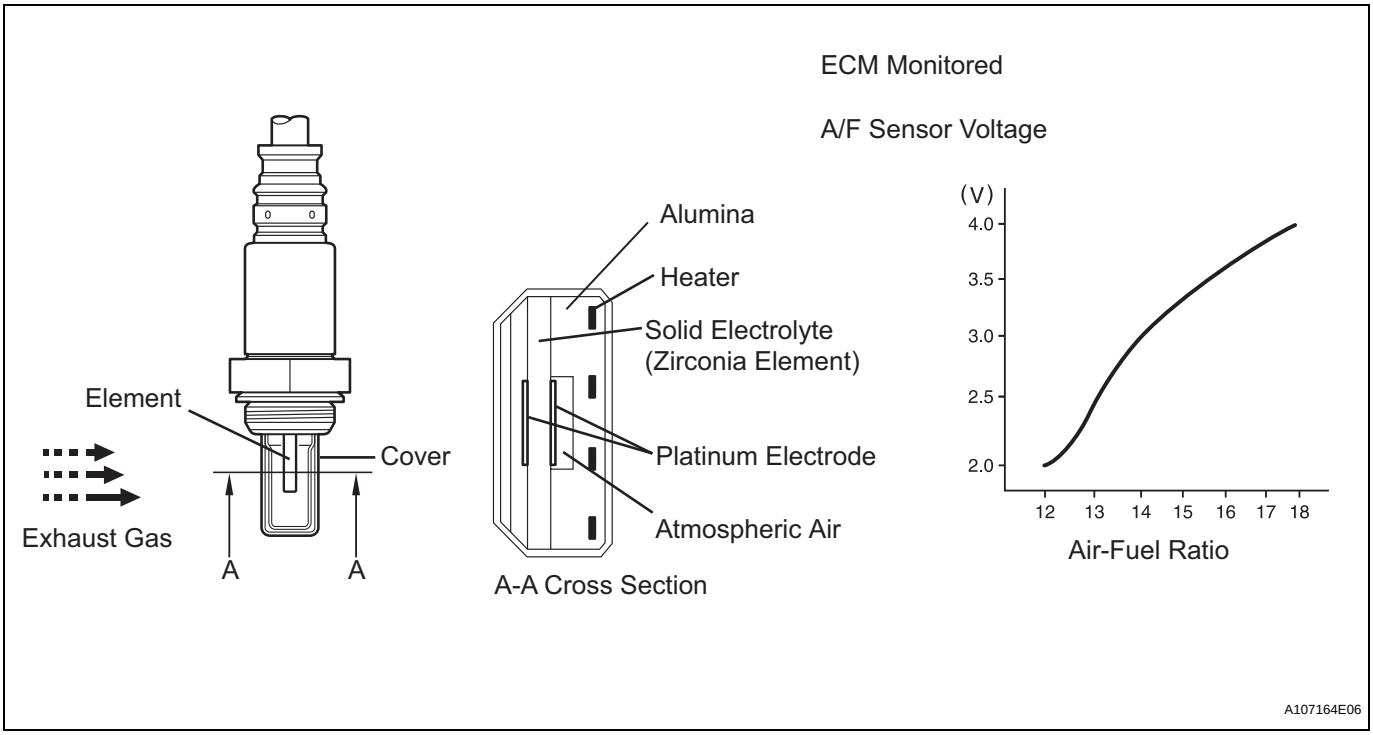

DTC No.	DTC Detection Conditions	Trouble Areas
P2195	Conditions (a) and (b) continue for 10 seconds or more (2 trip detection logic): (a) A/F sensor voltage more than 3.8 V (b) Heated Oxygen (HO2) sensor voltage 0.15 V or more	• Open or short in A/F sensor (sensor 1) circuit • A/F sensor (sensor 1) • A/F sensor heater (sensor 1) • Integration relay (EFI MAIN relay) • A/F sensor heater and EFI MAIN relay circuits • ECM
	While fuel-cut operation performed (during vehicle deceleration), A/F sensor current 3.6 mA or more for 3 seconds (2 trip detection logic)	• A/F sensor • ECM
P2196	Conditions (a) and (b) continue for 10 seconds or more (2 trip detection logic): (a) A/F sensor voltage less than 2.8 V for 10 seconds (b) HO2 sensor voltage less than 0.6 V	• Open or short in A/F sensor (sensor 1) circuit • A/F sensor (sensor 1) • A/F sensor heater (sensor 1) • Integration relay (EFI MAIN relay) • A/F sensor heater and EFI MAIN relay circuits • ECM
	While fuel-cut operation performed (during vehicle deceleration), A/F sensor current less than 1.0 mA for 3 seconds (2 trip detection logic)	• A/F sensor • ECM

ES

HINT:

- When either of these DTCs is set, check the A/F sensor output voltage by selecting the following menu items on the intelligent tester: DIAGNOSIS / ENHANCED OBD II / DATA LIST / PRIMARY / AFS B1 S1.
- Short-term fuel trim values can also be read using the intelligent tester.
- The ECM regulates the voltages at the A1A+ and A1A- terminals of the ECM to a constant level. Therefore, the A/F sensor output voltage cannot be confirmed without using the intelligent tester.
- If the A/F sensor is malfunctioning, the ECM sets the DTC P2195 or P2196.

MONITOR DESCRIPTION

Sensor voltage detection monitor

Under the air-fuel ratio feedback control, if the A/F sensor output voltage indicates rich or lean for a certain period of time, the ECM determines that there is a malfunction in the A/F sensor. The ECM illuminates the MIL and sets a DTC.

Example:

If the A/F sensor output voltage is less than 2.8 V (very rich condition) for 10 seconds, despite the rear HO2 sensor output voltage being less than 0.6 V, the ECM sets DTC P2196. Alternatively, if the A/F sensor output voltage is more than 3.8 V (very lean condition) for 10 seconds, despite the rear HO2 sensor output voltage being 0.15 V or more, DTC P2195 is set.

Sensor current detection monitor

A rich air-fuel mixture causes a low A/F sensor current, and a lean air-fuel mixture causes a high A/F sensor current. Therefore, the sensor output becomes low during acceleration, and it becomes high during deceleration with the throttle valve fully closed. The ECM monitors the A/F sensor current during fuel-cut and detects any abnormal current values.

If the A/F sensor output is 3.6 mA or more for more than 3 seconds of cumulative time, the ECM interprets this as a malfunction in the A/F sensor and sets DTC P2195 (high-side stuck). If the A/F sensor output is less than 1.0 mA for more than 3 seconds of cumulative time, the ECM sets DTC P2196 (low-side stuck).

A/F Sensor Current Monitor:

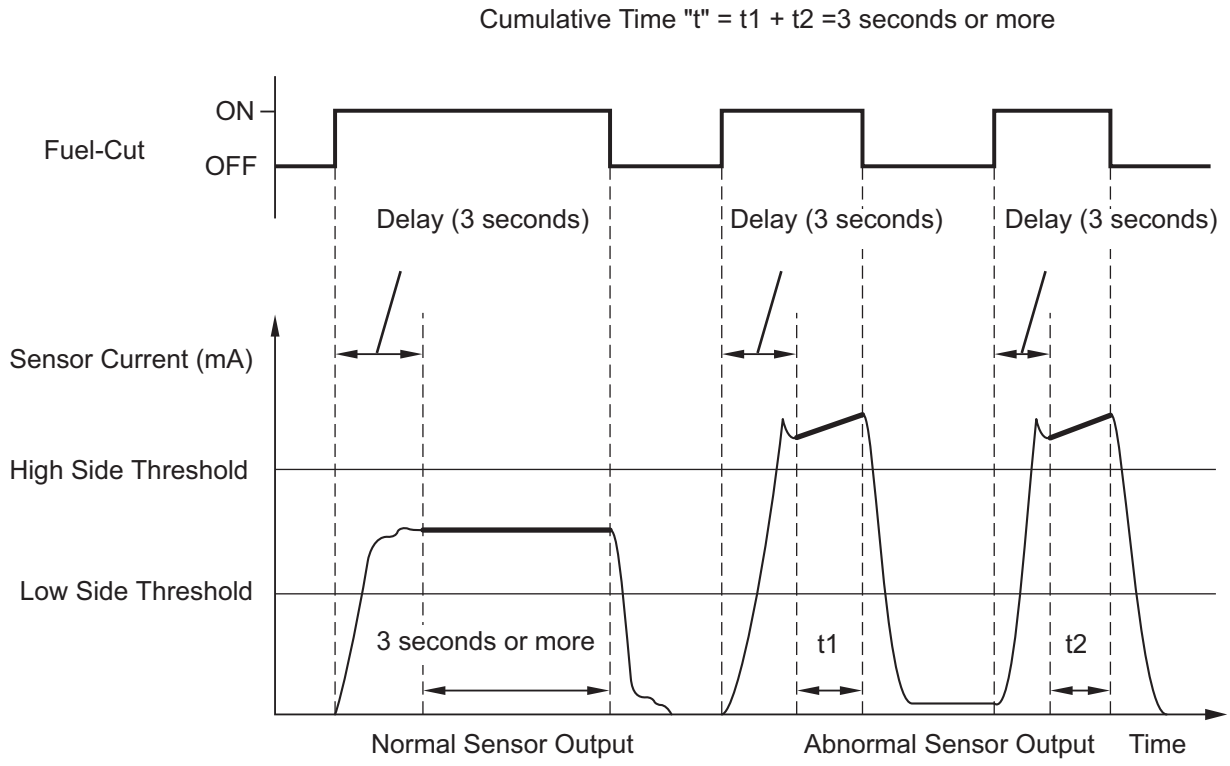

MONITOR STRATEGY

Related DTCs	P2195: A/F sensor signal stuck lean P2196: A/F sensor signal stuck rich
Required Sensors/Components (Main)	A/F sensor
Required Sensors/Components (Related)	HO2 sensor
Frequency of Operation	Continuous
Duration	10 seconds: Sensor voltage detection monitor 3 seconds: Sensor current detection monitor
MIL Operation	2 driving cycles
Sequence of Operation	None

TYPICAL ENABLING CONDITIONS

All

Monitor runs whenever following DTCs not present	P0031, P0032 (A/F sensor heater - Sensor 1) P0037, P0038 (O2 sensor heater - Sensor 2) P0100 - P0103 (MAF meter) P0110 - P0113 (IAT sensor) P0115 - P0118 (ECT sensor) P0120 - P0223, P2135 (TP sensor) P0125 (Insufficient ECT for Closed Loop) P0136 (O2 Sensor - Sensor 2) P0171, P0172 (Fuel system) P0300 - P0304 (Misfire) P0335 (CKP sensor) P0340 (CMP sensor) P0455, P0456 (EVAP system) P0500 (VSS)

Sensor voltage detection monitor (Lean side malfunction P2195):

Duration while all of following conditions met	2 seconds or more
Rear HO2 sensor voltage	0.15 V or more
Time after engine start	30 seconds or more
A/F sensor status	Activated
Fuel system status	Closed-loop
Engine	Running

Sensor voltage detection monitor (Rich side malfunction P2196):

Duration while all of following conditions met	2 seconds or more
Rear HO2 sensor voltage	Below 0.6 V
Time after engine start	30 seconds or more
A/F sensor status	Activated
Fuel system status	Closed-loop
Engine	Running

Sensor current detection monitor P2195 and P2196

Battery voltage	11 V or more
Atmospheric pressure	76 kPa (570 mmHg) or more
A/F sensor status	Activated
Continuous time of fuel cut	3 to 10 seconds
ECT	75°C (167°F) or more

TYPICAL MALFUNCTION THRESHOLDS

Sensor voltage detection monitor (Lean side malfunction P2195):

A/F sensor voltage	More than 3.8 V for 10 seconds

Sensor voltage detection monitor (Rich side malfunction P2196):

A/F sensor voltage	Less than 2.8 V for 10 seconds

Sensor current detection monitor (High side malfunction P2195):

A/F sensor current during fuel cut	3.6 mA or more

Sensor current detection monitor (Rich side malfunction P2196):

A/F sensor current during fuel cut	Less than 1 mA

MONITOR RESULT

Refer to CHECKING MONITOR STATUS (see page ES-17).

WIRING DIAGRAM

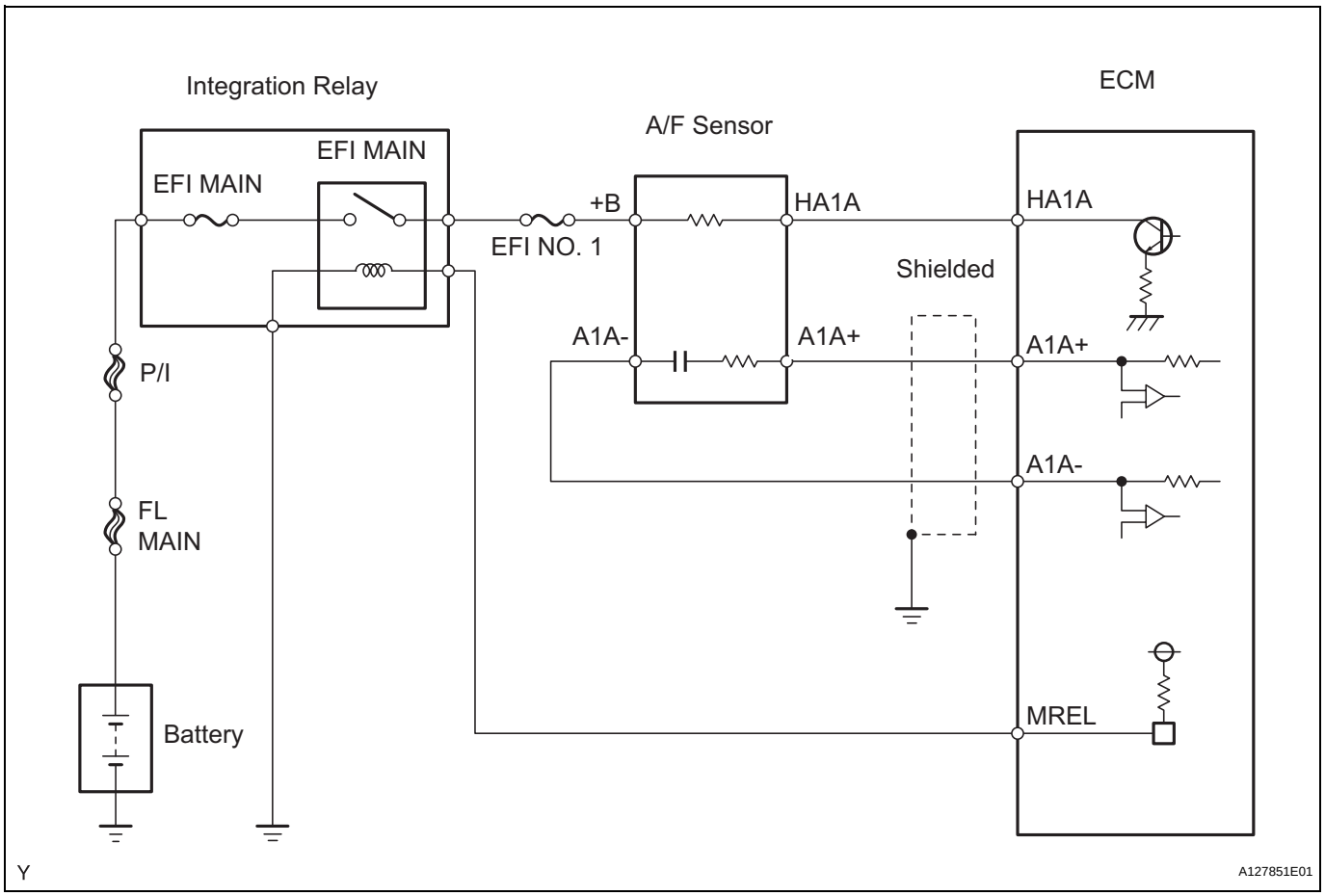

CONFIRMATION DRIVING PATTERN

This confirmation driving pattern is used in the "PERFORM CONFIRMATION DRIVING PATTERN" procedure of the following diagnostic troubleshooting procedure.

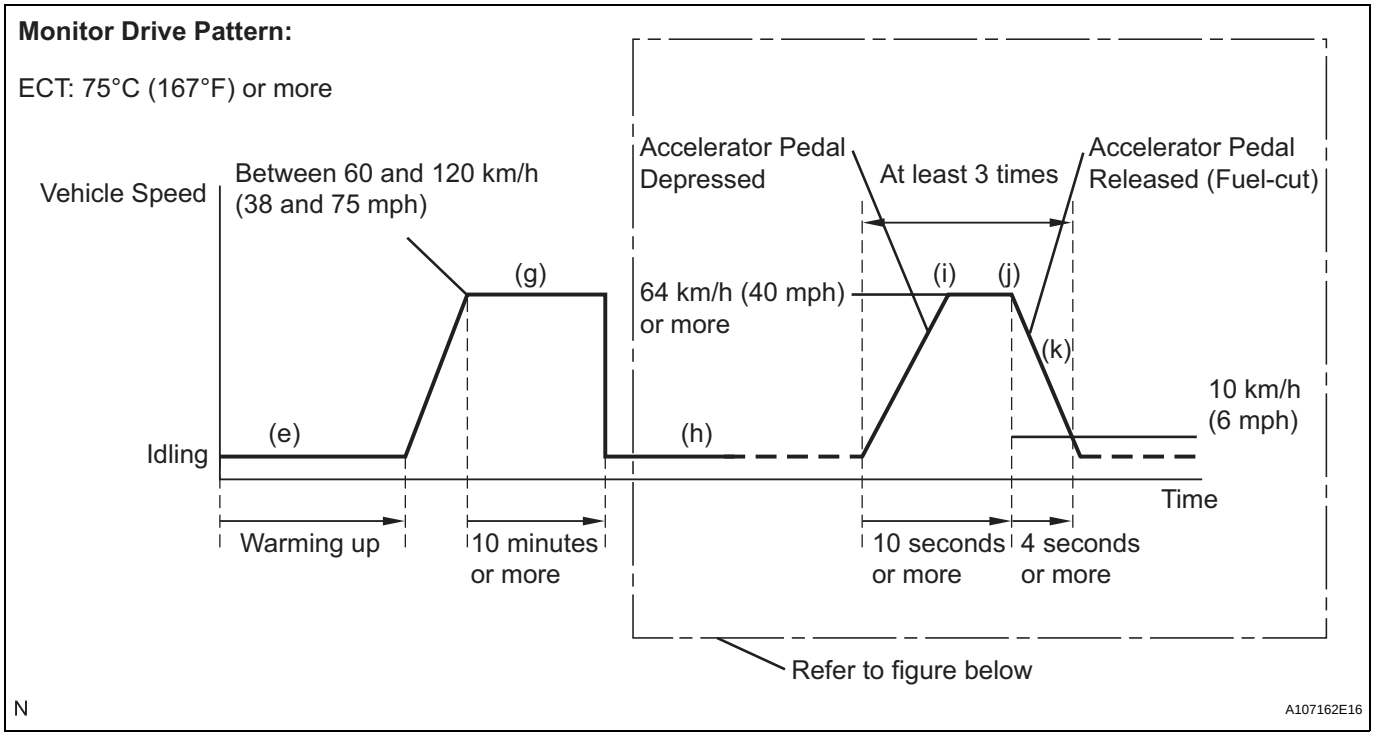

Driving Pattern Detail for (h) through (k):

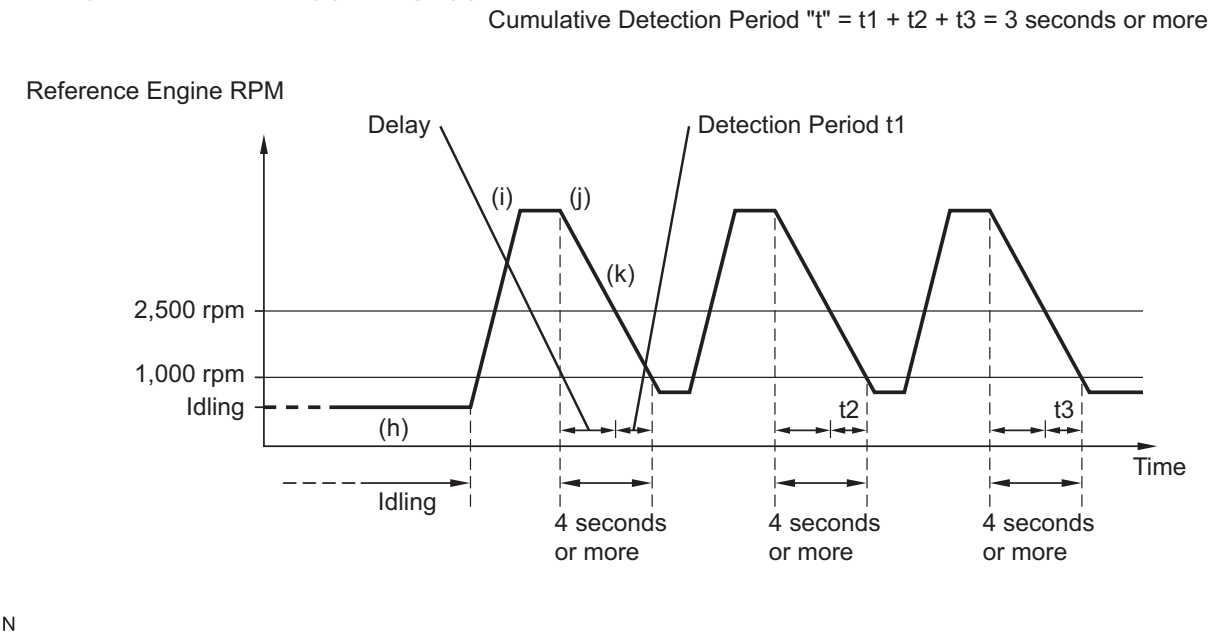

(a) Connect the intelligent tester to the DLC3.
(b) Turn the ignition switch ON.
(c) Turn the tester ON.
(d) Clear DTCs (see page ES-35).
(e) Start the engine, and warm it up until the ECT reaches 75°C (167°F) or higher.
(f) On the intelligent tester, select the following menu items to check the fuel-cut status: DIAGNOSIS / ENHANCED OBD II / DATA LIST / USER DATA / FC IDL.
(g) Drive the vehicle at between 60 km/h (38 mph) and 120 km/h (75 mph) for at least 10 minutes.
(h) Change the transmission to 2nd gear.
(i) Drive the vehicle at proper vehicle speed to perform fuel-cut operation.
HINT:
Fuel-cut is performed when the following conditions are met:
- Accelerator pedal fully released.
- Engine speed is 2,500 rpm or more (fuel injection returns at 1,000 rpm).

(j) Accelerate the vehicle to 64 km/h (40 mph) or more by depressing the accelerator pedal for at least 10 seconds.
(k) Soon after performing step (j) above, release the accelerator pedal for at least 4 seconds without depressing the brake pedal, in order to execute fuel-cut control.
(l) Allow the vehicle to decelerate until the vehicle speed declines to less than 10 km/h (6 mph).
(m) Repeat steps from (h) through (k) above at least 3 times in one driving cycle.
HINT:
Completion of all A/F sensor monitors is required to change the value in TEST RESULT.
CAUTION:
Strictly observe posted speed limits, traffic laws, and road conditions when performing these drive patterns.

INSPECTION PROCEDURE

HINT:
Intelligent tester only:
Malfunctioning areas can be identified by performing the A/F CONTROL function provided in the ACTIVE TEST. The A/F CONTROL function can help to determine whether the Air-fuel Ratio (A/F) sensor, Heated Oxygen (HO2) sensor and other potential trouble areas are malfunctioning.

The following instructions describe how to conduct the A/F CONTROL operation using the intelligent tester.
(a) Connect the intelligent tester to the DLC3.
(b) Start the engine and turn the tester ON.
(c) Warm up the engine at an engine speed of 2,500 rpm for approximately 90 seconds.
(d) On the tester, select the following menu items: DIAGNOSIS / ENHANCED OBD II / ACTIVE TEST / A/F CONTROL.
(e) Perform the A/F CONTROL operation with the engine idling (press the RIGHT or LEFT button to change the fuel injection volume).
(f) Monitor the output voltages of the A/F and HO2 sensors (AFS B1 S1 and O2S B1 S2) displayed on the tester.
HINT:

- The A/F CONTROL operation lowers the fuel injection volume by 12.5 % or increases the injection volume by 25 %.
- The sensors react in accordance with increases and decreases in the fuel injection volume.

Standard

Tester Display (Sensor)	Injection Volume	Status	Voltages
AFS B1 S1 (A/F)	+25 %	Rich	Less than 3.0
	-12.5 %	Lean	More than 3.35
O2S B1 S2 (HO2)	+25 %	Rich	More than 0.5
	-12.5 %	Lean	Less than 0.4

NOTICE:
The A/F sensor has an output delay of a few seconds and the HO2 sensor (sensor 2) output has a maximum output delay of approximately of 20 seconds.

Case	A/F Sensor (Sensor 1) Output Voltage		HO2 Sensor (Sensor 2) Output Voltage		Main Suspected Trouble Areas
1	Injection Volume +25 % -12.5 %		Injection Volume +25 % -12.5 %		-
	Output Voltage More than 3.35 V Less than 3.0 V		Output Voltage More than 0.5 V Less than 0.4 V		
2	Injection Volume +25 % -12.5 %		Injection Volume +25 % -12.5 %		• A/F sensor • A/F sensor heater • A/F sensor circuit
	Output Voltage Almost no reaction		Output Voltage More than 0.5 V Less than 0.4 V		
3	Injection Volume +25 % -12.5 %		Injection Volume +25 % -12.5 %		• HO2 sensor • HO2 sensor heater • HO2 sensor circuit
	Output Voltage More than 3.35 V Less than 3.0 V		Output Voltage Almost no reaction		
4	Injection volume +25 % -12.5 %		Injection Volume +25 % -12.5 %		• Injector • Fuel pressure • Gas leakage from exhaust system (Air-fuel ratio extremely lean or rich)
	Output Voltage Almost no reaction	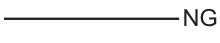	Output Voltage Almost no reaction	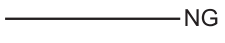	

Following the A/F CONTROL procedure enables technicians to check and graph the voltage outputs of both the A/F and HO2 sensors.
To display the graph, select the following menu items on the tester: DIAGNOSIS / ENHANCED OBD II / ACTIVE TEST / A/F CONTROL / USER DATA / AFS B1 S1 and O2S B1 S2, and press the YES button and then the ENTER button followed by the F4 button.
HINT:

- DTC P2A00 may be set when the air-fuel ratio is stuck rich or lean.
- Read freeze frame data using the intelligent tester. Freeze frame data records the engine condition when malfunctions are detected. When troubleshooting, freeze frame data can help determine if the vehicle was moving or stationary, if the engine was warmed up or not, if the air-fuel ratio was lean or rich, and other data from the time the malfunction occurred.
- A low A/F sensor voltage could be caused by a rich air-fuel mixture. Check for conditions that would cause the engine to run rich.
- A high A/F sensor voltage could be caused by a lean air-fuel mixture. Check for conditions that would cause the engine to run lean.

ES

1	CHECK ANY OTHER DTCS OUTPUT (IN ADDITION TO P2195 OR P2196)

(a) Connect an intelligent tester to the DLC3.
(b) Turn the ignition switch ON.
(c) Turn the tester ON.
(d) Select the following menu items: DIAGNOSIS / ENHANCED OBD II / DTC INFO / CURRENT CODES.
(e) Read DTCs.

Result

Display (DTC Output)	Proceed To
P2195 or P2196	A
P2195 or P2196 and other DTCs	B

HINT:
If any DTCs relating to the A/F sensor (DTCs for the A/F sensor heater or A/F sensor admittance) are output, troubleshoot those DTCs first.

B → GO TO DTC CHART

A

2	READ VALUE USING INTELLIGENT TESTER (TEST VALUE OF A/F SENSOR)

(a) Connect the intelligent tester to the DLC3.
(b) Turn the ignition switch ON and turn the tester ON.
(c) Clear DTCs (see page ES-35).
(d) Drive the vehicle in accordance with the drive pattern described in the CONFIRMATION DRIVING PATTERN.
(e) Select the following menu items: DIAGNOSIS / ENHANCED OBD II / MONITOR INFO / MONITOR STATUS.
(f) Check that the status of O2S MON is COMPL.
If the status is still INCMPL, drive the vehicle according to the driving pattern again.
HINT:
- AVAIL indicates that the component has not been monitored yet.

- COMPL indicates that the component is functioning normally.
- INCMPL indicates that the component is malfunctioning.

(g) Select the following menu items: DIAGNOSIS / ENHANCED OBD II / MONITOR INFO / TEST RESULT / RANGE B1 S1; then press the ENTER button.
(h) Check the test value of the A/F sensor output current during fuel-cut.

Result

Test Value	Proceed To
Within normal range (1.0 mA or more, and less than 3.6 mA)	A
Outside normal range (Less than 1.0 mA, or 3.6 mA or more)	B

ES

B → **Go to step 12**

A

3	READ VALUE USING INTELLIGENT TESTER (OUTPUT VOLTAGE OF A/F SENSOR)

(a) Connect the intelligent tester to the DLC3.
(b) Start the engine.
(c) Turn the tester ON.
(d) Warm up the A/F sensor at an engine speed of 2,500 rpm for 90 seconds.
(e) On the tester, select the following menu items: DIAGNOSIS / ENHANCED OBD II / SNAPSHOT / MANUAL SNAPSHOT / USER DATA / AFS B1 S1 and ENGINE SPD.
(f) Check the A/F sensor voltage 3 times, when the engine is in each of the following conditions:
(1) While idling (check for at least 30 seconds)
(2) At an engine speed of approximately 2,500 rpm (without any sudden changes in engine speed)
(3) Raise the engine speed to 4,000 rpm and then quickly release the accelerator pedal so that the throttle valve is fully closed.

Standard voltage

Conditions	A/F Sensor Voltage Variations	Reference
(1) and (2)	Remains at approximately 3.3 V	Between 3.1 V and 3.5 V
(3)	Increases to 3.8 V or more	This occurs during engine deceleration (when fuel-cut performed)

HINT:

- For more information, see the diagrams below.

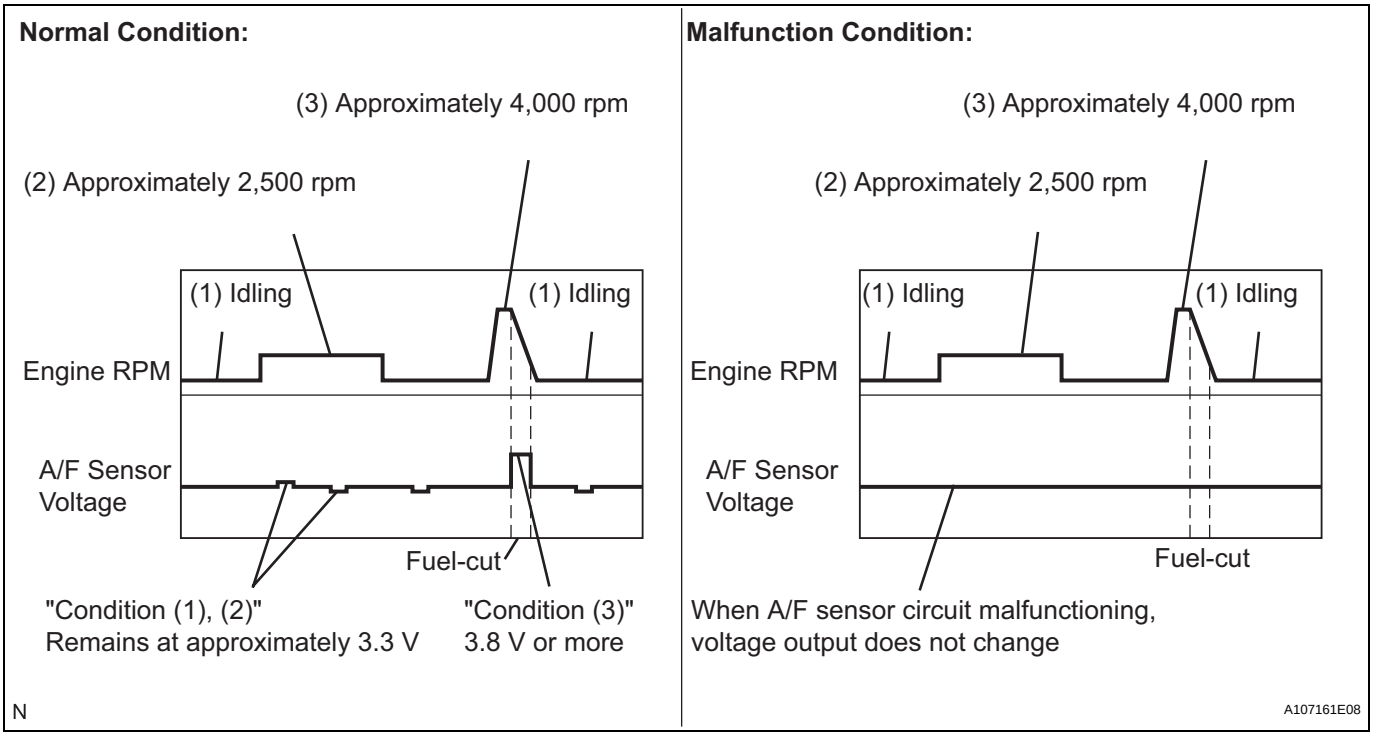

- If the output voltage of the A/F sensor remains at approximately 3.3 V (see Malfunction Condition diagram) under any conditions, including those above, the A/F sensor may have an open circuit. (This will also happen if the A/F sensor heater has an open circuit.)
- If the output voltage of the A/F sensor remains at either approximately 3.8 V or more, or 2.8 V or less (see Malfunction Condition diagram) under any conditions, including those above, the A/F sensor may have a short circuit.
- The ECM stops fuel injection (fuel cut) during engine deceleration. This causes a lean condition and result in a momentary increase in the A/F sensor output voltage.
- The ECM must establish a closed throttle valve position learning value to perform fuel cut. If the battery terminal has been reconnected, the vehicle must be driven over 16 km/h (10 mph) to allow the ECM to learn the closed throttle valve position.
- When the vehicle is driven:
  The output voltage of the A/F sensor may be below 2.8 V during fuel enrichment. For the vehicle, this translates to a sudden increase in speed with the accelerator pedal fully depressed when trying to overtake another vehicle. The A/F sensor is functioning normally.
- The A/F sensor is a current output element; therefore, the current is converted into a voltage inside the ECM. Measuring the voltage at the connectors of the A/F sensor or ECM will show a constant voltage result.

NG	**Go to step 9**

OK

4	PERFORM CONFIRMATION DRIVING PATTERN

NEXT

5	CHECK WHETHER DTC OUTPUT RECURS (DTC P2195 OR P2196)

(a) Read DTCs using the intelligent tester.
(b) Select the following menu items: DIAGNOSIS / ENHANCED OBD II / DTC INFO / PENDING CODES.

ES

Result

Display (DTC Output)	Proceed To
P2195 or P2196	A
No output	B

B → END

A

6	REPLACE AIR-FUEL RATIO SENSOR

NEXT

7	PERFORM CONFIRMATION DRIVING PATTERN

NEXT

8	CHECK WHETHER DTC OUTPUT RECURS (DTC P2195 OR P2196)

(a) Read DTCs using the intelligent tester.
(b) Select the following menu items: DIAGNOSIS / ENHANCED OBD II / DTC INFO / PENDING CODES.

Result

Display (DTC Output)	Proceed To
No output	A
P2195 or P2196	B

B → REPLACE ECM

A

END

9	INSPECT AIR-FUEL RATIO SENSOR (HEATER RESISTANCE) (See page ES-83)

NG → REPLACE AIR-FUEL RATIO SENSOR

OK

10	INSPECT INTEGRATION RELAY (EFI MAIN RELAY) (See page ES-84)

NG → REPLACE INTEGRATION RELAY (EFI MAIN RELAY)

OK

11	CHECK HARNESS AND CONNECTOR (A/F SENSOR - ECM)

Wire Harness Side:

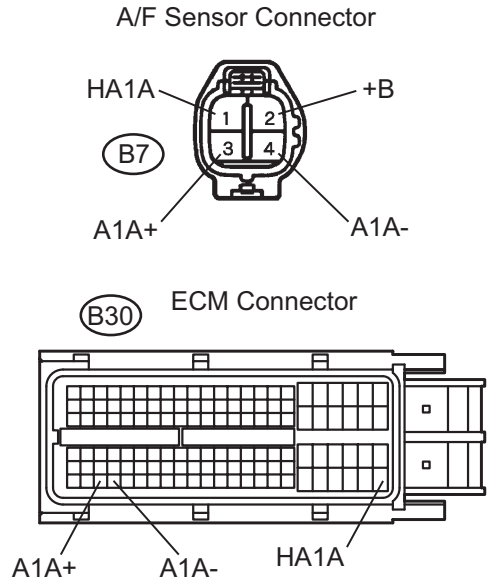

(a) Disconnect the B7 A/F sensor connector.
(b) Turn the ignition switch ON.
(c) Measure the voltage between the +B terminal of the A/F sensor connector and body ground.

Standard voltage

Tester Connections	Specified Conditions
B7-2 (+B) - Body ground	9 to 14 V

(d) Turn the ignition switch OFF.
(e) Disconnect the B30 ECM connector.
(f) Measure the resistance.

Standard resistance (Check for open)

Tester Connections	Specified Conditions
B7-1 (HA1A) - B30-109 (HA1A)	Below 1 Ω
B7-3 (A1A+) - B30-112 (A1A+)	Below 1 Ω
B7-4 (A1A-) - B30-113 (A1A-)	Below 1 Ω

Standard resistance (Check for short)

Tester Connections	Specified Conditions
B7-1 (HA1A) or B30-109 (HA1A) - Body ground	10 kΩ or higher
B7-3 (A1A+) or B30-112 (A1A+) - Body ground	10 kΩ or higher
B7-4 (A1A-) or B30-113 (A1A-) - Body ground	10 kΩ or higher

(g) Reconnect the ECM connector.
(h) Reconnect the A/F sensor connector.

Reference (System Diagram of Sensor 1):

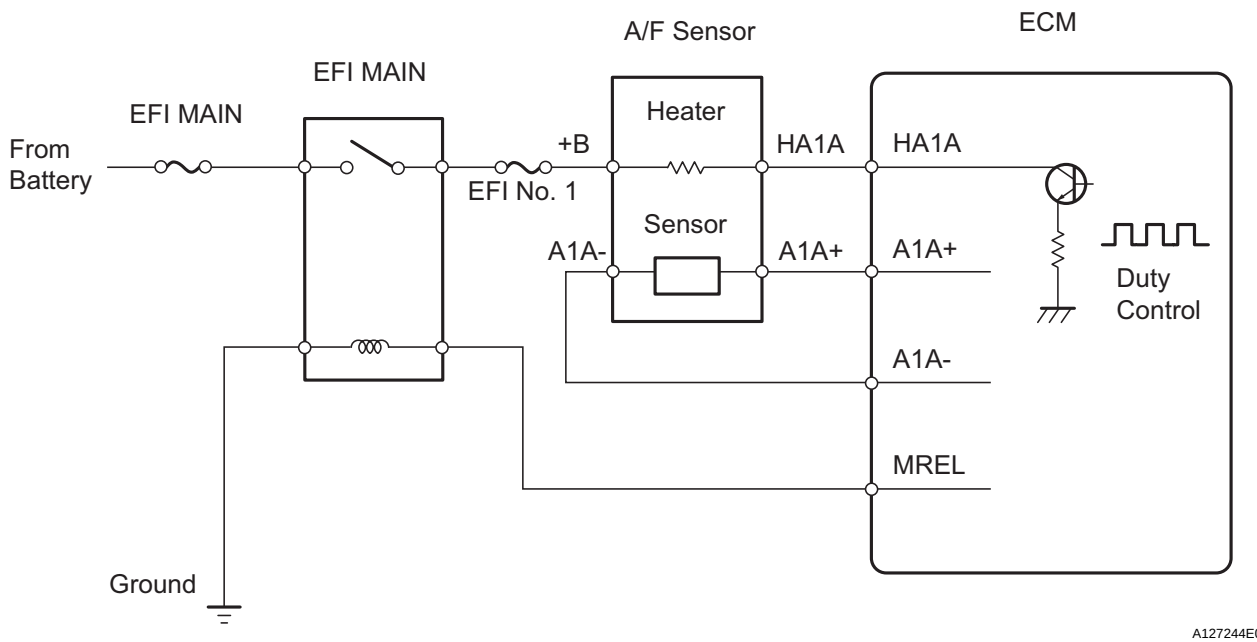

ES

NG → **REPAIR OR REPLACE HARNESS OR CONNECTOR**

OK

12	REPLACE AIR-FUEL RATIO SENSOR

NEXT

13	PERFORM CONFIRMATION DRIVING PATTERN

NEXT

14	CHECK WHETHER DTC OUTPUT RECURS (DTC P2195 OR P2196)

(a) Read DTCs using the intelligent tester.
(b) Select the following menu items: DIAGNOSIS / ENHANCED OBD II / DTC INFO / PENDING CODES.

Result

Display (DTC Output)	Proceed To
No output	A
P2195 or P2196	B

B → **REPLACE ECM**

A

END

DTC	P2238	Oxygen (A/F) Sensor Pumping Current Circuit Low (Bank 1 Sensor 1)

DTC	P2239	Oxygen (A/F) Sensor Pumping Current Circuit High (Bank 1 Sensor 1)

DTC	P2252	Oxygen (A/F) Sensor Reference Ground Circuit Low (Bank 1 Sensor 1)

DTC	P2253	Oxygen (A/F) Sensor Reference Ground Circuit High (Bank 1 Sensor 1)

DESCRIPTION

Refer to DTC P2195 (see page ES-292).

DTC No.	DTC Detection Conditions	Trouble Areas
P2238	• Case 1: Condition (a) or (b) continues for 5.0 seconds or more (2 trip detection logic): (a) AF+ voltage 0.5 V or less (b) (AF+) - (AF-) = 0.1 V or less • Case 2: A/F sensor admittance: Less than 0.022 1/Ω (2 trip detection logic)	• Open or short in A/F sensor (sensor 1) circuit • A/F sensor (sensor 1) • A/F sensor heater (sensor 1) • Integration relay (EFI MAIN relay) • A/F sensor heater and EFI MAIN relay circuits • ECM
P2239	AF+ voltage more than 4.5 V for 5.0 seconds or more (2 trip detection logic)	• Open or short in A/F sensor (sensor 1) circuit • A/F sensor (sensor 1) • A/F sensor heater (sensor 1) • Integration relay (EFI MAIN relay) • A/F sensor heater and EFI MAIN relay circuits • ECM
P2252	AF- voltage 0.5 V or less for 5.0 seconds or more (2 trip detection logic)	• Open or short in A/F sensor (sensor 1) circuit • A/F sensor (sensor 1) • A/F sensor heater (sensor 1) • Integration relay (EFI MAIN relay) • A/F sensor heater and EFI MAIN relay circuits • ECM
P2253	AF- voltage more than 4.5 V for 5.0 seconds or more (2 trip detection logic)	• Open or short in A/F sensor (sensor 1) circuit • A/F sensor (sensor 1) • A/F sensor heater (sensor 1) • Integration relay (EFI MAIN relay) • A/F sensor heater and EFI MAIN relay circuits • ECM

MONITOR DESCRIPTION

The Air-Fuel Ratio (A/F) sensor varies its output voltage in proportion to the air-fuel ratio. If the A/F sensor impedance (alternating current resistance) or output voltage deviates greatly from the standard range, the ECM determines that there is an open or short in the A/F sensor circuit.

MONITOR STRATEGY

Related DTCs	P2238: A/F sensor open circuit between AF+ and AF- P2238: A/F sensor short circuit between AF+ and AF- P2238: A/F sensor short circuit between AF+ and GND P2239: A/F sensor short circuit between AF+ and +B P2252: A/F sensor short circuit between AF- and GND P2253: A/F sensor short circuit between AF- and +B
Required Sensors/Components (Main)	A/F sensor
Required Sensors/Components (Related)	Engine Coolant Temperature (ECT) sensor, Crankshaft position sensor
Frequency of Operation	Once per driving cycle
Duration	10 seconds: A/F sensor open circuit between AF+ and AF- 5 seconds: Other
MIL Operation	2 driving cycles
Sequence of Operation	None

ES

TYPICAL ENABLING CONDITIONS

Monitor runs whenever following DTCs not present	P0031, P0032 (A/F sensor heater - Sensor 1) P0100 - P0103 (MAF meter) P0110 - P0113 (IAT sensor) P0115 - P0118 (ECT sensor) P0120 - P0223, P2135 (TP sensor) P0125 (Insufficient ECT for Closed Loop) P0171, P0172 (Fuel system) P0300 - P0304 (Misfire) P0335 (CKP sensor) P0340 (CMP sensor) P0455, P0456 (EVAP system) P0500 (VSS)

P2238 (open circuit between AF+ and AF-):

AF+ terminal voltage	0.5 to 4.5 V
AF- terminal voltage	0.5 to 4.5 V
Difference between AF+ and AF- terminal voltages	0.1 to 0.8 V
ECT	10°C (50°F) or more (varies with ECT at engine start)
Engine	Running
Fuel-cut	OFF
Time after fuel-cut OFF	2.5 seconds or more
A/F sensor heater	ON
Battery voltage	10.5 V or more
Ignition switch	ON
Time after ignition switch is OFF to ON	5 seconds or more

Other:

Battery voltage	10.5 V or more
Ignition switch	ON
Time after ignition switch is OFF to ON	5 seconds or more

TYPICAL MALFUNCTION THRESHOLDS

P2238 (Open circuit between AF+ and AF-):

A/F sensor admittance	Below 0.022 1/Ω

P2238 (Short circuit between AF+ and GND):

AF+ terminal voltage	0.5 V or less

P2238 (Short circuit between AF+ and AF-):

Difference between AF+ and AF- terminal voltages	0.1 V or less

P2239 (Short circuit between AF+ and +B):

AF+ terminal voltage	More than 4.5 V

P2252 (Short circuit between AF- and GND):

AF- terminal voltage	0.5 V or less

P2253 (Short circuit between AF- and +B):

AF- terminal voltage	More than 4.5 V

WIRING DIAGRAM

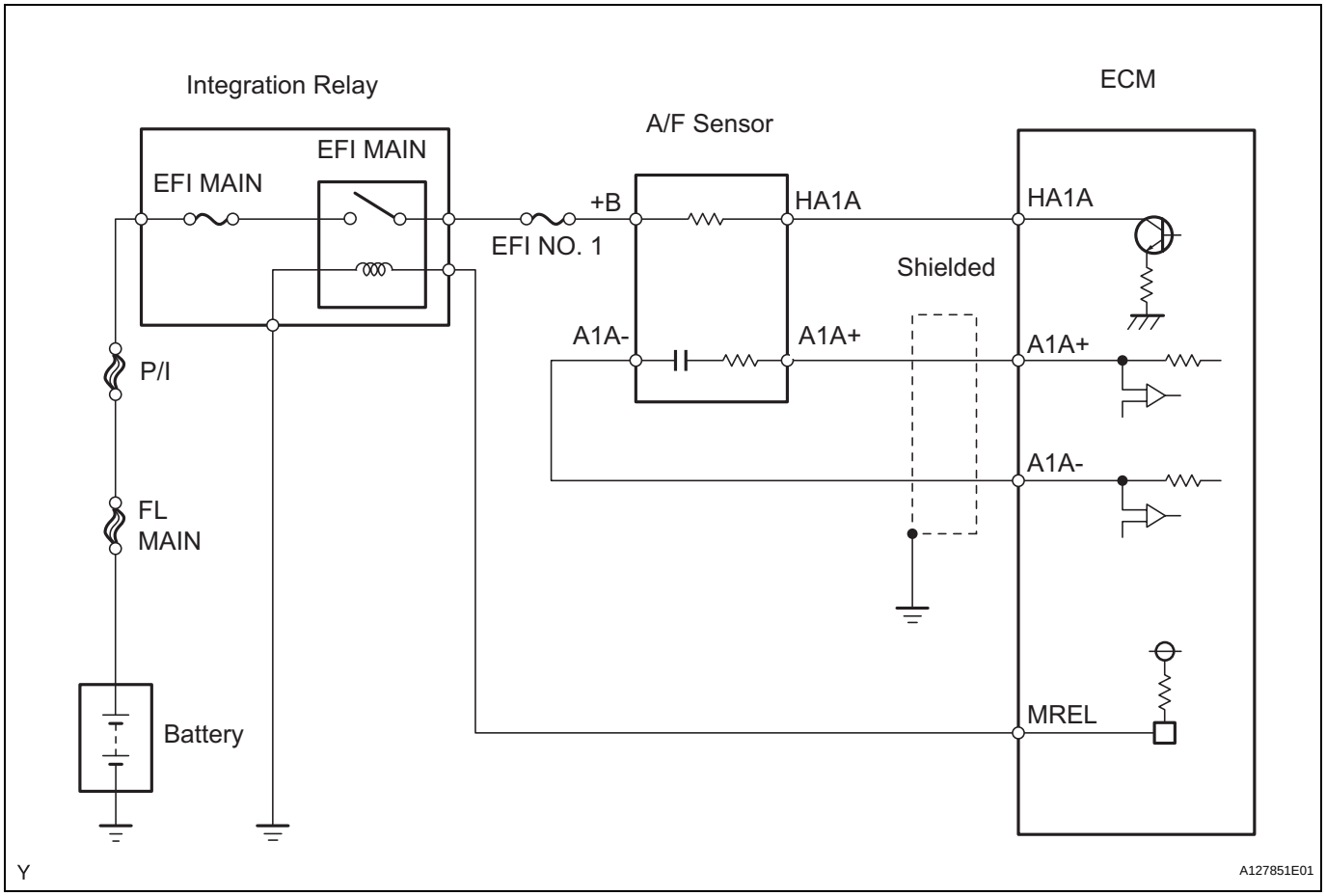

INSPECTION PROCEDURE

HINT:

- Although the DTC titles say oxygen sensor, these DTCs relate to the Air-Fuel Ratio (A/F) sensor.
- Sensor 1 refers to the sensor mounted in front of the Three-Way Catalytic Converter (TWC) and located near the engine assembly.

HINT:

Intelligent tester only:

Malfunctioning areas can be identified by performing the A/F CONTROL function provided in the ACTIVE TEST. The A/F CONTROL function can help to determine whether the Air-Fuel Ratio (A/F) sensor, Heated Oxygen (HO2) sensor and other potential trouble areas are malfunctioning.

The following instructions describe how to conduct the A/F CONTROL operation using the intelligent tester.

(a) Connect the intelligent tester to the DLC3.

(b) Start the engine and turn the tester ON.

(c) Warm up the engine at an engine speed of 2,500 rpm for approximately 90 seconds.

(d) On the tester, select the following menu items: DIAGNOSIS / ENHANCED OBD II / ACTIVE TEST / A/F CONTROL.
(e) Perform the A/F CONTROL operation with the engine idling (press the RIGHT or LEFT button to change the fuel injection volume).
(f) Monitor the output voltages of the A/F and HO2 sensors (AFS B1 S1 and O2S B1 S2) displayed on the tester.
HINT:

- The A/F CONTROL operation lowers the fuel injection volume by 12.5 % or increases the injection volume by 25 %.
- The sensors react in accordance with increases and decreases in the fuel injection volume.

Standard

ES

Tester Display (Sensor)	Injection Volume	Status	Voltages
AFS B1 S1 (A/F)	+25 %	Rich	Less than 3.0
	-12.5 %	Lean	More than 3.35
O2S B1 S2 (HO2)	+25 %	Rich	More than 0.5
	-12.5 %	Lean	Less than 0.4

NOTICE:
The A/F sensor has an output delay of a few seconds and the HO2 sensor has a maximum output delay of approximately 20 seconds.

Case	A/F Sensor (Sensor 1) Output Voltage		HO2 Sensor (Sensor 2) Output Voltage		Main Suspected Trouble Areas
1	Injection Volume +25 % -12.5 %		Injection Volume +25 % -12.5 %		-
	Output Voltage More than 3.35 V Less than 3.0 V		Output Voltage More than 0.5 V Less than 0.4 V		
2	Injection Volume +25 % -12.5 %		Injection Volume +25 % -12.5 %		• A/F sensor • A/F sensor heater • A/F sensor circuit
	Output Voltage Almost no reaction		Output Voltage More than 0.5 V Less than 0.4 V		
3	Injection Volume +25 % -12.5 %		Injection Volume +25 % -12.5 %		• HO2 sensor • HO2 sensor heater • HO2 sensor circuit
	Output Voltage More than 3.35 V Less than 3.0 V		Output Voltage Almost no reaction		
4	Injection volume +25 % -12.5 %		Injection Volume +25 % -12.5 %		• Injector • Fuel pressure • Gas leakage from exhaust system (Air-fuel ratio extremely lean or rich)
	Output Voltage Almost no reaction		Output Voltage Almost no reaction		

Following the A/F CONTROL procedure enables technicians to check and graph the output voltages of both the A/F and HO2 sensors.
To display the graph, select the following menu items on the tester: DIAGNOSIS / ENHANCED OBD II / ACTIVE TEST / A/F CONTROL / USER DATA / AFS B1 S1 and O2S B1 S2; then press the YES button and then the ENTER button followed by the F4 button.

HINT:
Read freeze frame data using the intelligent tester. Freeze frame data records the engine condition when malfunctions are detected. When troubleshooting, freeze frame data can help determine if the vehicle was moving or stationary, if the engine was warmed up or not, if the air-fuel ratio was lean or rich, and other data from the time the malfunction occurred.

1	**INSPECT AIR-FUEL RATIO SENSOR (HEATER RESISTANCE) (See page ES-83)**

NG → **REPLACE AIR-FUEL RATIO SENSOR**

OK

2	**INSPECT INTEGRATION RELAY (EFI MAIN RELAY) (See page ES-84)**

NG → **REPLACE INTEGRATION RELAY (EFI MAIN RELAY)**

OK

3	**CHECK HARNESS AND CONNECTOR (A/F SENSOR - ECM) (See page ES-310)**

NG → **REPAIR OR REPLACE HARNESS OR CONNECTOR**

OK

4	**REPLACE AIR-FUEL RATIO SENSOR**

NEXT

5	**CHECK WHETHER DTC OUTPUT RECURS**

(a) Connect the intelligent tester to the DLC3.
(b) Turn the ignition switch ON and turn the tester ON.
(c) Clear DTCs (see page ES-35).
(d) Start the engine.
(e) Allow the engine to idle for 5 minutes or more.
(f) Select the following menu items: DIAGNOSIS / ENHANCED OBD II / DTC INFO / PENDING CODES.
(g) Read pending DTCs.

Result

Display (DTC Output)	Proceed To
No output	A
P2238, P2239, P2252 or P2253	B

B → **REPLACE ECM**

A

END

DTC	P2401	Evaporative Emission Leak Detection Pump Stuck OFF

DTC	P2402	Evaporative Emission Leak Detection Pump Stuck ON

DTC SUMMARY

DTCs	Monitoring Items	Malfunction Detection Conditions	Trouble Areas	Detection Timings	Detection Logic
P2401	Leak detection pump stuck OFF	P043E, P043F, P2401, P2402 and P2419 present when one of following conditions met during key-off EVAP monitor: • EVAP pressure just after reference pressure measurement greater than -1 kPa-g (-7.5 mmHg-g) • Reference pressure less than -4.85 kPa-g (-36.4 mmHg-g) • Reference pressure greater than -1.057 kPa-g (-7.93 mmHg-g) • Reference pressure not saturated • Reference pressure difference between first and second 0.7 kPa-g (5.25 mmHg-g) or more HINT: Typical example values	• Canister pump module (Reference orifice, leak detection pump, vent valve) • Connector/wire harness (Canister pump module - ECM) • EVAP system hose (pipe from air inlet port to canister pump module, canister filter, fuel tank vent hose) • ECM	While ignition switch OFF	2 trip
P2402	Leak detection pump stuck ON		• Canister pump module (Reference orifice, leak detection pump, vent valve) • Connector/wire harness (Canister pump module - ECM) • EVAP system hose (pipe from air inlet port to canister pump module, canister filter, fuel tank vent hose) • ECM	While ignition switch OFF	2 trip

HINT:
The leak detection pump is built into the canister pump module.

DESCRIPTION

The description can be found in the EVAP (Evaporative Emission) System (see page ES-335).

INSPECTION PROCEDURE

Refer to the EVAP System (see page ES-340).

MONITOR DESCRIPTION

5 hours* after the ignition switch is turned OFF, the leak detection pump creates negative pressure (vacuum) in the EVAP system. The ECM monitors for leaks and actuator malfunctions based on the EVAP pressure.
HINT:
*: If the engine coolant temperature is not below 35°C (95°F) 5 hours after the ignition switch is turned OFF, the monitor check starts 2 hours later. If it is still not below 35°C (95°F) 7 hours after the ignition switch is turned to OFF, the monitor check starts 2.5 hours later.

Sequence	Operations	Descriptions	Duration
-	ECM activation	Activated by soak timer 5, 7 or 9.5 hours after ignition switch turned OFF.	-

Sequence	Operations	Descriptions	Duration
A	Atmospheric pressure measurement	Vent valve turned OFF (vent) and EVAP system pressure measured by ECM in order to register atmospheric pressure. If pressure in EVAP system not between 76 kPa-a and 110 kPa-a (570 mmHg-a and 825 mmHg-a), ECM cancels EVAP system monitor.	10 seconds
B	First reference pressure measurement	In order to determine reference pressure, leak detection pump creates negative pressure (vacuum) through reference orifice and then ECM checks if leak detection pump and vent valve operate normally.	60 seconds
C	EVAP system pressure measurement	Vent valve turned ON (closed) to shut EVAP system. Negative pressure (vacuum) created in EVAP system, and EVAP system pressure then measured. Write down measured value as it will be used in leak check. If EVAP pressure does not stabilize within 15 minutes, ECM cancels EVAP system monitor.	15 minutes*
D	Purge VSV monitor	Purge VSV opened and then EVAP system pressure measured by ECM. Large increase indicates normality.	10 seconds
E	Second reference pressure measurement	After second reference pressure measurement, leak check performed by comparing first and second reference pressure. If stabilized system pressure higher than second reference pressure, ECM determines that EVAP system leaking.	60 seconds
F	Final check	Atmospheric pressure measured and then monitoring result recorded by ECM.	-

*: If only a small amount of fuel is in the fuel tank, it takes longer for the EVAP pressure to stabilize.

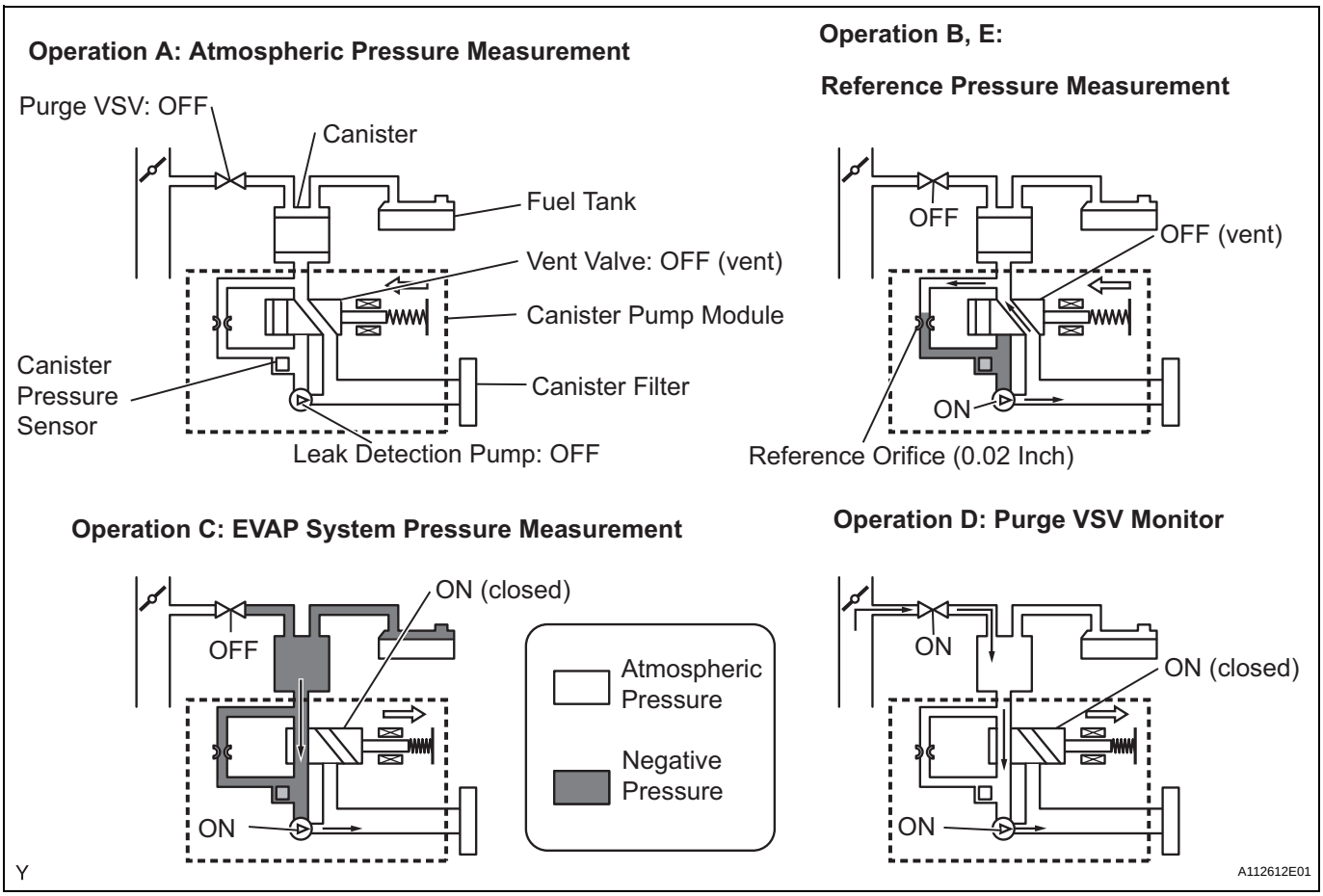

1. P2401: Leak detection pump stuck OFF
   In operation B, the leak detection pump creates negative pressure (a vacuum) through the reference orifice. The EVAP system pressure is then measured by the ECM, using the canister pressure sensor, to determine the reference pressure. If the pressure is higher than -1.057 kPa-g (-7.93 mmHg-g), or lower than -4.85 kPa-g (-36.4 mmHg-g), the ECM interprets this as the leak detection pump being stuck OFF (not operating). The ECM illuminates the MIL and sets the DTC (2 trip detection logic).

EVAP Pressure when Leak Detection Pump Stuck OFF:

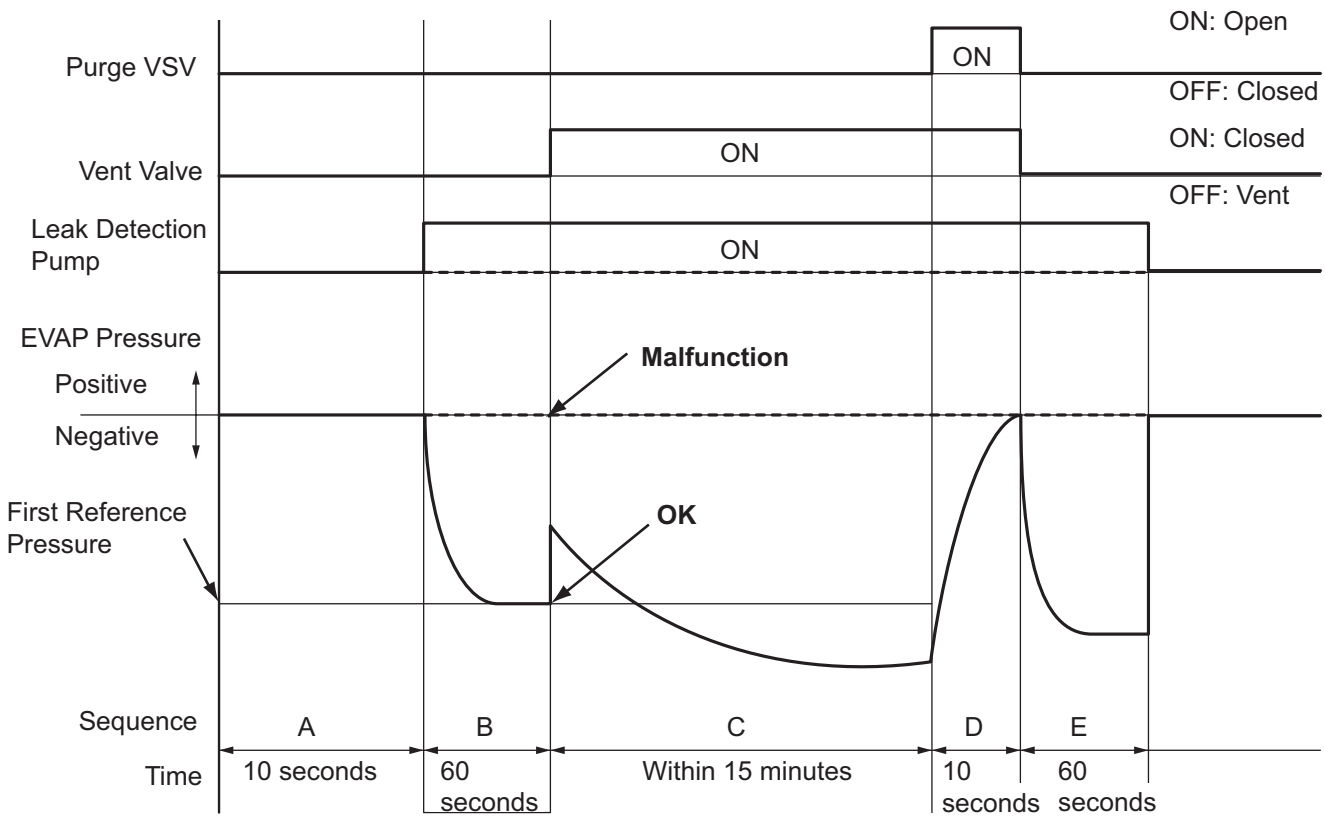

ES

2. P2402: Leak detection pump stuck ON
In operation B, the leak detection pump creates negative pressure (a vacuum) through the reference orifice. The EVAP (Evaporative Emission) system pressure is then measured by the ECM, using the canister pressure sensor, to determine the reference pressure. If the pressure is higher than -1.057 kPa-g (-7.93 mmHg-g), or lower than -4.85 kPa-g (-36.4 mmHg-g), the ECM interprets this as the leak detection pump being stuck ON (remaining ON all the time). The ECM illuminates the MIL and sets the DTC (2 trip detection logic).

EVAP Pressure when Leak Detection Pump Stuck ON:

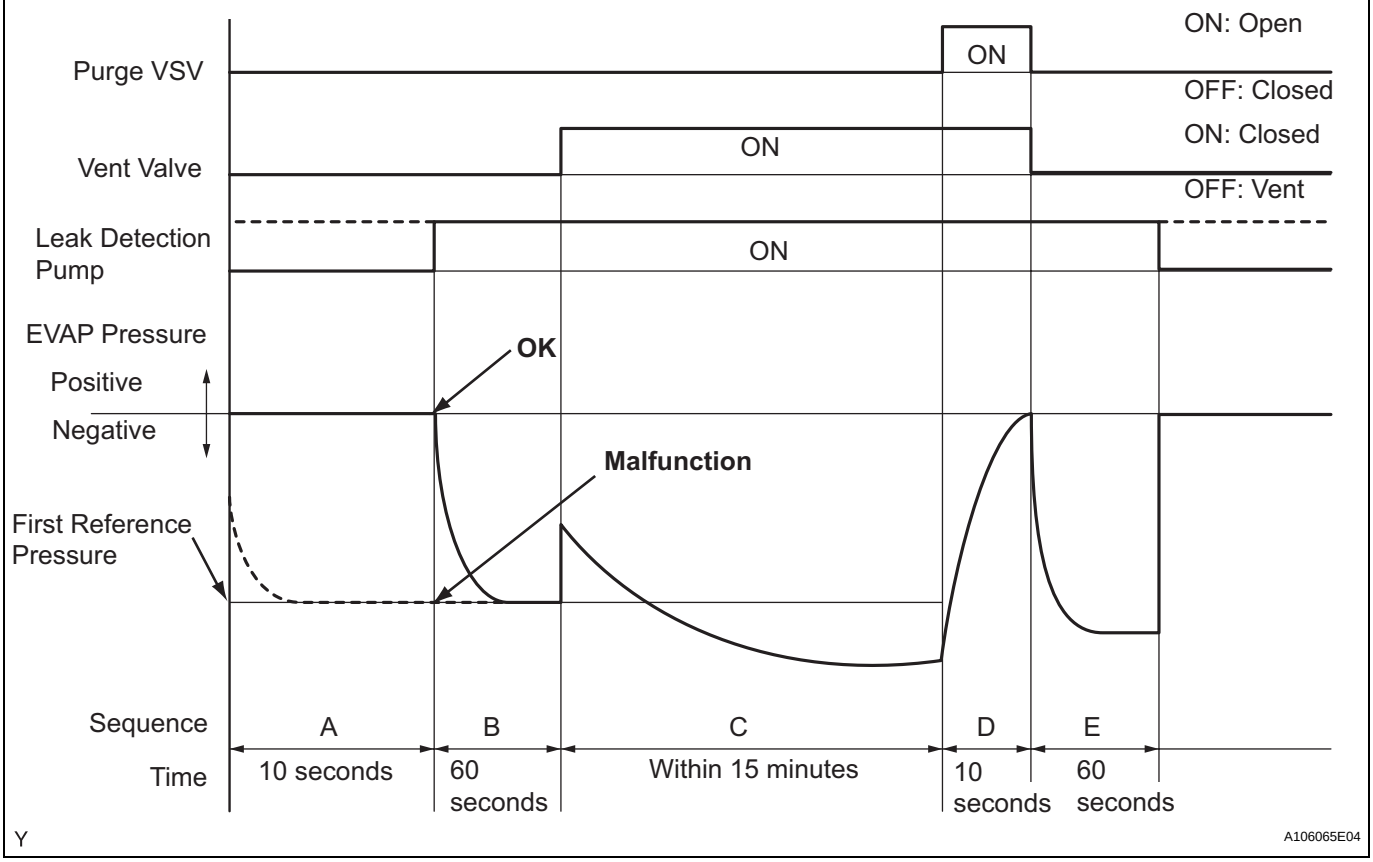

HINT:
The detection logic of DTCs P2401 and P2402 is the same because in both cases the reference pressure measured in operation B is compared to the atmospheric pressure registered in operation A. The ECM calculates the difference between these pressures by deducting [the reference pressure] from [the stored atmospheric pressure], and uses this to monitor the EVAP system pressure change.

MONITOR STRATEGY

Required Sensors/Components	Purge VSV and canister pump module
Frequency of Operation	Once per driving cycle
Duration	Within 2 minutes (varies with amount of fuel in tank)
MIL Operation	2 driving cycles
Sequence of Operation	None

TYPICAL ENABLING CONDITIONS

Monitor runs whenever following DTCs not present	None
EVAP key-off monitor runs when all of following conditions met	-
Atmospheric pressure	70 to 110 kPa-a (525 to 825 mmHg-a)
Battery voltage	10.5 V or more

Vehicle speed	Below 4 km/h (2.5 mph)
Ignition switch	OFF
Time after key off	5 or 7 or 9.5 hours
Canister pressure sensor malfunction (P0450, P0451, P0452 and P0453)	Not detected
Purge VSV	Not operated by scan tool
Vent valve	Not operated by scan tool
Leak detection pump	Not operated by scan tool
Both of following conditions met before key off	Conditions 1 and 2
1. Duration that vehicle driven	5 minutes or more
2. EVAP purge operation	Performed
ECT	4.4° to 35°C (40° to 95°F)
IAT	4.4°to 35°C (40° to 95°F)

1. Key-off monitor sequence 1 to 8

1. Atmospheric pressure measurement

Next sequence run if following condition set	-
Atmospheric pressure change	Less than 0.3 kPa-g (2.25 mmHg-g) in 1 second

2. First reference pressure measurement

Next sequence run if all of following conditions set	Condition 1, 2 and 3
1. EVAP pressure just after reference pressure measurement start	-1 kPa-g (-7.5 mmHg-g) or less
2. Reference pressure	-4.85 to -1.057 kPa-g (-36.4 to -7.93 mmHg-g)
3. Reference pressure	Saturated within 60 seconds

3. Vent valve stuck closed check

Next sequence run if following condition set	-
EVAP pressure change after vent valve ON (closed)	0.3 kPa-g (2.25 mmHg-g) or more

4. Vacuum introduction

Next sequence run if following condition set	-
EVAP pressure	Saturated within 15 minutes

5. Purge VSV stuck closed check

Next sequence run if following condition set	-
EVAP pressure change after purge VSV ON (open)	0.3 kPa-g (2.25 mmHg-g) or more

6. Second reference pressure measurement

Next sequence run if all of following conditions set	Condition 1, 2, 3 and 4
1. EVAP pressure just after reference pressure	-1 kPa-g (-7.5 mmHg-g) or less
2. Reference pressure	-4.85 to -1.057 kPa-g (-36.4 to -7.93 mmHg-g)
3. Reference pressure	Saturated within 60 seconds
4. Reference pressure difference between first and second	Less than 0.7 kPa-g (5.25 mmHg-g)

7. Leak check

Next sequence run if following condition set	-
EVAP pressure when vacuum introduction complete	Second reference pressure or less

8. Atmospheric pressure measurement

EVAP monitor complete if following condition set	-
Atmospheric pressure difference between sequence 1 and 8	Within 0.3 kPa-g (2.25 mmHg-g)

TYPICAL MALFUNCTION THRESHOLDS

"Saturated" indicates that the EVAP pressure change is less than 0.286 kPa-g (2.14 mmHg-g) in 60 seconds.

One of following conditions met	-
EVAP pressure just after reference pressure measurement start	More than -1 kPa-g (-7.5 mmHg-g)
Reference pressure	Less than -4.85 kPa-g (-36.4 mmHg-g)
Reference pressure	-1.057 kPa-g (-7.93 mmHg-g) or more
Reference pressure	Not saturated within 60 seconds
Reference pressure difference between first and second	0.7 kPa-g (5.25 mmHg-g) or more

MONITOR RESULT

Refer to CHECKING MONITOR STATUS (see page ES-17).

DTC	P2419	Evaporative Emission System Switching Valve Control Circuit Low

DTC	P2420	Evaporative Emission System Switching Valve Control Circuit High

DTC SUMMARY

DTCs	Monitoring Items	Malfunction Detection Conditions	Trouble Areas	Detection Timings	Detection Logic
P2419	Vent valve stuck closed	P043E, P043F, P2401, P2402 and P2419 present when one of following conditions met during key-off EVAP monitor: • EVAP pressure just after reference pressure measurement greater than -1 kPa-g (-7.5 mmHg-g) • Reference pressure less than -4.85 kPa-g (-36.4 mmHg-g) • Reference pressure greater than -1.057 kPa-g (-7.93 mmHg-g) • Reference pressure not saturated • Reference pressure difference between first and second 0.7 kPa-g (5.25 mmHg-g) or more HINT: Typical example values	• Canister pump module (Reference orifice, leak detection pump, vent valve) • Connector/wire harness (Canister pump module - ECM) • EVAP system hose (pipe from air inlet port to canister pump module, canister filter, fuel tank vent hose) • ECM	While ignition switch OFF	2 trip
P2420	Vent valve stuck open (vent)	Following condition met during key-off EVAP monitor: • EVAP pressure change when vent valve closed (ON) less than 0.3 kPa-g (2.25 mmHg-g)	• Canister pump module (Reference orifice, leak detection pump, vent valve) • Connector/wire harness (Canister pump module - ECM) • ECM	While ignition switch OFF	2 trip

HINT:
The vent valve is built into the canister pump module.

DESCRIPTION

The description can be found in the EVAP (Evaporative Emission) System (see page ES-335).

INSPECTION PROCEDURE

Refer to the EVAP System (see page ES-340).

MONITOR DESCRIPTION

5 hours* after the ignition switch is turned OFF, the leak detection pump creates negative pressure (vacuum) in the EVAP system. The ECM monitors for leaks and actuator malfunctions based on the EVAP pressure.
HINT:
*: If the engine coolant temperature is not below 35°C (95°F) 5 hours after the ignition switch is turned OFF, the monitor check starts 2 hours later. If it is still not below 35°C (95°F) 7 hours after the ignition switch is turned OFF, the monitor check starts 2.5 hours later.

Sequence	Operations	Descriptions	Duration
-	ECM activation	Activated by soak timer 5, 7 or 9.5 hours after ignition switch turned OFF.	-

Sequence	Operations	Descriptions	Duration
A	Atmospheric pressure measurement	Vent valve turned OFF (vent) and EVAP system pressure measured by ECM in order to register atmospheric pressure. If pressure in EVAP system not between 76 kPa-a and 110 kPa-a (570 mmHg-a and 825 mmHg-a), ECM cancels EVAP system monitor.	10 seconds
B	First reference pressure measurement	In order to determine reference pressure, leak detection pump creates negative pressure (vacuum) through reference orifice and then ECM checks if leak detection pump and vent valve operate normally.	60 seconds
C	EVAP system pressure measurement	Vent valve turned ON (closed) to shut EVAP system. Negative pressure (vacuum) created in EVAP system, and EVAP system pressure then measured. Write down measured value as it will be used in leak check. If EVAP pressure does not stabilize within 15 minutes, ECM cancels EVAP system monitor.	15 minutes*
D	Purge VSV monitor	Purge VSV opened and then EVAP system pressure measured by ECM. Large increase indicates normality.	10 seconds
E	Second reference pressure measurement	After second reference pressure measurement, leak check performed by comparing first and second reference pressure. If stabilized system pressure higher than second reference pressure, ECM determines that EVAP system leaking.	60 seconds
F	Final check	Atmospheric pressure measured and then monitoring result recorded by ECM.	-

*: If only a small amount of fuel is in the fuel tank, it takes longer for the EVAP pressure to stabilize.

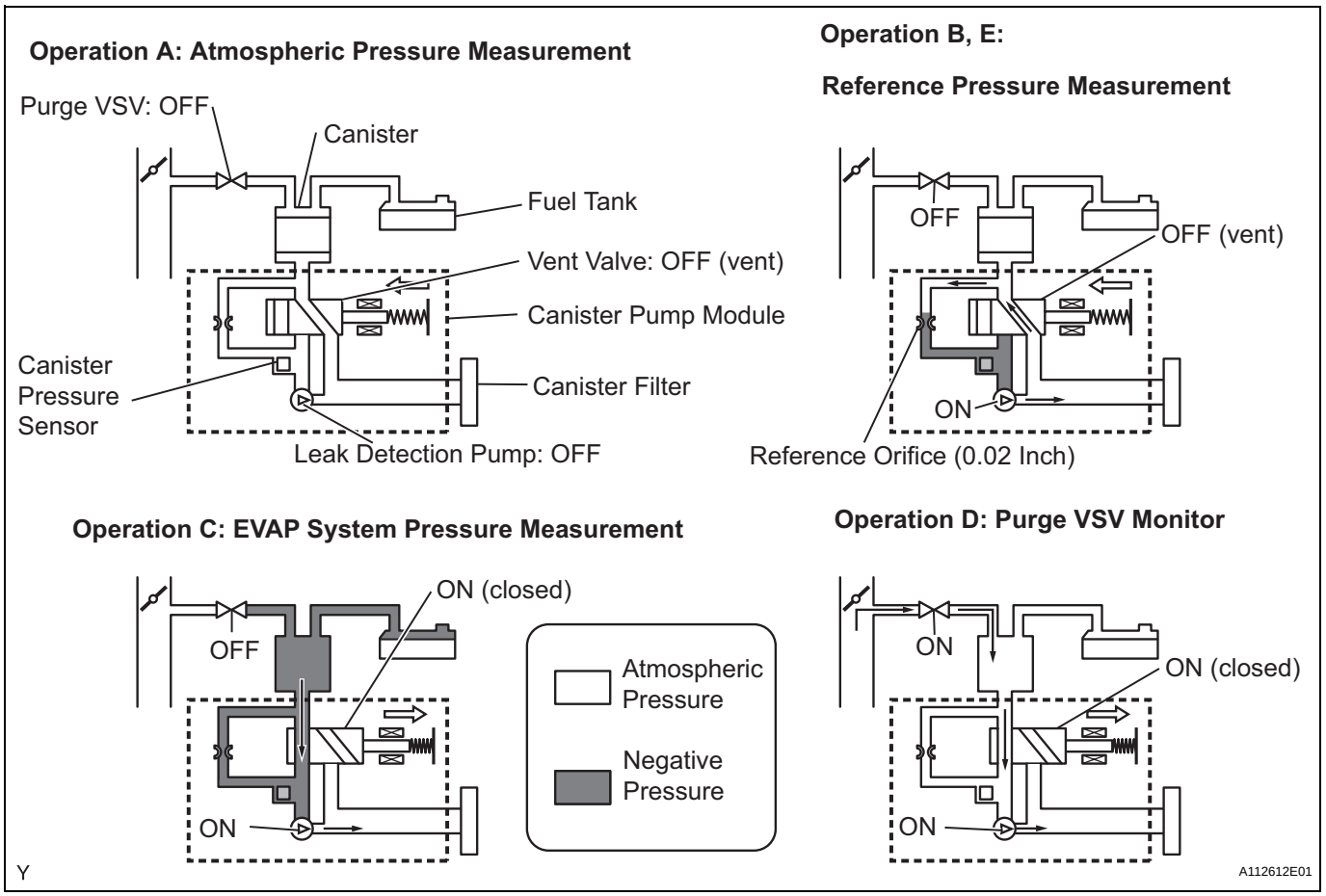

1. P2419: Vent valve stuck closed
   In operation B, the leak detection pump creates negative pressure (a vacuum) through the reference orifice. The EVAP system pressure is then measured by the ECM, using the canister pressure sensor, to determine the reference pressure. If the pressure exceeds -1.057 kPa-g (-7.93 mmHg-g) 4 seconds after the leak detection pump is turned ON, the ECM interprets this as the vent valve being stuck closed.
   The ECM illuminates the MIL and sets the DTC (2 trip detection logic).

EVAP Pressure when Vent Valve Stuck ON:

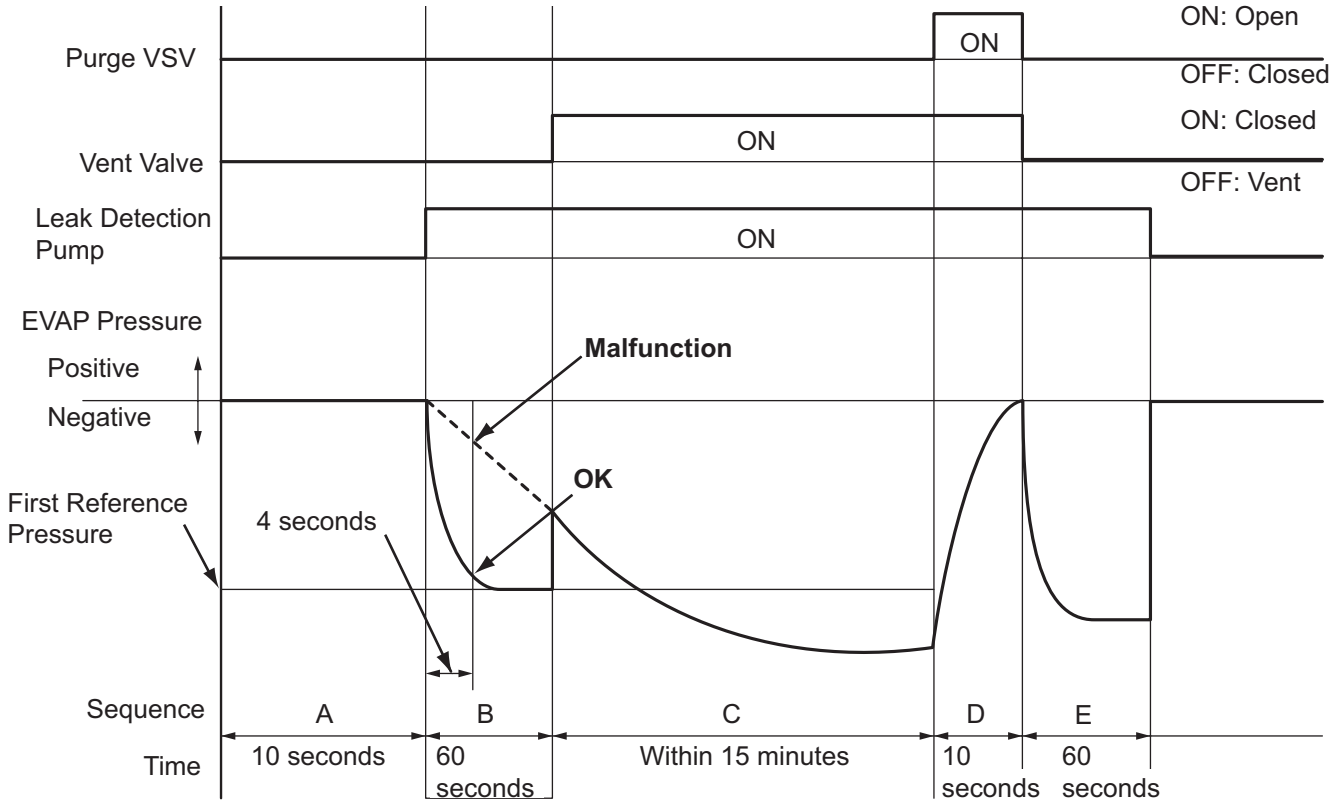

ES

2. P2420: Vent valve stuck open (vent)
In operation C, the vent valve turns ON (closes) and the EVAP system pressure is then measured by the ECM, using the canister pressure sensor, to conduct an EVAP leak check. If the pressure does not increase when the vent valve is open, the ECM interprets this as the vent valve being stuck open. The ECM illuminates the MIL and sets the DTC.

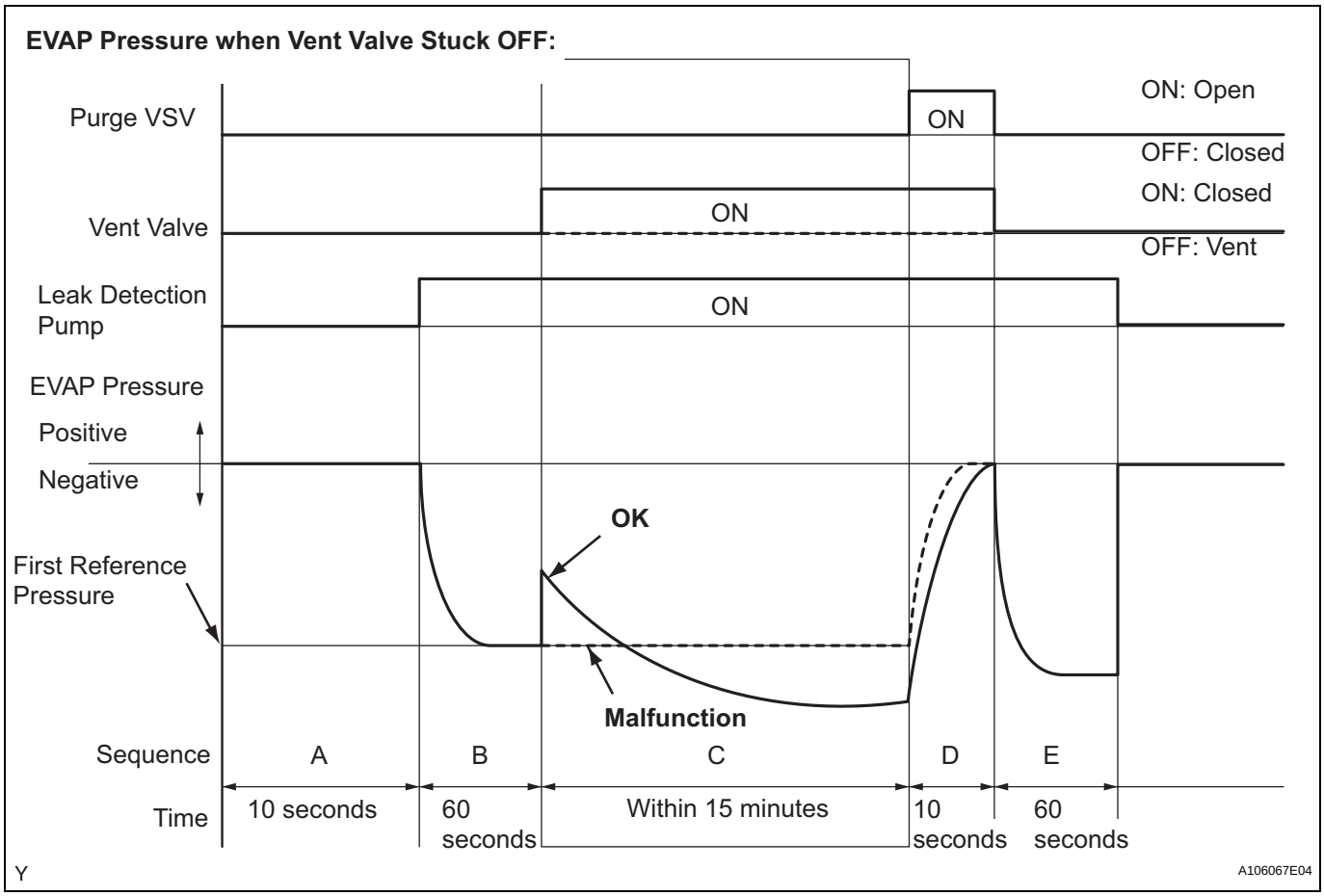

MONITOR STRATEGY

Required Sensors/Components	Purge VSV and canister pump module
Frequency of Operation	Once per driving cycle
Duration	Within 2 minutes (varies with amount of fuel in tank)
MIL Operation	2 driving cycles
Sequence of Operation	None

TYPICAL ENABLING CONDITIONS

Monitor runs whenever following DTCs not present	None
EVAP key-off monitor runs when all of following conditions met	-
Atmospheric pressure	70 to 110 kPa-a (525 to 825 mmHg-a)
Battery voltage	10.5 V or more
Vehicle speed	Below 4 km/h (2.5 mph)
Ignition switch	OFF
Time after key off	5 or 7 or 9.5 hours
Canister pressure sensor malfunction (P0450, P0451, P0452 and P0453)	Not detected
Purge VSV	Not operated by scan tool
Vent valve	Not operated by scan tool

Leak detection pump	Not operated by scan tool
Both of following conditions met before key off	Conditions 1 and 2
1. Duration that vehicle driven	5 minutes or more
2. EVAP purge operation	Performed
ECT	4.4° to 35°C (40° to 95°F)
IAT	4.4°to 35°C (40° to 95°F)

1. Key-off monitor sequence 1 to 8

1. Atmospheric pressure measurement

Next sequence run if following condition set	-
Atmospheric pressure change	Less than 0.3 kPa-g (2.25 mmHg-g) in 1 second

2. First reference pressure measurement

Next sequence run if all of following conditions set	Condition 1, 2 and 3
1. EVAP pressure just after reference pressure measurement start	-1 kPa-g (-7.5 mmHg-g) or less
2. Reference pressure	-4.85 to -1.057 kPa-g (-36.4 to -7.93 mmHg-g)
3. Reference pressure	Saturated within 60 seconds

3. Vent valve stuck closed check

Next sequence run if following condition set	-
EVAP pressure change after vent valve ON (closed)	0.3 kPa-g (2.25 mmHg-g) or more

4. Vacuum introduction

Next sequence run if following condition set	-
EVAP pressure	Saturated within 15 minutes

5. Purge VSV stuck closed check

Next sequence run if following condition set	-
EVAP pressure change after purge VSV ON (open)	0.3 kPa-g (2.25 mmHg-g) or more

6. Second reference pressure measurement

Next sequence run if all of following conditions set	Condition 1, 2, 3 and 4
1. EVAP pressure just after reference pressure	-1 kPa-g (-7.5 mmHg-g) or less
2. Reference pressure	-4.85 to -1.057 kPa-g (-36.4 to -7.93 mmHg-g)
3. Reference pressure	Saturated within 60 seconds
4. Reference pressure difference between first and second	Less than 0.7 kPa-g (5.25 mmHg-g)

7. Leak check

Next sequence run if following condition set	-
EVAP pressure when vacuum introduction complete	Second reference pressure or less

8. Atmospheric pressure measurement

EVAP monitor complete if following condition set	-
Atmospheric pressure difference between sequence 1 and 8	Within 0.3 kPa-g (2.25 mmHg-g)

TYPICAL MALFUNCTION THRESHOLDS

"Saturated" indicates that the EVAP pressure change is less than 0.286 kPa-g (2.14 mmHg-g) in 60 seconds.

P2419: Vent valve stuck closed

One of following conditions set	-
EVAP pressure just after reference pressure measurement start	More than -1 kPa-g (-7.5 mmHg-g)
Reference pressure	Less than -4.85 kPa-g (-36.4 mmHg-g)
Reference pressure	-1.057 kPa-g (-7.93 mmHg-g) or more
Reference pressure	Not saturated within 60 seconds

Reference pressure difference between first and second	0.7 kPa-g (5.25 mmHg-g) or more

P2420: Vent valve stuck open (vent)

EVAP pressure change after EVAP canister vent valve ON	Less than 0.3 kPa-g (2.25 mmHg-g)

MONITOR RESULT

Refer to CHECKING MONITOR STATUS (see page ES-17).

DTC	P2610	ECM / PCM Internal Engine Off Timer Performance

DTC SUMMARY

DTC	Monitoring Items	Malfunction Detection Conditions	Trouble Areas	Detection Timings	Detection Logic
P2610	Soak timer (built into ECM)	ECM internal malfunction	ECM	Engine running	2 trip

DESCRIPTION

To ensure the accuracy of the EVAP (Evaporative Emission) monitor values, the soak timer, which is built into the ECM, measures 5 hours (+-15 minutes) from when the ignition switch is turned OFF, before the monitor is run. This allows the fuel to cool down, which stabilizes the EVAP pressure. When 5 hours have elapsed, the ECM turns on.

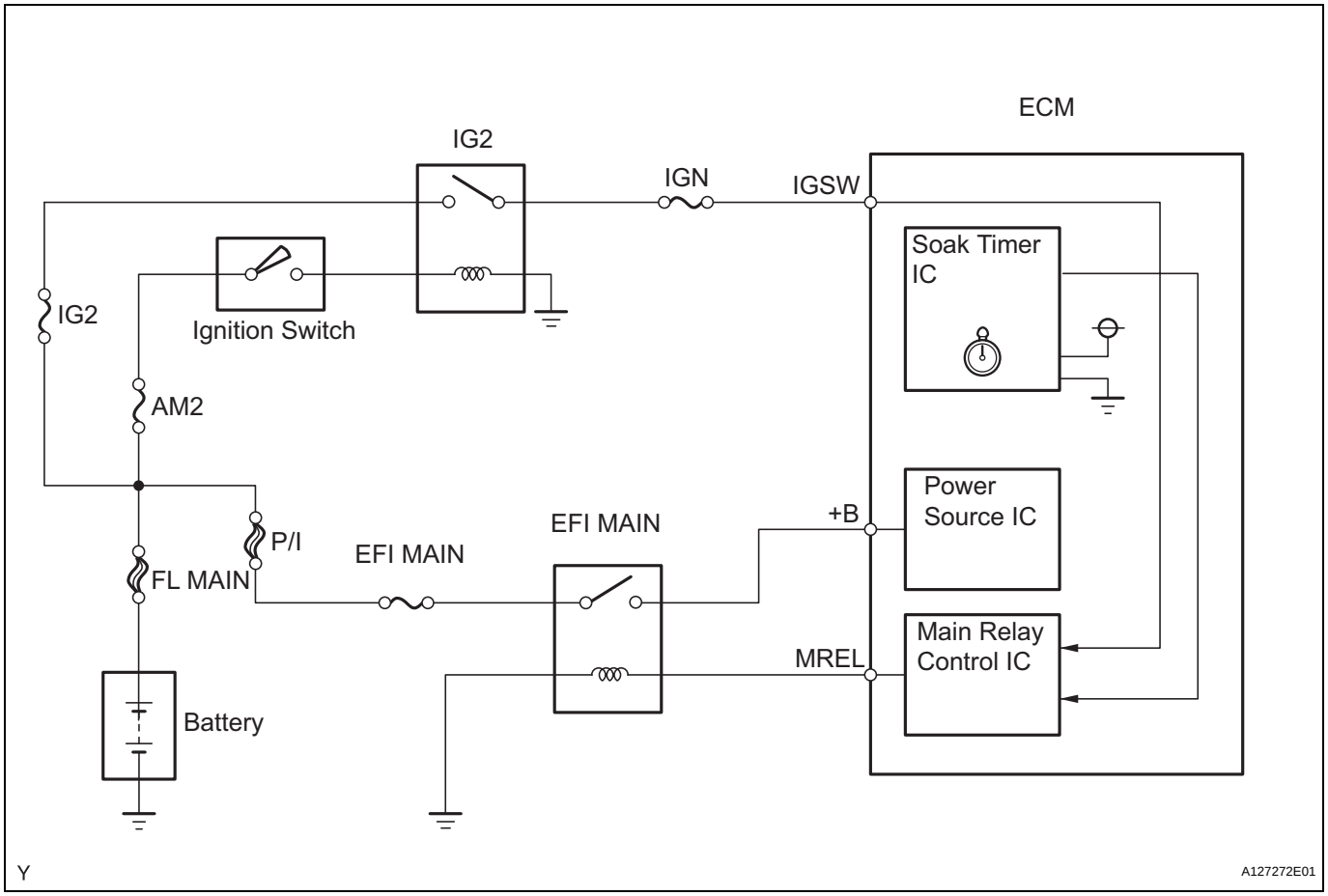

MONITOR DESCRIPTION

5 hours after the ignition switch is turned OFF, the soak timer activates the ECM to begin the EVAP system monitor. While the engine is running, the ECM monitors the synchronization of the soak timer and the CPU clock. If these two are not synchronized, the ECM interprets this as a malfunction, illuminates the MIL and sets the DTC (2 trip detection logic).

MONITOR STRATEGY

Required Sensors/Components	ECM
Frequency of Operation	Once per driving cycle

Duration	10 minutes
MIL Operation	2 driving cycles
Sequence of Operation	None

TYPICAL ENABLING CONDITIONS

Monitor runs whenever following DTC not present	None
Ignition switch	ON
Engine	Running
Battery voltage	8 V or more
Starter	OFF

ES

TYPICAL MALFUNCTION THRESHOLDS

Soak timer measurement when ECM CPU clock counts 10 minutes	Less than 7 minutes, or more than 13 minutes

INSPECTION PROCEDURE

HINT:

- DTC P2610 is set if an internal ECM problem is detected. Diagnostic procedures are not required. ECM replacement is necessary.
- Read freeze frame data using the intelligent tester. Freeze frame data records the engine condition when malfunctions are detected. When troubleshooting, freeze frame data can help determine if the vehicle was moving or stationary, if the engine was warmed up or not, if the air-fuel ratio was lean or rich, and other data from the time the malfunction occurred.

1	**REPLACE ECM**

(a) Replace the ECM (see page ES-429).

NEXT

2	**CHECK WHETHER DTC OUTPUT RECURS**

(a) Connect the intelligent tester to the DLC3.
(b) Turn the ignition switch ON.
(c) Turn the tester ON.
(d) Clear DTCs (see page ES-35).
(e) Start the engine and wait for 10 minutes or more.
(f) On the tester, select the following menu items: DIAGNOSIS / ENHANCED OBD II / DTC INFO / PENDING CODES.
(g) If no pending DTC is displayed, the repair has been successfully completed.

NEXT

END

DTC	P2A00	A/F Sensor Circuit Slow Response (Bank 1 Sensor 1)

HINT:
Sensor 1 refers to the sensor mounted in front of the Three-Way Catalytic Converter (TWC) and located near the engine assembly.

DESCRIPTION

Refer to DTC P2195 (see page ES-292).

DTC No.	DTC Detection Conditions	Trouble Areas
P2A00	Calculated value of air-fuel ratio (A/F) sensor response rate deterioration level less than threshold (2 trip detection logic)	• Open or short in A/F sensor circuit • A/F sensor • ECM

ES

MONITOR DESCRIPTION

After the engine is warmed up, the ECM performs air-fuel ratio feedback control to maintain the air-fuel ratio at the stoichiometric level. In addition, active A/F control is performed for approximately 10 seconds after the preconditions are met in order to measure the A/F sensor response rate. During active A/F control, the ECM forcibly increases and decreases the injection volume a certain amount, based on the stoichiometric air-fuel ratio learned during normal air-fuel ratio control, and measures the A/F sensor response rate. The ECM receives a signal from the A/F sensor while performing active A/F control and uses it to calculate the A/F sensor response rate deterioration level.
If the A/F sensor response rate deterioration level is less than the threshold, the ECM interprets this as a malfunction and sets the DTC.

Air-Fuel Ratio Sensor Output:

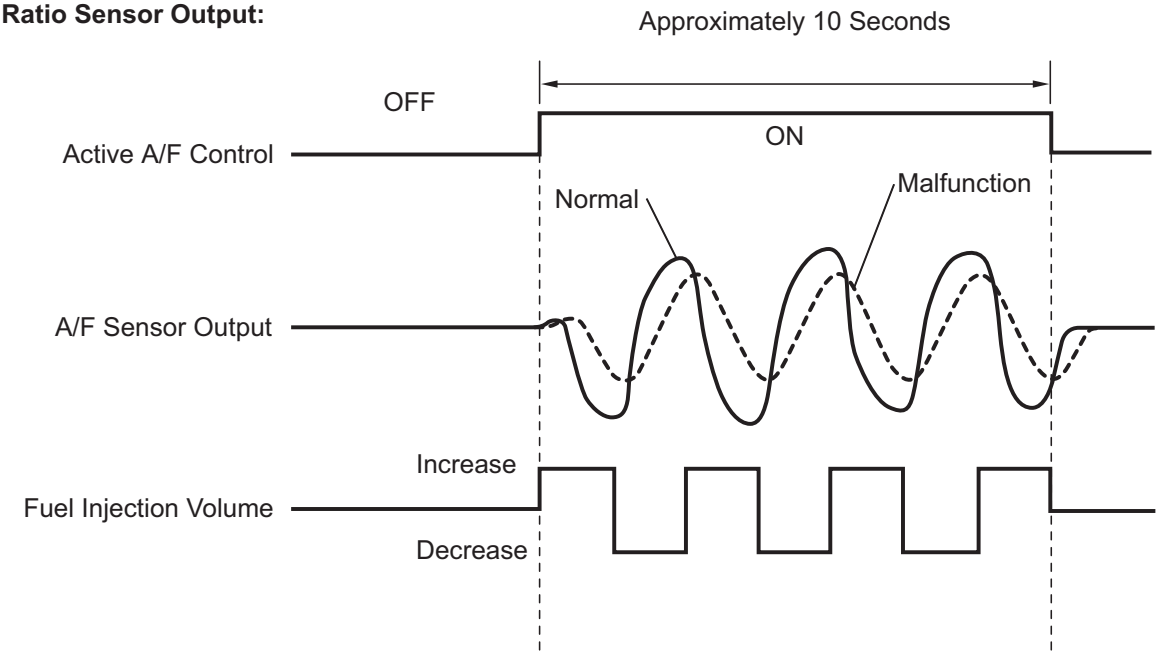

CONFIRMATION DRIVING PATTERN

HINT:
Performing this confirmation pattern will activate the A/F sensor response monitor.

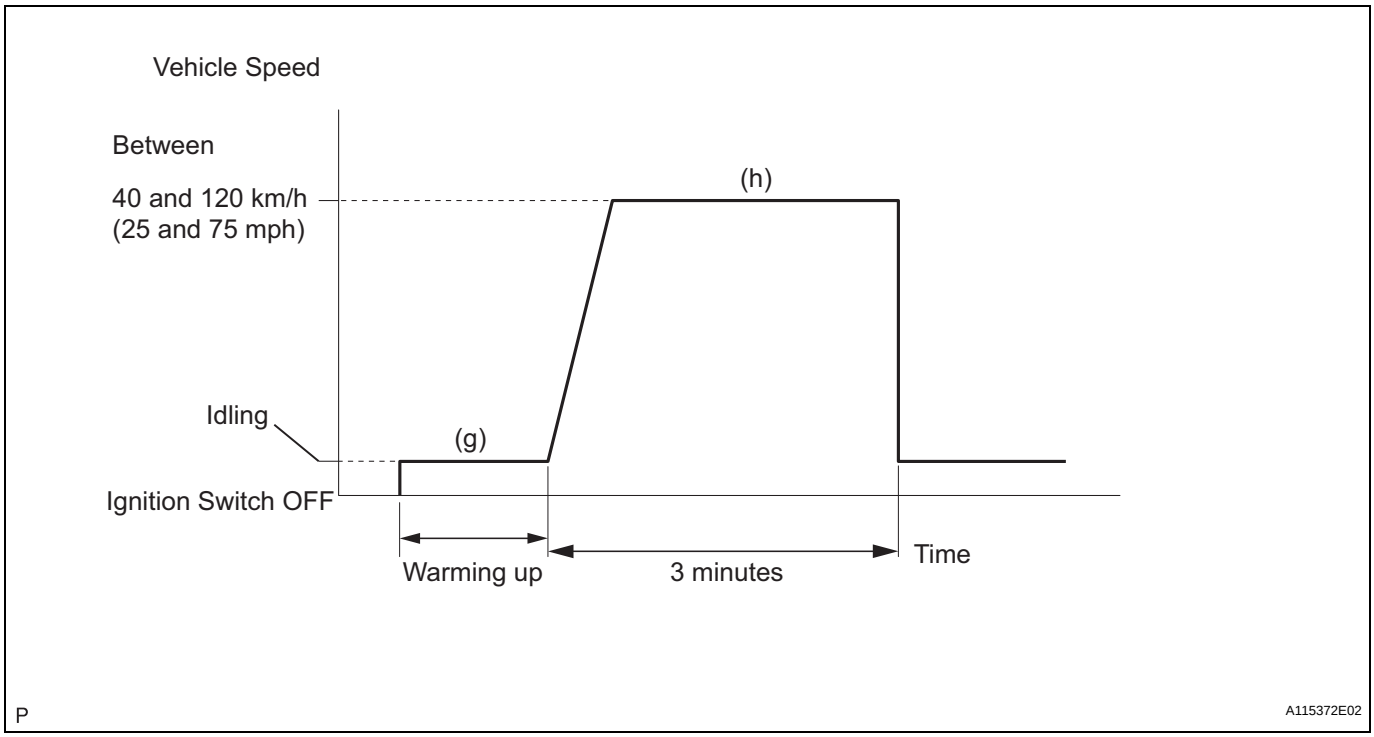

(a) Connect the intelligent tester to the DLC3.

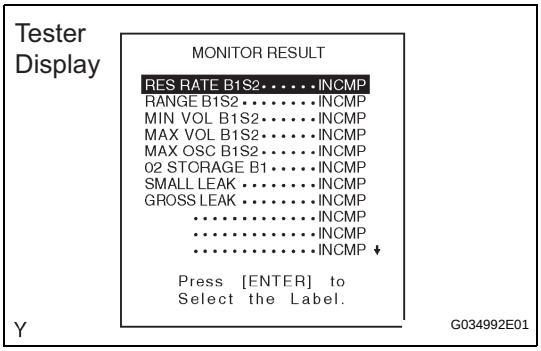

(b) Turn the ignition switch ON.
(c) Turn the tester ON.
(d) Clear DTCs (if set) (see page ES-35).
(e) Select the following menu items: DIAGNOSIS / ENHANCED OBD II / MONITOR INFO / MONITOR RESULT.
(f) Check that RES RATE B1S1 is INCOMP.
(g) Start the engine and warm it up.
(h) Drive the vehicle at a constant speed of between 40 km/h and 120 km/h (25 mph and 75 mph) for 3 minutes.
(i) Check the monitor result values on the intelligent tester by selecting the following menu items: DIAGNOSIS / ENHANCED OBD II / MONITOR INFO / TEST RESULT.
(j) If the values indicated on the tester do not change, perform READINESS MONITOR DRIVE PATTERN for the A/F sensor and the heated oxygen sensor (see page ES-19).
HINT:
Completion of all A/F sensor monitors is required to change the value in TEST RESULT.
(k) Note the value of the Monitor Result.
(l) Select the following menu items: DIAGNOSIS / ENHANCED OBD II / DTC INFO / PENDING CODES.
(m) Check if any DTCs (any pending DTCs) are set.

MONITOR STRATEGY

Related DTCs	P2A00: Air-Fuel Ratio (A/F) sensor slow response
Required Sensors/Components (Main)	A/F sensor
Required Sensors/Components (Related)	Vehicle speed sensor, Crankshaft position sensor
Frequency of Operation	Once per driving cycle
Duration	10 to 15 seconds
MIL Operation	2 driving cycles
Sequence of Operation	None

TYPICAL ENABLING CONDITIONS

Monitor runs whenever following DTCs not present	P0031, 32 (A/F Sensor heater - Sensor 1) P0100 - P0103 (MAF meter) P0110 - P0113 (IAT sensor) P0115 - P0118 (ECT sensor) P0120 - P0223, P2135 (TP sensor) P0125 (Insufficient ECT for Closed Loop) P0171, P0172 (Fuel system) P0300 - P0304 (Misfire) P0335 (CKP sensor) P0340 (CMP sensor) P0455, P0456 (EVAP system) P0500 (VSS) P2196 (A/F Sensor - rationality)
Active A/F control	Performing
Active A/F control performed when following conditions met	-
Engine coolant temperature	75°C (167°F) or more
Battery voltage	11 V or more
Idle	OFF
Engine RPM	Less than 4,000 rpm
A/F sensor status	Activated
Fuel-cut	OFF
Engine load	10 to 70 %
Shift position	2 or more
Catalyst monitor	Not yet
Intake air amount	4 to 16 g/sec.

TYPICAL MALFUNCTION THRESHOLDS

Response rate deterioration level	Less than 0.12 V

MONITOR RESULT

Refer to CHECKING MONITOR STATUS (see page ES-17).

WIRING DIAGRAM

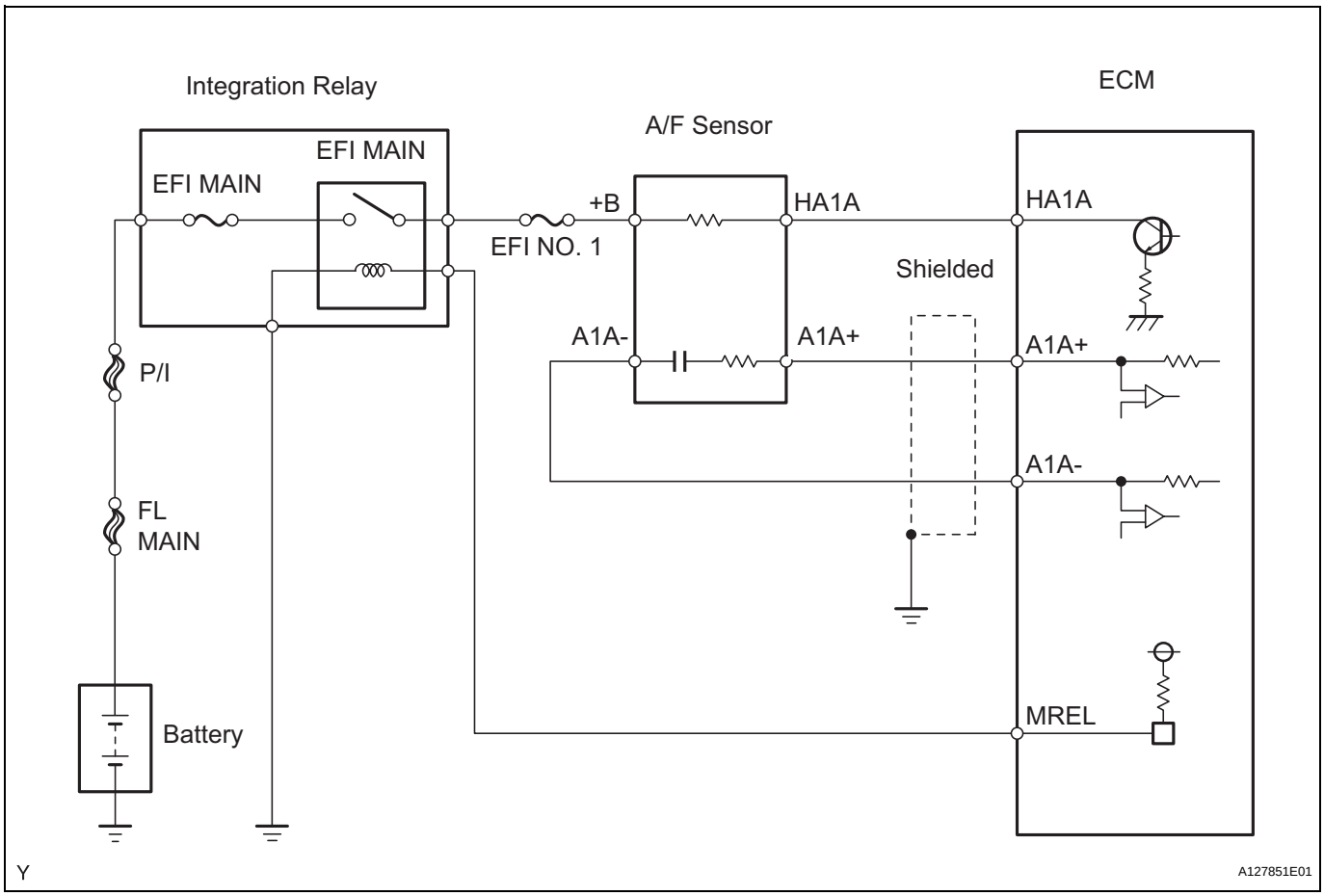

INSPECTION PROCEDURE

HINT:
Intelligent tester only:
Malfunctioning areas can be identified by performing the A/F CONTROL function provided in the ACTIVE TEST. The A/F CONTROL function can help to determine whether the Air-Fuel Ratio (A/F) sensor, Heated Oxygen (HO2) sensor and other potential trouble areas are malfunctioning.
The following instructions describe how to conduct the A/F CONTROL operation using the intelligent tester.
(a) Connect the intelligent tester to the DLC3.
(b) Start the engine and turn the tester ON.
(c) Warm up the engine at an engine speed of 2,500 rpm for approximately 90 seconds.
(d) On the tester, select the following menu items: DIAGNOSIS / ENHANCED OBD II / ACTIVE TEST / A/F CONTROL.
(e) Perform the A/F CONTROL operation with the engine idling (press the RIGHT or LEFT button to change the fuel injection volume).
(f) Monitor the voltage outputs of the A/F and HO2 sensors (AFS B1 S1 and O2S B1 S2) displayed on the tester.
HINT:

- The A/F CONTROL operation lowers the fuel injection volume by 12.5 % or increases the injection volume by 25 %.

- The sensors react in accordance with increases and decreases in the fuel injection volume.

Standard

Tester Display (Sensor)	Injection Volumes	Status	Voltages
AFS B1 S1 (A/F)	+25 %	Rich	Less than 3.0
	-12.5 %	Lean	More than 3.35
O2S B1 S2 (HO2)	+25 %	Rich	More than 0.5
	-12.5 %	Lean	Less than 0.4

NOTICE:
The A/F sensor has an output delay of a few seconds and the HO2 sensor has a maximum output delay of approximately 20 seconds.

Case	A/F Sensor (Sensor 1) Output Voltage		HO2 Sensor (Sensor 2) Output Voltage		Main Suspected Trouble Areas
1	Injection Volume +25 % -12.5 %		Injection Volume +25 % -12.5 %		-
	Output Voltage More than 3.35 V Less than 3.0 V		Output Voltage More than 0.5 V Less than 0.4 V		
2	Injection Volume +25 % -12.5 %		Injection Volume +25 % -12.5 %		• A/F sensor • A/F sensor heater • A/F sensor circuit
	Output Voltage Almost no reaction		Output Voltage More than 0.5 V Less than 0.4 V		
3	Injection Volume +25 % -12.5 %		Injection Volume +25 % -12.5 %		• HO2 sensor • HO2 sensor heater • HO2 sensor circuit
	Output Voltage More than 3.35 V Less than 3.0 V		Output Voltage Almost no reaction		
4	Injection volume +25 % -12.5 %		Injection Volume +25 % -12.5 %		• Injector • Fuel pressure • Gas leakage from exhaust system (Air-fuel ratio extremely lean or rich)
	Output Voltage Almost no reaction	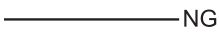	Output voltage Almost no reaction	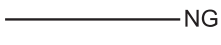	

Following the A/F CONTROL procedure enables technicians to check and graph the voltage outputs of both the A/F and HO2 sensors.
To display the graph, select the following menu items on the tester: DIAGNOSIS / ENHANCED OBD II / ACTIVE TEST / A/F CONTROL / USER DATA / AFS B1 S1 and O2S B1 S2; and press the YES button and then the ENTER button followed by the F4 button.
HINT:

- DTC P2A00 may be set when the air-fuel ratio is stuck rich or lean.
- A low A/F sensor voltage could be caused by a rich air-fuel mixture. Check for conditions that would cause the engine to run rich.
- A high A/F sensor voltage could be caused by a lean air-fuel mixture. Check for conditions that would cause the engine to run lean.

- Read freeze frame data using the intelligent tester. Freeze frame data records the engine condition when malfunctions are detected. When troubleshooting, freeze frame data can help determine if the vehicle was moving or stationary, if the engine was warmed up or not, if the air-fuel ratio was lean or rich, and other data from the time the malfunction occurred.

1	CHECK ANY OTHER DTCS OUTPUT (IN ADDITION TO DTC P2A00)

(a) Connect the intelligent tester to the DLC3.
(b) Turn the ignition switch ON.
(c) Turn the tester ON.
(d) Select the following menu items: DIAGNOSIS / ENHANCED OBD II / DTC INFO / CURRENT CODES.
(e) Read DTCs.

Result

Display (DTC Output)	Proceed To
P2A00	A
P2A00 and other DTCs	B

If any DTCs relating to the A/F sensor (DTCs for the A/F sensor heater or A/F sensor admittance) are output, troubleshoot those DTCs first.

B → GO TO DTC CHART

A

2	INSPECT AIR-FUEL RATIO SENSOR (HEATER RESISTANCE) (See page ES-83)

NG → REPLACE AIR-FUEL RATIO SENSOR

OK

3	CHECK HARNESS AND CONNECTOR (ECM - AIR-FUEL RATIO SENSOR) (See page ES-310)

NG → REPAIR OR REPLACE HARNESS OR CONNECTOR

OK

4	PERFORM CONFIRMATION DRIVING PATTERN

NEXT

5	CHECK WHETHER DTC OUTPUT RECURS (DTC P2A00)

(a) Connect the intelligent tester to the DLC3.
(b) Turn the ignition switch ON and turn the tester ON.
(c) Select the following menu items: DIAGNOSIS / ENHANCED OBD II / DTC INFO / PENDING CODES.

(d) Read pending DTCs.

Result

Display (DTC Output)	Proceed To
P2A00	A
No output	B

B → CHECK FOR INTERMITTENT PROBLEMS

A

6 REPLACE AIR-FUEL RATIO SENSOR

NEXT

7 PERFORM CONFIRMATION DRIVING PATTERN

NEXT

8 CHECK WHETHER DTC OUTPUT RECURS (DTC P2A00)

(a) Connect the intelligent tester to the DLC3.
(b) Turn the ignition switch ON and turn the tester ON.
(c) Select the following menu items: DIAGNOSIS / ENHANCED OBD II / DTC INFO / PENDING CODES.
(d) Read pending DTCs.

Result

Display (DTC Output)	Proceed To
No output	A
P2A00	B

B → REPLACE ECM

A

END

EVAP System

RELATED DTCS

DTCs	Monitoring Items	See page
P043E	Reference orifice clogged (built into canister pump module)	ES-198
P043F	Reference orifice high-flow (built into canister pump module)	
P0441	• Purge VSV (Vacuum Switching Valve) stuck closed • Purge VSV stuck open • Purge flow	ES-203
P0450	Canister pressure sensor (built into canister pump module) voltage abnormal fluctuation	ES-210
P0451	• Canister pressure sensor (built into canister pump module) noise • Canister pressure sensor (built into canister pump module) signal becomes fixed/flat	
P0452	Canister pressure sensor (built into canister pump module) voltage low	
P0453	Canister pressure sensor (built into canister pump module) voltage high	
P0455	EVAP gross leak	ES-220
P0456	EVAP small leak	
P2401	Leak detection pump stuck OFF (built into canister pump module)	ES-312
P2402	Leak detection pump stuck ON (built into canister pump module)	
P2419	Vent valve stuck closed (built into canister pump module)	ES-318
P2420	Vent valve stuck open (vent) (built into canister pump module)	
P2610	Soak timer (built into ECM)	ES-324

If any EVAP system DTCs are set, the malfunctioning area can be determined using the table below.

DTCs / Malfunctioning Areas	P043E P043F	P0441	P0450	P0451	P0452	P0453	P0455	P0456	P2401 P2402	P2419	P2420
Reference orifice clogged	●								●	●	
Reference orifice high-flow	●								●	●	
Purge VSV stuck open		●					●				
Purge VSV stuck closed		●									
Canister pressure sensor fixed output				●							
Canister pressure sensor noise				●							
Canister pressure sensor low output			●		●						
Canister pressure sensor high output			●			●					
Gross leak		●					●				
Small leak								●			
Leak detection pump stuck OFF	●								●	●	
Leak detection pump stuck ON	●								●	●	
Vent valve stuck closed	●								●	●	
Vent valve stuck open (vent)											●

Y

A106731E11

NOTICE:
If the reference pressure difference between the first and second checks is greater than the specification, all the DTCs relating to the reference pressure (P043E, P043F, P2401, P2402 and P2419) are stored.

ES

DESCRIPTION

Location of EVAP (Evaporative Emission) System:

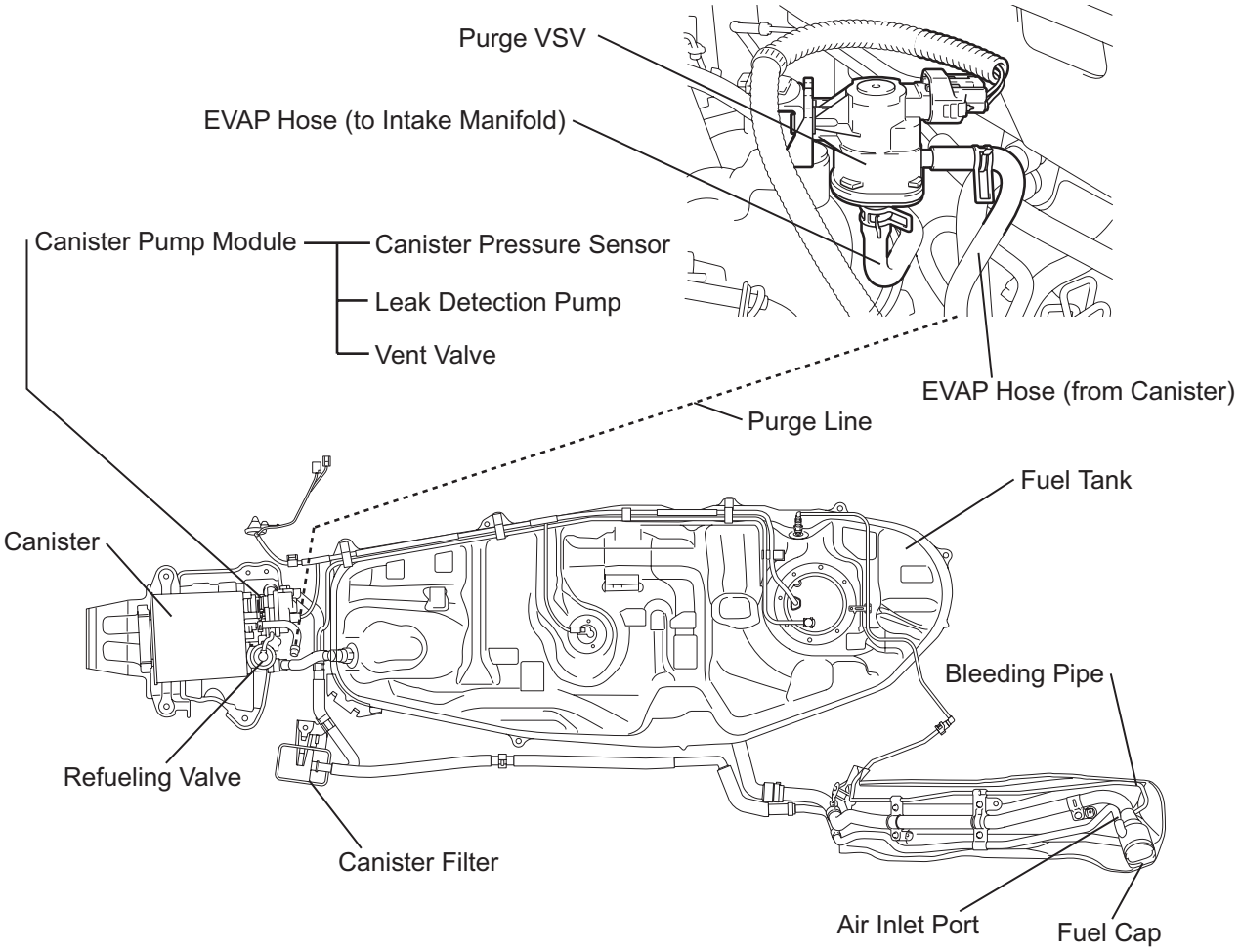

NOTE:

The canister is located near the fuel tank, underneath the body.

A128152E01

EVAP System Circuit:

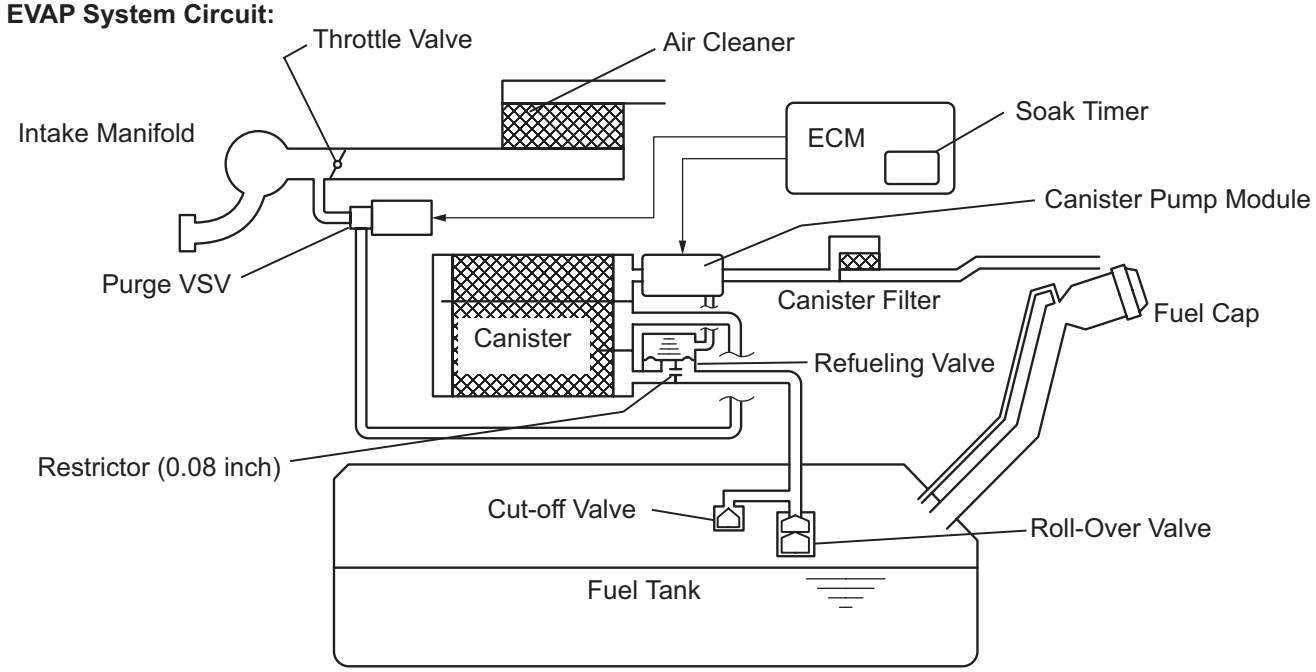

NOTICE:

In this vehicle's EVAP system, turning ON the vent valve does not seal off the EVAP system. To check for leaks in the EVAP system, disconnect the air inlet vent hose and apply pressure from the atmospheric side of the canister.

While the engine is running, if a predetermined condition (closed-loop, etc.) is met, the purge VSV is opened by the ECM and stored fuel vapors in the canister are purged into the intake manifold. The ECM changes the duty cycle ratio of the purge VSV to control purge flow volume.

The purge flow volume is also determined by the intake manifold pressure. Atmospheric pressure is allowed into the canister through the vent valve to ensure that the purge flow is maintained when the negative pressure (vacuum) is applied to the canister.

The following two monitors run to confirm the appropriate EVAP system operation.

1. Key-off monitor

This monitor checks for EVAP (Evaporative Emission) system leaks and canister pump module malfunctions. The monitor starts 5 hours* after the ignition switch is turned OFF. At least 5 hours are required for the fuel to cool down to stabilize the EVAP pressure, thus making the EVAP system monitor more accurate.

The leak detection pump creates negative pressure (vacuum) in the EVAP system and the pressure is measured. Finally, the ECM monitors for leaks from the EVAP system, and malfunctions in both the canister pump module and purge VSV, based on the EVAP pressure.

HINT:

*: If the engine coolant temperature is not below 35°C (95°F) 5 hours after the ignition switch is turned OFF, the monitor check starts 2 hours later. If it is still not below 35°C (95°F) 7 hours after the ignition switch is turned OFF, the monitor check starts 2.5 hours later.

2. Purge flow monitor

The purge flow monitor consists of the two monitors. The 1st monitor is conducted every time and the 2nd monitor is activated if necessary.

- The 1st monitor
  While the engine is running and the purge VSV (Vacuum Switching Valve) is ON (open), the ECM monitors the purge flow by measuring the EVAP pressure change. If negative pressure is not created, the ECM begins the 2nd monitor.

- The 2nd monitor
  The vent valve is turned OFF (open) and the EVAP pressure is measured. If the variation in the pressure is less than 0.5 kPa-g (3.75 mmHg-g), the ECM interprets this as the purge VSV being stuck closed, and illuminates the MIL and sets DTC P0441 (2 trip detection logic).

Atmospheric pressure check:
In order to ensure reliable malfunction detection, the variation between the atmospheric pressures, before and after conduction of the purge flow monitor, is measured by the ECM.

EVAP Purge Flow:

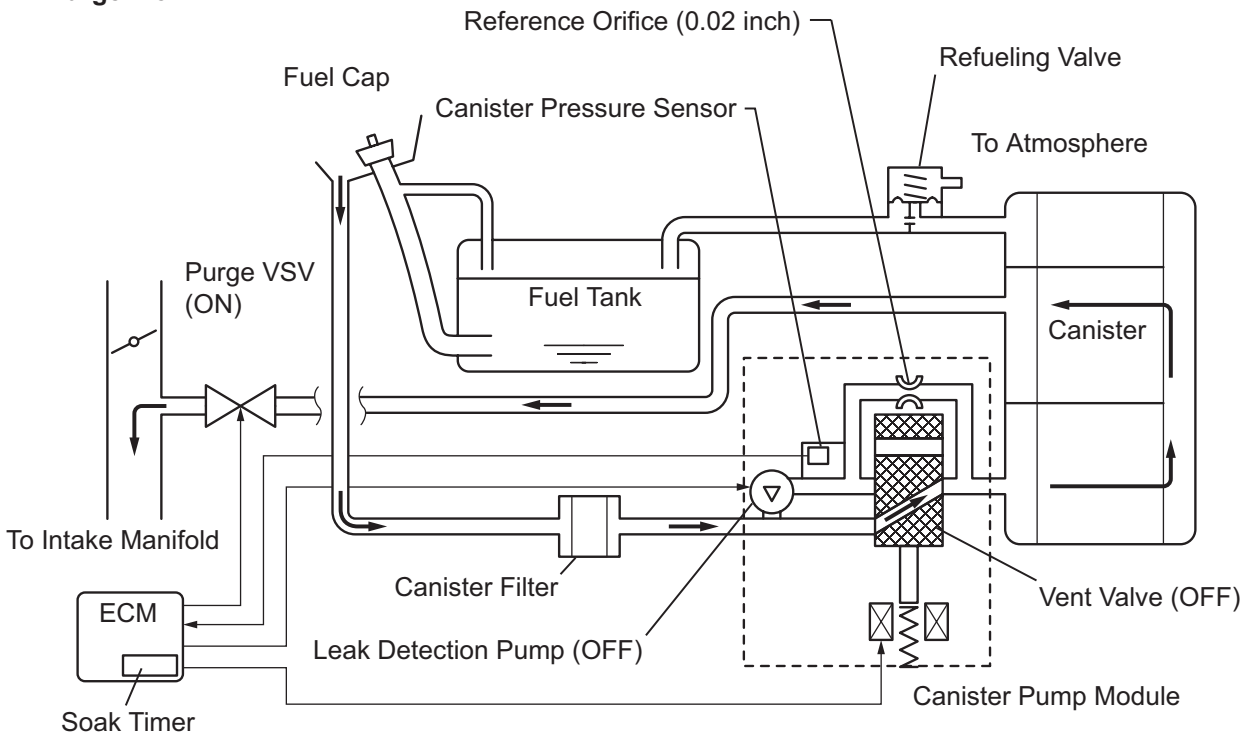

Components	Operations
Canister	Contains activated charcoal to absorb EVAP (Evaporative Emissions) generated in fuel tank.
Cut-off valve	Located in fuel tank. Valve floats and closes when fuel tank 100 % full.
Purge VSV (Vacuum Switching Valve)	Opens or closes line between canister and intake manifold. ECM uses purge VSV to control EVAP purge flow. In order to discharge EVAP absorbed by canister to intake manifold, ECM opens purge VSV. EVAP discharge volume to intake manifold controlled by purge VSV duty cycle ratio (current-carrying time) (Open: ON; Closed: OFF).
Refueling valve	Controls EVAP pressure from fuel tank to canister. Valve consists of diaphragm, spring and restrictor (diameter: 0.08 inch). When fuel vapor and pressure inside fuel tank increase, valve opens. While EVAP purged, valve closes and restrictor prevents large amount of vacuum from affecting pressure in fuel tank. Valve opened while refueling.
Roll-over valve	Located in fuel tank. Valve closed by its own weight when vehicle overturns to prevent fuel from spilling out.
Soak timer	Built into ECM. To ensure accurate EVAP monitor, measures 5 hours (+-15 min) after ignition switch turned OFF. This allows fuel to cool down, stabilizing EVAP pressure. When approximately 5 hours elapsed, ECM activates (refer to fig. 3).
Canister pump module	Consists of (a) to (d) below. Canister pump module cannot be disassembled.
(a) Vent valve	Vents and closes EVAP system. When ECM turns valve ON, EVAP system closed. When ECM turns valve OFF, EVAP system vented. Negative pressure (vacuum) created in EVAP system to check for EVAP leaks by closing purge VSV, turning on vent valve (closed) and operating leak detection pump (refer to fig. 1).
(b) Canister pressure sensor	Indicates pressure as voltages. ECM supplies regulated 5 V to canister pressure sensor, and uses feedback from sensor to monitor EVAP system pressure (refer to fig. 2).

Components	Operations
(c) Leak detection pump	Creates negative pressure (vacuum) in EVAP system for leak check.
(d) Reference orifice	Has opening with 0.02 inch diameter. Vacuum produced through orifice by closing purge VSV, turning off vent valve and operating leak detection pump, to monitor reference pressure. Reference pressure indicates small leak of EVAP.

Canister Pump Module (fig. 1):

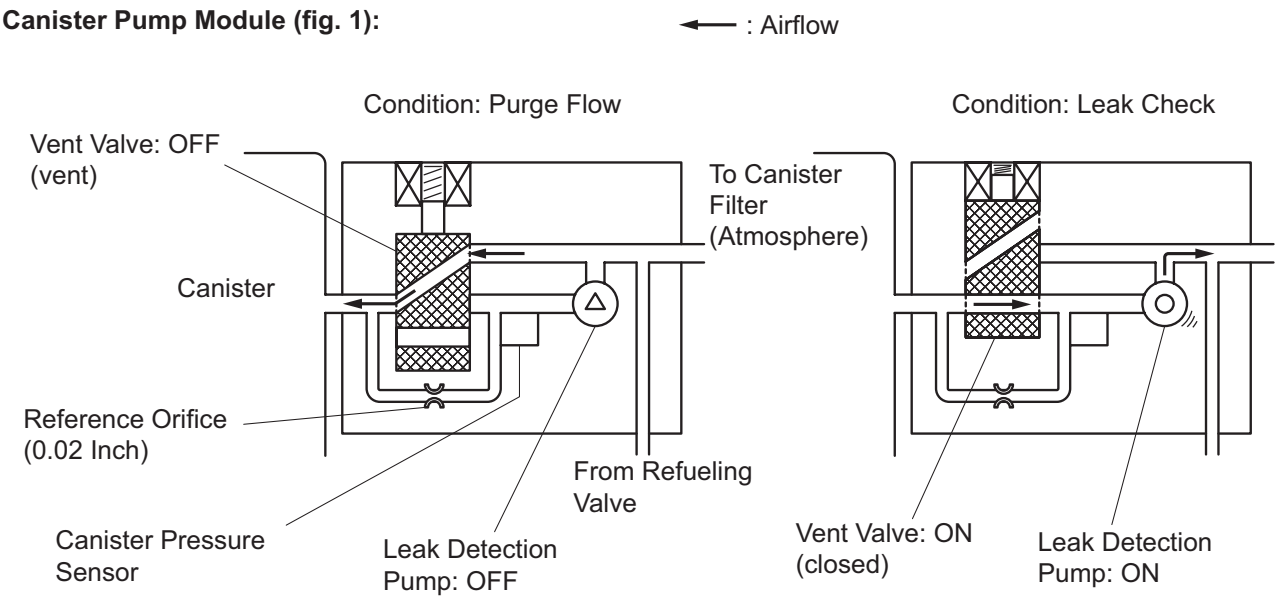

Y

A115902E02

Canister Pressure Sensor Specification (fig. 2):

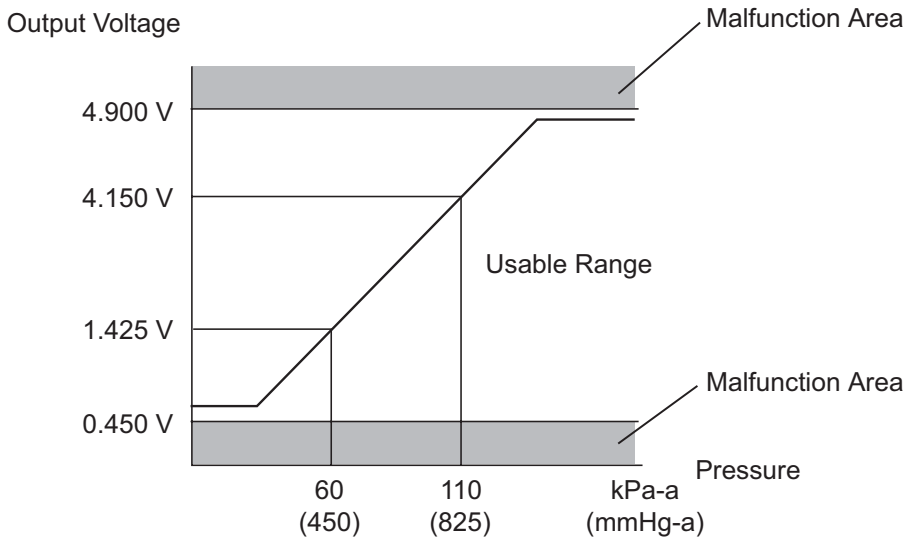

HINT:

Standard atmospheric pressure is 101.3 kPa-a (760 mmHg-a)

A115543E06

Soak Timer Circuit (fig. 3):

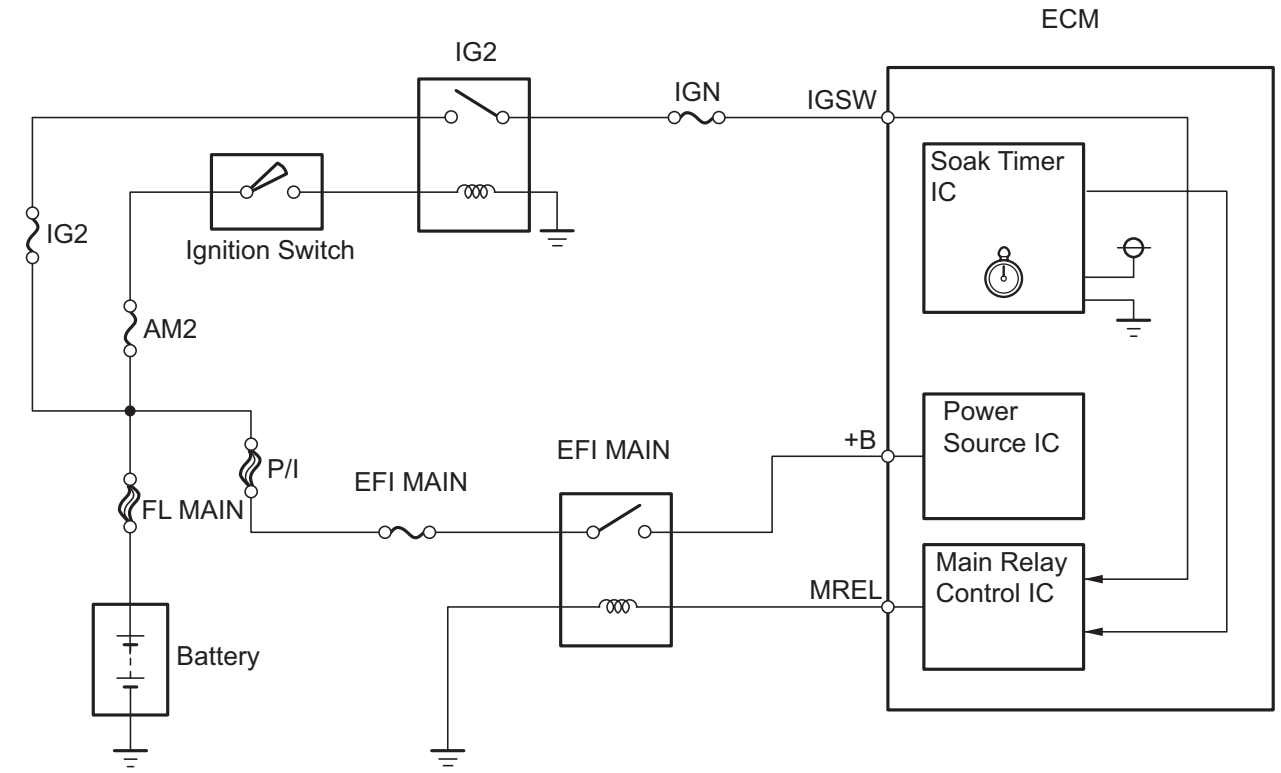

WIRING DIAGRAM

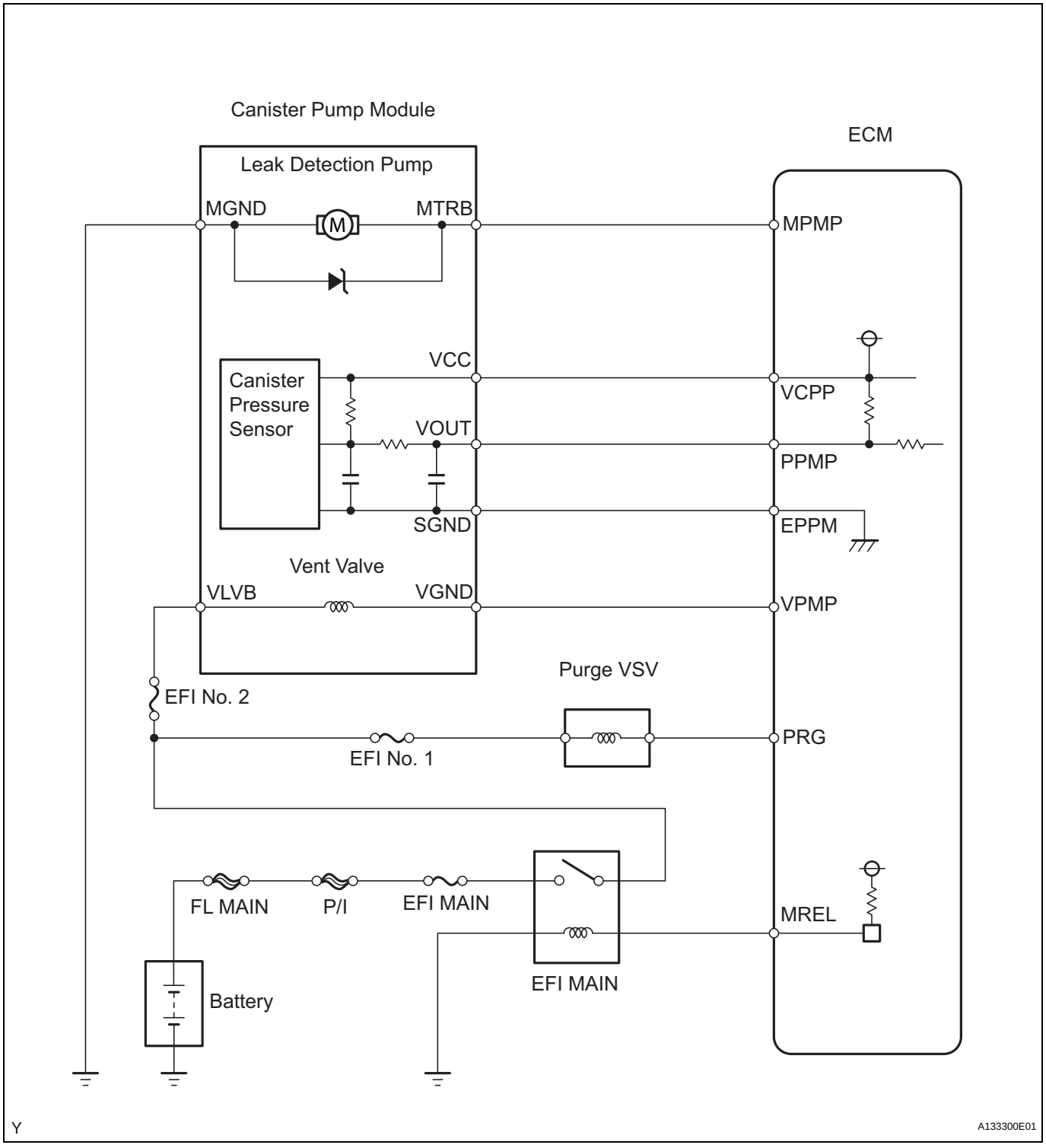

INSPECTION PROCEDURE

NOTICE:

The intelligent tester is required to conduct the following diagnostic troubleshooting procedure.

HINT:

- Using intelligent tester monitor results enables the EVAP (Evaporative Emission) system to be confirmed.

- Read freeze frame data using the intelligent tester. Freeze frame data records the engine condition when malfunctions are detected. When troubleshooting, freeze frame data can help determine if the vehicle was moving or stationary, if the engine was warmed up or not, if the air-fuel ratio was lean or rich, and other data from the time the malfunction occurred.

1	**CONFIRM DTC**

(a) Turn the ignition switch OFF and wait for 10 seconds.
(b) Turn the ignition switch ON.
(c) Turn the ignition switch OFF and wait for 10 seconds.
(d) Connect an intelligent tester to the DLC3.
(e) Turn the ignition switch ON and turn the tester ON.
(f) Select the following menu items: DIAGNOSIS / ENHANCED OBD II / DTC INFO / CURRENT CODES.
(g) Confirm DTCs and freeze frame data.
If any EVAP system DTCs are set, the malfunctioning area can be determined using the table below.
NOTICE:
If the reference pressure difference between the first and second checks is greater than the specification, all the DTCs relating to the reference pressure (P043E, P043F, P2401, P2402 and P2419) are stored.

DTCs / Malfunctioning Areas	P043E P043F	P0441	P0450	P0451	P0452	P0453	P0455	P0456	P2401 P2402	P2419	P2420
Reference orifice clogged	●								●	●	
Reference orifice high-flow	●								●	●	
Purge VSV stuck open		●					●				
Purge VSV stuck closed		●									
Canister pressure sensor fixed output				●							
Canister pressure sensor noise				●							
Canister pressure sensor low output			●		●						
Canister pressure sensor high output			●			●					
Gross leak		●					●				
Small leak								●			
Leak detection pump stuck OFF	●								●	●	
Leak detection pump stuck ON	●								●	●	
Vent valve stuck closed	●								●	●	
Vent valve stuck open (vent)											●

Y

A106731E11

NEXT

2	PERFORM EVAP SYSTEM CHECK (AUTO OPERATION)

NOTICE:

- **The EVAP SYSTEM CHECK (AUTO OPERATION) consists of 5 steps performed automatically by the intelligent tester. It takes a maximum of approximately 18 minutes.**
- **Do not perform the EVAP SYSTEM CHECK when the fuel tank is more than 90% full because the cut-off valve may be closed, making the fuel tank leak check unavailable.**
- **Do not run the engine during this operation.**
- **When the temperature of the fuel is 35°C (95°F) or more, a large amount of vapor forms and any check results become inaccurate. When performing the EVAP SYSTEM CHECK, keep the temperature below 35°C (95°F).**

(a) Clear DTCs (see page ES-35).

(b) On the tester, select the following menu items: DIAGNOSIS / ENHANCED OBD II / SYSTEM CHECK / EVAP SYS CHECK / AUTO OPERATION.
(c) After the EVAP SYSTEM CHECK is completed, check for pending DTCs by selecting the following menu items: DIAGNOSIS / ENHANCED OBD II / DTC INFO / PENDING CODES.
HINT:
If no pending DTCs are displayed, perform the MONITOR CONFIRMATION (see "Diagnostic Help" menu). After this confirmation, check for pending DTCs. If no DTCs are displayed, the EVAP system is normal.

ES

NEXT

3	PERFORM EVAP SYSTEM CHECK (MANUAL OPERATION)

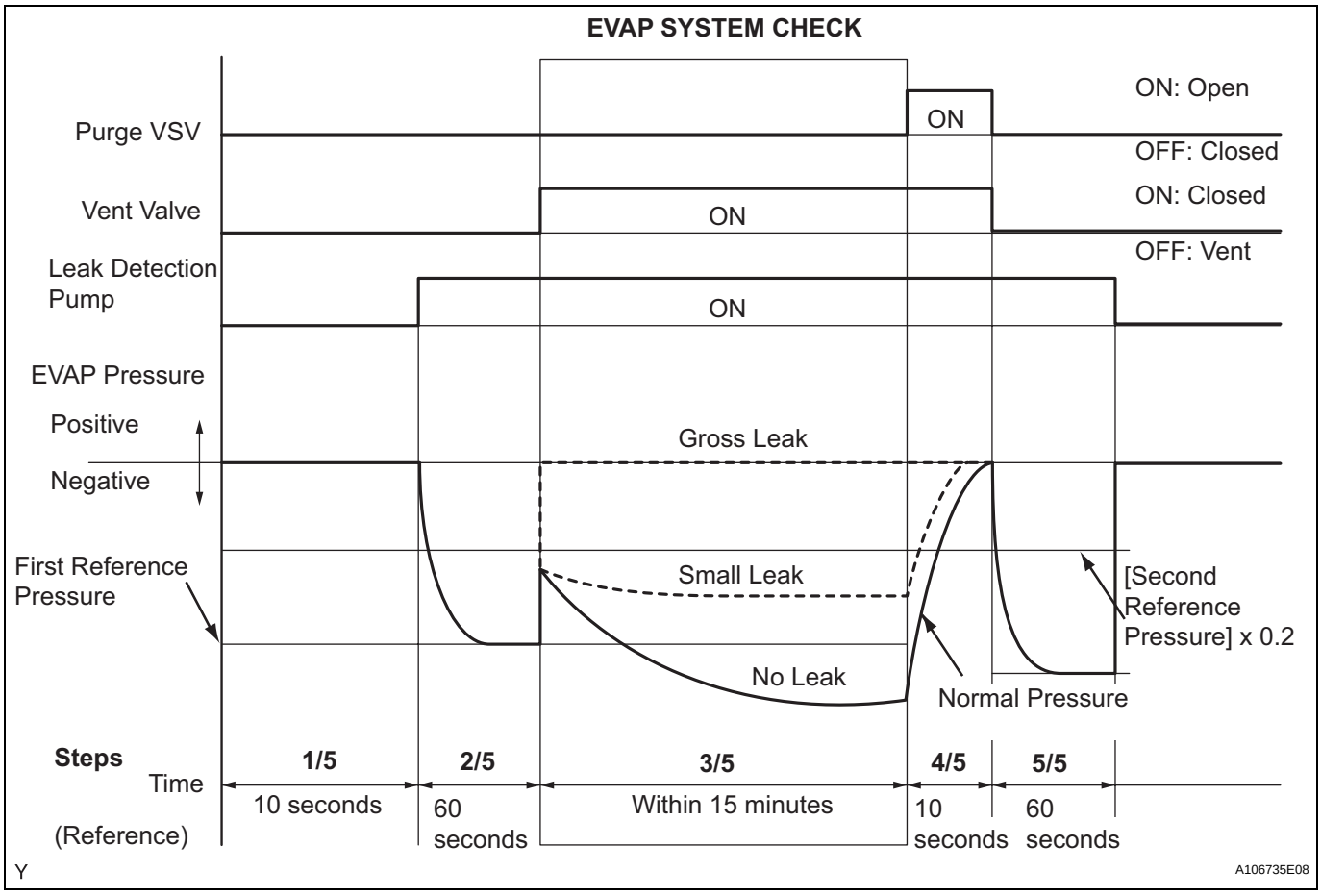

NOTICE:

- **In the EVAP SYSTEM CHECK (MANUAL OPERATION), perform the series of 5 EVAP SYSTEM CHECK steps manually using the intelligent tester.**
- **Do not perform the EVAP SYSTEM CHECK when the fuel tank is more than 90% full because the cut-off valve may be closed, making the fuel tank leak check unavailable.**
- **Do not run the engine during this operation.**

- **When the temperature of the fuel is 35°C (95°F) or more, a large amount of vapor forms and any check results become inaccurate. When performing the EVAP SYSTEM CHECK, keep the temperature below 35°C (95°F).**

(a) Clear DTCs (See page ES-35).
(b) Select the following menu items: DIAGNOSIS / ENHANCED OBD II / SYSTEM CHECK / EVAP SYS CHECK / MANUAL OPERATION.

NEXT

4	PERFORM EVAP SYSTEM CHECK (STEP 1/5)

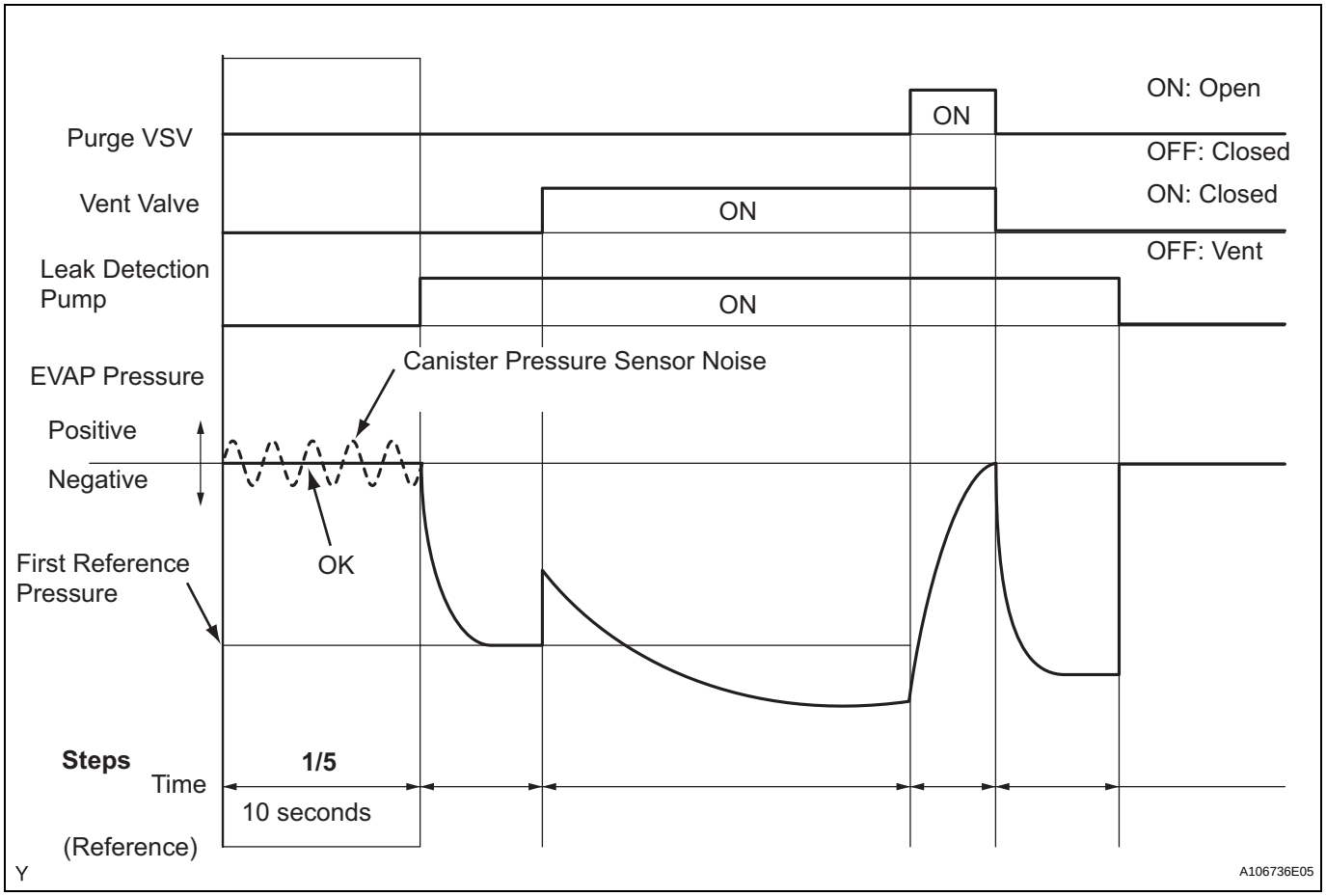

(a) Check the EVAP pressure in step 1/5.

Result

DTCs*	Test Results	Suspected Trouble Areas	Proceed To
-	Virtually no variation in EVAP pressure	Not yet determined	A
P0451	EVAP pressure fluctuates by +-0.3 kPa-g (2.25 mmHg-g) or more	Canister pressure sensor noise	B

*: These DTCs are already present in the ECM when the vehicle arrives and are confirmed in the "CONFIRM DTC" procedures above.

B → Go to step 29

A

5	PERFORM EVAP SYSTEM CHECK (STEP 1/5 TO 2/5)

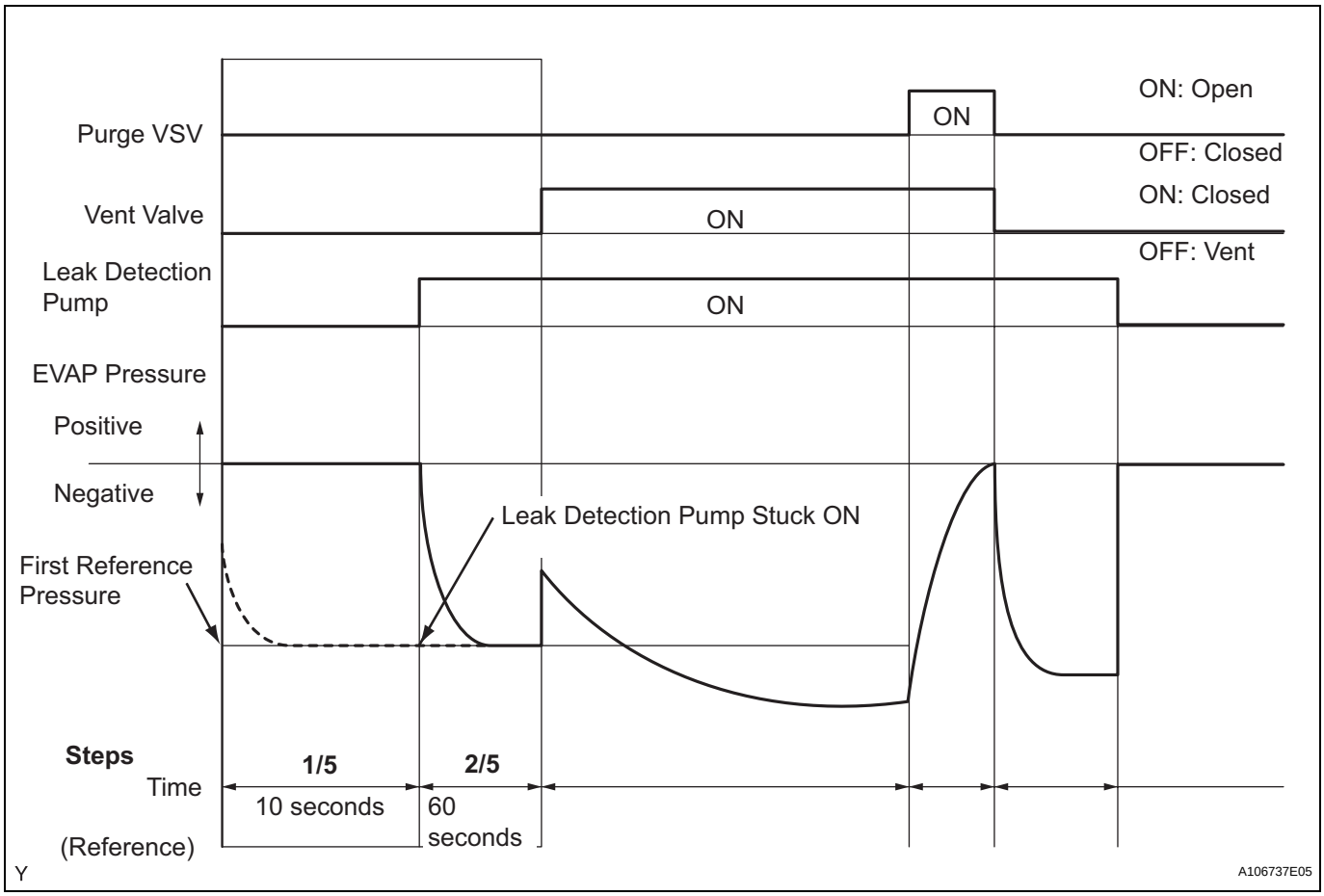

(a) Check the EVAP pressure in steps 1/5 and 2/5.

Result

DTCs*	Test Results	Suspected Trouble Areas	Proceed To
-	Virtually no variation in EVAP pressure during step 1/5. Then decreases to reference pressure	Not yet determined	A
P2402	Small difference between EVAP pressures during steps 1/5 and 2/5	Leak detection pump stuck ON	B

*: These DTCs are already present in the ECM when the vehicle arrives and are confirmed in the "CONFIRM DTC" procedures above.
HINT:
The first reference pressure is the value determined in step 2/5.

B → Go to step 22

A

6	PERFORM EVAP SYSTEM CHECK (STEP 2/5)

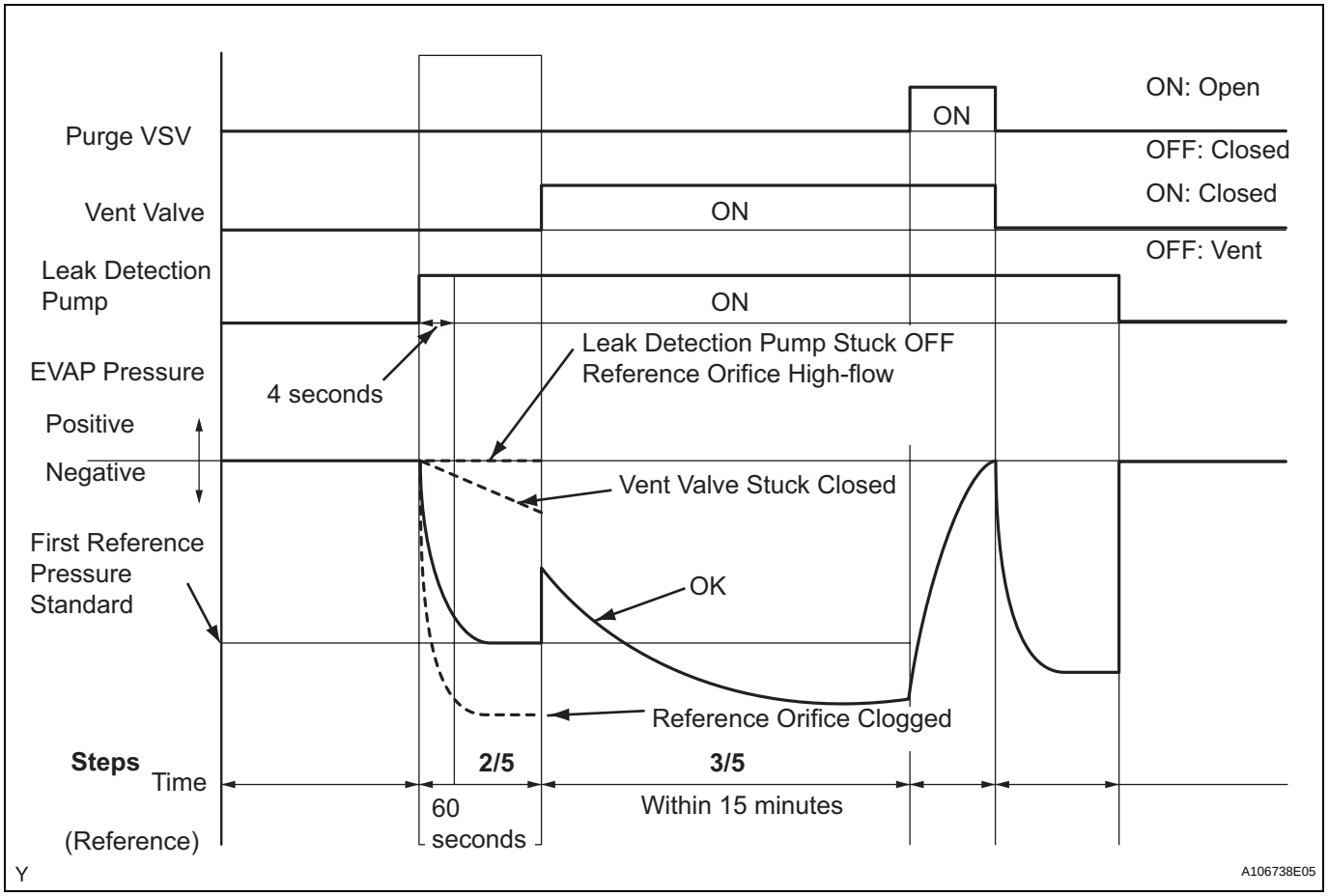

HINT:
Make a note of the pressures checked in steps (a) and (b) below.
(a) Check the EVAP pressure 4 seconds after the leak detection pump is activated*.
*: The leak detection pump begins to operate as step 1/5 finishes and step 2/5 starts.
(b) Check the EVAP pressure again when it has stabilized. This pressure is the reference pressure.

Result

DTCs*	Test Results	Suspected Trouble Areas	Proceed To
-	EVAP pressure in step (b) between -4.85 kPa-g and -1.057 kPa-g (-36.4 mmHg-g and -7.93 mmHg-g)	Not yet determined	A
P043F and P2401	EVAP pressure in step (b) -1.057 kPa-g (-7.93 mmHg-g) or more	• Reference orifice high-flow • Leak detection pump stuck OFF	B
P043E	EVAP pressure in step (b) below -4.85 kPa-g (-36.4 mmHg-g)	Reference orifice clogged	C
P2419	EVAP pressure in step (a) more than -1.057 kPa-g (-7.93 mmHg-g)	Vent valve stuck closed	D

*: These DTCs are already present in the ECM when the vehicle arrives and are confirmed in the "CONFIRM DTC" procedures above.

B	Go to step 11
C	Go to step 29
D	Go to step 20

A

7	PERFORM EVAP SYSTEM CHECK (STEP 2/5 TO 3/5)

ES

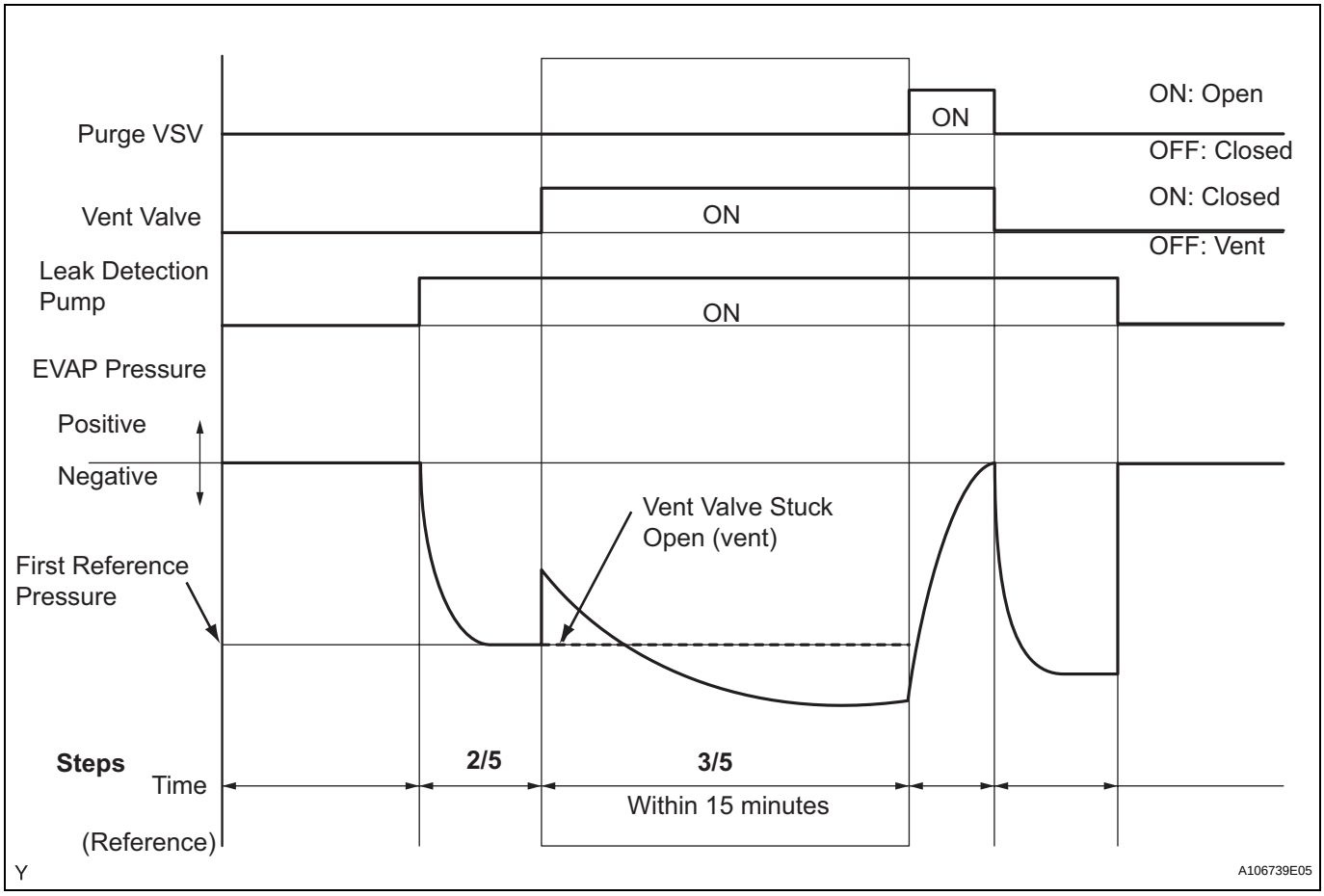

(a) Check the EVAP pressure increase in step 3/5.

Result

DTCs*	Test Results	Suspected Trouble Areas	Proceed To
-	EVAP pressure increases by 0.3 kPa-g (2.25 mmHg-g) or more within 10 seconds of proceeding from step 2/5 to step 3/5	Not yet determined	A
P2420	No variation in EVAP pressure despite proceeding from step 2/5 to step 3/5	Vent valve stuck open (vent)	B
P0451	No variation in EVAP pressure during steps 1/5 through 3/5	Canister pressure sensor malfunction fixed	C

*: These DTCs are already present in the ECM when the vehicle arrives and are confirmed in the "CONFIRM DTC" procedures above.

B	Go to step 19

C	Go to step 29

A

8	PERFORM EVAP SYSTEM CHECK (STEP 3/5)

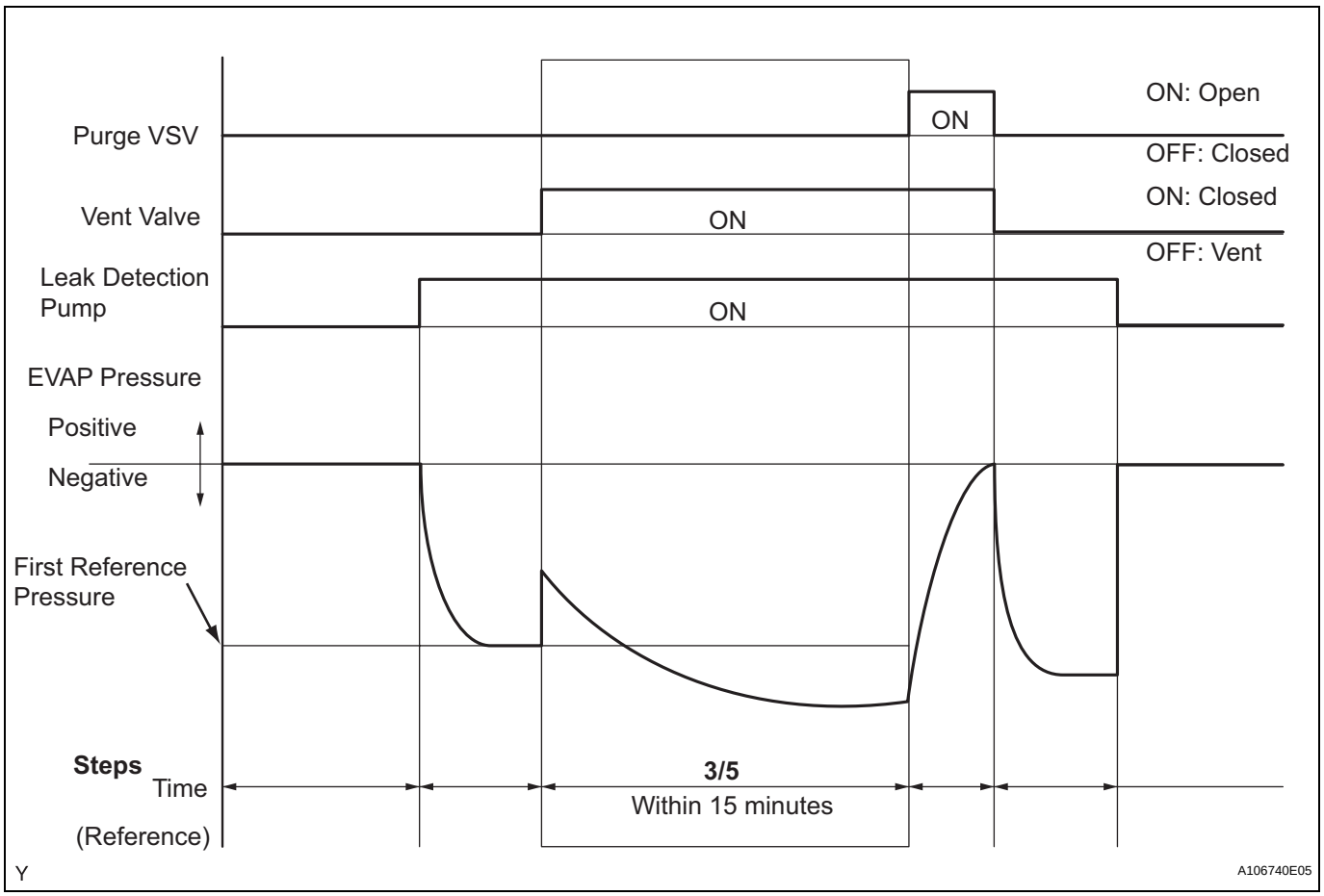

(a) Wait until the EVAP pressure change is less than 0.1 kPa-g (0.75 mmHg-g) for 30 seconds.

(b) Measure the EVAP pressure and record it.
HINT:
A few minutes are required for the EVAP pressure to become saturated. When there is little fuel in the fuel tank, it takes up to 15 minutes.

NEXT

ES

9	PERFORM EVAP SYSTEM CHECK (STEP 4/5)

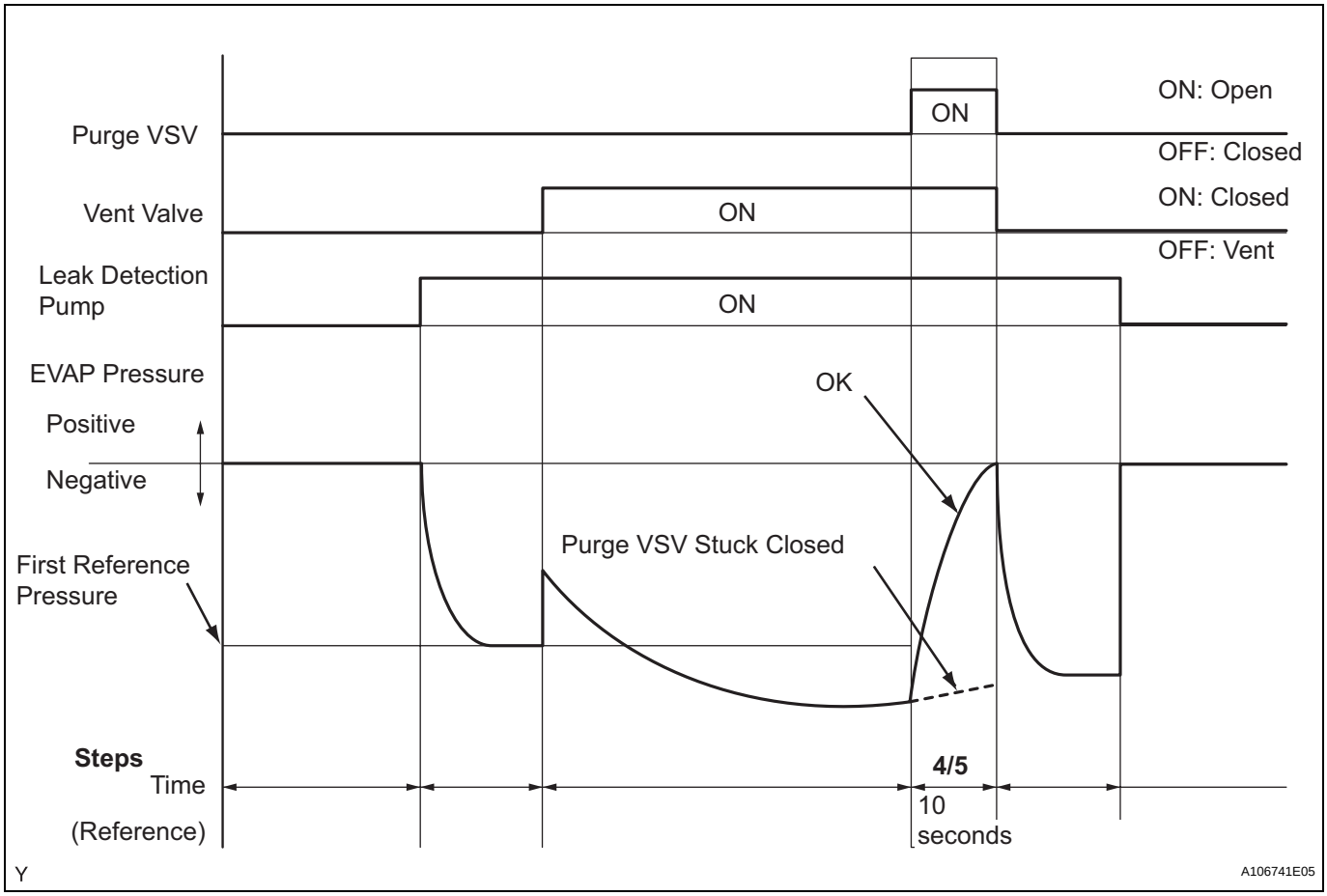

(a) Check the EVAP pressure in step 4/5.

Result

DTCs*	Test Results	Suspected Trouble Areas	Proceed To
-	EVAP pressure increases by 0.3 kPa-g (2.25 mmHg-g) or more within 10 seconds of proceeding from step 3/5 to step 4/5	Not yet determined	A
P0441	EVAP pressure increases by 0.3 kPa-g (2.25 mmHg-g) or more within 10 seconds of proceeding from step 3/5 to step 4/5	Problems in EVAP hose between purge VSV and intake manifold	B
P0441	Variation in EVAP pressure less than 0.3 kPa-g (2.25 mmHg-g) for 10 seconds, after proceeding from step 3/5 to step 4/5	Purge VSV stuck closed	C

*: These DTCs are already present in the ECM when the vehicle arrives and are confirmed in the "CONFIRM DTC" procedures above.

B → Go to step 15

C → Go to step 12

A

10	PERFORM EVAP SYSTEM CHECK (STEP 5/5)

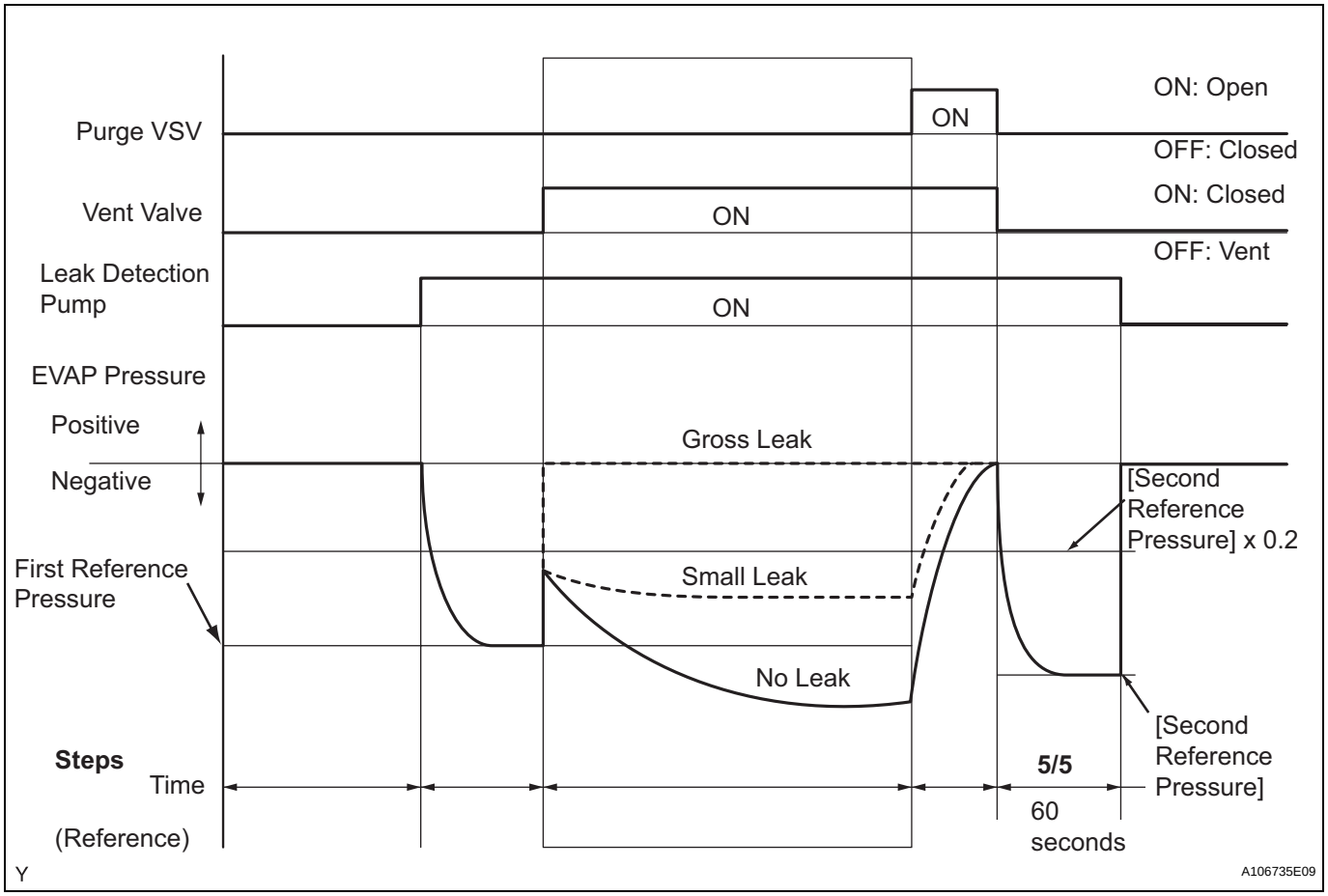

(a) Check the EVAP pressure in step 5/5.
(b) Compare the EVAP pressure in step 3/5 and the second reference pressure (step 5/5).

Result

DTCs*	Test Results	Suspected Trouble Areas	Proceed To
-	EVAP pressure (step 3/5) lower than second reference pressure (step 5/5)	Not yet determined (no leakage from EVAP system)	A
P0441 and P0455	EVAP pressure (step 3/5) higher than [second reference pressure (step 5/5) x 0.2]	• Purge VSV stuck open • EVAP gross leak	B
P0456	EVAP pressure (step 3/5) higher than second reference pressure (step 5/5)	EVAP small leak	B

*: These DTCs are already present in the ECM when the vehicle arrives and are confirmed in the "CONFIRM DTC" procedures above.

A	Go to step 35
B	Go to step 12

11	PERFORM EVAP SYSTEM CHECK (STEP 3/5)

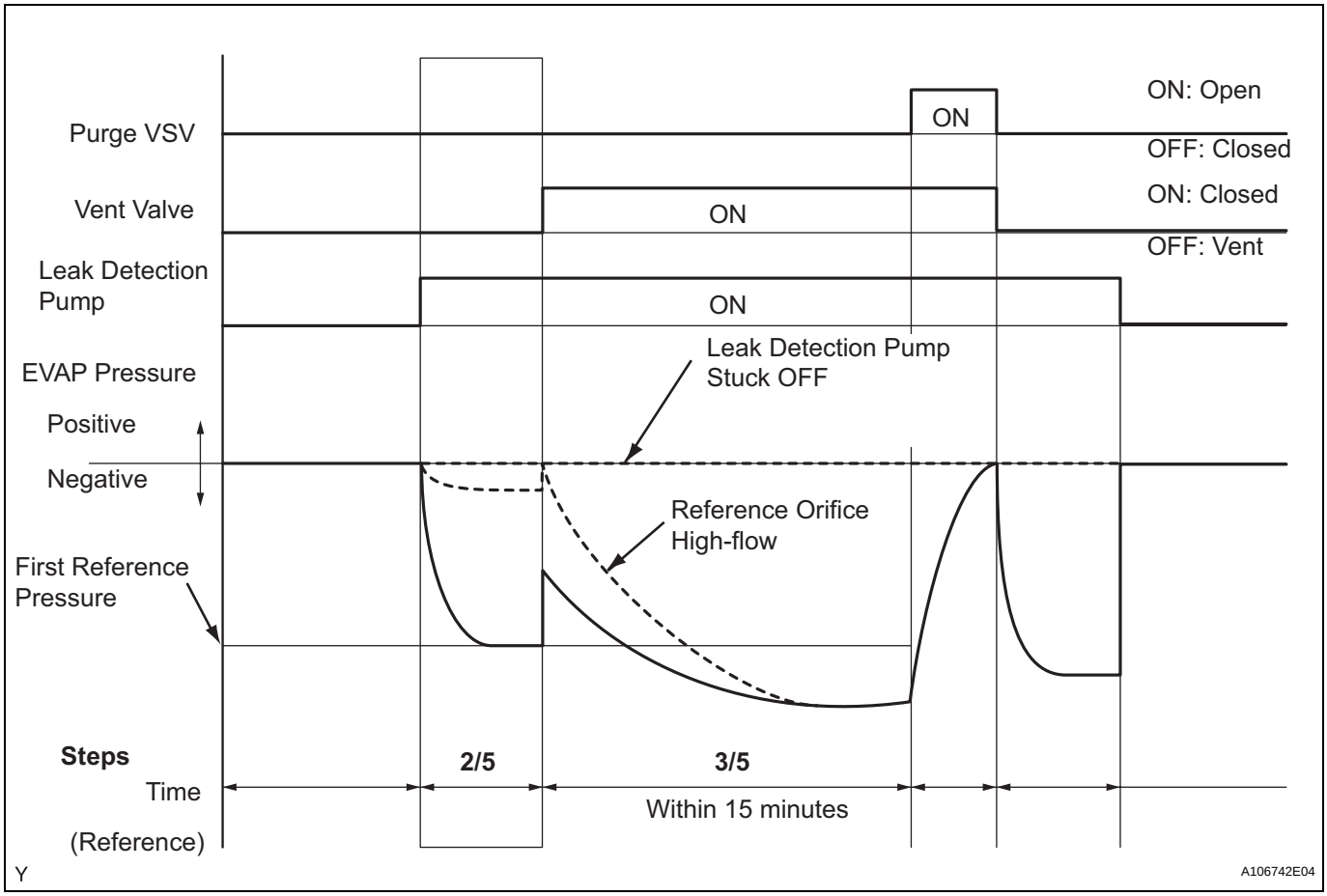

(a) Check the EVAP pressure in step 3/5.

Result

DTCs*	Test Results	Suspected Trouble Areas	Proceed To
P043F	EVAP pressure less than [reference pressure] measured at 2/5	Reference orifice high-flow	A
P2401	EVAP pressure almost same as [reference pressure] measured at 2/5	Leak detection pump stuck OFF	B

*: These DTCs are already present in the ECM when the vehicle arrives and are confirmed in the "CONFIRM DTC" procedures above.
HINT:
The first reference pressure is the value determined in step 2/5.

A	Go to step 29
B	Go to step 22

12 PERFORM ACTIVE TEST USING INTELLIGENT TESTER (PURGE VSV)

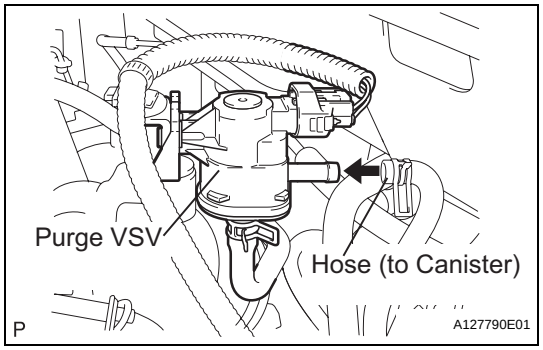

(a) On the intelligent tester, select the following menu items: DIAGNOSIS / ENHANCED OBD II / ACTIVE TEST / EVAP VSV (ALONE).
(b) Disconnect the hose (connected to the canister) from the purge VSV.
(c) Start the engine.
(d) Using the tester, turn off the purge VSV (EVAP VSV: OFF).
(e) Use your finger to confirm that the purge VSV has no suction.
(f) Using the tester, turn on the purge VSV (EVAP VSV: ON).
(g) Use your finger to confirm that the purge VSV has suction.

ES

Result

Test Results	Suspected Trouble Areas	Proceed To
No suction when purge VSV turned OFF, and suction applied when turned ON	Purge VSV normal	A
Suction applied when purge VSV turned OFF	Purge VSV stuck open	B
No suction when purge VSV turned ON	• Purge VSV stuck closed • Problems with EVAP hose between purge VSV and intake manifold	C

(h) Reconnect the hose.

B → **Go to step 14**

C → **Go to step 15**

A

13 CHECK FUEL CAP ASSEMBLY

(a) Check that the fuel cap is correctly installed and confirm the fuel cap meets OEM specifications.
(b) Tighten the fuel cap until a few click sounds are heard.
HINT:
If an EVAP tester is available, check the fuel cap using the tester.
1. Remove the fuel cap and install it onto a fuel cap adapter.
2. Connect an EVAP tester pump hose to the adapter, and pressurize the cap to 3.2 to 3.7 kPa (24 to 28 mmHg) using an EVAP tester pump.
3. Seal the adapter and wait for 2 minutes.
4. Check the pressure. If the pressure is 2 kPa (15 mmHg) or more, the fuel cap is normal.

Result

Test Results	Suspected Trouble Areas	Proceed To
Fuel cap correctly installed	-	A

Test Results	Suspected Trouble Areas	Proceed To
Fuel cap loose	• Fuel cap improperly installed • Defective fuel cap • Fuel cap does not meet OEM specifications	B
Defective fuel cap	-	B
No fuel cap	-	C

(c) Reinstall the fuel cap.

A	Go to step 28
B	Go to step 26
C	Go to step 27

14 INSPECT DUTY VACUUM SWITCHING VALVE (PURGE VSV)

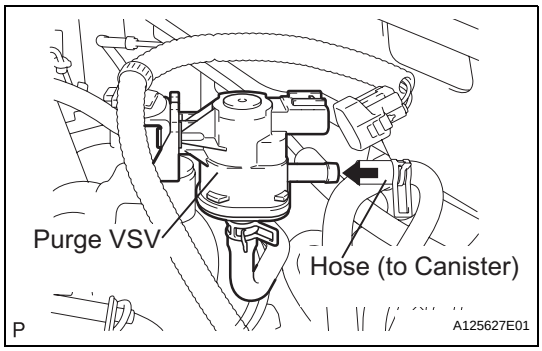

(a) Turn the ignition switch OFF.
(b) Disconnect the B2 purge VSV connector.
(c) Disconnect the hose (connected to the canister) from the purge VSV.
(d) Start the engine.
(e) Use your finger to confirm that the purge VSV has no suction.

Result

Test Results	Suspected Trouble Areas	Proceed To
No suction	ECM	A
Suction applied	Purge VSV	B

(f) Reconnect the purge VSV connector.
(g) Reconnect the hose.

A	Go to step 34
B	Go to step 30

15 CHECK EVAP HOSE (PURGE VSV - INTAKE MANIFOLD)

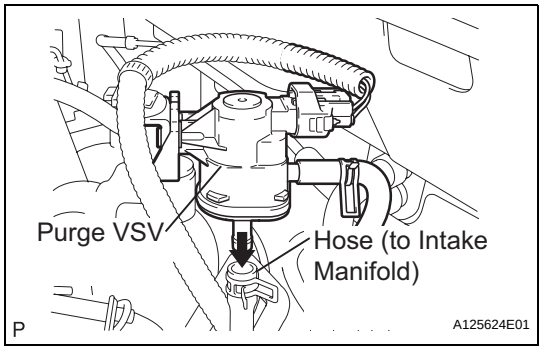

(a) Disconnect the hose (connected to the intake manifold) from the purge VSV.
(b) Start the engine.
(c) Use your finger to confirm that the hose has suction.

Result

Test Results	Suspected Trouble Areas	Proceed To
Suction applied	EVAP hose between purge VSV and intake manifold normal	A
No suction	• Intake manifold port • EVAP hose between purge VSV and intake manifold	B

(d) Reconnect the hose.

B → Go to step 25

A

16 INSPECT DUTY VACUUM SWITCHING VALVE (PURGE VSV)

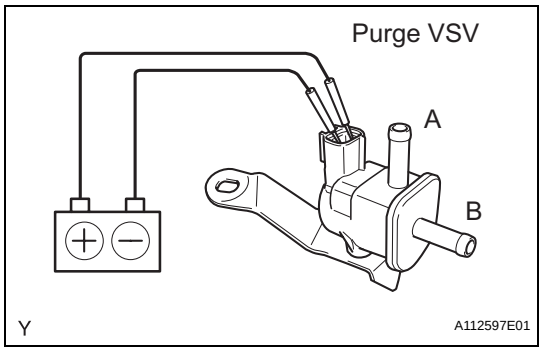

(a) Remove the purge VSV.
(b) Apply the battery voltage to the terminals of the purge VSV.
(c) Using an air gun, confirm that air flows from port A to port B.

Result

Test Results	Suspected Trouble Areas	Proceed To
Air flows	Purge VSV normal	A
No air flow	Purge VSV	B

(d) Install the purge VSV.

B → Go to step 30

A

17 CHECK HARNESS AND CONNECTOR (POWER SOURCE OF PURGE VSV)

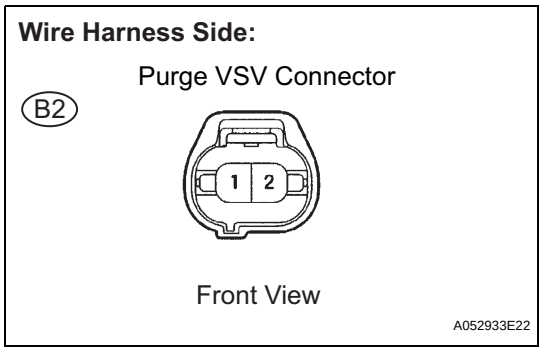

(a) Disconnect the B2 purge VSV connector.
(b) Turn the ignition switch ON.
(c) Measure the voltage between terminal 2 of the purge VSV connector and the body ground.

Result

Test Results	Suspected Trouble Areas	Proceed To
9 to 14 V	Normal	A
Other than result above	Wire harness or connectors between purge VSV and ECM	B

(d) Reconnect the purge VSV connector.

B	Go to step 31

A

18 CHECK HARNESS AND CONNECTOR (PURGE VSV - ECM)

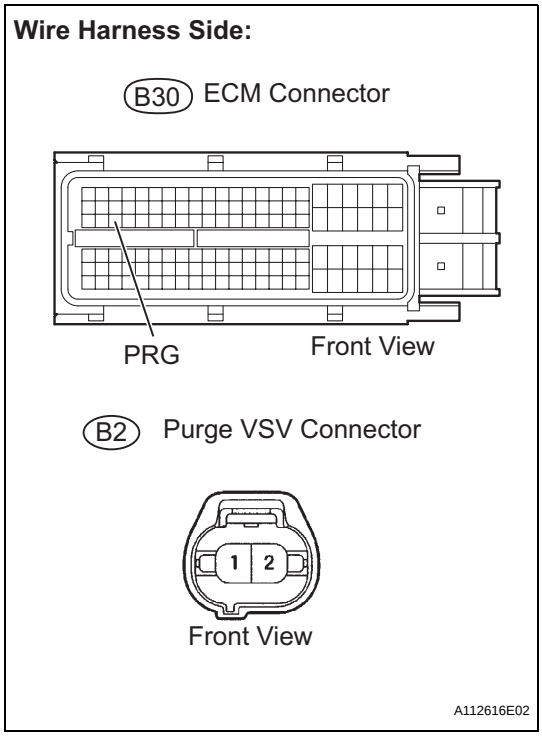

(a) Disconnect the B30 ECM connector and the B2 purge VSV connector.
(b) Measure the resistance.

Standard resistance

Tester Connections	Specified Conditions
B30-49 (PRG) - B2-2 (Purge VSV)	Below 1 Ω
B30-49 (PRG) - Body ground	10 kΩ or higher
B2-2 (Purge VSV) - Body ground	10 kΩ or higher

(c) Reconnect the purge VSV connector.
(d) Reconnect the ECM connector.

OK	Go to step 34
NG	Go to step 31

ES

19 INSPECT CANISTER PUMP MODULE (POWER SOURCE FOR VENT VALVE)

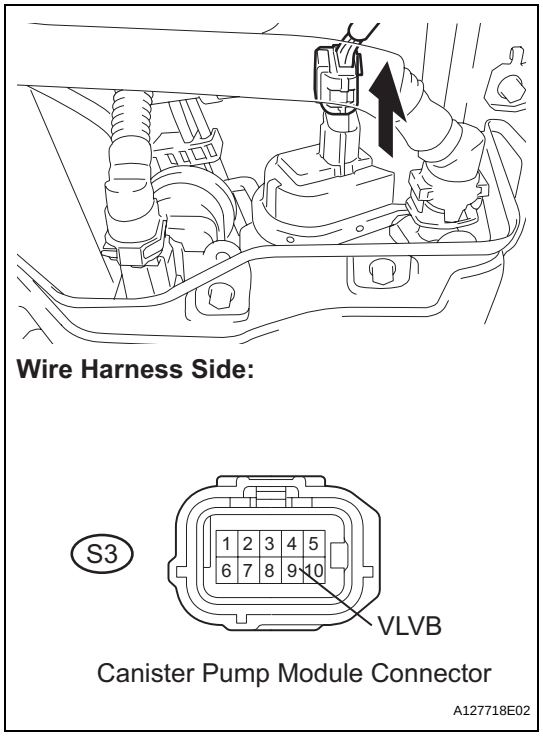

(a) Turn the ignition switch OFF.
(b) Disconnect the S3 canister pump module connector.
(c) Turn the ignition switch ON.
(d) Measure the voltage between VLVB terminal of the canister pump module connector and the body ground.

Result

Test Results	Suspected Trouble Areas	Proceed To
9 to 14 V	1. Wire harness between vent valve and ECM 2. Vent valve 3. ECM	A
Below 3 V	Power source wire harness of vent valve	B

(e) Reconnect the canister pump module connector.

B → Go to step 31

A

20 INSPECT CANISTER PUMP MODULE (VENT VALVE OPERATION)

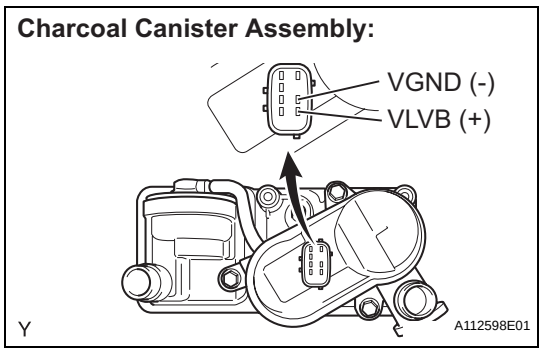

(a) Turn the ignition switch OFF.
(b) Disconnect the S3 canister pump module connector.
(c) Apply the battery voltage to VLVB and VGND terminals of the canister pump module.
(d) Touch the canister pump module to confirm the vent valve operation.

Result

Test Results	Suspected Trouble Areas	Proceed To
Operating	1. Wire harness between vent valve and ECM 2. ECM	A

Test Results	Suspected Trouble Areas	Proceed To
Not operating	Vent valve	B

(e) Reconnect the canister connector.

B → Go to step 29

A

21 CHECK HARNESS AND CONNECTOR (ECM - CANISTER PUMP MODULE)

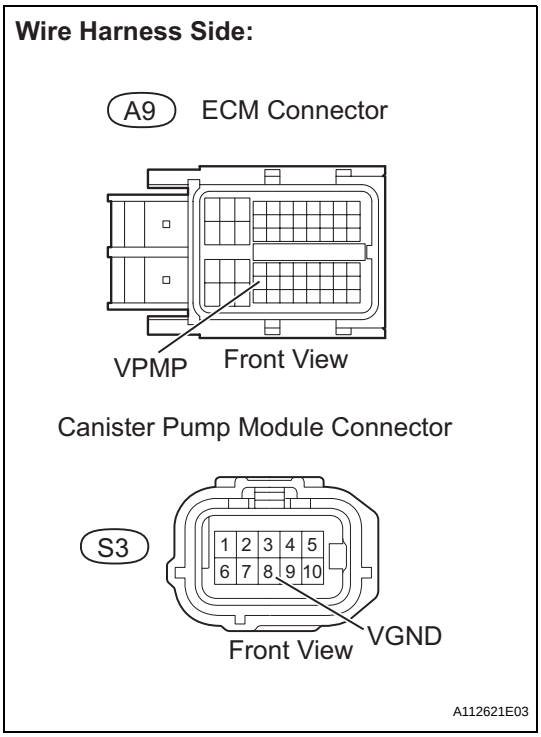

(a) Disconnect the A9 ECM connector.
(b) Disconnect the S3 canister pump module connector.
(c) Measure the resistance between VPMP terminal of the ECM connector and VGND terminal of the canister pump module connector.

Result

Test Results	Suspected Trouble Areas	Proceed To
Below 1 Ω	ECM	A
10 kΩ or higher	Wire harness between ECM and canister pump module	B

(d) Reconnect the ECM connector.
(e) Reconnect the canister pump module connector.

A → Go to step 34

B → Go to step 31

22	PERFORM ACTIVE TEST USING INTELLIGENT TESTER (VACUUM PUMP (ALONE))

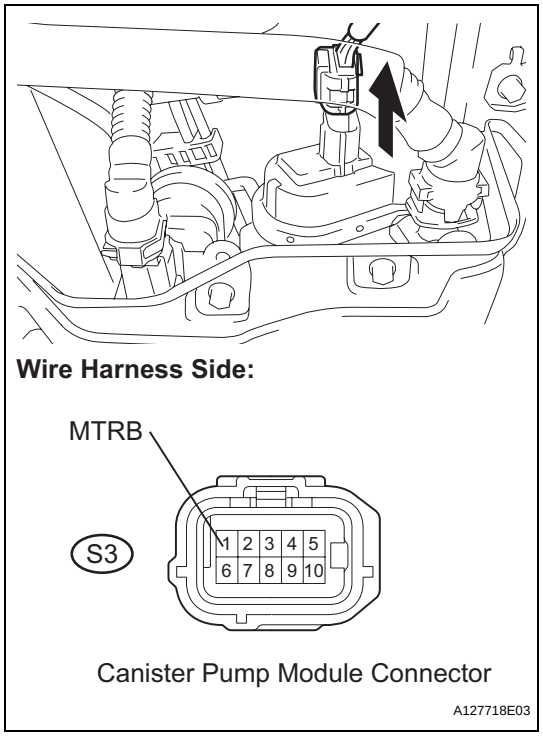

(a) Turn the ignition switch OFF.
(b) Disconnect the S3 canister pump module connector.
(c) Turn the ignition switch ON.
(d) On the intelligent tester, select the following menu items: DIAGNOSIS / ENHANCED OBD II / ACTIVE TEST / VACUUM PUMP.
(e) Measure the voltage between MTRB terminal 1 of the canister pump module connector and the body ground when the leak detection pump is turned ON and OFF using the tester.

ES

Result

Test Results	Suspected Trouble Areas	Proceed To
Below 3 V when OFF 9 to 14 V when ON	1. Wire harness between leak detection pump and body ground 2. Leak detection pump	A
Below 3 V when OFF and ON	1. Wire harness between leak detection pump and ECM 2. ECM	B

B → Go to step 24

A

23	CHECK HARNESS AND CONNECTOR (CANISTER PUMP MODULE - BODY GROUND)

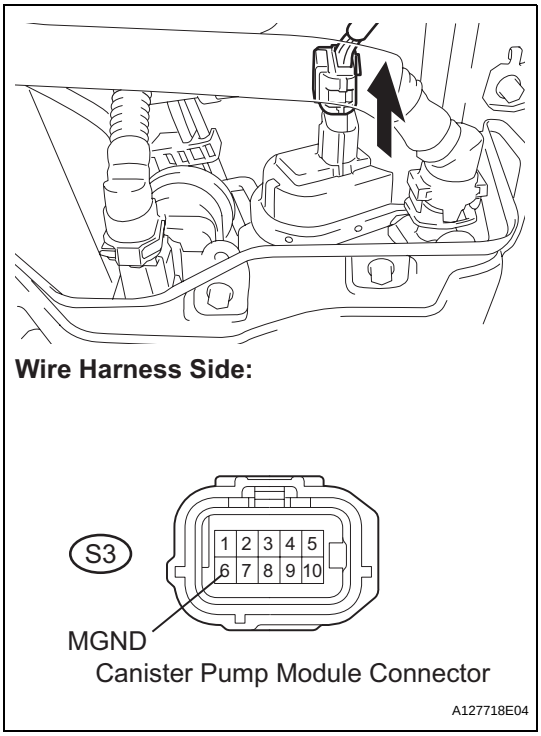

(a) Turn the ignition switch OFF.
(b) Disconnect the S3 canister pump module connector.
(c) Check the resistance between MGND terminal of the canister pump module connector and the body ground.

Result

Test Results	Suspected Trouble Areas	Proceed To
Below 1 Ω	Leak detection pump	A
10 kΩ or higher	Wire harness between canister pump module and body ground	B

(d) Reconnect the canister pump module connector.

A	Go to step 29
B	Go to step 31

24 CHECK HARNESS AND CONNECTOR (ECM - CANISTER PUMP MODULE)

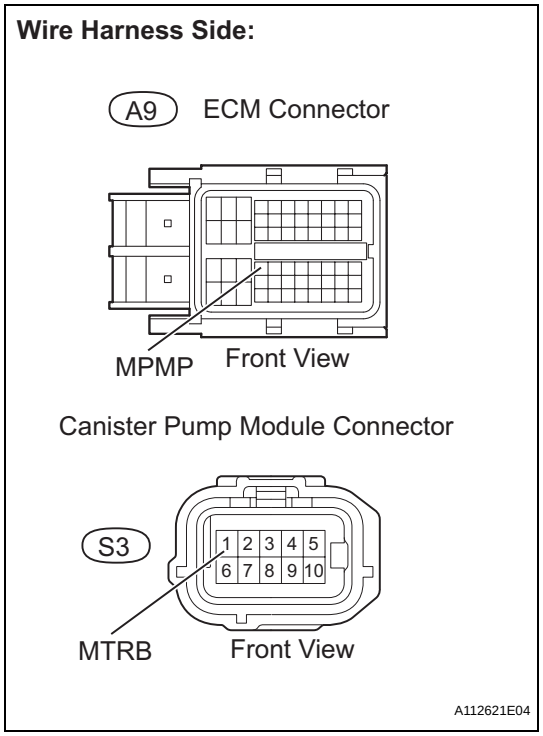

(a) Turn the ignition switch OFF.
(b) Disconnect the S3 canister pump module connector.
(c) Disconnect the A9 ECM connector.
(d) Measure the resistance between MPMP terminal of the ECM connector and MTRB terminal of the canister pump module connector.

ES

Result

Test Results	Suspected Trouble Areas	Proceed To
Below 1 Ω	ECM	A
10 kΩ or higher	Wire harness between ECM and canister pump module	B

(e) Reconnect the canister pump module connector.
(f) Reconnect the ECM connector.

A	Go to step 34
B	Go to step 31

25 INSPECT INTAKE MANIFOLD (EVAP PURGE PORT)

(a) Stop the engine.
(b) Disconnect the EVAP hose from the intake manifold.
(c) Start the engine.
(d) Use your finger to confirm that the port of the intake manifold has suction.

Result

Test Results	Suspected Trouble Areas	Proceed To
Suction applied	EVAP hose between intake manifold and purge VSV	A
No suction	Intake manifold	B

(e) Reconnect the EVAP hose.

A	Go to step 32
B	Go to step 33

26	CORRECTLY REINSTALL OR REPLACE FUEL CAP

HINT:
- When reinstalling the fuel cap, tighten it until a few click sounds are heard.
- When replacing the fuel cap, use a fuel cap that meets OEM specifications, and install it until a few click sounds are heard.

NEXT	Go to step 36

ES

27	REPLACE FUEL CAP

HINT:
When installing the fuel cap, tighten it until a few click sounds are heard.

NEXT	Go to step 36

28	LOCATE EVAP LEAK PART

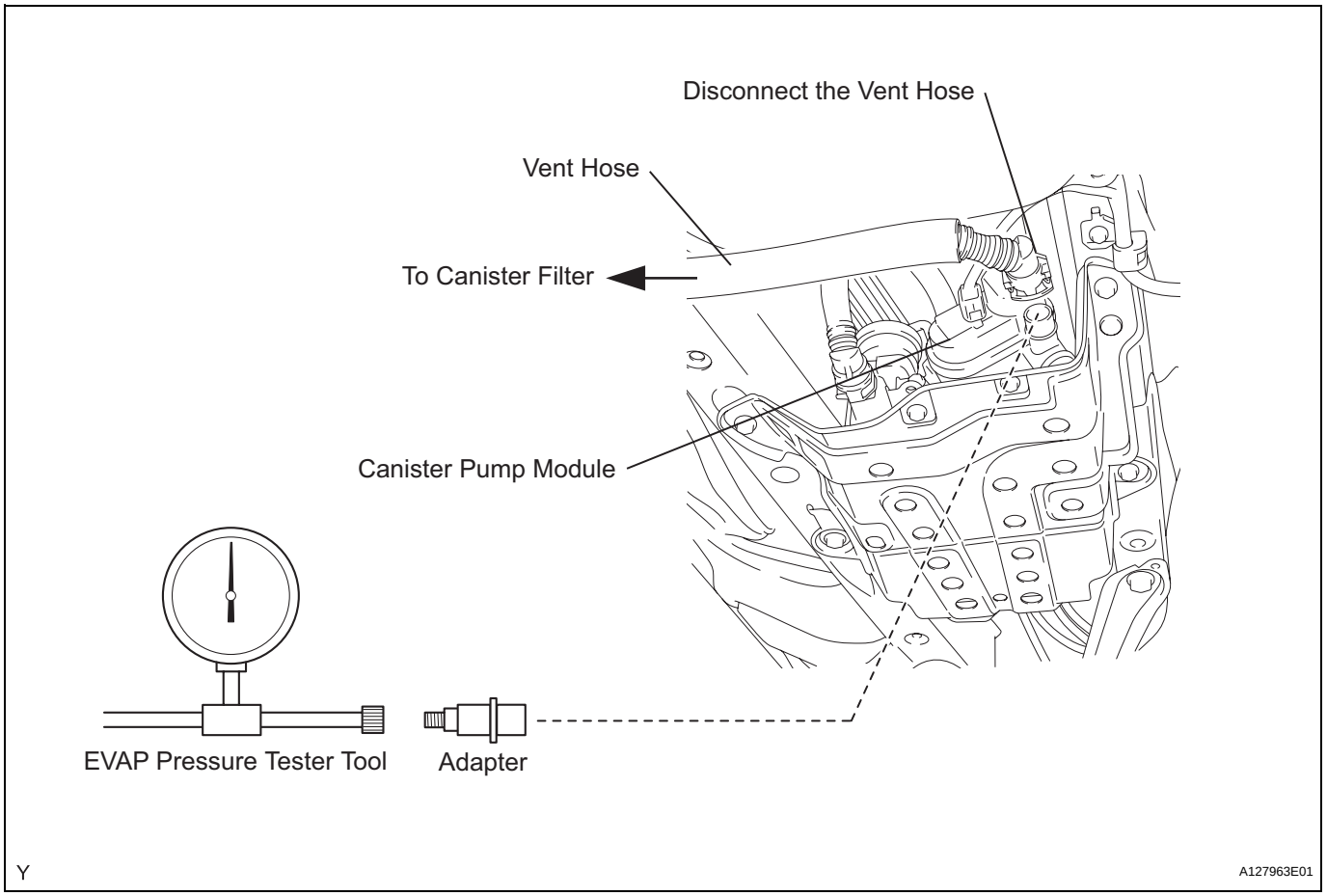

(a) Disconnect the vent hose.
(b) Connect the EVAP pressure tester tool to the canister pump module with the adapter.

(c) Pressurize the EVAP system to 3.2 to 3.7 kPa (24 to 28 mmHg).
(d) Apply soapy water to the piping and connecting parts of the EVAP system.
(e) Look for areas where bubbles appear. This indicates the leak point.
(f) Repair or replace the leak point.
HINT:
Disconnect the hose between the canister and the fuel tank from the canister. Block the canister side and conduct an inspection. In this way, the fuel tank can be excluded as an area suspected of causing fuel leaks.

NEXT	Go to step 36

ES

29	REPLACE CHARCOAL CANISTER ASSEMBLY

(a) Replace the canister assembly (see page EC-10).
NOTICE:
When replacing the canister, check the canister pump module interior and related pipes for water, fuel and other liquids. If liquids are present, check for disconnections and/or cracks in the following: 1) the pipe from the air inlet port to the canister pump module; 2) the canister filter; and 3) the fuel tank vent hose.

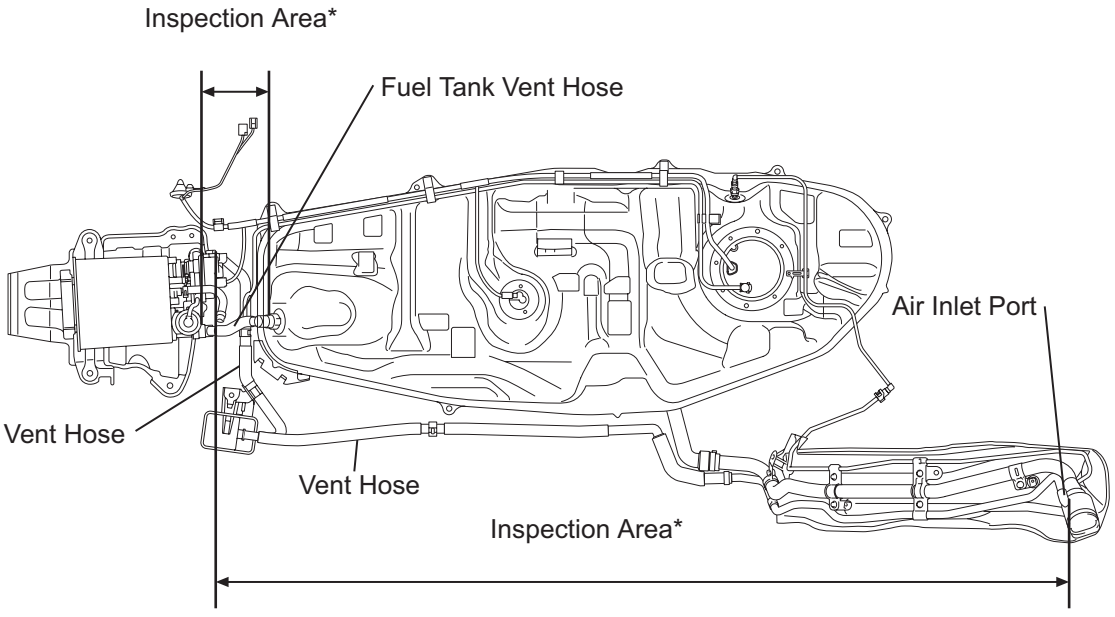

*: Check for disconnection and/or cracks

P A127720E01

NEXT → Go to step 36

30 REPLACE DUTY VACUUM SWITCHING VALVE (PURGE VSV)

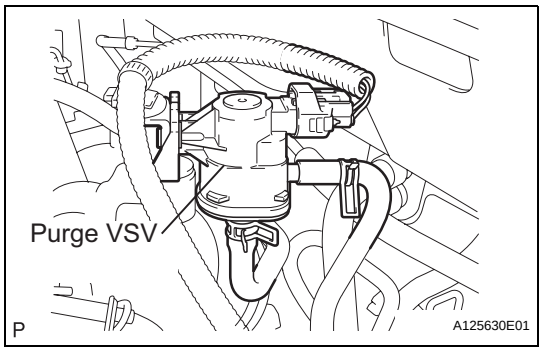

(a) Disconnect the connector and the hoses from the purge VSV.
(b) Remove the purge VSV.
(c) Install a new purge VSV.
(d) Reconnect the connector and hoses.

NEXT → Go to step 36

31 REPAIR OR REPLACE HARNESS OR CONNECTOR

NEXT → Go to step 36

32 REPLACE EVAP HOSE (INTAKE MANIFOLD - PURGE VSV)

NEXT → Go to step 36

33 INSPECT INTAKE MANIFOLD (EVAP PURGE PORT)

(a) Check that the EVAP purge port of the intake manifold is not clogged. If necessary, replace the intake manifold.

NEXT → Go to step 36

34 REPLACE ECM

(a) Replace the ECM (see page ES-429).

NEXT → Go to step 36

35 REPAIR OR REPLACE PARTS AND COMPONENTS INDICATED BY OUTPUT DTCS

(a) Repair the malfunctioning areas indicated by the DTCs that had been confirmed when the vehicle was brought in.

NEXT → Go to step 36

36	PERFORM EVAP SYSTEM CHECK (AUTO OPERATION)

NOTICE:

- **The EVAP SYSTEM CHECK (AUTO OPERATION) consists of 5 steps performed automatically by the intelligent tester. It takes a maximum of approximately 18 minutes.**
- **Do not perform the EVAP SYSTEM CHECK when the fuel tank is more than 90% full because the cut-off valve may be closed, making the fuel tank leak check unavailable.**
- **Do not run the engine in this step.**
- **When the temperature of the fuel is 35°C (95°F) or more, a large amount of vapor forms and any check results become inaccurate. When performing an EVAP SYSTEM CHECK, keep the temperature below 35°C (95°F).**

(a) Clear DTCs (see page ES-35).

(b) On the intelligent tester, select the following menu items: DIAGNOSIS / ENHANCED OBD II / SYSTEM CHECK / EVAP SYS CHECK / AUTO OPERATION.

(c) After the SYSTEM CHECK is completed, check for pending DTCs by selecting the following menu items: DIAGNOSIS / ENHANCED OBD II / DTC INFO / PENDING CODES.
HINT:
If no pending DTCs are found, the repair has been successfully completed.

NEXT

COMPLETED

CONFIRMATION DRIVING PATTERN

HINT:
After a repair, check Monitor Status by performing the Key-Off Monitor Confirmation and Purge Flow Monitor Confirmation described below.

1. KEY-OFF MONITOR CONFIRMATION

(a) Preconditions
The monitor will not run unless:
- The vehicle has been driven for 10 minutes or more (in a city area or on a freeway)
- The fuel tank is less than 90 % full
- The altitude is less than 8,000 ft (2,400 m)
- The Engine Coolant Temperature (ECT) is between 4.4°C and 35°C (40°F and 95°F)
- The Intake Air Temperature (IAT) is between 4.4°C and 35°C (40°F and 95°F)
- The vehicle remains stationary (the vehicle speed is 0 km/h [0 mph])

(b) Monitor Conditions
1. Allow the engine to idle for at least 5 minutes.
2. Turn the ignition switch OFF and wait for 6 hours (8 or 10.5 hours).
HINT:
Do not start the engine until checking MONITOR STATUS. If the engine is started, the steps described above must be repeated.

(c) Monitor Status
1. Connect the intelligent tester to the DLC3.
2. Turn the ignition switch ON and turn the tester ON.
3. Select the following menu items: DIAGNOSIS / ENHANCED OBD II / MONITOR STATUS.
4. Check the Monitor Status displayed on the tester.
HINT:
If INCMP is displayed, the monitor is not complete. Make sure that the preconditions have been met, and perform the Monitor Conditions again.

2. PURGE FLOW MONITOR CONFIRMATION (P0441)

HINT:
Perform this monitor confirmation after the Key-Off Monitor Confirmation shows COMPL (complete).

(a) Preconditions
The monitor will not run unless:
- The vehicle has been driven for 10 minutes or more (in a city area or on a freeway)
- The ECT is between 4.4°C and 35°C (40°F and 95°F)
- The IAT is between 4.4°C and 35°C (40°F and 95°F)

(b) Monitor Conditions
1. Release the pressure from the fuel tank by removing and reinstalling the fuel cap.
2. Warm the engine up until the ECT reaches more than 75°C (167°F).
3. Increase the engine speed to 3,000 rpm once.
4. Allow the engine to idle and turn A/C ON for 1 minute.

(c) Monitor Status
1. Turn the ignition switch OFF (if ON or the engine is running).
2. Connect the intelligent tester to the DLC3.
3. Turn the ignition switch ON and turn the tester ON.
4. Select the following menu items: DIAGNOSIS / ENHANCED OBD II / MONITOR STATUS.
5. Check the Monitor Status displayed on the tester.
HINT:
If INCMP is displayed, the monitor is not complete. Make sure that the preconditions have been met, and perform the Monitor Conditions again.

MONITOR RESULT

Refer to CHECKING MONITOR STATUS (See page ES-17).

ECM Power Source Circuit

DESCRIPTION

When the ignition switch is turned ON, the battery voltage is applied to the IGSW of the ECM. The output signal from the MREL terminal of the ECM causes a current to flow to the coil, closing the contacts of the integration relay (EFI MAIN relay) and supplying power to either terminal +B or +B2 of the ECM.

WIRING DIAGRAM

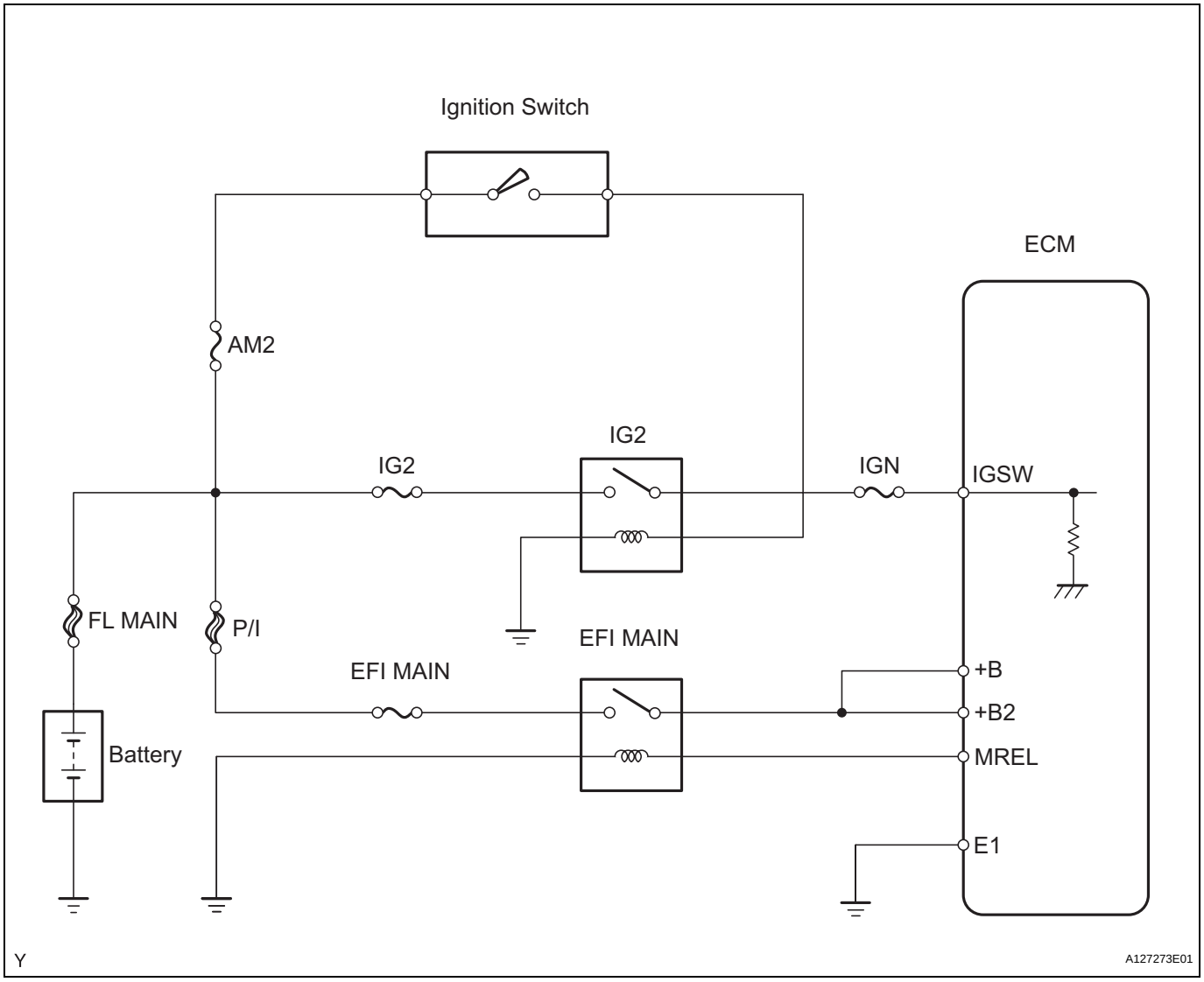

ES

INSPECTION PROCEDURE

1	INSPECT FUSES (P/I, AM2, IG2, EFI MAIN, IGN)

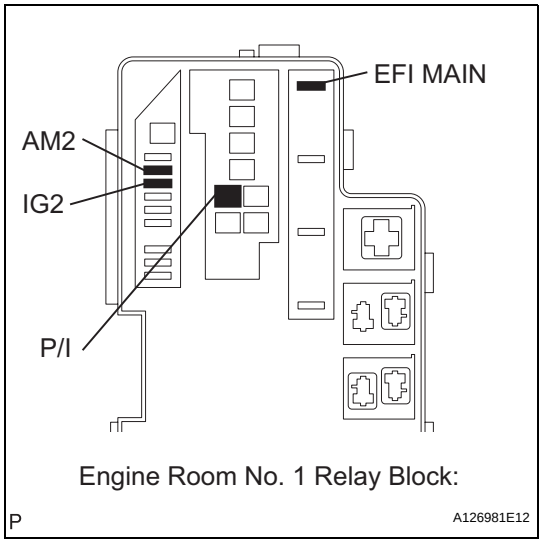

(a) Remove the P/I fuse, AM2 fuse, IG2 fuse and EFI MAIN fuse from the engine room No. 1 relay block.

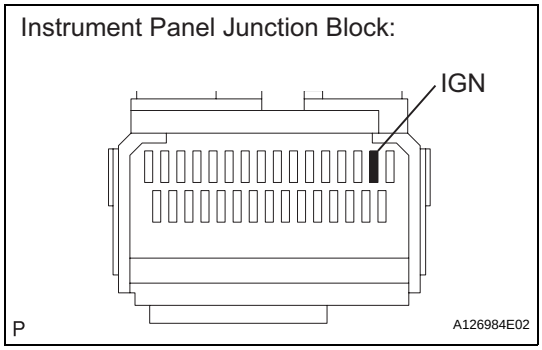

(b) Remove the IGN fuse from the instrument panel junction block.
(c) Measure the resistance of the fuses.
Standard resistance:
Below 1Ω
(d) Reinstall the fuses.

NG → **CHECK FOR SHORT IN ALL HARNESSES AND CONNECTORS CONNECTED TO FUSE AND REPLACE FUSE**

OK

2	INSPECT RELAY (IG2, EFI MAIN)

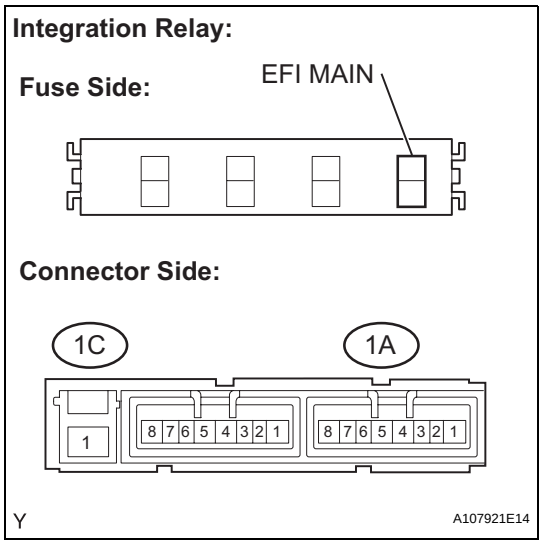

(a) Remove the integration relay and IG2 relay from the engine room No. 1 relay block.
(b) Measure the resistance between the terminal of the integration relay.
Standard resistance

Tester Connections	Specified Conditions
1C-1 - 1A-4	10 kΩ or higher
	Below 1 Ω (When battery voltage is applied to terminals 1A-2 and 1A-3)

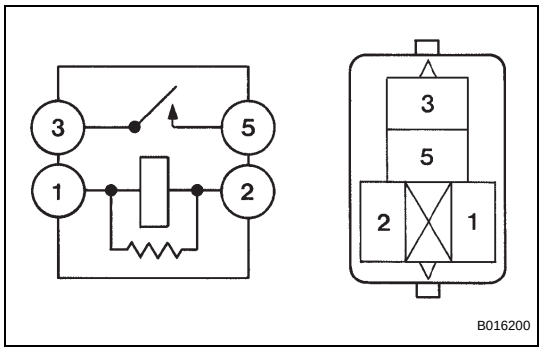

(c) Measure the resistance between the terminal of the IG2 relay.

Standard resistance

Tester Connections	Specified Conditions
3 - 5	10 kΩ or higher
	Below 1 Ω (When battery voltage is applied to terminals 1 and 2)

(d) Reinstall the relay.

NG → **REPLACE RELAY**

OK

ES

3 CHECK HARNESS AND CONNECTOR (ECM - BODY GROUND)

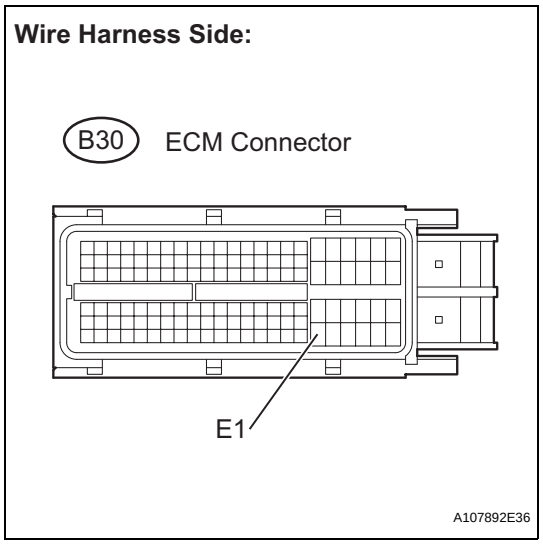

(a) Disconnect the B30 ECM connector.
(b) Measure the resistance.

Standard resistance

Tester Connection	Specified Condition
B30-104 (E1) - Body ground	Below 1 Ω

(c) Reconnect the ECM connector.

NG → **REPAIR OR REPLACE HARNESS OR CONNECTOR**

OK

4	INSPECT ECM (IGSW VOLTAGE)

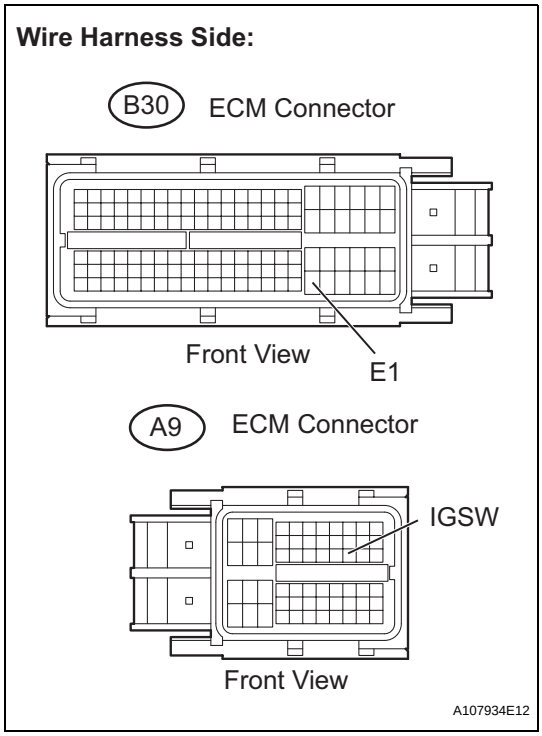

(a) Disconnect the B30 and A9 ECM connectors.
(b) Turn the ignition switch ON.
(c) Measure the voltage between the terminals of the B30 and A9 ECM connectors.

Standard voltage

Tester Connections	Specified Conditions
A9-28 (IGSW) - B30-104 (E1)	9 to 14 V

(d) Reconnect the ECM connector.

OK → **REPLACE ECM**

NG

5	CHECK HARNESS AND CONNECTOR (RELAY BLOCK - ECM, IGNITION SWITCH, BATTERY)

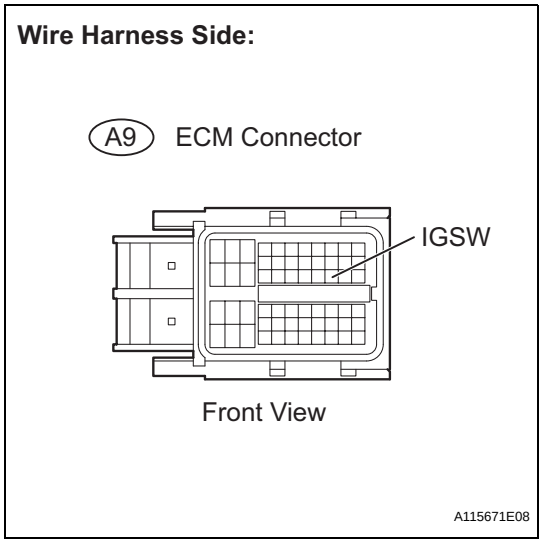

(a) Disconnect the A9 ECM connector.

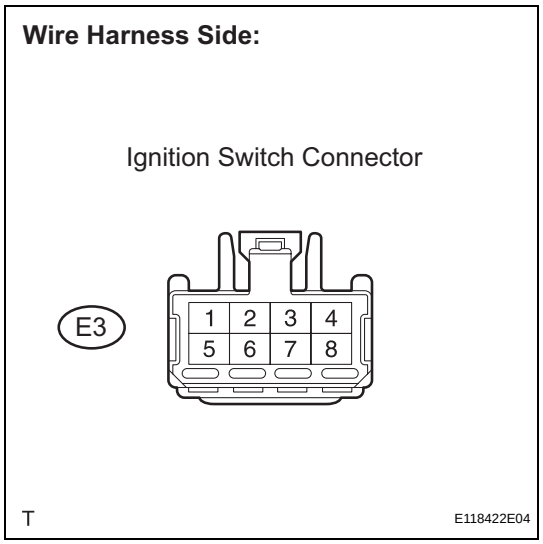

(b) Disconnect the E3 ignition switch connector.
(c) Disconnect the battery positive terminal.

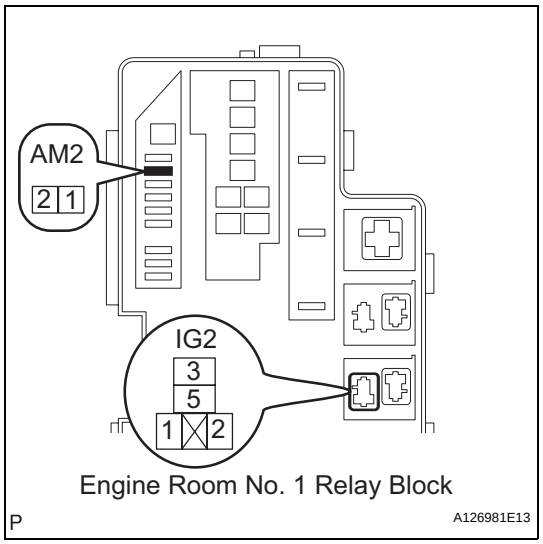

(d) Remove the AM2 fuse and IG2 relay.
(e) Measure the resistance between the terminals.

Standard resistance (Check for open)

Tester Connections	Specified Conditions
A9-28 (IGSW) - Engine room No. 1 relay block IG2 relay terminal 5	Below 1 Ω
Engine room No. 1 relay block IG2 relay terminal 2 - Body ground	Below 1 Ω
Positive (+) battery cable - Engine room relay block No. 1 AM2 fuse terminal 1	Below 1 Ω
Positive (+) battery cable - Engine room relay block No. 1 IG2 relay terminal 3	Below 1 Ω
E3-7 (AM2) - Engine room No. 1 relay block AM2 fuse terminal 2	Below 1 Ω
E3-6 (IG2) - Engine room No. 1 relay block IG2 relay terminal 1	Below 1 Ω

Standard resistance (Check for short)

Tester Connections	Specified Conditions
A9-28 (IGSW) or Engine room No. 1 relay block IG2 relay terminal 5 - Body ground	10 kΩ or higher
Positive (+) battery cable or Engine room No. 1 relay block AM2 fuse terminal 1 - Body ground	10 kΩ or higher
Positive (+) battery cable or Engine room No. 1 relay block IG2 relay terminal 3 - Body ground	10 kΩ or higher
E3-7 (AM2) or Engine room No. 1 relay block AM2 fuse terminal 2 - Body ground	10 kΩ or higher
E3-6 (IG2) or Engine room No. 1 relay block IG2 relay terminal 1 - Body ground	10 kΩ or higher

(f) Reinstall the relay and fuse.
(g) Reconnect the connectors.

NG → **REPAIR OR REPLACE HARNESS OR CONNECTOR**

OK

6	INSPECT IGNITION SWITCH (See page ES-261)

NG → REPLACE IGNITION SWITCH

OK

7	CHECK HARNESS AND CONNECTOR (INTEGRATION RELAY - ECM, BATTERY, BODY GROUND)

ES

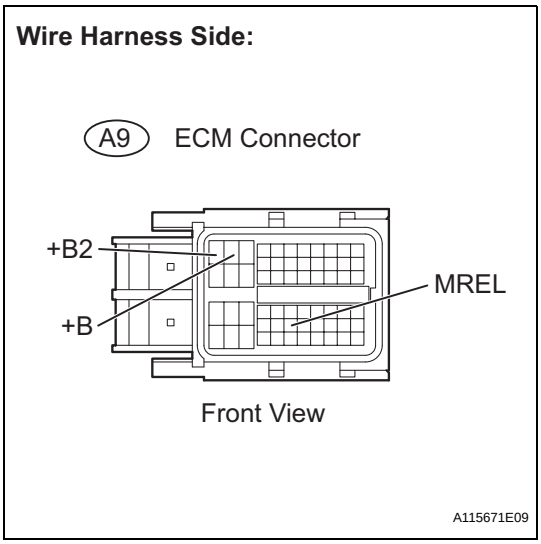

(a) Disconnect the A9 ECM connector.

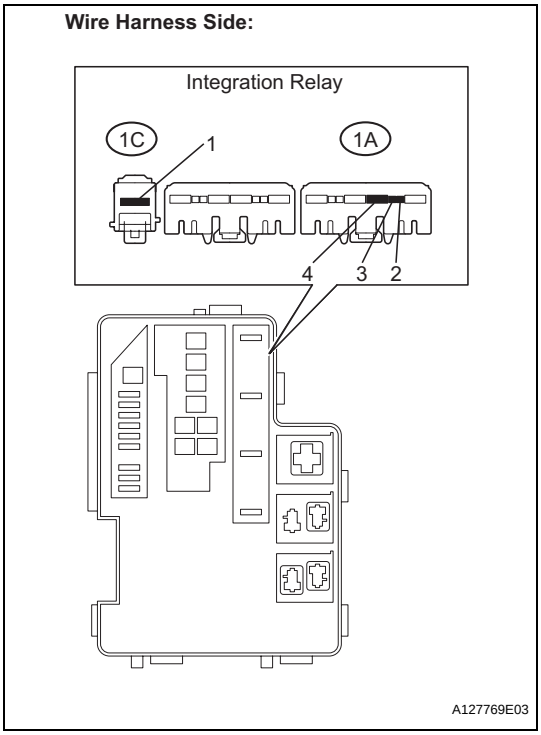

(b) Remove the integration relay from the engine room No. 1 relay block.
(c) Disconnect the integration relay connector.
(d) Remove the P/I fuse from the engine room No. 1 relay block.
(e) Check the resistance between the terminals.

Standard resistance (Check for open)

Tester Connections	Specified Conditions
A9-2 (+B) - 1A-4	Below 1 Ω
A9-1 (+B2) - 1A-4	Below 1 Ω
A9-44 (MREL) - 1A-2	Below 1 Ω
Engine room relay block No. 1 P/I fuse terminal 2 - 1C-1	Below 1 Ω
1A-3 - Body ground	Below 1 Ω

Standard resistance (Check for short)

Tester Connections	Specified Conditions
A9-2 (+B) or 1A-4 - Body ground	10 kΩ or higher
A9-1 (+B2) or 1A-4 - Body ground	10 kΩ or higher
A9-44 (MREL) or 1A-2 - Body ground	10 kΩ or higher
Engine room No. 1 relay block P/I fuse terminal 2 or 1C-1 - Body ground	10 kΩ or higher

(f) Reconnect the connectors.

(g) Reinstall the integration relay and P/I fuse.

NG → **REPAIR OR REPLACE HARNESS OR CONNECTOR**

OK

REPAIR OR REPLACE ENGINE ROOM NO. 1 RELAY BLOCK

VC Output Circuit

DESCRIPTION

The ECM constantly generates 5 V power from the battery voltages supplied to the +B (BATT) terminal to operate the microprocessor. The ECM also provides this power to the sensors through the VC output circuit.

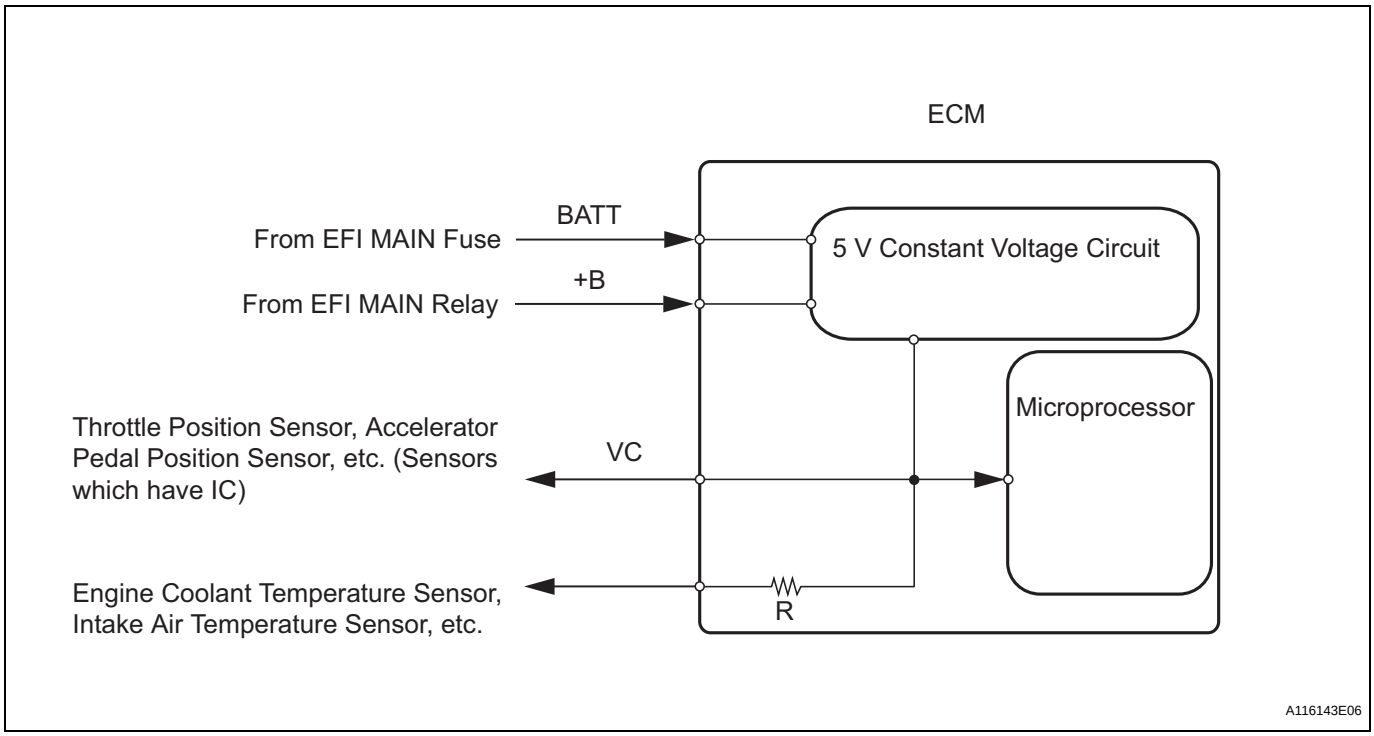

When the VC circuit is short-circuited, the microprocessor in the ECM and sensors that are supplied with power through the VC circuit are inactivated because the power is not supplied from the VC circuit. Under this condition, the system does not start up and the MIL does not illuminate even if the system malfunctions.

HINT:

Under normal conditions, the MIL is illuminated for several seconds when the ignition switch is first turned ON. The MIL goes off when the engine is started.

WIRING DIAGRAM

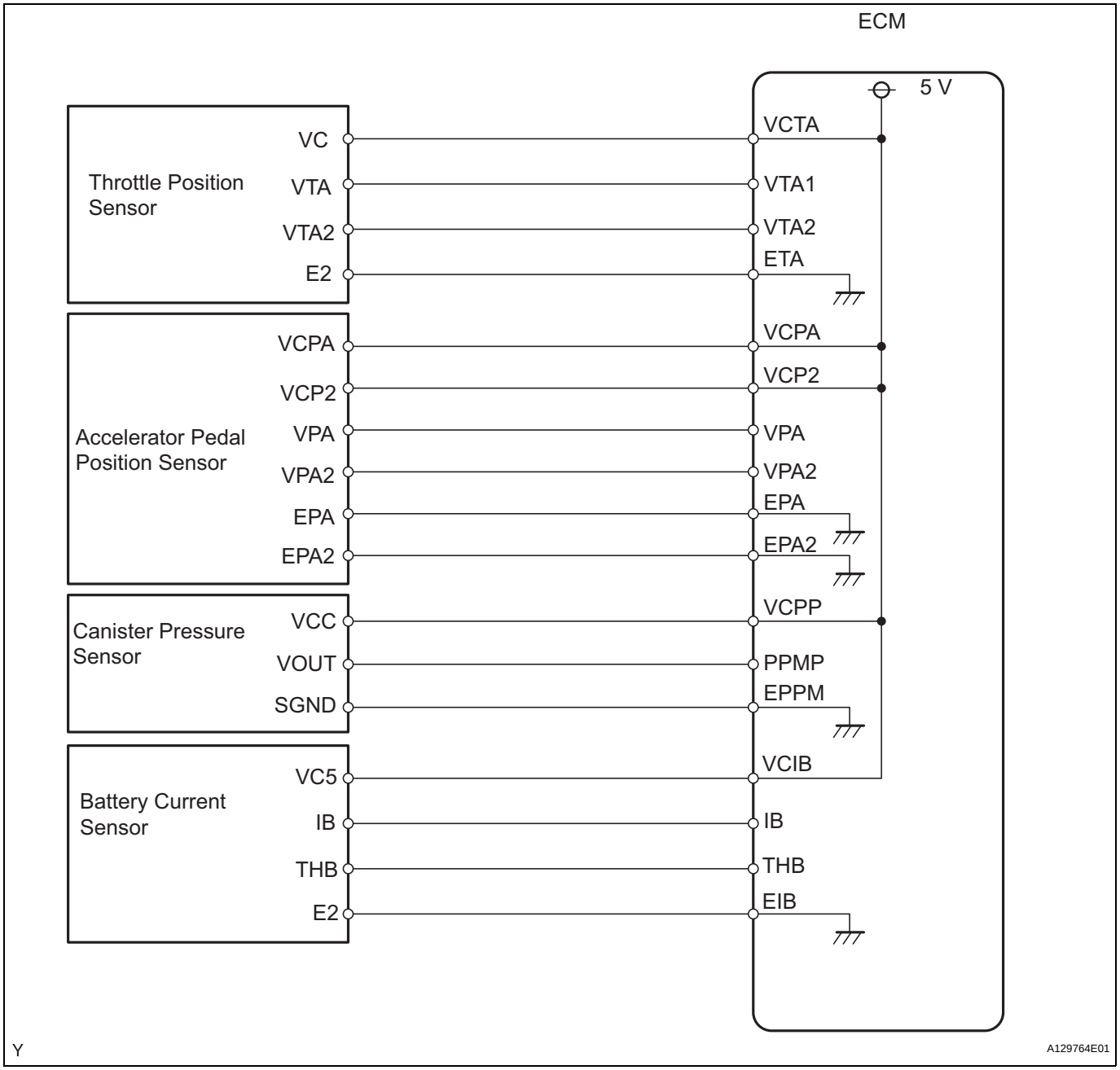

ES

INSPECTION PROCEDURE

1	CHECK MIL

(a) Check that the Malfunction Indicator Lamp (MIL) lights up when turning the ignition switch ON.
OK:
MIL lights up

OK	SYSTEM OK

NG

2	CHECK COMMUNICATION BETWEEN INTELLIGENT TESTER AND ECM

(a) Connect the intelligent tester to the DLC3.
(b) Turn the ignition switch ON and tester ON.
(c) Check the communication between the tester and ECM.

Result

Result	Proceed To
Communication is possible	A
Communication is not possible	B

A → GO TO MIL CIRCUIT

B

3	CHECK MIL (THROTTLE POSITION SENSOR)

(a) Disconnect the B3 throttle body connector.
(b) Turn the ignition switch ON.
(c) Check the MIL.

Result

Result	Proceed To
MIL illuminates	A
MIL does not illuminate	B

(d) Reconnect the throttle body connector.

A → REPLACE THROTTLE BODY ASSEMBLY

B

4	CHECK MIL (ACCELERATOR PEDAL POSITION SENSOR)

(a) Disconnect the A4 accelerator pedal position sensor connector.
(b) Turn the ignition switch ON.
(c) Check the MIL.

Result

Result	Proceed To
MIL illuminates	A
MIL does not illuminate	B

(d) Reconnect the accelerator pedal position sensor connector.

A → REPLACE ACCELERATOR PEDAL POSITION SENSOR

B

5	CHECK MIL (CANISTER PUMP MODULE)

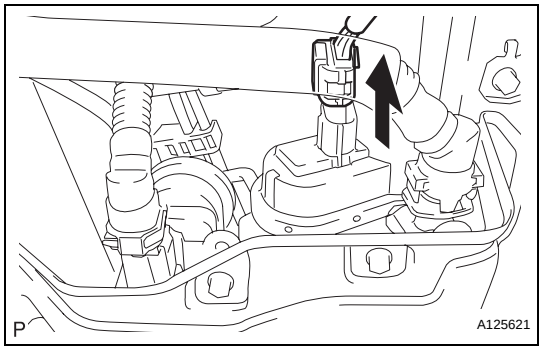

(a) Disconnect the S3 canister pump module connector.
(b) Turn the ignition switch ON.
(c) Check the MIL.

Result

Result	Proceed To
MIL illuminates	A
MIL does not illuminate	B

(d) Reconnect the canister pump module connector.

A → REPLACE CHARCOAL CANISTER ASSEMBLY

B

6	CHECK MIL (BATTERY CURRENT SENSOR)

(a) Disconnect the B29 battery current sensor connector.
(b) Turn the ignition switch ON.
(c) Check the MIL.

Result

Result	Proceed To
MIL illuminates	A
MIL does not illuminate	B

(d) Reconnect the battery current sensor connector.

A → REPLACE BATTERY CURRENT SENSOR

B

7	CHECK HARNESS AND CONNECTOR

(a) Disconnect the B3 throttle body connector.
(b) Disconnect the A4 accelerator pedal position sensor connector.
(c) Disconnect the S3 canister pump module connector.
(d) Disconnect the B29 battery current sensor connector.

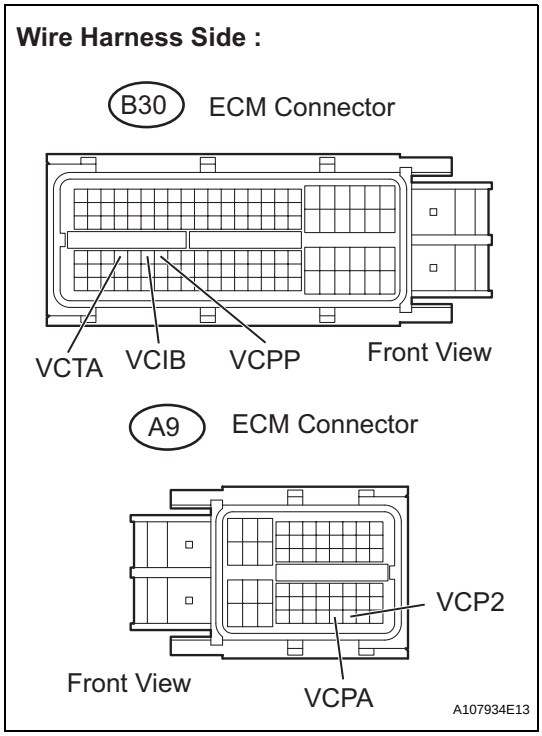

(e) Disconnect the A9 and B30 ECM connectors.
(f) Measure the resistance.

Standard resistance (check for short)

Tester Connections	Specified Conditions
B30-67 (VCTA) - Body ground	10 kΩ or higher
A9-57 (VCPA) - Body ground	10 kΩ or higher
A9-58 (VCP2) - Body ground	10 kΩ or higher
B30-70 (VCPP) - Body ground	10 kΩ or higher
B30-69 (VCIB) - Body ground	10 kΩ or higher

(g) Reconnect the throttle body connector.
(h) Reconnect the accelerator pedal position sensor connector.
(i) Reconnect the canister pump module connector.
(j) Reconnect the battery current sensor connector.
(k) Reconnect the ECM connectors.

NG → **REPAIR OR REPLACE HARNESS OR CONNECTOR**

OK

REPLACE ECM

Fuel Pump Control Circuit

DESCRIPTION

When the engine is cranked, the starter relay drive signal output from the STAR terminal of the ECM is input into the STA terminal of the ECM, and NE signal generated by the crankshaft position sensor is also input into the NE+ terminal. Thus, the ECM interprets that the engine is cranked, and turns the transistor Tr1 in the ECM internal circuit ON. The current flows to the C/OPN (Circuit Opening) relay by turning the Tr1 ON. Then, the fuel pump operates.

While the NE signal is input into the ECM, when the engine is running, the ECM turns the Tr1 on continuously.

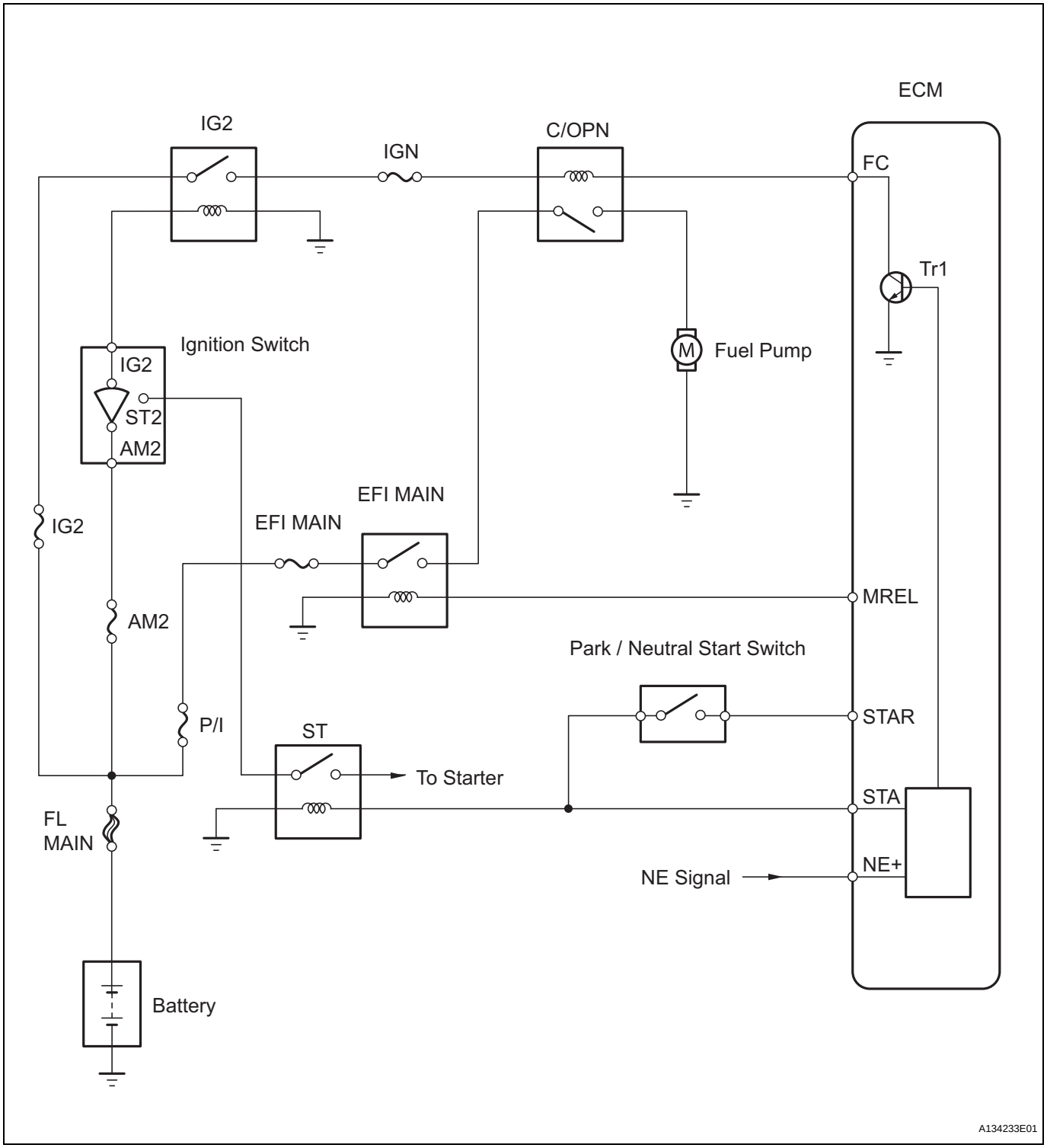

WIRING DIAGRAM

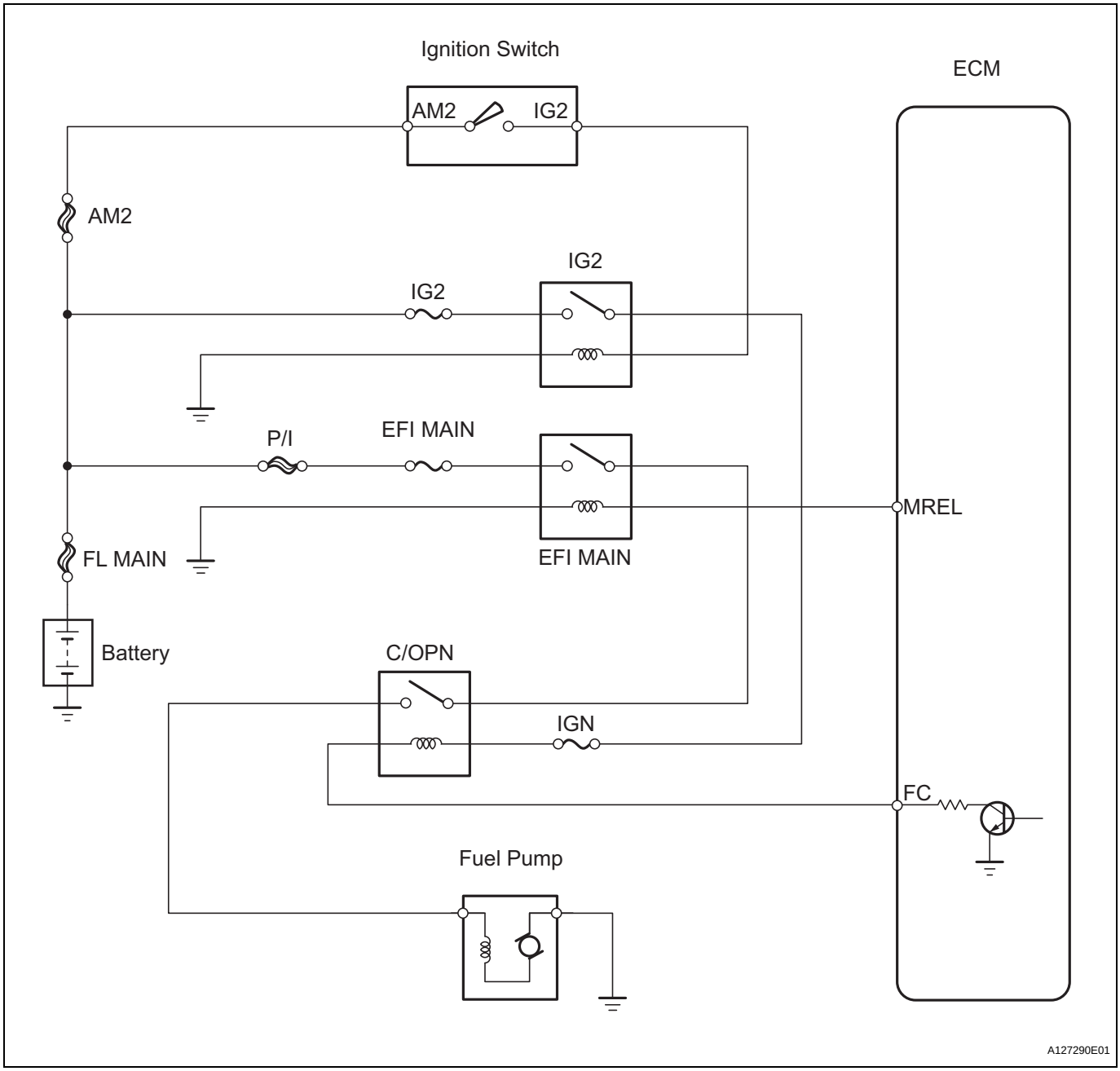

INSPECTION PROCEDURE

1	PERFORM ACTIVE TEST USING INTELLIGENT TESTER (FUEL PUMP/SPD)

(a) Connect the intelligent tester to the DLC3.
(b) Turn the ignition switch ON and turn the tester ON.
(c) Select the following menu items: DIAGNOSIS / ENHANCED OBD II / ACTIVE TEST / FUEL PUMP / SPD.
(d) Check whether the fuel pump operating sound occurs when performing the Active Test on the tester.

OK:
Fuel pump operating sound occurs.

OK → **Go to step 8**

NG

2	INSPECT INSTRUMENT PANEL JUNCTION BLOCK ASSEMBLY (C/OPN RELAY INPUT VOLTAGE)

Instrument Panel J/B:

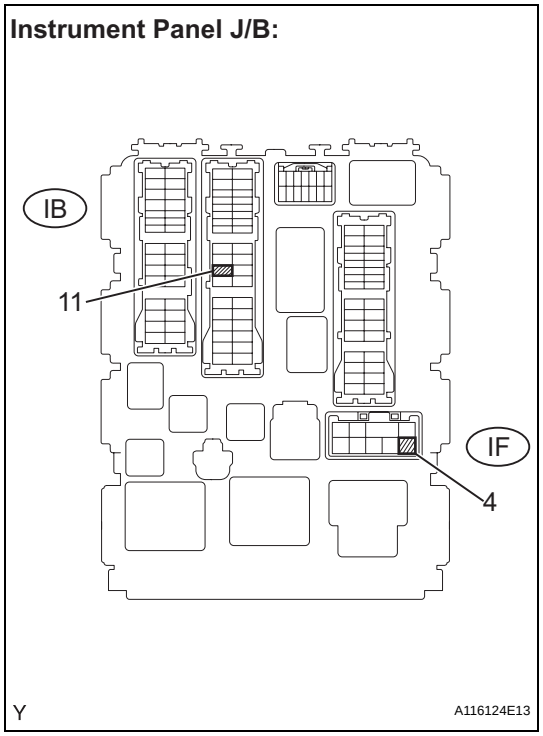

(a) Measure the voltage between the terminal of the instrument panel Junction Block (J/B) and the body ground when the ignition switch is turned ON and OFF.
Standard voltage

Tester Connections	Ignition Switch Conditions	Specified Conditions
IB-11 - Body ground	OFF	Below 1 V
IF-4 - Body ground		
IB-11 - Body ground	ON	9 to 14 V
IF-4 - Body ground		

OK → **Go to step 4**

NG

ES

3	CHECK HARNESS AND CONNECTOR (INSTRUMENT PANEL J/B - INTEGRATION RELAY, IG2 RELAY)

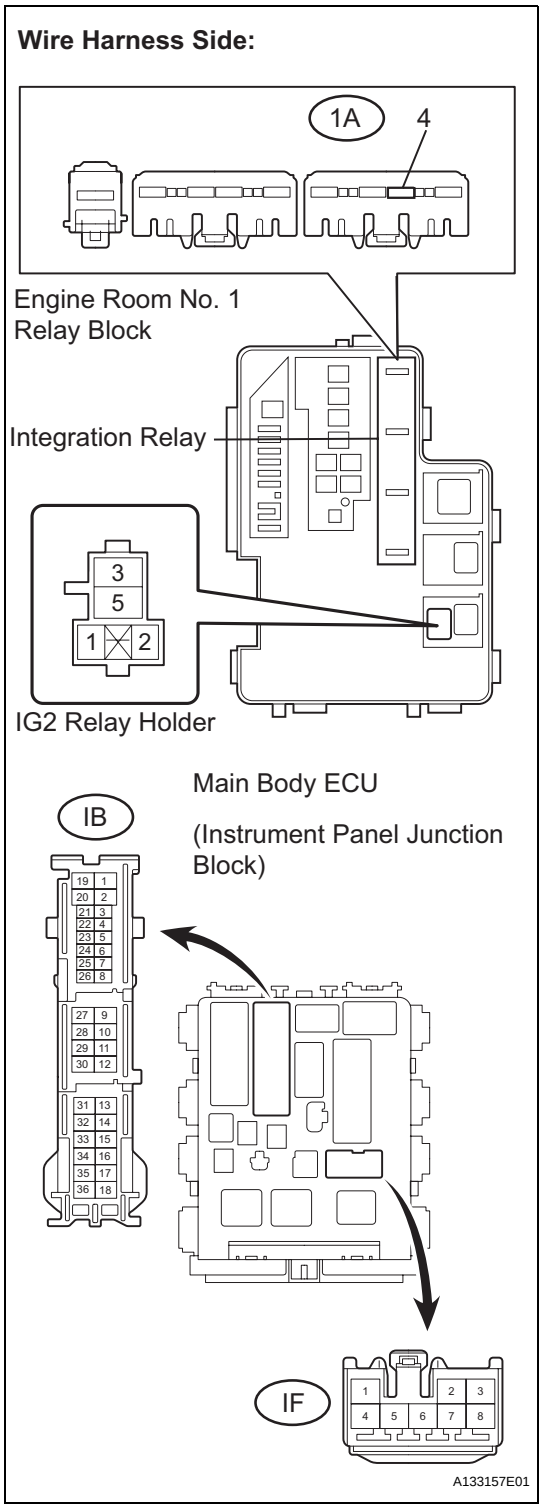

(a) Remove the integration relay and IG2 relay from the engine room No. 1 relay block.
(b) Disconnect the instrument panel junction block connector.
(c) Check the resistance.

Standard resistance (Check for open)

Tester Connections	Specified Conditions
IG2 relay 5 - IF-4	Below 1 Ω
1A-4 - IB-11	Below 1 Ω

Standard resistance (Check for short)

Tester Connections	Specified Conditions
IF-4 - Body ground	10 kΩor higher
IB-11 - Body ground	10 kΩor higher

(d) Reinstall the integration relay and IG2 relay.
(e) Reconnect the instrument panel junction block connector.

NG → **REPAIR OR REPLACE HARNESS OR CONNECTOR**

OK

GO TO ECM POWER SOURCE CIRCUIT

4	INSPECT INSTRUMENT PANEL JUNCTION BLOCK ASSEMBLY (C/OPN RELAY)

Instrument Panel J/B:

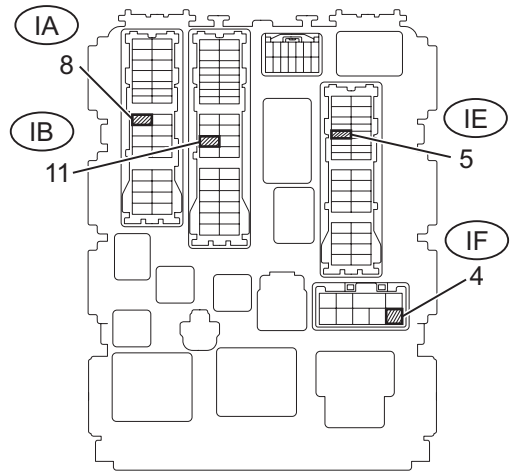

(a) Remove the instrument panel junction block.
(b) Measure the C/OPN relay resistance.
Standard resistance

Tester Connections	Specified Conditions
IB-11 - IA-8	10 kΩ or higher
	Below 1 Ω (when battery voltage is applied to terminals IF-4 and IE-5)

HINT:
Relay coil circuit between IF-4 and IE-5 is not through IGN fuse.

(c) Reinstall the instrument panel junction block.

NG → **REPLACE INSTRUMENT PANEL JUNCTION BLOCK ASSEMBLY**

OK

ES

5	CHECK HARNESS AND CONNECTOR (INSTRUMENT PANEL J/B - ECM)

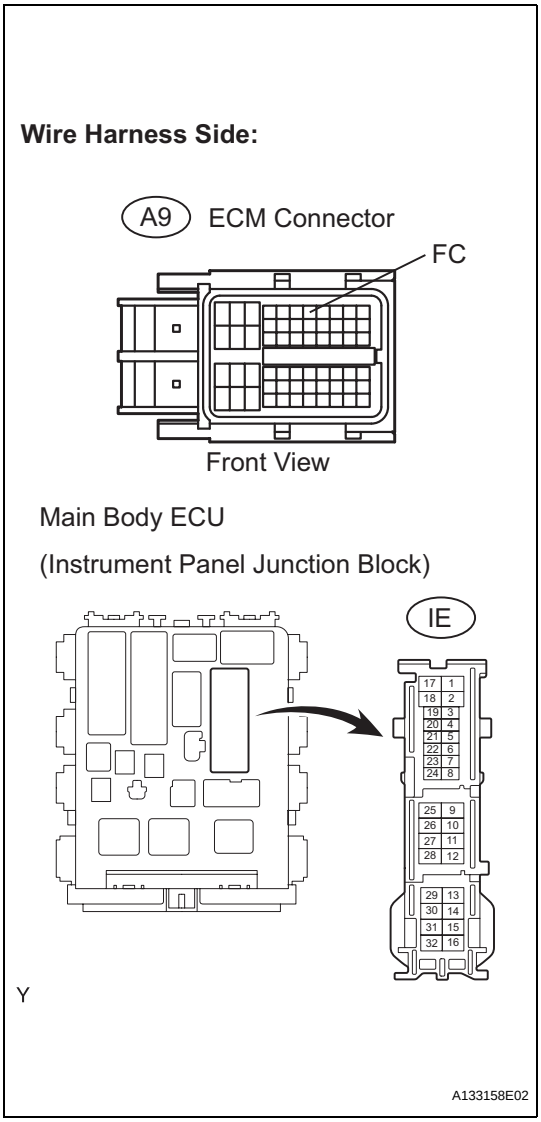

(a) Disconnect the A9 ECM connector.
(b) Disconnect the IE connector from instrument panel junction block.
(c) Measure the resistance.

Standard resistance (Check for open)

Tester Connections	Specified Conditions
IE-5 (Instrument panel J/B) - A9-7 (FC)	Below 1Ω

Standard resistance (Check for short)

Tester Connections	Specified Conditions
IE-5 (Instrument panel J/B) or A9-7 (FC) - Body ground	10 kΩ or higher

(d) Reconnect the instrument panel junction block and the ECM connectors.

NG → **REPAIR OR REPLACE HARNESS OR CONNECTOR**

OK

6 CHECK HARNESS AND CONNECTOR (C/OPN RELAY - FUEL PUMP - BODY GROUND)

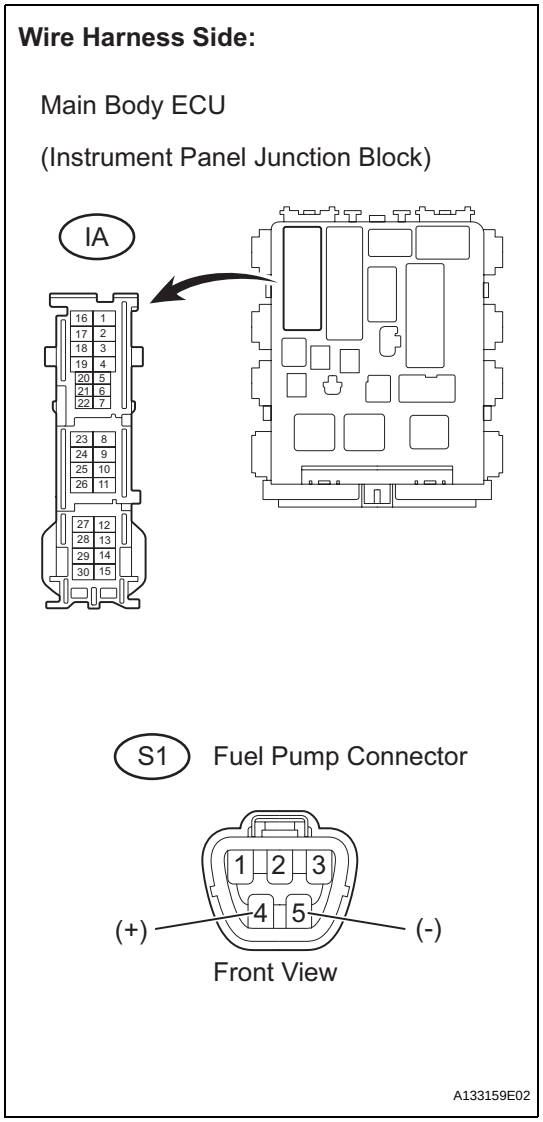

(a) Check the harness and the connectors between the instrument panel junction block assembly and the fuel pump.
  (1) Disconnect the IA instrument panel junction block connector.
  (2) Disconnect the S1 fuel pump connector.
  (3) Measure the resistance.
  Standard resistance (Check for open)

Tester Connections	Specified Conditions
IA-8 (Instrument panel J/B) - S1-4 (Fuel pump)	Below 1Ω

Standard resistance (Check for short)

Tester Connections	Specified Conditions
IA-8 (Instrument panel J/B) or S1-4 (Fuel pump) - Body ground	10 kΩ or higher

(b) Check the harness and the connectors between the fuel pump and the body ground.
  (1) Disconnect the S1 fuel pump connector.
  (2) Measure the resistance.
  Standard resistance (Check for open)

Tester Connections	Specified Conditions
S1-5 (Fuel pump) - Body ground	Below 1 Ω

(c) Reconnect the instrument panel junction block connector.
(d) Reconnect the fuel pump connector.

NG → **REPAIR OR REPLACE HARNESS OR CONNECTOR**

OK

7 INSPECT FUEL PUMP

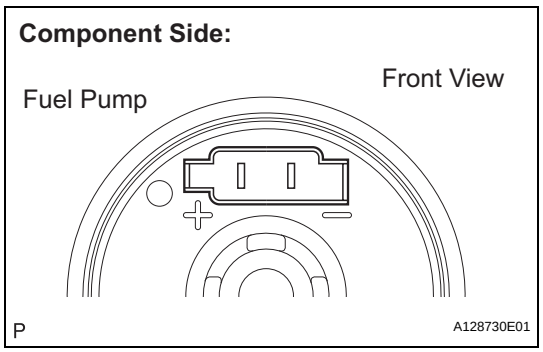

(a) Inspect fuel pump resistance.
  (1) Measure the resistance between the terminals.
  Standard resistance:
  0.2 to 3.0 Ω at 20°C(68°F)
(b) Inspect fuel pump operation.
  (1) Apply the battery voltage to both the terminals. Check that the pump operates.
  NOTICE:
  - **These tests must be done quickly (within 10 seconds) to prevent the coil from burning out.**
  - **Keep the fuel pump as far away from the battery as possible.**

- **Always turn the voltage on and off on the battery side, not the fuel pump side.**

NG → **REPLACE FUEL PUMP**

OK

REPLACE ECM

8	READ VALUE USING INTELLIGENT TESTER (STARTER SIG)

ES

(a) Connect the intelligent tester to the DLC3.
(b) Turn the ignition switch ON and turn the tester ON.
(c) Select the following menu items: DIAGNOSIS / ENHANCED OBD II / DATA LIST / PRIMARY / STARTER SIG.
(d) Check the result when the ignition switch is turned to ON and START.
OK

Ignition Switch Position	Starter Signal
ON	OFF
START	ON

NG → **REPAIR OR REPLACE STARTING SYSTEM**

OK

9	READ VALUE USING INTELLIGENT TESTER (ENGINE SPD)

(a) Connect the intelligent tester to the DLC3.
(b) Turn the ignition switch ON and turn the tester ON.
(c) Select the following menu items: DIAGNOSIS / ENHANCED OBD II / DATA LIST / PRIMARY / ENGINE SPD.
(d) Read the values displayed on the tester while cranking.
Standard:
Values are displayed continuously.

NG → **REPAIR OR REPLACE CRANKSHAFT POSITION SENSOR CIRCUIT**

OK

REPLACE ECM

MIL Circuit

DESCRIPTION

The MIL (Malfunction Indicator Lamp) is used to indicate vehicle malfunction detections by the ECM. When the ignition switch is turned ON, power is supplied to the MIL circuit, and the ECM provides the circuit ground which illuminates the MIL.
The MIL operation can be checked visually: When the ignition switch is first turned ON, the MIL should be illuminated and should then turn off. If the MIL remains illuminated or is not illuminated, conduct the following troubleshooting procedure using the intelligent tester.

WIRING DIAGRAM

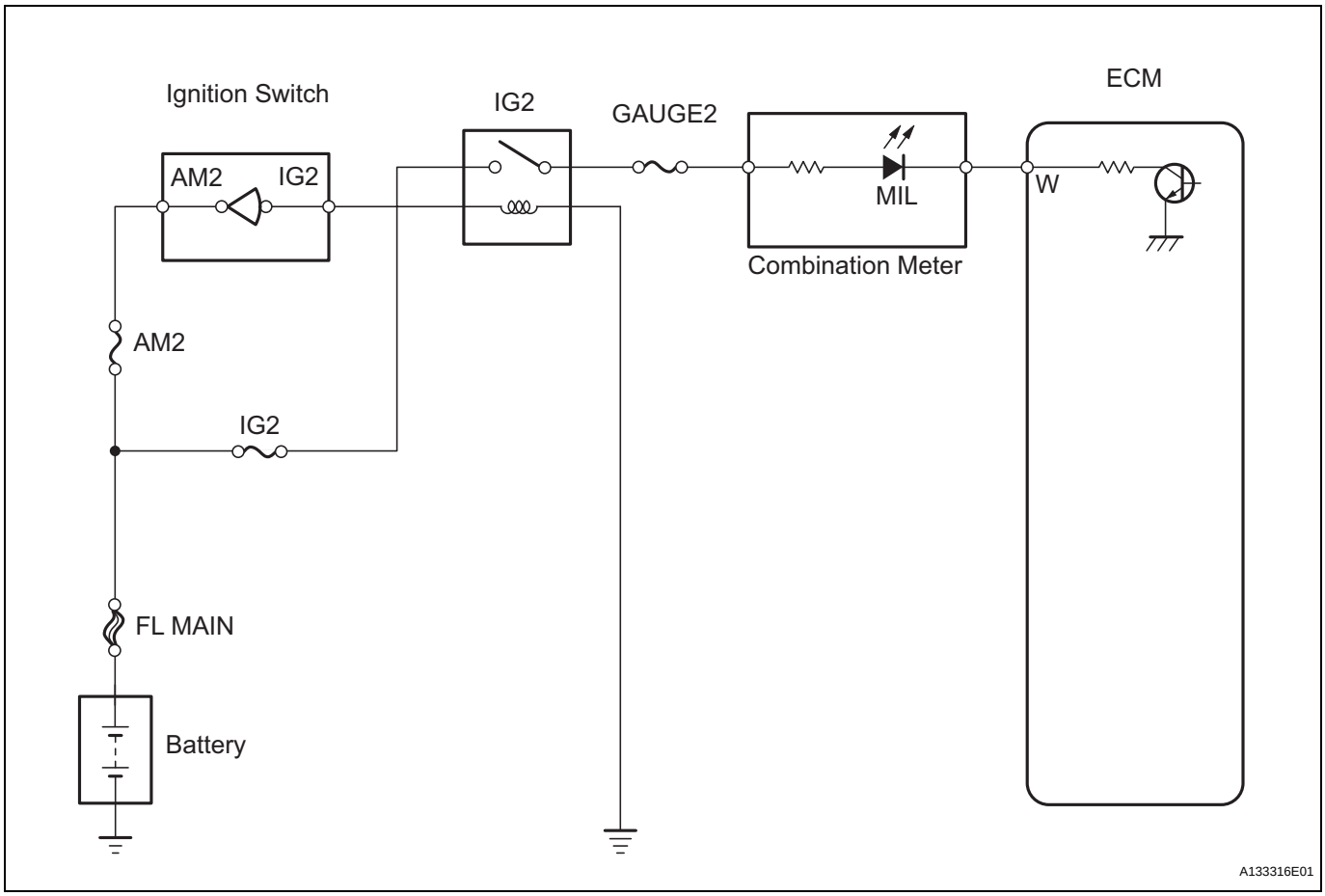

INSPECTION PROCEDURE

1	CHECK THAT MIL IS ILLUMINATED

(a) Perform troubleshooting in accordance with the table below.

Conditions	Proceed To
MIL remains ON	A
MIL does not illuminate	B

B	Go to step 5

A

2	CHECK WHETHER MIL TURNS OFF

(a) Connect the intelligent tester to the DLC3.
(b) Turn the ignition switch ON and turn the tester ON.
(c) Select the following menu items: DIAGNOSIS / ENHANCED OBD II / DTC INFO / CURRENT CODES.
(d) Check if any DTCs have been stored. Note down any DTCs.
(e) Clear DTCs (see page ES-35).
(f) Check if the MIL goes off.
Standard:
MIL should go off.

OK → **REPAIR CIRCUITS INDICATED BY OUTPUT DTCS**

NG

3	CHECK HARNESS AND CONNECTOR (CHECK FOR SHORT IN WIRE HARNESS)

Wire Harness Side:

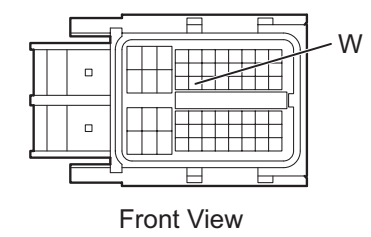

(a) Disconnect the A9 ECM connector.
(b) Turn the ignition switch ON.
(c) Check that the MIL is not illuminated.
OK:
MIL is not illuminated.
(d) Reconnect the ECM connector.

OK → **REPLACE ECM**

NG

4 CHECK HARNESS AND CONNECTOR (COMBINATION METER - ECM)

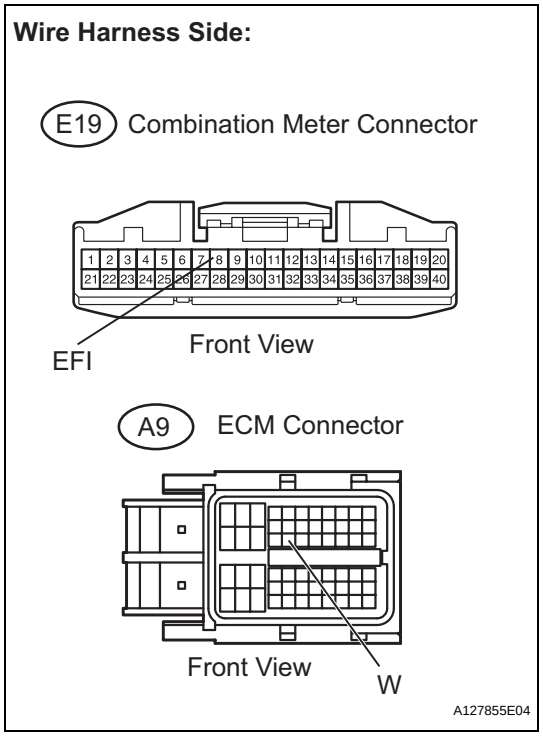

(a) Disconnect the A9 ECM connector.
(b) Disconnect the E19 combination meter connector.
(c) Measure the resistance.
Standard resistance (Check for short)

Tester Connections	Specified Conditions
A9-24 (W) or E19-8 (combination meter) - Body ground	10 kΩ or higher

(d) Reconnect the ECM connector.
(e) Reconnect the combination meter connector.

OK → **REPAIR OR REPLACE COMBINATION METER ASSEMBLY**

NG → **REPAIR OR REPLACE HARNESS OR CONNECTOR**

5 CHECK THAT MIL IS ILLUMINATED

(a) Check if the MIL is illuminated when the ignition switch is turned ON.
OK:
MIL should be illuminated.

OK → **SYSTEM OK**

NG

6 CHECK THAT ENGINE STARTS

(a) Turn the ignition switch ON.
(b) Start the engine.

Result	Proceed To
Engine starts	A
Engine does not start*	B

HINT:
*: The intelligent tester cannot communicate with the ECM.

ES

B → GO TO VC OUTPUT CIRCUIT

A

7	INSPECT COMBINATION METER ASSEMBLY (MIL CIRCUIT)

(a) Check the MIL circuit (see page ME-15).

NG → REPAIR OR REPLACE COMBINATION METER ASSEMBLY

OK

ES

CHECK AND REPLACE HARNESS OR CONNECTOR (COMBINATION METER - ECM)

SFI SYSTEM

PRECAUTION

NOTICE:

- **Perform RESET MEMORY (AT initialization) when replacing the automatic transmission assembly, engine assembly or ECM (see page AX-18).**
- **Perform REGISTRATION (VIN registration) when replacing the ECM (see page ES-13).**

HINT:

Initialization cannot be completed by only removing the battery.

DEFINITION OF TERMS

Terms	Definition
Monitor Description	Description of what ECM monitors and how detects malfunctions (monitoring purpose and details).
Related DTCs	Group of diagnostic trouble codes that are output by ECM based on same malfunction detection logic.
Typical Enabling Condition	Preconditions that allow ECM to detect malfunctions. With all preconditions satisfied, ECM sets DTC when monitored value(s) exceeds malfunction threshold(s).
Sequence of Operation	Order of monitor priority, applied if multiple sensors and components involved in single malfunction detection process. Each sensor and component monitored in turn, when previous detection operation completed.
Required Sensor/Components	Sensors and components used by ECM to detect each malfunction.
Frequency of Operation	Number of times ECM checks for each malfunction during each driving cycle. "Once per driving cycle" means ECM only performs checks for that malfunction once during single driving cycle. "Continuous" means ECM performs checks for that malfunction whenever enabling conditions met.
Duration	Minimum time for which ECM must detect continuous deviation in monitored value(s) in order to set DTC. Timing begins when Typical Enabling Conditions met.
Malfunction Thresholds	Value, beyond which, ECM determines malfunctions exist and sets DTCs.
MIL Operation	Timing of MIL illumination after malfunction detected. "Immediate" means ECM illuminates MIL as soon as malfunction detected. "2 driving cycle" means ECM illuminates MIL if same malfunction detected second time during next sequential driving cycle.

ON-VEHICLE INSPECTION

1. CHECK THROTTLE BODY

(a) Check the throttle control motor operating sounds.
  (1) Turn the ignition switch ON.
  (2) When pressing the accelerator pedal, check the operating sound of the running motor. Make sure that no friction noises emit from the motor. If friction noise exists, replace the throttle body.

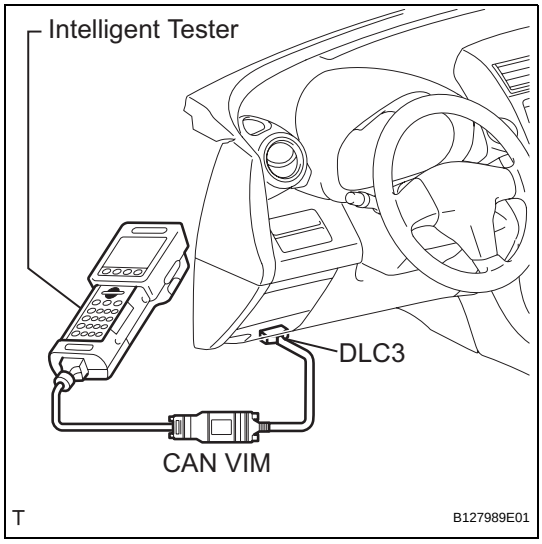

(b) Check the throttle position sensor.
  (1) Connect the intelligent tester to the DLC3.
  (2) Turn the ignition switch ON.
  (3) Push the intelligent tester main switch ON.
  (4) Enter the following menus: DIAGNOSIS / ENHANCED OBD II / DATA LIST / THROTTLE POS.
  (5) Depress the accelerator pedal. When the throttle valve is fully opened, check that the value of "THROTTLE POS" is within the specification.

Standard throttle valve opening percentage:
60% or more

NOTICE:

When checking the standard throttle valve opening percentage, the shift lever should be in the N position.

If the percentage is less than 60%, replace the throttle body.

REMOVAL

1. **DRAIN ENGINE COOLANT (See page CO-6)**
2. **DISCONNECT CABLE FROM NEGATIVE BATTERY TERMINAL**
   CAUTION:
   Wait at least 90 seconds after disconnecting the cable from the negative (-) battery terminal to prevent airbag and seat belt pretensioner activation.
3. **REMOVE NO. 1 ENGINE COVER**
   (a) Remove the 2 nuts and engine cover.

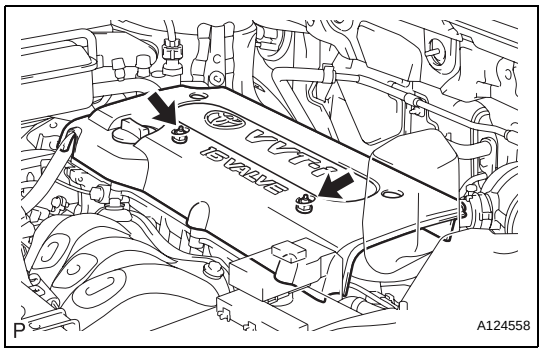

4. **REMOVE AIR CLEANER CAP**
   (a) Disconnect the mass air flow meter connector.
   (b) Disconnect the purge VSV connector.
   (c) Disconnect the 4 wire harness clamps.

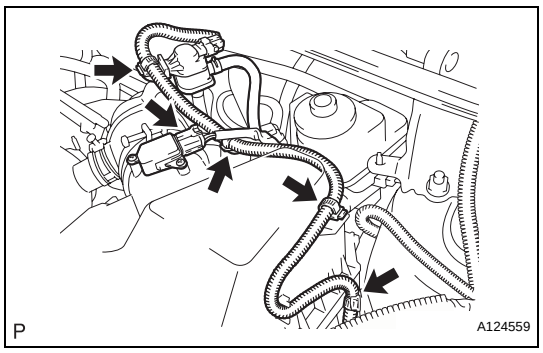

   (d) Disconnect the No. 2 ventilation hose from the air cleaner hose.
   (e) Disconnect the purge line hose from the clamp.

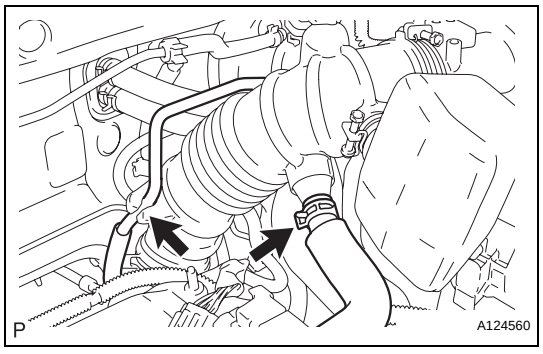

ES

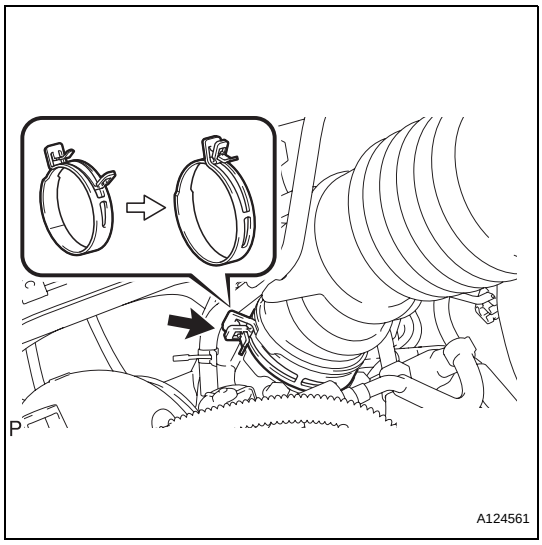

(f) Lock the No. 1 air cleaner hose clamp, and then disconnect the No. 1 air cleaner hose from the throttle body.

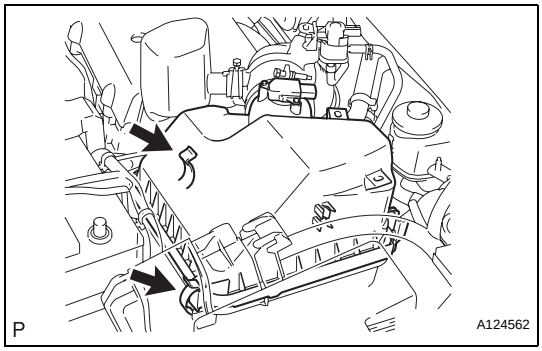

(g) Unfasten the 2 hook clamps, and then remove the air cleaner cap.
(h) Remove the air cleaner filter element from the air cleaner case.

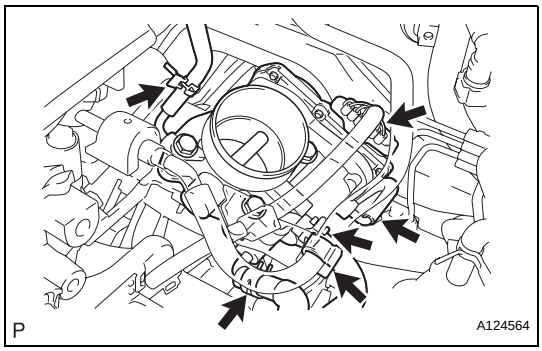

5. REMOVE THROTTLE BODY

(a) Disconnect the purge line hose from the throttle body.
(b) Disconnect the water by-pass hose from the throttle body.
(c) Disconnect the No. 2 water by-pass hose from the throttle body.
(d) Disconnect the No. 1 throttle body hose from the throttle body.
(e) Disconnect the throttle position sensor and control motor connector.
(f) Disconnect the wire harness clamp.
(g) Disconnect the fuel tube from the clamp.

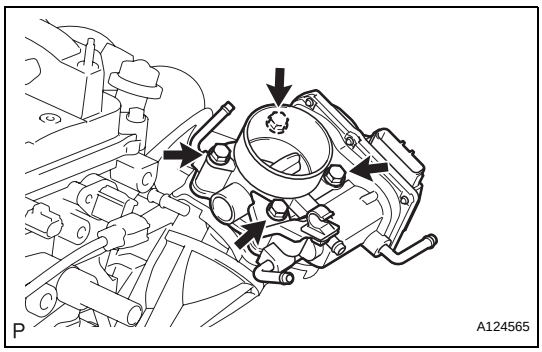

(h) Remove the 4 bolts, and then remove the fuel pipe support and throttle body.

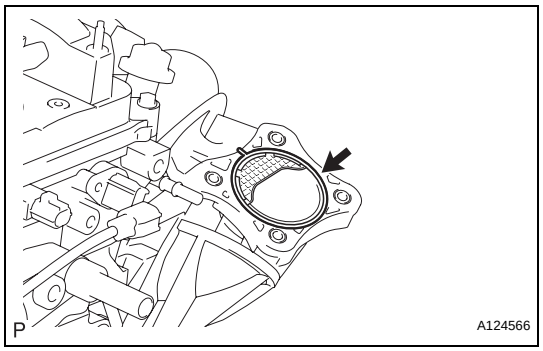

(i) Remove the gasket from the intake manifold.

INSPECTION

1. INSPECT THROTTLE BODY

(a) Measure the resistance of the throttle control motor.

Standard resistance

Tester Connection	Specified Condition
1 (M-) - 2 (M+)	0.3 to 100 Ω at 20°C (68°F)

If the result is not as specified, replace the throttle body.

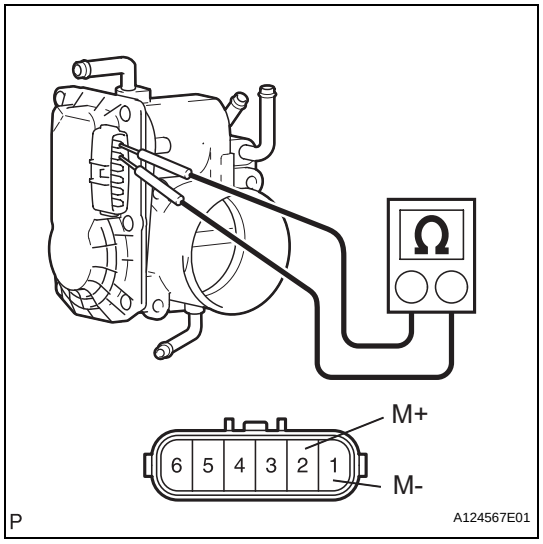

INSTALLATION

1. INSTALL THROTTLE BODY

(a) Install a new gasket onto the intake manifold.

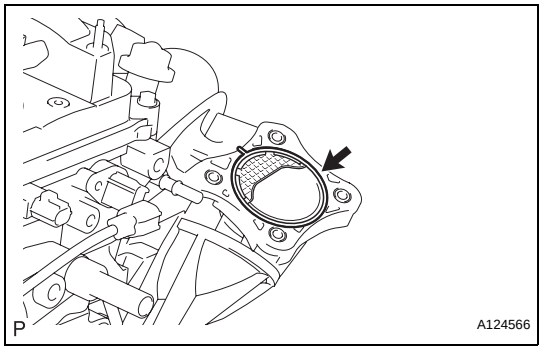

(b) Install the throttle body and fuel pipe clamp with the 4 bolts.

Torque: 30 N*m (305 kgf*cm, 22 ft.*lbf)

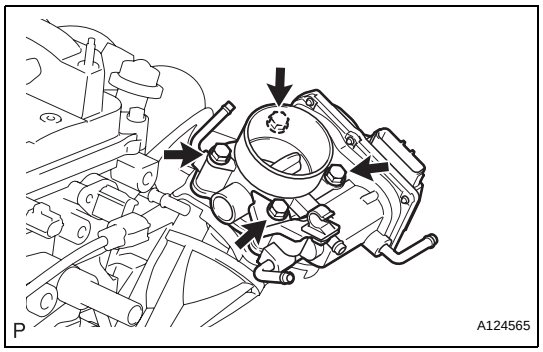

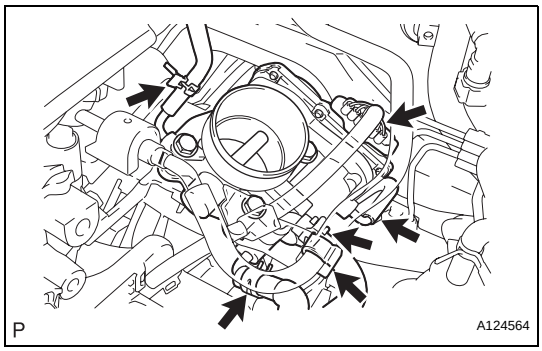

(c) Connect the fuel tube into the clamp.
(d) Connect the wire harness clamp.
(e) Connect the throttle position sensor and control motor connector.
(f) Connect the No. 1 throttle body hose to the throttle body.
(g) Connect the No. 2 water by-pass hose to the throttle body.
(h) Connect the water by-pass hose to the throttle body.
(i) Connect the purge line hose to the throttle body.

2. INSTALL AIR CLEANER CAP

(a) Install the air cleaner filter element onto the air cleaner case.

(b) Insert the hinge part of the air cleaner cap into the air cleaner case, then hang the 2 hook clamps.

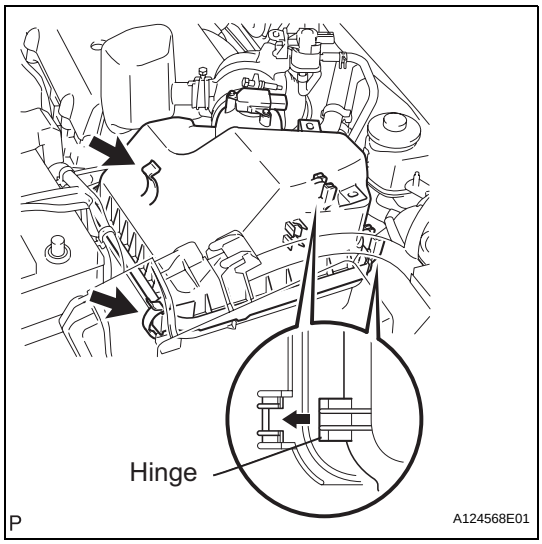

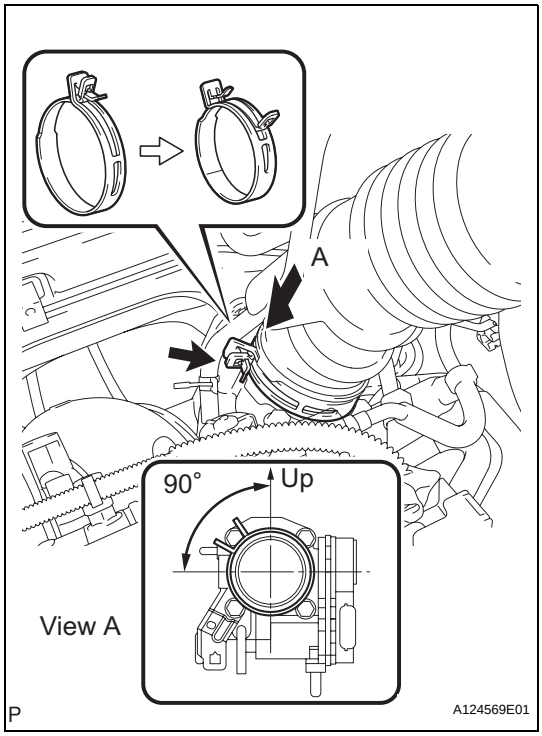

(c) Align the matchmarks of the No. 1 air cleaner hose and throttle body, and then connect the air cleaner hose No. 1 to the throttle body and unfasten the No. 1 air cleaner hose clamp.
NOTICE:
Make sure that the hose clamp is at the correct angle.

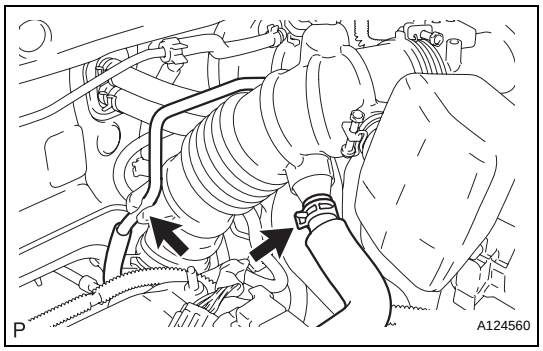

(d) Connect the purge line hose to the clamp.
(e) Connect the No. 2 ventilation hose to the air cleaner hose.

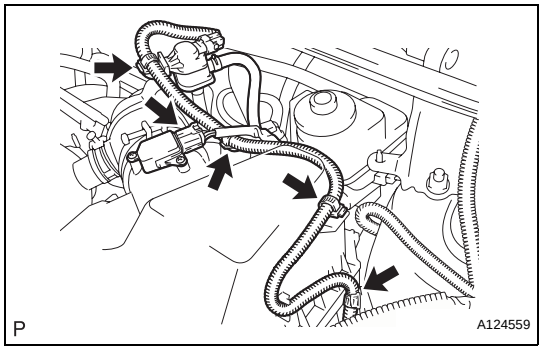

(f) Install the 4 wire harness clamps.
(g) Connect the mass air flow meter connector.

3. CONNECT CABLE TO NEGATIVE BATTERY TERMINAL

4. ADD ENGINE COOLANT (See page CO-6)

5. CHECK FOR ENGINE COOLANT LEAKAGE (See page CO-1)

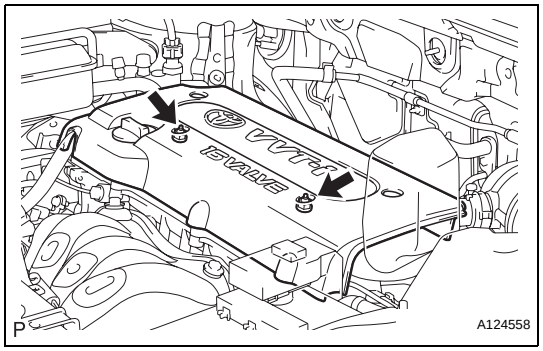

6. INSTALL NO. 1 ENGINE COVER

(a) Install the cover with the 2 nuts.
Torque: 7.0 N*m (71 kgf*cm, 62 in.*lbf)

ES

THROTTLE BODY

COMPONENTS

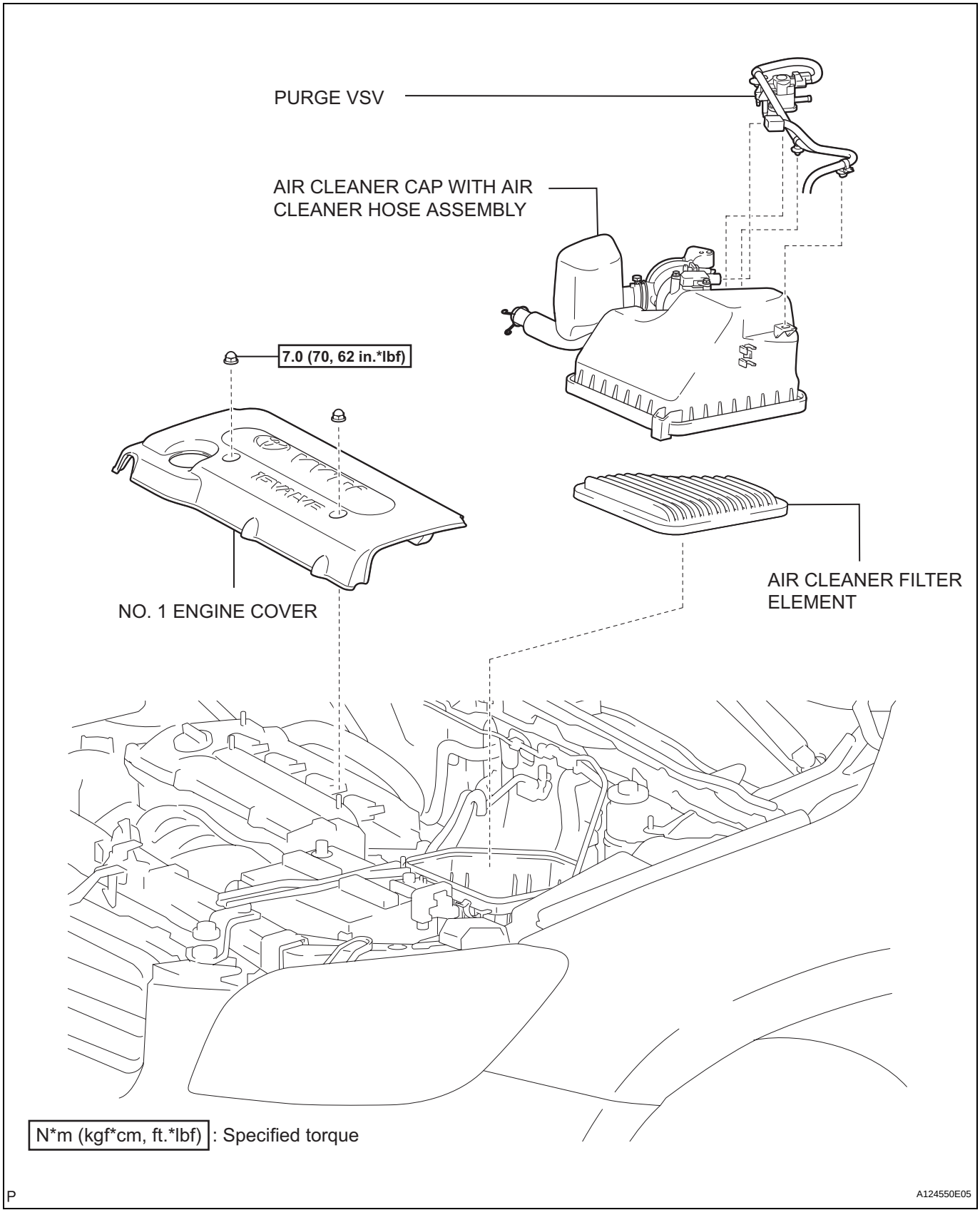

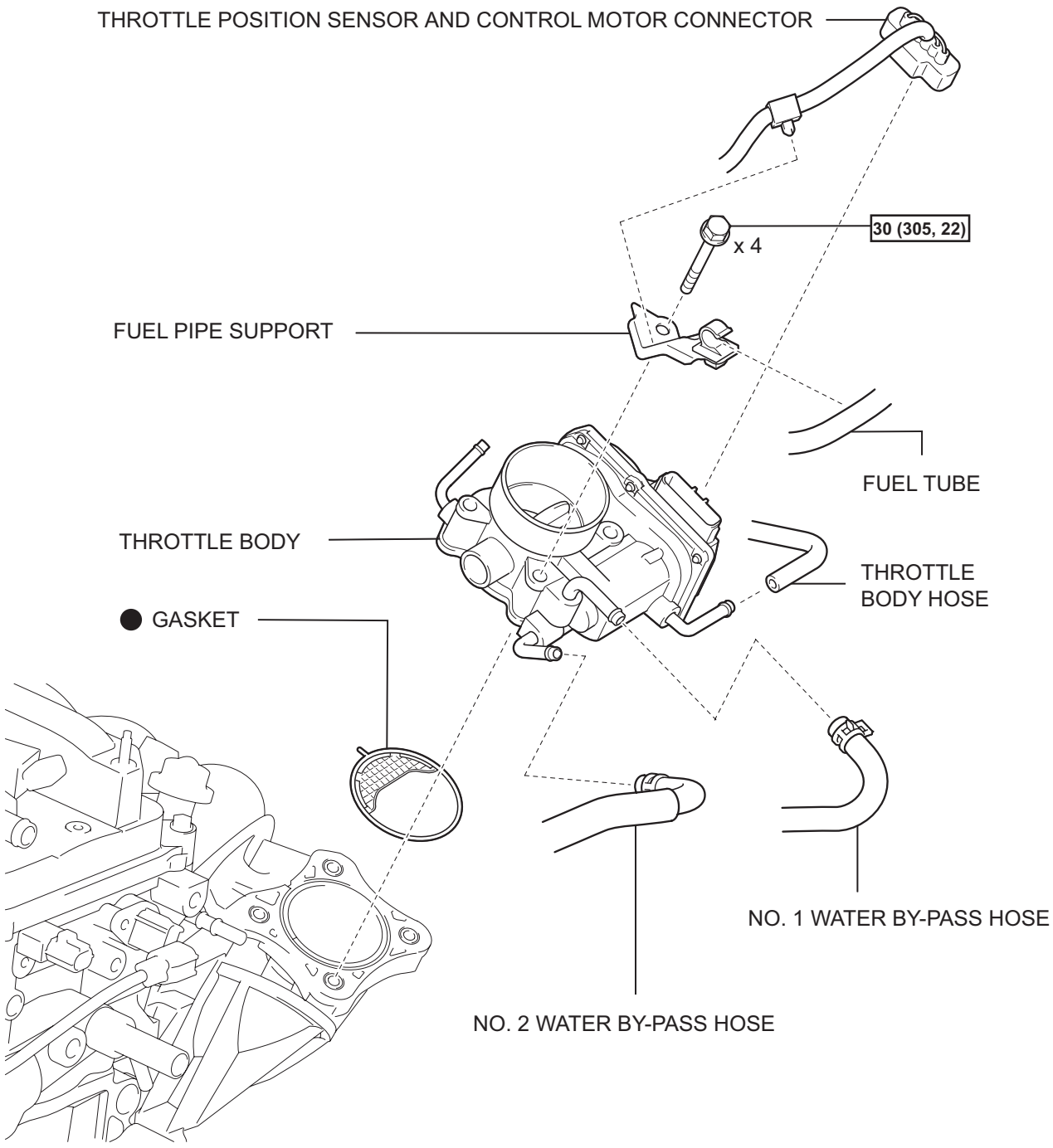

N*m (kgf*cm, ft.*lbf) : Specified torque

● Non-reusable part

P

A124552E01

ES

REMOVAL

1. **DISCHARGE FUEL SYSTEM PRESSURE (See page FU-9)**
2. **DISCONNECT CABLE FROM NEGATIVE BATTERY TERMINAL**
   CAUTION:
   Wait at least 90 seconds after disconnecting the cable from the negative (-) battery terminal to prevent airbag and seat belt pretensioner activation.
3. **REMOVE RADIATOR SUPPORT OPENING COVER**
4. **REMOVE FRONT WHEEL RH**
5. **REMOVE NO. 1 ENGINE UNDER COVER**
6. **REMOVE FRONT FENDER APRON RH**
7. **REMOVE NO. 1 ENGINE COVER (See page EM-22)**
8. **DRAIN ENGINE COOLANT (See page CO-6)**
9. **DRAIN ENGINE OIL (See page LU-4)**
10. **REMOVE AIR CLEANER CAP (See page ES-411)**
11. **REMOVE THROTTLE BODY (See page ES-412)**
12. **REMOVE FUEL DELIVERY PIPE SUB-ASSEMBLY (See page FU-10)**
13. **REMOVE INTAKE MANIFOLD (See page ES-419)**
14. **REMOVE INTAKE MANIFOLD INSULATOR (See page ES-420)**
15. **REMOVE FRONT EXHAUST PIPE (See page EX-3)**
16. **REMOVE OIL DIPSTICK**
17. **REMOVE OIL DIPSTICK GUIDE**
    (a) Remove the bolt and guide.
    (b) Remove the O-ring from the guide.

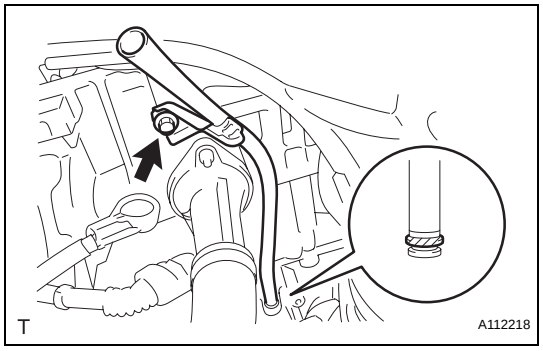

18. **REMOVE MANIFOLD STAY**
    (a) Remove the bolt, nut and stay.

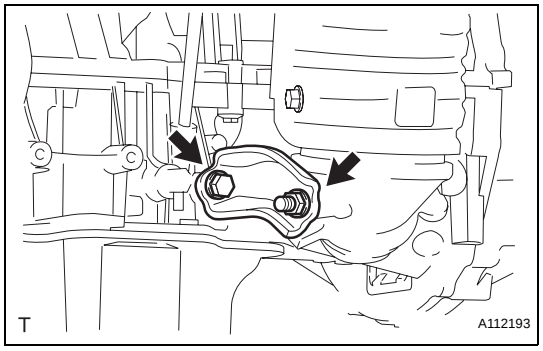

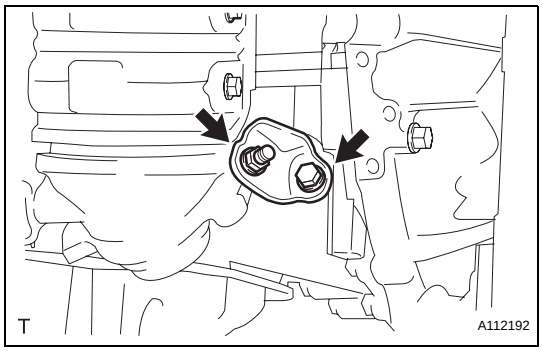

19. REMOVE NO. 2 MANIFOLD STAY

(a) Remove the bolt, nut and stay.

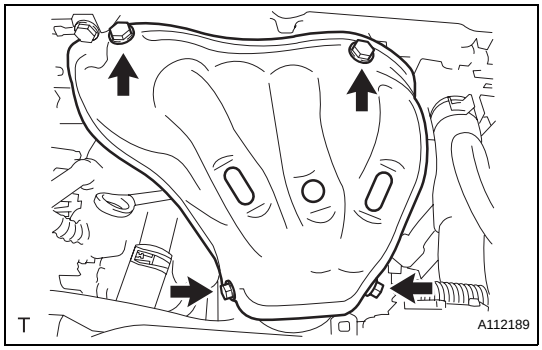

20. REMOVE NO. 1 EXHAUST MANIFOLD HEAT INSULATOR

(a) Remove the 4 bolts and heat insulator.

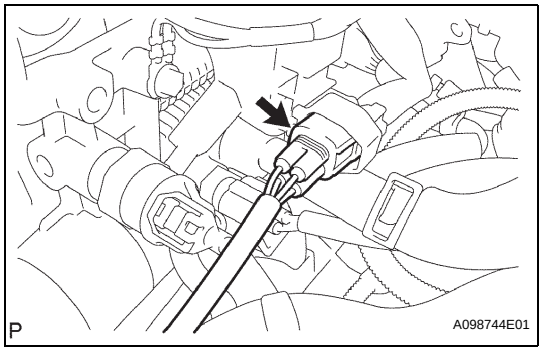

21. REMOVE EXHAUST MANIFOLD CONVERTER SUB-ASSEMBLY

(a) Disconnect the air-fuel ratio sensor connector.

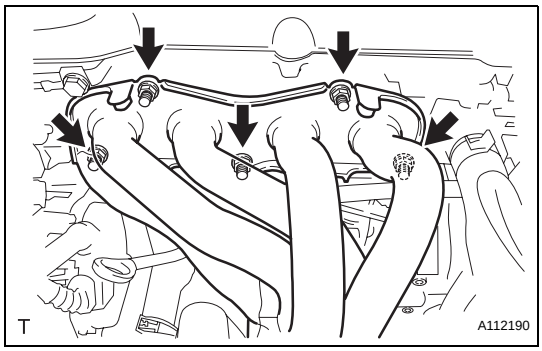

(b) Remove the 5 nuts, manifold converter and gasket.

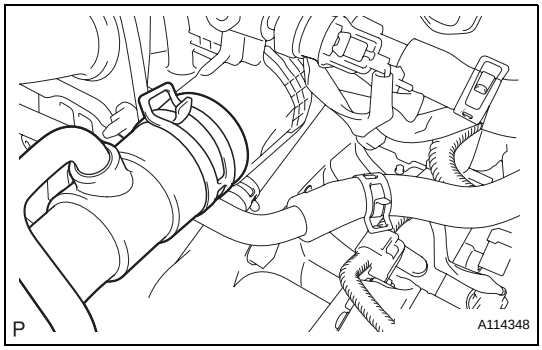

22. DISCONNECT NO. 1 RADIATOR HOSE

(a) Disconnect the No. 1 radiator hose.

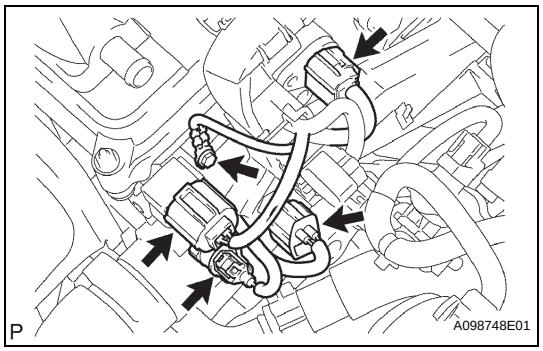

23. DISCONNECT ENGINE WIRE

(a) Disconnect the radio setting condenser connector.
(b) Disconnect the engine oil pressure switch connector.
(c) Disconnect the engine coolant temperature sensor connector.
(d) Disconnect the camshaft position sensor connector.
(e) Remove the bolt and ground cable.

24. REMOVE FRONT SUSPENSION MEMBER REINFORCEMENT RH (See page EM-6)

25. REMOVE FAN AND GENERATOR V BELT (See page EM-6)

26. REMOVE GENERATOR ASSEMBLY (See page CH-9)

27. REMOVE ENGINE MOUNTING INSULATOR RH (See page EM-22)

28. REMOVE IDLER PULLEY (See page EM-23)

29. REMOVE IGNITION COIL ASSEMBLY (See page IG-9)

30. REMOVE SPARK PLUG (See page EM-8)

31. REMOVE CYLINDER HEAD COVER SUB-ASSEMBLY (See page EM-24)

32. REMOVE V-RIBBED BELT TENSIONER ASSEMBLY (See page EM-26)

33. REMOVE CRANKSHAFT POSITION SENSOR (See page ES-402)

34. REMOVE OIL PAN SUB-ASSEMBLY (See page EM-24)

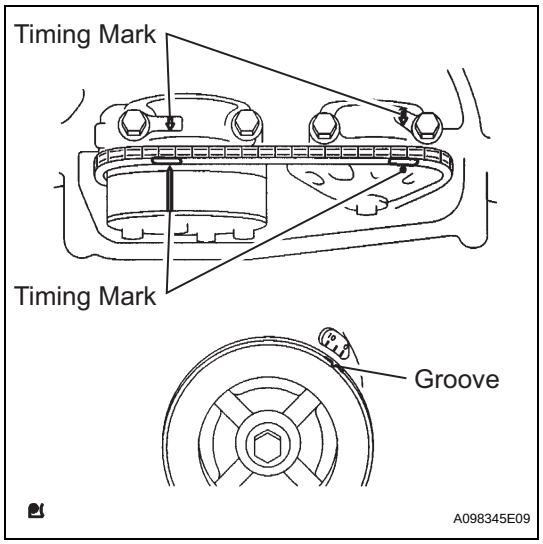

35. SET NO. 1 CYLINDER TO TDC/COMPRESSION

(a) Turn the crankshaft pulley until its groove and the timing mark "0" of the timing chain cover are aligned.
(b) Check that each timing mark of the camshaft timing gear and sprocket is aligned with each timing mark located on the No. 1 and No. 2 bearing caps as shown in the illustration.
If not, turn the crankshaft by 1 revolution (360°) to align the timing marks as above.

EM

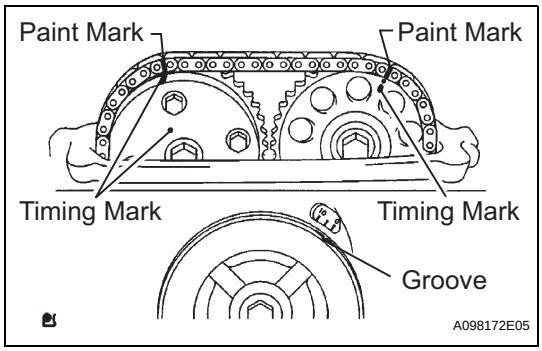

36. REMOVE NO. 2 CAMSHAFT

(a) Place paint marks on the chain in alignment with the timing marks on the camshaft timing gear and camshaft timing sprocket.

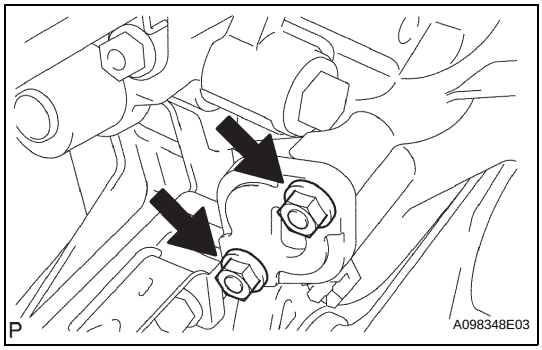

(b) Remove the 2 nuts, tensioner and gasket.

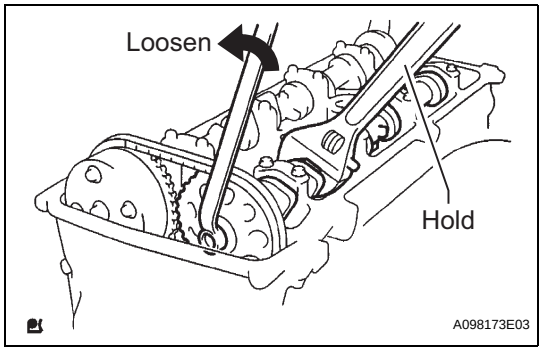

(c) While holding the camshaft with a wrench, loosen the camshaft timing set bolt.

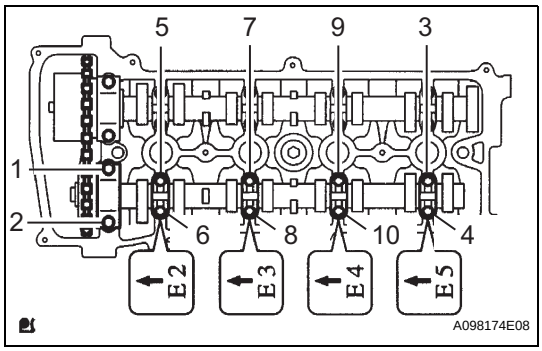

(d) Using several steps, uniformly loosen and remove the 10 bearing cap bolts in the sequence shown in the illustration.
(e) Remove the 5 bearing caps.

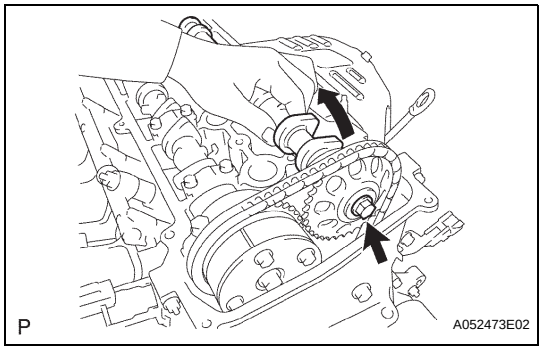

(f) While holding the No. 2 camshaft by hand, remove the camshaft timing sprocket set bolt.
(g) Remove the camshaft timing sprocket from the No. 2 camshaft with the timing chain wrapped on the sprocket.
(h) Remove the camshaft timing sprocket from the timing chain.

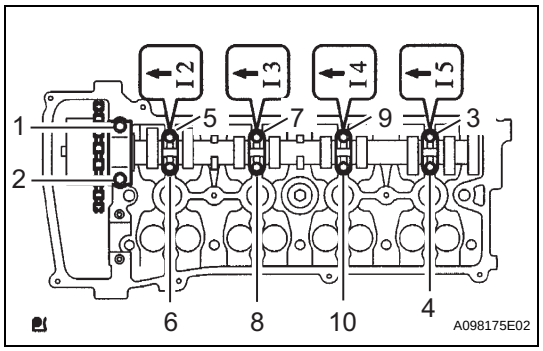

37. REMOVE CAMSHAFT

(a) Using several steps, uniformly loosen and remove the 10 bearing cap bolts in the sequence shown in the illustration.

(b) Remove the 5 bearing caps.

(c) Remove the camshaft and camshaft timing gear while holding the timing chain by hand.

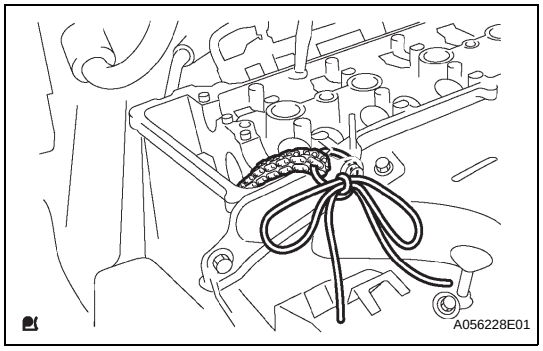

(d) Tie the timing chain with a string as shown in the illustration.

NOTICE:
Be careful not to drop anything inside the timing chain cover.

38. REMOVE CRANKSHAFT PULLEY (See page EM-25)

39. REMOVE ENGINE MOUNTING BRACKET RH (See page EM-26)

40. REMOVE TIMING CHAIN COVER SUB-ASSEMBLY (See page EM-26)

41. REMOVE NO. 1 CRANKSHAFT POSITION SENSOR PLATE

42. REMOVE TIMING CHAIN GUIDE (See page EM-28)

43. REMOVE CHAIN TENSIONER SLIPPER (See page EM-28)

44. REMOVE NO. 1 CHAIN VIBRATION DAMPER (See page EM-28)

45. REMOVE CHAIN SUB-ASSEMBLY

46. REMOVE CAMSHAFT TIMING OIL CONTROL VALVE ASSEMBLY (See page ES-395)

47. REMOVE CAMSHAFT TIMING GEAR ASSEMBLY

(a) Clamp the camshaft in a vise, and make sure that the camshaft timing gear does not rotate.

(b) Cover all the oil ports with vinyl tape except the advance side port shown in the illustration.

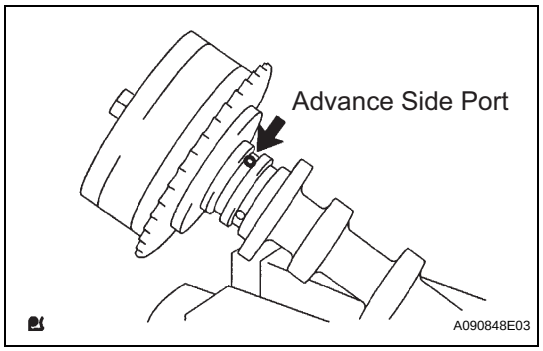

EM

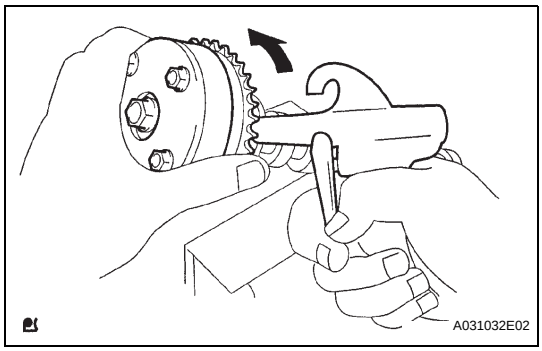

(c) Apply air pressure of 100 kPa (1.0 kgf/cm^2, 14 psi) to the oil path, then turn the camshaft timing gear to the advance direction (counterclockwise) by hand.
CAUTION:
Cover the paths with a shop rag to avoid oil splashes.
HINT:
Depending on the air pressure, the camshaft timing gear will turn to the advance angle side without applying force by hand. Also, under the condition that the pressure is difficult to apply because of air leakage from the port, there may be the case that the lock pin is difficult to release.

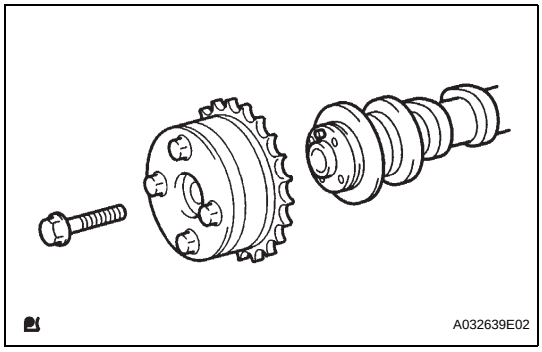

(d) Remove the flange bolt of the camshaft timing gear.
NOTICE:
- **Be sure not to remove the other 4 bolts.**
- **When reusing the camshaft timing gear, release the straight pin lock first, then install the gear.**

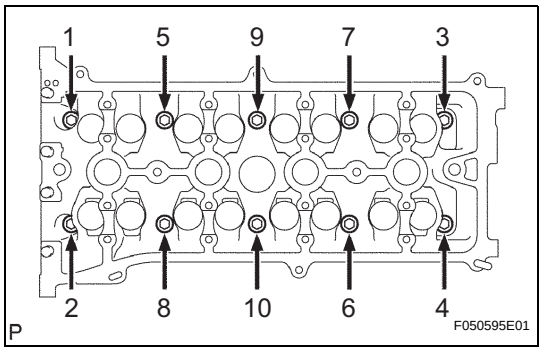

48. REMOVE CYLINDER HEAD SUB-ASSEMBLY

(a) Using several steps, uniformly loosen and remove the 10 cylinder head bolts and 10 plate washers with a 10 mm bi-hexagon wrench in the sequence shown in the illustration.
NOTICE:
Head warpage or cracking could result from removing the bolts in the wrong order.

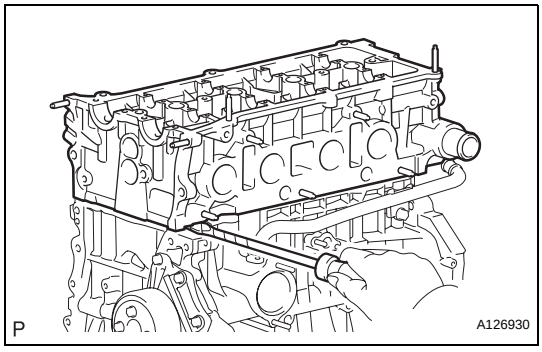

(b) Using a screwdriver with its tip wrapped with tape, pry between the cylinder head and cylinder block, and remove the cylinder head.
NOTICE:
Be careful not to damage the contact surfaces of the cylinder head and cylinder block.

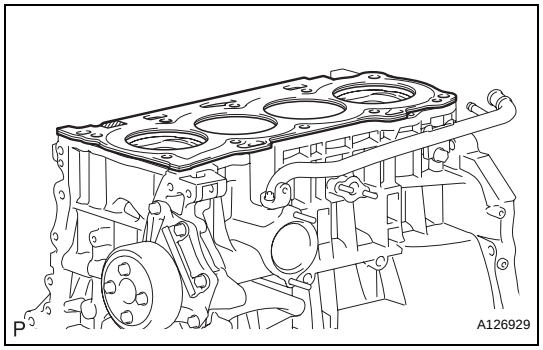

49. REMOVE CYLINDER HEAD GASKET

DISASSEMBLY

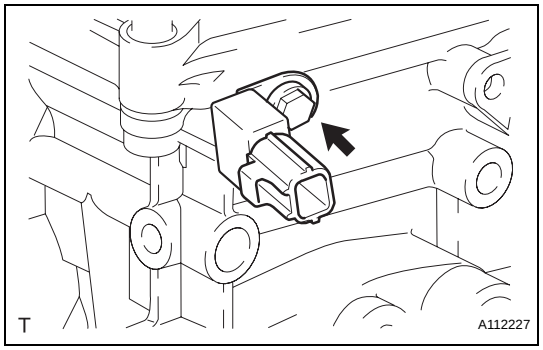

1. REMOVE RADIO SETTING CONDENSER

(a) Remove the bolt and condenser.

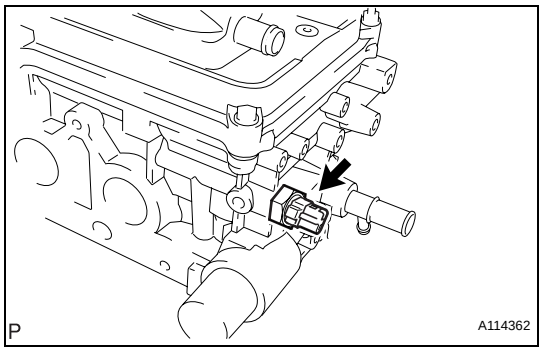

2. REMOVE OIL PRESSURE SWITCH

(a) Using a 24 mm deep socket wrench, remove the sensor.

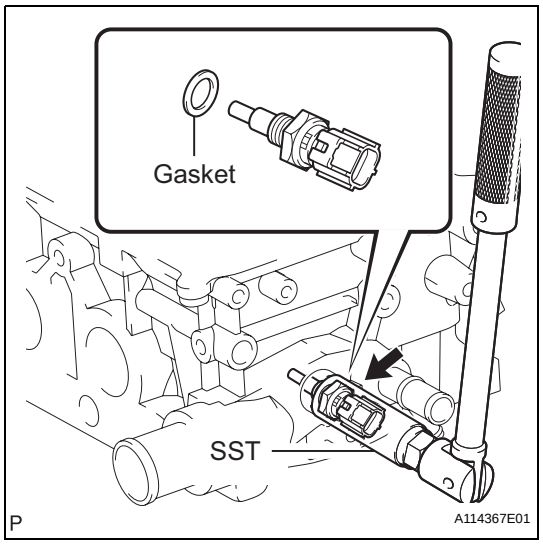

3. REMOVE ENGINE COOLANT TEMPERATURE SENSOR

(a) Using SST, remove the sensor and gasket.
SST 09817-33190

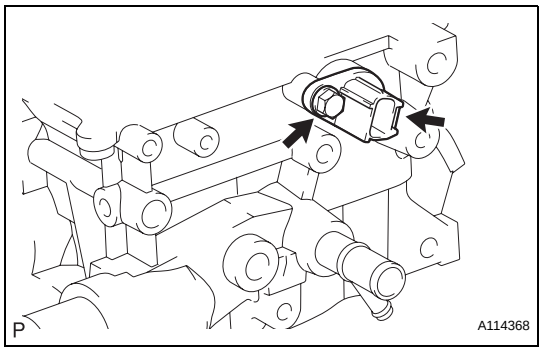

4. REMOVE CAMSHAFT POSITION SENSOR

(a) Remove the bolt and sensor.

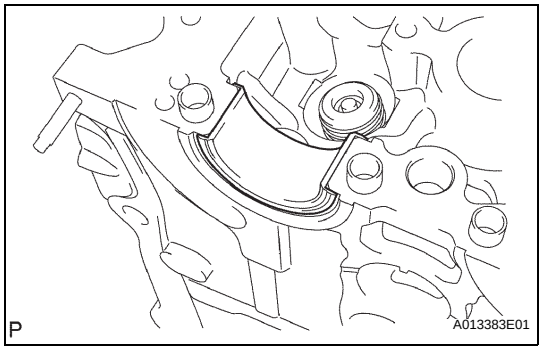

5. REMOVE NO. 2 CAMSHAFT BEARING

(a) Remove the No. 2 camshaft bearing.

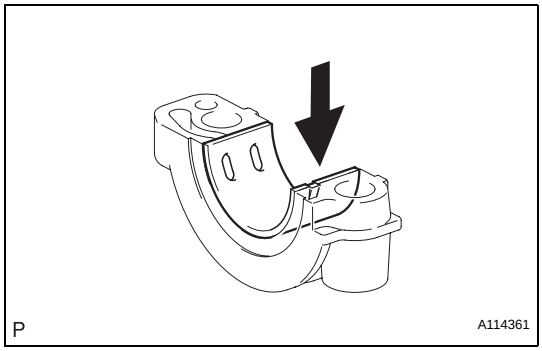

6. REMOVE NO. 1 CAMSHAFT BEARING

(a) Remove the No. 1 camshaft bearing.

7. REMOVE VALVE LIFTER

HINT:
Arrange the valve lifters in the correct order.

8. REMOVE INTAKE VALVE

(a) Place the cylinder head on wooden blocks.

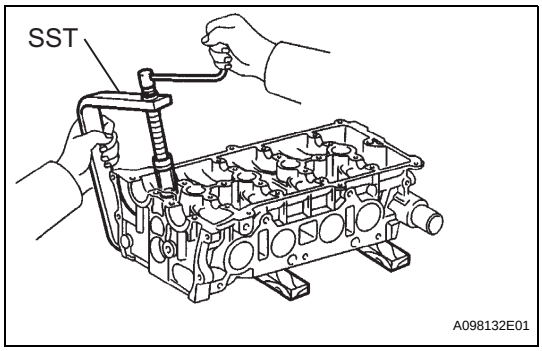

(b) Using SST, compress the spring, then remove the 2 retainer locks.
SST 09202-70020 (09202-00010)

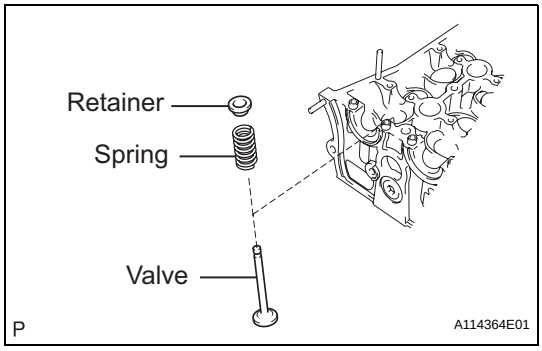

(c) Remove the retainer, spring and valve from the cylinder head.
HINT:
Arrange the removed parts in the correct order.

9. REMOVE EXHAUST VALVE

(a) Place the cylinder head on wooden blocks.

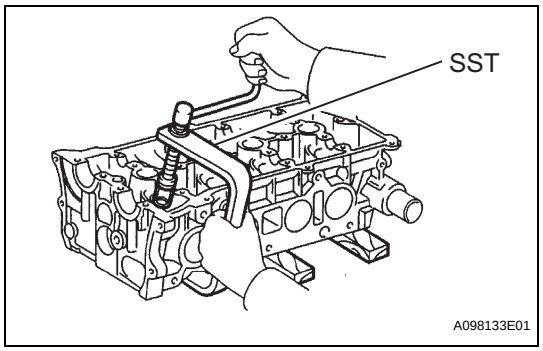

(b) Using SST, compress the spring, then remove the 2 retainer locks.
SST 09202-70020 (09202-00010)

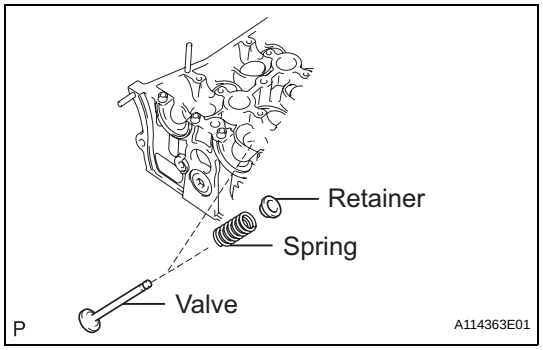

(c) Remove the retainer, spring and valve from the cylinder head.
HINT:
Arrange the removed parts in the correct order.

EM

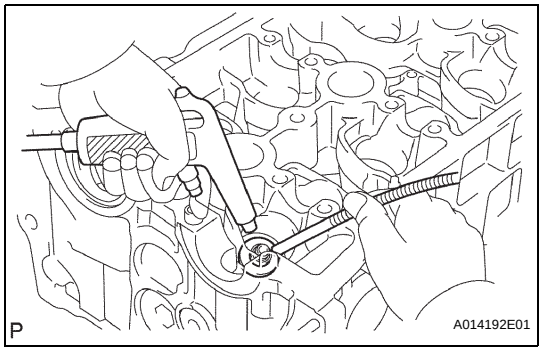

10. REMOVE VALVE SPRING SEAT

(a) Using compressed air and a magnetic finger, remove the spring seat by blowing air.
HINT:
Arrange the valves, valve springs, spring seats and spring retainers in the correct order.

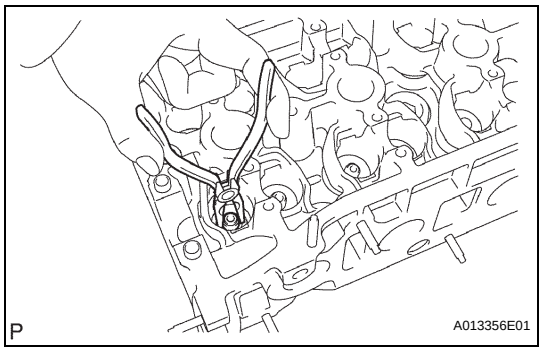

11. REMOVE VALVE STEM OIL SEAL

(a) Using needle-nose pliers, remove the 16 oil seals.

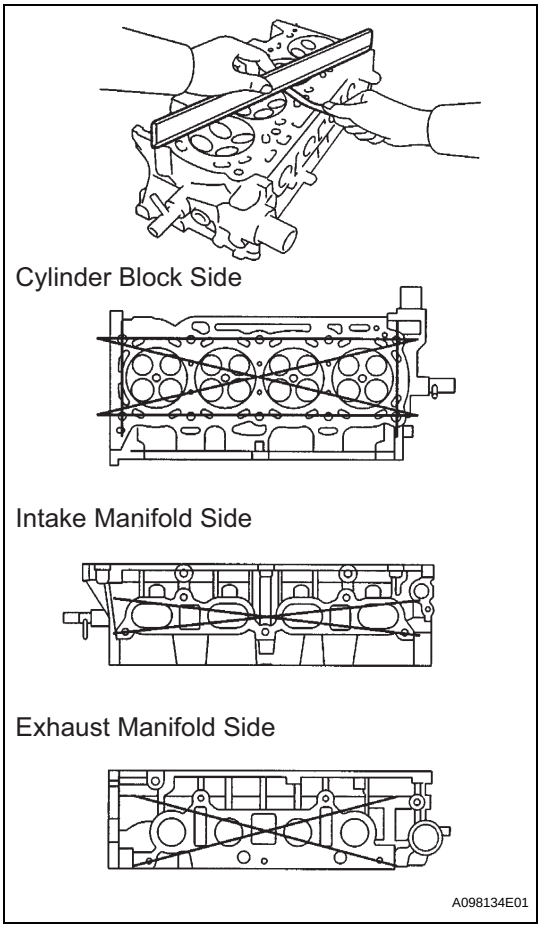

INSPECTION

1. INSPECT CYLINDER HEAD FOR WARPAGE

(a) Using a precision straightedge and feeler gauge, measure the warpage of the contact surfaces of the cylinder block and manifolds.

Maximum warpage:

0.08 mm (0.0032 in.)

If the warpage is greater than the maximum, replace the cylinder head sub-assembly.

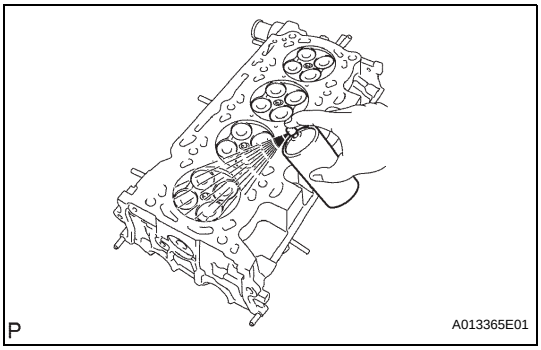

2. INSPECT CYLINDER HEAD FOR CRACKS

(a) Using a dye penetrant, inspect the combustion chamber, intake ports, exhaust ports and cylinder block surface for cracks.

If cracked, replace the cylinder head.

3. INSPECT VALVE SEAT

(a) Apply a light coat of Prussian blue to the valve face.

(b) Lightly press the valve against the seat.

NOTICE:

Do not turn the valve.

(c) Check the valve face and seat in accordance with the following procedure.

(1) If blue appears 360° around the face, the valve is concentric. If not, replace the valve.

(2) If blue appears 360° around the valve seat, the guide and face are concentric. If not, resurface the valve seat (see page EM-87).

(3) Check that the seat contact is in the middle of the valve face with a width.

Standard width

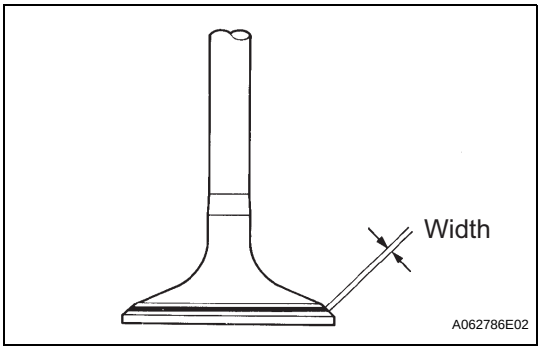

Item	Standard Condition
Intake	1.0 to 1.4 mm (0.0039 to 0.0551 in.)
Exhaust	1.2 to 1.6 mm (0.0472 to 0.0630 in.)

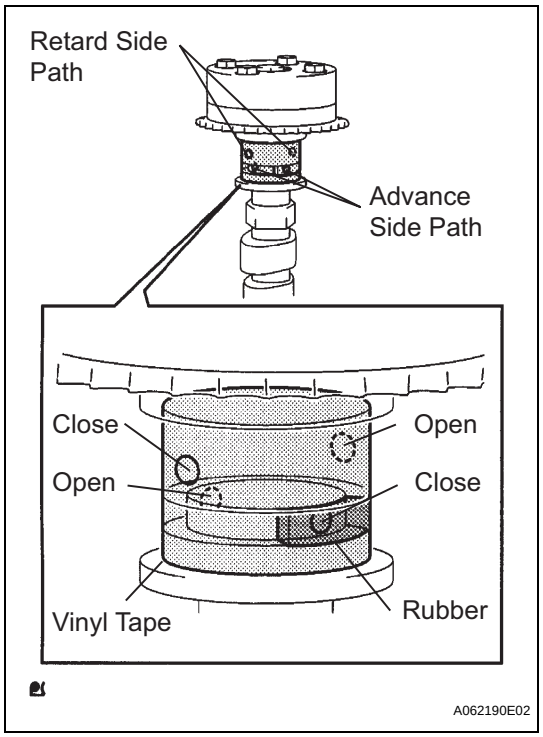

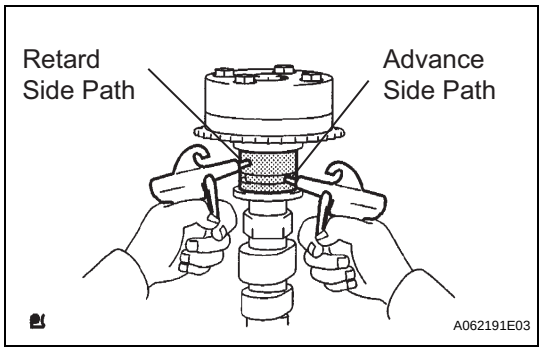

4. INSPECT CAMSHAFT TIMING GEAR ASSEMBLY

(a) Check the lock of the camshaft timing gear.

(1) Clamp the camshaft in a vise, and confirm that the camshaft timing gear is locked.

NOTICE:

Be careful not to damage the camshaft.

(b) Release the lock pin.

(1) Cover the 4 oil paths of the cam journal with vinyl tape as shown in the illustration.

HINT:

The 2 advance side paths are provided in the groove of the camshaft. Plug one of the paths with a rubber piece.

(2) Break through the tape of the advance side path and the retard side path on the opposite side of the groove.

(3) Apply approximately 200 kPa (2.0 kgf/cm^2, 28 psi) of air pressure to the paths whose tape was broken in the procedure above.

CAUTION:

Some oil spraying will occur. Contain the spray with a shop rag.

(4) Check that the camshaft timing gear revolves in the advance direction when weakening the air pressure of the retard side path.

OK:

Gear rotates in advance direction.

HINT:

This operation releases the lock pin for the extreme retard position.

(5) When the camshaft timing gear reaches the extreme advance position, remove the air gun from the retard side path and advance side path, in that order.

NOTICE:

Do not remove the air gun from the advance side path first. The gear may abruptly shift in the retard direction and break the lock pin.

(c) Check for smooth rotation.

(1) Rotate the camshaft timing gear within its movable range several times, but do not turn it to the extreme retard position. Check that the gear rotates smoothly.

OK:

Gear rotates smoothly.

EM

NOTICE:
Do not use an air gun to perform the smooth operation check.

(d) Check the lock in the extreme retard position.
(1) Confirm that the camshaft timing gear is locked at the extreme retard position.

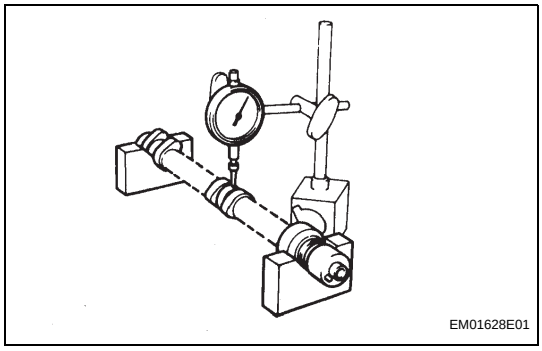
EM01628E01

5. INSPECT CAMSHAFT

(a) Inspect the camshaft for runout.
(1) Place the camshaft on V-blocks.
(2) Using a dial indicator, measure the circle runout at the center journal.
Maximum circle runout:
0.03 mm (0.0012 in.)
If the circle runout is greater than the maximum, replace the camshaft.

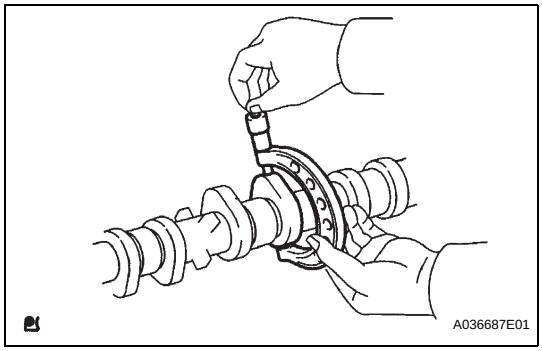
A036687E01

(b) Inspect the cam lobes.
(1) Using a micrometer, measure the cam lobe height.
Standard cam lobe height:
47.306 to 47.406 mm (1.8624 to 1.8664 in.)
Minimum cam lobe height:
47.196 mm (1.8581 in.)
If the cam lobe height is less than the minimum, replace the camshaft.

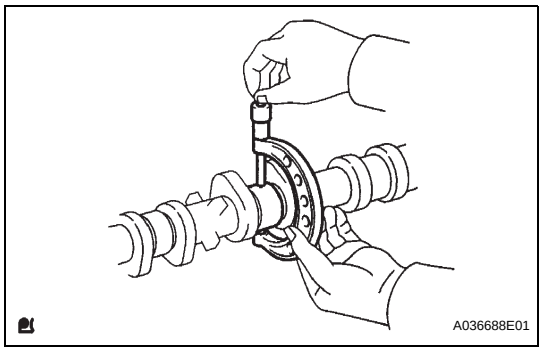
A036688E01

(c) Inspect the camshaft journals.
(1) Using a micrometer, measure the journal diameter.
Standard journal diameter

Journal Position	Specified Condition
No. 1	35.971 to 35.985 mm (1.4162 to 1.4167 in.)
Other	22.959 to 22.975 mm (0.9039 to 0.9045 in.)

If the journal diameter is not as specified, check the oil clearance.

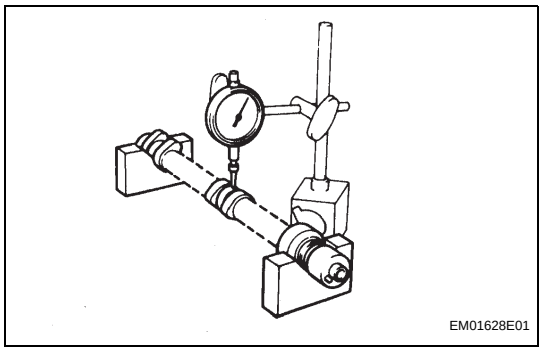
EM01628E01

6. INSPECT NO. 2 CAMSHAFT

(a) Inspect the camshaft for runout.
(1) Place the camshaft on V-blocks.
(2) Using a dial indicator, measure the circle runout at the center journal.
Maximum circle runout:
0.03 mm (0.0012 in.)
If the circle runout is greater than the maximum, replace the No. 2 camshaft.

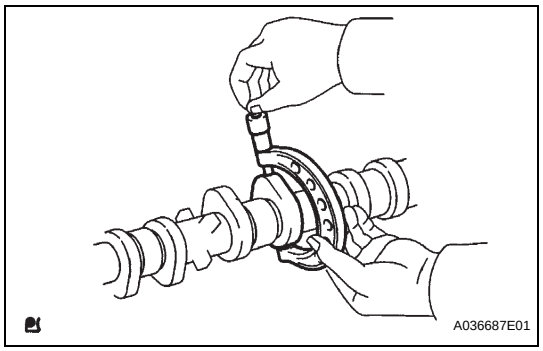

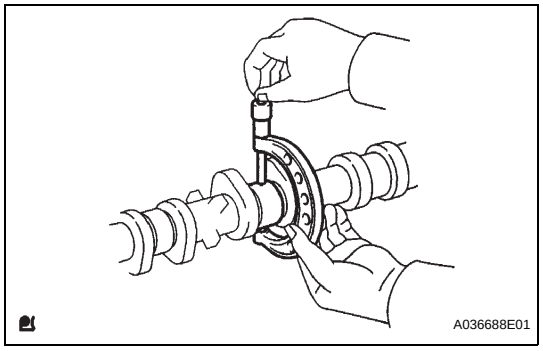

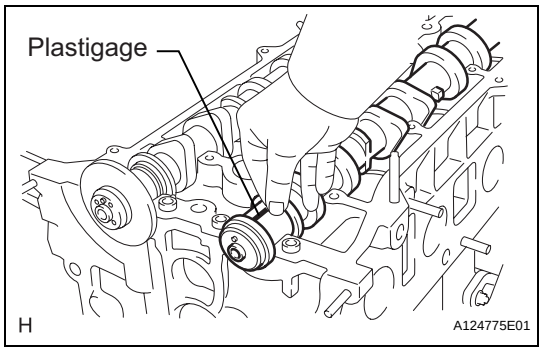

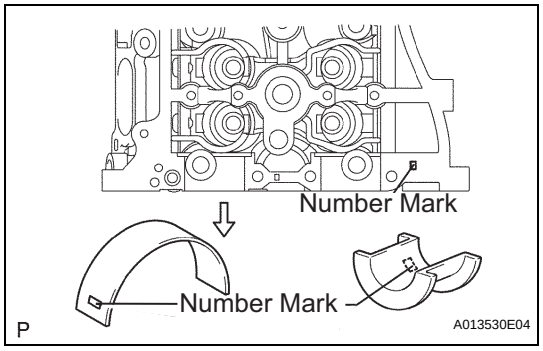

(b) Inspect the cam lobes.

(1) Using a micrometer, measure the cam lobe height.

Standard cam lobe height:
45.983 to 46.083 mm (1.8104 to 1.8143 in.)
Minimum cam lobe height:
45.873 mm (1.8060 in.)

If the cam lobe height is less than the minimum, replace the No. 2 camshaft.

(c) Inspect the camshaft journals.

(1) Using a micrometer, measure the journal diameter.

Standard journal diameter

Journal Position	Specified Condition
No. 1	35.971 to 35.985 mm (1.4162 to 1.4167 in.)
Other	22.959 to 22.975 mm (0.9039 to 0.9045 in.)

If the journal diameter is not as specified, check the oil clearance.

7. INSPECT CAMSHAFT OIL CLEARANCE

(a) Clean the 10 bearing caps and camshaft journals.

(b) Place the 2 camshafts on the cylinder head.

(c) Lay a strip of Plastigage across each of the camshaft journals.

(d) Install the 10 bearing caps (see page EM-84).

NOTICE:
Do not turn the camshaft.

(e) Remove the 10 bearing caps for the No. 2 camshaft (see page EM-60) and camshaft (see page EM-61).

(f) Measure the Plastigage at its widest point.

Standard oil clearance

Item	Standard Condition
Intake No. 1 journal	0.007 to 0.038 mm (0.0003 to 0.0015 in.)
Exhaust No. 1 journal	0.040 to 0.079 mm (0.0016 to 0.0031 in.)
Other journal	0.025 to 0.062 mm (0.0010 to 0.0024 in.)

Maximum oil clearance

Item	Standard Condition
Intake No. 1 journal	0.07 mm (0.0028 in.)
Other journal	0.10 mm (0.0039 in.)

NOTICE:
Completely remove the Plastigage after the measurement.

If the oil clearance on the No. 1 journal is greater than the maximum, choose a new bearing and install it.
If the oil clearance on the other journals is greater than the maximum, replace the cylinder head sub-assembly or the camshaft.

Standard cylinder head journal bore diameter

Mark	Standard Condition
Mark 1	40.000 to 40.008 mm (1.5748 to 1.5751 in.)
Mark 2	40.009 to 40.017 mm (1.5752 to 1.5755 in.)
Mark 3	40.018 to 40.025 mm (1.5755 to 1.5758 in.)

Standard bearing center wall thickness

Mark	Standard Condition
Mark 1	2.000 to 2.004 mm (0.0787 to 0.0789 in.)
Mark 2	2.005 to 2.008 mm (0.0789 to 0.0791 in.)
Mark 3	2.009 to 2.012 mm (0.0791 to 0.0792 in.)

Standard camshaft journal diameter:
35.971 to 35.985 mm (1.4162 to 1.4167 in.)

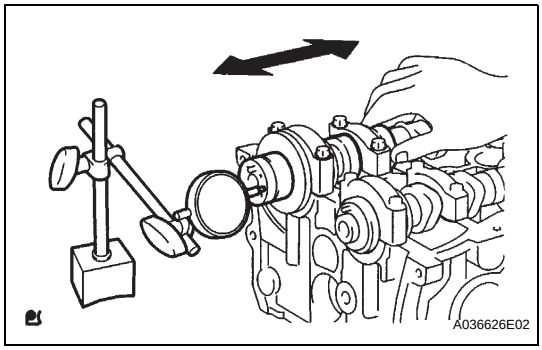

8. INSPECT CAMSHAFT THRUST CLEARANCE

(a) Install the 2 camshafts (see page EM-84).
(b) Using a dial indicator, measure the thrust clearance while moving the camshaft back and forth.

Standard thrust clearance

Item	Standard Condition
Intake	0.040 to 0.095 mm (0.0016 to 0.0037 in.)
Exhaust	0.080 to 0.135 mm (0.0032 to 0.0053 in.)

Maximum thrust clearance

Item	Standard Condition
Intake	0.11 mm (0.0043 in.)
Exhaust	0.15 mm (0.0059 in.)

If the thrust clearance is greater than the maximum, replace the cylinder head.
If damage is found on the camshaft thrust surfaces, replace the camshaft.

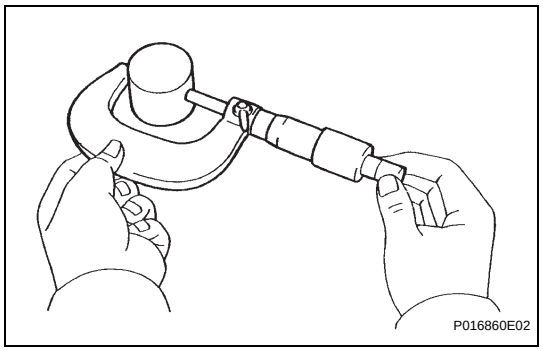

9. INSPECT VALVE LIFTER

(a) Using a micrometer, measure the lifter diameter.

Standard lifter diameter:

30.966 to 30.976 mm (1.2191 to 1.2195 in.)

If the diameter is not as specified, replace the valve lifter.

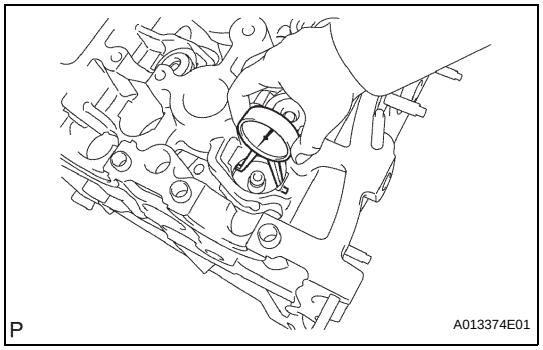

10. INSPECT VALVE LIFTER OIL CLEARANCE

(a) Using a caliper gauge, measure the valve lifter bore diameter of the cylinder head.

Standard lifter bore diameter:

31.009 to 31.025 mm (1.2208 to 1.2215 in.)

If the diameter is not as specified, replace the cylinder head sub-assembly.

(b) Subtract the valve lifter diameter measurement from the valve lifter bore diameter measurement.

Standard oil clearance:

0.033 to 0.059 mm (0.0013 to 0.0023 in.)

Maximum oil clearance:

0.079 mm (0.0031 in.)

If the oil clearance is greater than the maximum, replace the valve lifter. If necessary, replace the cylinder head sub-assembly.

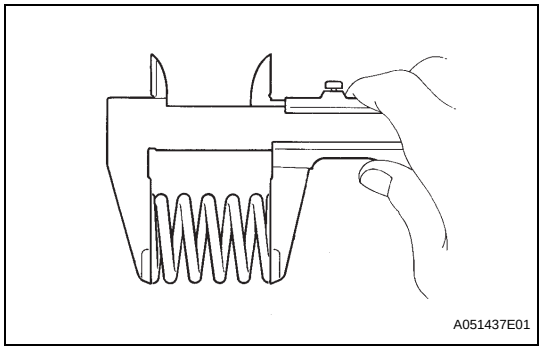

11. INSPECT INNER COMPRESSION SPRING

(a) Using a vernier caliper, measure the free length of the valve spring.

Standard free length:

47.43 mm (1.8673 in.)

If the length is not as specified, replace the inner compression spring.

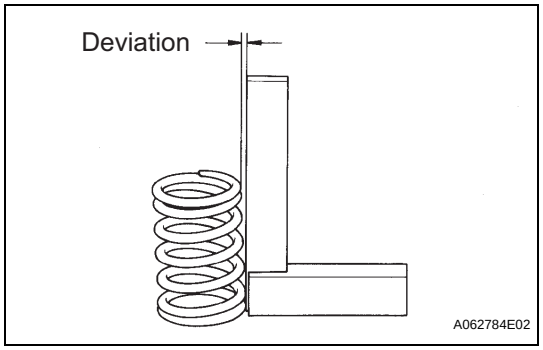

(b) Using a steel square, measure the deviation of the inner compression spring.

Maximum deviation:

1.6 mm (0.063 in.)

Maximum angle (Reference):

2°

If the deviation is greater than the maximum, replace the inner compression spring.

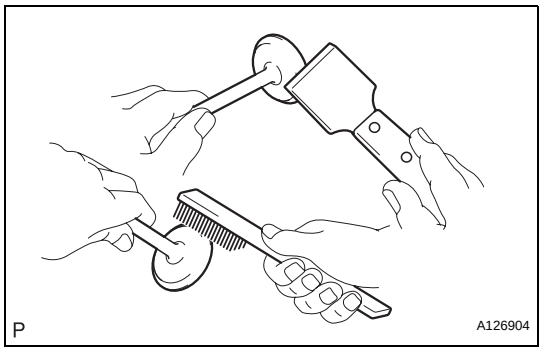

12. INSPECT INTAKE VALVE

(a) Using a gasket scraper, chip off any carbon on the valve head.

(b) Using a wire brush, thoroughly clean the valve.

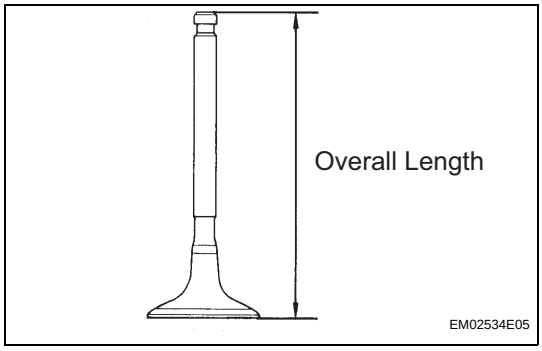

(c) Using a vernier caliper, measure the valve overall length.

Standard overall length:
101.71 mm (4.0043 in.)
Minimum overall length:
101.21 mm (3.9846 in.)

If the overall length is less than the minimum, replace the intake valve.

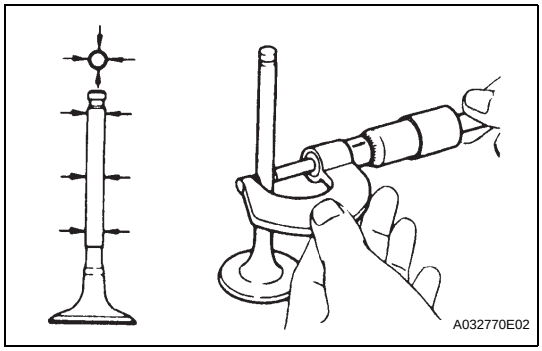

(d) Using a micrometer, measure the diameter of the valve stem.

Standard valve stem diameter:
5.470 to 5.485 mm (0.2154 to 0.2159 in.)

If the diameter is not as specified, replace the intake valve.

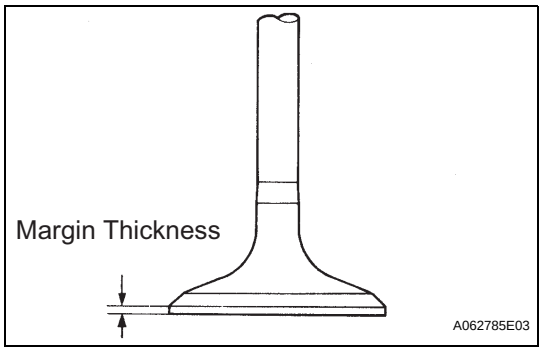

(e) Using a vernier caliper, measure the valve head margin thickness.

Standard margin thickness:
1.25 mm (0.0492 in.)
Minimum margin thickness:
1.05 mm (0.0413 in.)

If the diameter is not as specified, replace the intake valve.

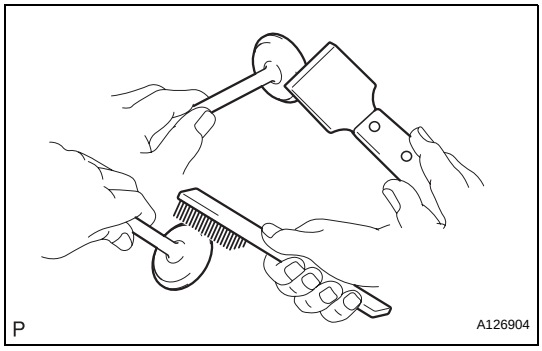

13. INSPECT EXHAUST VALVE

(a) Using a gasket scraper, chip off any carbon on the valve head.

(b) Using a wire brush, thoroughly clean the valve.

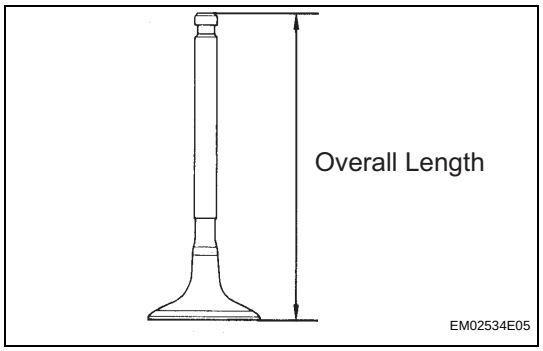

(c) Using a vernier caliper, measure the valve overall length.
Standard overall length:
101.15 mm (3.9823 in.)
Minimum overall length:
100.70 mm (3.9646 in.)
If the overall length is less than the minimum, replace the exhaust valve.

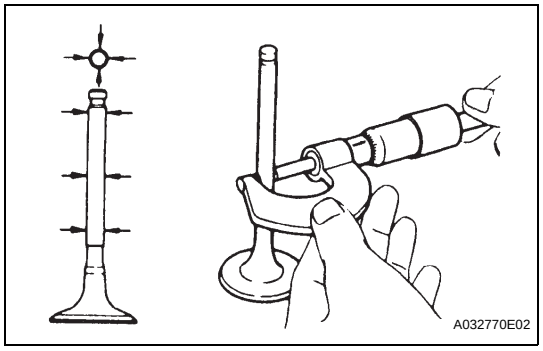

(d) Using a micrometer, measure the diameter of the valve stem.
Standard valve stem diameter:
5.465 to 5.480 mm (0.2152 to 0.2158 in.)
If the overall length is less than the minimum, replace the exhaust valve.

EM

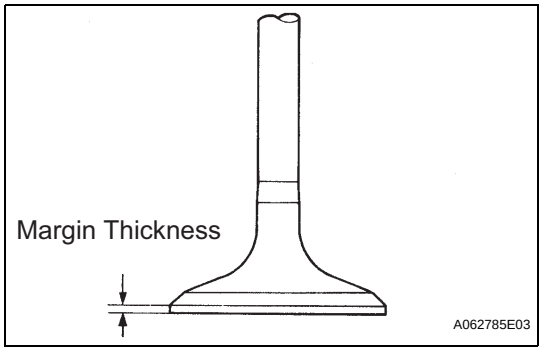

(e) Using a vernier caliper, measure the valve head margin thickness.
Standard margin thickness:
1.40 mm (0.0551 in.)
Minimum margin thickness:
1.20 mm (0.0472 in.)
If the overall length is less than the minimum, replace the exhaust valve.

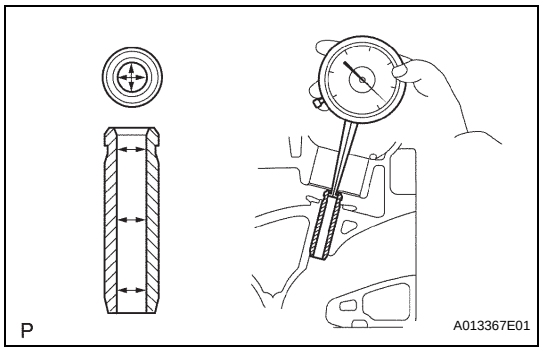

14. INSPECT INTAKE VALVE GUIDE BUSH

(a) Using a caliper gauge, measure the inside diameter of the guide bush.
Standard bush inside diameter:
5.510 to 5.530 mm (0.2169 to 0.2177 in.)
If the inside diameter is not as specified, replace the intake valve guide bush.

(b) Subtract the valve stem diameter measurement from the guide bush inside diameter measurement.
Standard oil clearance:
0.025 to 0.060 mm (0.0010 to 0.0024 in.)
Maximum oil clearance:
0.08 mm (0.0032 in.)
If the clearance is greater than the maximum, replace the valve and intake guide bush.

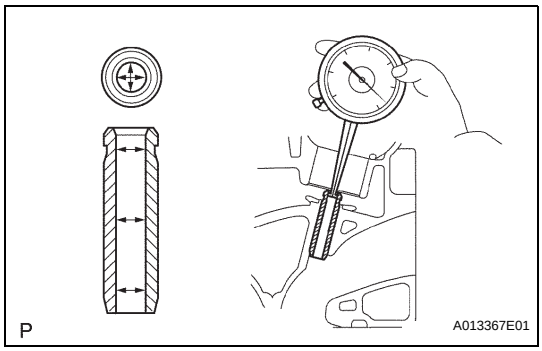

15. INSPECT EXHAUST VALVE GUIDE BUSH

(a) Using a caliper gauge, measure the inside diameter of the guide bush.

Standard bush inside diameter:
5.510 to 5.530 mm (0.2169 to 0.2177 in.)

If the inside diameter is not as specified, replace the exhaust valve guide bush.

(b) Subtract the valve stem diameter measurement from the guide bush inside diameter measurement.

Standard oil clearance:
0.030 to 0.065 mm (0.0012 to 0.0026 in.)
Maximum oil clearance:
0.10 mm (0.004 in.)

If the clearance is greater than the maximum, replace the valve and exhaust valve guide bush.

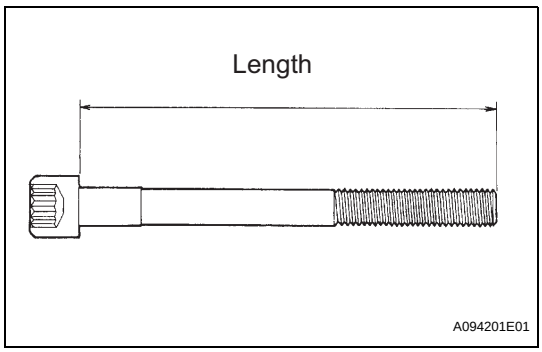

16. INSPECT CYLINDER HEAD SET BOLT

(a) Using a vernier caliper, measure the length of the head bolts from the seat to the end.

Standard bolt length:
141.3 to 142.7 mm (5.563 to 5.618 in.)
Maximum bolt length:
144.2 mm (5.677 in.)

If the bolt length is greater than the maximum, replace the cylinder head set bolt.

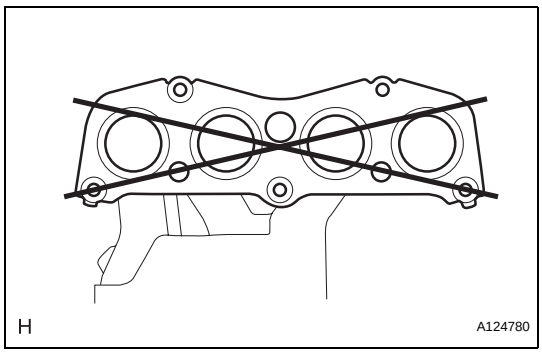

17. INSPECT EXHAUST MANIFOLD

(a) Using a precision straightedge and a feeler gauge, measure the surface contacting the cylinder head for warpage.

Maximum warpage:
0.70 mm (0.028 in.)

If the warpage is greater than the maximum, replace the exhaust manifold.

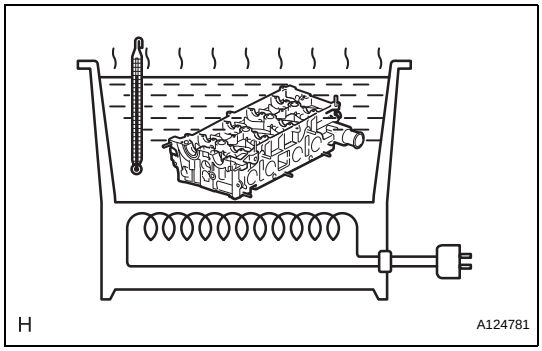

REPLACEMENT

1. REPLACE INTAKE VALVE GUIDE BUSH

(a) Heat the cylinder head to 80 to 100°C (176 to 212°F).

(b) Place the cylinder head on wooden blocks.

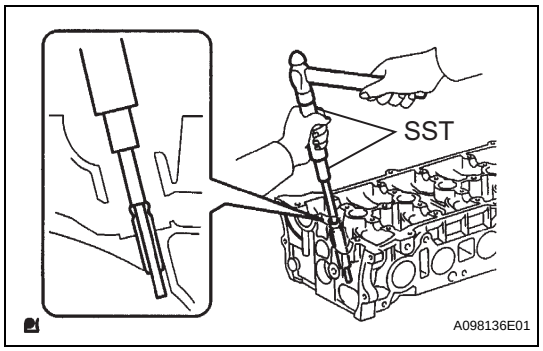

(c) Using SST and a hammer, tap out the guide bush.
SST 09201-10000 (09201-01050), 09950-70010 (09951-07100)

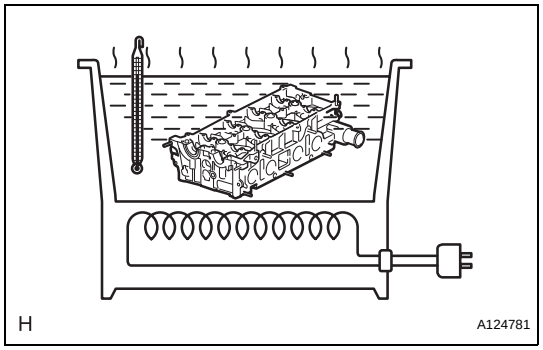

(d) Heat the cylinder head to 80 to 100°C (176 to 212°F).
(e) Place the cylinder head on wooden blocks.

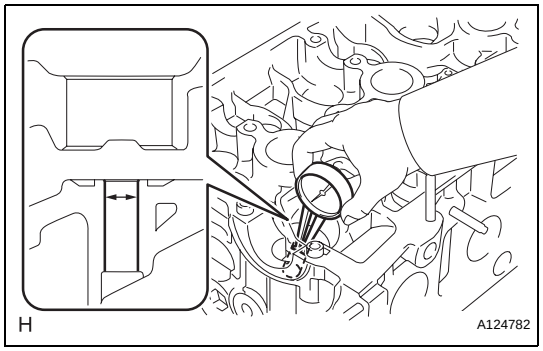

(f) Using a caliper gauge, measure the bush bore diameter of the cylinder head.
Standard diameter:
10.285 to 10.306 mm (0.4049 to 0.4058 in.)
If the bush bore diameter of the cylinder head is greater than 10.306 mm (0.4058 in.), machine the bush bore to the dimension of 10.335 to 10.365 mm (0.4068 to 0.4077 in.).
Standard valve guide bush diameter

Condition	Specified Condition
STD	10.333 to 10.344 mm (0.4068 to 0.4072 in.)
O/S (0.05 mm)	10.383 to 10.394 mm (0.4088 to 0.4092 in.)

If the bushing bore diameter of the cylinder head is greater than 10.394 mm (0.4092 in.), replace the cylinder head.

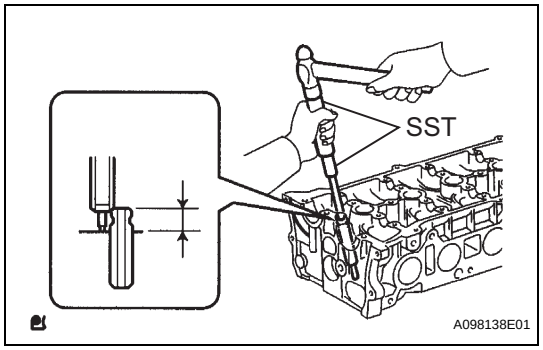

(g) Using SST and a hammer, tap in a new guide bush to the specified protrusion height.
SST 09201-10000 (09201-01050), 09950-70010 (09951-07100)
Standard protrusion height:
9.6 to 10.0 mm (0.378 to 0.394 in.)

EM

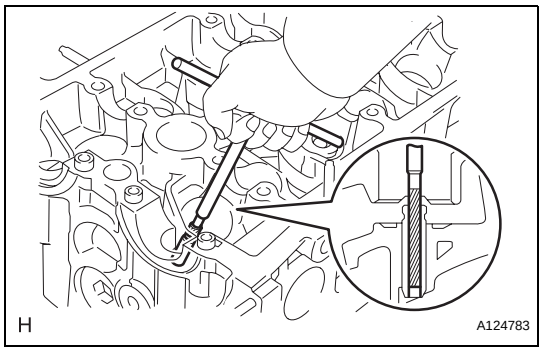

(h) Using a sharp 5.5 mm reamer, ream the valve guide bush to the standard specified clearance between the valve guide bush and valve stem.
Standard oil clearance:
0.025 to 0.060 mm (0.0010 to 0.0024 in.)

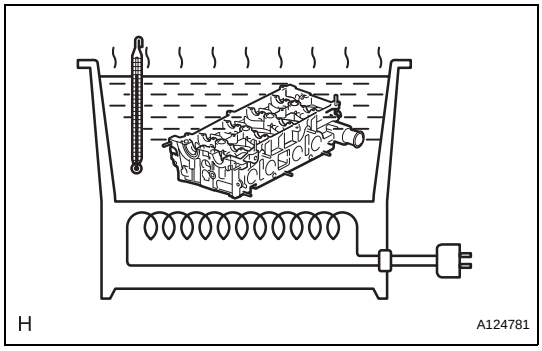

2. REPLACE EXHAUST VALVE GUIDE BUSH

(a) Heat the cylinder head to 80 to 100°C (176 to 212°F).
(b) Place the cylinder head on wooden blocks.

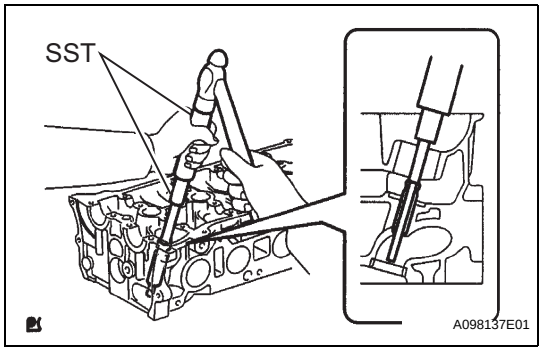

(c) Using SST and a hammer, tap out the guide bush.
SST 09201-10000 (09201-01050), 09950-70010 (09951-07100)

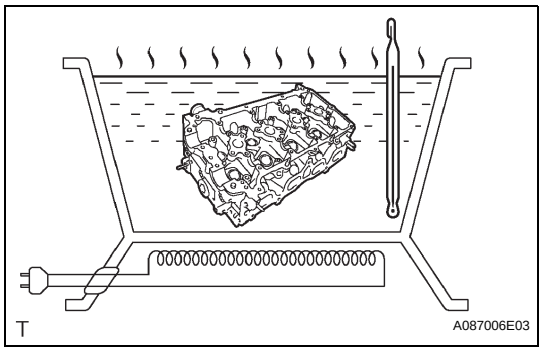

(d) Heat the cylinder head to 80 to 100°C (176 to 212°F).
(e) Place the cylinder head on wooden blocks.

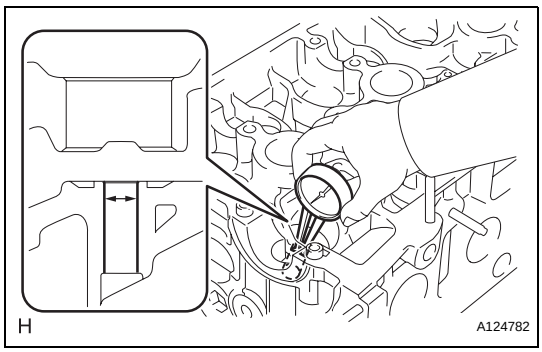

(f) Using a caliper gauge, measure the bush bore diameter of the cylinder head.
Standard diameter:
10.285 to 10.306 mm (0.4049 to 0.4058 in.)
If the bush bore diameter of the cylinder head is greater than 10.306 mm (0.4058 in.), machine the bush bore to the dimension of 10.335 to 10.365 mm (0.4068 to 0.4077 in.).

Standard valve guide bush diameter

Condition	Specified Condition
STD	10.333 to 10.344 mm (0.4068 to 0.4072 in.)
O/S (0.05 mm)	10.383 to 10.394 mm (0.4088 to 0.4092 in.)

If the bushing bore diameter of the cylinder head is greater than 10.394 mm (0.4092 in.), replace the cylinder head.

(g) Using SST and a hammer, tap in a new guide bush to the specified protrusion height.
SST 09201-10000 (09201-01050), 09950-70010 (09951-07100)
Standard protrusion height:
9.6 to 10.0 mm (0.378 to 0.394 in.)

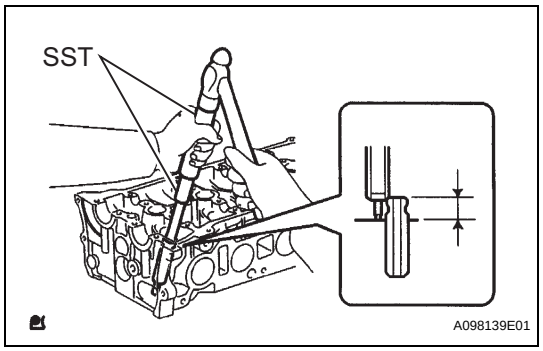

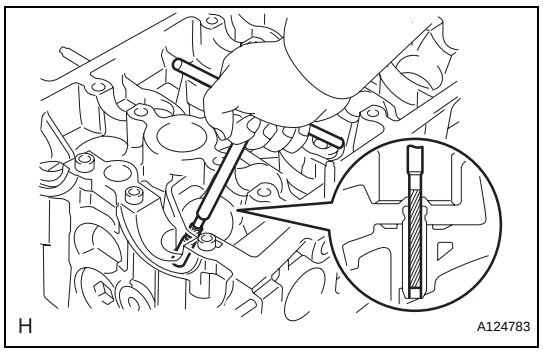

(h) Using a sharp 5.5 mm reamer, ream the valve guide bush to the standard specified clearance between the valve guide bush and valve stem.
Standard oil clearance:
0.030 to 0.065 mm (0.0012 to 0.0026 in.)

3. REPLACE STUD BOLT

NOTICE:
If the stud bolt is deformed or threads are damaged, replace it.

(a) Using E5 and E7 "torx" socket wrenches, remove the 11 stud bolts.

EM

(b) Using E5 and E7 "torx" socket wrenches, install the 11 stud bolts.

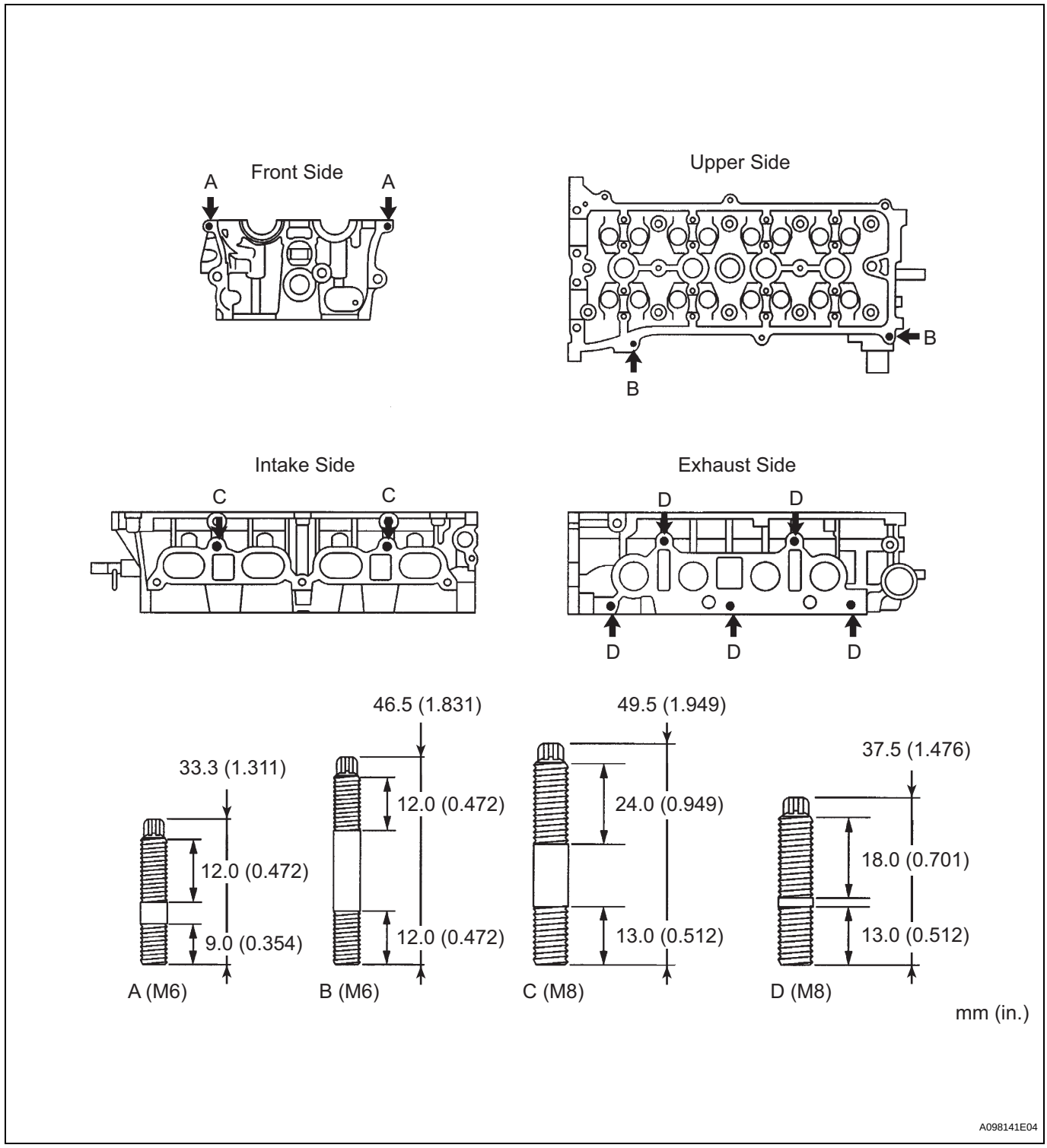

4. REPLACE RING PIN

(a) Remove the 4 ring pins.

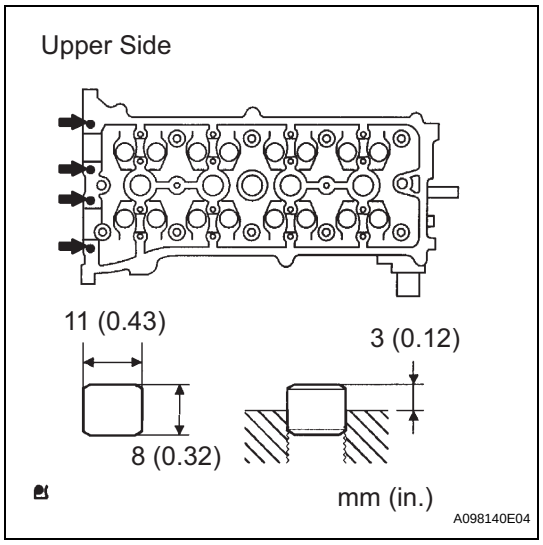

(b) Using a plastic-faced hammer, tap in 4 new ring pins to the specified protrusion height.
Protrusion height:
3.0 mm (0.12 in.)

EM

REASSEMBLY

HINT:
- Thoroughly clean all parts to be assembled.
- Before installing the parts, apply fresh engine oil to all sliding and rotating surfaces.
- Replace oil seals with new ones.

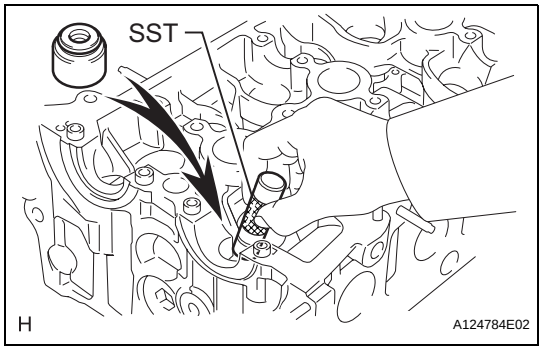

1. INSTALL VALVE STEM OIL SEAL

(a) Using SST, push in a new oil seal.
SST 09201-41020

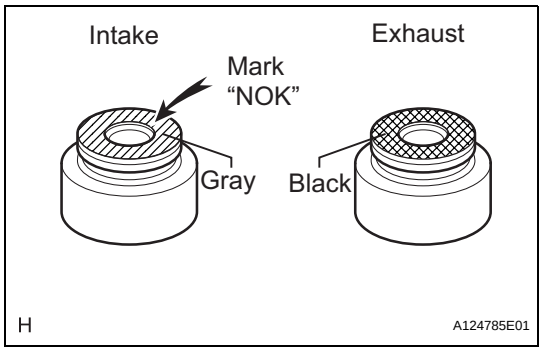

HINT:
The intake valve oil seal is gray and the exhaust valve oil seal is black.
NOTICE:
Pay close attention when installing the intake and exhaust oil seals. For example, installing the intake oil seal into the exhaust or installing the exhaust oil seal to the intake can cause installation problems later.

2. INSTALL INTAKE VALVE

(a) Place the cylinder head on wooden blocks.

(b) Install the valve, seat, spring and retainer onto the cylinder head.

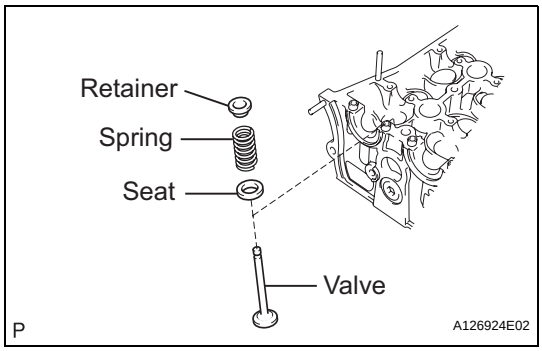

(c) Using SST, compress the spring, and place the 2 retainer locks around the valve stem.
SST 09202-70020 (09202-00010)

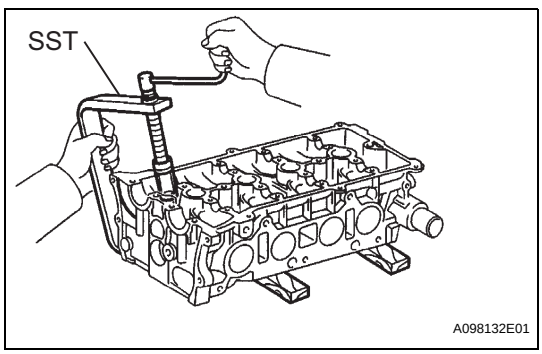

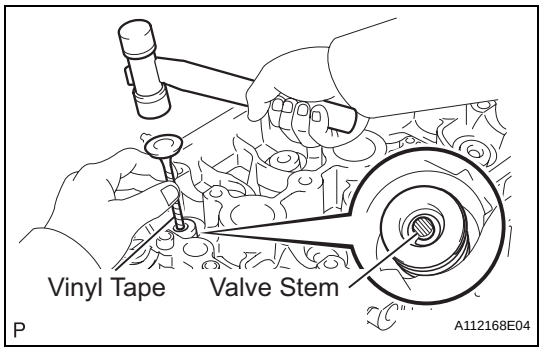

(d) Using a plastic-faced hammer and discarded valve (with its tip wrapped with tape), lightly tap the installed valve to fit it into place.
NOTICE:
Be careful not to damage the valve stem tip.

3. INSTALL EXHAUST VALVE

(a) Place the cylinder head on wooden blocks.

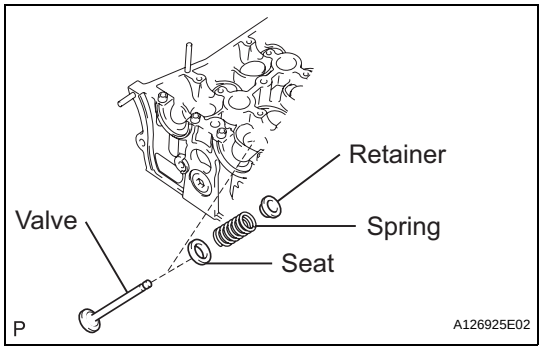

(b) Install the valve, seat, spring and retainer onto the cylinder head.

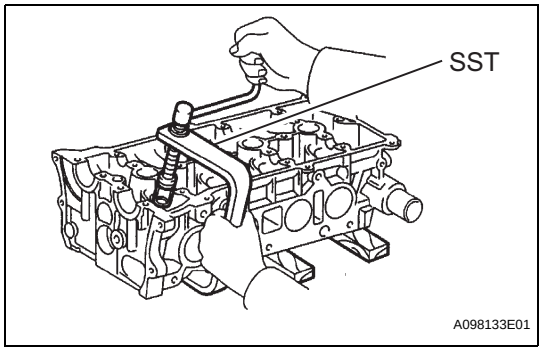

(c) Using SST, compress the spring, and place the 2 retainer locks around the valve stem.
SST 09202-70020 (09202-00010)

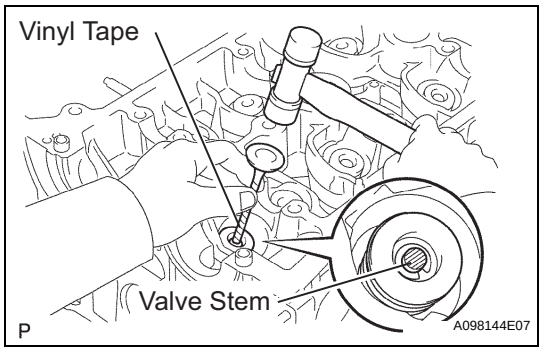

(d) Using a plastic-faced hammer and discarded valve (with its tip wrapped with tape), lightly tap the installed valve to fit it into place.
NOTICE:
Be careful not to damage the valve stem tip.

4. INSTALL VALVE LIFTER

(a) Assemble the valve lifter and the tip of the valve stem with a light coat of engine oil applied.
NOTICE:
Install the valve lifters in their original places.

5. INSTALL NO. 1 CAMSHAFT BEARING

(a) Clean the contact surface of the bearing and the bearing cap.
NOTICE:
Do not apply engine oil to the contact surfaces of the camshaft bearing and bearing cap.

EM

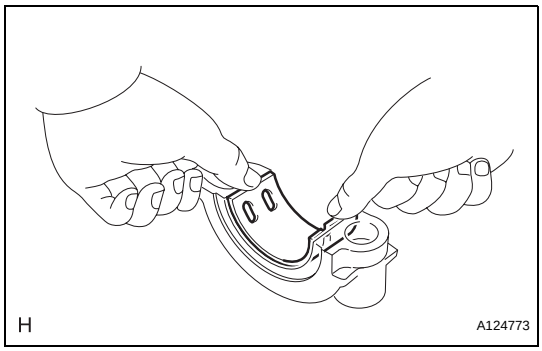

(b) Align the bearing claw with the claw groove of No. 1 and No. 2 bearing cap, and push in the No. 1 camshaft bearing.

6. INSTALL NO. 2 CAMSHAFT BEARING

(a) Clean the contact surface of the bearing and the bearing cap.

NOTICE:
Do not apply engine oil to the contact surfaces of the camshaft bearing and cylinder block.

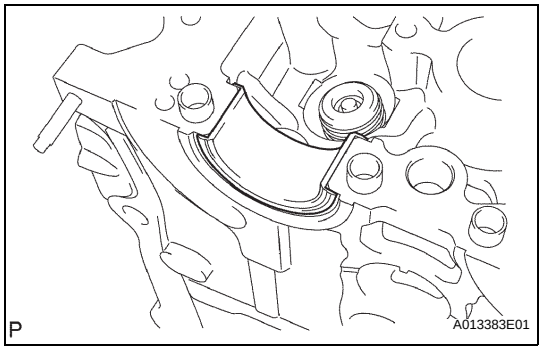

(b) Install the No. 2 camshaft bearing onto the cylinder head.

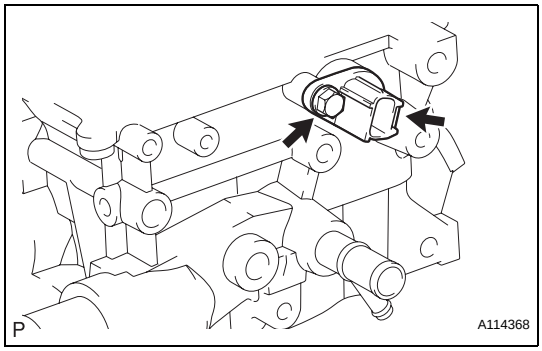

7. INSTALL CAMSHAFT POSITION SENSOR

(a) Install the camshaft position sensor with the bolt.
Torque: 9.0 N*m (92 kgf*cm, 80 in.*lbf)

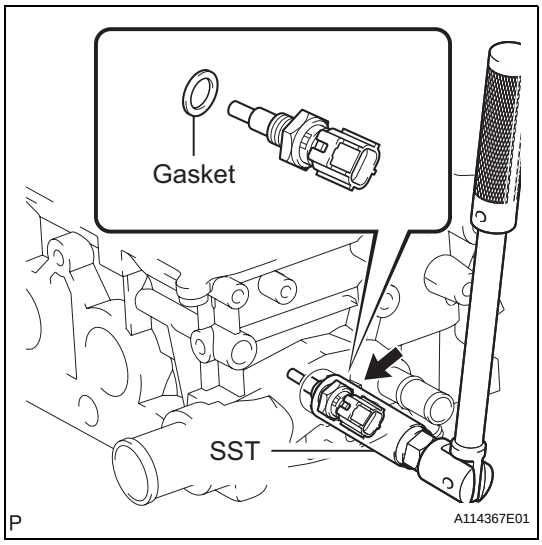

8. INSTALL ENGINE COOLANT TEMPERATURE SENSOR

(a) Using SST, install a new gasket and the ECT sensor.
SST 09817-33190
Torque: 20 N*m (204 kgf*cm, 15 ft.*lbf)

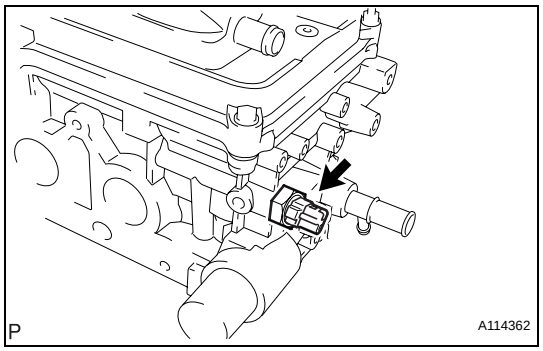

9. INSTALL OIL PRESSURE SWITCH

(a) Apply adhesive to 2 or 3 threads of the oil pressure switch.
Adhesive:
Toyota Genuine Adhesive 1344, Three Bond 1344 or equivalent

(b) Using a 24 mm deep socket wrench, install the oil pressure switch.
Torque: 13 N*m (133 kgf*cm, 10 ft.*lbf)

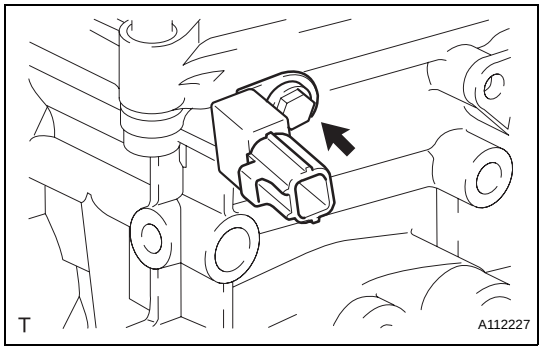

10. INSTALL RADIO SETTING CONDENSER

(a) Install the condenser with the bolt.
Torque: 10 N*m (102 kgf*cm, 7 ft.*lbf)

EM

INSTALLATION

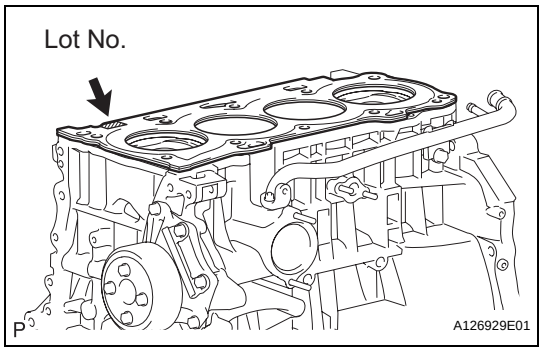

1. INSTALL CYLINDER HEAD GASKET

(a) Place a new gasket on the cylinder block surface with the Lot No. stamp facing upward.
NOTICE:
- **Remove any oil from contact surface.**
- **Be careful of the installation direction.**

2. INSTALL CYLINDER HEAD SUB-ASSEMBLY

(a) Place the cylinder head on the head gasket.
NOTICE:
Place the cylinder head gently in order to avoid damaging the gasket.

(b) Install the cylinder head bolts.
NOTICE:
The cylinder head bolts are tightened in 2 successive steps.

(1) Apply a light coat of engine oil to the threads and under the heads of the cylinder head set bolts.

(2) Using several steps, uniformly install and tighten the 10 cylinder head set bolts and plate washers with a 10 mm bi-hexagon wrench in the order shown in the illustration.
Torque: 70 N*m (714 kgf*cm, 52 ft.*lbf)

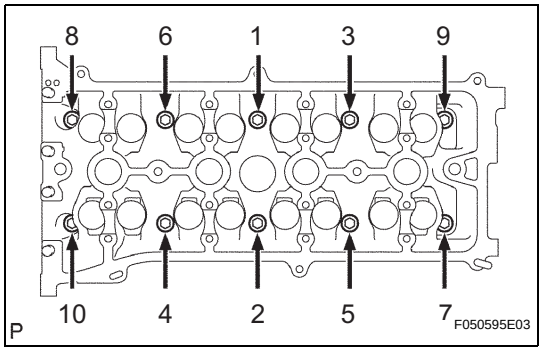

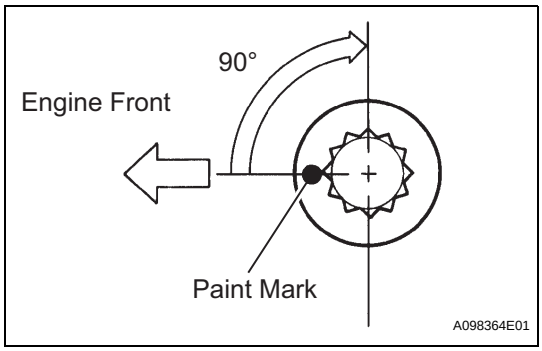

(c) Mark the front of the cylinder head bolts with paint.
(d) Retighten the cylinder head bolts by 90° as shown in the illustration.
(e) Check that the paint mark is now at a 90° angle to the front.

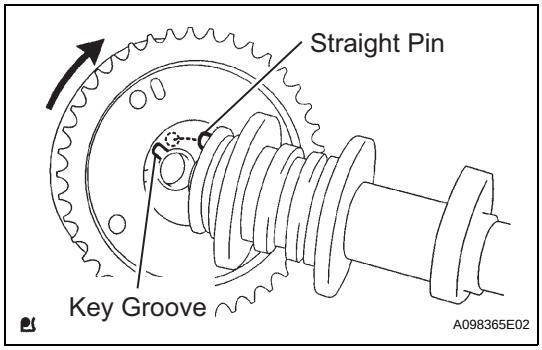

3. INSTALL CAMSHAFT TIMING GEAR ASSEMBLY

(a) Put the camshaft timing gear and camshaft together with the straight pin and key groove misaligned, as shown in the illustration.
(b) Turn the camshaft timing gear as shown in the illustration while pushing it gently against the camshaft. Push further at the position where the pin fits into the groove.
NOTICE:
Be sure not to turn the camshaft timing gear to the retard angle side (the right angle).
(c) Check that there is no clearance between the gear fringe and camshaft.
(d) Tighten the flange bolt with the camshaft timing gear fixed in place.
Torque: 54 N*m (551 kgf*cm, 40 ft.*lbf)
(e) Check that the camshaft timing gear can move to the retard angle side (the right direction) and is locked in the most retarded position.

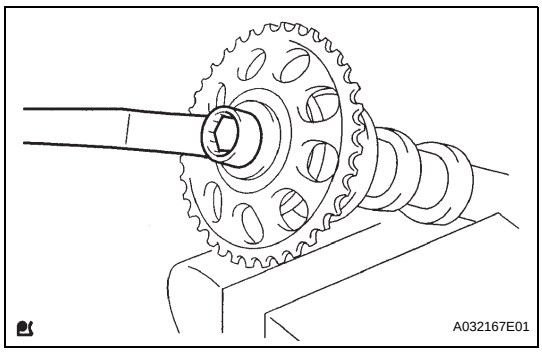

4. INSTALL NO. 2 CAMSHAFT TIMING SPROCKET

(a) Clamp the camshaft in a vise, then install the camshaft timing sprocket with the bolt.
Torque: 54 N*m (551 kgf*cm, 40 ft.*lbf)
NOTICE:
Do not damage the camshaft.

5. INSTALL CAMSHAFT

(a) Apply a light coat of engine oil to the journal portion of the camshaft.

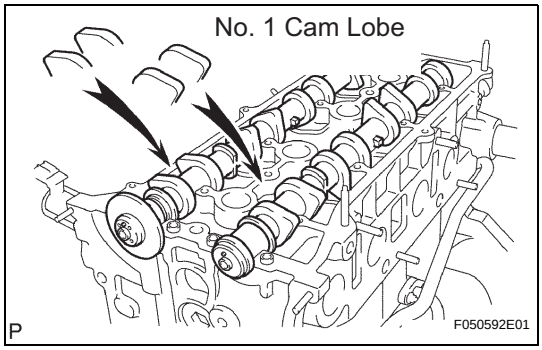

(b) Place the 2 camshafts on the cylinder head with the No. 1 cam lobes facing the directions shown in the illustration.

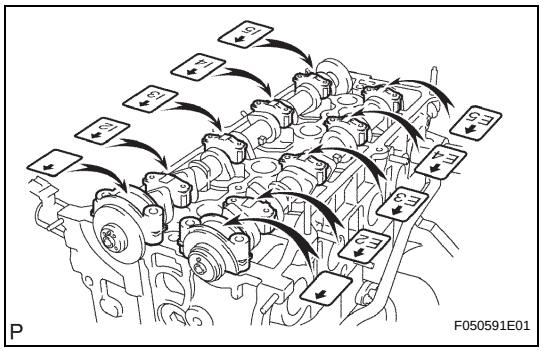

(c) Examine the front marks and numbers, and check that the order is as shown in the illustration. Then install the bearing caps onto the cylinder head.

(d) Apply a light coat of engine oil to the threads and under the heads of the bearing cap bolts.

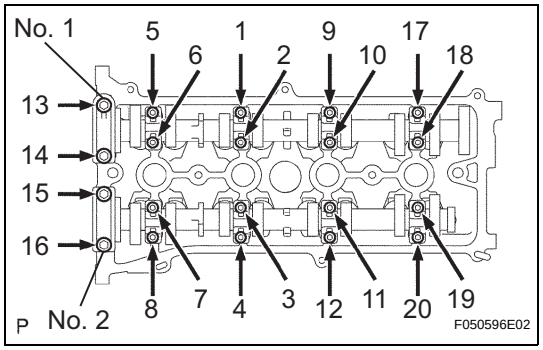

(e) Using several steps, uniformly tighten the 20 bearing cap bolts in the sequence shown in the illustration.

Torque: 29.5 N*m (301 kgf*cm, 22 ft.*lbf) for No. 1 and No. 2 bearing cap
9.0 N*m (92 kgf*cm, 80 in.*lbf) for No. 3 bearing cap

NOTICE:
Install the camshaft with the timing mark of the camshaft timing gear on top.

6. **INSTALL NO. 1 CHAIN VIBRATION DAMPER (See page EM-33)**
7. **INSTALL CHAIN SUB-ASSEMBLY (See page EM-33)**
8. **INSTALL CHAIN TENSIONER SLIPPER (See page EM-34)**
9. **INSTALL TIMING CHAIN GUIDE (See page EM-34)**
10. **INSTALL NO. 1 CRANKSHAFT POSITION SENSOR PLATE (See page EM-35)**
11. **INSTALL TIMING CHAIN COVER SUB-ASSEMBLY (See page EM-35)**
12. **INSTALL NO. 1 CHAIN TENSIONER ASSEMBLY (See page EM-37)**
13. **INSTALL V-RIBBED BELT TENSIONER ASSEMBLY (See page EM-38)**
14. **INSTALL ENGINE MOUNTING BRACKET RH (See page EM-38)**
15. **INSTALL CRANKSHAFT PULLEY (See page EM-38)**
16. **INSTALL OIL PAN SUB-ASSEMBLY (See page EM-39)**
17. **INSTALL CRANKSHAFT POSITION SENSOR (See page ES-402)**
18. **INSTALL CYLINDER HEAD COVER SUB-ASSEMBLY (See page EM-40)**
19. **INSTALL SPARK PLUG (See page EM-16)**
20. **INSTALL IGNITION COIL ASSEMBLY (See page IG-9)**
21. **INSTALL IDLER PULLEY (See page EM-41)**

22. INSTALL ENGINE MOUNTING INSULATOR RH (See page EM-41)

23. INSTALL RADIATOR RESERVOIR (See page EM-112)

24. INSTALL GENERATOR ASSEMBLY (See page CH-15)

25. INSTALL FAN AND GENERATOR V BELT (See page EM-7)

26. INSTALL FRONT SUSPENSION MEMBER REINFORCEMENT RH (See page EM-7)

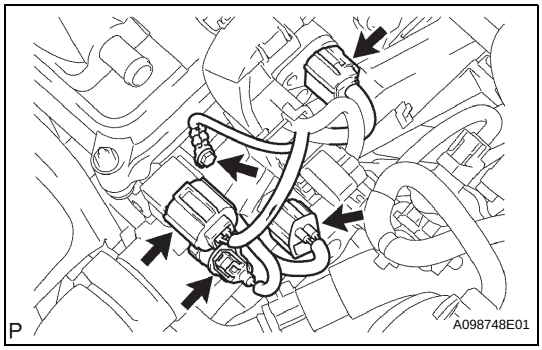

27. CONNECT ENGINE WIRE

(a) Connect the ground cable with the bolt.
Torque: 8.4 N*m (86 kgf*cm, 74 in.*lbf)
(b) Connect the camshaft position sensor connector.
(c) Connect the engine coolant temperature sensor connector.
(d) Connect the engine oil pressure switch connector.
(e) Connect the radio setting condenser connector.
(f) Connect the heater water inlet hose.

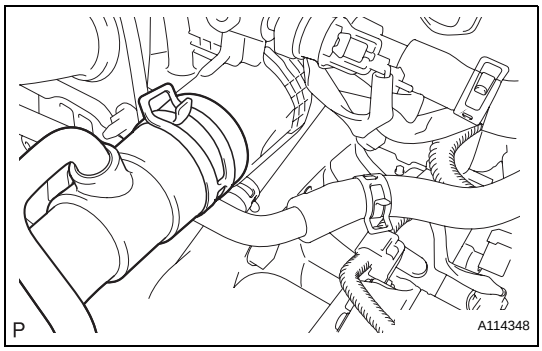

28. CONNECT NO. 1 RADIATOR HOSE

(a) Connect the hose to the cylinder head.

29. INSTALL CAMSHAFT TIMING OIL CONTROL VALVE ASSEMBLY (See page ES-396)

30. INSTALL EXHAUST MANIFOLD CONVERTER SUB-ASSEMBLY

(a) Install a new gasket onto the cylinder head.
(b) Temporarily tighten the exhaust manifold converter with the 5 nuts.

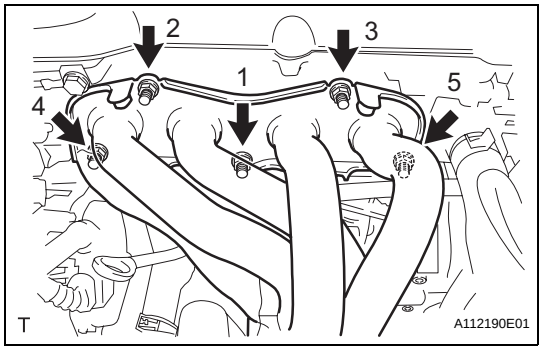

(c) Tighten the 5 nuts in the sequence shown in the illustration.
Torque: 37 N*m (377 kgf*cm, 27 ft.*lbf)

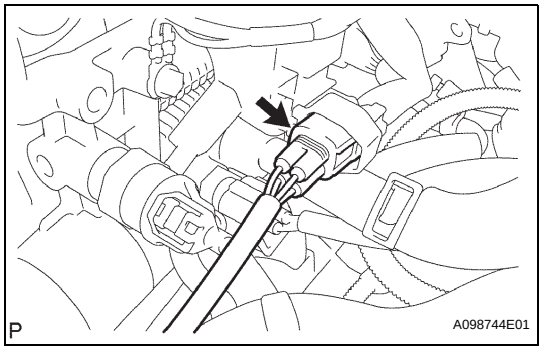

(d) Connect the air-fuel ratio sensor connector.

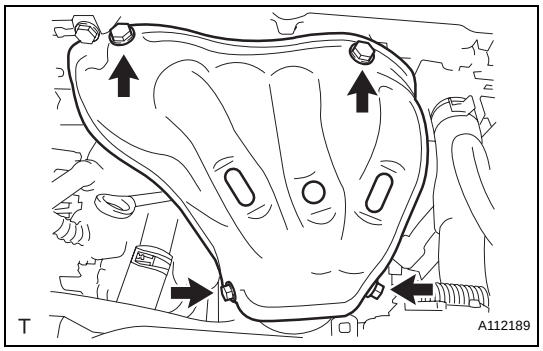

31. **INSTALL NO. 1 EXHAUST MANIFOLD HEAT INSULATOR**
    (a) Install the exhaust manifold heat insulator with the 4 bolts.
    Torque: 12 N*m (122 kgf*cm, 9 ft.*lbf)

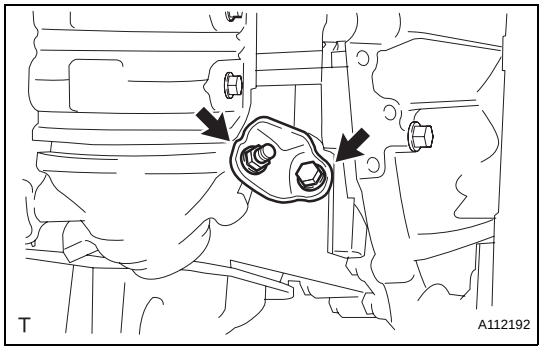

32. **INSTALL NO. 2 MANIFOLD STAY**
    (a) Install the stay with the bolt and nut.
    Torque: 44 N*m (449 kgf*cm, 32 ft.*lbf)

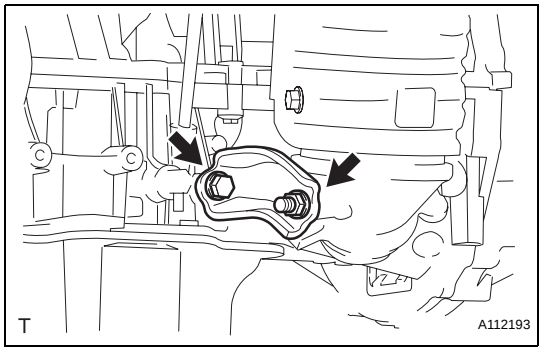

33. **INSTALL MANIFOLD STAY**
    (a) Install the stay with the bolt and nut.
    Torque: 44 N*m (449 kgf*cm, 32 ft.*lbf)

34. **INSTALL FRONT EXHAUST PIPE (See page EX-4)**

35. **INSTALL OIL DIPSTICK GUIDE**
    (a) Apply a light coat of engine oil to a new O-ring and install it onto the guide.

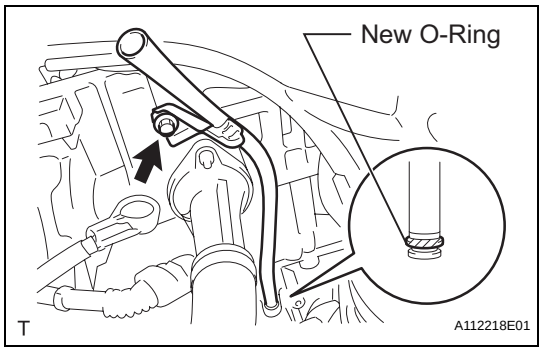

    (b) Install the guide with the bolt.
    Torque: 9.0 N*m (92 kgf*cm, 80 in.*lbf)

36. **INSTALL OIL DIPSTICK**

37. **INSTALL INTAKE MANIFOLD INSULATOR (See page ES-421)**

38. **INSTALL INTAKE MANIFOLD (See page ES-421)**

39. **INSTALL FUEL DELIVERY PIPE SUB-ASSEMBLY (See page FU-13)**

40. **INSTALL THROTTLE BODY (See page ES-413)**

41. **INSTALL AIR CLEANER CAP (See page ES-413)**

42. **ADD ENGINE OIL (See page LU-4)**

43. **CONNECT CABLE TO NEGATIVE BATTERY TERMINAL**

44. **CHECK FOR FUEL LEAKS**

45. **ADD ENGINE COOLANT (See page CO-6)**

46. **CHECK FOR ENGINE COOLANT LEAKS**
    (a) Check for engine coolant leaks (see page CO-1).

EM

47. **CHECK FOR ENGINE OIL LEAKS**
48. **CHECK FOR EXHAUST GAS LEAKS**
49. **INSPECT IGNITION TIMING (See page EM-1)**
50. **INSPECT ENGINE IDLING SPEED (See page EM-2)**
51. **INSPECT COMPRESSION (See page EM-3)**
52. **INSPECT CO/HC (See page EM-4)**
53. **INSTALL NO. 1 ENGINE COVER (See page EM-43)**
54. **INSTALL FRONT FENDER APRON RH**
55. **INSTALL NO. 1 ENGINE UNDER COVER**
56. **INSTALL FRONT WHEEL RH**
57. **INSTALL RADIATOR SUPPORT OPENING COVER**

EM

REPAIR

1. **REPAIR VALVE SEATS**
   (a) If the seating is too high on the valve face, use 30° and 45° cutters to correct the seat.
   (b) If the seating is too low on the valve face, use 75° and 45° cutters to correct the seat.
   Standard width

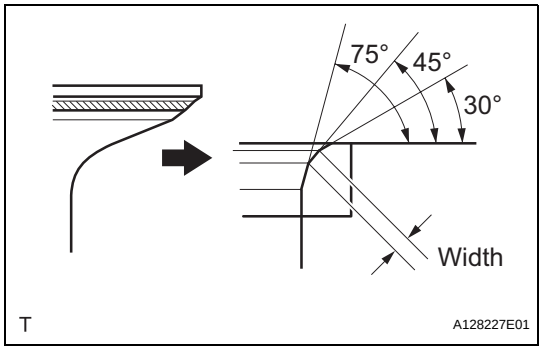

Item	Standard Condition
Intake	1.0 to 1.4 mm (0.0394 to 0.0551 in.)
Exhaust	1.2 to 1.6 mm (0.0427 to 0.0630 in.)

   (c) Lap the valve and valve seat by hand with an abrasive compound.
   (d) Recheck the valve seating position.

CYLINDER HEAD

COMPONENTS

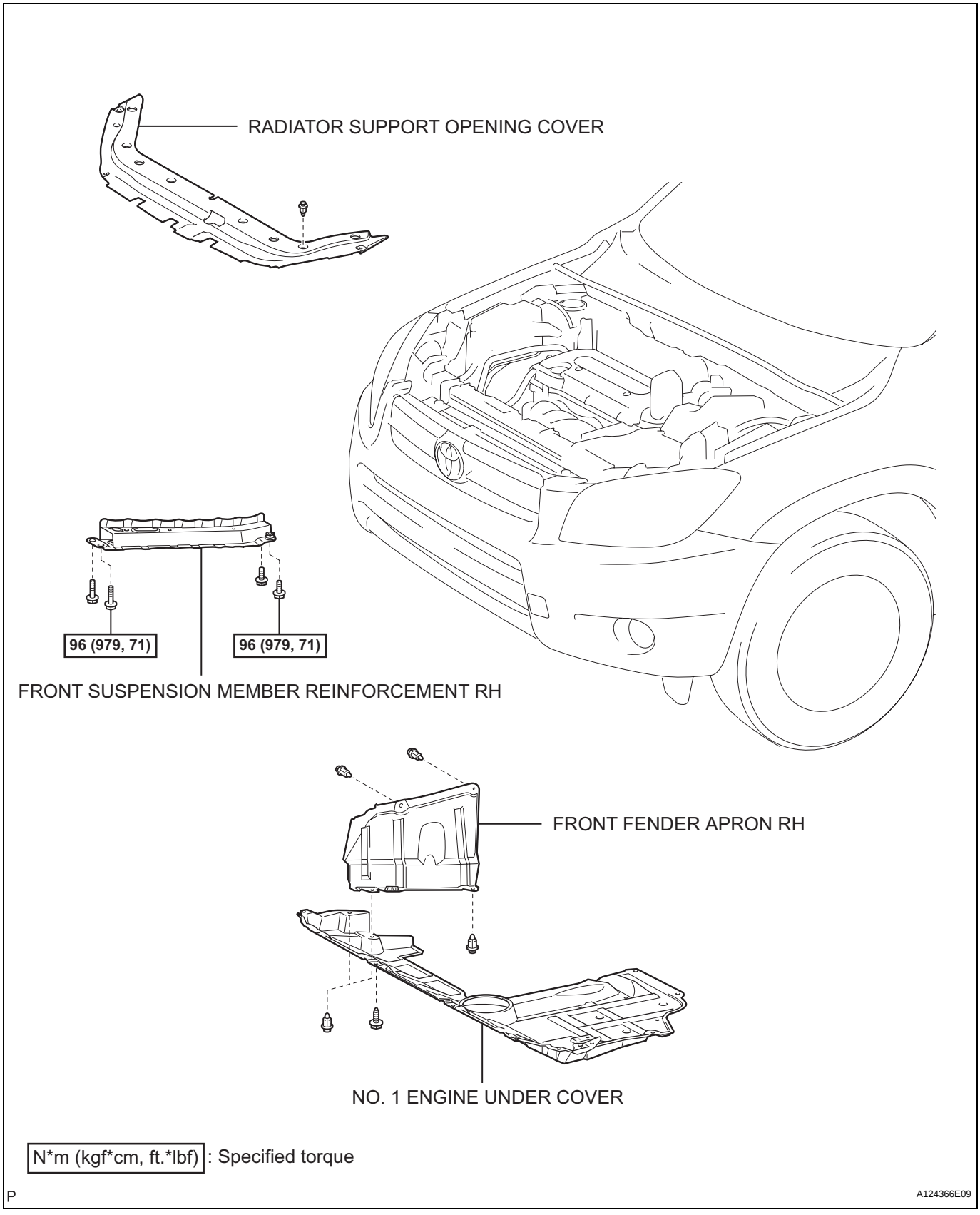

N*m (kgf*cm, ft.*lbf) : Specified torque

P

A124366E09

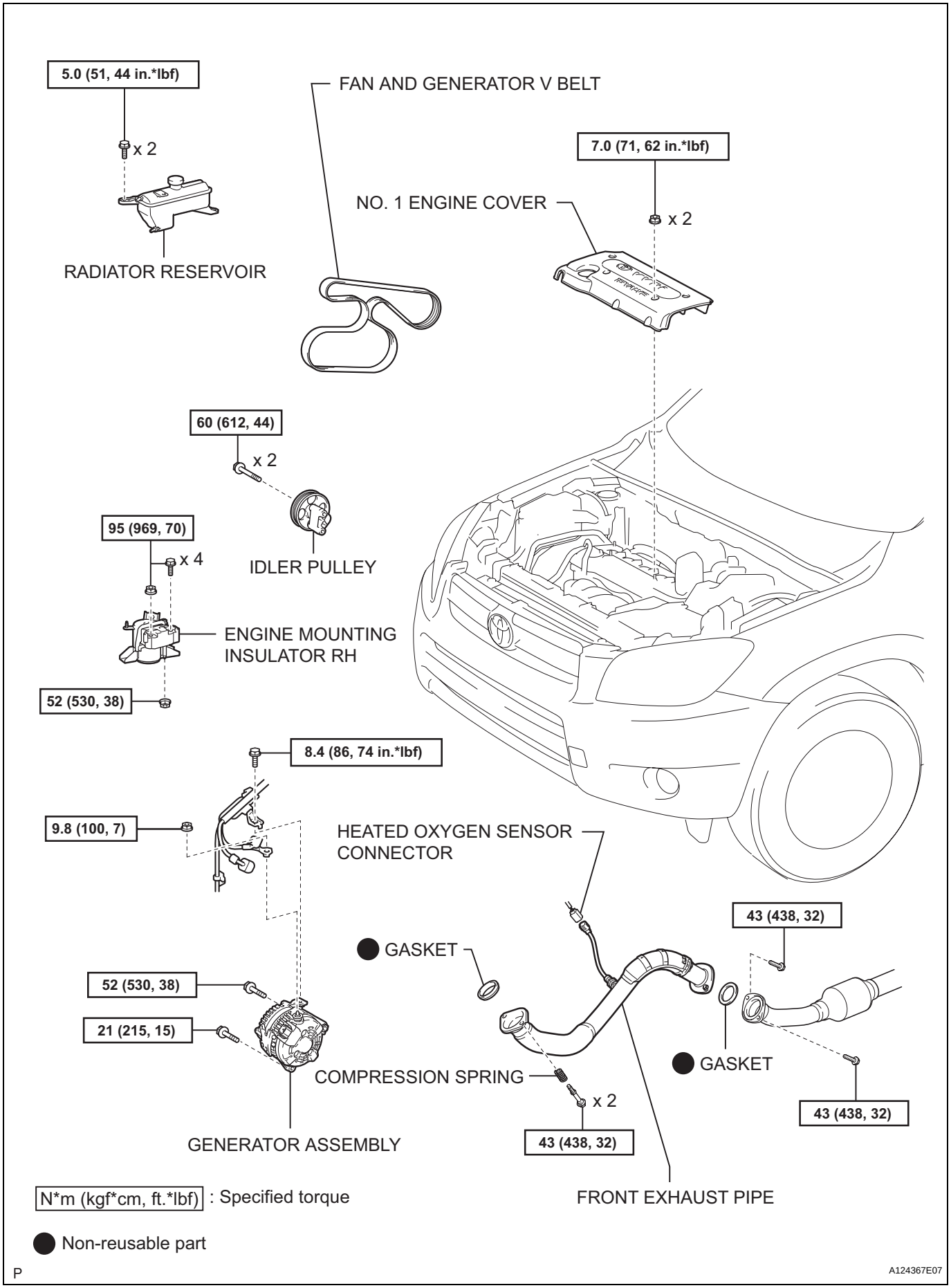
5.0 (51, 44 in.*lbf)
x 2
RADIATOR RESERVOIR
FAN AND GENERATOR V BELT
7.0 (71, 62 in.*lbf)
NO. 1 ENGINE COVER
x 2
60 (612, 44)
x 2
IDLER PULLEY
95 (969, 70)
x 4
ENGINE MOUNTING INSULATOR RH
52 (530, 38)
8.4 (86, 74 in.*lbf)
9.8 (100, 7)
HEATED OXYGEN SENSOR CONNECTOR
43 (438, 32)
GASKET
52 (530, 38)
21 (215, 15)
GENERATOR ASSEMBLY
COMPRESSION SPRING
x 2
43 (438, 32)
GASKET
43 (438, 32)
FRONT EXHAUST PIPE
N*m (kgf*cm, ft.*lbf) : Specified torque
Non-reusable part
P
A124367E07

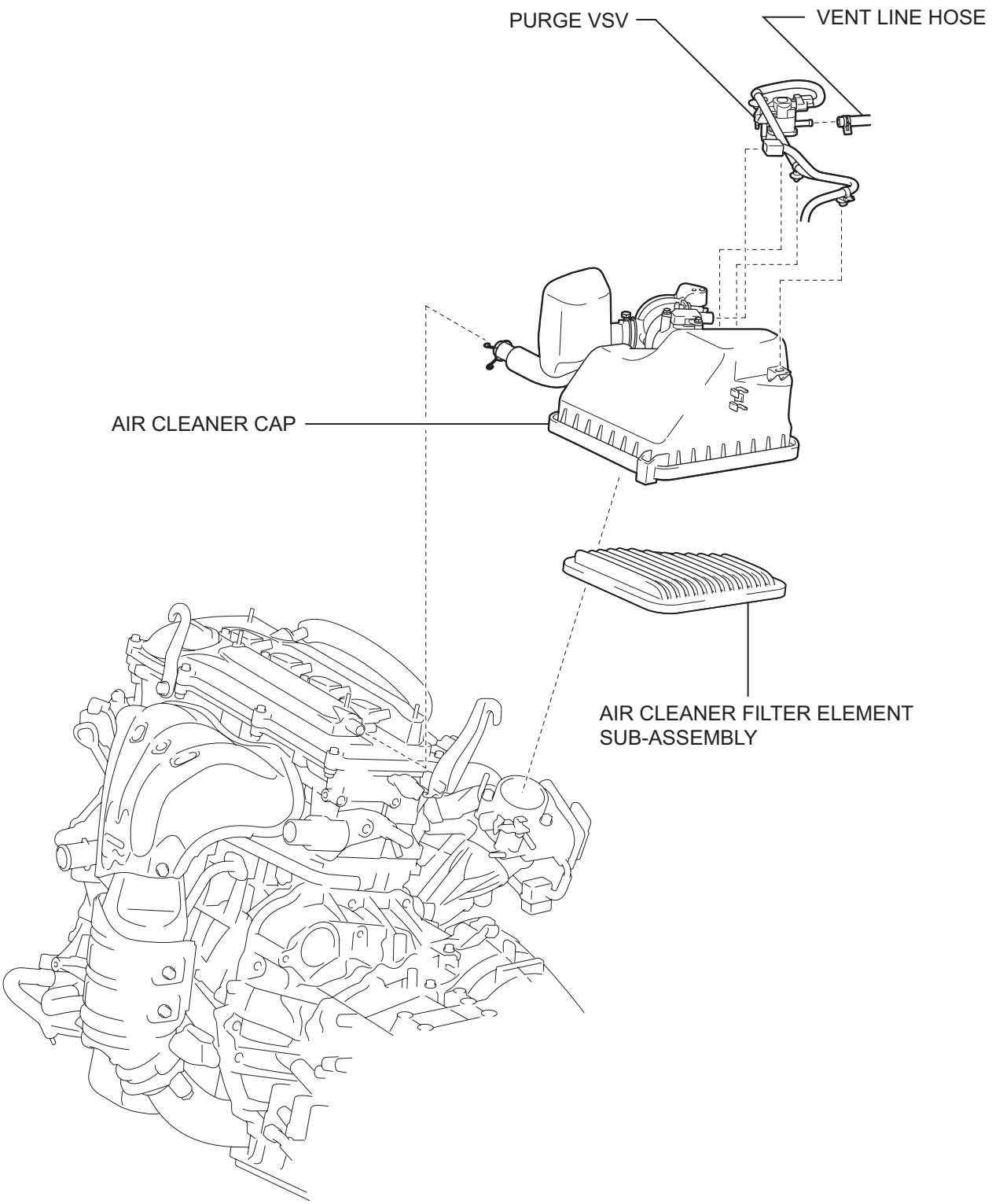

P

A124373E03

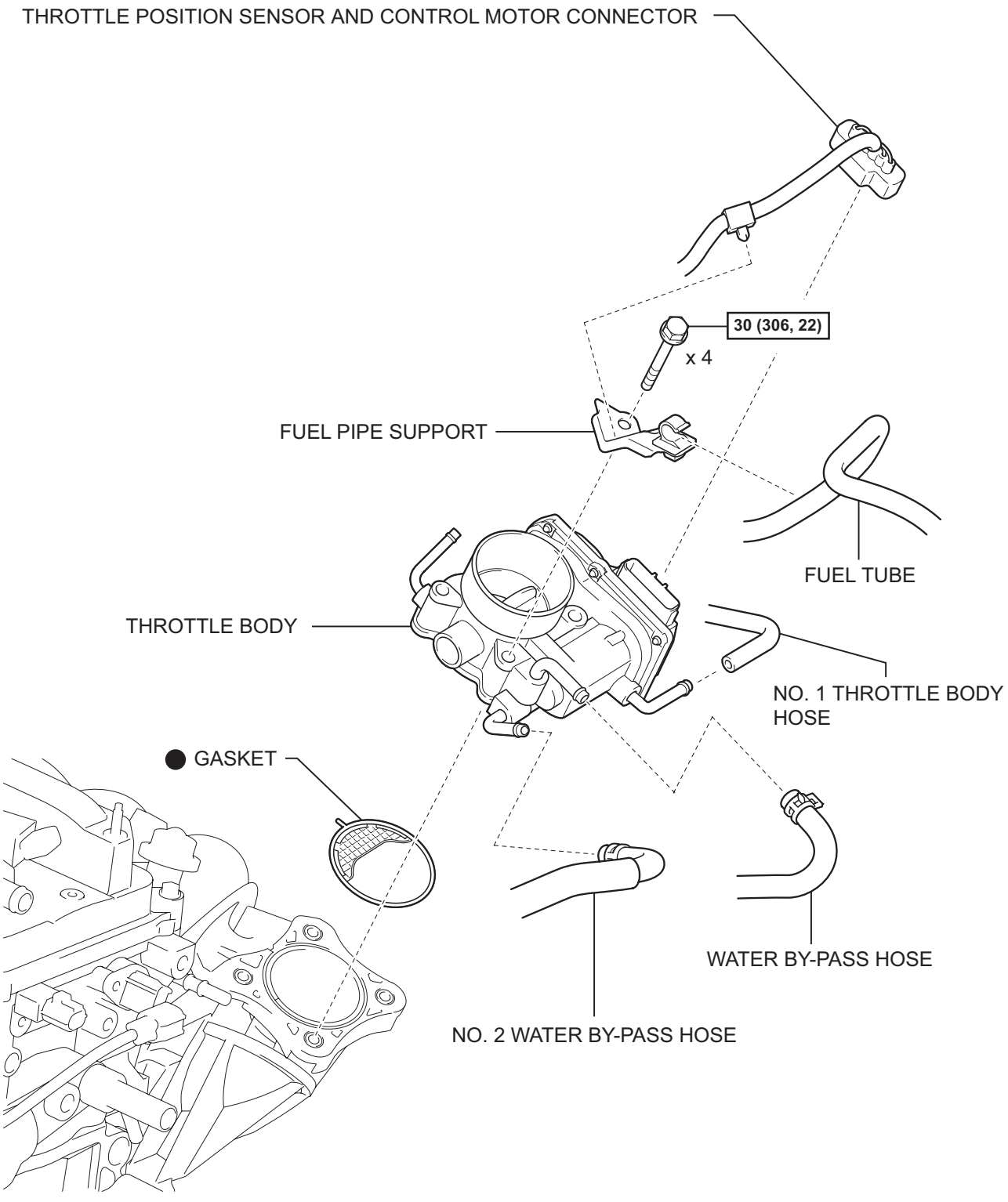

N*m (kgf*cm, ft.*lbf) : Specified torque

● Non-reusable part

P

A124403E04

EM

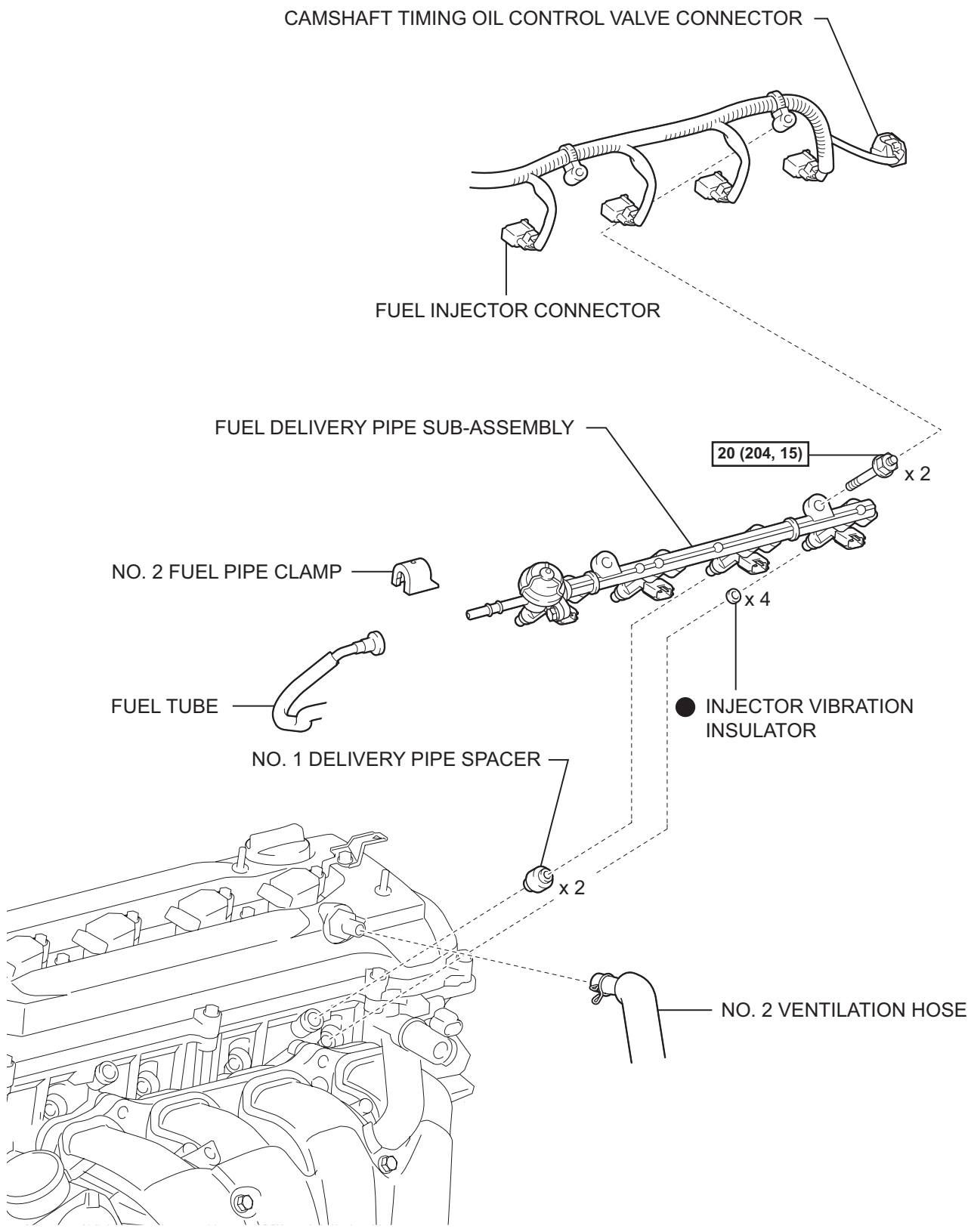

N*m (kgf*cm, ft.*lbf) : Specified torque

● Non-reusable part

P

A124404E02

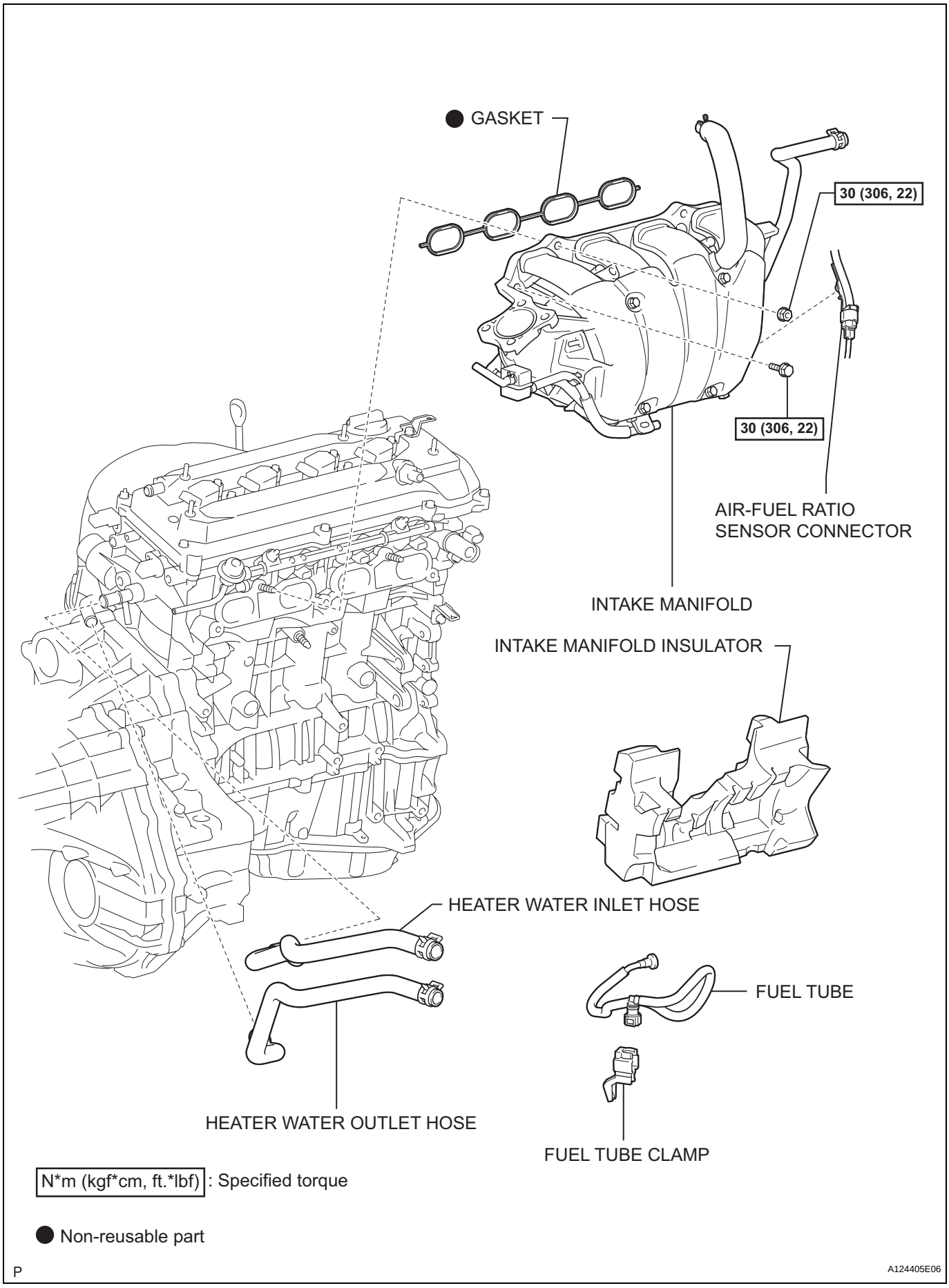
GASKET
30 (306, 22)
30 (306, 22)
AIR-FUEL RATIO SENSOR CONNECTOR
INTAKE MANIFOLD
INTAKE MANIFOLD INSULATOR
HEATER WATER INLET HOSE
FUEL TUBE
HEATER WATER OUTLET HOSE
FUEL TUBE CLAMP
N*m (kgf*cm, ft.*lbf) : Specified torque
Non-reusable part
P
A124405E06

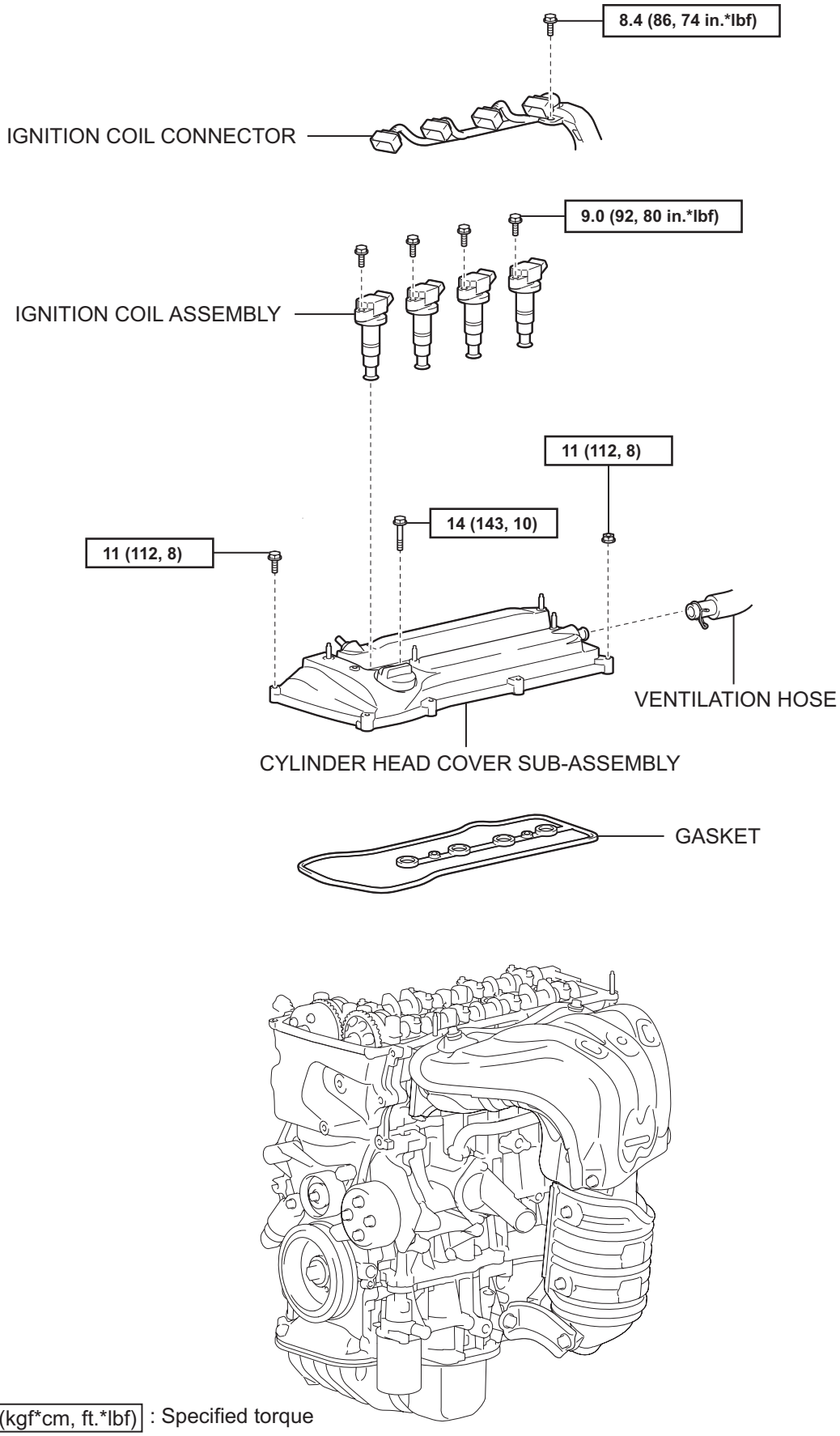
8.4 (86, 74 in.*lbf)
IGNITION COIL CONNECTOR
9.0 (92, 80 in.*lbf)
IGNITION COIL ASSEMBLY
11 (112, 8)
14 (143, 10)
11 (112, 8)
VENTILATION HOSE
CYLINDER HEAD COVER SUB-ASSEMBLY
GASKET
N*m (kgf*cm, ft.*lbf) : Specified torque
P
A124368E08

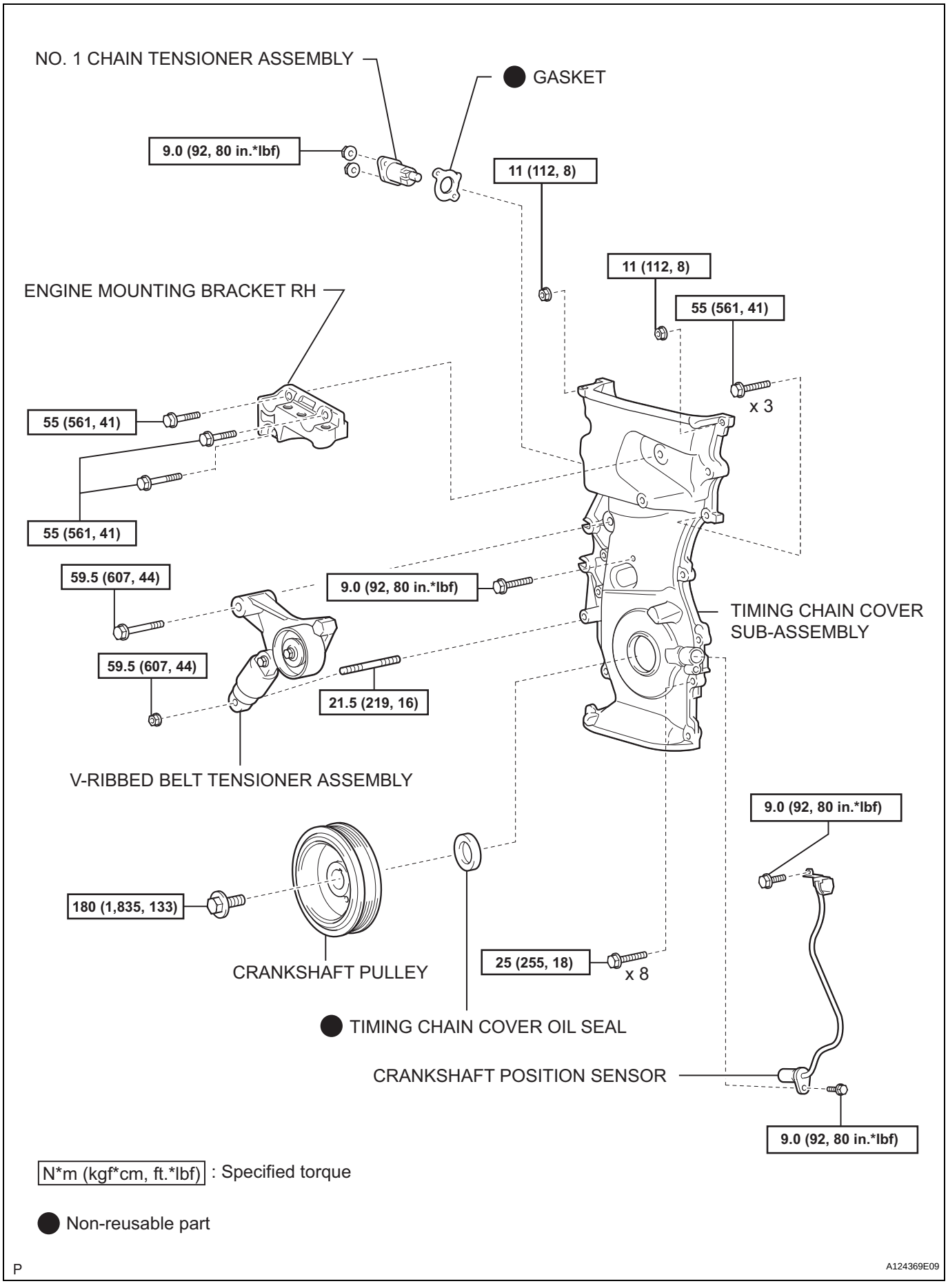
NO. 1 CHAIN TENSIONER ASSEMBLY
GASKET
9.0 (92, 80 in.*lbf)
11 (112, 8)
11 (112, 8)
ENGINE MOUNTING BRACKET RH
55 (561, 41)
55 (561, 41)
x 3
55 (561, 41)
59.5 (607, 44)
9.0 (92, 80 in.*lbf)
TIMING CHAIN COVER SUB-ASSEMBLY
59.5 (607, 44)
21.5 (219, 16)
V-RIBBED BELT TENSIONER ASSEMBLY
9.0 (92, 80 in.*lbf)
180 (1,835, 133)
CRANKSHAFT PULLEY
25 (255, 18)
x 8
TIMING CHAIN COVER OIL SEAL
CRANKSHAFT POSITION SENSOR
9.0 (92, 80 in.*lbf)
N*m (kgf*cm, ft.*lbf) : Specified torque
Non-reusable part
P
A124369E09

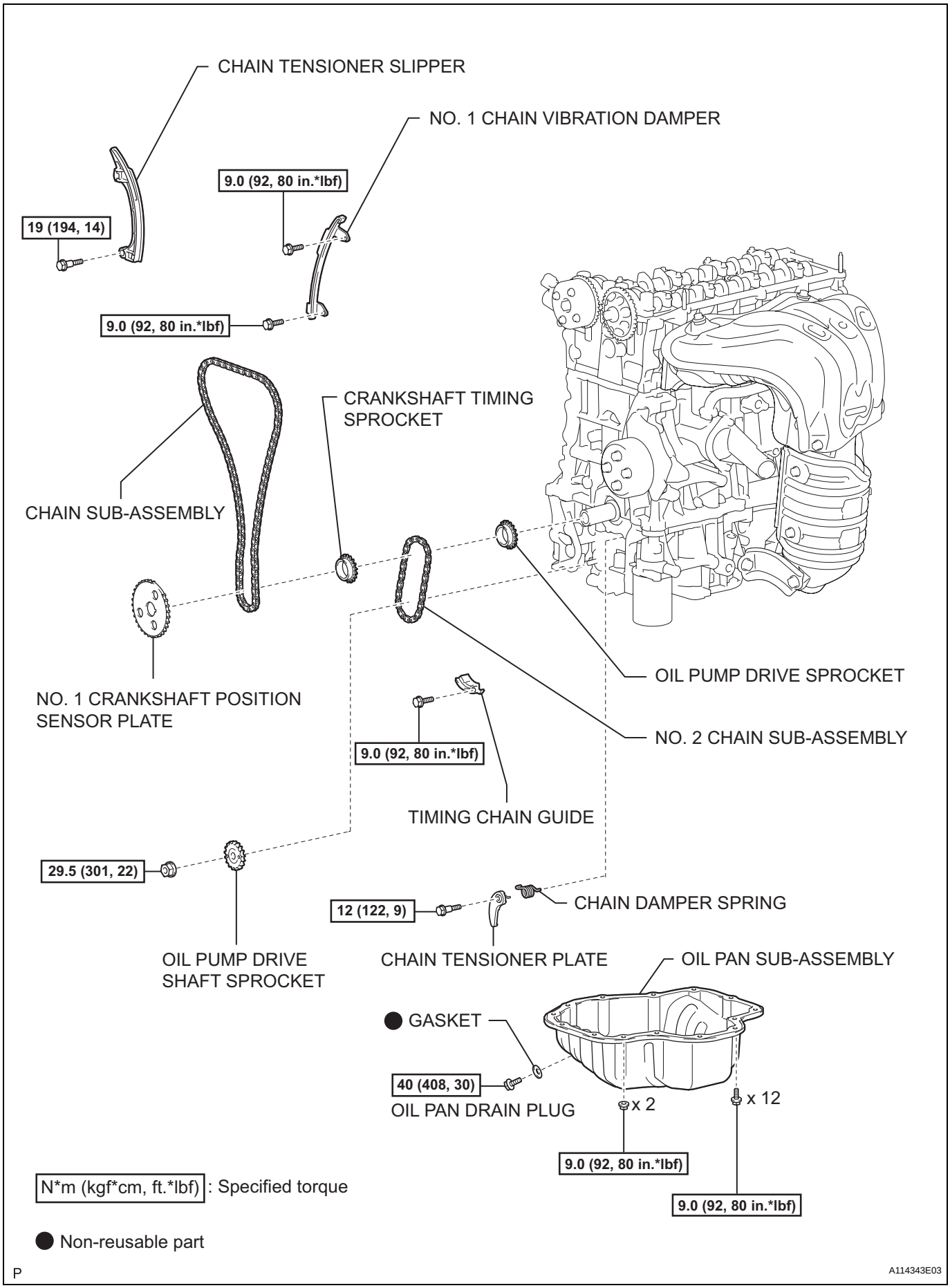
CHAIN TENSIONER SLIPPER
NO. 1 CHAIN VIBRATION DAMPER
9.0 (92, 80 in.*lbf)
19 (194, 14)
9.0 (92, 80 in.*lbf)
CRANKSHAFT TIMING SPROCKET
CHAIN SUB-ASSEMBLY
OIL PUMP DRIVE SPROCKET
NO. 1 CRANKSHAFT POSITION SENSOR PLATE
NO. 2 CHAIN SUB-ASSEMBLY
9.0 (92, 80 in.*lbf)
TIMING CHAIN GUIDE
29.5 (301, 22)
12 (122, 9)
CHAIN DAMPER SPRING
OIL PUMP DRIVE SHAFT SPROCKET
CHAIN TENSIONER PLATE
OIL PAN SUB-ASSEMBLY
GASKET
40 (408, 30)
OIL PAN DRAIN PLUG
x 2
x 12
9.0 (92, 80 in.*lbf)
9.0 (92, 80 in.*lbf)
N*m (kgf*cm, ft.*lbf) : Specified torque
Non-reusable part
P
A114343E03

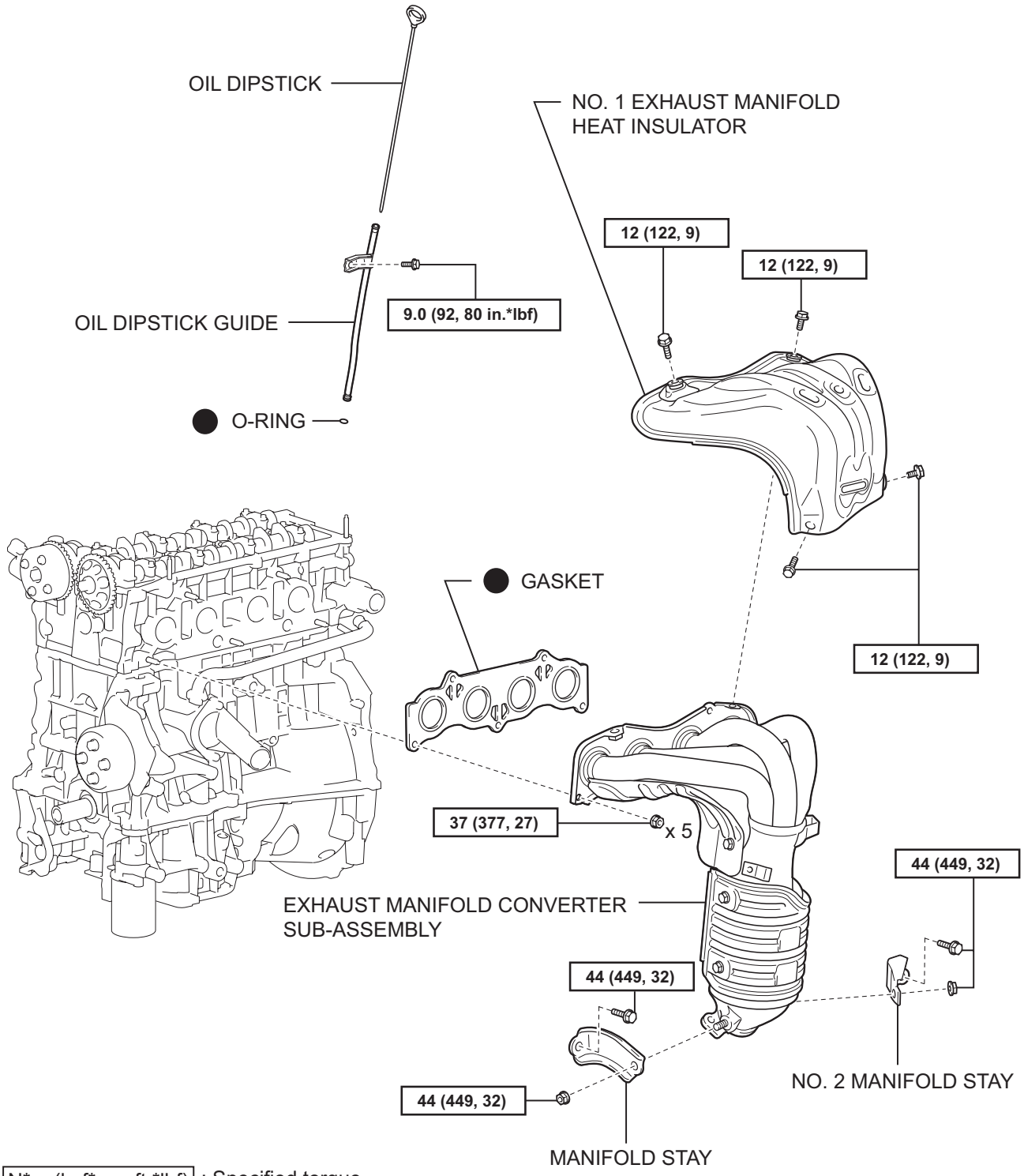
OIL DIPSTICK
NO. 1 EXHAUST MANIFOLD HEAT INSULATOR
12 (122, 9)
12 (122, 9)
9.0 (92, 80 in.*lbf)
OIL DIPSTICK GUIDE
O-RING
GASKET
12 (122, 9)
37 (377, 27)
x 5
44 (449, 32)
EXHAUST MANIFOLD CONVERTER SUB-ASSEMBLY
44 (449, 32)
NO. 2 MANIFOLD STAY
44 (449, 32)
MANIFOLD STAY
N*m (kgf*cm, ft.*lbf) : Specified torque
Non-reusable part
P
A124374E03

EM

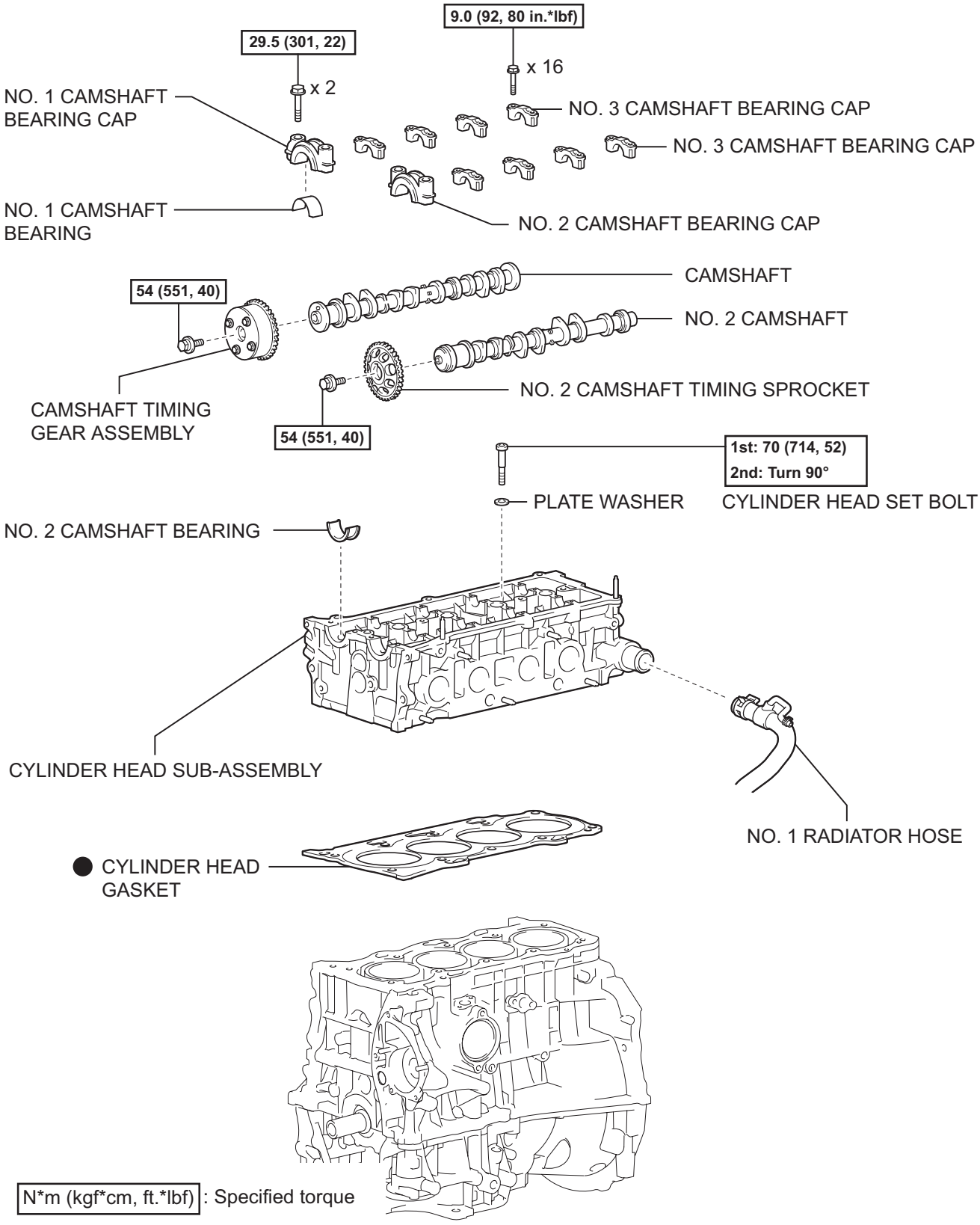

EM

P

A124406E03

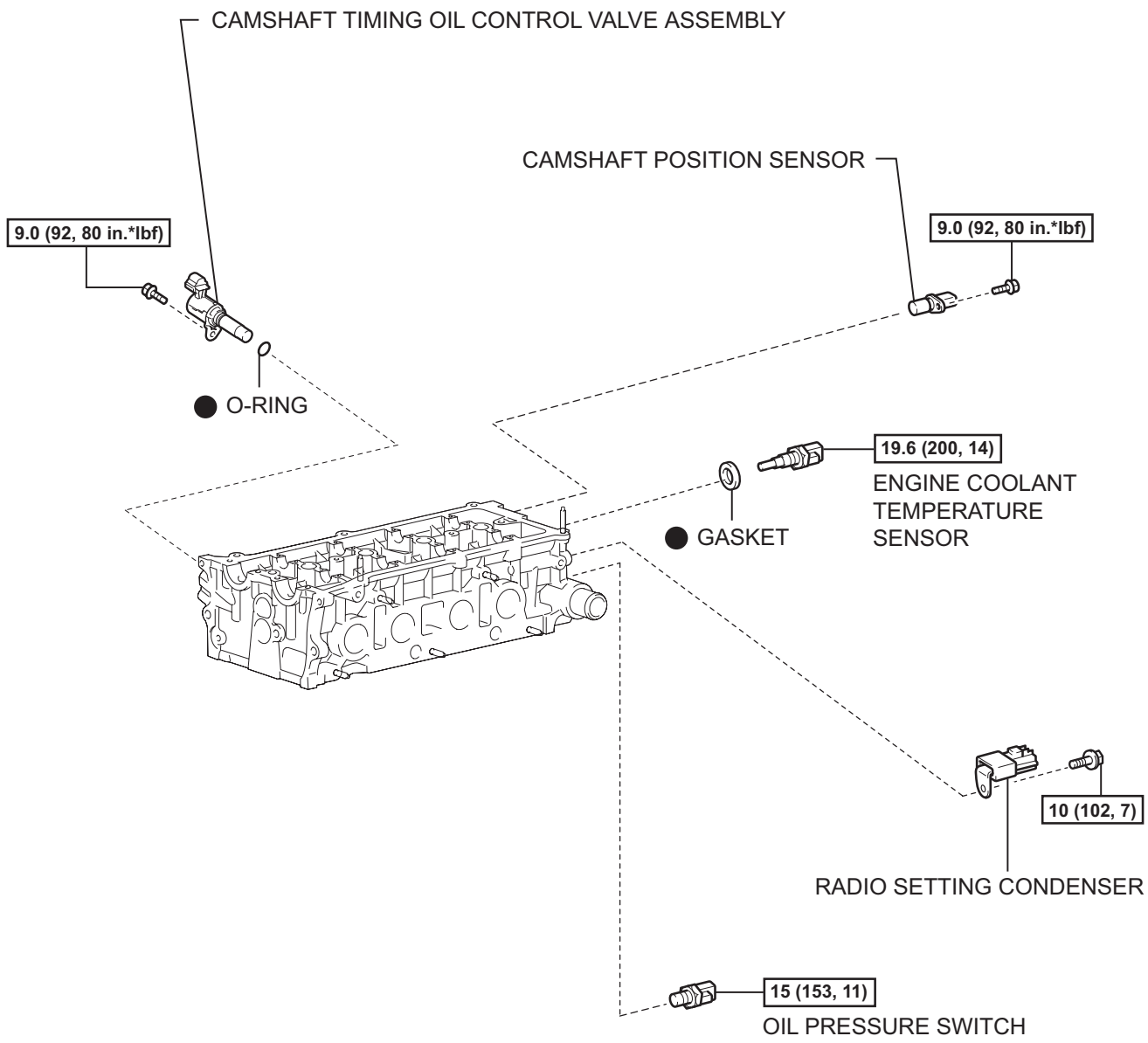

N*m (kgf*cm, ft.*lbf) : Specified torque

● Non-reusable part

P

A129325E03

EM

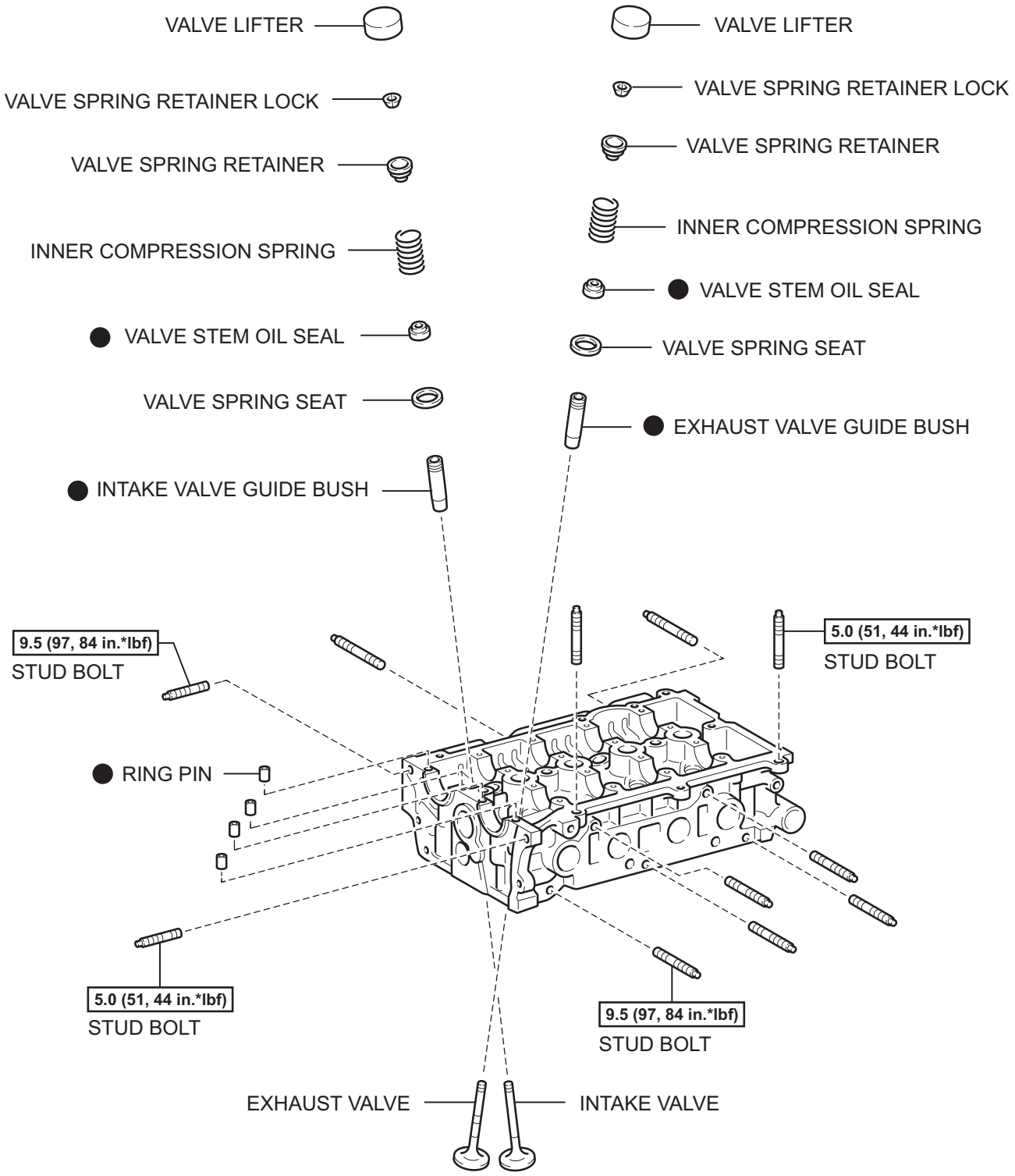

N*m (kgf*cm, ft.*lbf) : Specified torque

● Non-reusable part

T

A114154E04

REMOVAL

1. **REMOVE RADIATOR SUPPORT OPENING COVER**
2. **REMOVE FRONT WHEEL RH**
3. **REMOVE FRONT FENDER APRON RH**
4. **REMOVE FRONT SUSPENSION MEMBER REINFORCEMENT RH**
   (a) Remove the 4 bolts and reinforcement RH.
5. **REMOVE FAN AND GENERATOR V BELT**
   (a) Using SST and 19 mm socket wrench, loosen the V-ribbed belt tensioner arm clockwise, then remove the fan and generator V belt.
   SST 09216-42010
   NOTICE:
   - **Be sure to connect SST and the tools so that they are in line during use.**
   - **When retracting the tensioner, turn it clockwise slowly for 3 seconds or more. Do not apply force rapidly.**
   - **After the tensioner is fully retracted, do not apply force any more than necessary.**

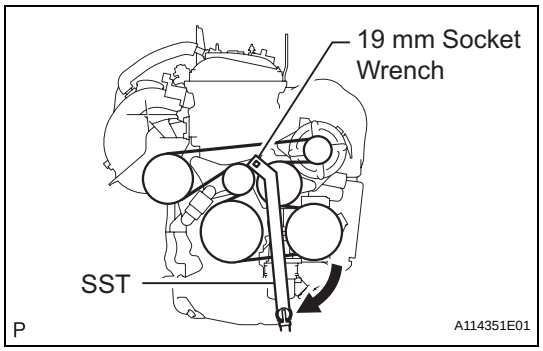

INSTALLATION

1. **INSTALL FAN AND GENERATOR V BELT**
   (a) Using SST and 19 mm socket wrench, loosen the V-ribbed belt tensioner arm clockwise, then install the fan and generator V belt.
   SST 09216-42010
   NOTICE:
   - **Be sure to connect SST and the tools so that they are in line during use.**
   - **When retracting the tensioner, turn it clockwise slowly for 3 seconds or more. Do not apply force rapidly.**
   - **After the tensioner is fully retracted, do not apply force any more than necessary.**
2. **INSTALL FRONT SUSPENSION MEMBER REINFORCEMENT RH**
   (a) Install the reinforcement RH with the 4 bolts.
   Torque: 96 N*m (979 kgf*cm, 71 ft.*lbf)
3. **INSTALL FRONT FENDER APRON RH**
4. **INSTALL FRONT WHEEL RH**
5. **INSTALL RADIATOR SUPPORT OPENING COVER**

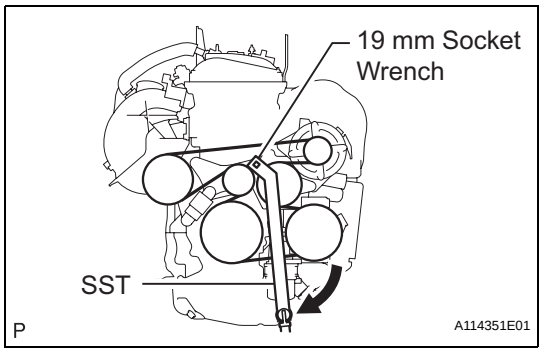

EM

DRIVE BELT

COMPONENTS

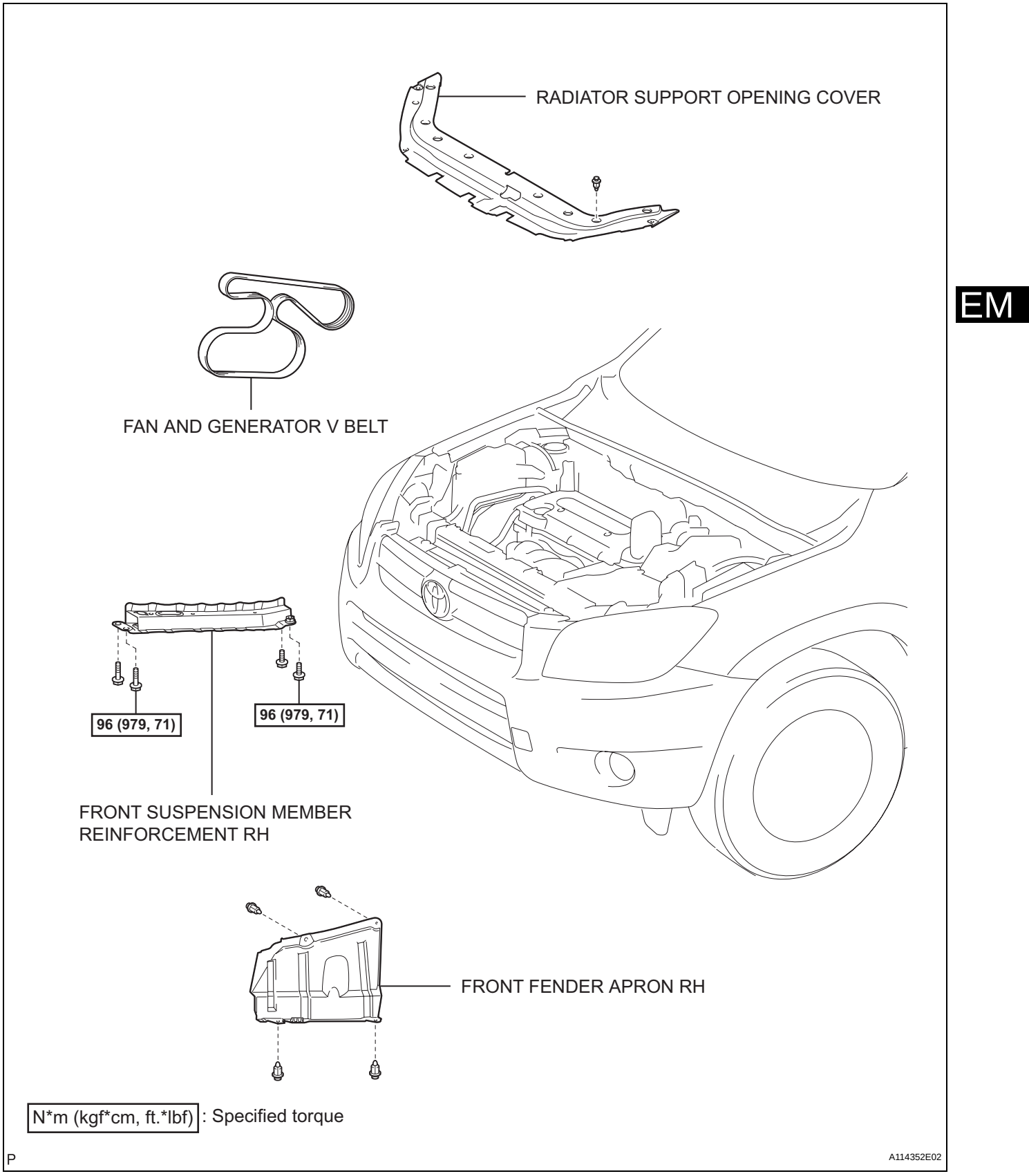

EM

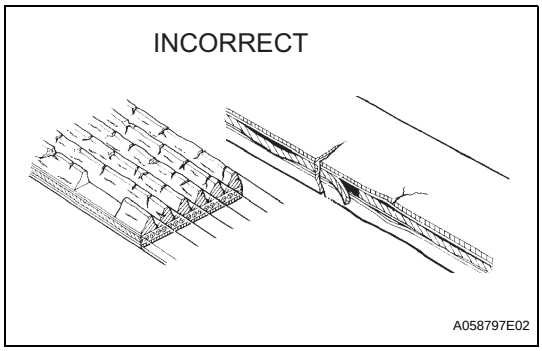

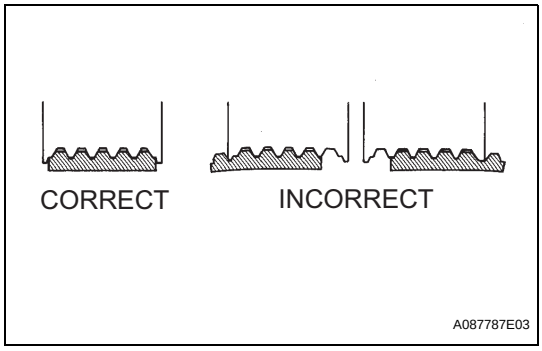

ON-VEHICLE INSPECTION

1. CHECK FAN AND GENERATOR V BELT

(a) Visually check the drive belt for excessive wear, frayed cords, etc.
If any defect has been found, replace the drive belt.
HINT:
Cracks on the rib side of a drive belt are considered acceptable.
If the drive belt has chunks missing from the ribs, it should be replaced.

(b) After installing the drive belt, check that it fits properly in the ribbed grooves.
Check with your hand to confirm that the belt has not slipped out of the grooves on the bottom of the crank pulley.
HINT:
- A "new belt" is a belt which has been used for less than 5 minutes on a running engine.
- A "used belt" is a belt which has been used on a running engine for 5 minutes or more.
- After installing a new belt, run the engine for approximately 5 minutes and then recheck the tension.

REMOVAL

1. **DISCHARGE FUEL SYSTEM PRESSURE (See page FU-9)**
2. **DISCONNECT CABLE FROM NEGATIVE BATTERY TERMINAL**
   CAUTION:
   Wait at least 90 seconds after disconnecting the cable from the negative (-) battery terminal to prevent airbag and seat belt pretensioner activation.
3. **REMOVE HOOD SUB-ASSEMBLY (See page ED-4)**
4. **REMOVE RADIATOR SUPPORT OPENING COVER**
5. **REMOVE BATTERY CLAMP SUB-ASSEMBLY**
   (a) Loosen the bolt and nut, and remove the battery clamp.
6. **REMOVE BATTERY**
7. **REMOVE BATTERY TRAY**
8. **REMOVE FRONT WHEEL**
9. **REMOVE NO. 1 ENGINE UNDER COVER**
10. **REMOVE NO. 2 ENGINE UNDER COVER**
11. **REMOVE FRONT FENDER APRON RH**
12. **REMOVE NO. 1 ENGINE COVER (See page EM-22)**
13. **DRAIN ENGINE COOLANT (See page CO-6)**
14. **DRAIN AUTOMATIC TRANSAXLE FLUID**
    (a) Drain automatic transaxle fluid for U241E (2WD) (see page AX-146).
    (b) Drain automatic transaxle fluid for U140F (4WD) (see page AX-147).
15. **REMOVE RADIATOR ASSEMBLY**
    (a) Remove the radiator (see page CO-29).
16. **REMOVE RADIATOR RESERVOIR**
    (a) Remove the 2 bolts and reservoir.
17. **REMOVE PURGE VSV (See page EC-15)**
18. **REMOVE AIR CLEANER CAP (See page ES-411)**
19. **REMOVE AIR CLEANER FILTER ELEMENT SUB-ASSEMBLY**

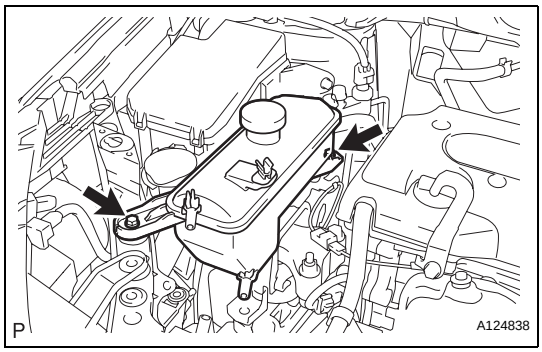

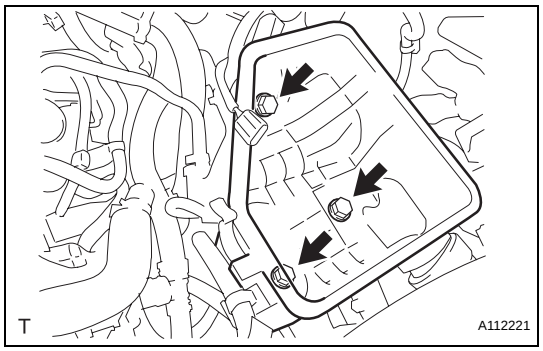

20. REMOVE AIR CLEANER CASE SUB-ASSEMBLY

(a) Remove the 3 bolts from the air cleaner case.
(b) Disconnect the case from the NO. 1 air cleaner inlet.

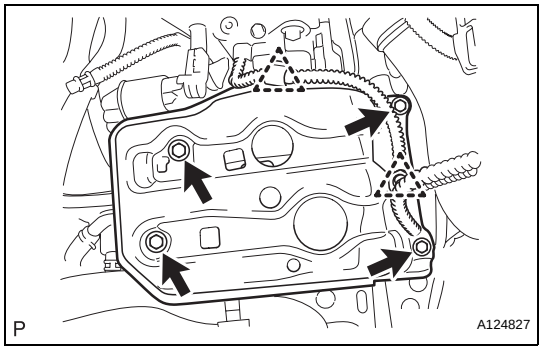

21. REMOVE FRONT BATTERY CARRIER

(a) Disconnect the 2 clamps of the engine wire.
(b) Remove the 4 bolts and front battery carrier.

EM

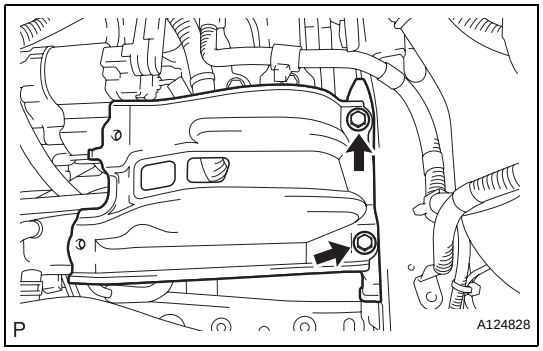

22. REMOVE BATTERY BRACKET REINFORCEMENT

(a) Remove the 2 bolts and battery bracket reinforcement.

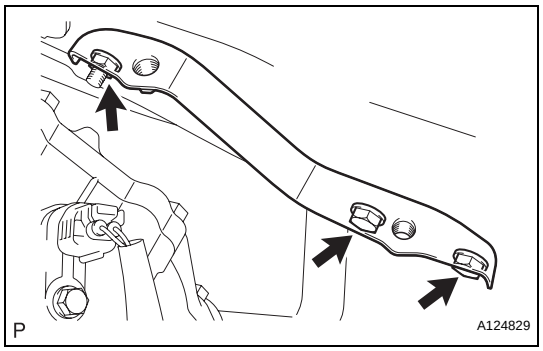

23. REMOVE BATTERY CARRIER BRACKET

(a) Remove the 2 bolts, nut and battery carrier bracket.

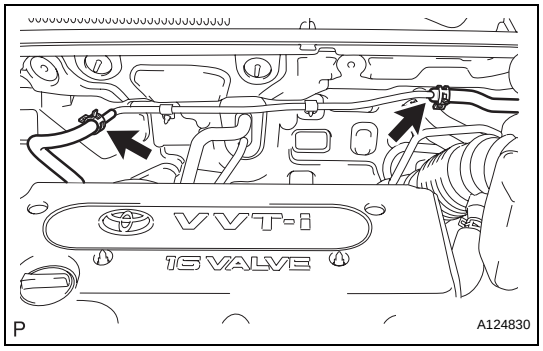

24. DISCONNECT UNION TO CONNECTOR TUBE HOSE

(a) Disconnect the 2 union to connector tube hoses from the booster vacuum tube.

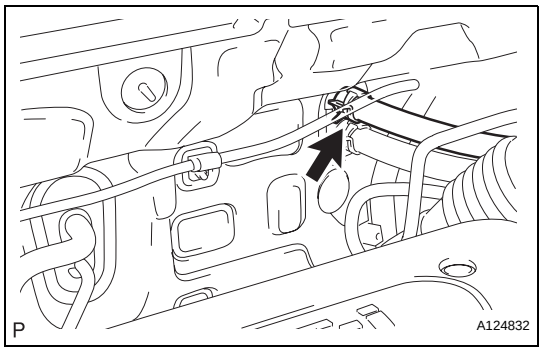

25. DISCONNECT HEATER WATER INLET HOSE

(a) Disconnect the heater water inlet hose from the heater unit.

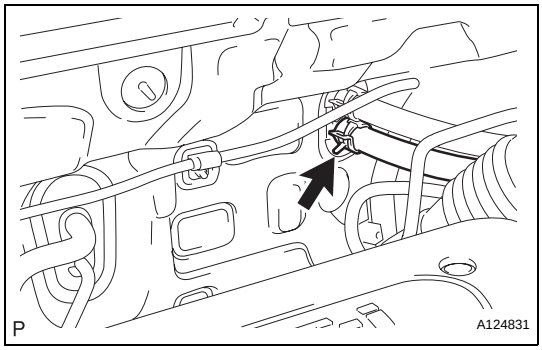

26. DISCONNECT HEATER WATER OUTLET HOSE

(a) Disconnect the heater water outlet hose from the heater unit.

27. DISCONNECT FUEL TUBE (See page FU-10)

28. REMOVE THROTTLE BODY (See page ES-412)

29. DISCONNECT NO. 2 VENTILATION HOSE (See page FU-10)

30. REMOVE FUEL DELIVERY PIPE SUB-ASSEMBLY (See page FU-10)

31. REMOVE INTAKE MANIFOLD (See page ES-419)

32. REMOVE INTAKE MANIFOLD INSULATOR (See page ES-420)

33. REMOVE TRANSAXLE CONTROL CABLE ASSEMBLY

(a) Remove the transaxle control cable for U241E (2WD) (see page AX-129).

(b) Remove the transaxle control cable for U140F (4WD) (see page AX-129).

34. REMOVE FRONT SUSPENSION MEMBER REINFORCEMENT RH (See page EM-6)

35. REMOVE FAN AND GENERATOR V BELT (See page EM-6)

36. REMOVE GENERATOR ASSEMBLY (See page CH-9)

37. REMOVE COOLER COMPRESSOR ASSEMBLY

(a) Remove the cooler compressor (see page AC-216).
HINT:
Disconnect the compressor together with the low-pressure and high-pressure hoses, then secure it to the vehicle side using rope.

38. REMOVE ECM (See page ES-429)

39. DISCONNECT ENGINE WIRE

(a) Remove the engine room relay block cover.

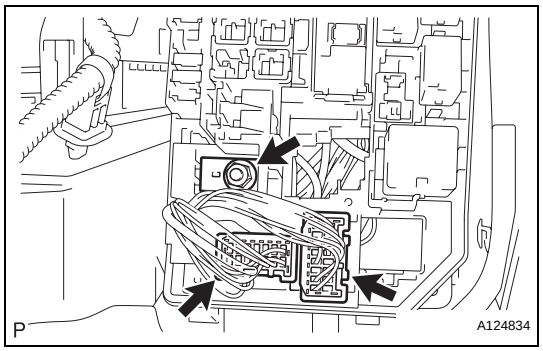

(b) Remove the nut and disconnect the 2 engine wire connectors.

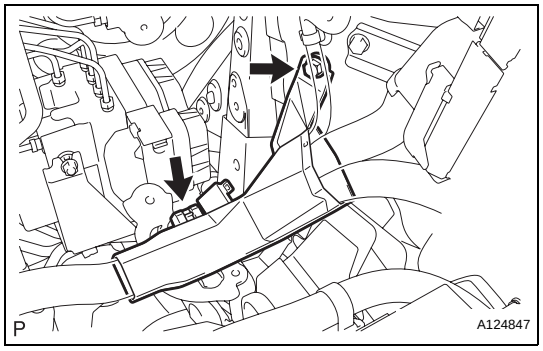

(c) Remove the bolt and engine wire cover. Then disconnect the engine wire from the engine wire cover.

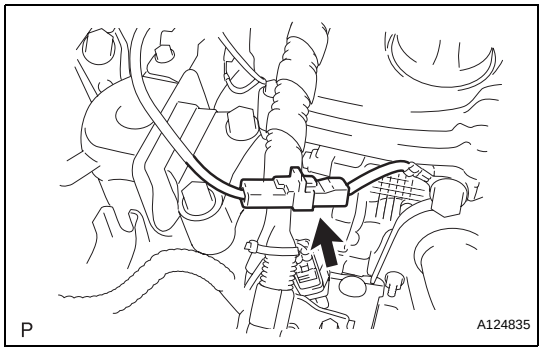

(d) Disconnect the ground cable connector.

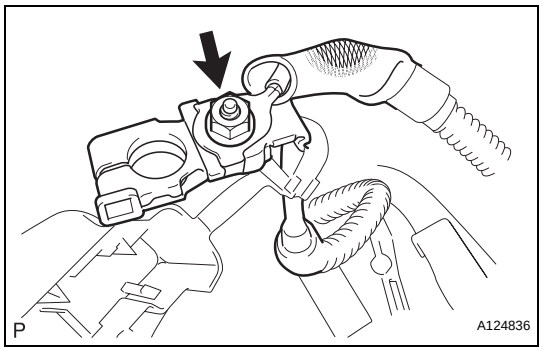

(e) Remove the nut from the positive (+) battery terminal to disconnect the engine wire.

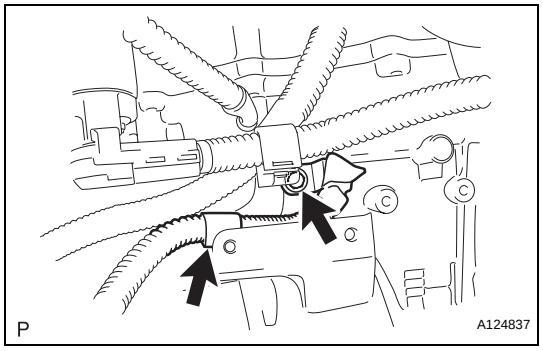

(f) Disconnect the ground cable from the clamp located near the starter.
(g) Remove the bolt and ground cable located near the starter.

40. REMOVE FRONT EXHAUST PIPE ASSEMBLY (See page EX-3)

41. REMOVE FRONT DRIVE SHAFT ASSEMBLY

(a) Remove the front drive shaft (for 2WD) (see page DS-7).

(b) Remove the front drive shaft (for 4WD) (see page DS-40).

42. REMOVE PROPELLER SHAFT ASSEMBLY (for 4WD) (See page PR-3)

43. REMOVE ENGINE MOUNTING INSULATOR FR

(a) Remove the through bolt and nut.

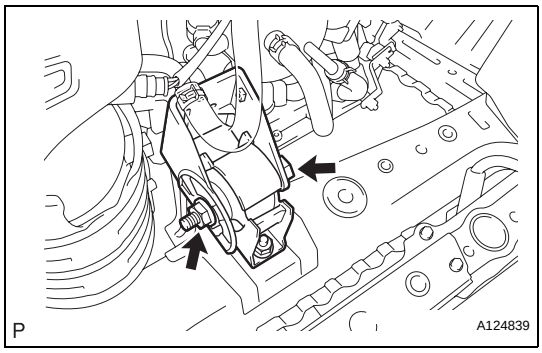

(b) Remove the 2 bolts and engine mounting insulator FR.

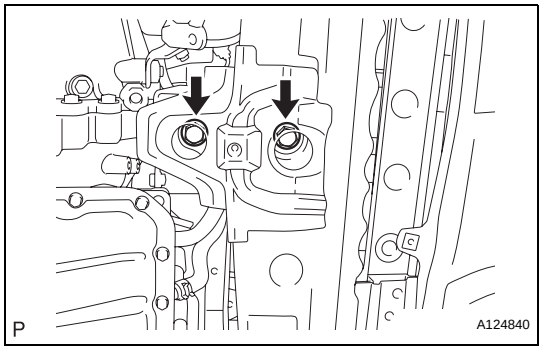

44. REMOVE ENGINE MOUNTING INSULATOR RR

(a) Remove the through bolt.

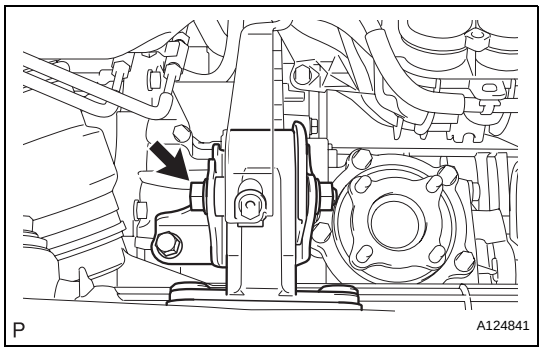

(b) Remove the 2 nuts, 2 bolts and engine mounting insulator RR.

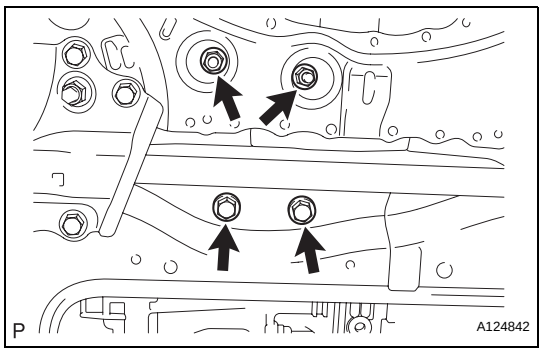

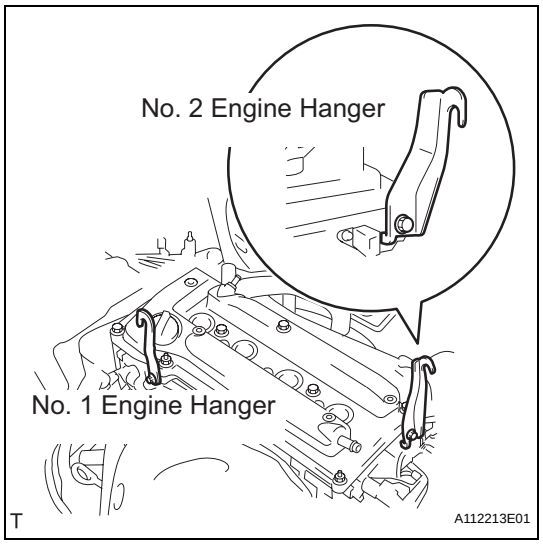

45. REMOVE ENGINE ASSEMBLY WITH TRANSAXLE

(a) Install the No. 1 and No. 2 engine hangers with the bolts as shown in the illustration.
Torque: 38 N*m (387 kgf*cm, 28 ft.*lbf)
Part No.

Item	Part No.
No. 1 engine hanger	12281-28010
No. 2 engine hanger	12282-28010
Bolt	91512-61020

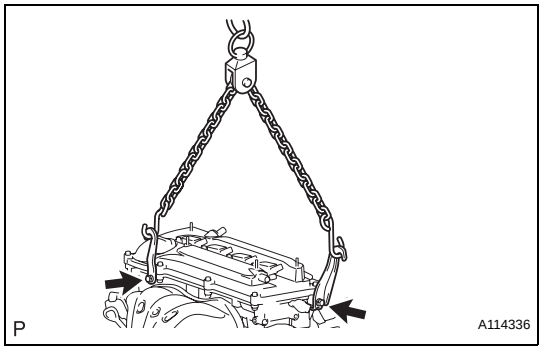

(b) Attach the sling device to the engine hangers and chain block.
(c) Carefully remove the engine with transaxle from the vehicle.

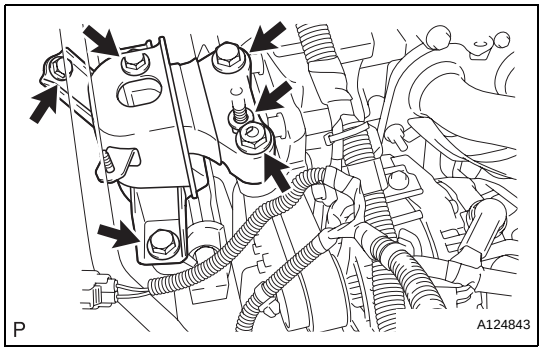

46. REMOVE ENGINE MOUNTING INSULATOR RH

(a) Remove the 2 nuts, 4 bolts and engine mounting insulator RH.

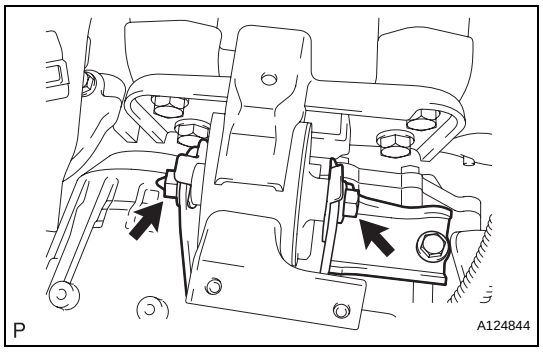

47. REMOVE ENGINE MOUNTING INSULATOR LH

(a) Remove the through bolt and nut.

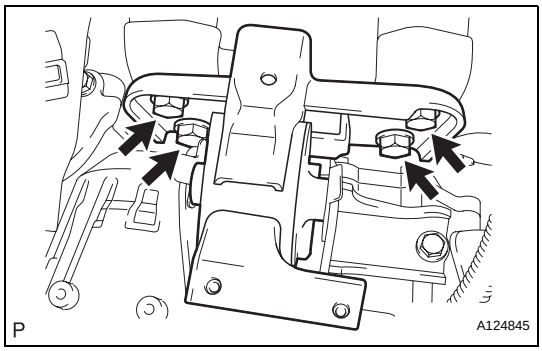

(b) Remove the 4 bolts and engine mounting insulator LH.

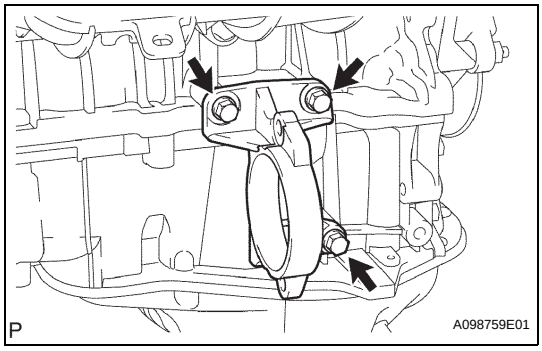

48. REMOVE DRIVE SHAFT BEARING BRACKET (for 2WD)

(a) Remove the 3 bolts and bracket.

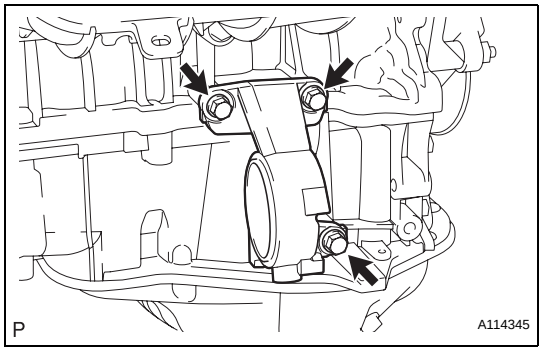

49. REMOVE DRIVE SHAFT BEARING BRACKET (for 4WD)

(a) Remove the 3 bolts and bracket.

50. REMOVE TRANSFER ASSEMBLY (for 4WD) (See page TF-59)

51. REMOVE STARTER ASSEMBLY (See page ST-7)

52. REMOVE AUTOMATIC TRANSAXLE ASSEMBLY

(a) Remove the automatic transaxle for U241E (2WD) (see page AX-147).

(b) Remove the automatic transaxle for U140F (4WD) (see page AX-148).

53. REMOVE TORQUE CONVERTER CLUTCH ASSEMBLY

(a) Remove the torque converter clutch for U241E (2WD) (see page AX-148).

(b) Remove the torque converter clutch for U140F (4WD) (see page AX-149).

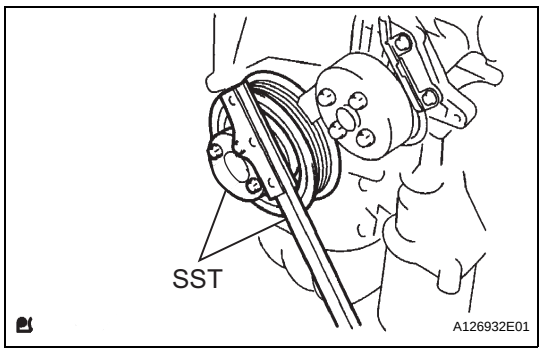

54. REMOVE DRIVE PLATE SUB-ASSEMBLY

(a) Using SST, hold the crankshaft.

SST 09213-54015 (91651-60855), 09330-00021

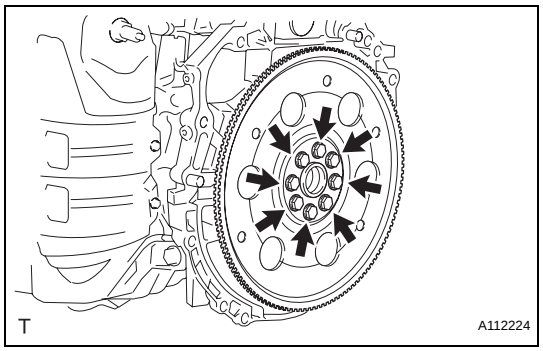

(b) Remove the 8 bolts, rear spacer, drive plate and front spacer.

INSTALLATION

1. INSTALL DRIVE PLATE SUB-ASSEMBLY

(a) Clean the 8 bolts and 8 bolt holes.

(b) Apply adhesive to 2 or 3 threads of the 8 bolts.
Adhesive:
Toyota Genuine Adhesive 1342, Three Bond 1342 or Equivalent

(c) Using SST, hold the crankshaft.
SST 09213-54015 (91651-60855), 09330-00021

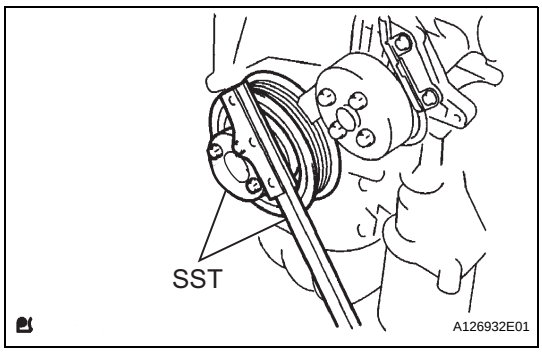

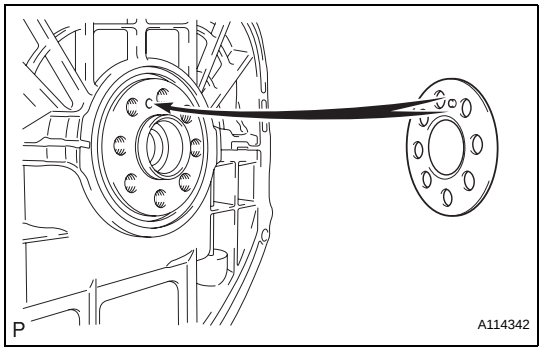

(d) Install the front spacer.
HINT:
Align the pin of the front spacer with the pin hole of the crankshaft.

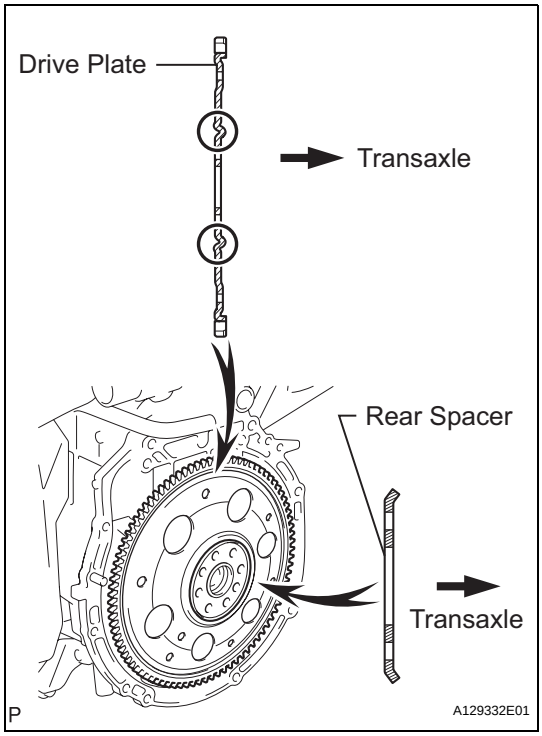

(e) Install the drive plate and rear spacer onto the crankshaft.

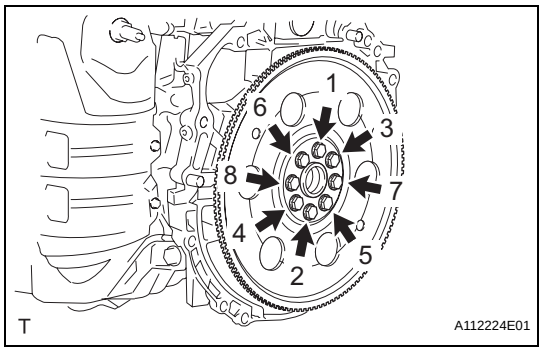

(f) Using several steps, uniformly install and tighten the 8 bolts in the sequence shown in the illustration.
Torque: 98 N*m (1,000 kgf*cm, 72 ft.*lbf)

2. INSTALL TORQUE CONVERTER CLUTCH ASSEMBLY

(a) Install the torque converter clutch for U241E (2WD) (see page AX-148).

(b) Install the torque converter clutch for U140F (4WD) (see page AX-149).

3. INSTALL AUTOMATIC TRANSAXLE ASSEMBLY

(a) Install the automatic transaxle for U241E (2WD) (see page AX-149).

(b) Install the automatic transaxle for U140F (4WD) (see page AX-150).

4. INSTALL STARTER ASSEMBLY (See page ST-14)

5. INSTALL TRANSFER ASSEMBLY (for 4WD) (See page TF-75)

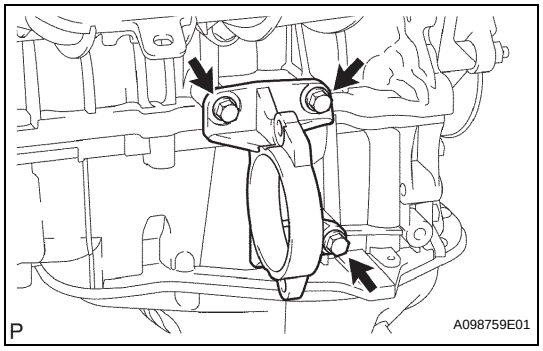

6. INSTALL DRIVE SHAFT BEARING BRACKET (for 2WD)

(a) Install the bracket with the 3 bolts.
Torque: 64 N*m (653 kgf*cm, 47 ft.*lbf)

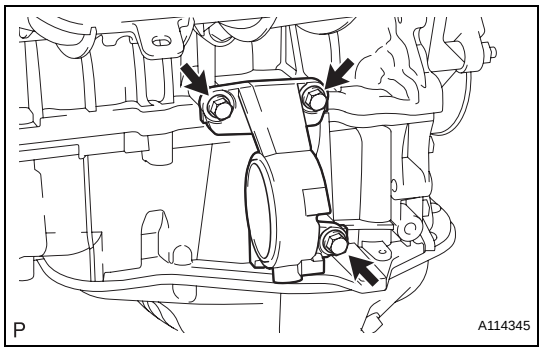

7. INSTALL DRIVE SHAFT BEARING BRACKET (for 4WD)

(a) Install the bracket with the 3 bolts.
Torque: 64 N*m (653 kgf*cm, 47 ft.*lbf)

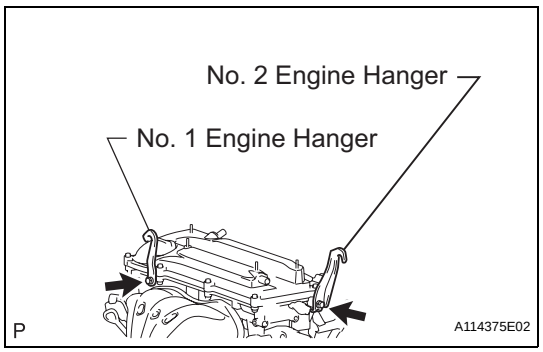

8. INSTALL ENGINE HANGER

(a) Install the No. 1 and No. 2 engine hangers.
Torque: 38 N*m (387 kgf*cm, 28 ft.*lbf)
Part No.

ITEM	Part No.
No. 1 engine hanger	12281-28010
No. 2 engine hanger	12282-28010
Bolt	91512-61020

EM

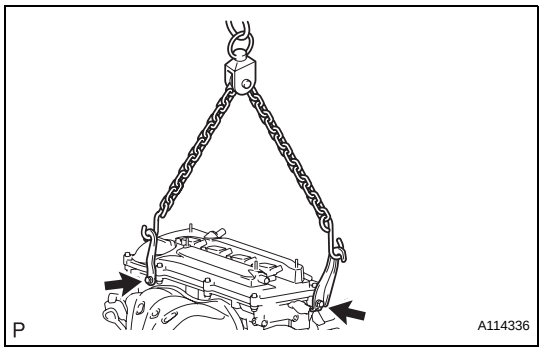

(b) Attach the sling device and the engine with the chain block.

9. INSTALL ENGINE ASSEMBLY WITH TRANSAXLE

(a) Lift the engine assembly (with transaxle) with the chain block.

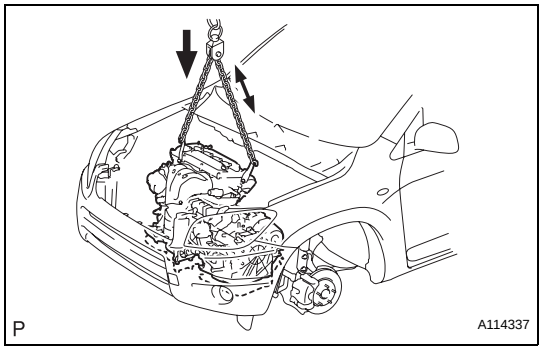

(b) Lower the engine out of the vehicle slowly and carefully.

NOTICE:
Make sure the engine is clear of all wiring, hoses and cables.

EM

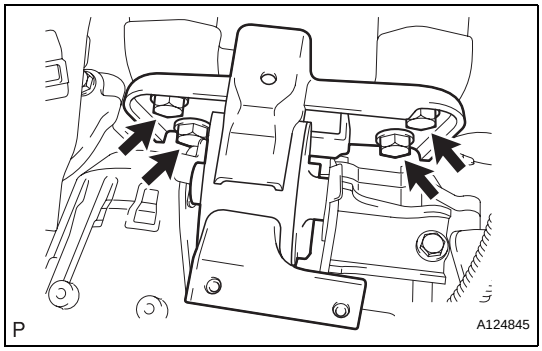

10. INSTALL ENGINE MOUNTING INSULATOR LH

(a) Install the engine mounting insulator LH with the 4 bolts.

Torque: 95 N*m (969 kgf*cm, 70 ft.*lbf)

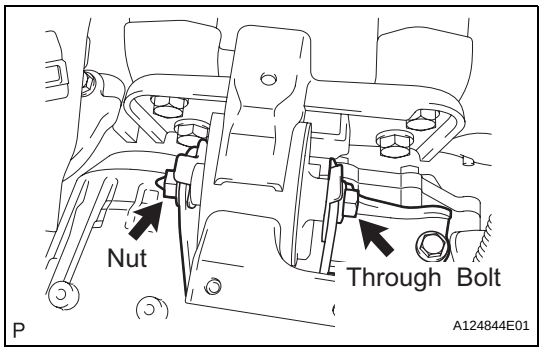

(b) Install the engine mounting insulator LH with the through bolt and nut.

HINT:
Install the through bolt by tightening the nut.

Torque: 56 N*m (571 kgf*cm, 41 ft.*lbf)

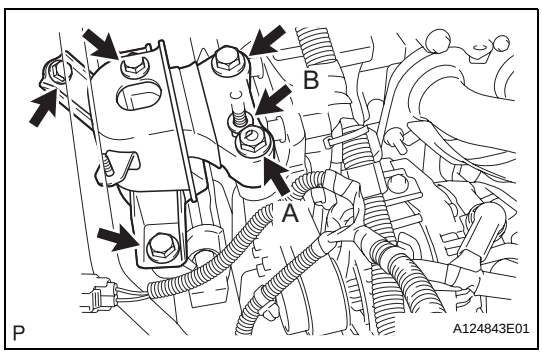

11. INSTALL ENGINE MOUNTING INSULATOR RH

(a) Install the engine mounting insulator RH with the 2 bolts and 2 nuts.

Torque: 95 N*m (969 kgf*cm, 70 ft.*lbf) for bolt
95 N*m (969 kgf*cm, 70 ft.*lbf) for nut A
52 N*m (530 kgf*cm, 38 ft.*lbf) for nut B

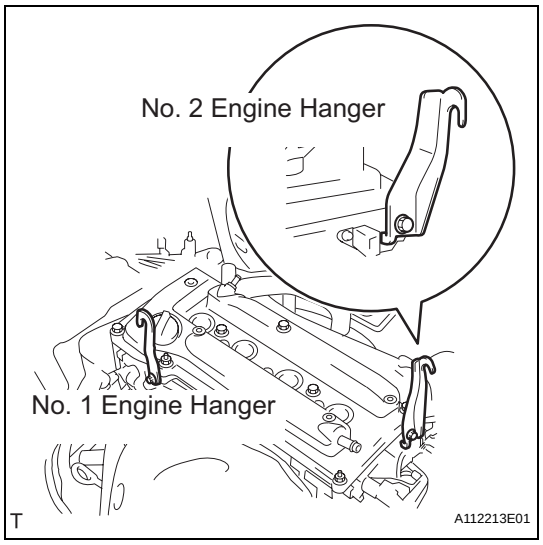

12. REMOVE ENGINE HANGER

(a) Remove the No. 1 and No. 2 engine hangers.

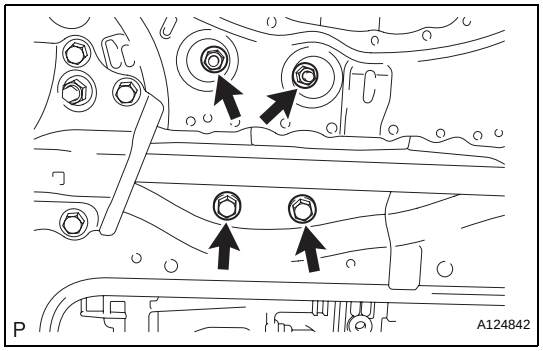

13. INSTALL ENGINE MOUNTING INSULATOR RR

(a) Install the engine mounting insulator RR with the 2 nuts and 2 bolts.
Torque: 95 N*m (969 kgf*cm, 70 ft.*lbf)

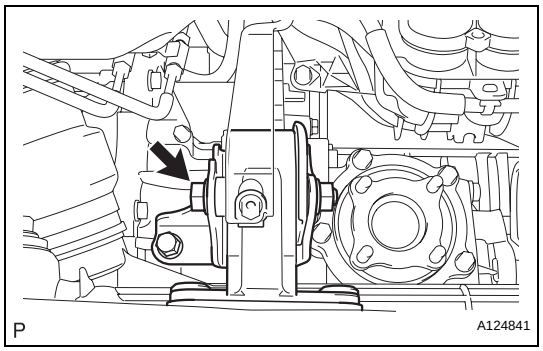

(b) Install the through bolt which is used to secure the rear engine mounting insulator, into the rear engine mounting bracket.
Torque: 95 N*m (969 kgf*cm, 70 ft.*lbf)

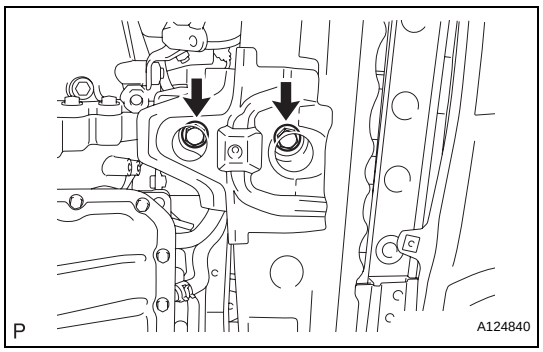

14. INSTALL ENGINE MOUNTING INSULATOR FR

(a) Install the engine mounting insulator FR with the 2 bolts.
Torque: 95 N*m (969 kgf*cm, 70 ft.*lbf)

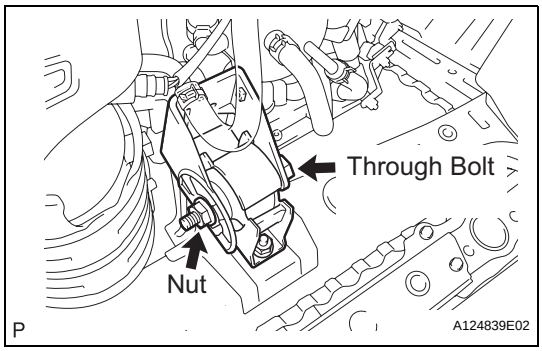

(b) Install the through bolt and nut which is used to secure the front engine mounting bracket FR.
HINT:
Install the through bolt by tightening the nut.
Torque: 145 N*m (1,479 kgf*cm, 107 ft.*lbf)

15. INSTALL PROPELLER SHAFT ASSEMBLY (for 4WD)

(a) Install the propeller shaft (see page PR-5).

16. INSTALL FRONT DRIVE SHAFT ASSEMBLY

(a) Install the front drive shaft RH (for 2WD) (see page DS-32).

(b) Install the front drive shaft RH (for 4WD) (see page DS-65).

17. INSTALL FRONT EXHAUST PIPE (See page EX-4)

18. CONNECT ENGINE WIRE

(a) Install the ground cable with the bolt located near the starter.
Torque: 13 N*m (133 kgf*cm, 10 ft.*lbf)

(b) Connect the ground cable to the clamp located near the starter.

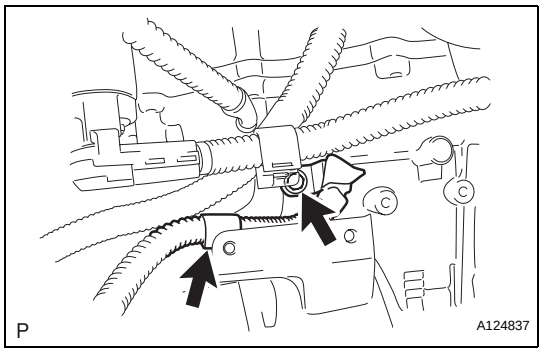

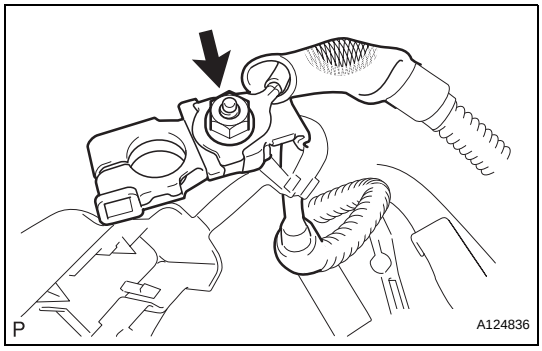

(c) Connect the engine wire to the positive (+) battery terminal with the nut.
Torque: 13 N*m (133 kgf*cm, 10 ft.*lbf)

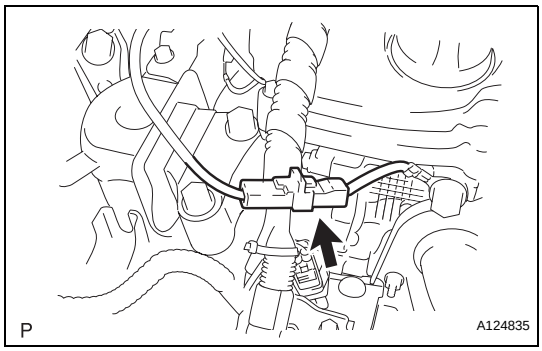

(d) Connect the ground cable connector.

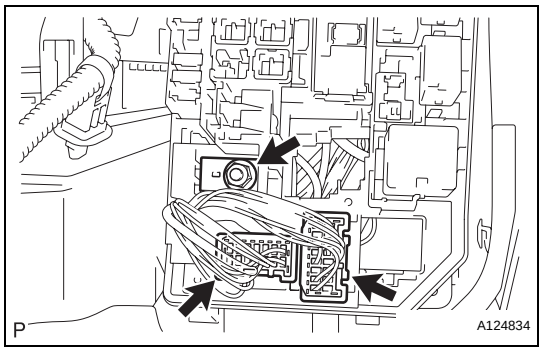

(e) Connect the 2 engine wire connectors and install the nut.
(f) Install the engine room relay block cover.

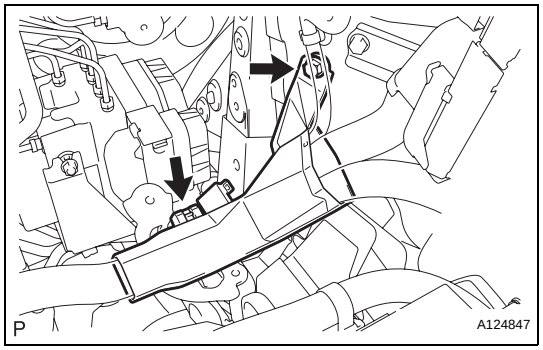

(g) Attach the clamp of the engine wire cover.
(h) Install the engine wire cover to with the bolt.

19. INSTALL ECM (See page ES-430)

20. INSTALL COOLER COMPRESSOR ASSEMBLY (See page AC-217)

21. INSTALL GENERATOR ASSEMBLY (See page CH-15)

22. INSTALL FAN AND GENERATOR V BELT (See page EM-7)

23. INSTALL FRONT SUSPENSION MEMBER REINFORCEMENT RH (See page EM-7)

24. INSTALL TRANSAXLE CONTROL CABLE ASSEMBLY

(a) Install the transaxle control cable for U241E (see page AX-130).
(b) Install the transaxle control cable for U140F (see page AX-130).

25. INSTALL INTAKE MANIFOLD INSULATOR (See page ES-421)

26. INSTALL INTAKE MANIFOLD (See page ES-421)

27. INSTALL FUEL DELIVERY PIPE SUB-ASSEMBLY (See page FU-13)

28. CONNECT NO. 2 VENTILATION HOSE (See page FU-14)

29. INSTALL THROTTLE BODY ASSEMBLY (See page ES-413)

30. CONNECT FUEL TUBE (See page FU-14)

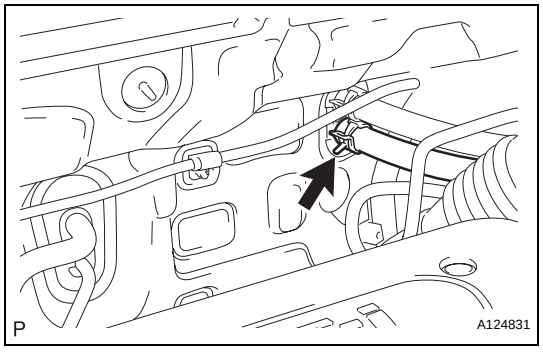

31. CONNECT HEATER WATER OUTLET HOSE

(a) Connect the heater water outlet hose to the air conditioner tube.

EM

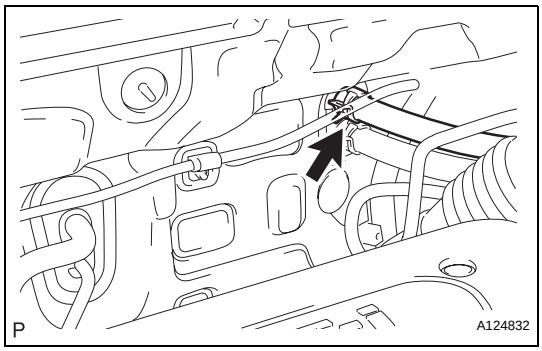

32. CONNECT HEATER WATER INLET HOSE

(a) Connect the heater water inlet hose to the air conditioner tube.

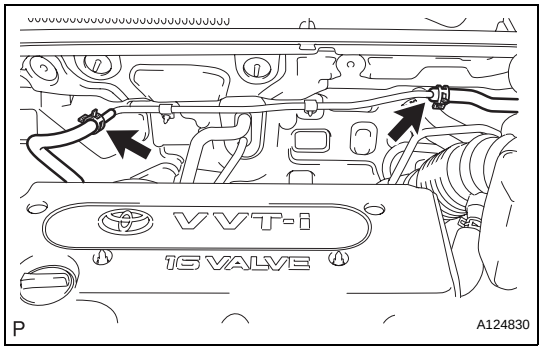

33. CONNECT UNION TO CONNECTOR TUBE HOSE

(a) Connect the 2 union to connector tube hoses to the booster vacuum tube.

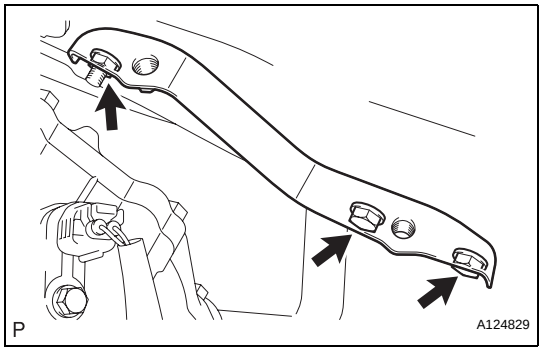

34. INSTALL BATTERY CARRIER BRACKET

(a) Install the battery carrier bracket with the nut and 2 bolts.
Torque: 20 N*m (204 kgf*cm, 15 ft.*lbf)

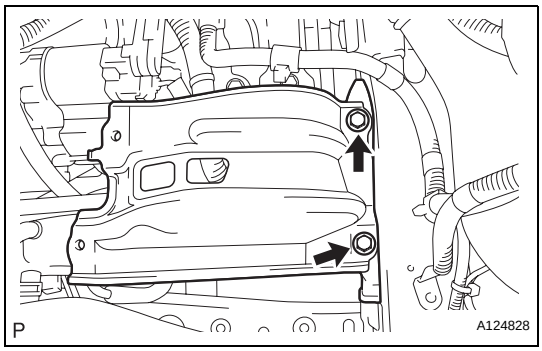

35. INSTALL BATTERY BRACKET REINFORCEMENT

(a) Install the battery bracket reinforcement with the 2 bolts.
Torque: 20 N*m (204 kgf*cm, 15 ft.*lbf)

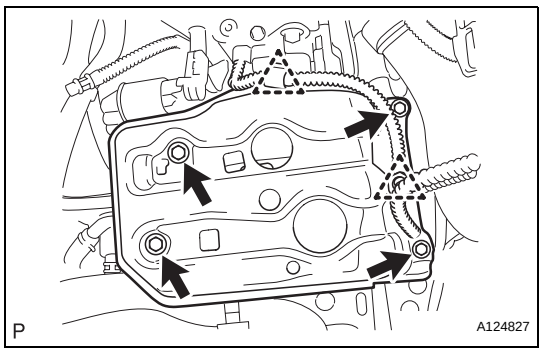

36. INSTALL FRONT BATTERY CARRIER

(a) Install the front battery carrier with the 4 bolts.
Torque: 20 N*m (204 kgf*cm, 15 ft.*lbf)

(b) Connect the 2 clamps of the engine wire.

37. INSTALL AIR CLEANER CASE SUB-ASSEMBLY

(a) Connect the air cleaner case to the No. 1 air cleaner inlet.

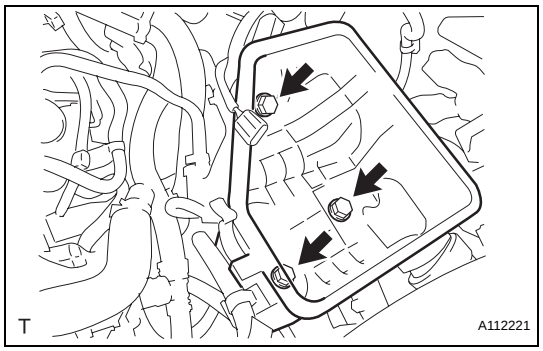

(b) Install the air cleaner case with the 3 bolts.
Torque: 5.0 N*m (51 kgf*cm, 44 in.*lbf)

38. **INSTALL AIR CLEANER FILTER ELEMENT SUB-ASSEMBLY**
39. **INSTALL AIR CLEANER CAP (See page ES-413)**
40. **INSTALL PURGE VSV (See page EC-16)**

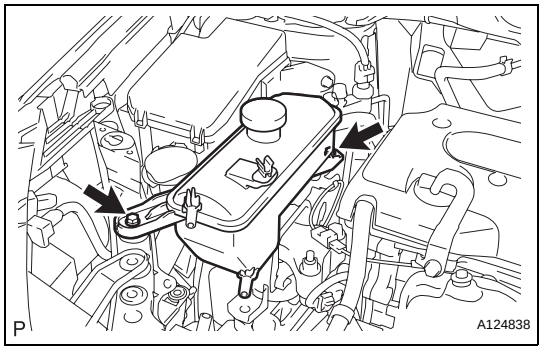

41. **INSTALL RADIATOR RESERVOIR**
    (a) Install the reservoir with the 2 bolts.
    Torque: 5.0 N*m (51 kgf*cm, 44 in.*lbf)
42. **INSTALL RADIATOR ASSEMBLY**
    (a) Install the radiator (see page CO-32).
43. **INSTALL BATTERY TRAY**
44. **INSTALL BATTERY**
    (a) Install the battery.
    (b) Install the battery clamp with the bolt and nut.
    Torque: 8.5 N*m (87 kgf*cm, 75 in.*lbf) for bolt
    5.0 N*m (51 kgf*cm, 44 in.*lbf) for nut
45. **CONNECT CABLE TO NEGATIVE BATTERY TERMINAL**
46. **ADD AUTOMATIC TRANSAXLE FLUID**
    (a) Add automatic transaxle fluid for U241E (2WD) (see page AX-151).
    (b) Add automatic transaxle fluid for U140F (4WD) (see page AX-152).
47. **CHECK FOR FUEL LEAKS (See page FU-14)**
48. **ADD ENGINE COOLANT (See page CO-6)**
49. **CHECK FOR ENGINE COOLANT LEAKS**
    (a) Check for engine coolant leaks (see page CO-1).
50. **CHECK FOR AUTOMATIC TRANSAXLE FLUID LEAKS**
51. **ADJUST SHIFT LEVER POSITION**
    (a) Adjust the shift lever position for U241E (2WD) (see page AX-138).
    (b) Adjust the shift lever position for U140F (4WD) (see page AX-138).
52. **INSTALL NO. 1 ENGINE COVER (See page EM-43)**
53. **INSTALL FRONT FENDER APRON RH**
54. **INSTALL NO. 2 ENGINE UNDER COVER**
55. **INSTALL NO. 1 ENGINE UNDER COVER**
56. **INSTALL FRONT WHEEL**
57. **INSTALL RADIATOR SUPPORT OPENING COVER**

58. INSTALL HOOD SUB-ASSEMBLY

(a) Install the hood (see page ED-7).

(b) Adjust the hood (see page ED-5).

59. INSPECT AND ADJUST FRONT WHEEL ALIGNMENT

(a) Inspect and adjust the front wheel alignment (see page SP-3).

60. PERFORM REGISTRATION

(a) When replacing the engine assembly, perform vehicle stability control system recognition in ECM (see page CC-12).

61. RESET MEMORY (for Automatic Transaxle)

(a) When replacing the engine assembly, perform the RESET MEMORY procedure (A/T initialization) for U241E (2WD) (see page AX-18) and for U140F (4WD) (see page AX-18).

DISASSEMBLY

1. **REMOVE IDLER PULLEY (See page EM-23)**
2. **REMOVE OIL DIPSTICK**
3. **REMOVE OIL DIPSTICK GUIDE (See page EM-57)**
4. **REMOVE MANIFOLD STAY (See page EM-57)**
5. **REMOVE NO. 2 MANIFOLD STAY (See page EM-58)**
6. **REMOVE NO. 1 EXHAUST MANIFOLD HEAT INSULATOR (See page EM-58)**
7. **REMOVE EXHAUST MANIFOLD CONVERTER SUB-ASSEMBLY (See page EM-58)**
8. **REMOVE WATER INLET (See page CO-15)**
9. **REMOVE THERMOSTAT**
10. **REMOVE NO. 1 WATER BY-PASS PIPE**
    (a) Remove the bolt, 2 nuts, pipe and gasket.

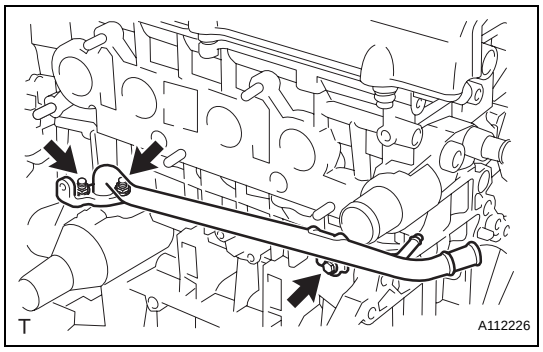

11. **REMOVE NO. 3 WATER BY-PASS PIPE**
    (a) Remove the bolt, 2 nuts, pipe and gasket.
12. **REMOVE V-RIBBED BELT TENSIONER ASSEMBLY (See page EM-26)**
13. **REMOVE CAMSHAFT TIMING OIL CONTROL VALVE ASSEMBLY (See page ES-395)**
14. **REMOVE KNOCK SENSOR (See page ES-420)**
15. **REMOVE RADIO SETTING CONDENSER (See page EM-63)**
16. **REMOVE OIL PRESSURE SWITCH ASSEMBLY (See page EM-63)**
17. **REMOVE ENGINE COOLANT TEMPERATURE SENSOR (See page EM-63)**
18. **REMOVE CAMSHAFT POSITION SENSOR (See page EM-64)**
19. **REMOVE IGNITION COIL ASSEMBLY (See page IG-9)**

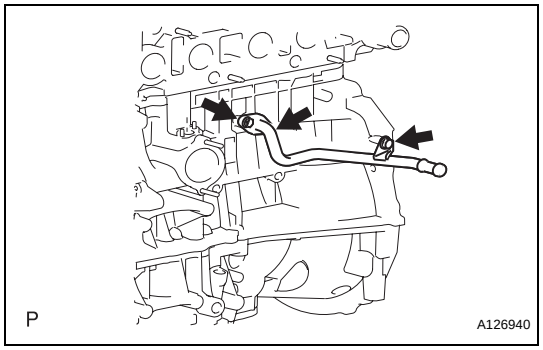

EM

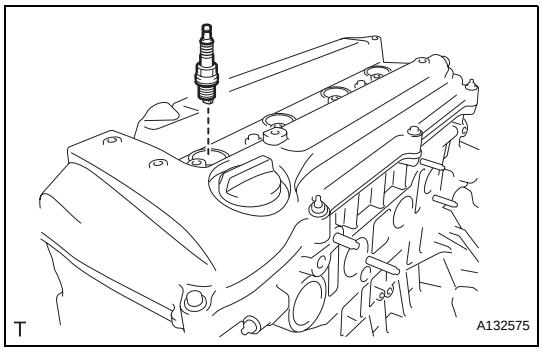

20. REMOVE SPARK PLUG

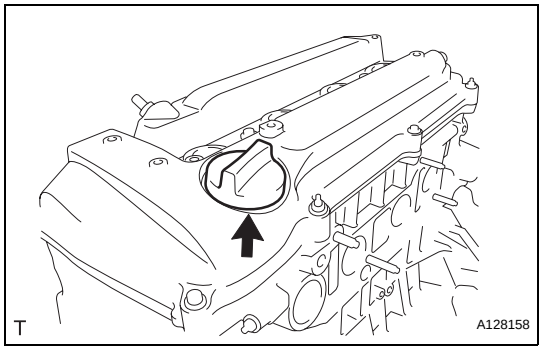

21. REMOVE OIL FILLER CAP SUB-ASSEMBLY

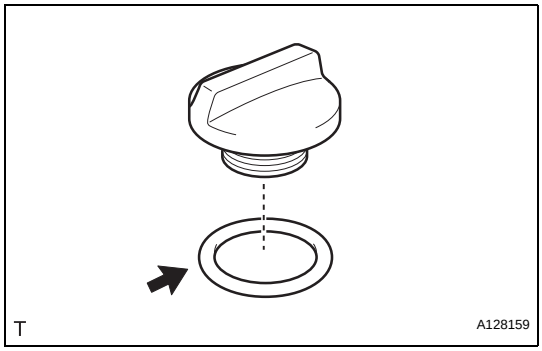

22. REMOVE OIL FILLER CAP GASKET

23. REMOVE VENTILATION VALVE SUB-ASSEMBLY (See page EC-18)

24. REMOVE CYLINDER HEAD COVER SUB-ASSEMBLY (See page EM-24)

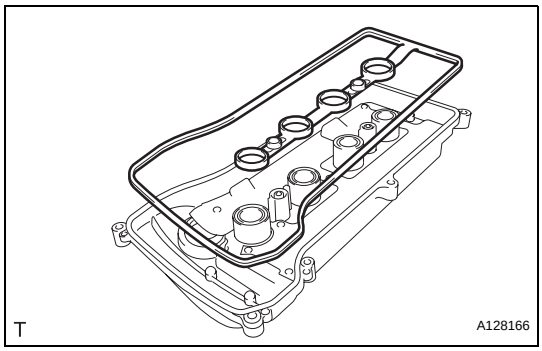

25. REMOVE CYLINDER HEAD COVER GASKET

26. REMOVE OIL FILTER SUB-ASSEMBLY (See page LU-4)

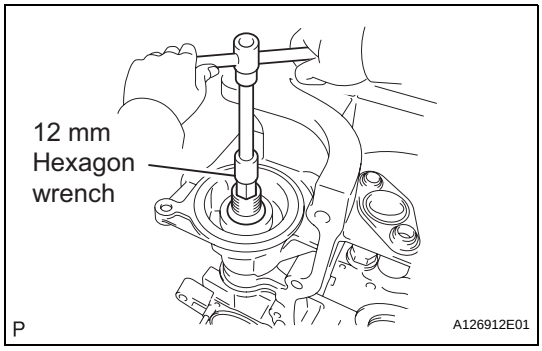

27. REMOVE OIL FILTER UNION

(a) Using a 12 mm hexagon wrench, remove the oil filter union.

28. REMOVE CRANKSHAFT POSITION SENSOR (See page ES-402)

29. REMOVE WATER PUMP PULLEY (See page CO-11)

30. REMOVE WATER PUMP ASSEMBLY (See page CO-11)

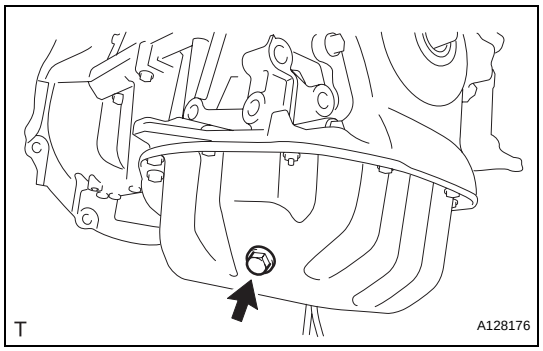

31. **REMOVE OIL PAN DRAIN PLUG**
    (a) Remove the oil pan drain plug and gasket.
32. **REMOVE OIL PAN SUB-ASSEMBLY (See page EM-24)**
33. **REMOVE CRANKSHAFT PULLEY (See page EM-25)**
34. **REMOVE NO. 1 CHAIN TENSIONER ASSEMBLY (See page EM-26)**
35. **REMOVE TIMING CHAIN COVER SUB-ASSEMBLY (See page EM-26)**
36. **REMOVE NO. 1 CRANKSHAFT POSITION SENSOR PLATE**

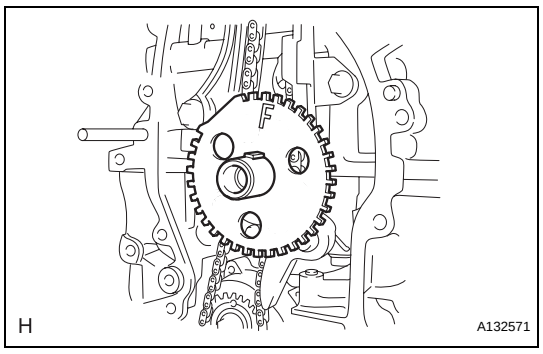

37. **REMOVE TIMING CHAIN GUIDE (See page EM-28)**
38. **REMOVE CHAIN TENSIONER SLIPPER (See page EM-28)**
39. **REMOVE NO. 1 CHAIN VIBRATION DAMPER (See page EM-28)**

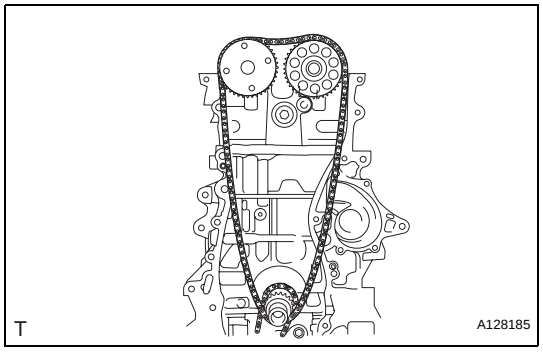

40. **REMOVE CHAIN SUB-ASSEMBLY**

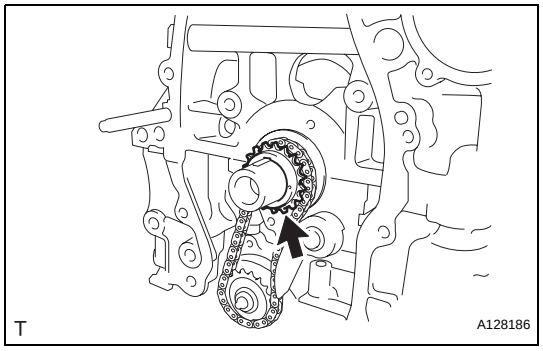

41. **REMOVE CRANKSHAFT TIMING SPROCKET**
42. **REMOVE NO. 2 CHAIN SUB-ASSEMBLY (See page EM-29)**
43. **REMOVE OIL PUMP DRIVE GEAR**
44. **REMOVE OIL PUMP ASSEMBLY (See page LU-12)**

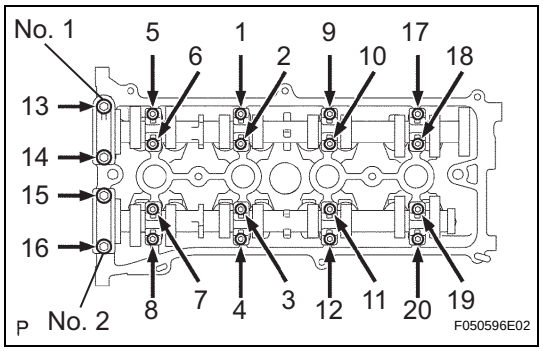

45. **REMOVE CAMSHAFT**
    (a) Using several steps, uniformly loosen and remove the 20 bearing cap bolts in the sequence shown in the illustration.
    (b) Remove the 10 bearing caps, then remove the camshaft and No. 2 camshaft.
46. **REMOVE CYLINDER HEAD SUB-ASSEMBLY (See page EM-62)**

EM

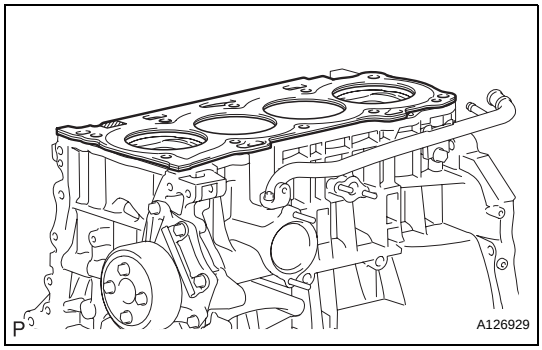

47. REMOVE CYLINDER HEAD GASKET

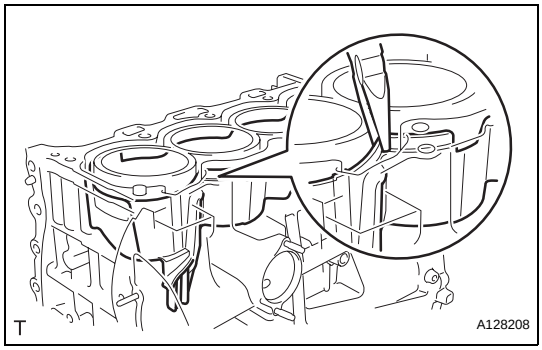

48. REMOVE CYLINDER BLOCK WATER JACKET SPACER

(a) Using needle-nose pliers, remove the cylinder block water jacket spacer from the water jacket.

NOTICE:
Before turning the cylinder block upside down, make sure that the water jacket spacer is removed, as it will fall out.

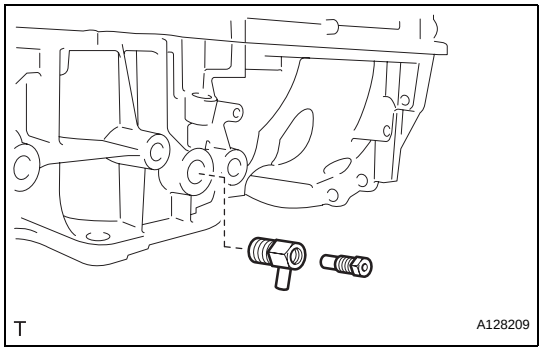

49. REMOVE CYLINDER BLOCK WATER DRAIN COCK SUB-ASSEMBLY

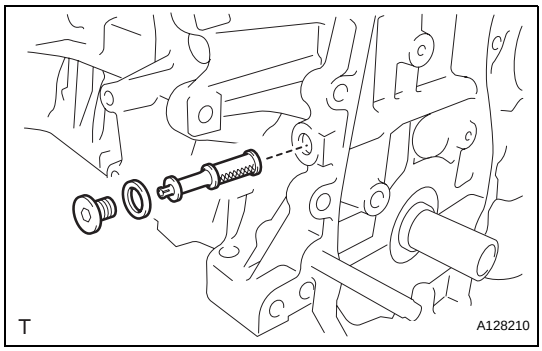

50. REMOVE OIL CONTROL VALVE FILTER

(a) Using a 6 mm socket hexagon wrench, remove the plug and gasket.
(b) Remove the oil control valve filter.

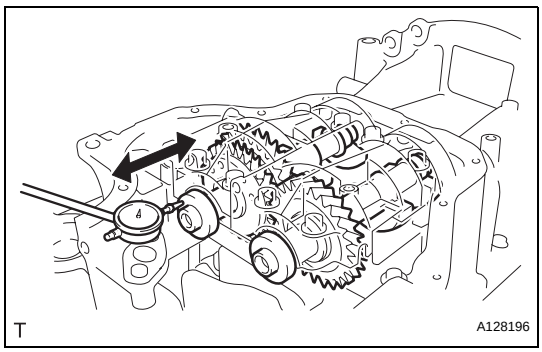

51. INSPECT BALANCE SHAFT THRUST CLEARANCE

(a) Using a dial indicator, measure the thrust clearance while moving the balance shaft back and forth.

Standard thrust clearance:
0.05 to 0.09 mm (0.0020 to 0.0035 in.)
Maximum thrust clearance:
0.09 mm (0.0035 in.)

If the thrust clearance is greater than the maximum, replace the balance shaft housing and bearings. If necessary, replace the balance shaft.

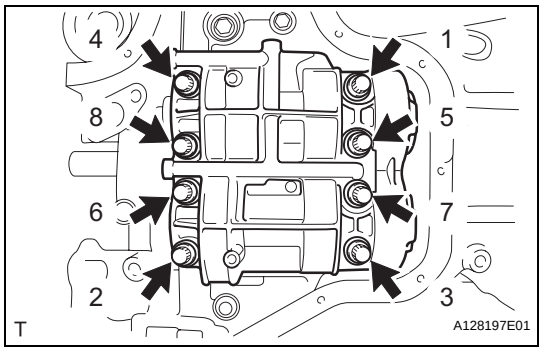

52. INSPECT BALANCE SHAFT OIL CLEARANCE

(a) Using several steps, uniformly loosen and remove the 8 bolts in the sequence shown in the illustration.

(b) Remove the balance shaft housing from the crankcase.
HINT:
Keep the lower bearing and balance shaft housing together.

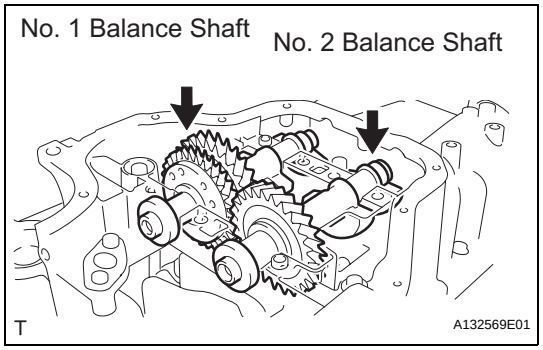

(c) Lift out the No. 1 and No. 2 balance shafts.
HINT:
Keep the upper bearing with the crankcase.

(d) Clean each bearing and journal.

(e) Check each bearing and journal for pitting and scratches.
If a bearing or journal is damaged, replace the bearings. If necessary, replace the balance shaft.

EM

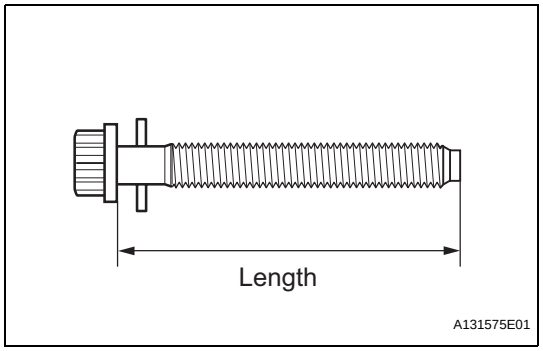

(f) Inspect the balance shaft housing bolt.
(1) Using a vernier caliper, measure the length of the bolts from the seat to the end.
Standard bolt length:
58.3 to 59.7 mm (2.295 to 2.350 in.)
Maximum bolt length:
60.3 mm (2.374 in.)
If the bolt length is greater than the maximum, replace the balance shaft bolt.

(g) Place the No. 1 and No. 2 balance shafts onto the crankcase.

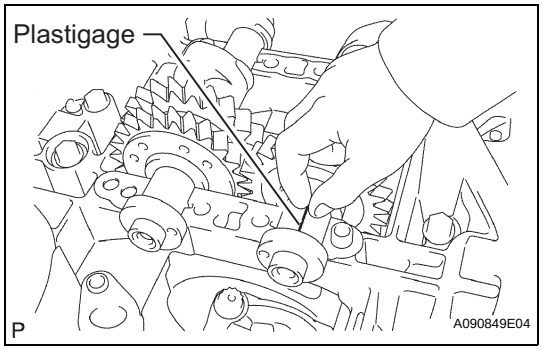

(h) Lay a strip of Plastigage across each journal.

(i) Install the balance shaft housing.

(j) Apply a light coat of engine oil on the threads and under the heads of the bolts.

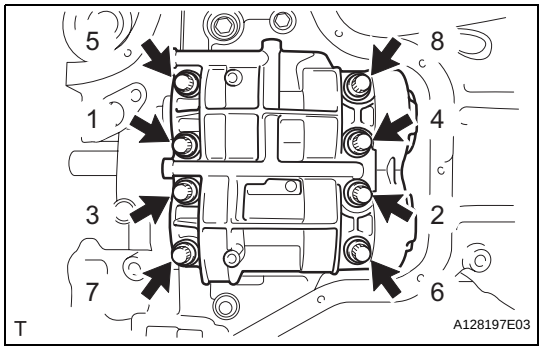

(k) Using several steps, uniformly install and tighten the 8 bolts in the sequence shown in the illustration.
Torque: 21.6 N*m (220 kgf*cm, 16 ft.*lbf)

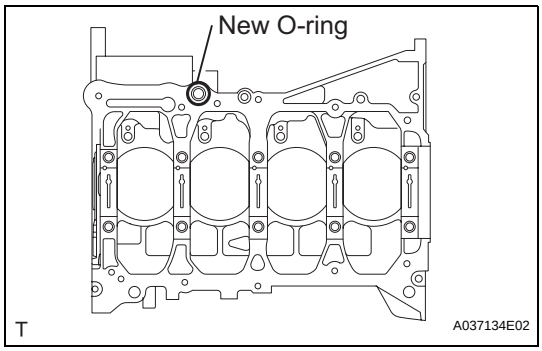

(l) Mark the front of the bolts with paint.
(m) Retighten the bolts 90° as shown in the illustration.
(n) Check that the paint mark is now at a 90° angle to the front.
(o) Remove the balance shaft housing from the crankcase.
(p) Measure the Plastigage at its widest point.

Standard oil clearance:
0.004 to 0.049 mm (0.0002 to 0.0019 in.)
Maximum oil clearance:
0.049 mm (0.0019 in.)
NOTICE:
Remove the Plastigage completely after the measurement.
If the oil clearance is greater than the maximum, replace the bearing. If necessary, replace the balance shaft.
HINT:
If replacing a bearing, select a new one with the same number.

Standard balance shaft housing journal bore diameter

Item	Specified Condition
Mark 1	26.000 to 26.006 mm (1.0236 to 1.0239 in.)
Mark 2	26.007 to 26.012 mm (1.0239 to 1.0214 in.)
Mark 3	26.013 to 26.018 mm (1.0241 to 1.0243 in.)

Standard balance shaft journal diameter:
22.985 to 23.000 mm (0.9049 to 0.9055 in.)

Standard bearing center wall thickness

Item	Specified Condition
Mark 1	1.486 to 1.489 mm (0.05850 to 0.05862 in.)
Mark 2	1.490 to 1.492 mm (0.05866 to 0.05874 in.)
Mark 3	1.493 to 1.495 mm (0.0585 to 0.0586 in.)

53. REMOVE BALANCE SHAFT

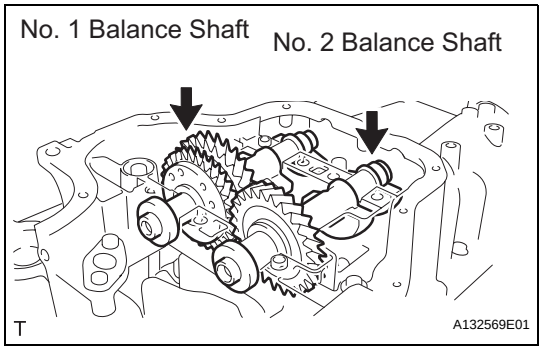

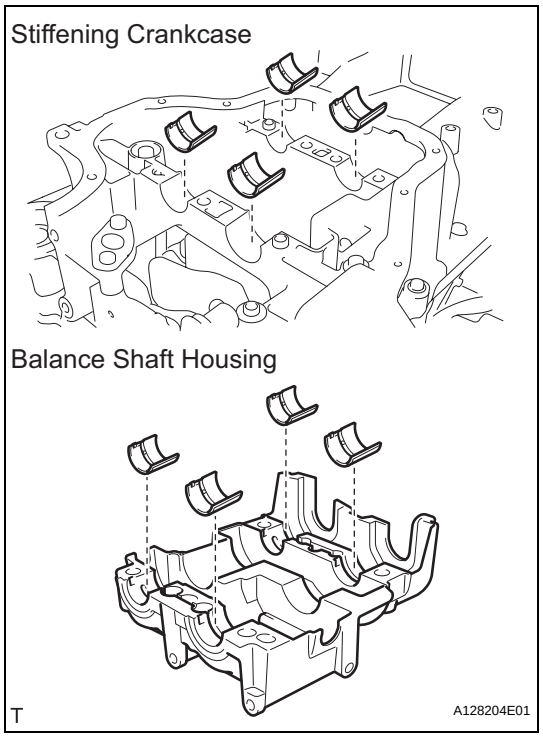

54. REMOVE NO. 1 BALANCE SHAFT BEARING

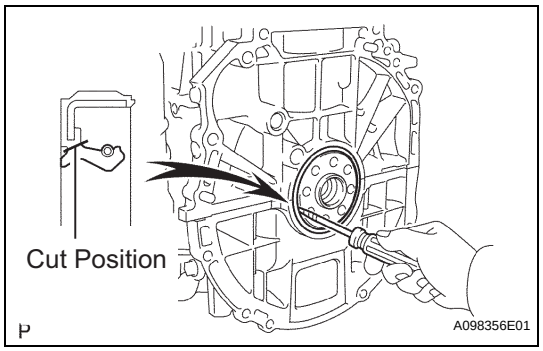

55. REMOVE ENGINE REAR OIL SEAL

(a) Using a knife, cut off the lip of the oil seal.

(b) Using a screwdriver with its tip wrapped with tape, pry out the oil seal.

NOTICE:

After removing, check the crankshaft for damage. If damaged, smooth the surface with 400-grit sandpaper.

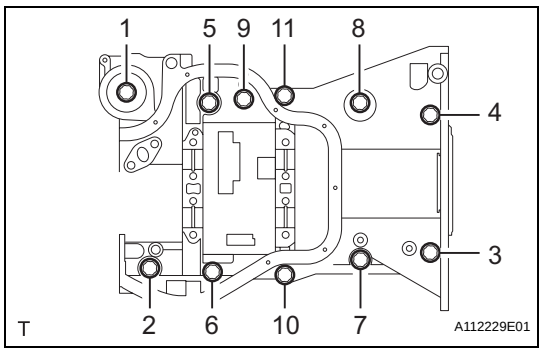

56. REMOVE STIFFENING CRANKCASE ASSEMBLY

(a) Using several steps, uniformly loosen and remove the 11 bolts in the sequence shown in the illustration.

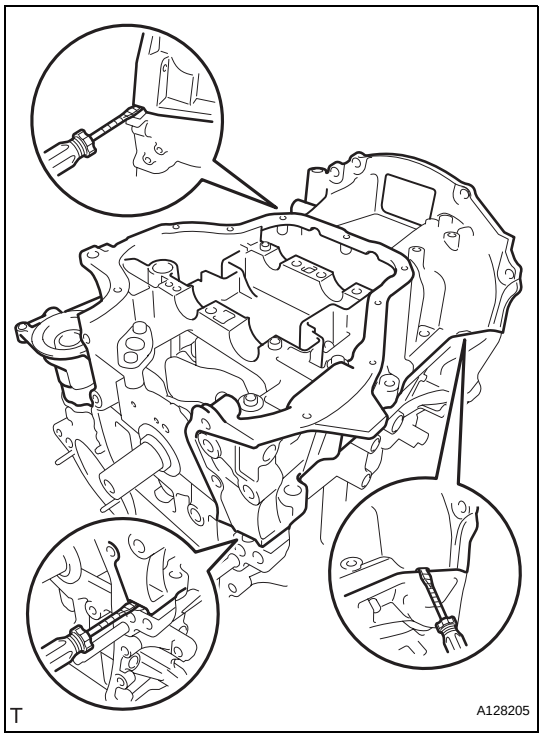

(b) Remove the crankcase by prying the portions between the crankcase and cylinder block.
NOTICE:
Be careful not to damage the contact surfaces of the crankcase and cylinder bock.

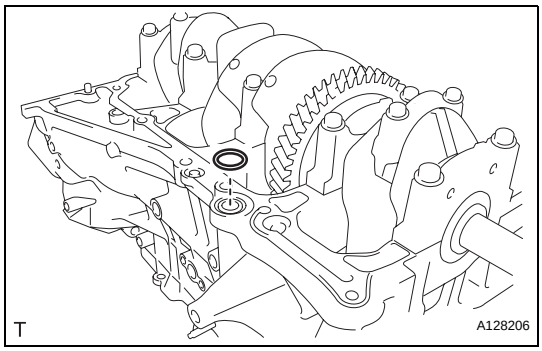

(c) Remove the O-ring from the cylinder block.

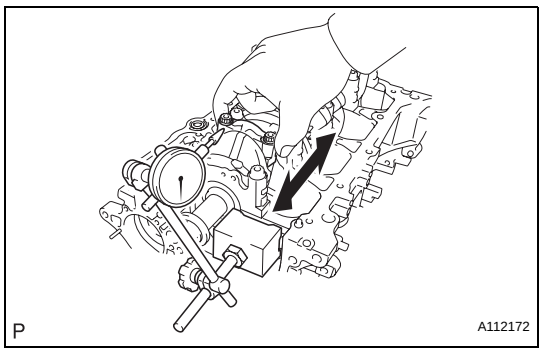

57. INSPECT CONNECTING ROD THRUST CLEARANCE

(a) Using a dial indicator, measure the thrust clearance while moving the connecting rod back and forth.
Standard thrust clearance:
0.160 to 0.362 mm (0.0063 to 0.0143 in.)
Maximum thrust clearance:
0.362 mm (0.0143 in.)
If the thrust clearance is greater than the maximum, replace the connecting rod. If necessary, replace the crankshaft.

58. INSPECT CONNECTING ROD OIL CLEARANCE
NOTICE:
Do not turn the crankshaft during the measurement.

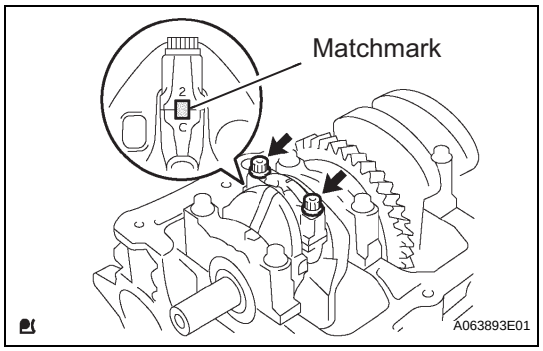

(a) Using marking paint, write the matched cylinder number on each connecting rod and cap.
HINT:
The matchmarks in the connecting rods and caps are for ensuring correct reassembly.

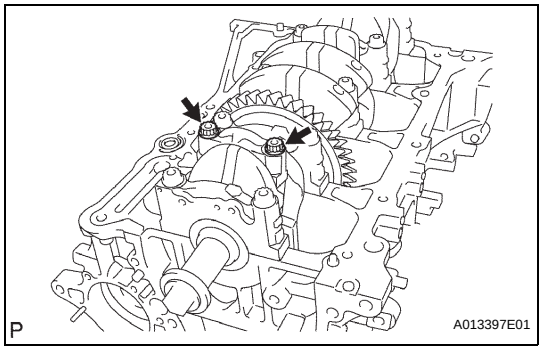

(b) Using a 12 mm socket wrench, remove the 2 bolts and connecting rod cap.
(c) Clean the crank pin and bearing.
(d) Check the crank pin and bearing for pitting and scratches.

EM

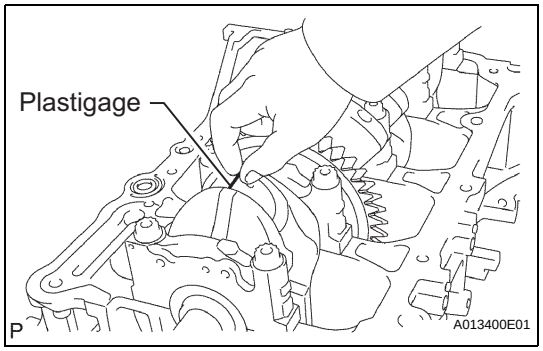

(e) Lay a strip of Plastigage on the crank pin.

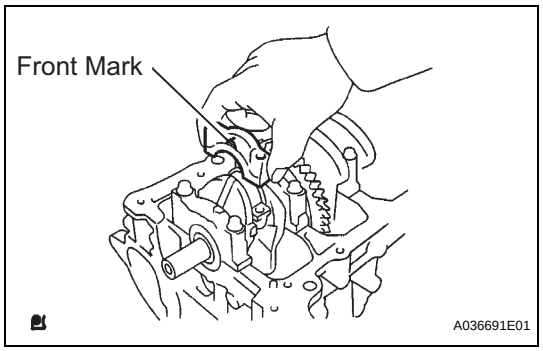

(f) Check that the front mark of the connecting rod cap is facing in the correct direction.
(g) Apply a light coat of engine oil to the threads and under the heads of the connecting rod bolts.
(h) Using a 12 mm socket wrench, tighten the bolts in several passes to the specified torque.
Torque: 24.5 N*m (250 kgf*cm, 18 ft.*lbf)

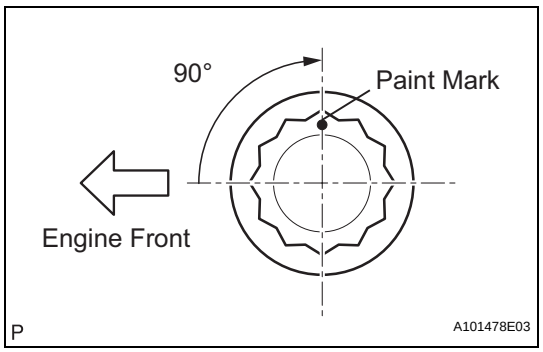

(i) Mark the front of the connecting rod bolts with paint.
(j) Retighten the cap bolts 90° as shown in the illustration.
(k) Check that the crankshaft turns smoothly.
(l) Using a 12 mm socket wrench, remove the 2 bolts and connecting rod cap.

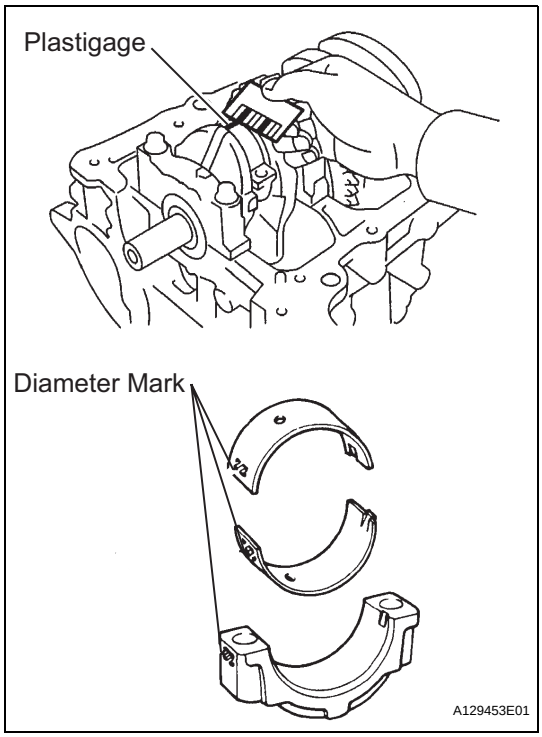

(m) Measure the Plastigage at its widest point.
Standard oil clearance:
0.024 to 0.048 mm (0.0009 to 0.0019 in.)
Maximum oil clearance:
0.08 mm (0.0032 in.)
NOTICE:
Remove the Plastigage completely after the measurement.
If the oil clearance is greater than the maximum, replace the connecting rod bearing. If necessary, grind or replace the crankshaft.
HINT:
If replacing a bearing, select a new one with the same number as marked on the connecting rod. There are 3 sizes of standard bearings, marked "1", "2" and "3" accordingly.
Standard connecting rod large end bore diameter

Mark	Specified Condition
Mark 1	51.000 to 51.007 mm (2.0079 to 2.0082 in.)
Mark 2	51.008 to 51.013 mm (2.0082 to 2.0084 in.)
Mark 3	51.014 to 51.020 mm (2.0084 to 2.0087 in.)

Standard connecting rod bearing thickness

Mark	Specified Condition
Mark 1	1.485 to 1.488 mm (0.0585 to 0.0586 in.)
Mark 2	1.489 to 1.491 mm (0.0586 to 0.0587 in.)
Mark 3	1.492 to 1.494 mm (0.0587 to 0.0588 in.)

Standard crankshaft pin diameter:
47.990 to 48.000 (1.8894 to 1.8898 in.)

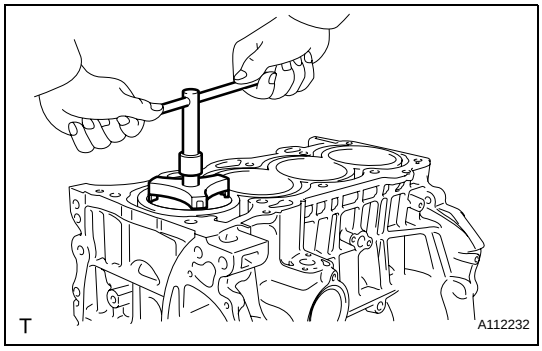

59. REMOVE PISTON WITH CONNECTING ROD

(a) Using a ridge reamer, remove all the carbon from the top of the cylinder.
(b) Push the piston, connecting rod assembly and upper bearing through the top of the cylinder block.
HINT:
- Keep the bearing, connecting rod and cap together.
- Arrange the piston and connecting rod assemblies in the correct order.

60. REMOVE CONNECTING ROD BEARING

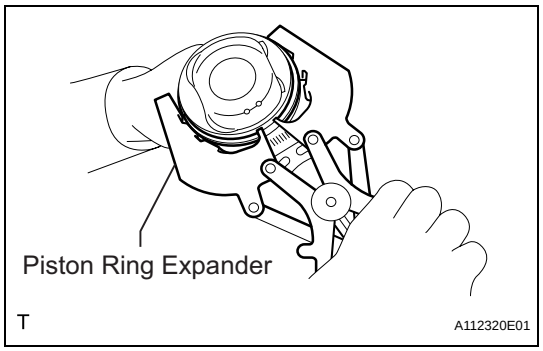

61. REMOVE PISTON RING SET

(a) Using a piston ring expander, remove the 2 compression rings.

(b) Remove the oil ring and expander by hand.

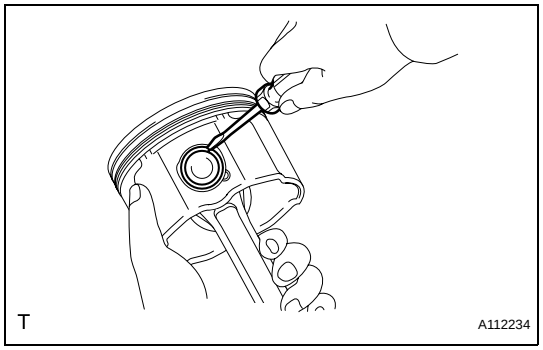

62. REMOVE PISTON PIN HOLE SNAP RING

(a) Using a small screwdriver, pry out the 2 snap rings.

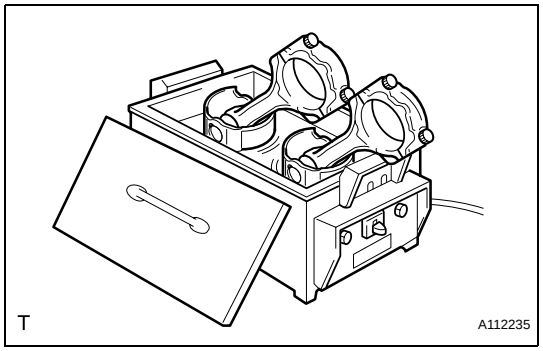

63. REMOVE PISTON

(a) Gradually heat the piston up to 80 to 90°C (176 to 194°F).

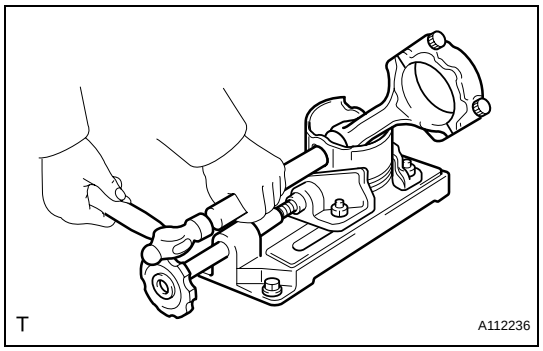

(b) Using a plastic-faced hammer and brass bar, lightly tap out the piston pin, then remove the connecting rod.

HINT:

- The piston and pin are a matched set.
- Arrange the piston, pin, ring, connecting rod and bearings in the correct order.

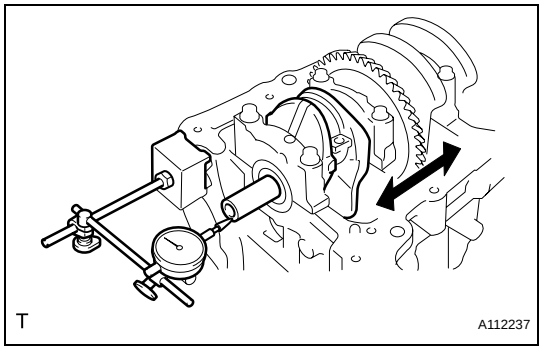

64. INSPECT CRANKSHAFT THRUST CLEARANCE

(a) Using a dial indicator, measure the thrust clearance while prying the crankshaft back and forth with a screwdriver.

Standard thrust clearance:
0.04 to 0.24 mm (0.0016 to 0.0095 in.)
Maximum thrust clearance:
0.30 mm (0.012 in.)

If the thrust clearance is greater than the maximum, replace the thrust washers as a set.

HINT:
The thrust washer thickness is 1.93 to 1.98 mm (0.0760 to 0.0780 in.).

65. INSPECT CRANKSHAFT OIL CLEARANCE
NOTICE:
Do not turn the crankshaft during the measurement.

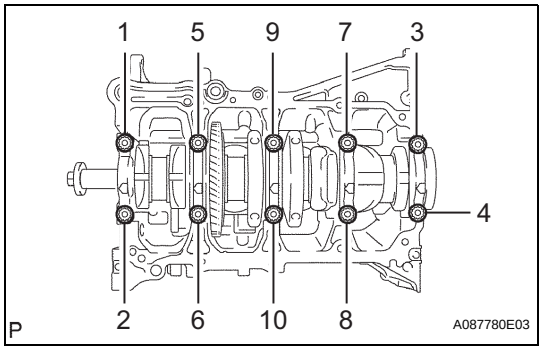

(a) Using several steps, uniformly loosen and remove the 10 bearing cap bolts in the sequence shown in the illustration.
(b) Remove the 5 bearing caps from the cylinder block.
HINT:
- Keep the No. 2 crankshaft bearings and crankshaft bearing caps together.
- Arrange the bearing caps in correct order.

(c) Remove the crankshaft.
HINT:
Keep the crankshaft bearings and crankshaft thrust washer uppers together with the cylinder block.
(d) Clean each main journal and bearing.
(e) Check each main journal and bearing for pitting and scratches.
- If the journal or bearing is damaged, replace the bearings.
- If necessary, replace the crankshaft.

(f) Place the crankshaft onto the cylinder block.

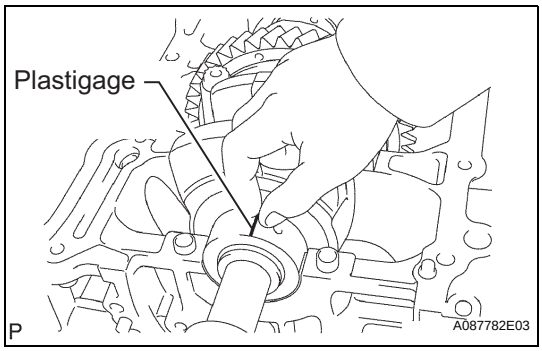

(g) Lay a strip of Plastigage across each journal.

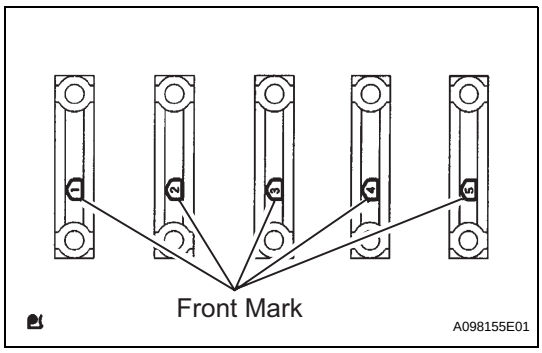

(h) Examine the front marks and numbers, and install the bearing caps onto the cylinder block in the order shown in the illustration.
(i) Apply a light coat of engine oil to the threads and under the heads of the crankshaft bearing cap set bolts.

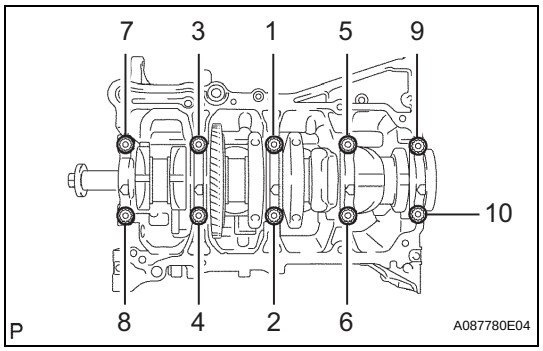

(j) Using several steps, uniformly install and tighten the 10 bearing cap bolts in the sequence shown in the illustration.
Torque: 40 N*m (408 kgf*cm, 30 ft.*lbf)

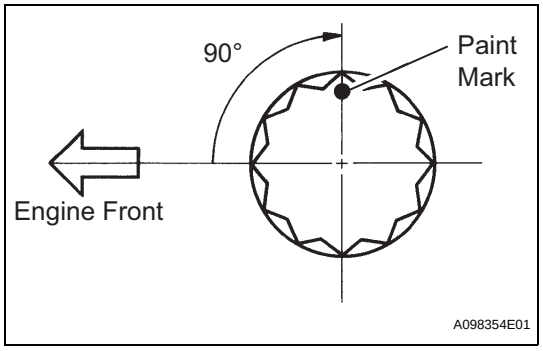

(k) Mark the front of the bearing cap bolts with paint.
(l) Retighten the 10 bearing cap bolts by 90°.
(m) Check that the paint marks are at a 90° angle to the front.

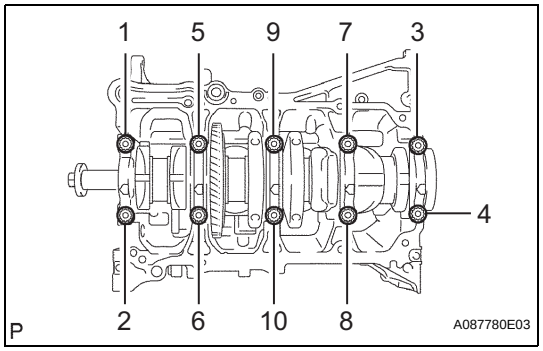

(n) Remove the crankshaft bearing caps.

EM

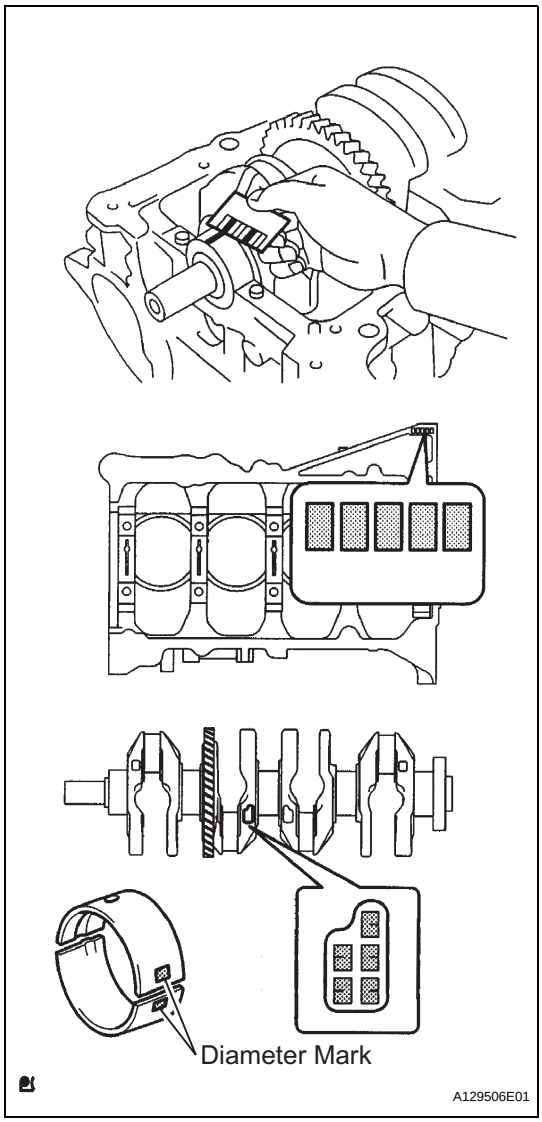

(o) Measure the Plastigage at its widest point.
Standard oil clearance:
0.008 to 0.024 mm (0.0003 to 0.0010 in.)
Maximum oil clearance:
0.050 mm (0.0020 in.)
NOTICE:
Remove the Plastigage completely after the measurement.
If the oil clearance is greater than the maximum, replace the crankshaft bearing. If necessary, replace the crankshaft.
HINT:
If replacing a bearing, select a new one with the same number. If the number of the bearing cannot be determined, calculate the correct bearing number by adding together the numbers imprinted on the cylinder block and crankshaft. Then select a new bearing with the calculated number. There are 4 sizes of standard bearings, marked "1", "2", "3" and "4" accordingly.

Cylinder block + Crankshaft	0 to 2	3 to 5	6 to 8	9 to 11
Use bearing	"1"	"2"	"3"	"4"

EXAMPLE
- Imprinted number on the cylinder block is 3.
- Imprinted number on the crankshaft is 4.
  3 + 4 = 7
  Select the bearing marked "3".

Standard cylinder block journal bore diameter

Mark	Specified Condition
0	59.000 to 59.002 mm (2.3228 to 2.3229 in.)
1	59.003 to 59.004 mm (2.3230 to 2.3230 in.)
2	59.005 to 59.006 mm (2.3230 to 2.3231 in.)
3	59.007 to 59.009 mm (2.3231 to 2.3232 in.)
4	59.010 to 59.011 mm (2.3232 to 2.3233 in.)
5	59.012 to 59.013 mm (2.3233 to 2.3234 in.)
6	59.014 to 59.016 mm (2.3234 to 2.3235 in.)

Standard crankshaft journal diameter

Mark	Specified Condition
0	54.999 to 55.000 mm (2.1653 to 2.1654 in.)
1	54.997 to 54.998 mm (2.1652 to 2.1653 in.)
2	54.995 to 54.996 mm (2.1652 to 2.1652 in.)
3	54.993 to 54.994 mm (2.1651 to 2.1651 in.)

Mark	Specified Condition
4	54.991 to 54.992 mm (2.1650 to 2.1650 in.)
5	54.988 to 54.990 mm (2.1649 to 2.1650 in.)

Standard bearing center wall thickness

Mark	Specified Condition
1	1.993 to 1.996 mm (0.0785 to 0.0786 in.)
2	1.997 to 1.999 mm (0.0786 to 0.0787 in.)
3	2.000 to 2.002 mm (0.0787 to 0.0788 in.)
4	2.003 to 2.005 mm (0.0789 to 0.0789 in.)

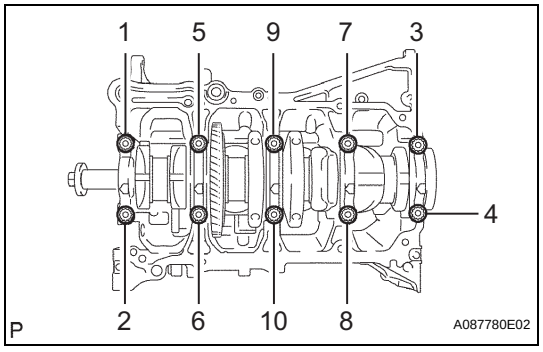

66. REMOVE CRANKSHAFT

(a) Using several steps, uniformly loosen and remove the 10 bearing cap bolts in the sequence shown in the illustration.
(b) Remove the 5 bearing caps from the cylinder block.
(c) Remove the crankshaft from the cylinder block.

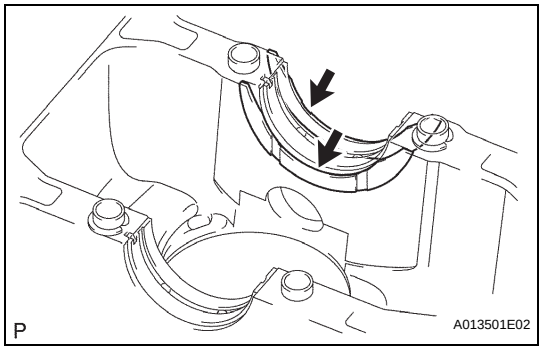

67. REMOVE CRANKSHAFT THRUST WASHER UPPER

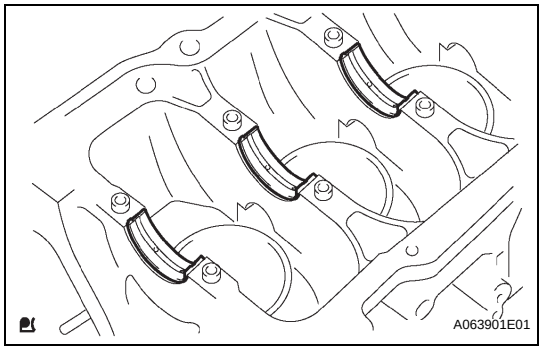

68. REMOVE CRANKSHAFT BEARING

HINT:
Arrange the bearings in the correct order.

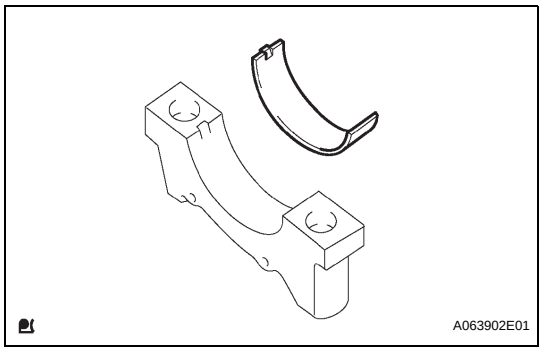

69. REMOVE NO. 2 CRANKSHAFT BEARING

HINT:

Arrange the bearings in the correct order.

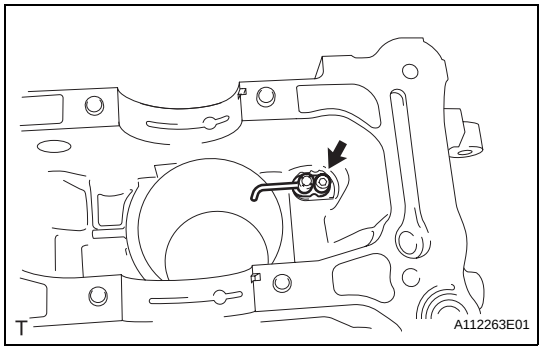

70. REMOVE NO. 1 OIL NOZZLE SUB-ASSEMBLY

(a) Remove the 4 bolts and 4 oil nozzles.

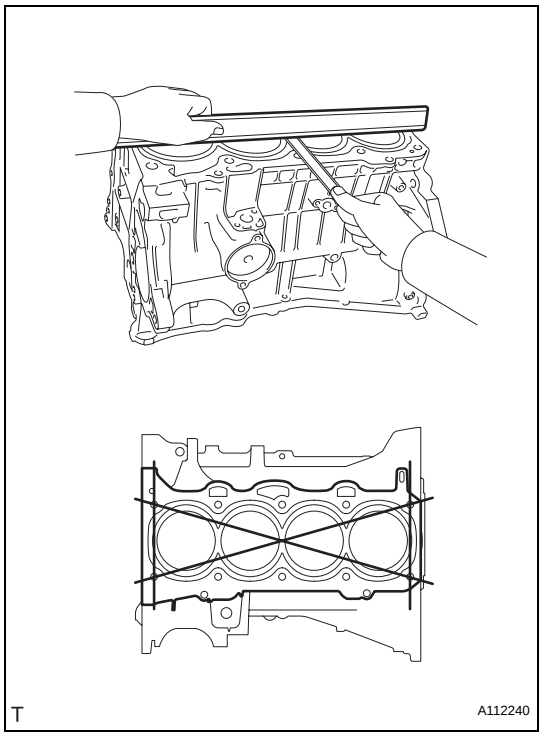

INSPECTION

1. INSPECT CYLINDER BLOCK FOR WARPAGE

(a) Using a precision straightedge and feeler gauge, measure the warpage of the surface that is in contact with the cylinder head gasket.

Maximum warpage:

0.05 mm (0.0020 in.)

If the warpage is greater than the maximum, replace the cylinder block.

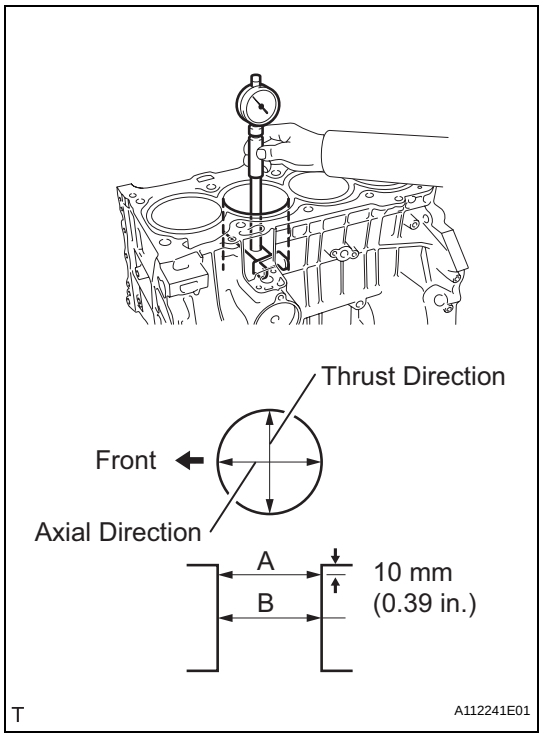

2. INSPECT CYLINDER BORE

(a) Using a cylinder gauge, measure the cylinder bore diameter at positions A and B in the thrust and axial directions.

Standard diameter:
88.500 to 88.513 mm (3.4843 to 3.4847 in.)
Maximum diameter:
88.633 mm (3.4894 in.)

If the average diameter of the 4 positions is greater than the maximum, replace the cylinder block.

EM

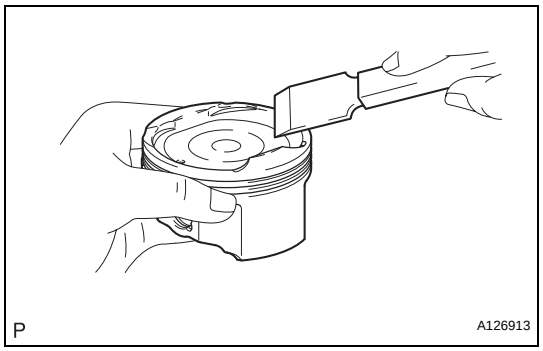

3. INSPECT PISTON

(a) Using a gasket scraper, remove the carbon from the piston top.

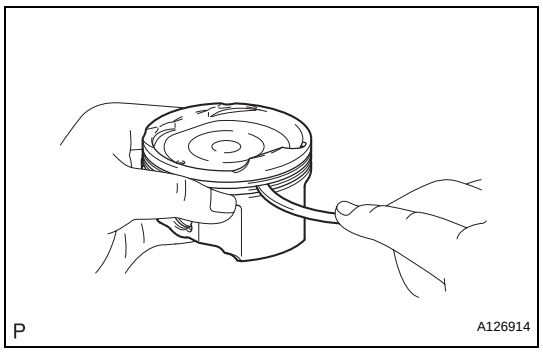

(b) Using a groove cleaning tool or a broken ring, clean the piston ring grooves.

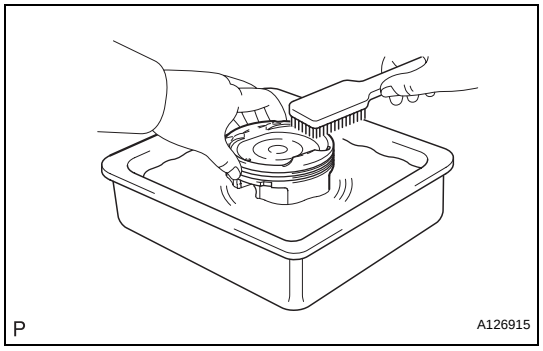

(c) Using a brush and solvent, thoroughly clean the piston.

NOTICE:
Do not use a wire brush.

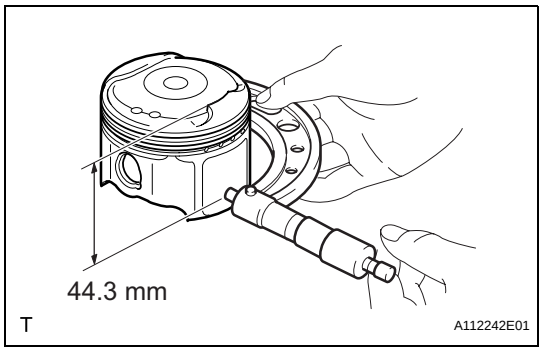

(d) Using a micrometer, measure the piston diameter at right angles to the piston pin hole, and at the piston 44.3 mm (1.7587 in.) from the piston head.
Standard piston diameter:
88.477 to 88.487 mm (3.5125 to 3.5129 in.)
If the diameter is not as specified, replace the piston.

4. INSPECT PISTON OIL CLEARANCE

(a) Subtract the piston diameter measurement from the cylinder bore diameter measurement.
Standard oil clearance:
0.021 to 0.044 mm (0.0008 to 0.0017 in.)
Maximum oil clearance:
0.10 mm (0.0039 in.)
If the oil clearance is greater than the maximum, replace all the pistons. If necessary, replace the cylinder block.

EM

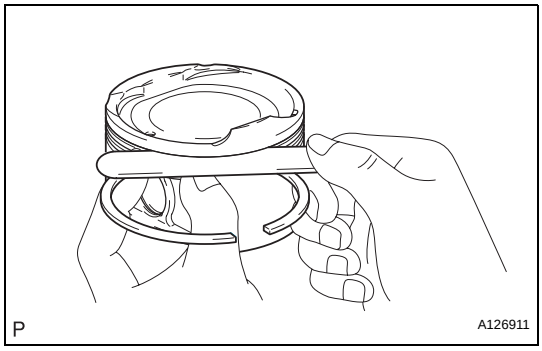

5. INSPECT RING GROOVE CLEARANCE

(a) Using a feeler gauge, measure the clearance between the new piston ring and wall of the ring groove.
Standard ring groove clearance

Item	Specified Condition
No. 1 ring	0.020 to 0.070 mm (0.0008 to 0.0028 in.)
No. 2 ring	0.020 to 0.060 mm (0.0008 to 0.0024 in.)
Oil ring	0.020 to 0.070 mm (0.0008 to 0.0028 in.)

If the groove clearance is not as specified, replace the piston.

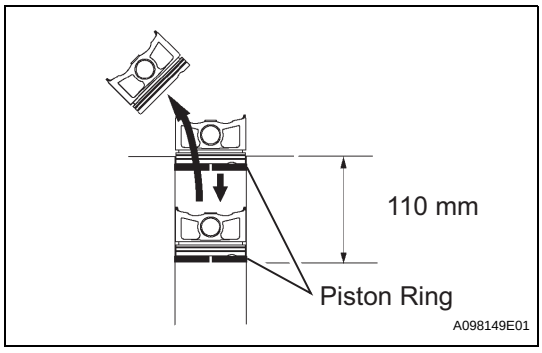

6. INSPECT PISTON RING END GAP

(a) Using a piston, push the piston ring a little beyond the bottom of the ring travel, 110 mm (4.33 in.) from the top of the cylinder block.

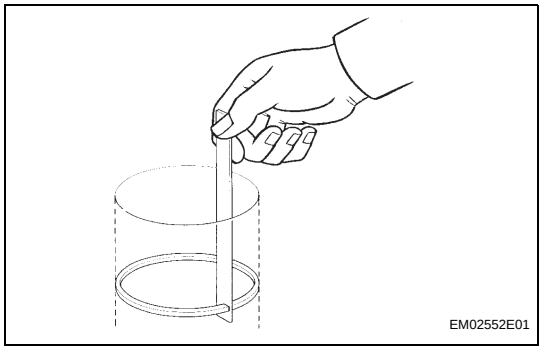

(b) Using a feeler gauge, measure the end gap.
Standard end gap

Item	Specified Condition
No. 1 ring	0.24 to 0.31 mm (0.0094 to 0.0122 in.)
No. 2 ring	0.33 to 0.43 mm (0.0130 to 0.0169 in.)
Oil ring	0.10 to 0.30 mm (0.0040 to 0.0119 in.)

Maximum end gap

Item	Specified Condition
No. 1 ring	0.89 mm (0.0350 in.)

Item	Specified Condition
No. 2 ring	1.37 mm (0.0539 in.)
Oil ring	0.73 mm (0.0287 in.)

If the end gap is greater than the maximum, replace the piston ring. If the end gap is greater than the maximum, even with a new piston ring, replace the cylinder block.

7. INSPECT PISTON PIN OIL CLEARANCE

(a) Using a caliper gauge, measure the piston pin bore diameter.

Standard piston pin bore diameter:
22.001 to 22.010 mm (0.8662 to 0.8665 in.)

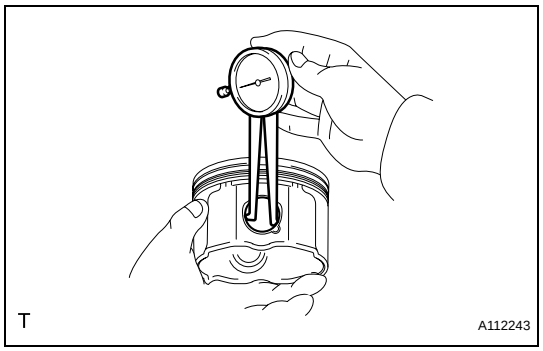

Item	Specified Condition
A	22.001 to 22.004 mm (0.8662 to 0.8663 in.)
B	22.005 to 22.007 mm (0.8663 to 0.8664 in.)
C	22.008 to 22.010 mm (0.8665 to 0.8665 in.)

If the diameter is not as specified, replace the piston.

(b) Using a micrometer, measure the piston pin diameter.

Standard piston pin diameter:
21.997 to 22.006 mm (0.8660 to 0.8664 in.)

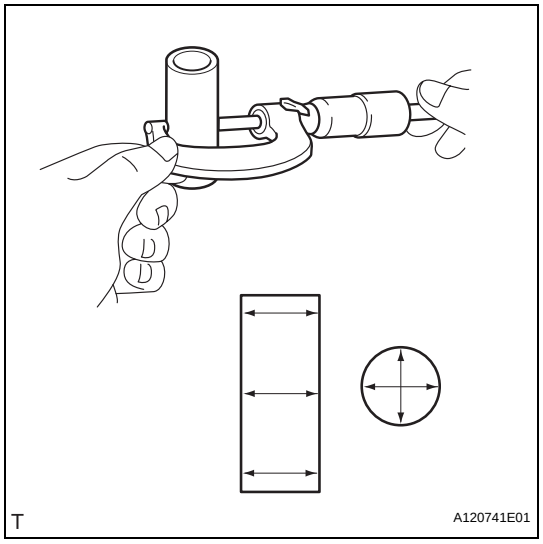

Item	Specified Condition
A	21.997 to 22.000 mm (0.8660 to 0.8661 in.)
B	22.001 to 22.003 mm (0.8662 to 0.8663 in.)
C	22.004 to 22.006 mm (0.8663 to 0.8664 in.)

If the diameter is not as specified, replace the piston pin.

(c) Using a caliper gauge, measure the connecting rod small end bore diameter.

Standard connecting rod small end bore diameter:
22.005 to 22.014 mm (0.8663 to 0.8667 in.)

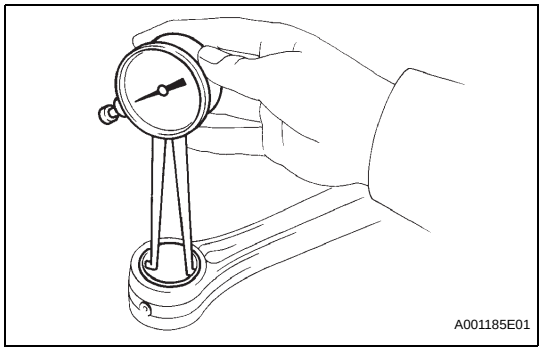

Item	Specified Condition
A	22.005 to 22.008 mm (0.8663 to 0.8665 in.)
B	22.009 to 22.011 mm (0.8665 to 0.8666 in.)
C	22.012 to 22.014 mm (0.8666 to 0.8667 in.)

If the diameter is not as specified, replace the connecting rod.

EM

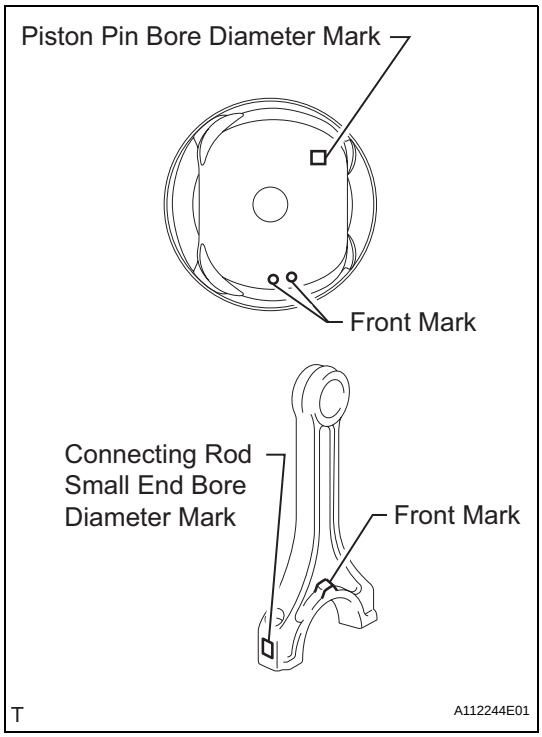

(d) Subtract the piston pin diameter measurement from the piston pin bore diameter measurement.
Standard oil clearance:
0.001 to 0.007 mm (0.00004 to 0.0003 in.)
Maximum oil clearance:
0.013 mm (0.0005 in.)
If the oil clearance is greater than the maximum, replace the connecting rod. If necessary, replace the piston and piston pin as a set.

(e) Subtract the piston pin diameter measurement from the connecting rod small end bore diameter measurement.
Standard oil clearance:
0.005 to 0.011 mm (0.0002 to 0.0004 in.)
Maximum oil clearance:
0.017 mm (0.0007 in.)
If the oil clearance is greater than the maximum, replace the connecting rod. If necessary, replace the connecting rod and piston pin as a set.

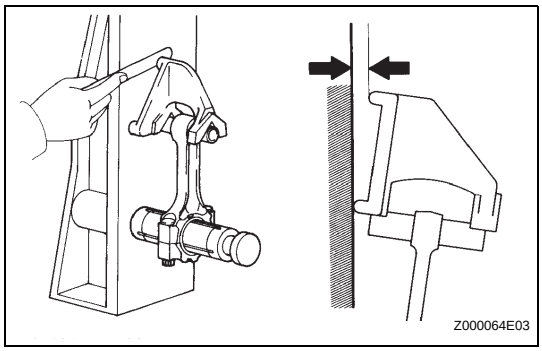

8. INSPECT CONNECTING ROD SUB-ASSEMBLY

(a) Using a connecting rod aligner and feeler gauge, check the connecting rod alignment.

(1) Check for misalignment.
Maximum misalignment:
0.05 mm (0.0020 in.) per 100 mm (3.94 in.)
If the misalignment is greater than the maximum, replace the connecting rod.

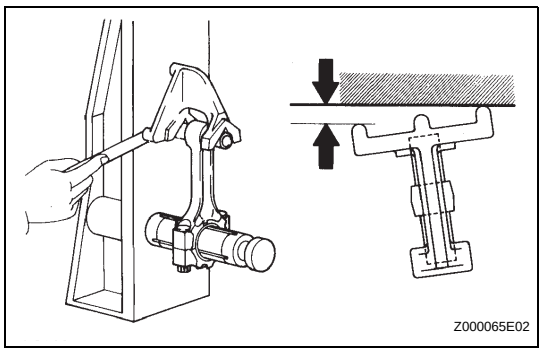

(2) Check for twist.
Maximum twist:
0.15 mm (0.0059 in.) per 100 mm (3.94 in.)
If the twist is greater than the maximum, replace the connecting rod.

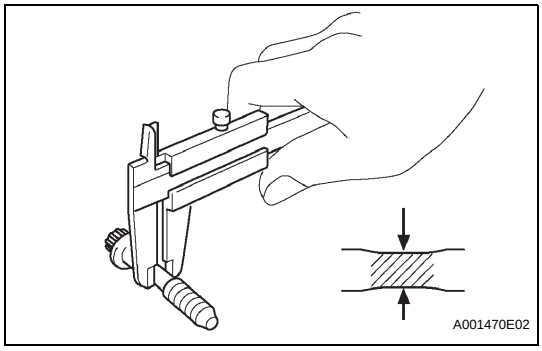

9. INSPECT CONNECTING ROD BOLT

(a) Using a vernier caliper, measure the tension portion diameter of the bolt.
Standard diameter:
7.2 to 7.3 mm (0.283 to 0.287 in.)
Maximum diameter:
7.0 mm (0.276 in.)
If the diameter is less than the minimum, replace the connecting rod bolt.

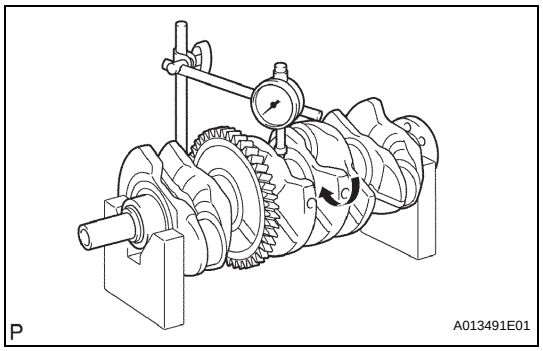

10. INSPECT CRANKSHAFT

(a) Using a dial indicator and V-blocks, measure the circle runout as shown in the illustration.
Maximum taper and distortion:
0.003 mm (0.0001 in.)
If the taper and distortion are greater than the maximum, replace the crankshaft.

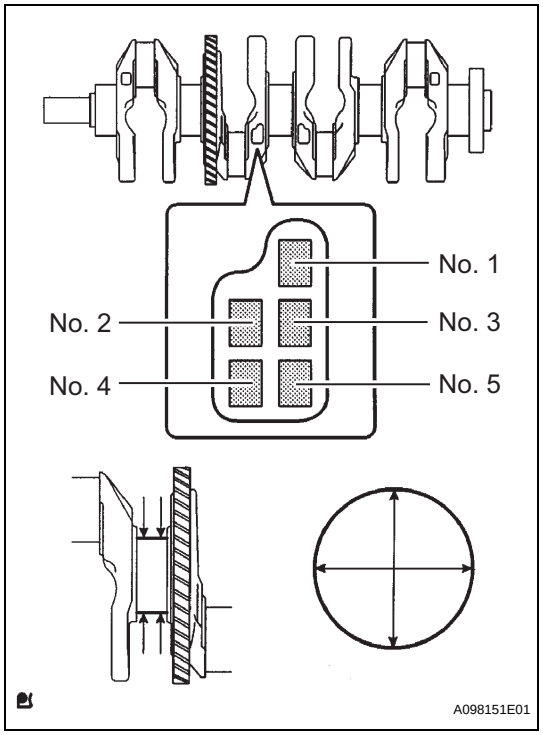

(b) Using a micrometer, measure the diameter of each main journal.
Standard diameter:
54.988 to 55.000 mm (2.1830 to 2.1654 in.)
If the diameter is not as specified, check the crankshaft oil clearance.

(c) Check each main journal for taper and distortion as shown in the illustration.
Maximum taper and distortion:
0.003 mm (0.0001 in.)
If the taper and distortion are greater than the maximum, replace the crankshaft.
Standard diameter (Reference)

Mark	Specified Condition
0	54.999 to 55.000 mm (2.1653 to 2.1654 in.)
1	54.997 to 54.998 mm (2.1652 to 2.1653 in.)
2	54.995 to 54.996 mm (2.1652 to 2.1652 in.)
3	54.993 to 54.994 mm (2.1651 to 2.1651 in.)
4	54.991 to 54.992 mm (2.1650 to 2.1650 in.)
5	54.998 to 54.990 mm (2.1649 to 2.1650 in.)

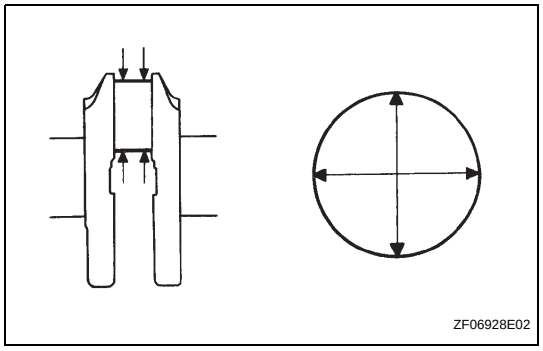

(d) Using a micrometer, measure the diameter of each crank pin.
Standard diameter:
47.990 to 48.000 mm (1.8894 to 1.8898 in.)
If the diameter is not as specified, check the connecting rod oil clearance.

(e) Inspect each crank pin for taper and distortion as shown in the illustration.
Maximum taper and distortion:
0.003 mm (0.0001 in.)
If the taper and distortion are greater than the maximum, replace the crankshaft.

EM

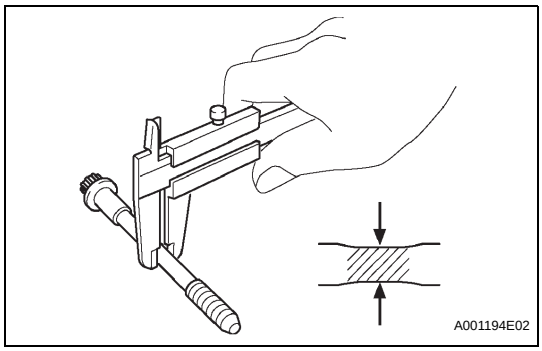

11. INSPECT CRANKSHAFT BEARING CAP SET BOLT

(a) Using a vernier caliper, measure the tension portion diameter of the bolts.

Standard diameter:

7.5 to 7.6 mm (0.295 to 0.299 in.)

Minimum diameter:

7.5 mm (0.295 in.)

If the diameter is less than the minimum, replace the bolt.

REPLACEMENT

1. REPLACE TIMING CHAIN COVER OIL SEAL

HINT:

There are 2 methods to replace the oil seal.

(a) If the timing chain cover is removed from the cylinder block:

(1) Using a screwdriver and hammer, tap out the oil seal.

(2) Apply multi-purpose grease to the lip of a new oil seal.

NOTICE:

Keep the lip free of foreign objects.

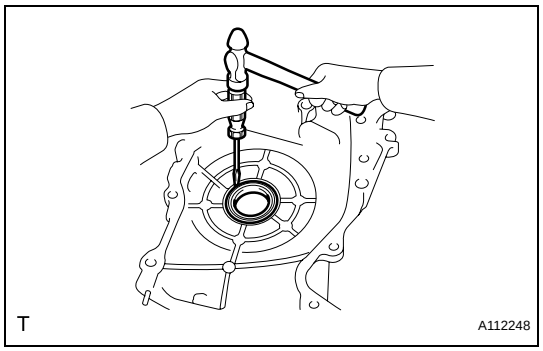

(3) Using SST and a hammer, tap in the new oil seal until its surface is flush with the timing chain cover edge.

SST 09223-22010

NOTICE:

Do not tap the oil seal at an angle.

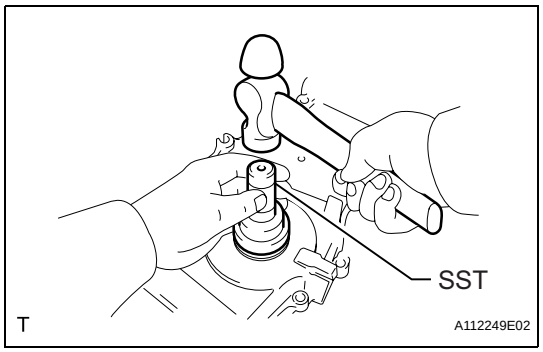

(b) If the timing chain cover oil seal is installed to the cylinder block:

(1) Remove the fan and generator V belt (see page EM-6).

(2) Remove the crankshaft pulley (see page EM-25).

(3) Using a knife, cut off the lip of the oil seal.

(4) Using a screwdriver with its tip wrapped with tape, pry out the oil seal.

NOTICE:

After removing, check the crankshaft for damage. If damaged, smooth the surface with 400-grit sandpaper.

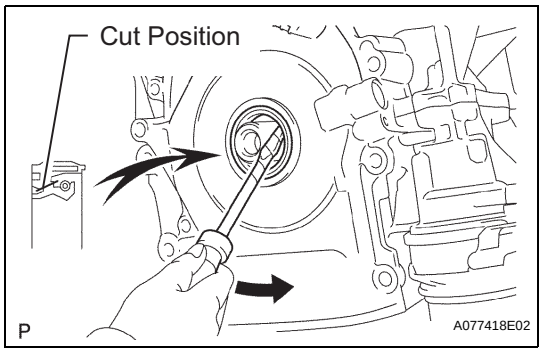

(5) Apply multi-purpose grease to the lip of a new oil seal.

NOTICE:

Keep the lip free of foreign objects.

(6) Using SST and a hammer, tap in the new oil seal until its surface is flush with the timing chain cover edge.

SST 09223-22010

NOTICE:

Do not tap the oil seal at an angle.

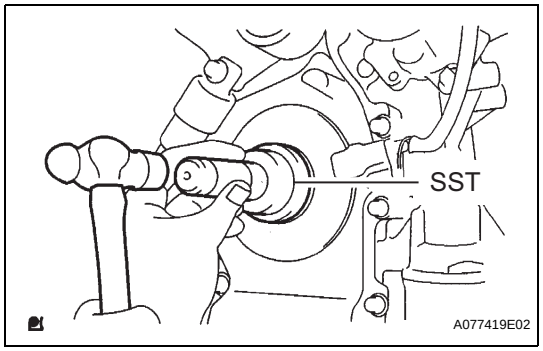

(7) Install the crankshaft pulley (see page EM-38).

(8) Install the fan and generator V belt (see page EM-7).

EM

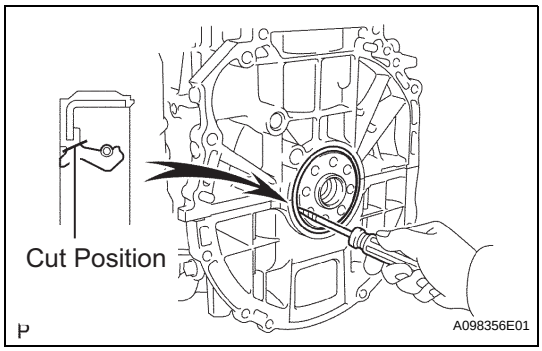

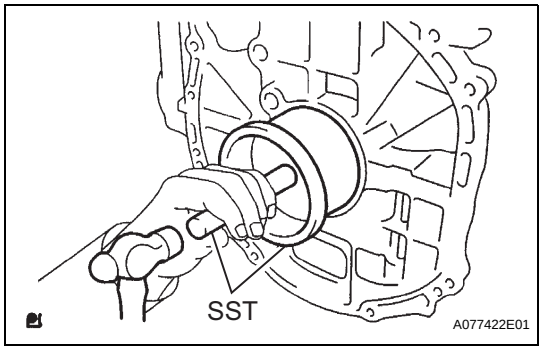

2. REPLACE ENGINE REAR OIL SEAL

(a) Using a knife, cut off the lip of the oil seal.

(b) Using a screwdriver with its tip wrapped with tape, pry out the oil seal.

NOTICE:
After removing, check the crankshaft for damage. If damaged, smooth the surface with 400-grit sandpaper.

(c) Apply multi-purpose grease to the lip of a new oil seal.

NOTICE:
Keep the lip free of foreign objects.

(d) Using SST and a hammer, tap in the new oil seal until its surface is flush with the rear oil seal retainer edge.

SST 09223-15030, 09950-70010 (09951-07100)

NOTICE:
- **Wipe any extra grease off the crankshaft.**
- **Do not tap the oil seal at an angle.**

3. REPLACE STUD BOLT (for Cylinder Block)

NOTICE:
If the stud bolt is deformed or the threads are damaged, replace it.

(a) Remove the 8 stud bolts.

(b) Install the 8 stud bolts into the cylinder block.

Torque

Item	Specified Condition
A	5.0 N*m (51 kgf*cm, 44 in.*lbf)
B	21.5 N*m (219 kgf*cm, 16 ft.*lbf)
C	5.0 N*m (51 kgf*cm, 44 in.*lbf)
D	5.0 N*m (51 kgf*cm, 44 in.*lbf)

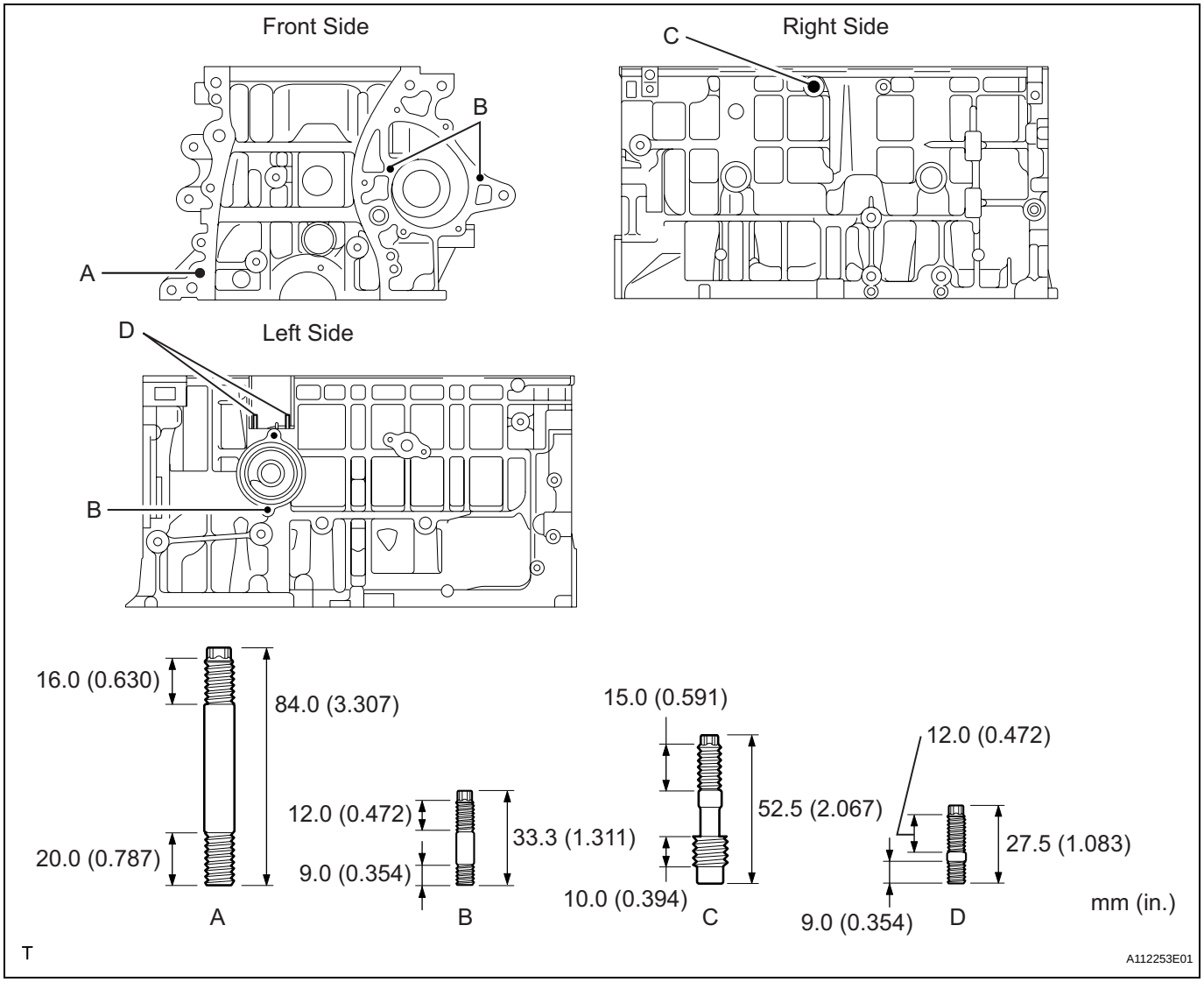

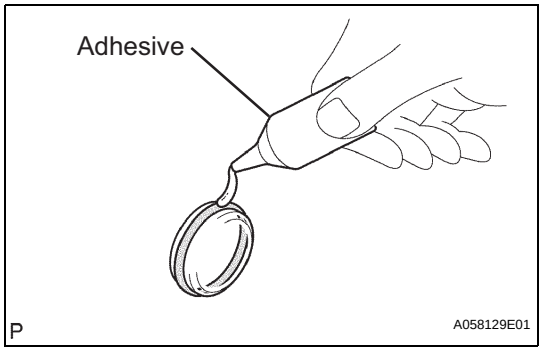

4. REPLACE TIGHT PLUG (for Cylinder Block)

NOTICE:

If water leaks from the tight plug or the plug corrodes, replace it.

(a) Remove the 2 tight plugs from the engine front and rear side.

(b) Apply adhesive around new tight plugs.

Adhesive:

Toyota Genuine Adhesive 1342, Three Bond 1342 or Equivalent

(c) Using SST, install the 2 tight plugs.

SST 09950-60010 (09951-00200), 09950-70010 (09951-07100)

Standard depth

Item	Specified Condition
A	1.7 to 2.7 mm (0.067 to 0.106 in.)
B	2.2 to 3.2 mm (0.087 to 0.126 in.)

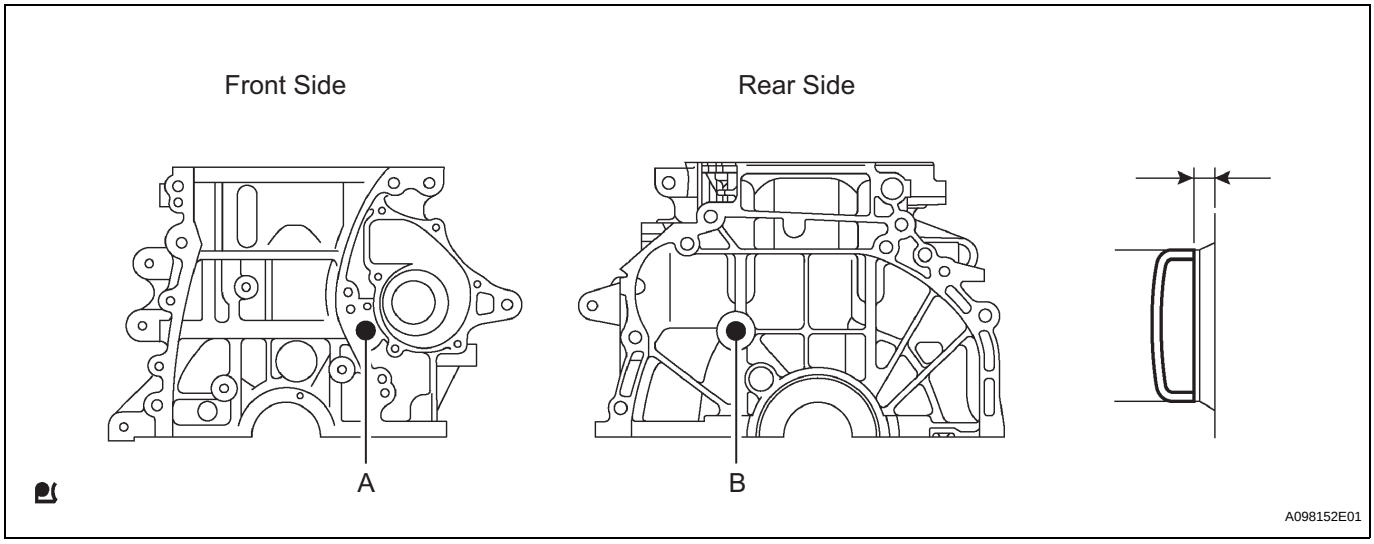

EM

5. REPLACE RING PIN (for Cylinder Block)

NOTICE:

It is not necessary to remove with head pin unless it is being replaced.

(a) Remove the 12 ring pins.

(b) Using a plastic-faced hammer, install 12 new ring pins.

Standard protrusion height

Item	Specified Condition
A	6.0 mm (0.236 in.)
B	5.0 mm (0.197 in.)

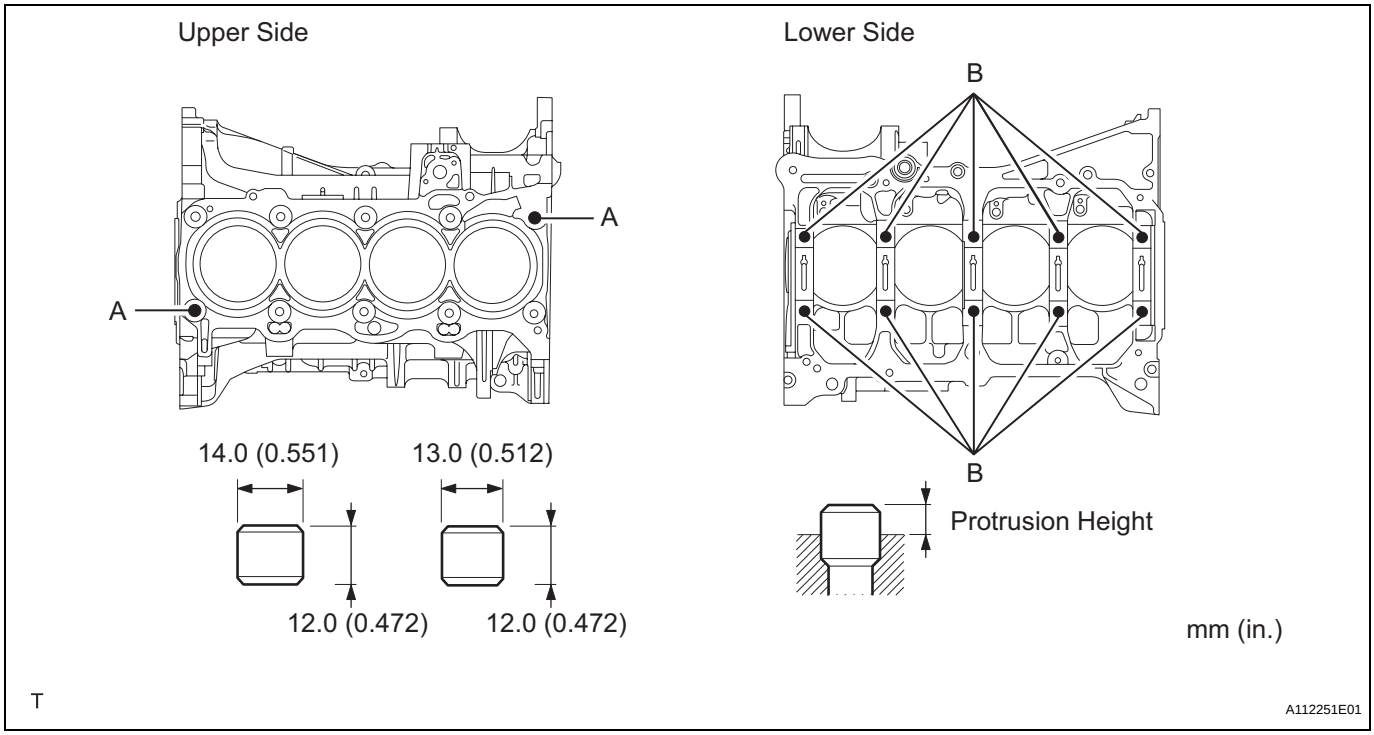

6. REPLACE STRAIGHT PIN (for Cylinder Block)

NOTICE:

It is not necessary to remove with straight pin unless it is being replaced.

(a) Remove the 8 straight pins.

(b) Using a plastic-faced hammer, install 8 new straight pins.

Standard protrusion height

Item	Specified Condition
A	8.0 mm (0.315 in.)
B	7.5 mm (0.295 in.)
C	12.0 mm (0.472 in.)
D	5.0 mm (0.197 in.)

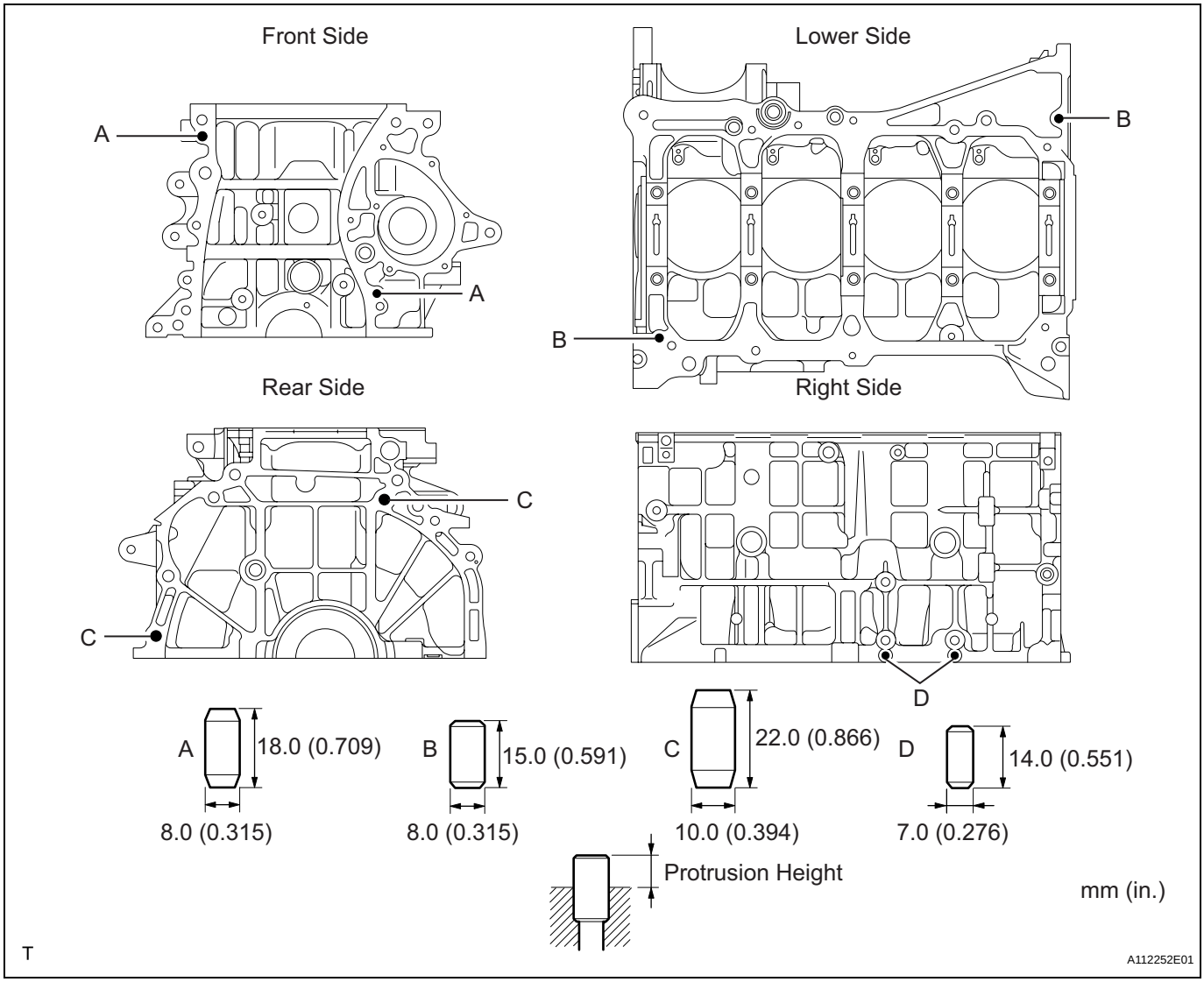

EM

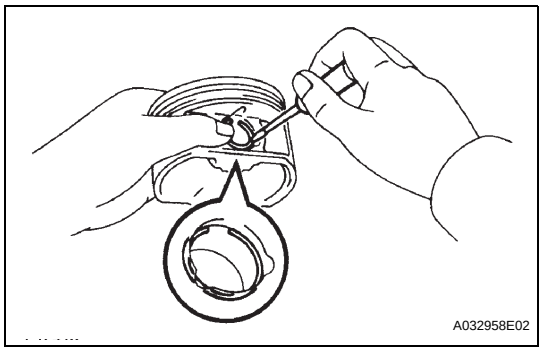

REASSEMBLY

1. INSTALL PISTON

(a) Using a small screwdriver, install a new snap ring onto one end of the piston pin hole.
HINT:
Make sure that the end gap of the snap ring is not aligned with the pin hole cutout portion of the piston.

(b) Gradually heat the piston up to 80 to 90°C (176 to 194°F).

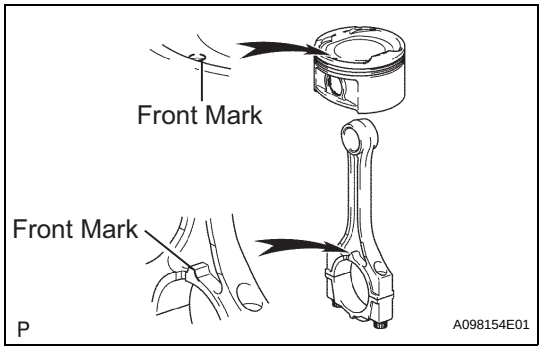

(c) Align the front marks of the piston and connecting rod, then push in the piston pin with your thumb until the pin comes into contact with the snap pin hole.
HINT:
Make sure that the end gap of the snap ring is not aligned with the pin hole cutout portion of the piston.

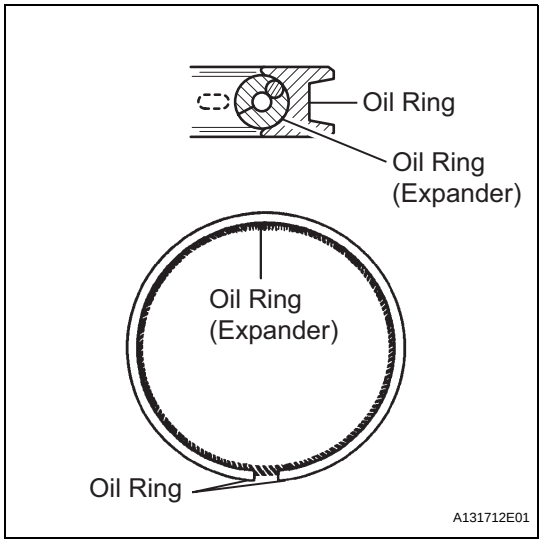

2. INSTALL PISTON RING SET

(a) Install the expander and oil ring by hand.

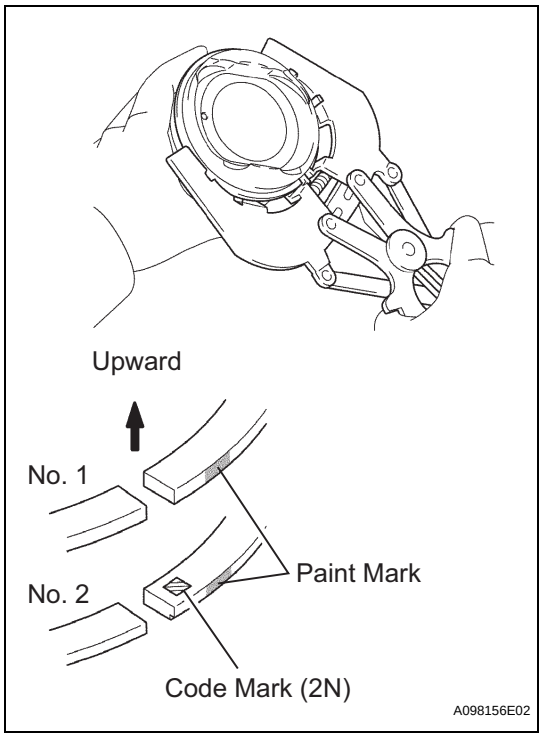

(b) Using a piston ring expander, install the 2 compression rings with the paint mark as shown in the illustration.
NOTICE:
Install the No. 2 compression ring with the code mark (2N) facing upward.

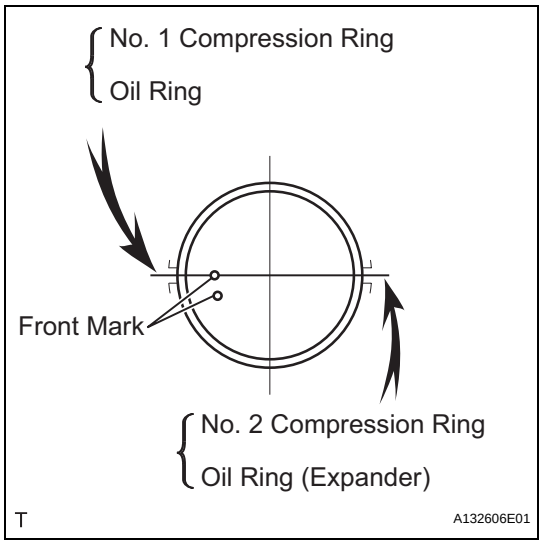

(c) Position the piston rings so that the ring ends are as shown in the illustration.

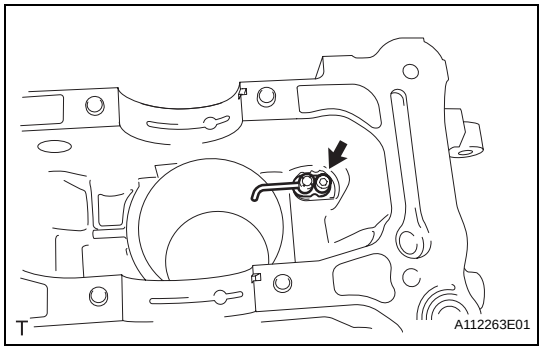

3. INSTALL NO. 1 OIL NOZZLE SUB-ASSEMBLY

(a) Install the 4 oil nozzles with the 4 bolts.
Torque: 7.0 N*m (71 kgf*cm, 62 in.*lbf)

EM

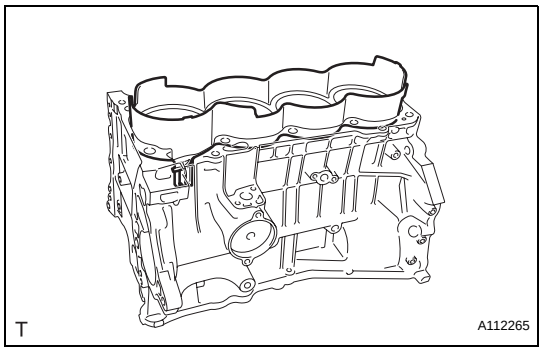

4. INSTALL CYLINDER BLOCK WATER JACKET SPACER

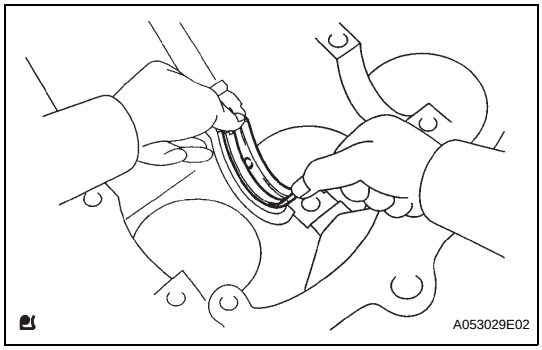

5. INSTALL CRANKSHAFT BEARING

(a) Install the upper bearing with an oil groove onto the cylinder block.

NOTICE:

Do not apply engine oil to the contact surfaces of the cylinder block and crankshaft bearing.

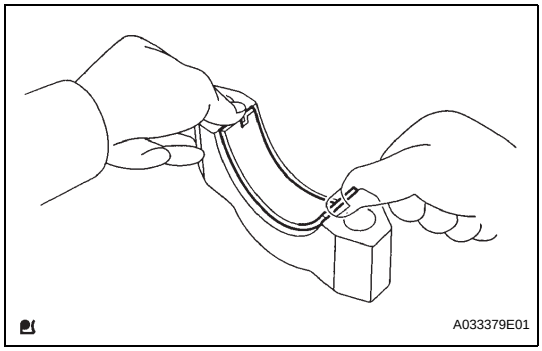

6. INSTALL NO. 2 CRANKSHAFT BEARING

(a) Install the lower bearing onto the bearing cap.

NOTICE:

Do not apply engine oil to the contact surfaces of the cylinder block and crankshaft bearing cap..

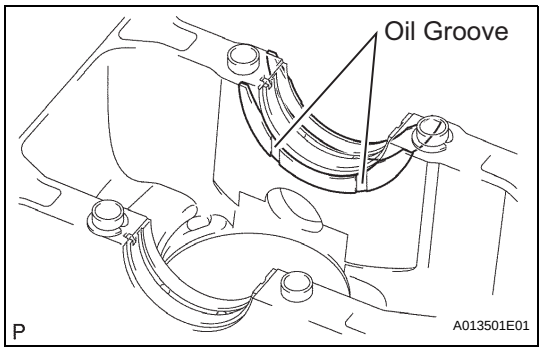

7. INSTALL CRANKSHAFT THRUST WASHER UPPER

(a) Install the 2 thrust washers onto the No. 3 journal position of the cylinder block with the oil groove facing outward.

8. INSTALL CRANKSHAFT

(a) Apply engine oil to the upper bearing, and install the crankshaft onto the cylinder block.

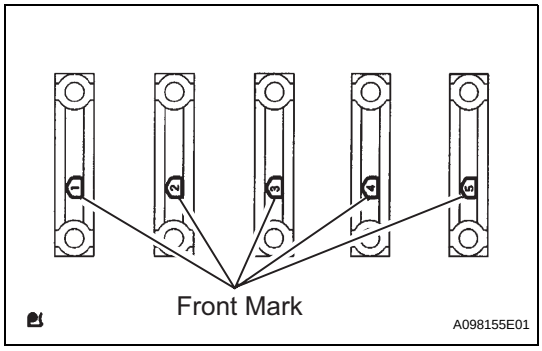

(b) Examine the front marks and numbers, and install the bearing caps onto the cylinder block in the order shown in the illustration.

(c) Apply a light coat of engine oil to the threads and under the heads of the bearing cap bolts.

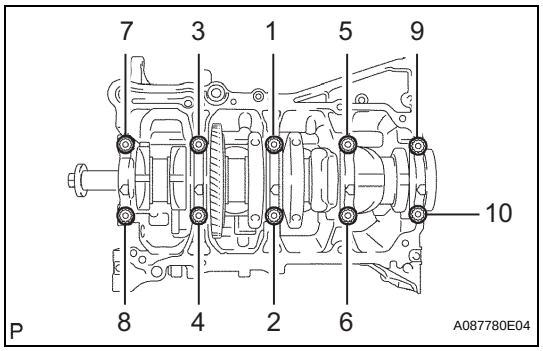

(d) Using several steps, uniformly install and tighten the 10 bearing cap bolts in the sequence shown in the illustration.
Torque: 40 N*m (408 kgf*cm, 30 ft.*lbf)

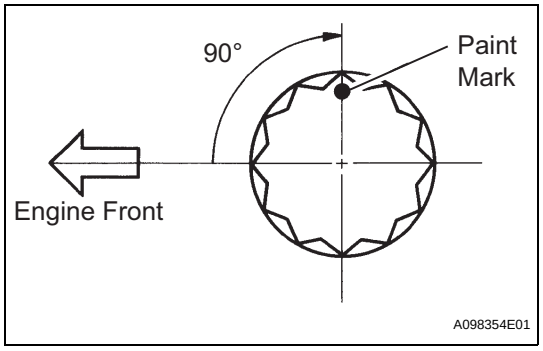

(e) Mark the front of the bearing cap bolts with paint.
(f) Retighten the 10 bearing cap bolts by 90° in the same sequence.
(g) Check that the paint marks are now at a 90° angle to the front.
(h) Check that the crankshaft turns smoothly.

EM

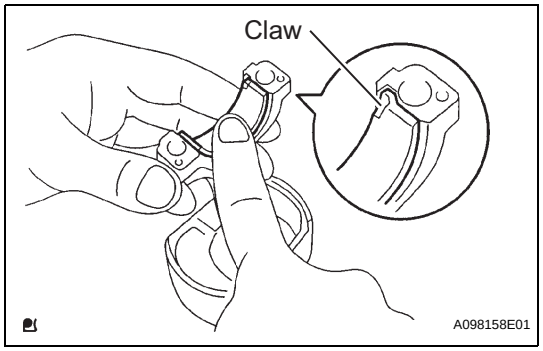

9. INSTALL CONNECTING ROD BEARING

(a) Align the bearing claw with the oil groove of the connecting rod or connecting rod cap.
NOTICE:
- **Do not apply engine oil to the contact surfaces of the connecting rod cap and bearing.**
- **Do not apply engine oil to the contact surfaces of the connecting rod and bearing.**

10. INSTALL PISTON WITH CONNECTING ROD

(a) Apply engine oil to the cylinder walls, pistons, and surfaces of connecting rod bearings.

(b) Check the position of the piston ring ends.

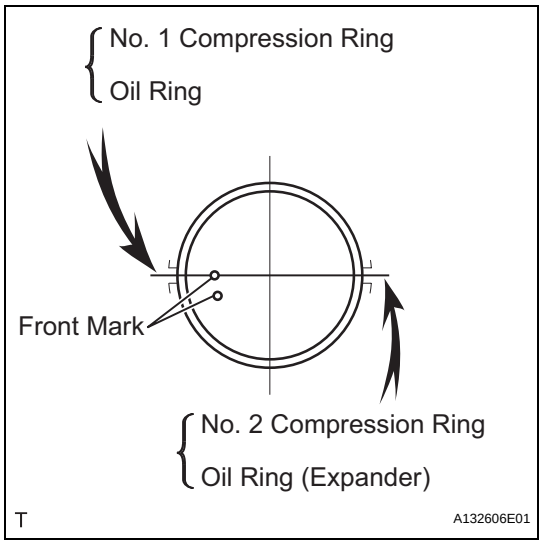

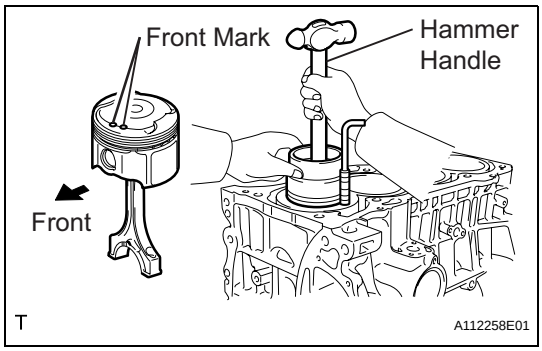

(c) Using a hammer handle and piston ring compressor, press a piston and connecting rod into each cylinder with the front mark of the piston facing forward.

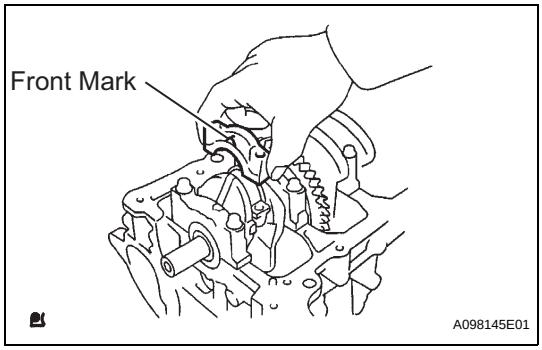

(d) Check that the front mark of the connecting rod cap is facing in the correct direction.
NOTICE:
Match the numbered connecting rod cap with the connecting rod.

(e) Apply a light coat of engine oil to the threads and under the heads of the connecting rod bolts.

(f) Using a 12 mm socket wrench, tighten the bolts in several passes to the specified torque.
Torque: 24.5 N*m (250 kgf*cm, 18 ft.*lbf)

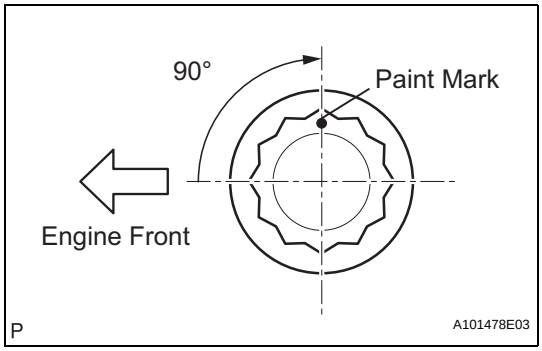

(g) Mark the front of the connecting rod bolts with paint.

(h) Retighten the cap bolts 90° as shown in the illustration.

(i) Check that the crankshaft turns smoothly.

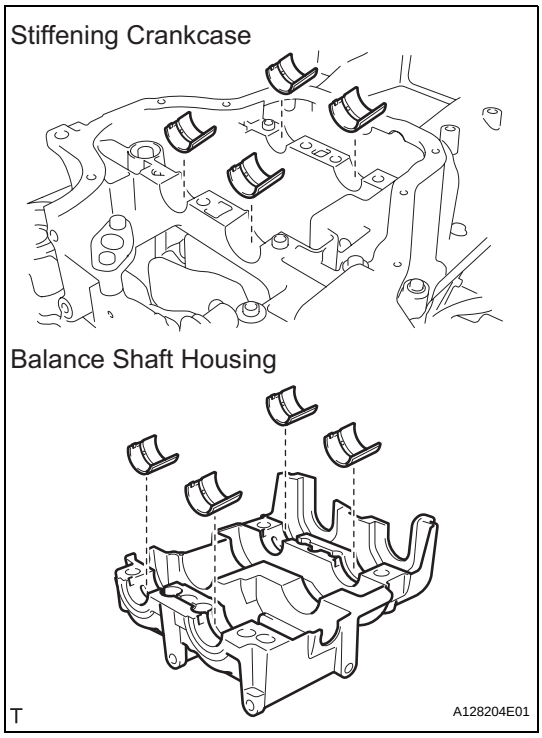

11. INSTALL NO. 1 BALANCE SHAFT BEARING

(a) Align the bearing claw with the claw groove, and push in the 8 bearings.
NOTICE:
- **Do not apply engine oil to the contact surfaces of the balance shaft bearing and balance shaft housing.**
- **Do not apply engine oil to the contact surfaces of the balance shaft bearing and stiffening crankcase.**

(b) Apply light coat of engine oil to the bearings.

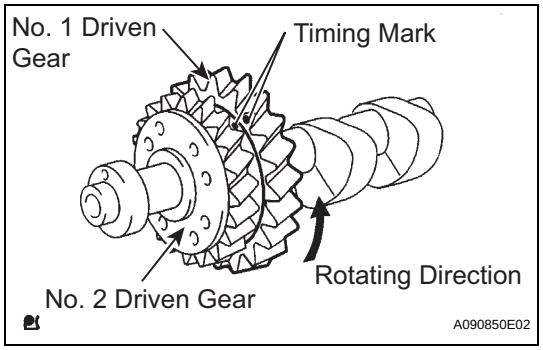

12. INSTALL BALANCE SHAFT

(a) Rotate the No. 1 driven gear of the No. 1 balance shaft in the rotating direction until it hits the stopper.

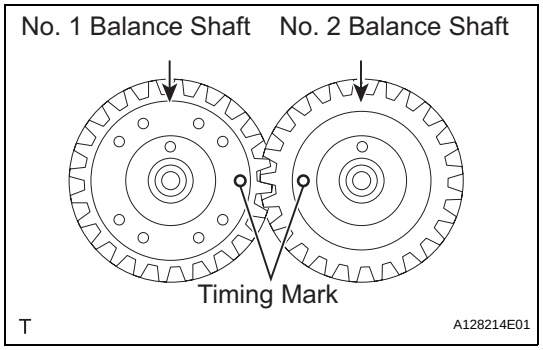

(b) Confirm that the timing marks on the No. 1 and No. 2 driven gears are aligned.

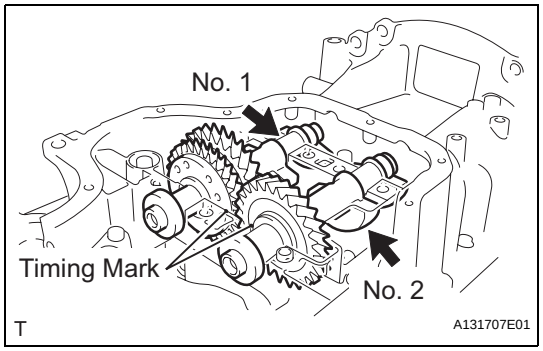

(c) Align the timing marks of the No. 1 and No. 2 balance shafts as shown in the illustration.
(d) Place the No. 1 and No. 2 balance shafts onto the crankcase.
(e) Apply a light coat of engine oil to the threads and under the heads of the bolts.

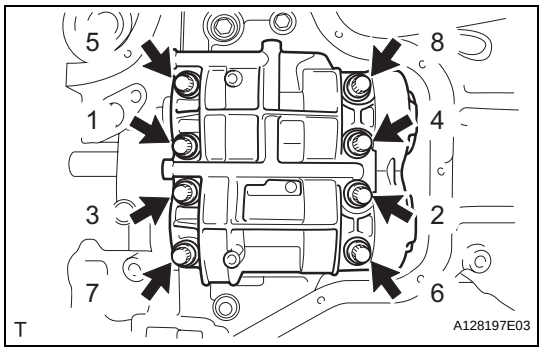

(f) Using several steps, uniformly install and tighten the 8 bolts in the sequence shown in the illustration.
Torque: 21.6 N*m (220 kgf*cm, 16 ft.*lbf)
(g) Mark the front of the bolts with paint.
(h) Retighten the bolts 90° as shown in the illustration.

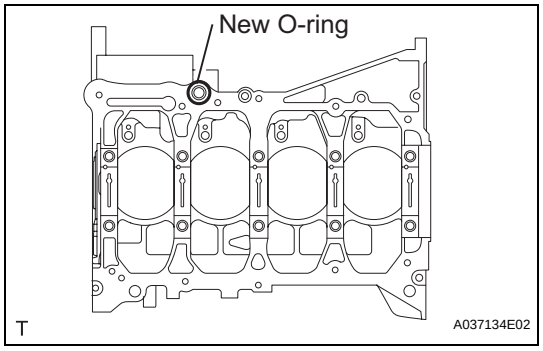

(i) Check that the paint mark is now at a 90° angle to the front.

13. INSTALL STIFFENING CRANKCASE ASSEMBLY

(a) Remove any old packing material and be careful not to drop any oil on the contact surfaces of the cylinder block and crankcase.

EM

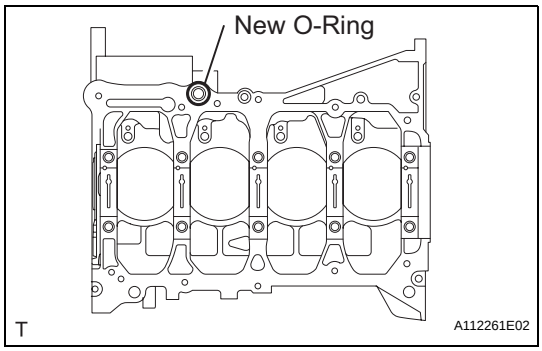

(b) Place a new O-ring on the cylinder block as shown in the illustration.

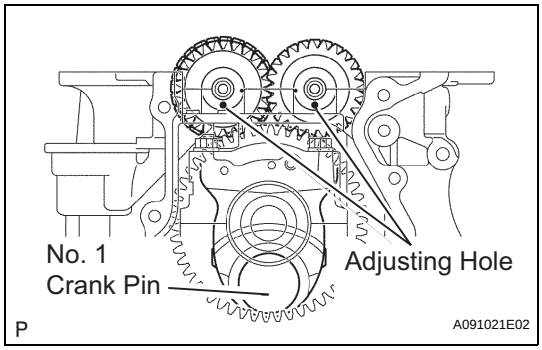

(c) With the No. 1 crank pin of the crankshaft placed at the 6 o'clock position, install the No. 1 and No. 2 balance shafts and align the adjusting holes as shown in the illustration.

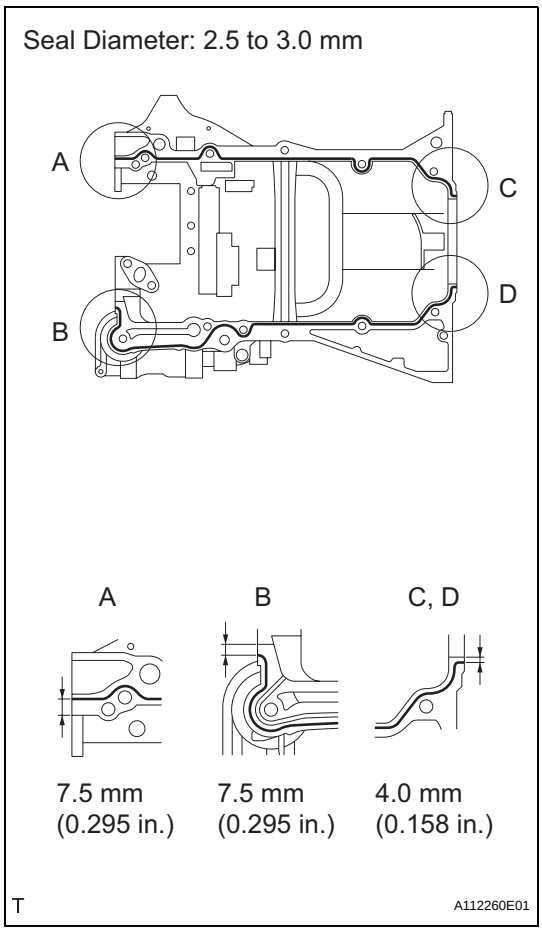

(d) Apply a continuous bead of seal packing (Diameter 2.5 to 3.0 mm (0.098 to 0.118 in.)) as shown in the illustration.

Seal packing:

Toyota Genuine Seal Packing Black, Three Bond 1207B or equivalent

NOTICE:

- **Remove any oil from the contact surface.**
- **Install the crankcase within 3 minutes of applying seal packing.**
- **Do not add engine oil for at least 2 hours after installing the crankcase.**

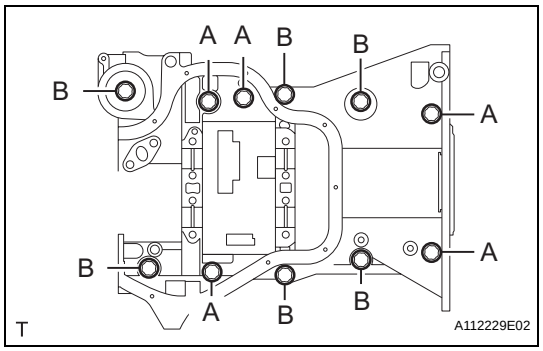

(e) Temporarily install the crankcase with the 11 bolts.
Standard bolt length

Item	Specified Condition
For bolt A (12 mm head)	112 mm (4.41 in.)
For bolt B (12 mm head)	35 mm (1.38 in.)

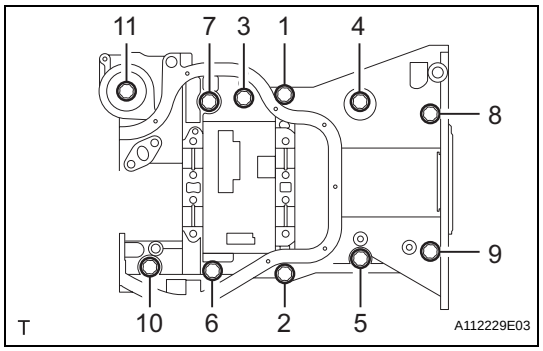

(f) Uniformly tighten the bolts.
Torque: 24 N*m (245 kgf*cm, 18 ft.*lbf)

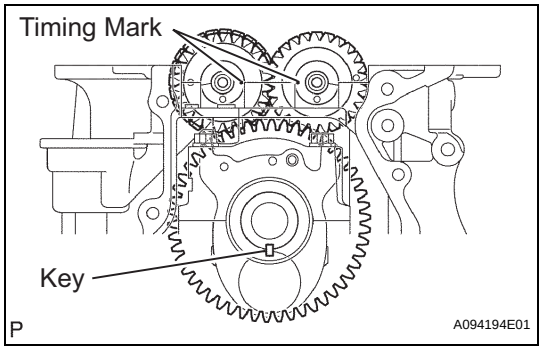

(g) Confirm that the timing marks of the balance shafts are aligned when the key groove is placed at the 6 o'clock position, as shown in the illustration.

14. INSTALL ENGINE REAR OIL SEAL

(a) Apply multi-purpose grease to the lip of a new oil seal.
NOTICE:
Keep the lip free of foreign object.

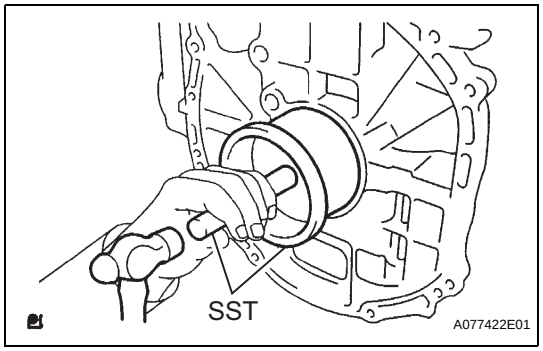

(b) Using SST and hammer, tap in the new oil seal until its surface is flush with the rear oil seal retainer edge.
SST 09223-15030, 09950-70010 (09951-07100)
NOTICE:
- **Wipe any extra grease off the crankshaft.**
- **Do not tap the oil seal at an angle.**

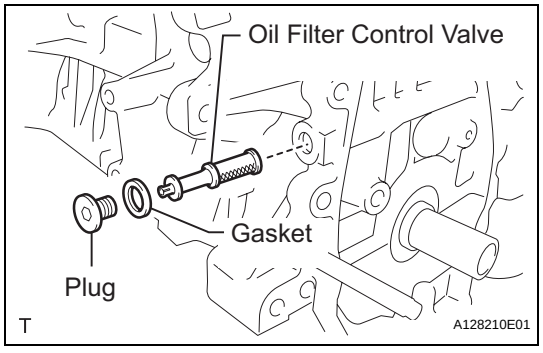

15. INSTALL OIL CONTROL VALVE FILTER

(a) Check that there are no foreign objects on the mesh part of the oil control valve filter.

(b) Using a 6 mm socket hexagon wrench, install a new gasket and the oil control valve filter with the plug.
Torque: 30 N*m (306 kgf*cm, 22 ft.*lbf)

EM

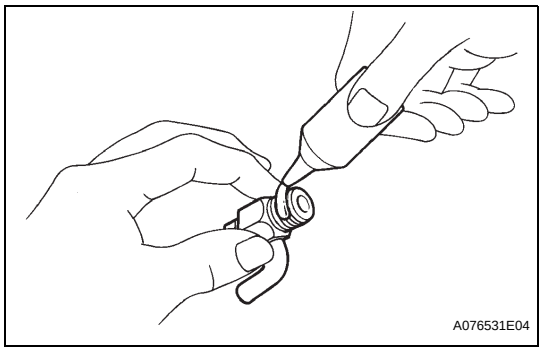

16. **INSTALL CYLINDER BLOCK WATER DRAIN COCK SUB-ASSEMBLY**
    (a) Apply adhesive to 2 or 3 threads of the drain cock.
    Adhesive:
    Toyota Genuine Adhesive 1324, Three Bond 1324 or equivalent

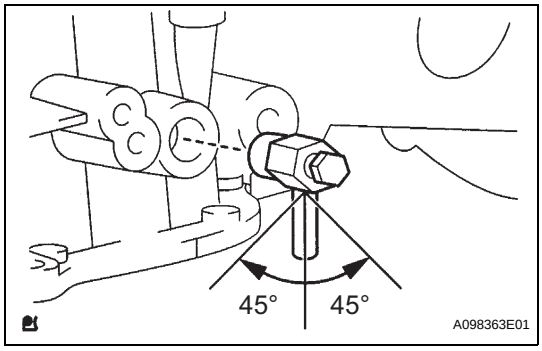

    (b) After tightening the drain cock to the specified torque, turn the drain cock clockwise as shown in the illustration.
    Torque: 25 N*m (255 kgf*cm, 18 ft.*lbf)
    NOTICE:
    - **Install the drain cock within 3 minutes of applying adhesive.**
    - **Do not add coolant for at least an hour after installing the drain cock.**
    - **Do not turn the drain cock by more than 1 revolution (360°) after tightening the drain cock to the specified torque.**
    - **Do not loosen the drain cock after setting it correctly.**

17. **INSTALL CYLINDER HEAD GASKET (See page EM-82)**

18. **INSTALL CYLINDER HEAD SUB-ASSEMBLY (See page EM-82)**

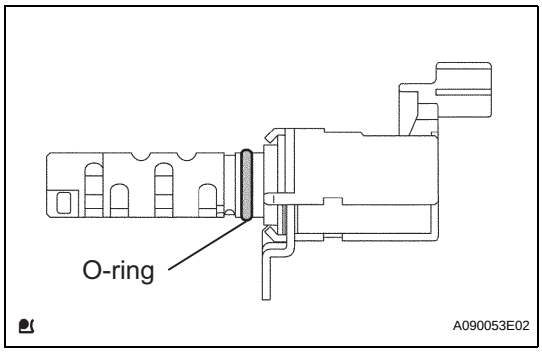

19. **INSTALL CAMSHAFT TIMING OIL CONTROL VALVE ASSEMBLY**
    (a) Apply a light coat of engine oil to a new O-ring, then install it onto the camshaft timing oil control valve.

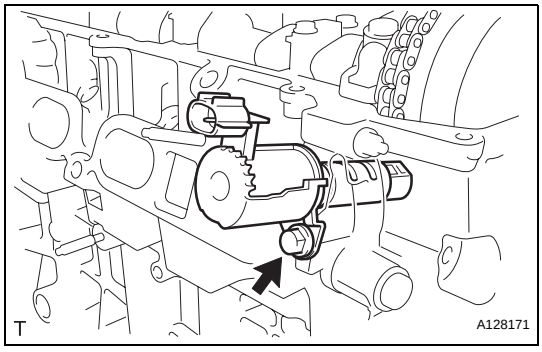

    (b) Install the camshaft timing oil control valve with the bolt.
    Torque: 9.0 N*m (92 kgf*cm, 80 in.*lbf)

20. **INSTALL CAMSHAFT TIMING GEAR ASSEMBLY (See page EM-83)**

21. **INSTALL NO. 2 CAMSHAFT TIMING SPROCKET (See page EM-84)**

22. **INSTALL NO. 2 CAMSHAFT BEARING (See page EM-81)**

23. **INSTALL NO. 1 CAMSHAFT BEARING (See page EM-81)**

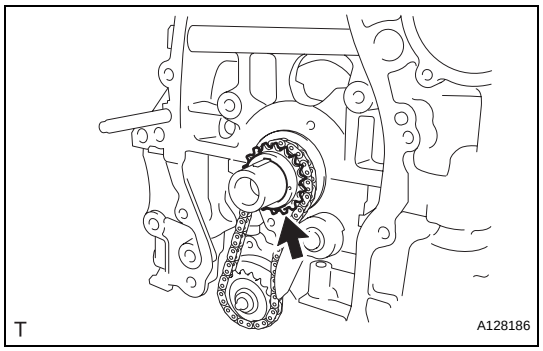

24. **INSTALL CAMSHAFT (See page EM-84)**
25. **INSTALL OIL PUMP ASSEMBLY (See page LU-15)**
26. **INSTALL OIL PUMP DRIVE GEAR**
27. **INSTALL NO. 2 CHAIN SUB-ASSEMBLY (See page EM-32)**
28. **INSTALL CRANKSHAFT TIMING SPROCKET**
29. **INSTALL NO. 1 CHAIN VIBRATION DAMPER (See page EM-33)**
30. **INSTALL CHAIN SUB-ASSEMBLY (See page EM-33)**
31. **INSTALL CHAIN TENSIONER SLIPPER (See page EM-34)**
32. **INSTALL TIMING CHAIN GUIDE (See page EM-34)**
33. **INSTALL NO. 1 CRANKSHAFT POSITION SENSOR PLATE (See page EM-35)**
34. **REPLACE TIMING CHAIN COVER OIL SEAL (See page EM-144)**
35. **INSTALL TIMING CHAIN COVER SUB-ASSEMBLY (See page EM-35)**
36. **INSTALL NO. 1 CHAIN TENSIONER ASSEMBLY (See page EM-37)**
37. **INSTALL CRANKSHAFT PULLEY (See page EM-38)**
38. **INSTALL OIL PAN SUB-ASSEMBLY (See page EM-39)**

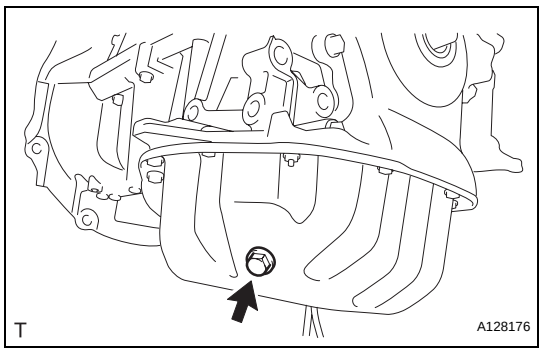

39. **INSTALL OIL PAN DRAIN PLUG**
    (a) Place a new gasket on the oil pan drain plug, then install it onto the oil pan.
    Torque: 40 N*m (408 kgf*cm, 30 ft.*lbf)
40. **INSTALL WATER PUMP ASSEMBLY (See page CO-12)**
41. **INSTALL WATER PUMP PULLEY (See page CO-13)**
42. **INSTALL CRANKSHAFT POSITION SENSOR (See page ES-402)**

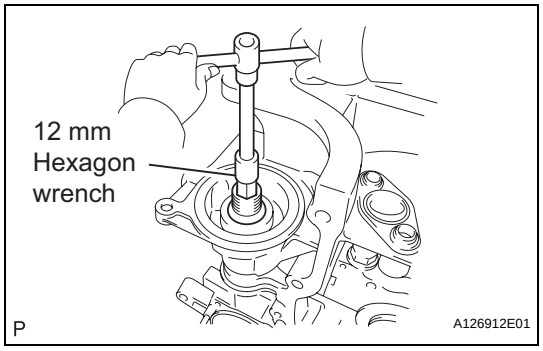

43. **INSTALL OIL FILTER UNION**
    (a) Using a 12 mm hexagon wrench, install the oil filter union.
    Torque: 29.5 N*m (301 kgf*cm, 22 ft.*lbf)
44. **INSTALL OIL FILTER SUB-ASSEMBLY (See page LU-4)**
45. **SET NO. 1 CYLINDER TO TDC/COMPRESSION (See page EM-25)**
46. **CHECK VALVE CLEARANCE (See page EM-8)**
47. **ADJUST VALVE CLEARANCE (See page EM-8)**
48. **INSTALL CAMSHAFT (See page EM-13)**

EM

49. INSTALL NO. 2 CAMSHAFT (See page EM-14)

50. INSTALL NO. 1 CHAIN TENSIONER ASSEMBLY (See page EM-37)

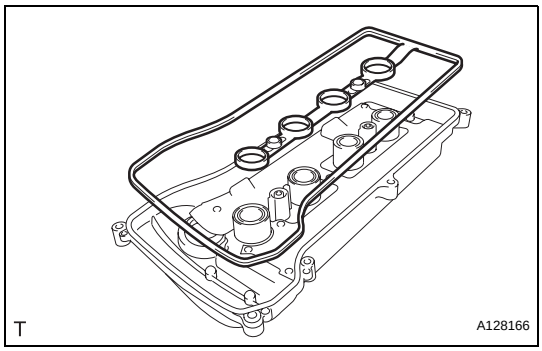

51. INSTALL CYLINDER HEAD COVER GASKET

(a) Install the gasket onto the cylinder head cover.

52. INSTALL CYLINDER HEAD COVER SUB-ASSEMBLY (See page EM-40)

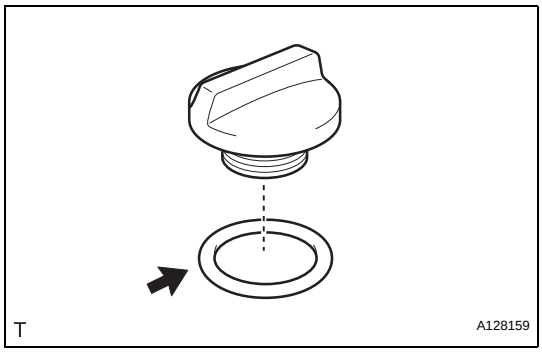

53. INSTALL OIL FILLER CAP SUB-ASSEMBLY

(a) Install the gasket to the cap.

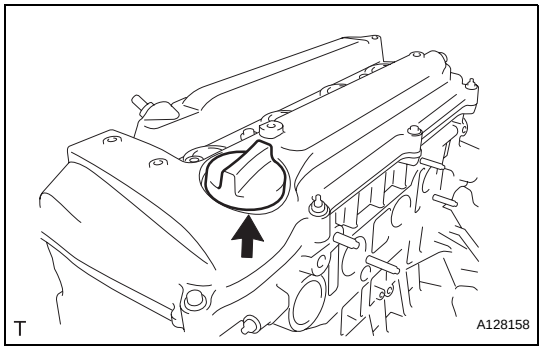

(b) Install the oil filler cap.
Torque: 3.0 N*m (31 kgf*cm, 26 in.*lbf)

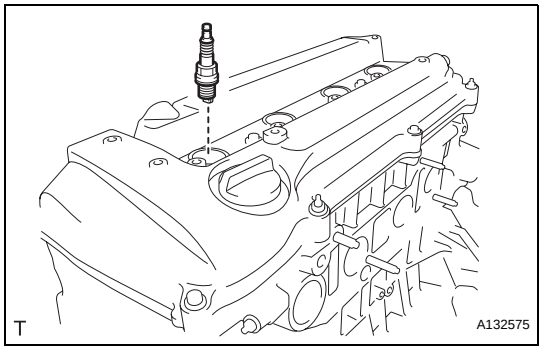

54. INSTALL SPARK PLUG
Torque: 25 N*m (254 kgf*cm, 18 ft.*lbf)

55. INSTALL IGNITION COIL ASSEMBLY (See page IG-9)

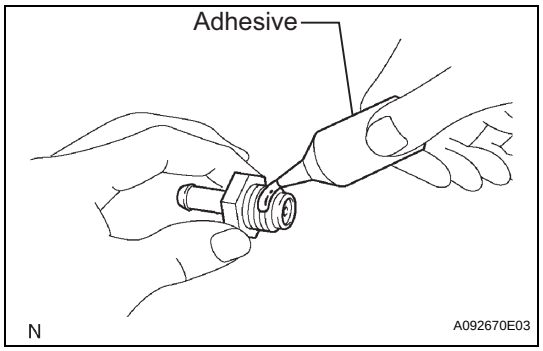

56. **INSTALL VENTILATION VALVE SUB-ASSEMBLY**
    (a) Apply adhesive to the threads of the ventilation valve.
    Adhesive:
    Toyota Genuine Adhesive 1324, Three Bond 1324 or equivalent

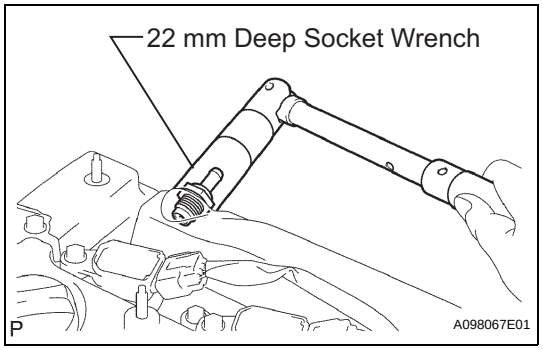

    (b) Using a 22 mm deep socket wrench, install the ventilation valve.
    Torque: 19 N*m (194 kgf*cm, 14 ft.*lbf)

57. **INSTALL OIL DIPSTICK GUIDE (See page EM-86)**
58. **INSTALL OIL DIPSTICK**
59. **INSTALL CAMSHAFT POSITION SENSOR (See page EM-81)**
60. **INSTALL ENGINE COOLANT TEMPERATURE SENSOR (See page EM-82)**
61. **INSTALL OIL PRESSURE SWITCH ASSEMBLY (See page EM-82)**
62. **INSTALL RADIO SETTING CONDENSER (See page EM-82)**
63. **INSTALL KNOCK SENSOR (See page ES-420)**
64. **INSTALL CAMSHAFT TIMING OIL CONTROL VALVE ASSEMBLY (See page ES-396)**
65. **INSTALL V-RIBBED BELT TENSIONER ASSEMBLY (See page EM-38)**

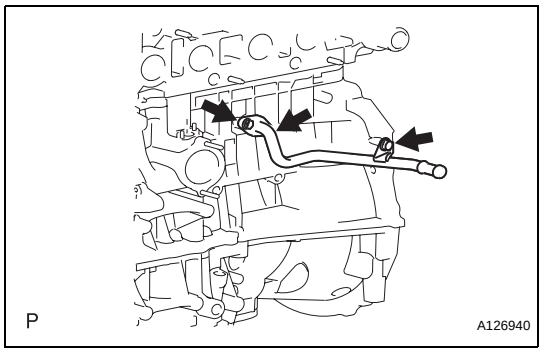

66. **INSTALL NO. 3 WATER BY-PASS PIPE**
    (a) Install a new gasket and pipe with the bolt and 2 nuts.
    Torque: 9.0 N*m (92 kgf*cm, 80 in.*lbf)

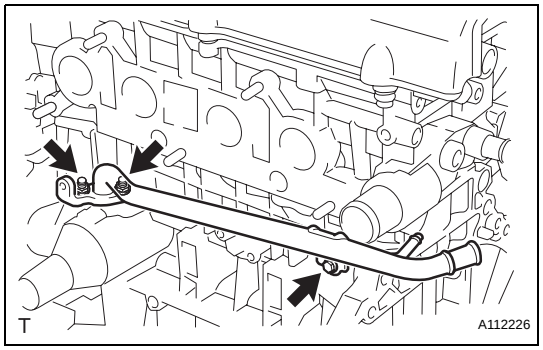

67. **INSTALL NO. 1 WATER BY-PASS PIPE**
    (a) Install a new gasket and the pipe with the bolt and 2 nuts.
    Torque: 9.0 N*m (92 kgf*cm, 80 in.*lbf)
68. **INSTALL THERMOSTAT (See page CO-15)**
69. **INSTALL WATER INLET (See page CO-16)**
70. **INSTALL EXHAUST MANIFOLD CONVERTER SUB-ASSEMBLY (See page EM-85)**

EM

71. **INSTALL NO. 1 EXHAUST MANIFOLD HEAT INSULATOR (See page EM-86)**
72. **INSTALL NO. 2 MANIFOLD STAY (See page EM-86)**
73. **INSTALL MANIFOLD STAY (See page EM-86)**
74. **INSTALL IDLER PULLEY (See page EM-41)**

ENGINE

ON-VEHICLE INSPECTION

1. INSPECT ENGINE COOLANT

2. INSPECT ENGINE OIL

3. INSPECT BATTERY

4. INSPECT AIR CLEANER FILTER ELEMENT SUB-ASSEMBLY

(a) Remove the air cleaner cap.
(b) Remove the air filter element.
(c) Visually check that the air filter is not excessively damaged or oily.
If necessary, replace the air filter.

5. INSPECT SPARK PLUG

6. INSPECT FAN AND GENERATOR V BELT

HINT:
You do not need to check the belt deflection because the auto tensioner has been adopted.

7. INSPECT IGNITION TIMING

NOTICE:

- **Turn all the electrical systems and the A/C OFF.**
- **Inspect the ignition timing with the cooling fan OFF.**
- **When checking the ignition timing, shift the transmission to the neutral position.**

(a) Warm up and stop the engine.

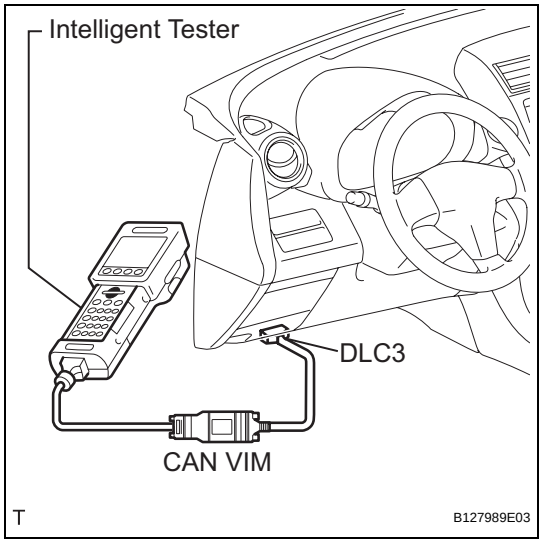

(b) When using intelligent tester:
(1) Connect the intelligent tester to the DLC3.
(2) Allow the engine to idle.
(3) Select the following menu items:
DIAGNOSIS / ENHANCED OBD II / DATA LIST / PRIMARY / IGN ADVANCE.
(4) Read IGN ADVANCE to check the ignition timing.
Standard ignition timing:
5 to 15° BTDC @ idle
(5) Check that the ignition timing advances immediately when the engine speed is increased.
(6) Turn the ignition switch OFF.
(7) Disconnect the intelligent tester from the DLC3.

(c) When not using intelligent tester:
(1) Remove the No. 1 engine cover (see page EM-22).

EM

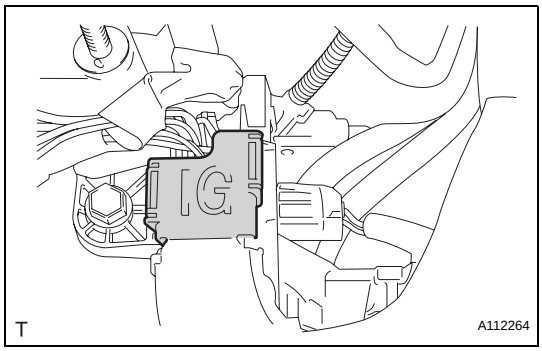

(2) Open the ignition cover located to the right of the No. 4 ignition coil.
(3) Pull out the wire harness from the IG cover.
(4) Connect a timing light to the wire harness.
NOTICE:
Use a timing light that detects the first signal.

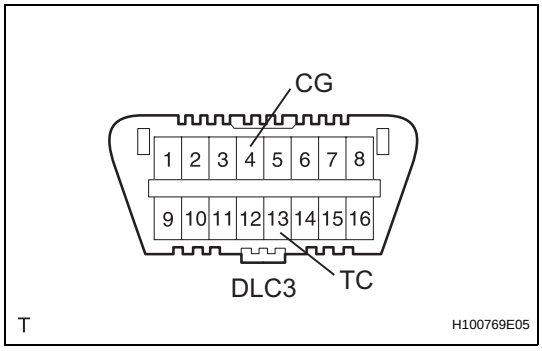

(5) Using SST, connect terminals 13 (TC) and 4 (CG) of the DLC3.
SST 09843-18040
(6) Allow the engine to idle and check the ignition timing.
Standard ignition timing:
8 to 12° BTDC @ idle
HINT:
Run the engine at 1,000 to 1,300 rpm for 5 seconds, then check that the engine speed returns to the idling speed.
(7) Remove SST from the DLC3.
(8) Allow the engine to idle and check the ignition timing.
Standard ignition timing:
5 to 15° BTDC
(9) Check that the ignition timing advances immediately when the engine speed is increased.
(10) Turn the ignition switch OFF.
(11) Remove the timing light.
(12) Close the IG cover.
(13) Install the No. 1 engine cover (see page EM-43).

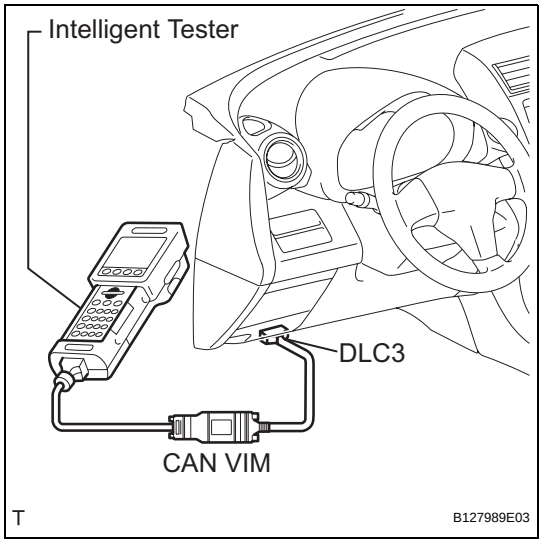

8. INSPECT ENGINE IDLE SPEED
(a) When using intelligent tester:
(1) Turn OFF all the accessories and air conditioning.
(2) Move the shift lever to P or neutral.
(3) Connect the intelligent tester to the DLC3.
(4) Warm up the engine.
(5) Select the tester menus:
DIAGNOSIS / ENHANCED OBD II / DATA LIST / PRIMARY / ENGINE SPD.
(6) Read ENGINE SPEED to check the idle speed while the radiator-cooling fan is not rotating.
Standard idle speed:
600 to 700 rpm
(7) Turn the ignition switch OFF.
(8) Disconnect the tester from the DLC3.
(b) When not using intelligent tester:
(1) Turn OFF all the accessories and air conditioning.

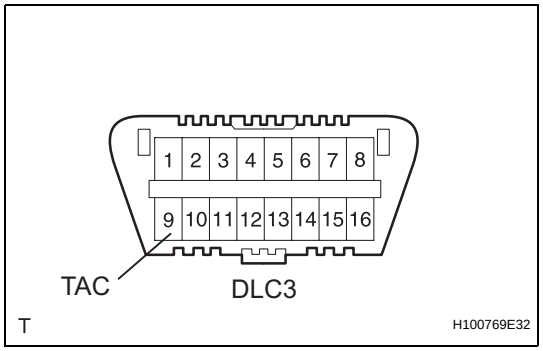

(2) Move the shift lever to P or neutral.

(3) Connect SST to 9 (TAC) of the DLC3 terminal, and then connect a tachometer to SST.
SST 09843-18030

(4) Warm up the engine.

(5) Check the idle speed while the radiator-cooling fan is not rotating.
Standard idle speed:
600 to 700 rpm

(6) Turn the ignition switch OFF.

(7) Remove the tachometer and disconnect SST from the DLC3.

9. INSPECT COMPRESSION

(a) Warm up and stop the engine.

(b) Remove the No. 1 engine under cover.

(c) Remove the 4 ignition coils (see page IG-9).

(d) Remove the 4 spark plugs.

(e) Disconnect the 4 fuel injector connectors.

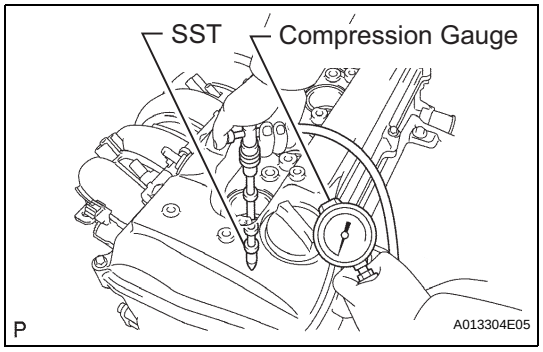

(f) Set SST and a compression gauge.
SST 09992-00500

(g) Insert the compression gauge into the spark plug hole.

(h) While cranking the engine, measure the compression pressure.
Standard compression pressure:
1,300 kPa (13.8 kgf/cm^2, 196 psi)
Minimum pressure:
1,000 kPa (10 kgf/cm^2, 142 psi)
Standard difference between each cylinder:
100 kPa (1.0 kgf/cm^2, 14 psi)
NOTICE:
- **Always use a fully charged battery to obtain an engine speed of 250 rpm or more.**
- **Check the other cylinders' compression pressures in the same way.**
- **This measurement must be done as quickly as possible.**

If the cylinder compression is low, pour a small amount of engine oil into the cylinder through the spark plug hole and inspect again.
HINT:
- If adding oil increases the compression, the piston rings and/or cylinder bore may be worn or damaged.
- If pressure stays low, a valve may be stuck or seated improperly, or there may be leakage in the gasket.

(i) Connect the 4 fuel injector connectors.

(j) Install the 4 spark plugs.
Torque: 25 N*m (255 kgf*cm, 18 ft.*lbf)

(k) Install the 4 ignition coils (see page IG-9).

(l) Install the No. 1 engine under cover.

EM

10. INSPECT CO/HC

HINT:

The ECM properly controls the CO/HC concentration in the emission gas.

(a) Start and warm up the engine.

(b) Run the engine at 2,500 rpm for approximately 180 seconds.

(c) Insert the CO/HC meter testing probe at least 40 cm (1.3 ft.) into the tailpipe while idling.

(d) Inspect the CO/HC concentration while idling and/or at 2,500 rpm.

If the CO/HC concentration is not as specified, perform troubleshooting.

HINT:

See the table below for possible causes, and then inspect and repair the applicable causes if necessary.

CO	HC	Problems	Causes
Normal	High	Rough idle	1. Faulty ignition: - Incorrect timing - Plugs are contaminated, shorted, or gaps are defective 2. Incorrect valve clearance 3. Leaks in intake and exhaust valve 4. Leaks in cylinders
Low	High	Rough idle (Fluctuating HC reading)	1. Vacuum leakage: - Ventilation hoses - Intake manifold - Throttle body - Brake booster line 2. Lean mixture causing misfire
High	High	Rough idle (Black smoke from exhaust)	1. Restricted air filter 2. Plugged PCV valve 3. Faulty SFI system: - Faulty pressure regulator - Faulty engine coolant temperature sensor - Faulty mass air flow meter - Faulty ECM - Faulty injectors - Faulty throttle body

ENGINE ASSEMBLY

COMPONENTS

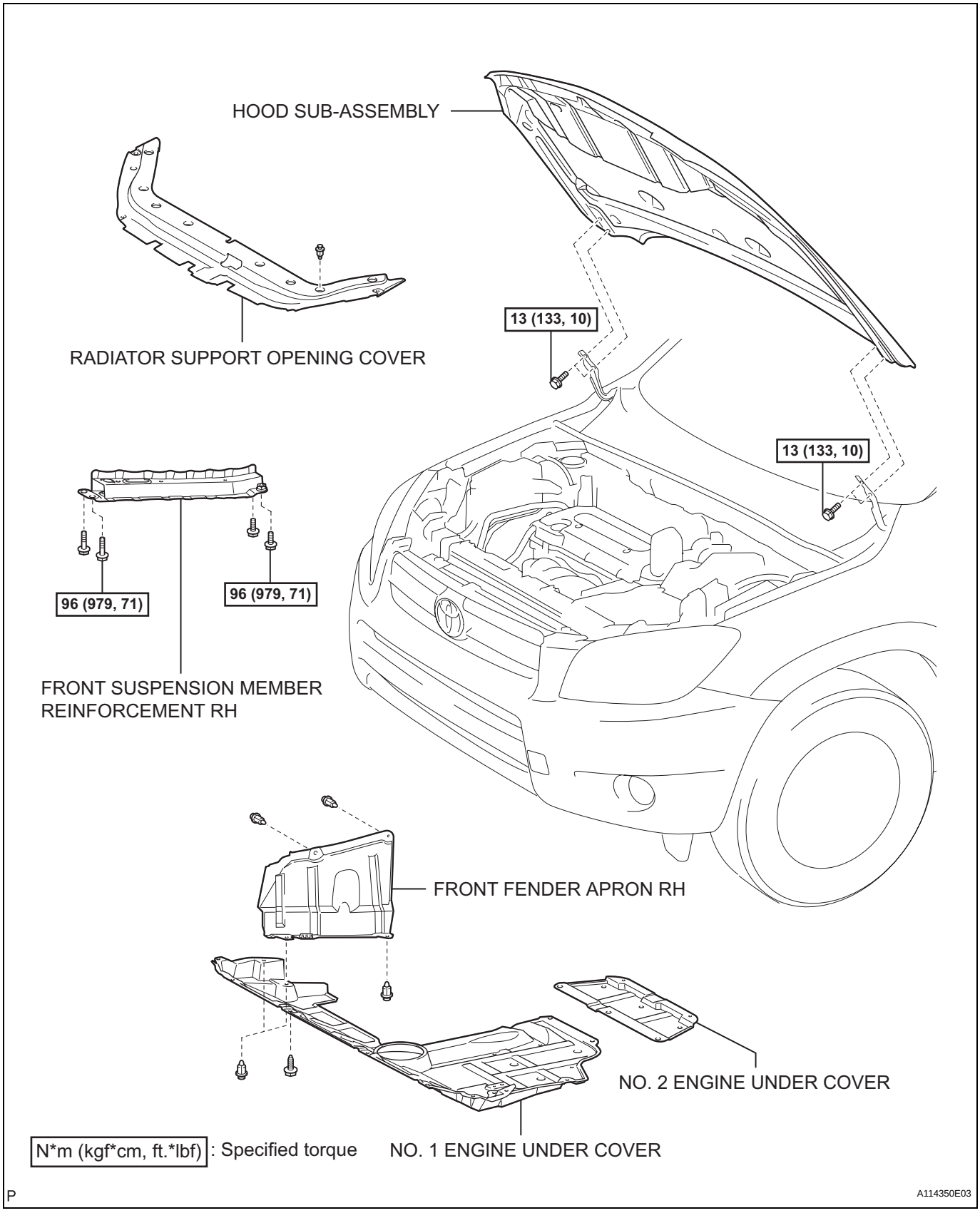

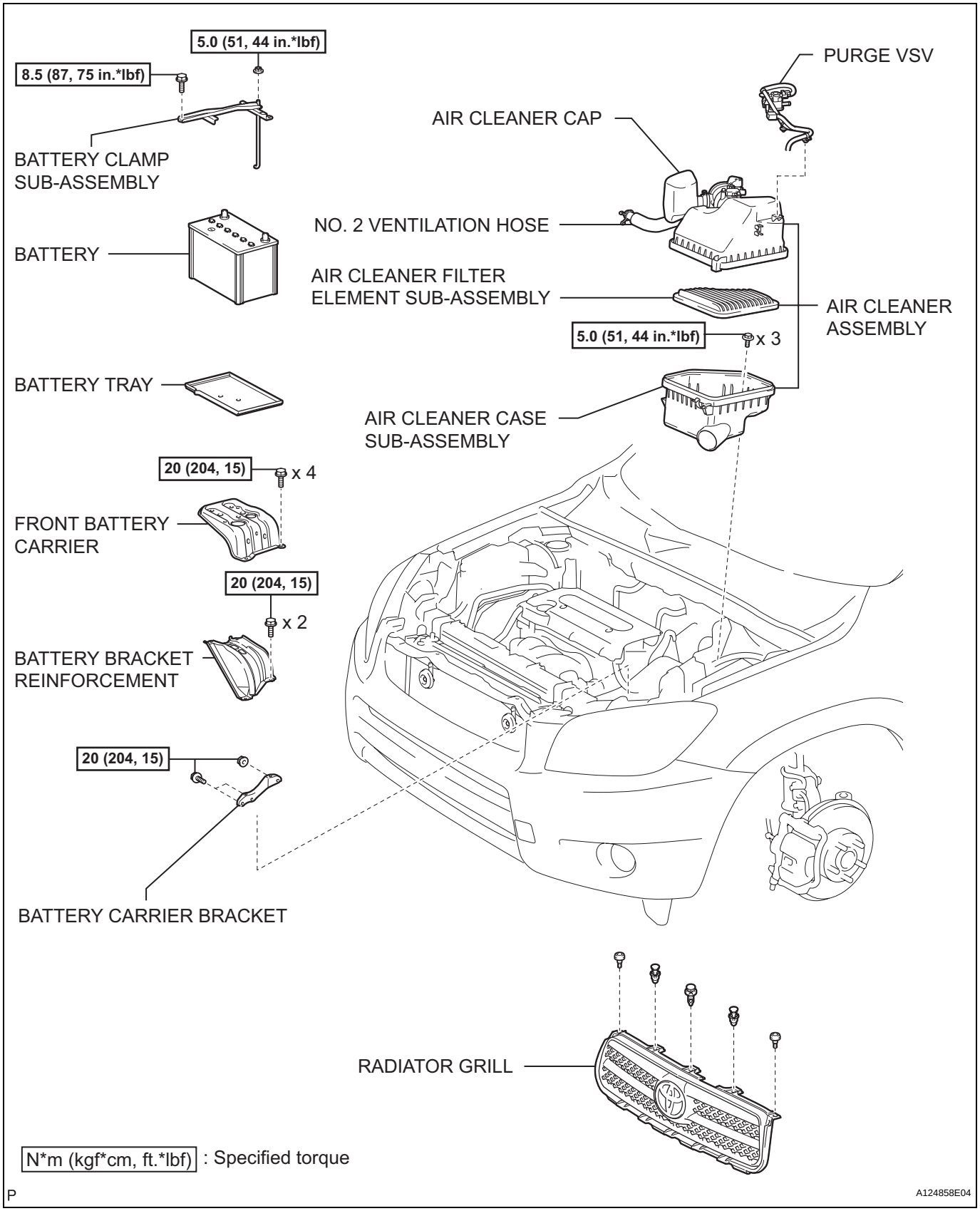
5.0 (51, 44 in.*lbf)
8.5 (87, 75 in.*lbf)
BATTERY CLAMP SUB-ASSEMBLY
BATTERY
BATTERY TRAY
20 (204, 15)
x 4
FRONT BATTERY CARRIER
20 (204, 15)
x 2
BATTERY BRACKET REINFORCEMENT
20 (204, 15)
BATTERY CARRIER BRACKET
PURGE VSV
AIR CLEANER CAP
NO. 2 VENTILATION HOSE
AIR CLEANER FILTER ELEMENT SUB-ASSEMBLY
AIR CLEANER ASSEMBLY
5.0 (51, 44 in.*lbf)
x 3
AIR CLEANER CASE SUB-ASSEMBLY
RADIATOR GRILL
N*m (kgf*cm, ft.*lbf) : Specified torque
P
A124858E04

EM

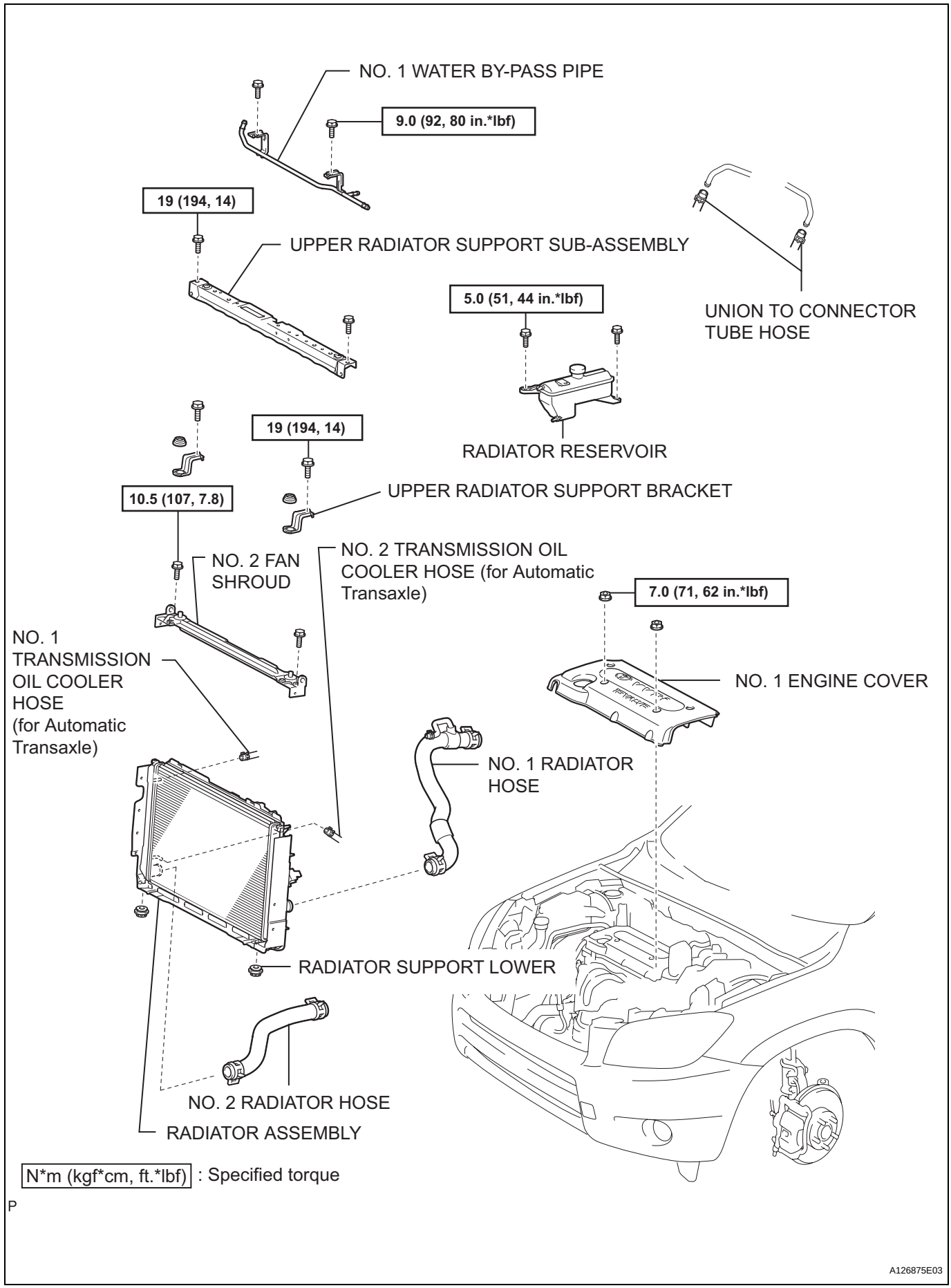
NO. 1 WATER BY-PASS PIPE
9.0 (92, 80 in.*lbf)
19 (194, 14)
UPPER RADIATOR SUPPORT SUB-ASSEMBLY
5.0 (51, 44 in.*lbf)
UNION TO CONNECTOR TUBE HOSE
RADIATOR RESERVOIR
19 (194, 14)
UPPER RADIATOR SUPPORT BRACKET
10.5 (107, 7.8)
NO. 2 FAN SHROUD
NO. 2 TRANSMISSION OIL COOLER HOSE (for Automatic Transaxle)
7.0 (71, 62 in.*lbf)
NO. 1 TRANSMISSION OIL COOLER HOSE (for Automatic Transaxle)
NO. 1 ENGINE COVER
NO. 1 RADIATOR HOSE
RADIATOR SUPPORT LOWER
NO. 2 RADIATOR HOSE
RADIATOR ASSEMBLY
N*m (kgf*cm, ft.*lbf) : Specified torque
A126875E03

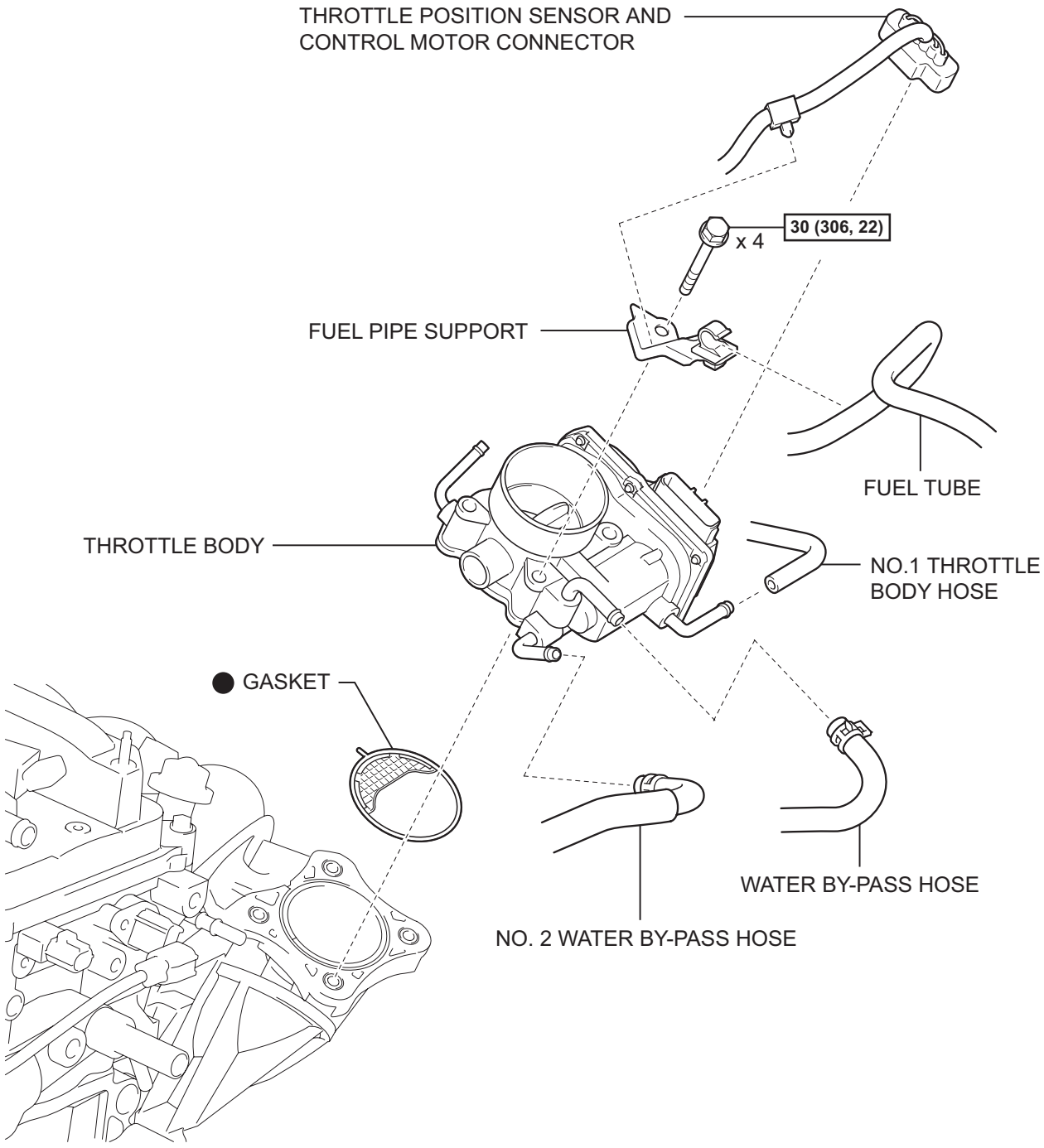

N*m (kgf*cm, ft.*lbf) : Specified torque

● Non-reusable part

P

A124403E05

EM

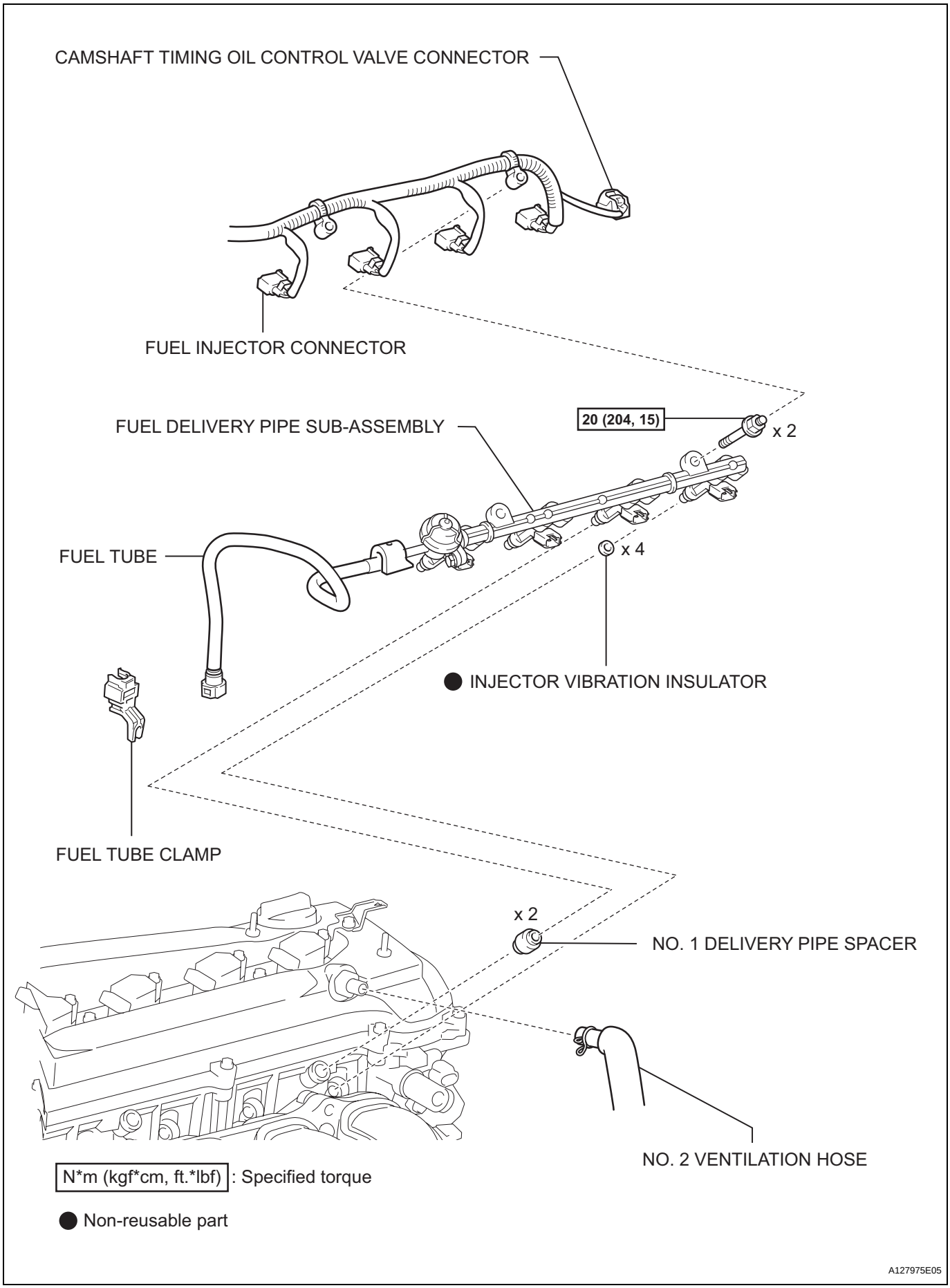
CAMSHAFT TIMING OIL CONTROL VALVE CONNECTOR
FUEL INJECTOR CONNECTOR
FUEL DELIVERY PIPE SUB-ASSEMBLY
20 (204, 15)
x 2
FUEL TUBE
x 4
● INJECTOR VIBRATION INSULATOR
FUEL TUBE CLAMP
x 2
NO. 1 DELIVERY PIPE SPACER
NO. 2 VENTILATION HOSE
N*m (kgf*cm, ft.*lbf) : Specified torque
● Non-reusable part
A127975E05

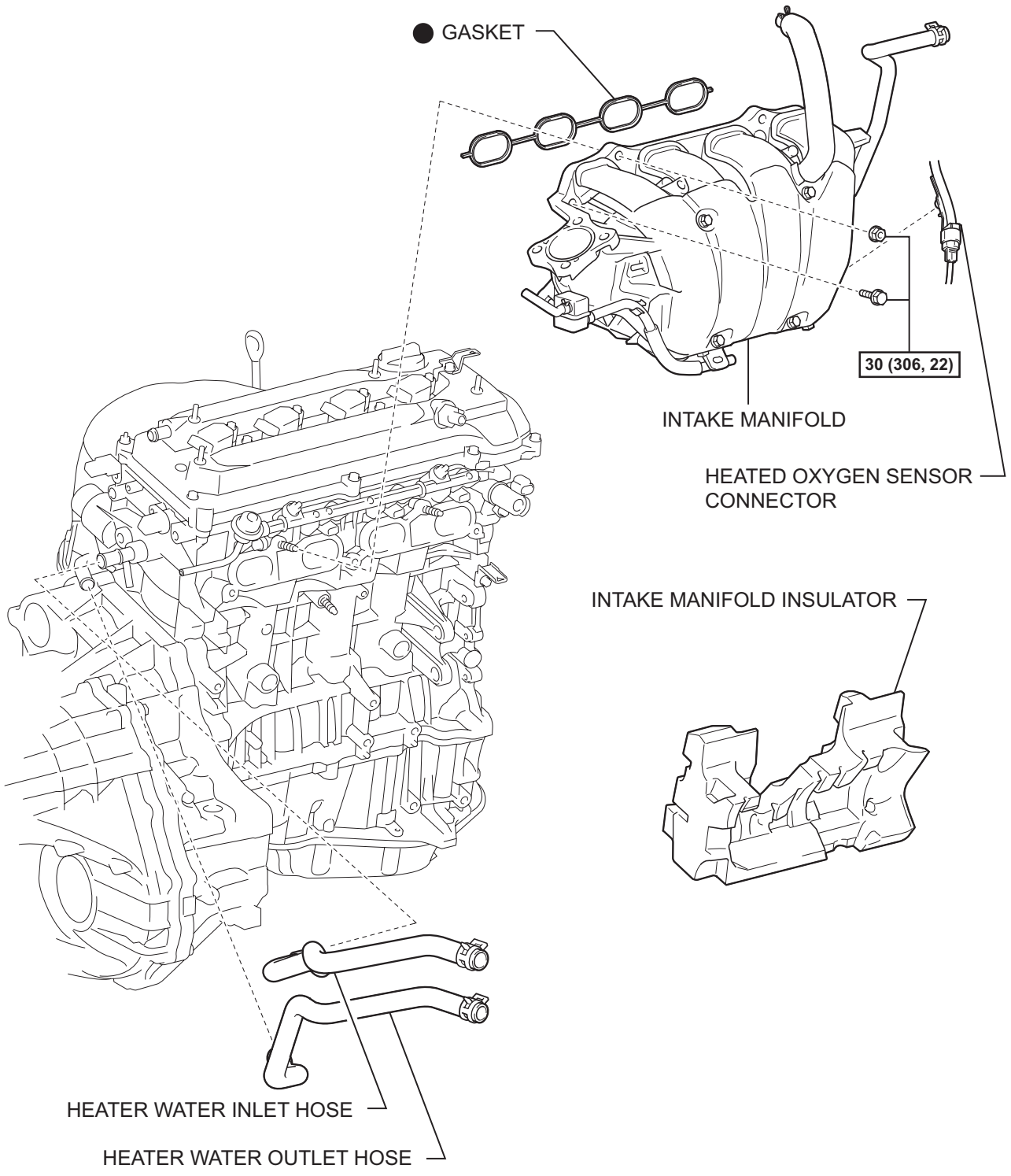

N*m (kgf*cm, ft.*lbf): Specified torque

● Non-reusable part

P

A124405E05

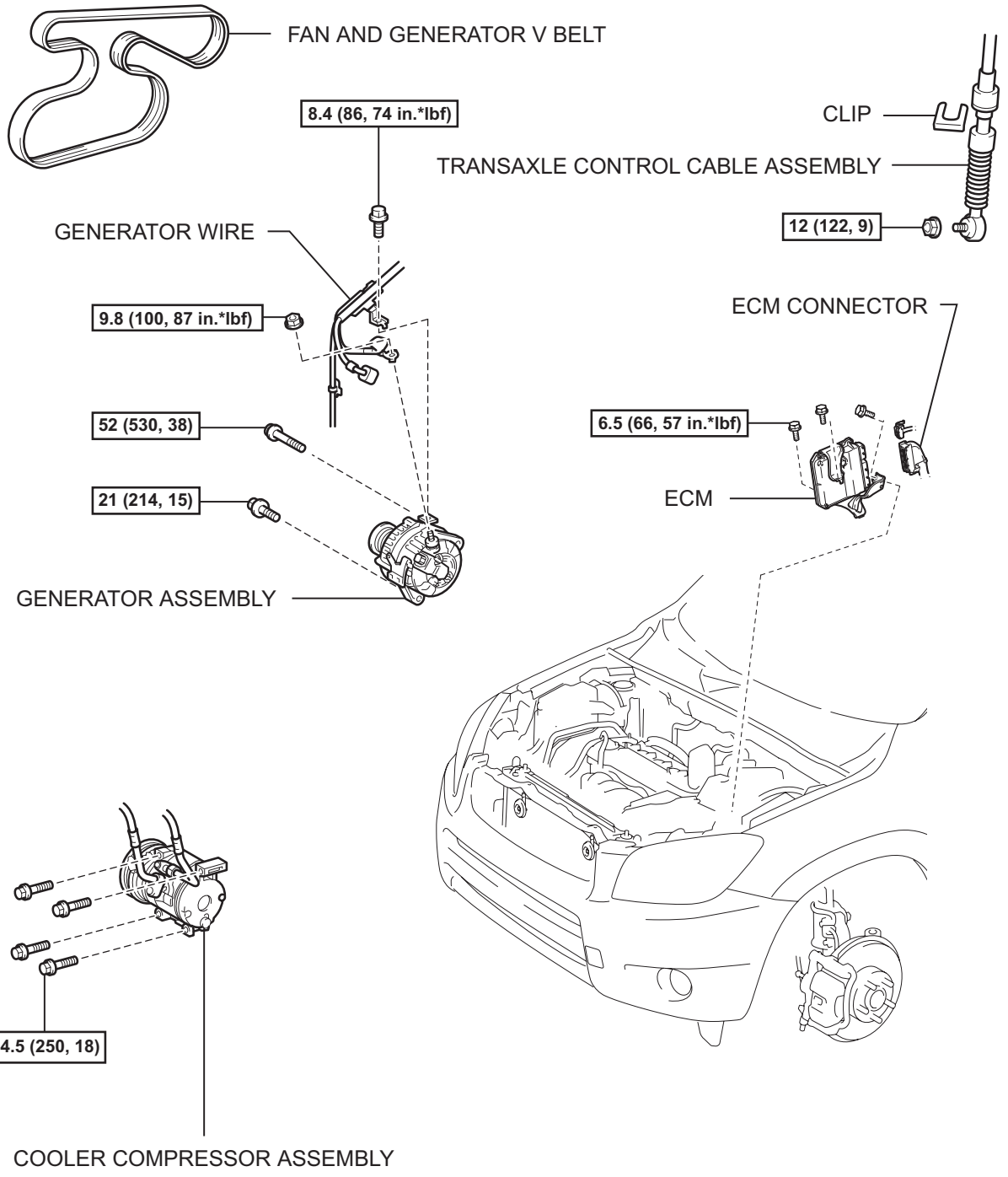

EM

N*m (kgf*cm, ft.*lbf) : Specified torque

T

A114360E02

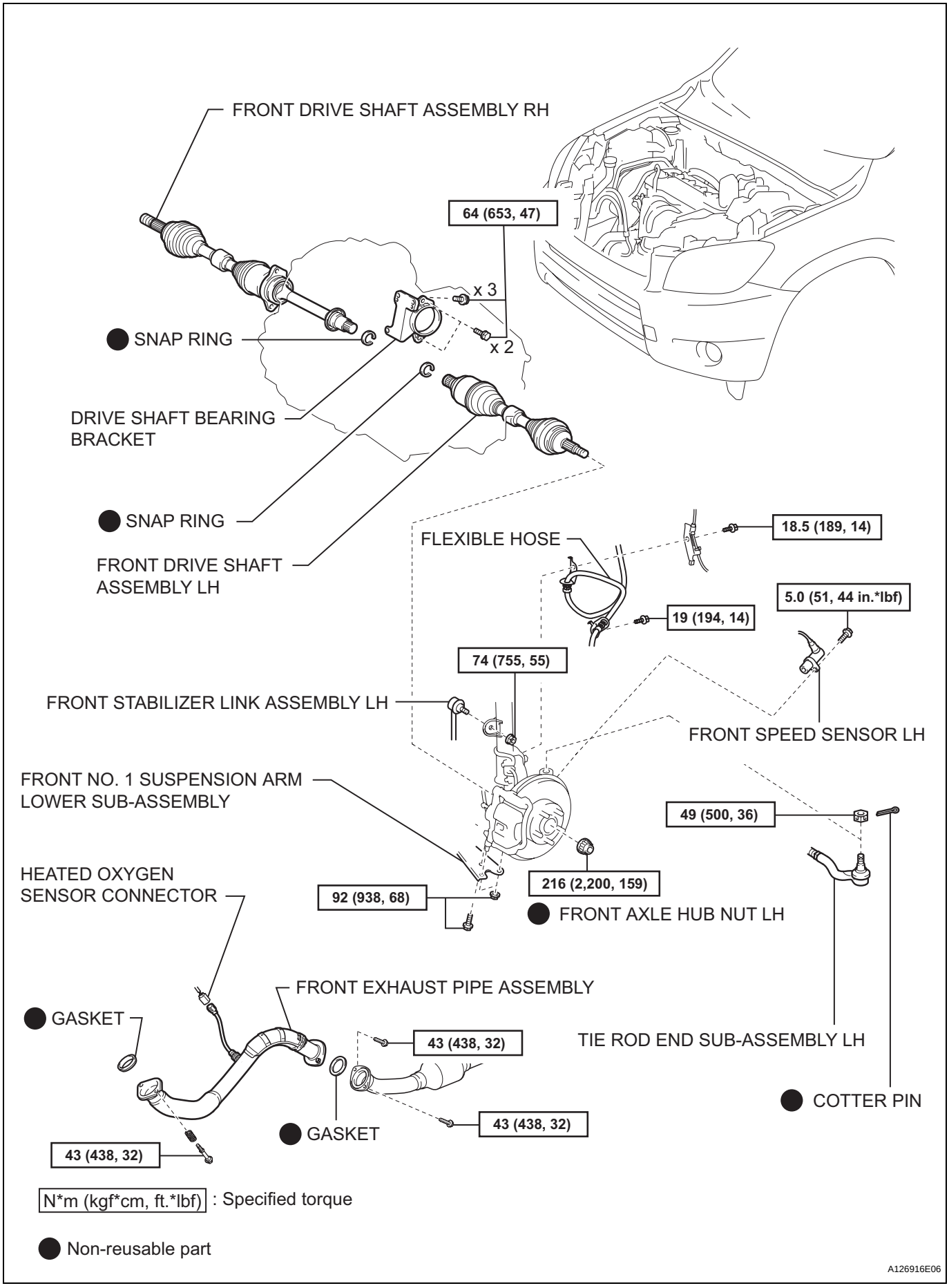
FRONT DRIVE SHAFT ASSEMBLY RH
64 (653, 47)
x 3
x 2
SNAP RING
DRIVE SHAFT BEARING BRACKET
SNAP RING
FRONT DRIVE SHAFT ASSEMBLY LH
FLEXIBLE HOSE
18.5 (189, 14)
19 (194, 14)
5.0 (51, 44 in.*lbf)
74 (755, 55)
FRONT STABILIZER LINK ASSEMBLY LH
FRONT SPEED SENSOR LH
FRONT NO. 1 SUSPENSION ARM LOWER SUB-ASSEMBLY
49 (500, 36)
HEATED OXYGEN SENSOR CONNECTOR
92 (938, 68)
216 (2,200, 159)
FRONT AXLE HUB NUT LH
FRONT EXHAUST PIPE ASSEMBLY
GASKET
43 (438, 32)
TIE ROD END SUB-ASSEMBLY LH
COTTER PIN
GASKET
43 (438, 32)
43 (438, 32)
N*m (kgf*cm, ft.*lbf) : Specified torque
Non-reusable part
A126916E06

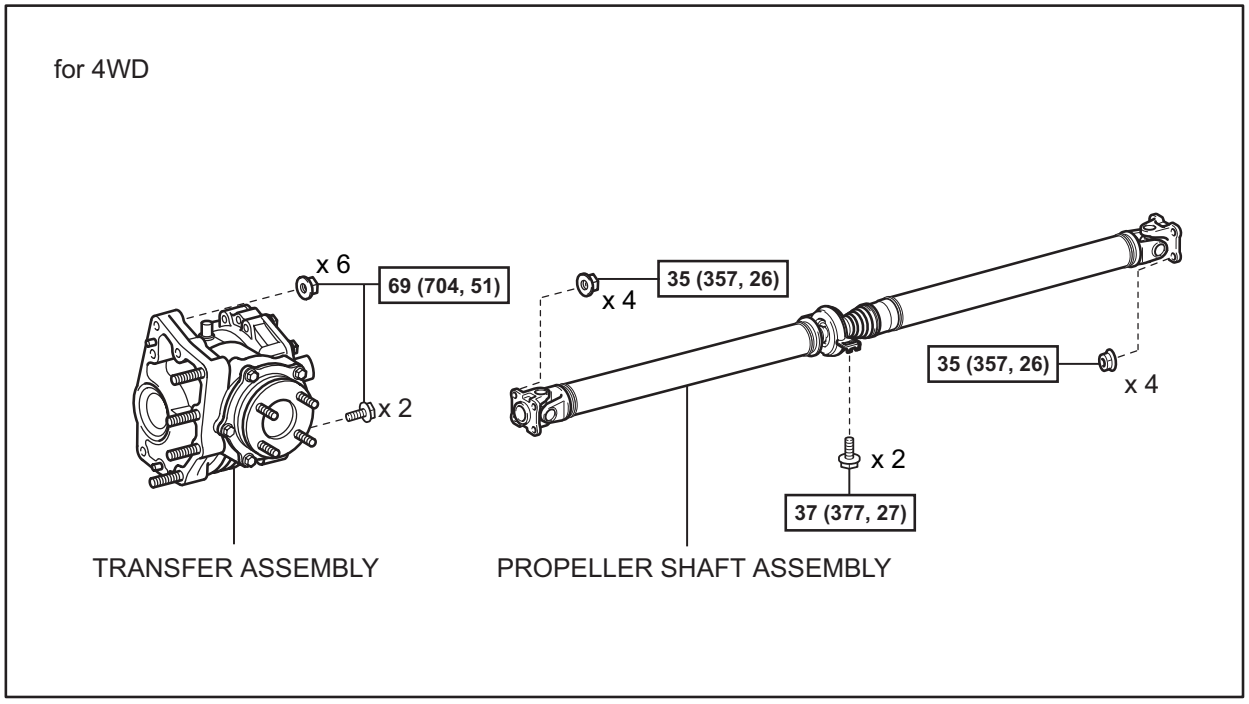

EM

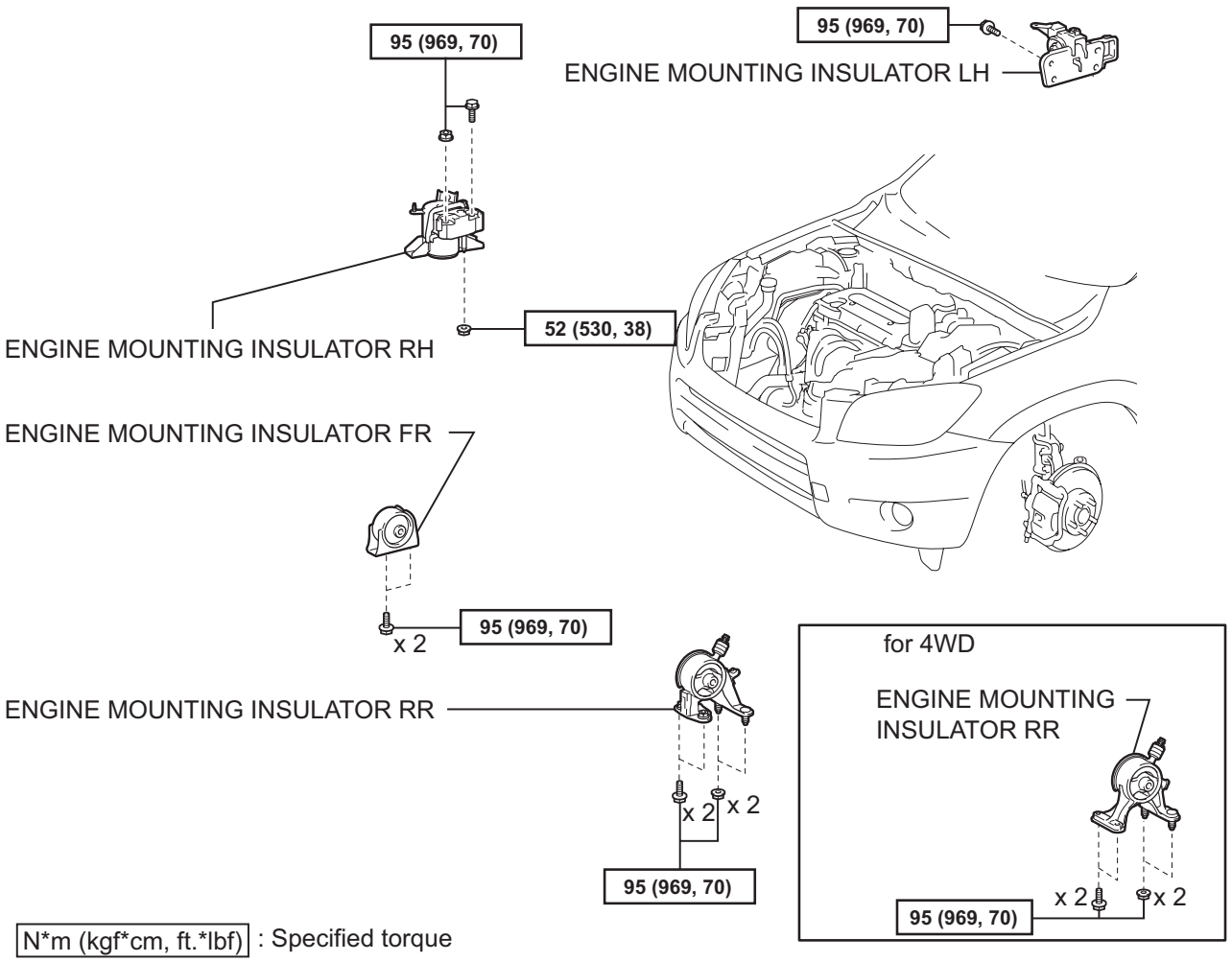

P

A126920E04

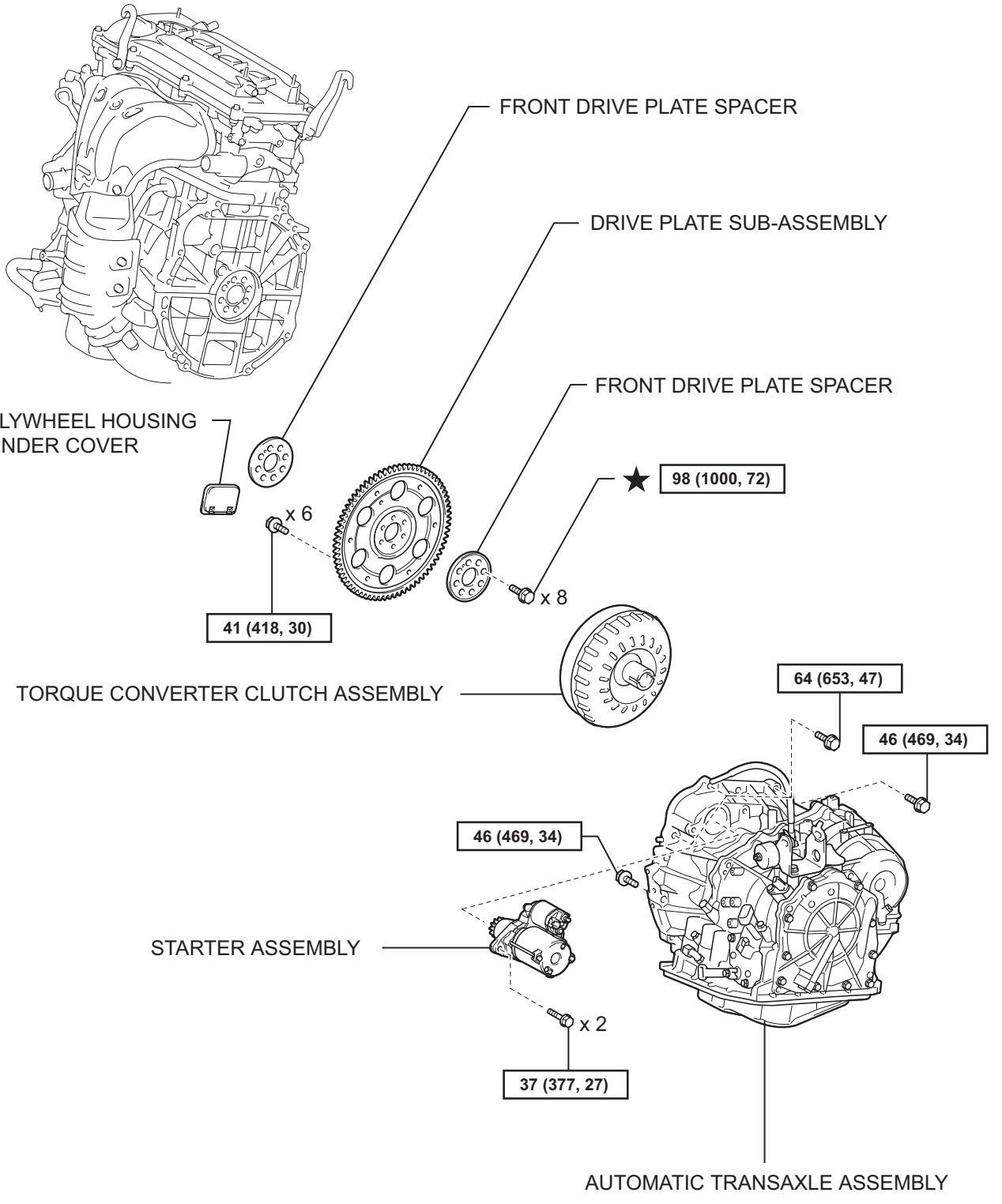

N*m (kgf*cm, ft.*lbf) : Specified torque

★ Precoated part

P

A124380E04

EM

ENGINE UNIT

COMPONENTS

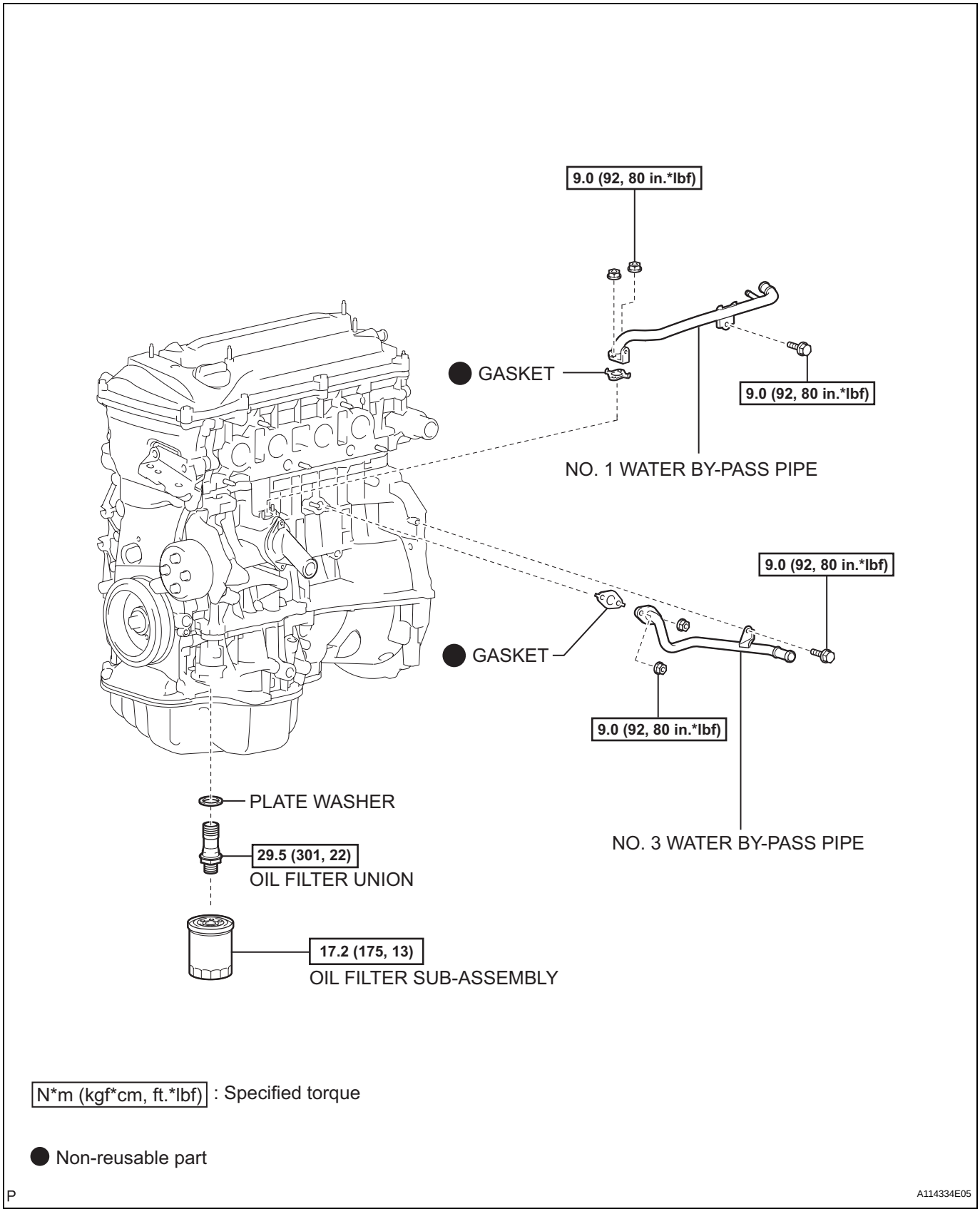

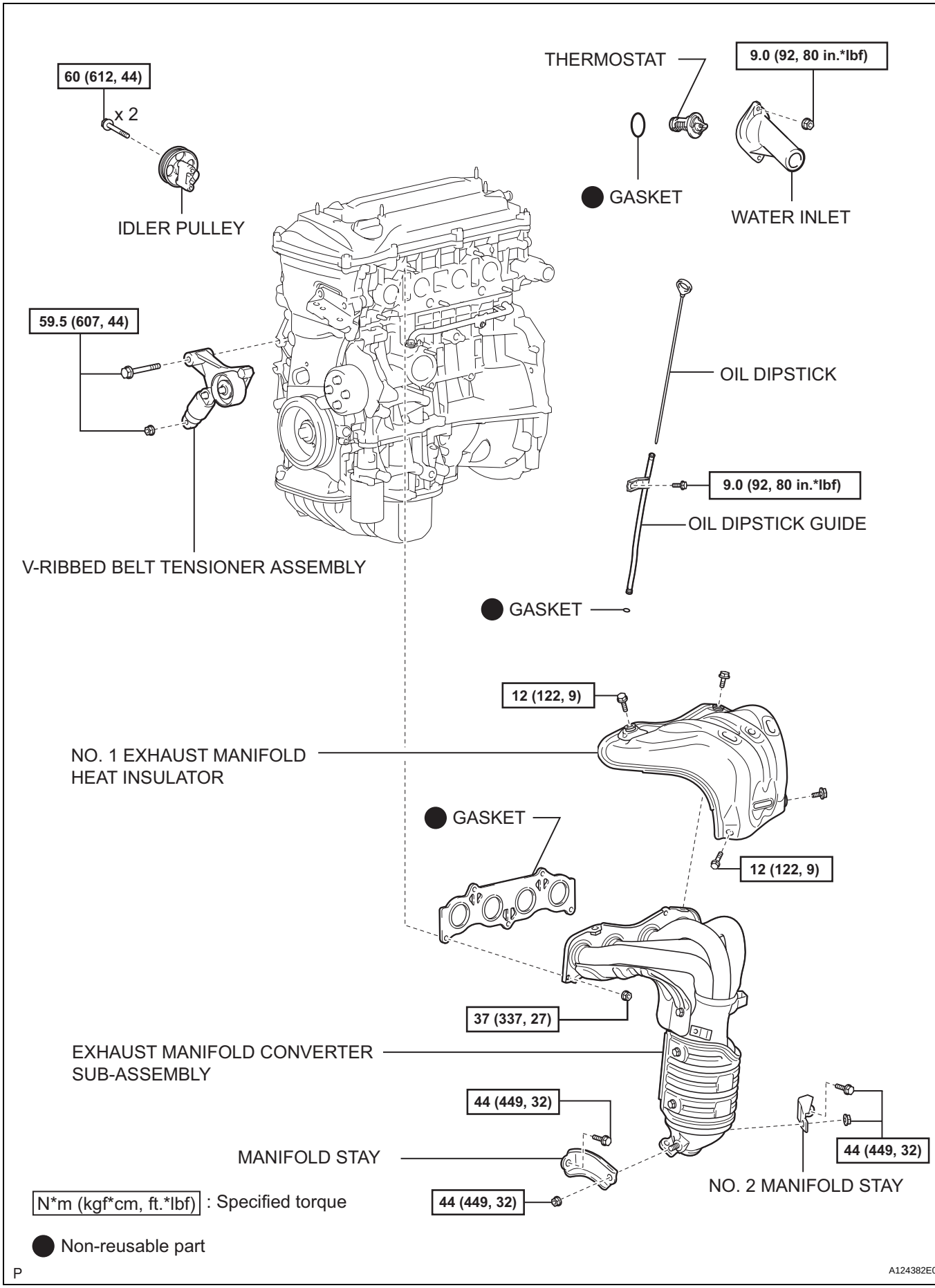
60 (612, 44)
x 2
IDLER PULLEY
THERMOSTAT
9.0 (92, 80 in.*lbf)
GASKET
WATER INLET
59.5 (607, 44)
OIL DIPSTICK
9.0 (92, 80 in.*lbf)
OIL DIPSTICK GUIDE
V-RIBBED BELT TENSIONER ASSEMBLY
GASKET
12 (122, 9)
NO. 1 EXHAUST MANIFOLD HEAT INSULATOR
GASKET
12 (122, 9)
37 (337, 27)
EXHAUST MANIFOLD CONVERTER SUB-ASSEMBLY
44 (449, 32)
MANIFOLD STAY
44 (449, 32)
44 (449, 32)
NO. 2 MANIFOLD STAY
N*m (kgf*cm, ft.*lbf) : Specified torque
Non-reusable part
P
A124382E03

EM

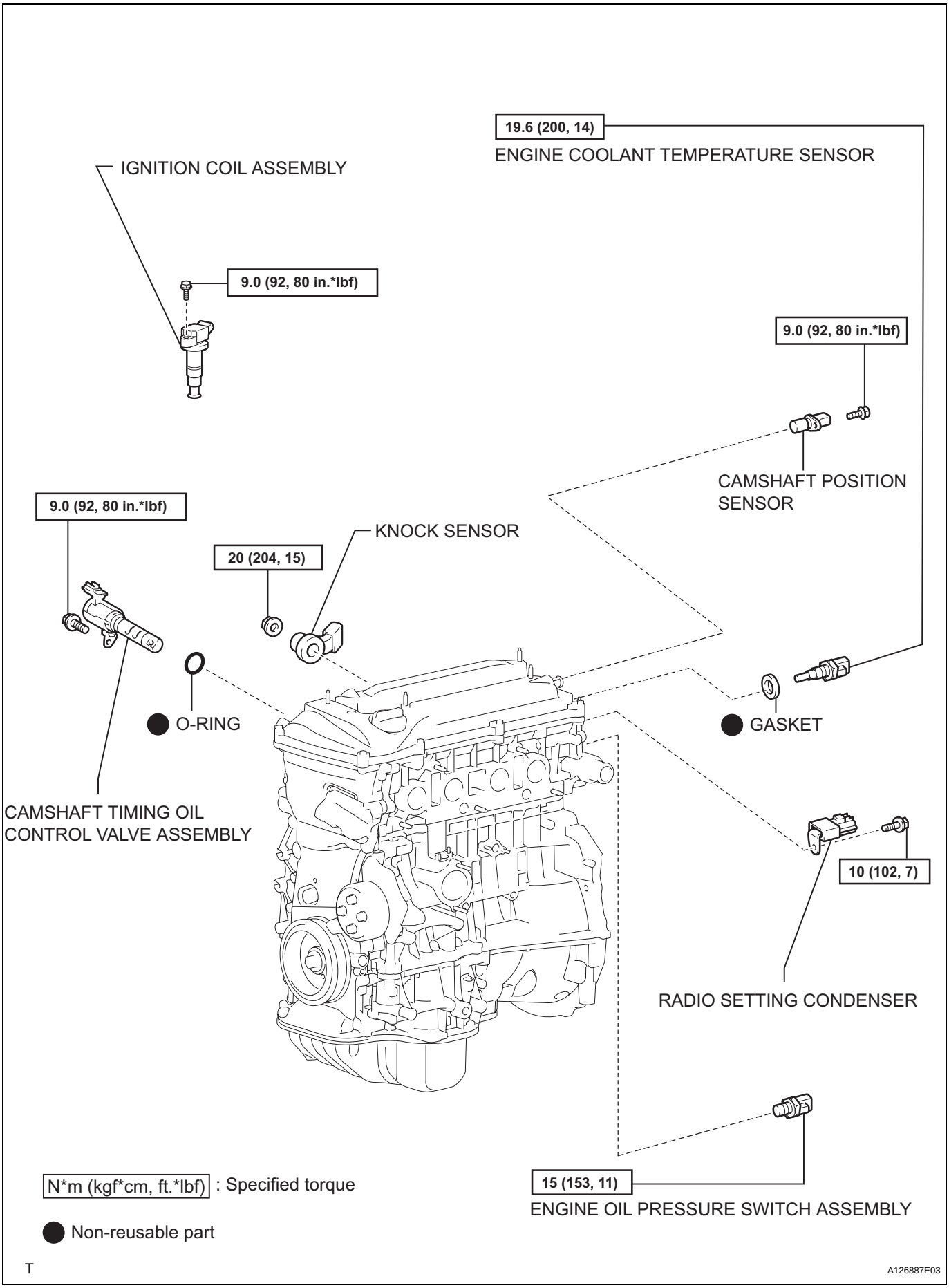
19.6 (200, 14)
ENGINE COOLANT TEMPERATURE SENSOR
IGNITION COIL ASSEMBLY
9.0 (92, 80 in.*lbf)
9.0 (92, 80 in.*lbf)
CAMSHAFT POSITION SENSOR
9.0 (92, 80 in.*lbf)
KNOCK SENSOR
20 (204, 15)
O-RING
GASKET
CAMSHAFT TIMING OIL CONTROL VALVE ASSEMBLY
10 (102, 7)
RADIO SETTING CONDENSER
15 (153, 11)
ENGINE OIL PRESSURE SWITCH ASSEMBLY
N*m (kgf*cm, ft.*lbf) : Specified torque
Non-reusable part
T
A126887E03

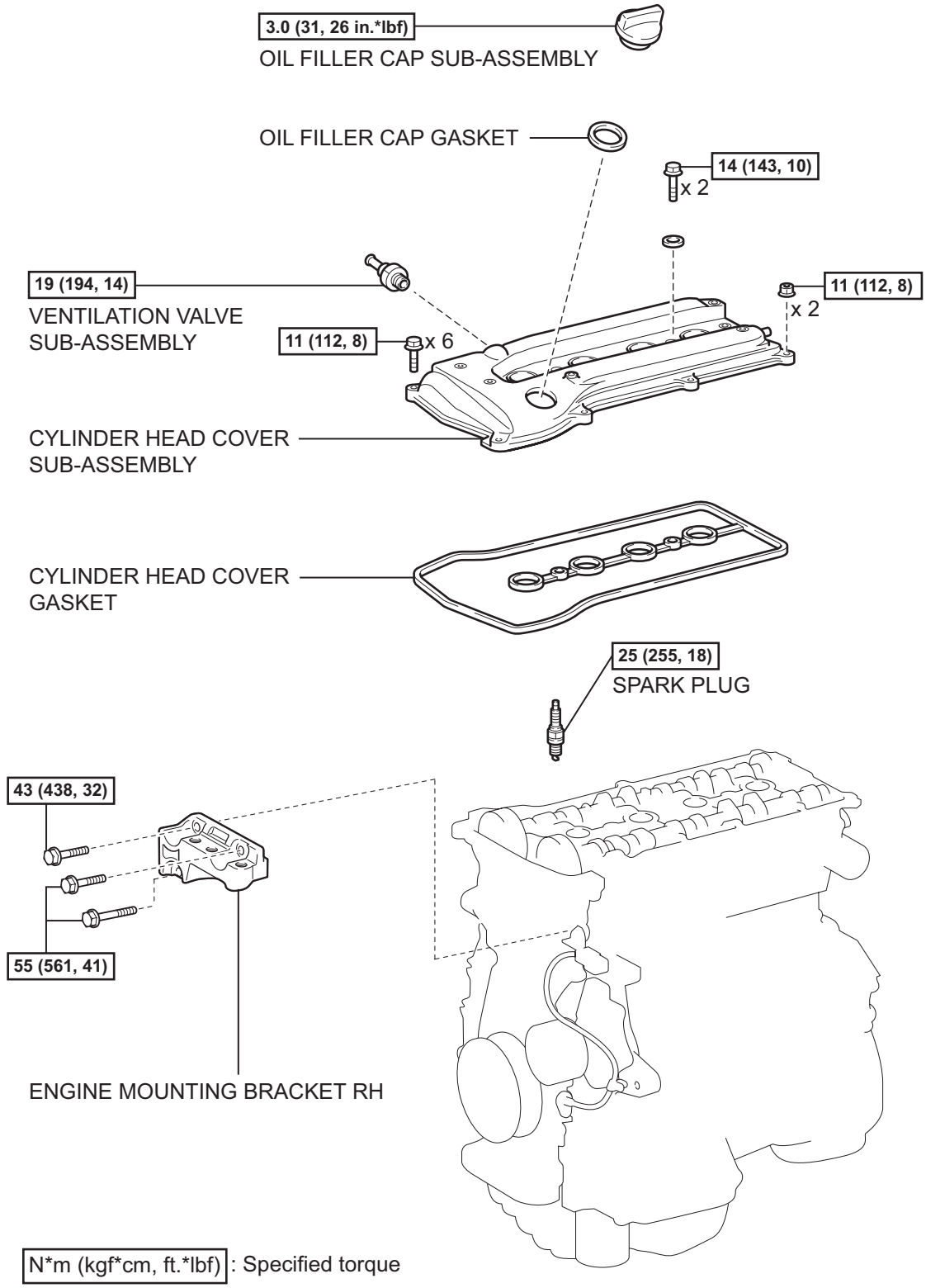
3.0 (31, 26 in.*lbf)
OIL FILLER CAP SUB-ASSEMBLY
OIL FILLER CAP GASKET
14 (143, 10)
x 2
19 (194, 14)
VENTILATION VALVE SUB-ASSEMBLY
11 (112, 8)
x 6
11 (112, 8)
x 2
CYLINDER HEAD COVER SUB-ASSEMBLY
CYLINDER HEAD COVER GASKET
25 (255, 18)
SPARK PLUG
43 (438, 32)
55 (561, 41)
ENGINE MOUNTING BRACKET RH
N*m (kgf*cm, ft.*lbf) : Specified torque
T
A132514E01

EM

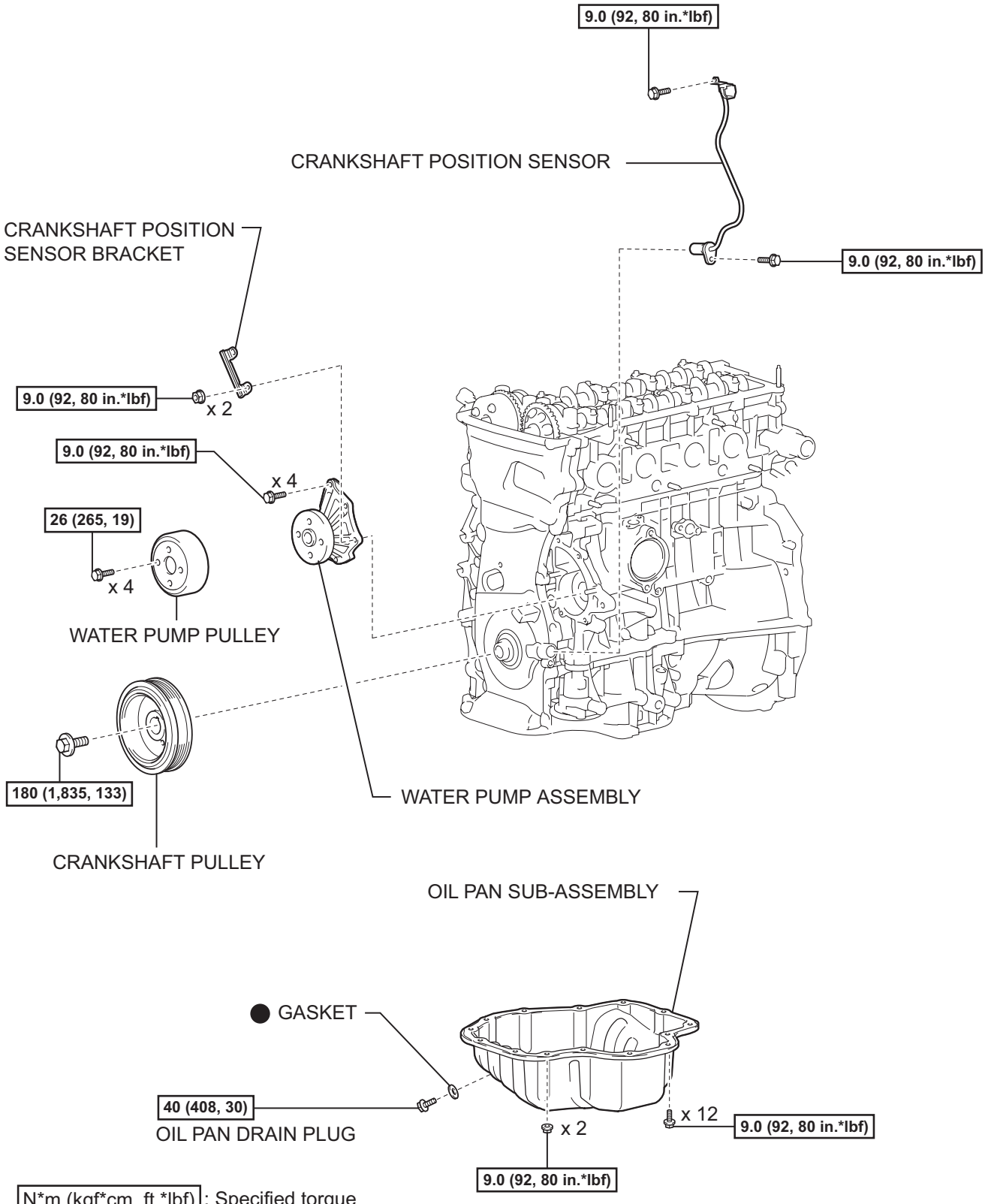
9.0 (92, 80 in.*lbf)
CRANKSHAFT POSITION SENSOR
CRANKSHAFT POSITION SENSOR BRACKET
9.0 (92, 80 in.*lbf)
9.0 (92, 80 in.*lbf)
x 2
9.0 (92, 80 in.*lbf)
x 4
26 (265, 19)
x 4
WATER PUMP PULLEY
180 (1,835, 133)
WATER PUMP ASSEMBLY
CRANKSHAFT PULLEY
OIL PAN SUB-ASSEMBLY
GASKET
40 (408, 30)
OIL PAN DRAIN PLUG
x 2
x 12
9.0 (92, 80 in.*lbf)
9.0 (92, 80 in.*lbf)
N*m (kgf*cm, ft.*lbf) : Specified torque
Non-reusable part
P
A124409E02

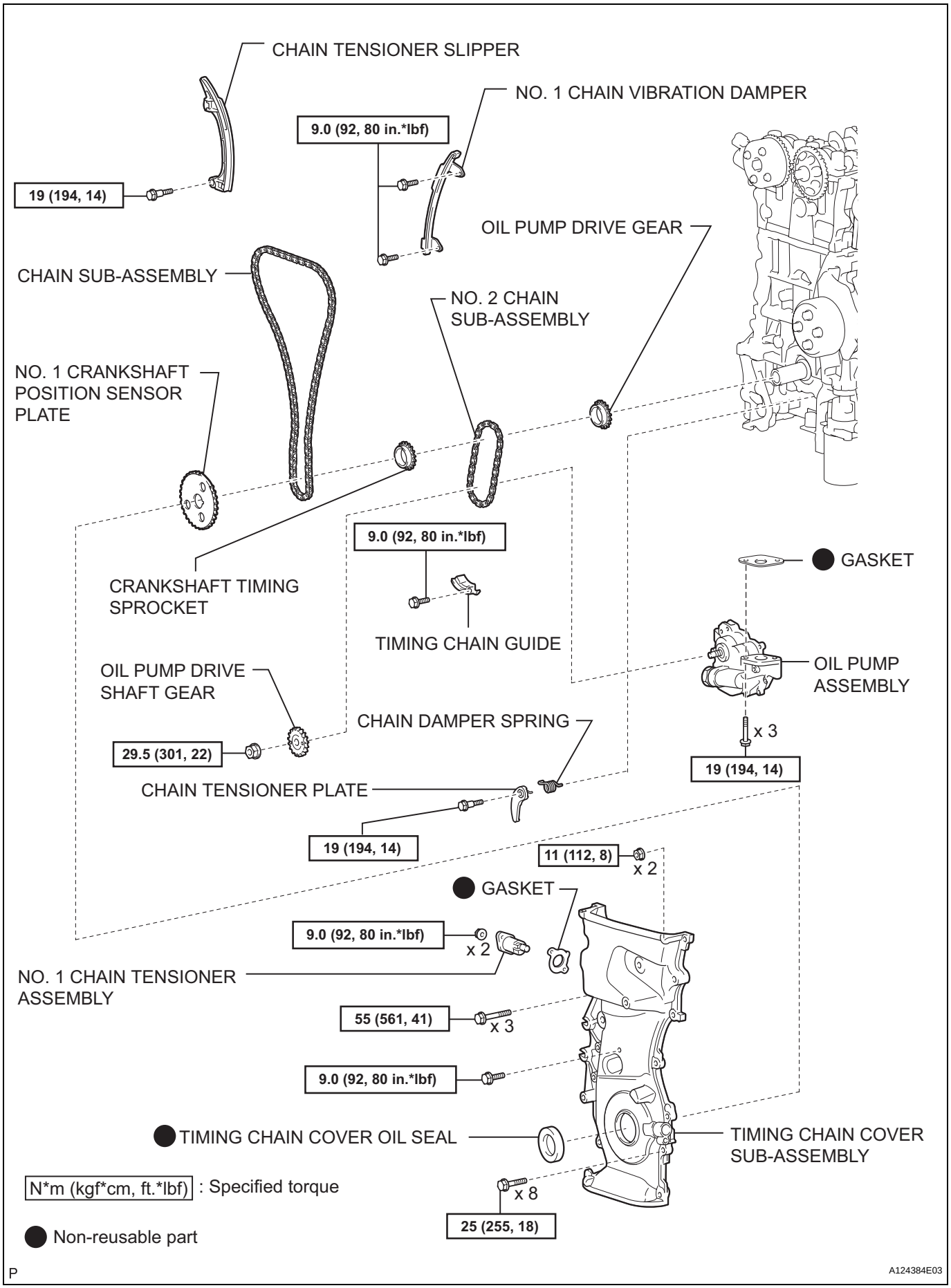
CHAIN TENSIONER SLIPPER
NO. 1 CHAIN VIBRATION DAMPER
9.0 (92, 80 in.*lbf)
19 (194, 14)
OIL PUMP DRIVE GEAR
CHAIN SUB-ASSEMBLY
NO. 2 CHAIN SUB-ASSEMBLY
NO. 1 CRANKSHAFT POSITION SENSOR PLATE
9.0 (92, 80 in.*lbf)
GASKET
CRANKSHAFT TIMING SPROCKET
TIMING CHAIN GUIDE
OIL PUMP ASSEMBLY
OIL PUMP DRIVE SHAFT GEAR
CHAIN DAMPER SPRING
x 3
29.5 (301, 22)
19 (194, 14)
CHAIN TENSIONER PLATE
19 (194, 14)
11 (112, 8)
x 2
GASKET
9.0 (92, 80 in.*lbf)
x 2
NO. 1 CHAIN TENSIONER ASSEMBLY
55 (561, 41)
x 3
9.0 (92, 80 in.*lbf)
TIMING CHAIN COVER OIL SEAL
TIMING CHAIN COVER SUB-ASSEMBLY
x 8
25 (255, 18)
N*m (kgf*cm, ft.*lbf) : Specified torque
Non-reusable part
P
A124384E03

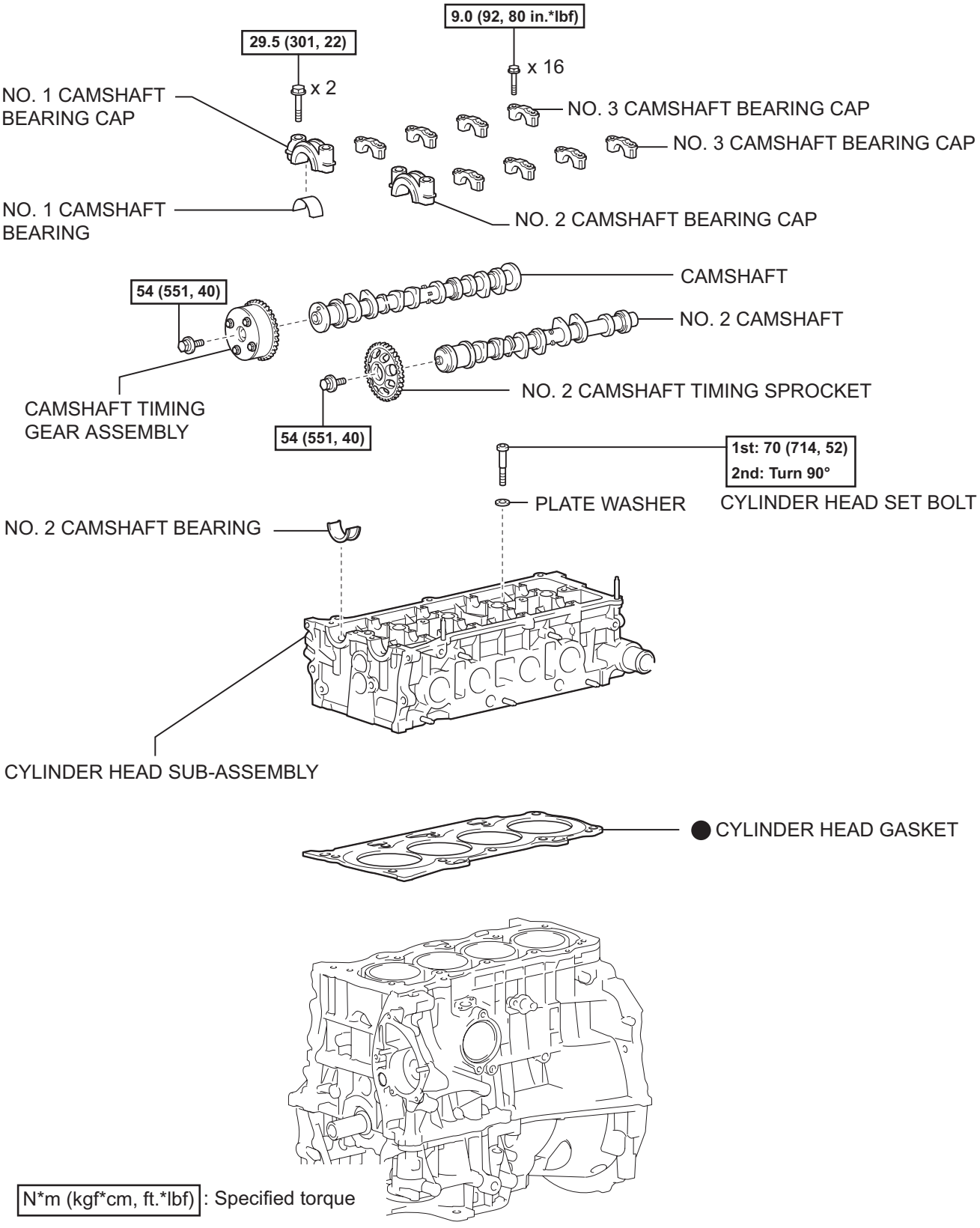

EM

P

A124406E04

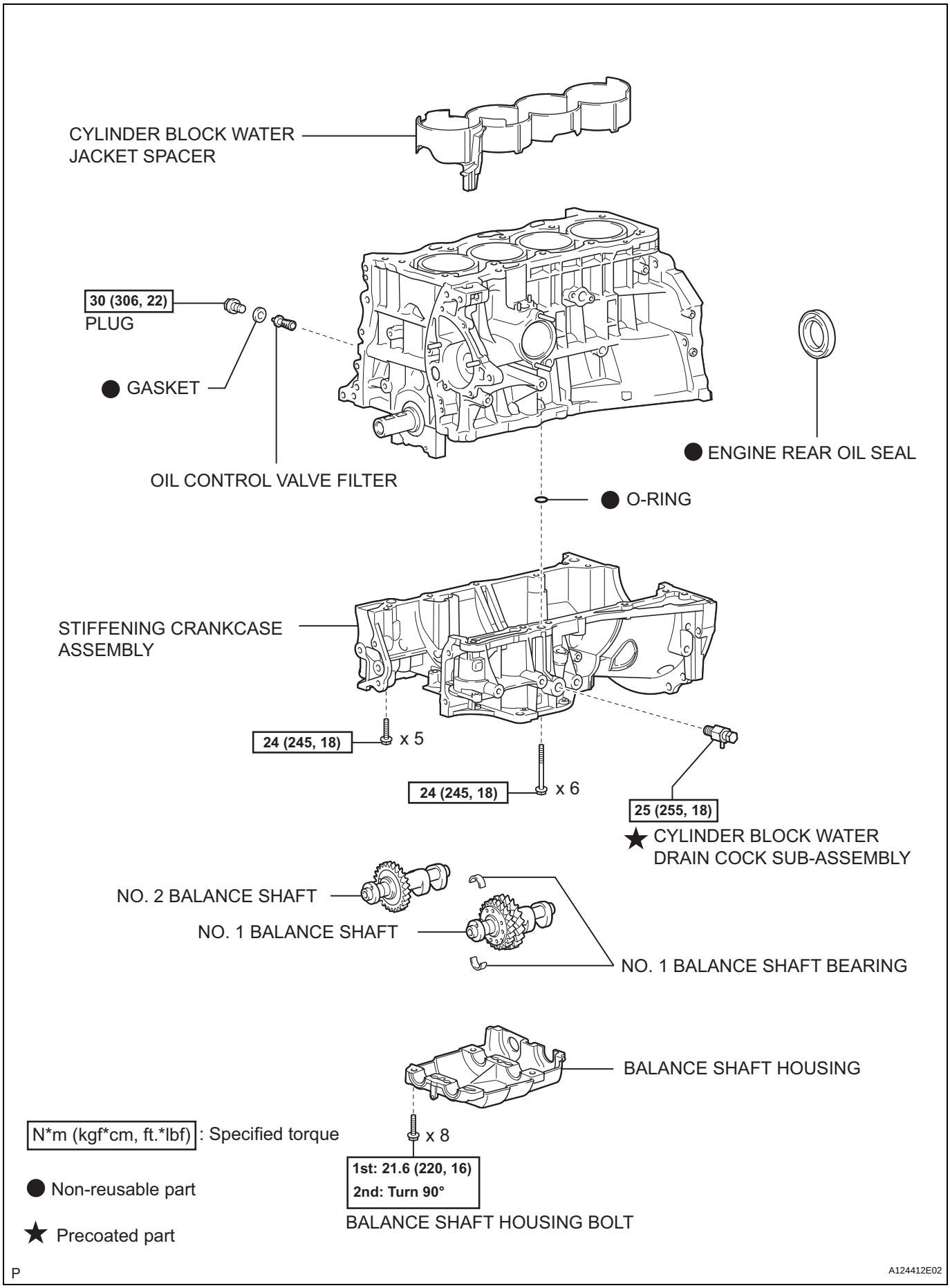
CYLINDER BLOCK WATER JACKET SPACER
30 (306, 22)
PLUG
GASKET
OIL CONTROL VALVE FILTER
ENGINE REAR OIL SEAL
O-RING
STIFFENING CRANKCASE ASSEMBLY
24 (245, 18)
x 5
24 (245, 18)
x 6
25 (255, 18)
CYLINDER BLOCK WATER DRAIN COCK SUB-ASSEMBLY
NO. 2 BALANCE SHAFT
NO. 1 BALANCE SHAFT
NO. 1 BALANCE SHAFT BEARING
BALANCE SHAFT HOUSING
x 8
1st: 21.6 (220, 16)
2nd: Turn 90°
BALANCE SHAFT HOUSING BOLT
N*m (kgf*cm, ft.*lbf) : Specified torque
Non-reusable part
Precoated part
P
A124412E02

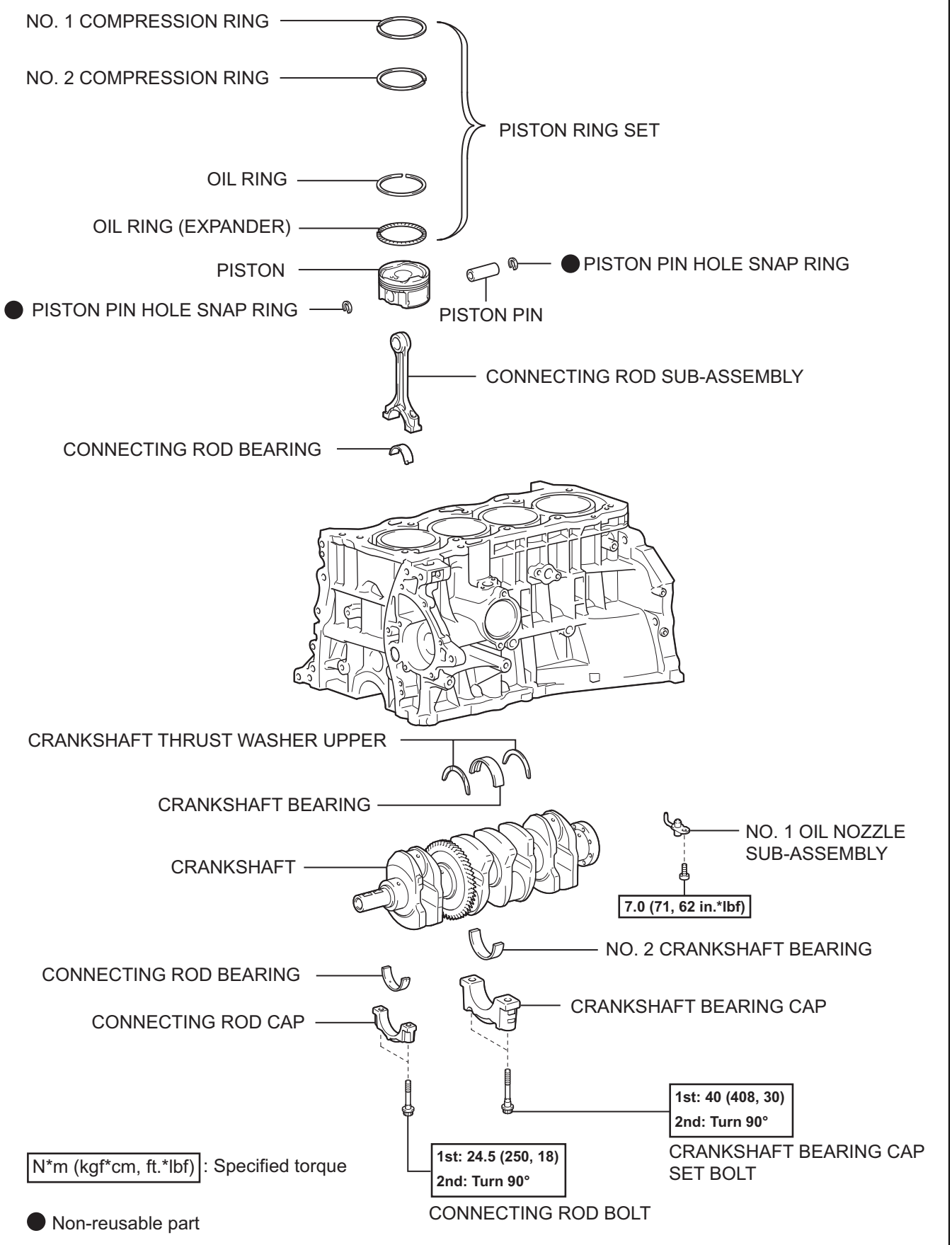
NO. 1 COMPRESSION RING
NO. 2 COMPRESSION RING
PISTON RING SET
OIL RING
OIL RING (EXPANDER)
PISTON
PISTON PIN HOLE SNAP RING
PISTON PIN HOLE SNAP RING
PISTON PIN
CONNECTING ROD SUB-ASSEMBLY
CONNECTING ROD BEARING
CRANKSHAFT THRUST WASHER UPPER
CRANKSHAFT BEARING
CRANKSHAFT
NO. 1 OIL NOZZLE SUB-ASSEMBLY
7.0 (71, 62 in.*lbf)
NO. 2 CRANKSHAFT BEARING
CONNECTING ROD BEARING
CRANKSHAFT BEARING CAP
CONNECTING ROD CAP
1st: 40 (408, 30)
2nd: Turn 90°
CRANKSHAFT BEARING CAP SET BOLT
1st: 24.5 (250, 18)
2nd: Turn 90°
CONNECTING ROD BOLT
N*m (kgf*cm, ft.*lbf): Specified torque
Non-reusable part
P
A124761E02

REMOVAL

1. **DISCHARGE FUEL SYSTEM PRESSURE (See page FU-9)**
2. **DISCONNECT CABLE FROM NEGATIVE BATTERY TERMINAL**
   CAUTION:
   Wait at least 90 seconds after disconnecting the cable from the negative (-) battery terminal to prevent airbag and seat belt pretensioner activation.
3. **REMOVE HOOD SUB-ASSEMBLY (See page ED-4)**
4. **REMOVE RADIATOR SUPPORT OPENING COVER**
5. **REMOVE BATTERY CLAMP SUB-ASSEMBLY**
   (a) Loosen the bolt and nut, and remove the battery clamp.
6. **REMOVE BATTERY**
7. **REMOVE BATTERY TRAY**
8. **REMOVE FRONT WHEEL**
9. **REMOVE NO. 1 ENGINE UNDER COVER**
10. **REMOVE NO. 2 ENGINE UNDER COVER**
11. **REMOVE FRONT FENDER APRON RH**
12. **REMOVE NO. 1 ENGINE COVER (See page EM-22)**
13. **DRAIN ENGINE COOLANT (See page CO-6)**
14. **DRAIN AUTOMATIC TRANSAXLE FLUID**
    (a) Drain automatic transaxle fluid for U241E (2WD) (see page AX-146).
    (b) Drain automatic transaxle fluid for U140F (4WD) (see page AX-147).
15. **REMOVE RADIATOR ASSEMBLY**
    (a) Remove the radiator (see page CO-29).
16. **REMOVE RADIATOR RESERVOIR**
    (a) Remove the 2 bolts and reservoir.
17. **REMOVE PURGE VSV (See page EC-15)**
18. **REMOVE AIR CLEANER CAP (See page ES-411)**
19. **REMOVE AIR CLEANER FILTER ELEMENT SUB-ASSEMBLY**

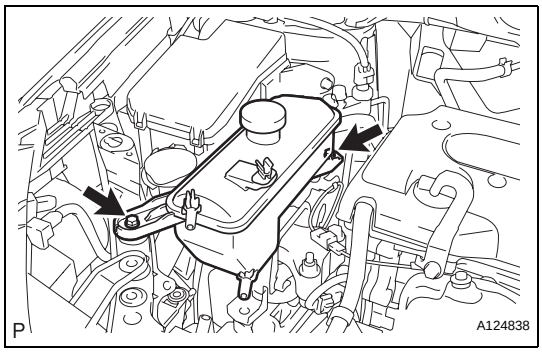

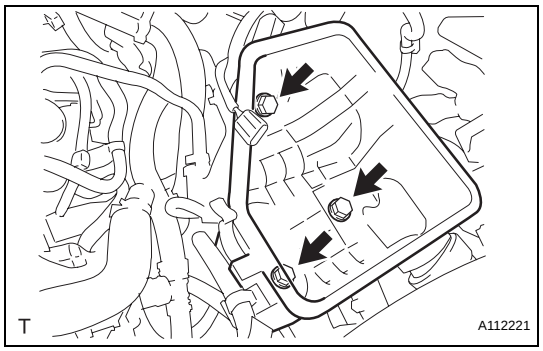

20. REMOVE AIR CLEANER CASE SUB-ASSEMBLY

(a) Remove the 3 bolts from the air cleaner case.
(b) Disconnect the case from the NO. 1 air cleaner inlet.

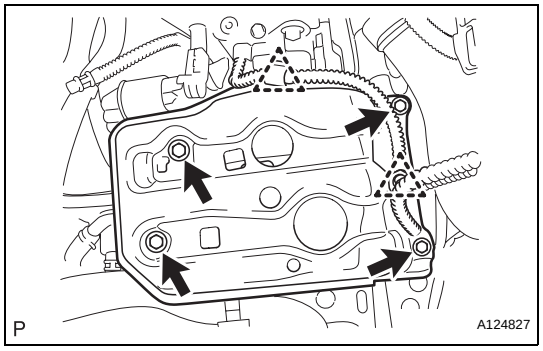

21. REMOVE FRONT BATTERY CARRIER

(a) Disconnect the 2 clamps of the engine wire.
(b) Remove the 4 bolts and front battery carrier.

EM

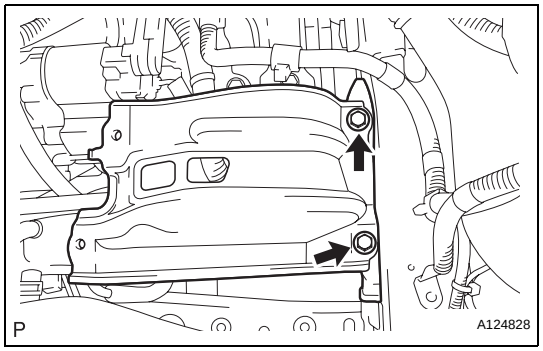

22. REMOVE BATTERY BRACKET REINFORCEMENT

(a) Remove the 2 bolts and battery bracket reinforcement.

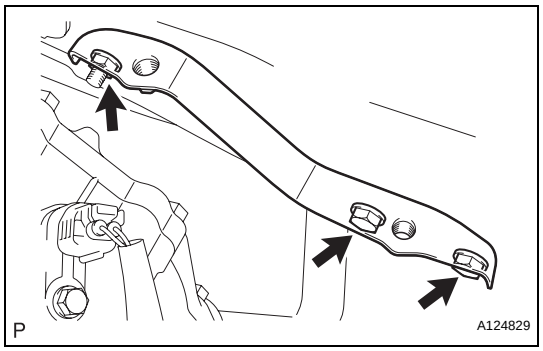

23. REMOVE BATTERY CARRIER BRACKET

(a) Remove the 2 bolts, nut and battery carrier bracket.

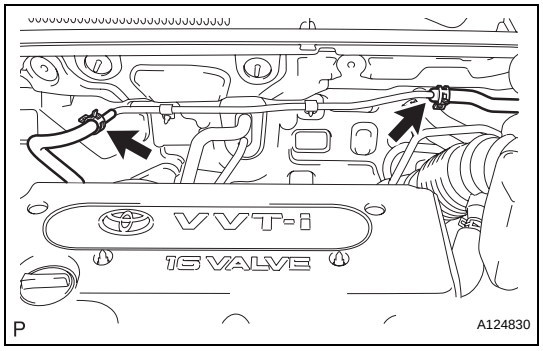

24. DISCONNECT UNION TO CONNECTOR TUBE HOSE

(a) Disconnect the 2 union to connector tube hoses from the booster vacuum tube.

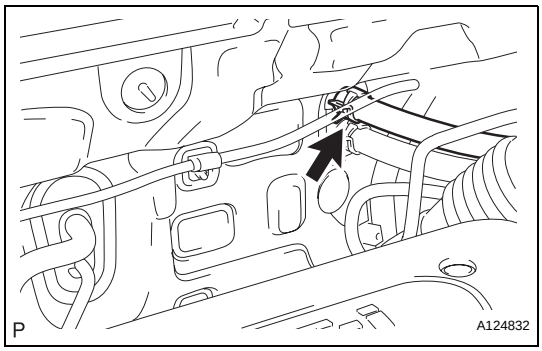

25. DISCONNECT HEATER WATER INLET HOSE

(a) Disconnect the heater water inlet hose from the heater unit.

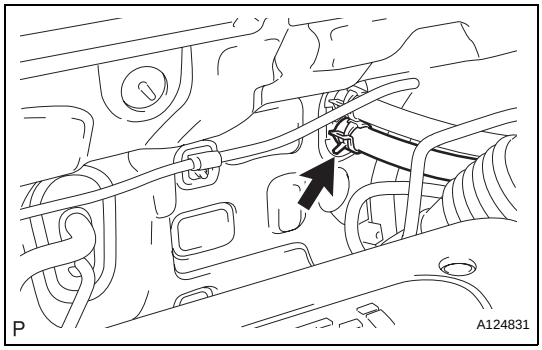

26. DISCONNECT HEATER WATER OUTLET HOSE

(a) Disconnect the heater water outlet hose from the heater unit.

27. DISCONNECT FUEL TUBE (See page FU-10)

28. REMOVE THROTTLE BODY (See page ES-412)

29. DISCONNECT NO. 2 VENTILATION HOSE (See page FU-10)

30. REMOVE FUEL DELIVERY PIPE SUB-ASSEMBLY (See page FU-10)

31. REMOVE INTAKE MANIFOLD (See page ES-419)

32. REMOVE INTAKE MANIFOLD INSULATOR (See page ES-420)

33. REMOVE TRANSAXLE CONTROL CABLE ASSEMBLY

(a) Remove the transaxle control cable for U241E (2WD) (see page AX-129).

(b) Remove the transaxle control cable for U140F (4WD) (see page AX-129).

34. REMOVE FRONT SUSPENSION MEMBER REINFORCEMENT RH (See page EM-6)

35. REMOVE FAN AND GENERATOR V BELT (See page EM-6)

36. REMOVE GENERATOR ASSEMBLY (See page CH-9)

37. REMOVE COOLER COMPRESSOR ASSEMBLY

(a) Remove the cooler compressor (see page AC-216).
HINT:
Disconnect the compressor together with the low-pressure and high-pressure hoses, then secure it to the vehicle side using rope.

38. REMOVE ECM (See page ES-429)

39. DISCONNECT ENGINE WIRE

(a) Remove the engine room relay block cover.

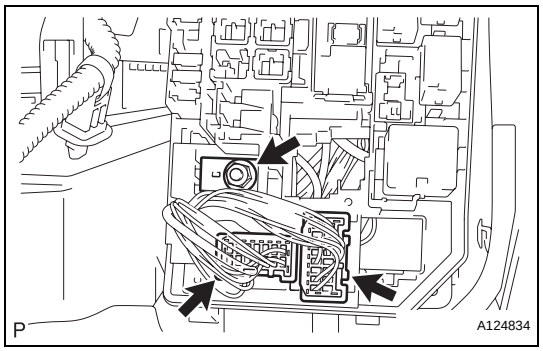

(b) Remove the nut and disconnect the 2 engine wire connectors.

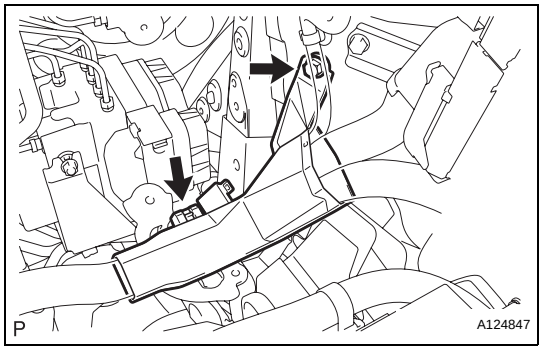

(c) Remove the bolt and engine wire cover. Then disconnect the engine wire from the engine wire cover.

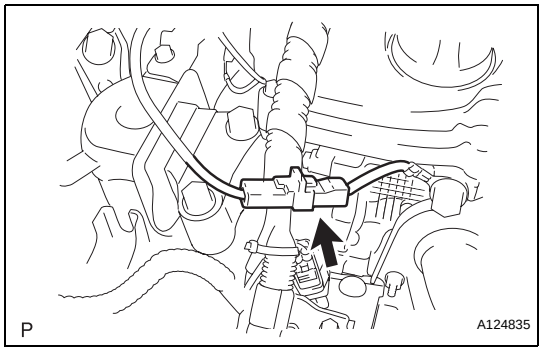

(d) Disconnect the ground cable connector.

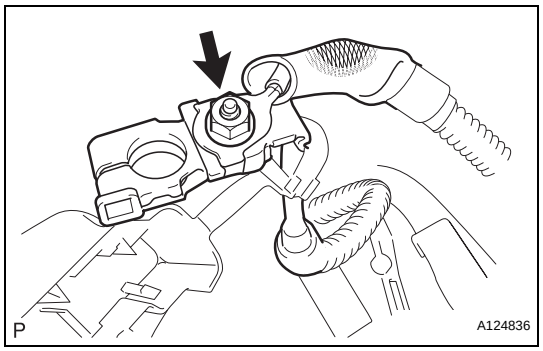

(e) Remove the nut from the positive (+) battery terminal to disconnect the engine wire.

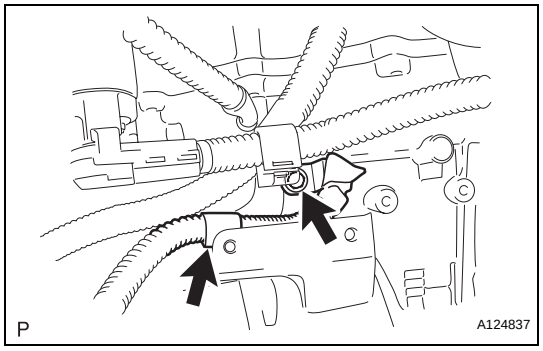

(f) Disconnect the ground cable from the clamp located near the starter.
(g) Remove the bolt and ground cable located near the starter.

40. REMOVE FRONT EXHAUST PIPE ASSEMBLY (See page EX-3)

41. REMOVE FRONT DRIVE SHAFT ASSEMBLY

(a) Remove the front drive shaft (for 2WD) (see page DS-7).

(b) Remove the front drive shaft (for 4WD) (see page DS-40).

42. REMOVE PROPELLER SHAFT ASSEMBLY (for 4WD) (See page PR-3)

43. REMOVE ENGINE MOUNTING INSULATOR FR

(a) Remove the through bolt and nut.

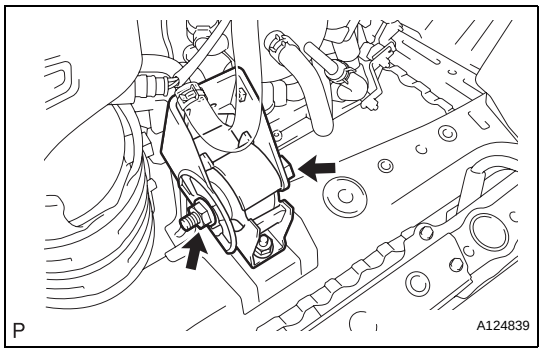

(b) Remove the 2 bolts and engine mounting insulator FR.

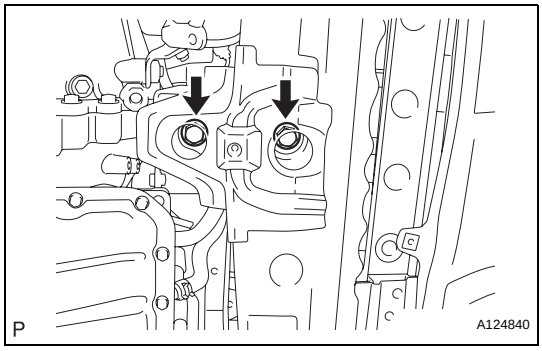

44. REMOVE ENGINE MOUNTING INSULATOR RR

(a) Remove the through bolt.

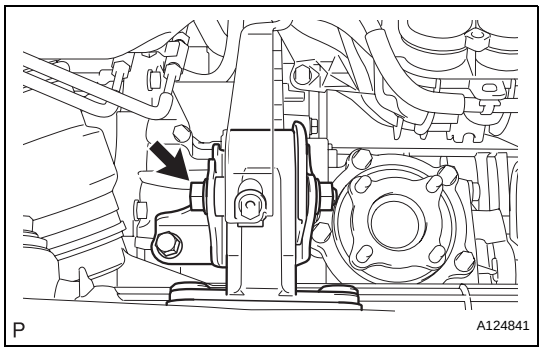

(b) Remove the 2 nuts, 2 bolts and engine mounting insulator RR.

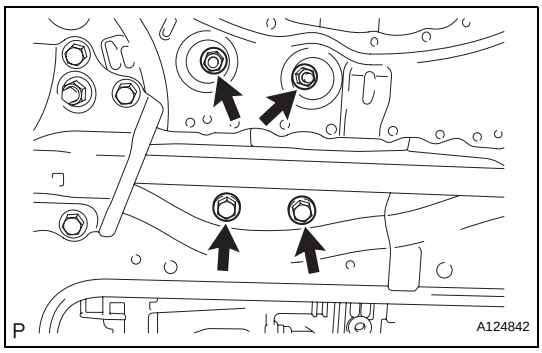

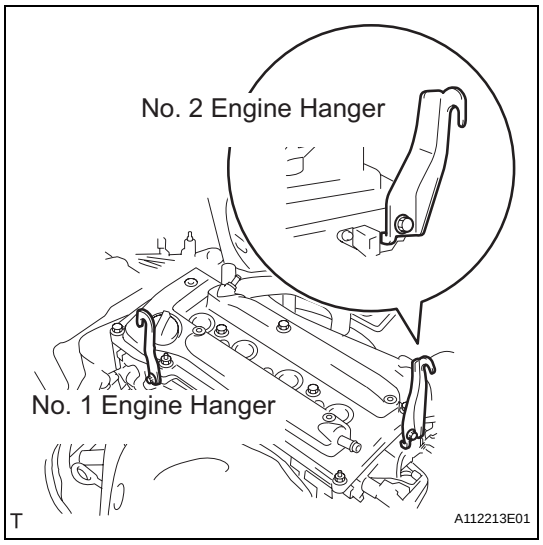

45. REMOVE ENGINE ASSEMBLY WITH TRANSAXLE

(a) Install the No. 1 and No. 2 engine hangers with the bolts as shown in the illustration.
Torque: 38 N*m (387 kgf*cm, 28 ft.*lbf)
Part No.

Item	Part No.
No. 1 engine hanger	12281-28010
No. 2 engine hanger	12282-28010
Bolt	91512-61020

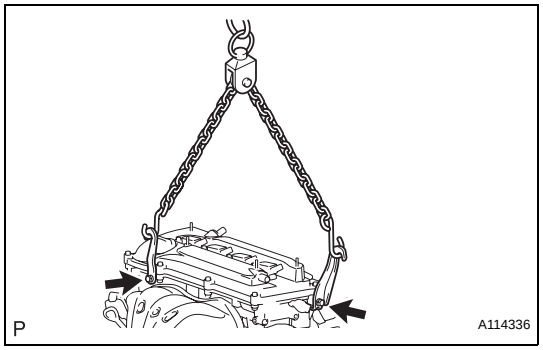

(b) Attach the sling device to the engine hangers and chain block.
(c) Carefully remove the engine with transaxle from the vehicle.

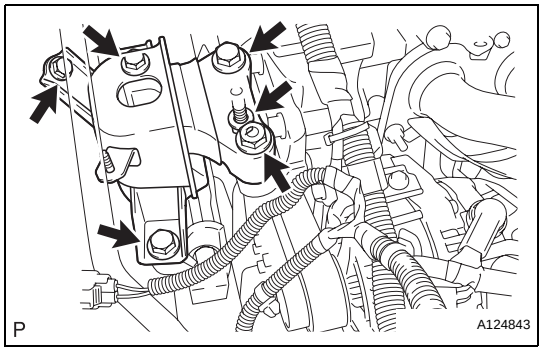

46. REMOVE ENGINE MOUNTING INSULATOR RH

(a) Remove the 2 nuts, 4 bolts and engine mounting insulator RH.

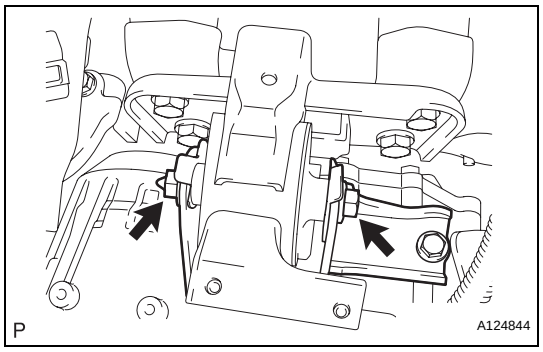

47. REMOVE ENGINE MOUNTING INSULATOR LH

(a) Remove the through bolt and nut.

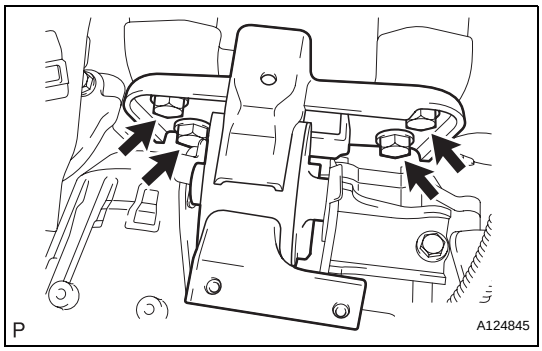

(b) Remove the 4 bolts and engine mounting insulator LH.

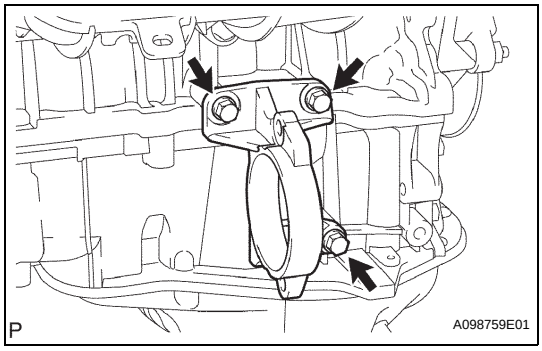

48. REMOVE DRIVE SHAFT BEARING BRACKET (for 2WD)

(a) Remove the 3 bolts and bracket.

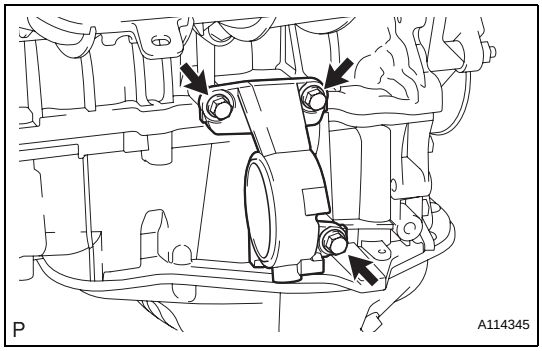

49. REMOVE DRIVE SHAFT BEARING BRACKET (for 4WD)

(a) Remove the 3 bolts and bracket.

50. REMOVE TRANSFER ASSEMBLY (for 4WD) (See page TF-59)

51. REMOVE STARTER ASSEMBLY (See page ST-7)

52. REMOVE AUTOMATIC TRANSAXLE ASSEMBLY

(a) Remove the automatic transaxle for U241E (2WD) (see page AX-147).

(b) Remove the automatic transaxle for U140F (4WD) (see page AX-148).

53. REMOVE TORQUE CONVERTER CLUTCH ASSEMBLY

(a) Remove the torque converter clutch for U241E (2WD) (see page AX-148).

(b) Remove the torque converter clutch for U140F (4WD) (see page AX-149).

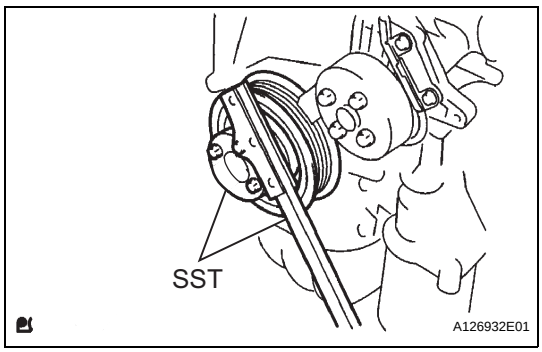

54. REMOVE DRIVE PLATE SUB-ASSEMBLY

(a) Using SST, hold the crankshaft.

SST 09213-54015 (91651-60855), 09330-00021

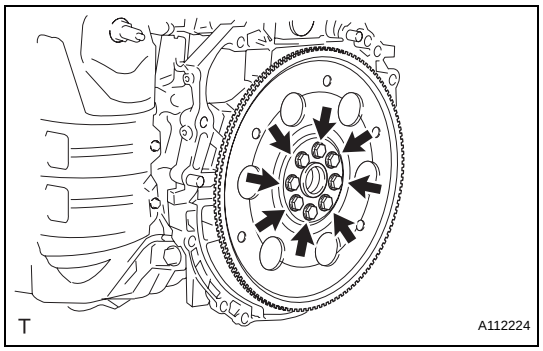

(b) Remove the 8 bolts, rear spacer, drive plate and front spacer.

INSTALLATION

1. INSTALL DRIVE PLATE SUB-ASSEMBLY

(a) Clean the 8 bolts and 8 bolt holes.

(b) Apply adhesive to 2 or 3 threads of the 8 bolts.
Adhesive:
Toyota Genuine Adhesive 1342, Three Bond 1342 or Equivalent

(c) Using SST, hold the crankshaft.
SST 09213-54015 (91651-60855), 09330-00021

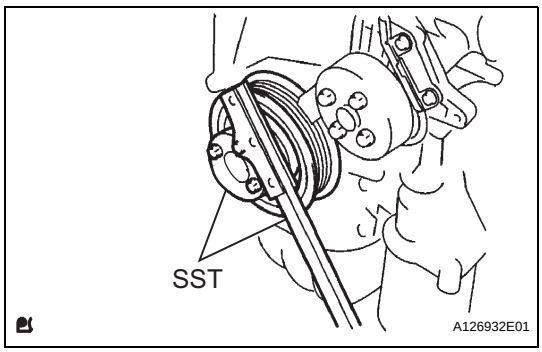

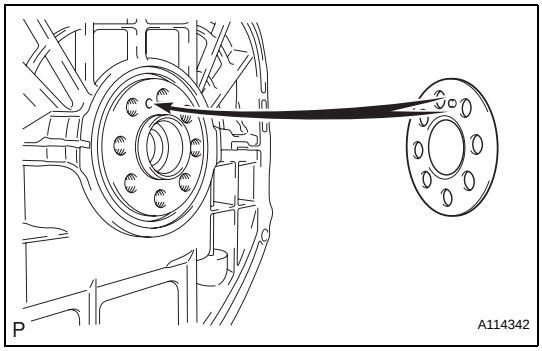

(d) Install the front spacer.
HINT:
Align the pin of the front spacer with the pin hole of the crankshaft.

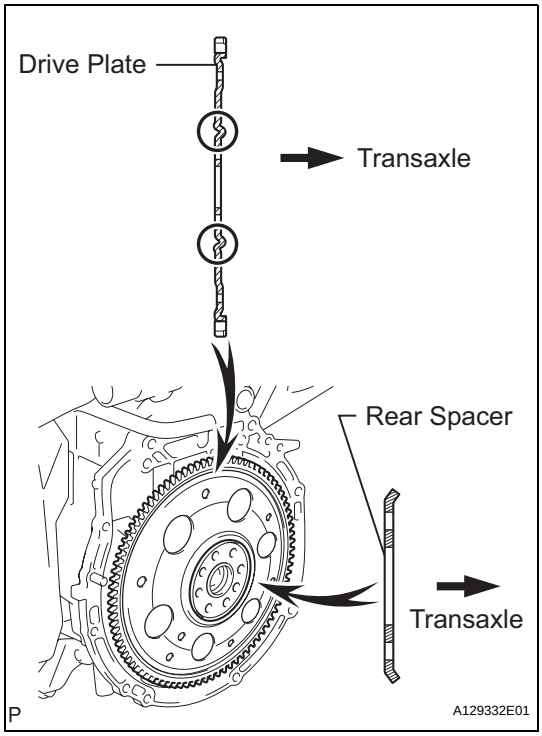

(e) Install the drive plate and rear spacer onto the crankshaft.

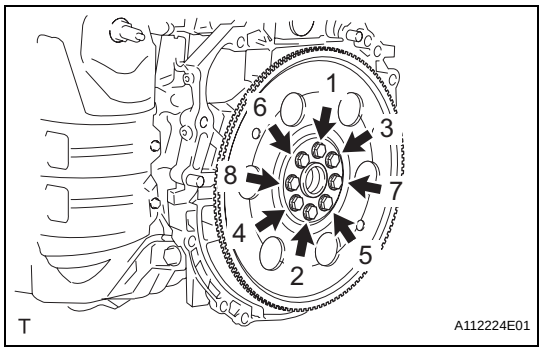

(f) Using several steps, uniformly install and tighten the 8 bolts in the sequence shown in the illustration.
Torque: 98 N*m (1,000 kgf*cm, 72 ft.*lbf)

2. INSTALL TORQUE CONVERTER CLUTCH ASSEMBLY

(a) Install the torque converter clutch for U241E (2WD) (see page AX-148).

(b) Install the torque converter clutch for U140F (4WD) (see page AX-149).

3. INSTALL AUTOMATIC TRANSAXLE ASSEMBLY

(a) Install the automatic transaxle for U241E (2WD) (see page AX-149).

(b) Install the automatic transaxle for U140F (4WD) (see page AX-150).

4. INSTALL STARTER ASSEMBLY (See page ST-14)

5. INSTALL TRANSFER ASSEMBLY (for 4WD) (See page TF-75)

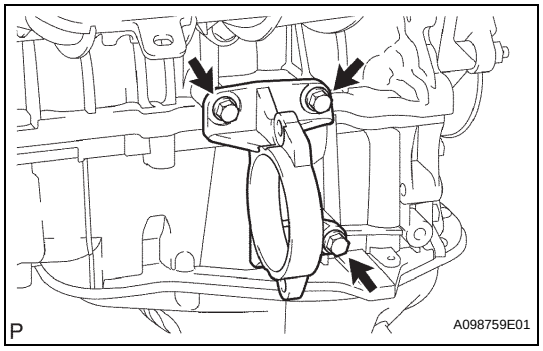

6. INSTALL DRIVE SHAFT BEARING BRACKET (for 2WD)

(a) Install the bracket with the 3 bolts.
Torque: 64 N*m (653 kgf*cm, 47 ft.*lbf)

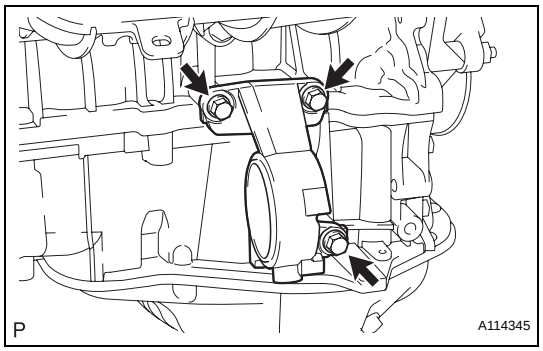

7. INSTALL DRIVE SHAFT BEARING BRACKET (for 4WD)

(a) Install the bracket with the 3 bolts.
Torque: 64 N*m (653 kgf*cm, 47 ft.*lbf)

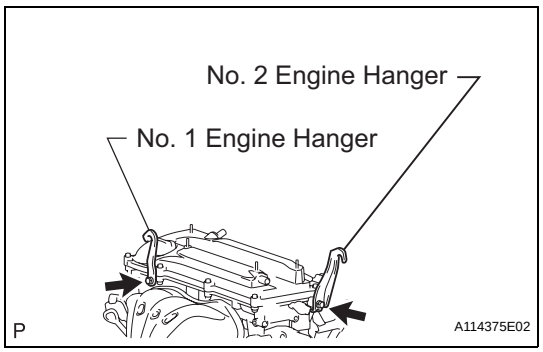

8. INSTALL ENGINE HANGER

(a) Install the No. 1 and No. 2 engine hangers.
Torque: 38 N*m (387 kgf*cm, 28 ft.*lbf)
Part No.

ITEM	Part No.
No. 1 engine hanger	12281-28010
No. 2 engine hanger	12282-28010
Bolt	91512-61020

EM

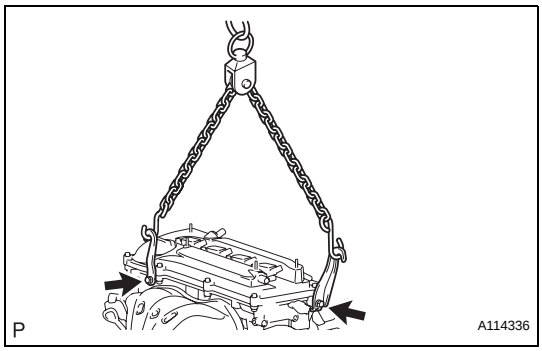

(b) Attach the sling device and the engine with the chain block.

9. INSTALL ENGINE ASSEMBLY WITH TRANSAXLE

(a) Lift the engine assembly (with transaxle) with the chain block.

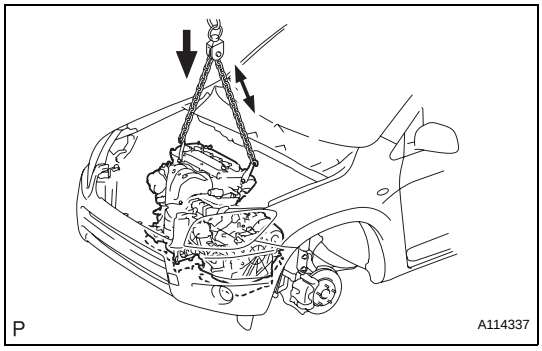

(b) Lower the engine out of the vehicle slowly and carefully.

NOTICE:
Make sure the engine is clear of all wiring, hoses and cables.

EM

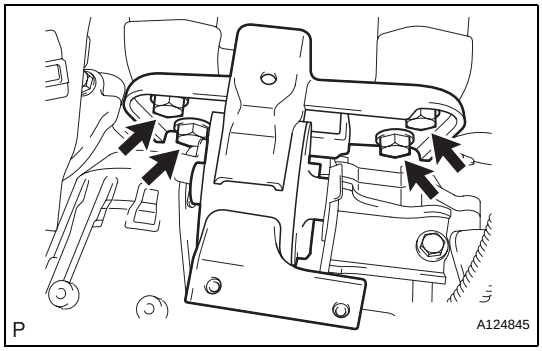

10. INSTALL ENGINE MOUNTING INSULATOR LH

(a) Install the engine mounting insulator LH with the 4 bolts.

Torque: 95 N*m (969 kgf*cm, 70 ft.*lbf)

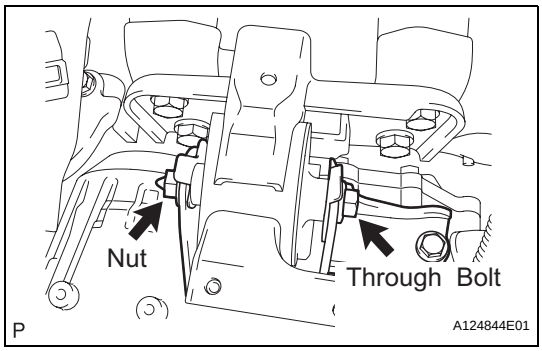

(b) Install the engine mounting insulator LH with the through bolt and nut.

HINT:
Install the through bolt by tightening the nut.

Torque: 56 N*m (571 kgf*cm, 41 ft.*lbf)

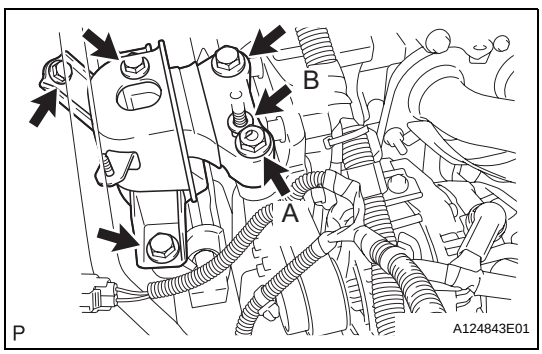

11. INSTALL ENGINE MOUNTING INSULATOR RH

(a) Install the engine mounting insulator RH with the 2 bolts and 2 nuts.

Torque: 95 N*m (969 kgf*cm, 70 ft.*lbf) for bolt
95 N*m (969 kgf*cm, 70 ft.*lbf) for nut A
52 N*m (530 kgf*cm, 38 ft.*lbf) for nut B

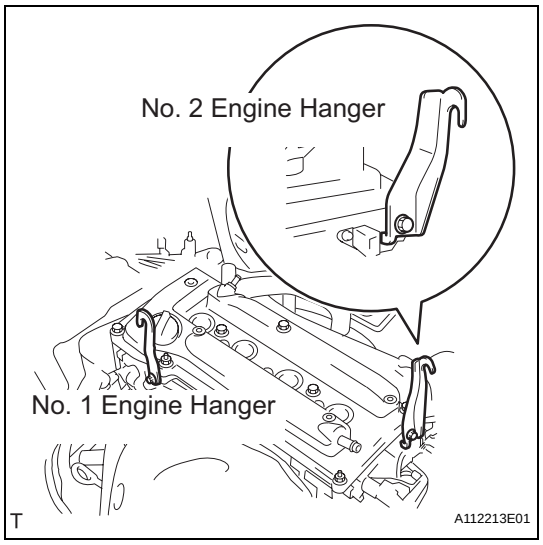

12. REMOVE ENGINE HANGER

(a) Remove the No. 1 and No. 2 engine hangers.

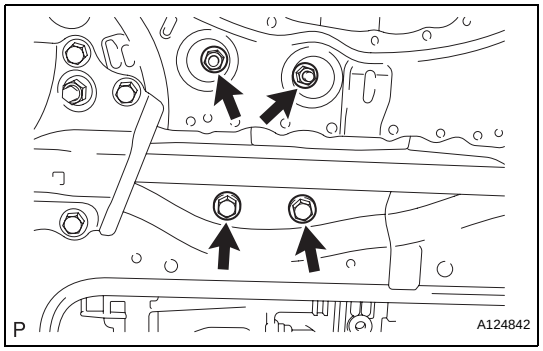

13. INSTALL ENGINE MOUNTING INSULATOR RR

(a) Install the engine mounting insulator RR with the 2 nuts and 2 bolts.
Torque: 95 N*m (969 kgf*cm, 70 ft.*lbf)

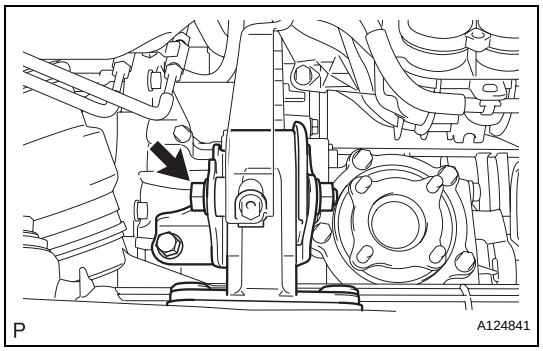

(b) Install the through bolt which is used to secure the rear engine mounting insulator, into the rear engine mounting bracket.
Torque: 95 N*m (969 kgf*cm, 70 ft.*lbf)

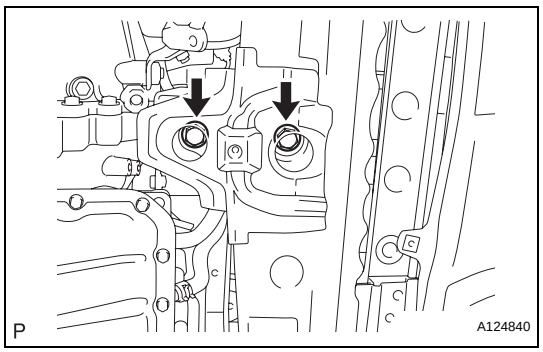

14. INSTALL ENGINE MOUNTING INSULATOR FR

(a) Install the engine mounting insulator FR with the 2 bolts.
Torque: 95 N*m (969 kgf*cm, 70 ft.*lbf)

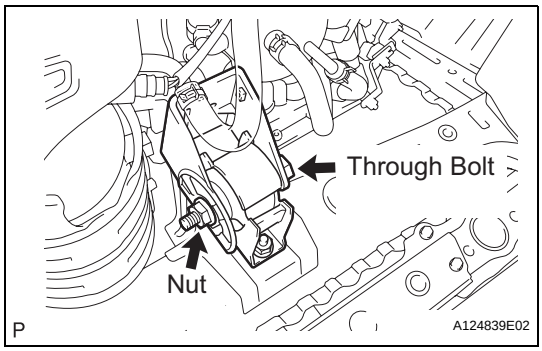

(b) Install the through bolt and nut which is used to secure the front engine mounting bracket FR.
HINT:
Install the through bolt by tightening the nut.
Torque: 145 N*m (1,479 kgf*cm, 107 ft.*lbf)

15. INSTALL PROPELLER SHAFT ASSEMBLY (for 4WD)

(a) Install the propeller shaft (see page PR-5).

16. INSTALL FRONT DRIVE SHAFT ASSEMBLY

(a) Install the front drive shaft RH (for 2WD) (see page DS-32).

(b) Install the front drive shaft RH (for 4WD) (see page DS-65).

17. INSTALL FRONT EXHAUST PIPE (See page EX-4)

18. CONNECT ENGINE WIRE

(a) Install the ground cable with the bolt located near the starter.
Torque: 13 N*m (133 kgf*cm, 10 ft.*lbf)

(b) Connect the ground cable to the clamp located near the starter.

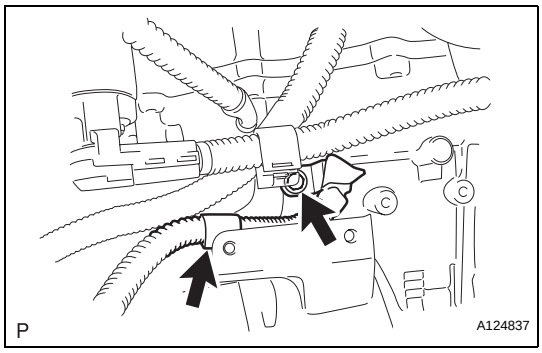

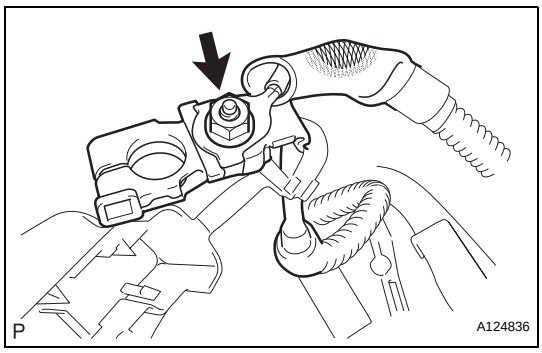

(c) Connect the engine wire to the positive (+) battery terminal with the nut.
Torque: 13 N*m (133 kgf*cm, 10 ft.*lbf)

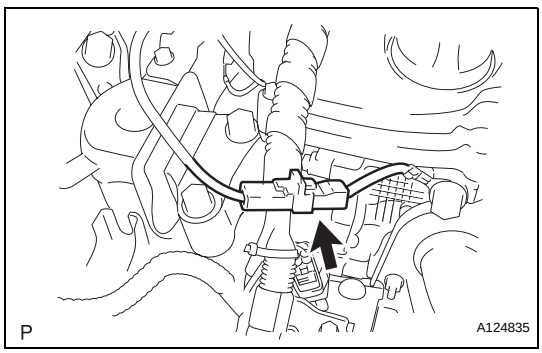

(d) Connect the ground cable connector.

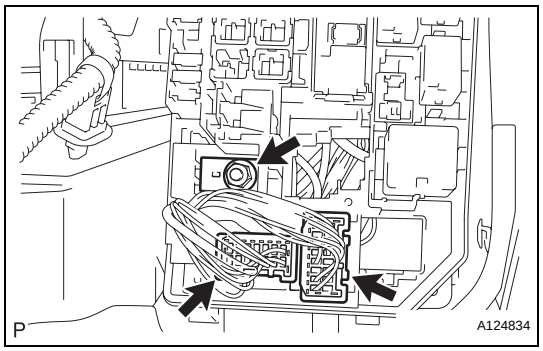

(e) Connect the 2 engine wire connectors and install the nut.
(f) Install the engine room relay block cover.

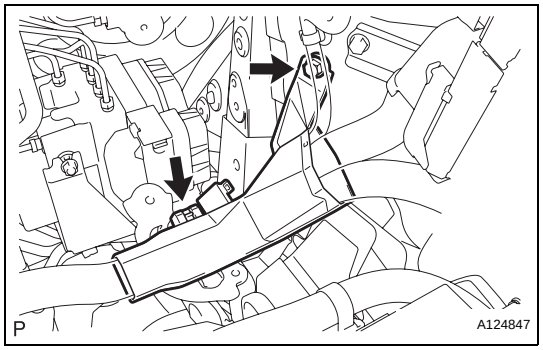

(g) Attach the clamp of the engine wire cover.
(h) Install the engine wire cover to with the bolt.

19. INSTALL ECM (See page ES-430)

20. INSTALL COOLER COMPRESSOR ASSEMBLY (See page AC-217)

21. INSTALL GENERATOR ASSEMBLY (See page CH-15)

22. INSTALL FAN AND GENERATOR V BELT (See page EM-7)

23. INSTALL FRONT SUSPENSION MEMBER REINFORCEMENT RH (See page EM-7)

24. INSTALL TRANSAXLE CONTROL CABLE ASSEMBLY

(a) Install the transaxle control cable for U241E (see page AX-130).
(b) Install the transaxle control cable for U140F (see page AX-130).

25. INSTALL INTAKE MANIFOLD INSULATOR (See page ES-421)

26. INSTALL INTAKE MANIFOLD (See page ES-421)

27. INSTALL FUEL DELIVERY PIPE SUB-ASSEMBLY (See page FU-13)

28. CONNECT NO. 2 VENTILATION HOSE (See page FU-14)

29. INSTALL THROTTLE BODY ASSEMBLY (See page ES-413)

30. CONNECT FUEL TUBE (See page FU-14)

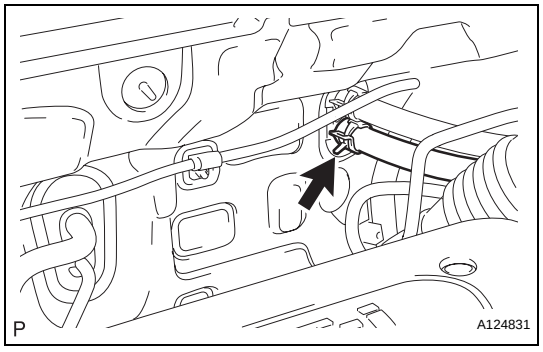

31. CONNECT HEATER WATER OUTLET HOSE

(a) Connect the heater water outlet hose to the air conditioner tube.

EM

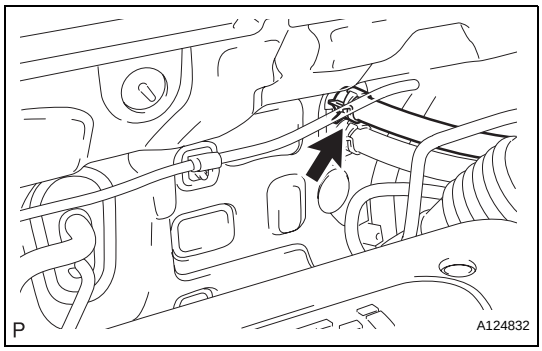

32. CONNECT HEATER WATER INLET HOSE

(a) Connect the heater water inlet hose to the air conditioner tube.

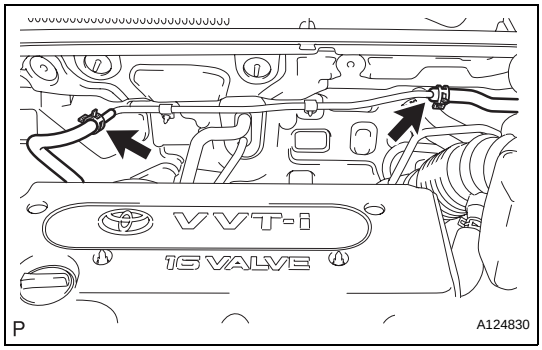

33. CONNECT UNION TO CONNECTOR TUBE HOSE

(a) Connect the 2 union to connector tube hoses to the booster vacuum tube.

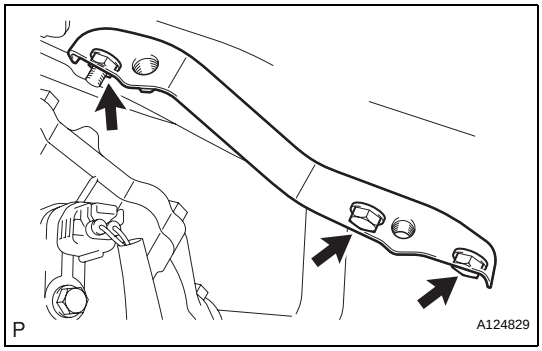

34. INSTALL BATTERY CARRIER BRACKET

(a) Install the battery carrier bracket with the nut and 2 bolts.
Torque: 20 N*m (204 kgf*cm, 15 ft.*lbf)

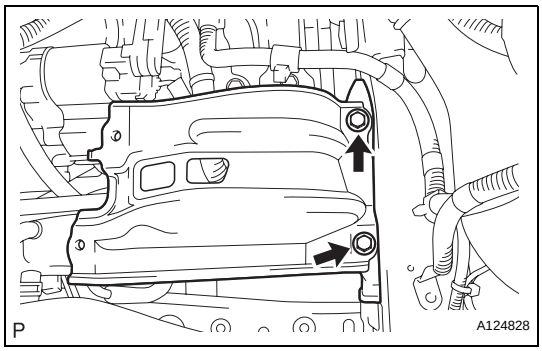

35. INSTALL BATTERY BRACKET REINFORCEMENT

(a) Install the battery bracket reinforcement with the 2 bolts.
Torque: 20 N*m (204 kgf*cm, 15 ft.*lbf)

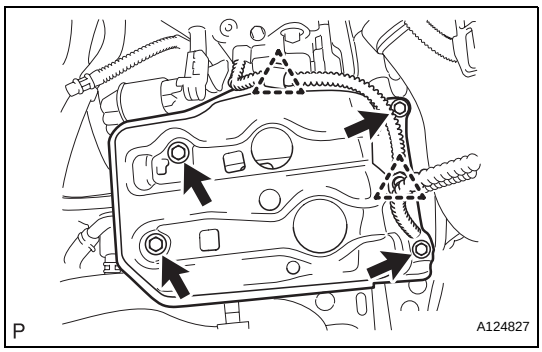

36. INSTALL FRONT BATTERY CARRIER

(a) Install the front battery carrier with the 4 bolts.
Torque: 20 N*m (204 kgf*cm, 15 ft.*lbf)

(b) Connect the 2 clamps of the engine wire.

37. INSTALL AIR CLEANER CASE SUB-ASSEMBLY

(a) Connect the air cleaner case to the No. 1 air cleaner inlet.

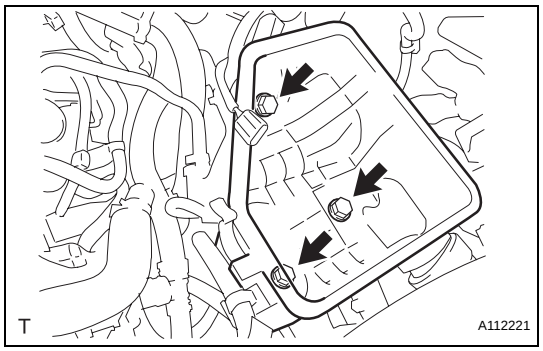

(b) Install the air cleaner case with the 3 bolts.
Torque: 5.0 N*m (51 kgf*cm, 44 in.*lbf)

38. **INSTALL AIR CLEANER FILTER ELEMENT SUB-ASSEMBLY**
39. **INSTALL AIR CLEANER CAP (See page ES-413)**
40. **INSTALL PURGE VSV (See page EC-16)**

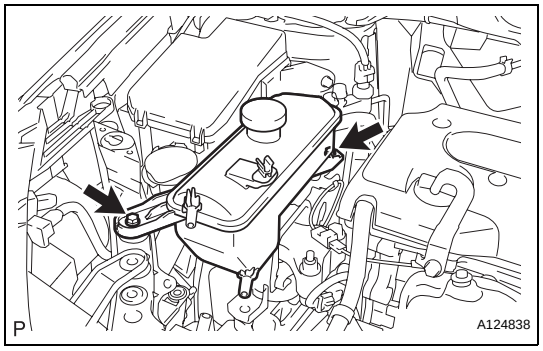

41. **INSTALL RADIATOR RESERVOIR**
    (a) Install the reservoir with the 2 bolts.
    Torque: 5.0 N*m (51 kgf*cm, 44 in.*lbf)
42. **INSTALL RADIATOR ASSEMBLY**
    (a) Install the radiator (see page CO-32).
43. **INSTALL BATTERY TRAY**
44. **INSTALL BATTERY**
    (a) Install the battery.
    (b) Install the battery clamp with the bolt and nut.
    Torque: 8.5 N*m (87 kgf*cm, 75 in.*lbf) for bolt
    5.0 N*m (51 kgf*cm, 44 in.*lbf) for nut
45. **CONNECT CABLE TO NEGATIVE BATTERY TERMINAL**
46. **ADD AUTOMATIC TRANSAXLE FLUID**
    (a) Add automatic transaxle fluid for U241E (2WD) (see page AX-151).
    (b) Add automatic transaxle fluid for U140F (4WD) (see page AX-152).
47. **CHECK FOR FUEL LEAKS (See page FU-14)**
48. **ADD ENGINE COOLANT (See page CO-6)**
49. **CHECK FOR ENGINE COOLANT LEAKS**
    (a) Check for engine coolant leaks (see page CO-1).
50. **CHECK FOR AUTOMATIC TRANSAXLE FLUID LEAKS**
51. **ADJUST SHIFT LEVER POSITION**
    (a) Adjust the shift lever position for U241E (2WD) (see page AX-138).
    (b) Adjust the shift lever position for U140F (4WD) (see page AX-138).
52. **INSTALL NO. 1 ENGINE COVER (See page EM-43)**
53. **INSTALL FRONT FENDER APRON RH**
54. **INSTALL NO. 2 ENGINE UNDER COVER**
55. **INSTALL NO. 1 ENGINE UNDER COVER**
56. **INSTALL FRONT WHEEL**
57. **INSTALL RADIATOR SUPPORT OPENING COVER**

58. INSTALL HOOD SUB-ASSEMBLY

(a) Install the hood (see page ED-7).

(b) Adjust the hood (see page ED-5).

59. INSPECT AND ADJUST FRONT WHEEL ALIGNMENT

(a) Inspect and adjust the front wheel alignment (see page SP-3).

60. PERFORM REGISTRATION

(a) When replacing the engine assembly, perform vehicle stability control system recognition in ECM (see page CC-12).

61. RESET MEMORY (for Automatic Transaxle)

(a) When replacing the engine assembly, perform the RESET MEMORY procedure (A/T initialization) for U241E (2WD) (see page AX-18) and for U140F (4WD) (see page AX-18).

ENGINE ASSEMBLY

COMPONENTS

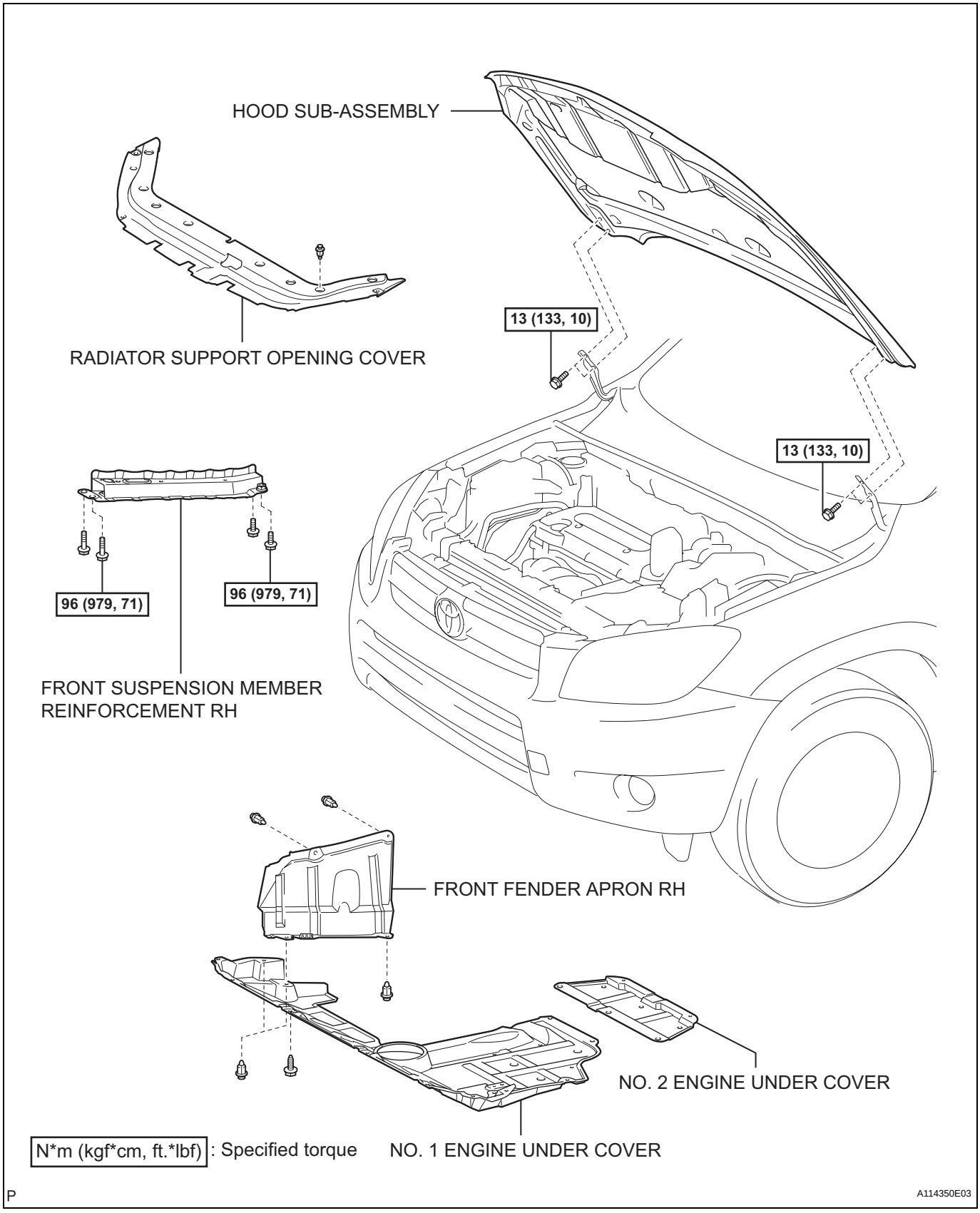

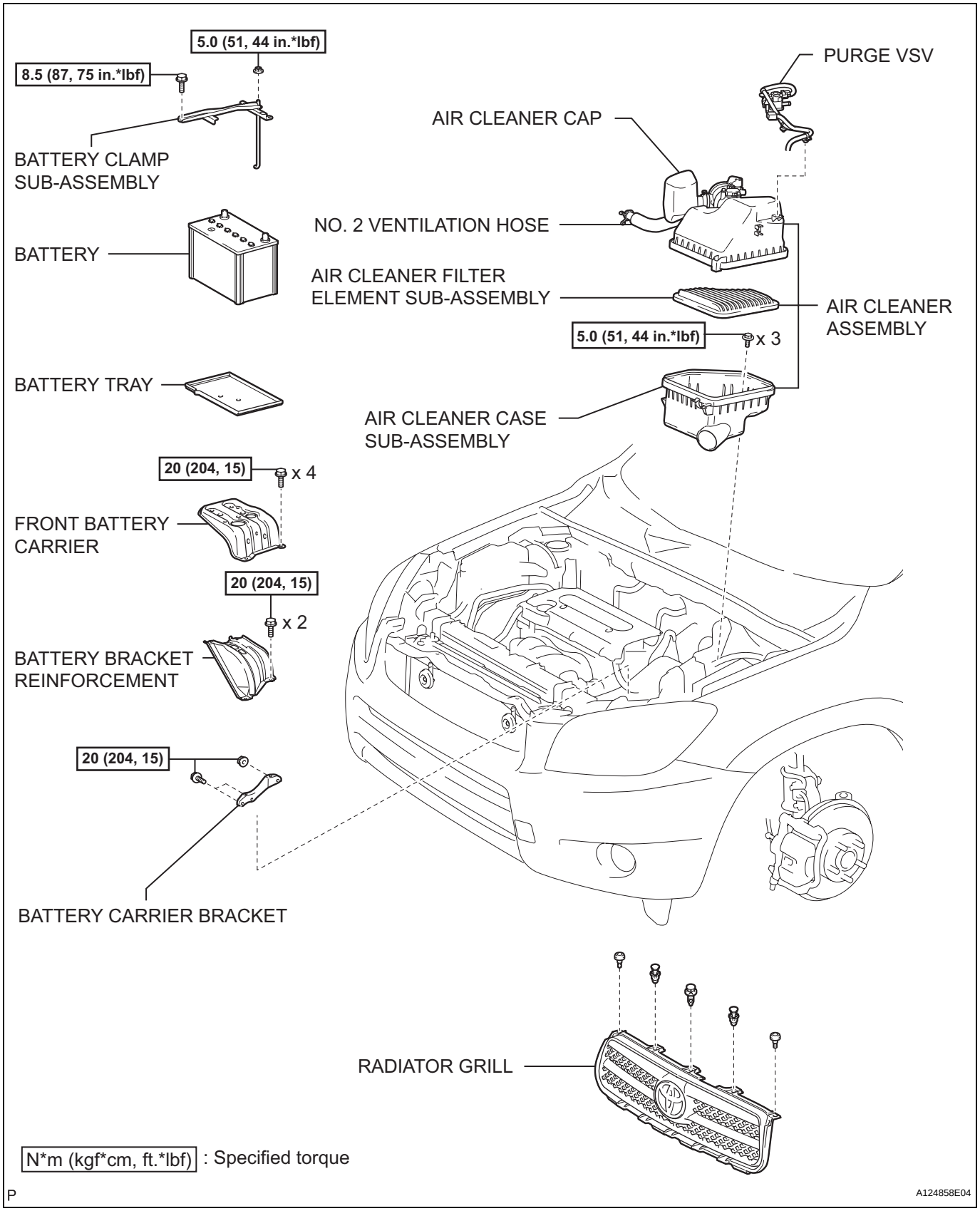
5.0 (51, 44 in.*lbf)
8.5 (87, 75 in.*lbf)
BATTERY CLAMP SUB-ASSEMBLY
BATTERY
BATTERY TRAY
20 (204, 15)
x 4
FRONT BATTERY CARRIER
20 (204, 15)
x 2
BATTERY BRACKET REINFORCEMENT
20 (204, 15)
BATTERY CARRIER BRACKET
PURGE VSV
AIR CLEANER CAP
NO. 2 VENTILATION HOSE
AIR CLEANER FILTER ELEMENT SUB-ASSEMBLY
AIR CLEANER ASSEMBLY
5.0 (51, 44 in.*lbf)
x 3
AIR CLEANER CASE SUB-ASSEMBLY
RADIATOR GRILL
N*m (kgf*cm, ft.*lbf) : Specified torque
P
A124858E04

EM

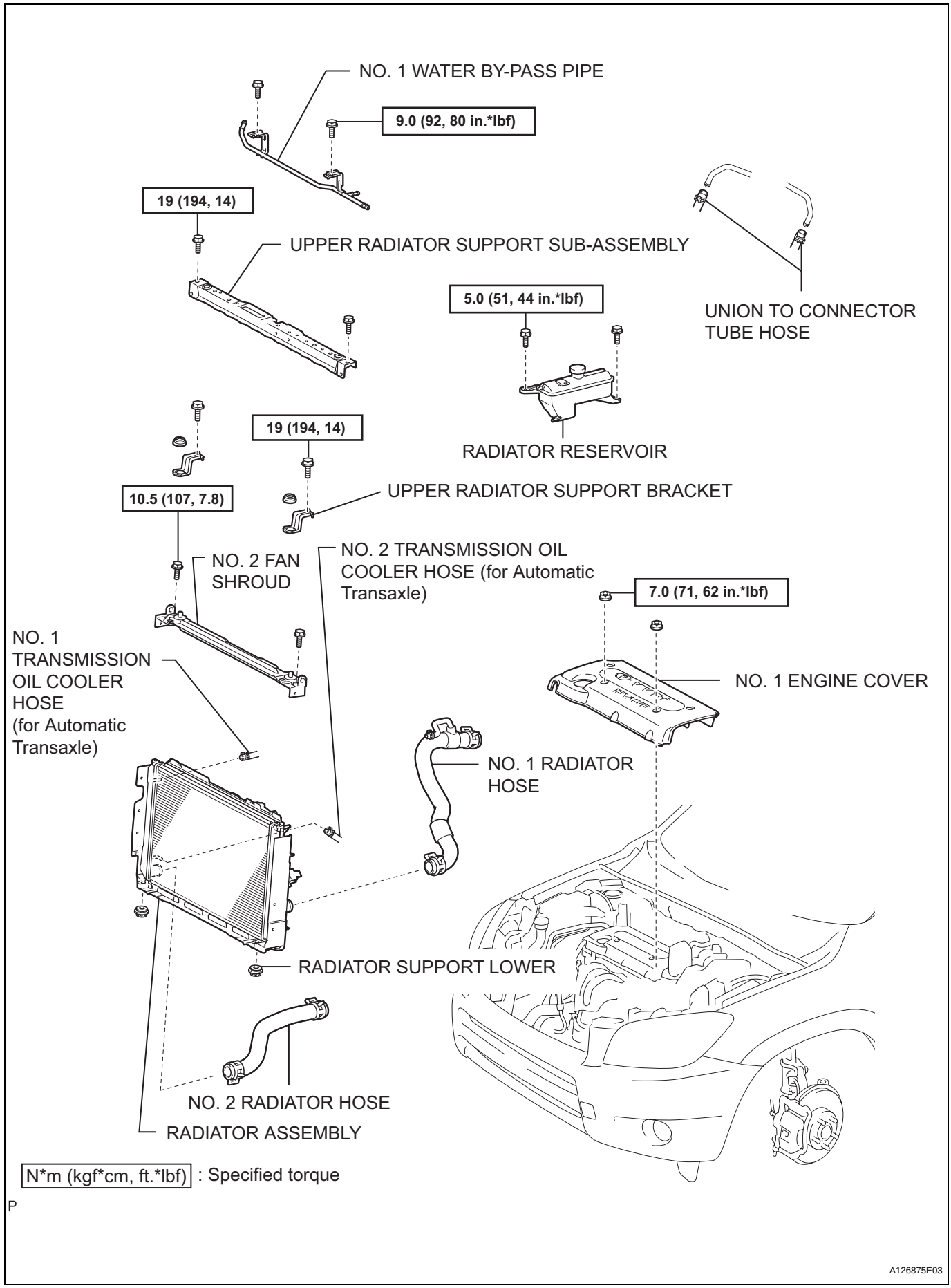
NO. 1 WATER BY-PASS PIPE
9.0 (92, 80 in.*lbf)
19 (194, 14)
UPPER RADIATOR SUPPORT SUB-ASSEMBLY
5.0 (51, 44 in.*lbf)
UNION TO CONNECTOR TUBE HOSE
RADIATOR RESERVOIR
19 (194, 14)
UPPER RADIATOR SUPPORT BRACKET
10.5 (107, 7.8)
NO. 2 FAN SHROUD
NO. 2 TRANSMISSION OIL COOLER HOSE (for Automatic Transaxle)
7.0 (71, 62 in.*lbf)
NO. 1 TRANSMISSION OIL COOLER HOSE (for Automatic Transaxle)
NO. 1 ENGINE COVER
NO. 1 RADIATOR HOSE
RADIATOR SUPPORT LOWER
NO. 2 RADIATOR HOSE
RADIATOR ASSEMBLY
N*m (kgf*cm, ft.*lbf) : Specified torque
A126875E03

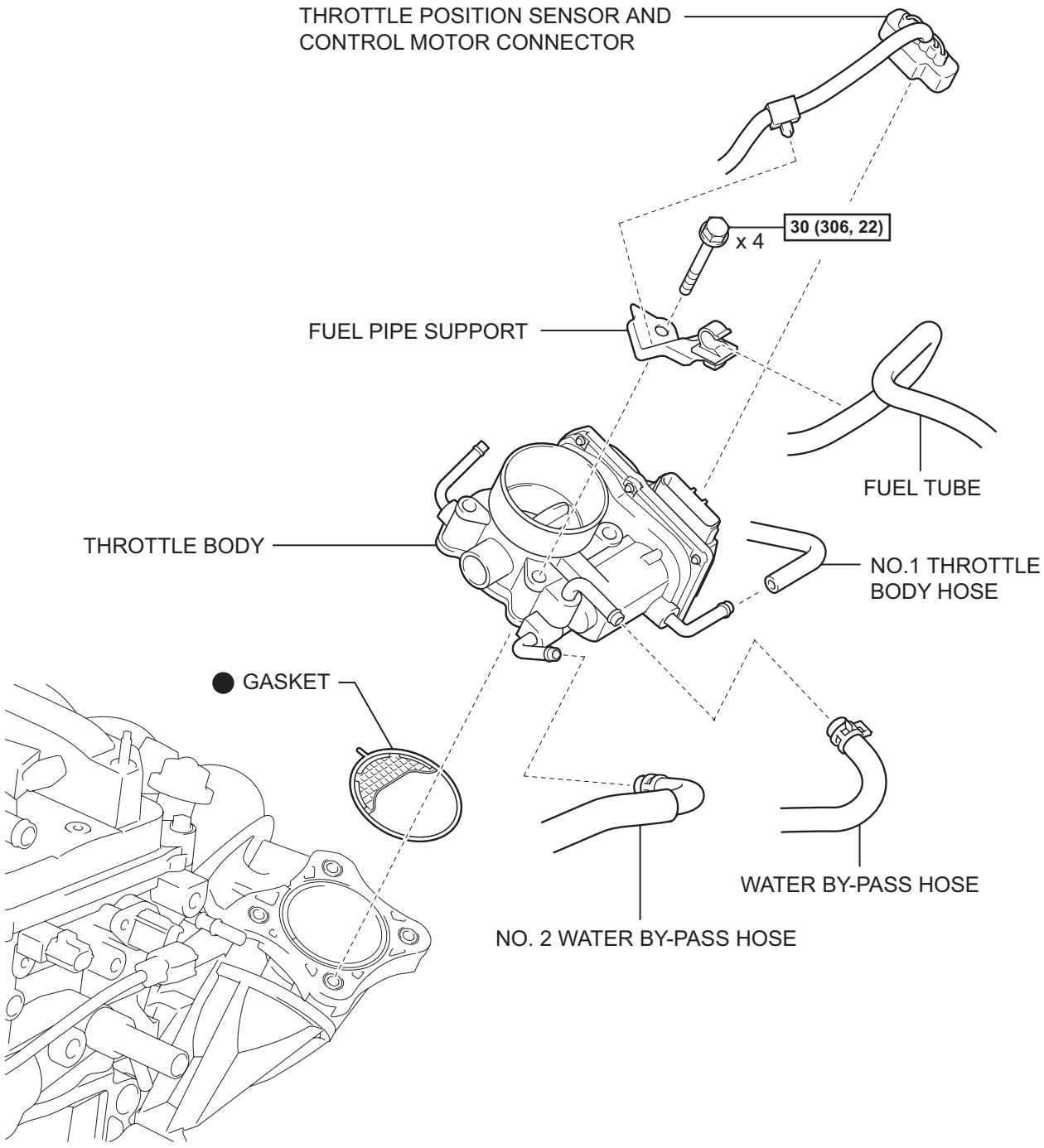

N*m (kgf*cm, ft.*lbf) : Specified torque

● Non-reusable part

P

A124403E05

EM

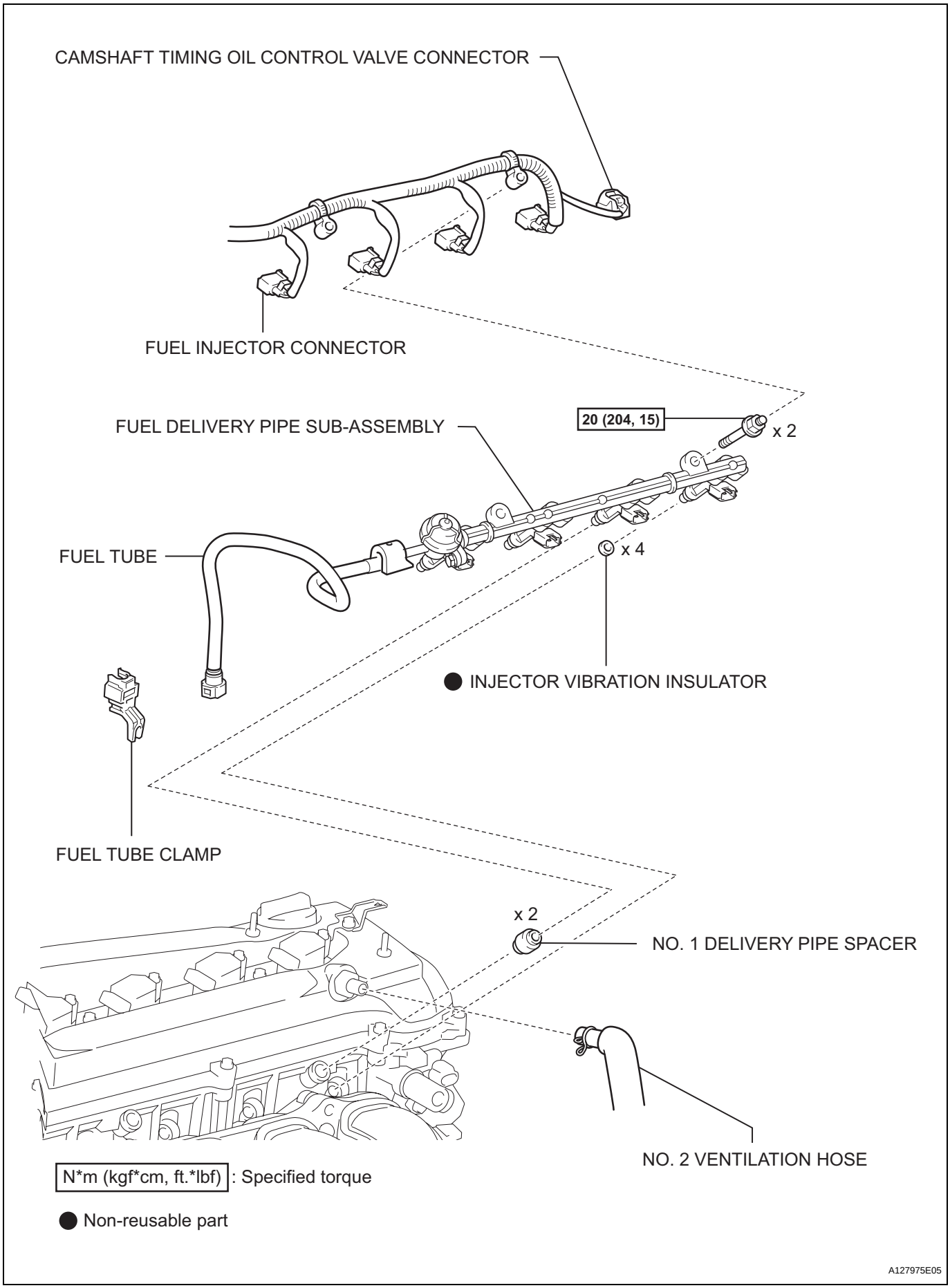
CAMSHAFT TIMING OIL CONTROL VALVE CONNECTOR
FUEL INJECTOR CONNECTOR
FUEL DELIVERY PIPE SUB-ASSEMBLY
20 (204, 15)
x 2
FUEL TUBE
x 4
● INJECTOR VIBRATION INSULATOR
FUEL TUBE CLAMP
x 2
NO. 1 DELIVERY PIPE SPACER
NO. 2 VENTILATION HOSE
N*m (kgf*cm, ft.*lbf) : Specified torque
● Non-reusable part
A127975E05

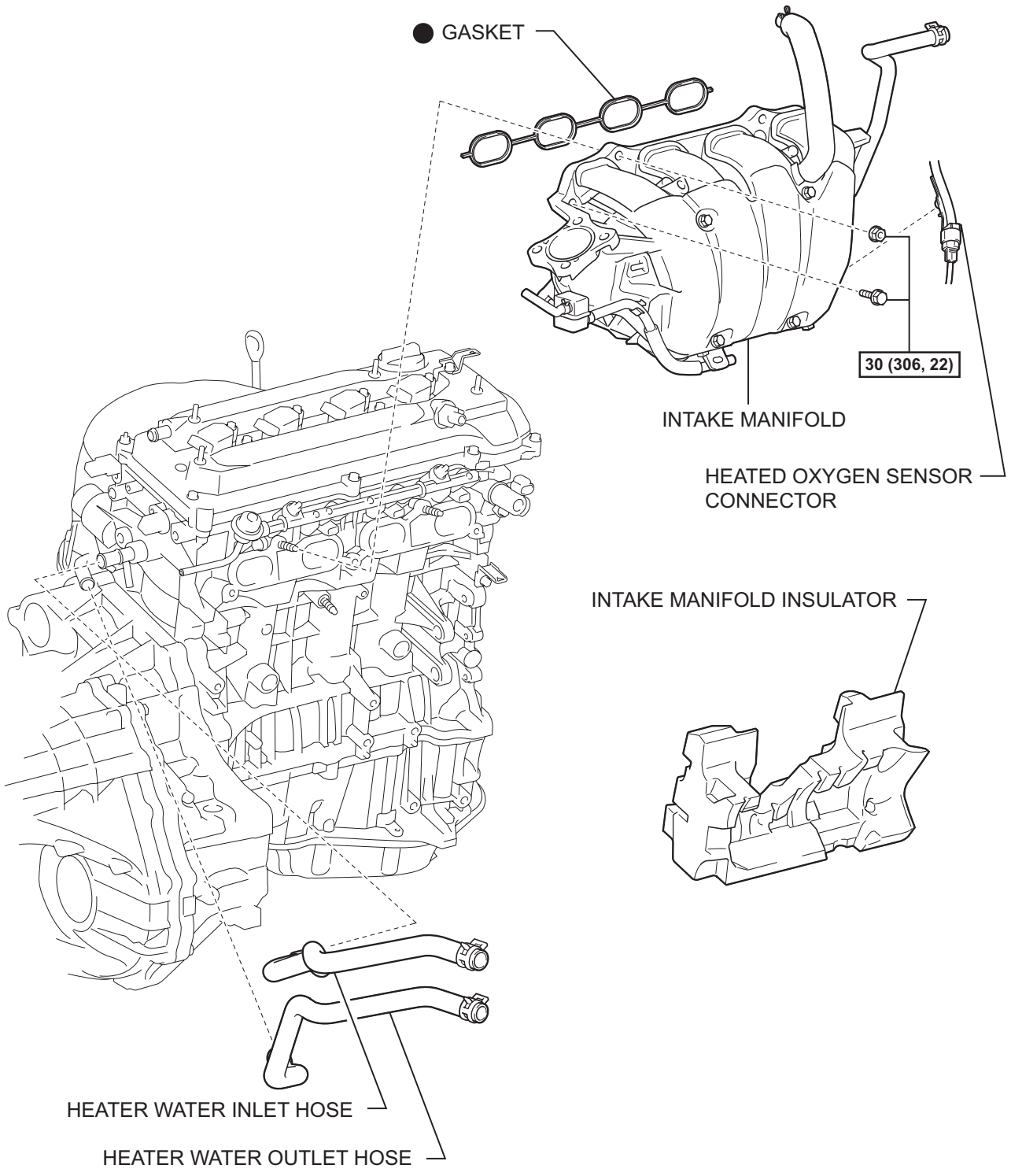

N*m (kgf*cm, ft.*lbf): Specified torque

● Non-reusable part

P

A124405E05

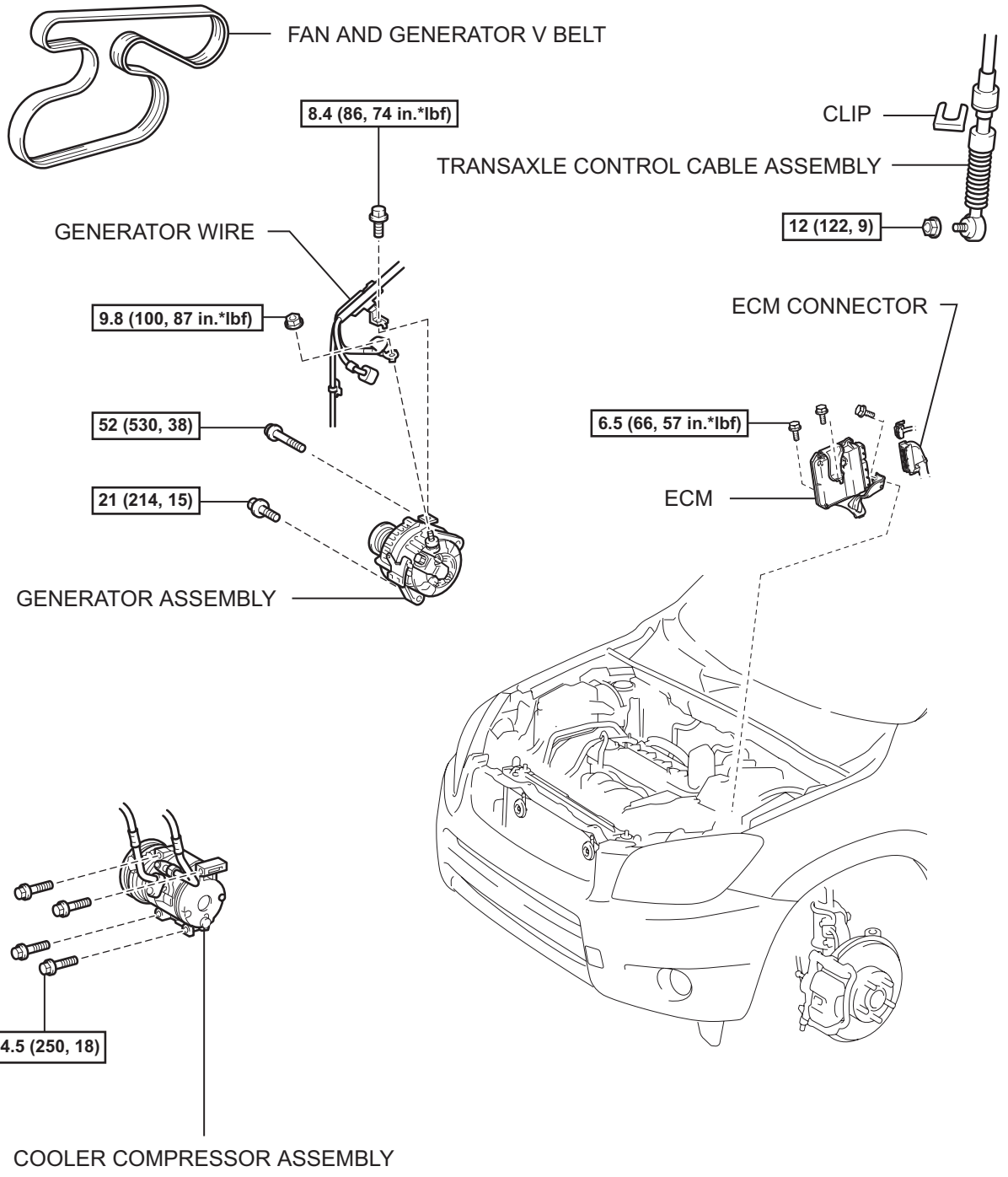

EM

N*m (kgf*cm, ft.*lbf) : Specified torque

T

A114360E02

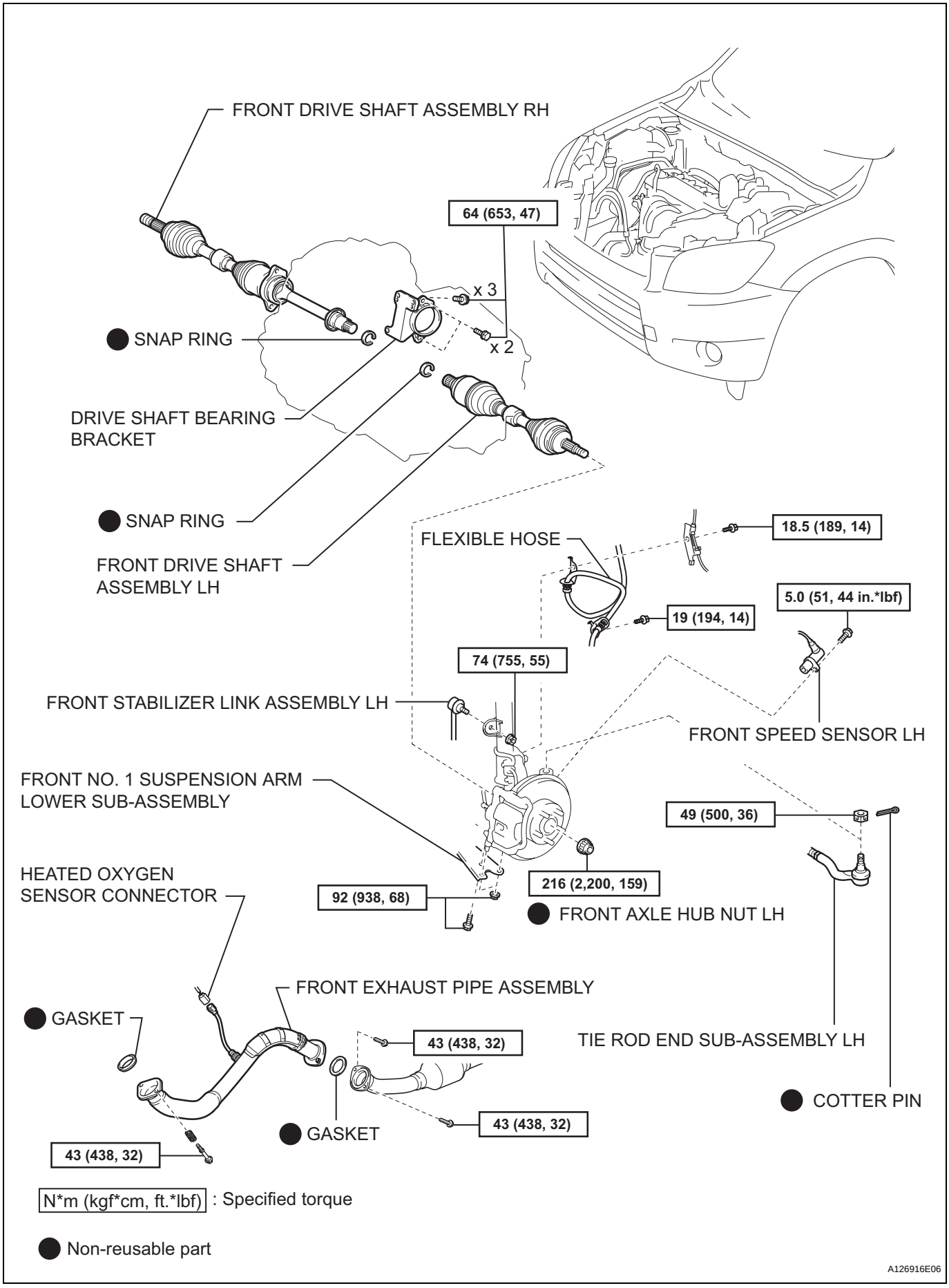
FRONT DRIVE SHAFT ASSEMBLY RH
64 (653, 47)
x 3
x 2
SNAP RING
DRIVE SHAFT BEARING BRACKET
SNAP RING
FRONT DRIVE SHAFT ASSEMBLY LH
FLEXIBLE HOSE
18.5 (189, 14)
19 (194, 14)
5.0 (51, 44 in.*lbf)
74 (755, 55)
FRONT STABILIZER LINK ASSEMBLY LH
FRONT SPEED SENSOR LH
FRONT NO. 1 SUSPENSION ARM LOWER SUB-ASSEMBLY
49 (500, 36)
HEATED OXYGEN SENSOR CONNECTOR
92 (938, 68)
216 (2,200, 159)
FRONT AXLE HUB NUT LH
FRONT EXHAUST PIPE ASSEMBLY
GASKET
43 (438, 32)
TIE ROD END SUB-ASSEMBLY LH
COTTER PIN
GASKET
43 (438, 32)
43 (438, 32)
N*m (kgf*cm, ft.*lbf) : Specified torque
Non-reusable part
A126916E06

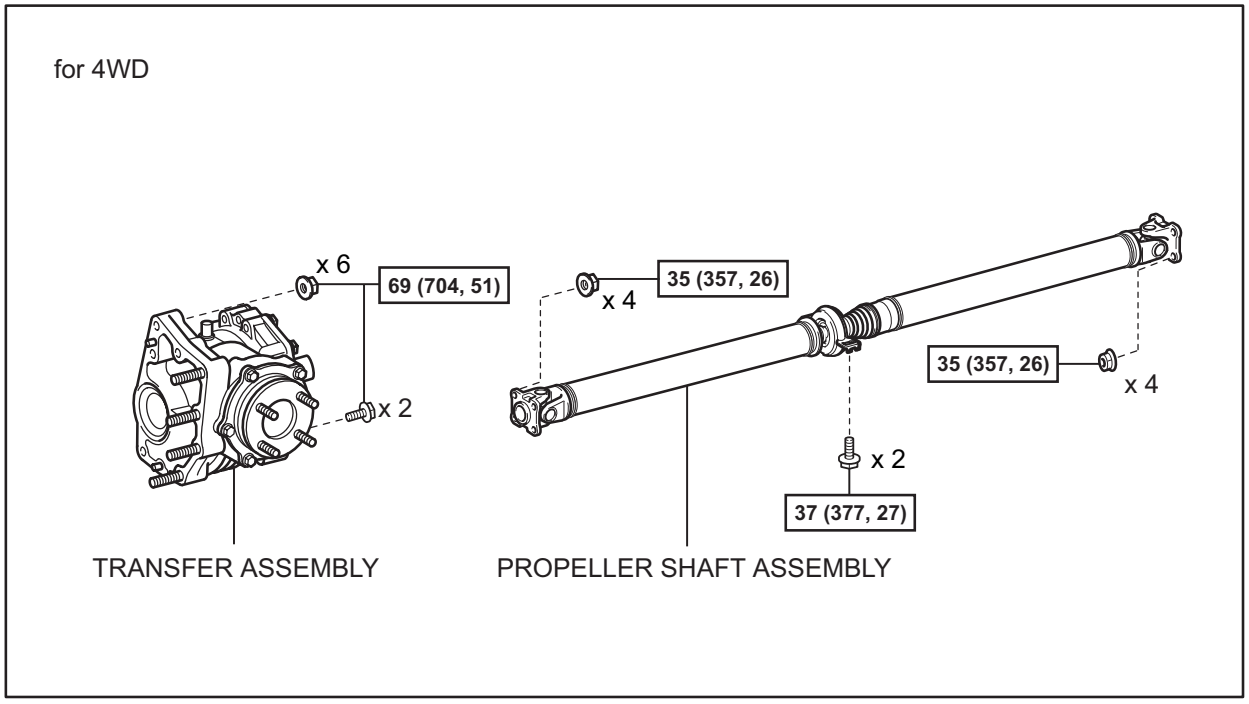

EM

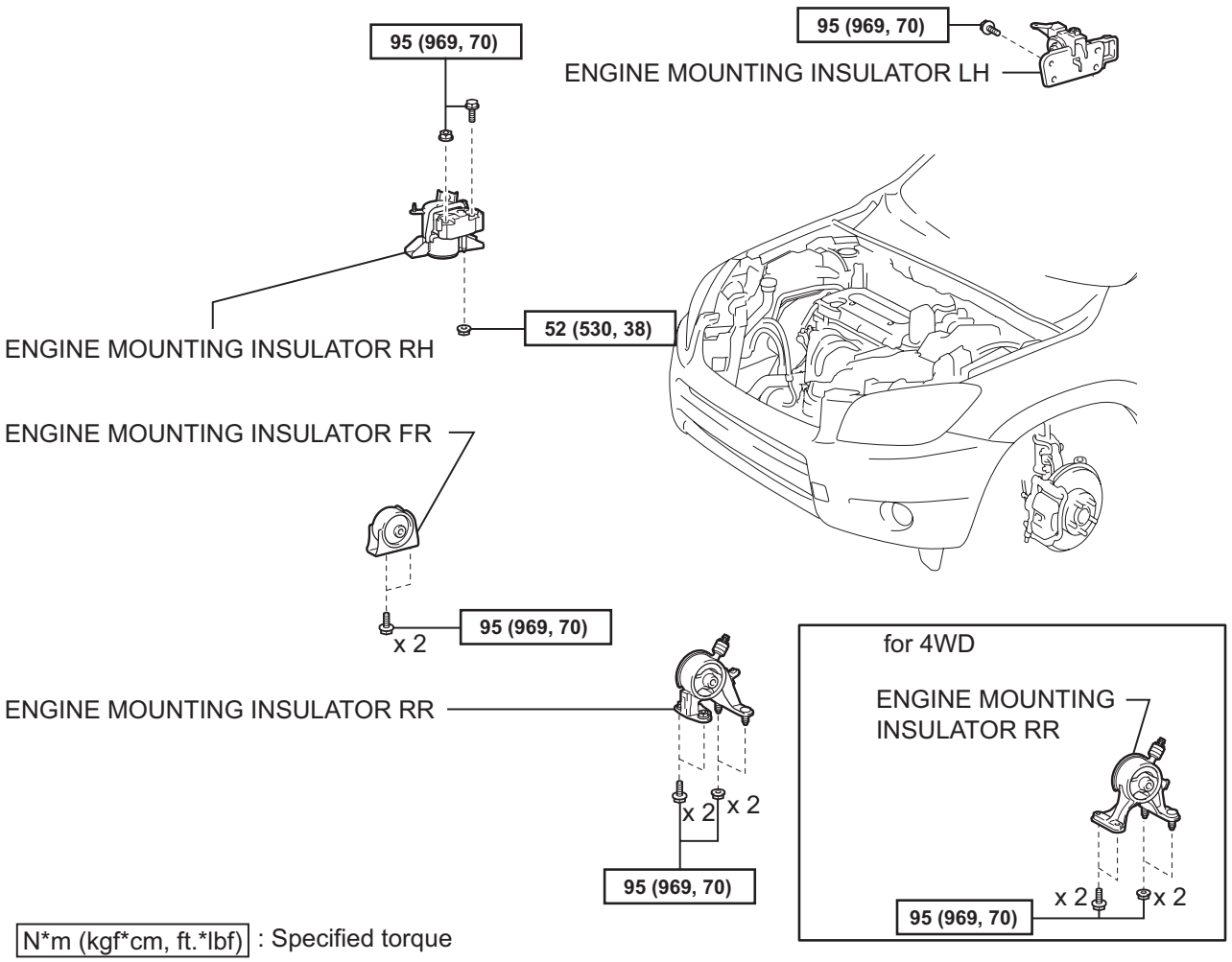

P

A126920E04

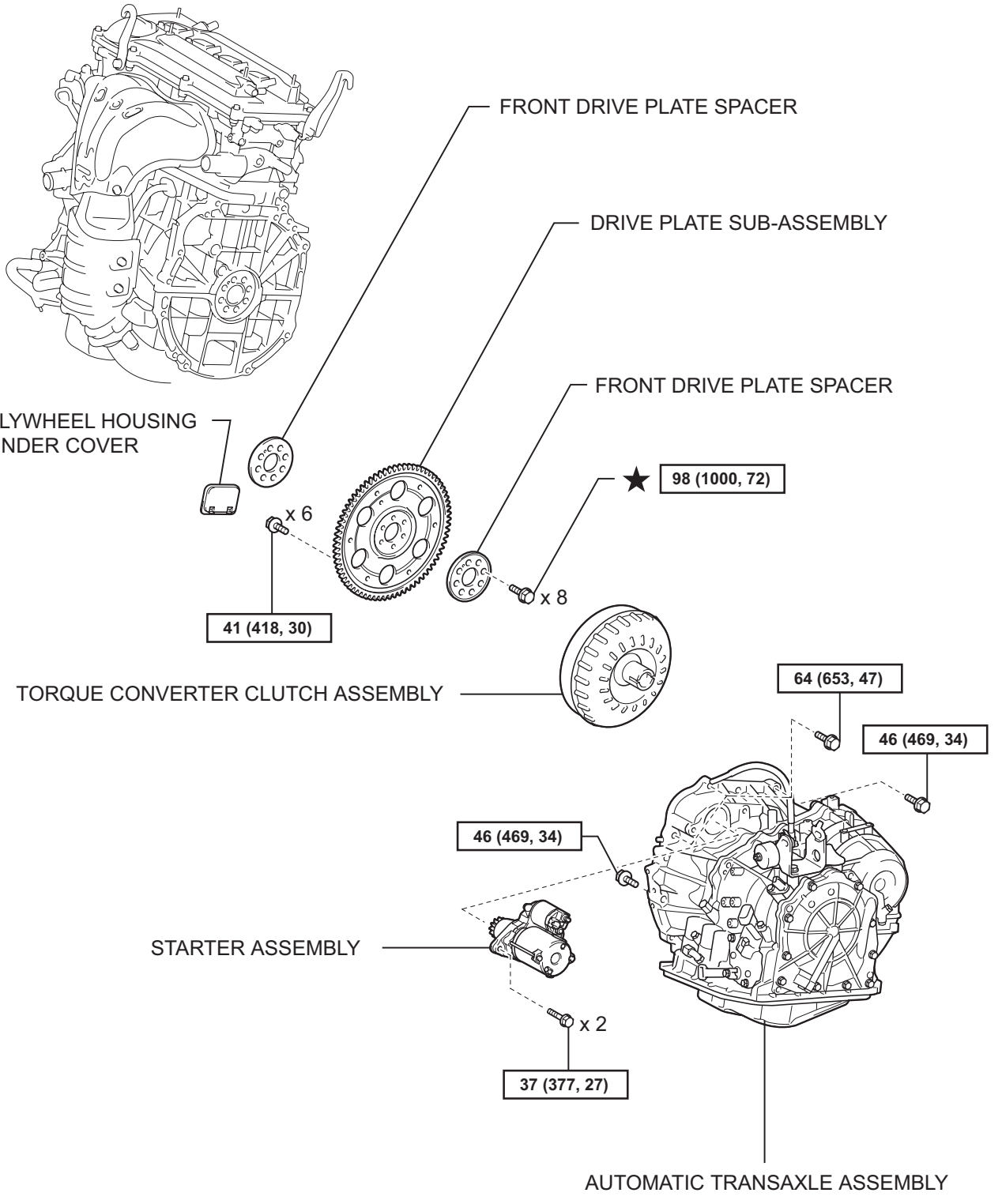

N*m (kgf*cm, ft.*lbf) : Specified torque

★ Precoated part

P

A124380E04

EM

DISASSEMBLY

1. **REMOVE IDLER PULLEY (See page EM-23)**
2. **REMOVE OIL DIPSTICK**
3. **REMOVE OIL DIPSTICK GUIDE (See page EM-57)**
4. **REMOVE MANIFOLD STAY (See page EM-57)**
5. **REMOVE NO. 2 MANIFOLD STAY (See page EM-58)**
6. **REMOVE NO. 1 EXHAUST MANIFOLD HEAT INSULATOR (See page EM-58)**
7. **REMOVE EXHAUST MANIFOLD CONVERTER SUB-ASSEMBLY (See page EM-58)**
8. **REMOVE WATER INLET (See page CO-15)**
9. **REMOVE THERMOSTAT**
10. **REMOVE NO. 1 WATER BY-PASS PIPE**
    (a) Remove the bolt, 2 nuts, pipe and gasket.

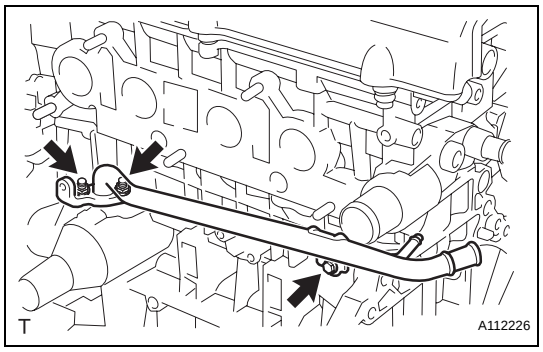

11. **REMOVE NO. 3 WATER BY-PASS PIPE**
    (a) Remove the bolt, 2 nuts, pipe and gasket.
12. **REMOVE V-RIBBED BELT TENSIONER ASSEMBLY (See page EM-26)**
13. **REMOVE CAMSHAFT TIMING OIL CONTROL VALVE ASSEMBLY (See page ES-395)**
14. **REMOVE KNOCK SENSOR (See page ES-420)**
15. **REMOVE RADIO SETTING CONDENSER (See page EM-63)**
16. **REMOVE OIL PRESSURE SWITCH ASSEMBLY (See page EM-63)**
17. **REMOVE ENGINE COOLANT TEMPERATURE SENSOR (See page EM-63)**
18. **REMOVE CAMSHAFT POSITION SENSOR (See page EM-64)**
19. **REMOVE IGNITION COIL ASSEMBLY (See page IG-9)**

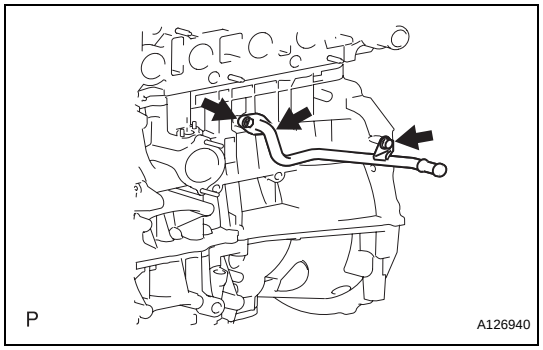

EM

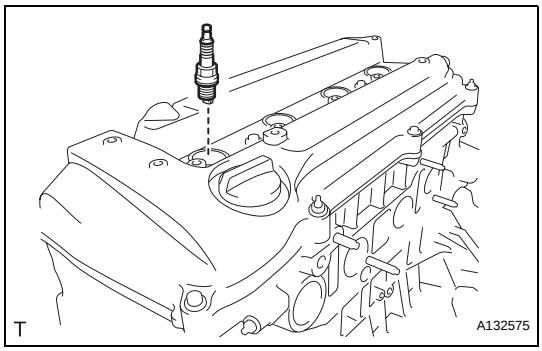

20. REMOVE SPARK PLUG

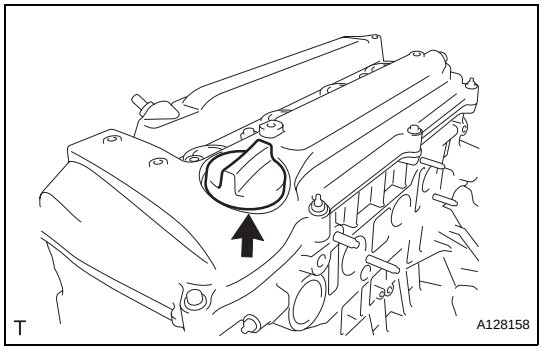

21. REMOVE OIL FILLER CAP SUB-ASSEMBLY

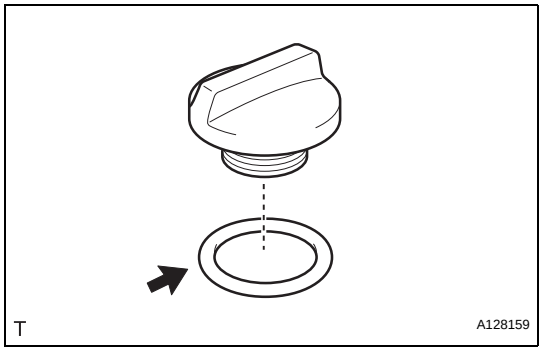

22. REMOVE OIL FILLER CAP GASKET

23. REMOVE VENTILATION VALVE SUB-ASSEMBLY (See page EC-18)

24. REMOVE CYLINDER HEAD COVER SUB-ASSEMBLY (See page EM-24)

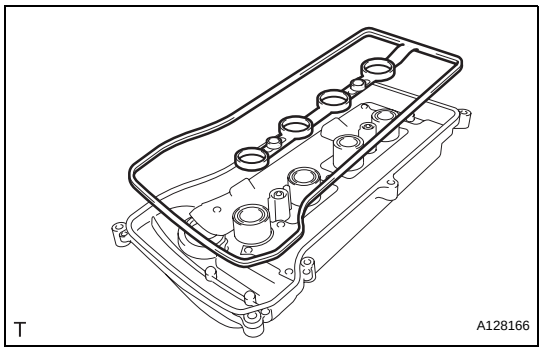

25. REMOVE CYLINDER HEAD COVER GASKET

26. REMOVE OIL FILTER SUB-ASSEMBLY (See page LU-4)

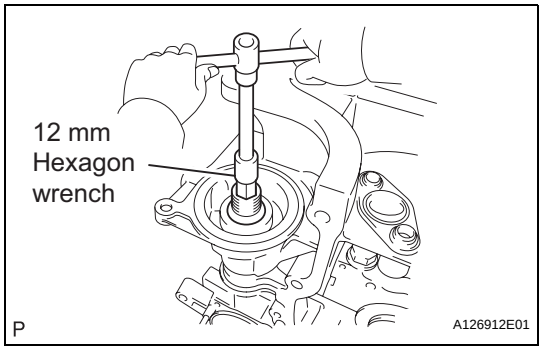

27. REMOVE OIL FILTER UNION

(a) Using a 12 mm hexagon wrench, remove the oil filter union.

28. REMOVE CRANKSHAFT POSITION SENSOR (See page ES-402)

29. REMOVE WATER PUMP PULLEY (See page CO-11)

30. REMOVE WATER PUMP ASSEMBLY (See page CO-11)

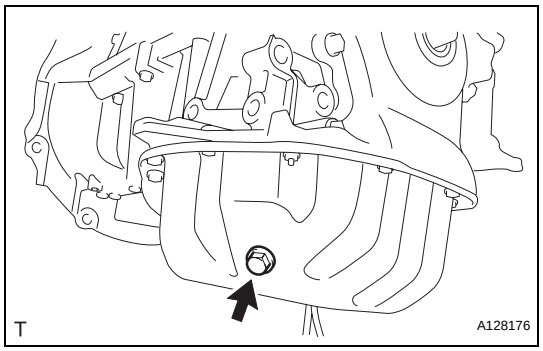

31. **REMOVE OIL PAN DRAIN PLUG**
    (a) Remove the oil pan drain plug and gasket.
32. **REMOVE OIL PAN SUB-ASSEMBLY (See page EM-24)**
33. **REMOVE CRANKSHAFT PULLEY (See page EM-25)**
34. **REMOVE NO. 1 CHAIN TENSIONER ASSEMBLY (See page EM-26)**
35. **REMOVE TIMING CHAIN COVER SUB-ASSEMBLY (See page EM-26)**
36. **REMOVE NO. 1 CRANKSHAFT POSITION SENSOR PLATE**

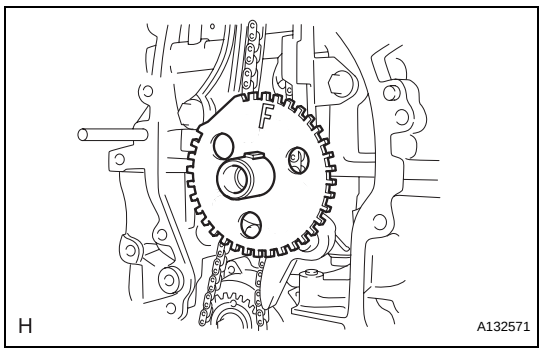

37. **REMOVE TIMING CHAIN GUIDE (See page EM-28)**
38. **REMOVE CHAIN TENSIONER SLIPPER (See page EM-28)**
39. **REMOVE NO. 1 CHAIN VIBRATION DAMPER (See page EM-28)**

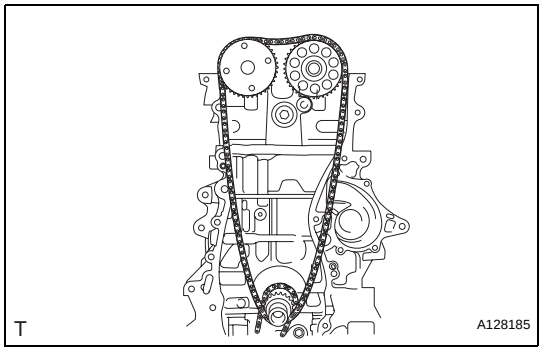

40. **REMOVE CHAIN SUB-ASSEMBLY**

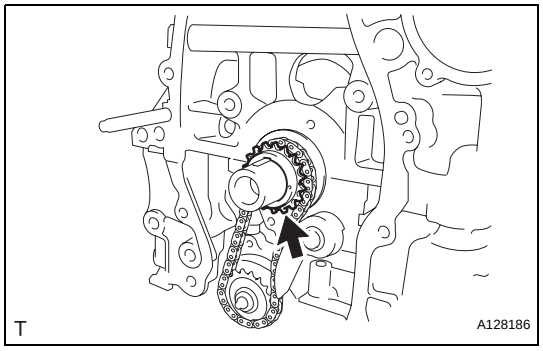

41. **REMOVE CRANKSHAFT TIMING SPROCKET**
42. **REMOVE NO. 2 CHAIN SUB-ASSEMBLY (See page EM-29)**
43. **REMOVE OIL PUMP DRIVE GEAR**
44. **REMOVE OIL PUMP ASSEMBLY (See page LU-12)**

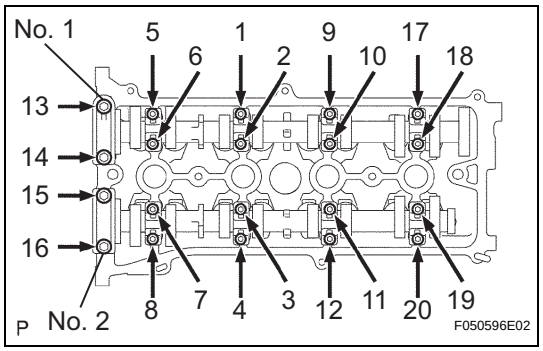

45. **REMOVE CAMSHAFT**
    (a) Using several steps, uniformly loosen and remove the 20 bearing cap bolts in the sequence shown in the illustration.
    (b) Remove the 10 bearing caps, then remove the camshaft and No. 2 camshaft.
46. **REMOVE CYLINDER HEAD SUB-ASSEMBLY (See page EM-62)**

EM

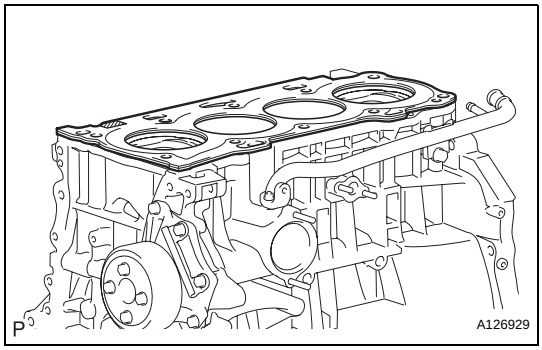

47. REMOVE CYLINDER HEAD GASKET

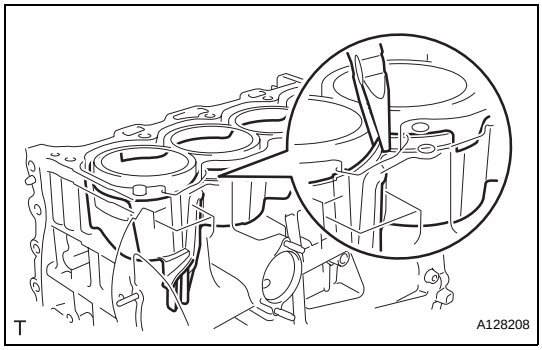

48. REMOVE CYLINDER BLOCK WATER JACKET SPACER

(a) Using needle-nose pliers, remove the cylinder block water jacket spacer from the water jacket.

NOTICE:
Before turning the cylinder block upside down, make sure that the water jacket spacer is removed, as it will fall out.

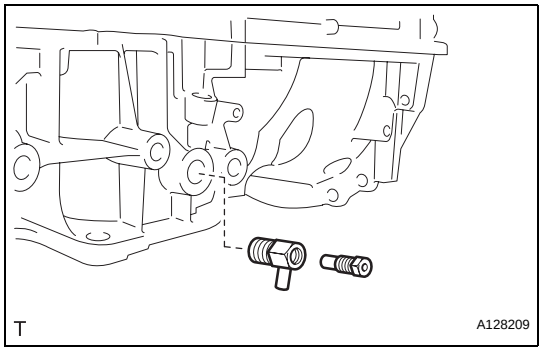

49. REMOVE CYLINDER BLOCK WATER DRAIN COCK SUB-ASSEMBLY

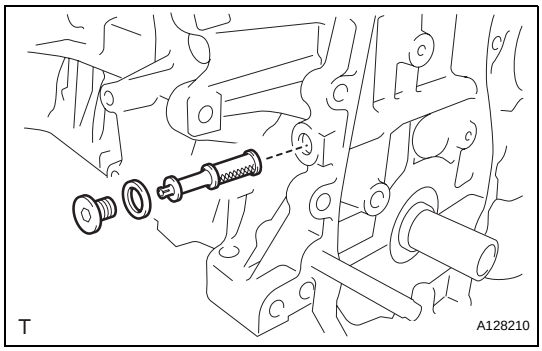

50. REMOVE OIL CONTROL VALVE FILTER

(a) Using a 6 mm socket hexagon wrench, remove the plug and gasket.
(b) Remove the oil control valve filter.

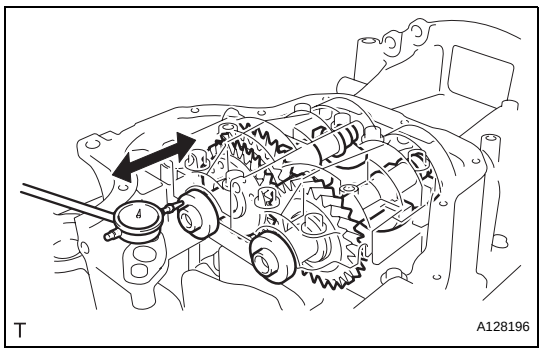

51. INSPECT BALANCE SHAFT THRUST CLEARANCE

(a) Using a dial indicator, measure the thrust clearance while moving the balance shaft back and forth.

Standard thrust clearance:
0.05 to 0.09 mm (0.0020 to 0.0035 in.)
Maximum thrust clearance:
0.09 mm (0.0035 in.)

If the thrust clearance is greater than the maximum, replace the balance shaft housing and bearings. If necessary, replace the balance shaft.

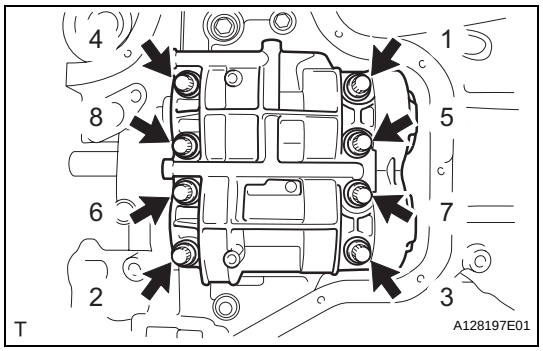

52. INSPECT BALANCE SHAFT OIL CLEARANCE

(a) Using several steps, uniformly loosen and remove the 8 bolts in the sequence shown in the illustration.

(b) Remove the balance shaft housing from the crankcase.
HINT:
Keep the lower bearing and balance shaft housing together.

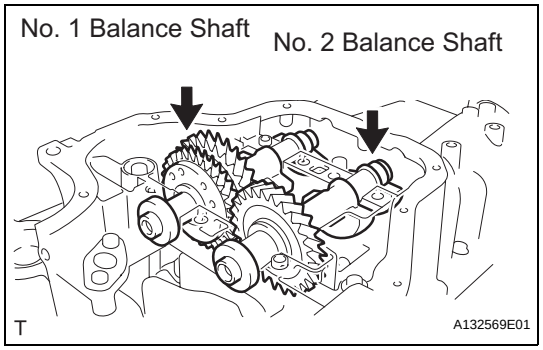

(c) Lift out the No. 1 and No. 2 balance shafts.
HINT:
Keep the upper bearing with the crankcase.

(d) Clean each bearing and journal.

(e) Check each bearing and journal for pitting and scratches.
If a bearing or journal is damaged, replace the bearings. If necessary, replace the balance shaft.

EM

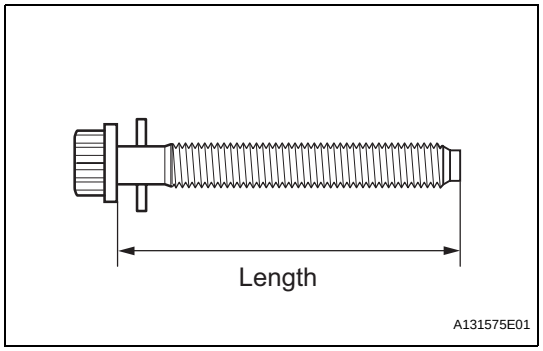

(f) Inspect the balance shaft housing bolt.
(1) Using a vernier caliper, measure the length of the bolts from the seat to the end.
Standard bolt length:
58.3 to 59.7 mm (2.295 to 2.350 in.)
Maximum bolt length:
60.3 mm (2.374 in.)
If the bolt length is greater than the maximum, replace the balance shaft bolt.

(g) Place the No. 1 and No. 2 balance shafts onto the crankcase.

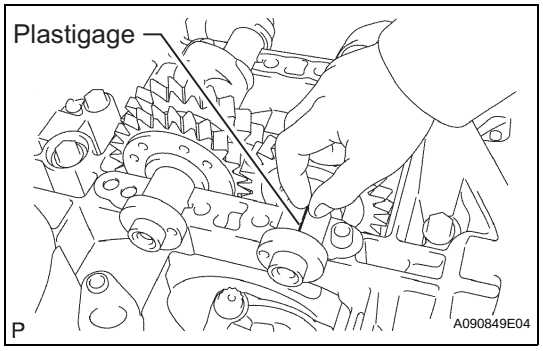

(h) Lay a strip of Plastigage across each journal.

(i) Install the balance shaft housing.

(j) Apply a light coat of engine oil on the threads and under the heads of the bolts.

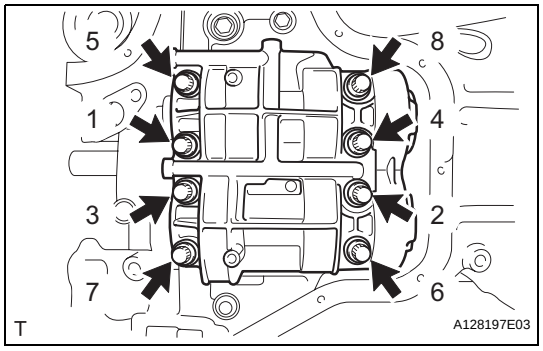

(k) Using several steps, uniformly install and tighten the 8 bolts in the sequence shown in the illustration.
Torque: 21.6 N*m (220 kgf*cm, 16 ft.*lbf)

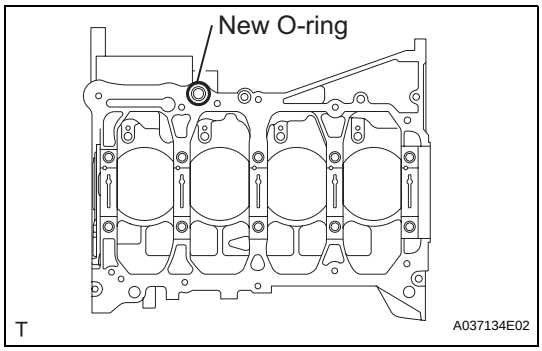

(l) Mark the front of the bolts with paint.
(m) Retighten the bolts 90° as shown in the illustration.
(n) Check that the paint mark is now at a 90° angle to the front.
(o) Remove the balance shaft housing from the crankcase.
(p) Measure the Plastigage at its widest point.

Standard oil clearance:
0.004 to 0.049 mm (0.0002 to 0.0019 in.)
Maximum oil clearance:
0.049 mm (0.0019 in.)
NOTICE:
Remove the Plastigage completely after the measurement.
If the oil clearance is greater than the maximum, replace the bearing. If necessary, replace the balance shaft.
HINT:
If replacing a bearing, select a new one with the same number.

Standard balance shaft housing journal bore diameter

Item	Specified Condition
Mark 1	26.000 to 26.006 mm (1.0236 to 1.0239 in.)
Mark 2	26.007 to 26.012 mm (1.0239 to 1.0214 in.)
Mark 3	26.013 to 26.018 mm (1.0241 to 1.0243 in.)

Standard balance shaft journal diameter:
22.985 to 23.000 mm (0.9049 to 0.9055 in.)

Standard bearing center wall thickness

Item	Specified Condition
Mark 1	1.486 to 1.489 mm (0.05850 to 0.05862 in.)
Mark 2	1.490 to 1.492 mm (0.05866 to 0.05874 in.)
Mark 3	1.493 to 1.495 mm (0.0585 to 0.0586 in.)

53. REMOVE BALANCE SHAFT

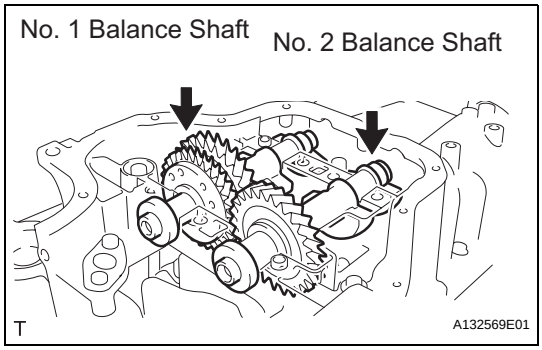

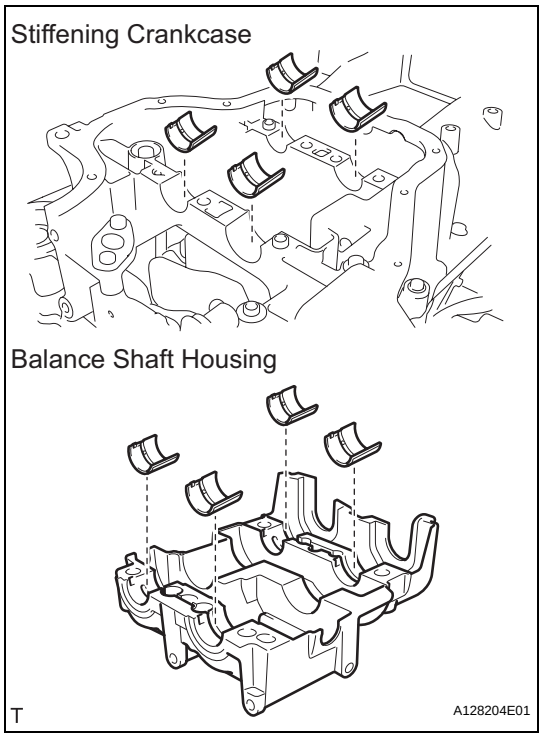

54. REMOVE NO. 1 BALANCE SHAFT BEARING

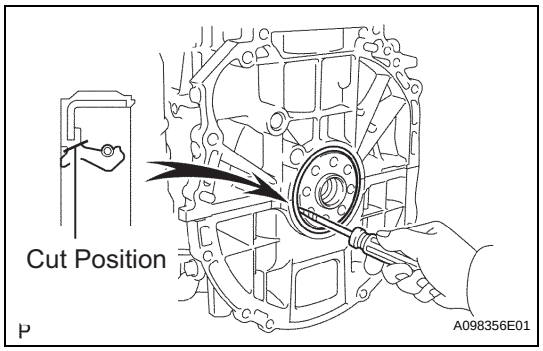

55. REMOVE ENGINE REAR OIL SEAL

(a) Using a knife, cut off the lip of the oil seal.

(b) Using a screwdriver with its tip wrapped with tape, pry out the oil seal.

NOTICE:

After removing, check the crankshaft for damage. If damaged, smooth the surface with 400-grit sandpaper.

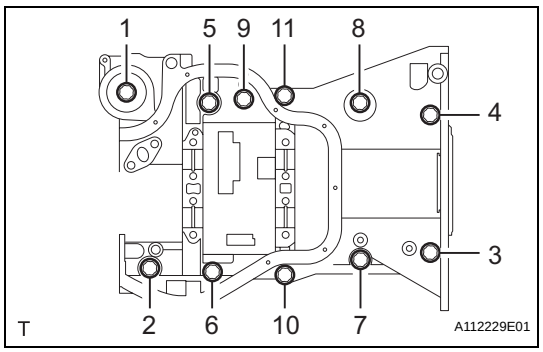

56. REMOVE STIFFENING CRANKCASE ASSEMBLY

(a) Using several steps, uniformly loosen and remove the 11 bolts in the sequence shown in the illustration.

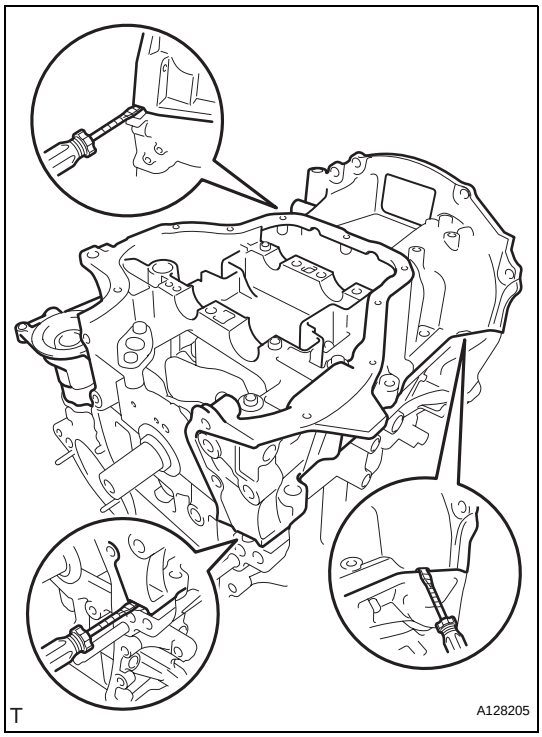

(b) Remove the crankcase by prying the portions between the crankcase and cylinder block.
NOTICE:
Be careful not to damage the contact surfaces of the crankcase and cylinder bock.

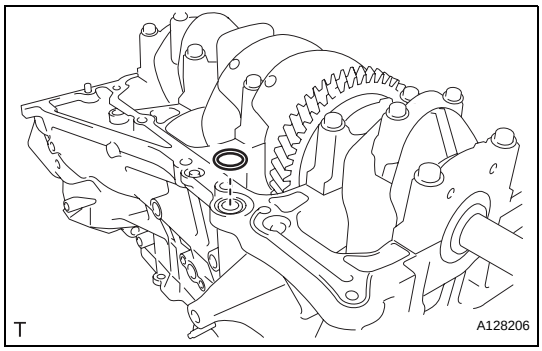

(c) Remove the O-ring from the cylinder block.

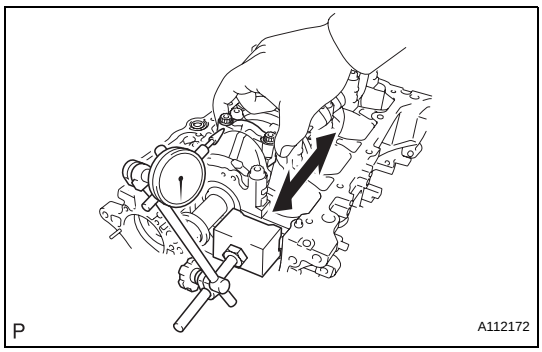

57. INSPECT CONNECTING ROD THRUST CLEARANCE

(a) Using a dial indicator, measure the thrust clearance while moving the connecting rod back and forth.
Standard thrust clearance:
0.160 to 0.362 mm (0.0063 to 0.0143 in.)
Maximum thrust clearance:
0.362 mm (0.0143 in.)
If the thrust clearance is greater than the maximum, replace the connecting rod. If necessary, replace the crankshaft.

58. INSPECT CONNECTING ROD OIL CLEARANCE
NOTICE:
Do not turn the crankshaft during the measurement.

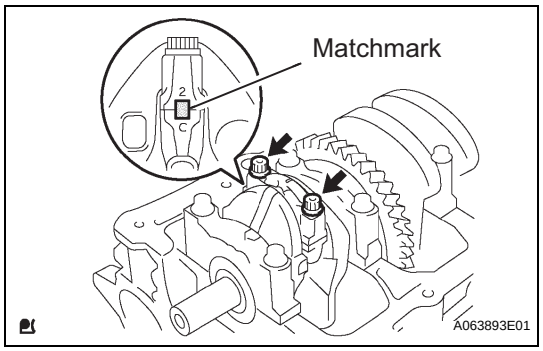

(a) Using marking paint, write the matched cylinder number on each connecting rod and cap.
HINT:
The matchmarks in the connecting rods and caps are for ensuring correct reassembly.

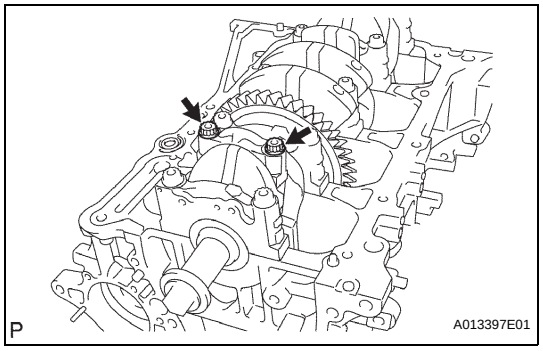

(b) Using a 12 mm socket wrench, remove the 2 bolts and connecting rod cap.
(c) Clean the crank pin and bearing.
(d) Check the crank pin and bearing for pitting and scratches.

EM

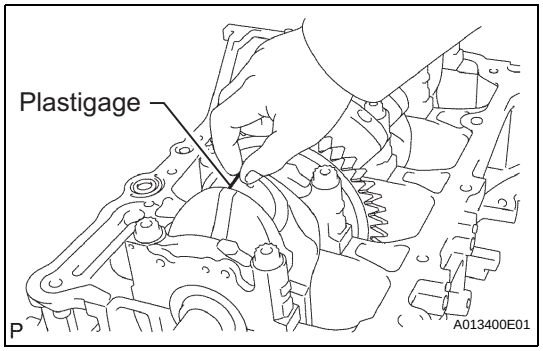

(e) Lay a strip of Plastigage on the crank pin.

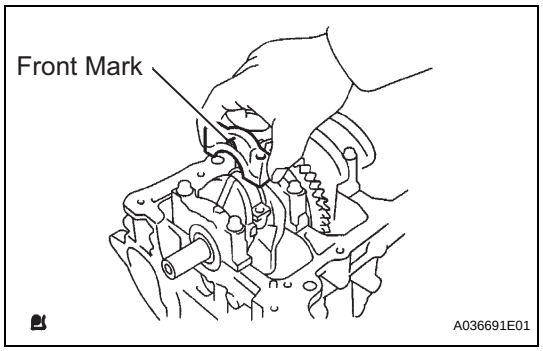

(f) Check that the front mark of the connecting rod cap is facing in the correct direction.
(g) Apply a light coat of engine oil to the threads and under the heads of the connecting rod bolts.
(h) Using a 12 mm socket wrench, tighten the bolts in several passes to the specified torque.
Torque: 24.5 N*m (250 kgf*cm, 18 ft.*lbf)

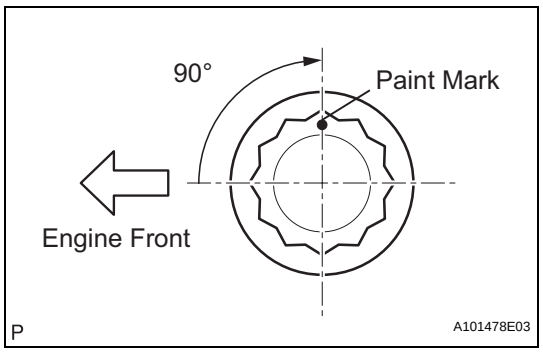

(i) Mark the front of the connecting rod bolts with paint.
(j) Retighten the cap bolts 90° as shown in the illustration.
(k) Check that the crankshaft turns smoothly.
(l) Using a 12 mm socket wrench, remove the 2 bolts and connecting rod cap.

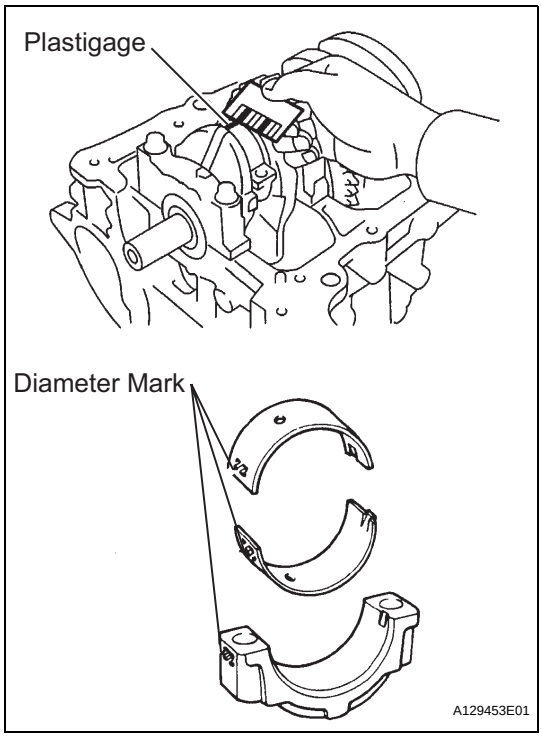

(m) Measure the Plastigage at its widest point.
Standard oil clearance:
0.024 to 0.048 mm (0.0009 to 0.0019 in.)
Maximum oil clearance:
0.08 mm (0.0032 in.)
NOTICE:
Remove the Plastigage completely after the measurement.
If the oil clearance is greater than the maximum, replace the connecting rod bearing. If necessary, grind or replace the crankshaft.
HINT:
If replacing a bearing, select a new one with the same number as marked on the connecting rod. There are 3 sizes of standard bearings, marked "1", "2" and "3" accordingly.
Standard connecting rod large end bore diameter

Mark	Specified Condition
Mark 1	51.000 to 51.007 mm (2.0079 to 2.0082 in.)
Mark 2	51.008 to 51.013 mm (2.0082 to 2.0084 in.)
Mark 3	51.014 to 51.020 mm (2.0084 to 2.0087 in.)

Standard connecting rod bearing thickness

Mark	Specified Condition
Mark 1	1.485 to 1.488 mm (0.0585 to 0.0586 in.)
Mark 2	1.489 to 1.491 mm (0.0586 to 0.0587 in.)
Mark 3	1.492 to 1.494 mm (0.0587 to 0.0588 in.)

Standard crankshaft pin diameter:
47.990 to 48.000 (1.8894 to 1.8898 in.)

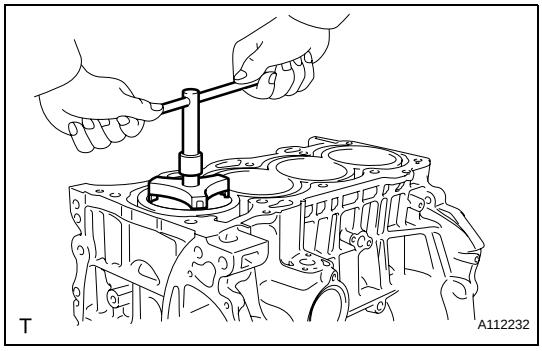

59. REMOVE PISTON WITH CONNECTING ROD

(a) Using a ridge reamer, remove all the carbon from the top of the cylinder.
(b) Push the piston, connecting rod assembly and upper bearing through the top of the cylinder block.
HINT:
- Keep the bearing, connecting rod and cap together.
- Arrange the piston and connecting rod assemblies in the correct order.

60. REMOVE CONNECTING ROD BEARING

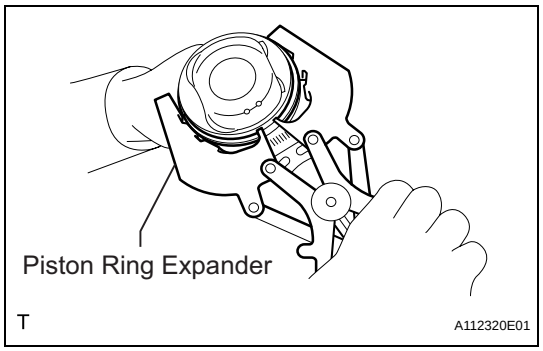

61. REMOVE PISTON RING SET

(a) Using a piston ring expander, remove the 2 compression rings.

(b) Remove the oil ring and expander by hand.

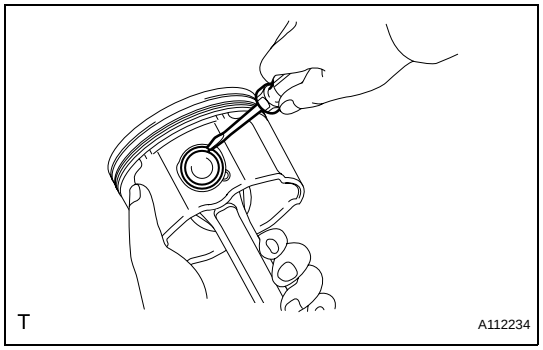

62. REMOVE PISTON PIN HOLE SNAP RING

(a) Using a small screwdriver, pry out the 2 snap rings.

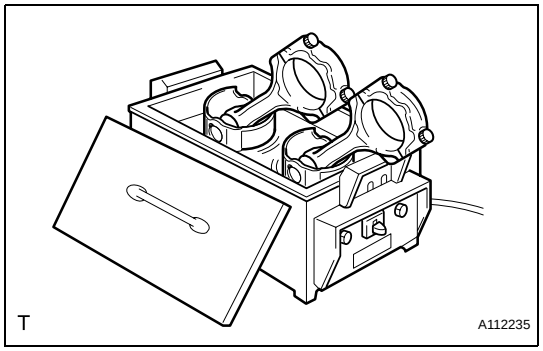

63. REMOVE PISTON

(a) Gradually heat the piston up to 80 to 90°C (176 to 194°F).

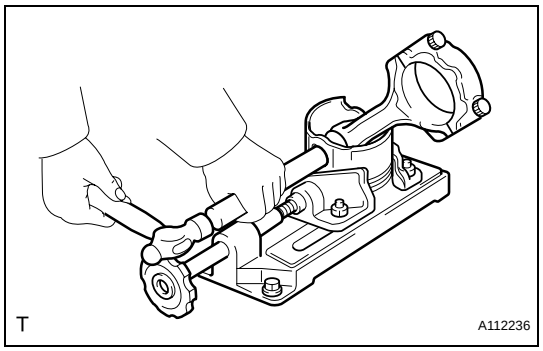

(b) Using a plastic-faced hammer and brass bar, lightly tap out the piston pin, then remove the connecting rod.

HINT:

- The piston and pin are a matched set.
- Arrange the piston, pin, ring, connecting rod and bearings in the correct order.

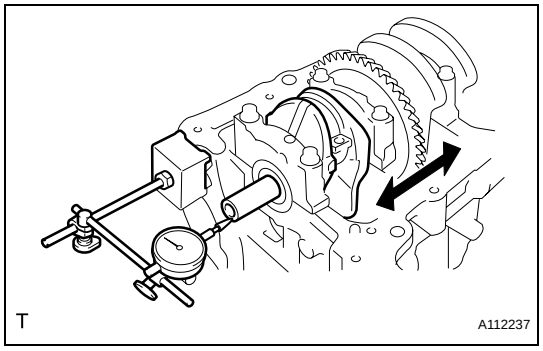

64. INSPECT CRANKSHAFT THRUST CLEARANCE

(a) Using a dial indicator, measure the thrust clearance while prying the crankshaft back and forth with a screwdriver.

Standard thrust clearance:
0.04 to 0.24 mm (0.0016 to 0.0095 in.)
Maximum thrust clearance:
0.30 mm (0.012 in.)

If the thrust clearance is greater than the maximum, replace the thrust washers as a set.

HINT:
The thrust washer thickness is 1.93 to 1.98 mm (0.0760 to 0.0780 in.).

65. INSPECT CRANKSHAFT OIL CLEARANCE
NOTICE:
Do not turn the crankshaft during the measurement.

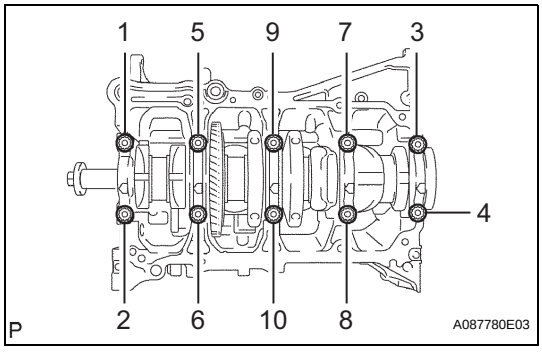

(a) Using several steps, uniformly loosen and remove the 10 bearing cap bolts in the sequence shown in the illustration.
(b) Remove the 5 bearing caps from the cylinder block.
HINT:
- Keep the No. 2 crankshaft bearings and crankshaft bearing caps together.
- Arrange the bearing caps in correct order.

(c) Remove the crankshaft.
HINT:
Keep the crankshaft bearings and crankshaft thrust washer uppers together with the cylinder block.
(d) Clean each main journal and bearing.
(e) Check each main journal and bearing for pitting and scratches.
- If the journal or bearing is damaged, replace the bearings.
- If necessary, replace the crankshaft.

(f) Place the crankshaft onto the cylinder block.

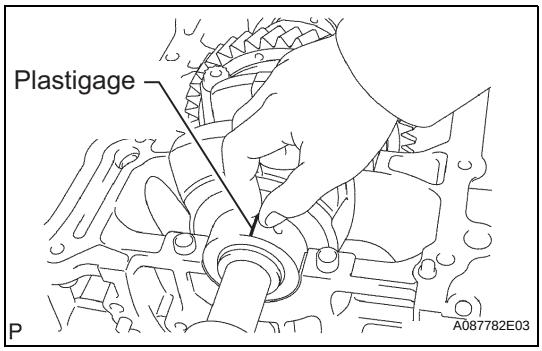

(g) Lay a strip of Plastigage across each journal.

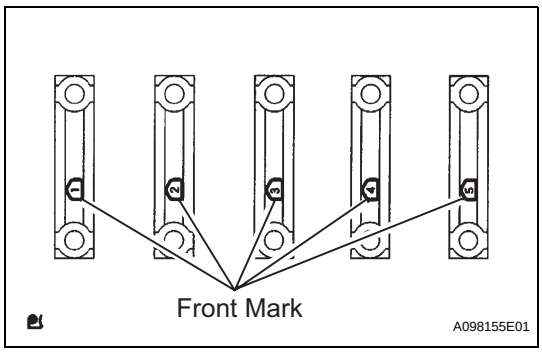

(h) Examine the front marks and numbers, and install the bearing caps onto the cylinder block in the order shown in the illustration.
(i) Apply a light coat of engine oil to the threads and under the heads of the crankshaft bearing cap set bolts.

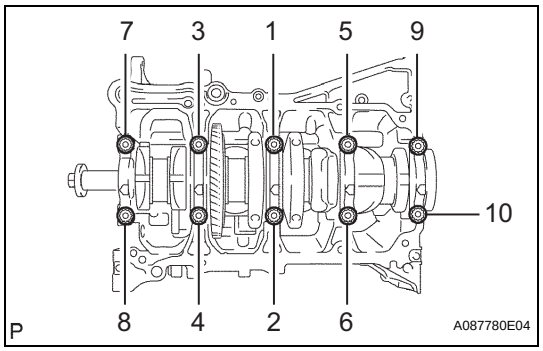

(j) Using several steps, uniformly install and tighten the 10 bearing cap bolts in the sequence shown in the illustration.
Torque: 40 N*m (408 kgf*cm, 30 ft.*lbf)

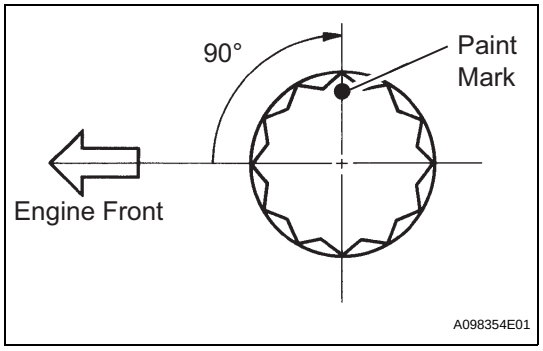

(k) Mark the front of the bearing cap bolts with paint.
(l) Retighten the 10 bearing cap bolts by 90°.
(m) Check that the paint marks are at a 90° angle to the front.

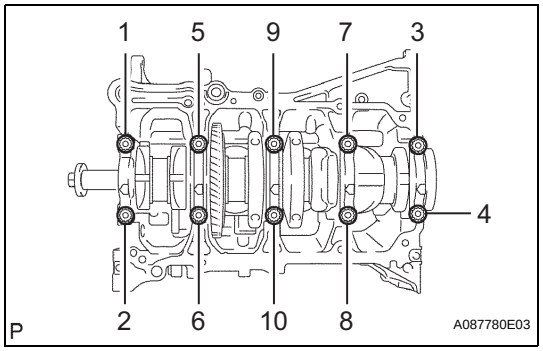

(n) Remove the crankshaft bearing caps.

EM

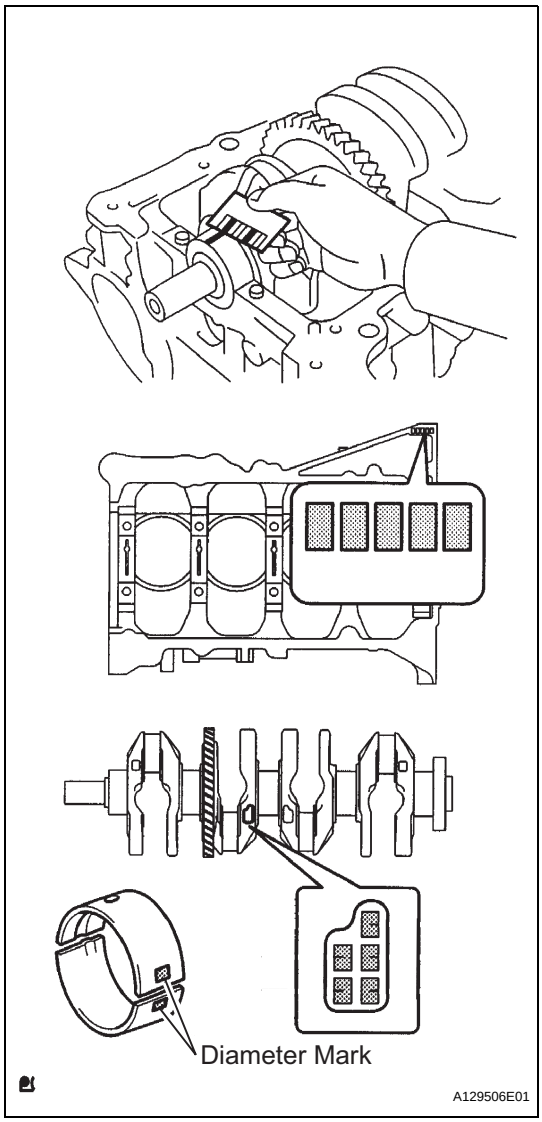

(o) Measure the Plastigage at its widest point.
Standard oil clearance:
0.008 to 0.024 mm (0.0003 to 0.0010 in.)
Maximum oil clearance:
0.050 mm (0.0020 in.)
NOTICE:
Remove the Plastigage completely after the measurement.
If the oil clearance is greater than the maximum, replace the crankshaft bearing. If necessary, replace the crankshaft.
HINT:
If replacing a bearing, select a new one with the same number. If the number of the bearing cannot be determined, calculate the correct bearing number by adding together the numbers imprinted on the cylinder block and crankshaft. Then select a new bearing with the calculated number. There are 4 sizes of standard bearings, marked "1", "2", "3" and "4" accordingly.

Cylinder block + Crankshaft	0 to 2	3 to 5	6 to 8	9 to 11
Use bearing	"1"	"2"	"3"	"4"

EXAMPLE
- Imprinted number on the cylinder block is 3.
- Imprinted number on the crankshaft is 4.
  3 + 4 = 7
  Select the bearing marked "3".

Standard cylinder block journal bore diameter

Mark	Specified Condition
0	59.000 to 59.002 mm (2.3228 to 2.3229 in.)
1	59.003 to 59.004 mm (2.3230 to 2.3230 in.)
2	59.005 to 59.006 mm (2.3230 to 2.3231 in.)
3	59.007 to 59.009 mm (2.3231 to 2.3232 in.)
4	59.010 to 59.011 mm (2.3232 to 2.3233 in.)
5	59.012 to 59.013 mm (2.3233 to 2.3234 in.)
6	59.014 to 59.016 mm (2.3234 to 2.3235 in.)

Standard crankshaft journal diameter

Mark	Specified Condition
0	54.999 to 55.000 mm (2.1653 to 2.1654 in.)
1	54.997 to 54.998 mm (2.1652 to 2.1653 in.)
2	54.995 to 54.996 mm (2.1652 to 2.1652 in.)
3	54.993 to 54.994 mm (2.1651 to 2.1651 in.)

Mark	Specified Condition
4	54.991 to 54.992 mm (2.1650 to 2.1650 in.)
5	54.988 to 54.990 mm (2.1649 to 2.1650 in.)

Standard bearing center wall thickness

Mark	Specified Condition
1	1.993 to 1.996 mm (0.0785 to 0.0786 in.)
2	1.997 to 1.999 mm (0.0786 to 0.0787 in.)
3	2.000 to 2.002 mm (0.0787 to 0.0788 in.)
4	2.003 to 2.005 mm (0.0789 to 0.0789 in.)

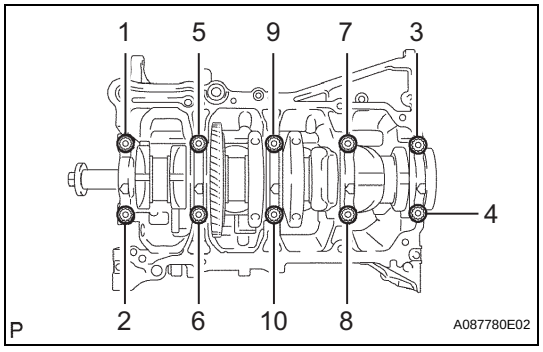

66. REMOVE CRANKSHAFT

(a) Using several steps, uniformly loosen and remove the 10 bearing cap bolts in the sequence shown in the illustration.
(b) Remove the 5 bearing caps from the cylinder block.
(c) Remove the crankshaft from the cylinder block.

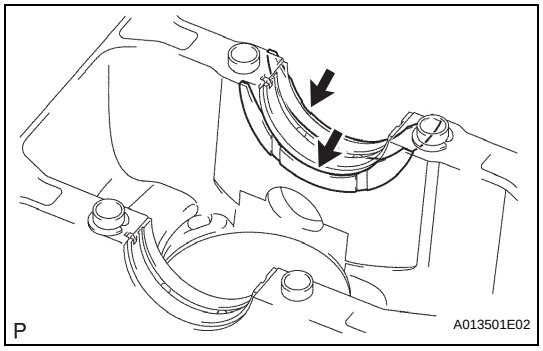

67. REMOVE CRANKSHAFT THRUST WASHER UPPER

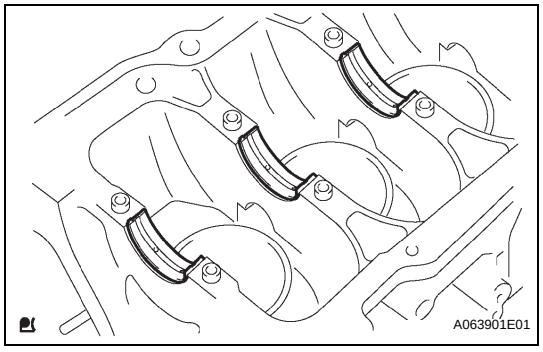

68. REMOVE CRANKSHAFT BEARING

HINT:
Arrange the bearings in the correct order.

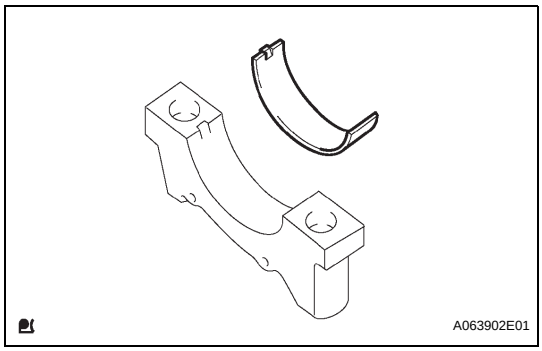

69. REMOVE NO. 2 CRANKSHAFT BEARING

HINT:

Arrange the bearings in the correct order.

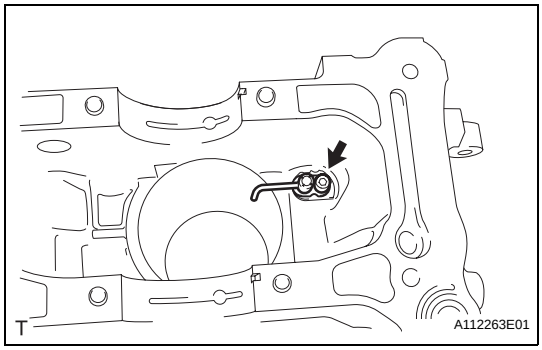

70. REMOVE NO. 1 OIL NOZZLE SUB-ASSEMBLY

(a) Remove the 4 bolts and 4 oil nozzles.

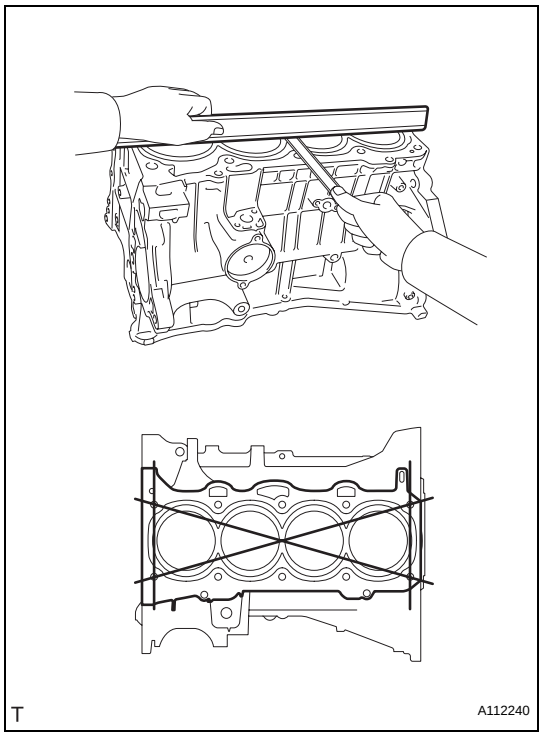

INSPECTION

1. INSPECT CYLINDER BLOCK FOR WARPAGE

(a) Using a precision straightedge and feeler gauge, measure the warpage of the surface that is in contact with the cylinder head gasket.

Maximum warpage:

0.05 mm (0.0020 in.)

If the warpage is greater than the maximum, replace the cylinder block.

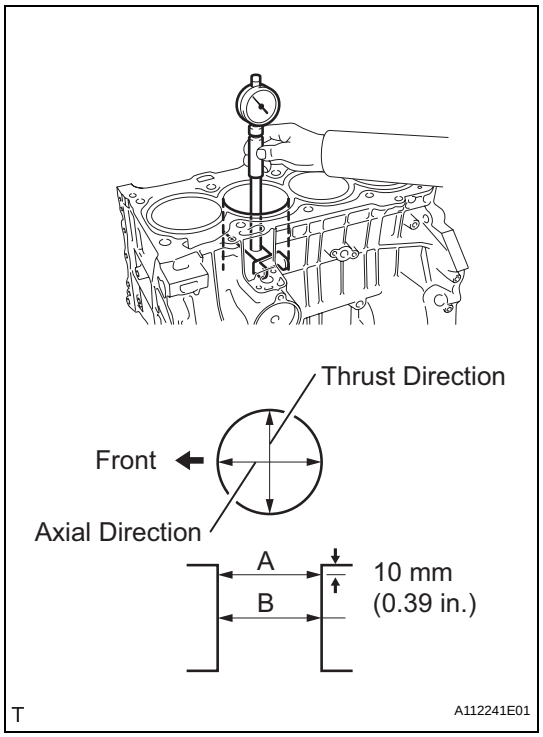

2. INSPECT CYLINDER BORE

(a) Using a cylinder gauge, measure the cylinder bore diameter at positions A and B in the thrust and axial directions.

Standard diameter:
88.500 to 88.513 mm (3.4843 to 3.4847 in.)
Maximum diameter:
88.633 mm (3.4894 in.)

If the average diameter of the 4 positions is greater than the maximum, replace the cylinder block.

EM

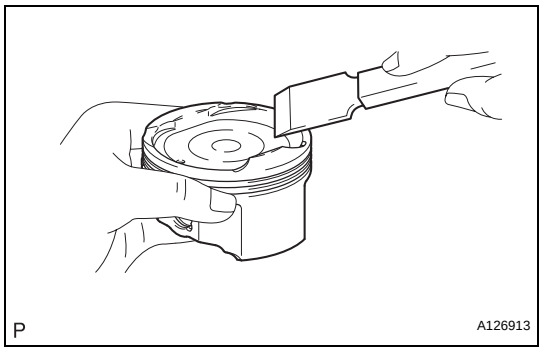

3. INSPECT PISTON

(a) Using a gasket scraper, remove the carbon from the piston top.

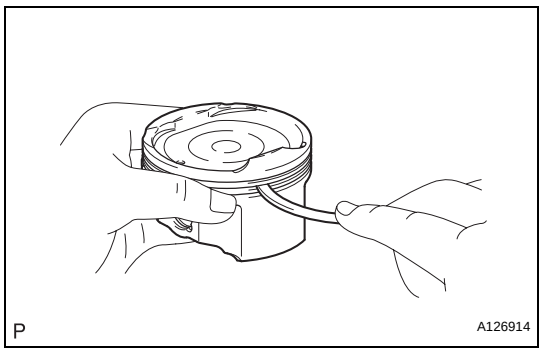

(b) Using a groove cleaning tool or a broken ring, clean the piston ring grooves.

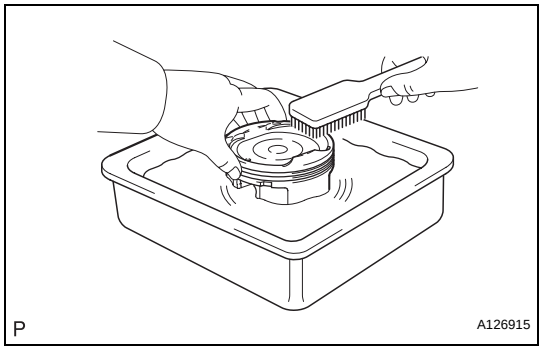

(c) Using a brush and solvent, thoroughly clean the piston.

NOTICE:
Do not use a wire brush.

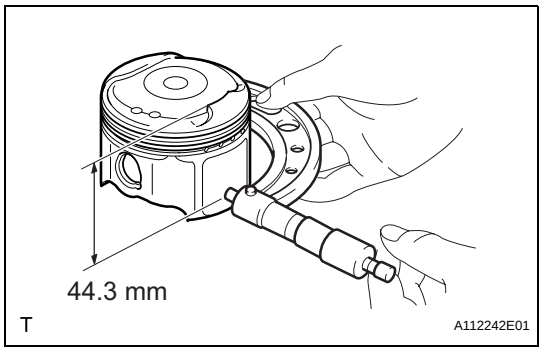

(d) Using a micrometer, measure the piston diameter at right angles to the piston pin hole, and at the piston 44.3 mm (1.7587 in.) from the piston head.
Standard piston diameter:
88.477 to 88.487 mm (3.5125 to 3.5129 in.)
If the diameter is not as specified, replace the piston.

4. INSPECT PISTON OIL CLEARANCE

(a) Subtract the piston diameter measurement from the cylinder bore diameter measurement.
Standard oil clearance:
0.021 to 0.044 mm (0.0008 to 0.0017 in.)
Maximum oil clearance:
0.10 mm (0.0039 in.)
If the oil clearance is greater than the maximum, replace all the pistons. If necessary, replace the cylinder block.

EM

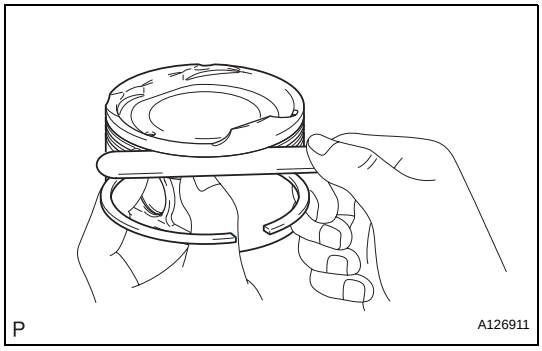

5. INSPECT RING GROOVE CLEARANCE

(a) Using a feeler gauge, measure the clearance between the new piston ring and wall of the ring groove.
Standard ring groove clearance

Item	Specified Condition
No. 1 ring	0.020 to 0.070 mm (0.0008 to 0.0028 in.)
No. 2 ring	0.020 to 0.060 mm (0.0008 to 0.0024 in.)
Oil ring	0.020 to 0.070 mm (0.0008 to 0.0028 in.)

If the groove clearance is not as specified, replace the piston.

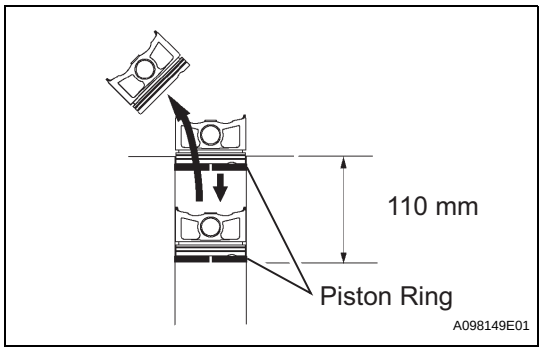

6. INSPECT PISTON RING END GAP

(a) Using a piston, push the piston ring a little beyond the bottom of the ring travel, 110 mm (4.33 in.) from the top of the cylinder block.

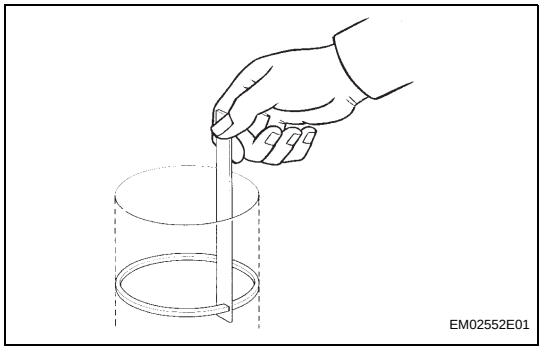

(b) Using a feeler gauge, measure the end gap.
Standard end gap

Item	Specified Condition
No. 1 ring	0.24 to 0.31 mm (0.0094 to 0.0122 in.)
No. 2 ring	0.33 to 0.43 mm (0.0130 to 0.0169 in.)
Oil ring	0.10 to 0.30 mm (0.0040 to 0.0119 in.)

Maximum end gap

Item	Specified Condition
No. 1 ring	0.89 mm (0.0350 in.)

Item	Specified Condition
No. 2 ring	1.37 mm (0.0539 in.)
Oil ring	0.73 mm (0.0287 in.)

If the end gap is greater than the maximum, replace the piston ring. If the end gap is greater than the maximum, even with a new piston ring, replace the cylinder block.

7. INSPECT PISTON PIN OIL CLEARANCE

(a) Using a caliper gauge, measure the piston pin bore diameter.

Standard piston pin bore diameter:
22.001 to 22.010 mm (0.8662 to 0.8665 in.)

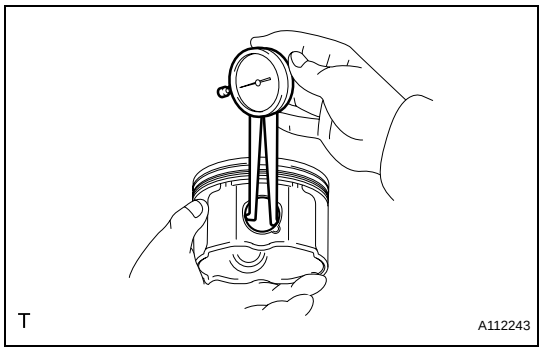

Item	Specified Condition
A	22.001 to 22.004 mm (0.8662 to 0.8663 in.)
B	22.005 to 22.007 mm (0.8663 to 0.8664 in.)
C	22.008 to 22.010 mm (0.8665 to 0.8665 in.)

If the diameter is not as specified, replace the piston.

(b) Using a micrometer, measure the piston pin diameter.

Standard piston pin diameter:
21.997 to 22.006 mm (0.8660 to 0.8664 in.)

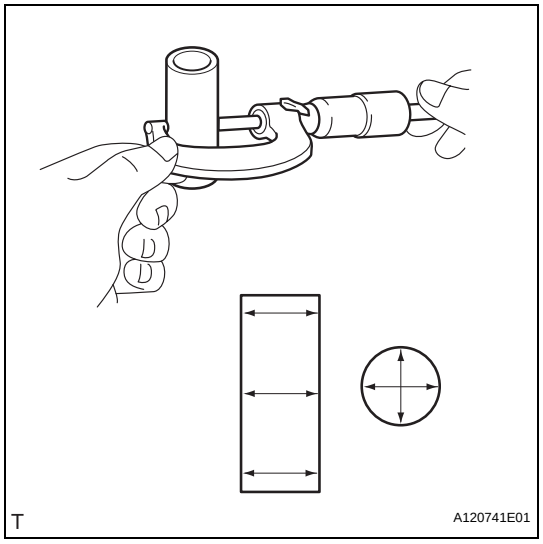

Item	Specified Condition
A	21.997 to 22.000 mm (0.8660 to 0.8661 in.)
B	22.001 to 22.003 mm (0.8662 to 0.8663 in.)
C	22.004 to 22.006 mm (0.8663 to 0.8664 in.)

If the diameter is not as specified, replace the piston pin.

(c) Using a caliper gauge, measure the connecting rod small end bore diameter.

Standard connecting rod small end bore diameter:
22.005 to 22.014 mm (0.8663 to 0.8667 in.)

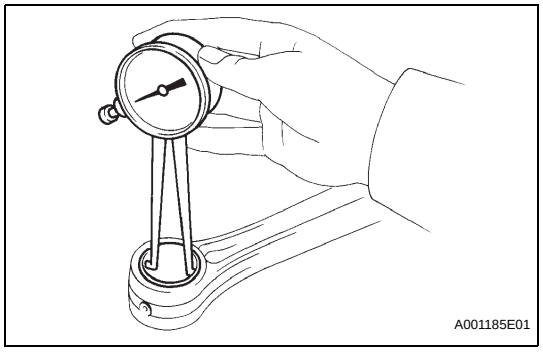

Item	Specified Condition
A	22.005 to 22.008 mm (0.8663 to 0.8665 in.)
B	22.009 to 22.011 mm (0.8665 to 0.8666 in.)
C	22.012 to 22.014 mm (0.8666 to 0.8667 in.)

If the diameter is not as specified, replace the connecting rod.

EM

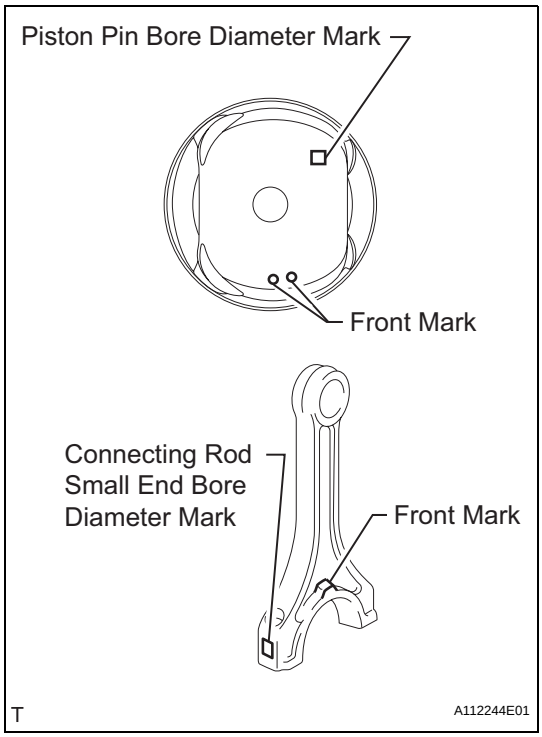

(d) Subtract the piston pin diameter measurement from the piston pin bore diameter measurement.
Standard oil clearance:
0.001 to 0.007 mm (0.00004 to 0.0003 in.)
Maximum oil clearance:
0.013 mm (0.0005 in.)
If the oil clearance is greater than the maximum, replace the connecting rod. If necessary, replace the piston and piston pin as a set.

(e) Subtract the piston pin diameter measurement from the connecting rod small end bore diameter measurement.
Standard oil clearance:
0.005 to 0.011 mm (0.0002 to 0.0004 in.)
Maximum oil clearance:
0.017 mm (0.0007 in.)
If the oil clearance is greater than the maximum, replace the connecting rod. If necessary, replace the connecting rod and piston pin as a set.

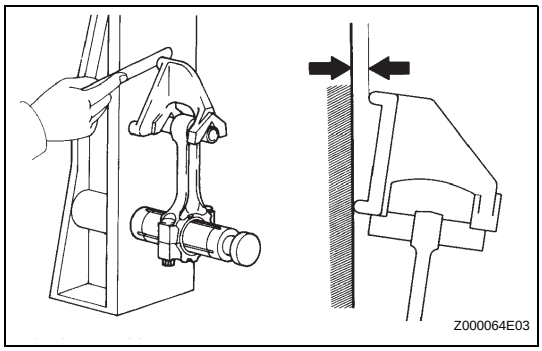

8. INSPECT CONNECTING ROD SUB-ASSEMBLY

(a) Using a connecting rod aligner and feeler gauge, check the connecting rod alignment.

(1) Check for misalignment.
Maximum misalignment:
0.05 mm (0.0020 in.) per 100 mm (3.94 in.)
If the misalignment is greater than the maximum, replace the connecting rod.

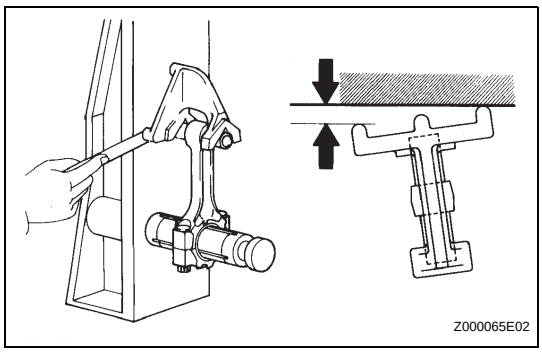

(2) Check for twist.
Maximum twist:
0.15 mm (0.0059 in.) per 100 mm (3.94 in.)
If the twist is greater than the maximum, replace the connecting rod.

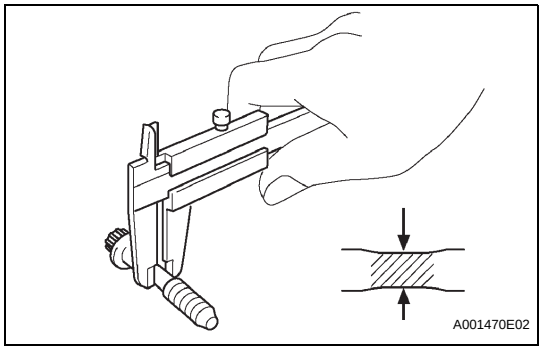

9. INSPECT CONNECTING ROD BOLT

(a) Using a vernier caliper, measure the tension portion diameter of the bolt.
Standard diameter:
7.2 to 7.3 mm (0.283 to 0.287 in.)
Maximum diameter:
7.0 mm (0.276 in.)
If the diameter is less than the minimum, replace the connecting rod bolt.

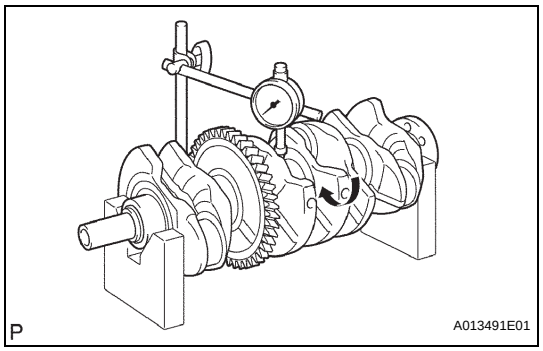

10. INSPECT CRANKSHAFT

(a) Using a dial indicator and V-blocks, measure the circle runout as shown in the illustration.
Maximum taper and distortion:
0.003 mm (0.0001 in.)
If the taper and distortion are greater than the maximum, replace the crankshaft.

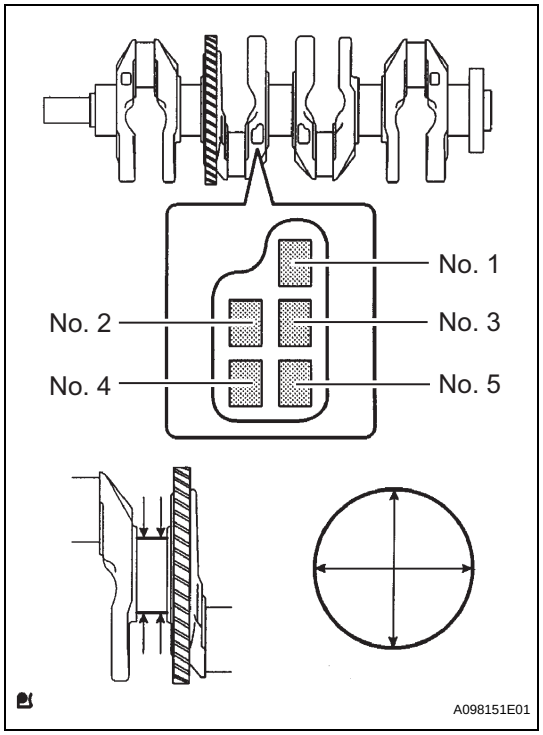

(b) Using a micrometer, measure the diameter of each main journal.
Standard diameter:
54.988 to 55.000 mm (2.1830 to 2.1654 in.)
If the diameter is not as specified, check the crankshaft oil clearance.

(c) Check each main journal for taper and distortion as shown in the illustration.
Maximum taper and distortion:
0.003 mm (0.0001 in.)
If the taper and distortion are greater than the maximum, replace the crankshaft.
Standard diameter (Reference)

Mark	Specified Condition
0	54.999 to 55.000 mm (2.1653 to 2.1654 in.)
1	54.997 to 54.998 mm (2.1652 to 2.1653 in.)
2	54.995 to 54.996 mm (2.1652 to 2.1652 in.)
3	54.993 to 54.994 mm (2.1651 to 2.1651 in.)
4	54.991 to 54.992 mm (2.1650 to 2.1650 in.)
5	54.998 to 54.990 mm (2.1649 to 2.1650 in.)

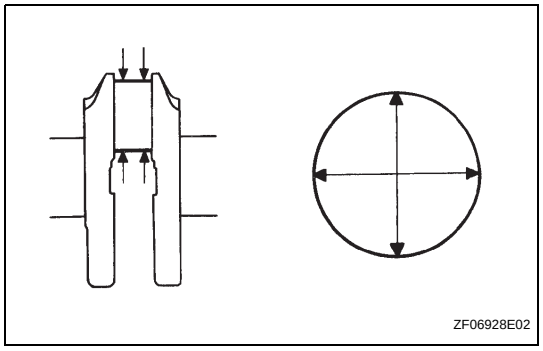

(d) Using a micrometer, measure the diameter of each crank pin.
Standard diameter:
47.990 to 48.000 mm (1.8894 to 1.8898 in.)
If the diameter is not as specified, check the connecting rod oil clearance.

(e) Inspect each crank pin for taper and distortion as shown in the illustration.
Maximum taper and distortion:
0.003 mm (0.0001 in.)
If the taper and distortion are greater than the maximum, replace the crankshaft.

EM

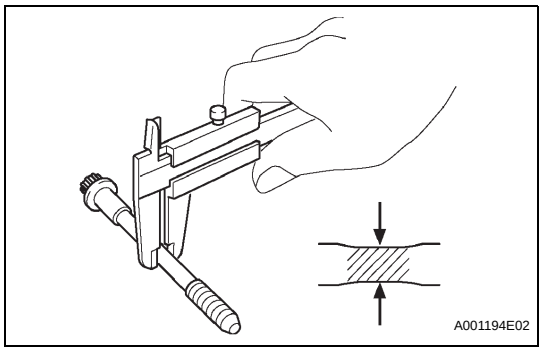

11. INSPECT CRANKSHAFT BEARING CAP SET BOLT

(a) Using a vernier caliper, measure the tension portion diameter of the bolts.

Standard diameter:

7.5 to 7.6 mm (0.295 to 0.299 in.)

Minimum diameter:

7.5 mm (0.295 in.)

If the diameter is less than the minimum, replace the bolt.

REPLACEMENT

1. REPLACE TIMING CHAIN COVER OIL SEAL

HINT:

There are 2 methods to replace the oil seal.

(a) If the timing chain cover is removed from the cylinder block:

(1) Using a screwdriver and hammer, tap out the oil seal.

(2) Apply multi-purpose grease to the lip of a new oil seal.

NOTICE:

Keep the lip free of foreign objects.

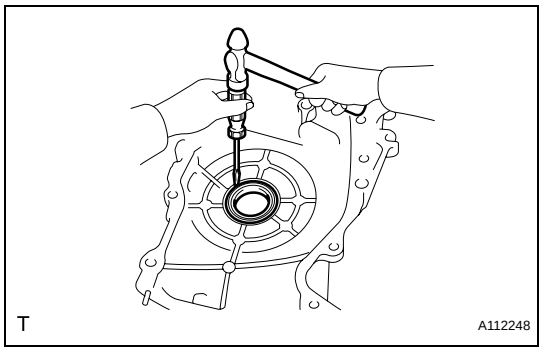

(3) Using SST and a hammer, tap in the new oil seal until its surface is flush with the timing chain cover edge.

SST 09223-22010

NOTICE:

Do not tap the oil seal at an angle.

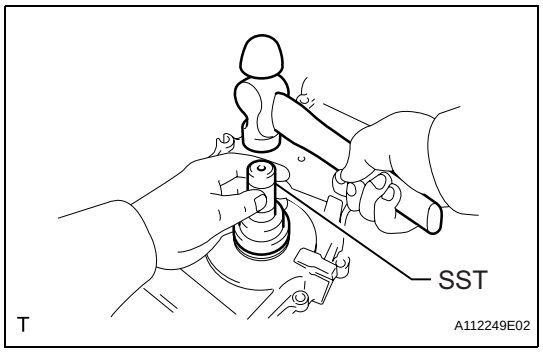

(b) If the timing chain cover oil seal is installed to the cylinder block:

(1) Remove the fan and generator V belt (see page EM-6).

(2) Remove the crankshaft pulley (see page EM-25).

(3) Using a knife, cut off the lip of the oil seal.

(4) Using a screwdriver with its tip wrapped with tape, pry out the oil seal.

NOTICE:

After removing, check the crankshaft for damage. If damaged, smooth the surface with 400-grit sandpaper.

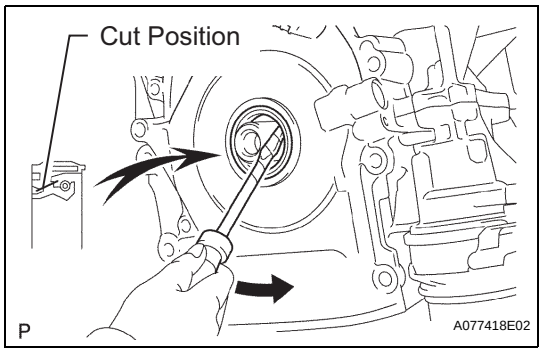

(5) Apply multi-purpose grease to the lip of a new oil seal.

NOTICE:

Keep the lip free of foreign objects.

(6) Using SST and a hammer, tap in the new oil seal until its surface is flush with the timing chain cover edge.

SST 09223-22010

NOTICE:

Do not tap the oil seal at an angle.

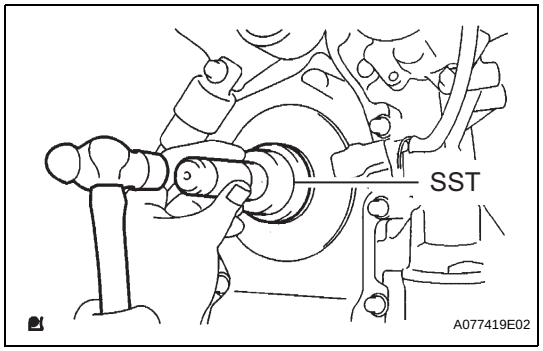

(7) Install the crankshaft pulley (see page EM-38).

(8) Install the fan and generator V belt (see page EM-7).

EM

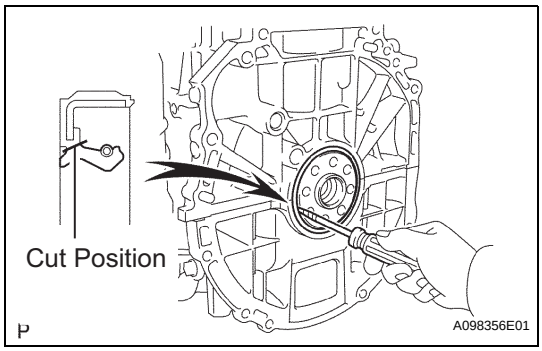

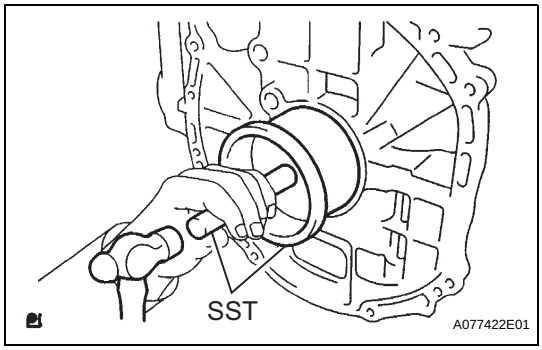

2. REPLACE ENGINE REAR OIL SEAL

(a) Using a knife, cut off the lip of the oil seal.

(b) Using a screwdriver with its tip wrapped with tape, pry out the oil seal.

NOTICE:
After removing, check the crankshaft for damage. If damaged, smooth the surface with 400-grit sandpaper.

(c) Apply multi-purpose grease to the lip of a new oil seal.

NOTICE:
Keep the lip free of foreign objects.

(d) Using SST and a hammer, tap in the new oil seal until its surface is flush with the rear oil seal retainer edge.

SST 09223-15030, 09950-70010 (09951-07100)

NOTICE:
- **Wipe any extra grease off the crankshaft.**
- **Do not tap the oil seal at an angle.**

3. REPLACE STUD BOLT (for Cylinder Block)

NOTICE:
If the stud bolt is deformed or the threads are damaged, replace it.

(a) Remove the 8 stud bolts.

(b) Install the 8 stud bolts into the cylinder block.

Torque

Item	Specified Condition
A	5.0 N*m (51 kgf*cm, 44 in.*lbf)
B	21.5 N*m (219 kgf*cm, 16 ft.*lbf)
C	5.0 N*m (51 kgf*cm, 44 in.*lbf)
D	5.0 N*m (51 kgf*cm, 44 in.*lbf)

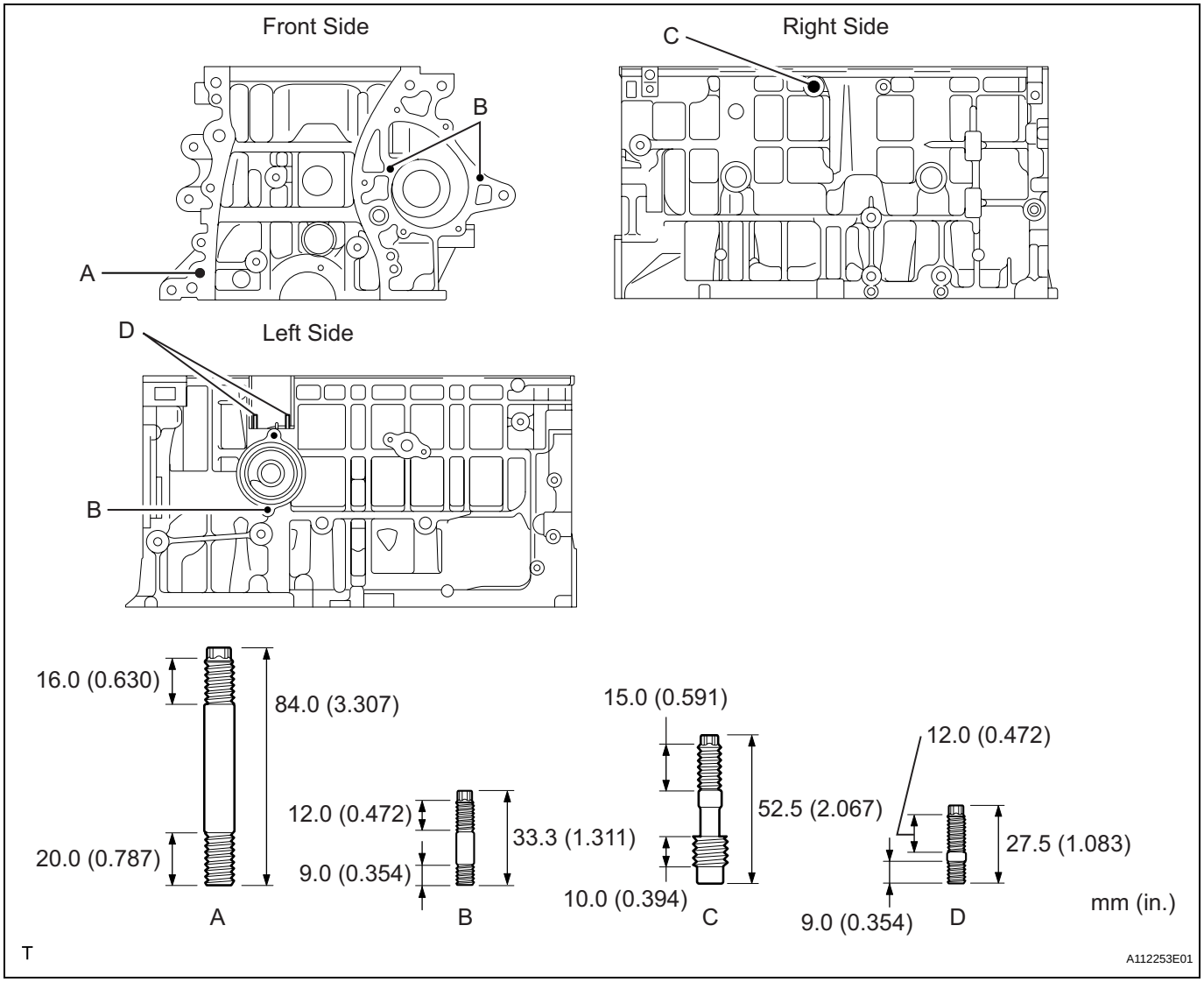

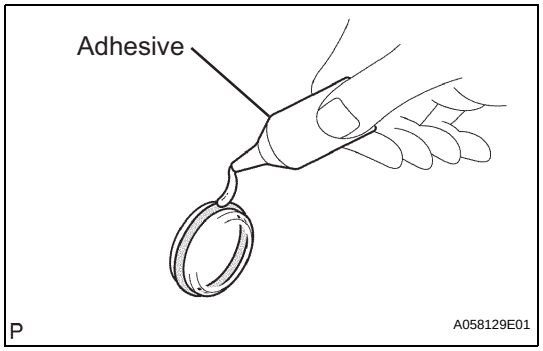

4. REPLACE TIGHT PLUG (for Cylinder Block)

NOTICE:

If water leaks from the tight plug or the plug corrodes, replace it.

(a) Remove the 2 tight plugs from the engine front and rear side.

(b) Apply adhesive around new tight plugs.

Adhesive:

Toyota Genuine Adhesive 1342, Three Bond 1342 or Equivalent

(c) Using SST, install the 2 tight plugs.

SST 09950-60010 (09951-00200), 09950-70010 (09951-07100)

Standard depth

Item	Specified Condition
A	1.7 to 2.7 mm (0.067 to 0.106 in.)
B	2.2 to 3.2 mm (0.087 to 0.126 in.)

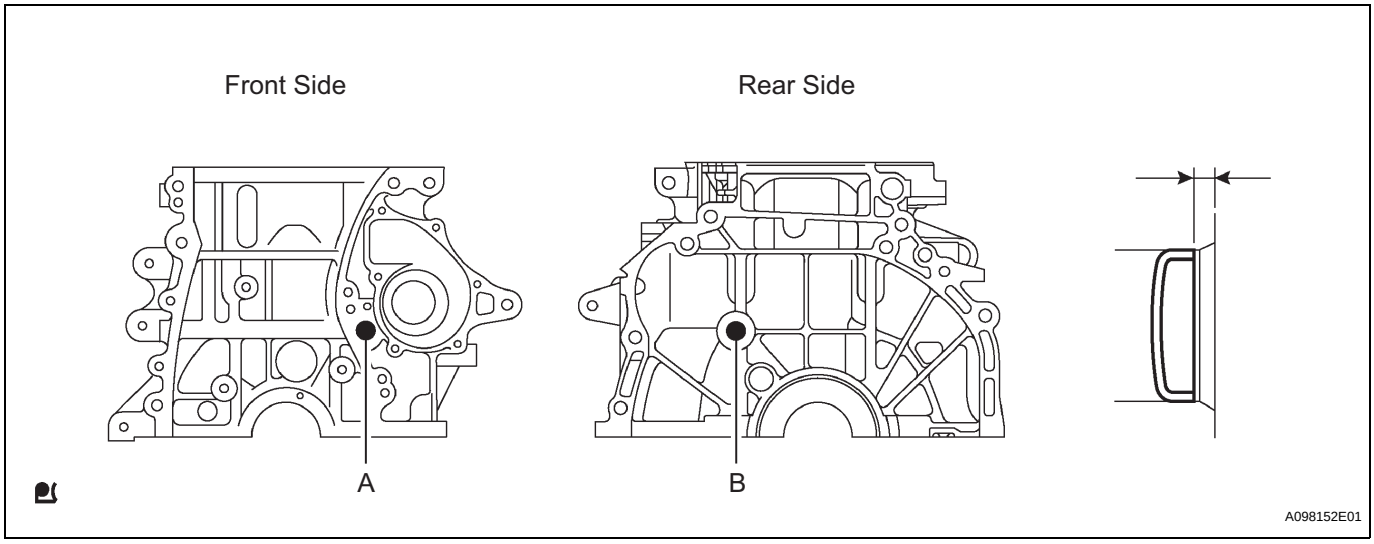

EM

5. REPLACE RING PIN (for Cylinder Block)

NOTICE:

It is not necessary to remove with head pin unless it is being replaced.

(a) Remove the 12 ring pins.

(b) Using a plastic-faced hammer, install 12 new ring pins.

Standard protrusion height

Item	Specified Condition
A	6.0 mm (0.236 in.)
B	5.0 mm (0.197 in.)

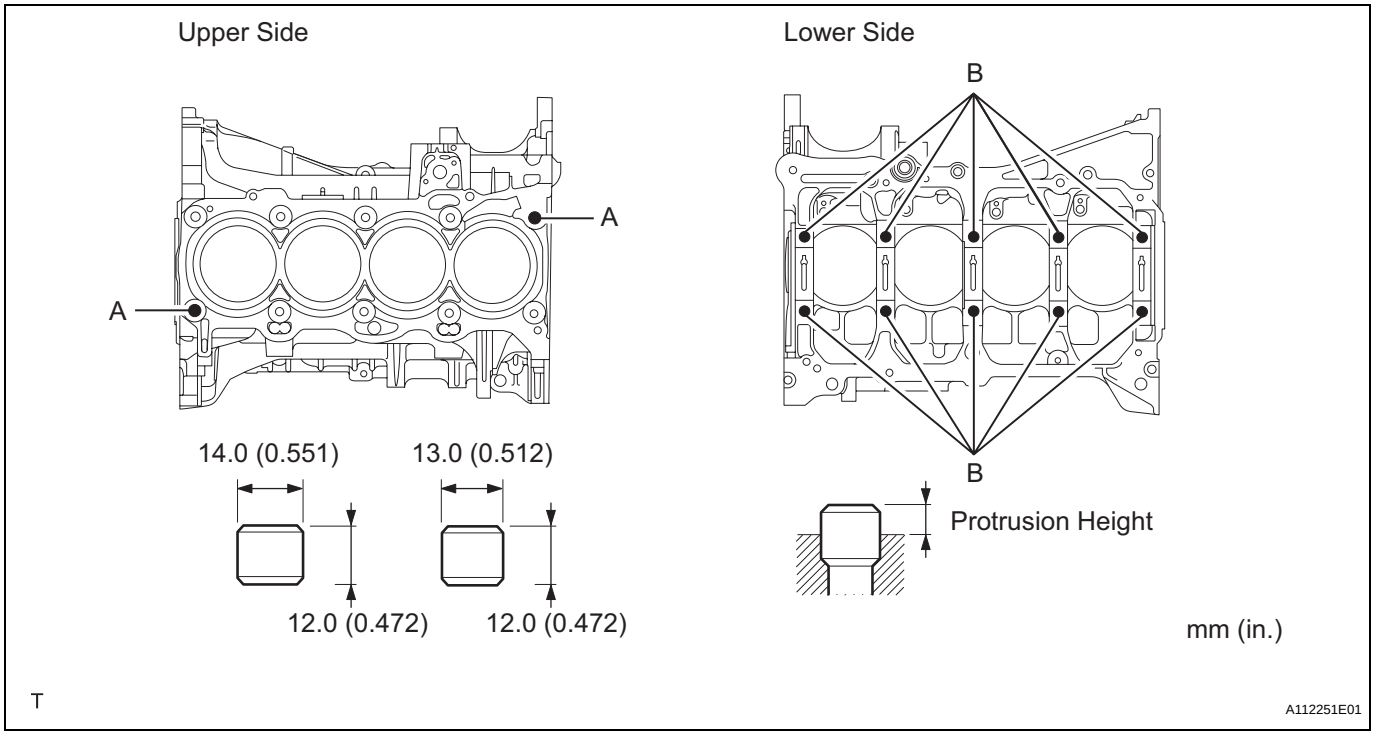

6. REPLACE STRAIGHT PIN (for Cylinder Block)

NOTICE:

It is not necessary to remove with straight pin unless it is being replaced.

(a) Remove the 8 straight pins.

(b) Using a plastic-faced hammer, install 8 new straight pins.

Standard protrusion height

Item	Specified Condition
A	8.0 mm (0.315 in.)
B	7.5 mm (0.295 in.)
C	12.0 mm (0.472 in.)
D	5.0 mm (0.197 in.)

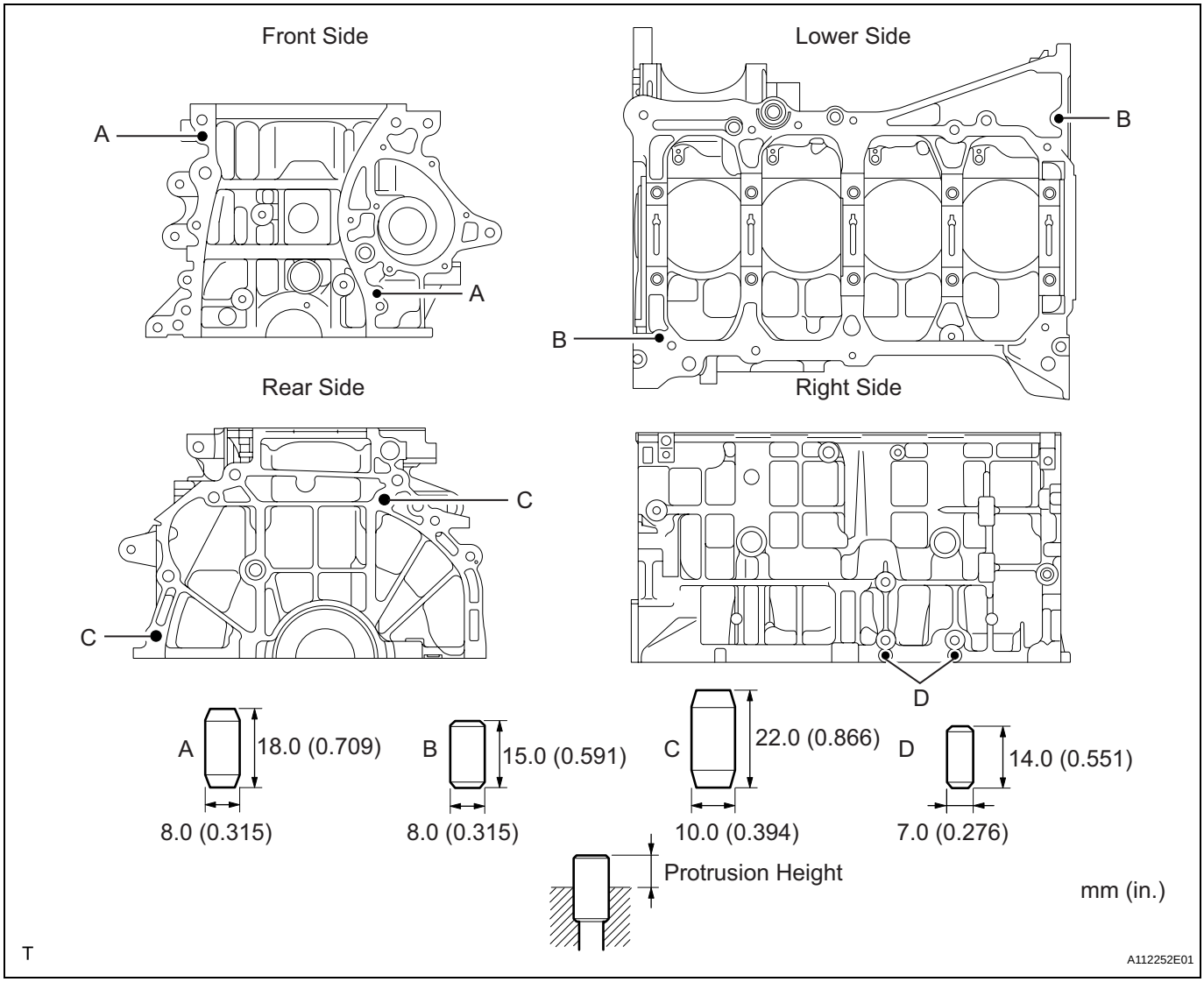

EM

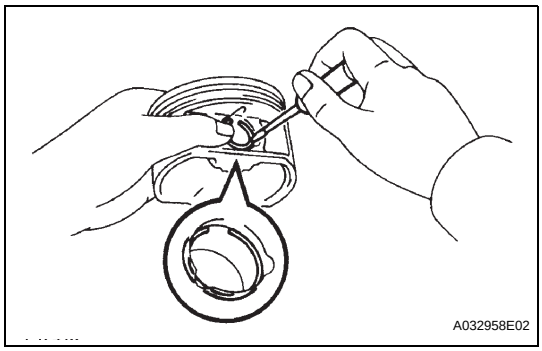

REASSEMBLY

1. INSTALL PISTON

(a) Using a small screwdriver, install a new snap ring onto one end of the piston pin hole.
HINT:
Make sure that the end gap of the snap ring is not aligned with the pin hole cutout portion of the piston.

(b) Gradually heat the piston up to 80 to 90°C (176 to 194°F).

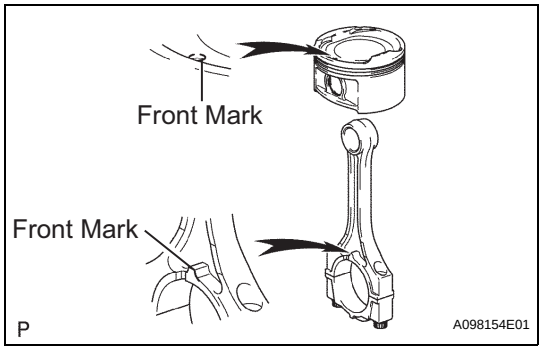

(c) Align the front marks of the piston and connecting rod, then push in the piston pin with your thumb until the pin comes into contact with the snap pin hole.
HINT:
Make sure that the end gap of the snap ring is not aligned with the pin hole cutout portion of the piston.

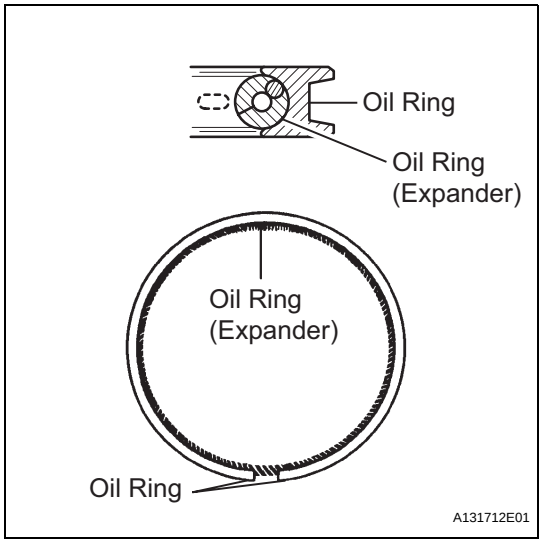

2. INSTALL PISTON RING SET

(a) Install the expander and oil ring by hand.

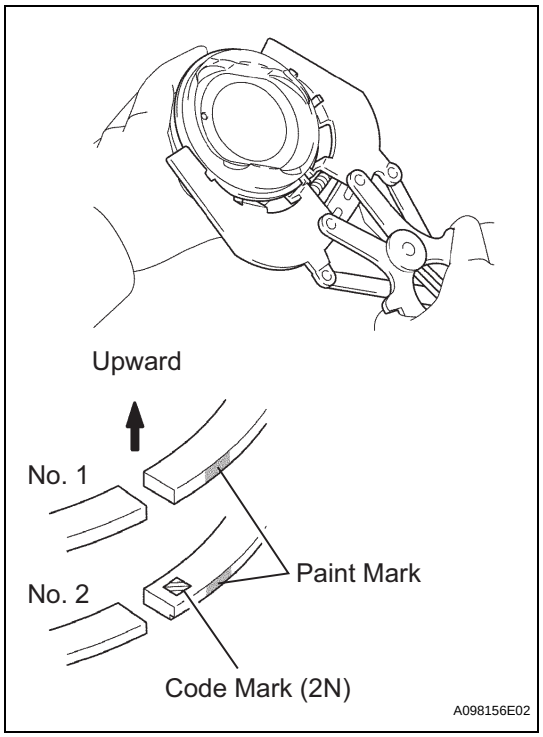

(b) Using a piston ring expander, install the 2 compression rings with the paint mark as shown in the illustration.
NOTICE:
Install the No. 2 compression ring with the code mark (2N) facing upward.

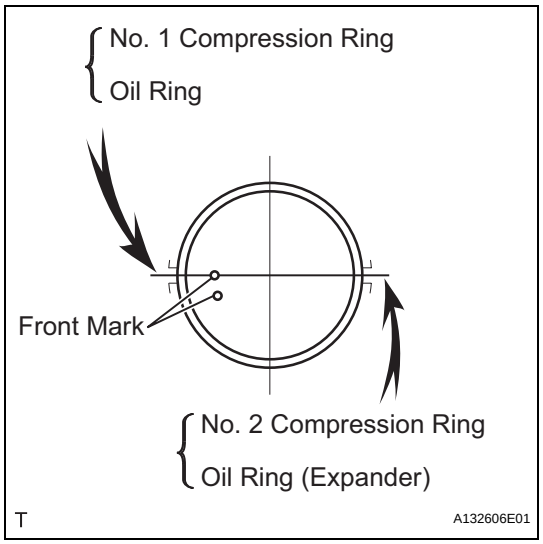

(c) Position the piston rings so that the ring ends are as shown in the illustration.

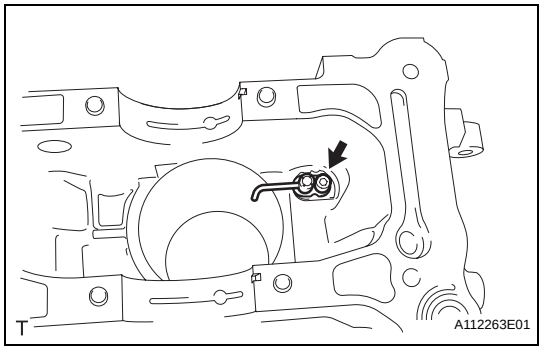

3. INSTALL NO. 1 OIL NOZZLE SUB-ASSEMBLY

(a) Install the 4 oil nozzles with the 4 bolts.
Torque: 7.0 N*m (71 kgf*cm, 62 in.*lbf)

EM

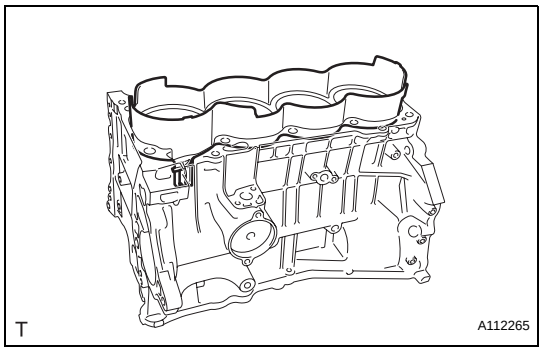

4. INSTALL CYLINDER BLOCK WATER JACKET SPACER

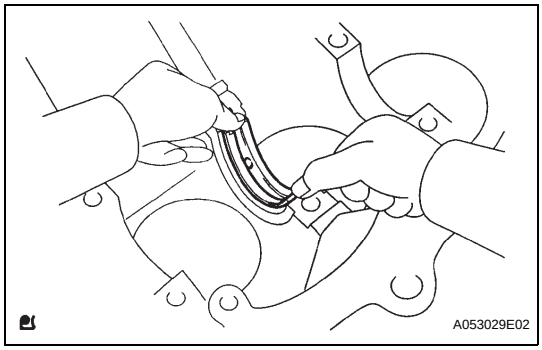

5. INSTALL CRANKSHAFT BEARING

(a) Install the upper bearing with an oil groove onto the cylinder block.

NOTICE:

Do not apply engine oil to the contact surfaces of the cylinder block and crankshaft bearing.

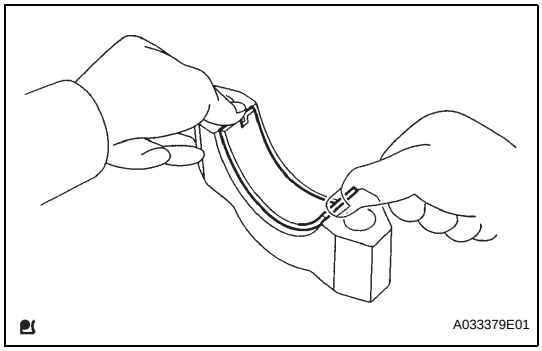

6. INSTALL NO. 2 CRANKSHAFT BEARING

(a) Install the lower bearing onto the bearing cap.

NOTICE:

Do not apply engine oil to the contact surfaces of the cylinder block and crankshaft bearing cap..

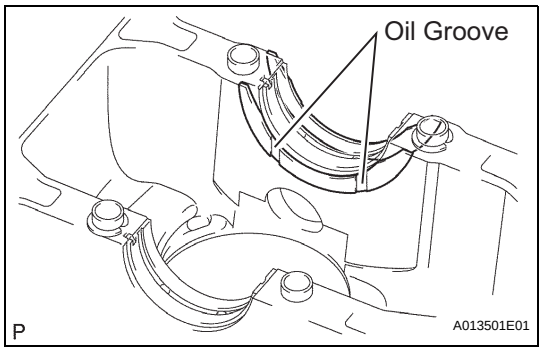

7. INSTALL CRANKSHAFT THRUST WASHER UPPER

(a) Install the 2 thrust washers onto the No. 3 journal position of the cylinder block with the oil groove facing outward.

8. INSTALL CRANKSHAFT

(a) Apply engine oil to the upper bearing, and install the crankshaft onto the cylinder block.

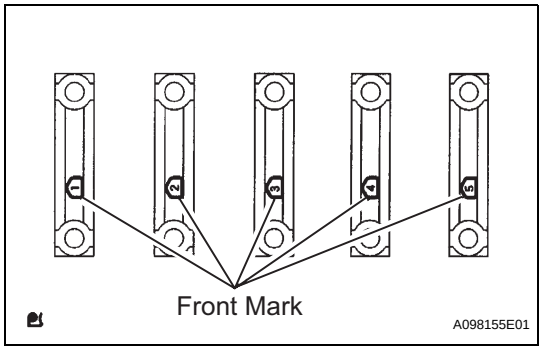

(b) Examine the front marks and numbers, and install the bearing caps onto the cylinder block in the order shown in the illustration.

(c) Apply a light coat of engine oil to the threads and under the heads of the bearing cap bolts.

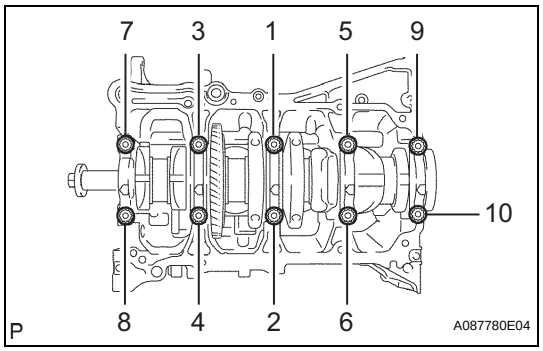

(d) Using several steps, uniformly install and tighten the 10 bearing cap bolts in the sequence shown in the illustration.
Torque: 40 N*m (408 kgf*cm, 30 ft.*lbf)

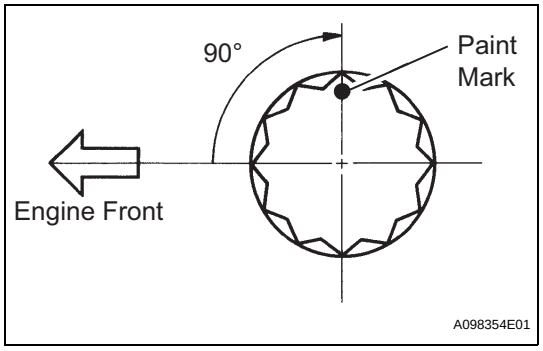

(e) Mark the front of the bearing cap bolts with paint.
(f) Retighten the 10 bearing cap bolts by 90° in the same sequence.
(g) Check that the paint marks are now at a 90° angle to the front.
(h) Check that the crankshaft turns smoothly.

EM

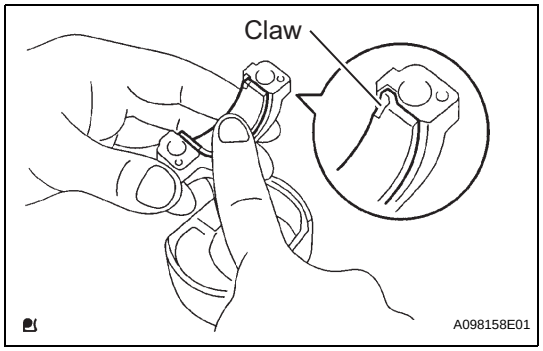

9. INSTALL CONNECTING ROD BEARING

(a) Align the bearing claw with the oil groove of the connecting rod or connecting rod cap.
NOTICE:
- **Do not apply engine oil to the contact surfaces of the connecting rod cap and bearing.**
- **Do not apply engine oil to the contact surfaces of the connecting rod and bearing.**

10. INSTALL PISTON WITH CONNECTING ROD

(a) Apply engine oil to the cylinder walls, pistons, and surfaces of connecting rod bearings.

(b) Check the position of the piston ring ends.

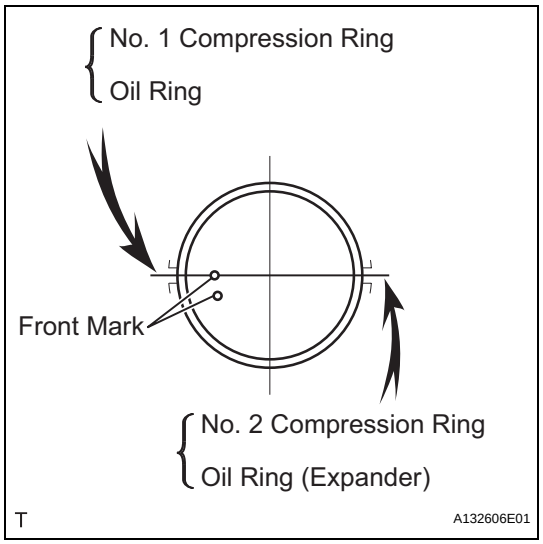

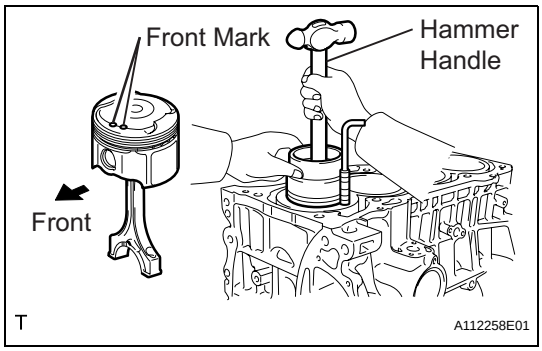

(c) Using a hammer handle and piston ring compressor, press a piston and connecting rod into each cylinder with the front mark of the piston facing forward.

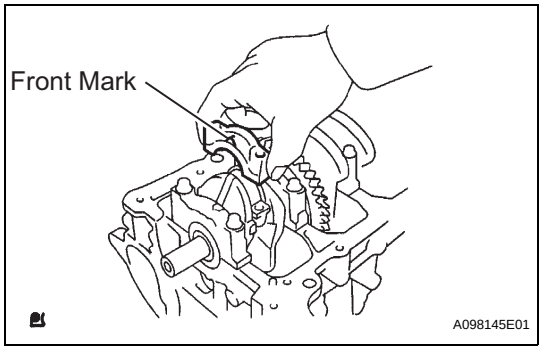

(d) Check that the front mark of the connecting rod cap is facing in the correct direction.
NOTICE:
Match the numbered connecting rod cap with the connecting rod.

(e) Apply a light coat of engine oil to the threads and under the heads of the connecting rod bolts.

(f) Using a 12 mm socket wrench, tighten the bolts in several passes to the specified torque.
Torque: 24.5 N*m (250 kgf*cm, 18 ft.*lbf)

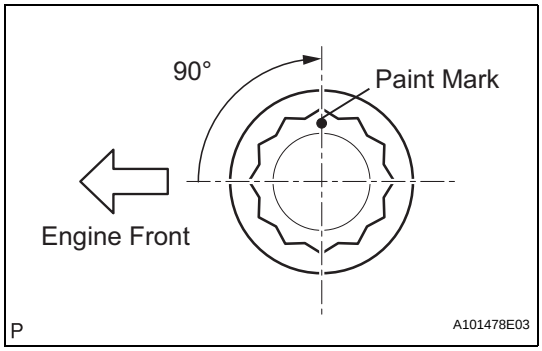

(g) Mark the front of the connecting rod bolts with paint.

(h) Retighten the cap bolts 90° as shown in the illustration.

(i) Check that the crankshaft turns smoothly.

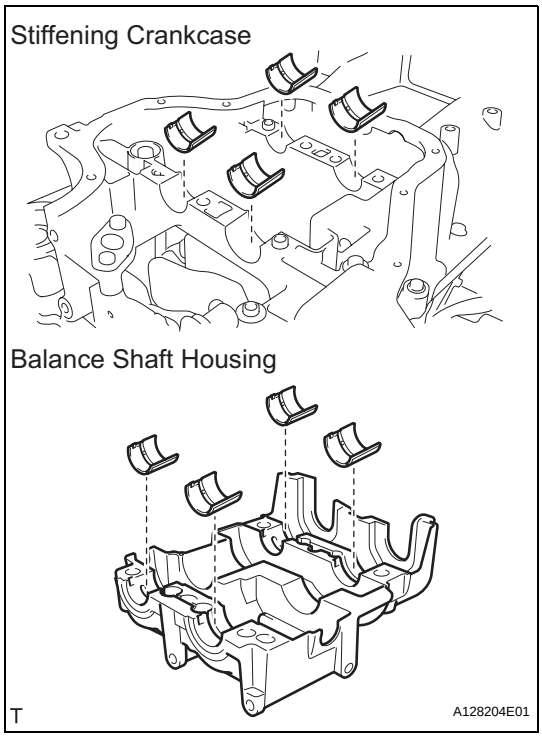

11. INSTALL NO. 1 BALANCE SHAFT BEARING

(a) Align the bearing claw with the claw groove, and push in the 8 bearings.
NOTICE:
- **Do not apply engine oil to the contact surfaces of the balance shaft bearing and balance shaft housing.**
- **Do not apply engine oil to the contact surfaces of the balance shaft bearing and stiffening crankcase.**

(b) Apply light coat of engine oil to the bearings.

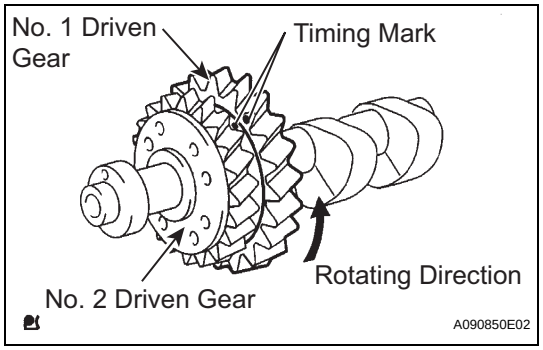

12. INSTALL BALANCE SHAFT

(a) Rotate the No. 1 driven gear of the No. 1 balance shaft in the rotating direction until it hits the stopper.

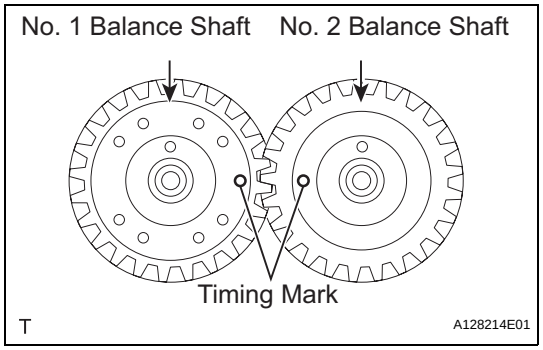

(b) Confirm that the timing marks on the No. 1 and No. 2 driven gears are aligned.

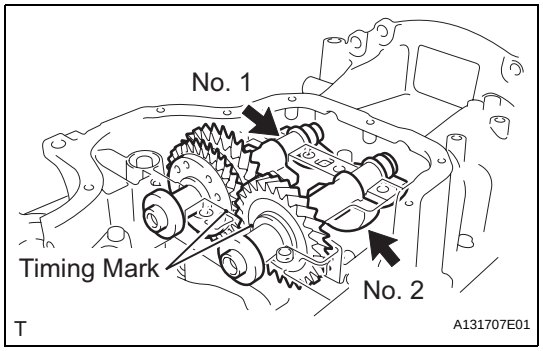

(c) Align the timing marks of the No. 1 and No. 2 balance shafts as shown in the illustration.
(d) Place the No. 1 and No. 2 balance shafts onto the crankcase.
(e) Apply a light coat of engine oil to the threads and under the heads of the bolts.

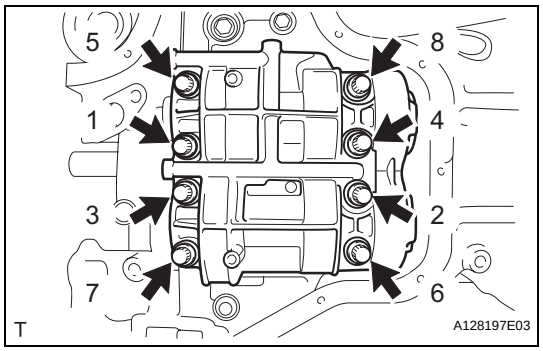

(f) Using several steps, uniformly install and tighten the 8 bolts in the sequence shown in the illustration.
Torque: 21.6 N*m (220 kgf*cm, 16 ft.*lbf)
(g) Mark the front of the bolts with paint.
(h) Retighten the bolts 90° as shown in the illustration.

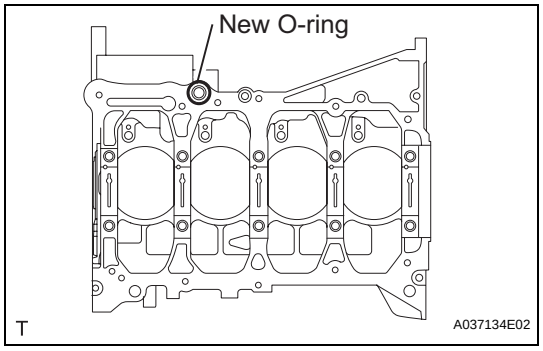

(i) Check that the paint mark is now at a 90° angle to the front.

13. INSTALL STIFFENING CRANKCASE ASSEMBLY

(a) Remove any old packing material and be careful not to drop any oil on the contact surfaces of the cylinder block and crankcase.

EM

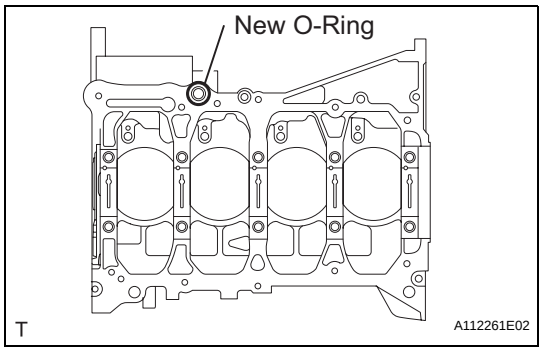

(b) Place a new O-ring on the cylinder block as shown in the illustration.

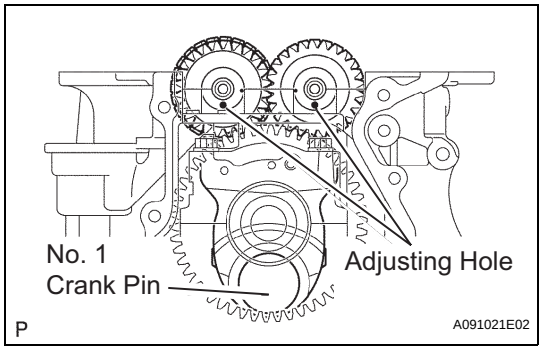

(c) With the No. 1 crank pin of the crankshaft placed at the 6 o'clock position, install the No. 1 and No. 2 balance shafts and align the adjusting holes as shown in the illustration.

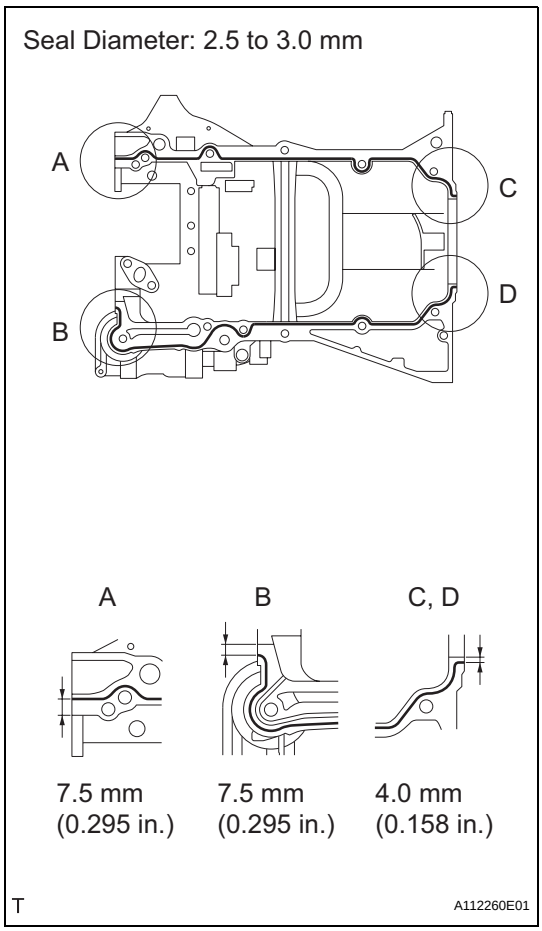

(d) Apply a continuous bead of seal packing (Diameter 2.5 to 3.0 mm (0.098 to 0.118 in.)) as shown in the illustration.

Seal packing:

Toyota Genuine Seal Packing Black, Three Bond 1207B or equivalent

NOTICE:

- **Remove any oil from the contact surface.**
- **Install the crankcase within 3 minutes of applying seal packing.**
- **Do not add engine oil for at least 2 hours after installing the crankcase.**

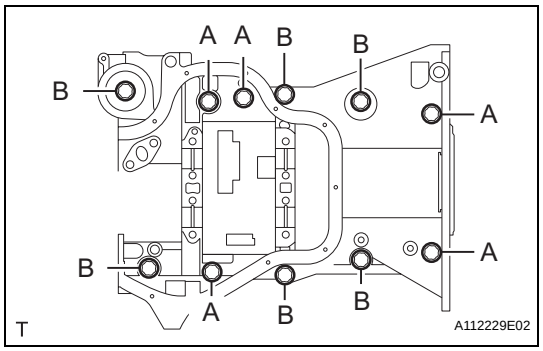

(e) Temporarily install the crankcase with the 11 bolts.
Standard bolt length

Item	Specified Condition
For bolt A (12 mm head)	112 mm (4.41 in.)
For bolt B (12 mm head)	35 mm (1.38 in.)

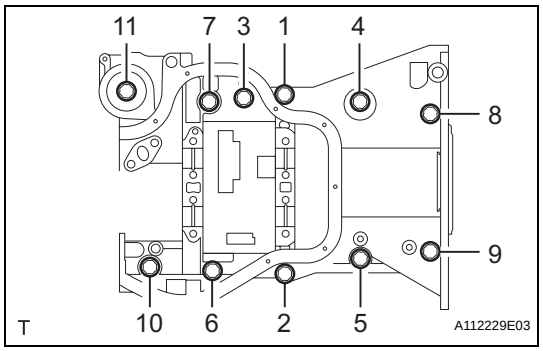

(f) Uniformly tighten the bolts.
Torque: 24 N*m (245 kgf*cm, 18 ft.*lbf)

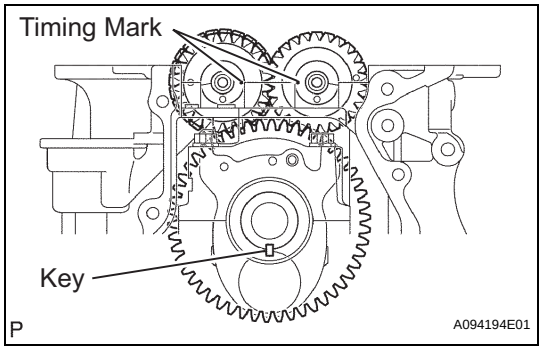

(g) Confirm that the timing marks of the balance shafts are aligned when the key groove is placed at the 6 o'clock position, as shown in the illustration.

14. INSTALL ENGINE REAR OIL SEAL

(a) Apply multi-purpose grease to the lip of a new oil seal.
NOTICE:
Keep the lip free of foreign object.

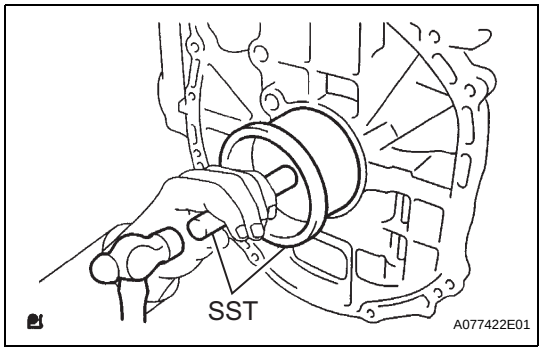

(b) Using SST and hammer, tap in the new oil seal until its surface is flush with the rear oil seal retainer edge.
SST 09223-15030, 09950-70010 (09951-07100)
NOTICE:
- **Wipe any extra grease off the crankshaft.**
- **Do not tap the oil seal at an angle.**

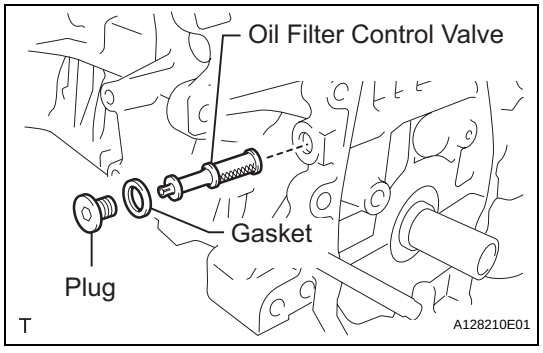

15. INSTALL OIL CONTROL VALVE FILTER

(a) Check that there are no foreign objects on the mesh part of the oil control valve filter.

(b) Using a 6 mm socket hexagon wrench, install a new gasket and the oil control valve filter with the plug.
Torque: 30 N*m (306 kgf*cm, 22 ft.*lbf)

EM

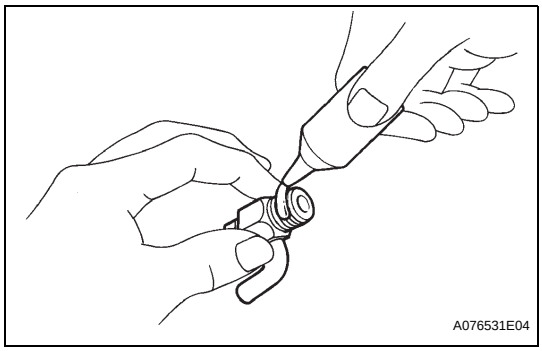

16. **INSTALL CYLINDER BLOCK WATER DRAIN COCK SUB-ASSEMBLY**
    (a) Apply adhesive to 2 or 3 threads of the drain cock.
    Adhesive:
    Toyota Genuine Adhesive 1324, Three Bond 1324 or equivalent

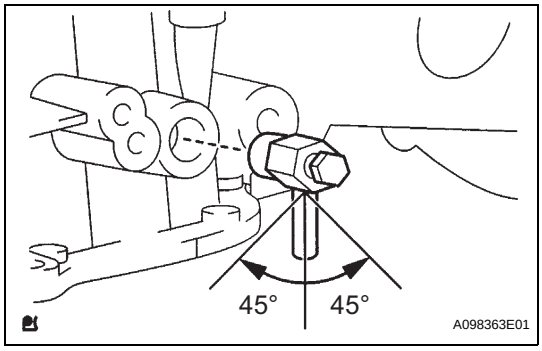

    (b) After tightening the drain cock to the specified torque, turn the drain cock clockwise as shown in the illustration.
    Torque: 25 N*m (255 kgf*cm, 18 ft.*lbf)
    NOTICE:
    - **Install the drain cock within 3 minutes of applying adhesive.**
    - **Do not add coolant for at least an hour after installing the drain cock.**
    - **Do not turn the drain cock by more than 1 revolution (360°) after tightening the drain cock to the specified torque.**
    - **Do not loosen the drain cock after setting it correctly.**

17. **INSTALL CYLINDER HEAD GASKET (See page EM-82)**

18. **INSTALL CYLINDER HEAD SUB-ASSEMBLY (See page EM-82)**

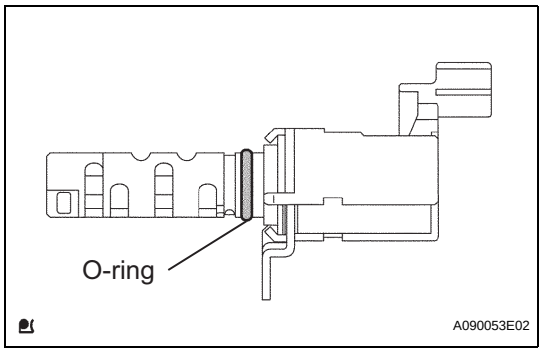

19. **INSTALL CAMSHAFT TIMING OIL CONTROL VALVE ASSEMBLY**
    (a) Apply a light coat of engine oil to a new O-ring, then install it onto the camshaft timing oil control valve.

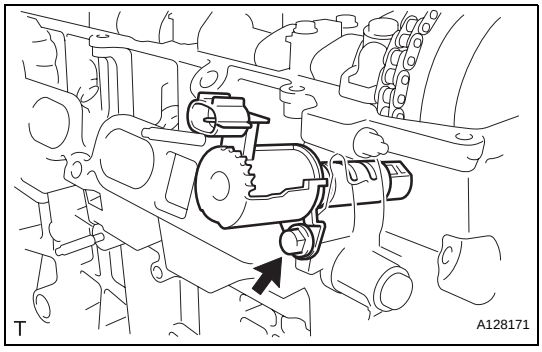

    (b) Install the camshaft timing oil control valve with the bolt.
    Torque: 9.0 N*m (92 kgf*cm, 80 in.*lbf)

20. **INSTALL CAMSHAFT TIMING GEAR ASSEMBLY (See page EM-83)**

21. **INSTALL NO. 2 CAMSHAFT TIMING SPROCKET (See page EM-84)**

22. **INSTALL NO. 2 CAMSHAFT BEARING (See page EM-81)**

23. **INSTALL NO. 1 CAMSHAFT BEARING (See page EM-81)**

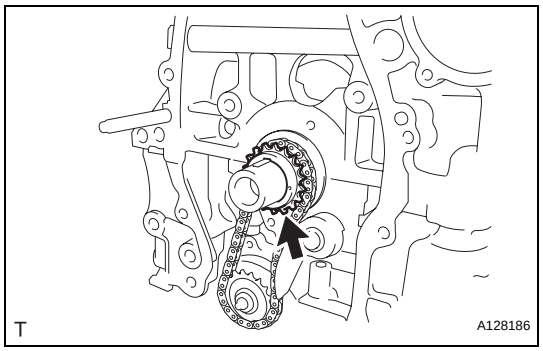

24. **INSTALL CAMSHAFT (See page EM-84)**
25. **INSTALL OIL PUMP ASSEMBLY (See page LU-15)**
26. **INSTALL OIL PUMP DRIVE GEAR**
27. **INSTALL NO. 2 CHAIN SUB-ASSEMBLY (See page EM-32)**
28. **INSTALL CRANKSHAFT TIMING SPROCKET**
29. **INSTALL NO. 1 CHAIN VIBRATION DAMPER (See page EM-33)**
30. **INSTALL CHAIN SUB-ASSEMBLY (See page EM-33)**
31. **INSTALL CHAIN TENSIONER SLIPPER (See page EM-34)**
32. **INSTALL TIMING CHAIN GUIDE (See page EM-34)**
33. **INSTALL NO. 1 CRANKSHAFT POSITION SENSOR PLATE (See page EM-35)**
34. **REPLACE TIMING CHAIN COVER OIL SEAL (See page EM-144)**
35. **INSTALL TIMING CHAIN COVER SUB-ASSEMBLY (See page EM-35)**
36. **INSTALL NO. 1 CHAIN TENSIONER ASSEMBLY (See page EM-37)**
37. **INSTALL CRANKSHAFT PULLEY (See page EM-38)**
38. **INSTALL OIL PAN SUB-ASSEMBLY (See page EM-39)**

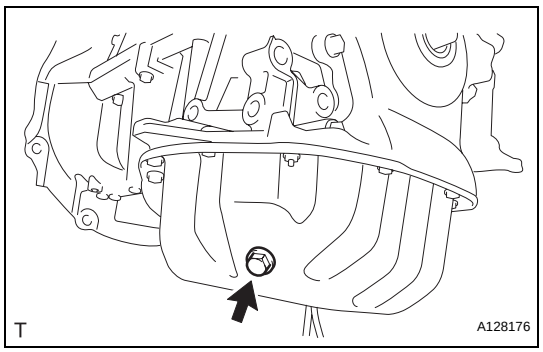

39. **INSTALL OIL PAN DRAIN PLUG**
    (a) Place a new gasket on the oil pan drain plug, then install it onto the oil pan.
    Torque: 40 N*m (408 kgf*cm, 30 ft.*lbf)
40. **INSTALL WATER PUMP ASSEMBLY (See page CO-12)**
41. **INSTALL WATER PUMP PULLEY (See page CO-13)**
42. **INSTALL CRANKSHAFT POSITION SENSOR (See page ES-402)**

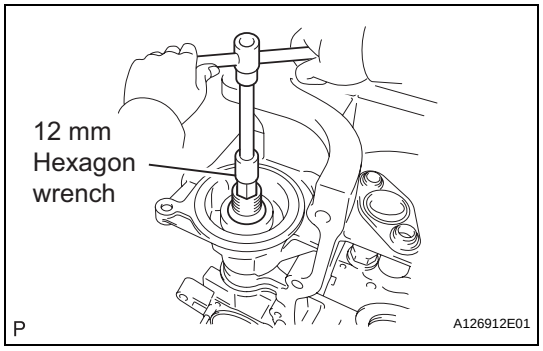

43. **INSTALL OIL FILTER UNION**
    (a) Using a 12 mm hexagon wrench, install the oil filter union.
    Torque: 29.5 N*m (301 kgf*cm, 22 ft.*lbf)
44. **INSTALL OIL FILTER SUB-ASSEMBLY (See page LU-4)**
45. **SET NO. 1 CYLINDER TO TDC/COMPRESSION (See page EM-25)**
46. **CHECK VALVE CLEARANCE (See page EM-8)**
47. **ADJUST VALVE CLEARANCE (See page EM-8)**
48. **INSTALL CAMSHAFT (See page EM-13)**

EM

49. INSTALL NO. 2 CAMSHAFT (See page EM-14)

50. INSTALL NO. 1 CHAIN TENSIONER ASSEMBLY (See page EM-37)

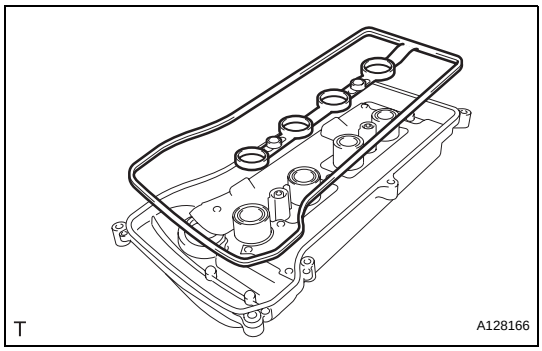

51. INSTALL CYLINDER HEAD COVER GASKET

(a) Install the gasket onto the cylinder head cover.

52. INSTALL CYLINDER HEAD COVER SUB-ASSEMBLY (See page EM-40)

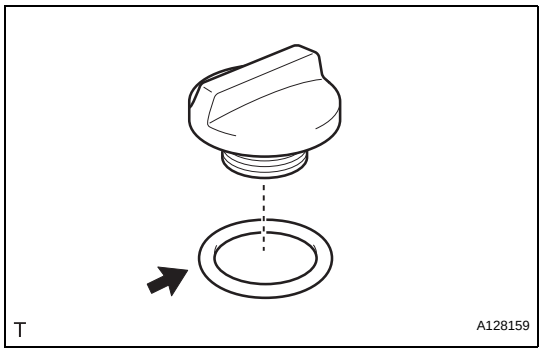

53. INSTALL OIL FILLER CAP SUB-ASSEMBLY

(a) Install the gasket to the cap.

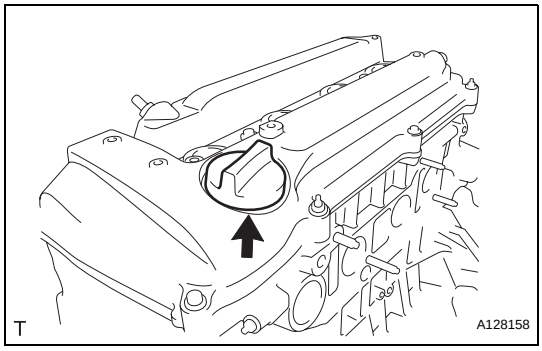

(b) Install the oil filler cap.
Torque: 3.0 N*m (31 kgf*cm, 26 in.*lbf)

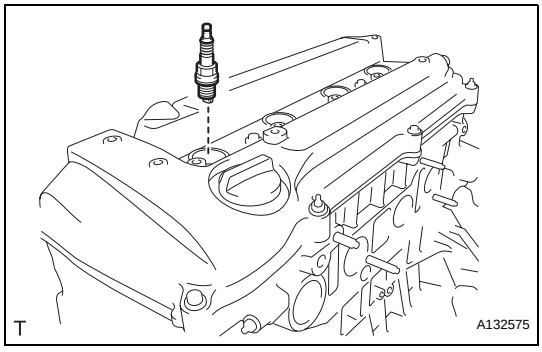

54. INSTALL SPARK PLUG
Torque: 25 N*m (254 kgf*cm, 18 ft.*lbf)

55. INSTALL IGNITION COIL ASSEMBLY (See page IG-9)

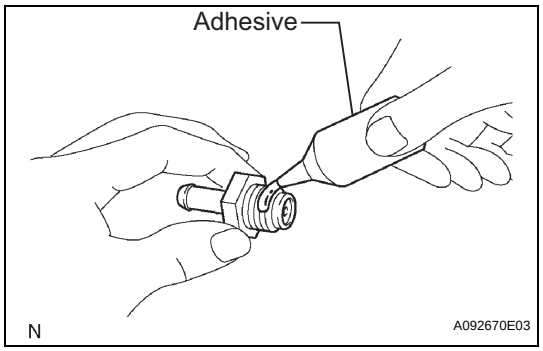

56. **INSTALL VENTILATION VALVE SUB-ASSEMBLY**
    (a) Apply adhesive to the threads of the ventilation valve.
    Adhesive:
    Toyota Genuine Adhesive 1324, Three Bond 1324 or equivalent

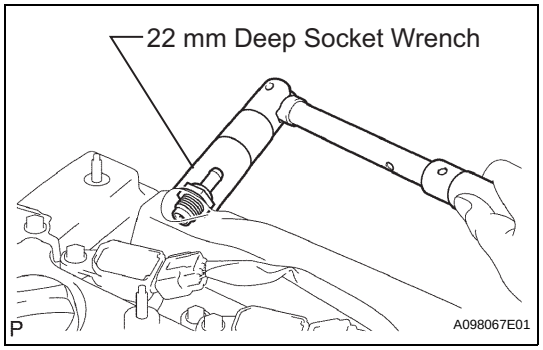

    (b) Using a 22 mm deep socket wrench, install the ventilation valve.
    Torque: 19 N*m (194 kgf*cm, 14 ft.*lbf)

57. **INSTALL OIL DIPSTICK GUIDE (See page EM-86)**
58. **INSTALL OIL DIPSTICK**
59. **INSTALL CAMSHAFT POSITION SENSOR (See page EM-81)**
60. **INSTALL ENGINE COOLANT TEMPERATURE SENSOR (See page EM-82)**
61. **INSTALL OIL PRESSURE SWITCH ASSEMBLY (See page EM-82)**
62. **INSTALL RADIO SETTING CONDENSER (See page EM-82)**
63. **INSTALL KNOCK SENSOR (See page ES-420)**
64. **INSTALL CAMSHAFT TIMING OIL CONTROL VALVE ASSEMBLY (See page ES-396)**
65. **INSTALL V-RIBBED BELT TENSIONER ASSEMBLY (See page EM-38)**

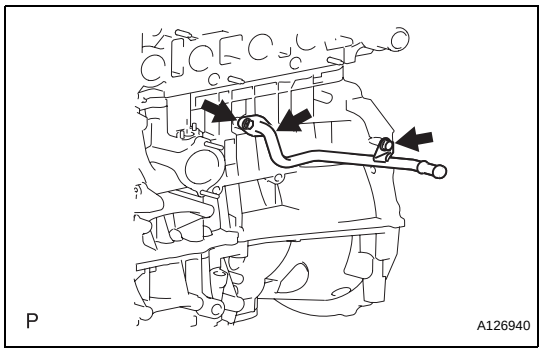

66. **INSTALL NO. 3 WATER BY-PASS PIPE**
    (a) Install a new gasket and pipe with the bolt and 2 nuts.
    Torque: 9.0 N*m (92 kgf*cm, 80 in.*lbf)

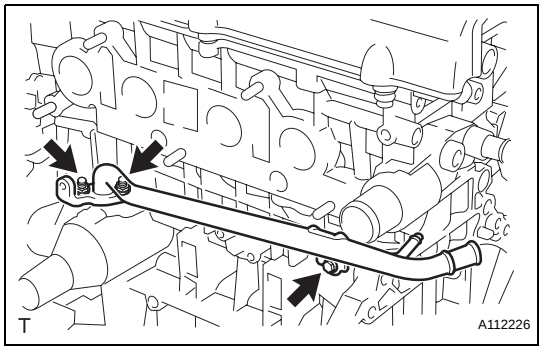

67. **INSTALL NO. 1 WATER BY-PASS PIPE**
    (a) Install a new gasket and the pipe with the bolt and 2 nuts.
    Torque: 9.0 N*m (92 kgf*cm, 80 in.*lbf)
68. **INSTALL THERMOSTAT (See page CO-15)**
69. **INSTALL WATER INLET (See page CO-16)**
70. **INSTALL EXHAUST MANIFOLD CONVERTER SUB-ASSEMBLY (See page EM-85)**

EM

71. **INSTALL NO. 1 EXHAUST MANIFOLD HEAT INSULATOR (See page EM-86)**
72. **INSTALL NO. 2 MANIFOLD STAY (See page EM-86)**
73. **INSTALL MANIFOLD STAY (See page EM-86)**
74. **INSTALL IDLER PULLEY (See page EM-41)**

ENGINE UNIT

COMPONENTS

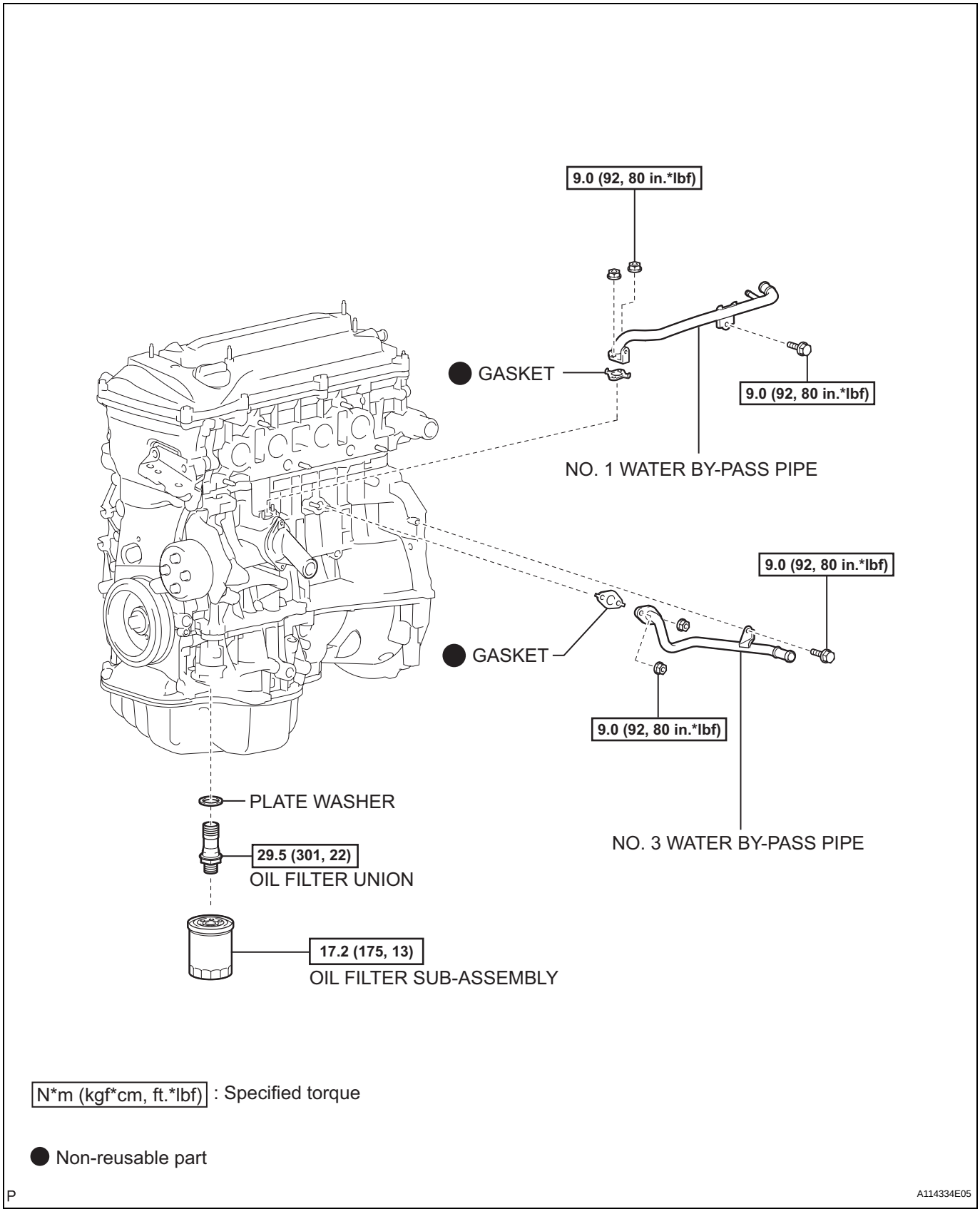

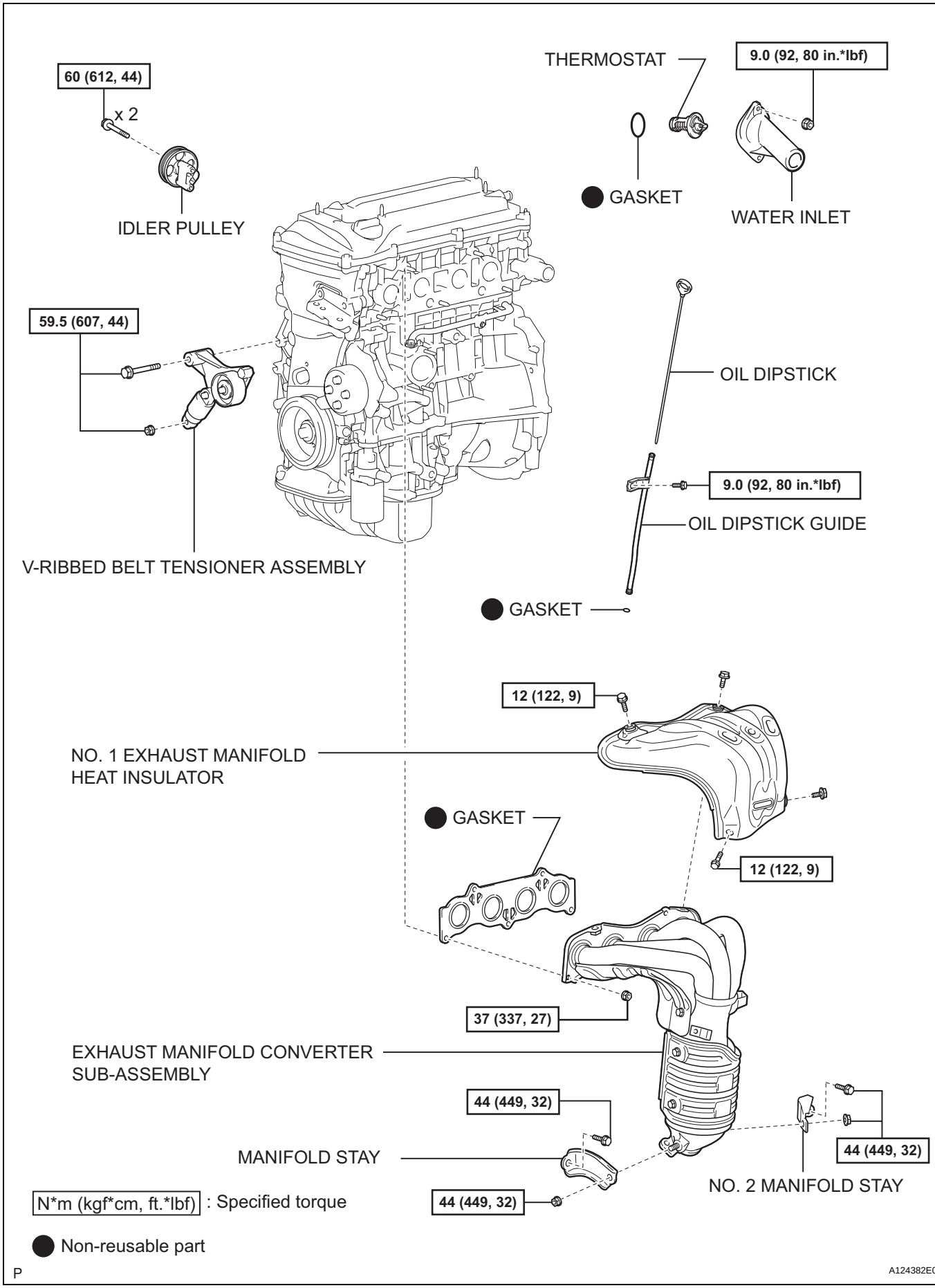
60 (612, 44)
x 2
IDLER PULLEY
THERMOSTAT
9.0 (92, 80 in.*lbf)
GASKET
WATER INLET
59.5 (607, 44)
OIL DIPSTICK
9.0 (92, 80 in.*lbf)
OIL DIPSTICK GUIDE
V-RIBBED BELT TENSIONER ASSEMBLY
GASKET
12 (122, 9)
NO. 1 EXHAUST MANIFOLD HEAT INSULATOR
GASKET
12 (122, 9)
37 (337, 27)
EXHAUST MANIFOLD CONVERTER SUB-ASSEMBLY
44 (449, 32)
MANIFOLD STAY
44 (449, 32)
44 (449, 32)
NO. 2 MANIFOLD STAY
N*m (kgf*cm, ft.*lbf) : Specified torque
Non-reusable part
P
A124382E03

EM

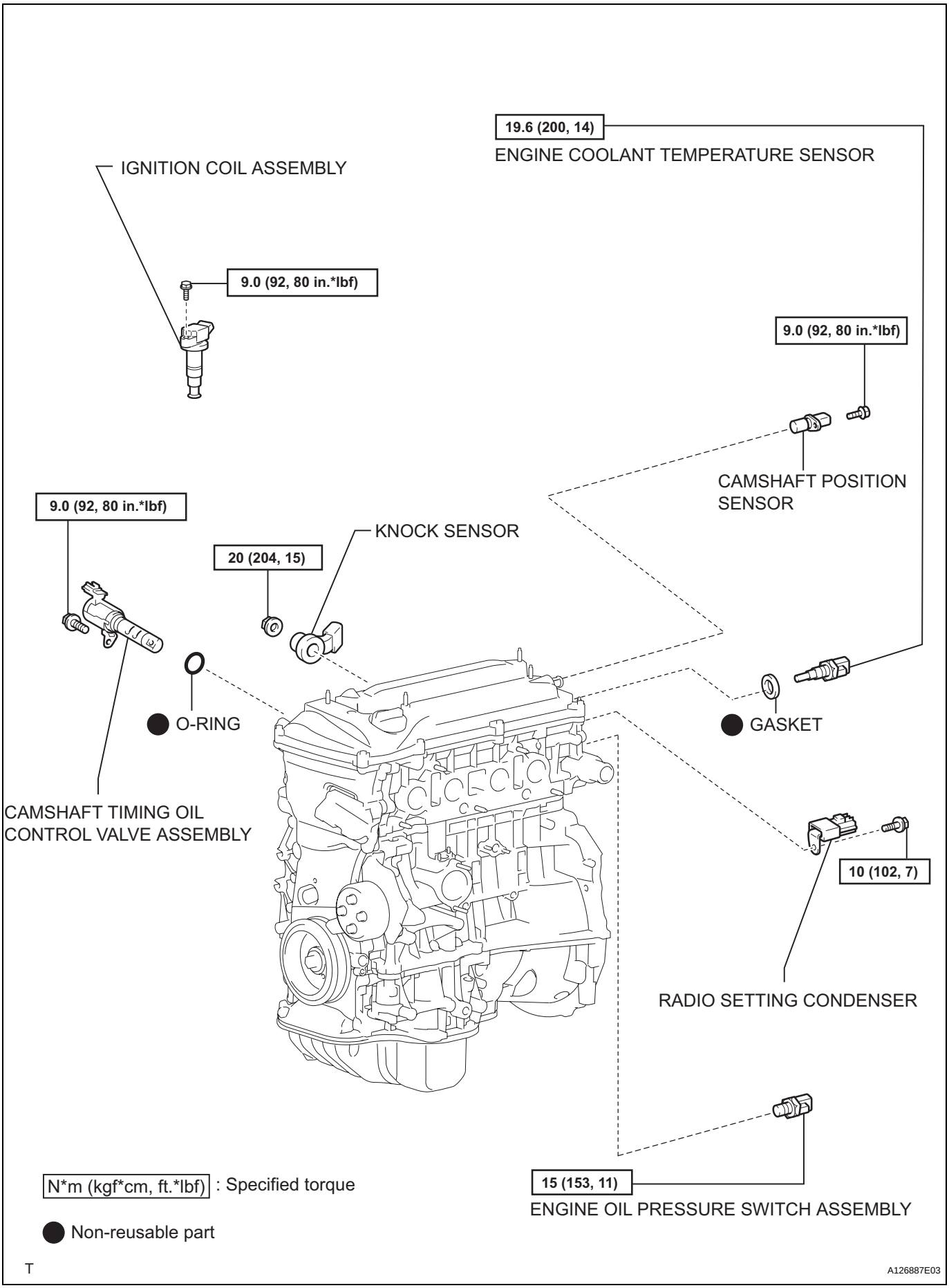
19.6 (200, 14)
ENGINE COOLANT TEMPERATURE SENSOR
IGNITION COIL ASSEMBLY
9.0 (92, 80 in.*lbf)
9.0 (92, 80 in.*lbf)
CAMSHAFT POSITION SENSOR
9.0 (92, 80 in.*lbf)
KNOCK SENSOR
20 (204, 15)
O-RING
GASKET
CAMSHAFT TIMING OIL CONTROL VALVE ASSEMBLY
10 (102, 7)
RADIO SETTING CONDENSER
15 (153, 11)
ENGINE OIL PRESSURE SWITCH ASSEMBLY
N*m (kgf*cm, ft.*lbf) : Specified torque
Non-reusable part
T
A126887E03

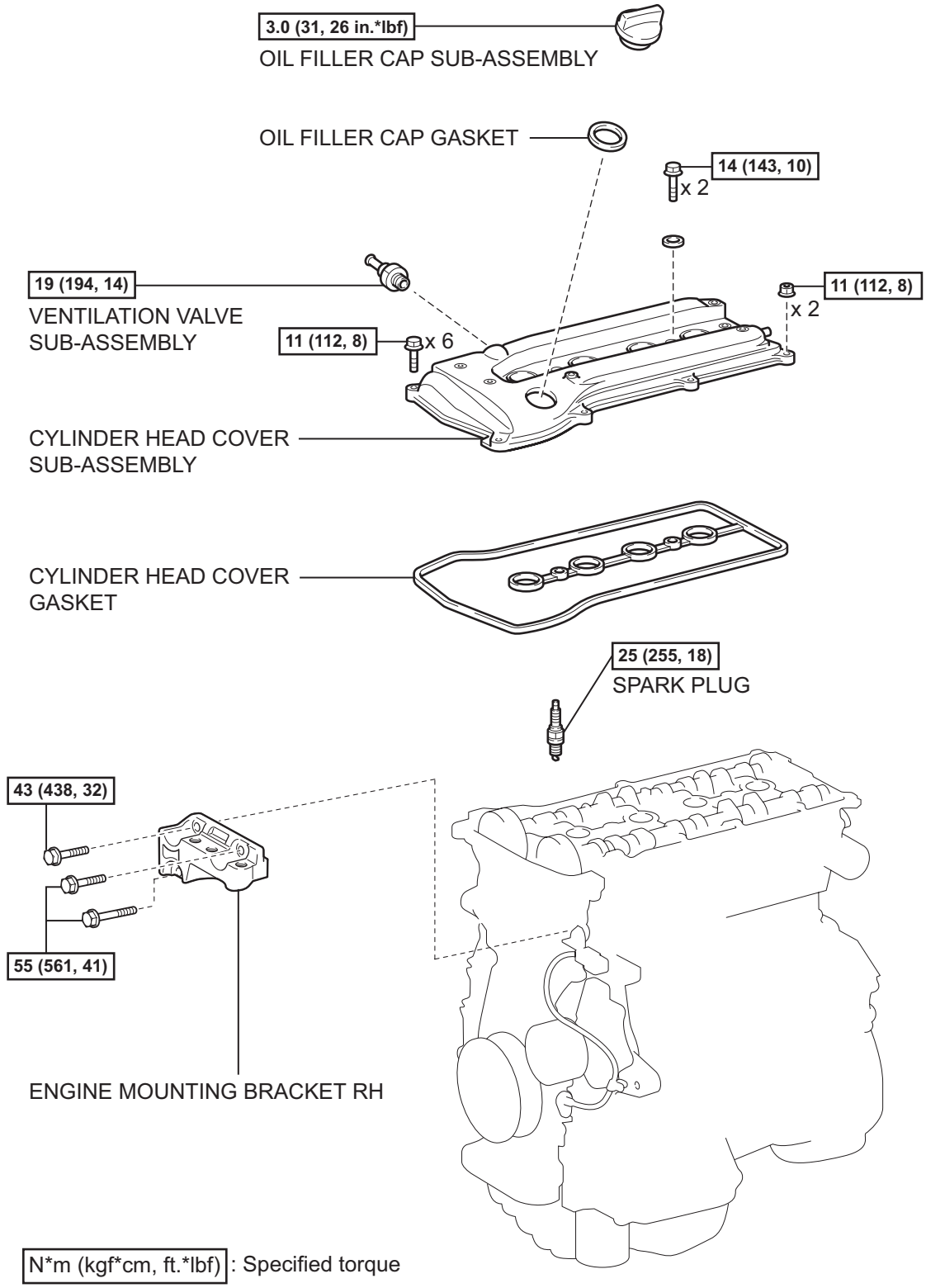
3.0 (31, 26 in.*lbf)
OIL FILLER CAP SUB-ASSEMBLY
OIL FILLER CAP GASKET
14 (143, 10)
x 2
19 (194, 14)
VENTILATION VALVE SUB-ASSEMBLY
11 (112, 8)
x 6
11 (112, 8)
x 2
CYLINDER HEAD COVER SUB-ASSEMBLY
CYLINDER HEAD COVER GASKET
25 (255, 18)
SPARK PLUG
43 (438, 32)
55 (561, 41)
ENGINE MOUNTING BRACKET RH
N*m (kgf*cm, ft.*lbf) : Specified torque
T
A132514E01

EM

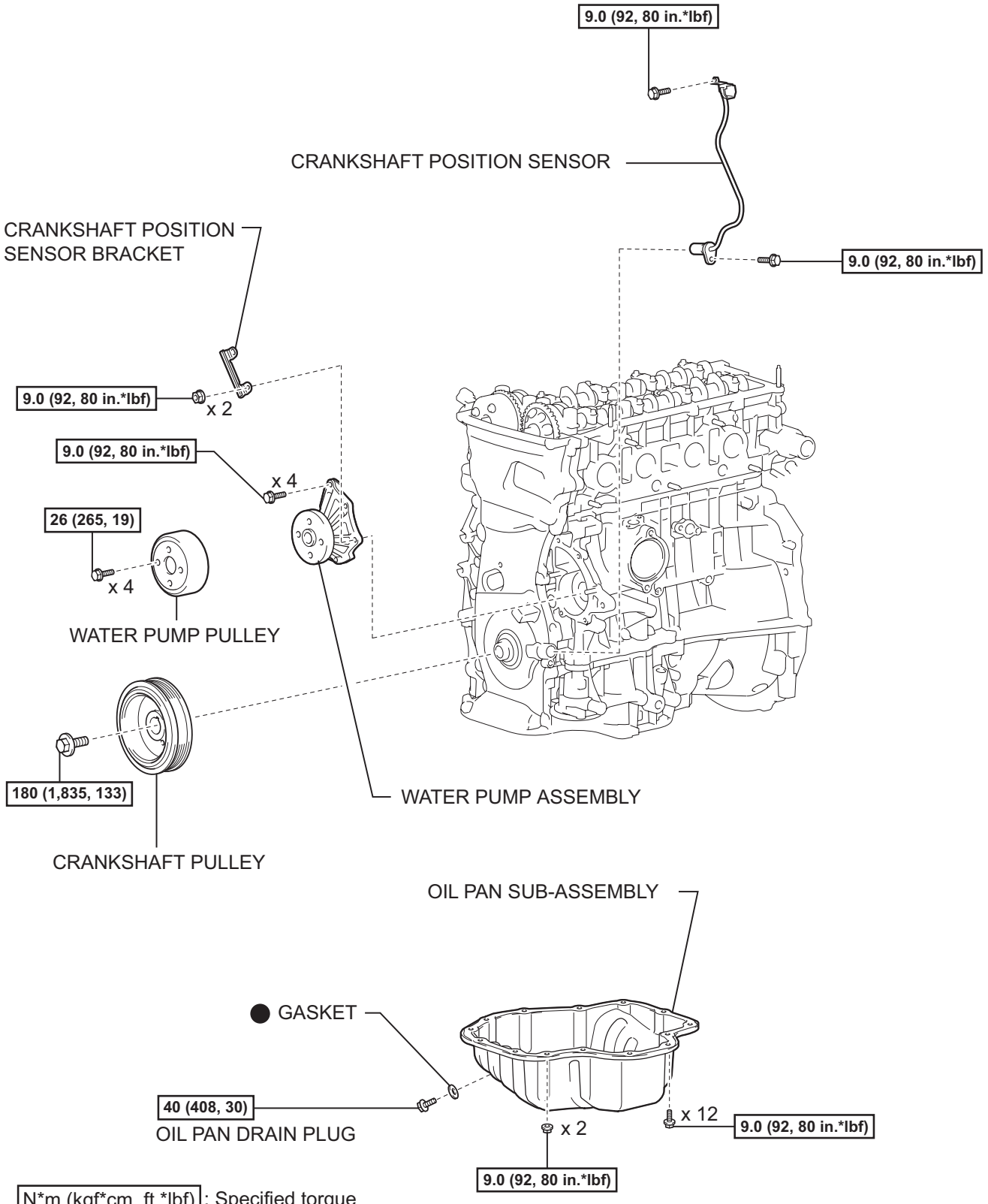
9.0 (92, 80 in.*lbf)
CRANKSHAFT POSITION SENSOR
CRANKSHAFT POSITION SENSOR BRACKET
9.0 (92, 80 in.*lbf)
9.0 (92, 80 in.*lbf)
x 2
9.0 (92, 80 in.*lbf)
x 4
26 (265, 19)
x 4
WATER PUMP PULLEY
180 (1,835, 133)
WATER PUMP ASSEMBLY
CRANKSHAFT PULLEY
OIL PAN SUB-ASSEMBLY
GASKET
40 (408, 30)
OIL PAN DRAIN PLUG
x 2
x 12
9.0 (92, 80 in.*lbf)
9.0 (92, 80 in.*lbf)
N*m (kgf*cm, ft.*lbf) : Specified torque
Non-reusable part
P
A124409E02

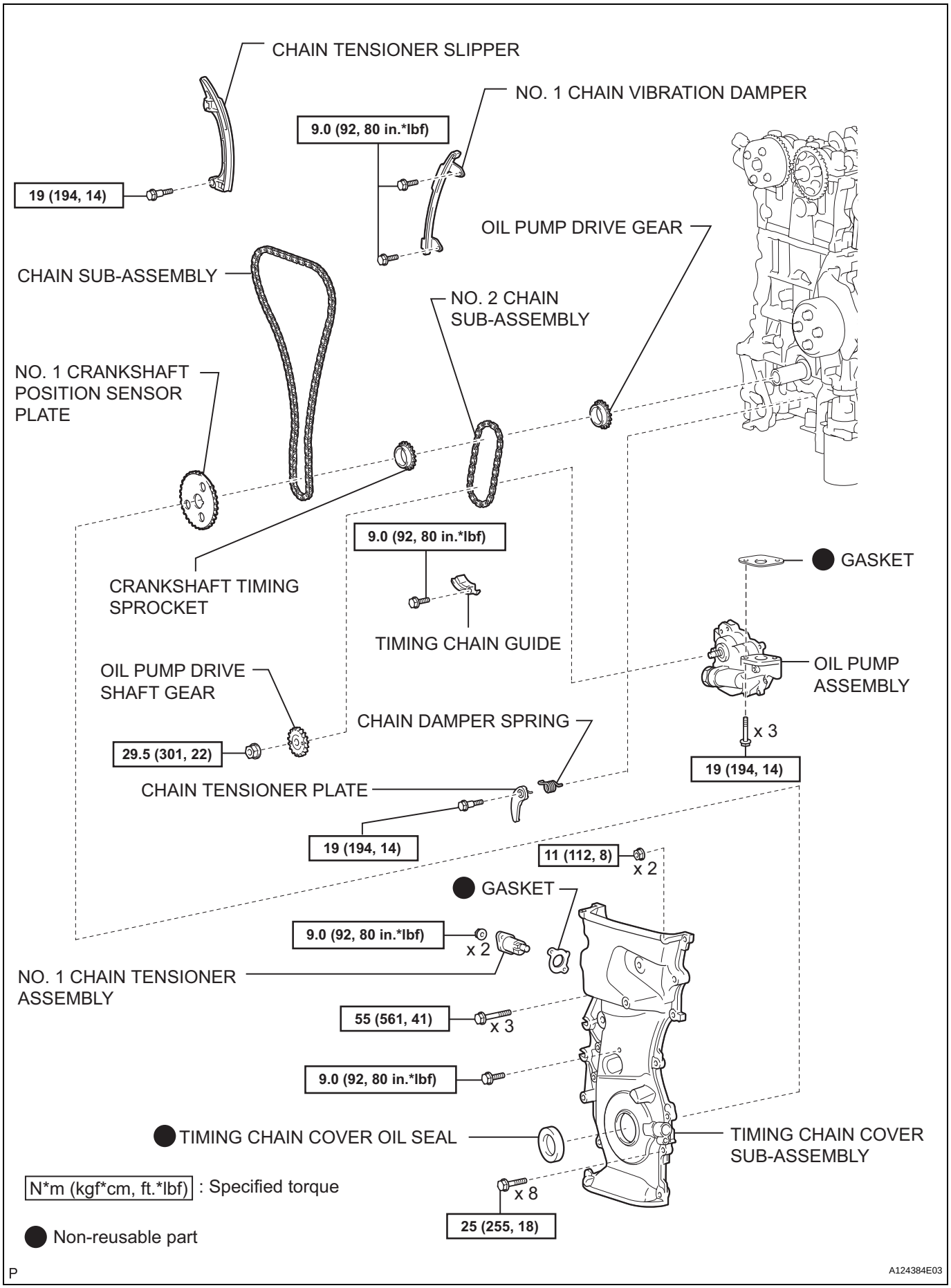
CHAIN TENSIONER SLIPPER
NO. 1 CHAIN VIBRATION DAMPER
9.0 (92, 80 in.*lbf)
19 (194, 14)
OIL PUMP DRIVE GEAR
CHAIN SUB-ASSEMBLY
NO. 2 CHAIN SUB-ASSEMBLY
NO. 1 CRANKSHAFT POSITION SENSOR PLATE
9.0 (92, 80 in.*lbf)
GASKET
CRANKSHAFT TIMING SPROCKET
TIMING CHAIN GUIDE
OIL PUMP ASSEMBLY
OIL PUMP DRIVE SHAFT GEAR
CHAIN DAMPER SPRING
x 3
29.5 (301, 22)
19 (194, 14)
CHAIN TENSIONER PLATE
19 (194, 14)
11 (112, 8)
x 2
GASKET
9.0 (92, 80 in.*lbf)
x 2
NO. 1 CHAIN TENSIONER ASSEMBLY
55 (561, 41)
x 3
9.0 (92, 80 in.*lbf)
TIMING CHAIN COVER OIL SEAL
TIMING CHAIN COVER SUB-ASSEMBLY
x 8
25 (255, 18)
N*m (kgf*cm, ft.*lbf) : Specified torque
Non-reusable part
P
A124384E03

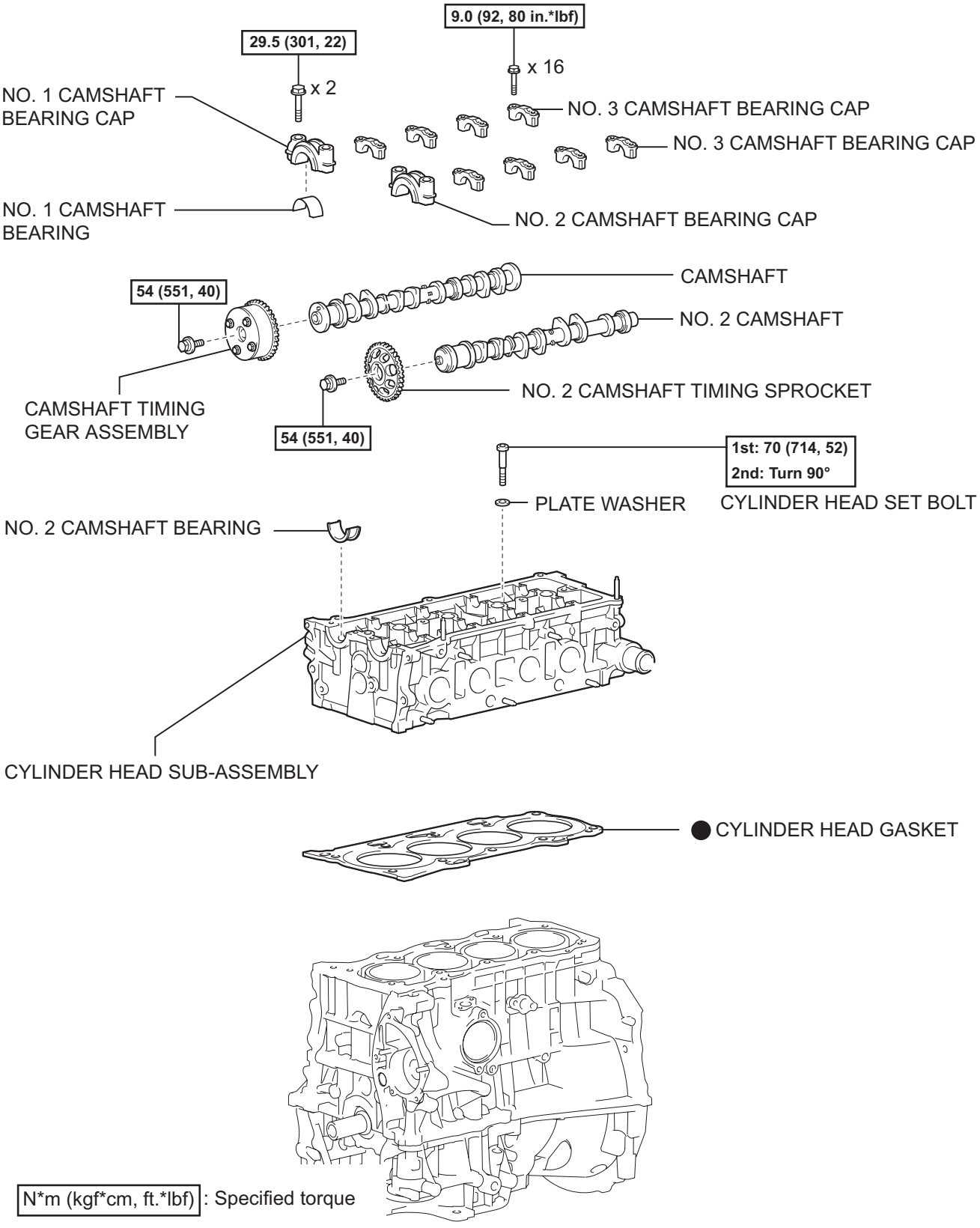

EM

P

A124406E04

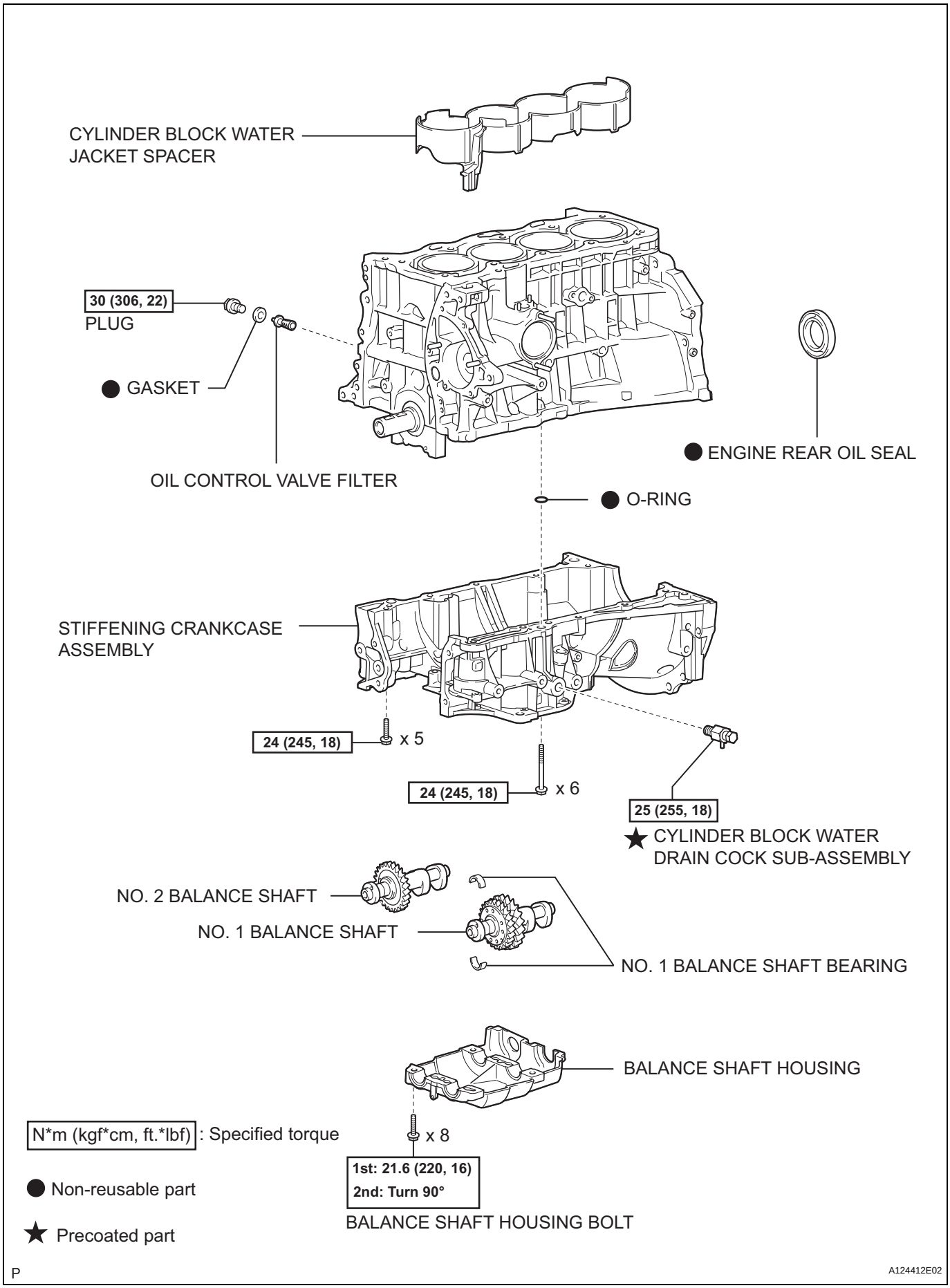
CYLINDER BLOCK WATER JACKET SPACER
30 (306, 22)
PLUG
GASKET
OIL CONTROL VALVE FILTER
ENGINE REAR OIL SEAL
O-RING
STIFFENING CRANKCASE ASSEMBLY
24 (245, 18)
x 5
24 (245, 18)
x 6
25 (255, 18)
CYLINDER BLOCK WATER DRAIN COCK SUB-ASSEMBLY
NO. 2 BALANCE SHAFT
NO. 1 BALANCE SHAFT
NO. 1 BALANCE SHAFT BEARING
BALANCE SHAFT HOUSING
x 8
1st: 21.6 (220, 16)
2nd: Turn 90°
BALANCE SHAFT HOUSING BOLT
N*m (kgf*cm, ft.*lbf) : Specified torque
Non-reusable part
Precoated part
P
A124412E02

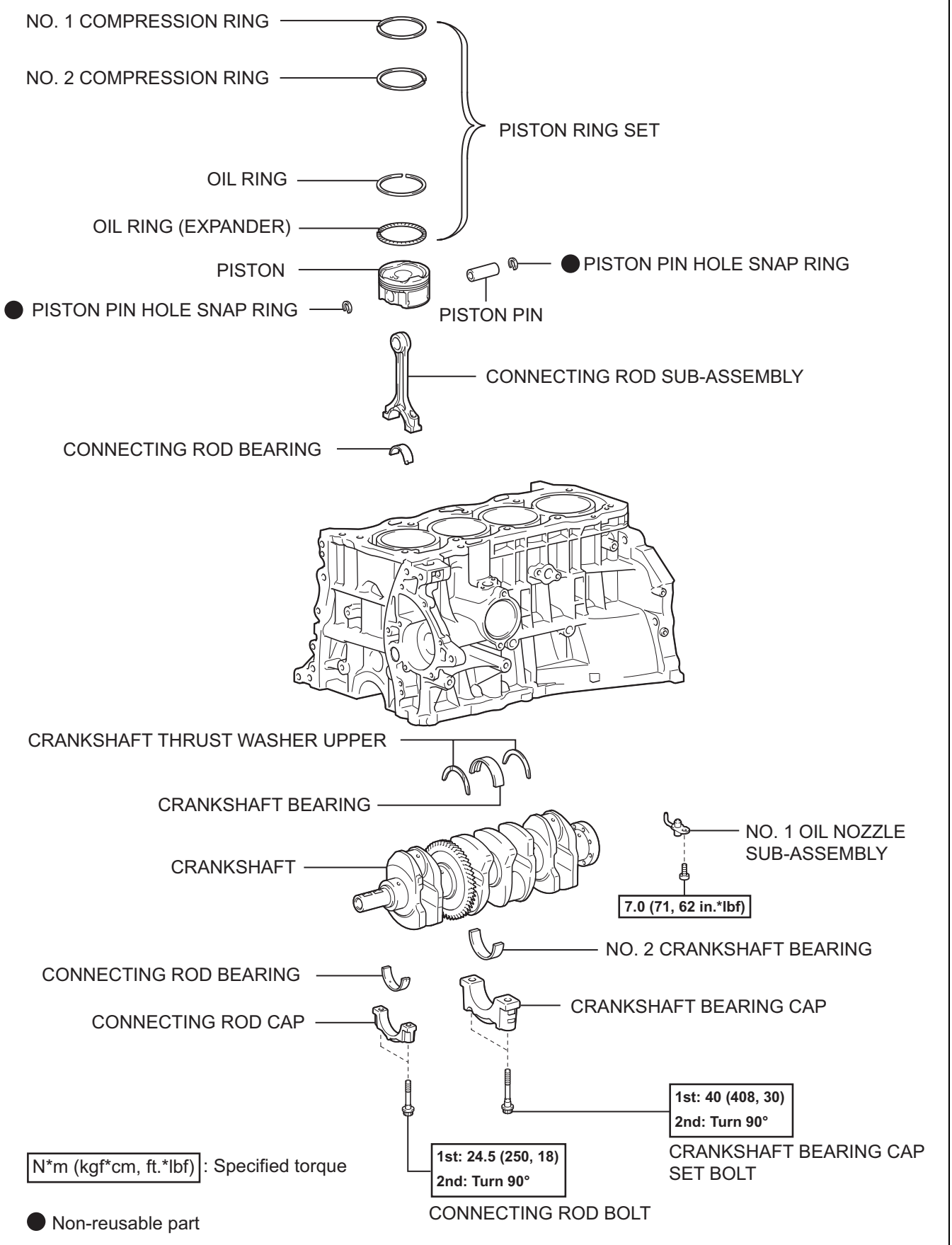
NO. 1 COMPRESSION RING
NO. 2 COMPRESSION RING
PISTON RING SET
OIL RING
OIL RING (EXPANDER)
PISTON
PISTON PIN HOLE SNAP RING
PISTON PIN HOLE SNAP RING
PISTON PIN
CONNECTING ROD SUB-ASSEMBLY
CONNECTING ROD BEARING
CRANKSHAFT THRUST WASHER UPPER
CRANKSHAFT BEARING
CRANKSHAFT
NO. 1 OIL NOZZLE SUB-ASSEMBLY
7.0 (71, 62 in.*lbf)
NO. 2 CRANKSHAFT BEARING
CONNECTING ROD BEARING
CRANKSHAFT BEARING CAP
CONNECTING ROD CAP
1st: 40 (408, 30)
2nd: Turn 90°
CRANKSHAFT BEARING CAP SET BOLT
1st: 24.5 (250, 18)
2nd: Turn 90°
CONNECTING ROD BOLT
N*m (kgf*cm, ft.*lbf): Specified torque
Non-reusable part
P
A124761E02

EM

REMOVAL

1. **DISCONNECT CABLE FROM NEGATIVE BATTERY TERMINAL**
   CAUTION:
   Wait at least 90 seconds after disconnecting the cable from the negative (-) battery terminal to prevent airbag and seat belt pretensioner activation.
2. **REMOVE RADIATOR SUPPORT OPENING COVER**
3. **REMOVE FRONT WHEEL RH**
4. **REMOVE NO. 1 ENGINE UNDER COVER**
5. **REMOVE FRONT FENDER APRON RH**
6. **REMOVE NO. 1 ENGINE COVER**
   (a) Remove the 2 nuts and cover.

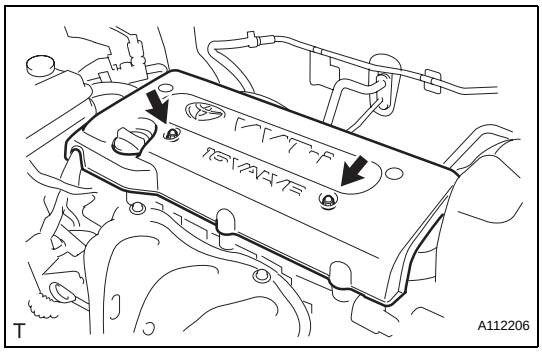

7. **DRAIN ENGINE OIL (See page LU-4)**
8. **REMOVE FRONT EXHAUST PIPE (See page EX-3)**
9. **REMOVE FRONT SUSPENSION MEMBER REINFORCEMENT RH (See page EM-6)**
10. **REMOVE FAN AND GENERATOR V BELT (See page EM-6)**
11. **REMOVE GENERATOR ASSEMBLY (See page CH-9)**
12. **REMOVE RADIATOR RESERVOIR**
    (a) Remove the 2 bolts and radiator reservoir.

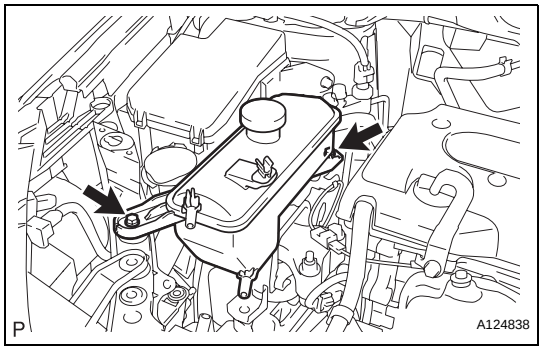

13. **REMOVE ENGINE MOUNTING INSULATOR RH**
    (a) Remove the bolt of the wire harness protector.
    (b) Disconnect the 2 clamps of the engine wire.

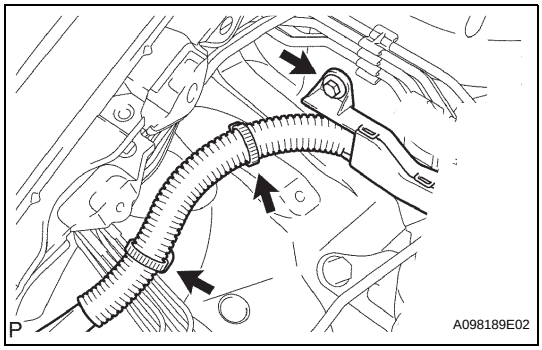

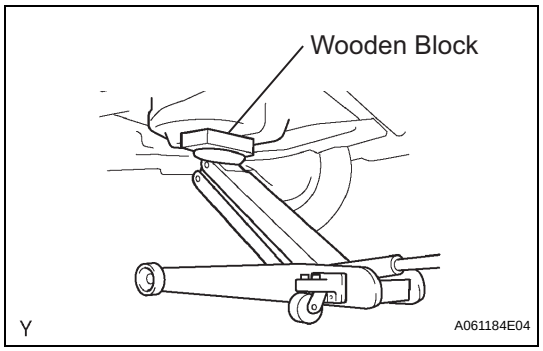

(c) Place a transmission jack underneath the engine, then put a wooden block on the jack.

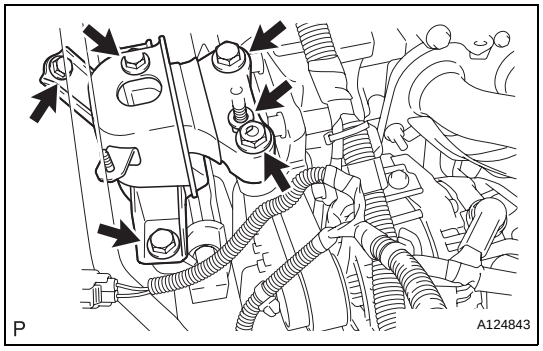

(d) Remove the 4 bolts, 2 nuts and engine mounting insulator RH.

NOTICE:

Do not apply excessive force to the return tube when removing the engine mounting insulator RH.

HINT:

Keep clearance by lowering the engine using the transmission jack when removing the engine mounting insulator FR.

EM

14. REMOVE ENGINE MOUNTING INSULATOR FR

(a) Remove the through bolt and nut.

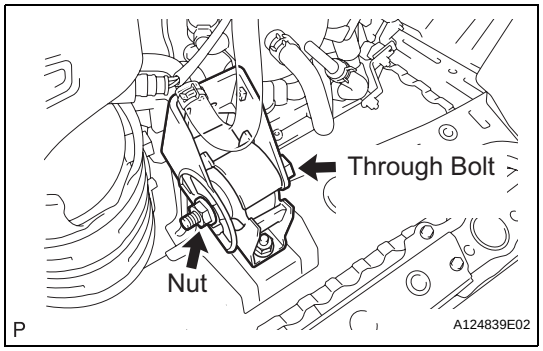

(b) Remove the 2 bolts and engine mounting insulator FR.

HINT:

Keep clearance by lowering the engine using the transmission jack when removing the engine mounting insulator FR.

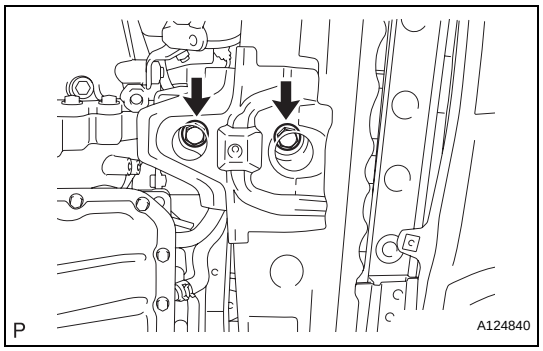

15. REMOVE IDLER PULLEY

(a) Loosen the 2 bolts and remove the idler pulley with the 2 bolts.

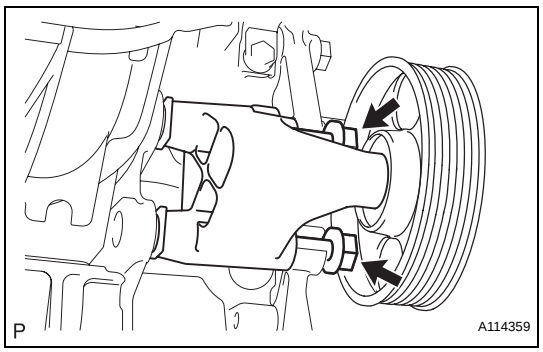

16. REMOVE IGNITION COIL ASSEMBLY (See page IG-9)

17. REMOVE SPARK PLUG (See page EM-8)

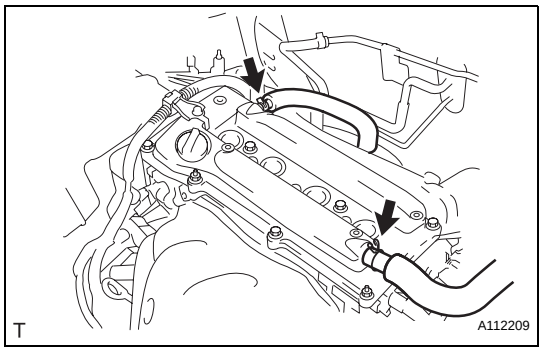

18. REMOVE CYLINDER HEAD COVER SUB-ASSEMBLY

(a) Disconnect the 2 ventilation hoses form the cylinder head cover.

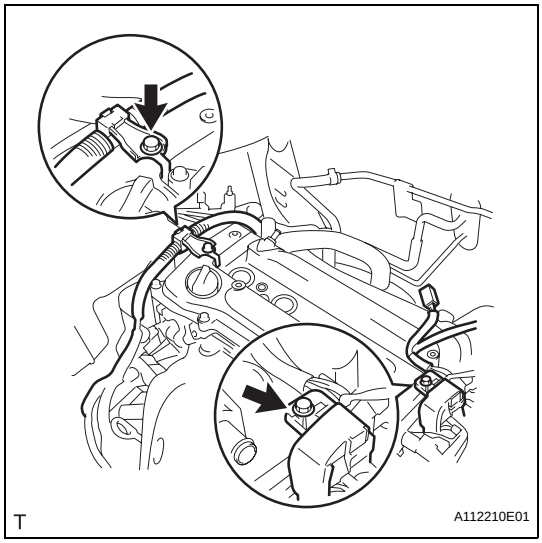

(b) Remove the 2 bolts and disconnect the 2 engine wires.

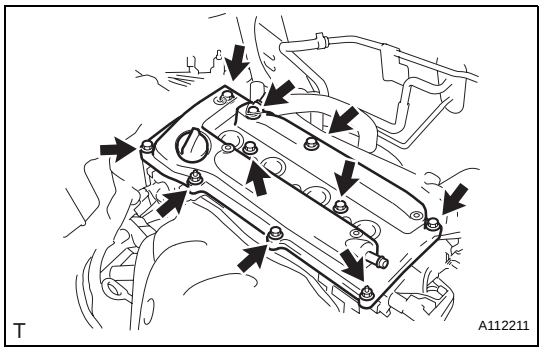

(c) Remove the 8 bolts, 2 nuts and cylinder head cover.

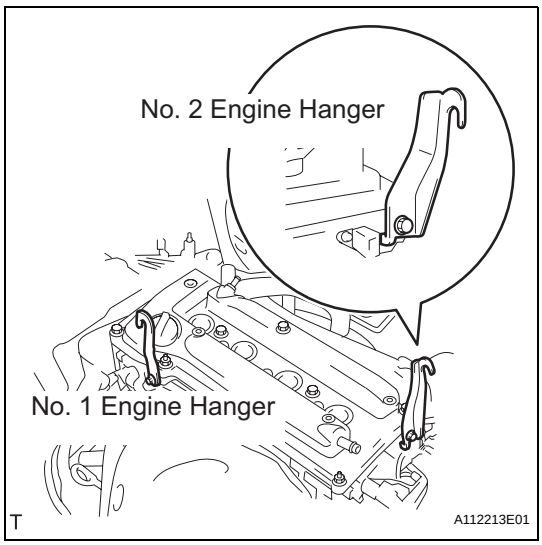

19. REMOVE OIL PAN SUB-ASSEMBLY

(a) Install the No. 1 and No. 2 engine hangers with the bolts.
Torque: 38 N*m (387 kgf*cm, 28 ft.*lbf)
Part No.

Item	Part No.
No. 1 engine hanger	12281-28010
No. 2 engine hanger	12282-28010
Bolt	91512-61020

(b) Attach the sling device to the engine hangers and chain block.

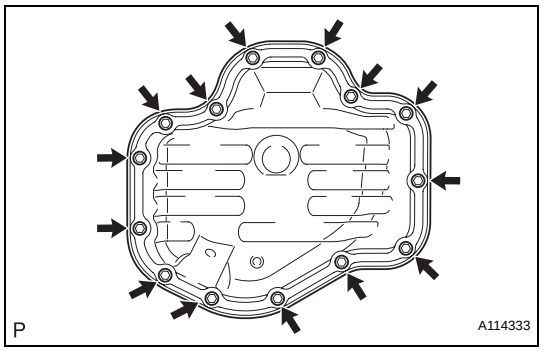

(c) Remove the 12 bolts and 2 nuts.

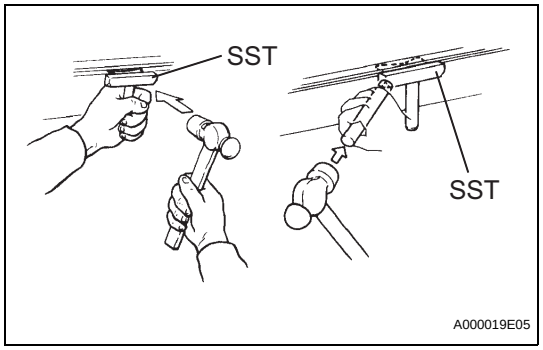

(d) Insert the blade of SST between the crankcase, chain cover and oil pan, then cut off the applied sealer and remove the oil pan.
SST 09032-00100
NOTICE:
Be careful not to damage the contact surface of the crankcase, chain cover and oil pan.

EM

20. SET NO. 1 CYLINDER TO TDC/COMPRESSION

(a) Turn the crankshaft pulley until its groove and the timing mark "0" of the timing chain cover are aligned.

(b) Check that each timing mark of the camshaft timing gear and sprocket is aligned with each timing mark located on the No. 1 and No. 2 bearing caps as shown in the illustration.
If not, turn the crankshaft by 1 revolution (360°) to align the timing marks as above.

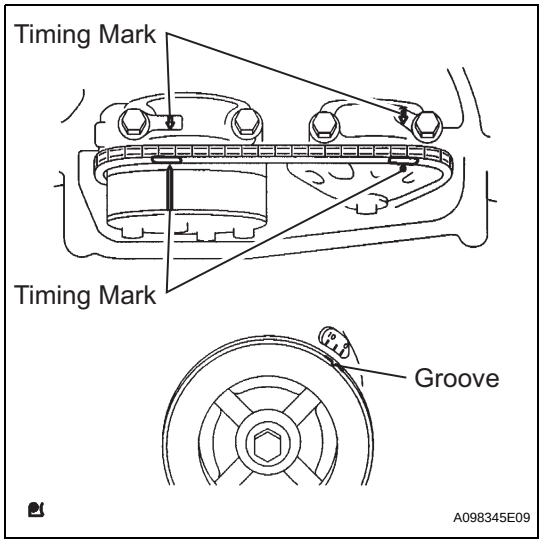

21. REMOVE CRANKSHAFT PULLEY

(a) Using SST, fix the pulley in place and loosen the pulley bolt.
SST 09213-54015 (91651-60855), 09330-00021

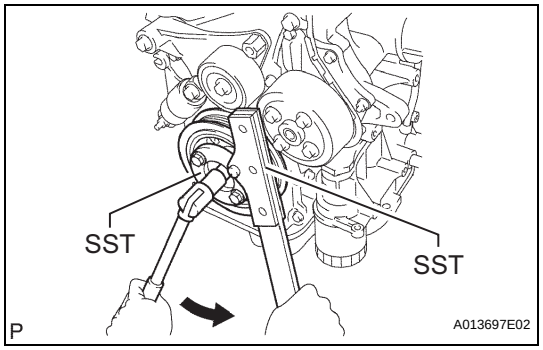

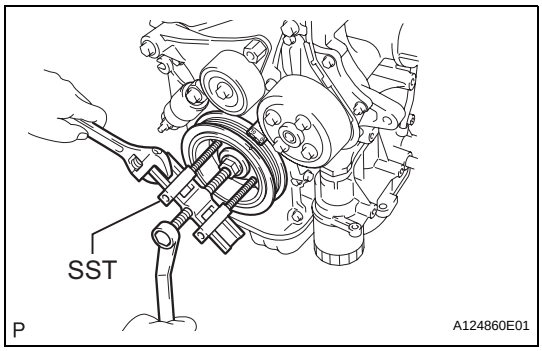

(b) Remove the crankshaft pulley.
HINT:
If necessary, remove the pulley and pulley bolt using SST.
SST 09950-50013 (09951-05010, 09952-05010, 09953-05020, 09954-05021), 09950-40011 (09957-04010)

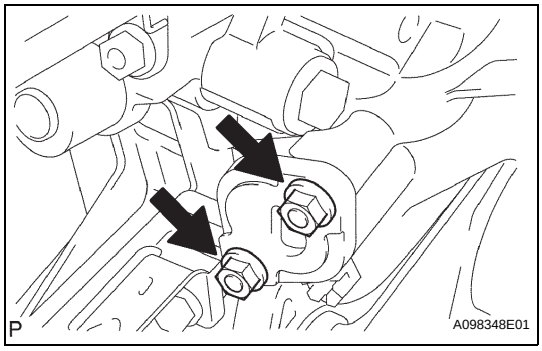

22. REMOVE NO. 1 CHAIN TENSIONER ASSEMBLY

(a) Remove the 2 nuts, chain tensioner and gasket.
NOTICE:
Do not turn the crankshaft without the chain tensioner.

EM

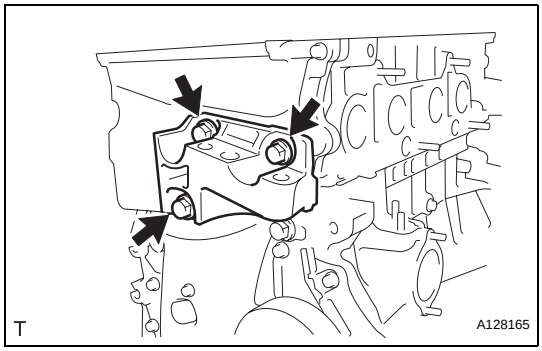

23. REMOVE ENGINE MOUNTING BRACKET RH

(a) Remove the 3 bolts and engine mounting bracket RH.

24. REMOVE V-RIBBED BELT TENSIONER ASSEMBLY

(a) Lift the engine upward using the transmission jack.
NOTICE:
Do not lift the engine more than necessary.

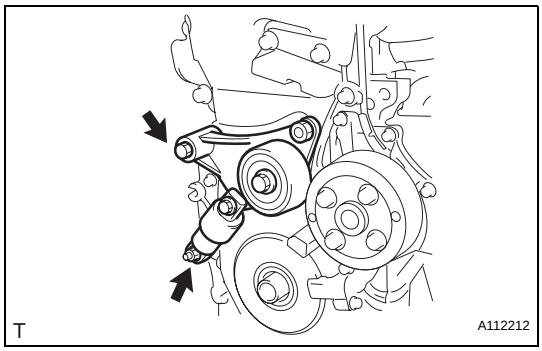

(b) Remove the bolt, nut and V-ribbed belt tensioner.

25. REMOVE CRANKSHAFT POSITION SENSOR (See page ES-402)

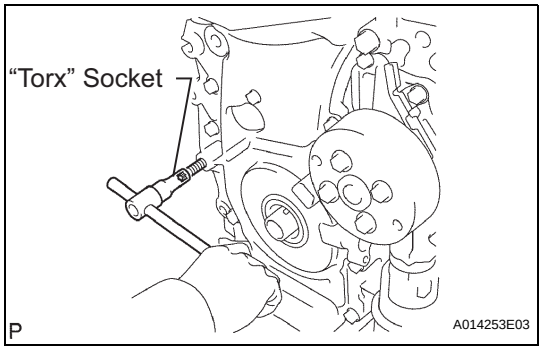

26. REMOVE TIMING CHAIN COVER SUB-ASSEMBLY

(a) Using an E10 "torx" socket, remove the stud bolt for the V-ribbed belt tensioner.

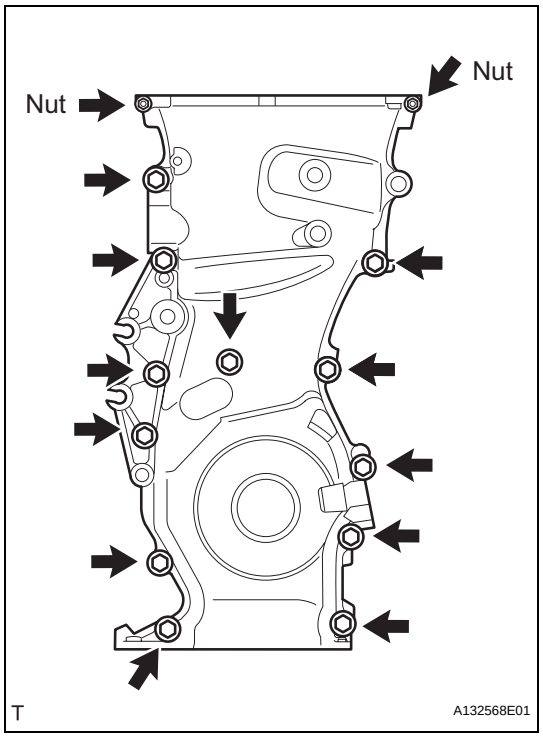

(b) Remove the 12 bolts and 2 nuts.

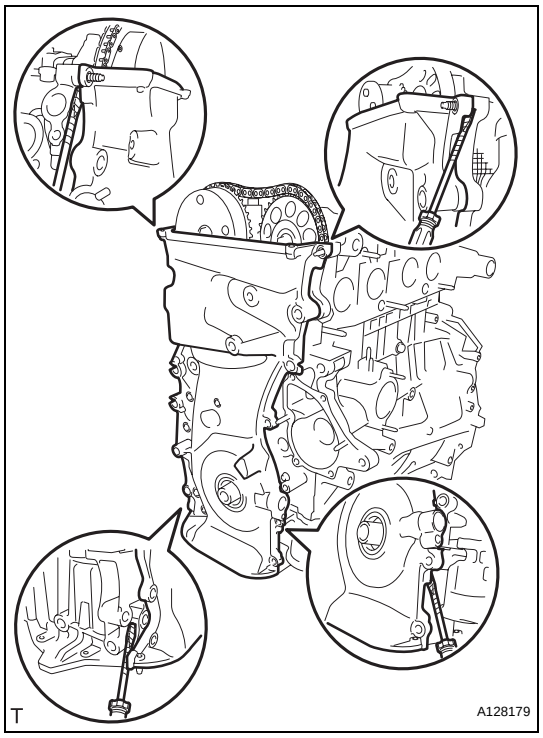

(c) Remove the timing chain cover by prying the portions between the timing chain cover, cylinder head and cylinder block with a screwdriver.
NOTICE:
Be careful not to damage the contact surfaces of the timing chain cover, cylinder head and cylinder block.

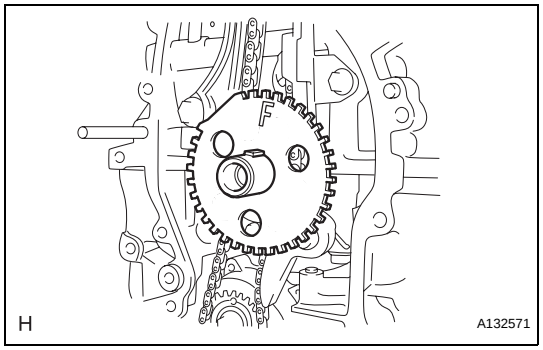

27. REMOVE NO. 1 CRANKSHAFT POSITION SENSOR PLATE

EM

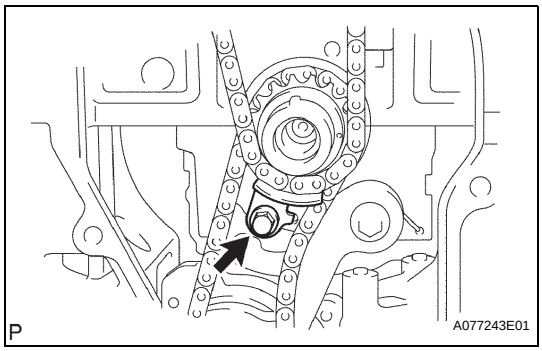

28. REMOVE TIMING CHAIN GUIDE

(a) Remove the bolt and timing chain guide.

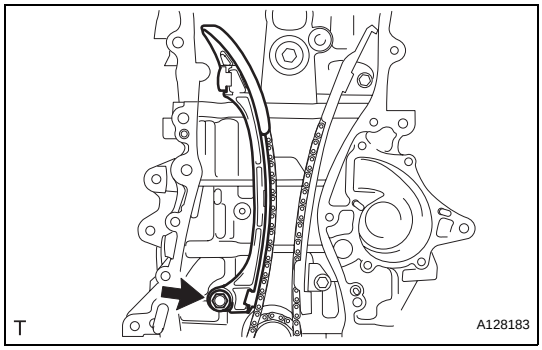

29. REMOVE CHAIN TENSIONER SLIPPER

(a) Remove the bolt and chain tensioner slipper.

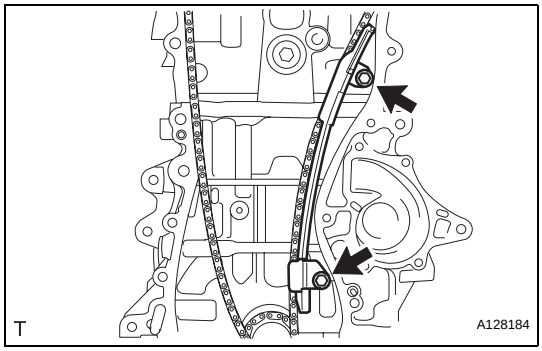

30. REMOVE NO. 1 CHAIN VIBRATION DAMPER

(a) Remove the 2 bolts and chain vibration damper.

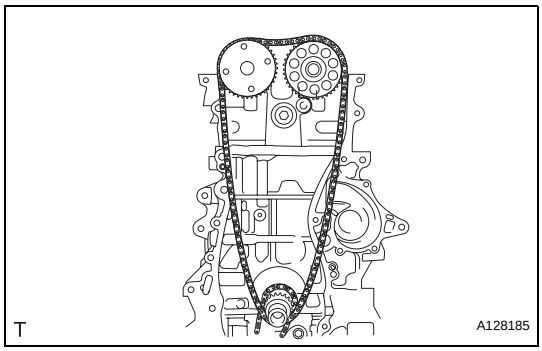

31. REMOVE CHAIN SUB-ASSEMBLY

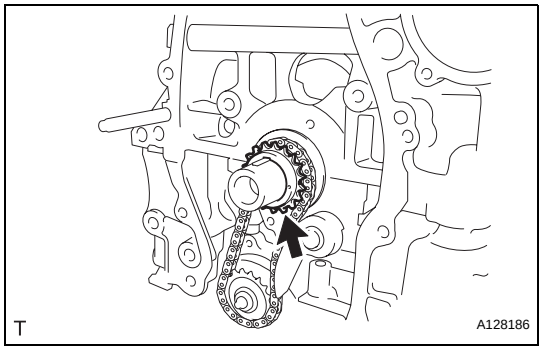

32. REMOVE CRANKSHAFT TIMING SPROCKET

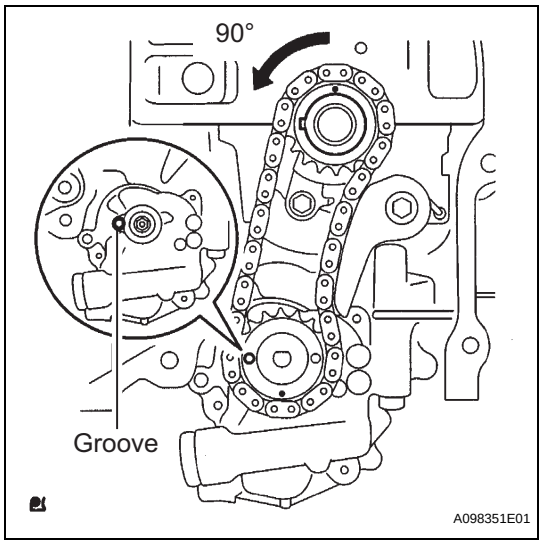

33. REMOVE NO. 2 CHAIN SUB-ASSEMBLY

(a) Turn the crankshaft by 90° counterclockwise to align the adjusting hole of the oil pump drive shaft sprocket with the groove of the oil pump.

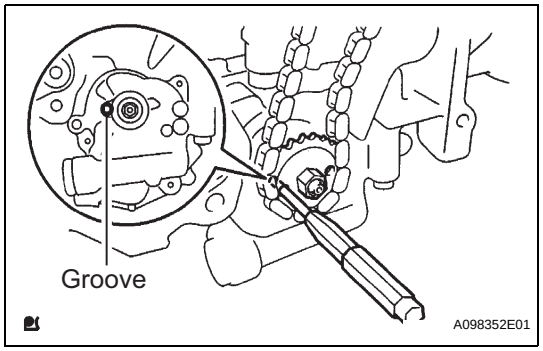

(b) Insert a 4 mm diameter bar into the adjusting hole of the oil pump drive shaft sprocket to lock the gear in position, and then remove the nut.

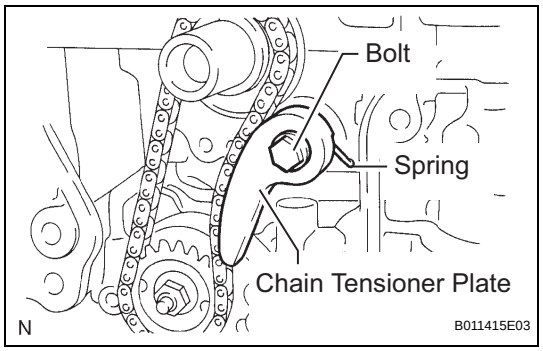

(c) Remove the bolt, chain tensioner plate and spring.
(d) Remove the oil pump drive sprocket, oil pump drive shaft sprocket and No. 2 chain.

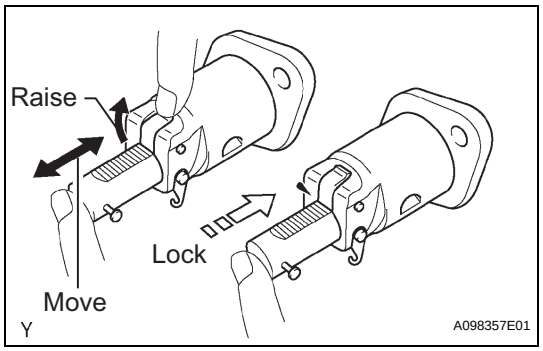

INSPECTION

1. INSPECT NO. 1 CHAIN TENSIONER

(a) Check that the plunger moves smoothly when the ratchet pawl is raised with your finger.
(b) Release the ratchet pawl, then check that the plunger is locked in place by the ratchet pawl and does not move when pushed with your finger.

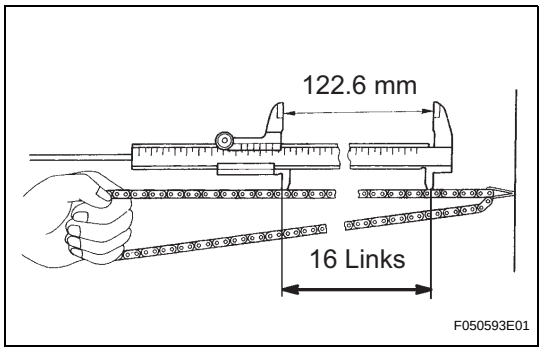

2. INSPECT CHAIN SUB-ASSEMBLY

(a) Using a vernier caliper, measure the length of the 16 links with the chain fully stretched.

Maximum chain elongation:

122.6 mm (4.827 in.)

If the chain elongation is greater than the maximum, replace the chain sub-assembly.

HINT:

Take the measurements at 3 or more places selected at random.

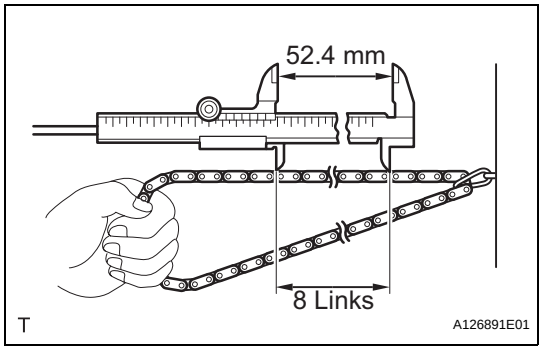

3. INSPECT NO. 2 CHAIN SUB-ASSEMBLY

(a) Using a vernier caliper, measure the length of the 8 links with the chain fully stretched.

Maximum chain elongation:

52.4 mm (2.063 in.)

If the chain elongation is greater than the maximum, replace the No. 2 chain sub-assembly.

HINT:

Take the measurements at 3 or more places selected at random.

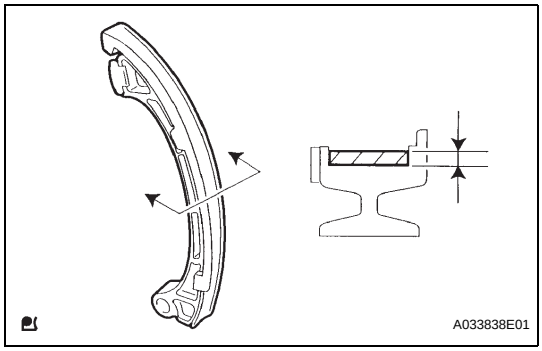

4. INSPECT CHAIN TENSIONER SLIPPER

(a) Using a vernier caliper, measure the tensioner slipper wear.

Maximum wear:

1.0 mm (0.039 in.)

If the wear is greater than the maximum, replace the chain tensioner slipper.

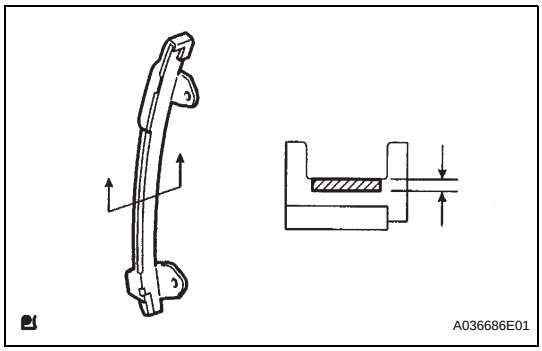

5. INSPECT NO. 1 CHAIN VIBRATION DAMPER

(a) Using a vernier caliper, measure the vibration damper wear.

Maximum wear:

1.0 mm (0.039 in.)

If the wear is greater than the maximum, replace the No. 1 chain vibration damper.

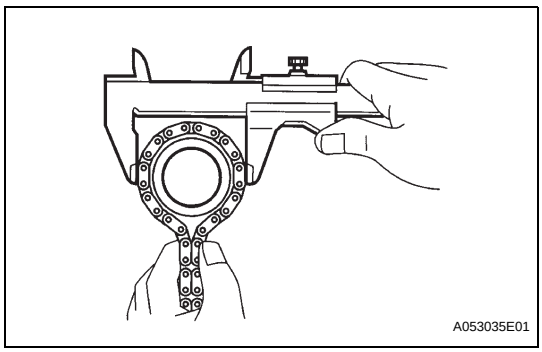

6. INSPECT CRANKSHAFT TIMING SPROCKET

(a) Wrap the chain around the timing sprocket.

(b) Using a vernier caliper, measure the timing gear diameter with the chain.

Minimum gear diameter (with chain):

51.6 mm (2.031 in.)

NOTICE:

The vernier caliper must be in contact with the chain rollers when measuring.

If the gear diameter is less than the minimum, replace the chain sub-assembly and crankshaft timing sprocket.

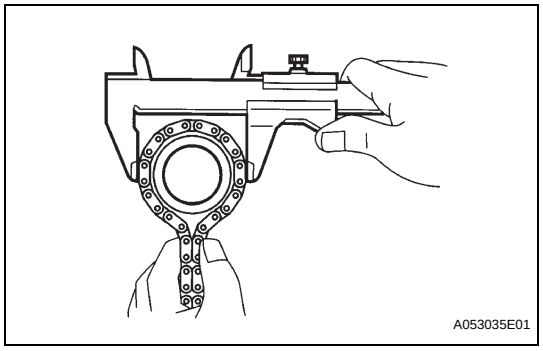

7. INSPECT OIL PUMP DRIVE SPROCKET

(a) Wrap the chain around the drive sprocket.

(b) Using a vernier caliper, measure the drive gear diameter with the chain.

Minimum gear diameter (with chain):
48.2 mm (1.898 in.)

NOTICE:
The vernier caliper must be in contact with the chain rollers when measuring.

If the gear diameter is less than the minimum, replace the No. 2 chain sub-assembly and oil pump drive sprocket.

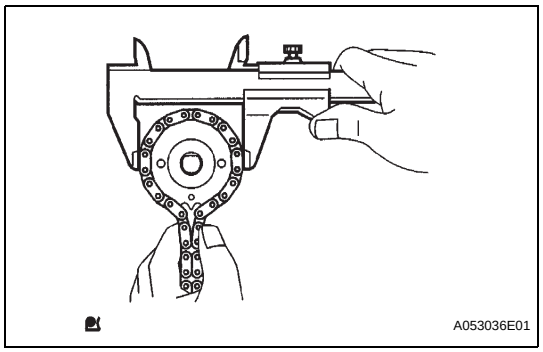

8. INSPECT OIL PUMP DRIVE SHAFT SPROCKET

(a) Wrap the chain around the drive shaft sprocket.

(b) Using a vernier caliper, measure the drive shaft gear diameter with the chain.

Minimum gear diameter (with chain):
48.2 mm (1.898 in.)

NOTICE:
The vernier caliper must be in contact with the chain rollers when measuring.

If the gear diameter is less than the minimum, replace the No. 2 chain sub-assembly and oil pump drive shaft sprocket.

EM

REPLACEMENT

1. REPLACE TIMING CHAIN COVER OIL SEAL

(a) Using a screwdriver and hammer, tap out the oil seal.

(b) Place the oil seal retainer on wooden blocks.

(c) Apply multi-purpose grease to the lip of a new oil seal.

NOTICE:
Keep the lip free of foreign objects.

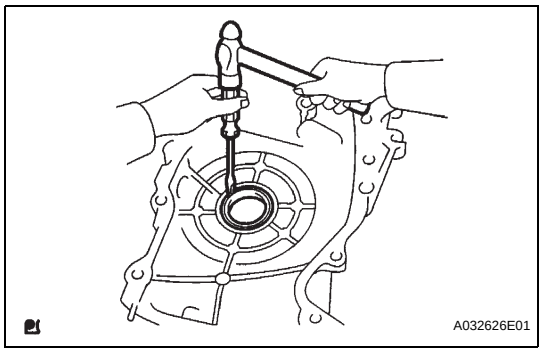

(d) Using SST and a hammer, tap in a new oil seal until its surface is flush with the timing gear case edge.

SST 09223-22010

NOTICE:
Do not tap the oil seal at an angle.

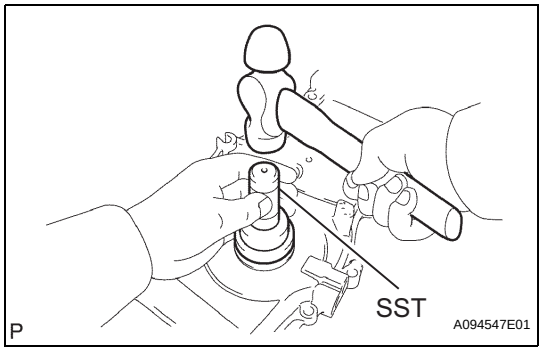

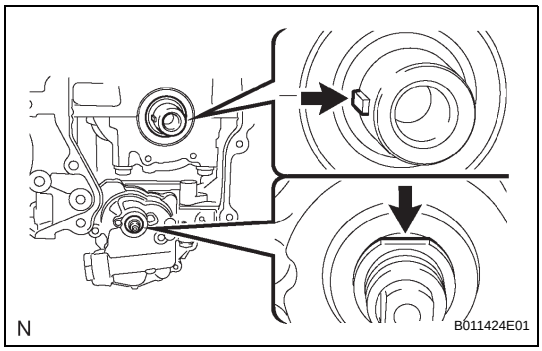

INSTALLATION

1. INSTALL NO. 2 CHAIN SUB-ASSEMBLY

(a) Set the crankshaft key in the left horizontal position.
(b) Turn the cutout of the drive shaft so that it faces upward.

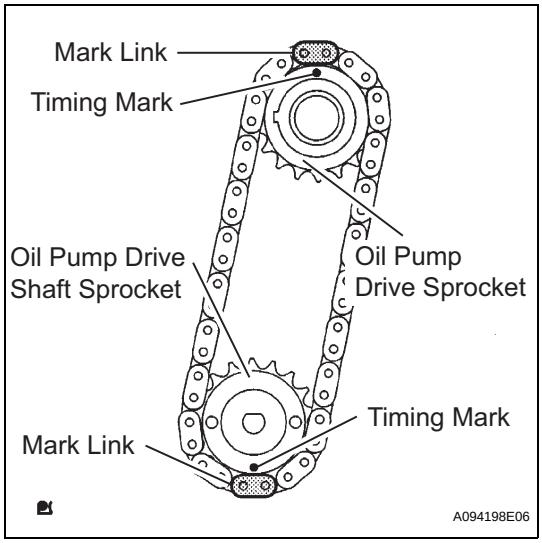

(c) Align the yellow mark links with the timing marks of each gear as shown in the illustration.
(d) Install the sprockets onto the crankshaft and oil pump shaft with the chain wrapped on the gears.
(e) Temporarily tighten the oil pump drive shaft sprocket with the nut.

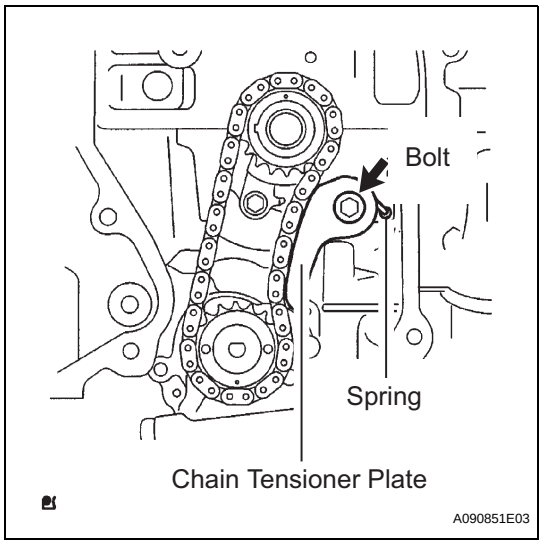

(f) Insert the damper spring into the adjusting hole, and then install the chain tensioner plate with the bolt.
Torque: 12 N*m (122 kgf*cm, 9 ft.*lbf)

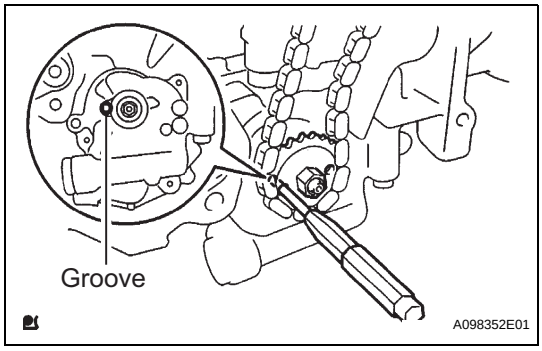

(g) Align the adjusting hole of the oil pump drive shaft sprocket with the groove of the oil pump.
(h) Insert a 4 mm diameter bar into the adjusting hole of the oil pump drive shaft gear to lock the gear in position, and then tighten the nut.
Torque: 29.5 N*m (301 kgf*cm, 22 ft.*lbf)

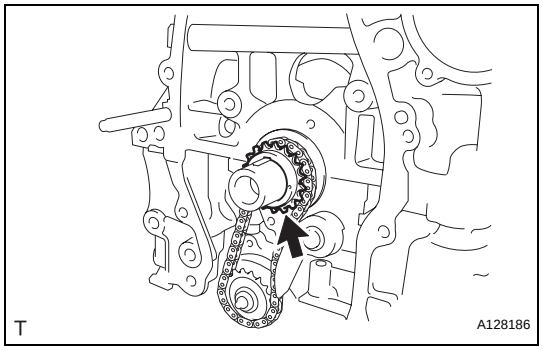

2. INSTALL CRANKSHAFT TIMING SPROCKET

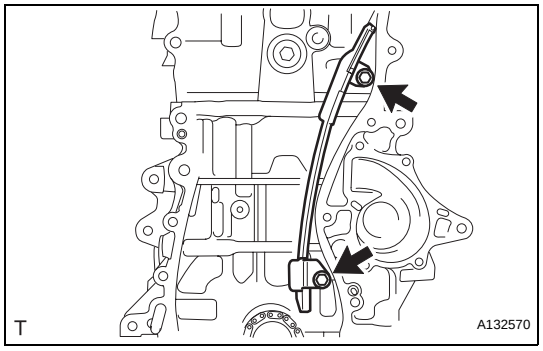

3. INSTALL NO. 1 CHAIN VIBRATION DAMPER

(a) Install the chain vibration damper with the 2 bolts.
Torque: 9.0 N*m (92 kgf*cm, 80 in.*lbf)

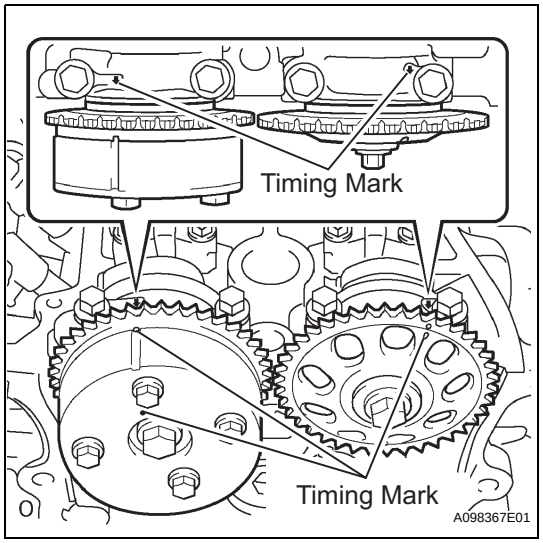

4. INSTALL CHAIN SUB-ASSEMBLY

(a) Set the No. 1 cylinder to TDC/compression.
(1) Turn the camshafts with a wrench (using the hexagonal lobe) to align the timing marks of the camshaft timing gear with each timing mark located on the No. 1 and No. 2 bearing caps as shown in the illustration.

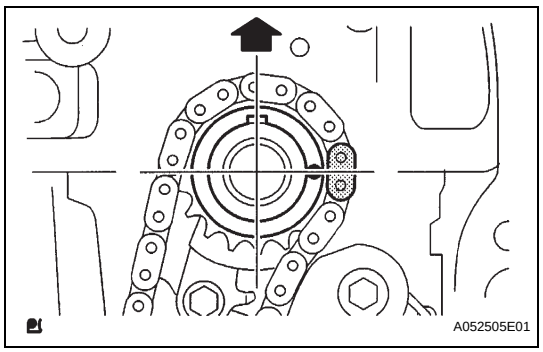

(2) Using the crankshaft pulley bolt, turn the crankshaft to position the key on the crankshaft upward.

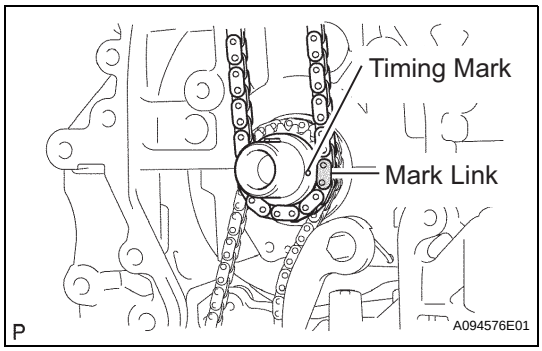

(b) Install the chain onto the crankshaft timing sprocket with the gold or orange mark link aligned with the timing mark on the crankshaft.

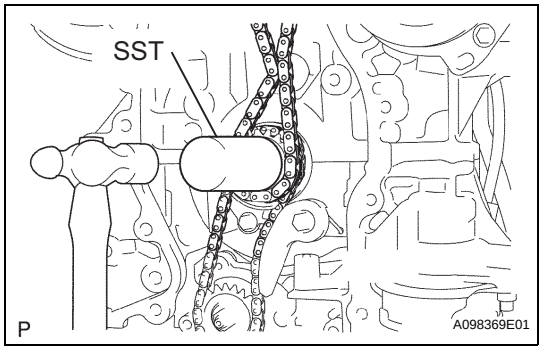

(c) Using SST and a hammer, tap in the crankshaft timing sprocket.
SST 09309-37010

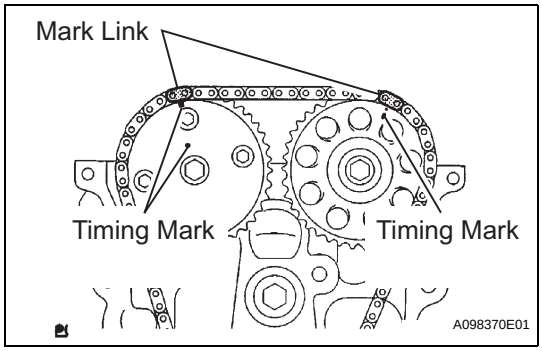

(d) Align the gold or yellow links with each timing mark located on the camshaft timing gear and sprocket, then install the chain.

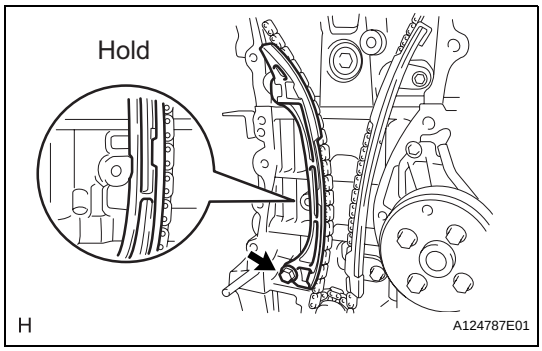

5. INSTALL CHAIN TENSIONER SLIPPER

(a) Install the chain tensioner slipper with the bolt.
Torque: 19 N*m (194 kgf*cm, 14 ft.*lbf)

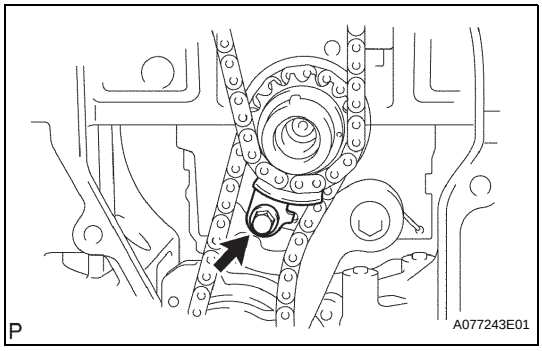

6. INSTALL TIMING CHAIN GUIDE

(a) Install the timing chain guide with the bolt.
Torque: 9.0 N*m (92 kgf*cm, 80 in.*lbf)

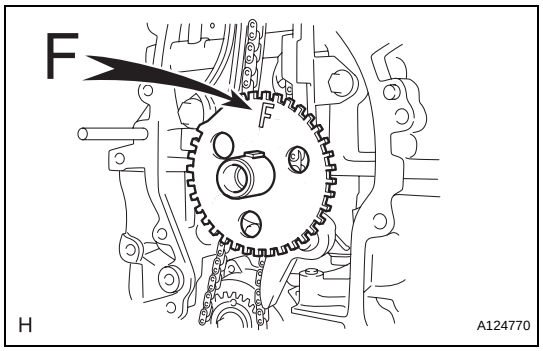

7. INSTALL NO. 1 CRANKSHAFT POSITION SENSOR PLATE

(a) Install the sensor plate with the "F" mark facing forward.

8. INSTALL TIMING CHAIN COVER SUB-ASSEMBLY

(a) Remove any old packing material and be careful not to drop any oil on the contact surfaces of the timing chain cover, cylinder head and cylinder block.

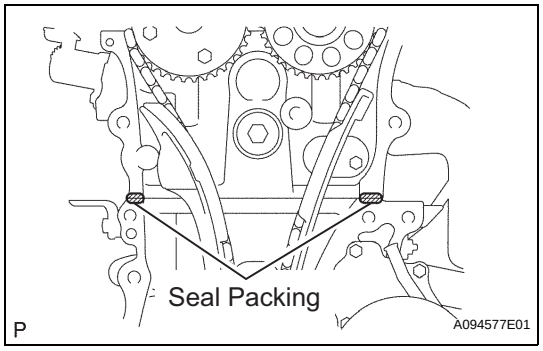

(b) Apply seal packing (Diameter 4.0 to 4.5 mm (0.157 to 0.177 in.)) as shown in the illustration.

Seal packing:

Toyota Genuine Seal Packing Block, Three Bond 1207B or Equivalent

NOTICE:

- **Remove any oil from the contact surface.**
- **Install the chain cover within 3 minutes of applying seal packing.**
- **Do not add engine oil for at least 2 hours after installing the chain cover.**

(c) Apply a continuous bead of seal packing as shown in the illustration.

Seal packing:

Toyota Genuine Seal Packing Block, Three Bond 1207B or Equivalent

NOTICE:

- **Remove any oil from the contact surface.**
- **Install the chain cover within 3 minutes of applying seal packing.**

EM

- **Do not add engine oil for at least 2 hours after installing the chain cover.**

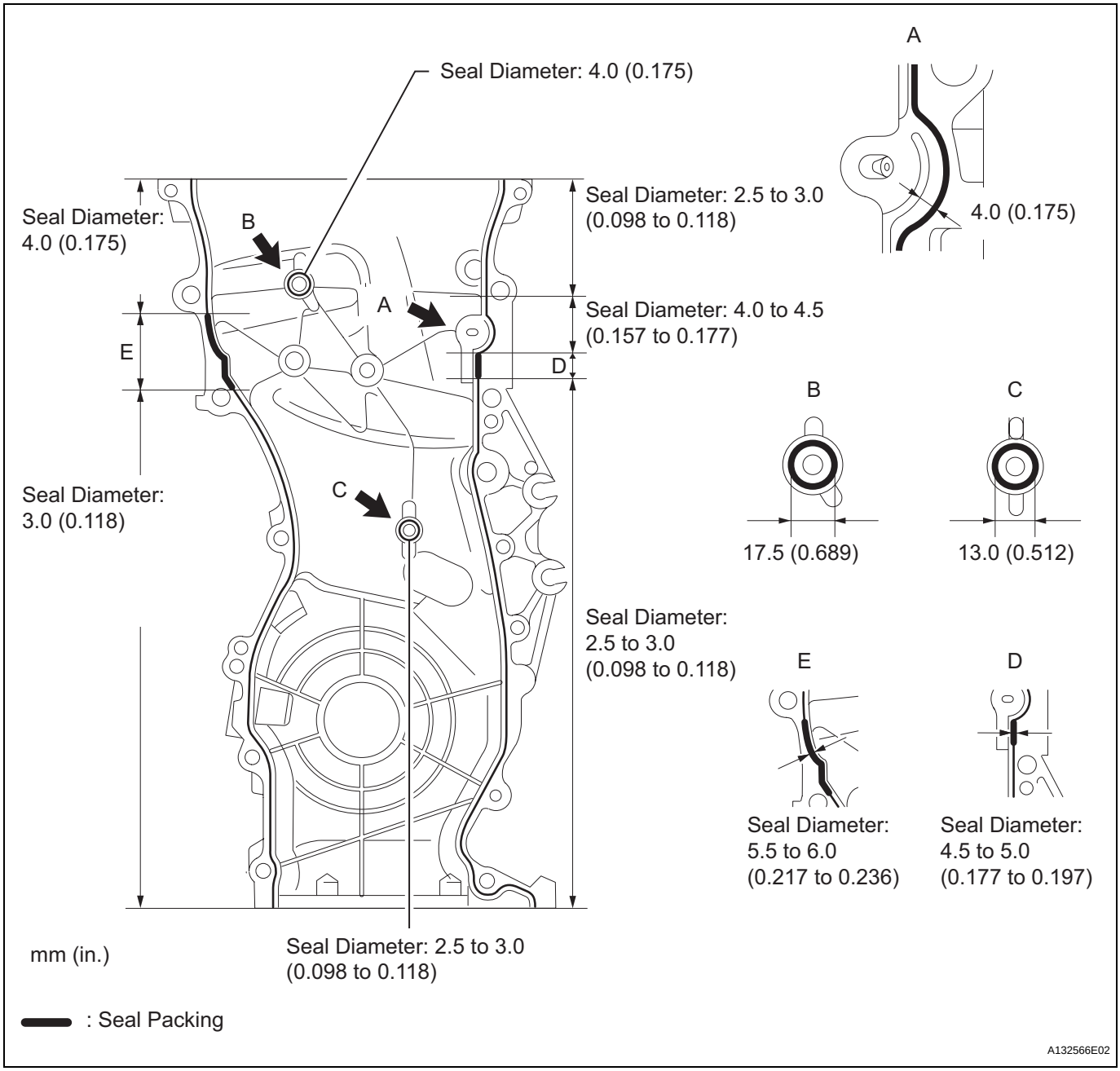

EM

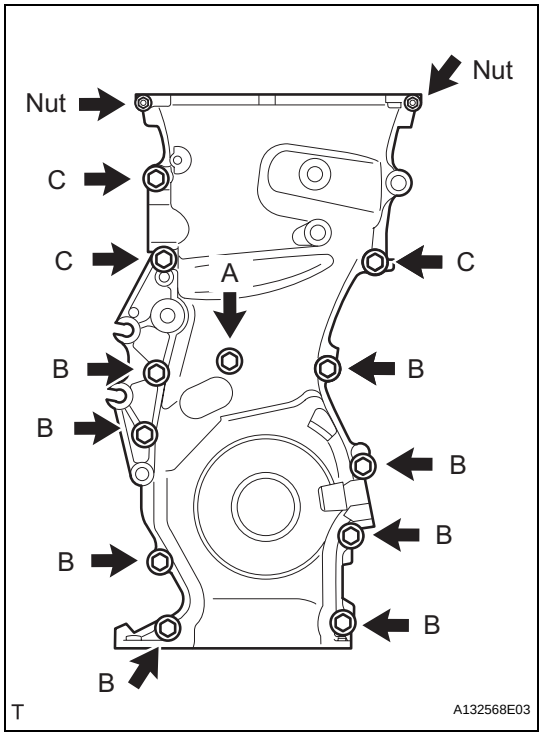

(d) Install the timing chain cover with the 12 bolts and 2 nuts.

Torque: 9.0 N*m (92 kgf*cm, 80 in.*lbf) for bolt A
25 N*m (255 kgf*cm, 18 ft.*lbf) for bolt B
55 N*m (561 kgf*cm, 41 ft.*lbf) for bolt C
11 N*m (112 kgf*cm, 8 ft.*lbf) for nut

HINT:
Bolt length:

Bolt A	30 mm (1.18 in.) length for 10 mm head
Bolt B	30 mm (1.18 in.) length for 12 mm head
Bolt C	40 mm (1.57 in.) length for 14 mm head

EM

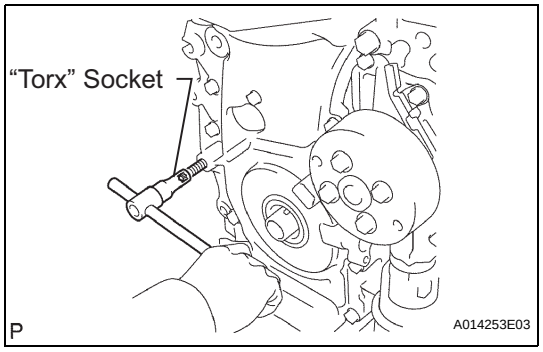

(e) Using an E10 "torx" socket, install the stud bolt for the V-ribbed belt tensioner.

Torque: 21.5 N*m (219 kgf*cm, 16 ft.*lbf)

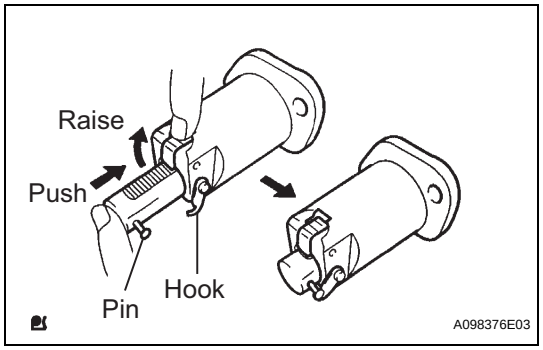

9. INSTALL NO. 1 CHAIN TENSIONER ASSEMBLY

(a) Release the ratchet pawl, then fully push in the plunger and hook the hook to the pin so that the plunger is in the position shown in the illustration.

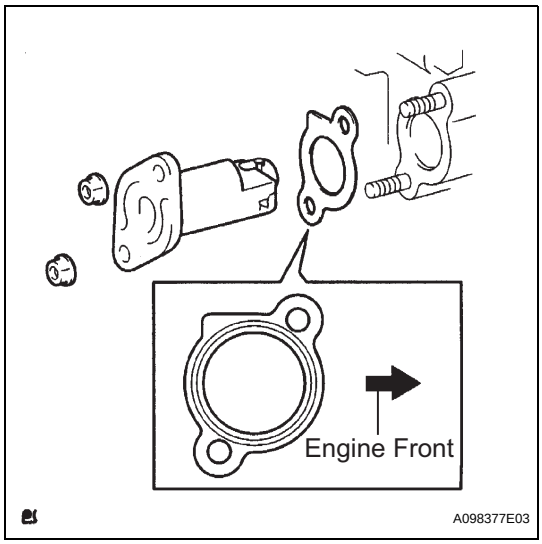

(b) Install a new gasket and the chain tensioner with the 2 nuts.
Torque: 9.0 N*m (92 kgf*cm, 80 in.*lbf)
NOTICE:
When installing the chain tensioner, set the hook again if the hook releases the plunger.

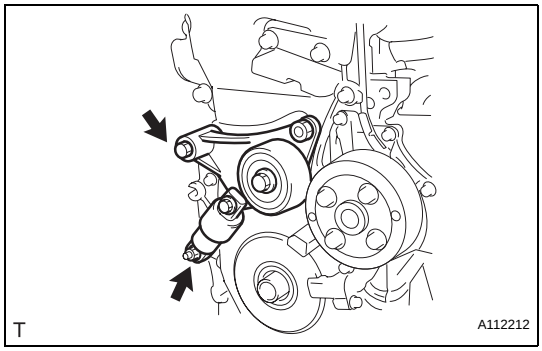

10. INSTALL V-RIBBED BELT TENSIONER ASSEMBLY
(a) Install the V-ribbed belt tensioner with the bolt and nut.
Torque: 59.5 N*m (607 kgf*cm, 44 ft.*lbf)
NOTICE:
Do not lift the engine more than necessary.

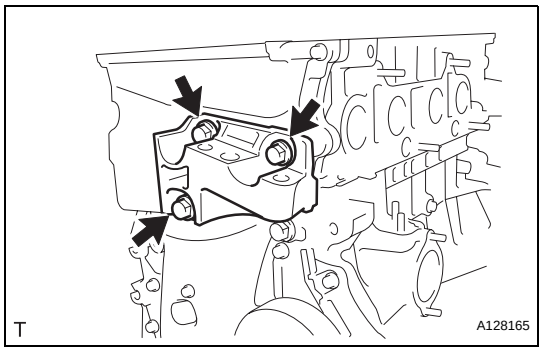

11. INSTALL ENGINE MOUNTING BRACKET RH
(a) Install the engine mounting bracket RH with the 3 bolts.
Torque: 55 N*m (561 kgf*cm, 41 ft.*lbf)

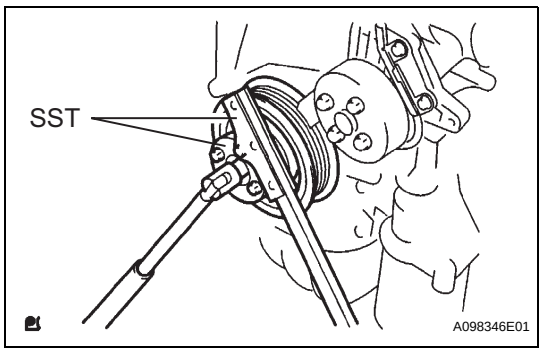

12. INSTALL CRANKSHAFT PULLEY
(a) Using SST, fix the pulley in place and tighten the bolt.
SST 09213-54015 (91651-60855), 09330-00021
Torque: 180 N*m (1,835 kgf*cm, 133 ft.*lbf)

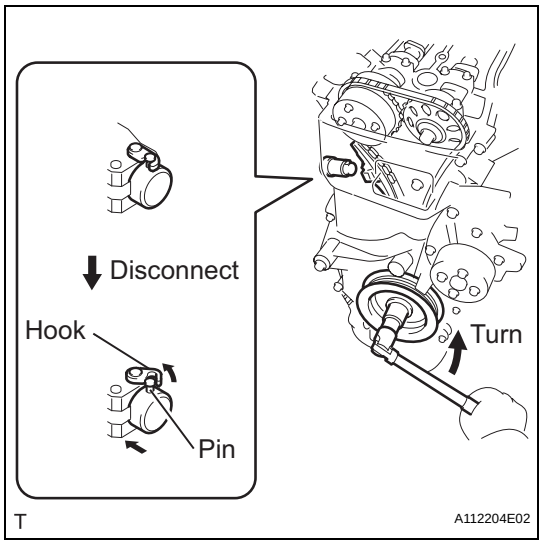

(b) Turn the crankshaft counterclockwise, then disconnect the plunger knock pin from the hook.

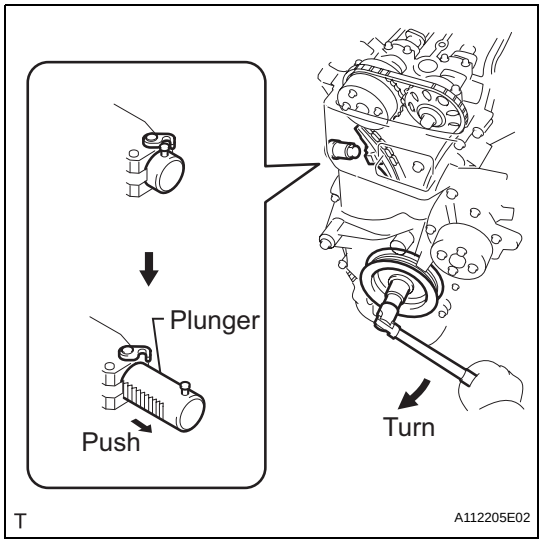

(c) Turn the crankshaft clockwise, then check that the plunger is extended.

EM

13. INSTALL OIL PAN SUB-ASSEMBLY

(a) Remove any old packing material and be careful not to drop any oil on the contact surfaces of the cylinder block and oil pan.

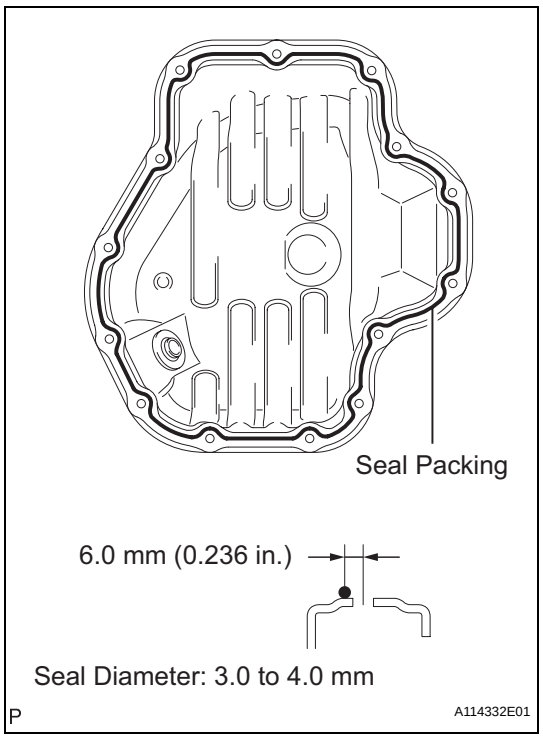

(b) Apply a continuous bead of seal packing (Diameter 3.0 to 4.0 mm (0.118 to 0.157 in.)) as shown in the illustration.

Seal packing:

Toyota Genuine Seal Packing Block, Three Bond 1207B or Equivalent

NOTICE:

- **Remove any oil from the contact surface.**
- **Install the oil pan within 3 minutes of applying seal packing.**
- **Do not add engine oil for at least 2 hours after installing the oil pan.**

(c) Install the oil pan to the cylinder block.

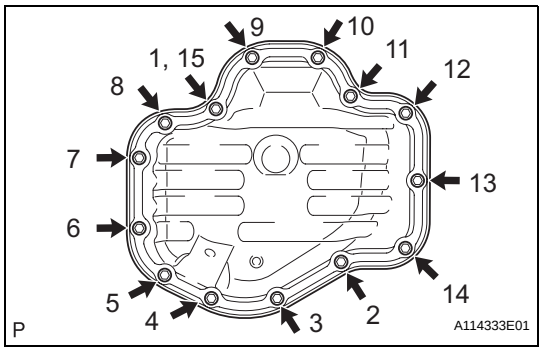

(d) Uniformly tighten the 12 bolts and 2 nuts in the sequence shown in the illustration.
Torque: 9.0 N*m (92 kgf*cm, 80 in.*lbf)

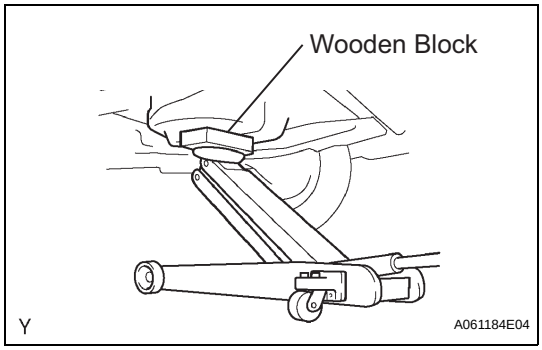

(e) Place a transmission jack underneath the engine, then put a wooden block on the jack.
(f) Remove the chain block and sling device.
(g) Remove the No. 1 and No. 2 engine hangers.

14. INSTALL CRANKSHAFT POSITION SENSOR (See page ES-402)

15. INSTALL CYLINDER HEAD COVER SUB-ASSEMBLY

(a) Remove any old packing material from the contact surface.

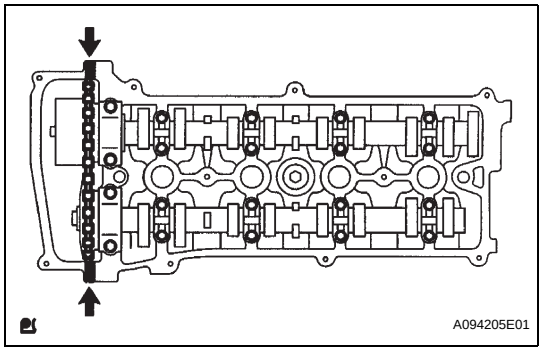

(b) Apply seal packing to the 2 locations shown in the illustration.
Seal packing:
Toyota Genuine Seal Packing Block, Three Bond 1207B or Equivalent
NOTICE:
- **Remove any oil from the contact surface.**
- **Install the oil pan within 3 minutes of applying seal packing.**
- **Do not add engine oil for at least 2 hours after installing the oil pan.**

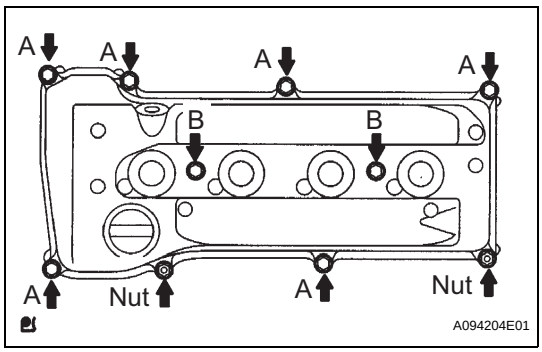

(c) Install the cylinder head cover with the 8 bolts and 2 nuts.
Torque: 11 N*m (112 kgf*cm, 8 ft.*lbf) for bolt A
14 N*m (143 kgf*cm, 10 ft.*lbf) for bolt B
11 N*m (112 kgf*cm, 8 ft.*lbf) for nut

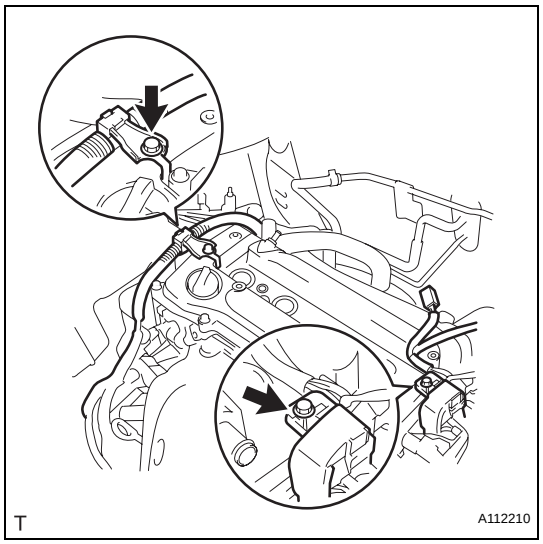

(d) Install the 2 engine wires with the 2 bolts.
Torque: 8.4 N*m (86 kgf*cm, 74 in.*lbf)

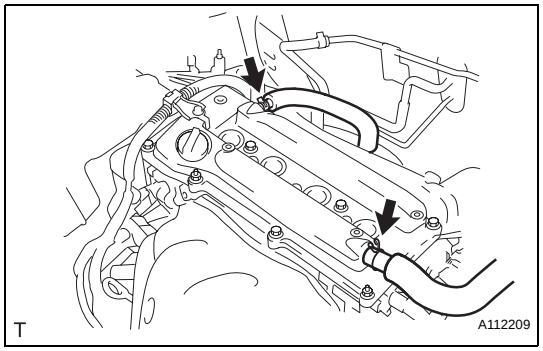

(e) Connect the 2 ventilation hoses to the cylinder head cover.

16. INSTALL SPARK PLUG (See page EM-16)

17. INSTALL IGNITION COIL ASSEMBLY (See page IG-9)

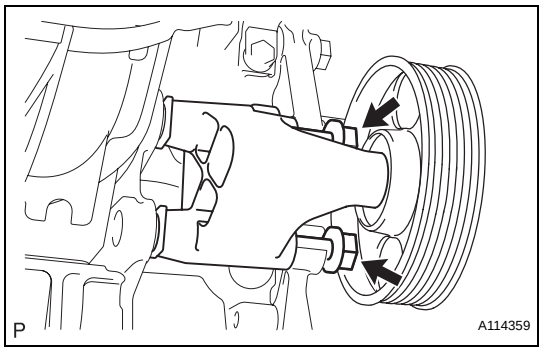

18. INSTALL IDLER PULLEY

(a) Install the idler pulley with the 2 bolts.
Torque: 60 N*m (612 kgf*cm, 44 ft.*lbf)

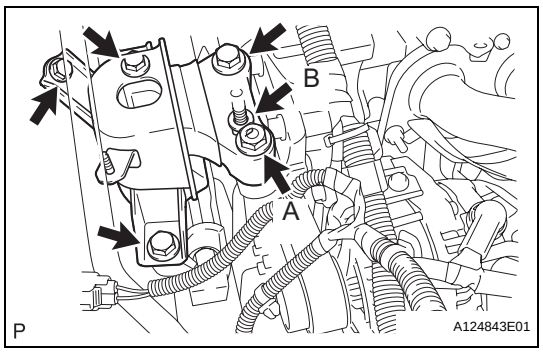

19. INSTALL ENGINE MOUNTING INSULATOR RH

(a) Install the engine mounting insulator RH with the 4 bolts and 2 nuts.
Torque: 95 N*m (969 kgf*cm, 70 ft.*lbf) for bolt
95 N*m (969 kgf*cm, 70 ft.*lbf) for nut A
52 N*m (530 kgf*cm, 38 ft.*lbf) for nut B

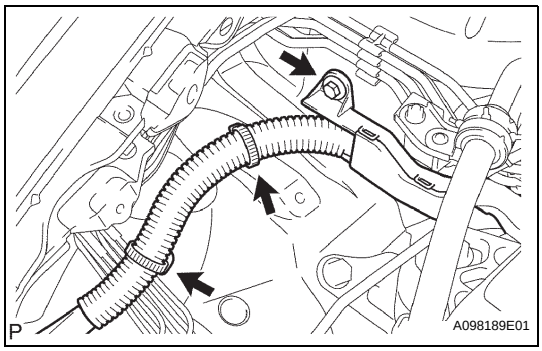

(b) Connect the 2 clamps of the engine wire.
(c) Install the wire harness protector with the bolt.

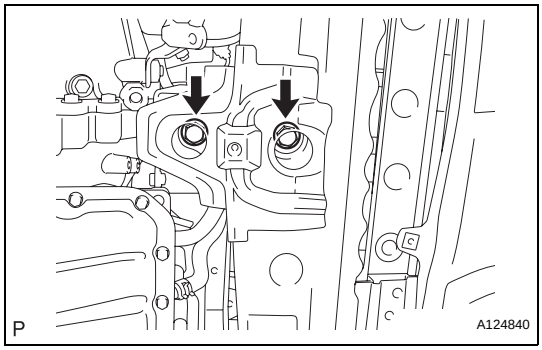

20. INSTALL ENGINE MOUNTING INSULATOR FR

(a) Install the engine mounting insulator FR with the 2 bolts.
Torque: 95 N*m (969 kgf*cm, 70 ft.*lbf)

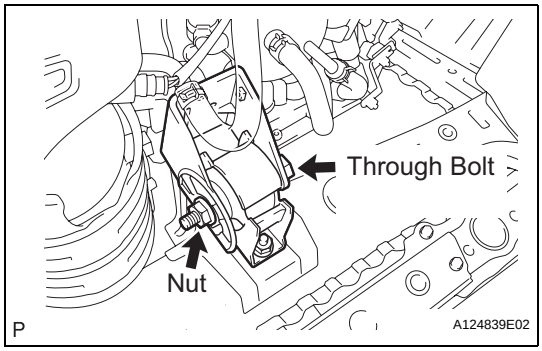

(b) Install the through bolt and nut.
Torque: 145 N*m (1,479 kgf*cm, 107 ft.*lbf)
HINT:
Install the bolt which is used to secure the front engine mounting bracket FR.

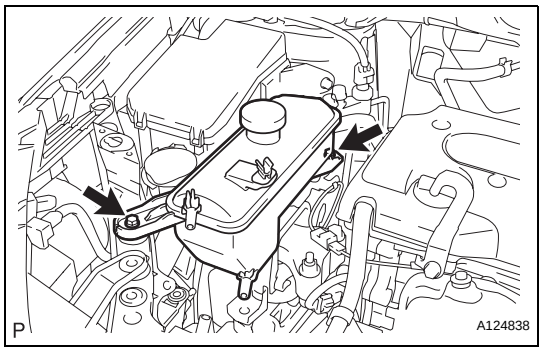

21. INSTALL RADIATOR RESERVOIR

(a) Install the radiator reservoir with the 2 bolts.
Torque: 5.0 N*m (51 kgf*cm, 44 in.*lbf)

22. INSTALL GENERATOR ASSEMBLY (See page CH-15)

23. INSTALL FAN AND GENERATOR V BELT (See page EM-7)

24. INSTALL FRONT SUSPENSION MEMBER REINFORCEMENT RH (See page EM-7)

25. INSTALL FRONT EXHAUST PIPE (See page EX-4)

26. ADD ENGINE OIL (See page LU-4)

27. CONNECT CABLE TO NEGATIVE BATTERY TERMINAL

28. CHECK FOR ENGINE OIL LEAKS

29. CHECK FOR EXHAUST GAS LEAKS

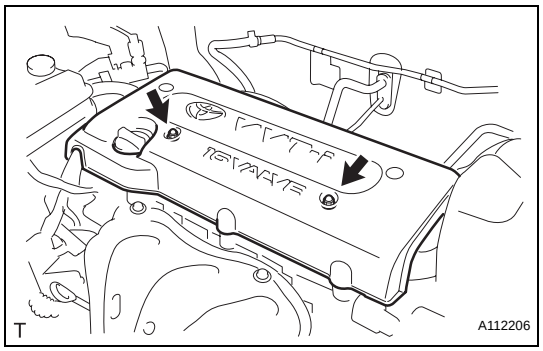

30. INSTALL NO. 1 ENGINE COVER

(a) Install the engine cover with the 2 nuts.
Torque: 7.0 N*m (71 kgf*cm, 62 in.*lbf)

31. INSTALL FRONT FENDER APRON RH

32. INSTALL NO. 1 ENGINE UNDER COVER

33. INSTALL FRONT WHEEL RH

34. INSTALL RADIATOR SUPPORT OPENING COVER

TIMING CHAIN

COMPONENTS

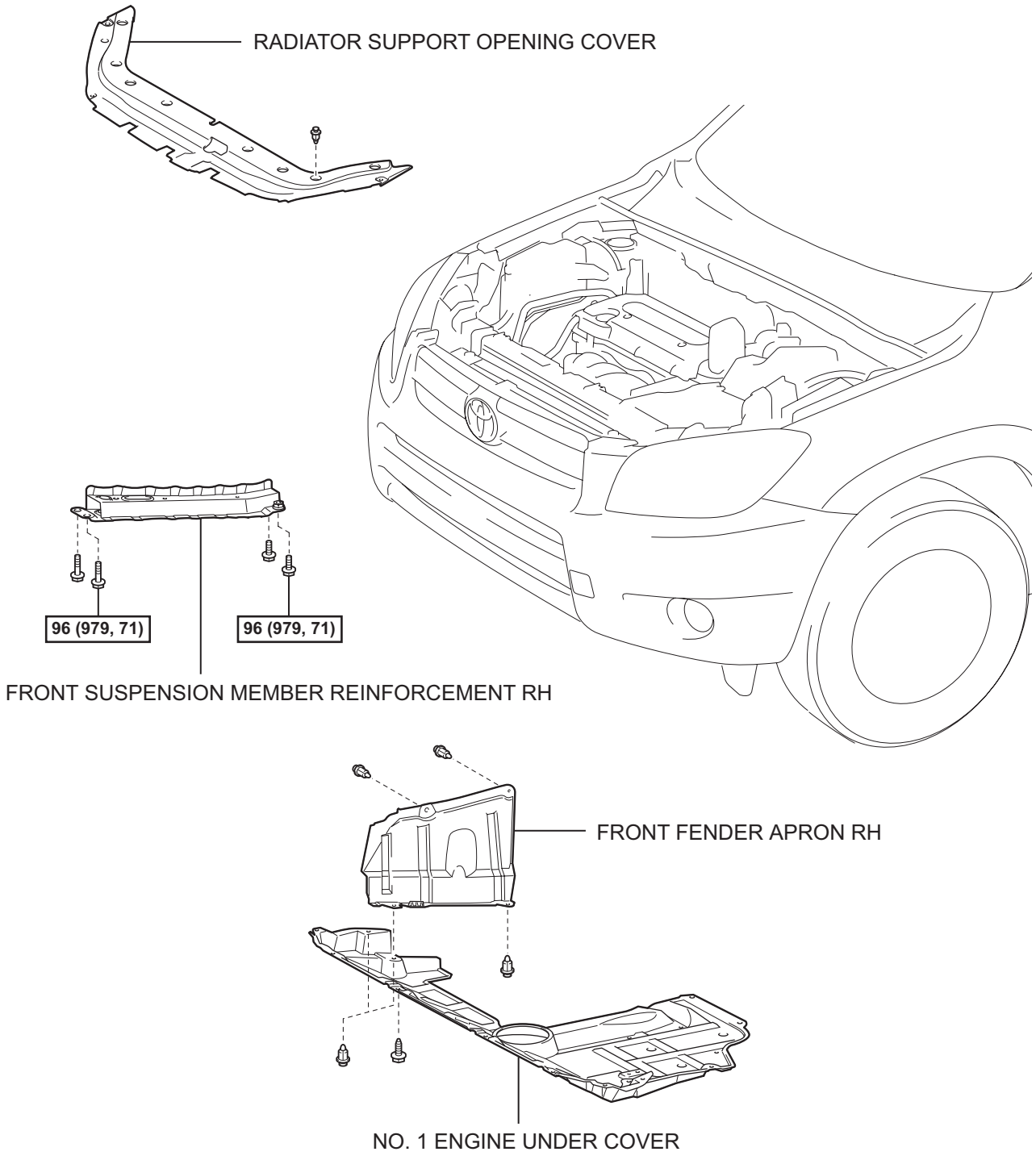

N*m (kgf*cm, ft.*lbf) : Specified torque

P

A124366E08

EM

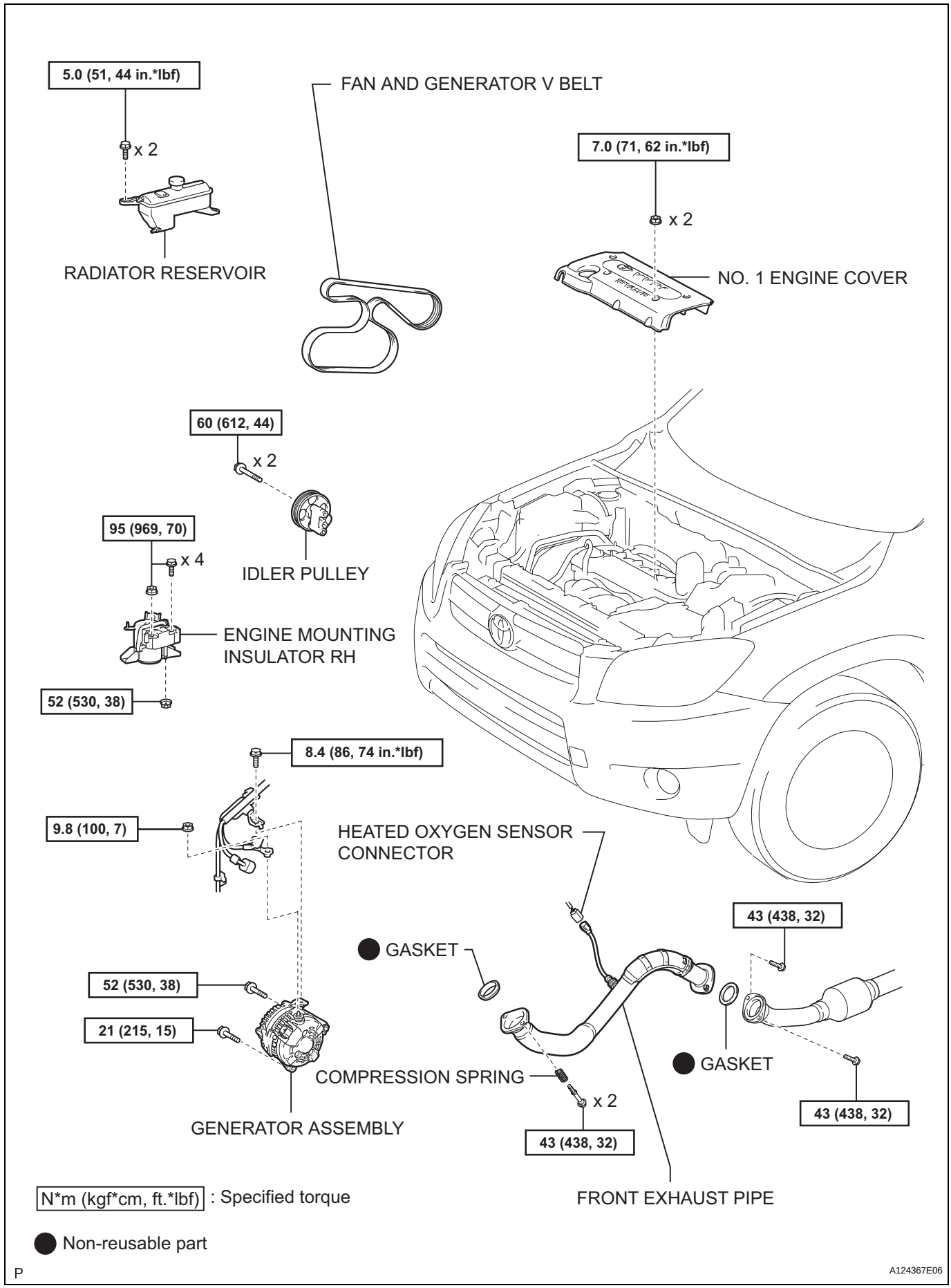
5.0 (51, 44 in.*lbf)
x 2
RADIATOR RESERVOIR
FAN AND GENERATOR V BELT
7.0 (71, 62 in.*lbf)
x 2
NO. 1 ENGINE COVER
60 (612, 44)
x 2
IDLER PULLEY
95 (969, 70)
x 4
ENGINE MOUNTING INSULATOR RH
52 (530, 38)
8.4 (86, 74 in.*lbf)
9.8 (100, 7)
HEATED OXYGEN SENSOR CONNECTOR
GASKET
43 (438, 32)
52 (530, 38)
21 (215, 15)
COMPRESSION SPRING
x 2
43 (438, 32)
GASKET
43 (438, 32)
GENERATOR ASSEMBLY
FRONT EXHAUST PIPE
N*m (kgf*cm, ft.*lbf) : Specified torque
Non-reusable part
P
A124367E06

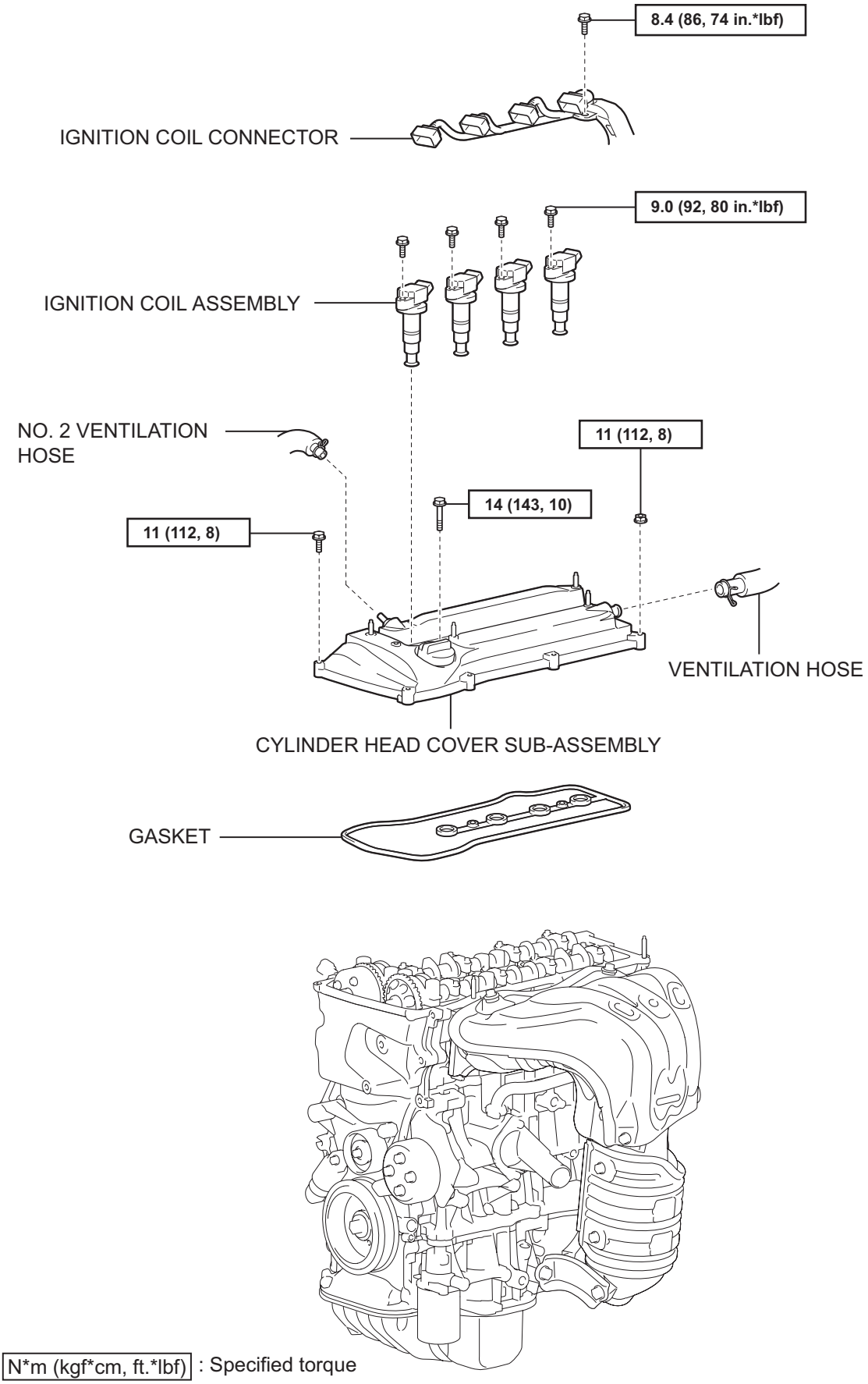

EM

P

A124368E07

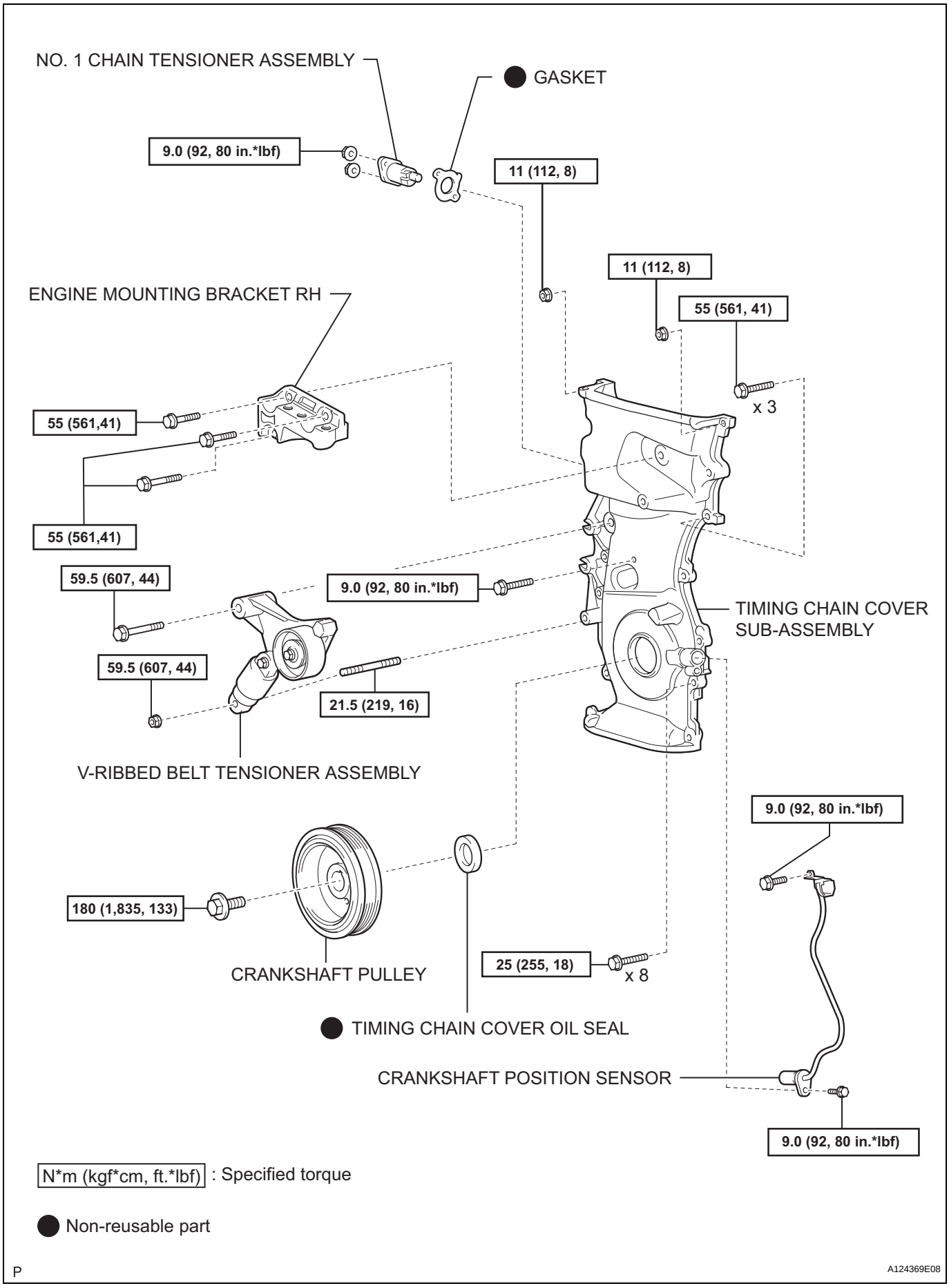
NO. 1 CHAIN TENSIONER ASSEMBLY
GASKET
9.0 (92, 80 in.*lbf)
11 (112, 8)
11 (112, 8)
55 (561, 41)
x 3
ENGINE MOUNTING BRACKET RH
55 (561,41)
55 (561,41)
59.5 (607, 44)
9.0 (92, 80 in.*lbf)
TIMING CHAIN COVER SUB-ASSEMBLY
59.5 (607, 44)
21.5 (219, 16)
V-RIBBED BELT TENSIONER ASSEMBLY
9.0 (92, 80 in.*lbf)
180 (1,835, 133)
CRANKSHAFT PULLEY
25 (255, 18)
x 8
TIMING CHAIN COVER OIL SEAL
CRANKSHAFT POSITION SENSOR
9.0 (92, 80 in.*lbf)
N*m (kgf*cm, ft.*lbf) : Specified torque
Non-reusable part
P
A124369E08

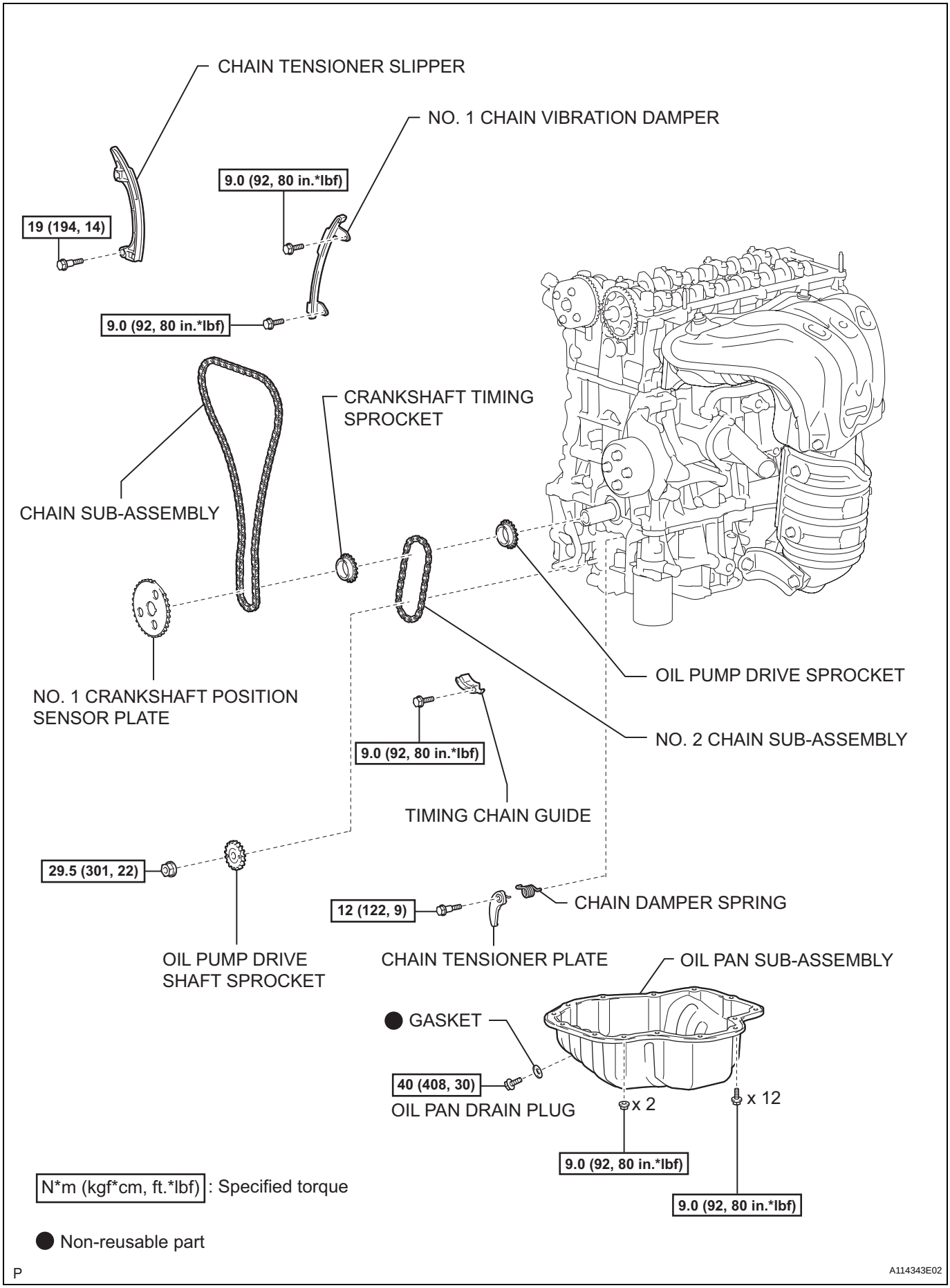
CHAIN TENSIONER SLIPPER
NO. 1 CHAIN VIBRATION DAMPER
9.0 (92, 80 in.*lbf)
19 (194, 14)
9.0 (92, 80 in.*lbf)
CRANKSHAFT TIMING SPROCKET
CHAIN SUB-ASSEMBLY
OIL PUMP DRIVE SPROCKET
NO. 1 CRANKSHAFT POSITION SENSOR PLATE
NO. 2 CHAIN SUB-ASSEMBLY
9.0 (92, 80 in.*lbf)
TIMING CHAIN GUIDE
29.5 (301, 22)
12 (122, 9)
CHAIN DAMPER SPRING
OIL PUMP DRIVE SHAFT SPROCKET
CHAIN TENSIONER PLATE
OIL PAN SUB-ASSEMBLY
GASKET
40 (408, 30)
OIL PAN DRAIN PLUG
x 2
x 12
9.0 (92, 80 in.*lbf)
9.0 (92, 80 in.*lbf)
N*m (kgf*cm, ft.*lbf) : Specified torque
Non-reusable part
P
A114343E02

VALVE CLEARANCE

ADJUSTMENT

1. **DISCONNECT CABLE FROM NEGATIVE BATTERY TERMINAL**
   CAUTION:
   Wait at least 90 seconds after disconnecting the cable from the negative (-) battery terminal to prevent airbag and seat belt pretensioner activation.
2. **REMOVE FRONT WHEEL RH**
3. **REMOVE NO. 1 ENGINE UNDER COVER**
4. **REMOVE FRONT FENDER APRON RH**
5. **REMOVE NO. 1 ENGINE COVER (See page EM-22)**
6. **REMOVE IGNITION COIL ASSEMBLY (See page IG-9)**
7. **REMOVE SPARK PLUG**
   (a) Remove the 4 spark plugs.
8. **REMOVE CYLINDER HEAD COVER SUB-ASSEMBLY (See page EM-24)**
9. **SET NO. 1 CYLINDER TO TDC/COMPRESSION (See page EM-25)**
10. **CHECK VALVE CLEARANCE**
    (a) Check only the valves indicated.
    (1) Using a feeler gauge, measure the clearance between the valve lifter and camshaft.
    Standard valve clearance (cold)

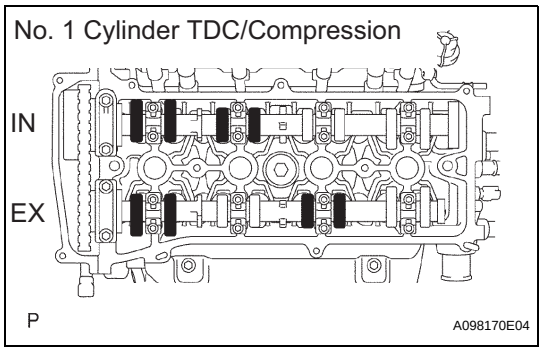

Item	Standard Condition
Intake	0.19 to 0.29 mm (0.0075 to 0.0114 in.)
Exhaust	0.38 to 0.48 mm (0.0150 to 0.0189 in.)

    (2) Record any out-of-specification valve clearance measurements. They will be used later to determine the required replacement valve clearance lifters.
    (b) Turn the crankshaft 1 revolution (360°) and set the No. 4 cylinder to the TDC/compression.
    (c) Check only the valves indicated.
    (1) Using a feeler gauge, measure the clearance between the valve lifter and camshaft.
    Standard valve clearance (cold)

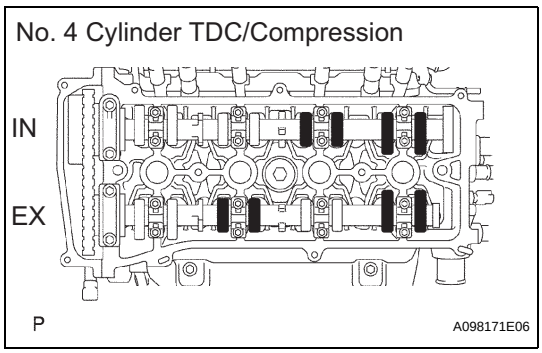

Item	Standard Condition
Intake	0.19 to 0.29 mm (0.0075 to 0.0114 in.)
Exhaust	0.38 to 0.48 mm (0.0150 to 0.0189 in.)

    (2) Record any out-of-specification valve clearance measurements. They will be used later to determine the required replacement valve lifters.
11. **ADJUST VALVE CLEARANCE**
    (a) Remove the No. 2 camshaft (see page EM-60).

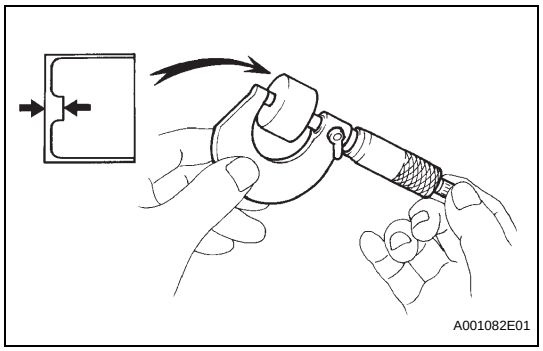

(b) Remove the camshaft (see page EM-61).
(c) Remove the valve lifters.
(d) Using a micrometer, measure the thickness of the removed valve lifters.
(e) Calculate the thickness of a new lifter so that the valve clearance comes within the specified values.

New lifter thickness

Item	Specification
Intake	**A = B + (C - 0.24 mm (0.0095 in.))**
Exhaust	**A = B + (C - 0.43 mm (0.0169 in.))**

A	New lifter thickness
B	Used lifter thickness
C	Measured valve clearance

CALCULATION EXAMPLE (Intake):

1. Measured intake valve clearance = 0.40 mm (0.0158 in.)
   (Measured - Specification = Excess clearance)
   (a) 0.40 mm (0.0158 in.) - 0.24 mm (0.0095 in.) = 0.16 mm (0.0063 in.)
2. Measured used lifter thickness = 5.250 mm (0.2067 in.)
3. New lifter thickness = 5.410 mm (0.2130 in.)
   (Excess clearance + Used lifter thickness = Ideal new lifter)
   (a) 0.16 mm (0.0063 in.) + 5.250 mm (0.2067 in.) = 5.410 mm (0.2130 in.)
4. Closest new lifter = 5.420 mm (0.2134 in.)
   – Select No. 42 lifter

(f) Select a new lifter with a thickness as close as possible to the calculated values.
HINT:
- Lifters are available in 35 sizes in increments of 0.020 mm (0.0008 in.), from 5.060 to 5.740 mm (0.1992 to 0.2260 in.).
- The identification number inside the valve lifters shows the value to 2 decimal places. (The illustration shows 5.420 mm (0.2134 in.)

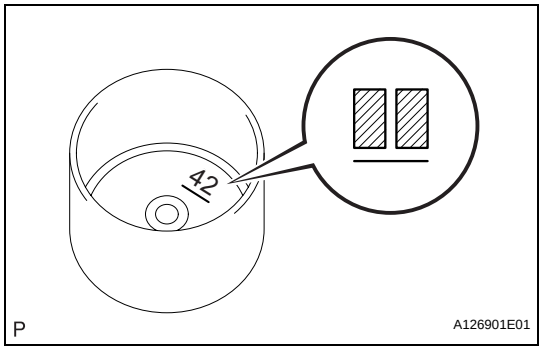

EM

(g) Valve lifter selection chart (intake).

Installed lifter thickness mm (in.) \ Measured clearance mm (in.)	0.000 - 0.030 (0.0000 - 0.0012)	0.031 - 0.050 (0.0012 - 0.0020)	0.051 - 0.070 (0.0020 - 0.0028)	0.071 - 0.090 (0.0028 - 0.0035)	0.091 - 0.110 (0.0036 - 0.0043)	0.111 - 0.130 (0.0044 - 0.0051)	0.131 - 0.150 (0.0052 - 0.0059)	0.151 - 0.170 (0.0059 - 0.0067)	0.171 - 0.189 (0.0067 - 0.0074)	0.190 - 0.290 (0.0075 - 0.0114)	0.291 - 0.310 (0.0115 - 0.0122)	0.311 - 0.330 (0.0122 - 0.0130)	0.331 - 0.350 (0.0130 - 0.0138)	0.351 - 0.370 (0.0138 - 0.0146)	0.371 - 0.390 (0.0146 - 0.0154)	0.391 - 0.410 (0.0154 - 0.0161)	0.411 - 0.430 (0.0162 - 0.0169)	0.431 - 0.450 (0.0170 - 0.0177)	0.451 - 0.470 (0.0178 - 0.0185)	0.471 - 0.490 (0.0185 - 0.0193)	0.491 - 0.510 (0.0193 - 0.0201)	0.511 - 0.530 (0.0201 - 0.0209)	0.531 - 0.550 (0.0209 - 0.0217)	0.551 - 0.570 (0.0217 - 0.0224)	0.571 - 0.590 (0.0225 - 0.0232)	0.591 - 0.610 (0.0233 - 0.0240)	0.611 - 0.630 (0.0241 - 0.0248)	0.631 - 0.650 (0.0248 - 0.0256)	0.651 - 0.670 (0.0256 - 0.0264)	0.671 - 0.690 (0.0264 - 0.0272)	0.691 - 0.710 (0.0272 - 0.0280)	0.711 - 0.730 (0.0280 - 0.0287)	0.731 - 0.750 (0.0288 - 0.0295)	0.751 - 0.770 (0.0296 - 0.0303)	0.771 - 0.790 (0.0304 - 0.0311)	0.791 - 0.810 (0.0311 - 0.0319)	0.811 - 0.830 (0.0319 - 0.0327)	0.831 - 0.850 (0.0327 - 0.0335)	0.851 - 0.870 (0.0335 - 0.0343)	0.871 - 0.890 (0.0343 - 0.0350)	0.891 - 0.910 (0.0351 - 0.0358)	0.911 - 0.930 (0.0359 - 0.0366)
5.060 (0.1992)											12	14	16	18	20	22	24	26	28	30	32	34	36	38	40	42	44	46	48	50	52	54	56	58	60	62	64	66	68	70	72	74
5.080 (0.2000)										06	14	16	18	20	22	24	26	28	30	32	34	36	38	40	42	44	46	48	50	52	54	56	58	60	62	64	66	68	70	72	74
5.100 (0.2008)									06	08	16	18	20	22	24	26	28	30	32	34	36	38	40	42	44	46	48	50	52	54	56	58	60	62	64	66	68	70	72	74	
5.120 (0.2016)								06	08	10	18	20	22	24	26	28	30	32	34	36	38	40	42	44	46	48	50	52	54	56	58	60	62	64	66	68	70	72	74		
5.140 (0.2024)							06	08	10	12	20	22	24	26	28	30	32	34	36	38	40	42	44	46	48	50	52	54	56	58	60	62	64	66	68	70	72	74			
5.160 (0.2031)						06	08	10	12	14	22	24	26	28	30	32	34	36	38	40	42	44	46	48	50	52	54	56	58	60	62	64	66	68	70	72	74				
5.180 (0.2039)					06	08	10	12	14	16	24	26	28	30	32	34	36	38	40	42	44	46	48	50	52	54	56	58	60	62	64	66	68	70	72	74					
5.200 (0.2047)				06	08	10	12	14	16	18	26	28	30	32	34	36	38	40	42	44	46	48	50	52	54	56	58	60	62	64	66	68	70	72	74						
5.210 (0.2051)			06	08	10	12	14	16	18	20	28	30	32	34	36	38	40	42	44	46	48	50	52	54	56	58	60	62	64	66	68	70	72	74	74						
5.220 (0.2055)			06	08	10	12	14	16	18	20	28	30	32	34	36	38	40	42	44	46	48	50	52	54	56	58	60	62	64	66	68	70	72	74	74						
5.230 (0.2059)			06	08	10	12	14	16	18	20	30	32	34	36	38	40	42	44	46	48	50	52	54	56	58	60	62	64	66	68	70	72	74	74							
5.240 (0.2063)			08	10	12	14	16	18	20	22	30	32	34	36	38	40	42	44	46	48	50	52	54	56	58	60	62	64	66	68	70	72	74	74							
5.250 (0.2067)	06	08	10	12	14	16	18	20	22		32	34	36	38	40	42	44	46	48	50	52	54	56	58	60	62	64	66	68	70	72	74	74								
5.260 (0.2071)	06	10	12	14	16	18	20	22	24		32	34	36	38	40	42	44	46	48	50	52	54	56	58	60	62	64	66	68	70	72	74	74								
5.270 (0.2075)	08	10	12	14	16	18	20	22	24		34	36	38	40	42	44	46	48	50	52	54	56	58	60	62	64	66	68	70	72	74	74									
5.280 (0.2079)	08	12	14	16	18	20	22	24	26		34	36	38	40	42	44	46	48	50	52	54	56	58	60	62	64	66	68	70	72	74	74									
5.290 (0.2083)	10	12	14	16	18	20	22	24	26		36	38	40	42	44	46	48	50	52	54	56	58	60	62	64	66	68	70	72	74	74										
5.300 (0.2087)	10	14	16	18	20	22	24	26	28		36	38	40	42	44	46	48	50	52	54	56	58	60	62	64	66	68	70	72	74	74										
5.310 (0.2091)	12	14	16	18	20	22	24	26	28		38	40	42	44	46	48	50	52	54	56	58	60	62	64	66	68	70	72	74	74											
5.320 (0.2094)	12	16	18	20	22	24	26	28	30		38	40	42	44	46	48	50	52	54	56	58	60	62	64	66	68	70	72	74	74											
5.330 (0.2098)	14	16	18	20	22	24	26	28	30		40	42	44	46	48	50	52	54	56	58	60	62	64	66	68	70	72	74	74												
5.340 (0.2102)	14	18	20	22	24	26	28	30	32		40	42	44	46	48	50	52	54	56	58	60	62	64	66	68	70	72	74	74												
5.350 (0.2106)	16	18	20	22	24	26	28	30	32		42	44	46	48	50	52	54	56	58	60	62	64	66	68	70	72	74	74													
5.360 (0.2110)	16	20	22	24	26	28	30	32	34		42	44	46	48	50	52	54	56	58	60	62	64	66	68	70	72	74	74													
5.370 (0.2114)	18	20	22	24	26	28	30	32	34		44	46	48	50	52	54	56	58	60	62	64	66	68	70	72	74	74														
5.380 (0.2118)	18	22	24	26	28	30	32	34	36		44	46	48	50	52	54	56	58	60	62	64	66	68	70	72	74	74														
5.390 (0.2122)	20	22	24	26	28	30	32	34	36		46	48	50	52	54	56	58	60	62	64	66	68	70	72	74	74															
5.400 (0.2126)	20	24	26	28	30	32	34	36	38		46	48	50	52	54	56	58	60	62	64	66	68	70	72	74	74															
5.410 (0.2130)	22	24	26	28	30	32	34	36	38		48	50	52	54	56	58	60	62	64	66	68	70	72	74	74																
5.420 (0.2134)	22	26	28	30	32	34	36	38	40		48	50	52	54	56	58	60	62	64	66	68	70	72	74	74																
5.430 (0.2138)	24	26	28	30	32	34	36	38	40		50	52	54	56	58	60	62	64	66	68	70	72	74	74																	
5.440 (0.2142)	24	28	30	32	34	36	38	40	42		50	52	54	56	58	60	62	64	66	68	70	72	74	74																	
5.450 (0.2146)	26	28	30	32	34	36	38	40	42		52	54	56	58	60	62	64	66	68	70	72	74	74																		
5.460 (0.2150)	26	30	32	34	36	38	40	42	44		52	54	56	58	60	62	64	66	68	70	72	74	74																		
5.470 (0.2154)	28	30	32	34	36	38	40	42	44		54	56	58	60	62	64	66	68	70	72	74	74																			
5.480 (0.2157)	28	32	34	36	38	40	42	44	46		54	56	58	60	62	64	66	68	70	72	74	74																			
5.490 (0.2161)	30	32	34	36	38	40	42	44	46		56	58	60	62	64	66	68	70	72	74	74																				
5.500 (0.2165)	30	34	36	38	40	42	44	46	48		56	58	60	62	64	66	68	70	72	74	74																				
5.510 (0.2169)	32	34	36	38	40	42	44	46	48		58	60	62	64	66	68	70	72	74	74																					
5.520 (0.2173)	32	36	38	40	42	44	46	48	50		58	60	62	64	66	68	70	72	74	74																					
5.530 (0.2177)	34	36	38	40	42	44	46	48	50		60	62	64	66	68	70	72	74	74																						
5.540 (0.2181)	34	38	40	42	44	46	48	50	52		60	62	64	66	68	70	72	74	74																						
5.550 (0.2185)	36	38	40	42	44	46	48	50	52		62	64	66	68	70	72	74	74																							
5.560 (0.2189)	36	40	42	44	46	48	50	52	54		62	64	66	68	70	72	74	74																							
5.570 (0.2193)	38	40	42	44	46	48	50	52	54		64	66	68	70	72	74	74																								
5.580 (0.2197)	38	42	44	46	48	50	52	54	56		64	66	68	70	72	74	74																								
5.590 (0.2201)	40	42	44	46	48	50	52	54	56		66	68	70	72	74	74																									
5.600 (0.2205)	40	44	46	48	50	52	54	56	58		66	68	70	72	74	74																									
5.620 (0.2213)	42	46	48	50	52	54	56	58	60		68	70	72	74	74																									
5.640 (0.2220)	44	48	50	52	54	56	58	60	62		70	72	74	74	74																									
5.660 (0.2228)	46	50	52	54	56	58	60	62	64		72	74	74	74																									
5.680 (0.2236)	48	52	54	56	58	60	62	64	66		74	74	74																									
5.700 (0.2244)	50	54	56	58	60	62	64	66	68		74	74																									
5.720 (0.2252)	52	56	58	60	62	64	66	68	70		74																									
5.740 (0.2260)	54	58	60	62	64	66	68	70	72																											

G

A126931E02

New lifter thickness

Lifter No.	Thickness mm (in.)	Lifter No.	Thickness mm (in.)	Lifter No.	Thickness mm (in.)
06	5.060 (0.1992)	30	5.300 (0.2087)	54	5.540 (0.2181)

Lifter No.	Thickness mm (in.)	Lifter No.	Thickness mm (in.)	Lifter No.	Thickness mm (in.)
08	5.080 (0.2000)	32	5.320 (0.2094)	56	5.560 (0.2189)
10	5.100 (0.2008)	34	5.340 (0.2102)	58	5.580 (0.2197)
12	5.120 (0.2016)	36	5.360 (0.2110)	60	5.600 (0.2205)
14	5.140 (0.2024)	38	5.380 (0.2118)	62	5.620 (0.2213)
16	5.160 (0.2031)	40	5.400 (0.2126)	64	5.640 (0.2220)
18	5.180 (0.2039)	42	5.420 (0.2134)	66	5.660 (0.2228)
20	5.200 (0.2047)	44	5.440 (0.2142)	68	5.680 (0.2236)
22	5.220 (0.2055)	46	5.460 (0.2150)	70	5.700 (0.2244)
24	5.240 (0.2063)	48	5.480 (0.2157)	72	5.720 (0.2252)
26	5.260 (0.2071)	50	5.500 (0.2165)	74	5.740 (0.2260)
28	5.280 (0.2079)	52	5.520 (0.2173)	-	-

Standard intake valve clearance (cold):
0.19 to 0.29 mm (0.0075 to 0.0114 in.)

EXAMPLE:

The 5.250 mm (0.2067 in.) lifter is installed, and the measured clearance is 0.400 mm (0.0157 in.).

Replace the 5.250 mm (0.2067 in.) lifter with a new No. 42 lifter.

(h) Valve lifter selection chart (exhaust).

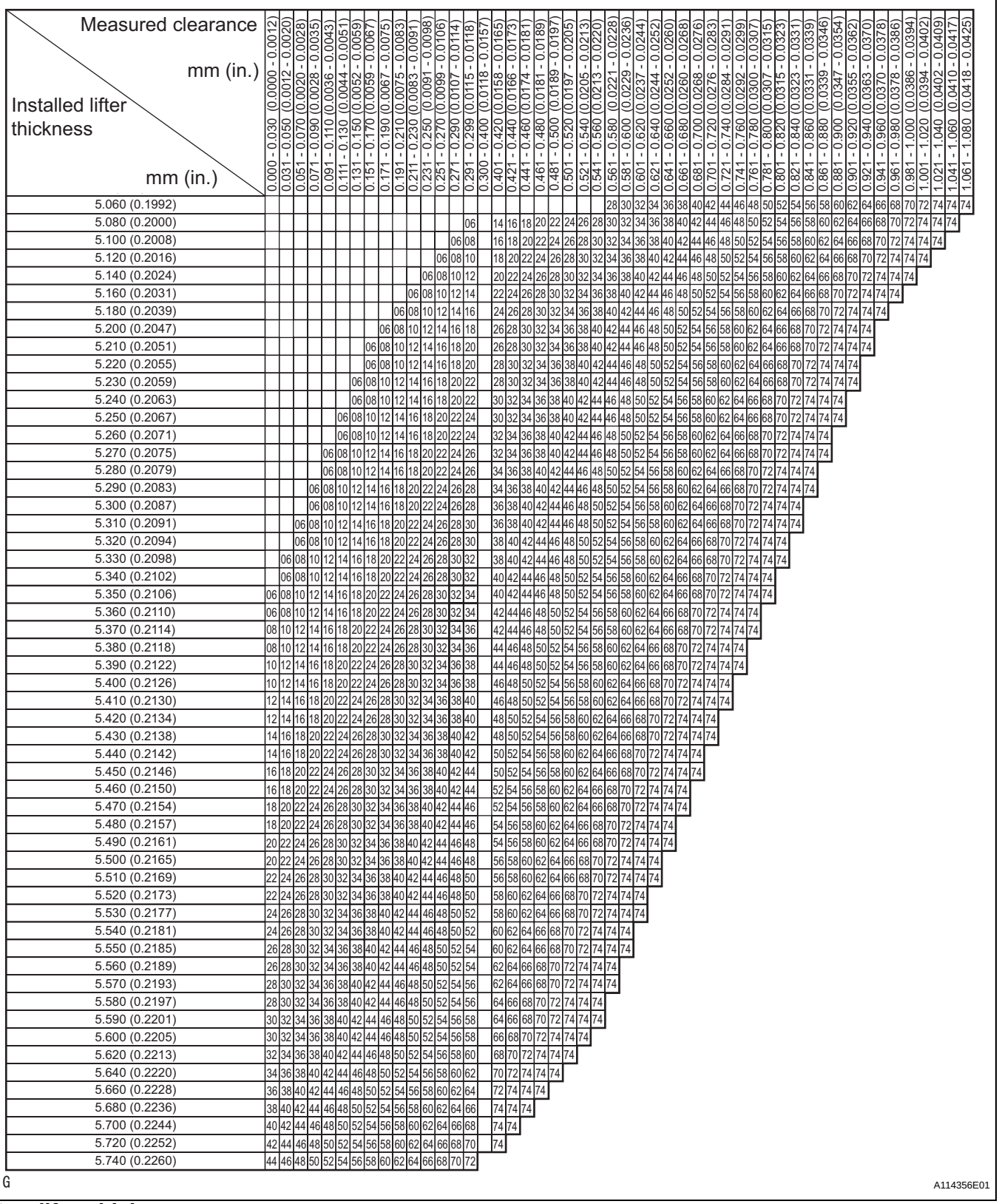

New lifter thickness

Lifter No.	Thickness mm (in.)	Lifter No.	Thickness mm (in.)	Lifter No.	Thickness mm (in.)
06	5.060 (0.1992)	30	5.300 (0.2087)	54	5.540 (0.2181)

Lifter No.	Thickness mm (in.)	Lifter No.	Thickness mm (in.)	Lifter No.	Thickness mm (in.)
08	5.080 (0.2000)	32	5.320 (0.2094)	56	5.560 (0.2189)
10	5.100 (0.2008)	34	5.340 (0.2102)	58	5.580 (0.2197)
12	5.120 (0.2016)	36	5.360 (0.2110)	60	5.600 (0.2205)
14	5.140 (0.2024)	38	5.380 (0.2118)	62	5.620 (0.2213)
16	5.160 (0.2031)	40	5.400 (0.2126)	64	5.640 (0.2220)
18	5.180 (0.2039)	42	5.420 (0.2134)	66	5.660 (0.2228)
20	5.200 (0.2047)	44	5.440 (0.2142)	68	5.680 (0.2236)
22	5.220 (0.2055)	46	5.460 (0.2150)	70	5.700 (0.2244)
24	5.240 (0.2063)	48	5.480 (0.2157)	72	5.720 (0.2252)
26	5.260 (0.2071)	50	5.500 (0.2165)	74	5.740 (0.2260)
28	5.280 (0.2079)	52	5.520 (0.2173)	-	-

Standard exhaust valve clearance (cold):
0.38 to 0.48 mm (0.0150 to 0.0189 in.)

EXAMPLE:
The 5.340 mm (0.2102 in.) lifter is installed, and the measured clearance is 0.430 mm (0.0169 in.).
Replace the 5.340 mm (0.2102 in.) lifter with a new No. 42 lifter.

(i) Install the selected valve lifter.

12. INSTALL CAMSHAFT

(a) Apply a light coat of engine oil to the journal portion of the camshaft.

(b) Install the timing chain onto the camshaft timing gear with the paint mark aligned with the timing mark in the camshaft timing gear as shown in the illustration.

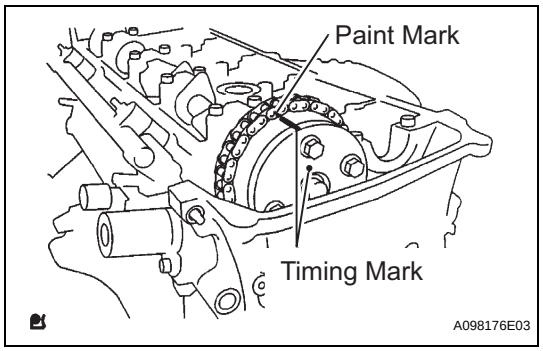

(c) Examine the front marks and numbers, and check that the order is as shown in the illustration. Then install the bearing caps into the cylinder head.

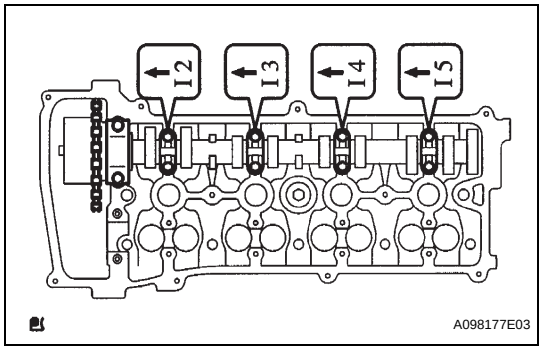

(d) Apply a light coat of engine oil on the threads and under the heads of the bearing cap bolts.

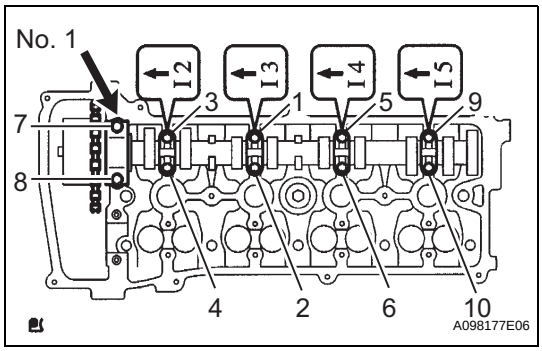

(e) Using several steps, uniformly tighten the 10 bearing cap bolts in the sequence shown in the illustration.

Torque: 29.5 N*m (301 kgf*cm, 22 ft.*lbf) for No. 1 bearing cap
9.0 N*m (92 kgf*cm, 80 in.*lbf) for No. 3 bearing cap

13. INSTALL NO. 2 CAMSHAFT

(a) Apply a light coat of engine oil to the journal portion of the No. 2 camshaft.

(b) Put the No. 2 camshaft on the cylinder head with the paint mark of the chain aligned with the timing mark on the camshaft timing sprocket.

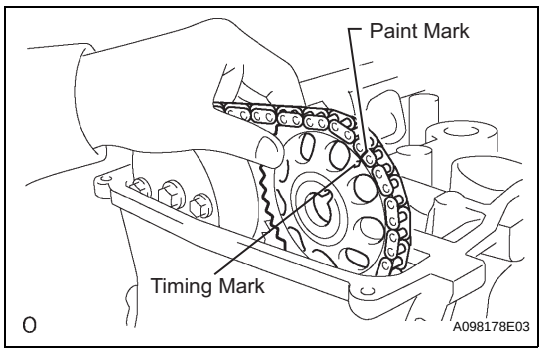

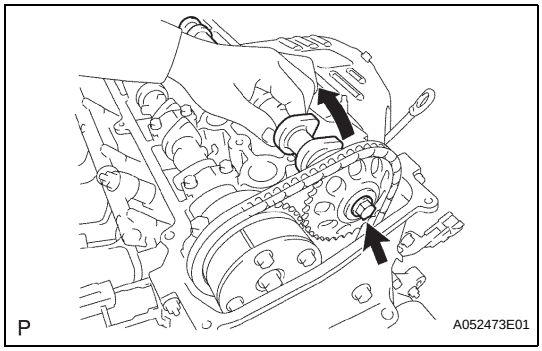

(c) While holding the No. 2 camshaft by hand, temporarily tighten the camshaft timing sprocket set bolt.

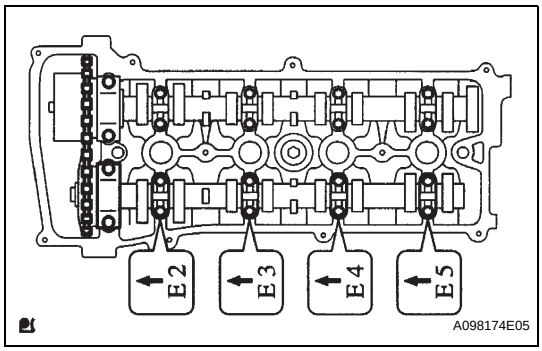

(d) Examine the front marks and numbers, and check that the order is as shown in the illustration. Then install the bearing caps onto the cylinder head.

(e) Apply a light coat of engine oil to the threads and under the heads of the bearing cap bolts.

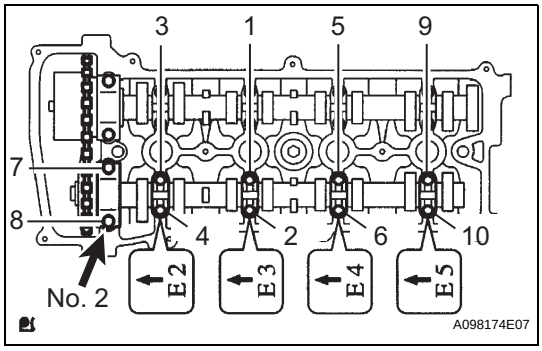

(f) Using several steps, uniformly tighten the 10 bearing cap bolts in the sequence shown in the illustration.

Torque: 29.5 N*m (301 kgf*cm, 22 ft.*lbf) for No. 2 bearing cap
9.0 N*m (92 kgf*cm, 80 in.*lbf) for No. 3 bearing cap

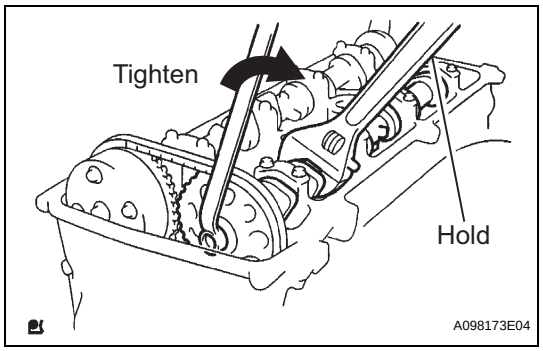

(g) While holding the camshaft with a wrench, tighten the camshaft timing sprocket set bolt.
Torque: 54 N*m (551 kgf*cm, 40 ft.*lbf)
NOTICE:
Be careful not to damage the valve lifter.

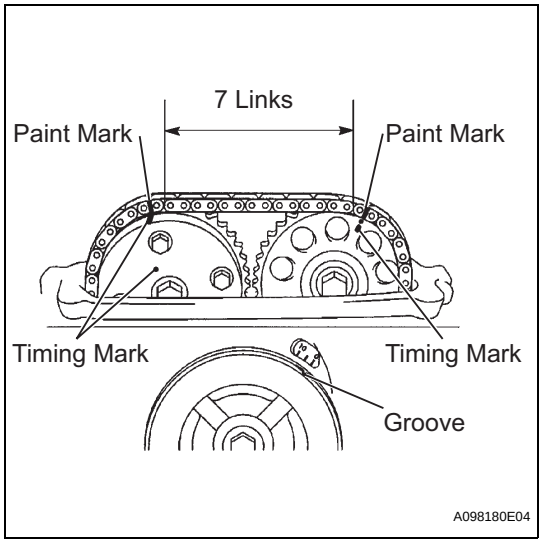

(h) Check that the paint marks on the chain are aligned with the timing marks on the camshaft timing gear and camshaft timing sprocket. Also, check that the crankshaft pulley groove is aligned with the timing mark "0" of the timing chain cover.

EM

14. INSTALL NO. 1 CHAIN TENSIONER

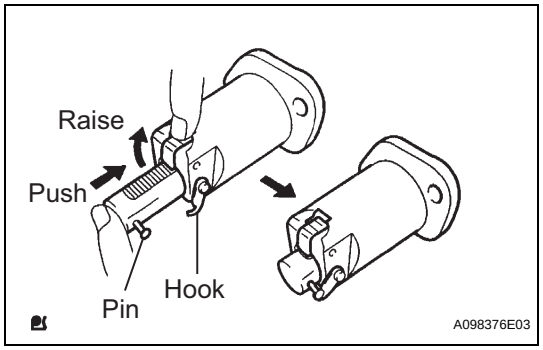

(a) Release the ratchet pawl, then fully push in the plunger and hook the hook to the pin so that the plunger is in the position shown in the illustration.

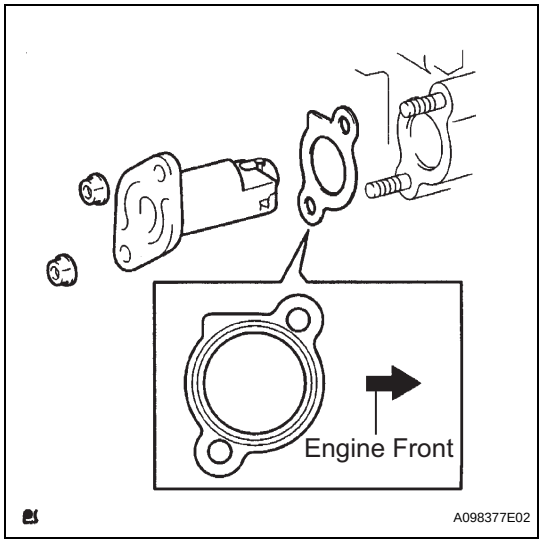

(b) Install a new gasket and the chain tensioner with the 2 nuts.
Torque: 9.0 N*m (92 kgf*cm, 80 in.*lbf)
NOTICE:
When installing the chain tensioner, set the hook again if the hook releases the plunger.

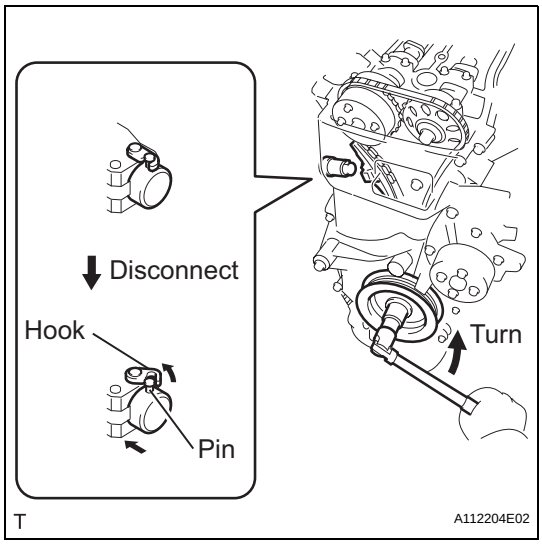

(c) Turn the crankshaft counterclockwise, then disconnect the plunger knock pin from the hook.

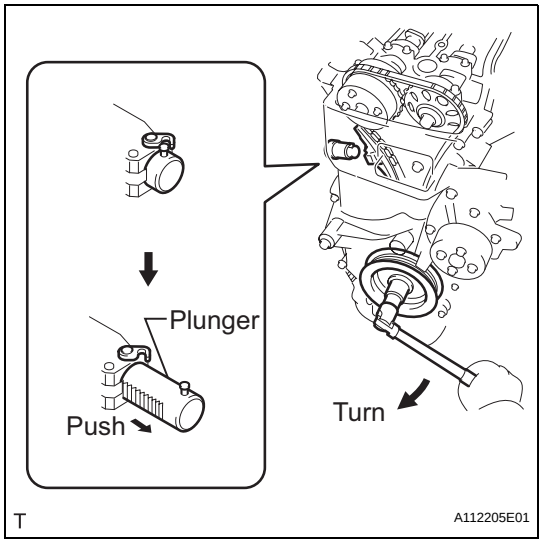

(d) Turn the crankshaft clockwise, then check that the plunger is extended.

15. **INSTALL CYLINDER HEAD COVER SUB-ASSEMBLY (See page EM-40)**
16. **INSTALL SPARK PLUG**
    (a) Install the 4 spark plugs.
    Torque: 25 N*m (255 kgf*cm, 18 ft.*lbf)
17. **INSTALL IGNITION COIL ASSEMBLY (See page IG-9)**
18. **CONNECT CABLE TO NEGATIVE BATTERY TERMINAL**
19. **CHECK FOR ENGINE OIL LEAKS**
20. **INSTALL NO. 1 ENGINE COVER (See page EM-43)**
21. **INSTALL FRONT FENDER APRON RH**
22. **INSTALL NO. 1 ENGINE UNDER COVER**
23. **INSTALL FRONT WHEEL RH**

(b) Remove the gasket from the exhaust manifold.

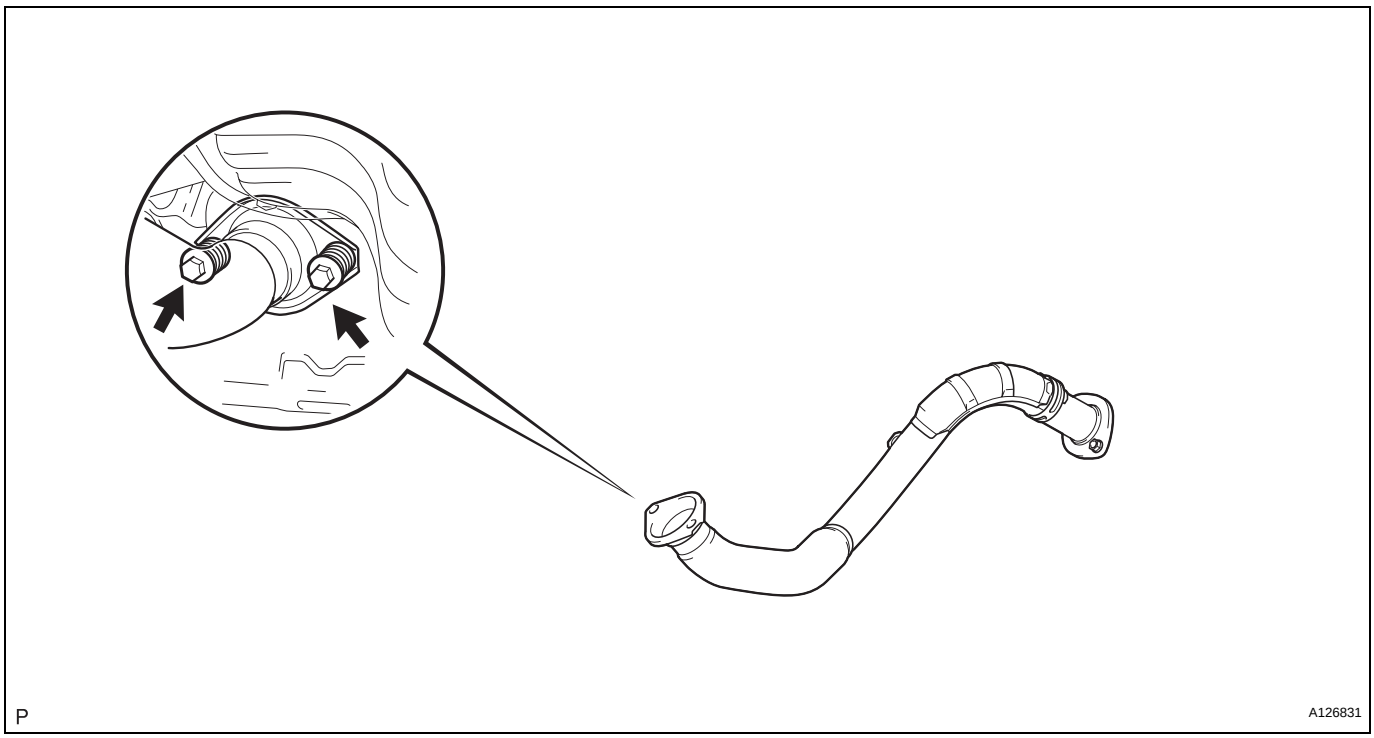

INSTALLATION

1. INSTALL FRONT EXHAUST PIPE ASSEMBLY

(a) Using a vernier caliper, measure the free length of the compression spring.

Minimum length:

41.5 mm (1.634 in.)

If the length is less than the minimum, replace the compression spring.

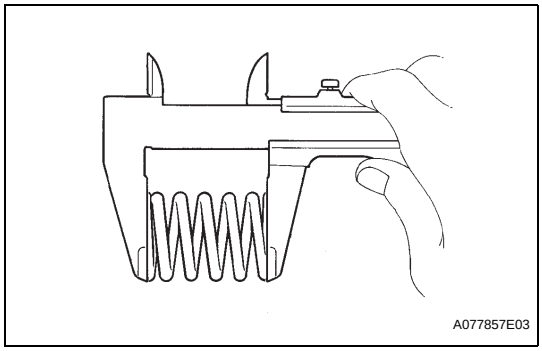

(b) Install a new gasket by hand so that its surface is flush with the exhaust manifold.

NOTICE:

- **Make sure the gasket is facing the correct direction.**
- **Do not reuse the removed gasket.**
- **Do not push in the gasket while installing the front exhaust pipe.**

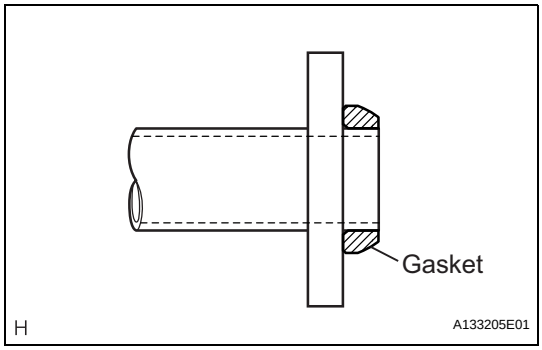

(c) Install the front exhaust pipe with the 2 compression springs and 2 bolts.

Torque: 43 N*m (438 kgf*cm, 32 ft.*lbf)

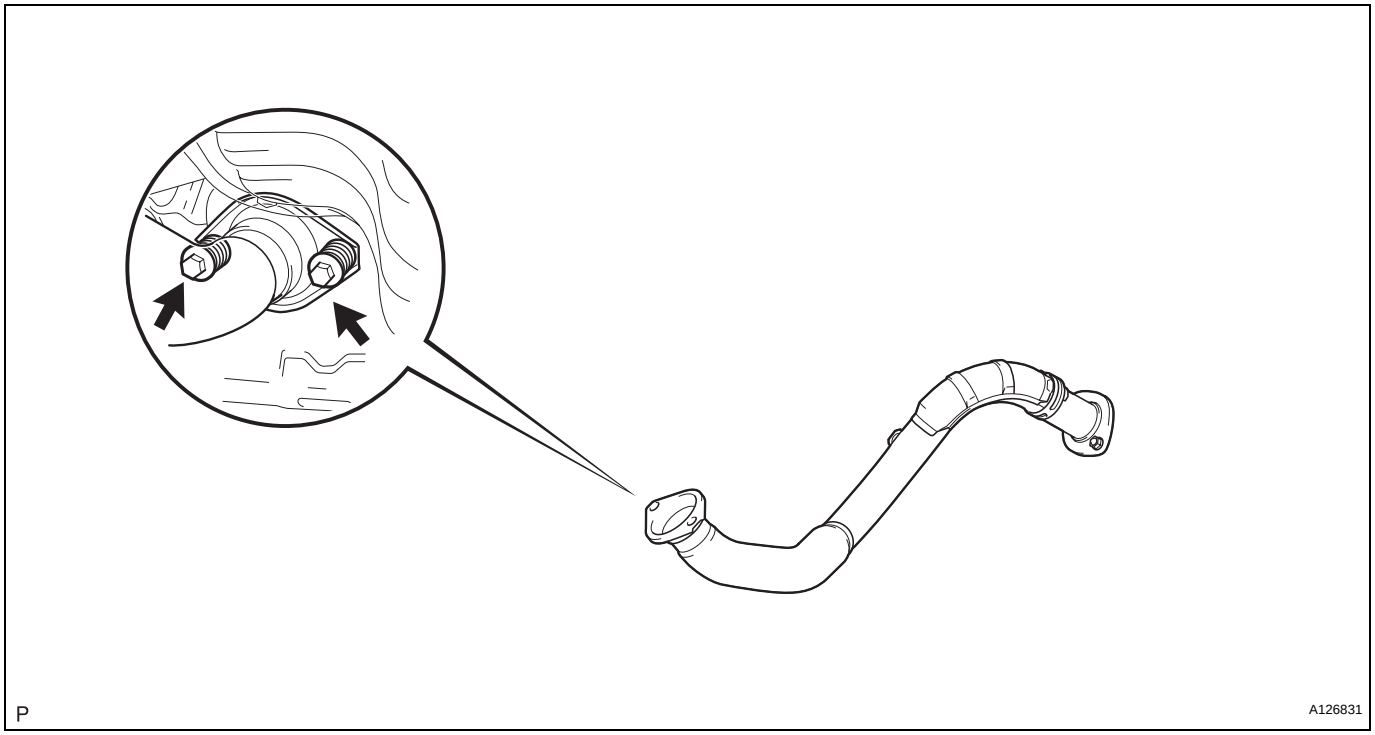

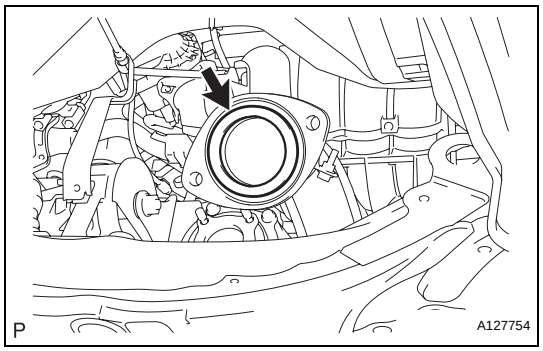

2. INSTALL CENTER EXHAUST PIPE ASSEMBLY

(a) Install a new gasket onto the front exhaust pipe.

(b) Connect the 3 exhaust pipe supports, and install the center exhaust pipe.

(c) Install the 2 bolts.
Torque: 43 N*m (438 kgf*cm, 32 ft.*lbf)

EX

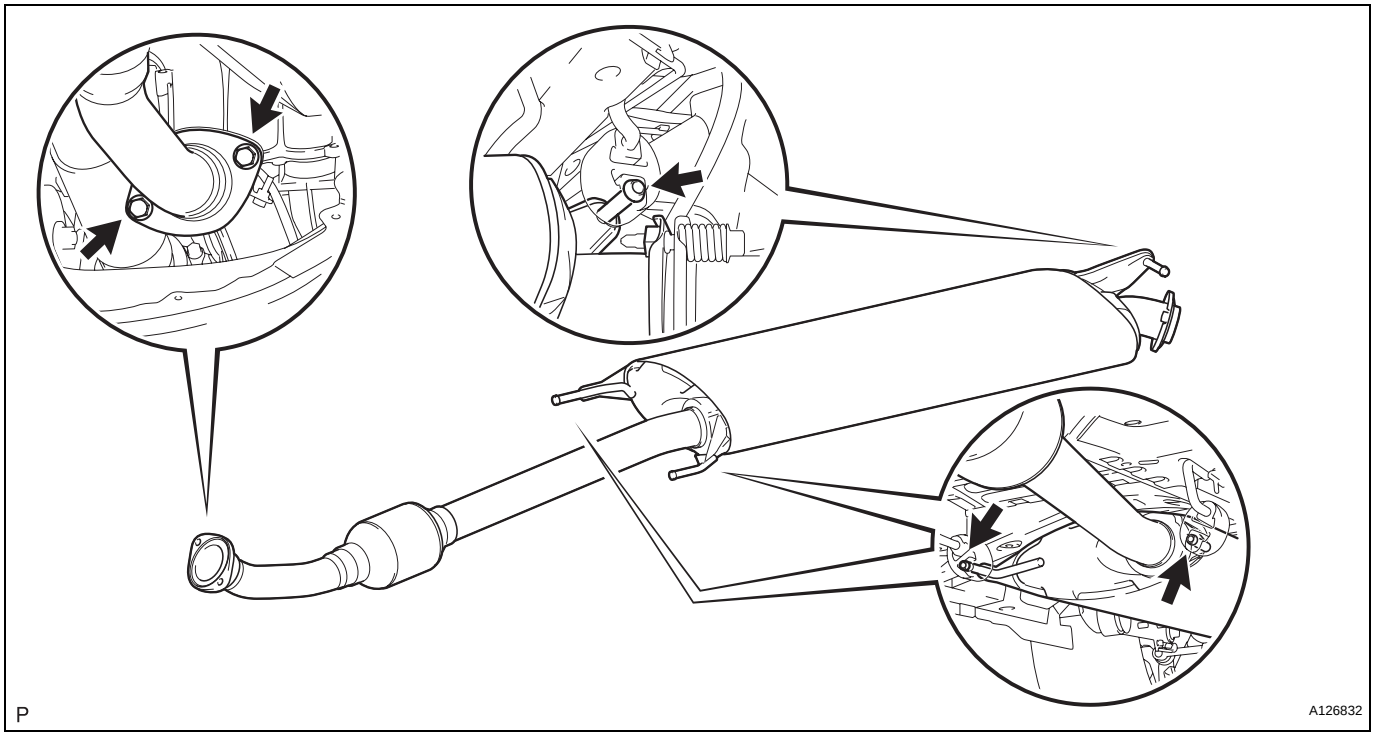

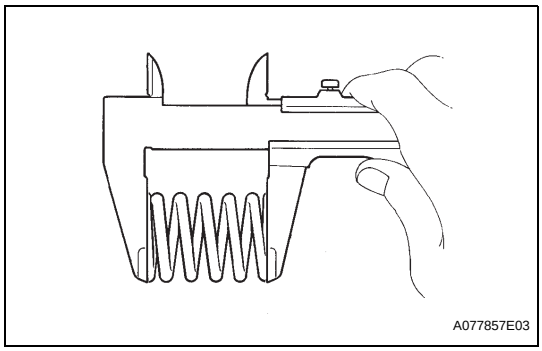

3. INSTALL TAILPIPE ASSEMBLY

(a) Using a vernier caliper, measure the free length of the compression spring.
Minimum length:
38.5 mm (1.516 in.)
If the length is less than the minimum, replace the compression spring.

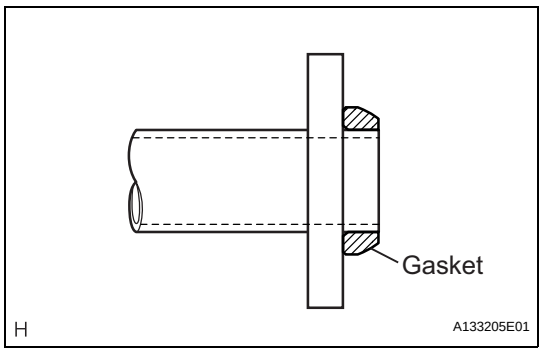

(b) Install a new gasket by hand so that its surface is flush with the center exhaust pipe.
NOTICE:
- **Make sure the gasket is facing the correct direction.**
- **Do not reuse the removed gasket.**
- **Do not push in the gasket while installing the tailpipe.**

(c) Connect the 2 exhaust pipe supports, and install the tailpipe.

(d) Install the 2 compression springs and 2 bolts.
Torque: 43 N*m (438 kgf*cm, 32 ft.*lbf)

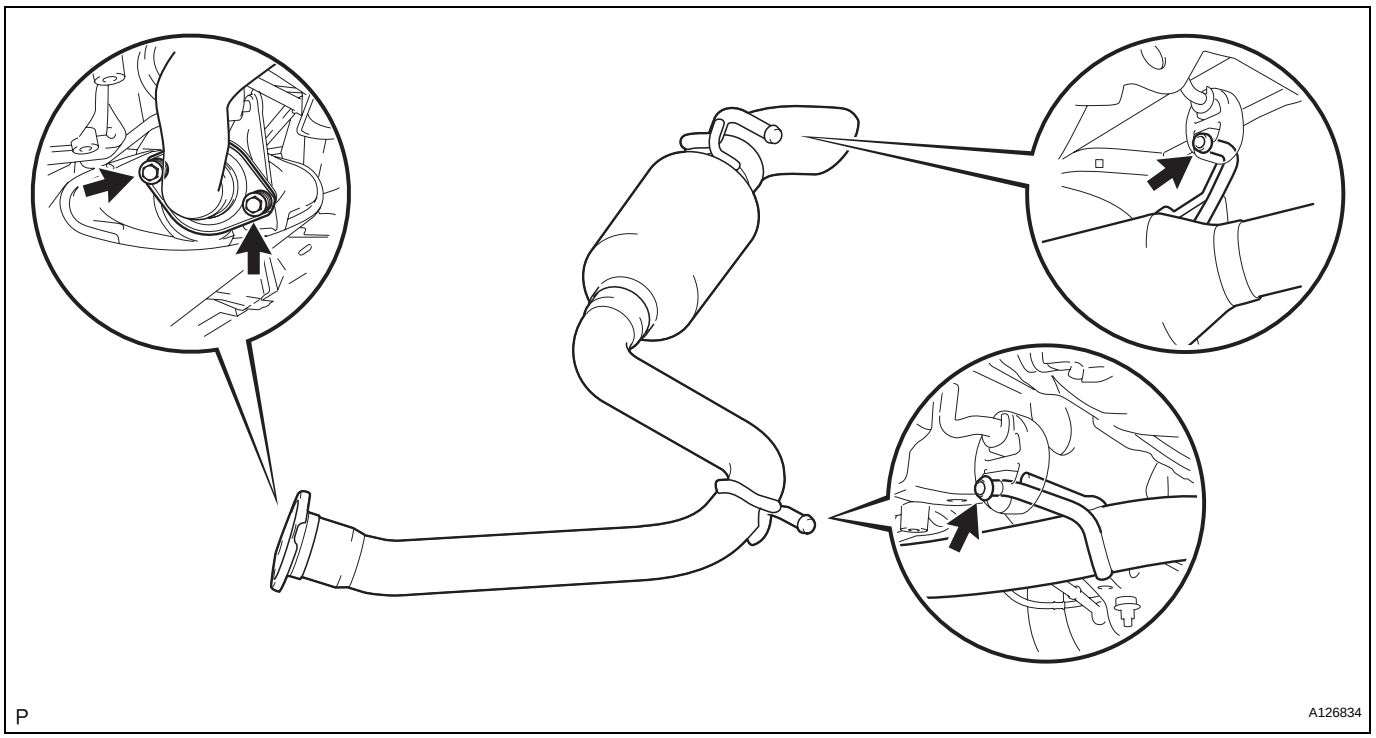

4. INSTALL HEATED OXYGEN SENSOR (for Bank 1 Sensor 2) (See page EC-24)

5. CONNECT CABLE TO NEGATIVE BATTERY TERMINAL

6. CHECK FOR EXHAUST GAS LEAKS
If gas is leaking, tighten the areas necessary to stop the leak. Replace damaged parts as necessary.

EXHAUST PIPE

COMPONENTS

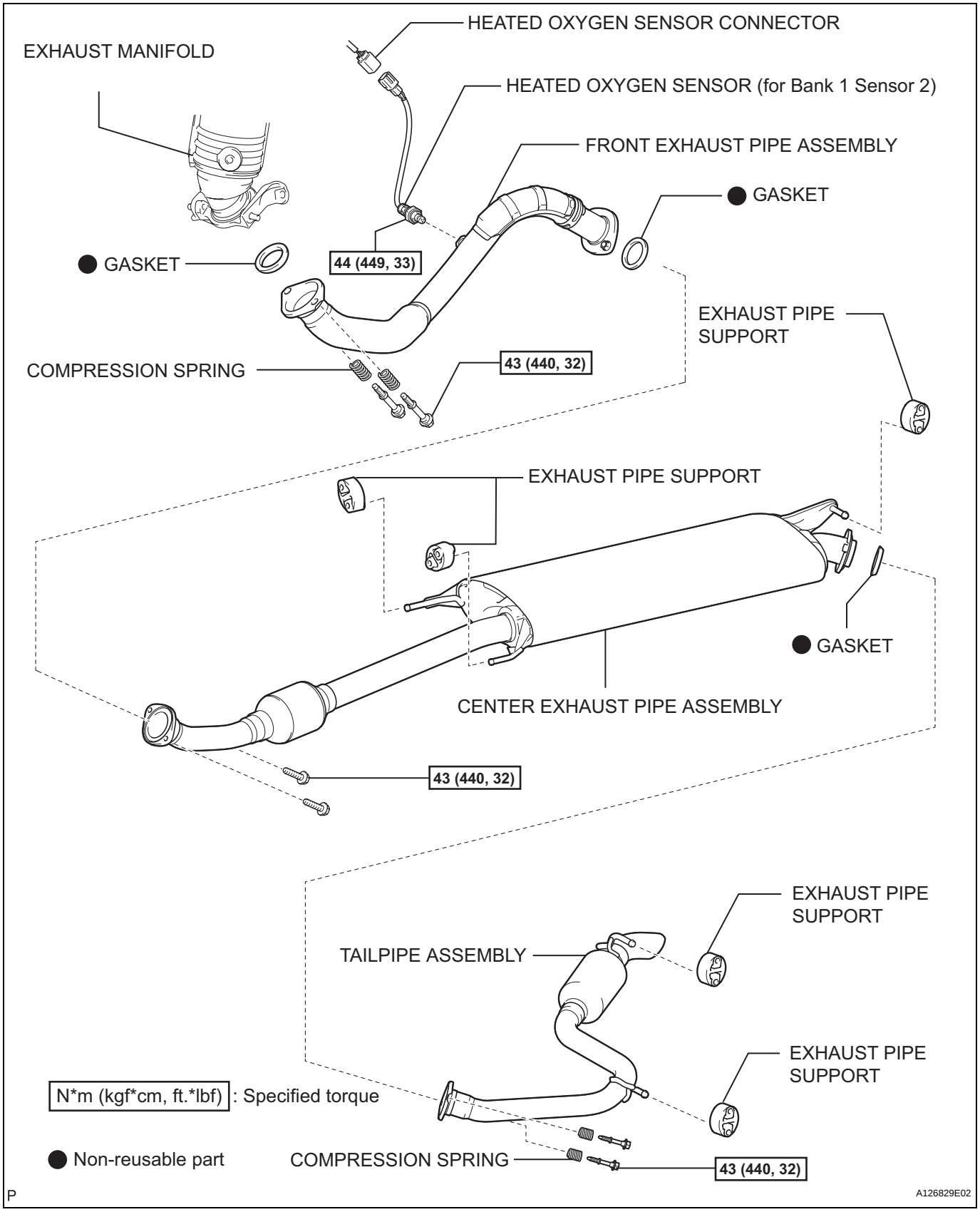

EX

REMOVAL

1. **DISCONNECT CABLE FROM NEGATIVE BATTERY TERMINAL**
   CAUTION:
   Wait at least 90 seconds after disconnecting the cable from the negative (-) battery terminal to prevent airbag and seat belt pretensioner activation.
2. **REMOVE HEATED OXYGEN SENSOR (for Bank 1 Sensor 2) (See page EC-24)**
3. **REMOVE TAILPIPE ASSEMBLY**
   (a) Remove the 2 bolts and 2 compression springs.
   (b) Disconnect the 2 exhaust pipe supports, and remove the tailpipe.
   (c) Remove the gasket from the center exhaust pipe.

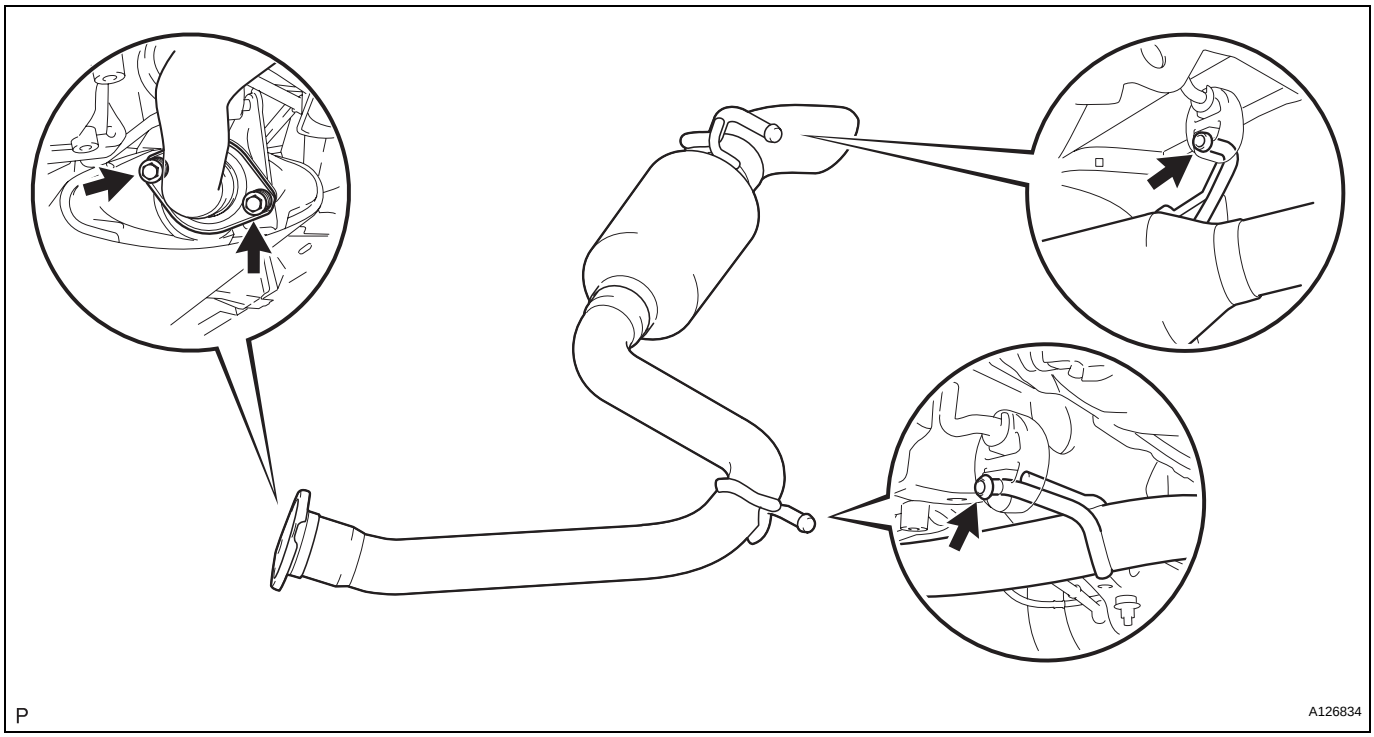

4. **REMOVE CENTER EXHAUST PIPE ASSEMBLY**
   (a) Remove the 2 bolts.

EX

(b) Disconnect the 3 exhaust pipe supports, and remove the center exhaust pipe.

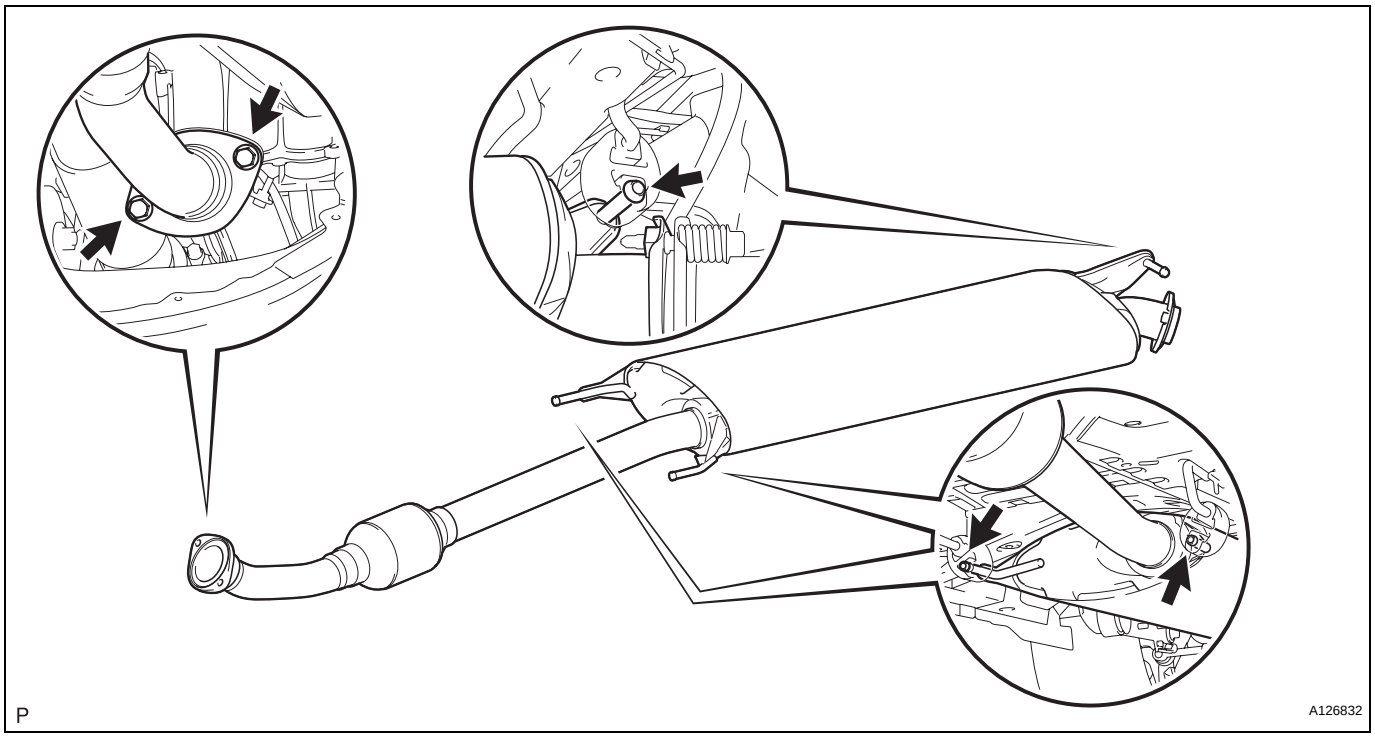

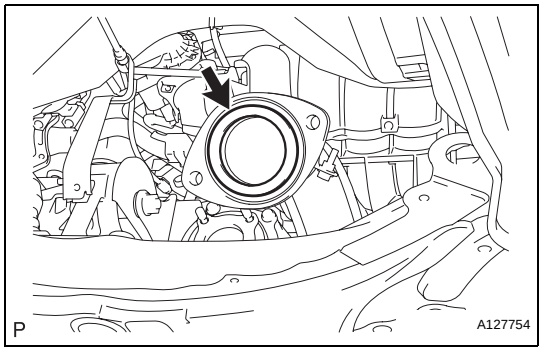

(c) Remove the gasket from the front exhaust pipe.

5. REMOVE FRONT EXHAUST PIPE ASSEMBLY

(a) Remove the 2 bolts, 2 compression springs and front exhaust pipe.

EX

REMOVAL

1. DISCHARGE FUEL SYSTEM PRESSURE

CAUTION:

- **DISCHARGE FUEL SYSTEM PRESSURE procedures must be performed before disconnecting any part of the fuel system.**
- **After performing the DISCHARGE FUEL SYSTEM PRESSURE procedures, pressure will remain in the fuel line. When disconnecting the fuel line, place a cloth or equivalent over fittings to reduce the risk of fuel spray.**

(a) Remove the console box (see page IR-83).

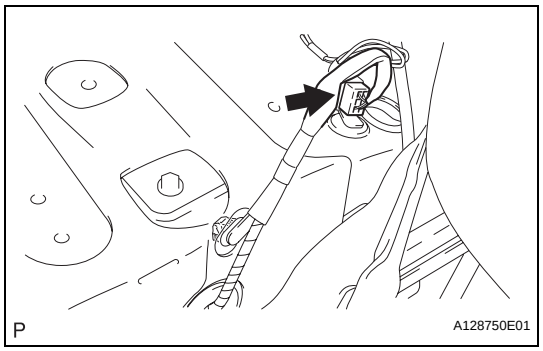

(b) Disconnect the connector.

(c) Start the engine. After the engine has stopped, turn the ignition switch off.

HINT:

DTC P0171 (system too lean) may be set.

(d) Check that the engine does not start.

(e) Remove the fuel tank cap, and let the air out of the fuel tank.

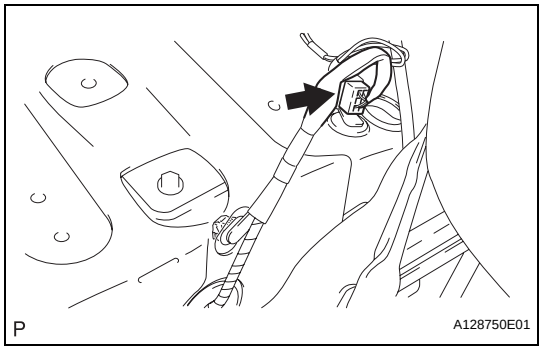

(f) Connect the connector.

(g) Install the console box (see page IR-90).

2. DISCONNECT CABLE FROM NEGATIVE BATTERY TERMINAL

CAUTION:

Wait at least 90 seconds after disconnecting the cable from the negative (-) battery terminal to prevent airbag and seat belt pretensioner activation.

3. REMOVE NO. 1 ENGINE COVER (See page ES-410)

4. REMOVE AIR CLEANER CAP SUB-ASSEMBLY (See page ES-411)

FU

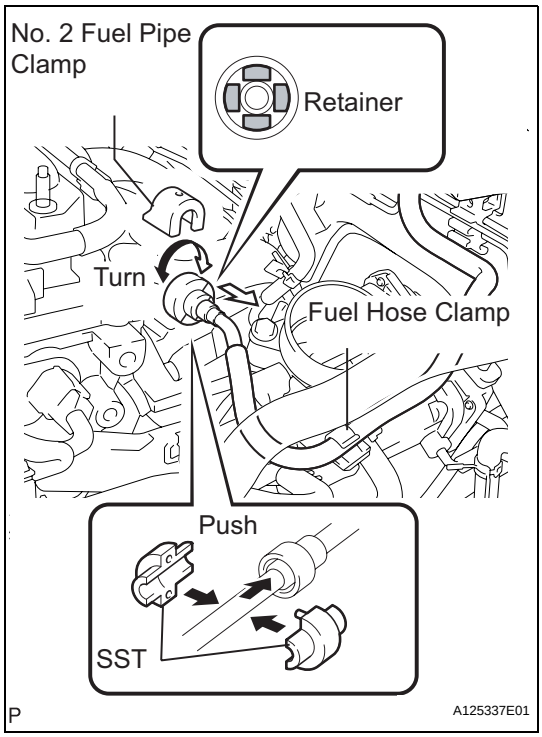

5. DISCONNECT FUEL MAIN TUBE

NOTICE:

Do not forcibly bend and twist the fuel main tube.

(a) Remove the fuel tube from the fuel hose clamp.
(b) Remove the fuel pipe clamp.
(c) Wipe off any dirt on the fuel tube connector.
(d) Hold the fuel tube connector, and then install SST.
SST 09268-21010
(e) Turn SST to align the retainer inside the fuel tube connector with the chamfered part of SST.
(f) Insert SST into the fuel tube and hold it. Then push the fuel tube connector toward SST side.
(g) Mount the retainer of the fuel tube connector onto the chamfered part of SST.

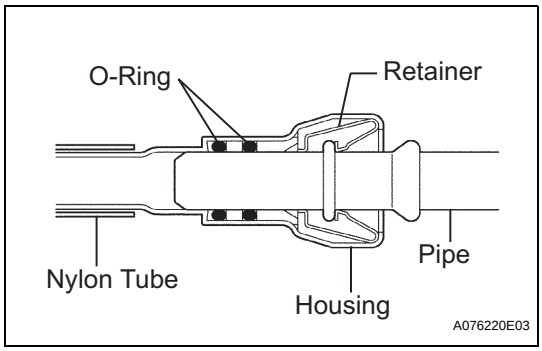

(h) Slide SST and fuel tube connector together towards the fuel tube until they make a "click" sound, and then disconnect the fuel tube.
(i) Drain the fuel remaining inside the fuel tube.
(j) Cover the fuel tube and fuel pipe with a plastic bag to protect the disconnected part.

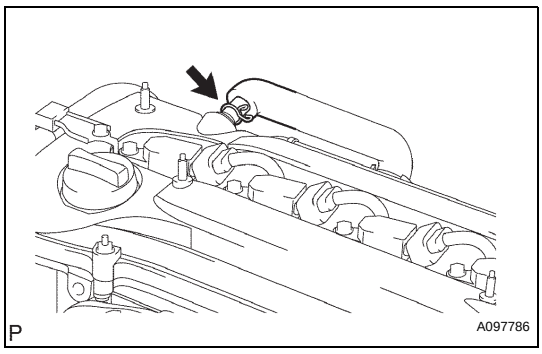

6. DISCONNECT NO. 2 VENTILATION HOSE

(a) Disconnect the No. 2 ventilation hose from the ventilation valve.

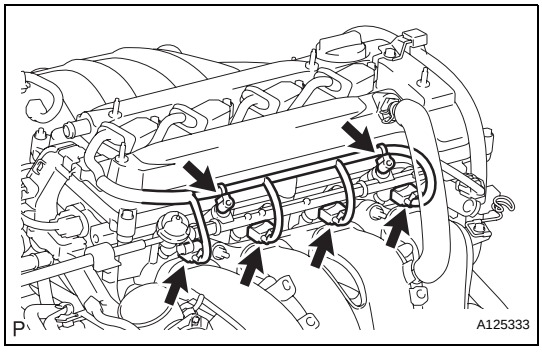

7. REMOVE FUEL DELIVERY PIPE SUB-ASSEMBLY

(a) Remove the 2 wire harness clamps.
(b) Disconnect the 4 fuel injector connectors.

FU

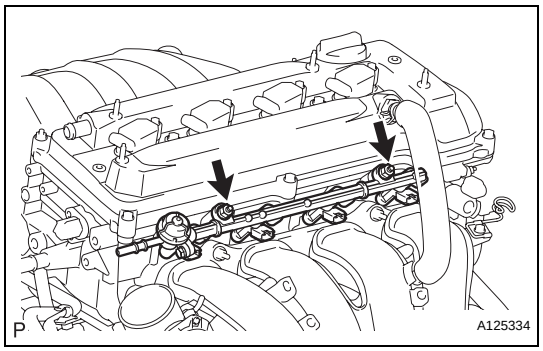

(c) Remove the 2 bolts, then remove the fuel delivery pipe together with the 4 fuel injectors.
NOTICE:
Be careful not to drop the fuel injectors when removing the fuel delivery pipe.

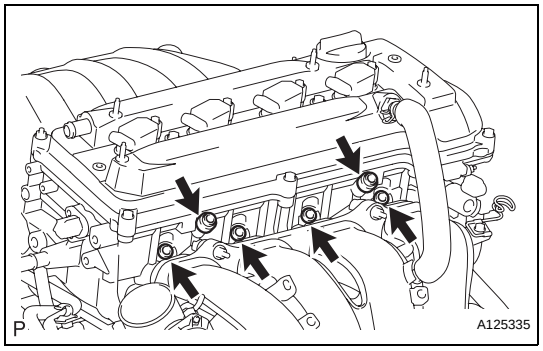

(d) Remove the 2 delivery pipe spacers from the cylinder head.
(e) Remove the 4 insulators from the cylinder head.

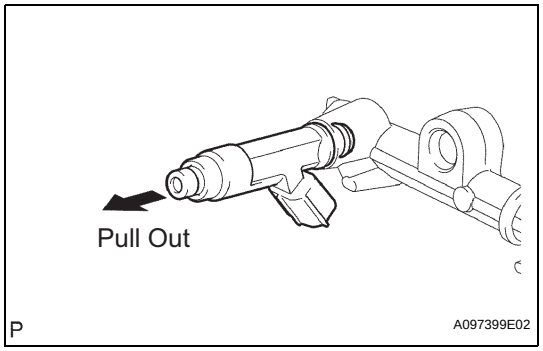

8. REMOVE FUEL INJECTOR ASSEMBLY
(a) Pull the 4 fuel injectors out of the fuel delivery pipe.

INSPECTION

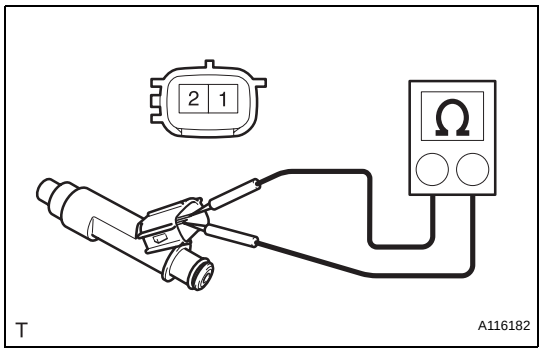

1. INSPECT FUEL INJECTOR ASSEMBLY
(a) Measure the resistance between the injector terminals.
Standard resistance:
11.6 to 12.4 Ω at 20°C (68°F)
If the result is not as specified, replace the injector.
(b) Inspect the injector injection.
CAUTION:
Keep the injector away from sparks during the test.

(1) Connect SST (fuel tube connector) to SST (hose), then connect them to the fuel pipe (vehicle side).
SST 09268-31011 (09268-41500, 90467-13001, 95336-08070)
(2) Install the O-ring to the fuel injector.

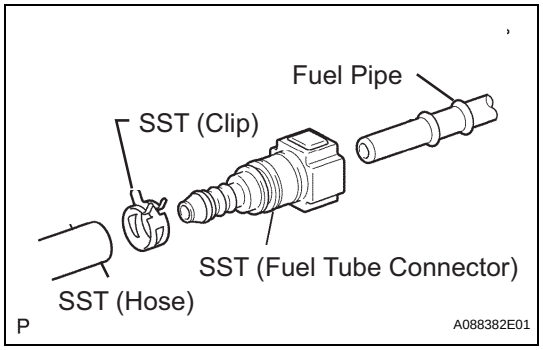

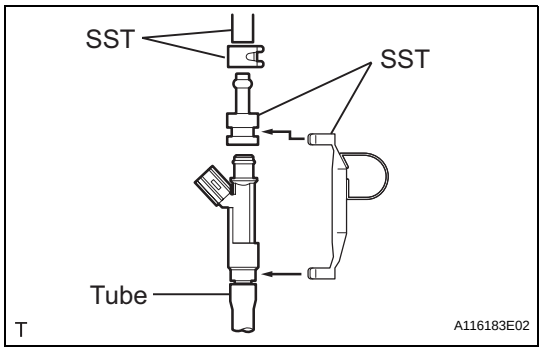

(3) Connect SST (adapter and hose) to the injector, and hold the injector and union with SST (clamp).
SST 09268-31011 (09268-41110, 09268-41130, 09268-41310)

(4) Put the injector into the graduated cylinder.
CAUTION:
Install a suitable vinyl tube onto the injector to contain gasoline spray.

(5) Operate the fuel pump.

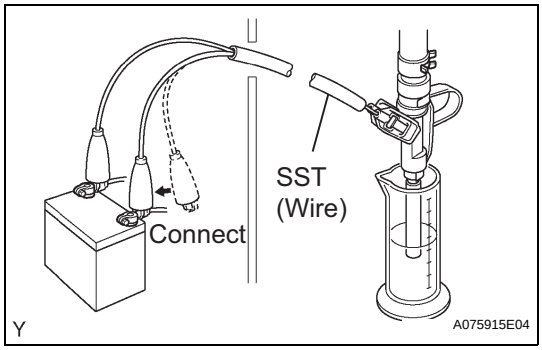

(6) Connect SST (wire) to the injector and the battery for 15 seconds, and measure the injection volume with the graduated cylinder. Test each injector 2 or 3 times.
SST 09842-30080
Standard injection volume:
76 to 92 cm^3 (4.6 to 5.6 cu in.) per 15 seconds
Standard difference between each injector:
16 cm^3 (1.0 cu in.) or less

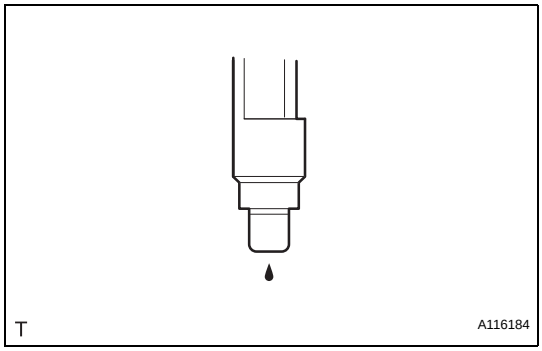

(c) Inspect the fuel leakage.
(1) Disconnect the SST (wire) tester probes from the battery and check the fuel leakage from the injector.
Standard fuel drop:
1 drop or less per 12 minutes
(2) Turn the ignition switch OFF.
(3) Disconnect the cable from the negative (-) battery terminal.
(4) Remove SST.
SST 09842-30080
(5) Disconnect the intelligent tester from the DLC3.
(6) Reconnect the fuel inlet hose (rear fuel pipe) to the fuel main tube.

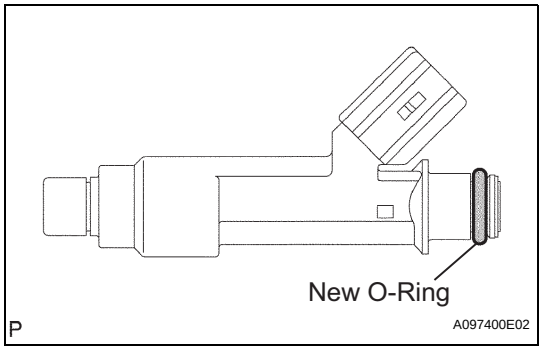

INSTALLATION

1. INSTALL FUEL INJECTOR ASSEMBLY

(a) Apply a light coat of gasoline or spindle oil to new O-rings, then install one onto each fuel injector.

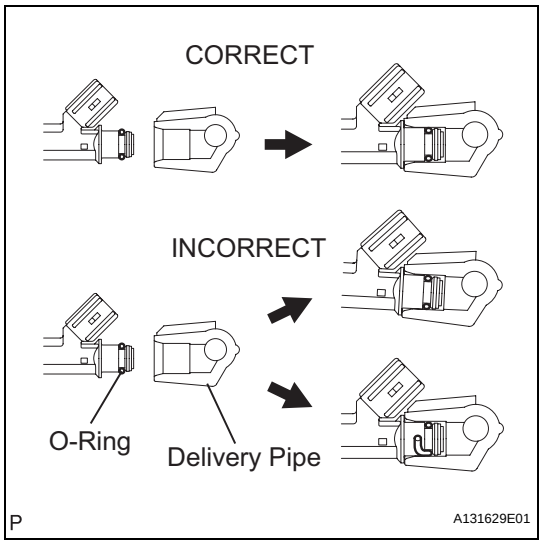

(b) Apply a light coat of gasoline or spindle oil to the part of the fuel delivery pipe which comes into contact with the O-ring of the fuel injector.

(c) Apply a light coat of gasoline or spindle oil to the O-ring again, then install the right and left fuel injectors onto the fuel delivery pipe.

NOTICE:

Make sure that the O-ring is not cracked or jammed when installing.

(d) Check that the fuel injector rotates smoothly. If the fuel injector does not rotate, replace the O-ring.

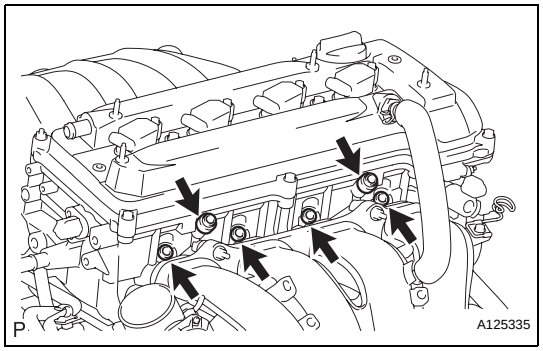

2. INSTALL FUEL DELIVERY PIPE SUB-ASSEMBLY

(a) Install 4 new insulators into the cylinder head.

(b) Install the 2 delivery pipe spacers onto the cylinder head.

FU

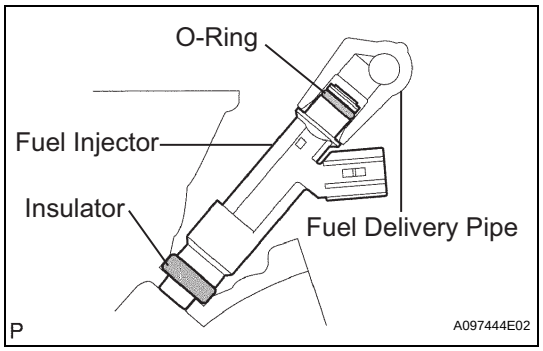

(c) Install the fuel delivery pipe together with the 4 fuel injectors, then temporarily tighten the 2 bolts.

NOTICE:

Be careful not to drop the fuel injectors when installing the fuel delivery pipe.

(d) Check that the fuel injector rotates smoothly.
If the fuel injector does not rotate, replace the O-ring.

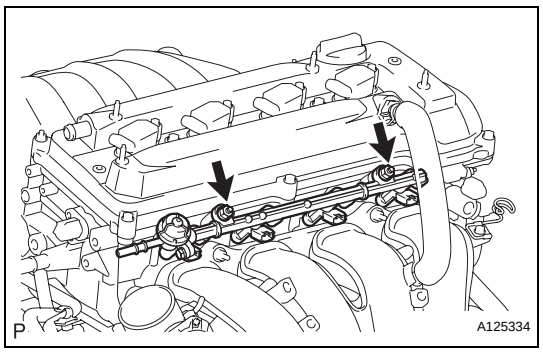

(e) Tighten the 2 bolts to the specified torque.
Torque: 20 N*m (205 kgf*cm, 15 ft.*lbf)

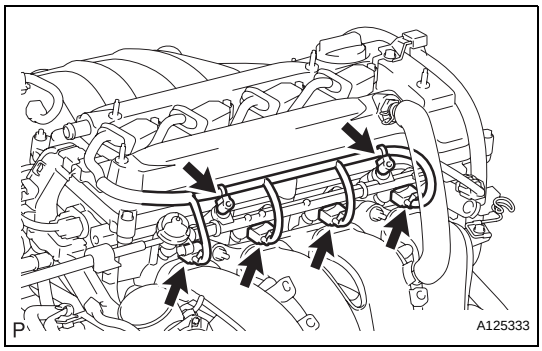

(f) Connect the 4 fuel injector connectors.
(g) Install the 2 wire harness clamps.

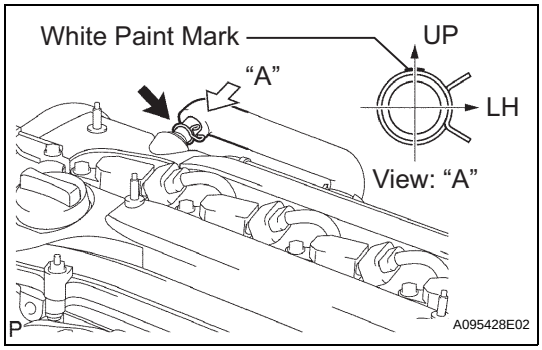

3. CONNECT NO. 2 VENTILATION HOSE

(a) Connect the ventilation hose to the ventilation valve.
NOTICE:
Make sure that the paint mark and hose clamp are at the correct angle when installing the hose.

4. CONNECT FUEL MAIN TUBE

(a) Connect the fuel main tube.
(b) Push the fuel tube connector until it makes a "click" sound.
(c) Install the fuel pipe clamp.
(d) Install the fuel tube to the fuel hose clamp.

5. INSTALL AIR CLEANER CAP SUB-ASSEMBLY (See page ES-413)

6. INSTALL NO. 1 ENGINE COVER (See page ES-414)

7. CONNECT CABLE TO BATTERY NEGATIVE TERMINAL

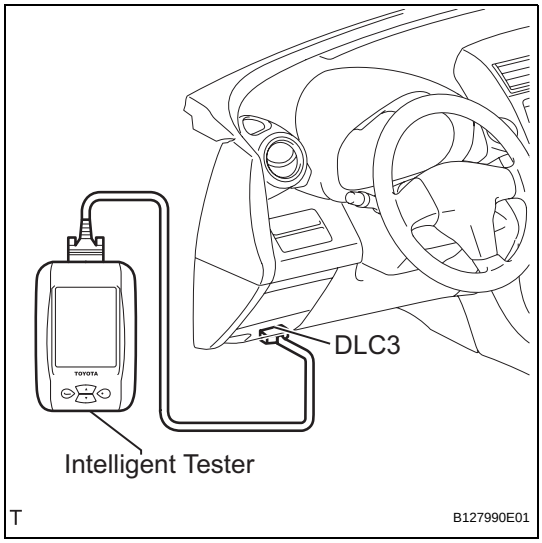

8. CHECK FOR FUEL LEAKAGE

(a) Make sure that there are no fuel leaks after performing maintenance on the fuel system.
(1) Connect the intelligent tester to the DLC3.
(2) Turn the ignition switch ON, and push the intelligent tester main switch ON.
NOTICE:
Do not start the engine.
(3) Select the Active Test mode on the intelligent tester.
HINT:
Refer to the intelligent tester operator's manual for further details.
(4) Check that there are no leaks from the fuel system.
(5) Turn the ignition switch OFF.
(6) Disconnect the intelligent tester from the DLC3.

FUEL INJECTOR

COMPONENTS

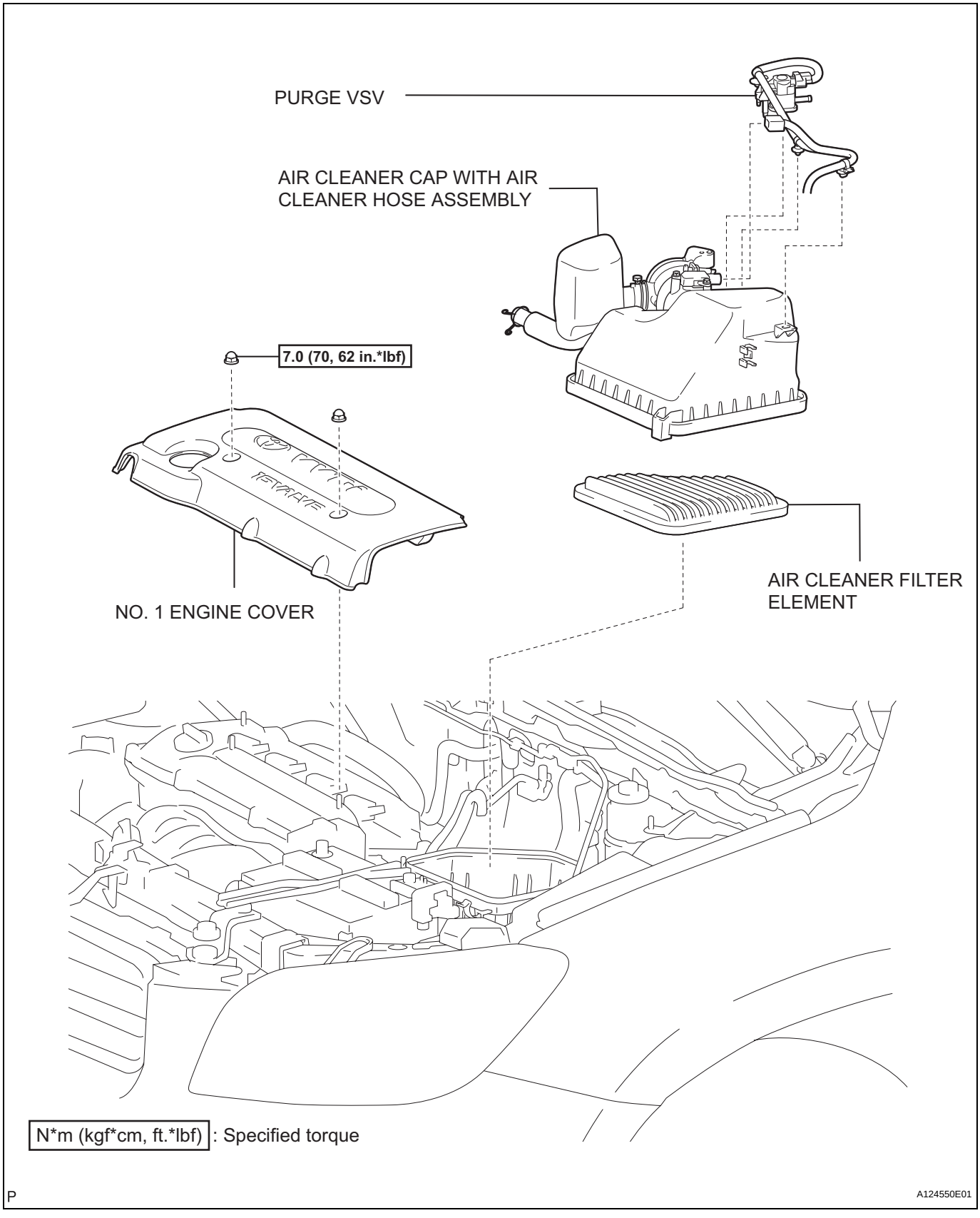

FU

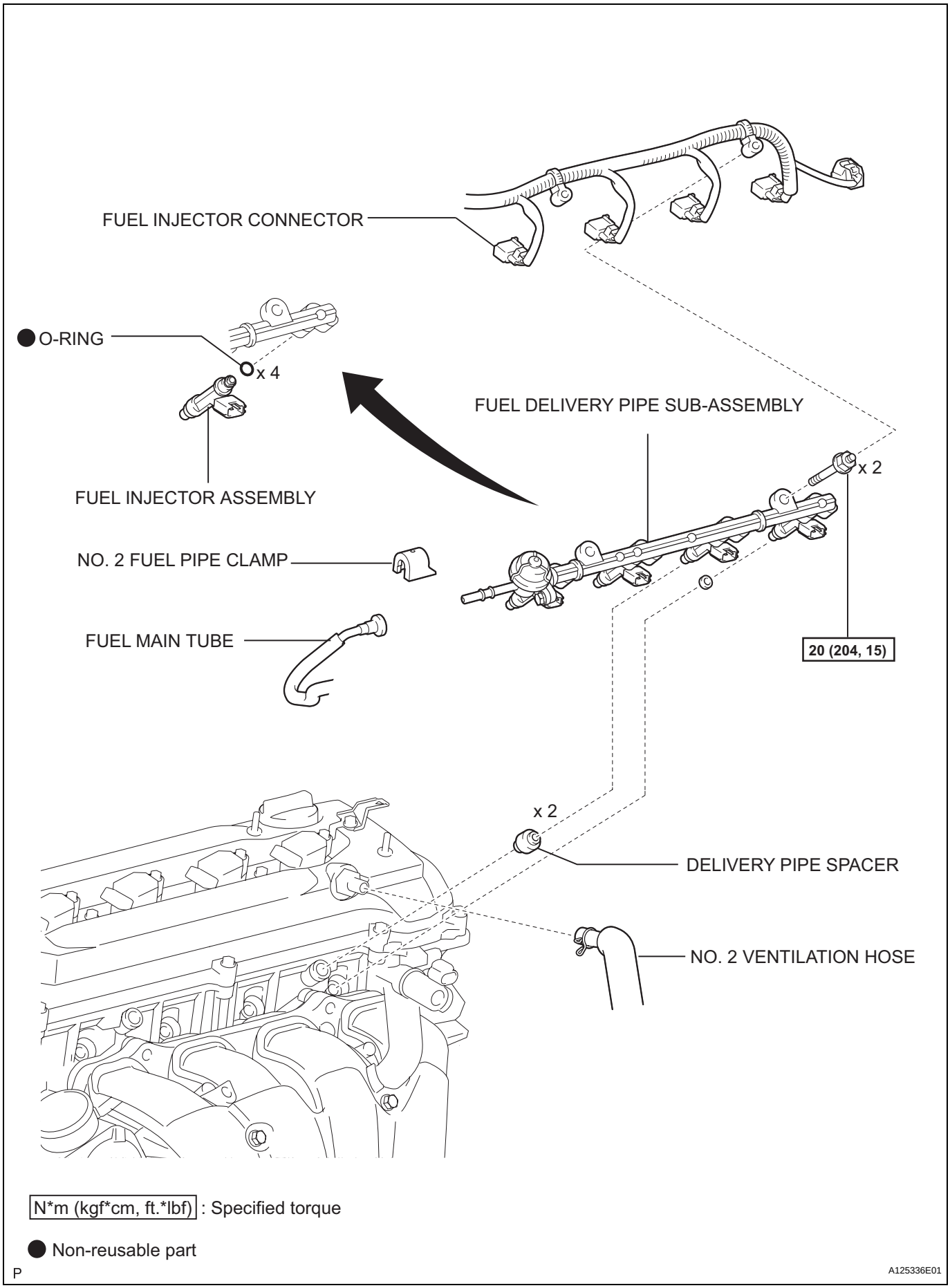

FU

N*m (kgf*cm, ft.*lbf) : Specified torque

● Non-reusable part

P

A125336E01

REMOVAL

1. **DISCHARGE FUEL SYSTEM PRESSURE (See page FU-9)**
2. **DISCONNECT CABLE FROM NEGATIVE BATTERY TERMINAL**
3. **REMOVE NO. 1 ENGINE COVER (See page ES-410)**
4. **REMOVE AIR CLEANER CAP SUB-ASSEMBLY (See page ES-411)**
5. **DISCONNECT FUEL MAIN TUBE (See page FU-10)**
6. **REMOVE FUEL PRESSURE PULSATION DAMPER ASSEMBLY**
   (a) Remove the 2 bolts and fuel pressure pulsation damper.

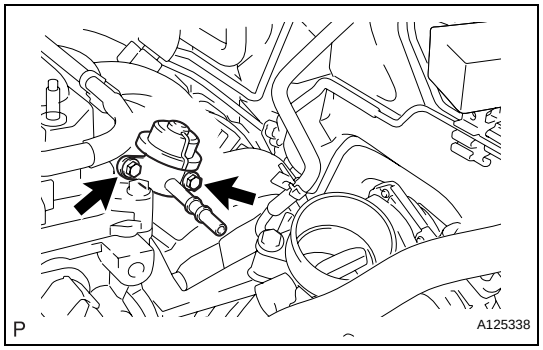

INSTALLATION

1. **INSTALL FUEL PRESSURE PULSATION DAMPER ASSEMBLY**
   (a) Apply a light coat of gasoline or spindle oil to the O-ring of the fuel pressure pulsation damper.

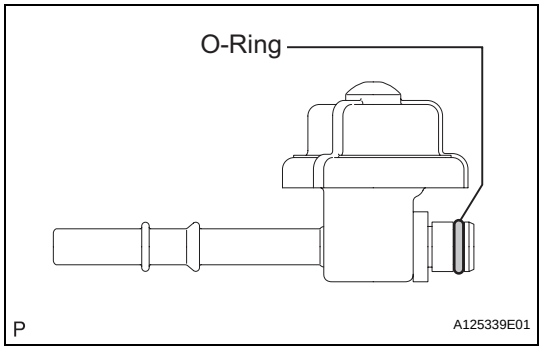

   (b) Install the fuel pressure pulsation damper with the 2 bolts.
   Torque: 9.0 N*m (90 kgf*cm, 80 in.*lbf)
   NOTICE:
   Make sure that the O-ring is not cracked or jammed when installing.

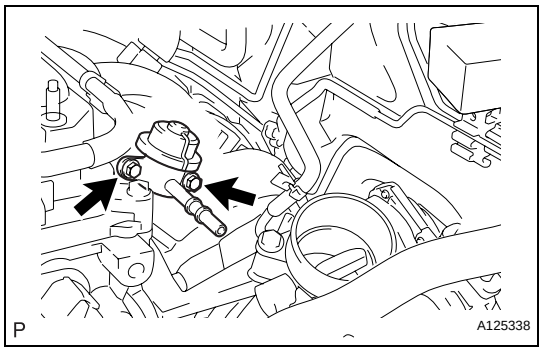

2. **INSTALL FUEL MAIN TUBE (See page FU-14)**
3. **INSTALL AIR CLEANER CAP SUB-ASSEMBLY (See page ES-413)**
4. **INSTALL NO. 1 ENGINE COVER (See page ES-414)**
5. **CONNECT CABLE TO BATTERY NEGATIVE TERMINAL**
6. **CHECK FOR FUEL LEAKS (See page FU-14)**

FUEL PRESSURE PULSATION DAMPER

COMPONENTS

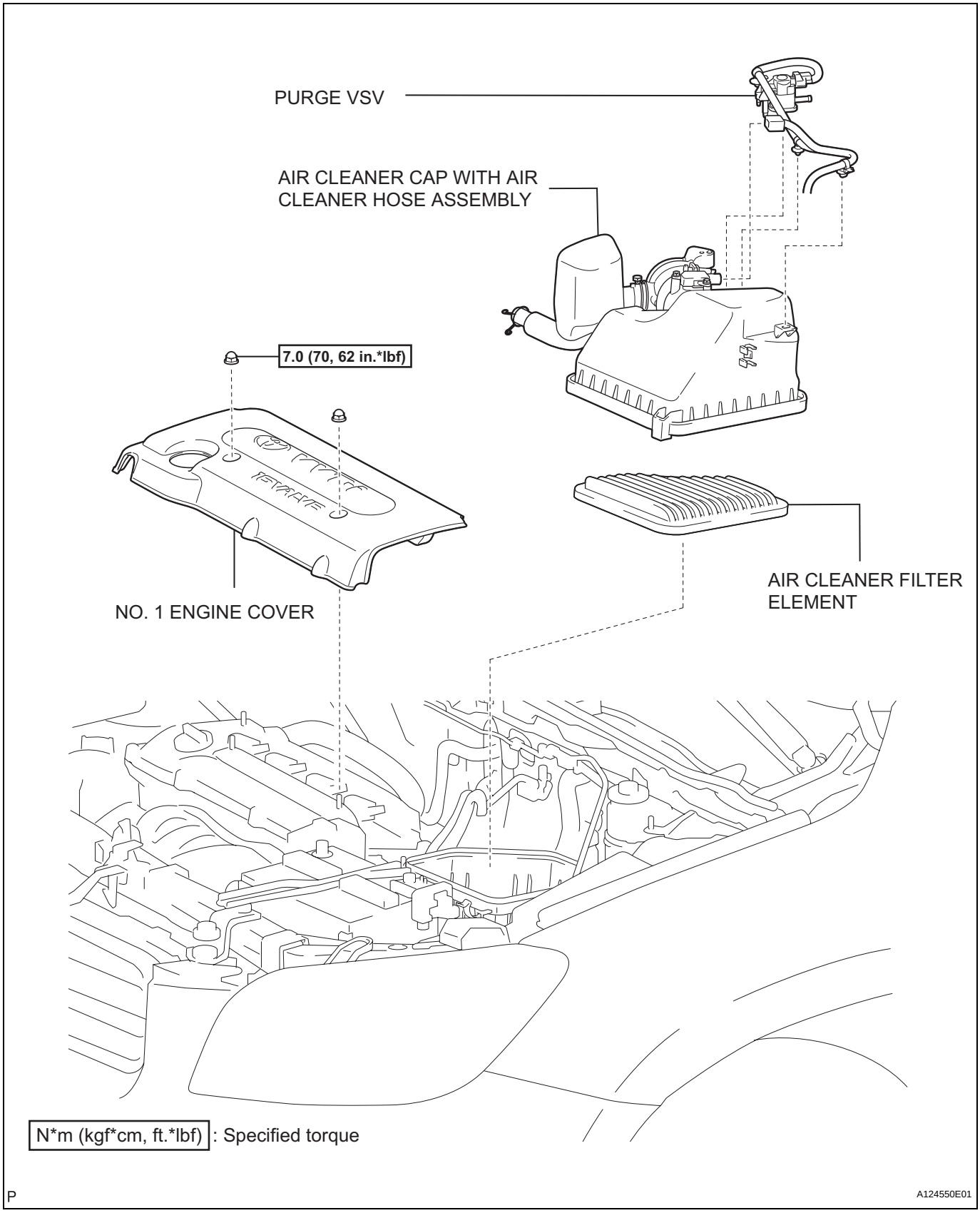

FU

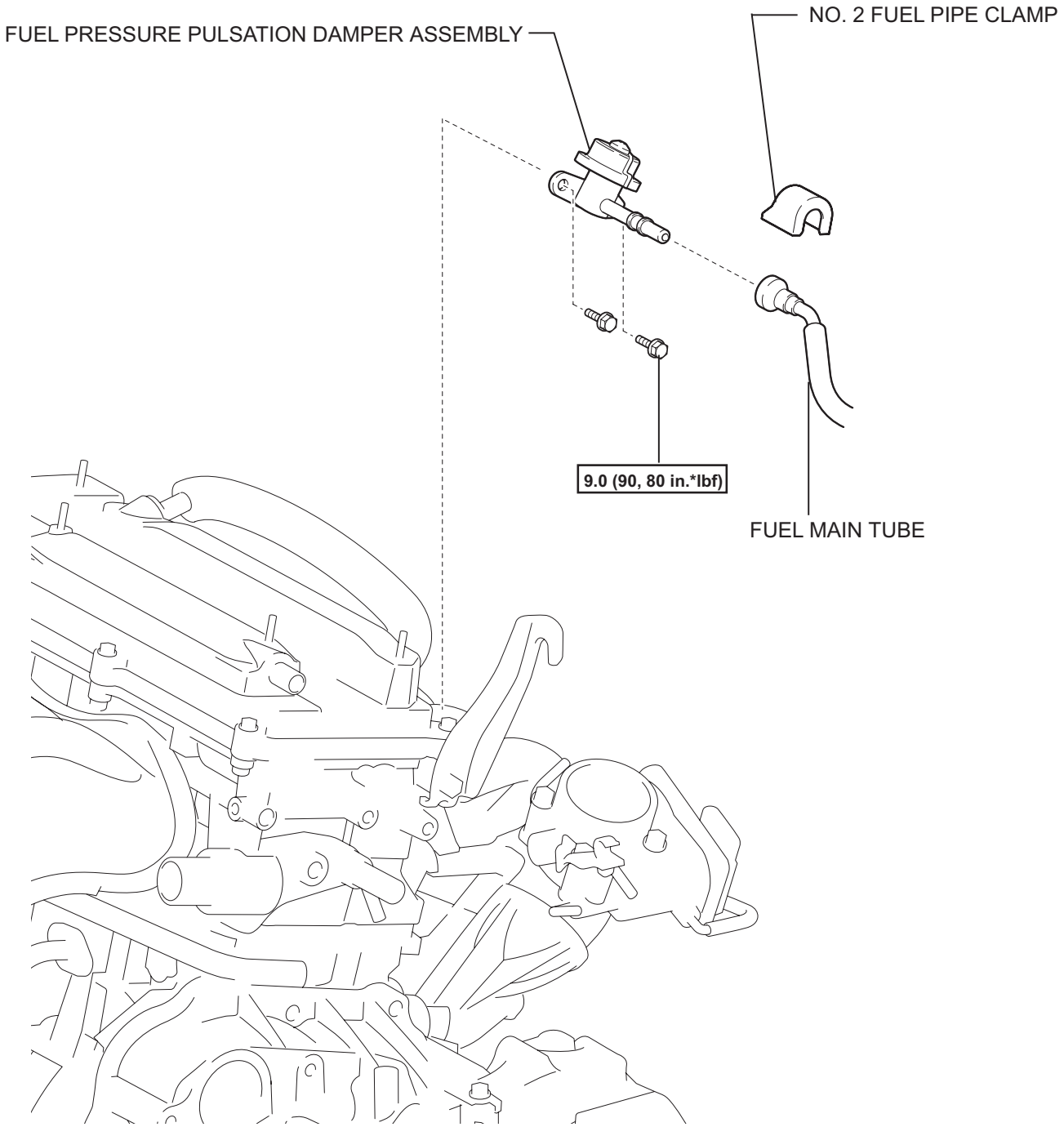

FU

N*m (kgf*cm, ft.*lbf) : Specified torque

P

A125332E01

REMOVAL

1. REMOVE FUEL TANK ASSEMBLY

(a) Remove the fuel tank (see page FU-39).

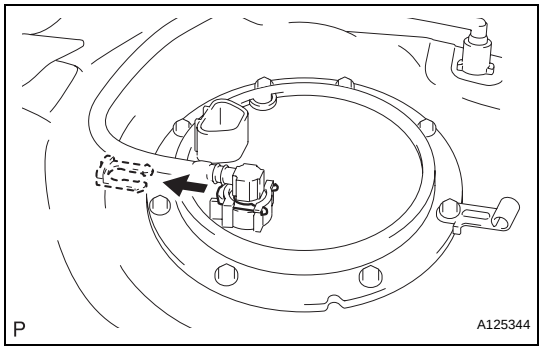

2. REMOVE FUEL TANK MAIN TUBE SUB-ASSEMBLY

(a) Remove the joint clip and fuel tank main tube.

CAUTION:

- **Before removing the tube joint clip, check for foreign matter around the clip. Clean if necessary.**
- **Keep the O-ring free of foreign matter, as it becomes contaminated easily.**
- **Do not use any tools in this procedure.**
- **Do not forcefully bend or twist the tube.**
- **Put the tube in a plastic bag to prevent damage and contamination.**
- **If the fuel suction plate and tube are stuck together, pinch the tube and turn it carefully to disconnect it.**
- **Be careful not to damage the clip. If the clip is damaged, replace it.**

FU

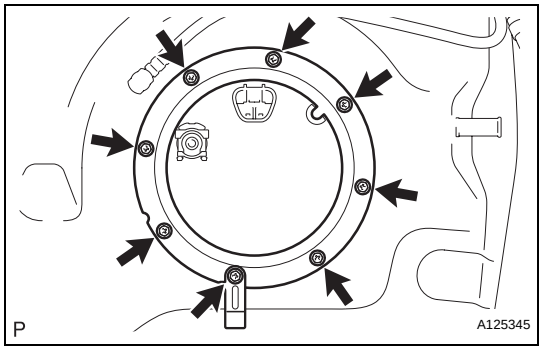

3. REMOVE FUEL TANK VENT TUBE SET PLATE

(a) Remove the 8 bolts and set plate.

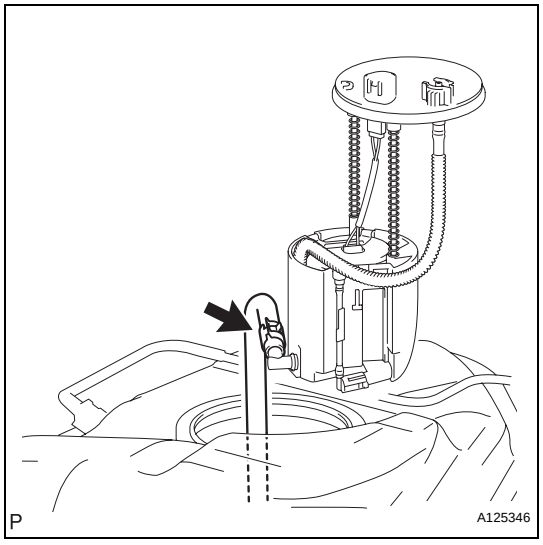

4. REMOVE FUEL SUCTION WITH PUMP ASSEMBLY

(a) Disconnect the fuel hose and remove the fuel pump from the fuel tank.

NOTICE:

Do not damage the fuel pump.

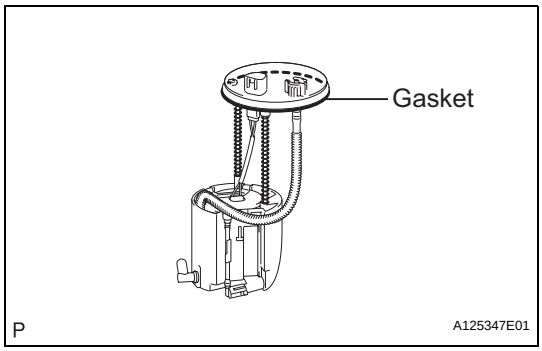

(b) Remove the gasket from the fuel pump.

5. REMOVE FUEL SUB-TANK ASSEMBLY

(a) Disconnect the wire harness.

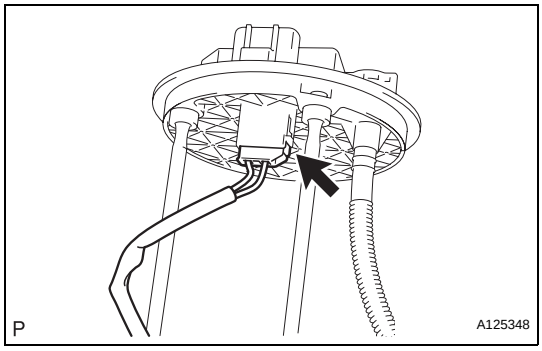

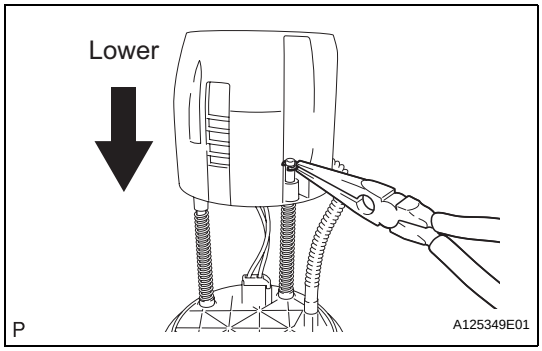

(b) Using needle nose pliers, remove the E-ring.
HINT:
Slightly lower the sub-tank to remove the E-ring.

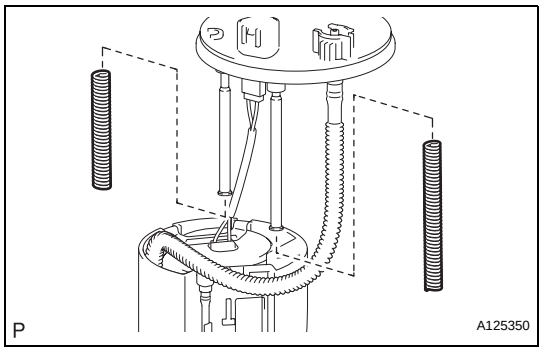

(c) Remove the 2 springs from the 2 shaft.

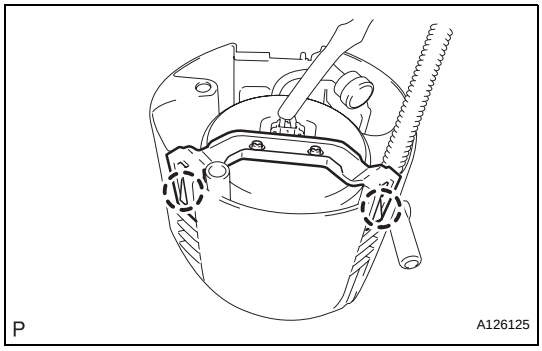

(d) Detach the 2 claws and remove the sub-tank.

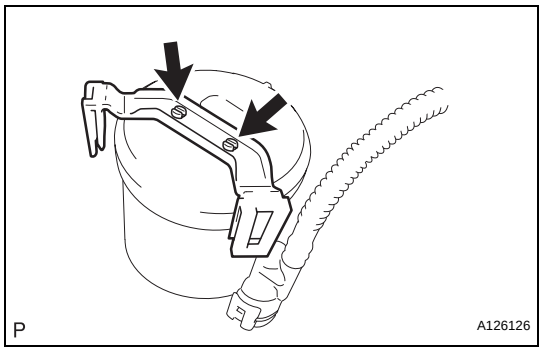

6. REMOVE BRACKET

(a) Using a screwdriver, detach the 2 claws and remove the bracket.
HINT:
Tape the screwdriver tip before use.

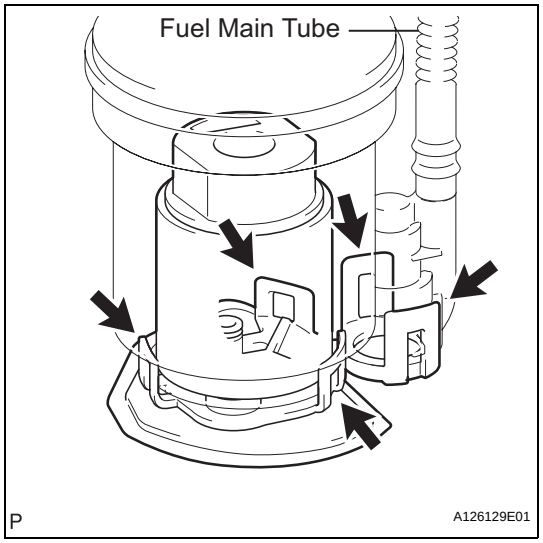

7. REMOVE FUEL PUMP ASSEMBLY

(a) Detach the 5 claws on the filter and remove the fuel pump from the fuel filter.
HINT:
When removing the claw, do not disconnect the fuel main tube.

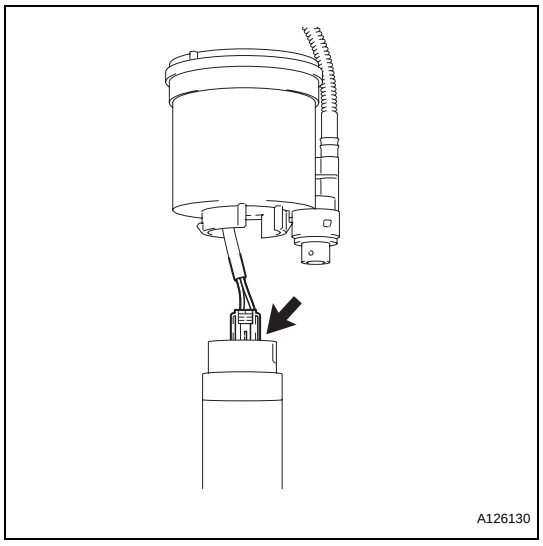

(b) Disconnect the fuel pump connector.

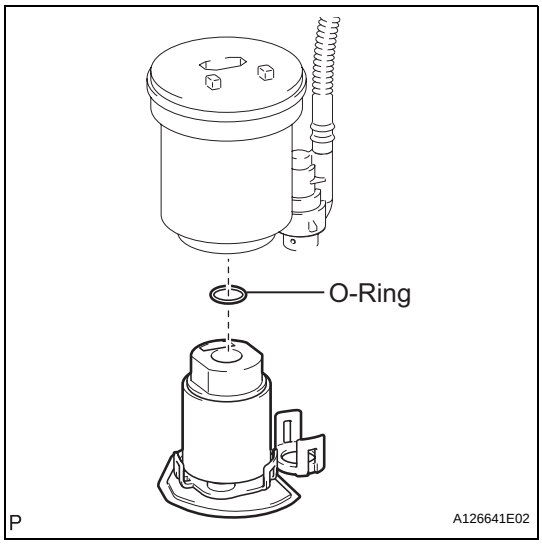

(c) Remove the O-ring from the fuel filter.

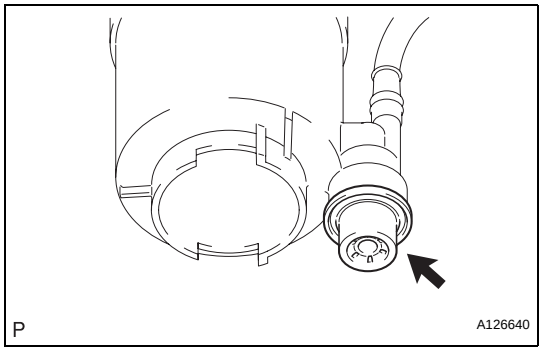

8. REMOVE FUEL PRESSURE REGULATOR ASSEMBLY

(a) Remove the fuel pressure regulator from the fuel filter.

(b) Remove the 2 O-rings.

INSTALLATION

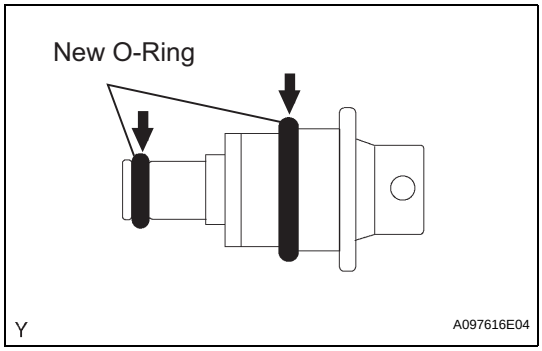

1. INSTALL FUEL PRESSURE REGULATOR ASSEMBLY

(a) Apply a light coat of gasoline to 2 new O-rings, and install them onto the fuel pressure regulator.

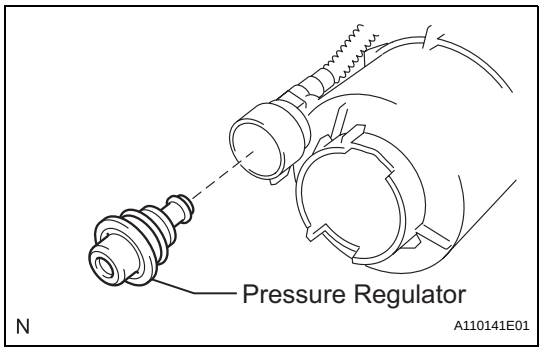

(b) Install the fuel pressure regulator to the fuel filter.

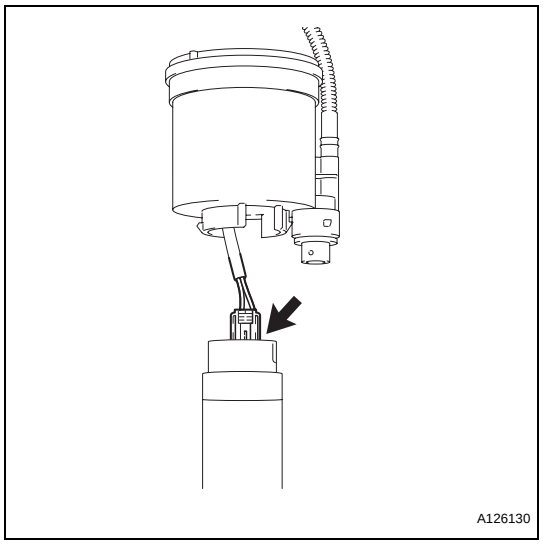

2. INSTALL FUEL PUMP ASSEMBLY

(a) Connect the pump harness connector.



(b) Apply gasoline to a new O-ring and install the O-ring to the fuel filter.

(c) Attach the 5 claws to the claw holes and install the fuel pump.

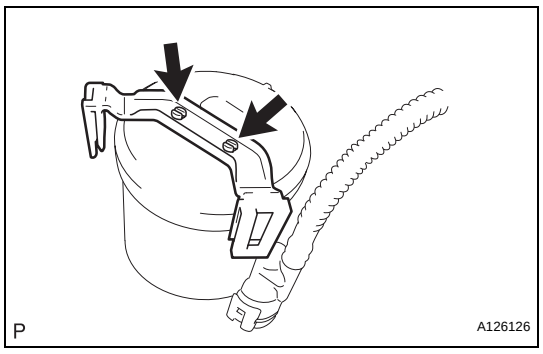

3. INSTALL BRACKET

(a) Attach the 2 claws to the claw holes and install the bracket.

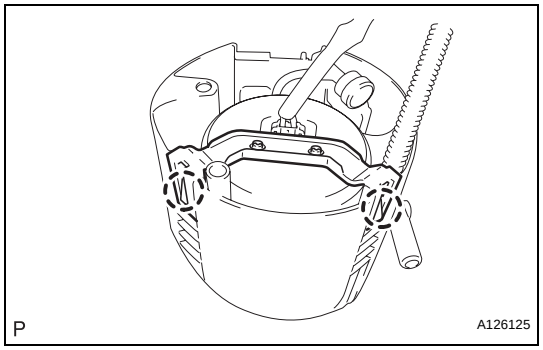

4. INSTALL FUEL SUB-TANK ASSEMBLY

(a) Attach the 2 claws to the claw holes and install the fuel sub-tank.

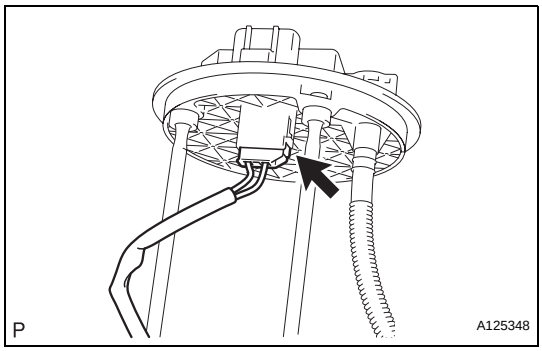

(b) Connect the wire harness.

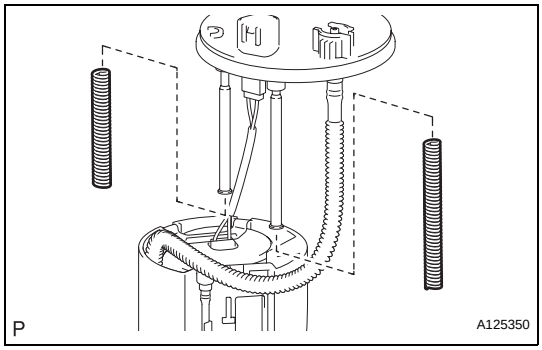

(c) Install the spring to the fuel suction plate shaft and install it to the sub-tank.

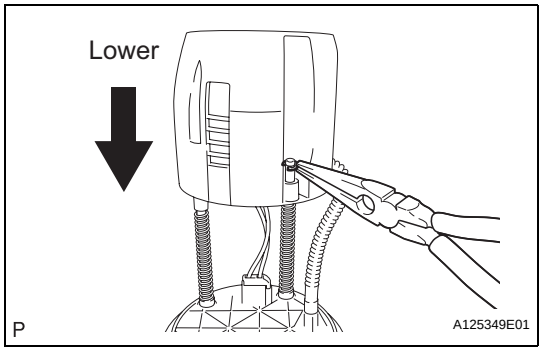

(d) Using needle-nose pliers, install a new E-ring.
HINT:
Slightly lower the sub-tank to install the E-ring.

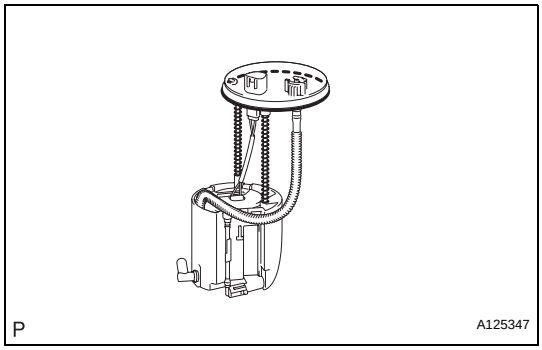

5. INSTALL FUEL SUCTION WITH PUMP ASSEMBLY

(a) Install a new gasket onto the fuel pump.

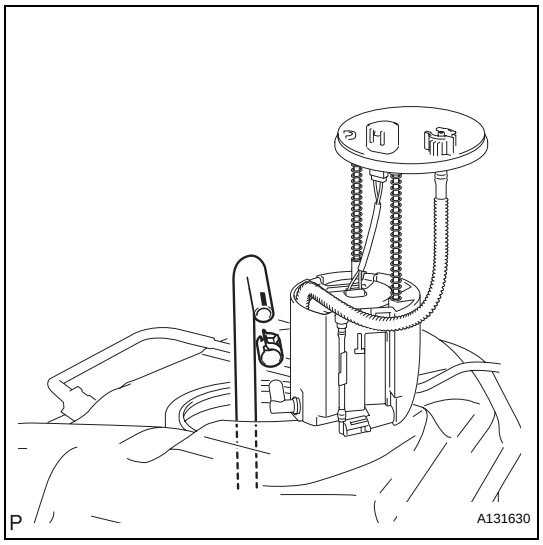

(b) Connect the fuel hose and install the fuel pump into the fuel tank.
NOTICE:
Do not damage the fuel pump filter.

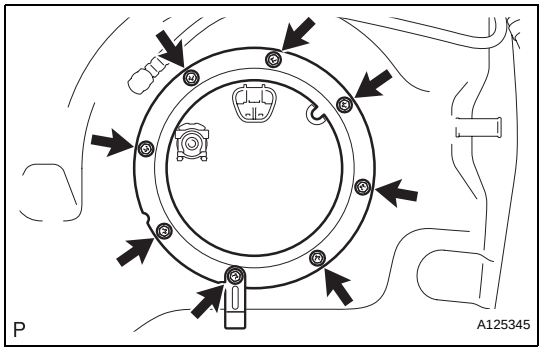

6. INSTALL FUEL TANK VENT TUBE SET PLATE

(a) Install the set plate with the 8 bolts.
Torque: 4.0 N*m (41 kgf*cm, 35 in.*lbf)

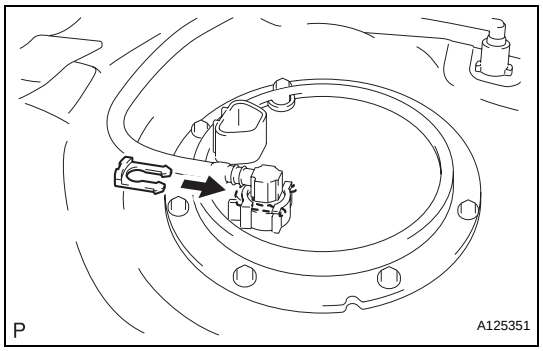

7. INSTALL FUEL TANK MAIN TUBE SUB-ASSEMBLY

(a) Install the fuel tube with the joint clips.

FU

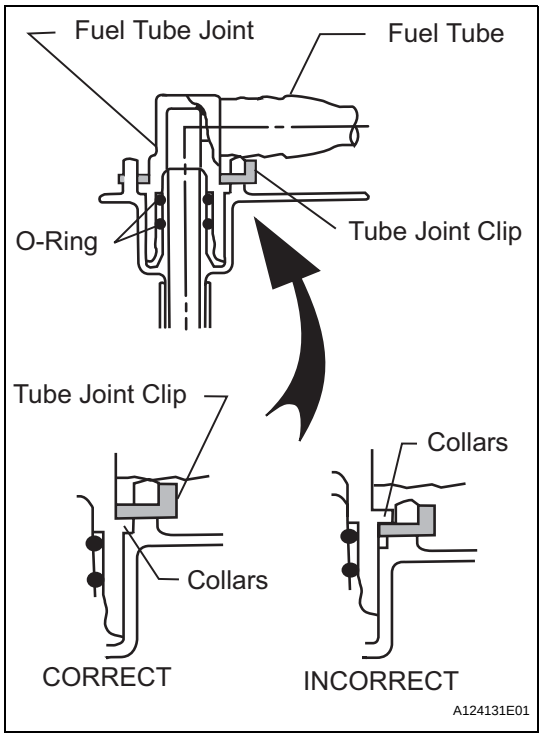

CAUTION:

- **Check that there are no scratches or foreign objects on the connecting parts.**
- **Check that the fuel tube joint is inserted securely.**
- **Check that the fuel tube joint clip is on the collars of the fuel tube joint.**
- **After installing the tube joint clip, check that the fuel tube joint has not been pulled off.**
- **Be careful not to damage the clip. If the clip is damaged, replace it.**

8. INSTALL FUEL TANK ASSEMBLY

(a) Install the fuel tank (see page FU-44).

FUEL PRESSURE REGULATOR

COMPONENTS

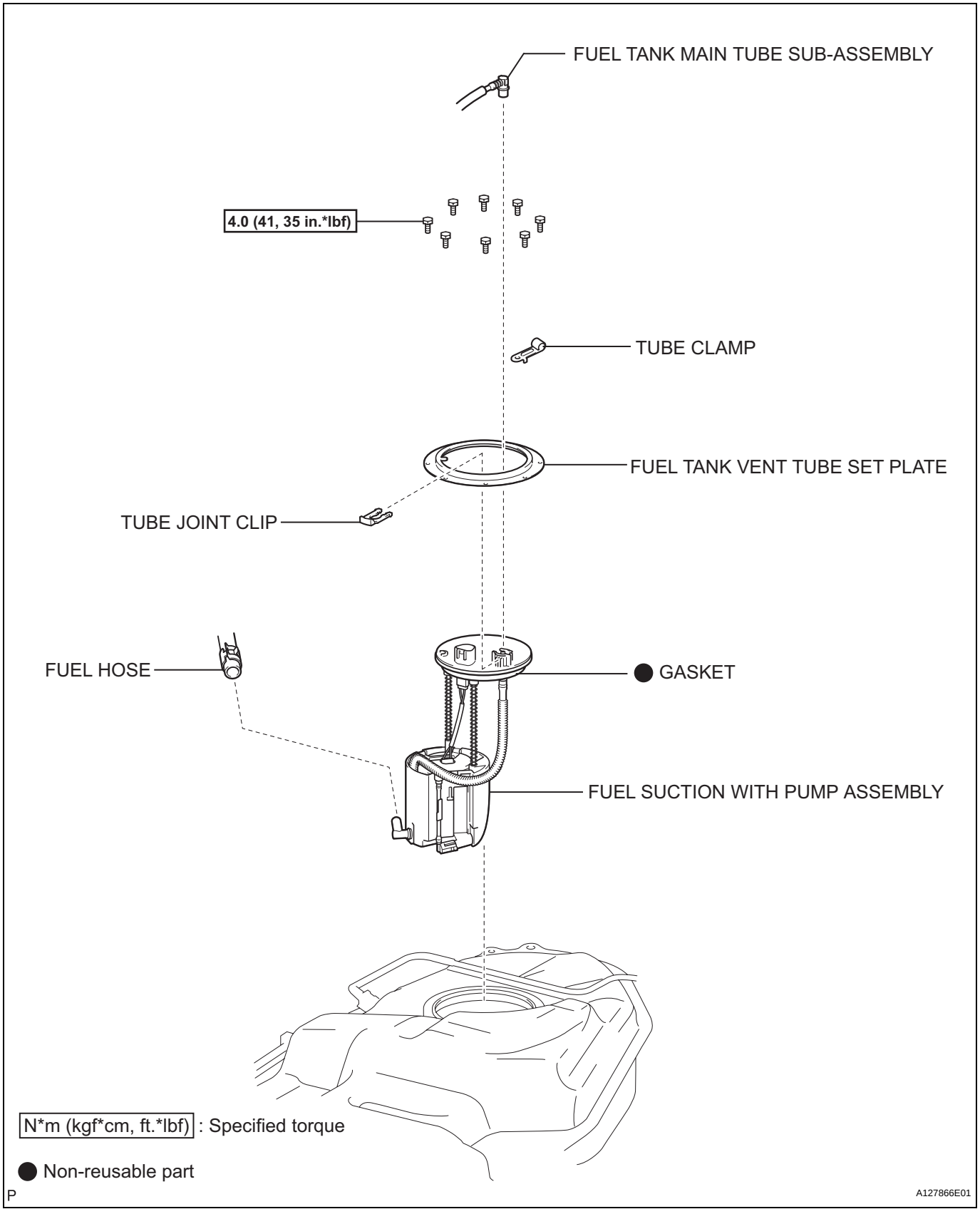

FU

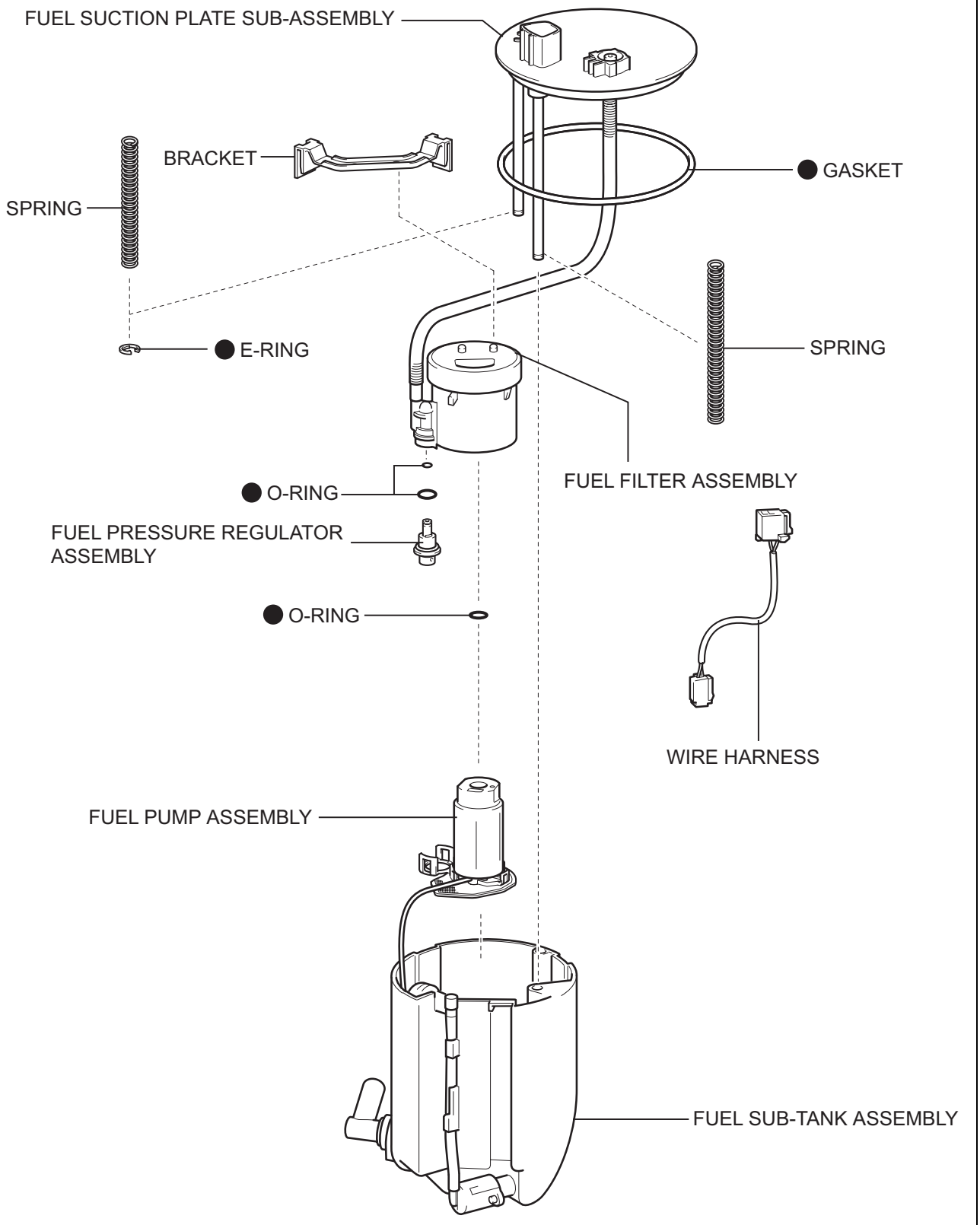
FUEL SUCTION PLATE SUB-ASSEMBLY
BRACKET
SPRING
GASKET
E-RING
SPRING
FUEL FILTER ASSEMBLY
O-RING
FUEL PRESSURE REGULATOR ASSEMBLY
O-RING
WIRE HARNESS
FUEL PUMP ASSEMBLY
FUEL SUB-TANK ASSEMBLY
Non-reusable part
A125536E01

FU

T

REMOVAL

1. REMOVE FUEL TANK ASSEMBLY

(a) Remove the fuel tank (see page FU-39).

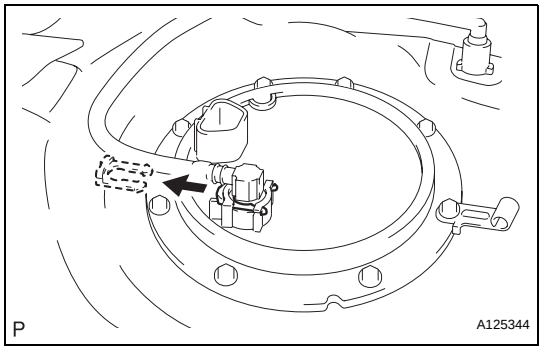

2. REMOVE FUEL TANK MAIN TUBE SUB-ASSEMBLY

(a) Remove the joint clip and fuel tank main tube.

CAUTION:

- **Before removing the tube joint clip, check for foreign matter around the clip. Clean if necessary.**
- **Keep the O-ring free of foreign matter, as it becomes contaminated easily.**
- **Do not use any tools in this procedure.**
- **Do not forcefully bend or twist the tube.**
- **Put the tube in a plastic bag to prevent damage and contamination.**
- **If the fuel suction plate and tube are stuck together, pinch the tube and turn it carefully to disconnect it.**
- **Be careful not to damage the clip. If the clip is damaged, replace it.**

FU

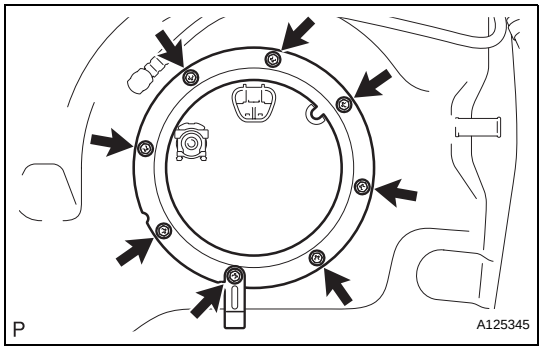

3. REMOVE FUEL TANK VENT TUBE SET PLATE

(a) Remove the 8 bolts and set plate.

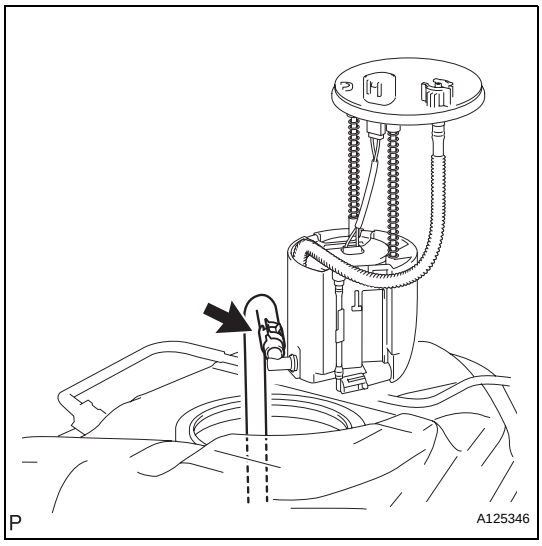

4. REMOVE FUEL SUCTION WITH PUMP ASSEMBLY

(a) Disconnect the fuel hose and remove the fuel pump from the fuel tank.

NOTICE:

Do not damage the fuel pump.

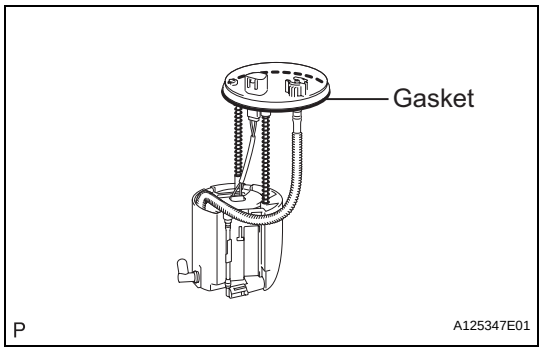

(b) Remove the gasket from the fuel pump.

5. REMOVE FUEL SUB-TANK ASSEMBLY

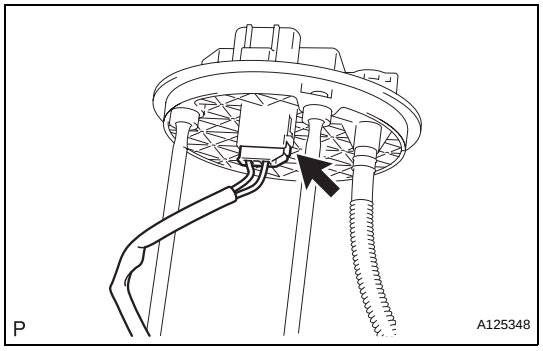

(a) Disconnect the wire harness.

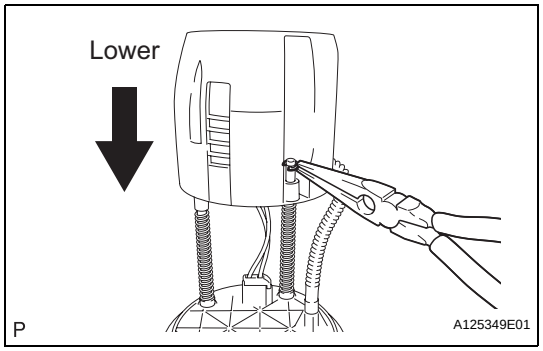

(b) Using needle nose pliers, remove the E-ring.
HINT:
Slightly lower the sub-tank to remove the E-ring.

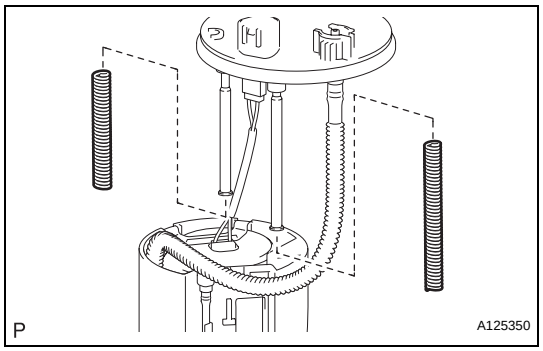

(c) Remove the 2 springs from the 2 shaft.

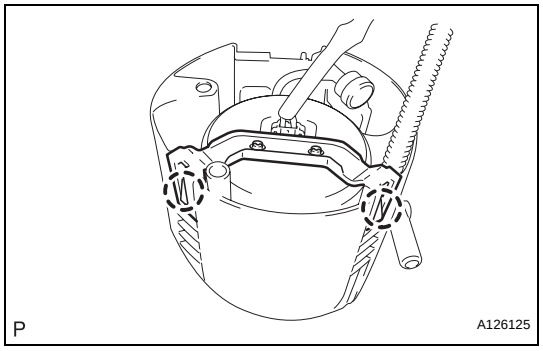

(d) Detach the 2 claws and remove the sub-tank.

FU

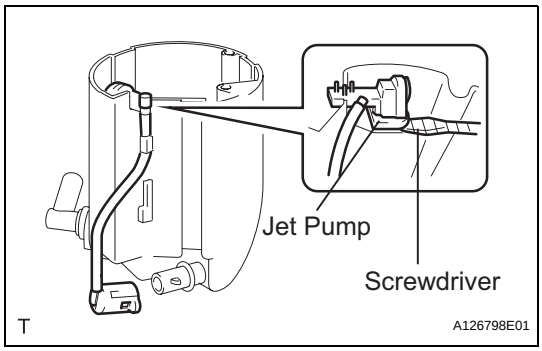

(e) Disengage the claw of the jet pump nozzle.
(f) Using a screwdriver with the tip taped, remove the jet pump.

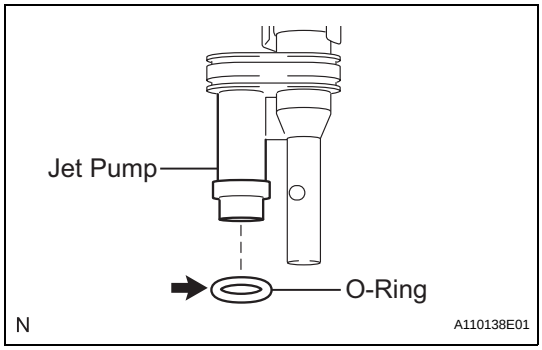

(g) Remove the O-ring from the jet pump.

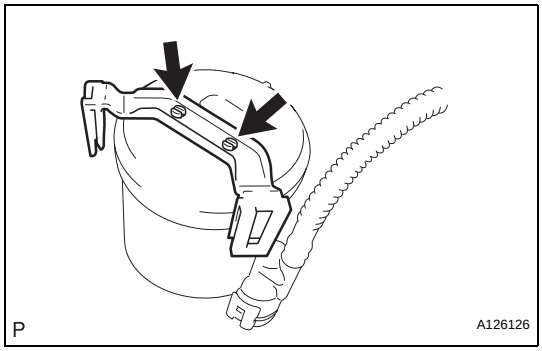

6. REMOVE BRACKET

(a) Using a screwdriver, detach the 2 claws and remove the bracket.
HINT:
Tape the screwdriver tip before use.

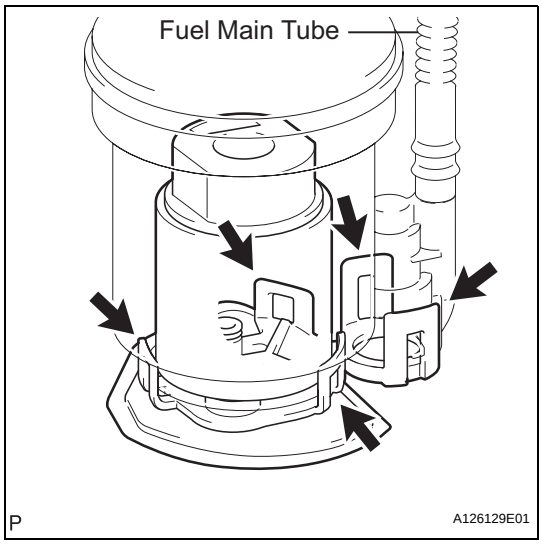

7. REMOVE FUEL PUMP ASSEMBLY

(a) Detach the 5 claws on the filter and remove the fuel pump from the fuel filter.
HINT:
When removing the claw, do not disconnect the fuel main tube.

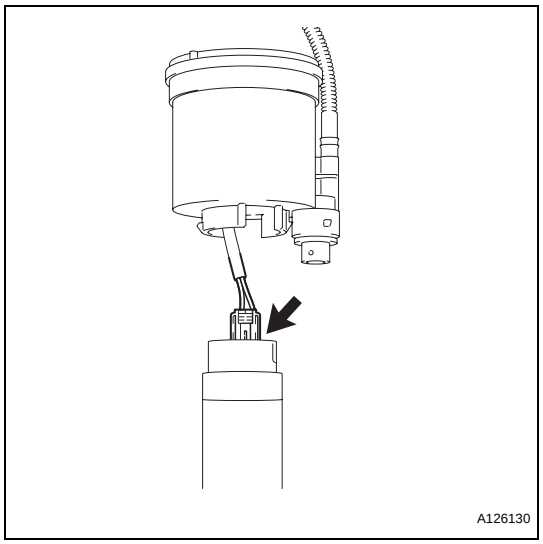

(b) Disconnect the fuel pump connector.

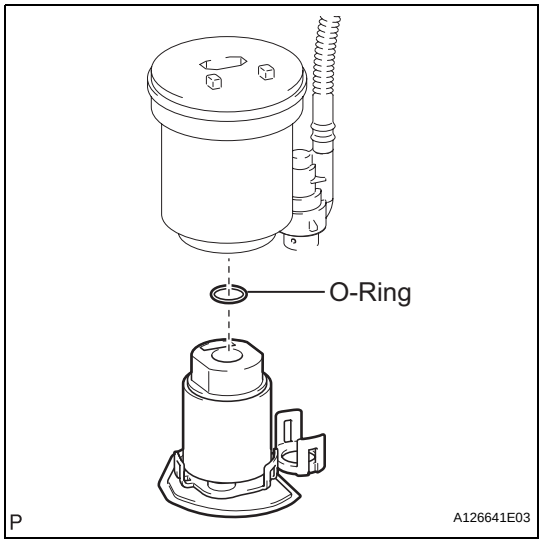

(c) Remove the O-ring from the fuel filter.

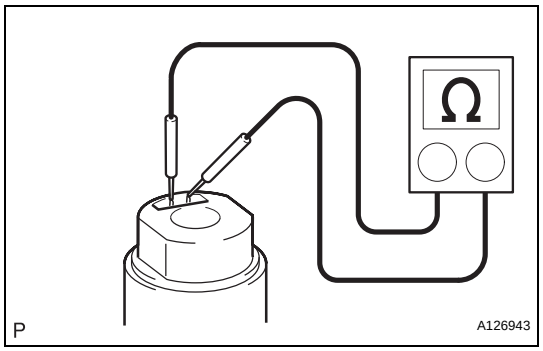

INSPECTION

1. INSPECT FUEL PUMP

(a) Check the fuel pump resistance.

(1) Measure the resistance between terminals 1 and 2.

Standard resistance:

0.2 to 3.0 Ω at 20°C (68°F)

If the result is not as specified, replace the fuel pump.

(b) Check fuel pump operation.

(1) Apply battery voltage to terminals 1 and 2. Check that the pump operates.

NOTICE:

- **These tests must be completed within 10 seconds to prevent the coil from burning out.**
- **Keep the fuel pump as far away from the battery as possible.**
- **Always the voltage on and off on the battery side, not the fuel pump side.**

If the pump does not operate, replace the fuel pump.

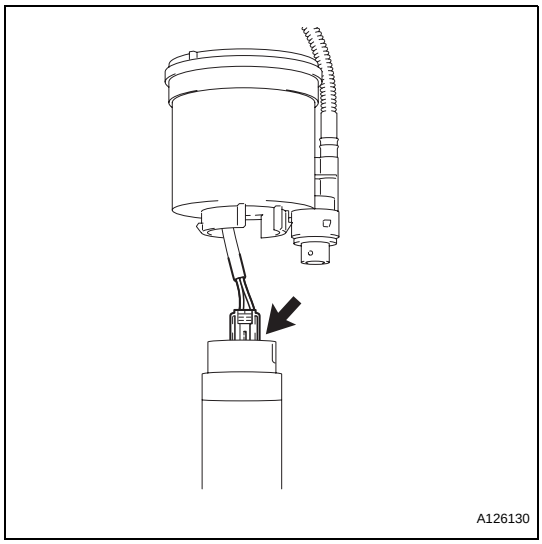

INSTALLATION

1. INSTALL FUEL PUMP ASSEMBLY

(a) Connect the pump harness connector.

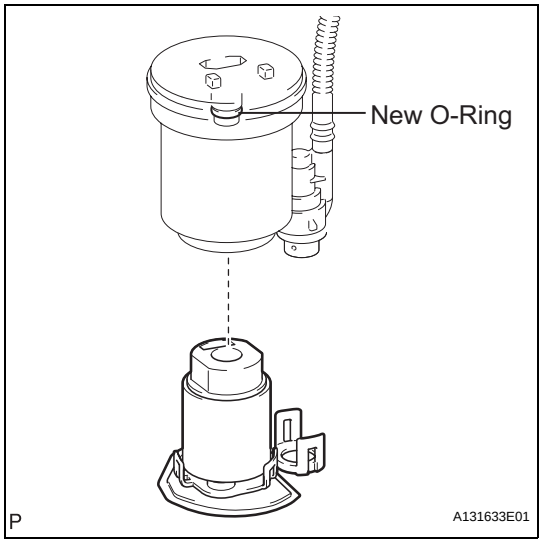

(b) Apply gasoline to a new O-ring and install the O-ring to the fuel filter.

(c) Attach the 5 claws to the claw holes and install the fuel pump.

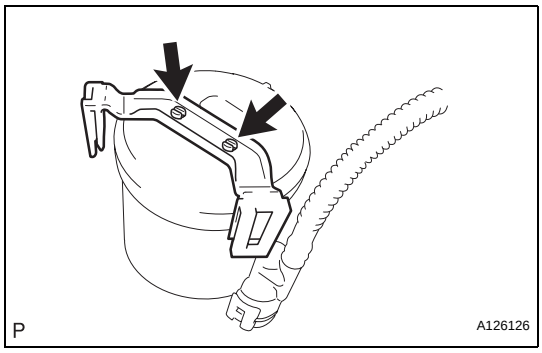

2. INSTALL BRACKET

(a) Attach the 2 claws to the claw holes and install the bracket.

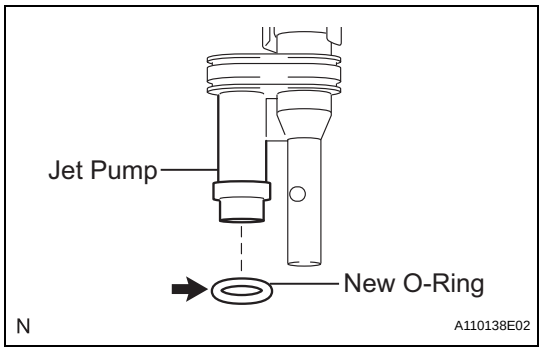

3. INSTALL FUEL SUB-TANK ASSEMBLY

(a) Apply gasoline to a new O-ring and install it to the jet pump.

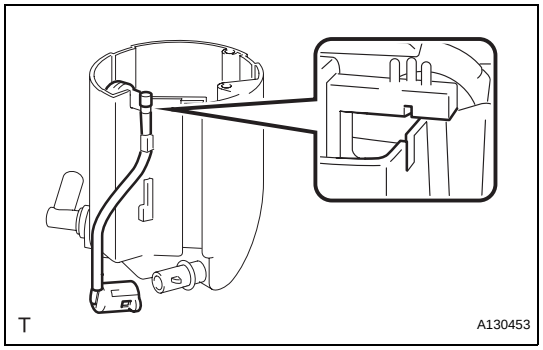

(b) Install the jet pump while aligning it to the installation position of the sub-tank.

(c) Install the jet pump nozzle.

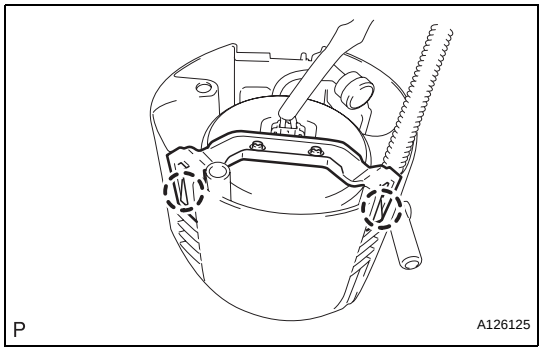

(d) Attach the 2 claws to the claw holes and install the fuel sub-tank.

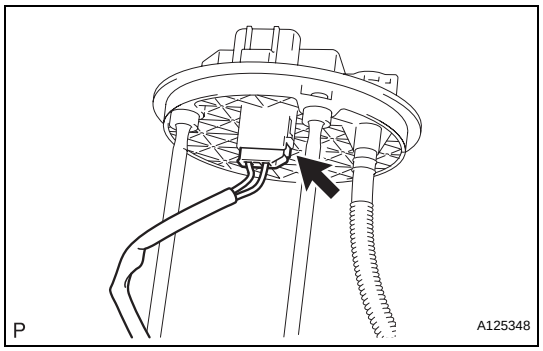

(e) Connect the wire harness.

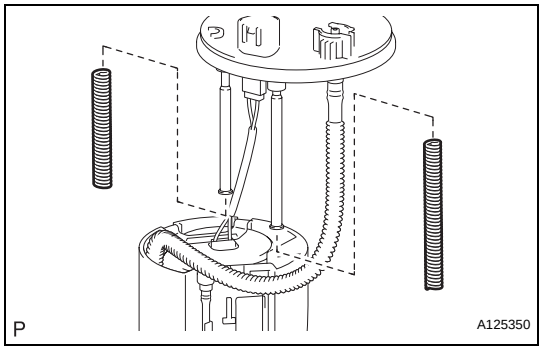

(f) Install the spring to the fuel suction plate shaft and install them to the sub-tank.

FU

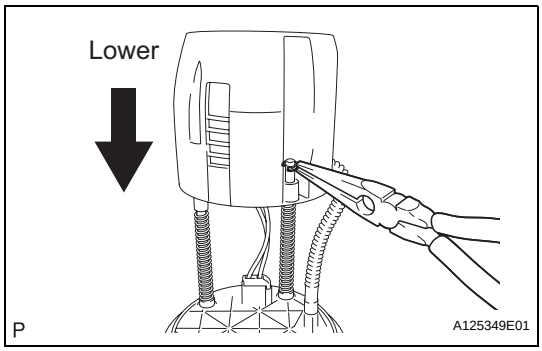

(g) Using needle-nose pliers, install a new E-ring.
HINT:
Slightly lower the sub-tank to install the E-ring.

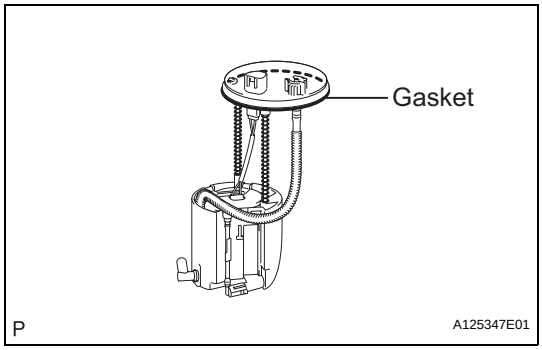

4. INSTALL FUEL SUCTION WITH PUMP ASSEMBLY

(a) Install a new gasket onto the fuel pump.

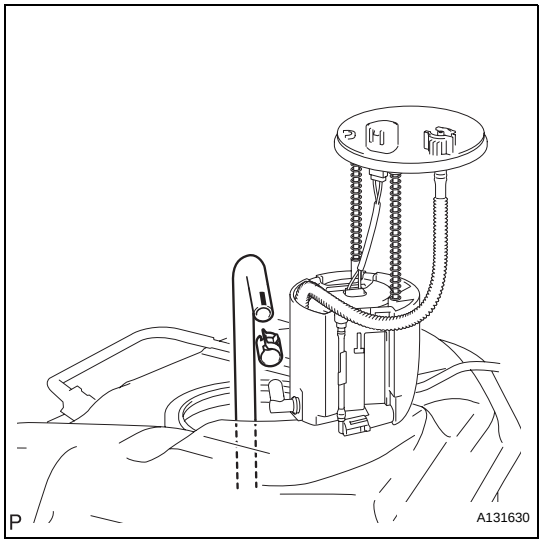

(b) Connect the fuel hose and install the fuel pump into the fuel tank.
NOTICE:
Do not damage the fuel pump filter.

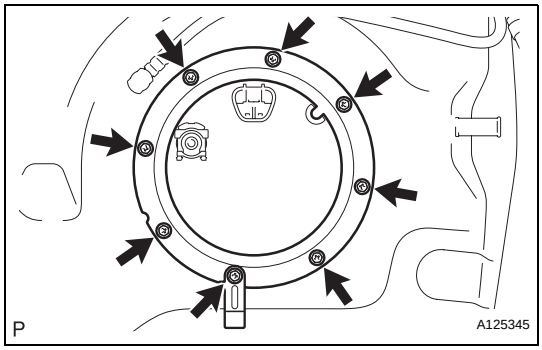

5. INSTALL FUEL TANK VENT TUBE SET PLATE

(a) Install the set plate with the 8 bolts.
Torque: 4.0 N*m (41 kgf*cm, 35 in.*lbf)

FU

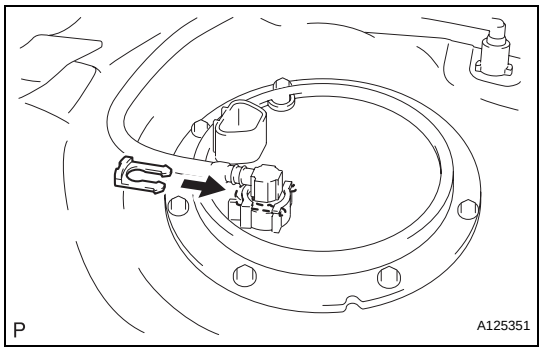

6. INSTALL FUEL TANK MAIN TUBE SUB-ASSEMBLY

(a) Install the fuel tube with the joint clips.

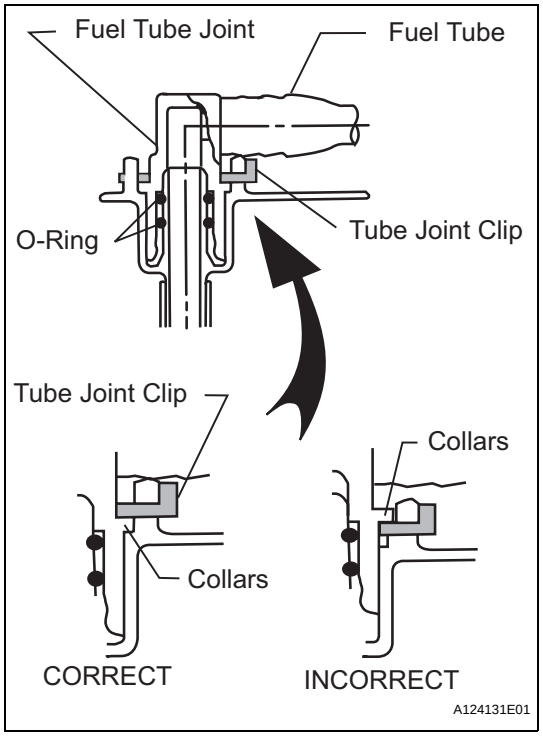

CAUTION:

- **Check that there are no scratches or foreign objects on the connecting parts.**
- **Check that the fuel tube joint is inserted securely.**
- **Check that the fuel tube joint clip is on the collars of the fuel tube joint.**
- **After installing the tube joint clip, check that the fuel tube joint has not been pulled off.**
- **Be careful not to damage the clip. If the clip is damaged, replace it.**

7. INSTALL FUEL TANK ASSEMBLY

(a) Install the fuel tank (see page FU-44).

FU

FUEL PUMP

COMPONENTS

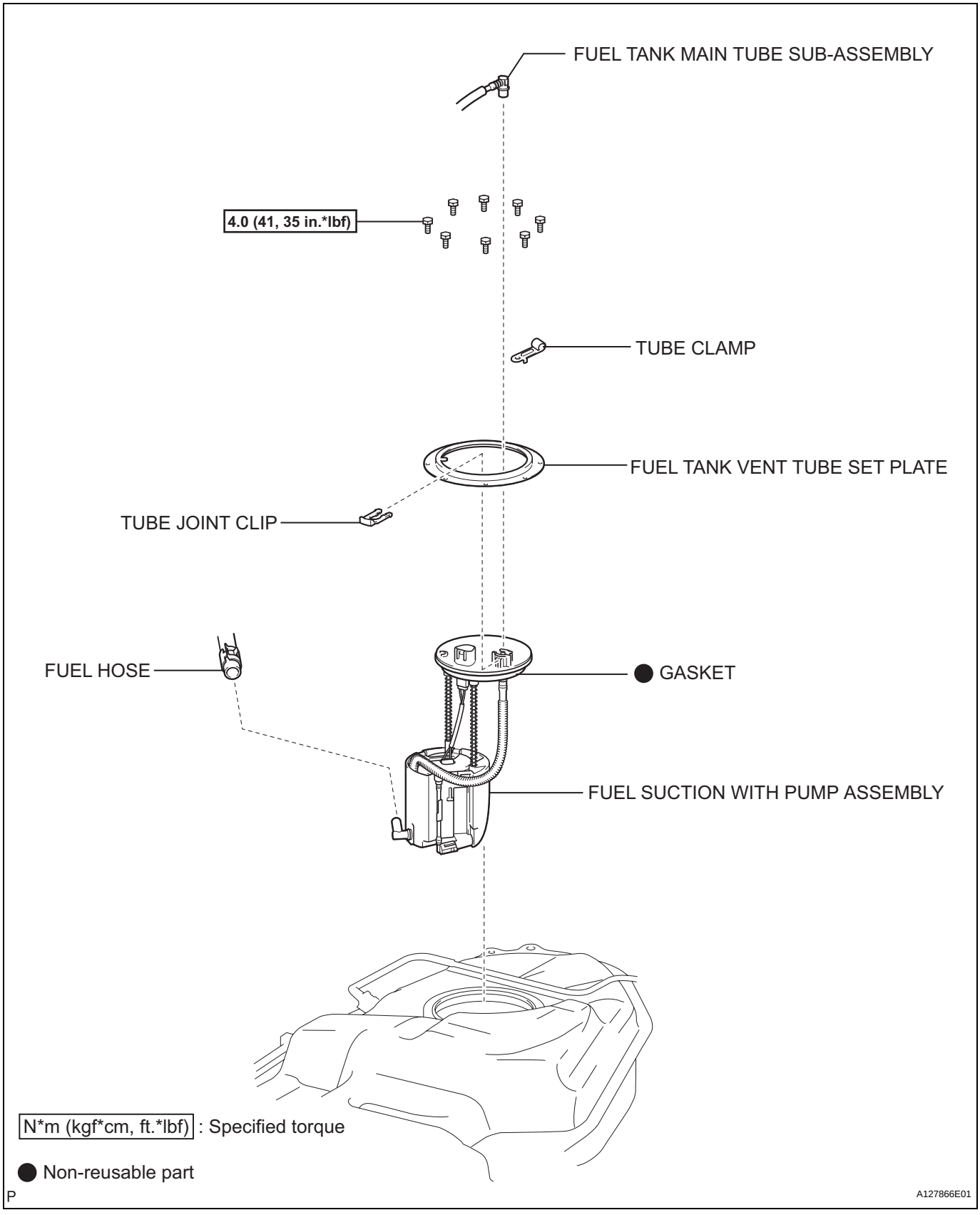

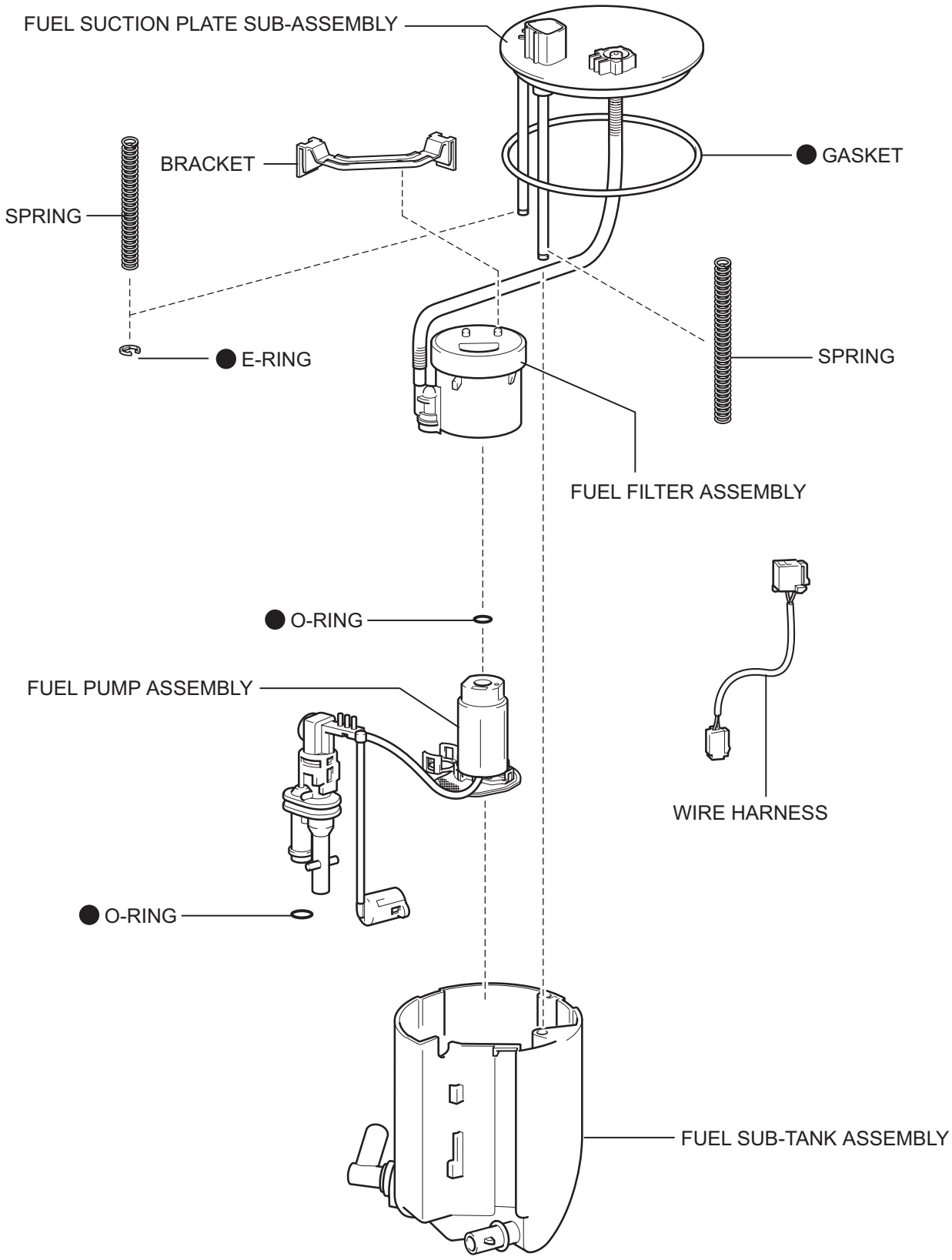
FUEL SUCTION PLATE SUB-ASSEMBLY
BRACKET
GASKET
SPRING
E-RING
SPRING
FUEL FILTER ASSEMBLY
O-RING
FUEL PUMP ASSEMBLY
WIRE HARNESS
O-RING
FUEL SUB-TANK ASSEMBLY
Non-reusable part
A128752E01

T

PARTS LOCATION

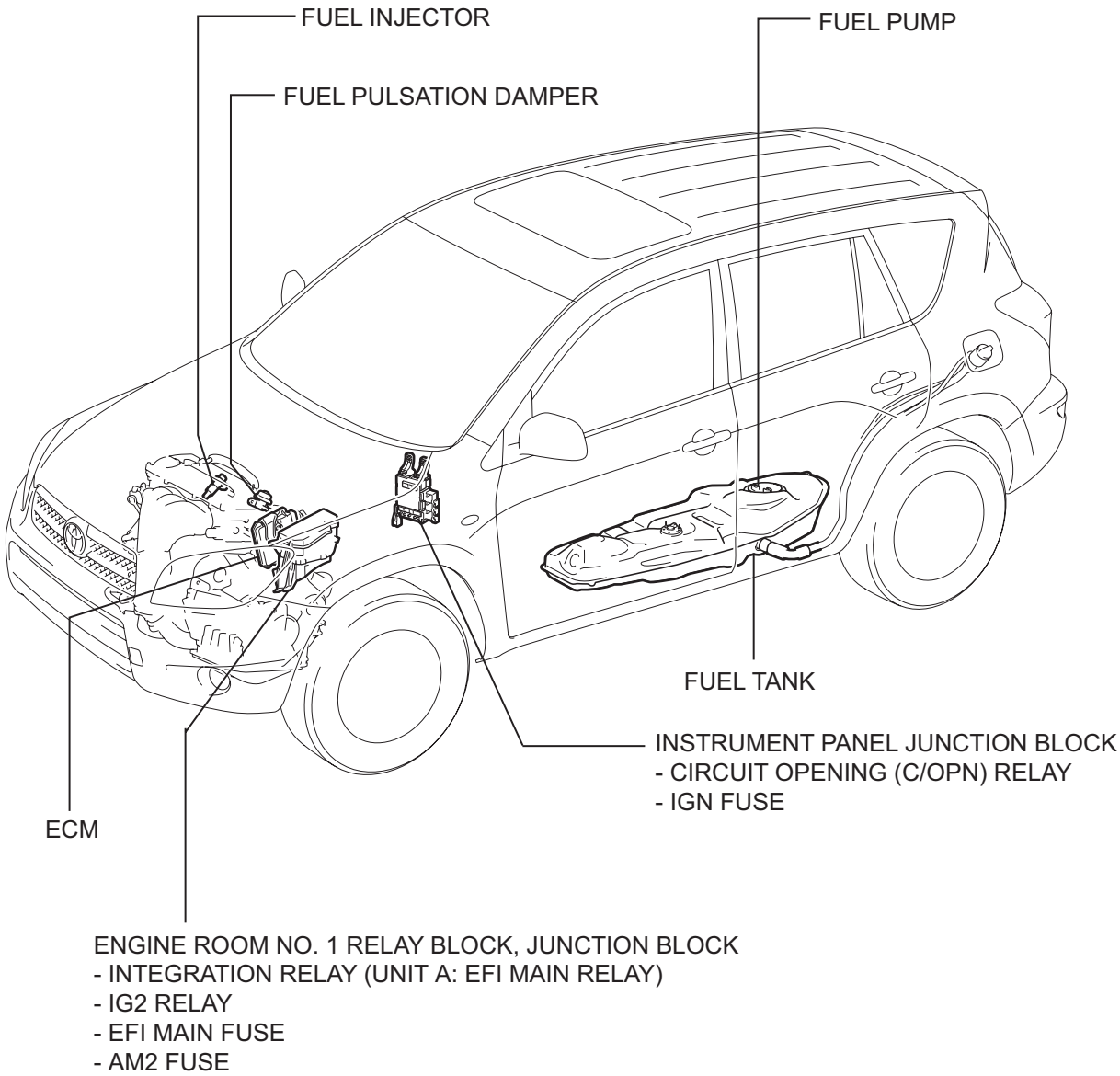

P

A126790E01

SYSTEM DIAGRAM

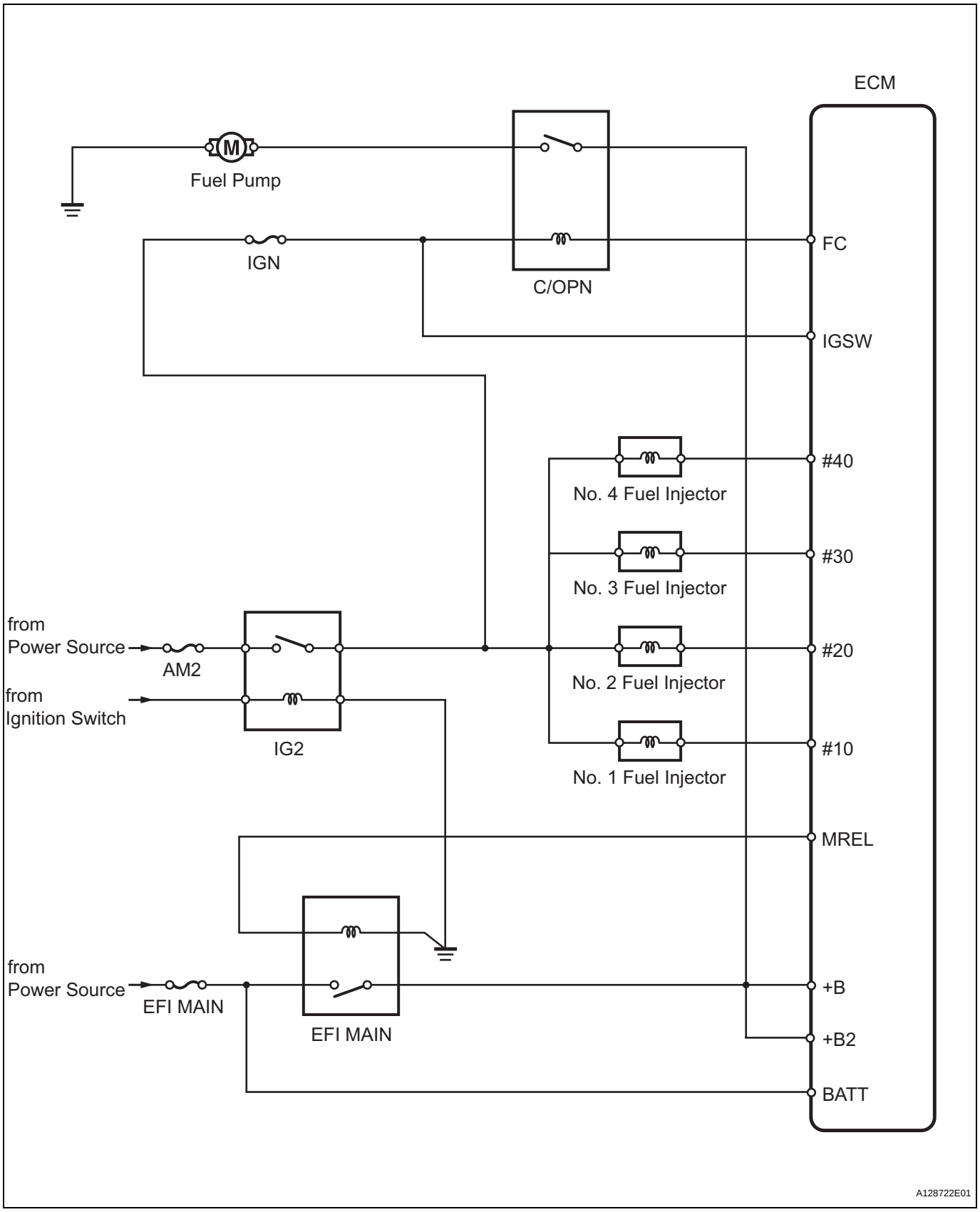

FU

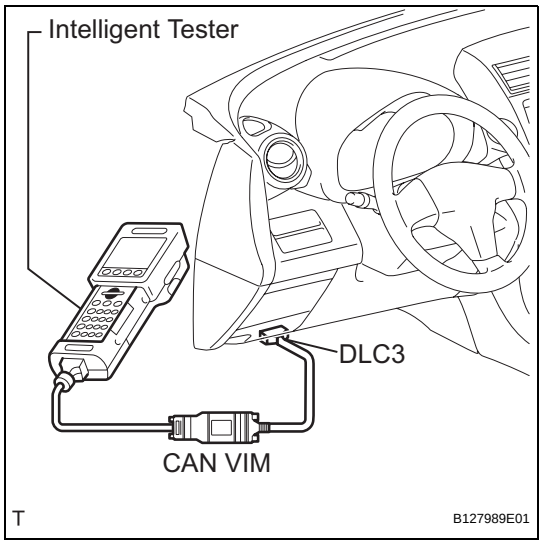

ON-VEHICLE INSPECTION

1. CHECK FUEL PUMP OPERATION

(a) Connect the intelligent tester to the DLC3.
(b) Turn the ignition switch ON. Do not start the engine.
(c) Select the following tester menus: DIAGNOSIS, ENHANCED OBD II, ACTIVE TEST and FUEL PUMP/SPD. Operate the fuel pump.
(d) Touch the fuel hose in the engine compartment to check the fuel flow, and you will be able to hear the sound of the fuel pump.
(e) Stop the fuel pump.
If there is no fuel flow, the fuel pump may not operate. Check the fuel pump circuit (see page FU-33).

2. CHECK FUEL PRESSURE

(a) Check that the battery positive voltage is above 12 V.
(b) Discharge the fuel system pressure (see page FU-9).
(c) Disconnect the cable from the negative (-) battery terminal.
(d) Disconnect the fuel main tube (see page FU-10).
(e) Install SST (pressure gauge) as shown in the illustration.
SST 09268-31011 (95336-08070, 90467-13001, 09268-41500), 09268-45014 (09268-41200, 09268-41220, 09268-41250)
(f) Wipe off any gasoline.
(g) Reconnect the cable to the negative (-) battery terminal.
(h) Start the engine.
(i) Measure the fuel pressure at idle.
Fuel pressure:
304 to 343 kPa (3.1 to 3.5 kgf/cm^2, 44 to 50 psi)
If the pressure is not as specified, check the fuel pump and injectors.
(j) After checking the fuel pressure, disconnect the cable from the negative (-) battery terminal and carefully remove SST and the fuel tube connector to prevent fuel from spilling.
(k) Reconnect the fuel main tube (see page FU-14).
(l) Check for fuel leaks (see page FU-14).

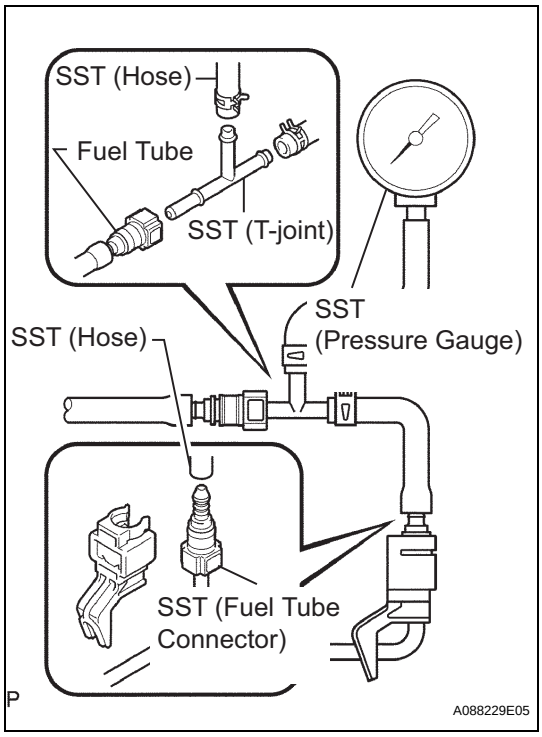

FUEL SYSTEM

PRECAUTION

1. BEFORE WORKING ON FUEL SYSTEM

(a) Do not work near an open flame.
(b) Keep gasoline away from rubber and leather parts.
(c) Discharge the fuel pressure before disconnecting the fuel line to prevent gasoline from spilling out. Refer to the following procedure.

2. DISCHARGE FUEL PRESSURE

CAUTION:

- **DISCHARGE FUEL SYSTEM PRESSURE procedures must be performed before disconnecting any part of the fuel system.**
- **After performing the DISCHARGE FUEL SYSTEM PRESSURE procedures, pressure will remain in the fuel line. When disconnecting the fuel line, place a cloth or equivalent over fittings to reduce the risk of fuel spray.**

(a) Remove the console box (see page IR-83).

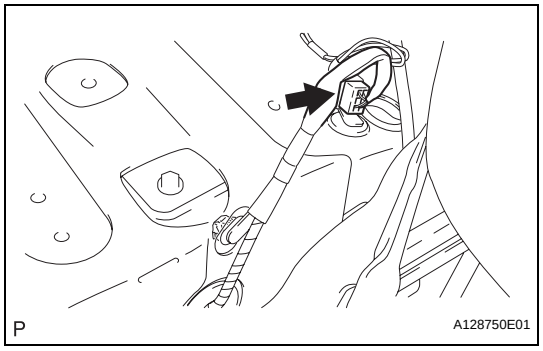

(b) Disconnect the connector.
(c) Start the engine. After the engine has stopped, turn the ignition switch off.
HINT:
DTC P0171 (system too lean) may be set.
(d) Check that the engine does not start.
(e) Remove the fuel tank cap, and let the air out of the fuel tank.

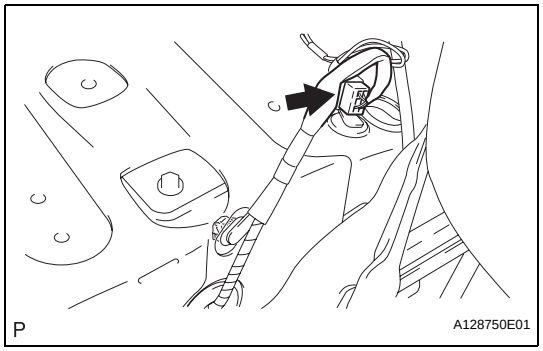

(f) Connect the connector.
(g) Install the console box (see page IR-90).

FU

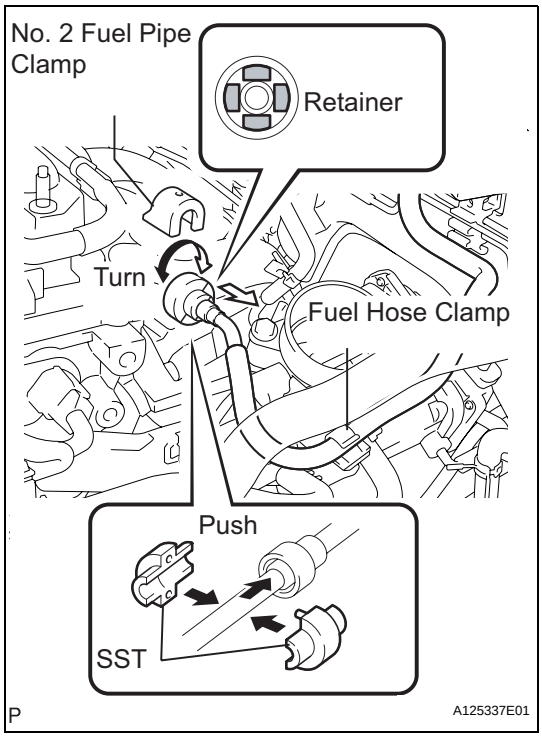

3. DISCONNECT FUEL MAIN TUBE

NOTICE:

Do not forcibly bend and twist the fuel main tube.

(a) Remove the fuel tube from the fuel hose clamp.
(b) Remove the fuel pipe clamp.
(c) Wipe off dirt on the fuel tube connector.
(d) Hold the fuel tube connector, and then install SST.
SST 09268-21010
(e) Turn SST to align the retainer inside the fuel tube connector with the chamfered part of SST.
(f) Insert SST into the fuel tube and hold it. Then push the fuel tube connector toward SST side.
(g) Mount the retainer of the fuel tube connector onto the chamfered part of SST.

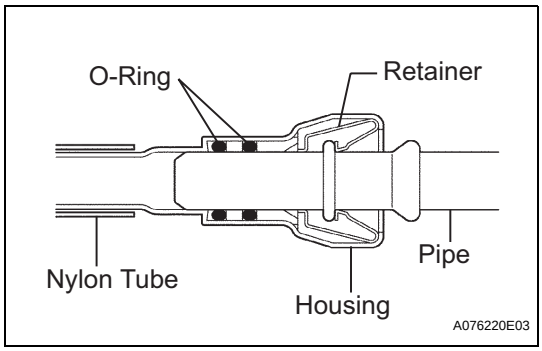

(h) Slide SST and fuel tube connector together towards the fuel tube until they make a click sound, and then disconnect the fuel tube.
(i) Drain the fuel remaining inside the fuel tube.
(j) Cover the fuel tube and fuel pipe with a plastic bag to protect the disconnected part.

4. CONNECT FUEL MAIN TUBE

(a) Connect the fuel main tube.
(b) Push the fuel tube connector until it makes a "click" sound.
(c) Install the fuel pipe clamp.
(d) Install the fuel tube to the fuel hose clamp.

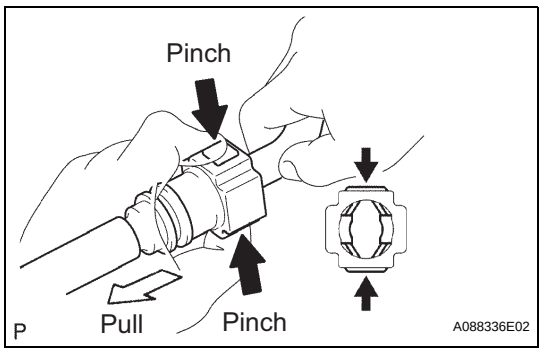

5. DISCONNECT FUEL TUBE CONNECTOR

(a) Wipe off any dirt on the fuel tube connector.
(b) Pinch the fuel tube connector, and then disconnect the fuel tube. Do not use any tools.
(c) Drain the fuel remaining inside the fuel tube.
(d) Cover the fuel tube and fuel pipe with a plastic bag to protect the disconnected part.

6. CONNECT FUEL TUBE CONNECTOR

(a) Connect the fuel tube connector to the fuel pipe.
(b) Push the fuel connector until it makes a click sound.

HINT:

If it is difficult to connect the fuel tube connector, apply a small amount of new engine oil on the tip of the pipe.

FU

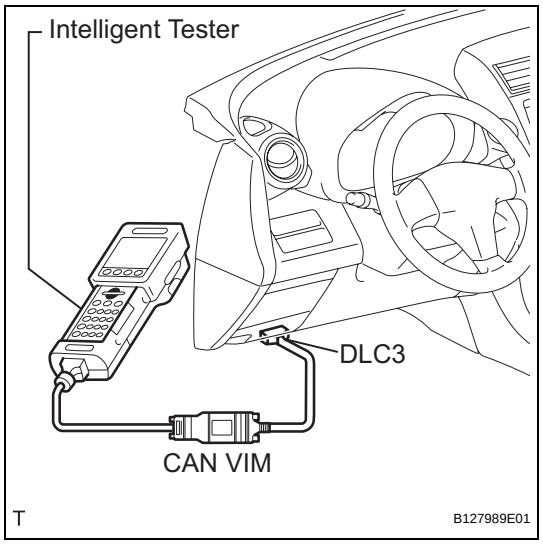

7. CHECK FOR FUEL LEAKS

(a) Make sure that there are no fuel leaks after performing maintenance on the fuel system.
  (1) Connect the intelligent tester to the DLC3.
  (2) Turn the ignition switch ON, and push the intelligent tester main switch ON.
  NOTICE:
  Do not start the engine.
  (3) Select the Active Test mode on the intelligent tester.
  HINT:
  Refer to the intelligent tester operator's manual for further details.
  (4) Check that there are no leaks from the fuel system.
  (5) Turn the ignition switch OFF.
  (6) Disconnect the intelligent tester from the DLC3.

REMOVAL

1. **DISCHARGE FUEL SYSTEM PRESSURE (See page FU-9)**

2. **DISCONNECT CABLE FROM NEGATIVE BATTERY TERMINAL**
   CAUTION:
   Wait at least 90 seconds after disconnecting the cable from the negative (-) battery terminal to prevent airbag and seat belt pretensioner activation.

3. **REMOVE FUEL TANK CAP**

4. **REMOVE FRONT FLOOR COVER**
   (a) Remove the nut, bolt, 3 clips and floor cover.

5. **REMOVE NO. 1 FLOOR UNDER COVER**
   (a) Remove the 2 nuts, clip and floor under cover.

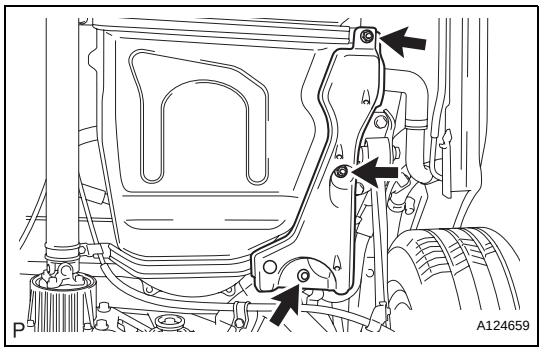

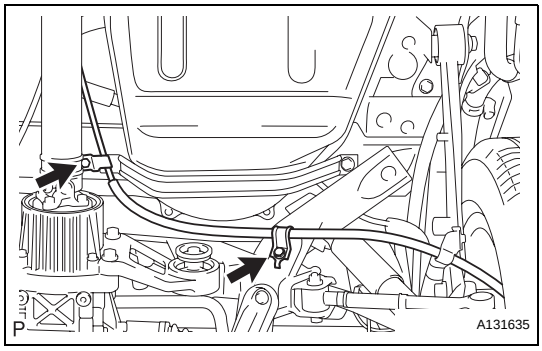

6. **DISCONNECT NO. 2 PARKING BRAKE CABLE ASSEMBLY**
   (a) Remove the 2 bolts and disconnect the parking brake cable.

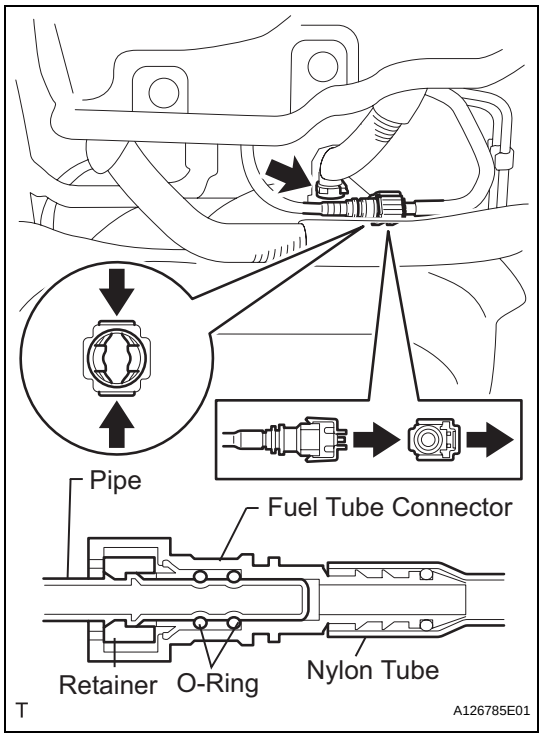

7. DISCONNECT FUEL TANK MAIN TUBE SUB-ASSEMBLY

(a) Pinch and pull the main tube connector to disconnect the connector from the pipe.

NOTICE:

- **Check for foreign matter in the pipe and around the connector. Clean if necessary. Foreign matter may damage the O-ring or cause leaks in the seal between the pipe and connector.**
- **Do not use any tools to separate the pipe and connector.**
- **Do not forcefully bend or twist the nylon tube.**
- **Check for foreign matter on the pipe seal surface. Clean if necessary.**
- **Put the pipe and connector ends in plastic bags to prevent damage and foreign matter contamination.**
- **If the pipe and connector are stuck together, pinch the connector between your fingers and turn it carefully to disconnect it.**

(b) Disconnect the EVAP hose from the tank.

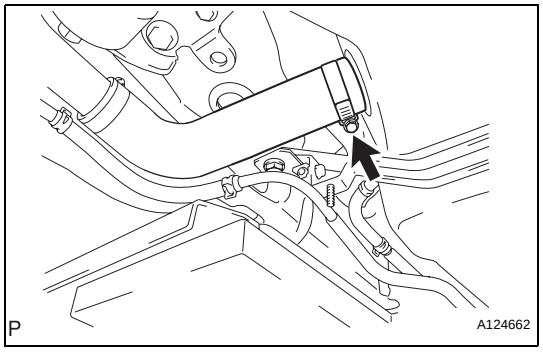

8. DISCONNECT FUEL TANK TO FILLER PIPE HOSE

(a) Disconnect the filler pipe hose from the fuel tank.

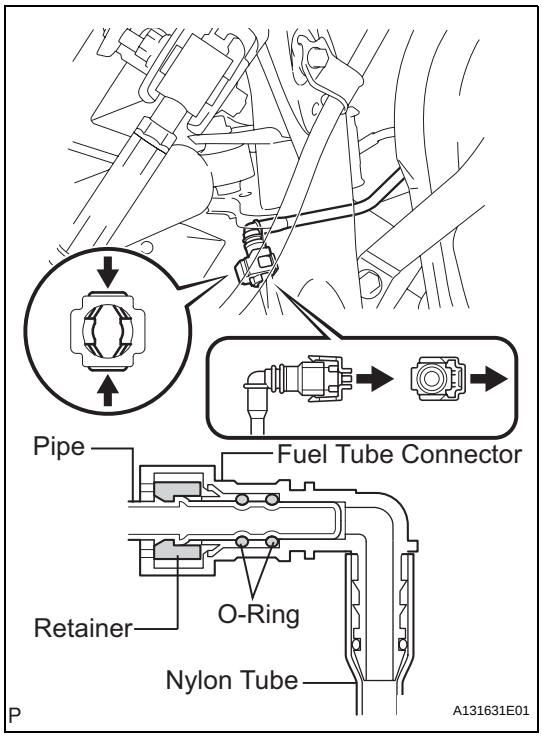

9. DISCONNECT FUEL TANK BREATHER HOSE

(a) Disconnect the breather hose from the fuel tank.

NOTICE:

- **Check for foreign matter in the pipe and around the connector. Clean if necessary. Foreign matter may damage the O-ring or cause leaks in the seal between the pipe and connector.**
- **Do not use any tools to separate the pipe and connector.**
- **Do not forcefully bend or twist the nylon tube.**
- **Check for foreign matter on the pipe seal surface. Clean if necessary.**
- **Put the pipe and connector ends in plastic bags to prevent damage and foreign matter contamination.**
- **If the pipe and connector are stuck together, pinch the connector between your fingers and turn it carefully to disconnect it.**

10. REMOVE FUEL TANK FILLER PIPE

(a) Remove the 3 bolts and filler pipe protector.

(b) Remove the 2 bolts and filler pipe.

11. REMOVE FUEL TANK ASSEMBLY

(a) Set a mission jack underneath the fuel tank.

(b) Remove the 6 bolts and 3 fuel tank bands.

(c) Slightly lower the mission jack.

NOTICE:

Be careful not to cut the wirings.

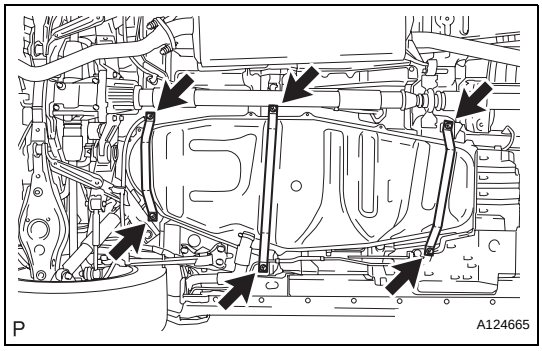

FU

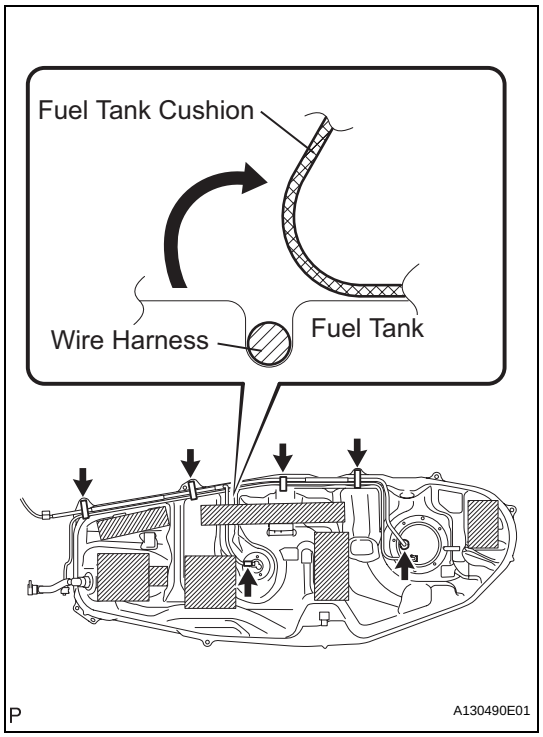

(d) Fold back approximately half of each cushion rubber so that the wire harness can be detached from the fuel tank in the step below.

(e) Disconnect the fuel pump connector and sender gauge connector.
NOTICE:
- **Before this procedure, check the connector for dirt, mud or other contamination.**
- **Do not use any tools in this procedure.**

(f) Detach the wire harness from the 4 clamps and remove the fuel tank.

DISASSEMBLY

1. **REMOVE FUEL TANK MAIN TUBE SUB-ASSEMBLY (See page FU-30)**
2. **REMOVE FUEL TANK VENT TUBE SET PLATE (See page FU-30)**
3. **REMOVE FUEL SUCTION WITH PUMP ASSEMBLY (See page FU-30)**
4. **REMOVE FUEL TANK MAIN TUBE SUB-ASSEMBLY**
   (a) Remove the tube from the fuel tube clamps.
5. **REMOVE NO. 1 FUEL TUBE CLAMP**
   (a) Remove the 4 tube clamps from the fuel tank.

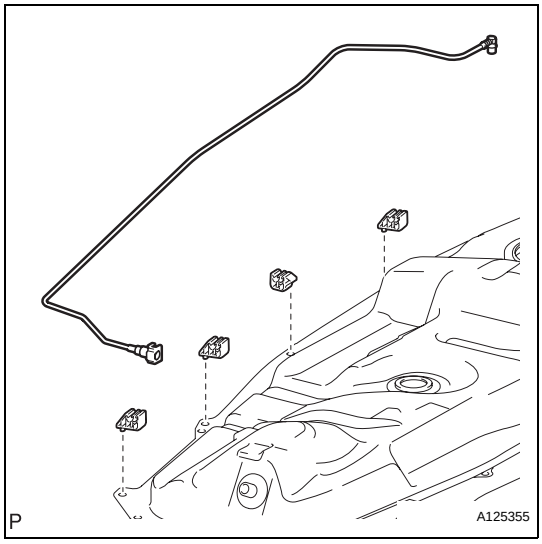

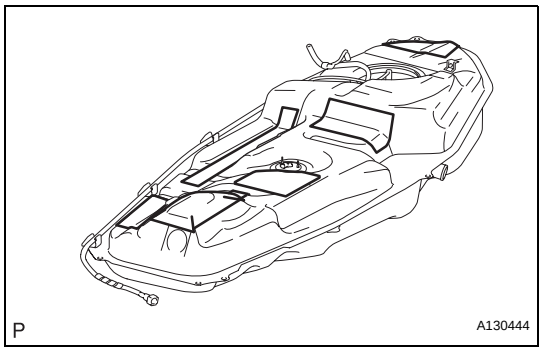

6. **REMOVE NO. 1 FUEL TANK CUSHION**
   (a) Remove the 7 fuel tank cushions from the fuel tank.

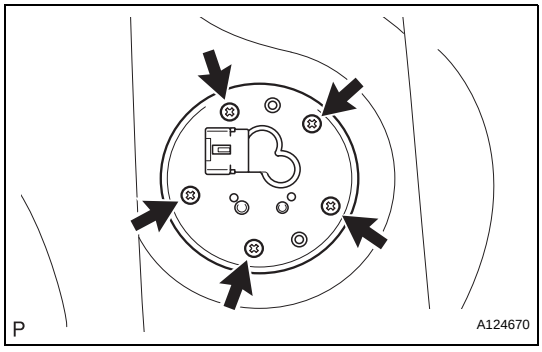

7. **REMOVE FUEL SENDER GAUGE ASSEMBLY**
   (a) Remove the 5 screws and sender gauge.

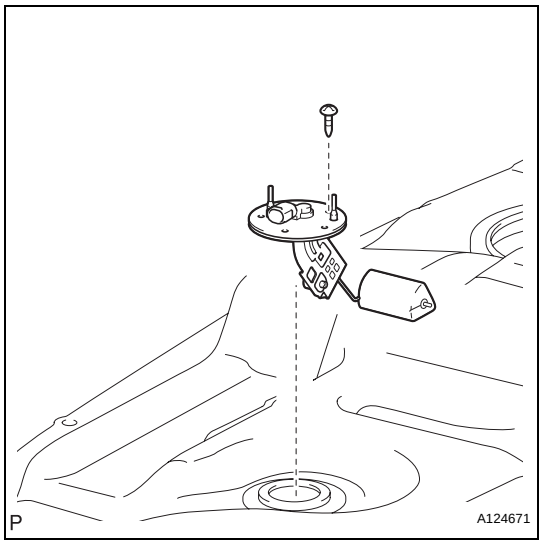

REASSEMBLY

1. **INSTALL FUEL SENDER GAUGE ASSEMBLY**
   (a) Install the sender gauge with the 5 bolts.
   Torque: 1.5 N*m (15 kgf*cm, 13 in.*lbf)

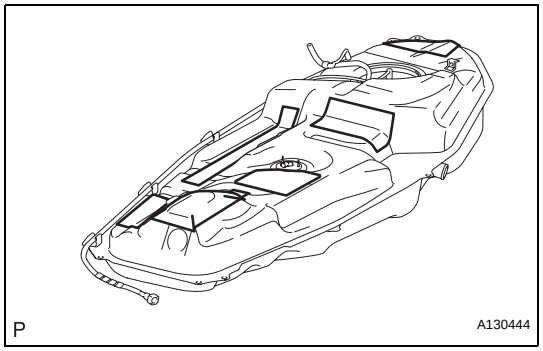

2. **INSTALL NO. 1 FUEL TANK CUSHION**
   (a) Install 7 new fuel tank cushions onto the fuel tank as shown in the illustration.

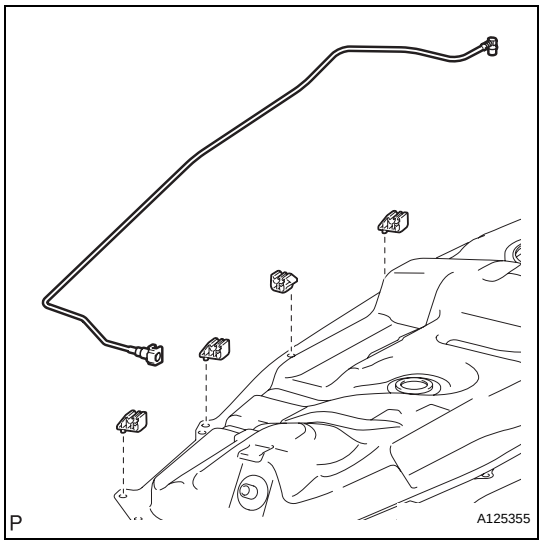

3. **INSTALL NO. 1 FUEL TUBE CLAMP**
   (a) Install the 4 tube clamps to the fuel tank.
4. **INSTALL FUEL TANK MAIN TUBE SUB-ASSEMBLY**
   (a) Install the tube with the 4 clips.
5. **INSTALL FUEL SUCTION WITH PUMP ASSEMBLY (See page FU-36)**
6. **INSTALL FUEL TANK VENT TUBE SET PLATE (See page FU-36)**
7. **INSTALL FUEL TANK MAIN TUBE SUB-ASSEMBLY (See page FU-37)**

FU

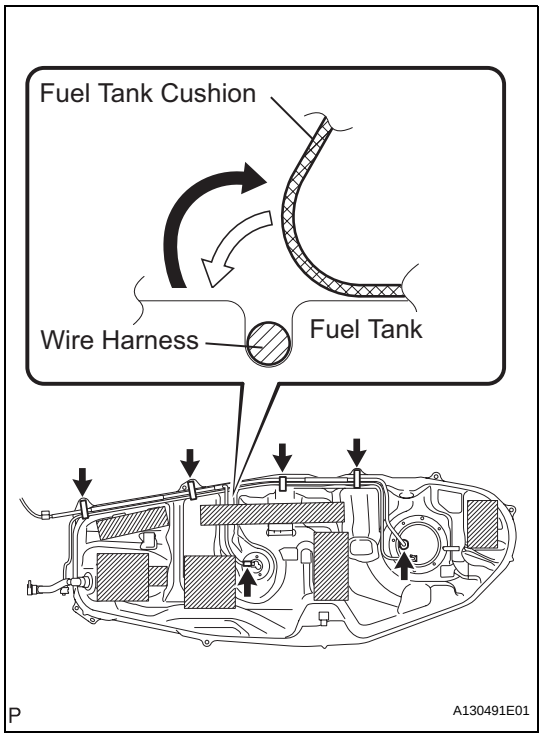

INSTALLATION

1. INSTALL FUEL TANK ASSEMBLY

(a) Set the fuel tank on a mission jack.
(b) Lift up the mission jack.
(c) Fold back the 2 cushion rubbers.
(d) Connect the fuel pump connector and sender gauge connector to the fuel tank.
NOTICE:
Be careful not to cut the wirings.
(e) Attach the wire harness to the 4 clamps.

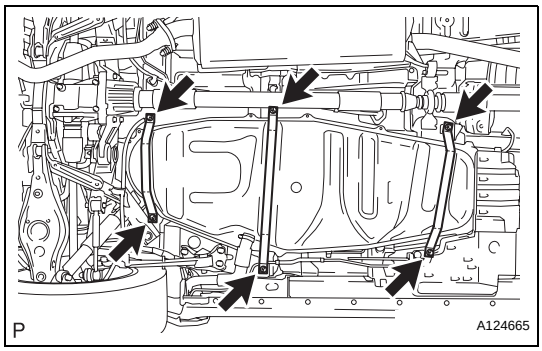

(f) Install the 3 fuel tank bands with the 6 bolts.
Torque: 40 N*m (408 kgf*cm, 30 ft.*lbf)

2. INSTALL FUEL TANK FILLER PIPE

(a) Install the filler pipe with the 2 bolts.
Torque: 23.5 N*m (240 kgf*cm, 17 ft.*lbf)
(b) Install the filler pipe protector with the 3 bolts.

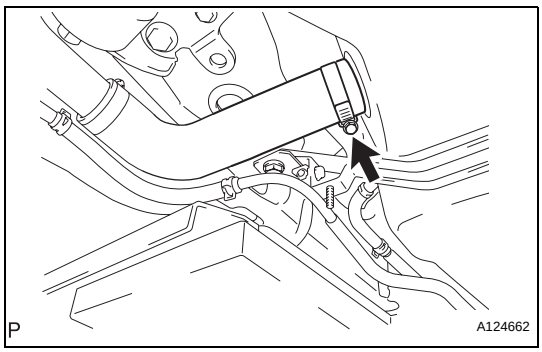

3. CONNECT FUEL TANK TO FILLER PIPE HOSE

(a) Connect the filler pipe hose to the fuel tank.

FU

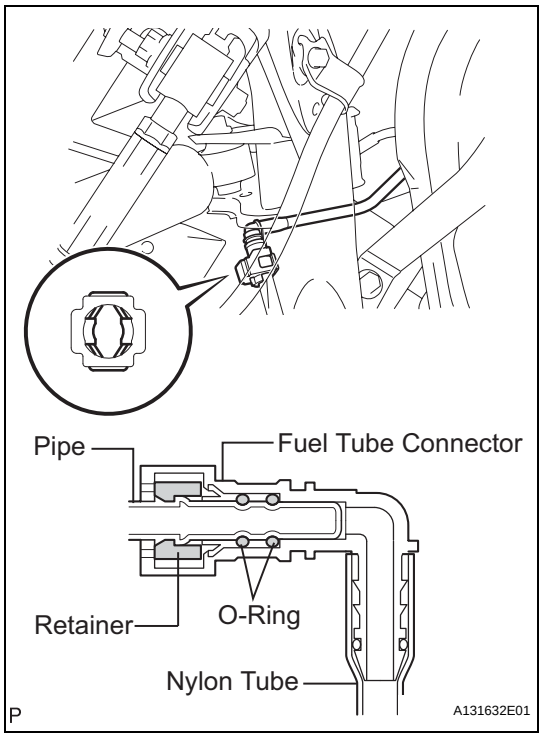

4. CONNECT FUEL TANK BREATHER HOSE

(a) Connect the fuel tank breather hose to the fuel tank.
NOTICE:
- **Before installing the tube connector to the pipe, check the connector for damage and foreign matter.**
- **Check that the connector and pipe is securely connected by trying to pull them apart.**

5. CONNECT FUEL TANK MAIN TUBE SUB-ASSEMBLY
NOTICE:
Before installing the tube connector to the pipe, check the connector for damage and foreign matter.

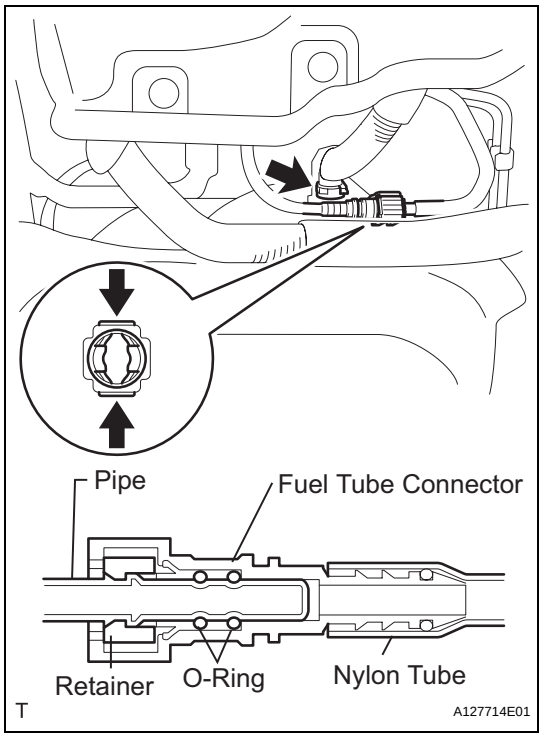

(a) Connect the main tube connector to the pipe. Push the 2 parts together firmly until a "click" sound is heard.
NOTICE:
Check that the connector and pipe are securely connected by trying to pull them apart.
(b) Connect the EVAP hose to the fuel tank.

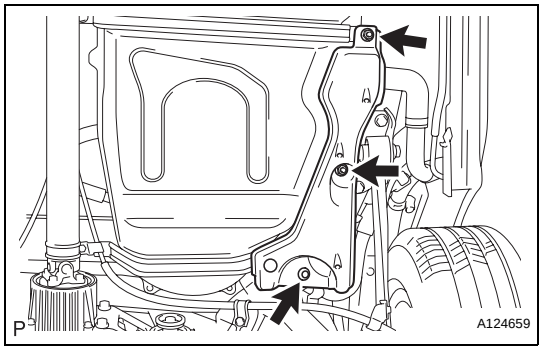

6. INSTALL NO. 1 FLOOR UNDER COVER

(a) Install the floor cover with the clip and 2 nuts.

7. INSTALL FRONT FLOOR COVER

(a) Install the floor under cover with the 3 clips, bolt and nut.

FU

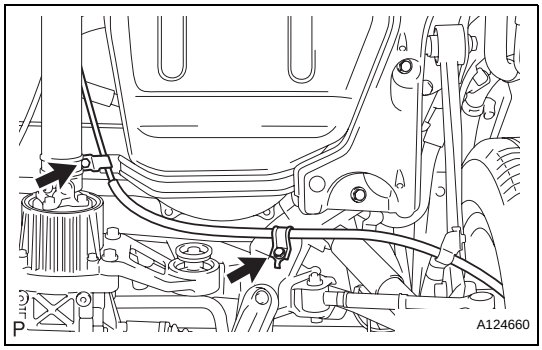

8. **INSTALL NO. 2 PARKING BRAKE CABLE ASSEMBLY**
   (a) Install the parking brake cable with the 2 bolts.
9. **INSTALL FUEL TANK CAP**
10. **CONNECT CABLE TO NEGATIVE BATTERY TERMINAL**
11. **CHECK FOR FUEL LEAKS (See page FU-14)**

FUEL TANK

COMPONENTS

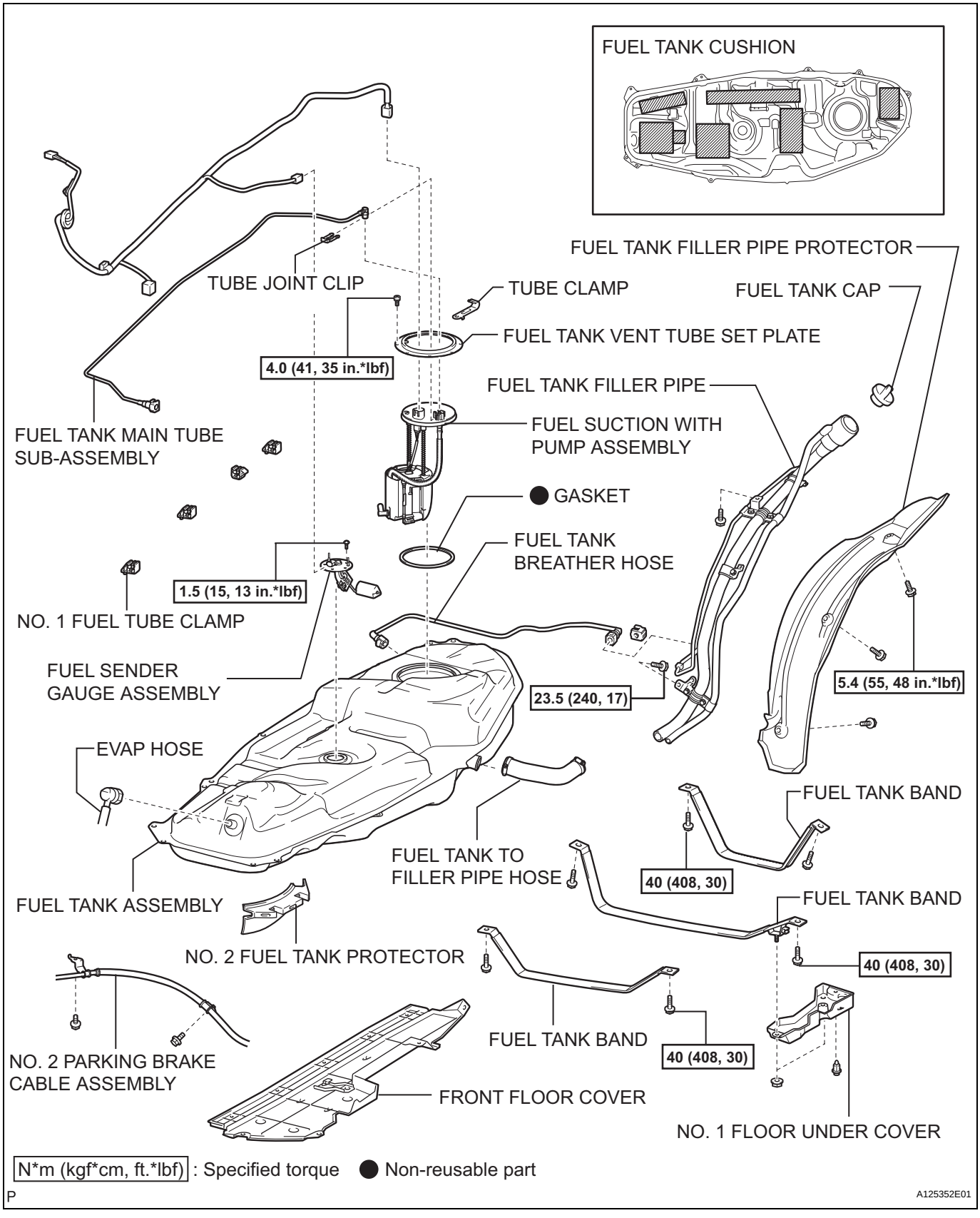

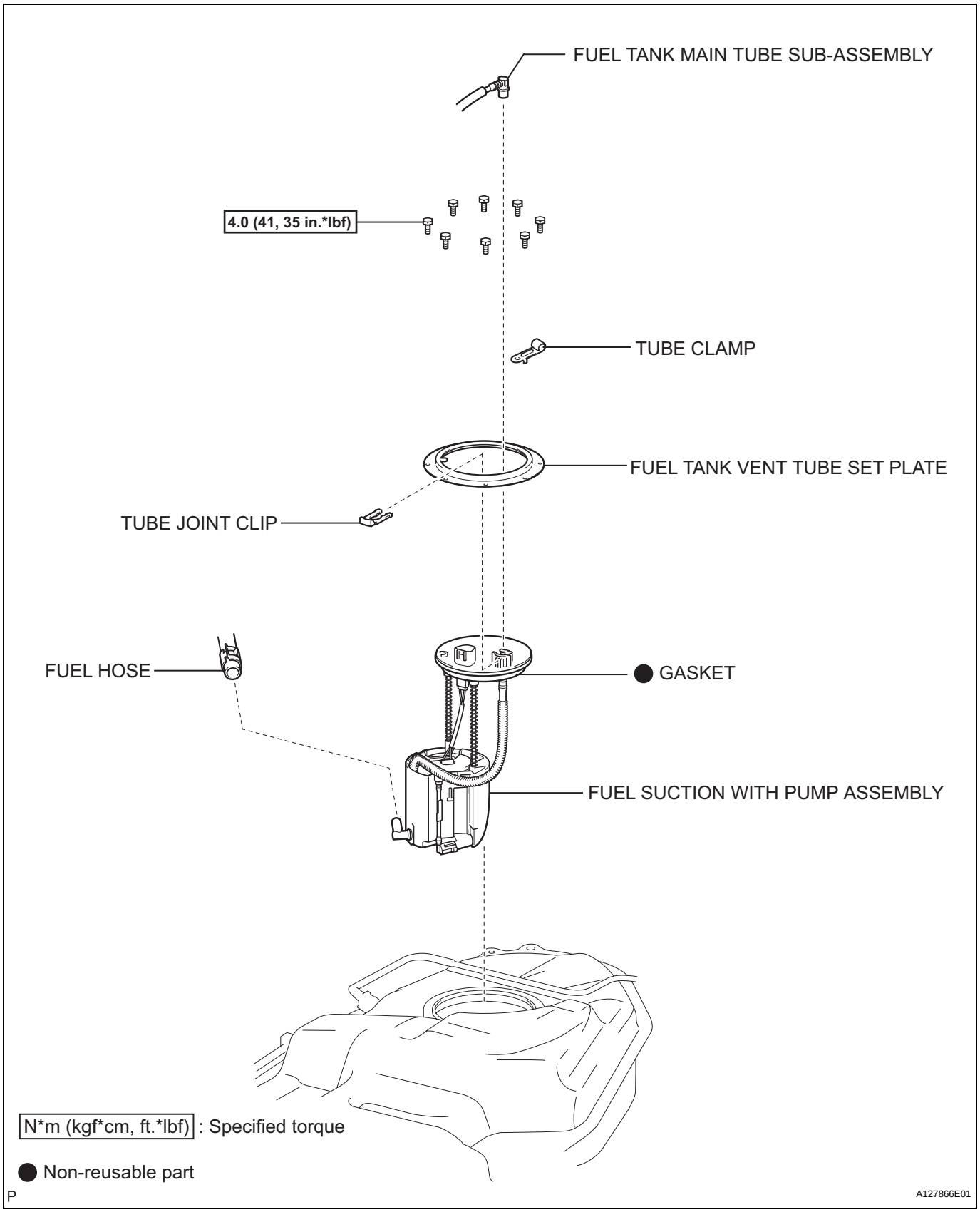
FUEL TANK MAIN TUBE SUB-ASSEMBLY
4.0 (41, 35 in.*lbf)
TUBE CLAMP
FUEL TANK VENT TUBE SET PLATE
TUBE JOINT CLIP
FUEL HOSE
GASKET
FUEL SUCTION WITH PUMP ASSEMBLY
N*m (kgf*cm, ft.*lbf) : Specified torque
Non-reusable part
P
A127866E01

IGNITION COIL

COMPONENTS

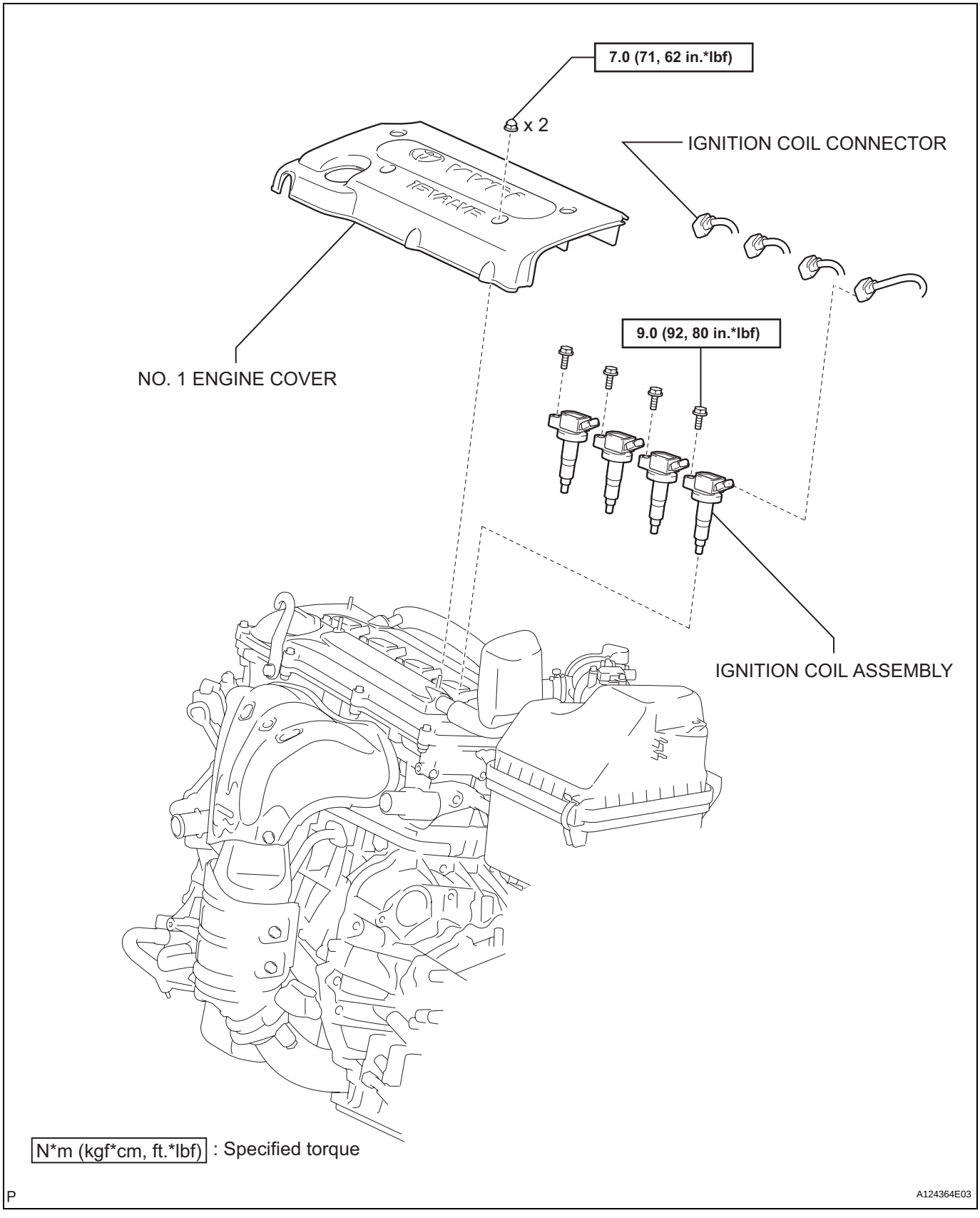

REMOVAL

1. **DISCONNECT CABLE FROM NEGATIVE BATTERY TERMINAL**
   CAUTION:
   Wait at least 90 seconds after disconnecting the cable from the negative (-) battery terminal to prevent airbag and seat belt pretensioner activation.
2. **REMOVE NO. 1 ENGINE COVER (See page ES-410)**
3. **REMOVE IGNITION COIL ASSEMBLY**
   (a) Disconnect the 4 ignition coil connectors.
   (b) Remove the 4 bolts and 4 ignition coils.

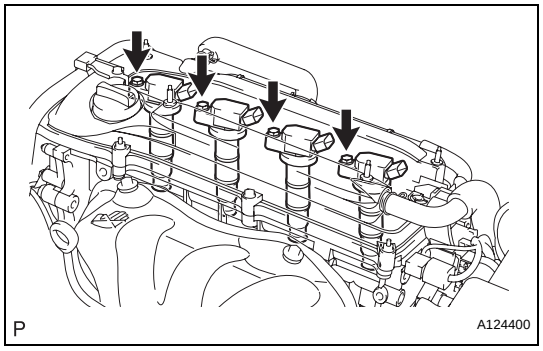

INSTALLATION

1. **INSTALL IGNITION COIL ASSEMBLY**
   (a) Install the 4 ignition coils with the 4 bolts.
   Torque: 9.0 N*m (92 kgf*cm, 80 in.*lbf)
   (b) Connect the 4 ignition coil connectors.
2. **INSTALL NO. 1 ENGINE COVER (See page ES-414)**
3. **CONNECT CABLE TO NEGATIVE BATTERY TERMINAL**

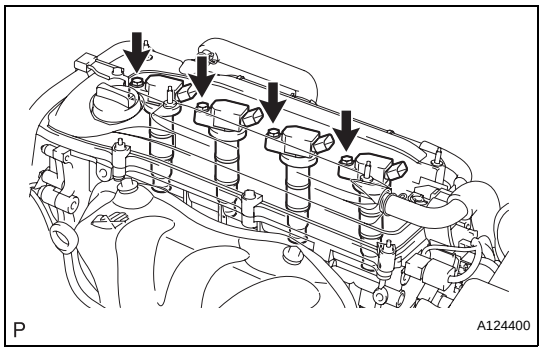

SYSTEM DIAGRAM

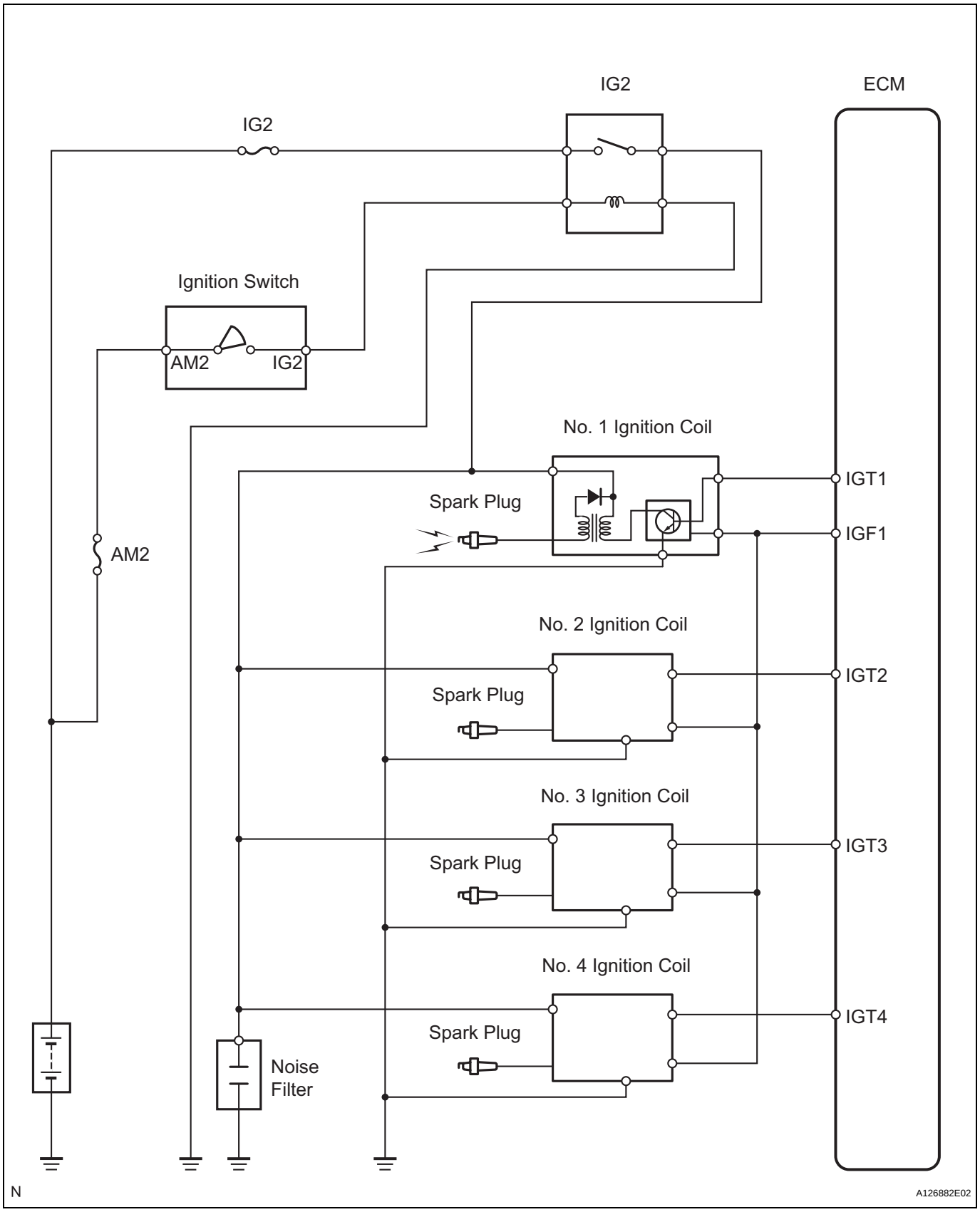

IG

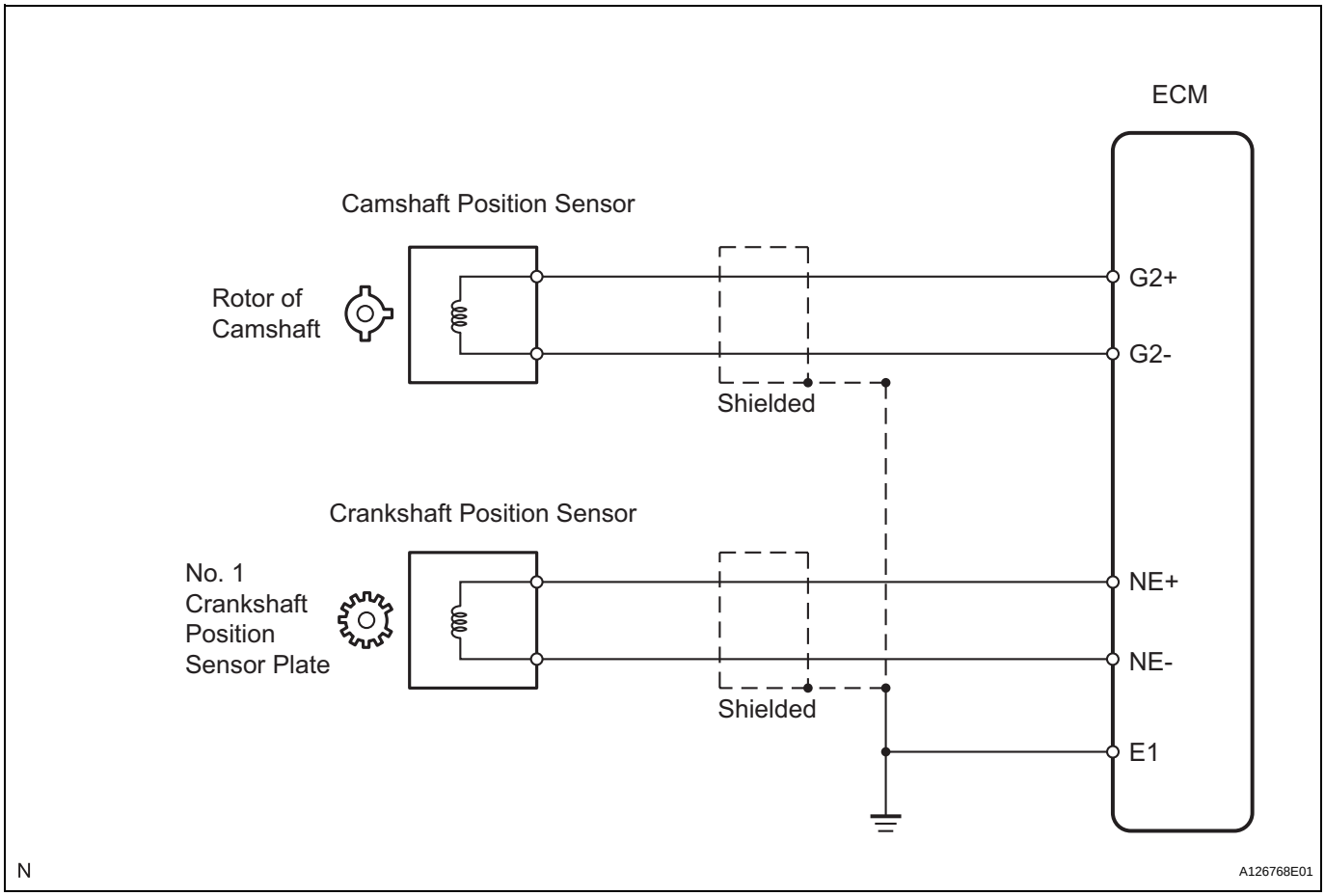
ECM
Camshaft Position Sensor
Rotor of Camshaft
G2+
G2-
Shielded
Crankshaft Position Sensor
No. 1 Crankshaft Position Sensor Plate
NE+
NE-
Shielded
E1
N
A126768E01

ON-VEHICLE INSPECTION

1. CHECK IGNITION COIL ASSEMBLY AND PERFORM SPARK TEST

NOTICE:

In this section, the terms "cold" and "hot" refer to the temperature of the coils. "Cold" means approximately -10 to 50°C (14 to 122°F). "Hot" means approximately 50 to 100°C (122 to 212°F).

(a) Check the DTCs.

NOTICE:

If a DTC is present, perform troubleshooting in accordance with the procedure for that DTC.

(b) Check that sparks occur.

(1) Remove the No. 1 engine cover.

(2) Remove the bolt and ignition coil.

(3) Using a 16 mm spark plug wrench, remove the spark plug.

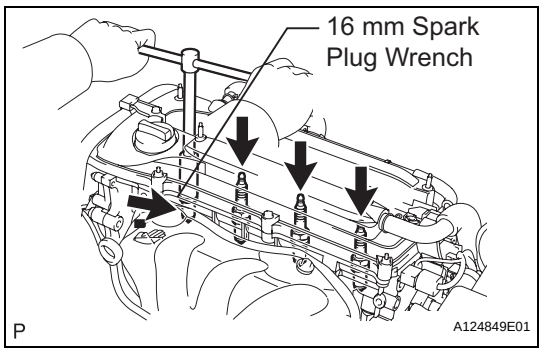

(4) Disconnect the 4 fuel injector connectors.

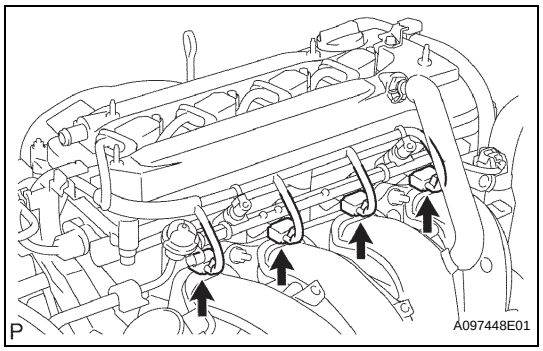

(5) Install the spark plug into the ignition coil, and then connect the ignition coil connectors.

(6) Ground the spark plug.

(7) Check that sparks occur at the spark plug while the engine is being cranked.

NOTICE:

- **Be sure to ground the spark plugs when checking them.**
- **If the ignition coil has been struck or dropped, replace it.**
- **Do not crank the engine for more than 2 seconds.**

If sparks do not occur, Perform the spark test.

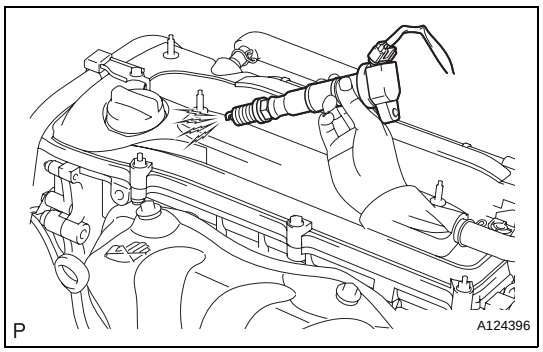

(8) Using a 16 mm plug wrench, install the spark plug.

Torque: 25 N*m (254 kgf*cm, 18 ft.*lbf)

IG

(9) Install the ignition coil with the bolt.
Torque: 9.0 N*m (92 kgf*cm, 80 in.*lbf)
(10) Connect the 4 fuel injector connectors.
(11) Install the No. 1 engine cover.

(c) Spark test flow chart.

(1) Check that the ignition coil connector is securely connected.
Result

Result	Proceed to
NG	Connect securely
OK	Go to next step

(2) Perform the spark test on each ignition coil.
1. Replace the ignition coil with a normal one.
2. Perform the spark test again.
Result

Result	Proceed to
OK	Replace ignition coil
NG	Go to next step

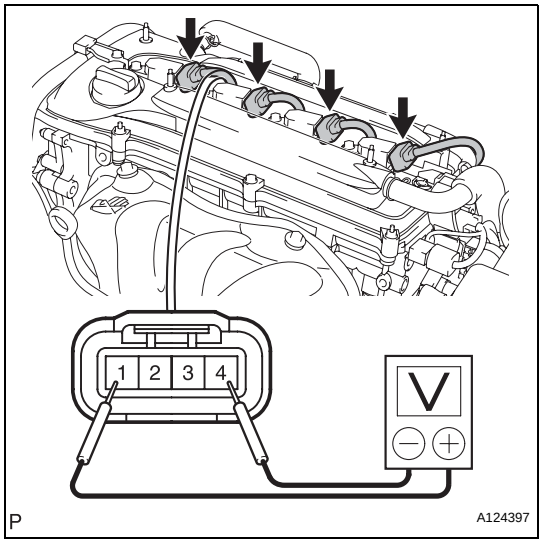

(3) Check the power supply to the ignition coil.
1. Disconnect the ignition coil connector.
2. Turn the ignition switch ON.
3. Measure the voltage of the wire harness side connector.
Standard voltage

Tester Connection	Specified Condition
1 (+B) - 4 (GND)	9 to 14 V

Result

Result	Proceed to
NG	Check wire harness and connector
OK	Go to next step

(4) Check the resistance of the camshaft position sensor.
Standard resistance

Temperature Condition	Specified Condition
Cold	835 to 1,400 Ω
Hot	1,060 to 1,645 Ω

Result

Result	Proceed to
NG	Replace camshaft position sensor
OK	Go to next step

(5) Check the resistance of the crankshaft position sensor.
Standard resistance

Temperature Condition	Specified Condition
Cold	985 to 1,600 Ω
Hot	1,265 to 1,890 Ω

Result

Result	Proceed to
NG	Replace crankshaft position sensor
OK	Go to next step

(6) Check the IGT signal from the ECM.
Result

Result	Proceed to
NG	Check ECM (see page ES-183)
OK	Repair wiring between ignition coil and ECM

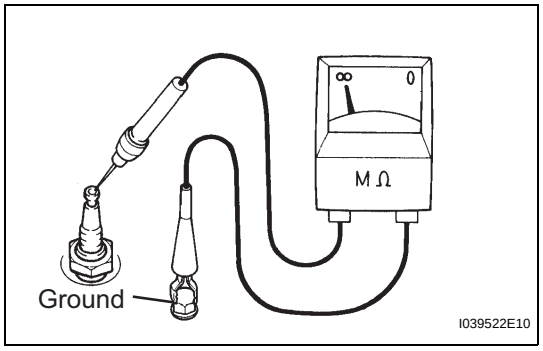

2. CHECK SPARK PLUG

(a) Check the electrode.
(1) Using a megohmmeter, measure the insulation resistance.
Standard insulation resistance:
10 MΩ or more
HINT:
- If a megohmmeter is not available, perform the following simple inspection instead.
- If the result is 10 MΩ or less, clean the plug and measure the resistance again.

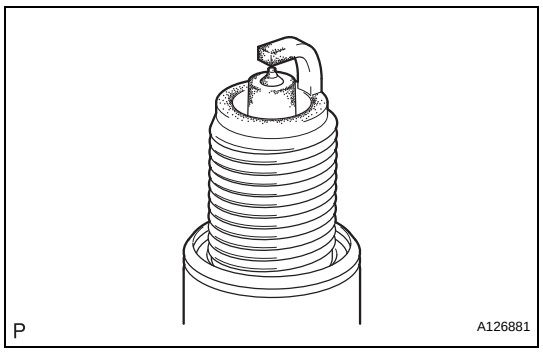

(b) Alternative inspection method:
(1) Quickly accelerate the engine to 4,000 rpm 5 times.
(2) Remove the spark plug.
(3) Visually check the spark plug.
If the electrode is dry, the spark plug is functioning properly. If the electrode is damp, proceed to the next step.

(c) Check the spark plug for any damage on its threads and insulator.
If there is damage, replace the spark plug.
Recommended spark plug

Manufacturer	Spark plug type
DENSO	SK20R11
NGK	IFR6A11

(d) Check the spark plug electrode gap.
Maximum electrode gap for used spark plug:
1.3 mm (0.051 in.)
If the gap is greater than the maximum, replace the spark plug.
Electrode gap for new spark plug:
1.0 to 1.1 mm (0.039 to 0.043 in.)

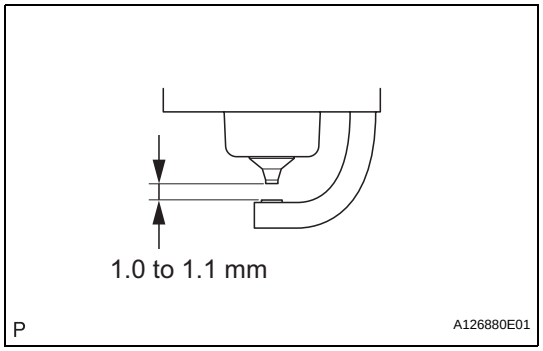

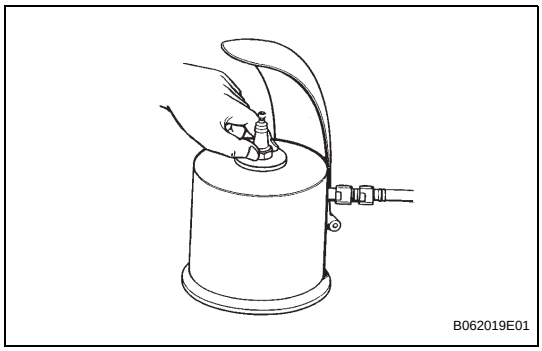

(e) Clean the spark plugs.
If the electrode has traces of wet carbon, clean the electrode with a spark plug cleaner and then dry it.
Standard air pressure:
588 kPa (6 kgf*cm^2, 85 psi)
Standard duration:
20 seconds or less
HINT:
Only use the spark plug cleaner when the electrode is free of oil. If the electrode has traces of oil, use gasoline to clean off the oil before using the spark plug cleaner.

IGNITION SYSTEM

PARTS LOCATION

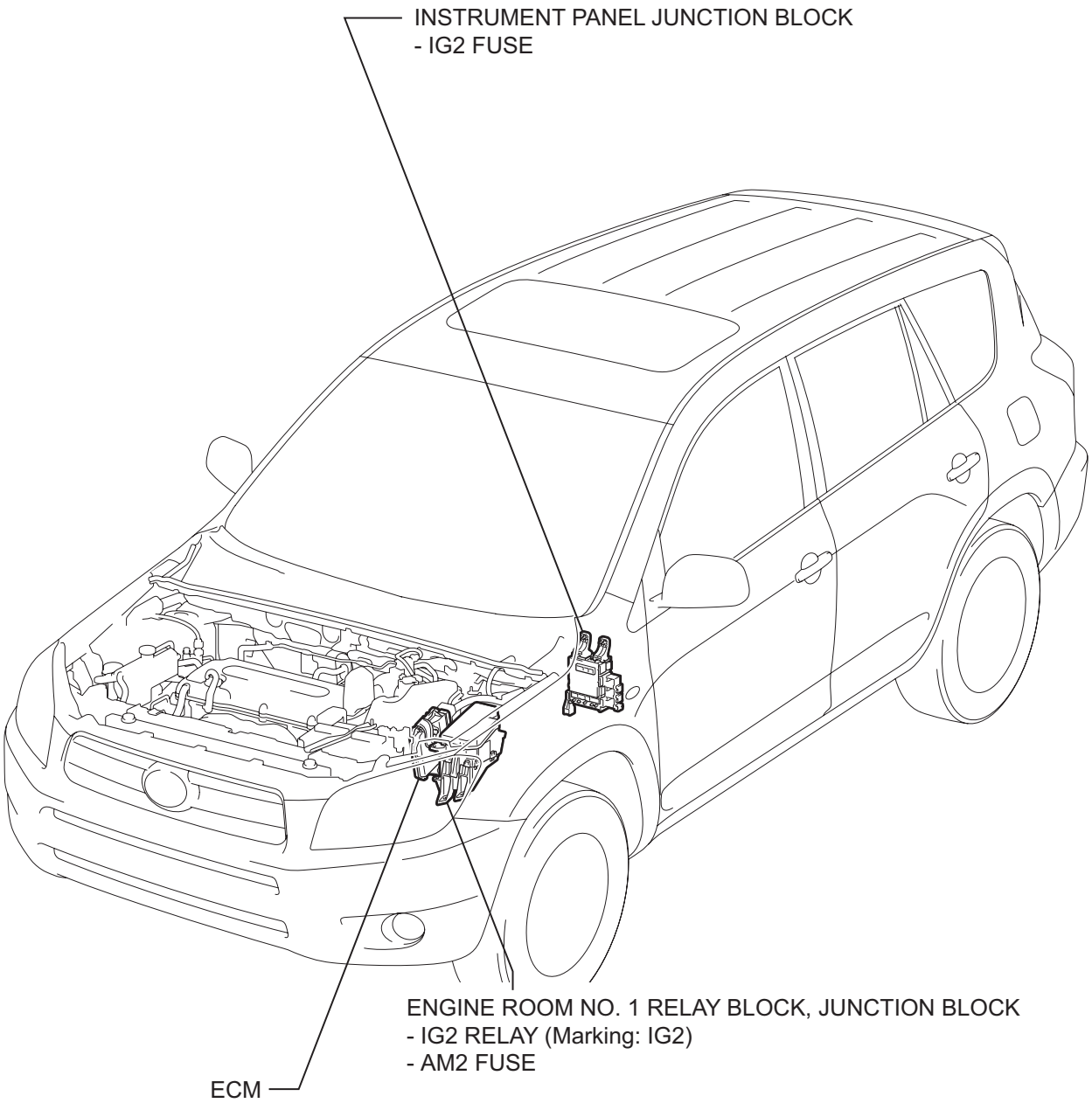

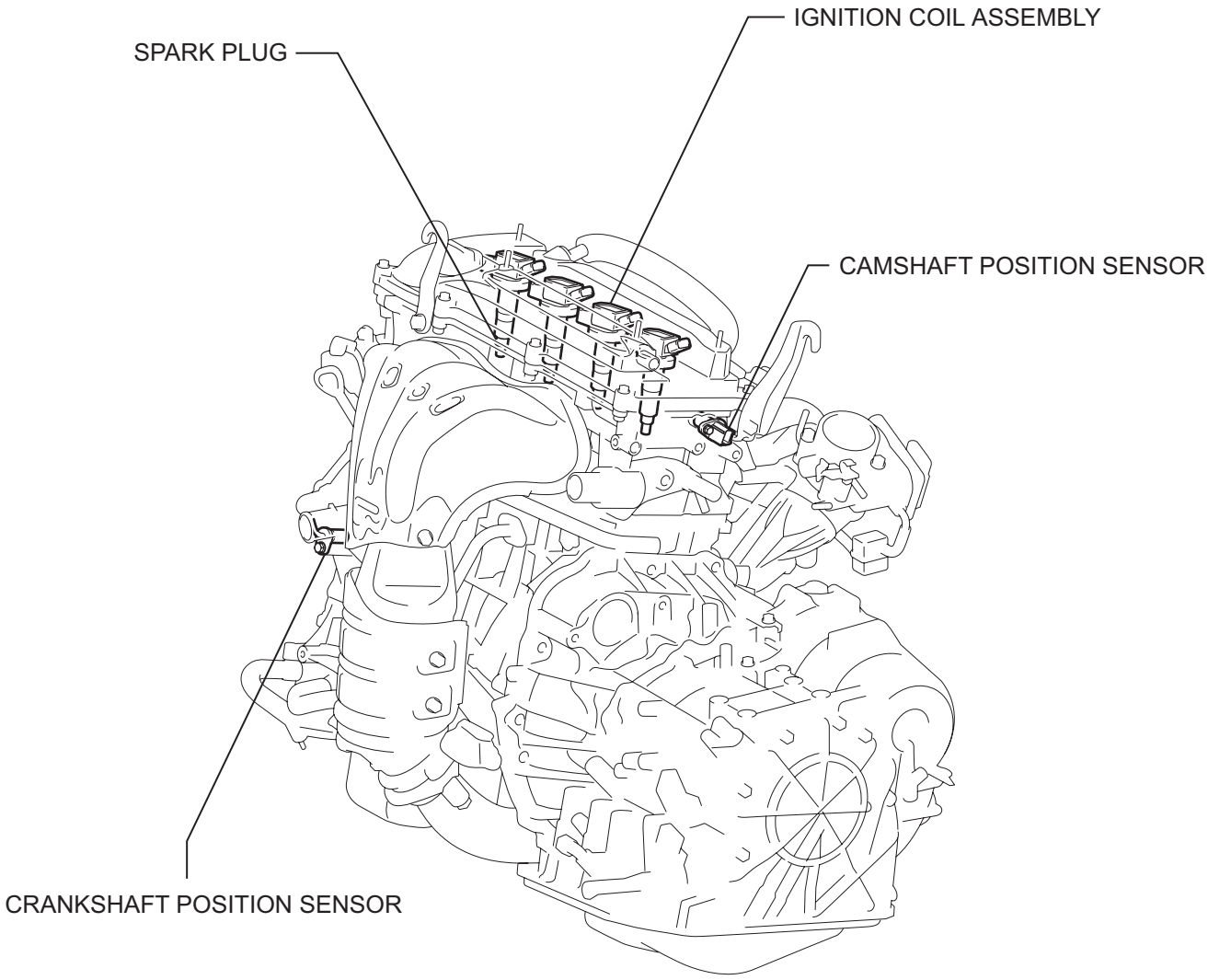

P

A124848E03

LUBRICATION SYSTEM

ON-VEHICLE INSPECTION

1. CHECK ENGINE OIL LEVEL

(a) Warm up the engine, stop the engine and wait for 5 minutes.

(b) Check that the engine oil level is between the L and F marks of the oil dipstick.
If low, check for leakage and add oil up to the F mark.
NOTICE:
Do not add engine oil above the F mark.

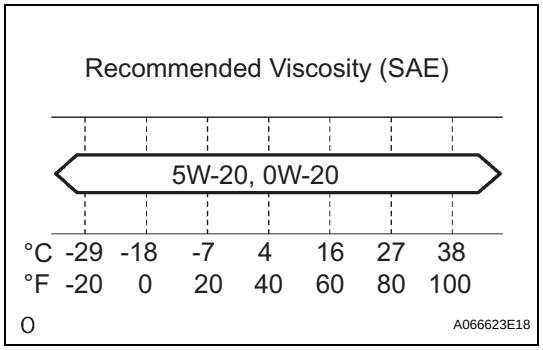

2. CHECK ENGINE OIL QUALITY

(a) Check the oil for deterioration, water intrusion, discoloration or thinning.
If the quality is visibly poor, replace the oil.
Oil grade:
Use API grade SL "Energy-Conserving" or ILSAC multigrade engine oil. SAE 5W-20 and SAE 0W-20 engine oil may be used. However, SAE0W-20 is the best choice for good fuel economy and good starting in cold weather.

3. CHECK OIL PRESSURE

(a) Disconnect the oil pressure switch connector.

(b) Using a 24 mm deep socket wrench, remove the oil pressure switch.

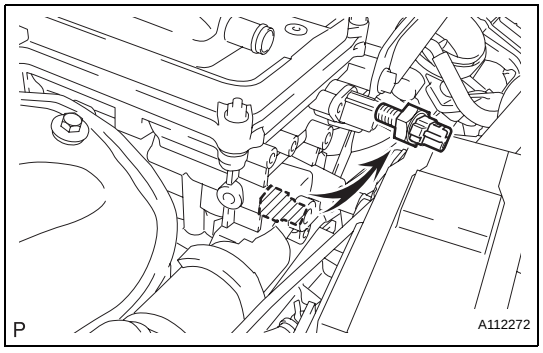

(c) Install the oil pressure gauge.

(d) Warm up the engine.

(e) Measure the oil pressure.
Standard oil pressure

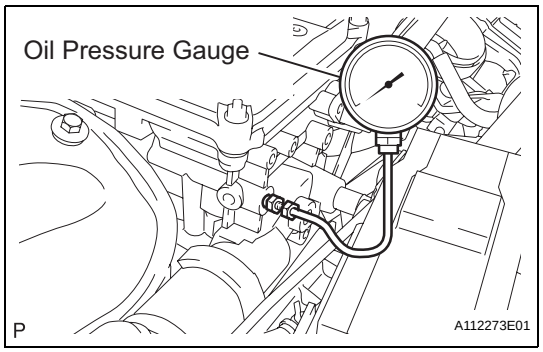

Condition	Specified Condition
Idle	29 kPa (0.3 kgf/cm^2, 4.3 psi) or more
3,000 rpm	160 to 539 kPa (1.6 to 5.5 kgf/cm^2, 23 to 78 psi)

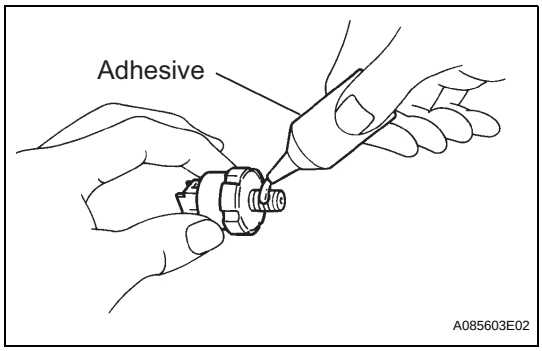

(f) Apply adhesive to 2 or 3 threads of the oil pressure switch.
Adhesive:
TOYOTA Genuine Adhesive 1344, Three Bond 1344 or Equivalent

(g) Using a 24 mm deep socket wrench, install the oil pressure switch.
Torque: 15 N*m (153 kgf*cm, 11 ft.*lbf)
NOTICE:
Do not start the engine within 1 hour of installation.

(h) Connect the oil pressure switch connector.

(i) Check for engine oil leakage.

OIL FILTER

COMPONENTS

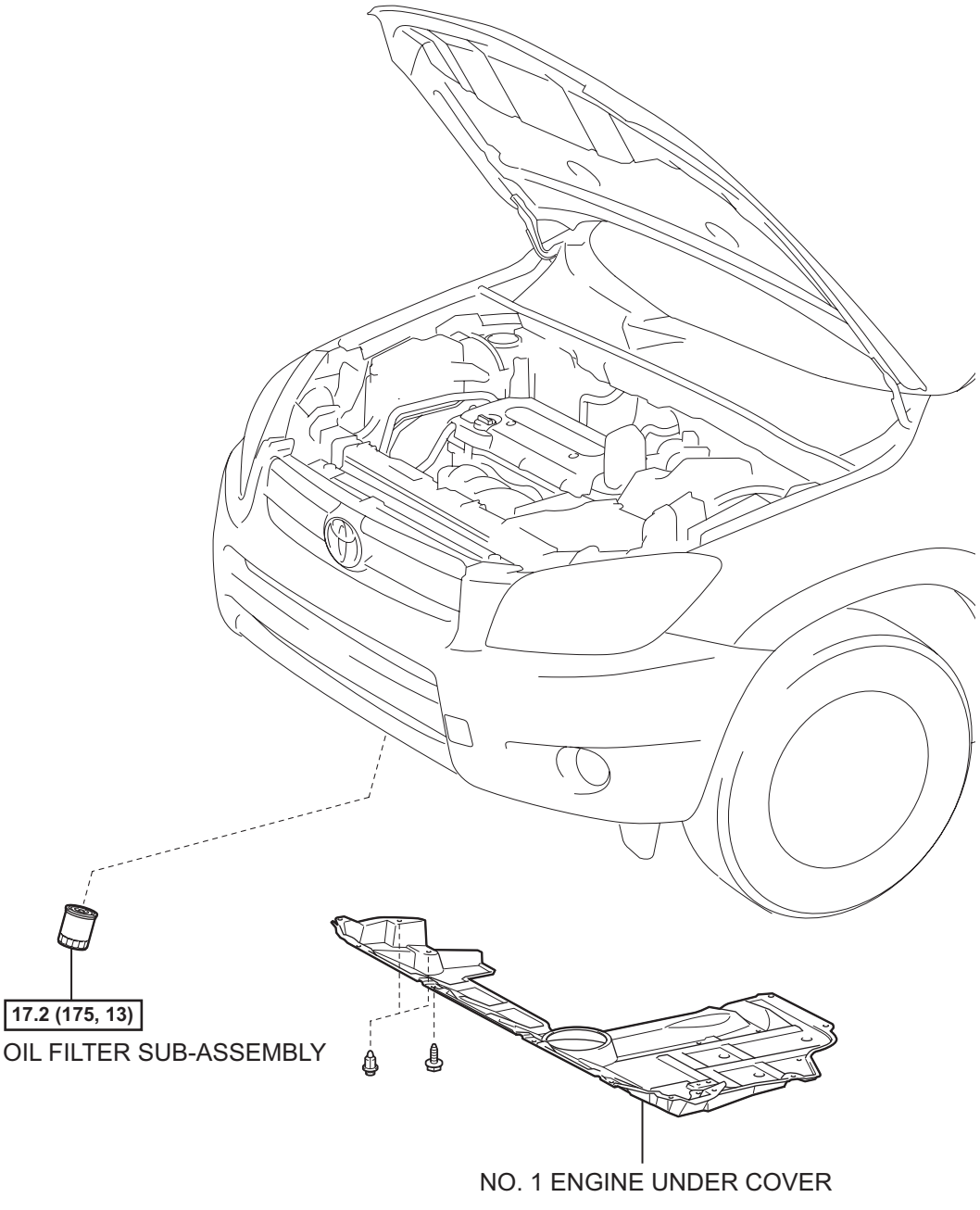

N*m (kgf*cm, ft.*lbf) : Specified torque

P

A114354E02

REPLACEMENT

CAUTION:

- **Prolonged and repeated contact with engine oil will cause the loss of natural oils from the skin, leading to dryness, irritation and dermatitis. In addition, used engine oil contains potentially harmful contaminants which may cause skin cancer.**
- **Precautions should be taken when replacing engine oil to minimize the risk of your skin making contact with used engine oil. Wear protective clothing and gloves. Wash your skin thoroughly with soap and water, or use a waterless hand cleaner to remove any used engine oil. Do not use gasoline, thinners or solvents.**
- **For environmental protection, used oil and used oil filters must be disposed of at designated disposal sites.**

1. REMOVE NO. 1 ENGINE UNDER COVER

2. DRAIN ENGINE OIL

(a) Remove the oil filler cap.

(b) Remove the oil drain plug and drain the oil into a container.

3. REMOVE OIL FILTER SUB-ASSEMBLY

(a) Using SST, remove the oil filter.
SST 09228-06501

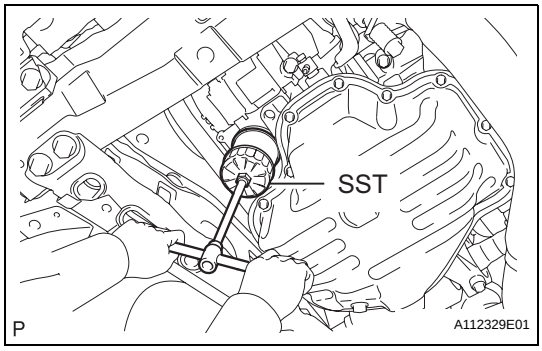

4. INSTALL OIL FILTER SUB-ASSEMBLY

(a) Check and clean the oil filter installation surface.

(b) Apply clean engine oil to the gasket of a new oil filter.

(c) Lightly screw the oil filter into place by hand. Tighten it until the gasket contacts the seat.

(d) Using SST, tighten the oil filter.
SST 09228-06501

(1) Depending on the work space available, choose from the following.
1. If enough space is available, use a torque wrench to tighten the oil filter.
Torque: 17.2 N*m (175 kgf*cm, 13 ft.*lbf)
2. If enough space is not available to use a torque wrench, tighten the oil filter a 3/4 turn by hand or use a common wrench.

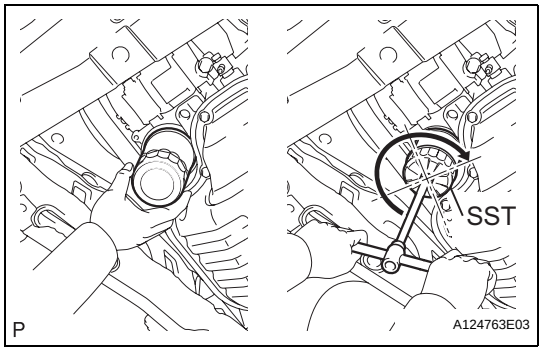

5. ADD ENGINE OIL

(a) Clean and install the oil drain plug with a new gasket.
Torque: 40 N*m (408 kgf*cm, 30 ft.*lbf)

LU

(b) Add new oil.
Standard capacity

Item	Standard Condition
Drain and refill with oil filter change	4.3 liters (4.5 US qts, 3.8 Imp. qts)
Drain and refill without oil filter change	4.1 liters (4.3 US qts, 3.6 Imp. qts)
Dry fill	5.0 liters (5.3 US qts, 4.4 Imp. qts)

(c) Install the oil filler cap.

6. CHECK FOR ENGINE OIL LEAKS

7. INSTALL NO. 1 ENGINE UNDER COVER

REMOVAL

1. REMOVE CHAIN SUB-ASSEMBLY

(a) Remove the chain (see page EM-22).

2. REMOVE OIL PUMP ASSEMBLY

(a) Remove the 3 bolts, oil pump and gasket.

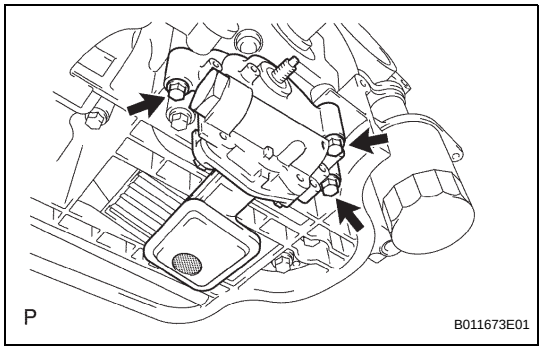

DISASSEMBLY

1. REMOVE OIL PUMP STRAINER

(a) Remove the 2 nuts, oil pump strainer and gasket.

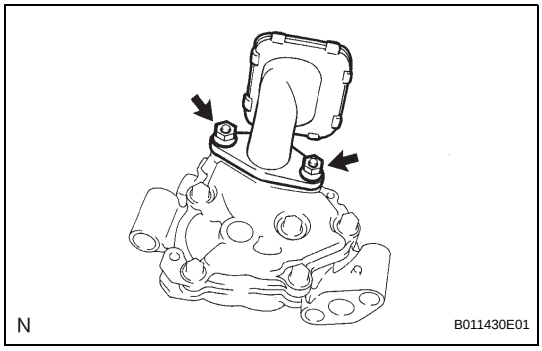

2. REMOVE OIL PUMP RELIEF VALVE

(a) Using a 27 mm socket wrench, remove the plug.

(b) Remove the valve spring and relief valve.

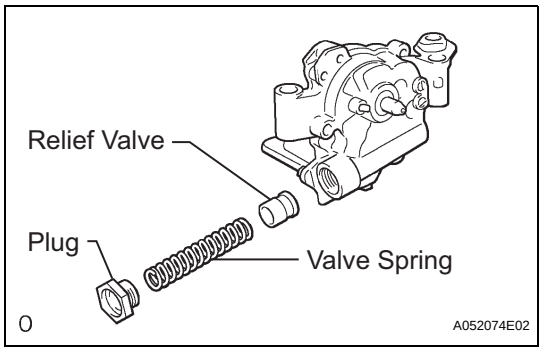

3. REMOVE OIL PUMP COVER

(a) Remove the 5 bolts and oil pump cover.

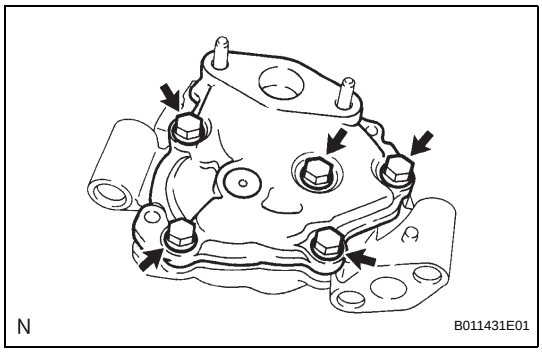

LU

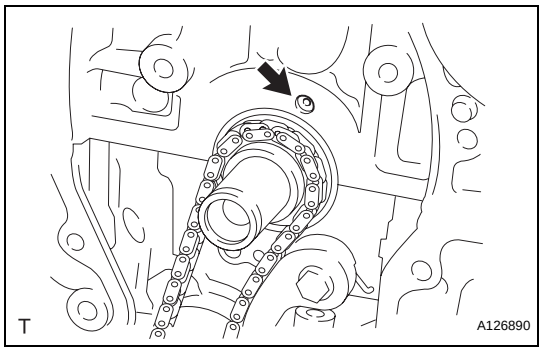

INSPECTION

1. INSPECT OIL JET

(a) Check the oil jet for damage or clogging.
If necessary, repair the cylinder block.

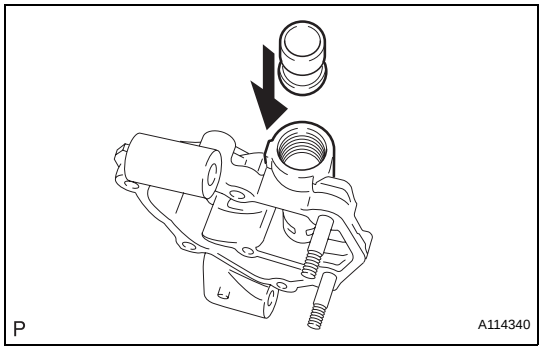

2. INSPECT OIL PUMP RELIEF VALVE

(a) Check the relief valve.
(1) Coat the valve with engine oil, and then check that the valve falls smoothly into the valve hole by its own weight.
If it does not, replace the relief valve. If necessary, replace the oil pump assembly.

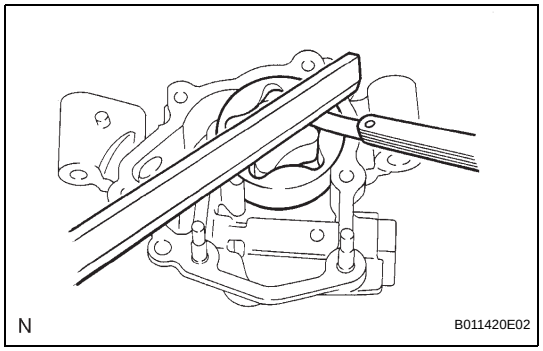

3. INSPECT OIL PUMP ROTOR

(a) Check the side clearance.
(1) Using a feeler gauge and precision straightedge, measure the clearance between the rotors and precision straightedge.
Standard clearance:
0.030 to 0.085 mm (0.0012 to 0.0033 in.)
Maximum clearance:
0.16 mm (0.0063 in.)
If the side clearance is greater than the maximum, replace the oil pump assembly.

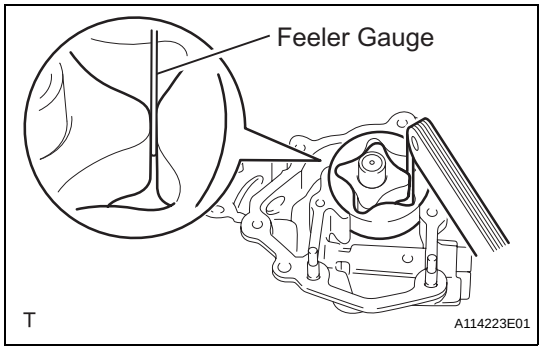

(b) Check the tip clearance.
(1) Using a feeler gauge, measure the clearance between the drive and driven rotor tips.
Standard clearance:
0.080 to 0.160 mm (0.0031 to 0.0063 in.)
Maximum clearance:
0.35 mm (0.0138 in.)
If the tip clearance is greater than the maximum, replace the oil pump assembly.

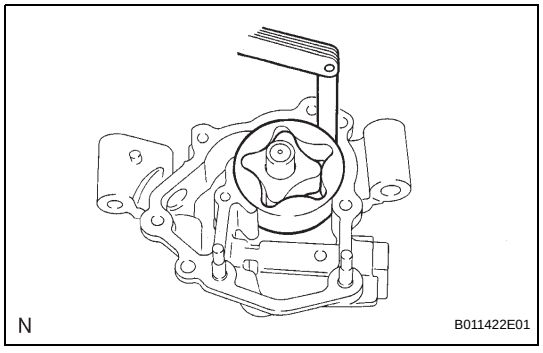

(c) Check the body clearance.
(1) Using a feeler gauge, measure the clearance between the driven rotor and pump body.
Standard clearance:
0.100 to 0.170 mm (0.0039 to 0.0067 in.)
Maximum clearance:
0.325 mm (0.01128 in.)
If the body clearance is greater than the maximum, replace the oil pump assembly.

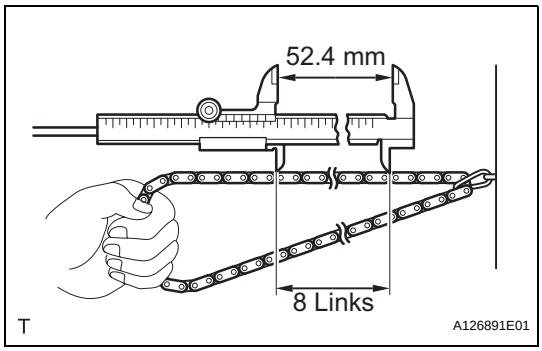

4. INSPECT OIL PUMP DRIVE CHAIN AND 2 OIL PUMP SPROCKETS

(a) Using vernier calipers, measure the length of the 8 links with the chain fully stretched.

Maximum chain elongation:

52.4 mm (2.063 in.)

If the elongation is greater than the maximum, replace the chain.

HINT:

Make the measurements at 3 or more places selected at random.

(b) Wrap the chain around the oil pump sprocket.

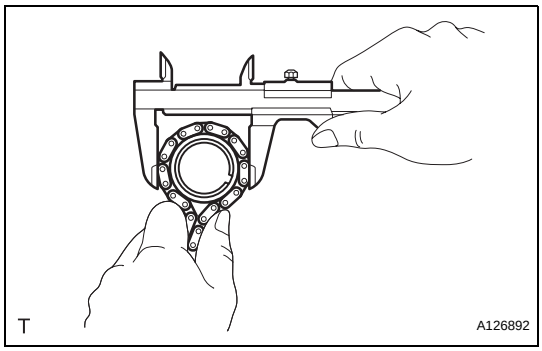

(c) Using vernier calipers, measure the sprocket diameter with the chain.

NOTICE:

Vernier calipers must contact the chain rollers when measuring.

Minimum sprocket diameter (with chain):

Crankshaft 48.2 mm (1.898 in.)

Oil pump drive shaft 48.2 mm (1.898 in.)

If the diameter is less than the minimum, replace the chain and sprockets.

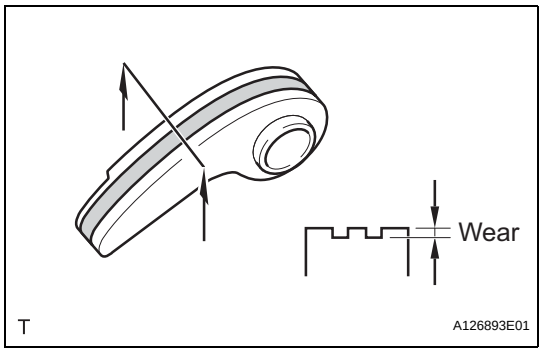

5. INSPECT CHAIN TENSIONER PLATE

(a) Measure the chain tensioner plate wear.

Maximum wear:

0.5 mm (0.020 in.)

If the wear is greater than the maximum, replace the chain tensioner plate.

REASSEMBLY

1. INSTALL OIL PUMP ROTOR

(a) Coat the drive rotor and driven rotor with engine oil.

(b) Place the drive and driven rotors into the oil pump with the marks facing the pump cover side.

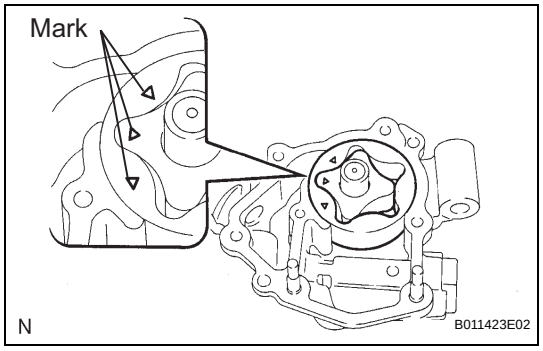

2. INSTALL OIL PUMP COVER

(a) Install the oil pump cover with the 5 bolts.
Torque: 8.8 N*m (90 kgf*cm, 78 in.*lbf)

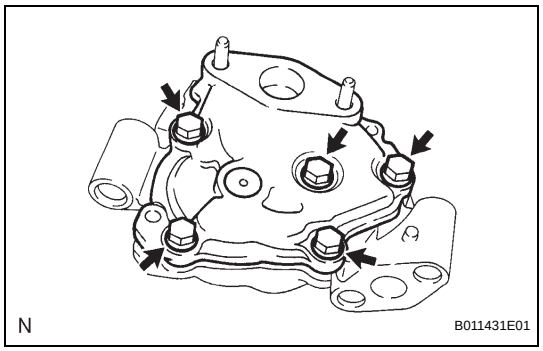

3. INSTALL OIL PUMP RELIEF VALVE

(a) Coat the relief valve with engine oil.

(b) Insert the relief valve and spring into the pump body hole.

(c) Using a 27 mm socket wrench, install the plug.
Torque: 49 N*m (500 kgf*cm, 36 ft.*lbf)

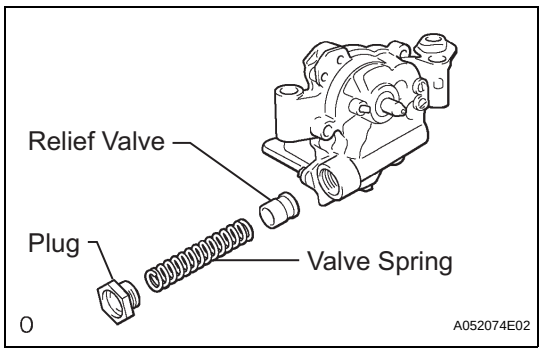

4. INSTALL OIL PUMP STRAINER

(a) Install a new gasket and the oil strainer with the 2 nuts.
Torque: 8.8 N*m (90 kgf*cm, 78 in.*lbf)

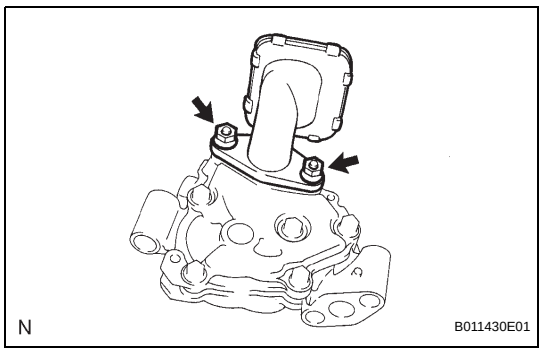

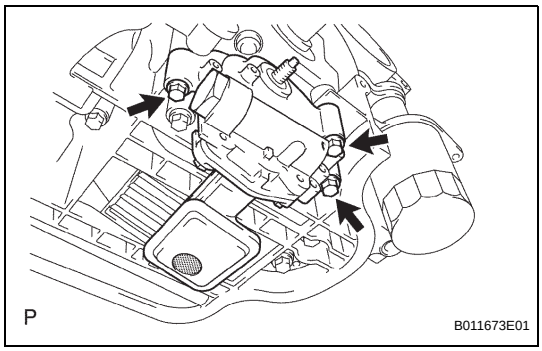

INSTALLATION

1. INSTALL OIL PUMP ASSEMBLY

(a) Install a new gasket and the oil pump with the 3 bolts.
Torque: 19 N*m (194 kgf*cm, 14 ft.*lbf)

2. INSTALL CHAIN SUB-ASSEMBLY

(a) Install the chain (see page EM-32).

OIL PUMP

COMPONENTS

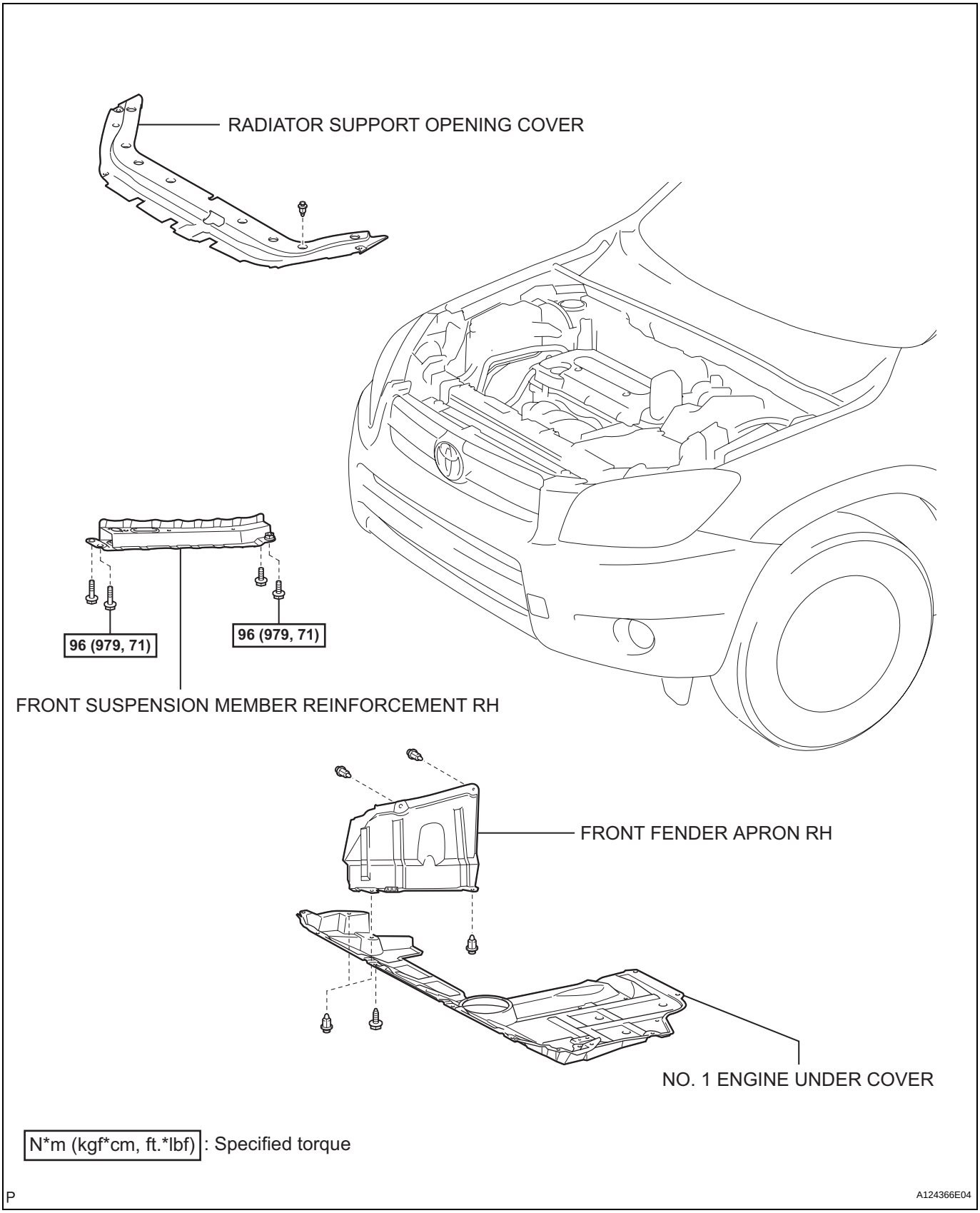

N*m (kgf*cm, ft.*lbf) : Specified torque

P

A124366E04

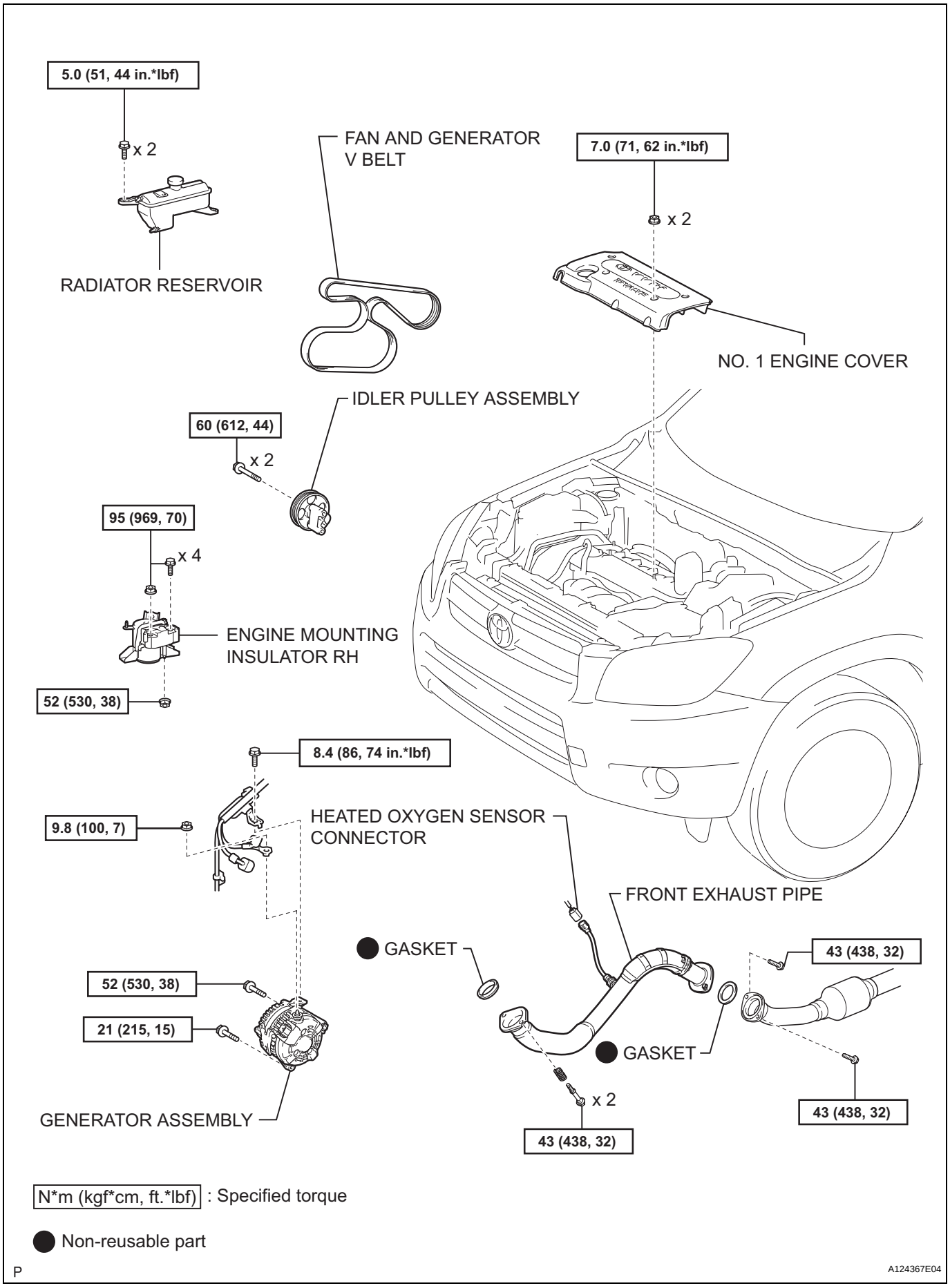

N*m (kgf*cm, ft.*lbf) : Specified torque

● Non-reusable part

P

A124367E04

LU

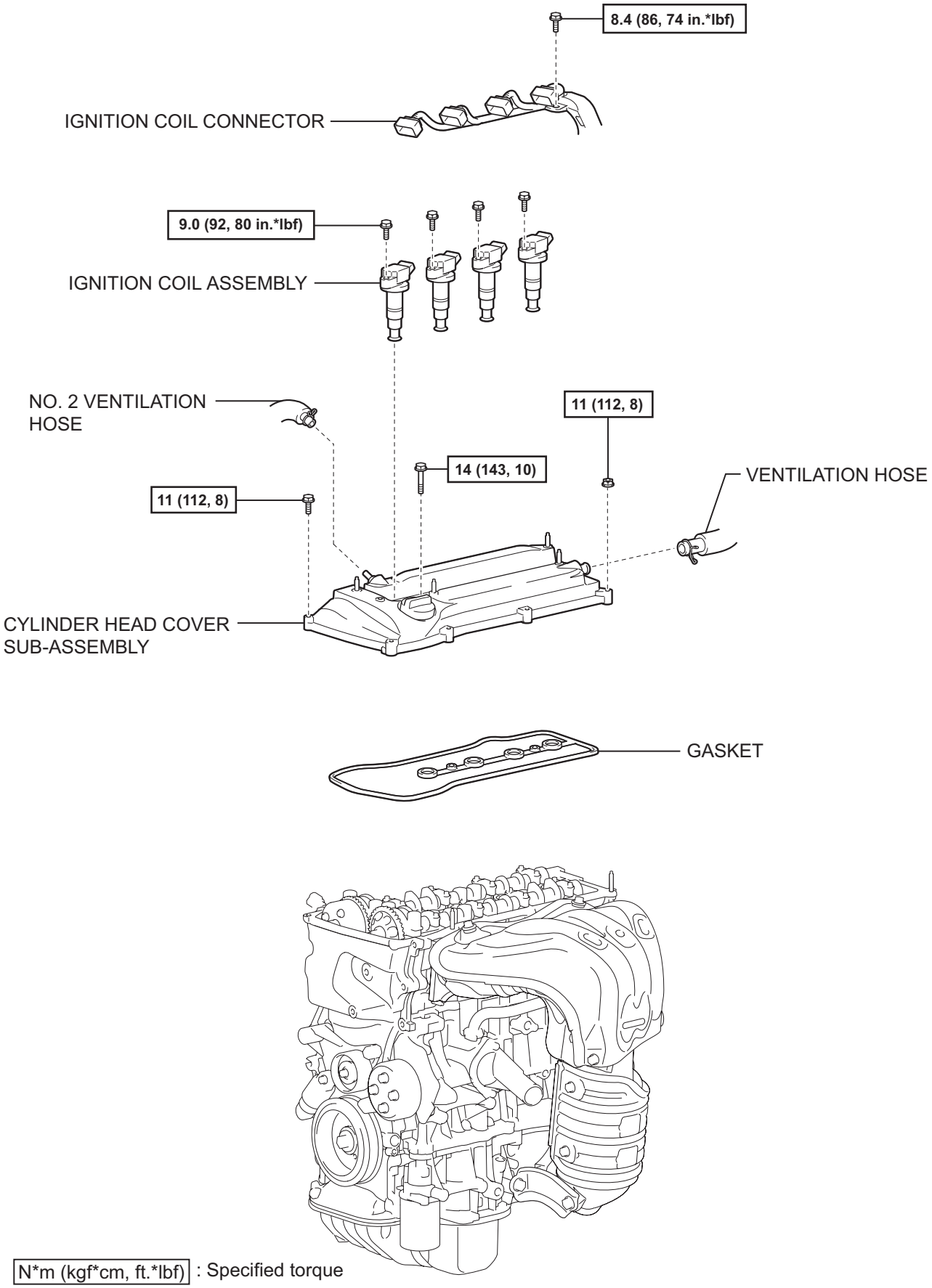
8.4 (86, 74 in.*lbf)
IGNITION COIL CONNECTOR
9.0 (92, 80 in.*lbf)
IGNITION COIL ASSEMBLY
NO. 2 VENTILATION HOSE
11 (112, 8)
14 (143, 10)
VENTILATION HOSE
11 (112, 8)
CYLINDER HEAD COVER SUB-ASSEMBLY
GASKET
N*m (kgf*cm, ft.*lbf) : Specified torque
A124368E04

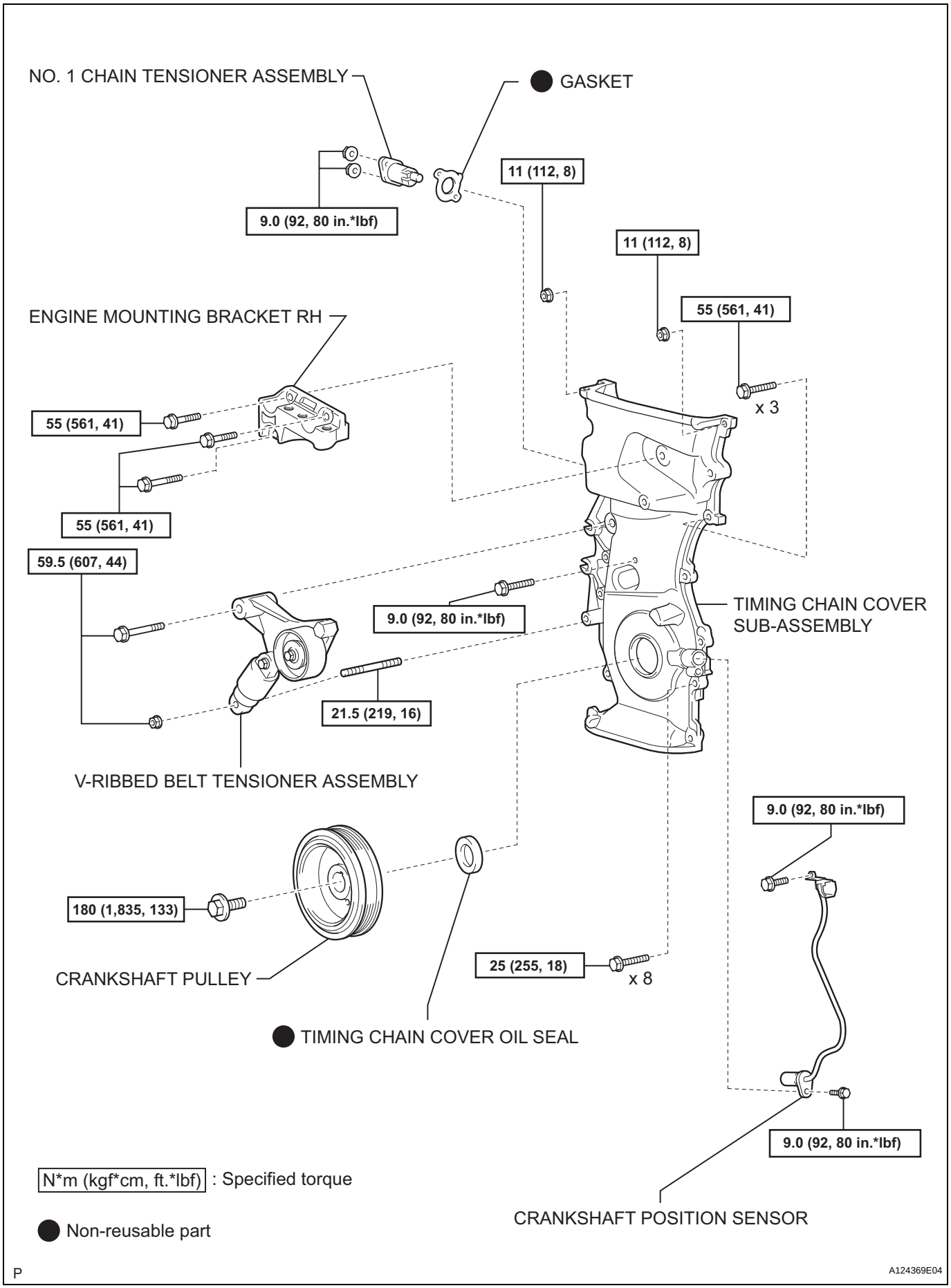
NO. 1 CHAIN TENSIONER ASSEMBLY
GASKET
11 (112, 8)
9.0 (92, 80 in.*lbf)
11 (112, 8)
55 (561, 41)
ENGINE MOUNTING BRACKET RH
x 3
55 (561, 41)
55 (561, 41)
59.5 (607, 44)
9.0 (92, 80 in.*lbf)
TIMING CHAIN COVER SUB-ASSEMBLY
21.5 (219, 16)
V-RIBBED BELT TENSIONER ASSEMBLY
9.0 (92, 80 in.*lbf)
180 (1,835, 133)
CRANKSHAFT PULLEY
25 (255, 18)
x 8
TIMING CHAIN COVER OIL SEAL
9.0 (92, 80 in.*lbf)
CRANKSHAFT POSITION SENSOR
N*m (kgf*cm, ft.*lbf) : Specified torque
Non-reusable part
P
A124369E04

LU

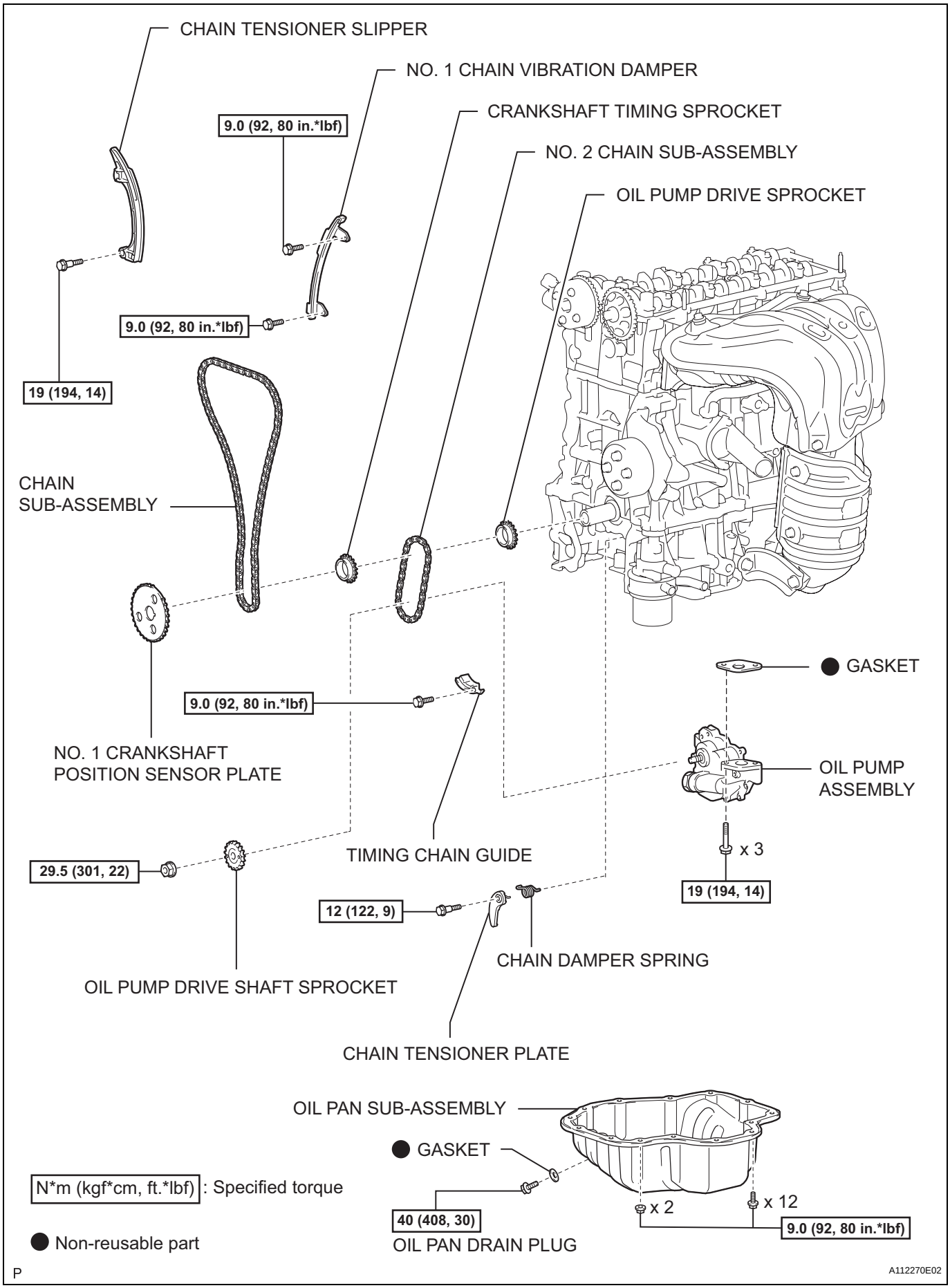
CHAIN TENSIONER SLIPPER
NO. 1 CHAIN VIBRATION DAMPER
CRANKSHAFT TIMING SPROCKET
NO. 2 CHAIN SUB-ASSEMBLY
OIL PUMP DRIVE SPROCKET
9.0 (92, 80 in.*lbf)
9.0 (92, 80 in.*lbf)
19 (194, 14)
CHAIN
SUB-ASSEMBLY
GASKET
9.0 (92, 80 in.*lbf)
NO. 1 CRANKSHAFT
POSITION SENSOR PLATE
OIL PUMP
ASSEMBLY
x 3
19 (194, 14)
TIMING CHAIN GUIDE
29.5 (301, 22)
12 (122, 9)
CHAIN DAMPER SPRING
OIL PUMP DRIVE SHAFT SPROCKET
CHAIN TENSIONER PLATE
OIL PAN SUB-ASSEMBLY
GASKET
x 2
x 12
40 (408, 30)
9.0 (92, 80 in.*lbf)
OIL PAN DRAIN PLUG
N*m (kgf*cm, ft.*lbf) : Specified torque
Non-reusable part
P
A112270E02

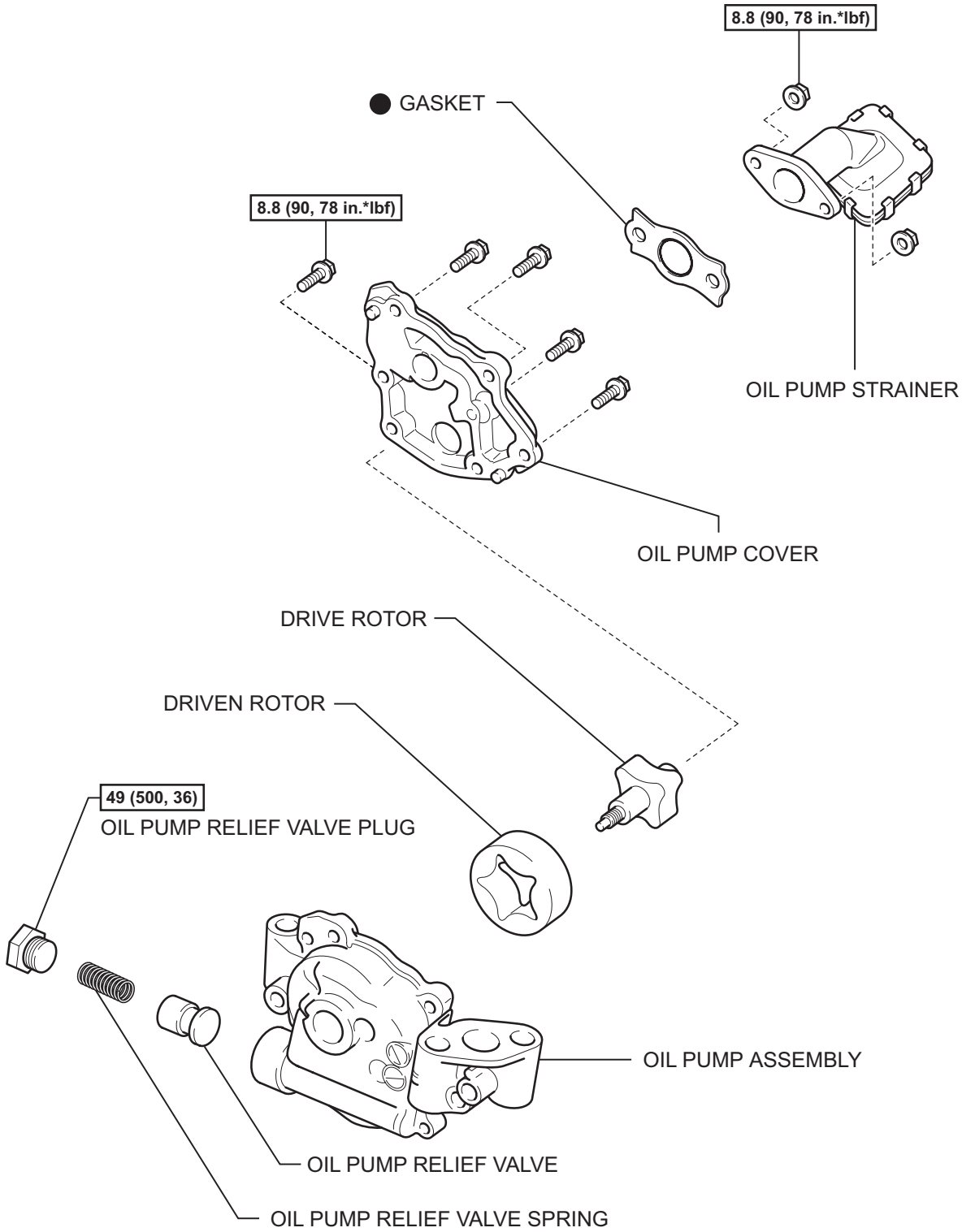

N*m (kgf*cm, ft.*lbf) : Specified torque

● Non-reusable part

T

A114157E05

LU

If the result is not as specified, replace the switch assembly.

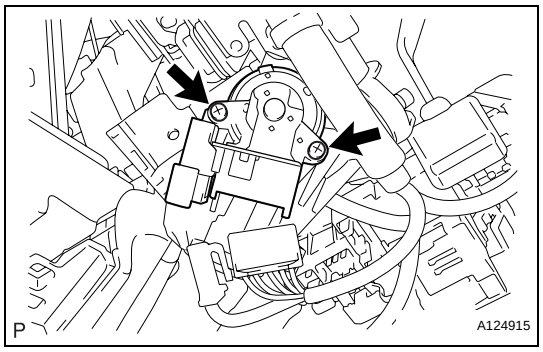

INSTALLATION

1. INSTALL IGNITION SWITCH ASSEMBLY

(a) Install the ignition switch with the 2 screws.

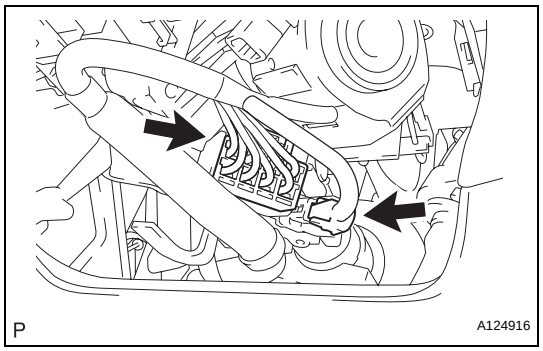

(b) Install the ignition key cylinder light connector.
(c) Install the ignition switch connector.

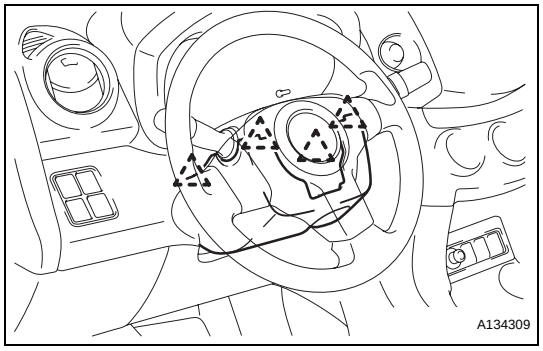

2. INSTALL STEERING COLUMN COVER LOWER

(a) Attach the 4 claws to install the steering column lower cover.

3. CONNECT CABLE TO NEGATIVE BATTERY TERMINAL

IGNITION SWITCH

COMPONENTS

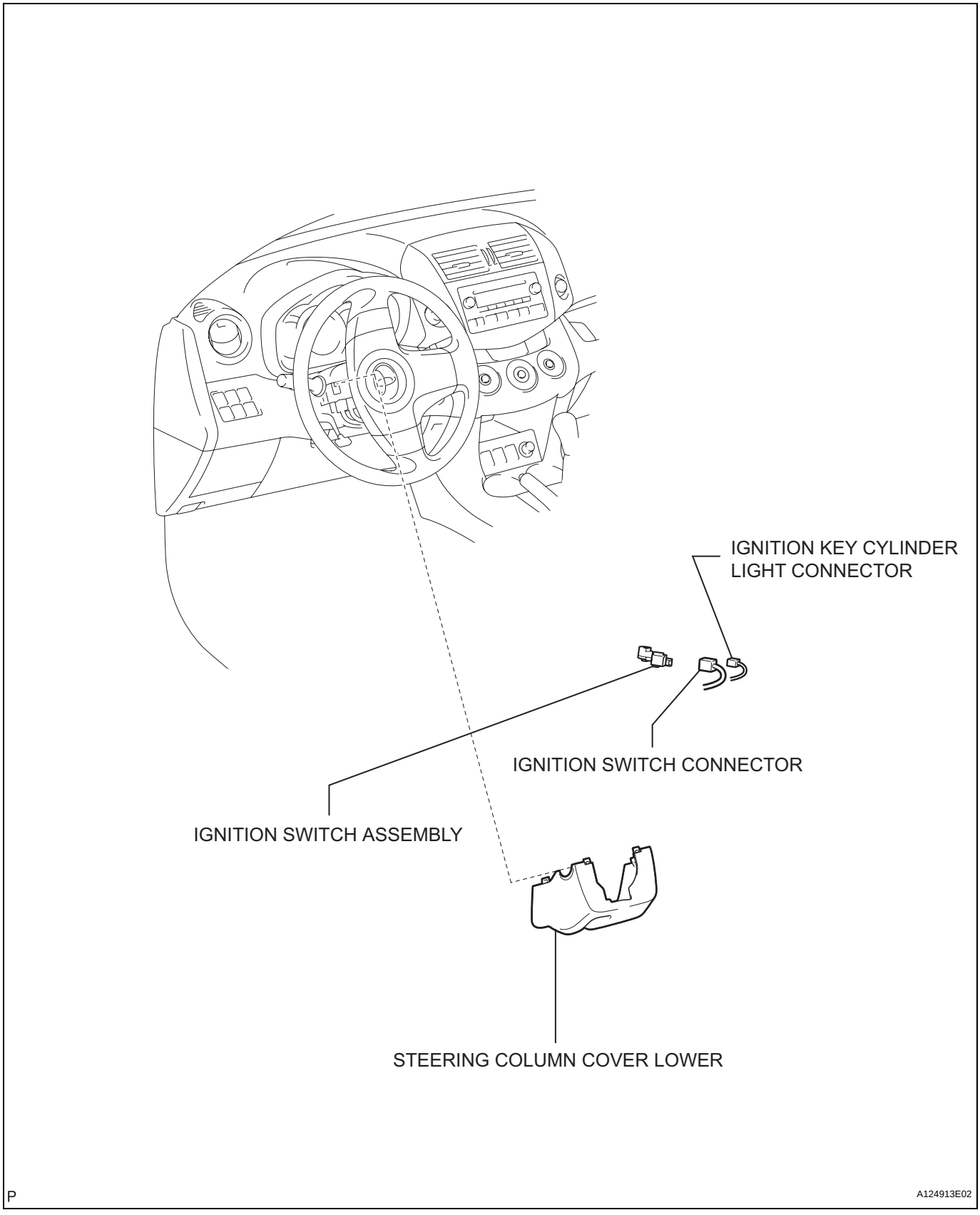

REMOVAL

1. DISCONNECT CABLE FROM NEGATIVE BATTERY TERMINAL

CAUTION:
Wait at least 90 seconds after disconnecting the cable from the negative (-) battery terminal to prevent airbag and seat belt pretensioner activation.

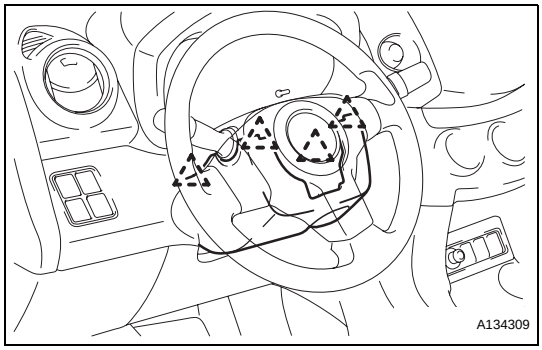

2. REMOVE STEERING COLUMN COVER LOWER

(a) Detach the 4 claws, release the tilt lever and remove the steering column cover lower.

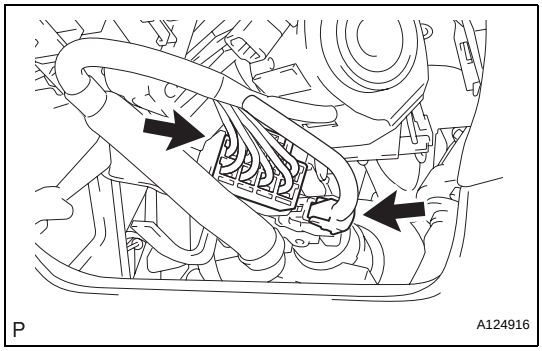

3. REMOVE IGNITION SWITCH ASSEMBLY

(a) Disconnect the ignition switch connector.
(b) Disconnect the ignition key cylinder light connector.

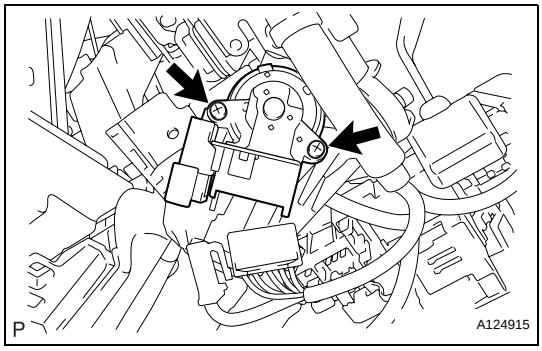

(c) Remove the 2 screws and ignition switch.

INSPECTION

1. INSPECT IGNITION SWITCH ASSEMBLY

(a) Measure the resistance of the switch.
Standard resistance

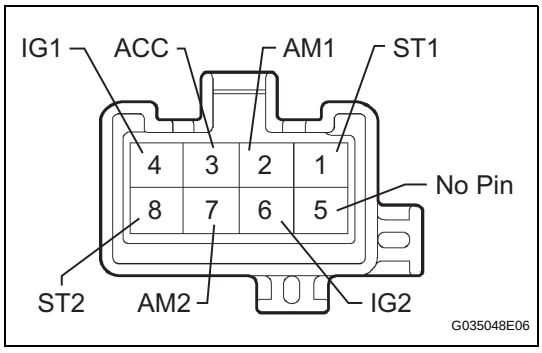

Tester Connection	Switch Condition	Specified Condition
-	LOCK	10 kΩ or higher
2 (AM1) - 3 (ACC)	ACC	Below 1 Ω
2 (AM1) - 3 (ACC) 2 (AM1) - 4 (IG1) 6 (IG2) - 7 (AM2)	ON	Below 1 Ω
1 (ST1) - 2 (AM1) 1 (ST1) - 4 (IG1) 6 (IG2) - 7 (AM2) 6 (IG2) - 8 (ST2)	START	Below 1 Ω

ST

REMOVAL

1. **DISCONNECT CABLE FROM NEGATIVE BATTERY TERMINAL**
   CAUTION:
   Wait at least 90 seconds after disconnecting the cable from the negative (-) battery terminal to prevent airbag and seat belt pretensioner activation.
2. **DISCONNECT CABLE FROM POSITIVE BATTERY TERMINAL**
3. **REMOVE BATTERY CLAMP**
   (a) Remove the bolt and loosen the nut.
   (b) Detach the 2 wire harness clamps.
   (c) Detach the hook of the battery clamp from the battery bracket front, and then remove the battery clamp.
4. **REMOVE BATTERY INSULATOR**
5. **REMOVE BATTERY**

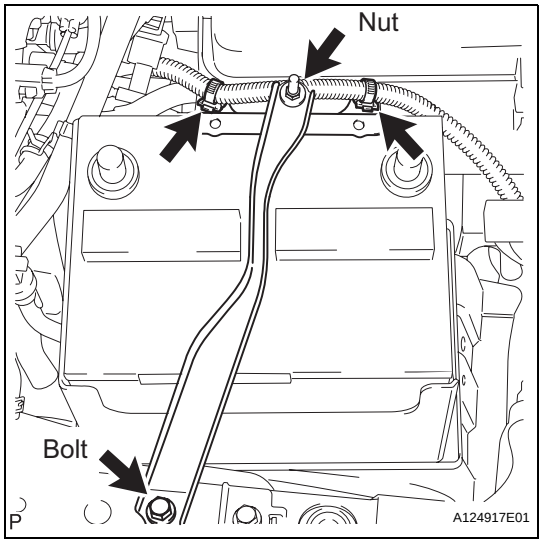

6. **REMOVE FRONT BATTERY BRACKET**
   (a) Detach the 2 wire harness clamps.
   (b) Remove the 4 bolts and bracket front.

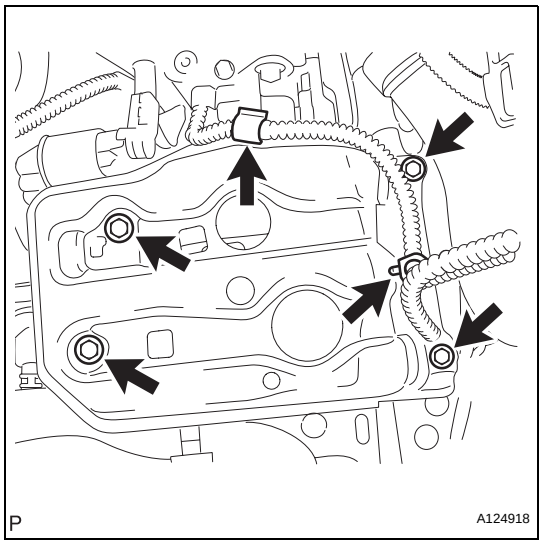

7. **REMOVE BATTERY BRACKET REINFORCEMENT**
   (a) Remove the 2 bolts and reinforcement bracket.

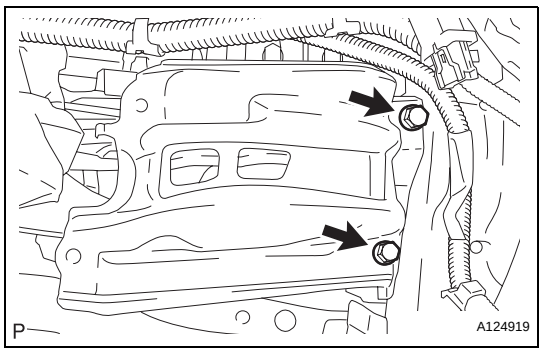

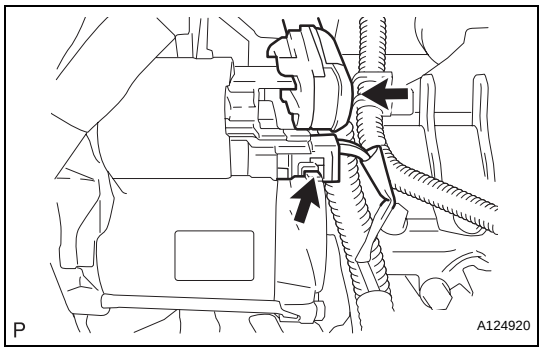

8. REMOVE STARTER ASSEMBLY

(a) Disconnect the starter connector.

(b) Open the terminal cap, remove the nut and disconnect the starter wire.

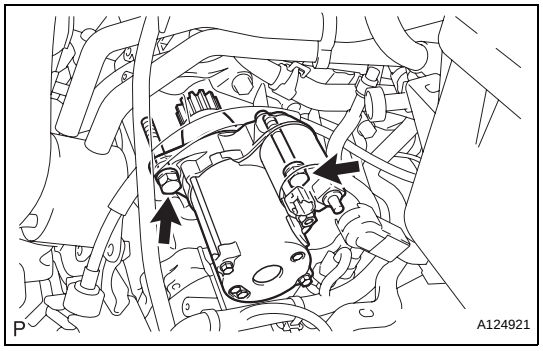

(c) Remove the 2 bolts and starter.

DISASSEMBLY

1. REMOVE MAGNETIC SWITCH ASSEMBLY

(a) Remove the nut and disconnect the lead wire from the magnetic switch.

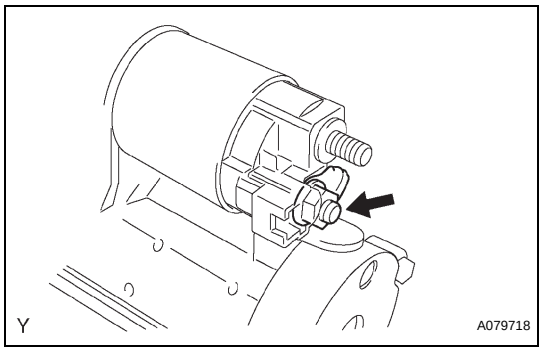

(b) Remove the 2 screws holding the magnetic switch to the starter drive housing.

(c) Remove the magnetic switch.

(d) Remove the return spring and plunger from the starter drive housing.

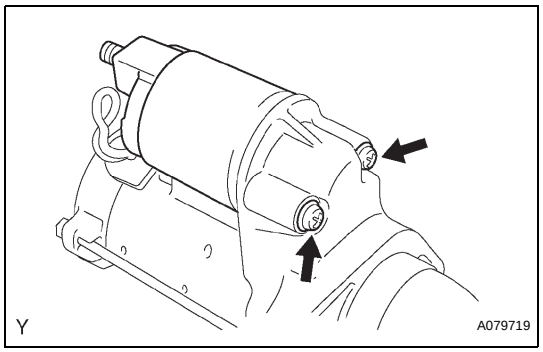

2. REMOVE STARTER YOKE ASSEMBLY

(a) Remove the 2 through-bolts, and pull out the starter yoke together with the commutator end frame.

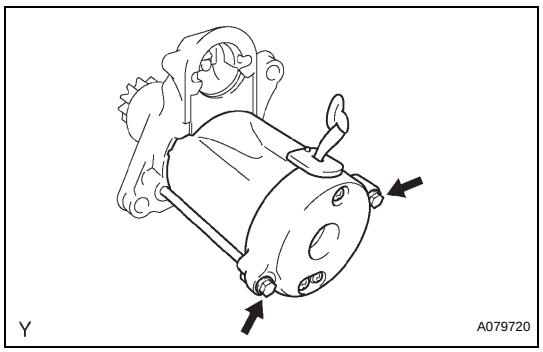

ST

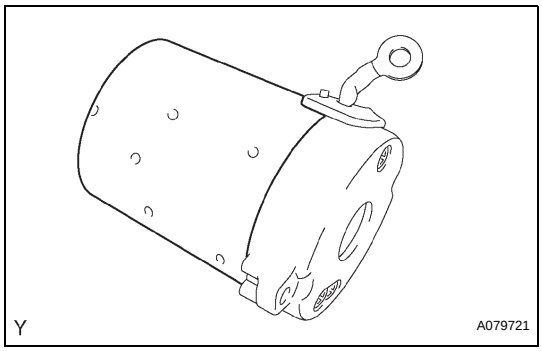

(b) Remove the starter yoke from the commutator end frame.

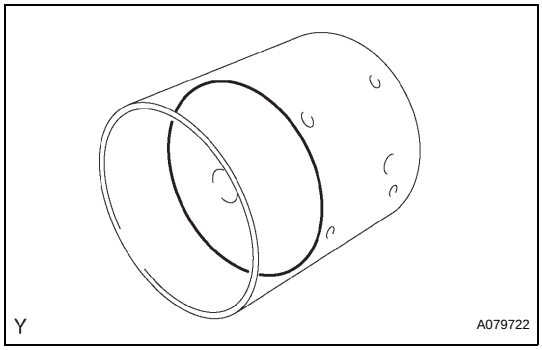

3. REMOVE STARTER ARMATURE PLATE

(a) Remove the armature plate from the starter yoke.

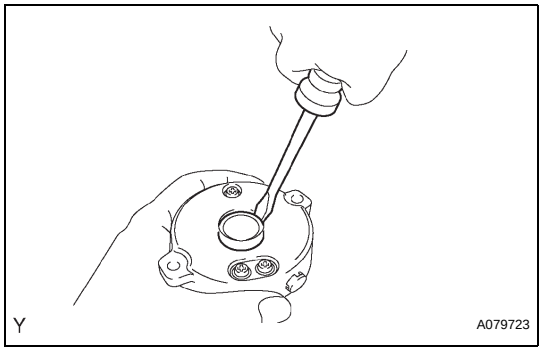

4. REMOVE STARTER COMMUTATOR END FRAME COVER

(a) Using a screwdriver, pry out the commutator end frame cover.

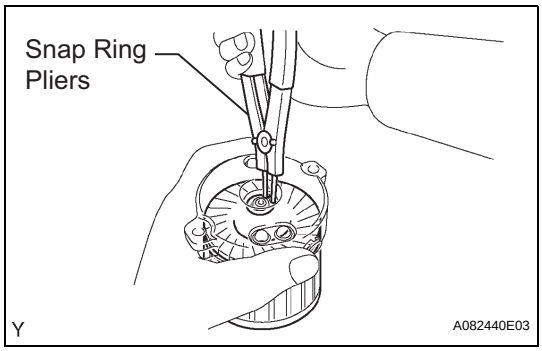

5. REMOVE STARTER ARMATURE ASSEMBLY

(a) Using snap ring pliers, remove the snap ring and plate washer.

(b) Remove the armature from the commutator end frame.

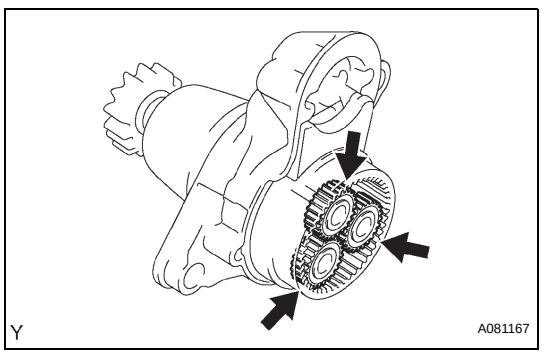

6. REMOVE PLANETARY GEAR

(a) Remove the 3 planetary gears from the starter drive housing.

ST

INSPECTION

1. INSPECT STARTER ASSEMBLY

NOTICE:

These tests must be performed within 3 to 5 seconds to avoid burning out the coil.

(a) Perform the pull-in test.

(1) Disconnect the lead wire from terminal C.

(2) Connect the battery to the magnetic switch as shown in the illustration. Check that the clutch pinion gear extends.
If the clutch pinion gear does not move, replace the magnetic switch.

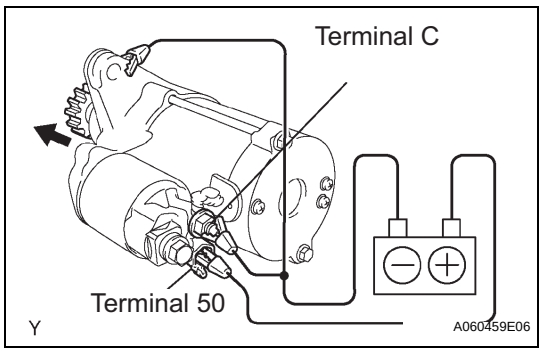

(b) Perform the hold-in test.

(1) Maintain the battery connections of the pull-in test above, but disconnect the negative (-) lead from terminal C. Check that the pinion gear remains extended.
If the clutch pinion gear returns inward, replace the magnetic switch.

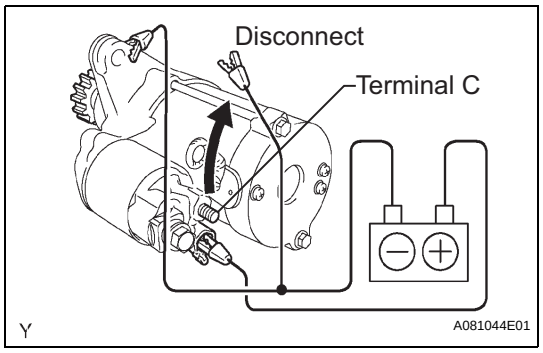

(c) Check the clutch pinion gear return.

(1) Disconnect the negative (-) lead from the switch body. Check that the clutch pinion gear returns.
If the clutch pinion gear does not return, replace the magnetic switch.

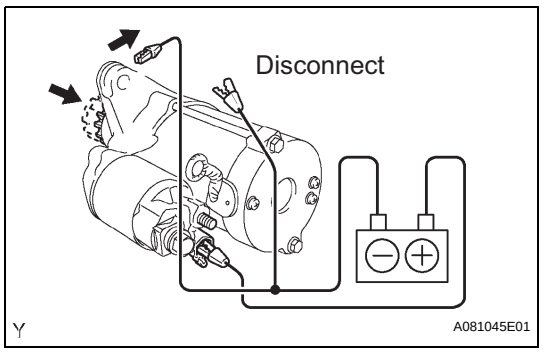

(d) Perform the no-load performance test.

(1) Connect the lead wire to terminal C. Make sure that the lead is not grounded.

(2) Clamp the starter in a vise.

(3) Connect the battery and an ammeter to the starter as shown in the illustration.

(4) Check that the starter rotates smoothly and steadily while the pinion gear is moving out. Then measure the current.
Standard current:
90 A or less at 11.5 V
If result is not as specified, replace the starter assembly.

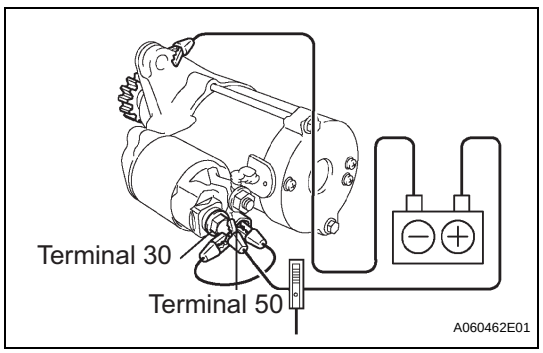

ST

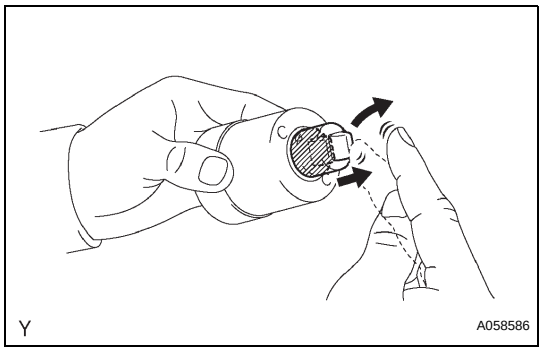

2. INSPECT MAGNETIC SWITCH ASSEMBLY

(a) Check the plunger.

(1) Push in the plunger and check that it returns quickly to its original position.
If necessary, replace the magnetic switch assembly.

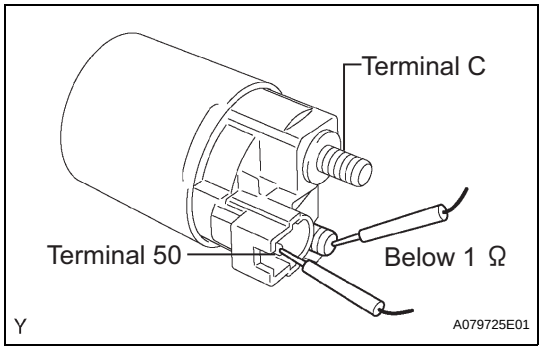

(b) Check if the pull-in coil has an open circuit.

(1) Measure the resistance between terminals 50 and C.
Standard resistance:
Below 1 Ω
If the result is not as specified, replace the magnetic switch assembly.

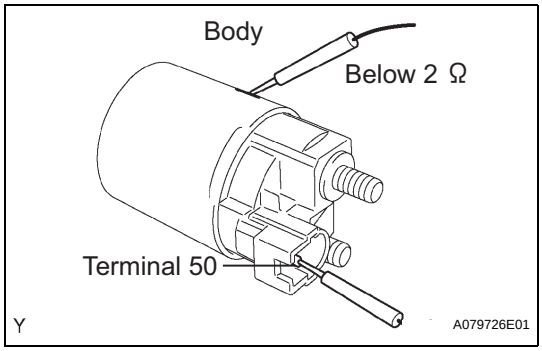

(c) Check if the hold-in coil has an open circuit.

(1) Measure the resistance between terminal 50 and the switch body.
Standard resistance:
Below 2 Ω
If the result is not as specified, replace the magnetic switch assembly.

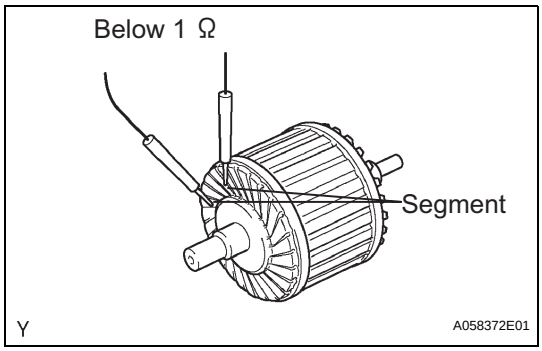

3. INSPECT STARTER ARMATURE ASSEMBLY

(a) Check if the commutator has an open circuit.

(1) Measure the resistance between the segments of the commutator.
Standard resistance:
Below 1 Ω
If the result is not as specified, replace the armature assembly.

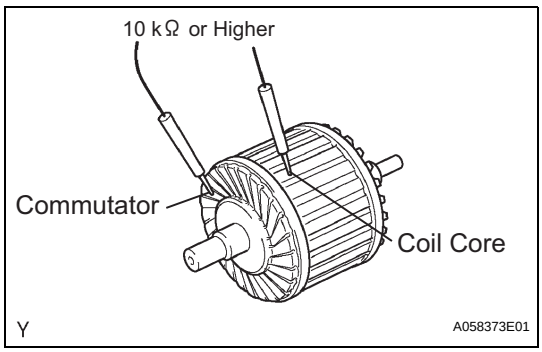

(b) Check if the commutator is grounded.

(1) Measure the resistance between the commutator and armature coil core.
Standard resistance:
10 kΩ or higher
If the result is not as specified, replace the armature assembly.

(c) Check the commutator for contamination and burns on its surface.
If the surface is dirty or burnt, correct it with sandpaper (No. 400) or a lathe.

ST

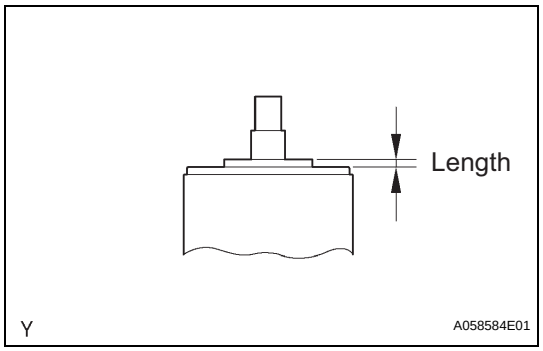

(d) Using a vernier caliper, measure the commutator's length.
Standard length:
3.1 to 3.8 mm (0.122 to 0.150 in.)
If the length is greater than the maximum, replace the starter armature assembly.

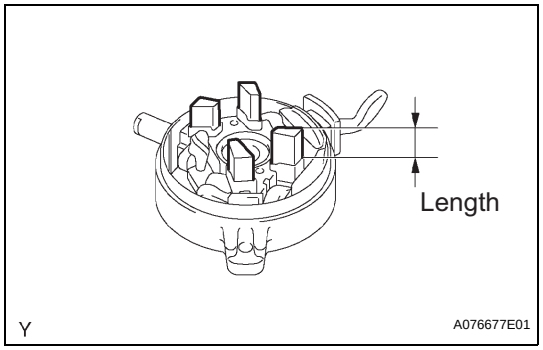

4. INSPECT STARTER COMMUTATOR END FRAME ASSEMBLY

(a) Using a vernier caliper, measure the brush length.
Standard length:
4.0 to 9.0 mm (0.158 to 0.359 in.)
If the length is less than the minimum, replace the end frame assembly.

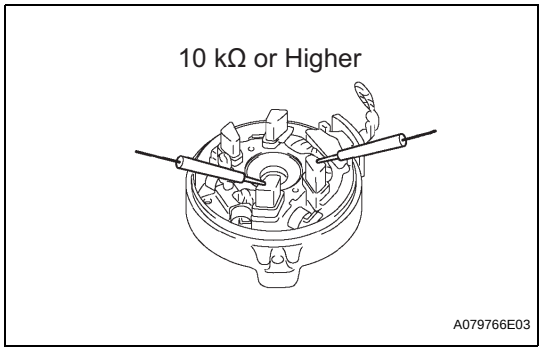

(b) Check the brush insulation.
(1) Measure the resistance between the positive (+) and negative (-) brush.
Standard resistance:
10 kΩ or higher
If the result is not as specified, repair or replace the end frame assembly.

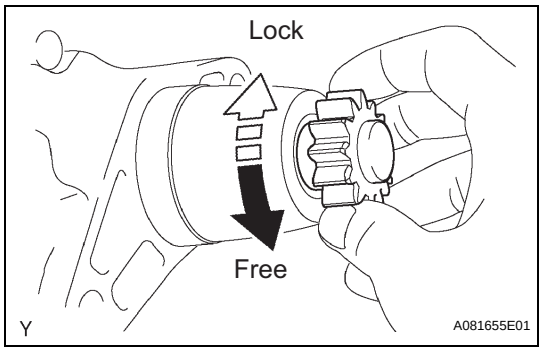

5. INSPECT STARTER CLUTCH

(a) Check the starter clutch.
(1) Rotate the clutch pinion gear counterclockwise and check that it turns freely. Try to rotate the clutch pinion gear clockwise and check that it locks.
If necessary, replace the starter drive housing assembly.

REASSEMBLY

HINT:
Use high-temperature grease to lubricate the bearings, gears, return spring and steel ball when assembling the starter.

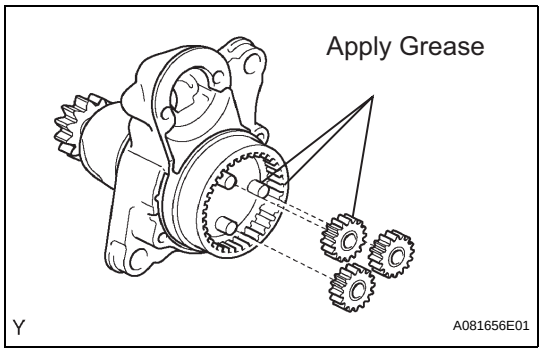

1. INSTALL PLANETARY GEAR

(a) Apply grease to the planetary gears and pin parts of the planetary shaft.
(b) Install the 3 planetary gears.

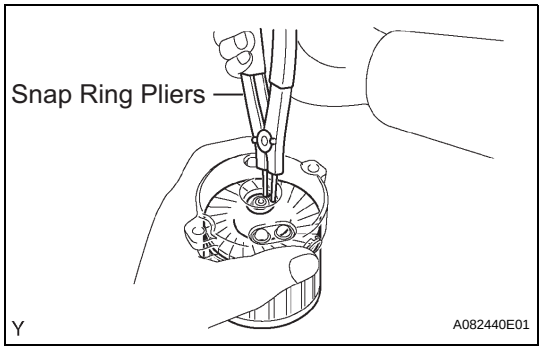

2. INSTALL STARTER ARMATURE ASSEMBLY

(a) Apply grease to the plate washer and the armature shaft.
(b) Install the starter armature to the starter commutator end frame.
(c) Using snap ring pliers, install the plate washer and a new snap ring.

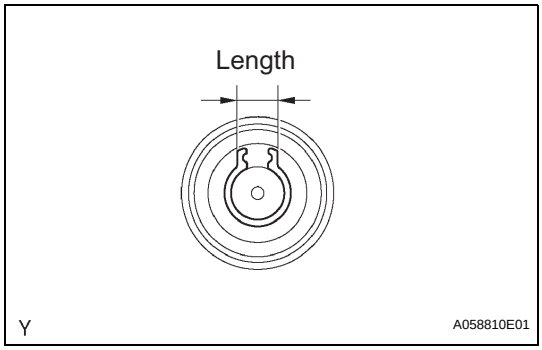

(d) Using a vernier caliper, measure length of the snap ring.
Maximum length:
5.0 mm (0.197 in.)
If the length is greater than the maximum, replace it with a new snap ring.

3. INSTALL STARTER COMMUTATOR END FRAME COVER

(a) Install the end frame cover to the commutator end frame.

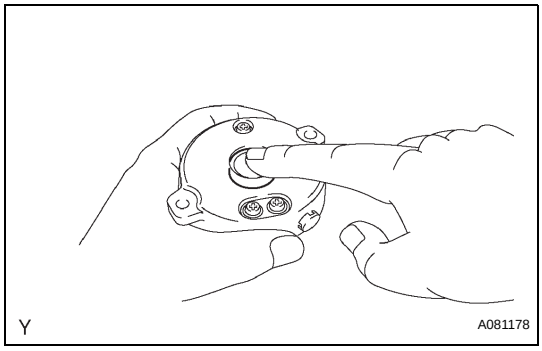

ST

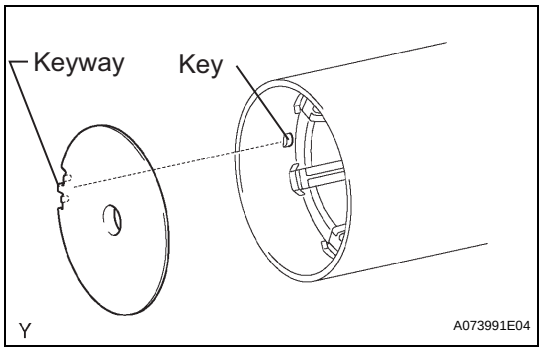

4. INSTALL STARTER ARMATURE PLATE

(a) Insert the armature plate to the starter yoke.

(b) Align the keyway of the starter plate with the key inside the starter yoke, and install the starter plate.

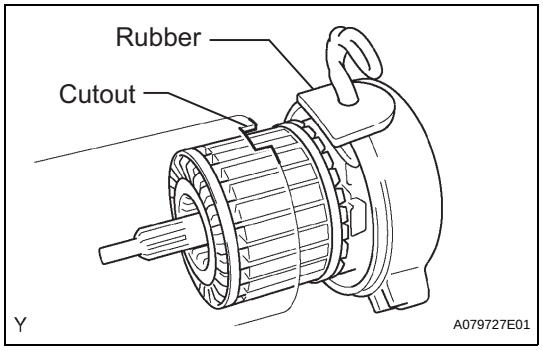

5. INSTALL STARTER COMMUTATOR END FRAME ASSEMBLY

(a) Align the rubber of the end frame with the cutout of the starter yoke.

(b) Install the end frame to the starter yoke.

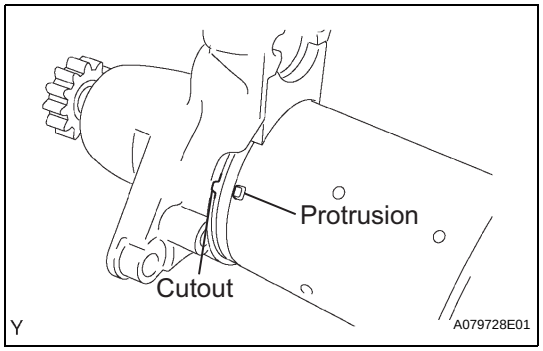

6. INSTALL STARTER YOKE ASSEMBLY

(a) Align the protrusion of the starter yoke with the cutout of the starter drive housing.

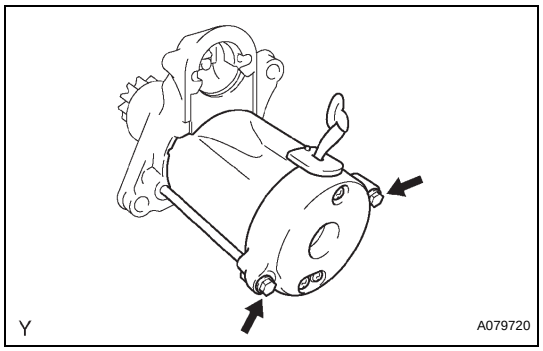

(b) Install the starter yoke with the 2 through-bolts.
Torque: 5.9 N*m (60 kgf*cm, 52 in.*lbf)

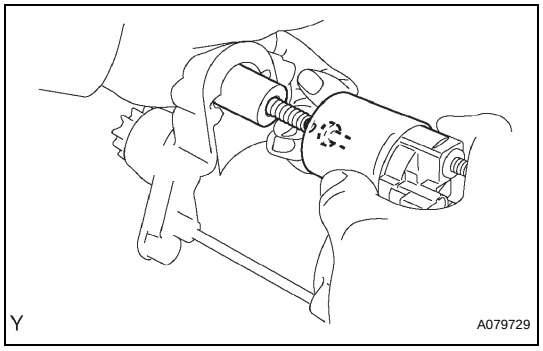

7. INSTALL MAGNETIC SWITCH ASSEMBLY

(a) Apply grease to the plunger and the hook.

(b) Hang the plunger hook of the magnetic switch to the drive lever.

(c) Install the plunger and return spring.

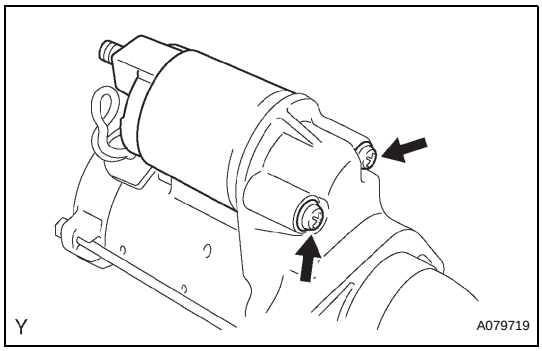

(d) Install the magnetic switch with the 2 screws.
Torque: 7.5 N*m (76 kgf*cm, 66 in.*lbf)

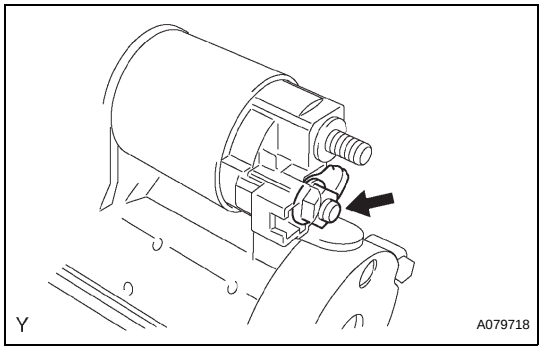

(e) Connect the lead wire to the magnetic switch with the nut.
Torque: 10 N*m (102 kgf*cm, 7 ft.*lbf)

INSTALLATION

1. INSTALL STARTER ASSEMBLY

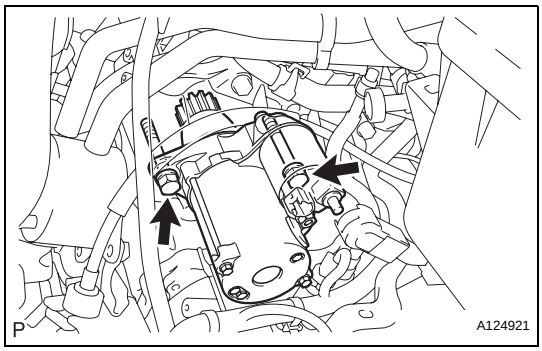

(a) Install the starter with the 2 bolts.
Torque: 37 N*m (377 kgf*cm, 27 ft.*lbf)

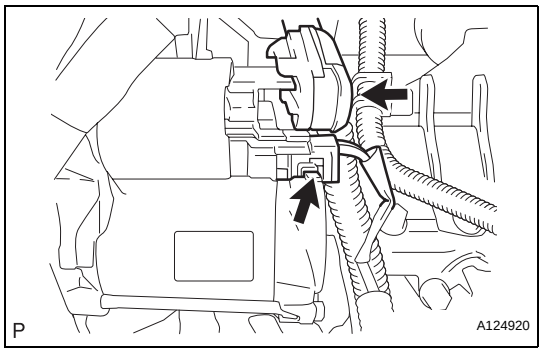

(b) Connect the starter connector.
(c) Install the terminal nut and cover the nut with the cap.
Torque: 9.8 N*m (100 kgf*cm, 7 ft.*lbf)

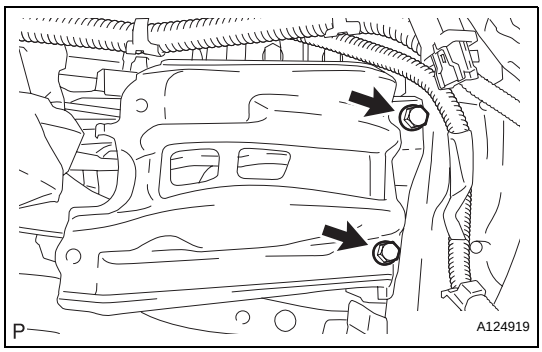

2. INSTALL BATTERY BRACKET REINFORCEMENT

(a) Install the bracket reinforcement.
Torque: 19 N*m (194 kgf*cm, 14 ft.*lbf)

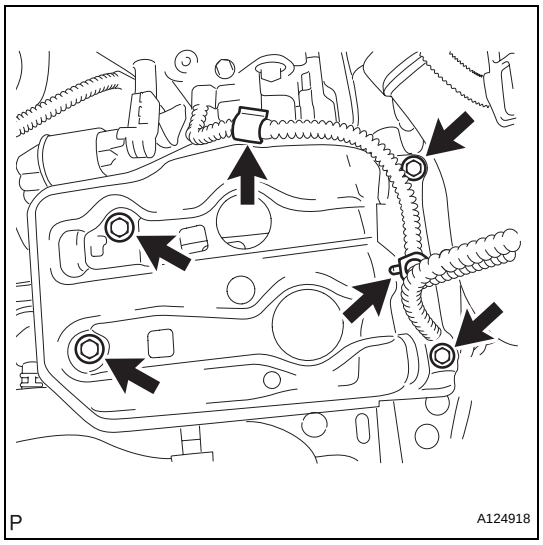

3. **INSTALL FRONT BATTERY BRACKET**
   (a) Install the bracket front with the 4 bolts.
   Torque: 19 N*m (194 kgf*cm, 14 ft.*lbf)
   (b) Attach the 2 wire harness clamps.
4. **INSTALL BATTERY**
5. **INSTALL BATTERY INSULATOR**

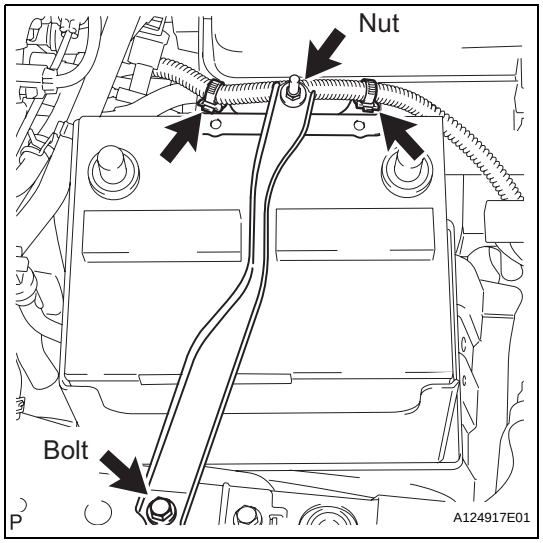

6. **INSTALL BATTERY CLAMP**
   (a) Attach the hook of the battery clamp to the battery bracket front.
   (b) Temporarily tighten the nut and install the bolt.
   (c) Adjust the battery clamp's position.
   (d) Fully tighten the nut and bolt.
   Torque: 5.0 N*m (51 kgf*cm, 44 in.*lbf)
   (e) Attach the 2 wire harness clamps.
7. **CONNECT CABLE TO POSITIVE BATTERY TERMINAL**
8. **CONNECT CABLE TO NEGATIVE BATTERY TERMINAL**

STARTER

COMPONENTS

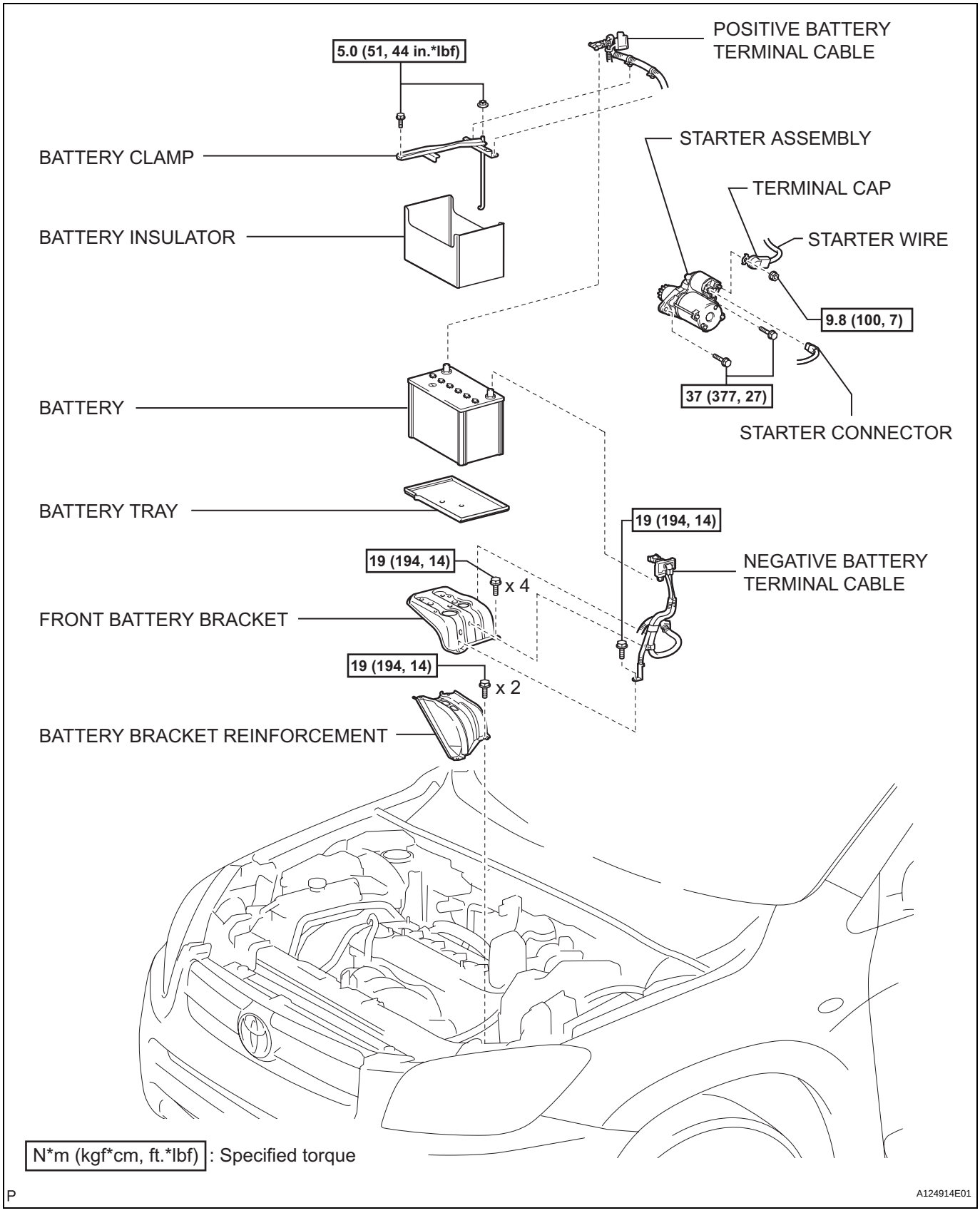

ST

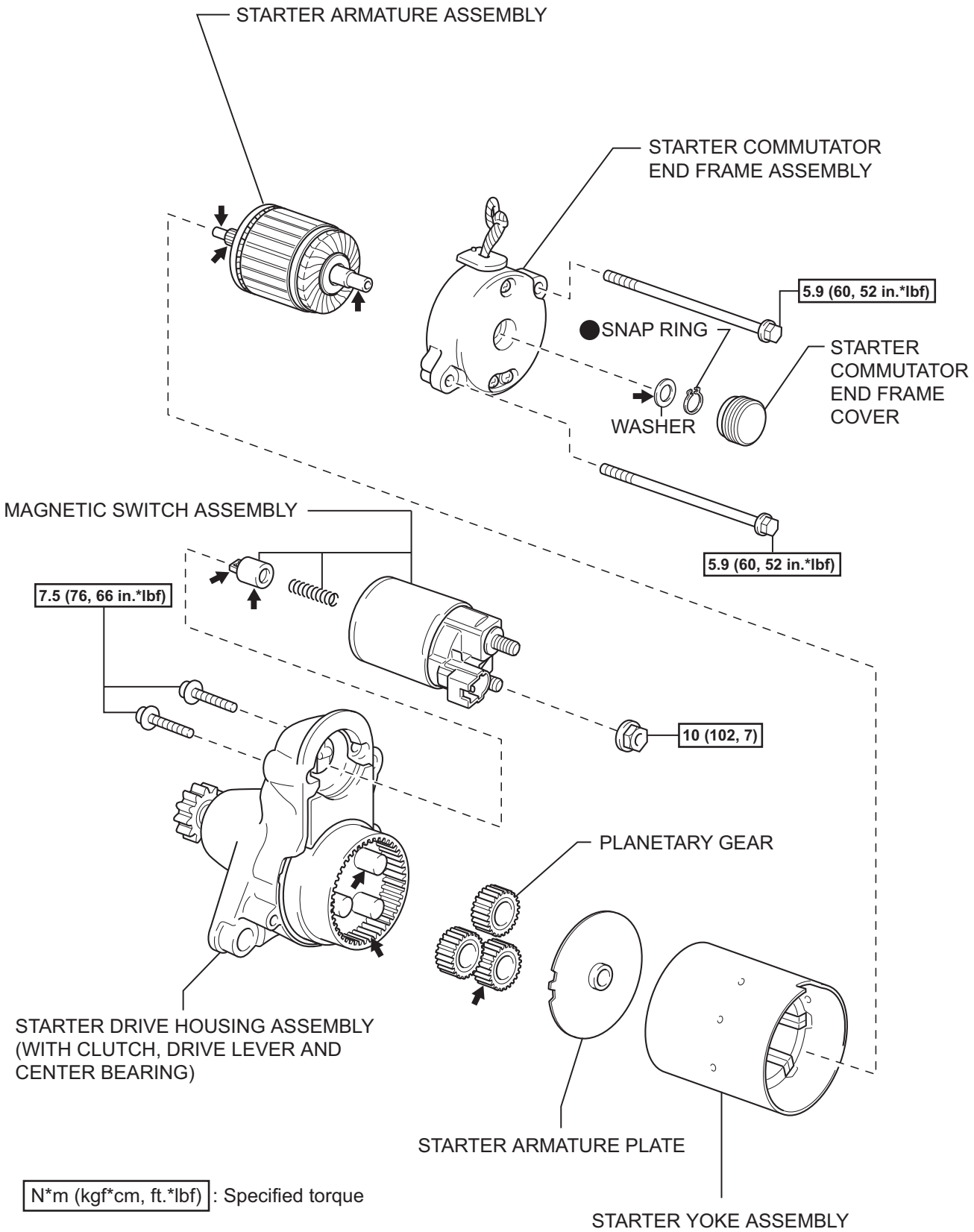
STARTER ARMATURE ASSEMBLY
STARTER COMMUTATOR END FRAME ASSEMBLY
5.9 (60, 52 in.*lbf)
SNAP RING
STARTER COMMUTATOR END FRAME COVER
WASHER
MAGNETIC SWITCH ASSEMBLY
5.9 (60, 52 in.*lbf)
7.5 (76, 66 in.*lbf)
10 (102, 7)
PLANETARY GEAR
STARTER DRIVE HOUSING ASSEMBLY (WITH CLUTCH, DRIVE LEVER AND CENTER BEARING)
STARTER ARMATURE PLATE
STARTER YOKE ASSEMBLY
N*m (kgf*cm, ft.*lbf) : Specified torque
Non-reusable part
High-temperature grease
Y
A128144E01

ST

STARTER RELAY

ON-VEHICLE INSPECTION

1. DISCONNECT CABLE FROM NEGATIVE BATTERY TERMINAL

CAUTION:

Wait at least 90 seconds after disconnecting the cable from the negative (-) battery terminal to prevent airbag and seat belt pretensioner activation.

2. REMOVE STARTER RELAY

(a) Remove the starter relay from the No. 7 relay block.

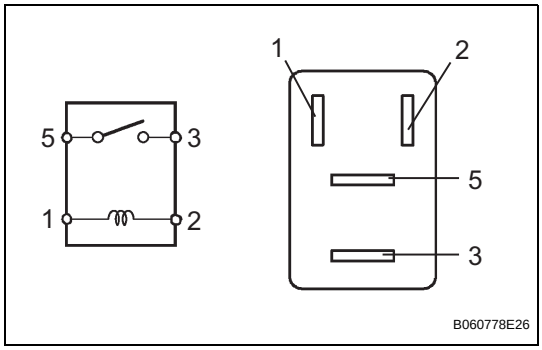

3. INSPECT STARTER RELAY

(a) Measure the resistance of the relay.

Standard resistance

Tester Connection	Specified Condition
3 - 5	10 kΩ or higher
3 - 5	Below 1 Ω (when battery voltage is applied to terminals 1 and 2)

If the resistance is not as specified, replace the relay.

4. INSTALL STARTER RELAY

5. CONNECT CABLE TO NEGATIVE BATTERY TERMINAL

STARTER RELAY

ON-VEHICLE INSPECTION

1. DISCONNECT CABLE FROM NEGATIVE BATTERY TERMINAL

CAUTION:

Wait at least 90 seconds after disconnecting the cable from the negative (-) battery terminal to prevent airbag and seat belt pretensioner activation.

2. REMOVE STARTER RELAY

(a) Remove the starter relay from the No. 7 relay block.

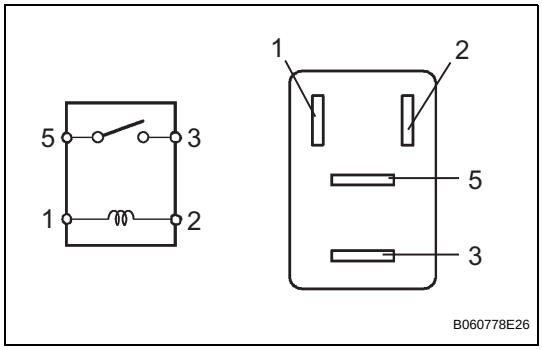

3. INSPECT STARTER RELAY

(a) Measure the resistance of the relay.

Standard resistance

Tester Connection	Specified Condition
3 - 5	10 kΩ or higher
3 - 5	Below 1 Ω (when battery voltage is applied to terminals 1 and 2)

If the resistance is not as specified, replace the relay.

4. INSTALL STARTER RELAY

5. CONNECT CABLE TO NEGATIVE BATTERY TERMINAL

SYSTEM DIAGRAM

The starting system rotates the starter motor according to the signals from the ignition switch and PNP switch.

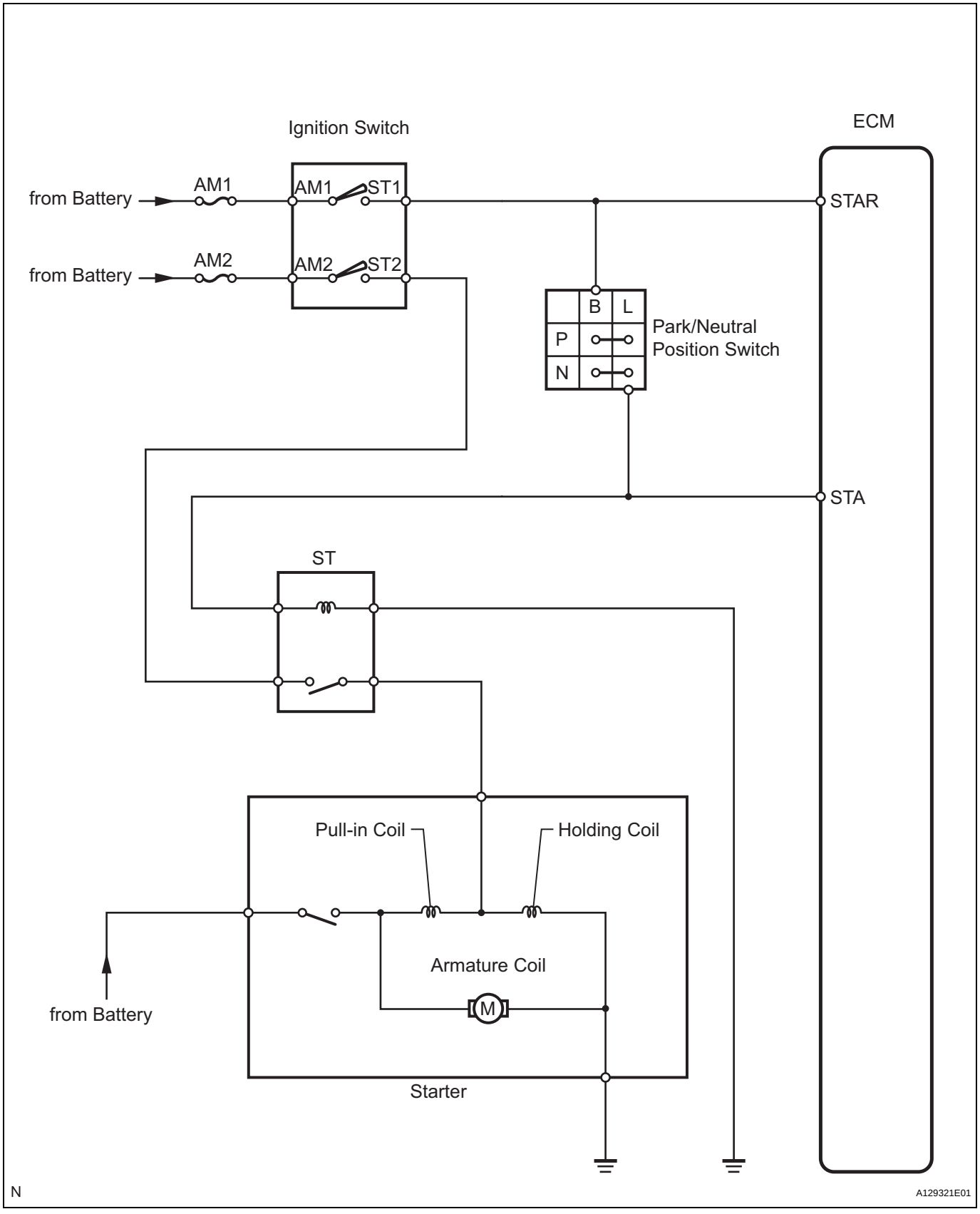

ST

STARTING SYSTEM

PARTS LOCATION

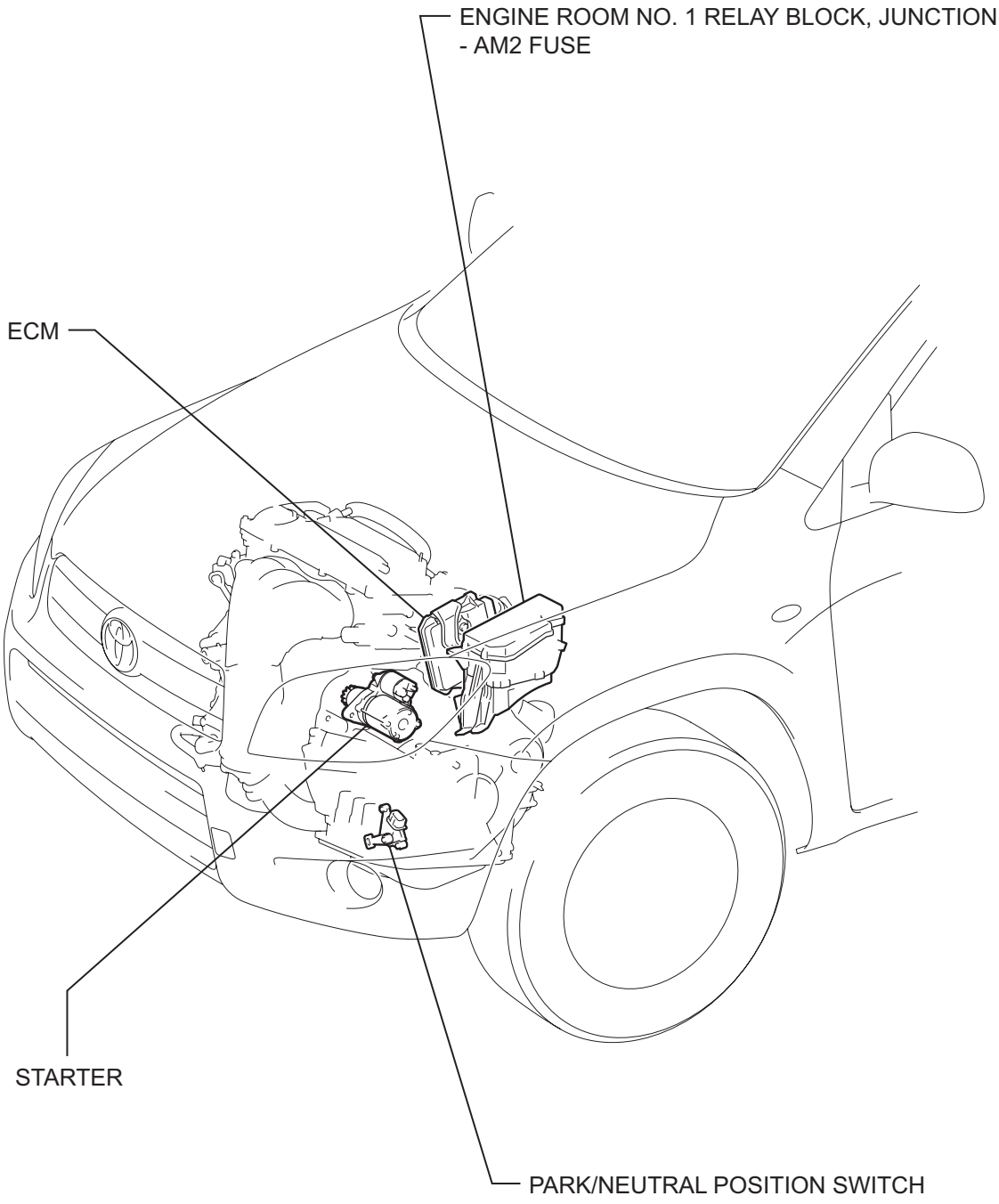

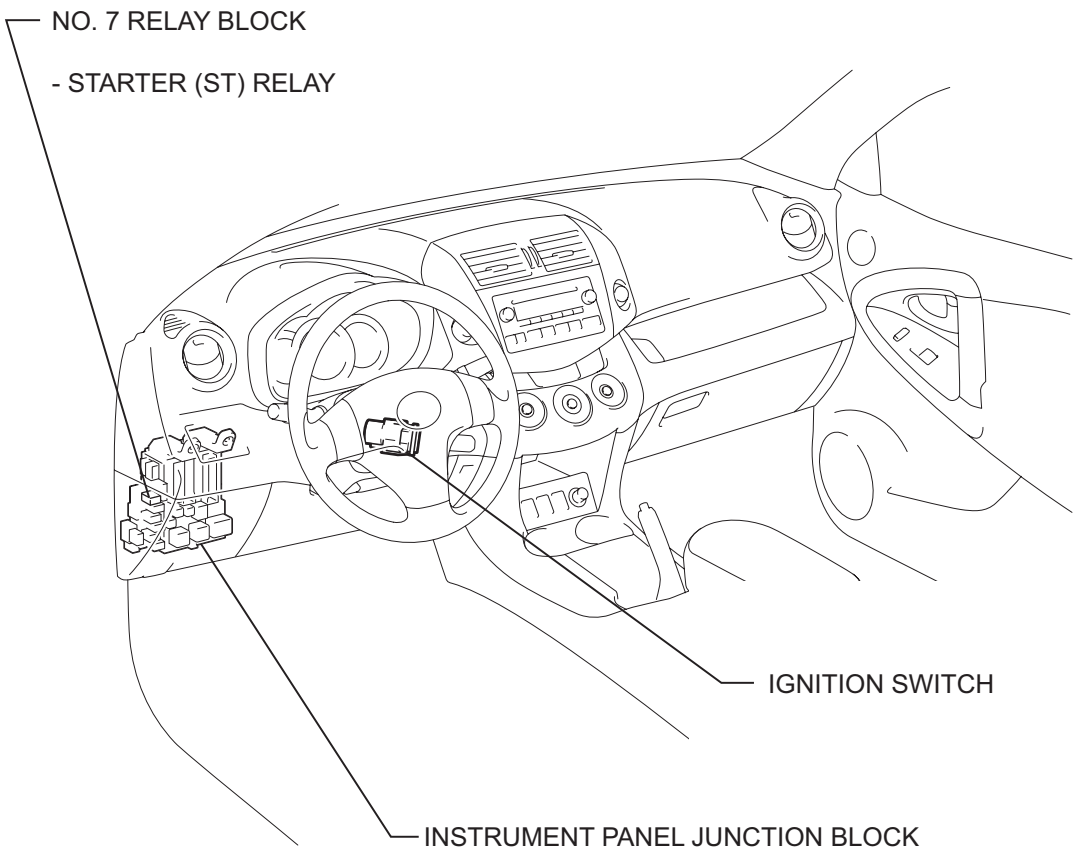

ST

P

A129320E01

BATTERY CURRENT SENSOR

ON-VEHICLE INSPECTION

1. INSPECT BATTERY CURRENT SENSOR ASSEMBLY

(a) Measure the resistance of the sensor.

Standard resistance

Tester Connection	Condition	Specified Condition
2 (VC5) - 4 (E2)	Always	3 to 10 kΩ
2 (VC5) - 3 (IB)	Always	Below 0.5 kΩ
3 (IB) - 4 (E2)	Always	3 to 10 kΩ
1 (THB) - 4 (E2)	20 to 30°C (68 to 86°F)	1.5 to 2.5 kΩ

HINT:
Tester connection 1 (THB) - 4 (E2):
As the temperature increases, the resistance decreases (see graph).
If the result is not as specified, replace the sensor assembly.

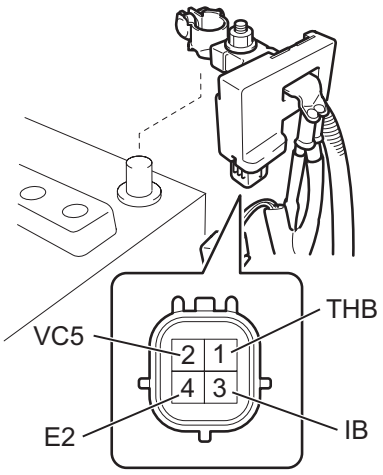

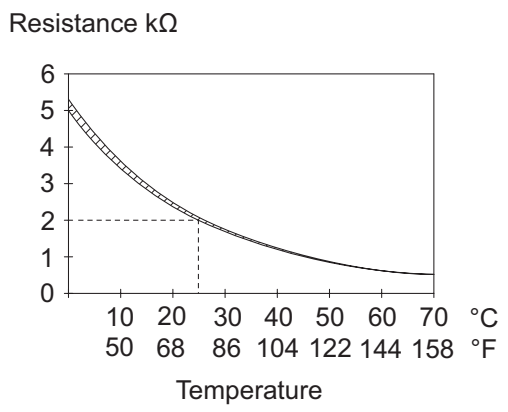

A132490E01

CH

SYSTEM DIAGRAM

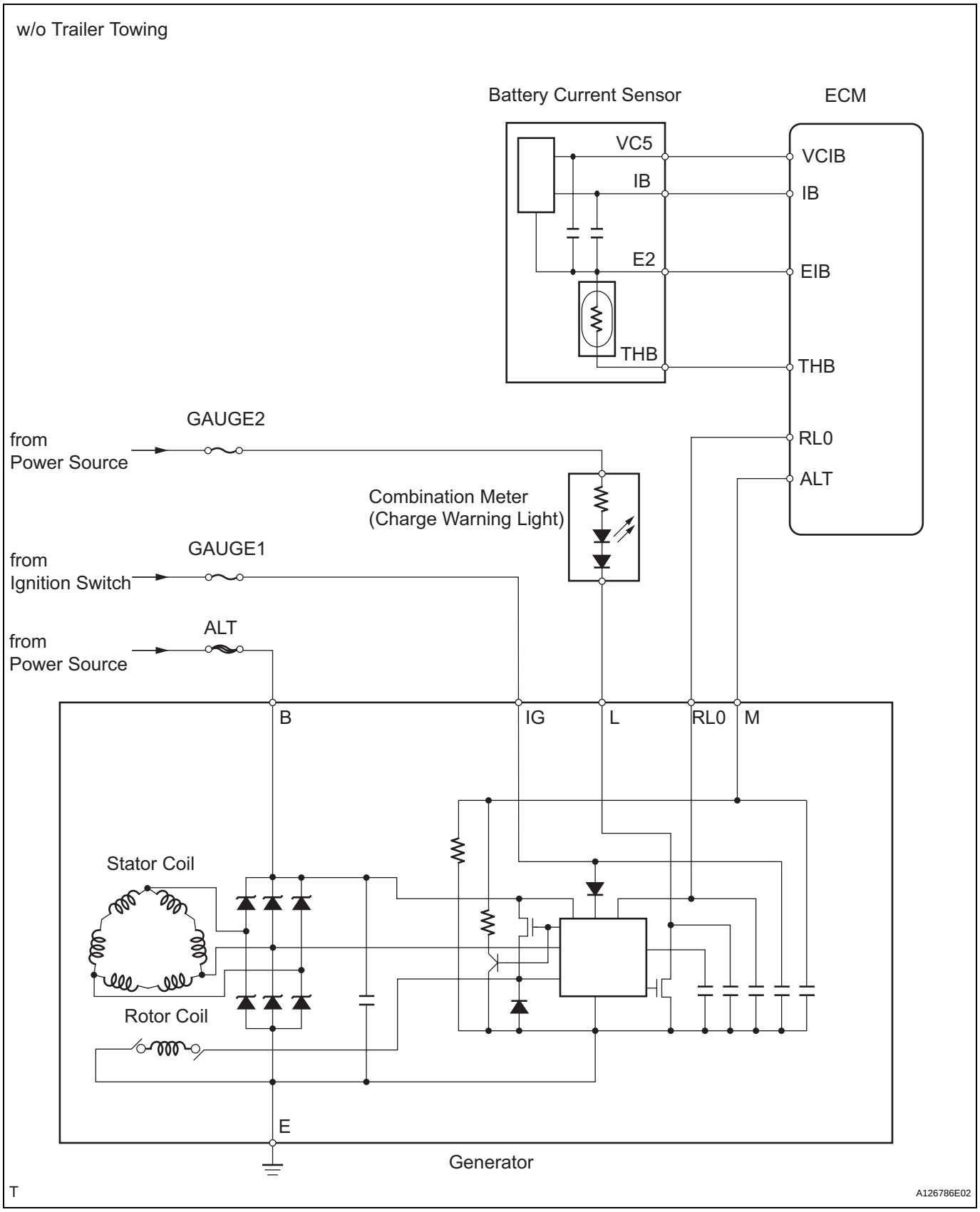

CH

w/ Trailer Towing

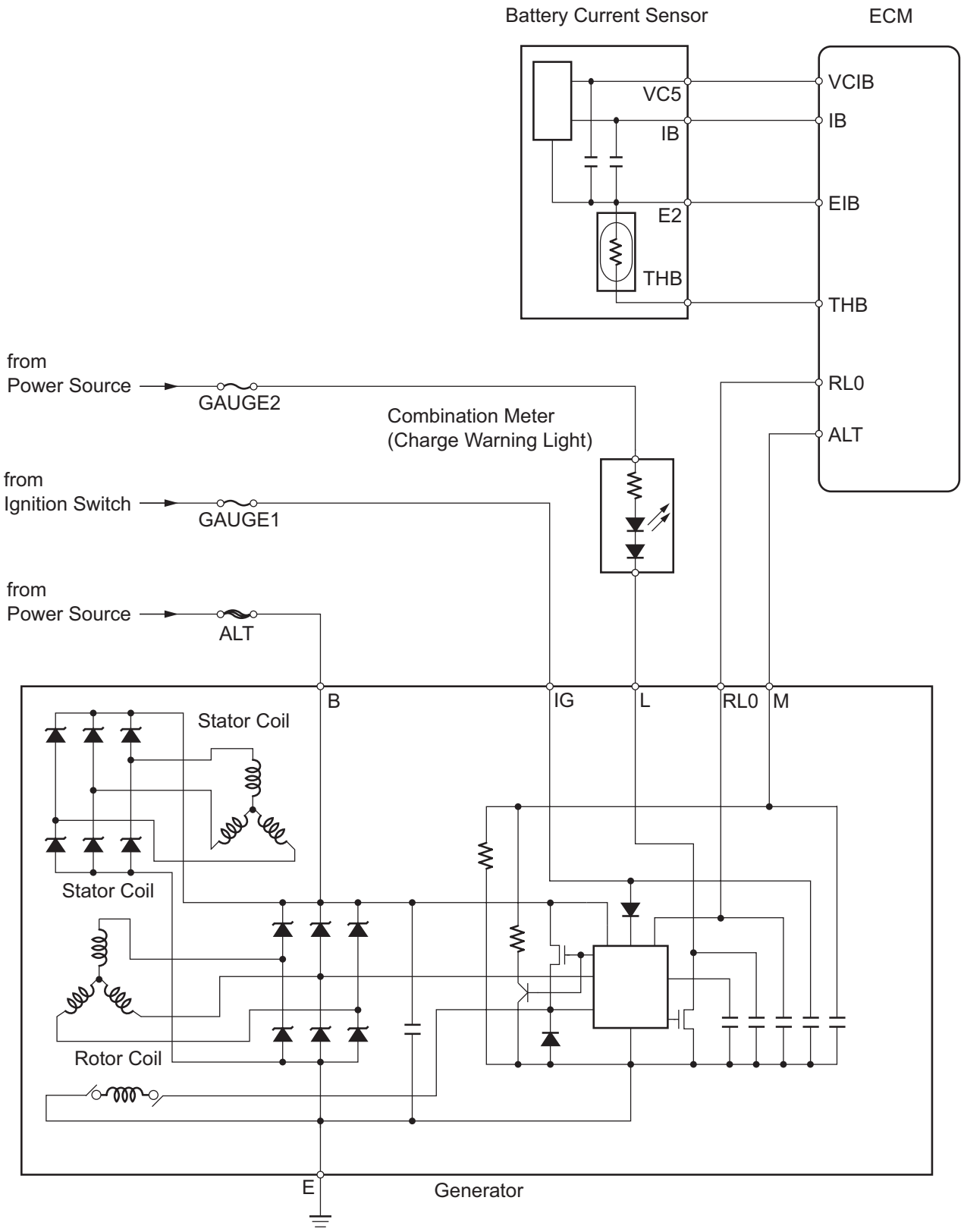

A136838E01

ON-VEHICLE INSPECTION

1. CHECK BATTERY CONDITION

NOTICE:

If the battery is weak or if the engine is difficult to start, perform the following procedures.

(a) Check the battery for damage and deformation. If severe damage, deformation or leakage is found, replace the battery.

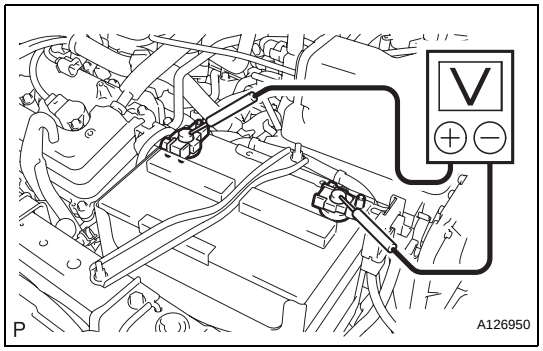

(b) Check the electrolyte quantity of each cell.

(1) For maintenance-free batteries:

- If the electrolyte quantity is below the lower line, replace the battery.
- If the electrolyte quantity is above the lower line, check the battery voltage when cranking the engine. If the voltage is less than 9.6 V, recharge or replace the battery.

HINT:

Before checking the battery voltage, turn off all the electrical systems (headlights, blower motor, rear defogger, etc.).

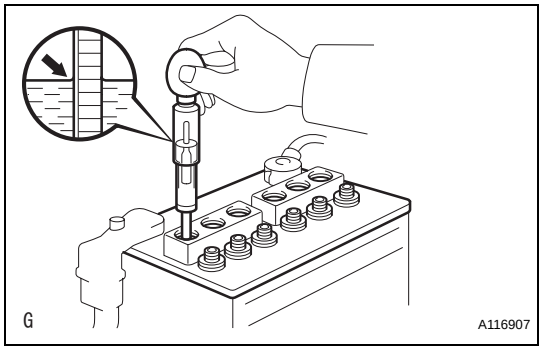

(2) For non-maintenance-free batteries:

If the electrolyte quantity is below the lower line, add distilled water to each cell. Then, recharge the battery and check the electrolyte's specific gravity.

Standard specific gravity:

1.25 to 1.29 at 20°C (68°F)

If the electrolyte quantity is above the lower line, check the battery voltage when cranking the engine. If the voltage is less than 9.6 V, recharge or replace the battery.

HINT:

Before checking the battery voltage, turn off all the electrical systems (headlights, blower motor, rear defogger, etc.).

2. INSPECT BATTERY TERMINAL AND FUSE

(a) Visually check the battery terminals.

(1) Check that the battery terminals are not loose or corroded.

(b) Measure the resistance of the H-fuses and fuses.

Standard resistance:

Below 1 Ω

If the results are not as specified, replace the fuses as necessary.

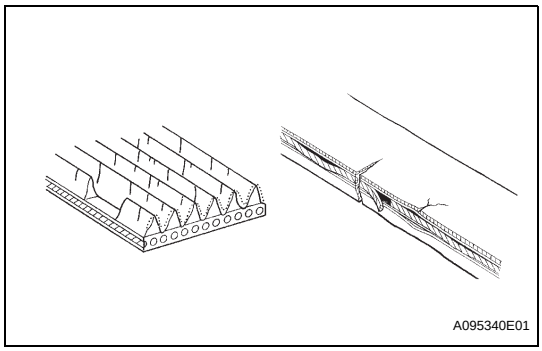
A095340E01

3. INSPECT V-RIBBED BELT

(a) Visually check the belt for excessive wear, frayed cords, etc.
If any defects are found, replace the V-ribbed belt.
HINT:
Cracks on the rib side of the belt are considered acceptable. If the belt has chunks missing from the ribs, it should be replaced.

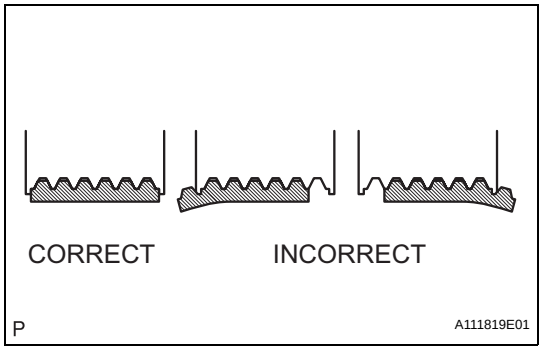

(b) Check that the belt fits properly in the ribbed grooves.
HINT:
Confirm by hand that the belt has not slipped out of the grooves on the bottom of the pulley.

4. INSPECT GENERATOR WIRING

(a) Visually check the generator wiring.
(1) Check that the wiring is in good condition.

5. CHECK FOR ABNORMAL NOISES

(a) Listen for abnormal noises from the generator.
(1) Check that no abnormal noises are heard from the generator while the engine is running.

6. INSPECT CHARGE WARNING LIGHT CIRCUIT

(a) Turn the ignition switch ON. Check that the charge warning light comes on.
(b) Start the engine and check that the light goes off.
If the light does not operate as specified, troubleshoot the charge warning light circuit.

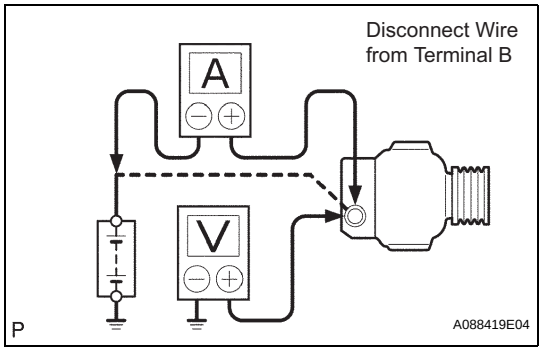

7. INSPECT CHARGING CIRCUIT WITHOUT LOAD

(a) Connect a voltmeter and ammeter to the charging circuit as follows.
(1) Disconnect the wire from terminal B of the generator, then connect it to the negative (-) lead of the ammeter.
(2) Connect the positive (+) lead of the ammeter to terminal B of the generator.
(3) Connect the positive (+) lead of the voltmeter to terminal B of the generator.
(4) Ground the negative (-) lead of the voltmeter.
(b) Check the charging circuit.
(1) Keep the engine speed at 2,000 rpm and check the reading on the ammeter and voltmeter.
Standard amperage:
10 A or less
Standard voltage:
12.1 to 15.4 V
If the result is not as specified, replace the generator.
HINT:
If the battery is not fully charged, the ammeter reading will sometimes be more than the standard amperage.

8. INSPECT CHARGING CIRCUIT WITH LOAD

(a) With the engine running at 2,000 rpm, turn the high beam headlights ON and turn the heater blower switch to the "HI" position.

(b) Check the reading on the ammeter.

Standard amperage:

30 A or more

If the ammeter reading is less than the standard amperage, repair the generator.

HINT:

If the battery is fully charged, the indication will sometimes be less than the standard amperage. If this is the case, add more electrical load (operate the wipers, rear window defogger, etc.) and check the reading on the ammeter again.

CHARGING SYSTEM

PRECAUTION

1. **Check that the battery cables are connected to the correct terminals.**
2. **Disconnect the battery cables if a quick charge is given to the battery.**
3. **Do not perform tests with a high voltage insulation resistance tester.**
4. **Never disconnect the battery while the engine is running.**
5. **Check that the charging cable is tightly connected onto terminal B of the generator and the fuse box.**
6. **Do not check whether the generator generates current or not while terminal F is connected to the other terminals.**

PARTS LOCATION

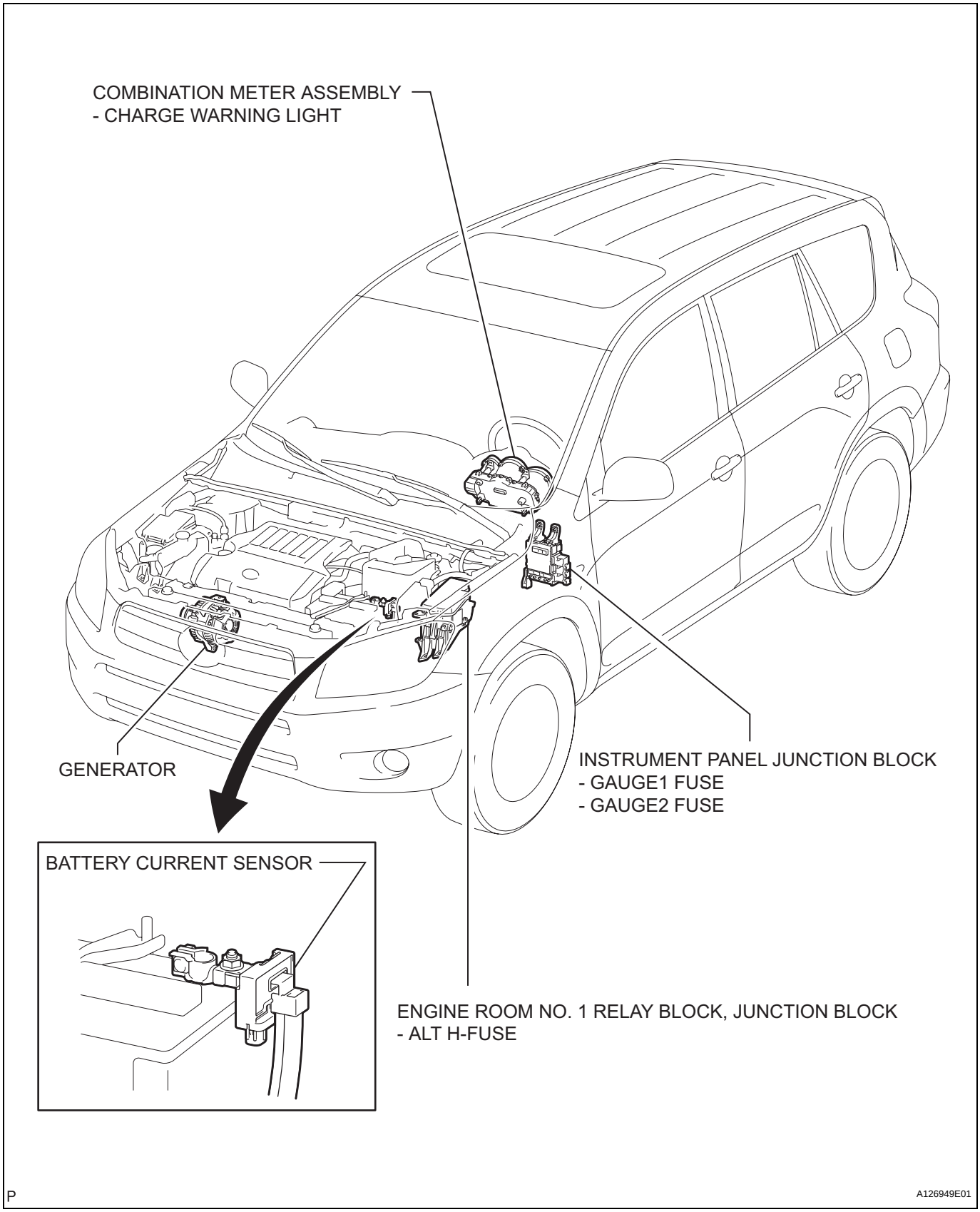

REMOVAL

1. **REMOVE RADIATOR ASSEMBLY**
   (a) Remove the radiator (see page CO-36).
2. **REMOVE FRONT WHEEL RH**
3. **REMOVE ENGINE UNDER COVER REAR RH (See page EM-21)**
4. **REMOVE FRONT SUSPENSION MEMBER REINFORCEMENT RH (See page EM-7)**
5. **REMOVE RADIATOR RESERVOIR TANK (See page CO-19)**
6. **REMOVE FAN AND GENERATOR V BELT (See page EM-8)**
7. **REMOVE GENERATOR ASSEMBLY**
   (a) Disconnect the 2 wire harness clamps.

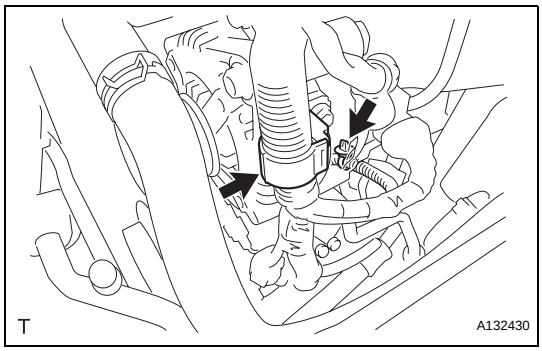

   (b) Remove the terminal cap.
   (c) Remove the nut and disconnect the generator wire from terminal B.
   (d) Disconnect the generator connector from the generator.

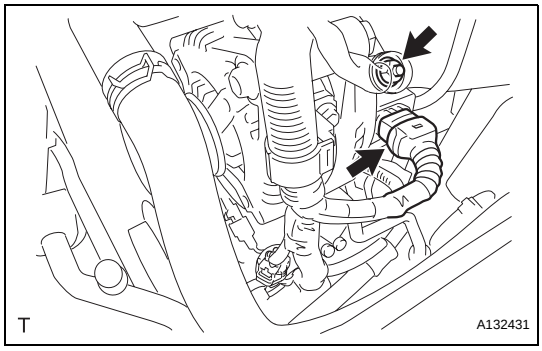

   (e) Remove the bolt from the cylinder block.

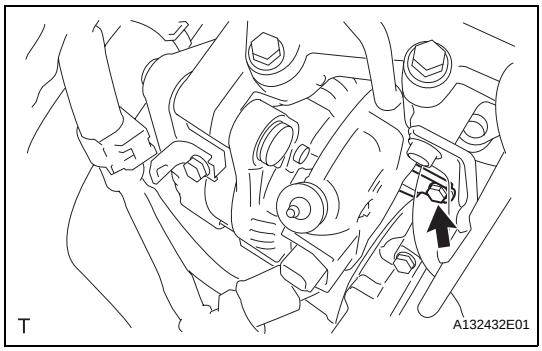

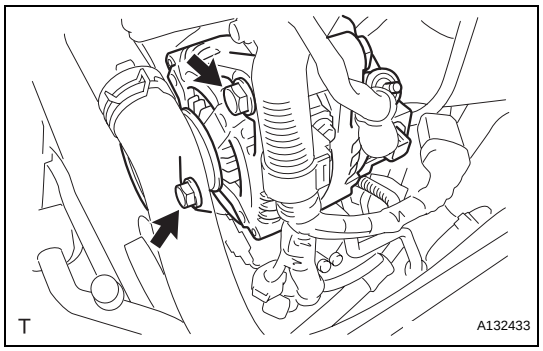

(f) Remove the 2 bolts and generator.

DISASSEMBLY

1. REMOVE GENERATOR PULLEY WITH CLUTCH

(a) Using a screwdriver, puncture the center of the cap and pry it off the pulley.
NOTICE:
Do not reuse the cap.

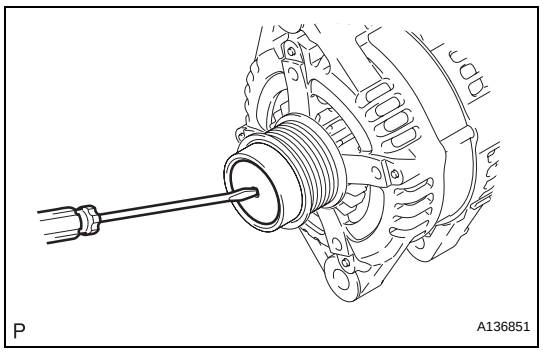

(b) Install SST to the pulley as shown in the illustration.
SST 09820-63020

(c) Mount SST (A) in a vise.

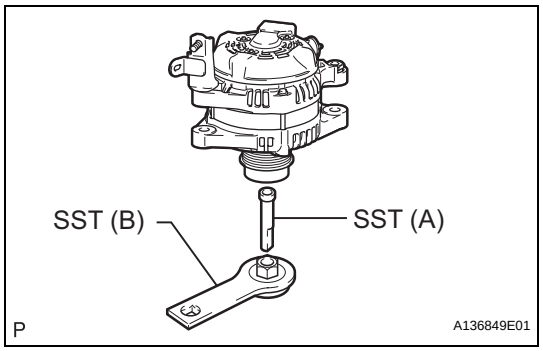

(d) Turn SST (B) clockwise to loosen the pulley.

(e) Remove the pulley.

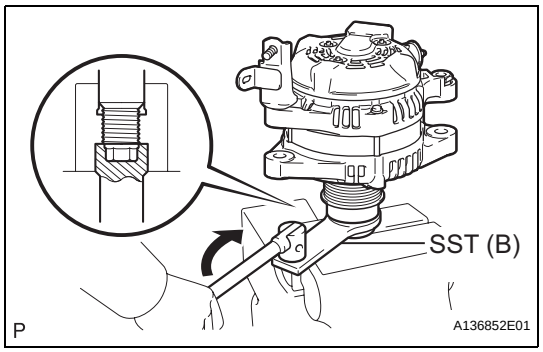

2. REMOVE GENERATOR BRUSH HOLDER ASSEMBLY

(a) Remove the bolt and wire harness clamp stay.

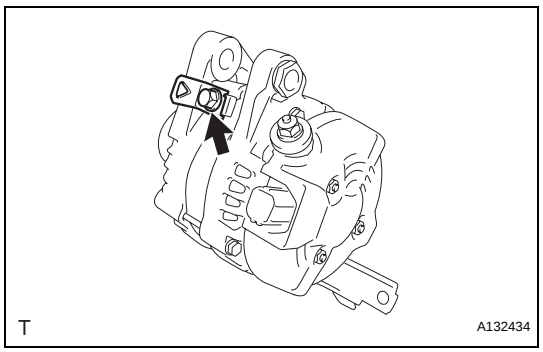

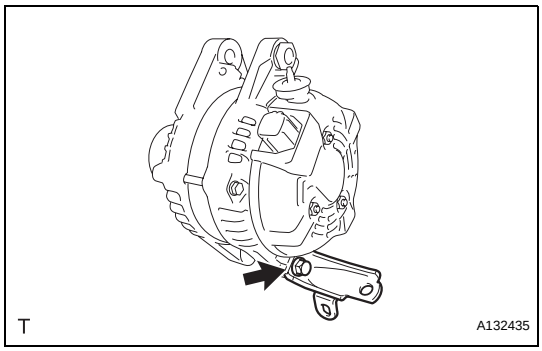

(b) Remove the bolt and bracket.

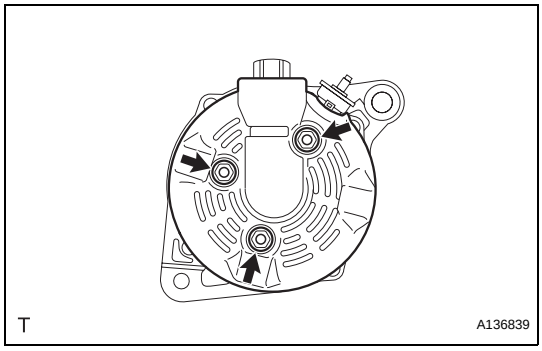

(c) Remove the 3 nuts and generator rear end cover.

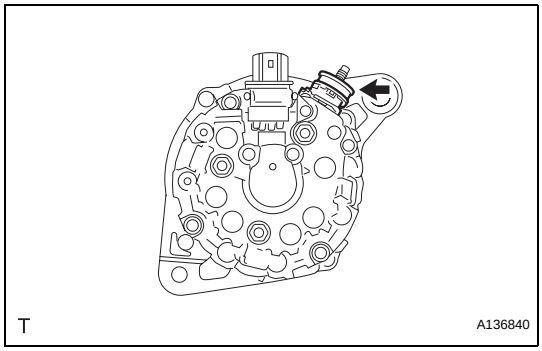

(d) Remove the terminal insulator.

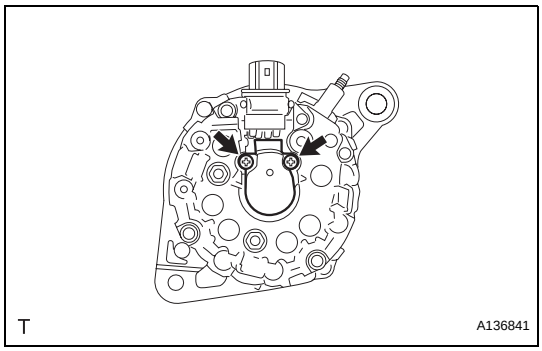

(e) Remove the 2 screws and generator brush holder.

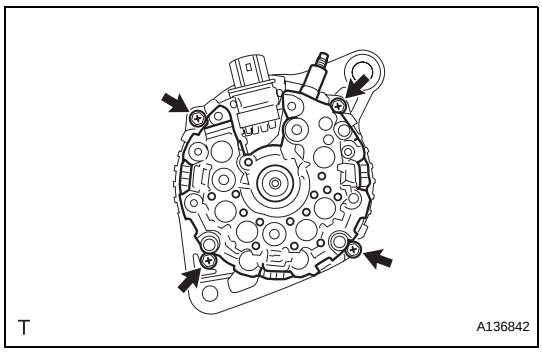

3. REMOVE GENERATOR ROTOR ASSEMBLY

(a) Remove the 4 bolts.

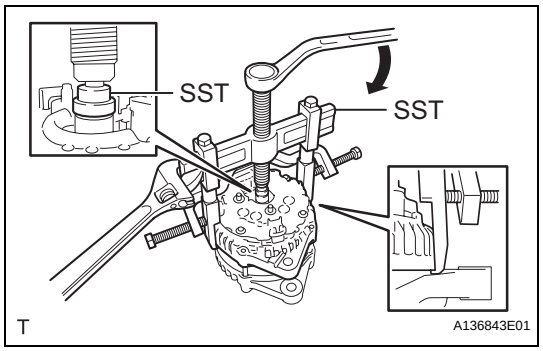

(b) Using SST, remove the generator rectifier end frame.
SST 09950-40011 (09951-04020, 09952-04010, 09953-04020, 09954-04010, 09955-04071, 09957-04010, 09958-04011)
(c) Remove the washer.
(d) Remove the generator rotor.

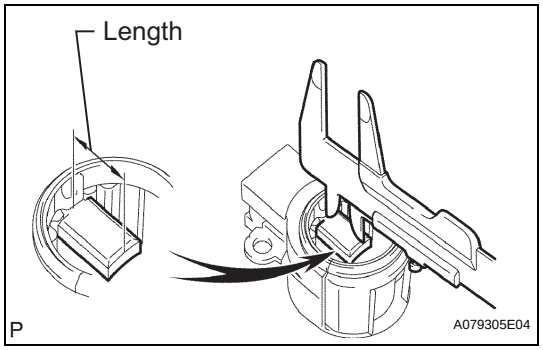

INSPECTION

1. INSPECT GENERATOR BRUSH HOLDER ASSEMBLY

(a) Using a vernier caliper, measure the brush length.
Standard length:
9.5 to 11.5 mm (0.374 to 0.453 in.)
Minimum length:
4.5 mm (0.177 in.)
If the brush length is less than the minimum, replace the generator brush holder assembly.

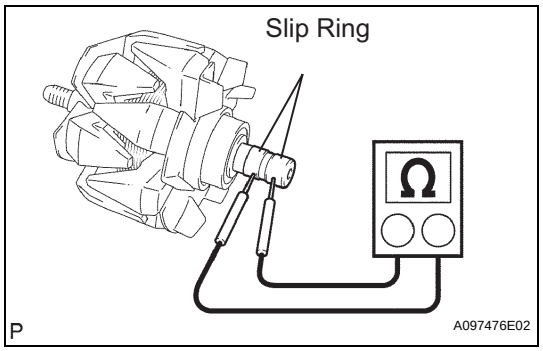

2. INSPECT GENERATOR ROTOR ASSEMBLY

(a) Check the resistance.
(1) Measure the resistance between the slip rings.
Standard resistance:
2.3 to 2.7 Ω at 20°C (68°F)
If the result is not as specified, replace the generator rotor assembly.

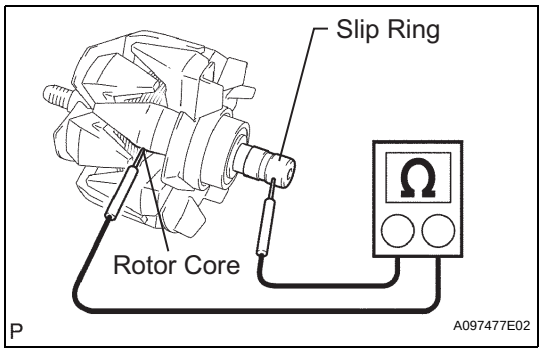

(2) Measure the resistance between the slip ring and rotor core.
Standard resistance:
1 MΩ or higher
If the result is not as specified, replace the generator rotor assembly.

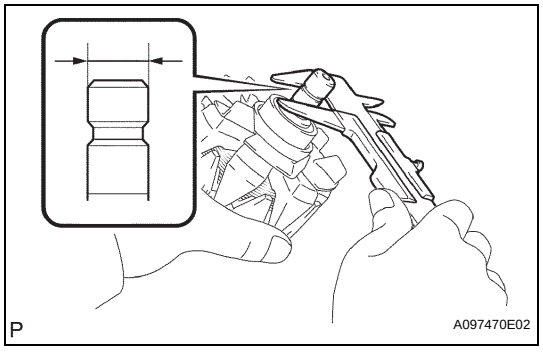

(b) Check the slip ring diameter.
(1) Using a vernier caliper, measure the slip ring diameter.
Standard diameter:
14.2 to 14.4 mm (0.559 to 0.567 in.)
Minimum diameter:
14 mm (0.551 in.)
If the diameter is less than the minimum, replace the generator rotor assembly.

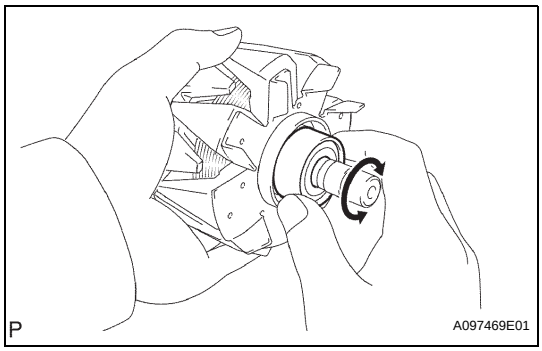

(c) Check the appearance.
(1) Check that the bearing is not rough or worn.
OK:
The bearing rotates smoothly.
If the result is not as specified, replace the generator rotor assembly.

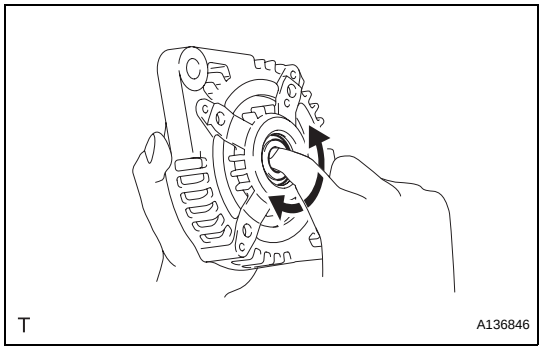

3. INSPECT GENERATOR DRIVE END FRAME BEARING
(a) Check that the bearing is not rough or worn.
OK:
The bearing rotates smoothly.
If the bearing does not rotate smoothly, replace the bearing.

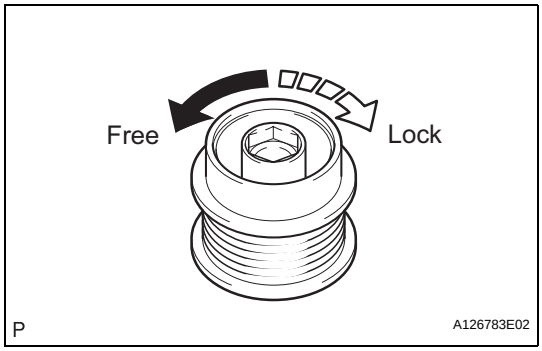

4. INSPECT GENERATOR PULLEY WITH CLUTCH
(a) Hold the center of the pulley, and confirm that the outer ring turns counterclockwise and does not turn clockwise.
If the result is not as specified, replace the generator pulley with clutch.

REPLACEMENT

1. REPLACE GENERATOR DRIVE END FRAME BEARING
(a) Remove the 4 screws and bearing retainer.

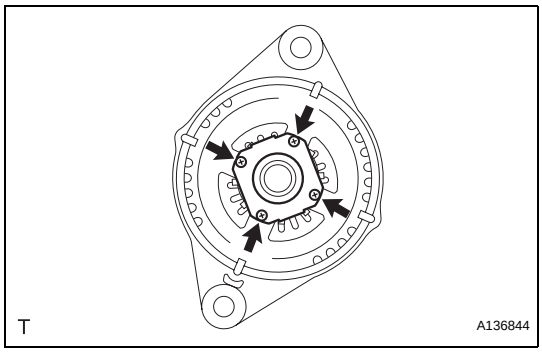

(b) Using SST and a hammer, tap out the bearing.
SST 09950-60010 (09951-00250), 09950-70010 (09951-07100)

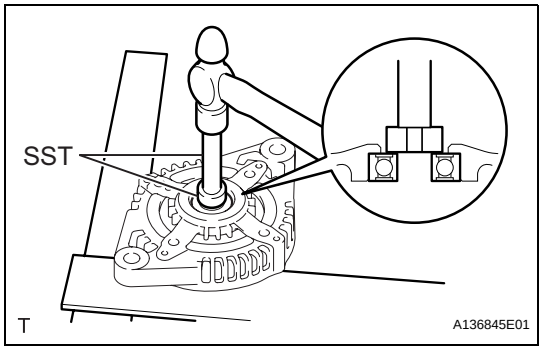

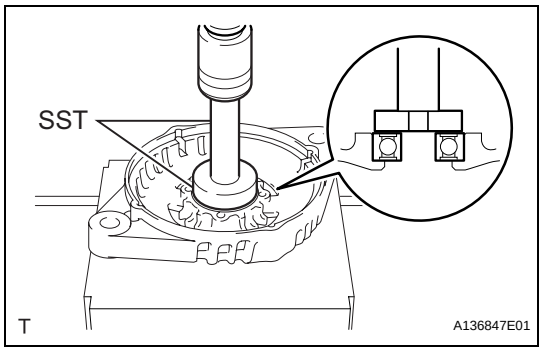

(c) Using SST and a press, press in a new bearing.
SST 09950-60010 (09951-00250), 09950-70010 (09951-07100)

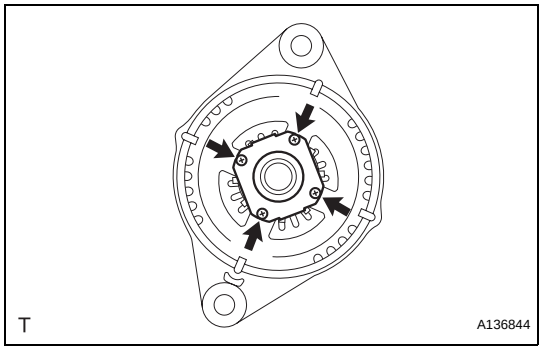

(d) Install the bearing retainer with the 4 screws.
Torque: 2.3 N*m (23 kgf*cm, 20 in.*lbf)

REASSEMBLY

1. INSTALL GENERATOR ROTOR ASSEMBLY

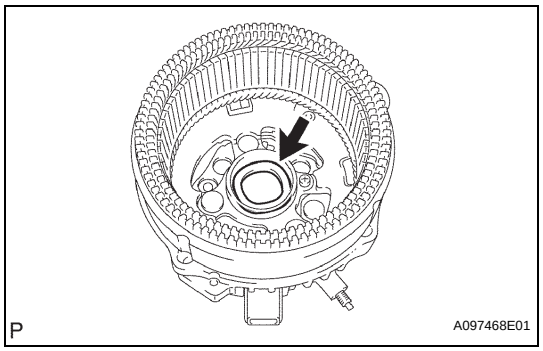

(a) Install the washer onto the generator rectifier end frame.

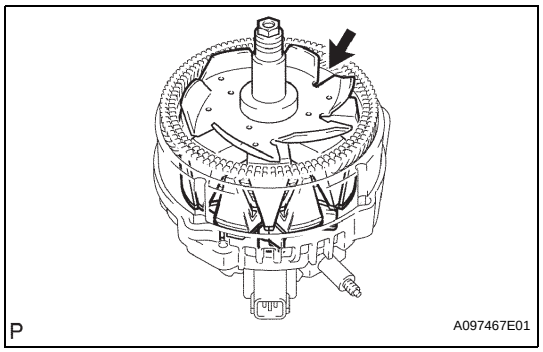

(b) Install the generator rotor onto the generator rectifier end frame.

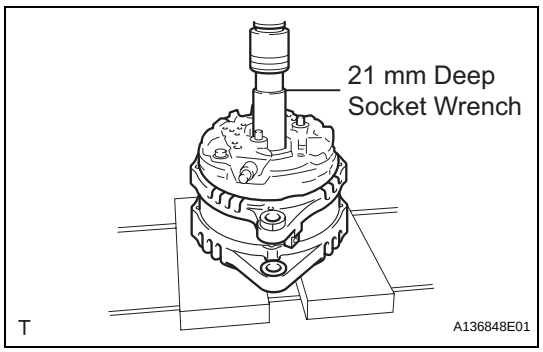

(c) Using a 21 mm deep socket wrench and press, slowly push the generator drive end frame onto the generator rectifier frame.

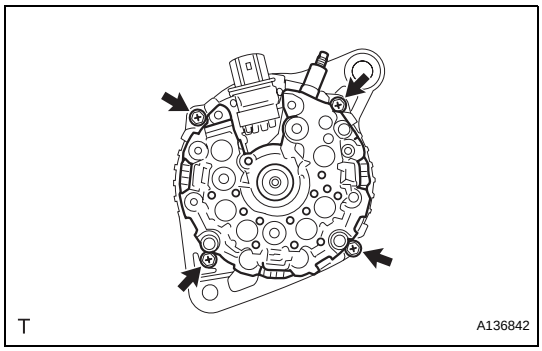

(d) Install the 4 bolts.
Torque: 5.8 N*m (59 kgf*cm, 51 in.*lbf)

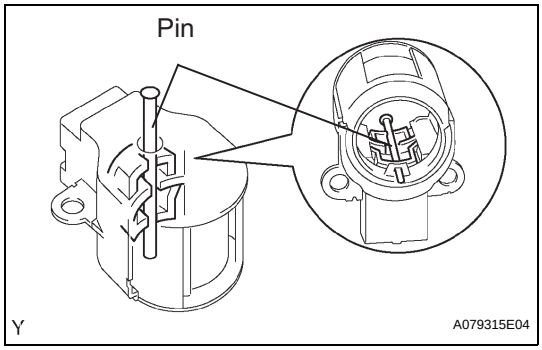

2. INSTALL GENERATOR BRUSH HOLDER ASSEMBLY

(a) While pushing the 2 brushes into the generator brush holder, insert a ϕ 1.0 mm (0.039 in.) pin into the generator brush holder.

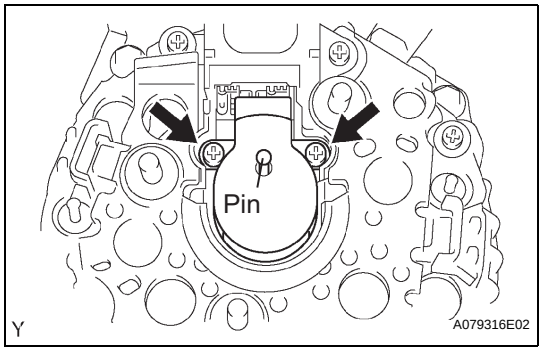

(b) Install the generator brush holder with the 2 screws.
Torque: 1.8 N*m (18 kgf*cm, 16 in.*lbf)

(c) Pull the pin out of the generator brush holder.

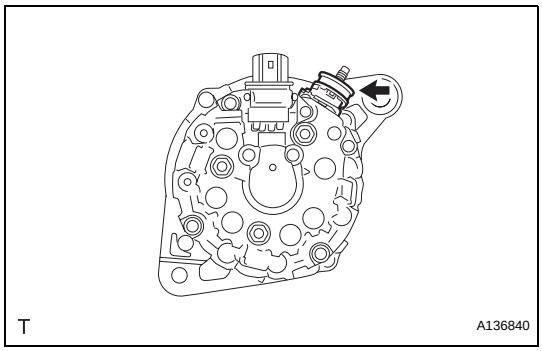

(d) Install the terminal insulator onto the generator rectifier end frame.

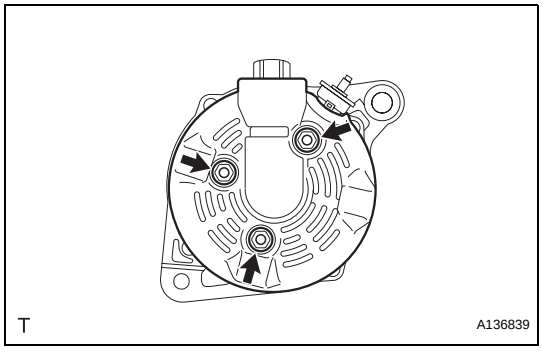

(e) Install the generator rear end cover with the 3 nuts.
Torque: 4.6 N*m (47 kgf*cm, 41 in.*lbf)

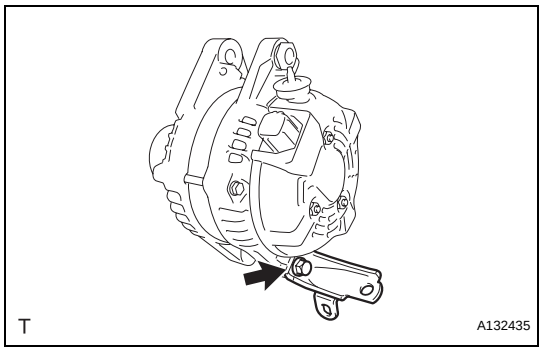

(f) Install the bracket with the bolt.
Torque: 20 N*m (204 kgf*cm, 15 ft.*lbf)

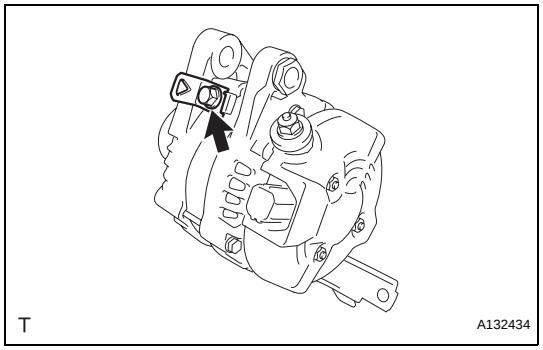

(g) Install the wire harness clamp stay.
Torque: 8.4 N*m (86 kgf*cm, 74 in.*lbf)

3. INSTALL GENERATOR PULLEY WITH CLUTCH

(a) Install the pulley by hand.

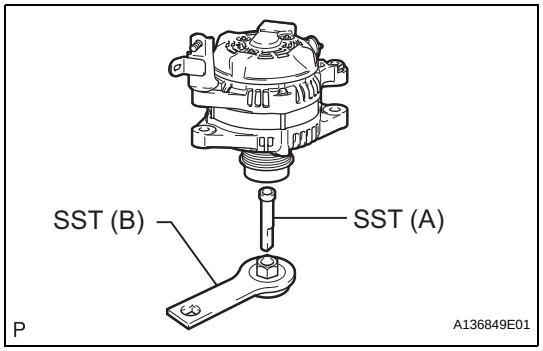

(b) Install SST to the pulley as shown in the illustration.
SST 09820-63020

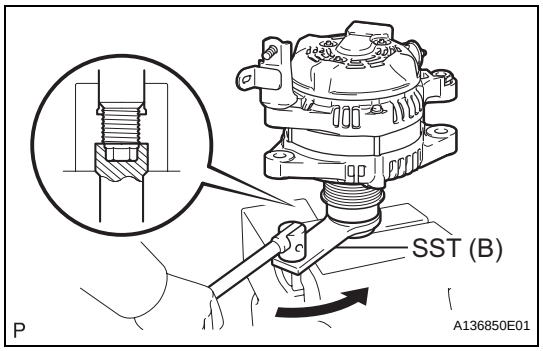

(c) Turn SST (B) counterclockwise to tighten the pulley.
Torque: 111 N*m (1125 kgf*cm, 81 ft.*lbf)

(d) Install a new cap to the pulley.

(e) Check that the generator pulley rotates smoothly.

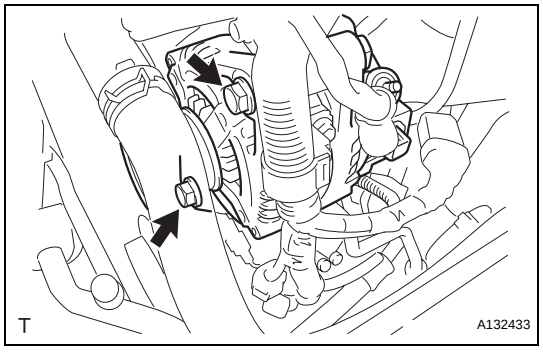

INSTALLATION

1. INSTALL GENERATOR ASSEMBLY

(a) Install the generator with the 2 bolts.
Torque: 43 N*m (438 kgf*cm, 32 ft.*lbf)

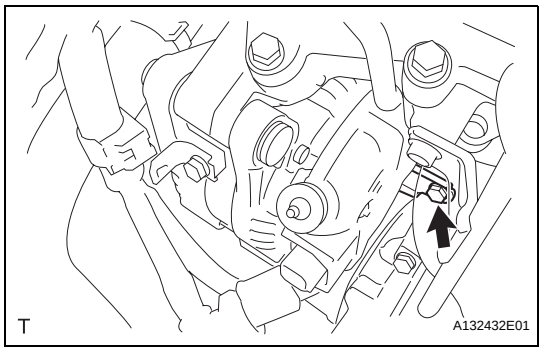

(b) Install the bolt to the cylinder block.
Torque: 20 N*m (204 kgf*cm, 15 ft.*lbf)

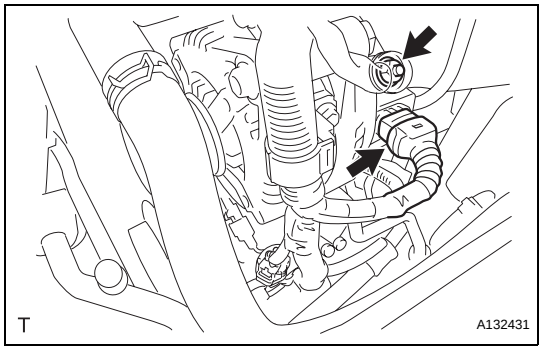

(c) Connect the generator connector to the generator.
(d) Connect the generator wire with the nut.
Torque: 9.8 N*m (100 kgf*cm, 88 in.*lbf)
(e) Install the terminal cap.

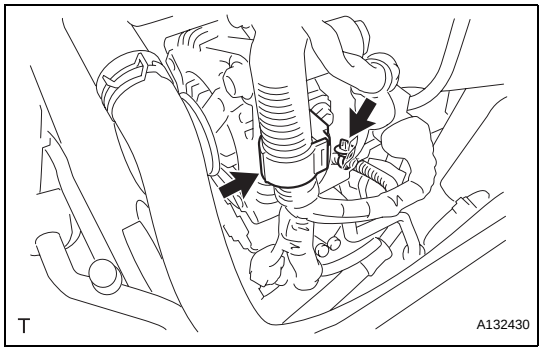

(f) Connect the 2 wire harness clamps.

2. **INSTALL FAN AND GENERATOR V BELT (See page EM-8)**
3. **INSTALL RADIATOR RESERVOIR TANK (See page CO-21)**
4. **INSTALL FRONT SUSPENSION MEMBER REINFORCEMENT RH (See page EM-9)**
5. **INSTALL ENGINE UNDER COVER REAR RH (See page EM-41)**
6. **INSTALL FRONT WHEEL RH**
7. **INSTALL RADIATOR ASSEMBLY**
   (a) Install the radiator (see page CO-40).

GENERATOR

COMPONENTS

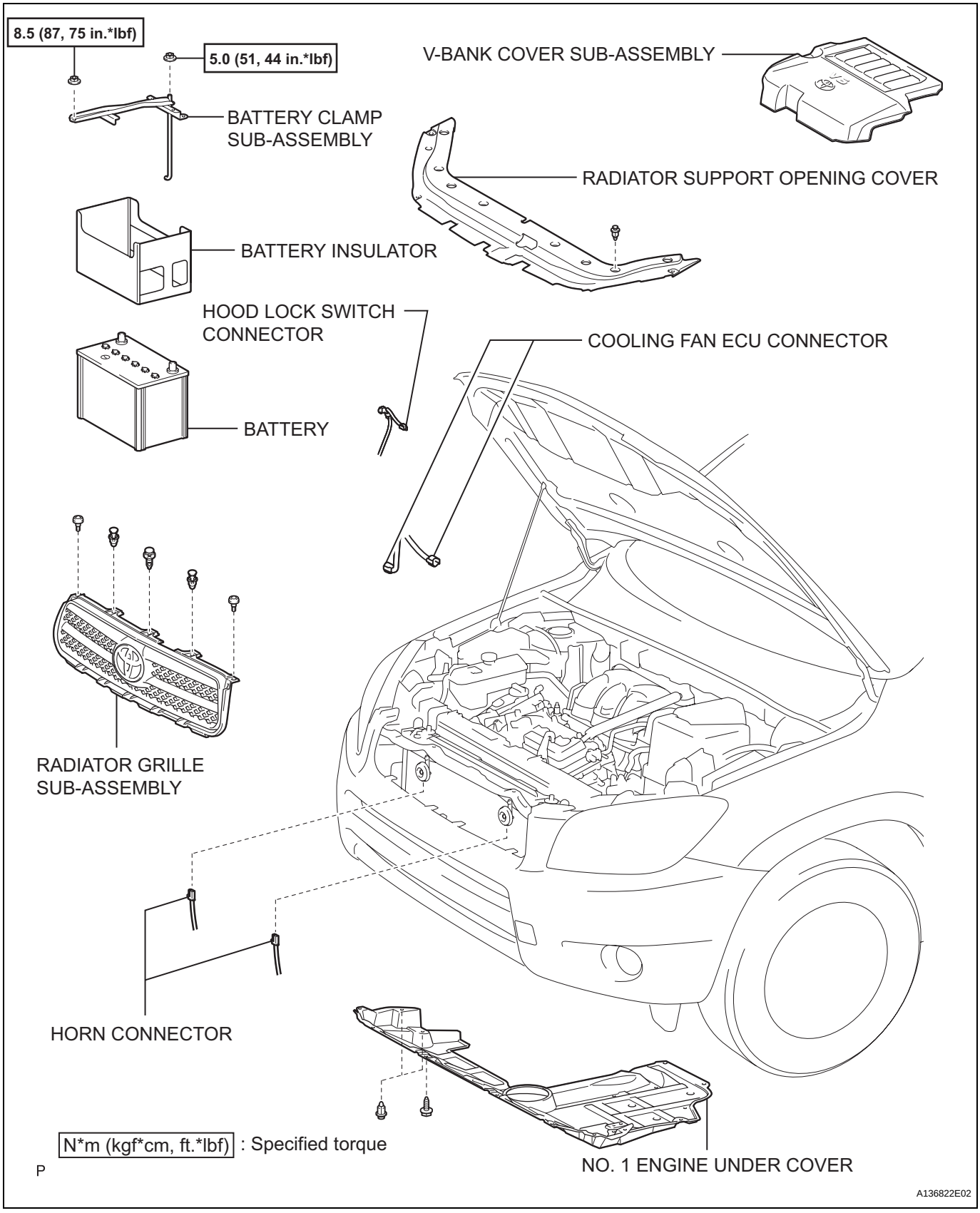

CH

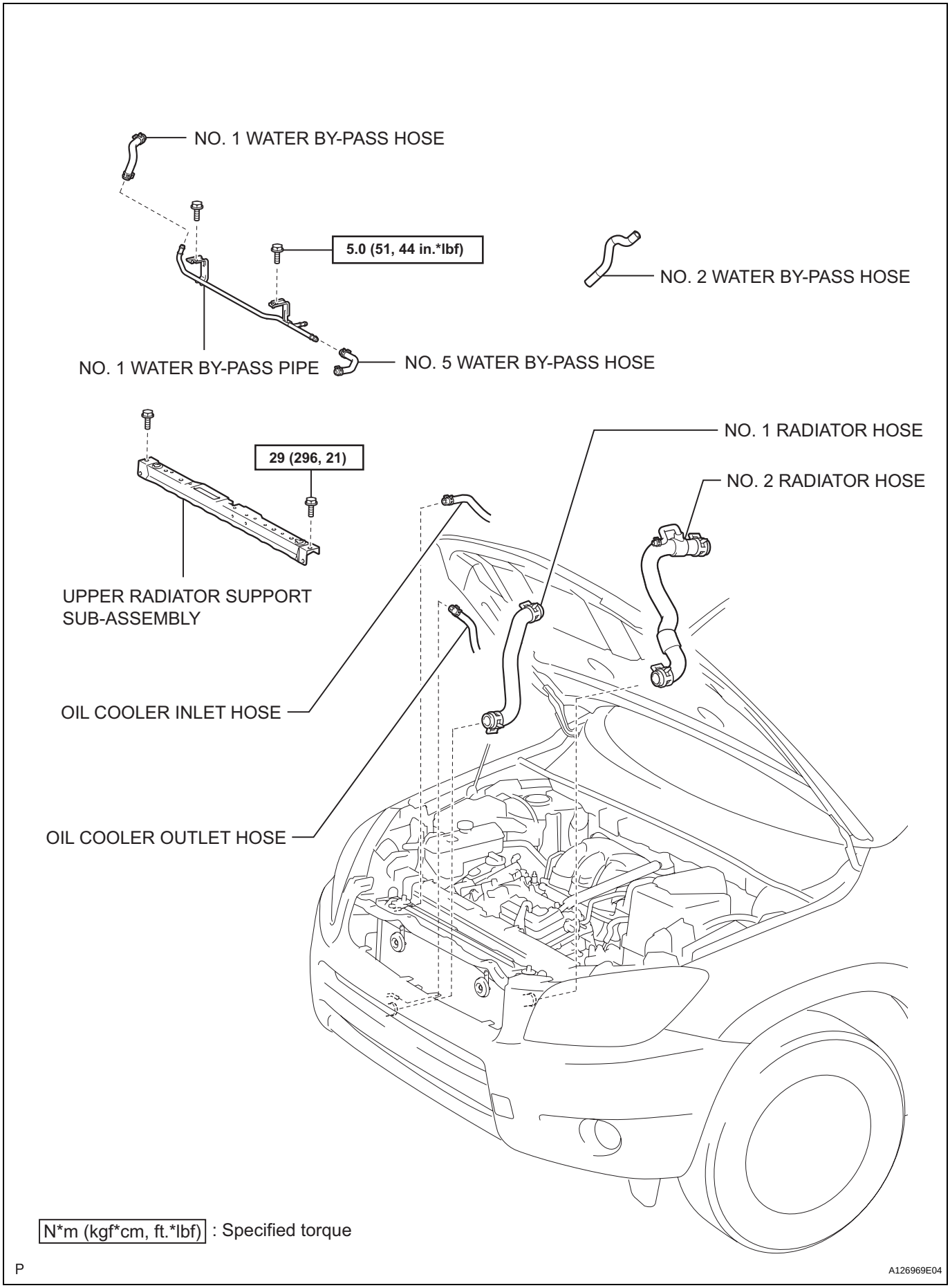
NO. 1 WATER BY-PASS HOSE
5.0 (51, 44 in.*lbf)
NO. 2 WATER BY-PASS HOSE
NO. 1 WATER BY-PASS PIPE
NO. 5 WATER BY-PASS HOSE
29 (296, 21)
NO. 1 RADIATOR HOSE
NO. 2 RADIATOR HOSE
UPPER RADIATOR SUPPORT SUB-ASSEMBLY
OIL COOLER INLET HOSE
OIL COOLER OUTLET HOSE
N*m (kgf*cm, ft.*lbf) : Specified torque
P
A126969E04

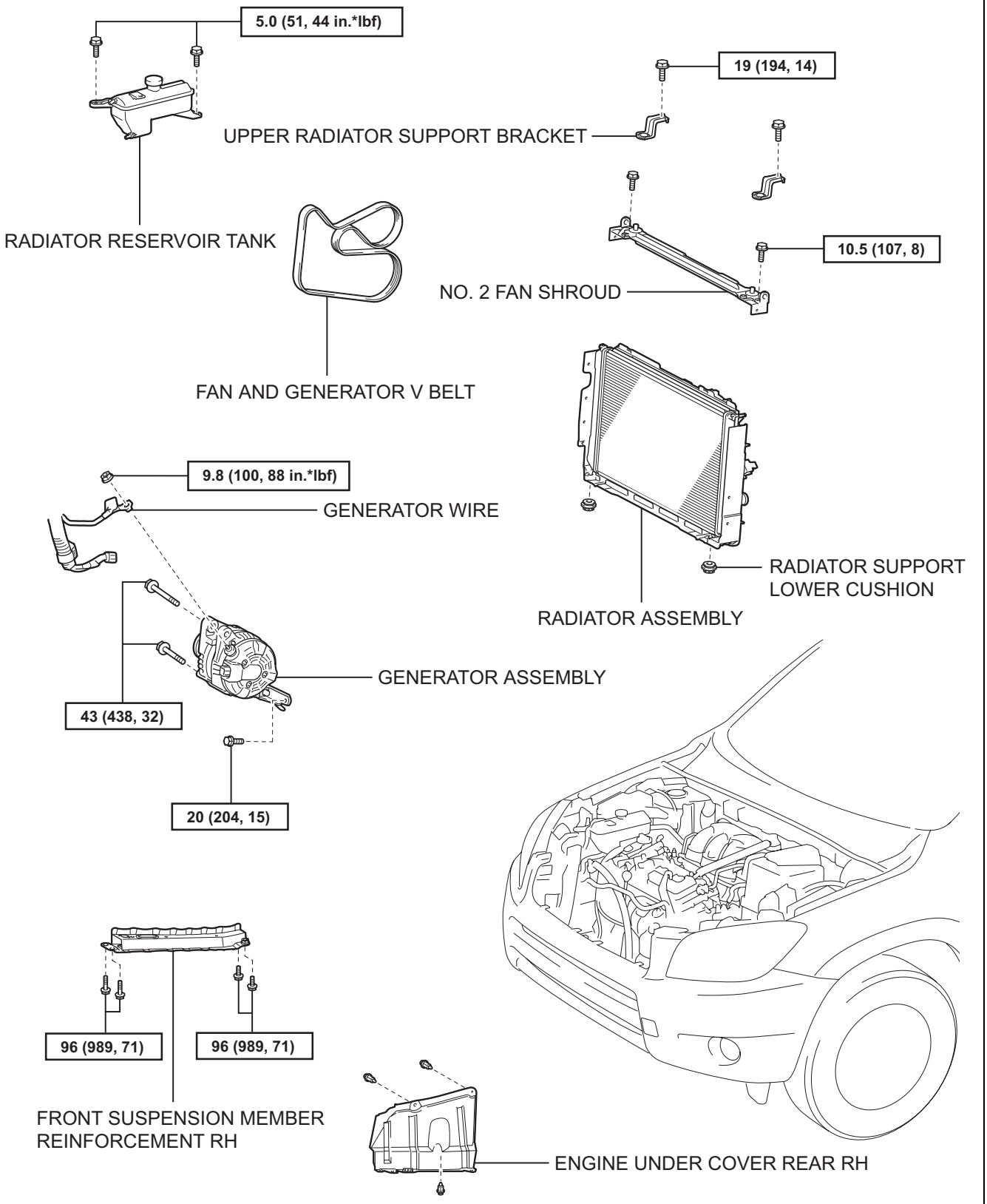

N*m (kgf*cm, ft.*lbf) : Specified torque

P

A132429E01

CH

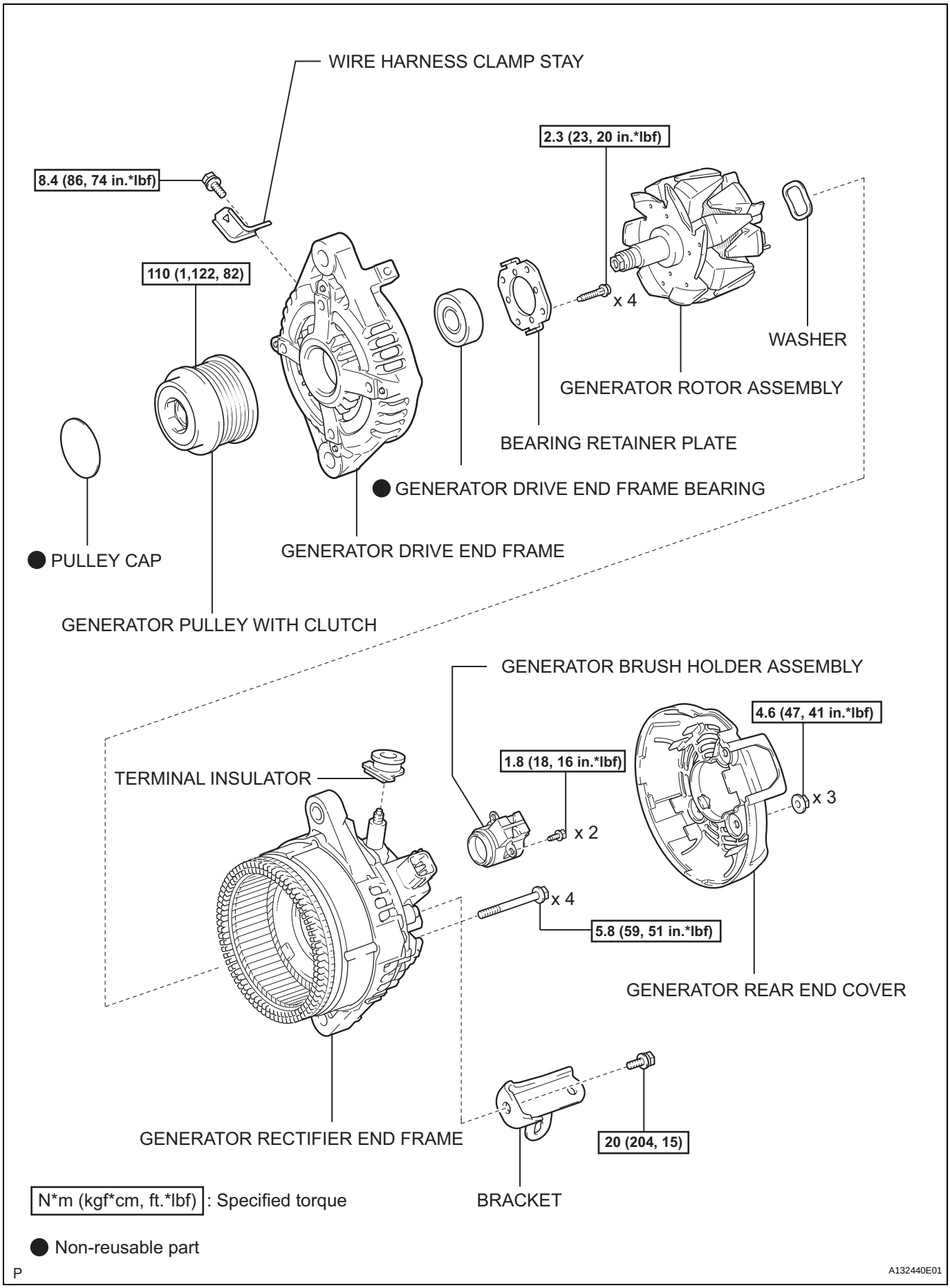
WIRE HARNESS CLAMP STAY
2.3 (23, 20 in.*lbf)
8.4 (86, 74 in.*lbf)
110 (1,122, 82)
x 4
WASHER
GENERATOR ROTOR ASSEMBLY
BEARING RETAINER PLATE
GENERATOR DRIVE END FRAME BEARING
PULLEY CAP
GENERATOR DRIVE END FRAME
GENERATOR PULLEY WITH CLUTCH
GENERATOR BRUSH HOLDER ASSEMBLY
4.6 (47, 41 in.*lbf)
1.8 (18, 16 in.*lbf)
TERMINAL INSULATOR
x 3
x 2
x 4
5.8 (59, 51 in.*lbf)
GENERATOR REAR END COVER
GENERATOR RECTIFIER END FRAME
20 (204, 15)
BRACKET
N*m (kgf*cm, ft.*lbf) : Specified torque
Non-reusable part
P
A132440E01

CH

COOLANT

REPLACEMENT

1. **REMOVE NO. 1 ENGINE UNDER COVER (See page EM-21)**

2. **DRAIN ENGINE COOLANT**
   (a) Loosen the radiator drain cock plug.
   HINT:
   Collect the coolant in a container and dispose of it according to the regulations in your area.
   (b) Remove the radiator reservoir cap.
   CAUTION:
   Do not remove the radiator reservoir cap while the engine and radiator are still hot. Pressurized, hot engine coolant and steam may be released and cause serious burns.
   (c) Loosen the 2 cylinder block drain cock plugs.

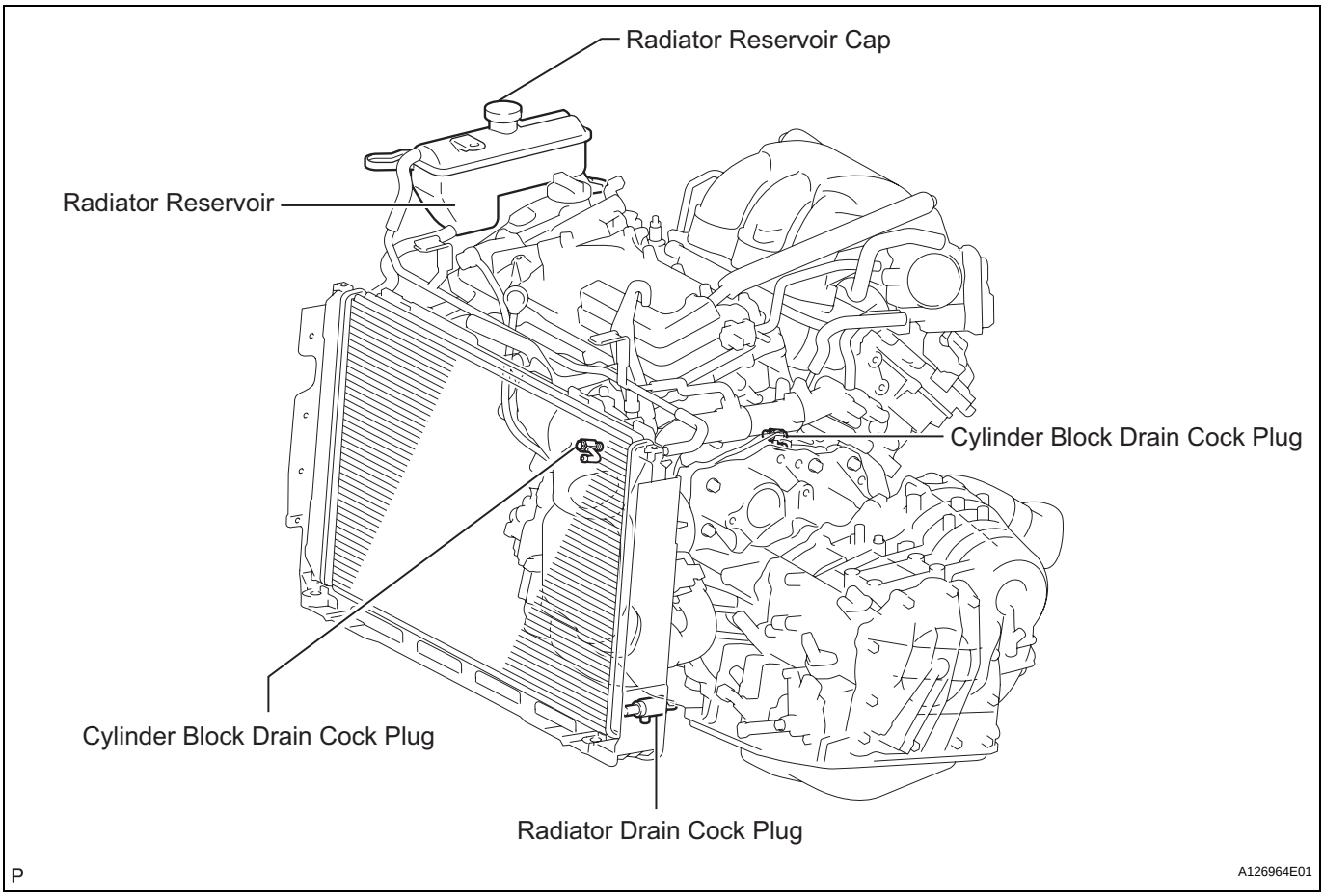

3. **ADD ENGINE COOLANT**
   (a) Tighten the radiator drain cock plug by hand.
   (b) Tighten the 2 cylinder block drain cock plugs.
   Torque: 12.7 N*m (130 kgf*cm, 10 ft.*lbf)
   (c) Add TOYOTA Super Long Life Coolant (SLLC) to the radiator reservoir filler opening.

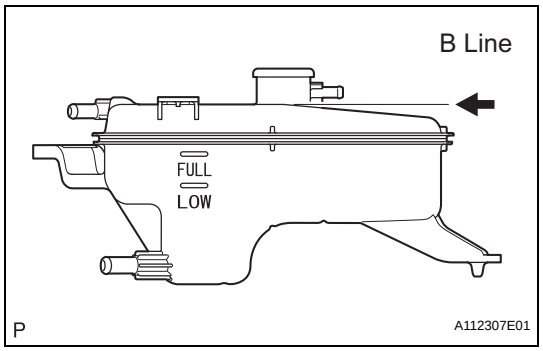

(d) Continue adding TOYOTA SLLC until it is filled to the B line at the base of the reservoir's filler neck.
Standard capacity

Item	Specified Condition
STD (A/T)	**8.9 liters (9.4 US qts, 7.8 Imp. qts)**
TWG (A/T)	**9.3 liters (9.8 US qts, 8.2 Imp. qts)**

HINT:
TOYOTA vehicles are filled with TOYOTA SLLC at the factory. In order to avoid damage to the engine cooling system and other technical problems, only use TOYOTA SLLC or similar high quality ethylene glycol based non-silicate, non-amine, non-nitrite, non-borate coolant with long-life hybrid organic acid technology (coolant with long-life hybrid organic acid technology consists of a combination of low phosphates and organic acids).
NOTICE:
Never use water as a substitute for engine coolant.

(e) Press the No. 1 and No. 2 radiator hoses several times by hand, and then check the level of the coolant. If the coolant level drops below the B line, add TOYOTA SLLC to the B line.
(f) Install the radiator reservoir cap.
(g) Start the engine and warm it up until the cooling fan operates. While the cooling fan operates, circulate the coolant for several minutes.
(1) Set the air conditioning as follows while warming up the engine.

Item	Specified Condition
Manual Air Conditioning System	Fan speed: Any setting except OFF
	Temperature: Toward WARM Air conditioning switch: OFF
Automatic Air Conditioning System	Temperature: Toward MAX Air conditioning switch: OFF

(2) Maintain the engine speed at 2,000 to 2,500 rpm and warm up the engine until the cooling fan operates.
NOTICE:
- **Make sure that the radiator reservoir still has some coolant in it.**
- **Pay attention to the needle of the water temperature meter. Make sure that the needle does not show an abnormally high temperature.**
- **If there is not enough coolant, the engine may burn out or overheat.**
- **Immediately after starting the engine, if the radiator reservoir does not have any coolant, perform the following: 1) stop the engine, 2) wait until the coolant has cooled down, and 3) add coolant until the coolant is filled to the B line.**

- **Run the engine at 2,000 rpm until the coolant level has stabilized.**

(h) Press the No. 1 and No. 2 radiator hoses several times by hand to bleed air.
CAUTION:
When pressing the radiator hoses:
- **Wear protective gloves.**
- **Be careful as the radiator hoses are hot.**
- **Keep your hands away from the radiator fan.**

(i) Stop the engine and wait until the coolant cools down to ambient temperature.

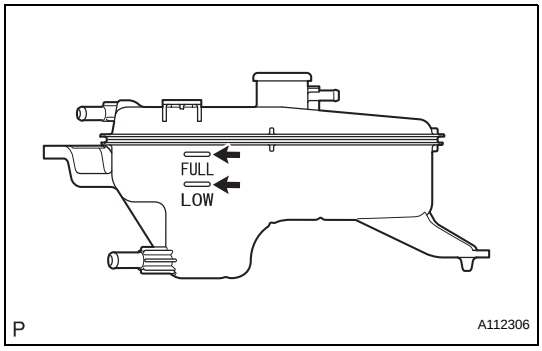

(j) Check that the coolant level is between the FULL and LOW line.
If the coolant level is below the LOW line, repeat all of the procedures above.
If the coolant level is above the FULL line, drain coolant so that the coolant level is between the FULL and LOW line.

4. **CHECK FOR ENGINE COOLANT LEAKAGE (See page CO-1)**

5. **INSTALL NO. 1 ENGINE UNDER COVER (See page EM-41)**

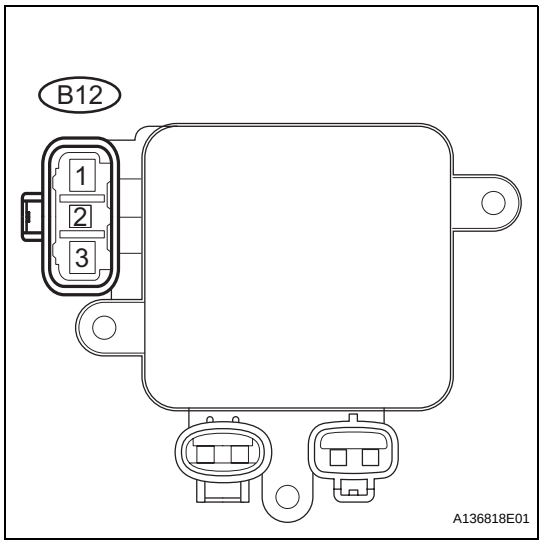

COOLING FAN ECU

ON-VEHICLE INSPECTION

1. CHECK COOLING FAN ECU (w/o Trailer Towing System)

(a) Disconnect the B12 ECU connector.

(b) Measure the voltage and resistance of the wire harness side connector.

Standard voltage

Tester Connection	Condition	Specified Condition
B12-3 (+B) - Body ground	Ignition switch ON	9 to 14 V

Standard resistance

Tester Connection	Condition	Specified Condition
B12-1 (E1) - Body ground	Always	Below 1 Ω

If the result is not as specified, inspect the power source system (fusible link, fuse, wire harness and relay).

(c) Connect the B12 ECU connector.

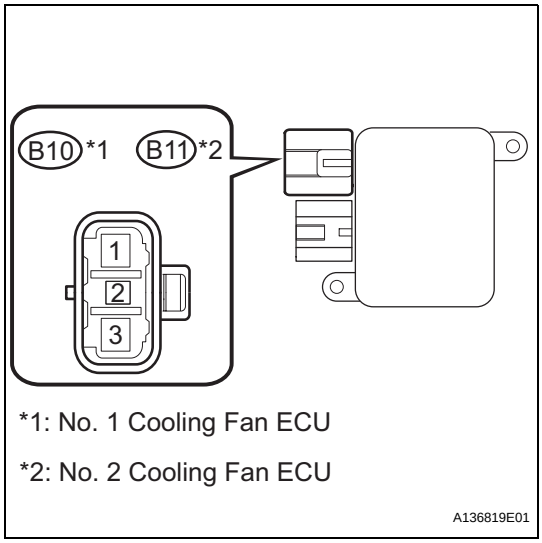

2. CHECK COOLING FAN ECU (w/ Trailer Towing System)

(a) Disconnect the B10 and B11 ECU connector.

(b) Measure the voltage and resistance of the wire harness side connector.

Standard voltage

Tester Connection	Condition	Specified Condition
B10-1 (+B1) - Body ground	Ignition switch ON	9 to 14 V
B11-1 (+B2) - Body ground	Ignition switch ON	9 to 14 V

Standard resistance

Tester Connection	Condition	Specified Condition
B10-3 (E1) - Body ground	Always	Below 1 Ω
B11-3 (E2) - Body ground	Always	Below 1 Ω

If the result is not as specified, inspect the power source system (fusible link, fuse, wire harness and relay).

(c) Connect the B10 and B11 ECU connector.

CO

REMOVAL

1. **REMOVE RADIATOR ASSEMBLY**
   (a) Remove the radiator (see page CO-36).

DISASSEMBLY

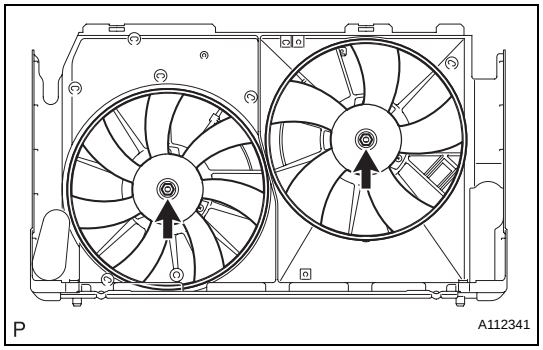

1. **REMOVE FAN**
   (a) Remove the 2 nuts and 2 fans.

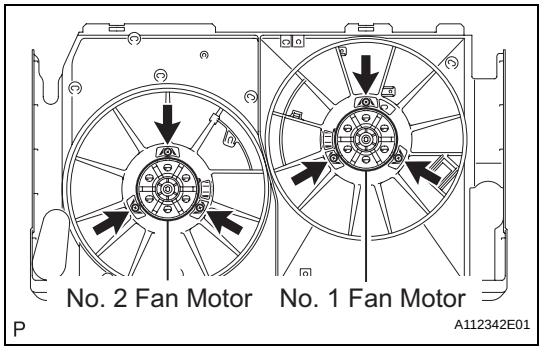

2. **REMOVE NO. 1 COOLING FAN MOTOR**
   (a) Remove the 3 screws and fan motor.
3. **REMOVE NO. 2 COOLING FAN MOTOR**
   (a) Remove the 3 screws and fan motor.

REASSEMBLY

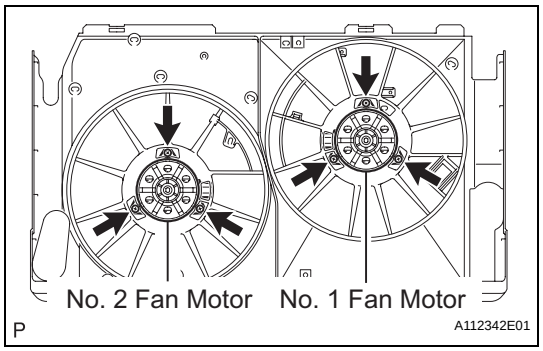

1. **INSTALL NO. 2 COOLING FAN MOTOR**
   (a) Install the fan motor with the 3 screws.
   Torque: 3.9 N*m (40 kgf*cm, 35 in.*lbf)
2. **INSTALL NO. 1 COOLING FAN MOTOR**
   (a) Install the fan motor with the 3 screws.
   Torque: 3.9 N*m (40 kgf*cm, 35 in.*lbf)

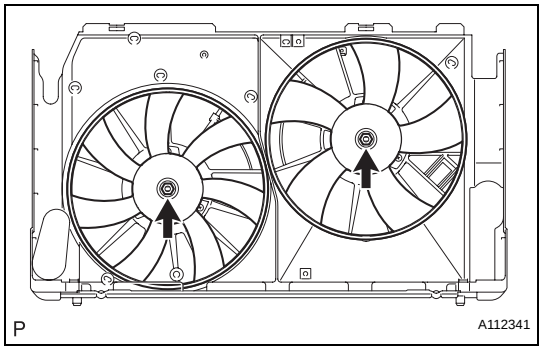

3. **INSTALL FAN**
   (a) Install the 2 fans with the 2 nuts.
   Torque: 6.3 N*m (64 kgf*cm, 55 in.*lbf)
   (b) Check the fan motor operation.

CO

INSTALLATION

1. INSTALL RADIATOR ASSEMBLY

(a) Install the radiator (see page CO-40).

COOLING FAN MOTOR

COMPONENTS

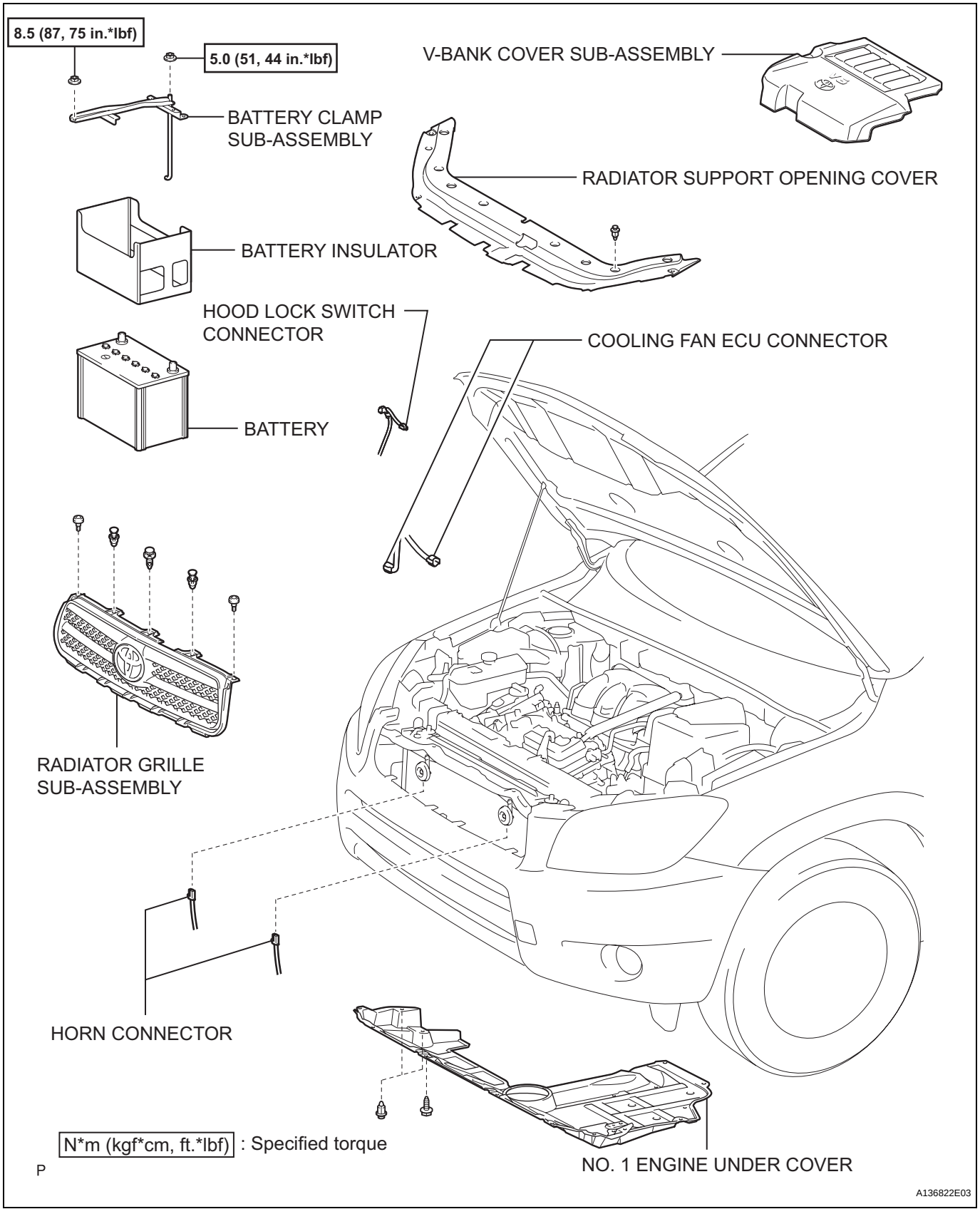

CO

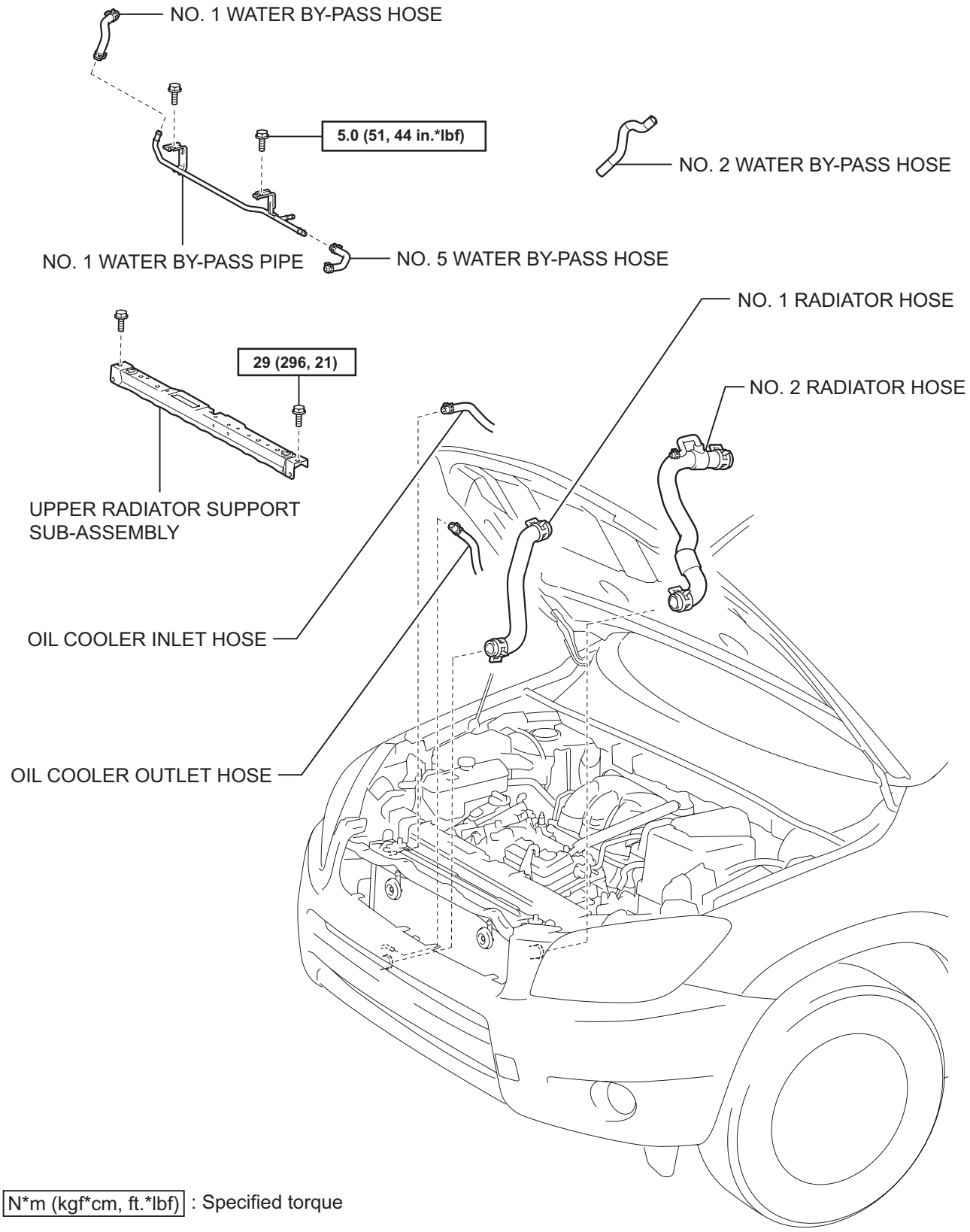
NO. 1 WATER BY-PASS HOSE
5.0 (51, 44 in.*lbf)
NO. 2 WATER BY-PASS HOSE
NO. 1 WATER BY-PASS PIPE
NO. 5 WATER BY-PASS HOSE
NO. 1 RADIATOR HOSE
29 (296, 21)
NO. 2 RADIATOR HOSE
UPPER RADIATOR SUPPORT SUB-ASSEMBLY
OIL COOLER INLET HOSE
OIL COOLER OUTLET HOSE
N*m (kgf*cm, ft.*lbf) : Specified torque
P
A126969E03

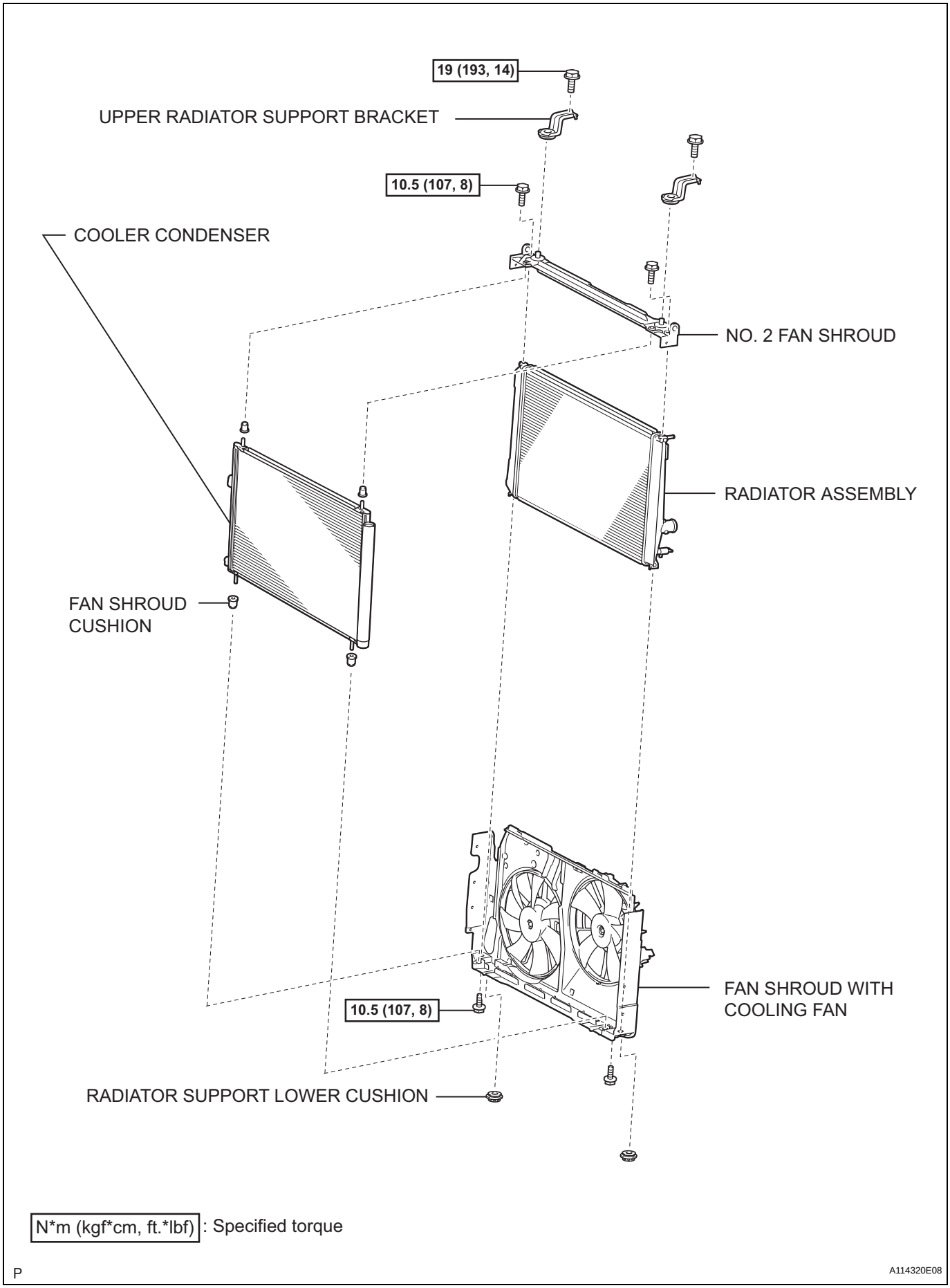

N*m (kgf*cm, ft.*lbf): Specified torque

P

A114320E08

CO

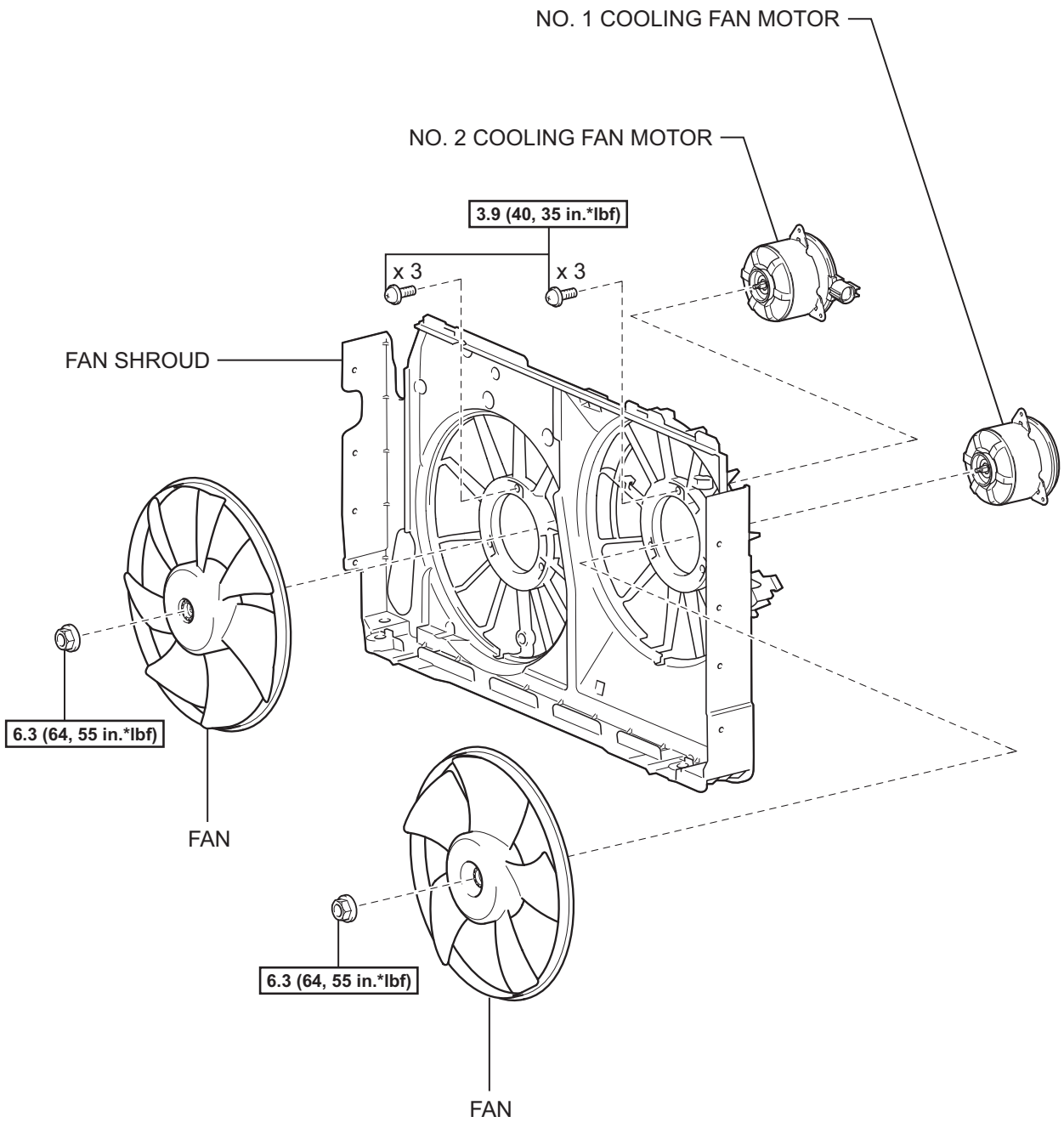

N*m (kgf*cm, ft.*lbf) : Specified torque

P

A114316E04

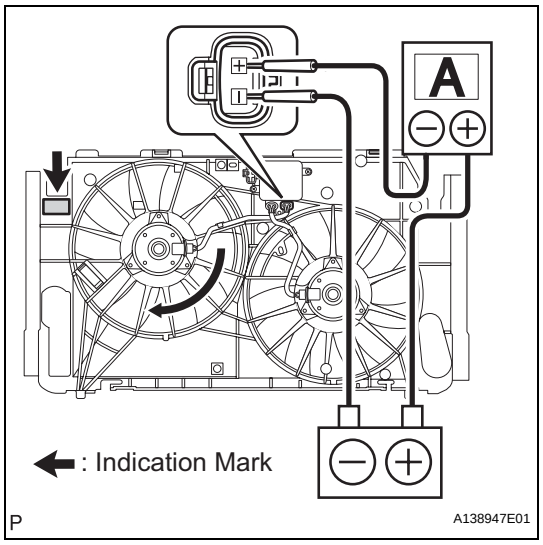

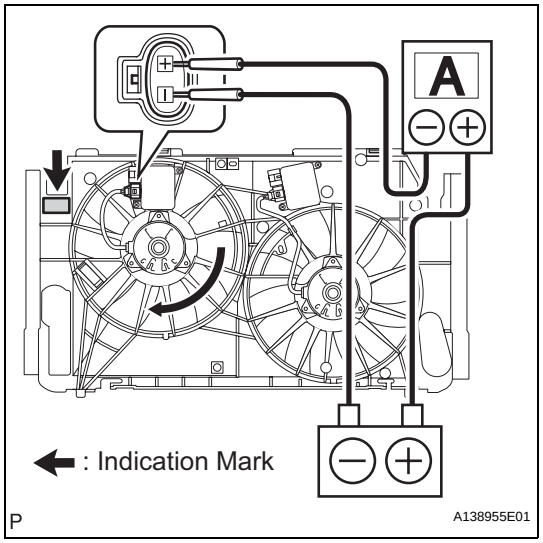

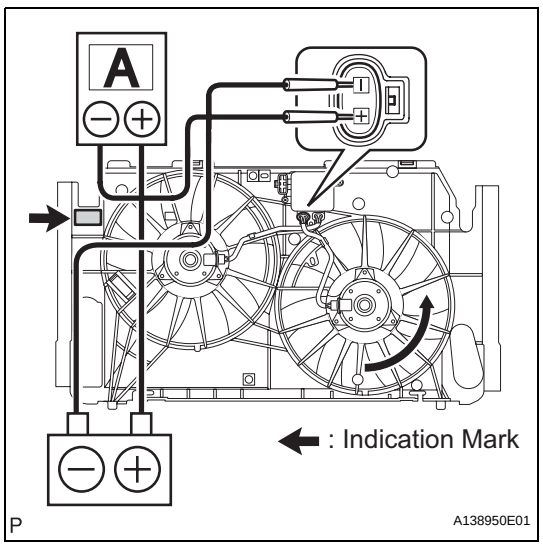

ON-VEHICLE INSPECTION

1. INSPECT NO. 1 COOLING FAN MOTOR (w/o Trailer Towing System)

(a) Disconnect the No. 1 fan connector.
(b) Connect the battery and an ammeter to the No. 1 fan motor connector.
(c) Check that the No. 1 fan rotates smoothly, and then check the reading on the ammeter.

Standard amperage

Indication Mark	Motor Type	Condition	Specified Condition
E	160 W	at 20°C (68°F)	11.8 to 14.8 A

HINT:
Refer to the illustration for the indication mark location.
If the result is not as specified, replace the No. 1 cooling fan motor.

(d) Reconnect the No. 1 fan motor connector.

2. INSPECT NO. 1 COOLING FAN MOTOR (w/ Trailer Towing System)

(a) Disconnect the No. 1 fan connector.
(b) Connect the battery and an ammeter to the No. 1 fan motor connector.
(c) Check that the No. 1 fan rotates smoothly, and then check the reading on the ammeter.

Standard amperage

Indication Mark	Motor Type	Condition	Specified Condition
H	240 W	at 20°C (68°F)	18.0 to 22.0 A

HINT:
Refer to the illustration for the indication mark location.
If the result is not as specified, replace the No. 1 cooling fan motor.

(d) Reconnect the No. 1 fan motor connector.

3. INSPECT NO. 2 COOLING FAN MOTOR (w/o Trailer Towing System)

(a) Disconnect the No. 2 fan connector.
(b) Connect the battery and an ammeter to the No. 2 fan motor connector.
(c) Check that the No. 2 fan rotates smoothly, and then check the reading on the ammeter.

Standard amperage

Indication Mark	Motor Type	Condition	Specified Condition
E	160 W	at 20°C (68°F)	11.8 to 14.8 A

HINT:
Refer to the illustration for the indication mark location.
If the result is not as specified, replace the No. 2 cooling fan motor.

CO

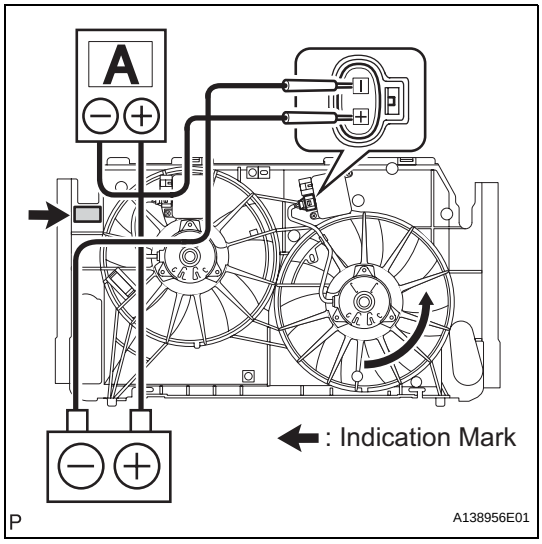

(d) Reconnect the No. 2 fan motor connector.

4. INSPECT NO. 2 COOLING FAN MOTOR (w/ Trailer Towing System)

(a) Disconnect the No. 2 fan connector.

(b) Connect the battery and an ammeter to the No. 2 fan motor connector.

(c) Check that the No. 2 fan rotates smoothly, and then check the reading on the ammeter.

Standard amperage

Indication Mark	Motor Type	Condition	Specified Condition
H	240 W	at 20°C (68°F)	18.0 to 22.0 A

HINT:

Refer to the illustration for the indication mark location.

If the result is not as specified, replace the No. 2 cooling fan motor.

(d) Reconnect the No. 2 fan motor connector.

COOLING FAN RELAY

ON-VEHICLE INSPECTION

1. DISCONNECT CABLE FROM NEGATIVE BATTERY TERMINAL

CAUTION:

Wait at least 90 seconds after disconnecting the cable from the negative (-) battery terminal to prevent airbag and seat belt pretensioner activation.

2. REMOVE ENGINE ROOM NO. 2 RELAY BLOCK COVER

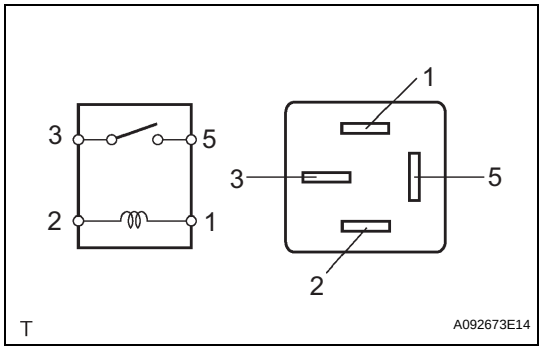

3. INSPECT NO. 1 FAN RELAY (Marking: FAN NO. 1)

(a) Remove the relay from the engine room No. 2 relay block.

(b) Measure the resistance of the relay.

Standard resistance

Tester Connection	Specified Condition
3 - 5	10 Ω or higher
3 - 5	Below 1 Ω (when battery voltage is applied to terminals 1 and 2)

If the result is not as specified, replace the relay.

(c) Install the relay.

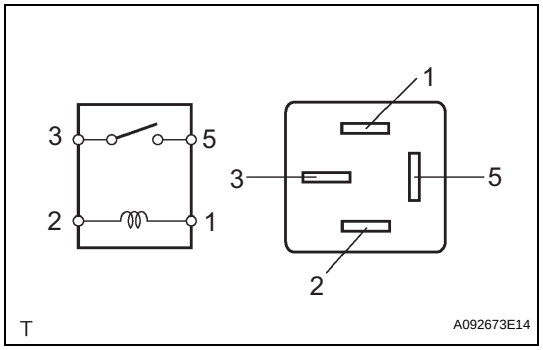

4. INSPECT NO. 2 FAN RELAY (Marking: FAN NO. 2)

(a) Remove the relay from the engine room No. 2 relay block.

(b) Measure the resistance of the relay.

Standard resistance

Tester Connection	Specified Condition
3 - 5	10 Ω or higher
3 - 5	Below 1 Ω (when battery voltage is applied to terminals 1 and 2)

If the result is not as specified, replace the relay.

(c) Install the relay.

5. INSTALL ENGINE ROOM NO. 2 RELAY BLOCK COVER

6. CONNECT CABLE TO NEGATIVE BATTERY TERMINAL

CO

SYSTEM DIAGRAM

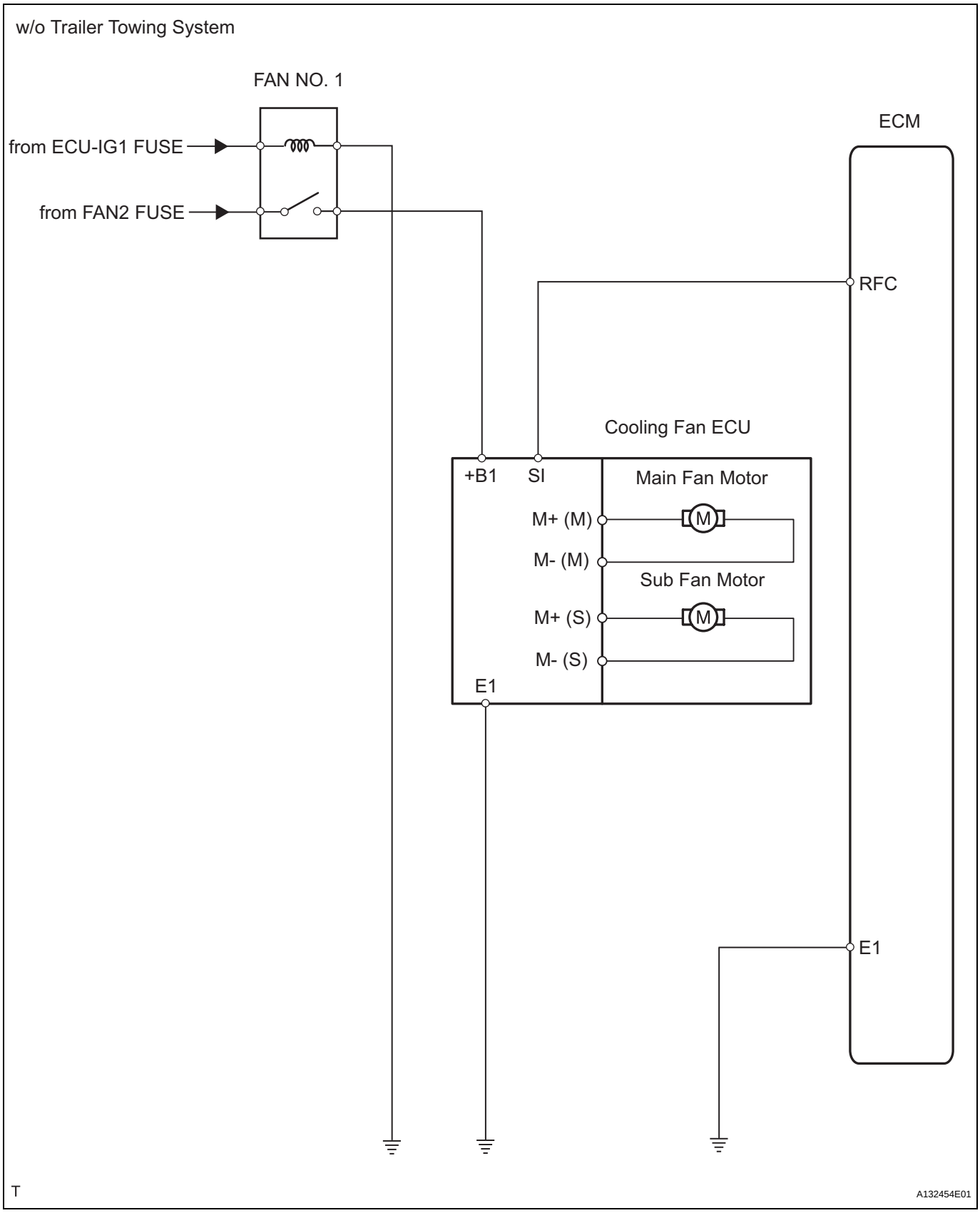

w/ Trailer Towing System

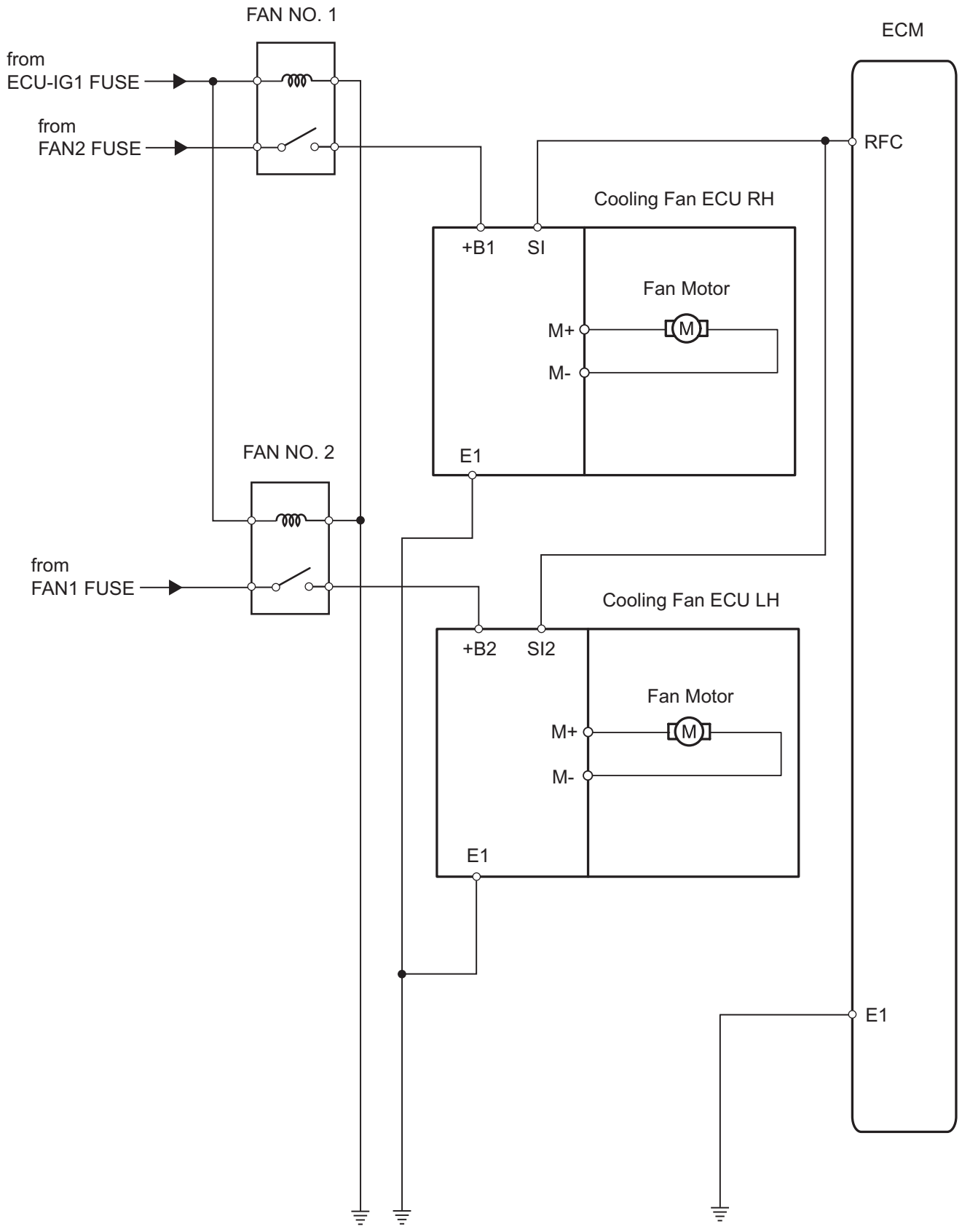

T

A132455E01

CO

ON-VEHICLE INSPECTION

HINT:
It is normal for the cooling fan to sometimes rotate when the ignition switch is turned from ACC to ON.

1. CHECK COOLING FAN OPERATION AT LOW TEMPERATURES (Below 94°C (201°F))

(a) Turn the ignition switch ON with the A/C switch OFF.

(b) Check that the cooling fan stops.
If it does not, check the cooling fan relays and engine coolant temperature sensor, and then check for disconnection of the connector or wire breaks between the cooling fan relay and engine coolant temperature sensor.

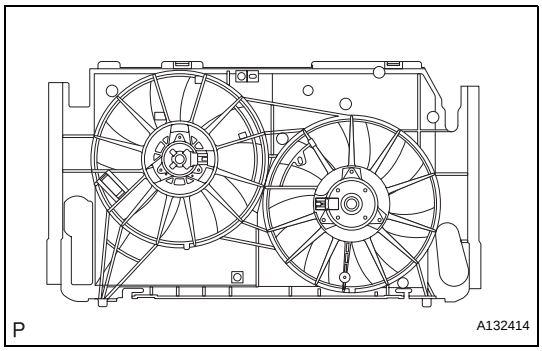

(c) Disconnect the engine coolant temperature sensor connector.

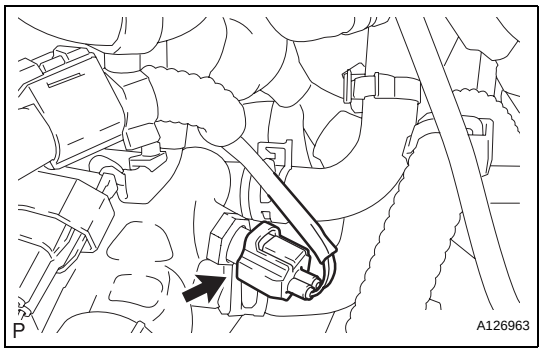

(d) Check that the cooling fan rotates.
If it does not, check the fuses, cooling fan relays, ECM and cooling fan, and then check for an open circuit between the cooling fan relay and engine coolant temperature sensor.

(e) Reconnect the engine coolant temperature sensor connector.

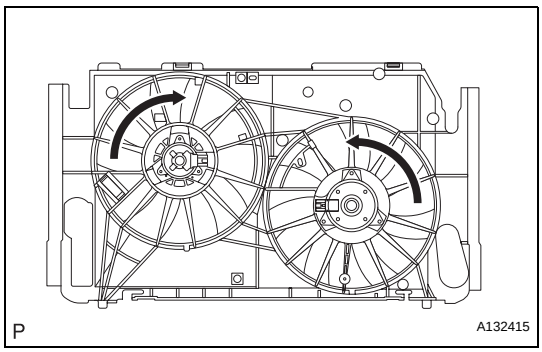

2. CHECK COOLING FAN OPERATION AT HIGH TEMPERATURES (Above 96°C (205°F))

(a) Start the engine, and then raise the coolant temperature to above 96°C (205°F).
HINT:
Coolant temperature is the value detected by the engine coolant temperature sensor on the cylinder head.

(b) Check that the A/C switch is OFF.

CO

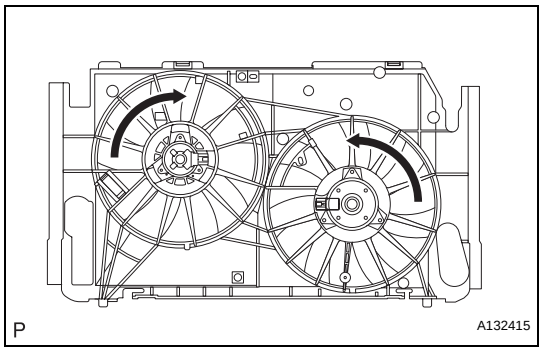

(c) Check that the cooling fan rotates.
If it does not, check the engine coolant temperature sensor, cooling fan, harness or connector.

COOLING FAN SYSTEM

PARTS LOCATION

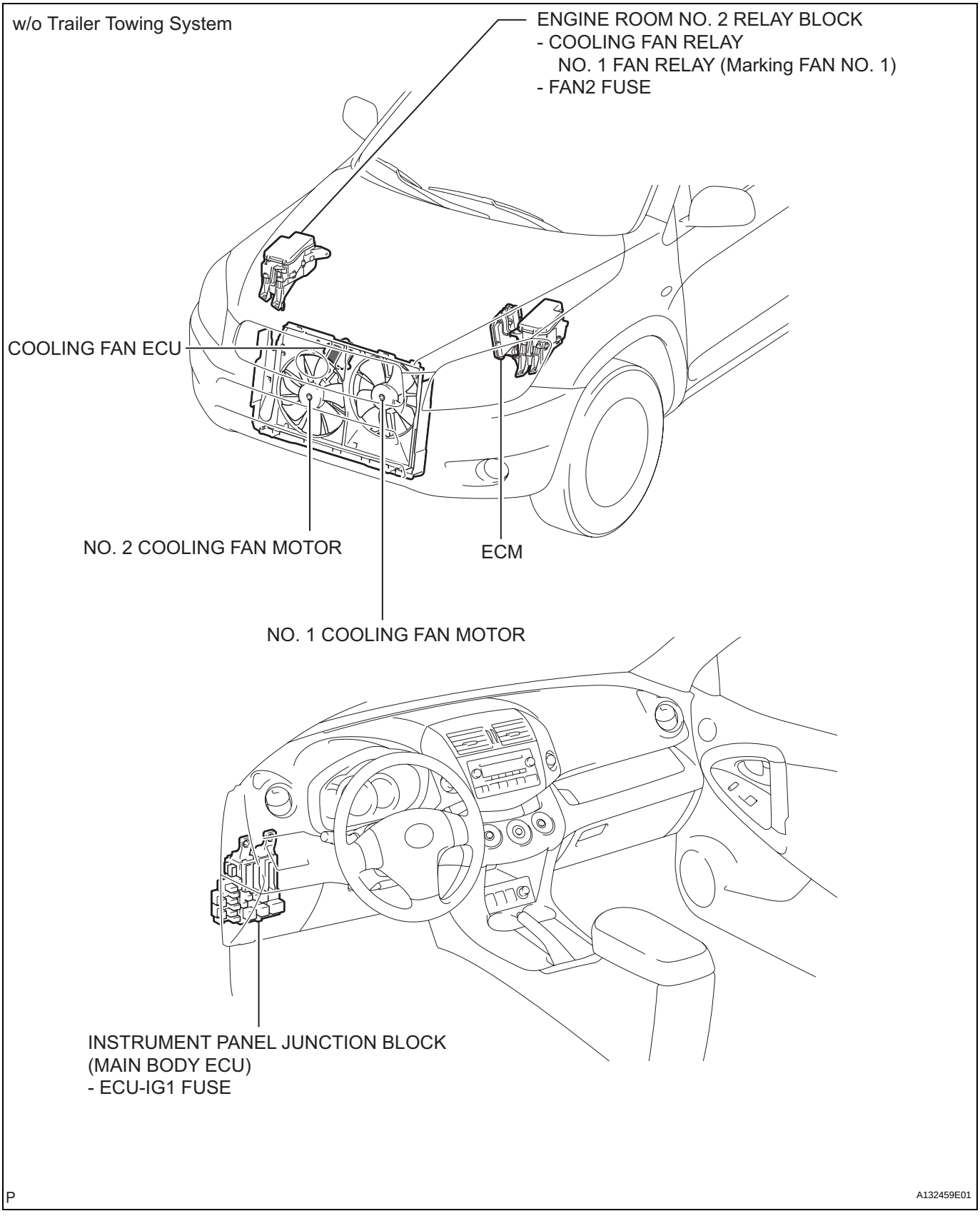

w/ Trailer Towing System

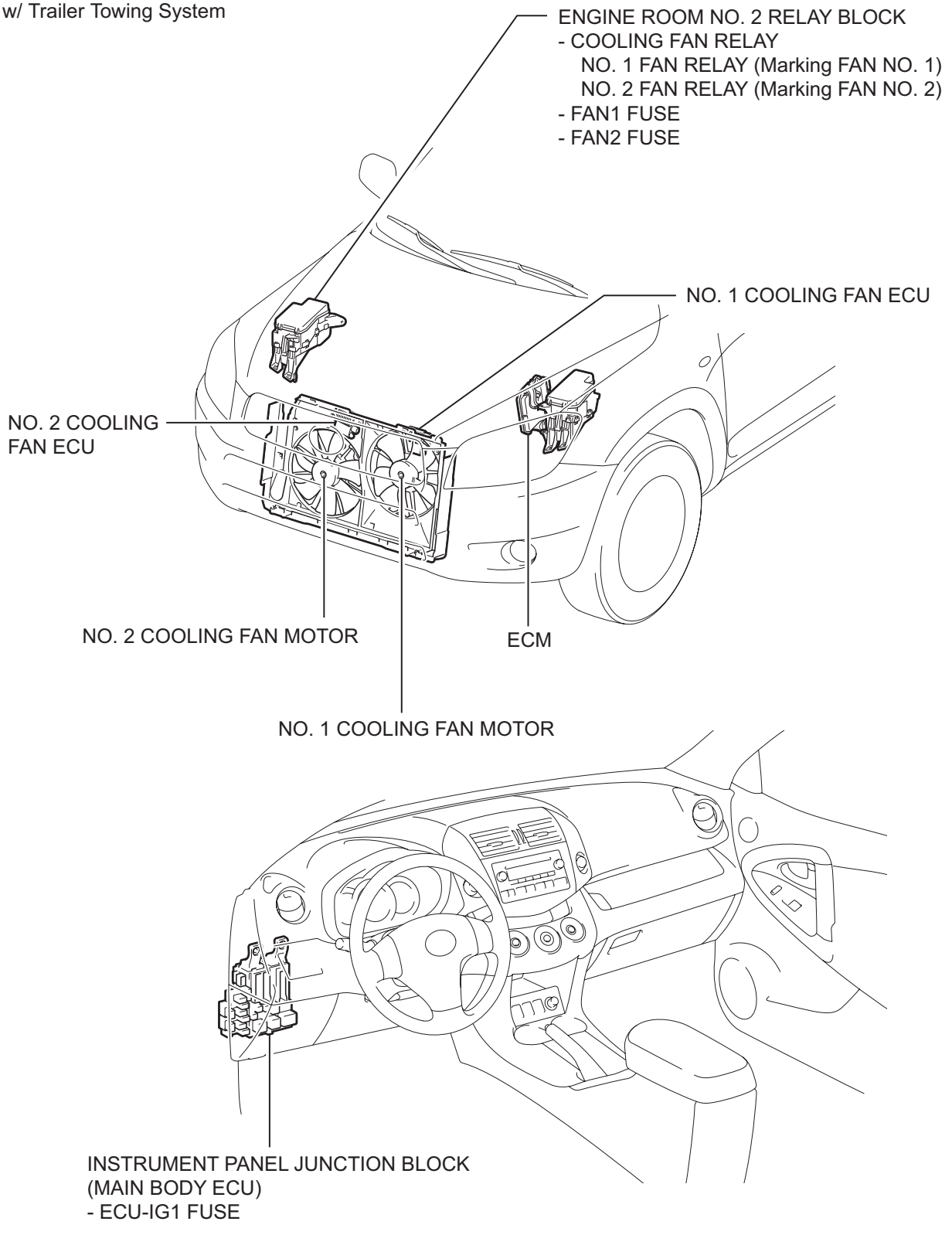

P

A132460E01

CO

COOLING SYSTEM

ON-VEHICLE INSPECTION

1. CHECK COOLING SYSTEM FOR LEAKS

(a) Remove the radiator reservoir cap.

CAUTION:
Do not remove the radiator reservoir cap while the engine and radiator are still hot.
Pressurized, hot engine coolant and steam may be released and cause serious burns.

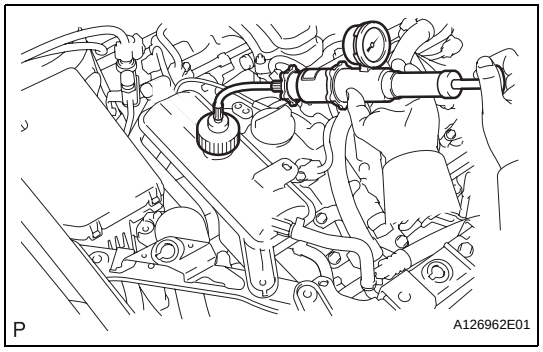

(b) Fill the radiator with coolant, and then attach a radiator cap tester.

(c) Warm up the engine.

(d) Pump the radiator cap tester to 118 kPa (1.2 kgf/cm^2, 17.1 psi), and then check that the pressure does not drop.

If the pressure drops, check the hoses, radiator and water pump for leakage.

If there are no signs of external coolant leaks, check the heater core, cylinder block and head.

(e) Reinstall the radiator cap.

2. CHECK ENGINE COOLANT LEVEL OF RESERVOIR

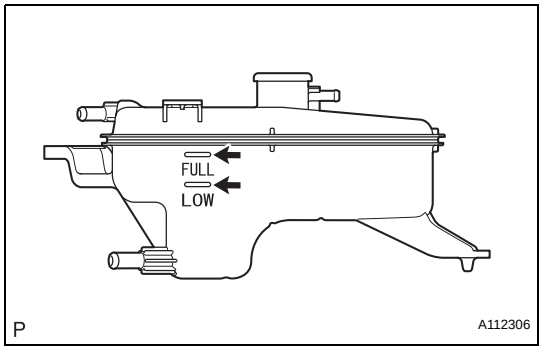

(a) The engine coolant should be between the LOW and FULL lines when the engine is cold.

If the coolant level is below the LOW line, check for leakage and add TOYOTA Super Long Life Coolant (SLLC) or similar high quality ethylene glycol based non-silicate, non-amine, non-nitrite, and non-borate coolant with long-life hybrid organic acid technology up to the FULL line.

3. CHECK ENGINE COOLANT QUALITY

(a) Remove the radiator reservoir cap.

CAUTION:
Do not remove the radiator reservoir cap while the engine and radiator are still hot.
Pressurized, hot engine coolant and steam may be released and cause serious burns.

(b) Check for any excessive deposits of rust or scale around the radiator reservoir cap and radiator filler hole. The coolant should be free of oil.

If excessively dirty, replace the coolant.

(c) Install the radiator reservoir cap.

REMOVAL

1. **DISCONNECT CABLE FROM NEGATIVE BATTERY TERMINAL**
   CAUTION:
   Wait at least 90 seconds after disconnecting the cable from the negative (-) battery terminal to prevent airbag activation.
2. **REMOVE BATTERY CLAMP SUB-ASSEMBLY (See page ST-6)**
3. **REMOVE BATTERY INSULATOR**
4. **REMOVE BATTERY**
5. **REMOVE NO. 1 ENGINE UNDER COVER (See page EM-21)**
6. **DRAIN ENGINE COOLANT (See page CO-8)**
7. **REMOVE V-BANK COVER SUB-ASSEMBLY (See page EM-21)**
8. **REMOVE RADIATOR SUPPORT OPENING COVER (See page EM-22)**
9. **REMOVE RADIATOR GRILLE SUB-ASSEMBLY (See page ET-6)**
10. **DISCONNECT HOOD LOCK SWITCH CONNECTOR**

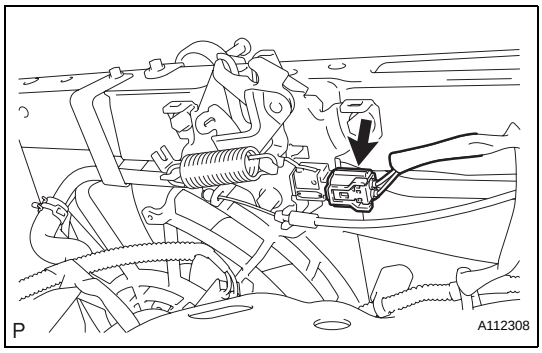

11. **DISCONNECT NO. 1 WATER BY-PASS HOSE**
    (a) Disconnect the hose from the radiator reservoir.
12. **DISCONNECT NO. 5 WATER BY-PASS HOSE**
    (a) Disconnect the hose from the radiator.
13. **REMOVE NO. 1 WATER BY-PASS PIPE**
    (a) Disconnect the pipe from the No. 1 radiator hose.

(b) Remove the 2 bolts and pipe.

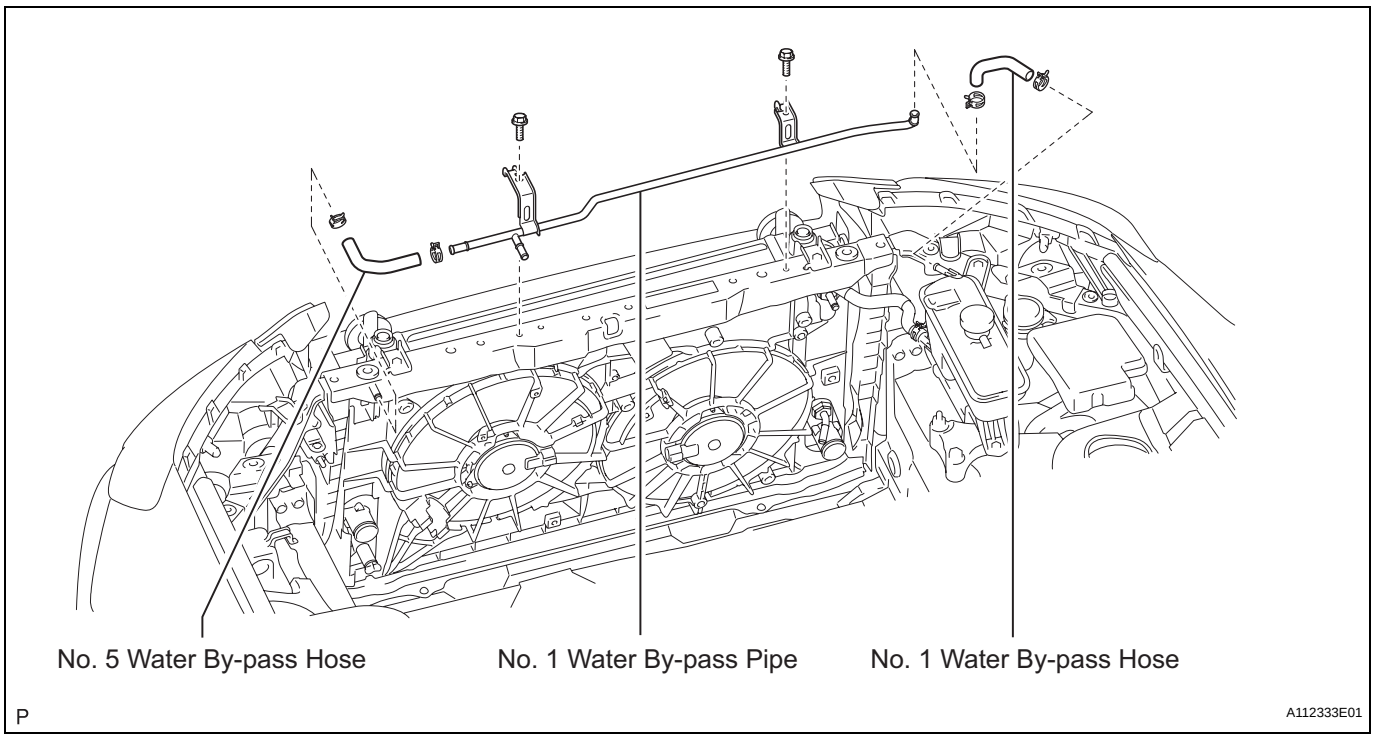

14. DISCONNECT COOLING FAN ECU HARNESS (w/o Trailer Towing System)

(a) Disconnect the fan ECU connector.

(b) Detach the 3 harness clamps from the fan shroud and upper radiator support.

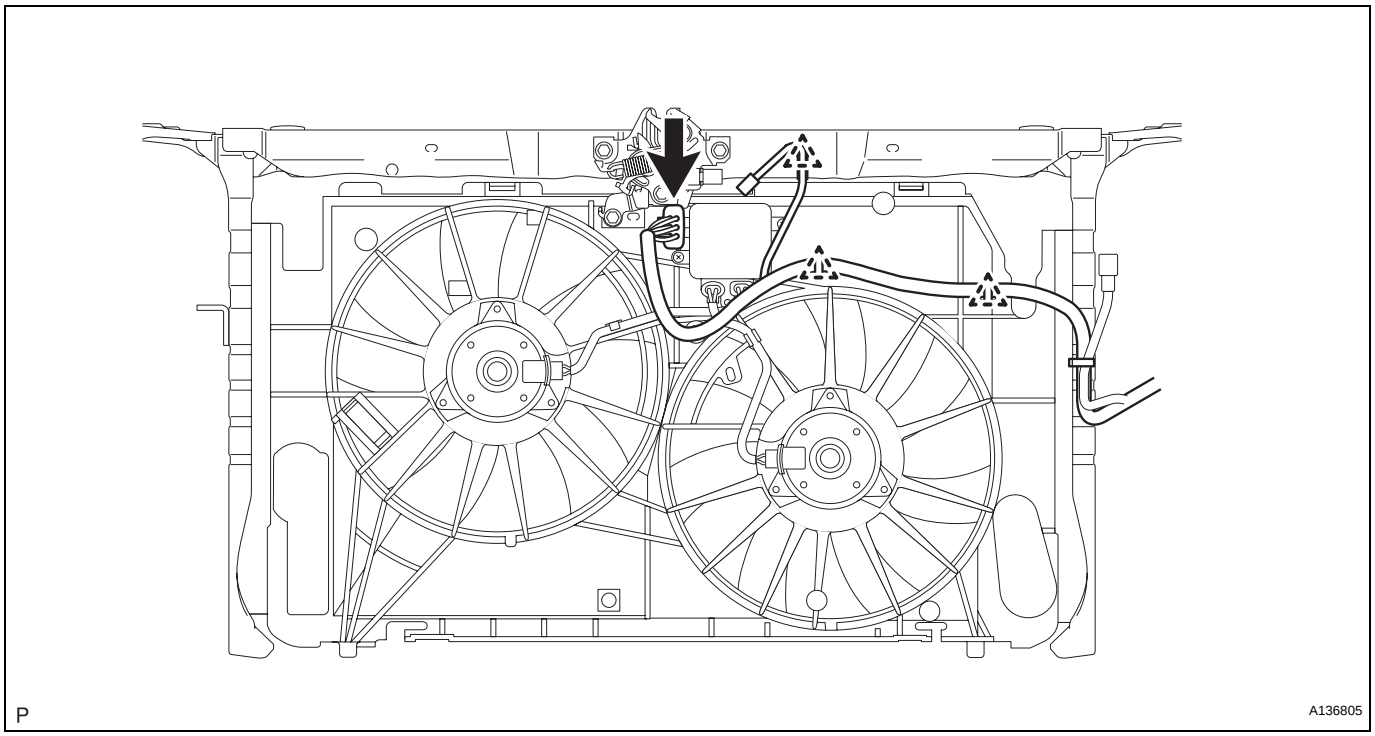

15. DISCONNECT COOLING FAN ECU HARNESS (w/ Trailer Towing System)

(a) Disconnect the 2 fan ECU connectors.

(b) Detach the 3 harness clamps from the fan shroud and upper radiator support.

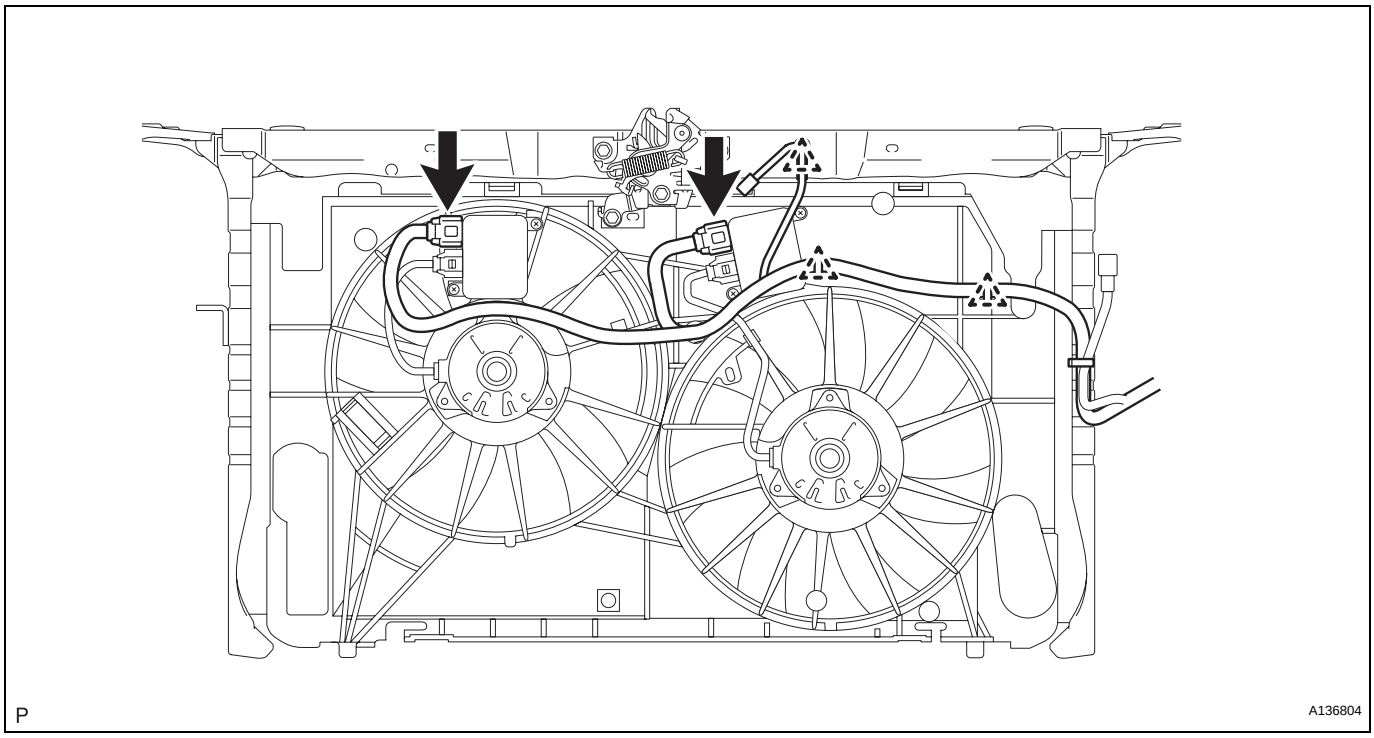

16. DISCONNECT HORN CONNECTOR

(a) Disconnect the 2 horn connectors.

17. REMOVE UPPER RADIATOR SUPPORT BRACKET

(a) Remove the 2 bolts and 2 upper radiator support brackets.

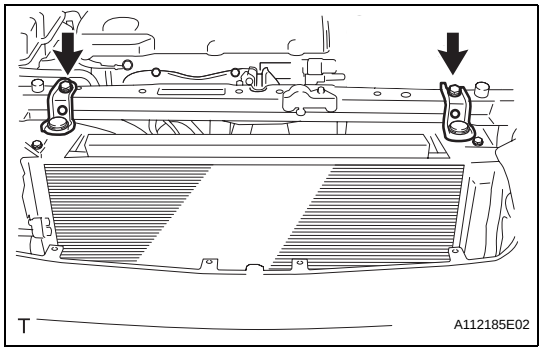

18. REMOVE NO. 2 FAN SHROUD

(a) Remove the 2 bolts.

(b) Detach the 2 claws and No. 2 shroud.

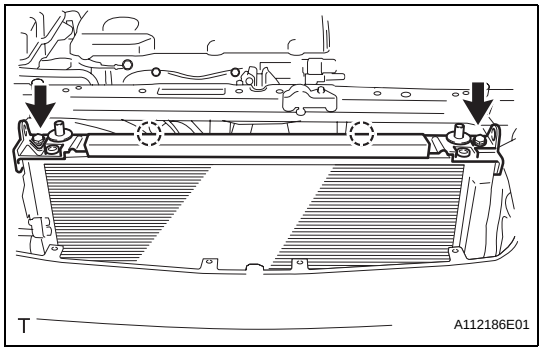

CO

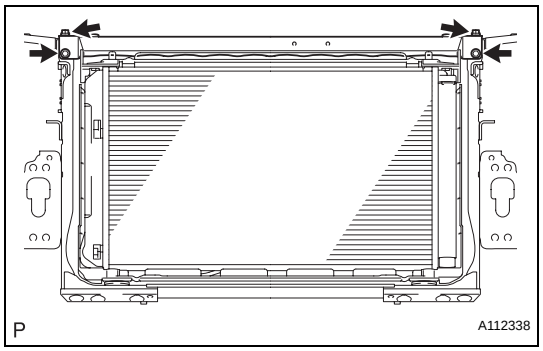

19. REMOVE UPPER RADIATOR SUPPORT SUB-ASSEMBLY

(a) Remove the 4 bolts and upper radiator support with hood lock.

20. DISCONNECT OIL COOLER INLET HOSE

21. DISCONNECT OIL COOLER OUTLET HOSE

22. DISCONNECT NO. 1 RADIATOR HOSE

23. DISCONNECT NO. 2 RADIATOR HOSE

24. DISCONNECT NO. 2 WATER BY-PASS HOSE

(a) Disconnect the by-pass hose from the radiator reservoir and radiator.

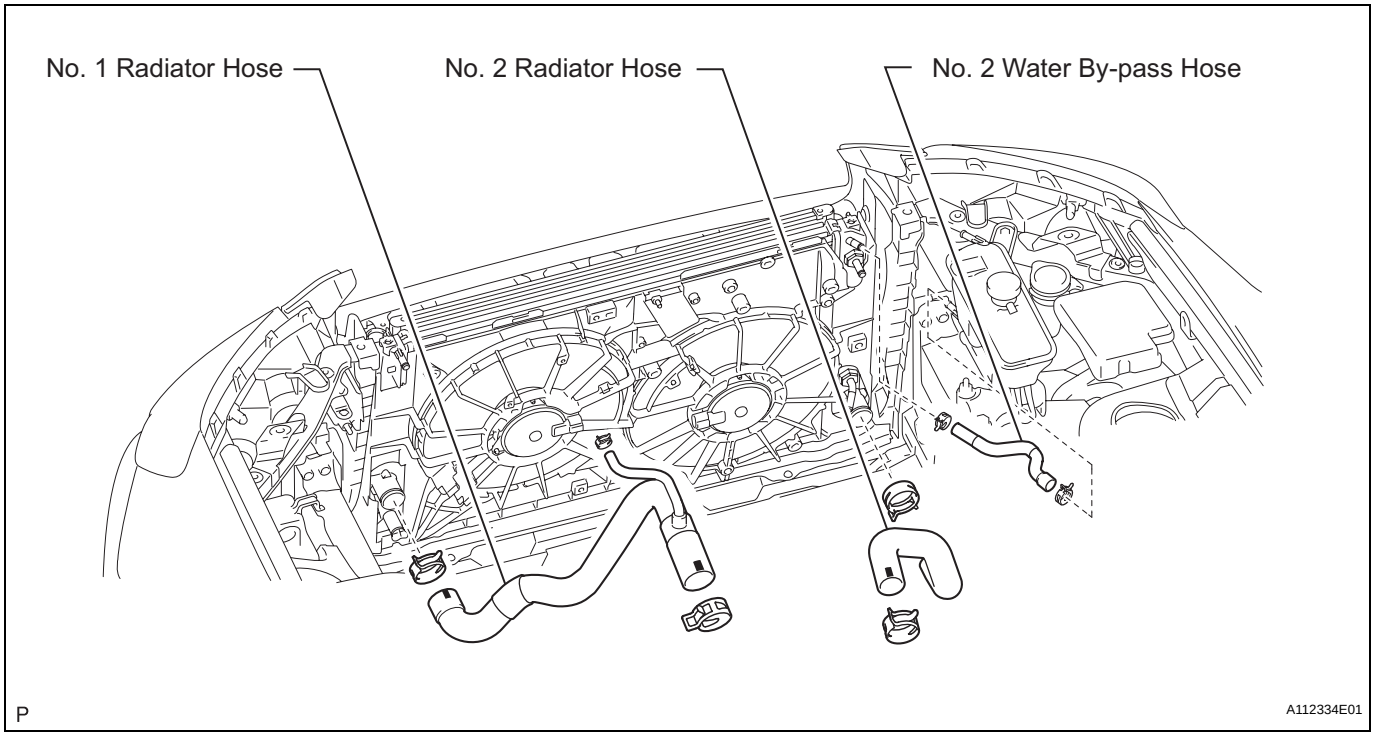

25. REMOVE RADIATOR ASSEMBLY

(a) Detach the cooler condenser from the radiator.
HINT:
After detaching the condenser, make sure that all 4 fan shroud cushions are present.

(b) Remove the radiator with the 2 radiator support lower cushions.
HINT:
After detaching the radiator, make sure that all 2 radiator support lowers are present.

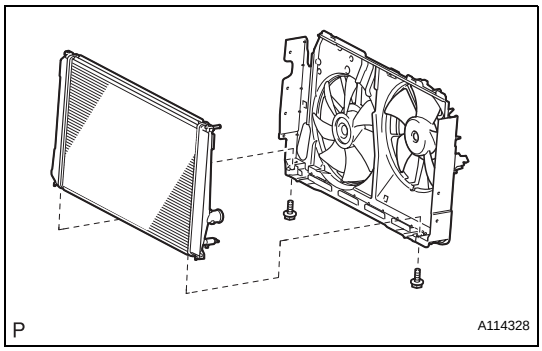

26. REMOVE FAN SHROUD WITH COOLING FAN

(a) Remove the 2 bolts and fan shroud with cooling fan from the radiator.

INSTALLATION

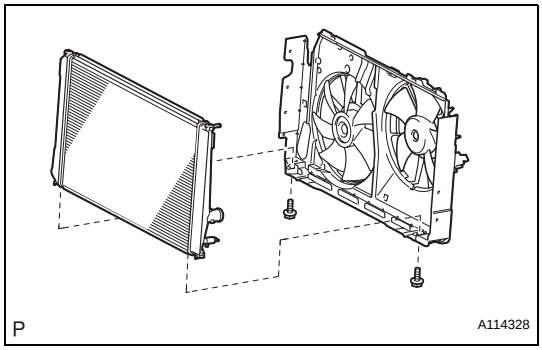

1. INSTALL FAN SHROUD WITH COOLING FAN

(a) Install the fan shroud with cooling fan to the radiator with the 2 bolts.
Torque: 10.5 N*m (107 kgf*cm, 8 ft.*lbf)

2. INSTALL RADIATOR ASSEMBLY

(a) Install the 4 fan shroud cushions to the cooler condenser.

(b) Set the cooler condenser into the fan shroud.

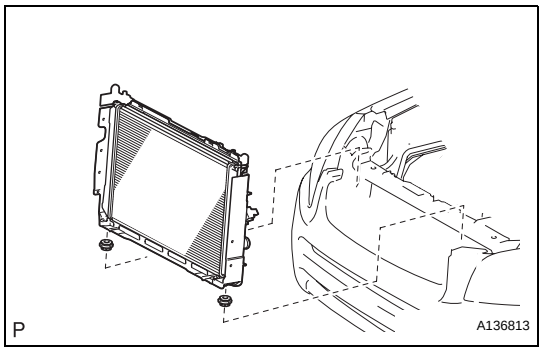

(c) Install the 2 radiator support lower cushions to the fan shroud.

(d) Install the radiator with cooler condenser and fan shroud to the radiator support lowers.

CO

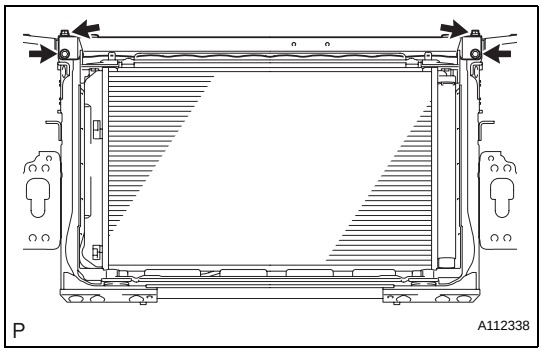

3. INSTALL UPPER RADIATOR SUPPORT SUB-ASSEMBLY

(a) Install the upper radiator support with the 4 bolts.
Torque: 29 N*m (296 kgf*cm, 21 ft.*lbf)

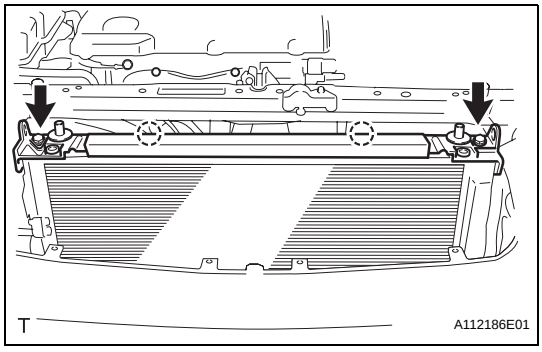

4. INSTALL NO. 2 FAN SHROUD

(a) Attach the 2 claws to install the No. 2 fan shroud, and install the 2 bolts.
Torque: 10.5 N*m (107 kgf*cm, 8 ft.*lbf)

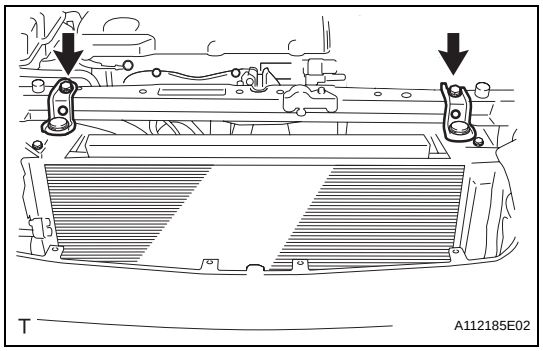

5. INSTALL UPPER RADIATOR SUPPORT BRACKET

(a) Install the brackets with the 2 bolts.
Torque: 19 N*m (194 kgf*cm, 14 ft.*lbf)

6. CONNECT HORN CONNECTOR

(a) Connect the 2 horn connectors.

7. CONNECT NO. 2 WATER BY-PASS HOSE

(a) Connect the by-pass hose to the radiator and radiator reservoir.
HINT:
The direction of the hose clamp is indicated in the illustration.

8. CONNECT NO. 2 RADIATOR HOSE

HINT:
The direction of the hose clamp is indicated in the illustration.

9. CONNECT NO. 1 RADIATOR HOSE

HINT:
The direction of the hose clamp is indicated in the illustration.

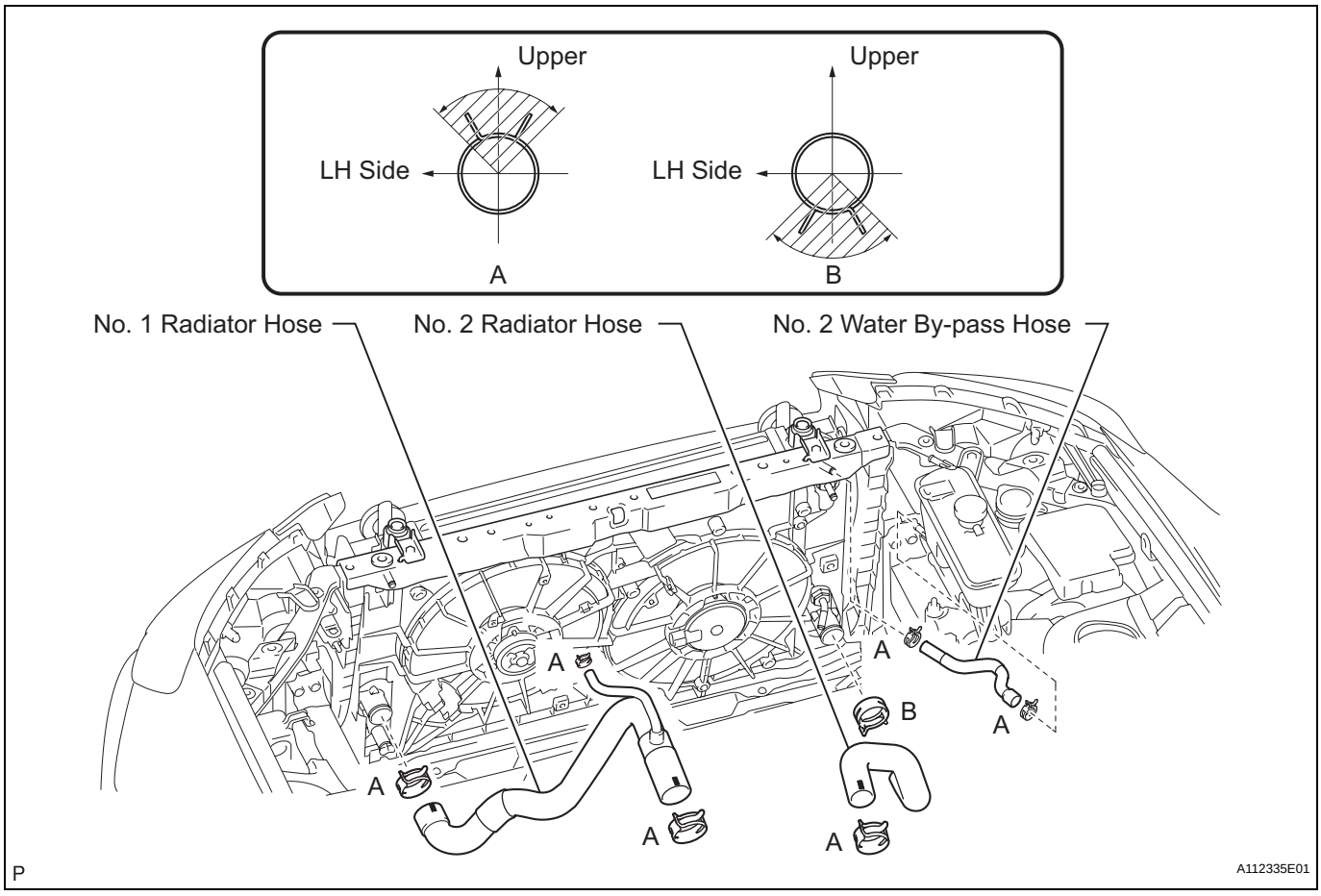

10. CONNECT OIL COOLER OUTLET HOSE

11. CONNECT OIL COOLER INLET HOSE

12. CONNECT COOLING FAN ECU HARNESS (w/ Trailer Towing System)

(a) Attach the harness with the 3 clamps.

CO

(b) Connect the 2 fan ECU connectors.

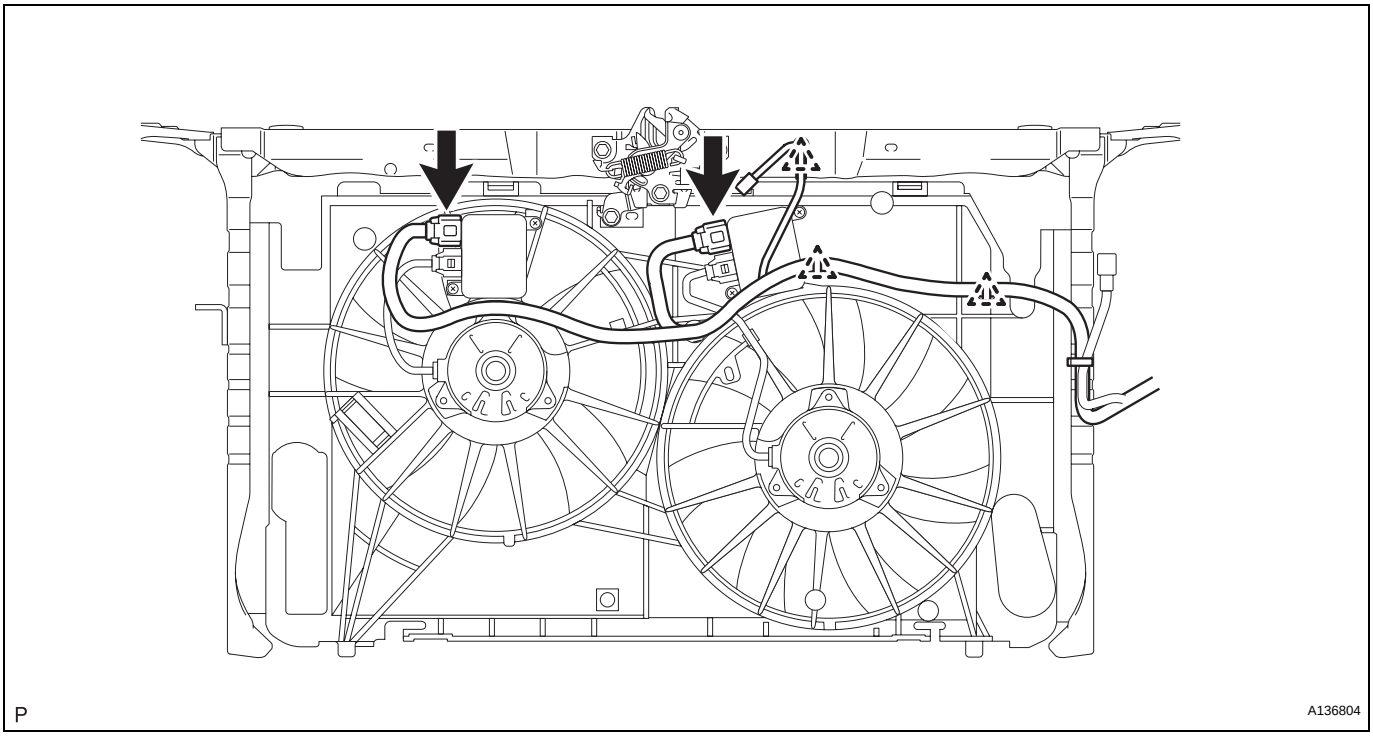

13. CONNECT COOLING FAN ECU HARNESS (w/o Trailer Towing System)

(a) Attach the harness with the 3 clamps.

(b) Connect the fan ECU connector.

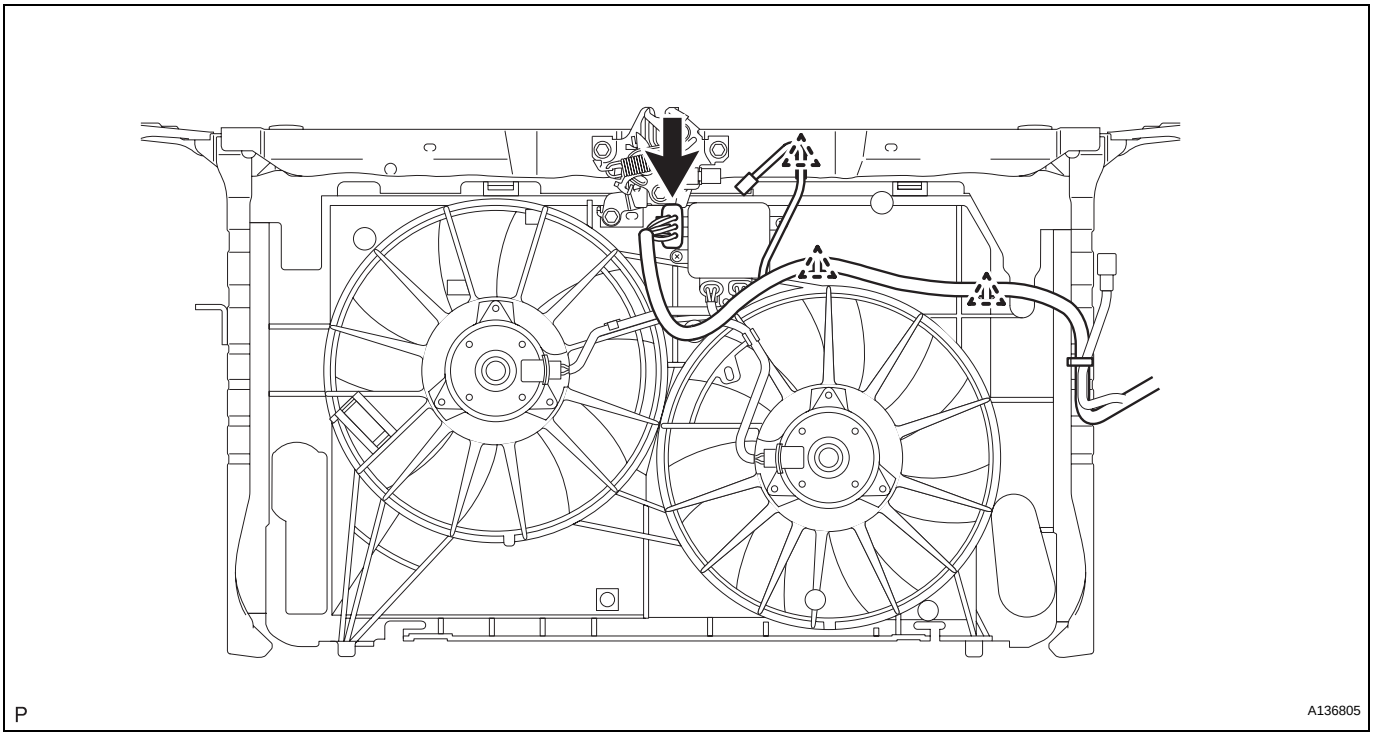

14. INSTALL NO. 1 WATER BY-PASS PIPE

(a) Install the by-pass pipe with the 2 bolts to the upper radiator support.
Torque: 5.0 N*m (51 kgf*cm, 44 in.*lbf)

(b) Connect the No. 1 radiator hose to the pipe.

15. **CONNECT NO. 5 WATER BY-PASS HOSE**
    (a) Connect the by-pass hose to the radiator.
16. **CONNECT NO. 1 WATER BY-PASS HOSE**
    (a) Connect the by-pass hose to the radiator reservoir.

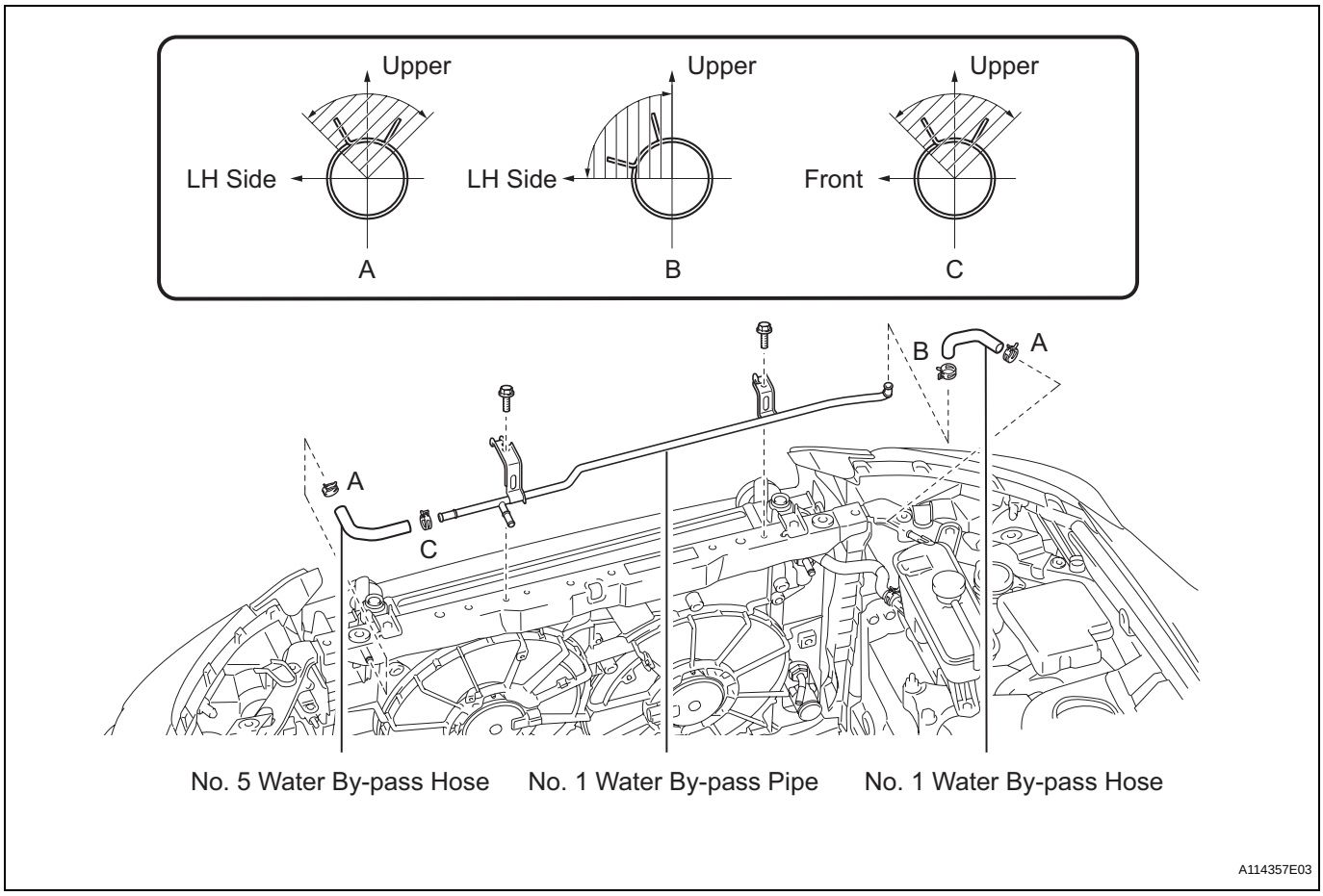

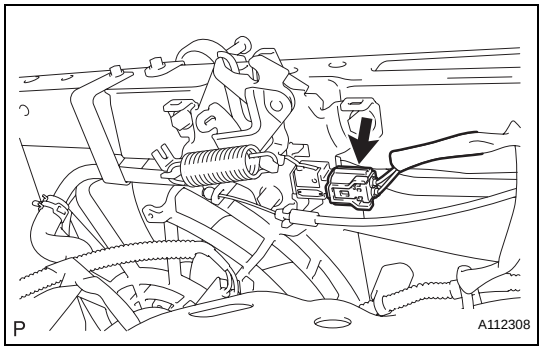

17. **CONNECT HOOD LOCK SWITCH CONNECTOR**
18. **INSTALL RADIATOR GRILLE SUB-ASSEMBLY (See page ET-10)**
19. **INSTALL BATTERY**
20. **INSTALL BATTERY INSULATOR**
21. **INSTALL BATTERY CLAMP SUB-ASSEMBLY (See page ST-15)**
22. **CONNECT CABLE TO NEGATIVE BATTERY TERMINAL**
23. **INSTALL RADIATOR SUPPORT OPENING COVER (See page EM-42)**
24. **INSTALL V-BANK COVER SUB-ASSEMBLY (See page EM-42)**
25. **ADD ENGINE COOLANT (See page CO-8)**
26. **CHECK FOR ENGINE COOLANT LEAKS (See page CO-1)**

27. **INSTALL NO. 1 ENGINE UNDER COVER (See page EM-41)**

RADIATOR

COMPONENTS

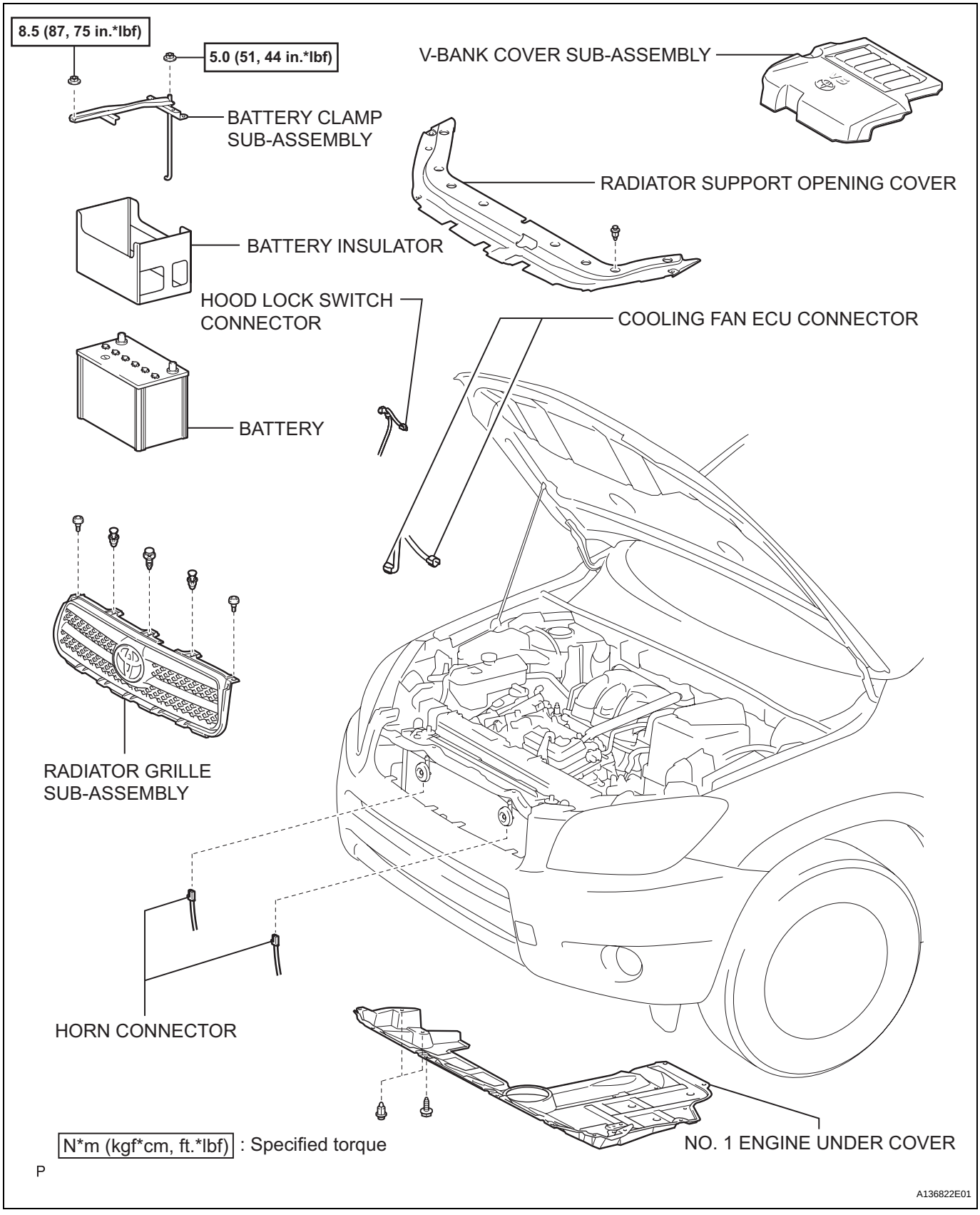

CO

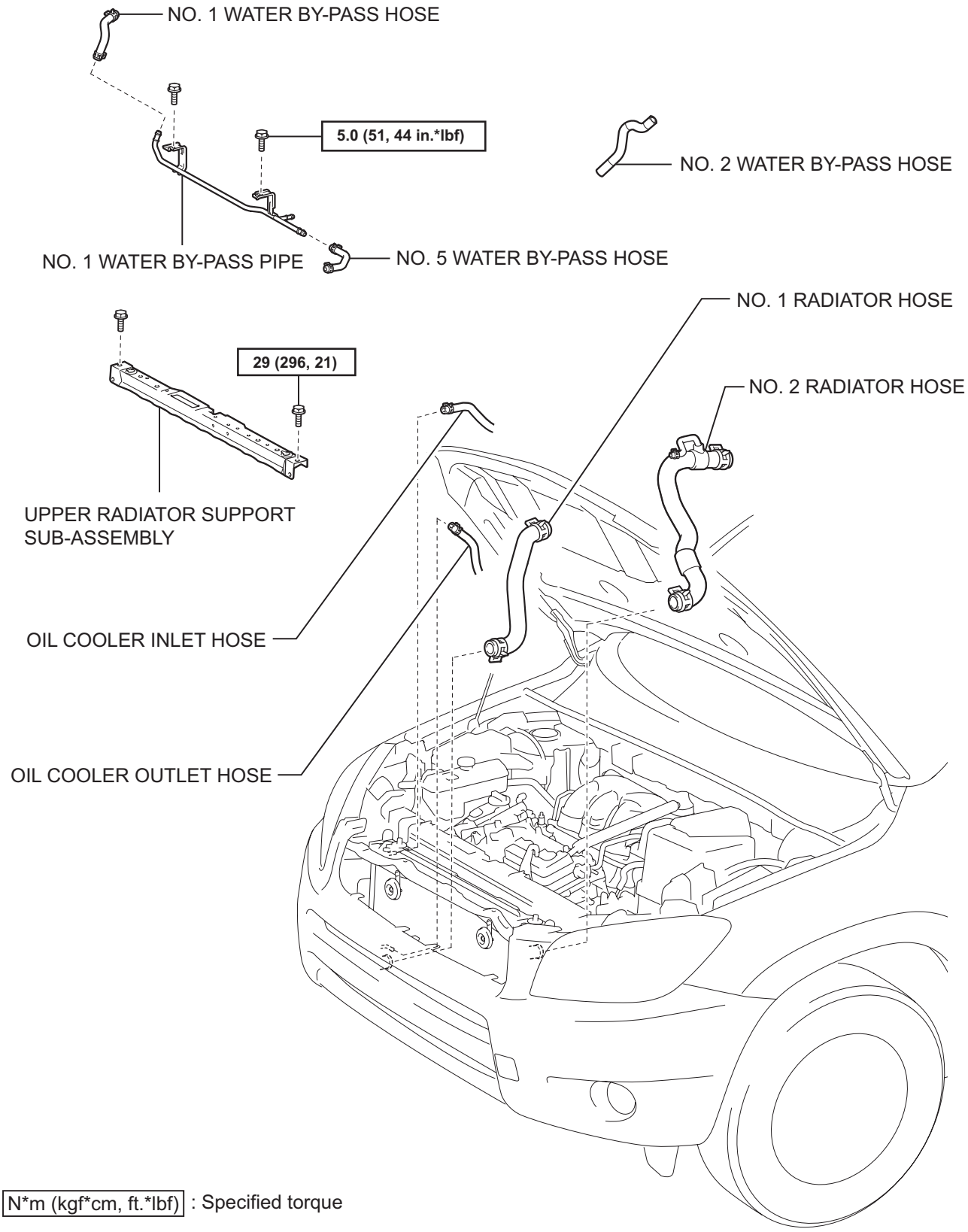
NO. 1 WATER BY-PASS HOSE
5.0 (51, 44 in.*lbf)
NO. 2 WATER BY-PASS HOSE
NO. 1 WATER BY-PASS PIPE
NO. 5 WATER BY-PASS HOSE
NO. 1 RADIATOR HOSE
29 (296, 21)
NO. 2 RADIATOR HOSE
UPPER RADIATOR SUPPORT SUB-ASSEMBLY
OIL COOLER INLET HOSE
OIL COOLER OUTLET HOSE
N*m (kgf*cm, ft.*lbf) : Specified torque
P
A126969E02

CO

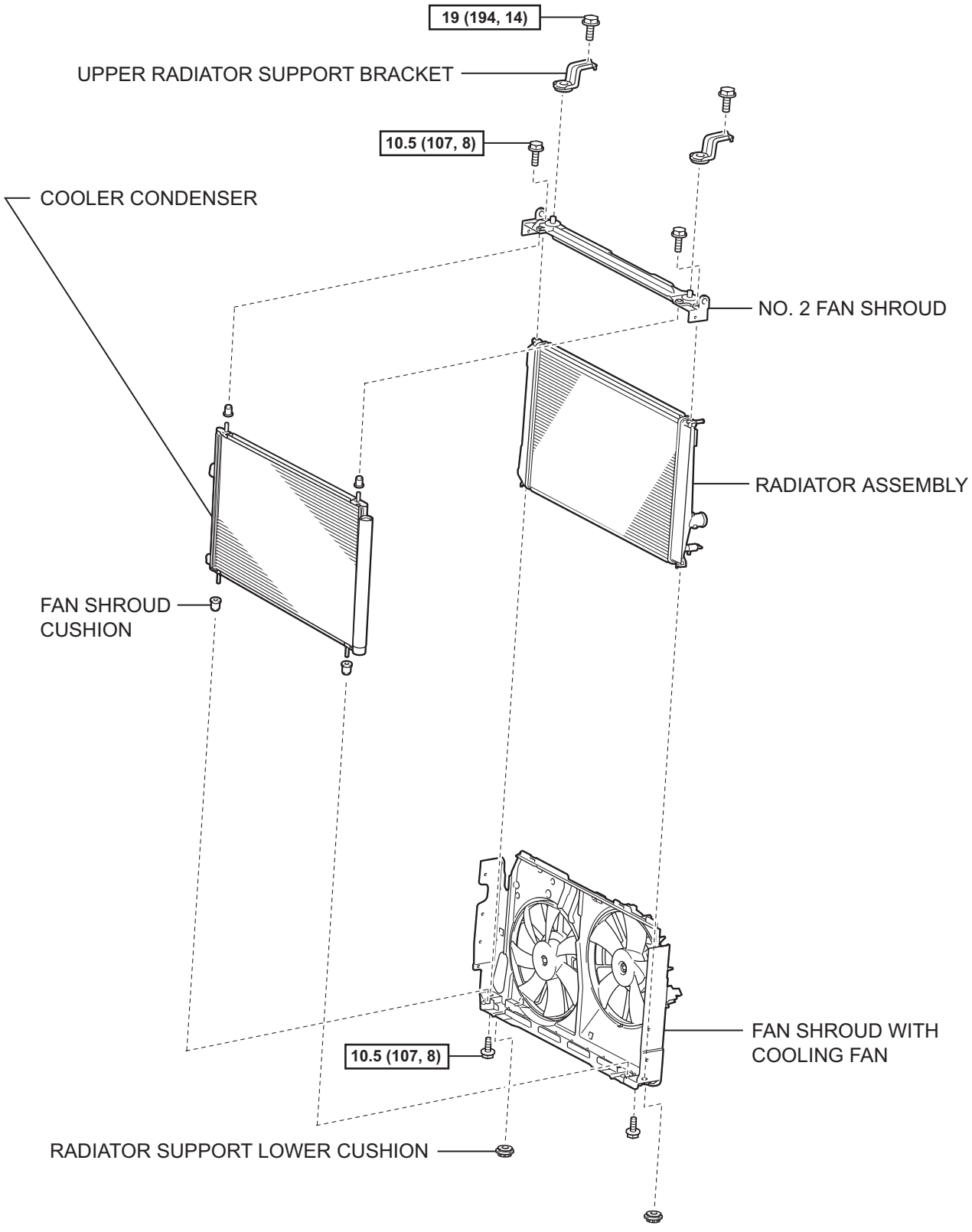

N*m (kgf*cm, ft.*lbf) : Specified torque

A114320E07

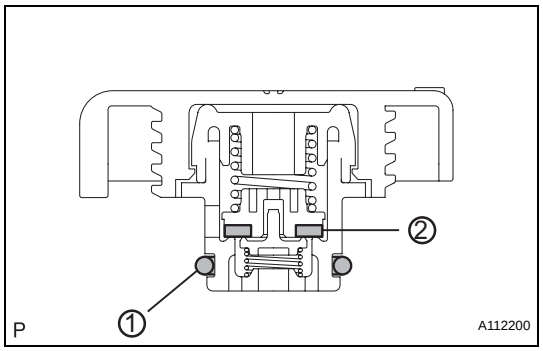

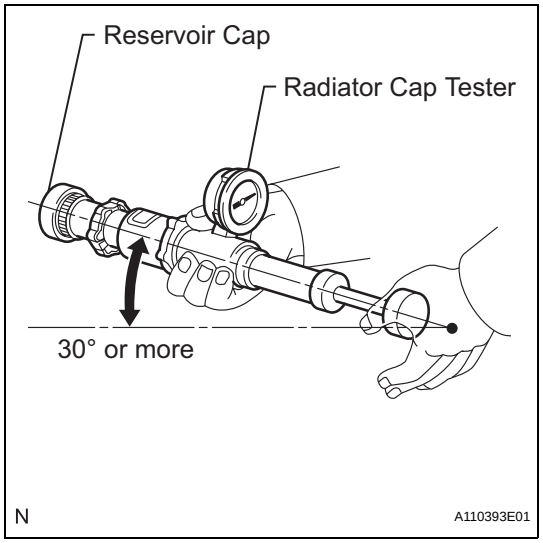

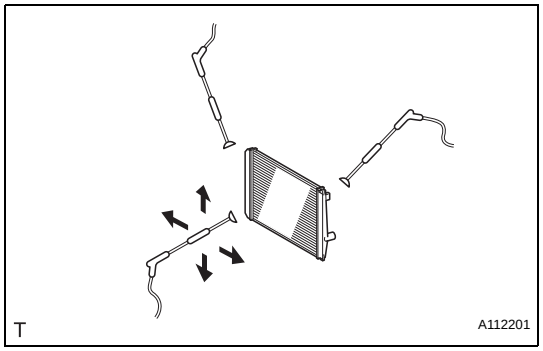

ON-VEHICLE INSPECTION

1. CHECK RADIATOR RESERVOIR CAP SUB-ASSEMBLY

(a) Measure the valve opening pressure.

(1) If there are water stains or foreign matter on O-ring 1, clean it with water and finger scouring.

(2) Check that O-ring 1 is not deformed, cracked or swollen.

(3) Apply engine coolant to O-ring 1 and rubber packing 2 before using a radiator cap tester.

(4) When using the cap tester, tilt it more than 30°.

(5) Pump the cap tester several times, and check the maximum pressure*.

Pump speed:

1 pump per second

*: Even if the cap cannot maintain the maximum pressure, it is not a defect.

Judgment criterion

Item	Specified Condition
Standard value (for brand-new cap)	93.3 to 122.7 kPa (0.95 to 1.25 kgf/cm^2, 13.5 to 17.8 psi)
Minimum standard value (after using cap)	78.5 kPa (0.8 kgf/cm^2, 11.4 psi)

If the maximum pressure is less than the minimum standard value, replace the radiator reservoir cap sub-assembly.

ON-VEHICLE CLEANING

1. INSPECT RADIATOR ASSEMBLY

(a) Check that the radiator and condenser are not blocked with leaves, dirt, or insects. Clean the hose connections.

If the fins are blocked, wash them with water or a steam cleaner.

NOTICE:

- **If the distance between the steam cleaner and core is too close, the fins may be damaged.**
- **Keep the following injection distance.**

Standard injection distance

Injection Pressure	Specified Condition
2,942 to 4,903 kPa (30 to 50 kgf/cm^2, 427 to 711 psi)	300 mm (11.81 in.)
4,903 to 7,845 kPa (50 to 80 kgf/cm^2, 711 to 1,138 psi)	500 mm (19.69 in.)

- **If the fins are bent, straighten them with a screwdriver or pliers.**
- **Never apply water directly onto the electronic components.**

(b) Dry the fins with compressed air.

CO

REMOVAL

1. **REMOVE FRONT WHEEL RH**
2. **REMOVE NO. 1 ENGINE UNDER COVER (See page EM-21)**
3. **REMOVE ENGINE UNDER COVER REAR RH (See page EM-21)**
4. **REMOVE FRONT SUSPENSION MEMBER REINFORCEMENT RH (See page EM-7)**
5. **DRAIN ENGINE COOLANT (See page CO-8)**
6. **REMOVE V-BANK COVER SUB-ASSEMBLY (See page EM-21)**
7. **REMOVE RADIATOR SUPPORT OPENING COVER (See page EM-22)**
8. **REMOVE RADIATOR RESERVOIR TANK**
   (a) Remove the 2 bolts and radiator reservoir.
9. **REMOVE FAN AND GENERATOR V BELT (See page EM-8)**

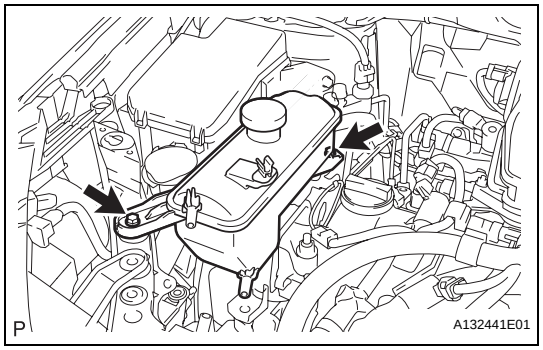

10. **REMOVE ENGINE MOUNTING INSULATOR RH**
    (a) Remove the 5 bolts, 2 nuts and engine mounting insulator RH.
11. **REMOVE FRONT NO. 1 ENGINE MOUNTING BRACKET LH (See page CO-12)**

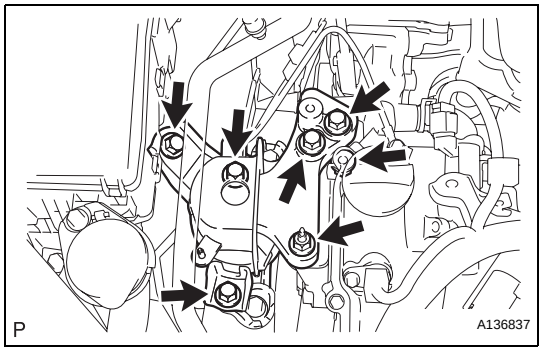

12. **REMOVE NO. 2 IDLER PULLEY SUB-ASSEMBLY**
    (a) Remove the bolt, No. 2 idler pulley cover plate and No. 2 idler pulley.
13. **DISCONNECT NO. 2 RADIATOR HOSE**

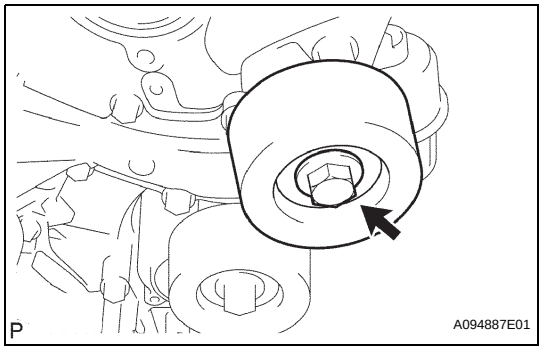

CO

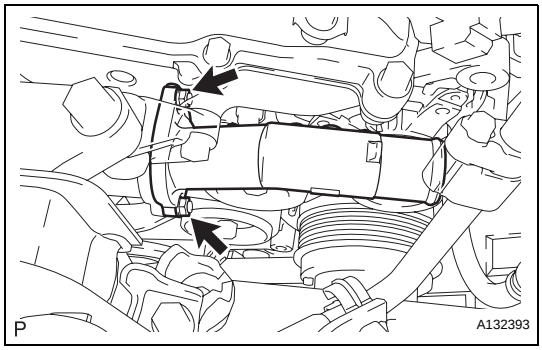

14. REMOVE WATER INLET

(a) Remove the 2 nuts and remove the water inlet from the water inlet housing.

15. REMOVE THERMOSTAT

INSPECTION

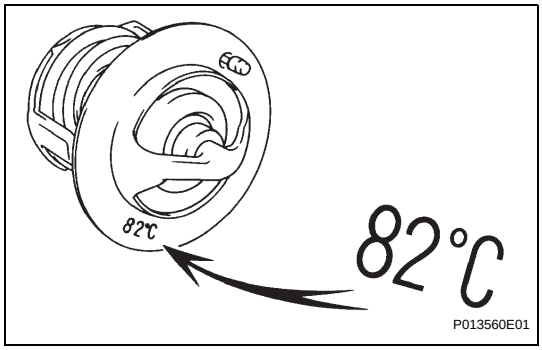

1. INSPECT THERMOSTAT

HINT:
The valve opening temperature is inscribed on the thermostat.

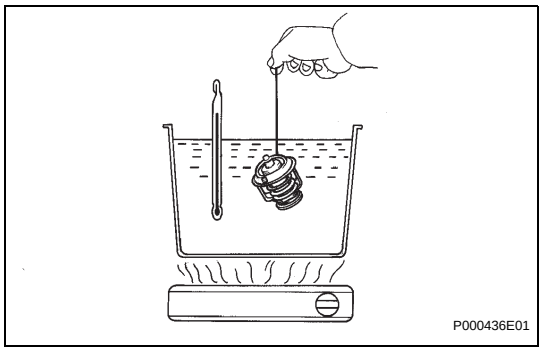

(a) Immerse the thermostat in water, and then gradually heat the water.

(b) Check the valve opening temperature of the thermostat.
Standard valve opening temperature:
80 to 84°C (176 to 183°F)
If the valve opening temperature is not as specified, replace the thermostat.

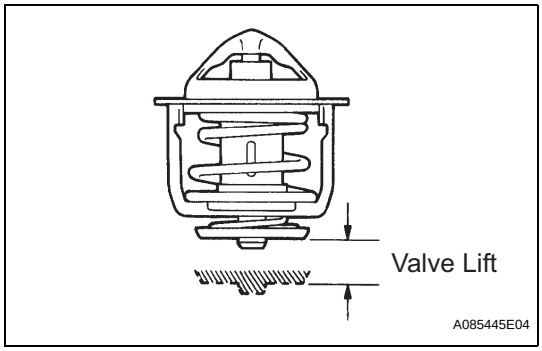

(c) Check the valve lift.
Standard valve lift:
10 mm (0.39 in.) or more at 95°C (203°F)
If the valve lift is not as specified, replace the thermostat.

(d) Check that the valve is fully closed when the thermostat is at low temperatures (below 77°C (171°F)).
If not fully closed, replace the thermostat.

CO

INSTALLATION

1. INSTALL THERMOSTAT

(a) Install a new gasket to the thermostat.

(b) Install the thermostat with the jiggle valve facing upward.
HINT:
The jiggle valve can be set to within 10° of either side of the upward position.

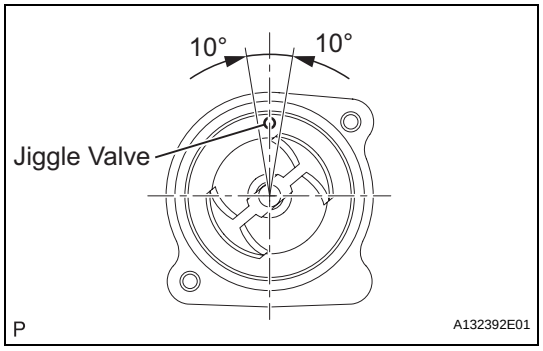

2. INSTALL WATER INLET

(a) Install the water inlet with the 2 nuts.
Torque: 10 N*m (102 kgf*cm, 7 ft.*lbf)

3. CONNECT NO. 2 RADIATOR HOSE

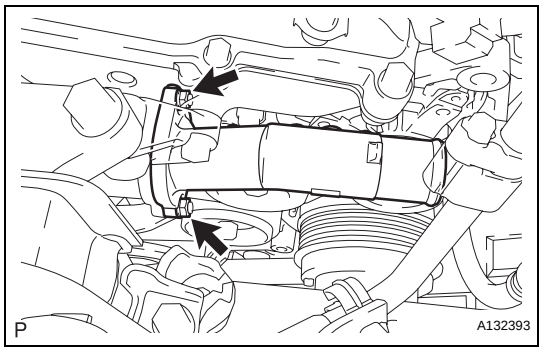

4. INSTALL NO. 2 IDLER PULLEY SUB-ASSEMBLY

(a) Install the No. 2 idler pulley cover plate and No. 2 idler pulley with the bolt.
Torque: 43 N*m (438 kgf*cm, 32 ft.*lbf)

5. INSTALL FRONT NO. 1 ENGINE MOUNTING BRACKET LH (See page CO-15)

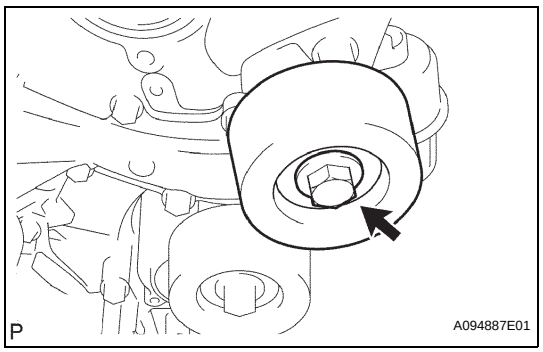

6. INSTALL ENGINE MOUNTING INSULATOR RH

(a) Install the engine mounting insulator RH with the 2 nuts and 5 bolts.
Torque: 95 N*m (969 kgf*cm, 70 ft.*lbf) for bolt
95 N*m (969 kgf*cm, 70 ft.*lbf) for nut A
52 N*m (530 kgf*cm, 38 ft.*lbf) for nut B

7. INSTALL FAN AND GENERATOR V BELT (See page EM-8)

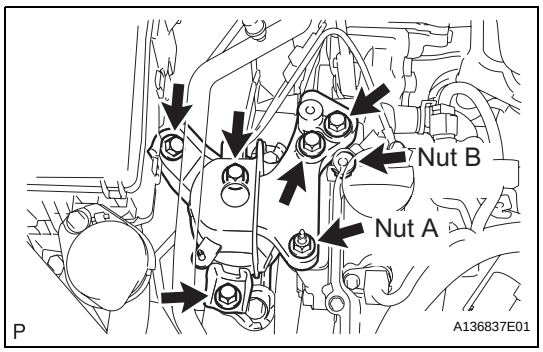

CO

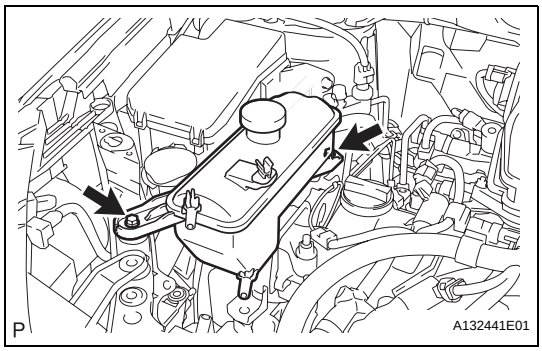

8. **INSTALL RADIATOR RESERVOIR TANK**
   (a) Install the radiator reservoir with the 2 bolts.
   Torque: 5.0 N*m (51 kgf*cm, 44 in.*lbf)
9. **INSTALL RADIATOR SUPPORT OPENING COVER (See page EM-42)**
10. **INSTALL V-BANK COVER SUB-ASSEMBLY (See page EM-42)**
11. **ADD ENGINE COOLANT (See page CO-8)**
12. **CHECK FOR ENGINE COOLANT LEAKAGE (See page CO-1)**
13. **INSTALL FRONT SUSPENSION MEMBER REINFORCEMENT RH (See page EM-9)**
14. **INSTALL ENGINE UNDER COVER REAR RH (See page EM-41)**
15. **INSTALL NO. 1 ENGINE UNDER COVER (See page EM-41)**
16. **INSTALL FRONT WHEEL RH**

THERMOSTAT

COMPONENTS

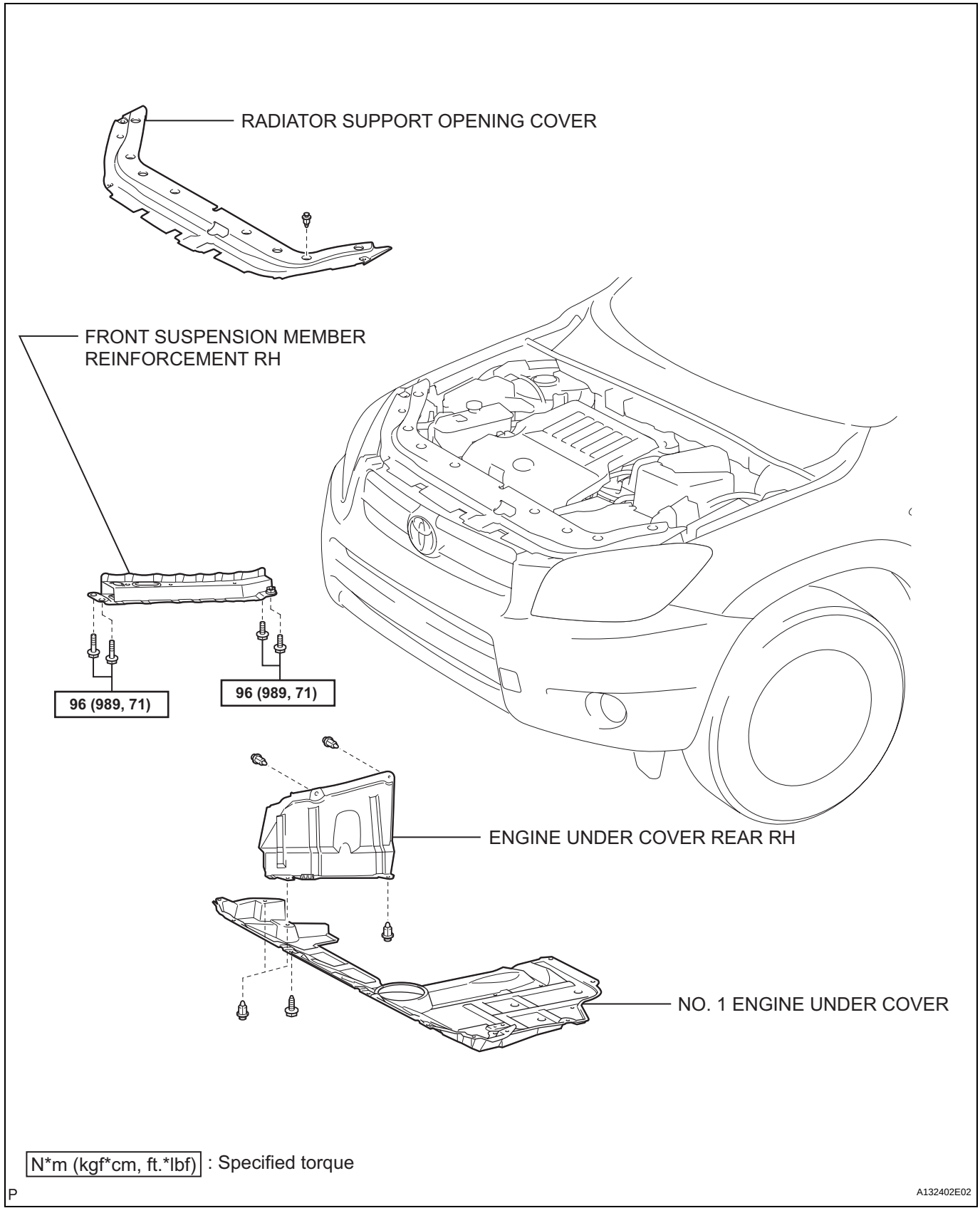

CO

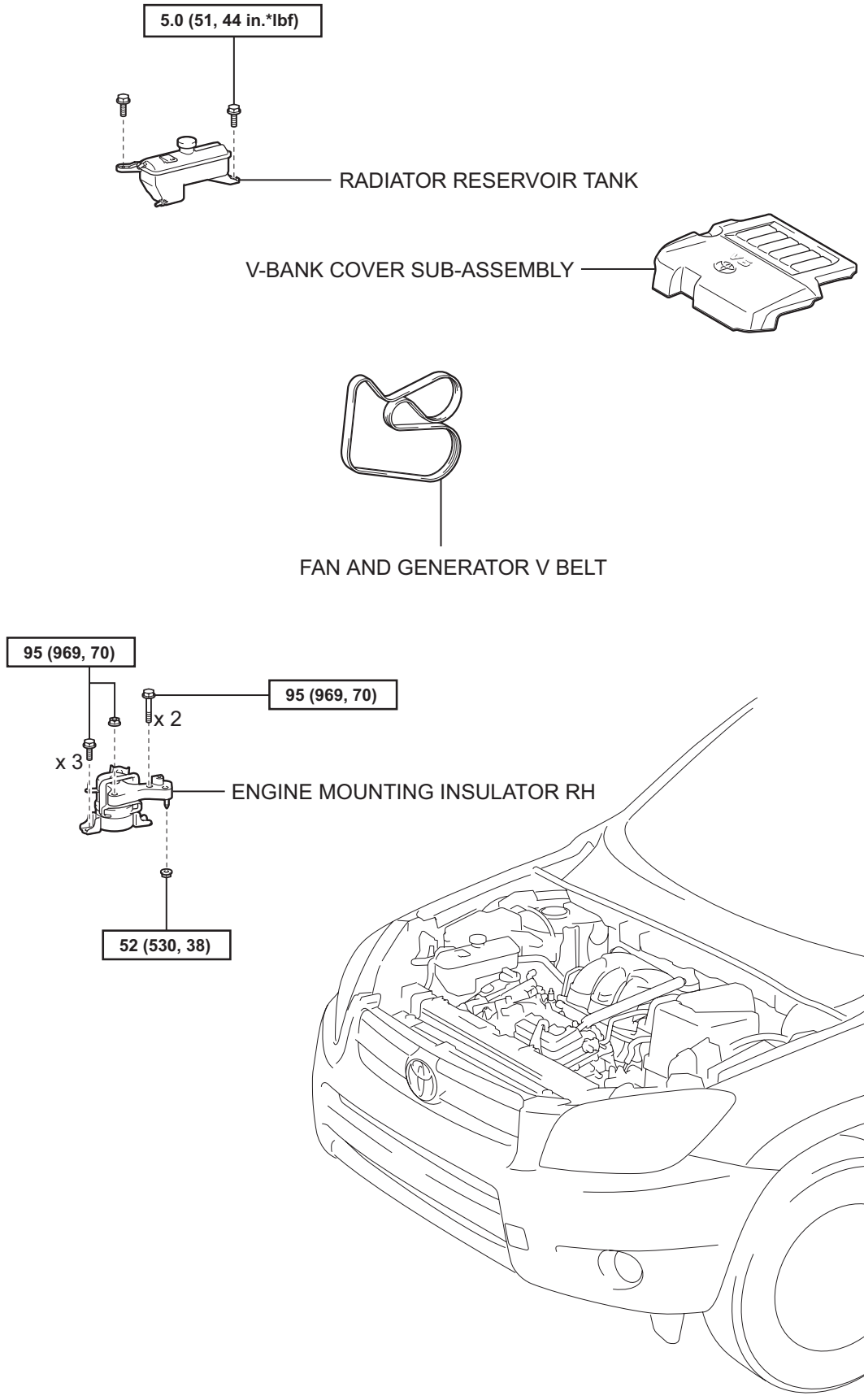

N*m (kgf*cm, ft.*lbf) : Specified torque

P

A132427E02

CO

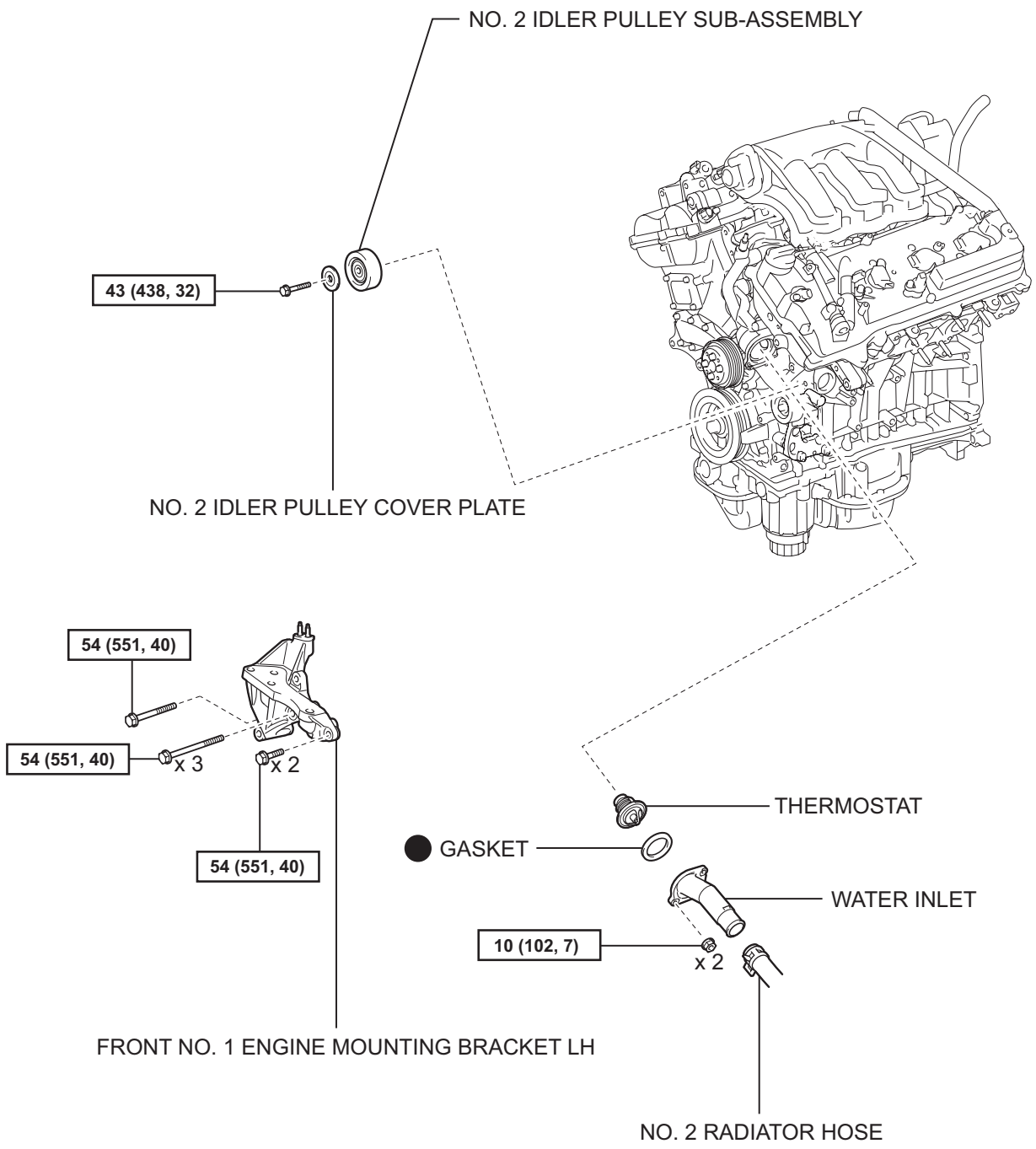

CO

N*m (kgf*cm, ft.*lbf) : Specified torque

● Non-reusable part

P

A138911E01

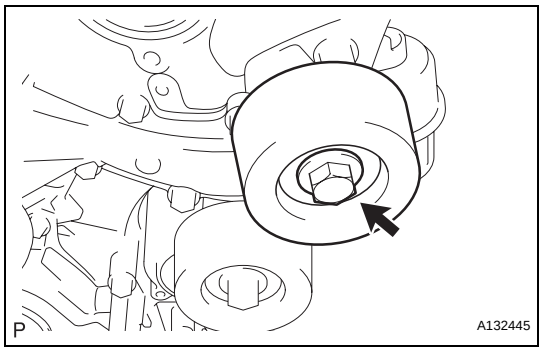

6. REMOVE NO. 2 IDLER PULLEY SUB-ASSEMBLY

(a) Remove the bolt, No. 2 idler pulley cover plate and No. 2 idler pulley.

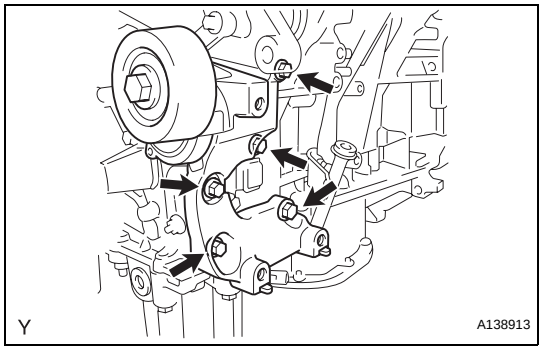

7. REMOVE V-RIBBED BELT TENSIONER ASSEMBLY

(a) Remove the 5 bolts and V-ribbed belt tensioner assembly.

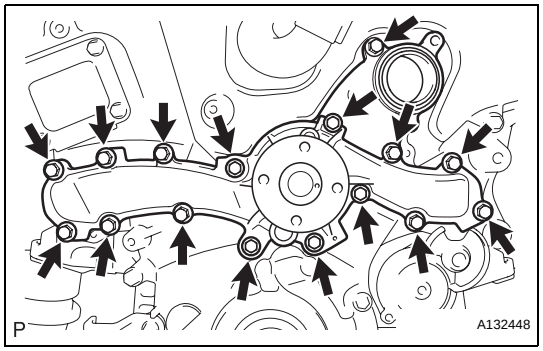

8. REMOVE WATER PUMP ASSEMBLY

(a) Remove the 16 bolts, water pump and water pump gasket.

INSPECTION

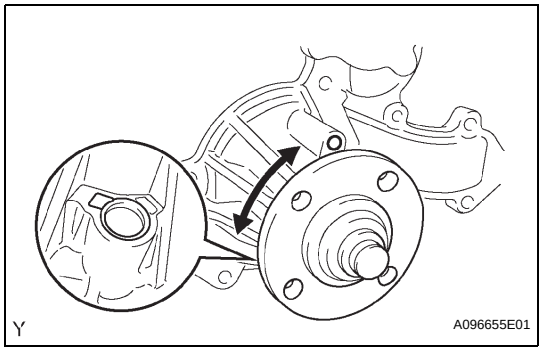

1. INSPECT WATER PUMP ASSEMBLY

(a) Visually check the drain hole for coolant leakage. If leakage is found, replace the water pump assembly.

(b) Turn the pulley, and then check that the water pump bearing moves smoothly without making a clicking noise.

If it does not move smoothly, replace the water pump assembly.

INSTALLATION

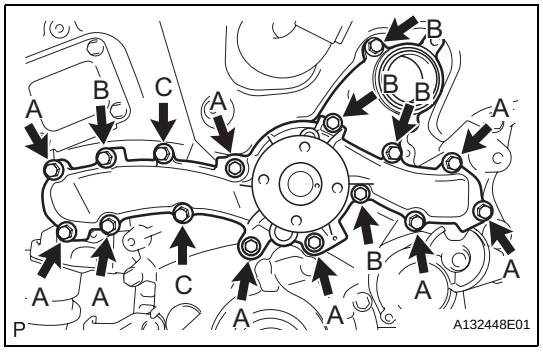

1. INSTALL WATER PUMP ASSEMBLY

(a) Install a new water pump gasket and the water pump with the 16 bolts.

Torque: 21 N*m (214 kgf*cm, 15 ft.*lbf) for bolt A
9.1 N*m (93 kgf*cm, 81 in.*lbf) for bolt B and C

CO

NOTICE:

- **Be sure to replace the 2 C bolts with new ones or reuse them after applying adhesive.**
  Adhesive:
  Toyota Genuine Adhesive 1344, Three Bond 1344 or Equivalent
- **Make sure that there is no oil on the threads of the A bolts.**

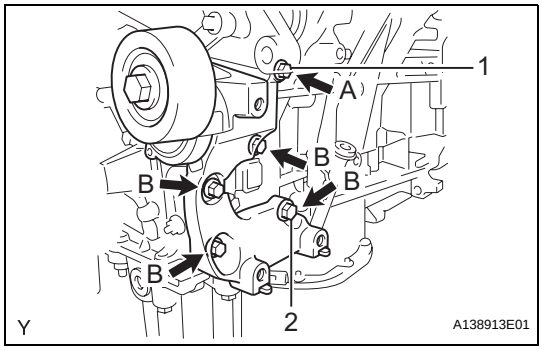

2. INSTALL V-RIBBED BELT TENSIONER ASSEMBLY

(a) Temporarily install the V-ribbed belt tensioner with the 5 bolts.
HINT:
Each bolt length is as follows:
A: 70 mm (2.76 in.)
B: 30 mm (1.30 in.)

(b) Install the V-ribbed belt tensioner by tightening the bolt 1 and bolt 2 in the order shown in the illustration.
Torque: 43 N*m (438 kgf*cm, 32 ft.*lbf)

(c) Tighten the other bolts.
Torque: 43 N*m (438 kgf*cm, 32 ft.*lbf)

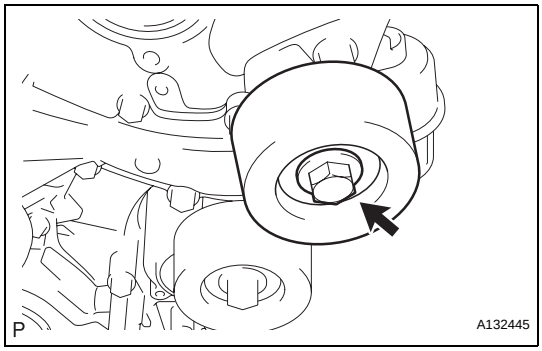

3. INSTALL NO. 2 IDLER PULLEY SUB-ASSEMBLY

(a) Install the No. 2 idler pulley cover plate and No. 2 idler pulley with the bolt.
Torque: 43 N*m (438 kgf*cm, 32 ft.*lbf)

CO

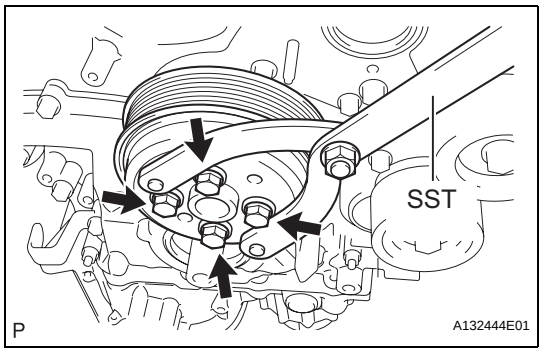

4. INSTALL WATER PUMP PULLEY

(a) Temporarily install the water pump pulley with the 4 bolts.

(b) Using SST, hold the water pump pulley.
SST 09960-10010 (09962-01000, 09963-00700)

(c) Tighten the 4 bolts.
Torque: 21 N*m (214 kgf*cm, 15 ft.*lbf)

5. INSTALL CRANKSHAFT PULLEY (See page EM-126)

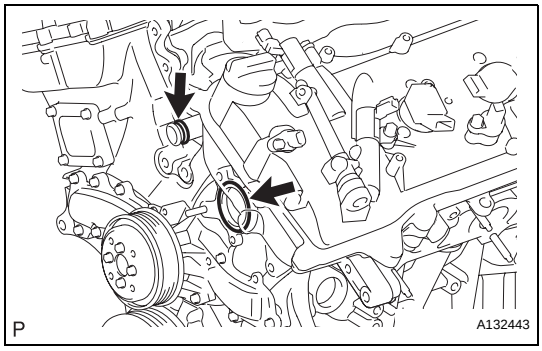

6. INSTALL WATER INLET HOUSING

(a) Install a new water inlet housing No. 1 gasket and water outlet pipe O-ring.

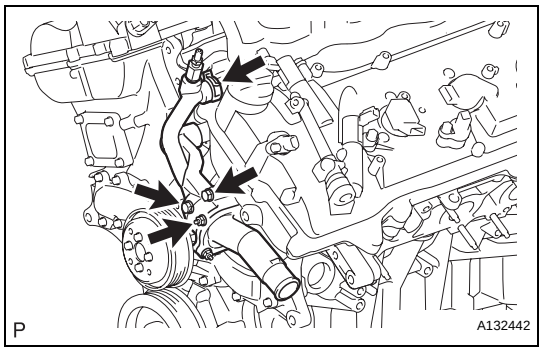

(b) Install the water inlet with the 2 bolts and nut.
Torque: 10 N*m (102 kgf*cm, 7 ft.*lbf)
NOTICE:
Be careful not to allow the O-ring to get caught between the parts.

(c) Connect the water hose.

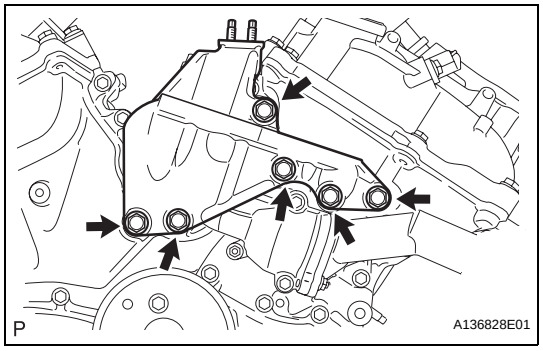

7. INSTALL FRONT NO. 1 ENGINE MOUNTING BRACKET LH

(a) Install the front No. 1 engine mounting bracket LH with the 6 bolts.
Torque: 54 N*m (551 kgf*cm, 40 ft.*lbf)
NOTICE:
- **Install the water inlet and mounting bracket within 15 minutes after installing the chain cover.**
- **Do not start the engine for at least 2 hours after installation.**

8. INSTALL ENGINE ASSEMBLY

(a) Install the engine (see page EM-31).

WATER PUMP

COMPONENTS

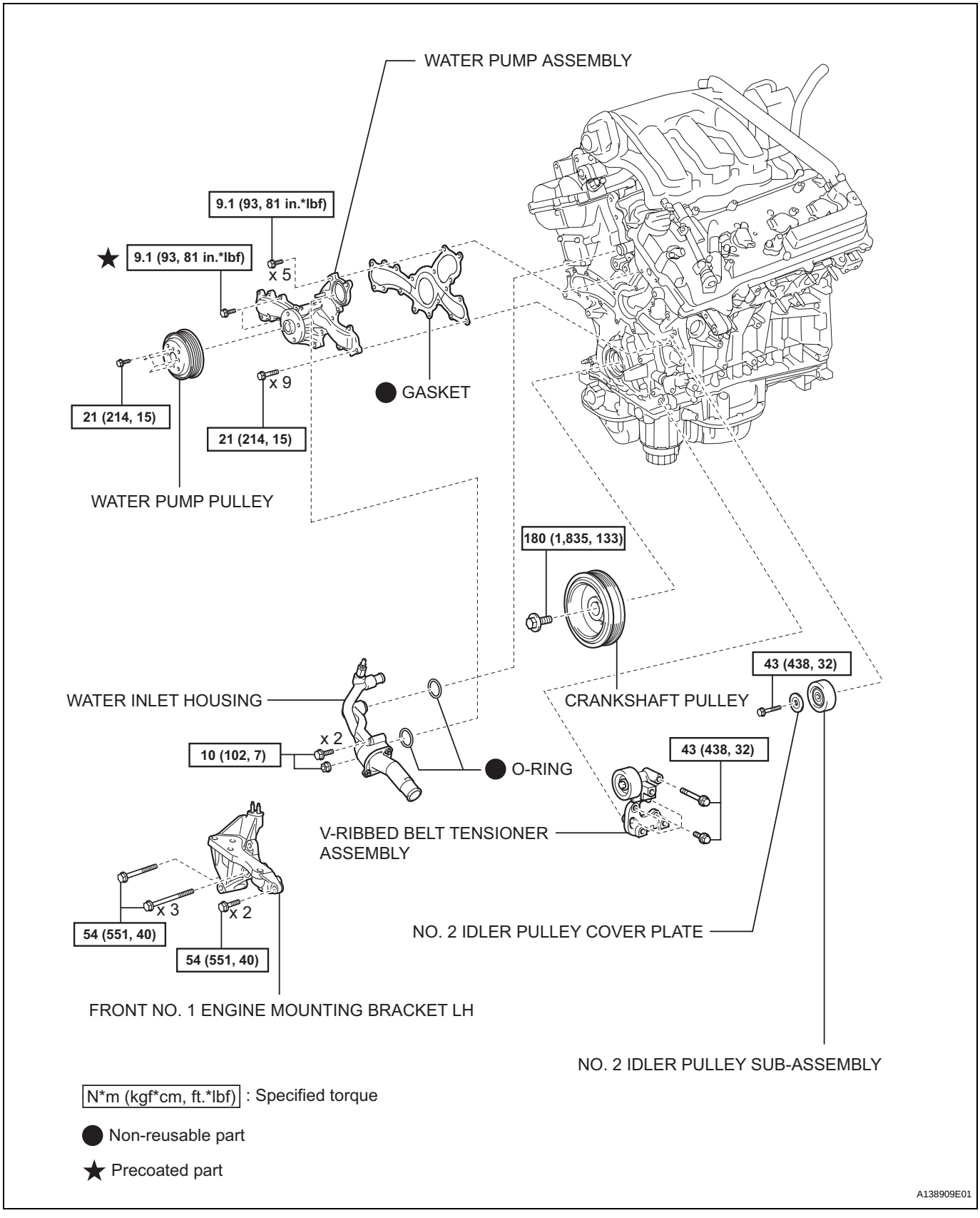

CO

REMOVAL

1. REMOVE ENGINE ASSEMBLY

(a) Remove the engine (see page EM-21).

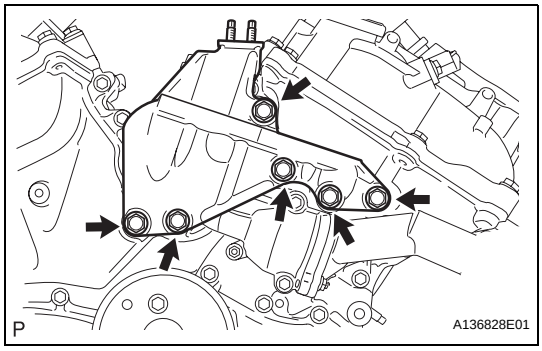

2. REMOVE FRONT NO. 1 ENGINE MOUNTING BRACKET LH

(a) Remove the 6 bolts and mounting bracket.

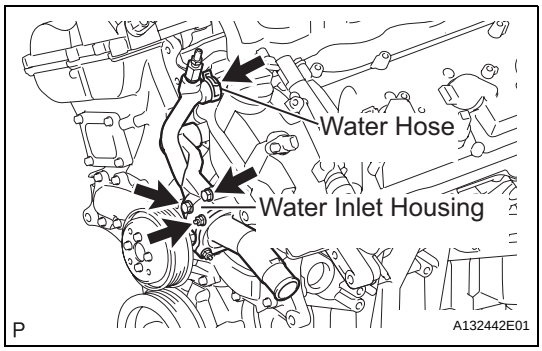

3. REMOVE WATER INLET HOUSING

(a) Disconnect the water hose.

(b) Remove the 2 bolts, nut and water inlet housing.

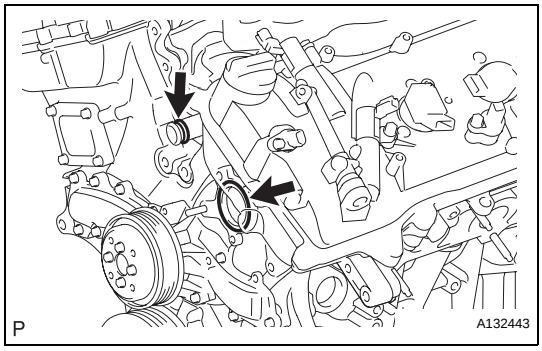

(c) Remove the water inlet housing No. 1 gasket and water outlet pipe O-ring.

4. REMOVE CRANKSHAFT PULLEY (See page EM-54)

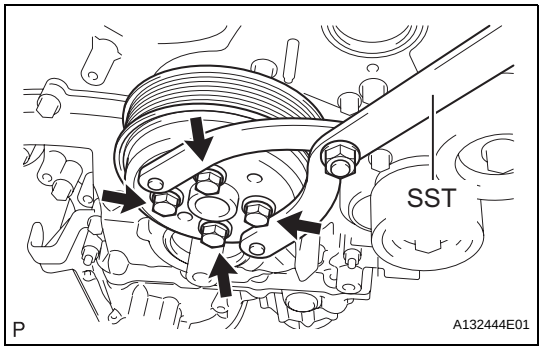

5. REMOVE WATER PUMP PULLEY

(a) Using SST, hold the water pump pulley.
SST 09960-10010 (09962-01000, 09963-00700)

(b) Remove the 4 bolts and water pump pulley.

CO

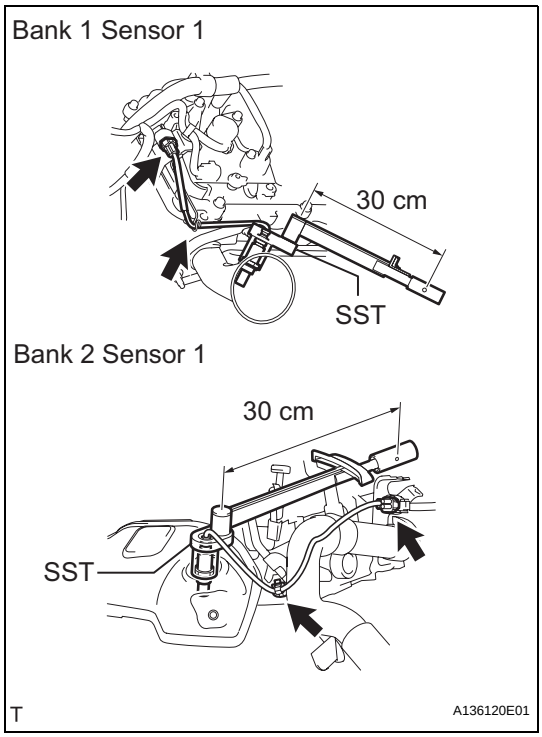

INSTALLATION

1. INSTALL AIR FUEL RATIO SENSOR (for Sensor 1)

(a) Using SST, install the sensor to the exhaust manifold.

SST 09224-00010

Torque: 40 N*m (408 kgf*cm, 30 ft.*lbf) for use with SST
44 N*m (449 kgf*cm, 32 ft.*lbf) for use without SST

HINT:

- Use a torque wrench with a fulcrum length of 30 cm (11.81 in.).
- Make sure SST and a wrench are connected in a straight line.

(b) Connect the sensor connector.

2. CONNECT CABLE TO NEGATIVE BATTERY TERMINAL

3. CHECK FOR EXHAUST GAS LEAKS

EC

AIR FUEL RATIO SENSOR

COMPONENTS

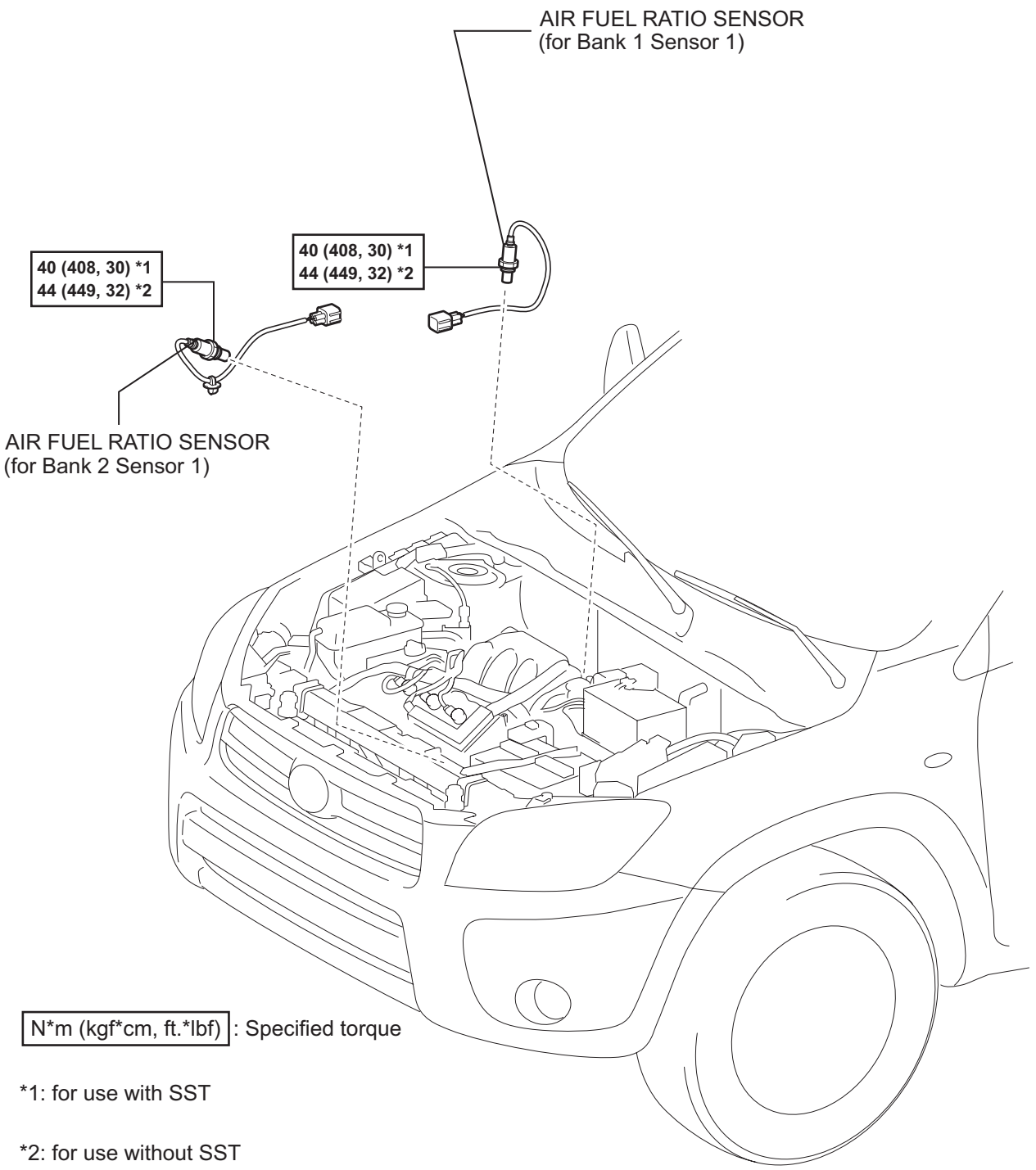

EC

T

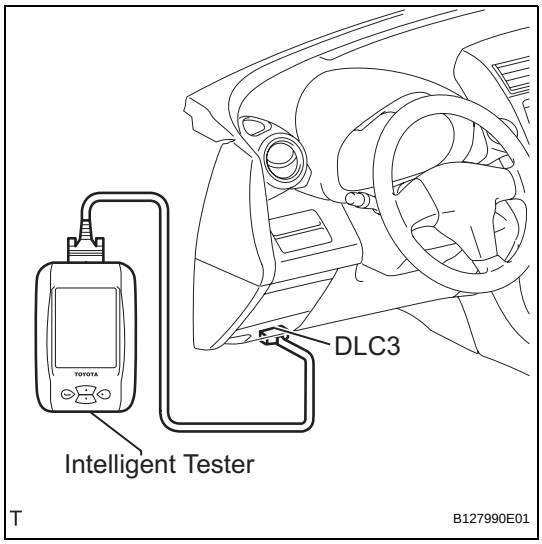

ON-VEHICLE INSPECTION

1. CHECK AIR FUEL RATIO COMPENSATION SYSTEM

(a) Connect the intelligent tester to the DLC3.
(b) Turn the ignition switch ON.
(c) Select the following menu items: Data List / A/FS B1 S1, A/FS B2 S1, O2S B1 S2 and O2S B2 S2.
(d) Warm up the A/F sensor with the engine speed at 2,500 rpm for approximately 2 minutes.

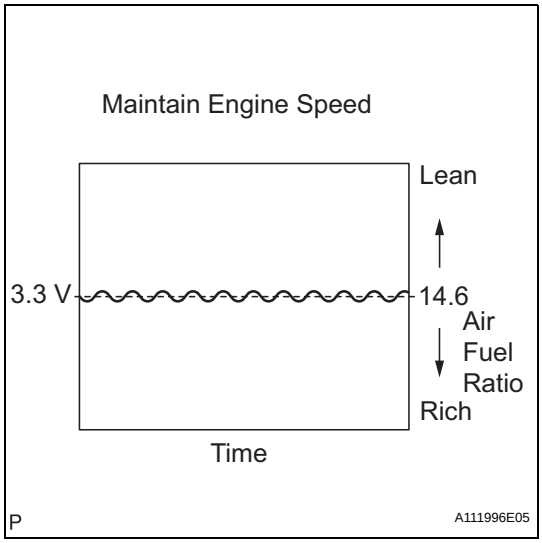

(e) Maintain the engine speed at 2,500 rpm and confirm that the display of "A/FS B1 S1" and "A/FS B2 S1" is as shown in the illustration.
HINT:
- The illustration may slightly differ from the display on the intelligent tester.
- Only the intelligent tester displays the waveform of the A/F sensor.

(f) Confirm that the display of "O2S B1 S2" and "O2S B2 S2" changes between 0 to 1 V with the engine speed at 2,500 rpm.
OK:
The voltage output oscillates more than 8 times in 10 seconds.
NOTICE:
- **Perform the check immediately after warming the engine up.**
- **If the voltage variation could not be verified, warm up the A/F sensor again. If it could not be verified even after warming up the sensor again, check for DTCs (see page ES-334).**

EC

REMOVAL

1. DISCONNECT CABLE FROM NEGATIVE BATTERY TERMINAL

CAUTION:

Wait at least 90 seconds after disconnecting the cable from the negative (-) battery terminal to prevent airbag and seat belt pretensioner activation.

2. REMOVE AIR FUEL RATIO SENSOR (for Sensor 1)

(a) Disconnect the sensor connector.

(b) Using SST, remove the sensor from the exhaust manifold.

SST 09224-00010

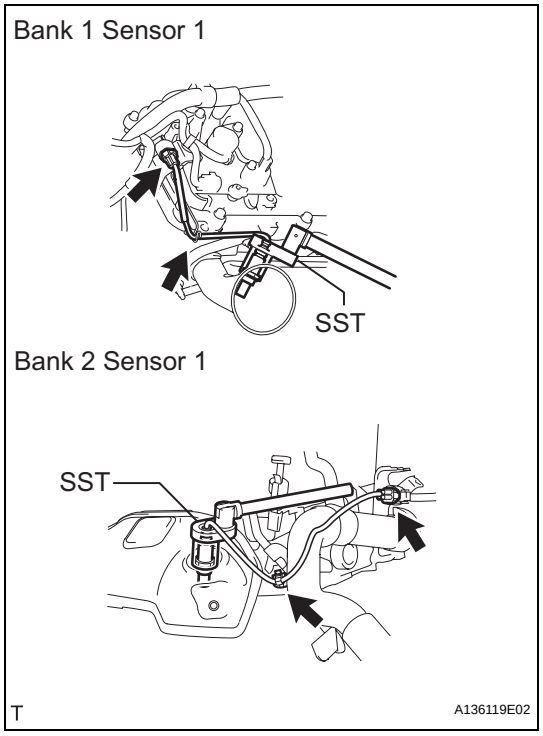

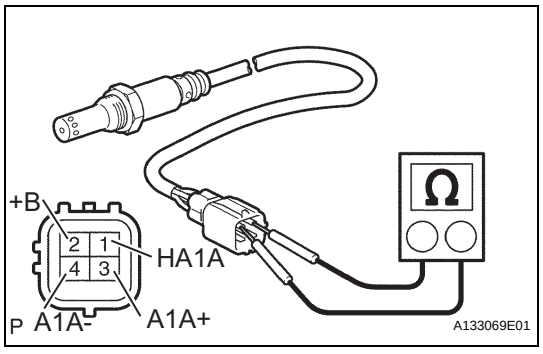

INSPECTION

1. INSPECT AIR FUEL RATIO SENSOR (for Sensor 1)

(a) Measure the resistance of the sensor.

Standard resistance

Tester Connection	Condition	Specified Condition
1 (HA1A) - 2 (+B)	20°C (68°F)	1.8 to 3.4 Ω
1 (HA1A) - 4 (A1A-)	-	10 kΩ or higher

If the resistance is not as specified, replace the sensor.

EC

INSPECTION

1. INSPECT CANISTER

(a) Visually check the canister for cracks or damage.
If cracks or damage is found, replace the canister.

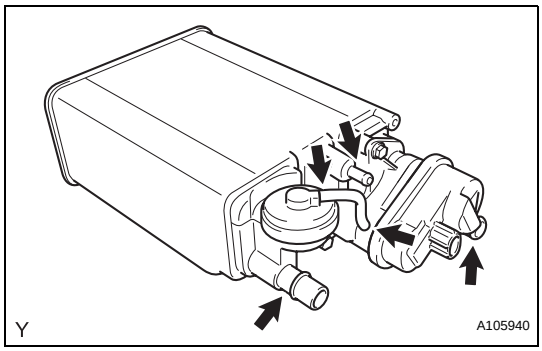

(b) Check the canister operation.

(1) While holding the purge port closed, blow air 0.39 kPa (4.0 kgf/cm^2, 3 mmHg) into the vent port, and check that air flows from the air inlet port.
If the result is not as specified, replace the canister.

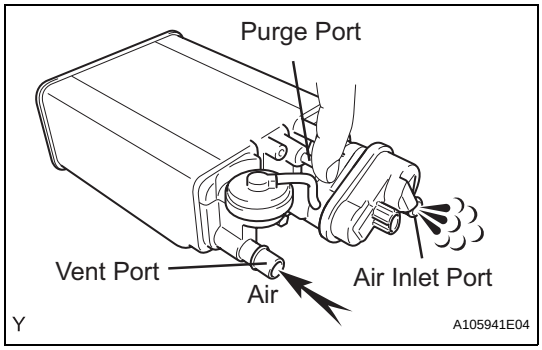

(2) While holding the air inlet port closed, blow air 0.39 kPa (4.0 kgf/cm^2, 3 mmHg) into the vent port, and check that air flows from the purge port.
If the result is not as specified, replace the canister.

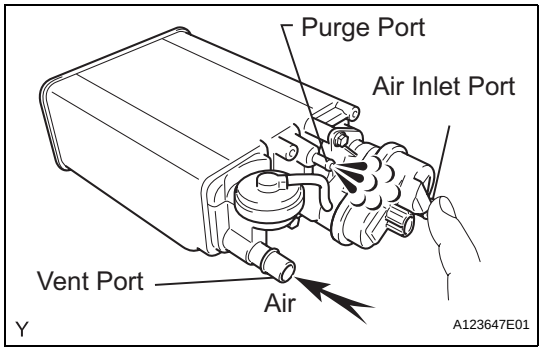

(3) While holding the air inlet port closed, apply vacuum 3.43 kPa (35.0 kgf/cm^2, 25.7 mmHg) to the vent port, and check that air is sucked into the purge port.
If the result is not as specified, replace the canister.

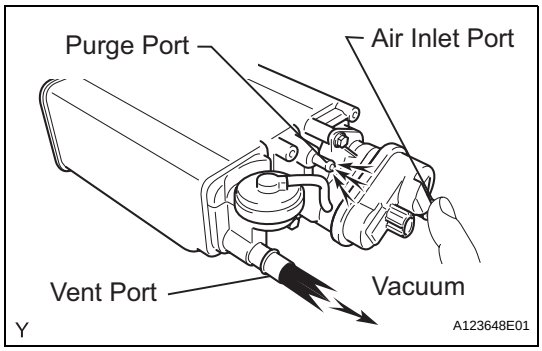

(c) Check the airtightness.

(1) While holding the vent and air inlet ports closed, apply vacuum 3.43 kPa (35.0 kgf/cm^2, 25.7 mmHg) to the purge port, and check that the vacuum is maintained for 1 minute.
If the result is not as specified, replace the canister.

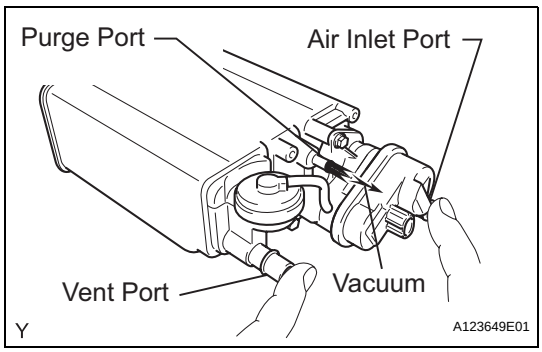

EC

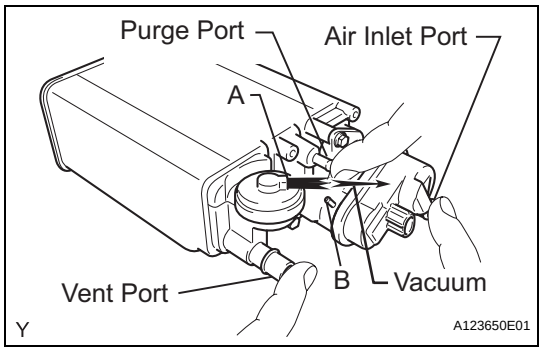

(d) Check the diaphragm.
(1) Remove the air hose between ports A and B.
(2) While holding the vent, purge and air inlet ports closed, apply vacuum 1.42 kPa (14.5 kgf/cm^2, 10.6 mmHg) to port A, and check that air is not sucked into port B.

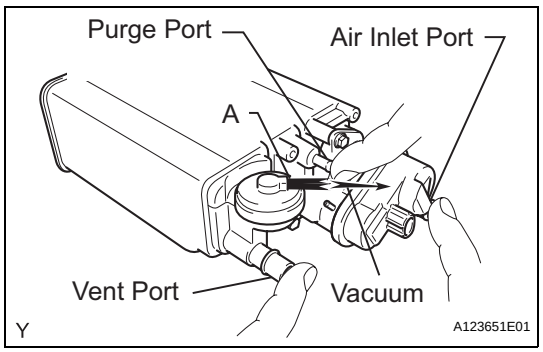

(3) While holding the vent, purge and air inlet ports closed, apply vacuum 1.42 kPa (14.5 kgf/cm^2, 10.6 mmHg) to port A, and measure how long it takes for the vacuum to drop.
Vacuum drop time:
10 seconds or more
If the result is not as specified, replace the canister.

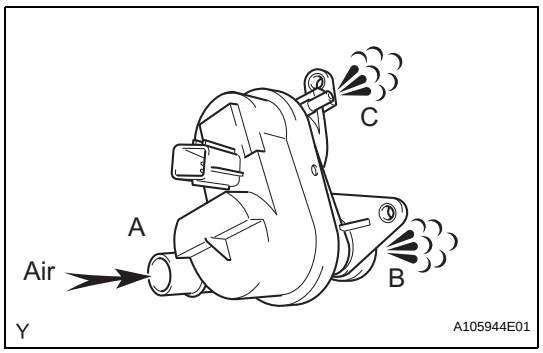

(e) Check the leak detection pump.
(1) Check that air flows from port A to port B and C.
If the result is not as specified, replace the canister.

EC

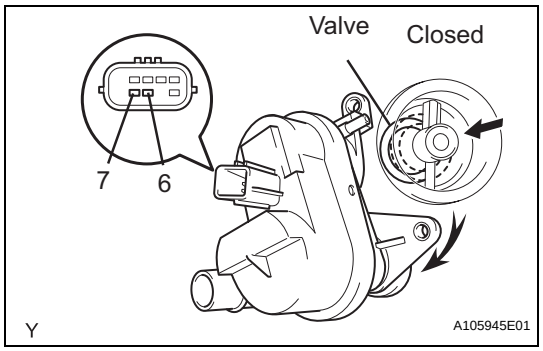

(2) Connect the positive (+) lead of the battery to terminal 7 and the negative (-) lead to terminal 6.
(3) Check that the valve closes.
If the result is not as specified, replace the canister.
(4) Install the canister pump module.

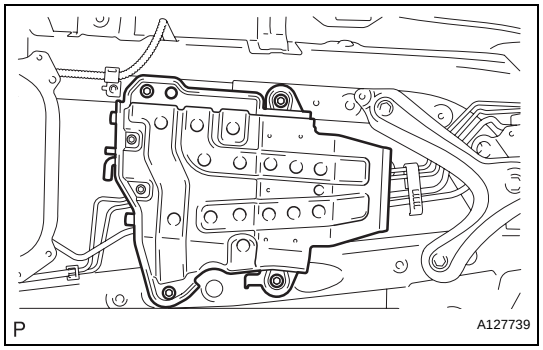

INSTALLATION

1. INSTALL CANISTER

(a) Install the canister with the 4 bolts and clip.
Torque: 20 N*m (204 kgf*cm, 15 ft.*lbf)
(b) Connect the air inlet line tube to the canister (leak detection pump).

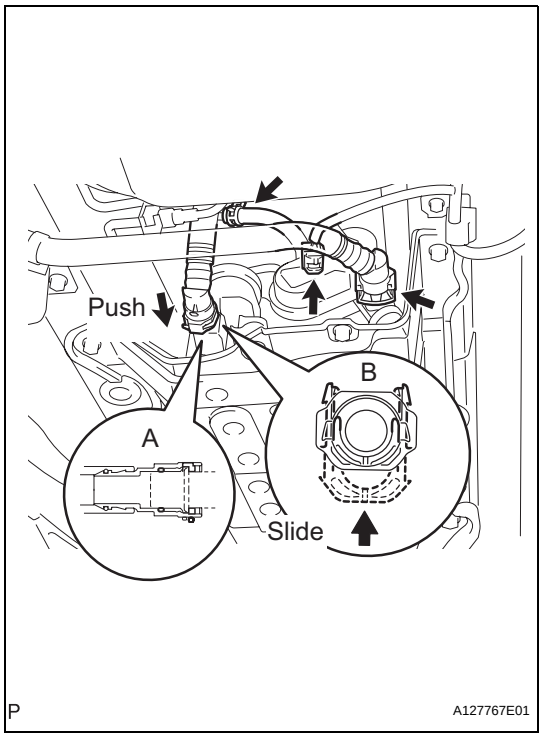

(c) Install the vent line tube.
  (1) Connect the pipe to the fuel tube connector, as shown in A in the illustration. Then push up the retainer to lock the claws, as shown in B in the illustration.
  NOTICE:
  - **Check that there are no scratches or foreign objects around the connected part of the fuel tube connector and pipe before performing this work.**
  - **After connecting the fuel tank vent line tube, check that the fuel tank vent line tube is securely connected by pulling the fuel tube connector and pipe.**

(d) Connect the purge line hose.
  HINT:
  Install the hose to the canister, and then attach the retainer.

(e) Connect the connector to the canister (leak detection pump).

2. CONNECT CABLE TO NEGATIVE BATTERY TERMINAL

EC

CANISTER

COMPONENTS

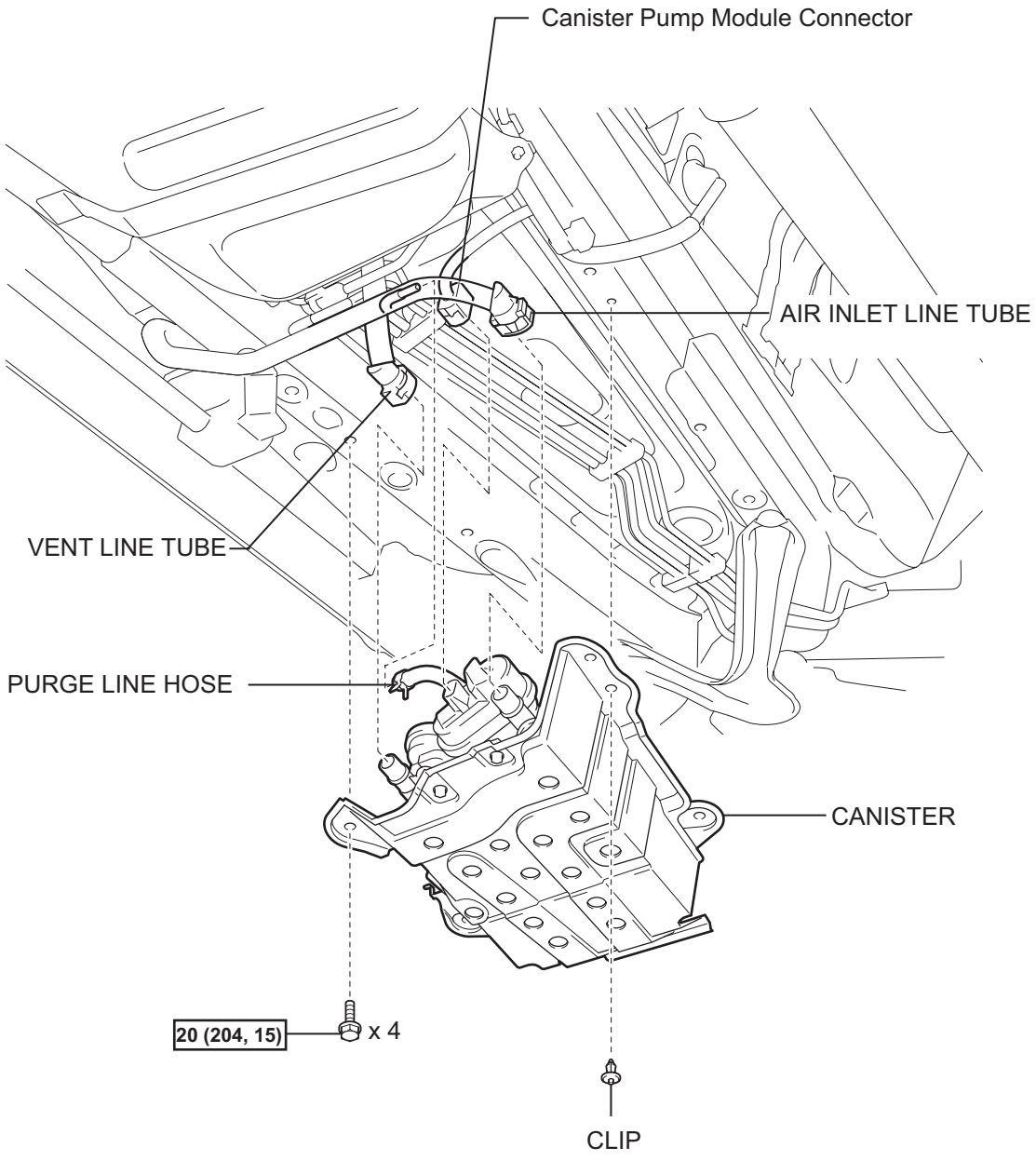

N*m (kgf*cm, ft.*lbf) : Specified torque

P

A127737E01

REMOVAL

1. DISCONNECT CABLE FROM NEGATIVE BATTERY TERMINAL

CAUTION:

Wait at least 90 seconds after disconnecting the cable from the negative (-) battery terminal to prevent airbag and seat belt pretensioner activation.

2. REMOVE CANISTER

NOTICE:

Remove any dirt or foreign objects before performing this work.

(a) Disconnect the 2 tubes, hose and connector.

(1) Using a screwdriver, pry up the retainer.
HINT:
Do not remove the retainer.

(2) Disconnect the purge line hose.

(3) Disconnect the air inlet line tube from the canister.

(4) Disconnect the vent line tube from the canister (leak detection pump).

(5) Disconnect the connector from the canister (leak detection pump).

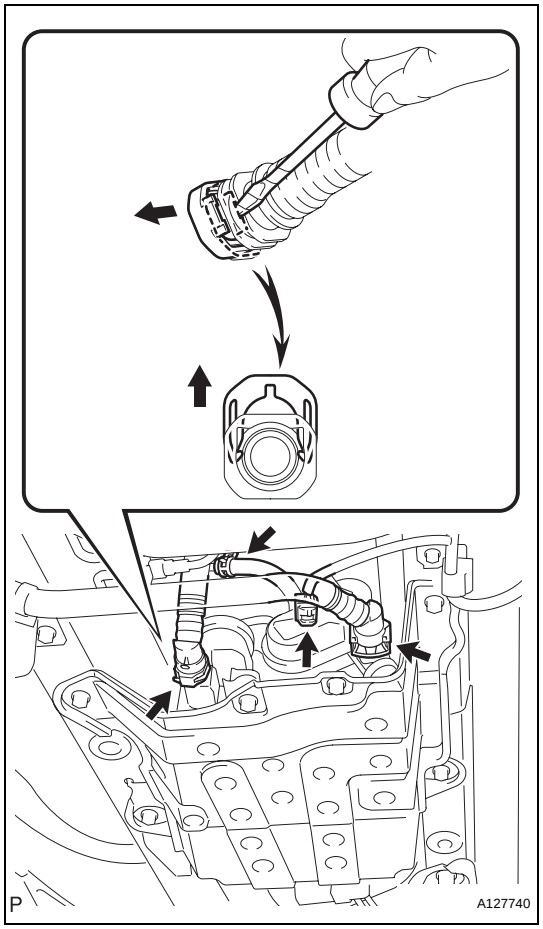

(b) Remove the 4 bolts, clip and canister.

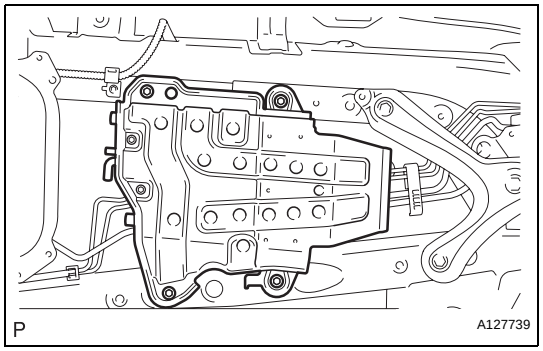

EC

SYSTEM DIAGRAM

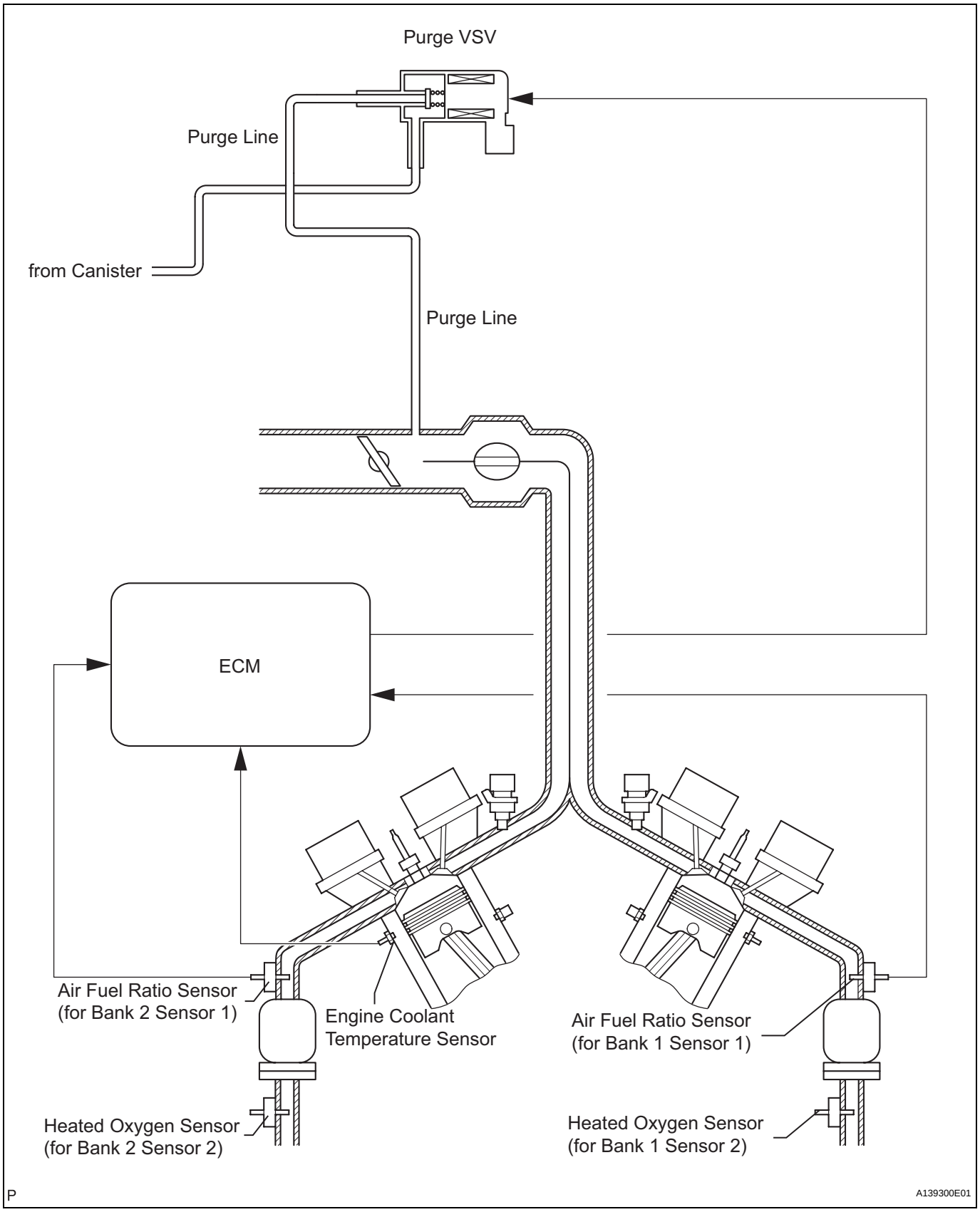

EC

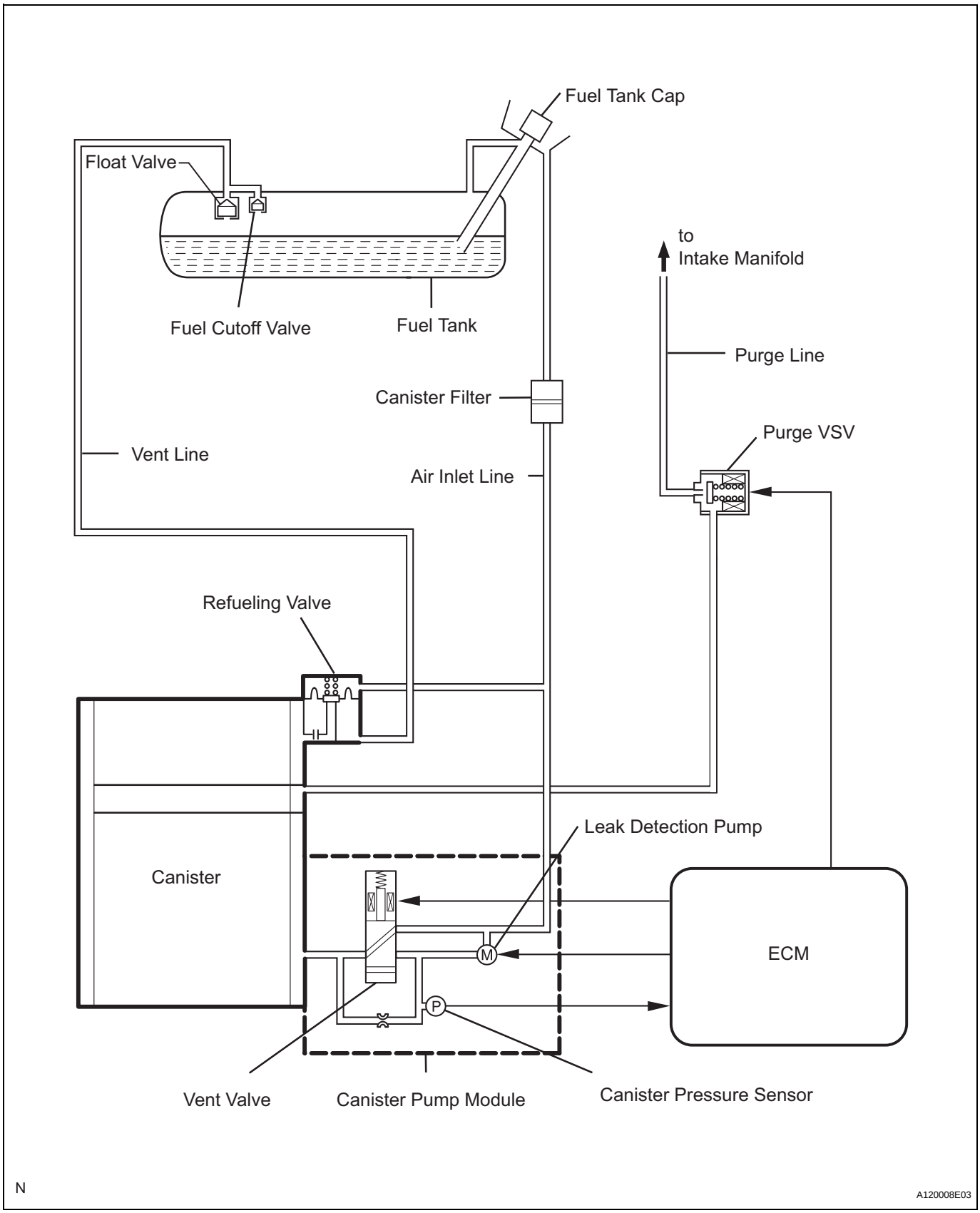
Fuel Tank Cap
Float Valve
to
Intake Manifold
Fuel Cutoff Valve
Fuel Tank
Purge Line
Canister Filter
Purge VSV
Vent Line
Air Inlet Line
Refueling Valve
Leak Detection Pump
Canister
ECM
M
P
Vent Valve
Canister Pump Module
Canister Pressure Sensor
N
A120008E03

EC

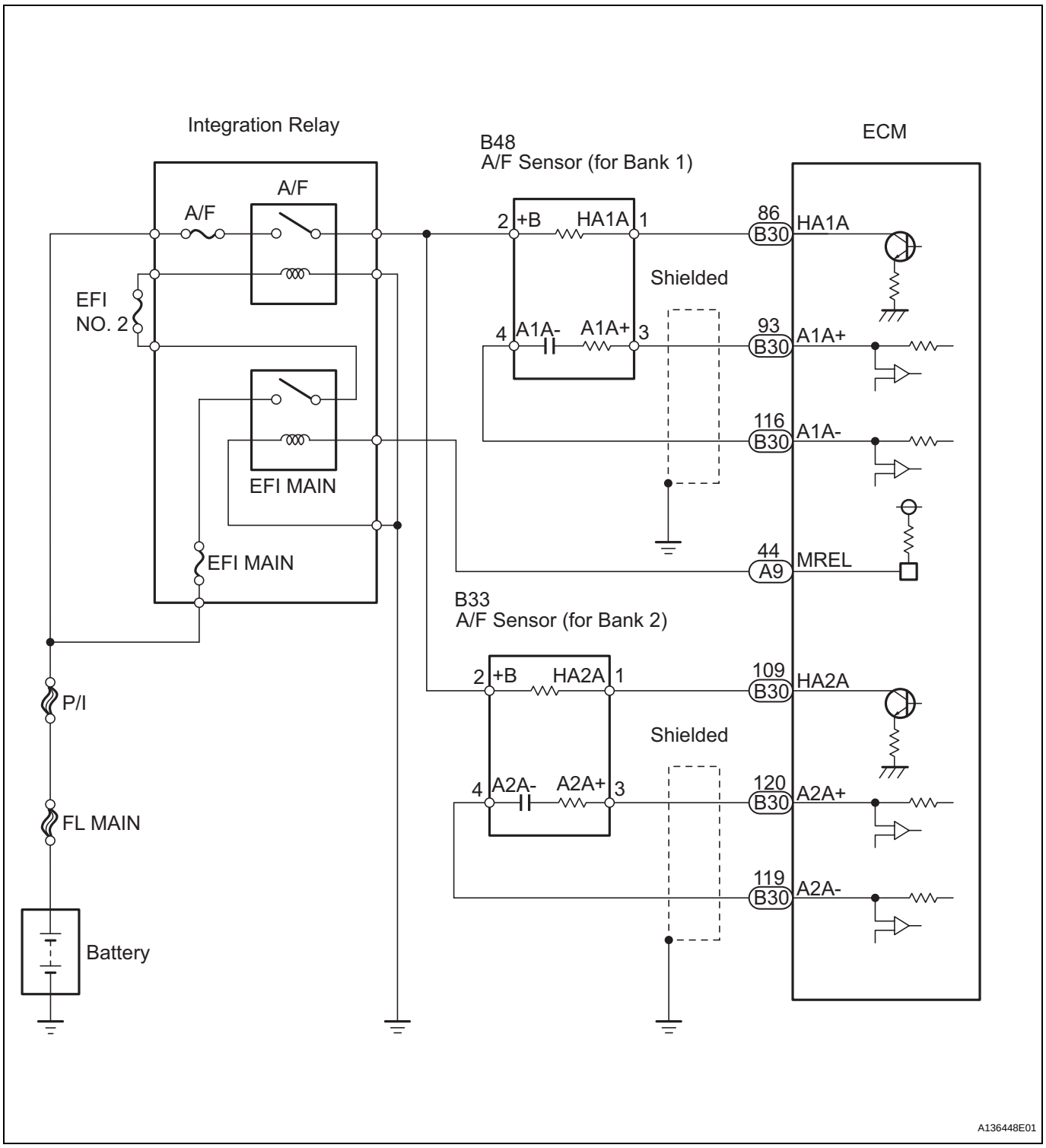
Integration Relay
ECM
B48
A/F Sensor (for Bank 1)
A/F
A/F
EFI
NO. 2
EFI MAIN
EFI MAIN
2 +B HA1A 1
4 A1A- A1A+ 3
Shielded
86
B30
HA1A
93
B30
A1A+
116
B30
A1A-
44
A9
MREL
B33
A/F Sensor (for Bank 2)
2 +B HA2A 1
4 A2A- A2A+ 3
Shielded
109
B30
HA2A
120
B30
A2A+
119
B30
A2A-
P/I
FL MAIN
Battery
A136448E01

EC

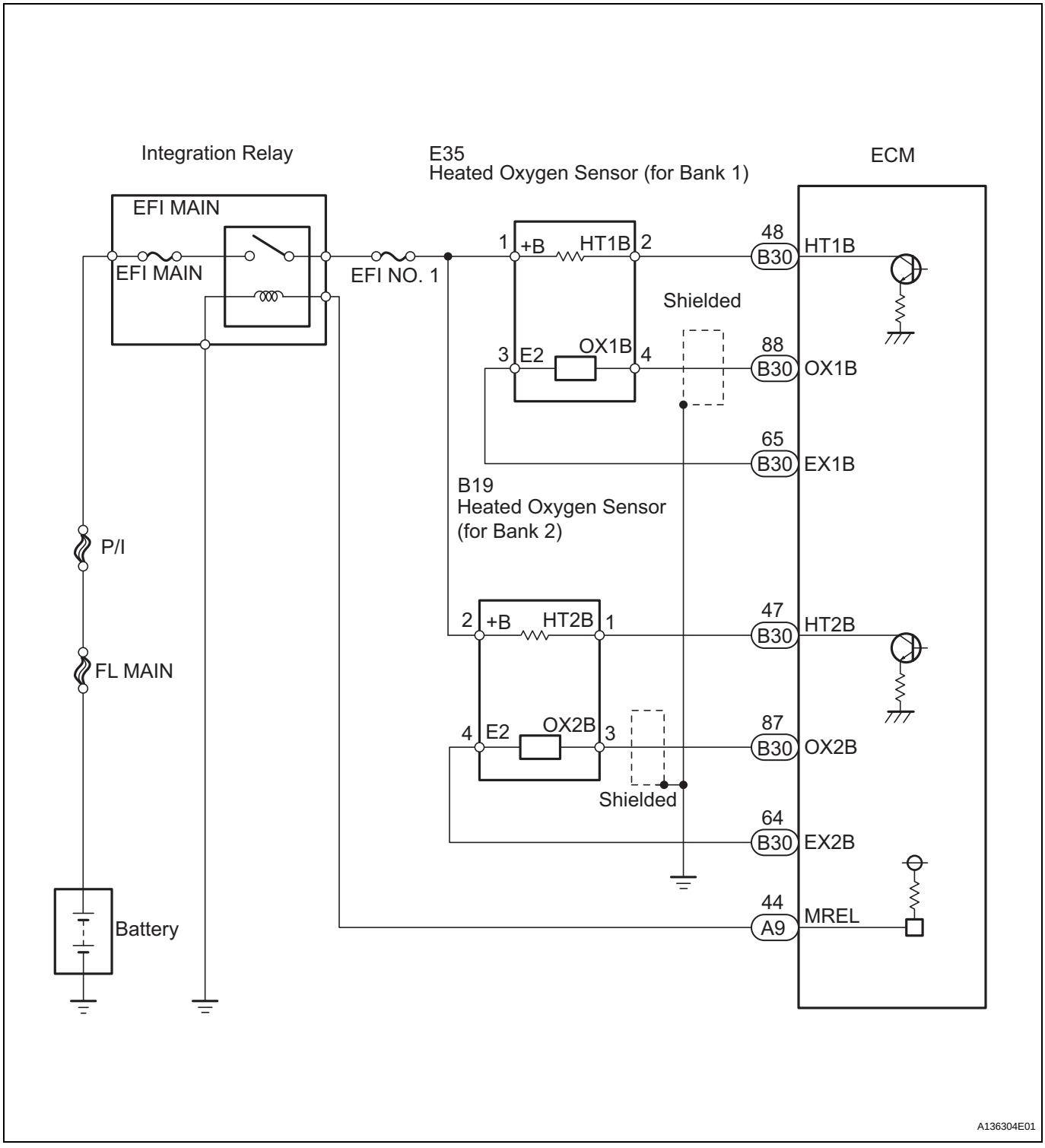
Integration Relay
E35
Heated Oxygen Sensor (for Bank 1)
ECM
EFI MAIN
EFI MAIN
EFI NO. 1
1
+B
HT1B
2
48
B30
HT1B
Shielded
3
E2
OX1B
4
88
B30
OX1B
65
B30
EX1B
B19
Heated Oxygen Sensor
(for Bank 2)
P/I
FL MAIN
2
+B
HT2B
1
47
B30
HT2B
4
E2
OX2B
3
87
B30
OX2B
Shielded
64
B30
EX2B
44
A9
MREL
Battery
A136304E01

EC

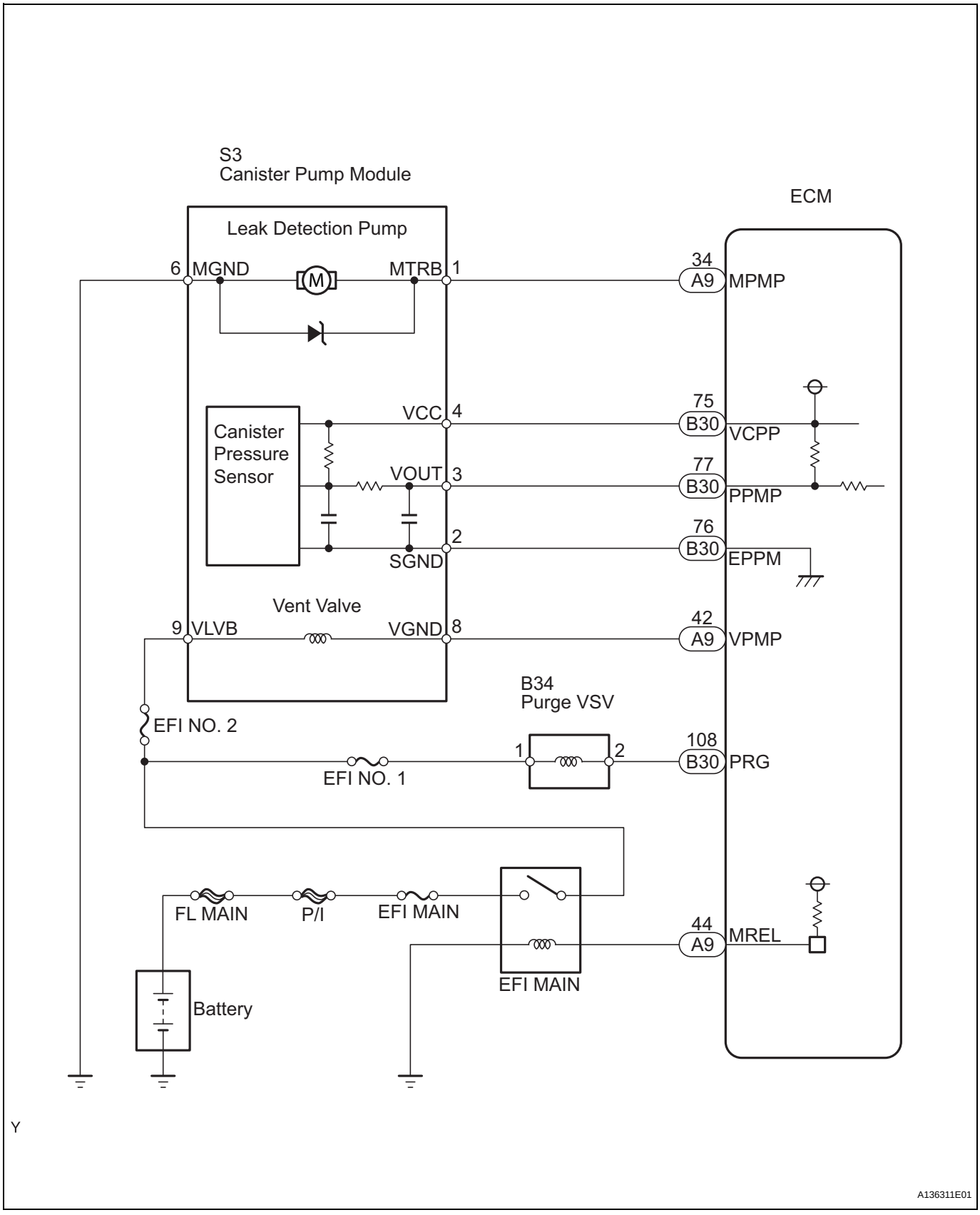
S3
Canister Pump Module
ECM
Leak Detection Pump
6 MGND
M
MTRB 1
34
A9
MPMP
Canister
Pressure
Sensor
VCC 4
75
B30
VCPP
VOUT 3
77
B30
PPMP
2
SGND
76
B30
EPPM
Vent Valve
9 VLVB
VGND 8
42
A9
VPMP
B34
Purge VSV
EFI NO. 2
EFI NO. 1
1
2
108
B30
PRG
FL MAIN
P/I
EFI MAIN
EFI MAIN
44
A9
MREL
Battery
Y
A136311E01

EC

ON-VEHICLE INSPECTION

1. CHECK FUEL CUT RPM

(a) Increase the engine speed to at least 3,500 rpm.

(b) Use a sound scope to check for injector operating noise.

(c) Check that the operating sounds stop momentarily and then resume when the throttle lever is released.

HINT:

Measure with the A/C OFF.

Fuel return rpm:

1,400 rpm

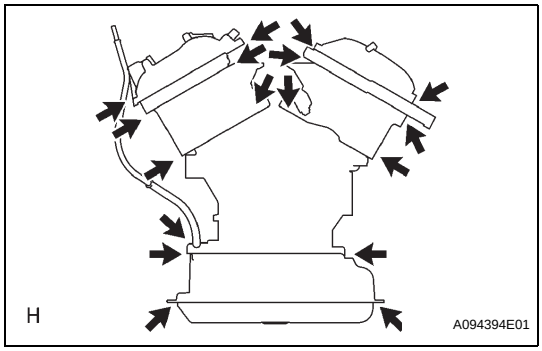

2. CHECK FOR LEAKS

(a) Visually check that the hoses, connections and gaskets have no cracks, leaks or damage.

NOTICE:

- **Detachment or other problems with the engine oil dipstick, filler cap, PCV hose and other components may cause the engine to run improperly.**
- **Disconnection, looseness or cracks in the parts of the air induction system between the throttle body and cylinder head will allow air suction and cause an engine failure or engine malfunctions.**

If the result is not as specified, replace parts as necessary.

3. CHECK LINE AND CONNECTORS

(a) Visually check for loose connections, sharp bends or damage.

4. CHECK FUEL TANK ASSEMBLY

(a) Visually check for deformation, cracks or fuel leakage.

5. CHECK FUEL TANK AND VENT LINE

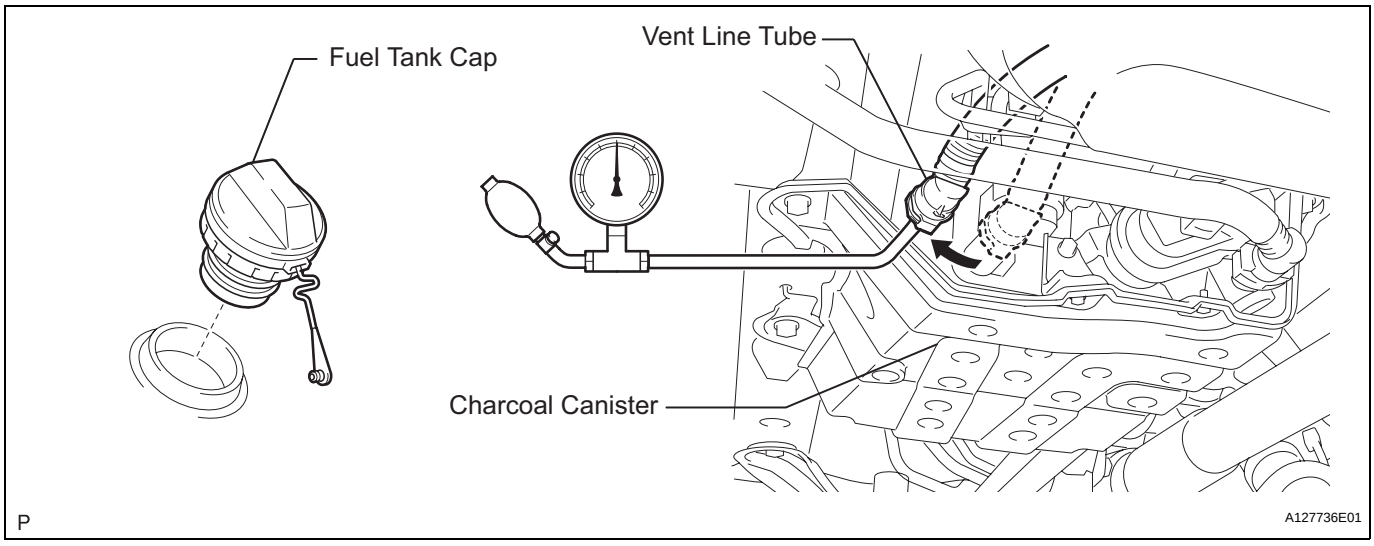

(a) Disconnect the vent line tube from the canister.

(b) Connect a pressure gauge to the vent line tube.

(c) Apply 4 kPa (41 kgf/cm^2, 30 mmHg) of pressure to the vent line of the fuel tank.
HINT:
Perform this inspection with the fuel tank less than 90% full. When the fuel tank is full, the fuel cutoff valve closes and pressure is released through the 1.5 mm orifice. As a result, when the fuel tank cap is removed, the pressure does not decrease smoothly.

(d) Check that the fuel tank pressure is maintained for some time, and does not decrease immediately.
HINT:
If the pressure decreases immediately, one of the following may be the cause:
- The fuel tank cap is not completely tightened.
- The fuel tank cap is damaged.
- Air is leaking from the vent line.
- The fuel tank is damaged.

(e) When the fuel tank cap is removed, check that pressure is released smoothly.
HINT:
If the pressure does not drop, replace the fuel tank assembly.

(f) Reconnect the vent line tube to the canister.

6. CHECK AIR INLET LINE

(a) Disconnect the air inlet line hose from the charcoal canister.

(b) Check that air flows freely into the air inlet line.
HINT:
If air does not flow freely into the air inlet line, repair or replace it.

(c) Reconnect the air inlet line hose to the charcoal canister.

EMISSION CONTROL SYSTEM

PARTS LOCATION

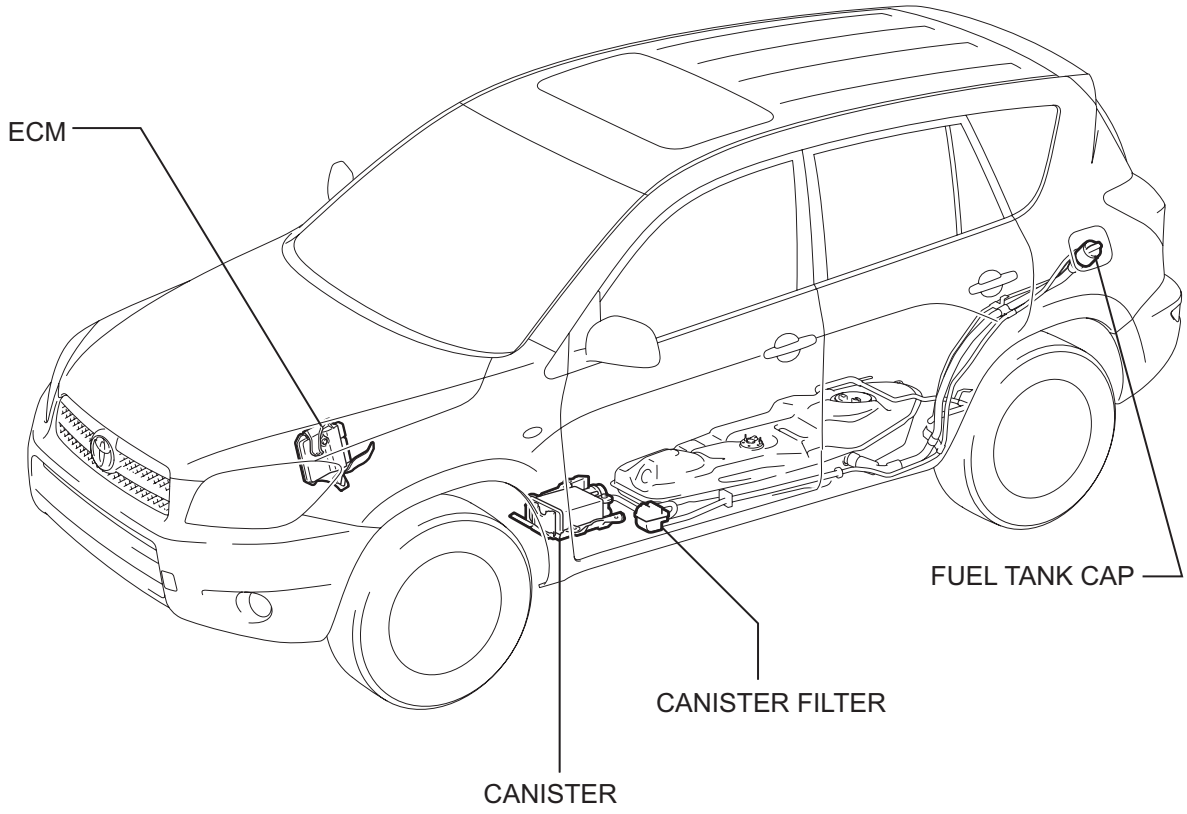

P

A127735E01

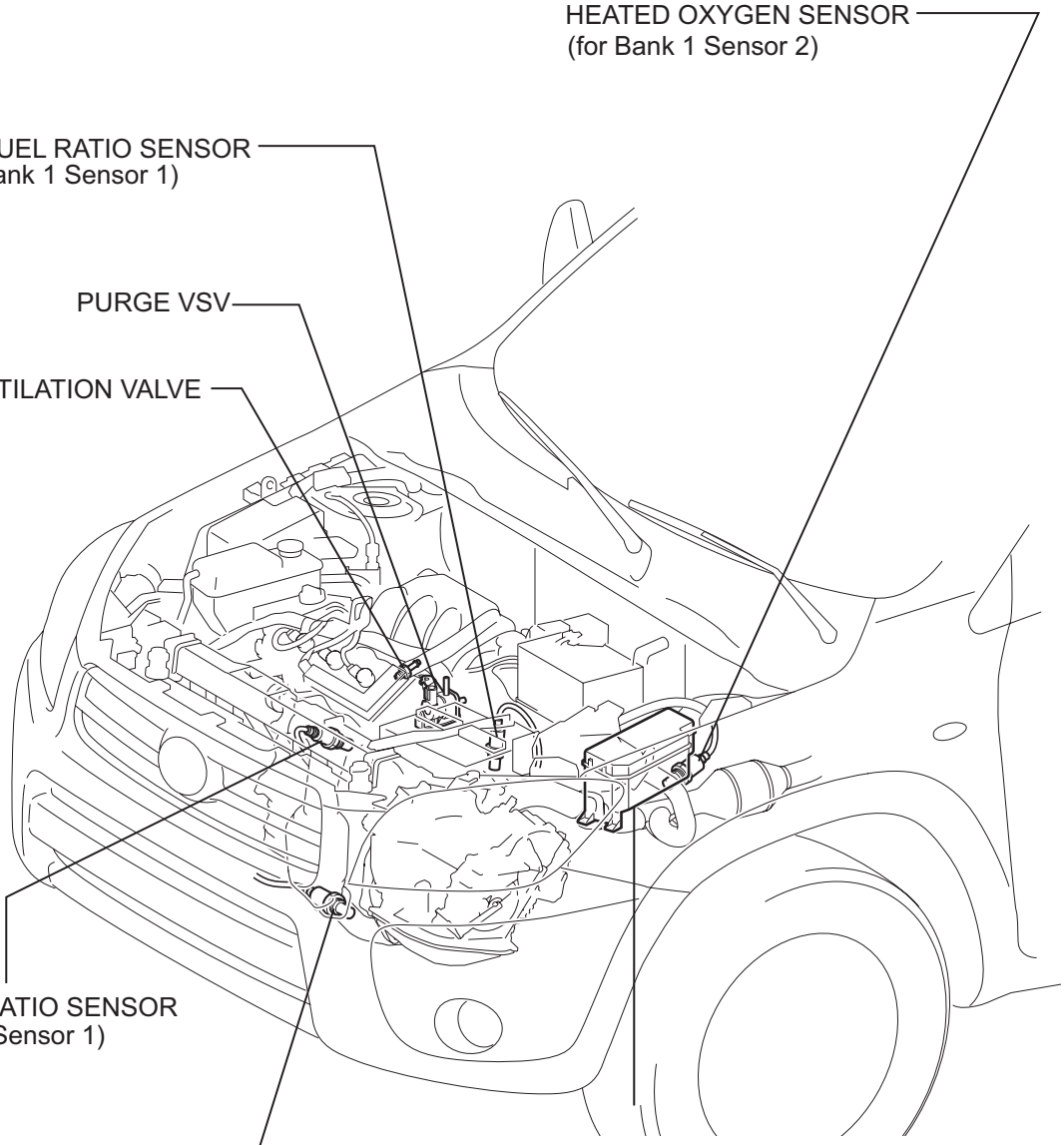

ENGINE ROOM NO. 1 JUNCTION BLOCK, NO. 1 RELAY BLOCK

- INTEGRATION RELAY (UNIT A: EFI MAIN RELAY)
- P/I H-FUSE
- EFI MAIN FUSE
- NO. 1 EFI FUSE

T

A136124E01

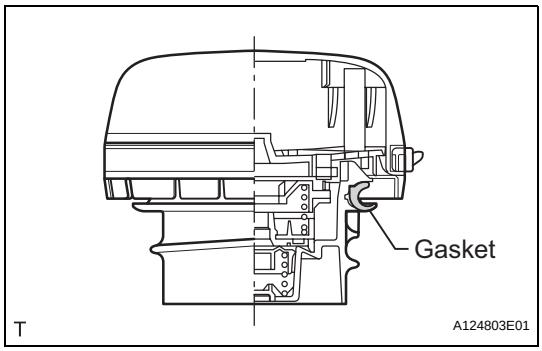

FUEL TANK CAP

INSPECTION

1. INSPECT FUEL TANK CAP ASSEMBLY

(a) Visually check that the cap and gasket are not deformed or damaged.
If the result is not as specified, replace the cap assembly or gasket.

REMOVAL

1. DISCONNECT CABLE FROM NEGATIVE BATTERY TERMINAL

CAUTION:

Wait at least 90 seconds after disconnecting the cable from the negative (-) battery terminal to prevent airbag and seat belt pretensioner activation.

2. REMOVE HEATED OXYGEN SENSOR (for Sensor 2)

(a) Bank 1 Sensor 2:
Remove the rear console box (see page IP-16).

(b) Disconnect the sensor connector.

(c) Using SST, remove the sensor from the exhaust pipe.
SST 09224-00010

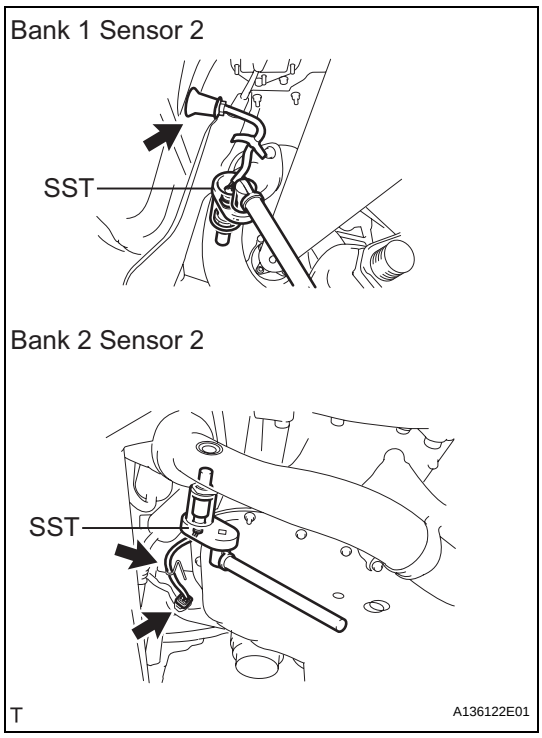

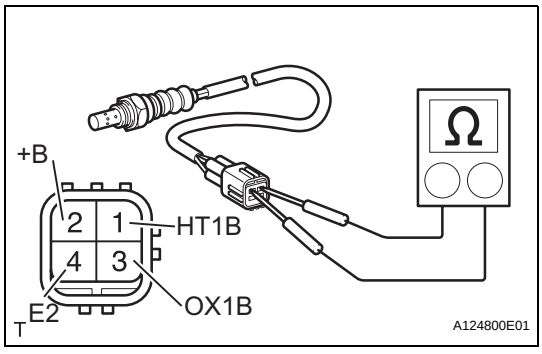

INSPECTION

1. INSPECT HEATED OXYGEN SENSOR (for Sensor 2)

(a) Measure the resistance of the sensor.
Standard resistance

Tester Connection	Specified Condition	Specified Condition
1 (HT1B) - 2 (+B)	20°C (68°F)	11 to 16 Ω
1 (HT1B) - 4 (E2)	-	10 kΩ or higher

If the resistance is not as specified, replace the sensor.

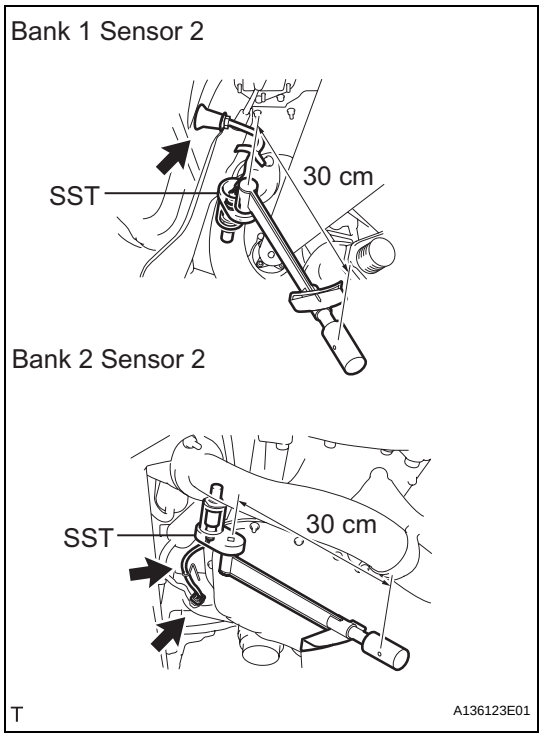

INSTALLATION

1. **INSTALL HEATED OXYGEN SENSOR (for Sensor 2)**
   (a) Using SST, install the sensor to the exhaust pipe.
   SST 09224-00010
   Torque: 40 N*m (408 kgf*cm, 30 ft.*lbf) for use with SST
   44 N*m (449 kgf*cm, 32 ft.*lbf) for use without SST
   HINT:
   - Use a torque wrench with a fulcrum length of 30 cm (11.81 in.).
   - Make sure SST and a wrench are connected in a straight line.

   (b) Connect the sensor connector.
   (c) Bank 1 Sensor 2:
   Install the rear console box (see page IP-23).
2. **CONNECT CABLE TO NEGATIVE BATTERY TERMINAL**
3. **CHECK FOR EXHAUST GAS LEAKS**

EC

HEATED OXYGEN SENSOR

COMPONENTS

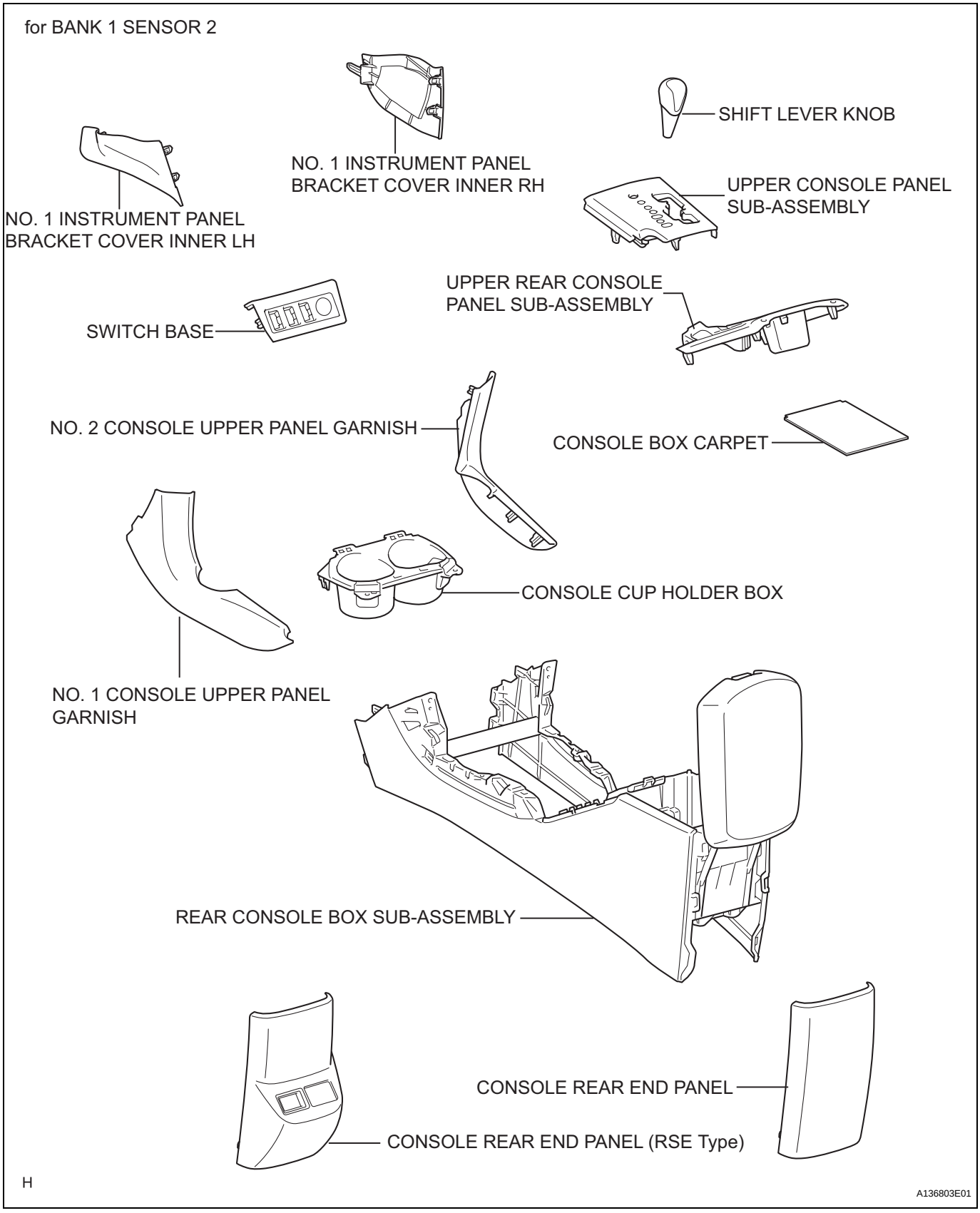

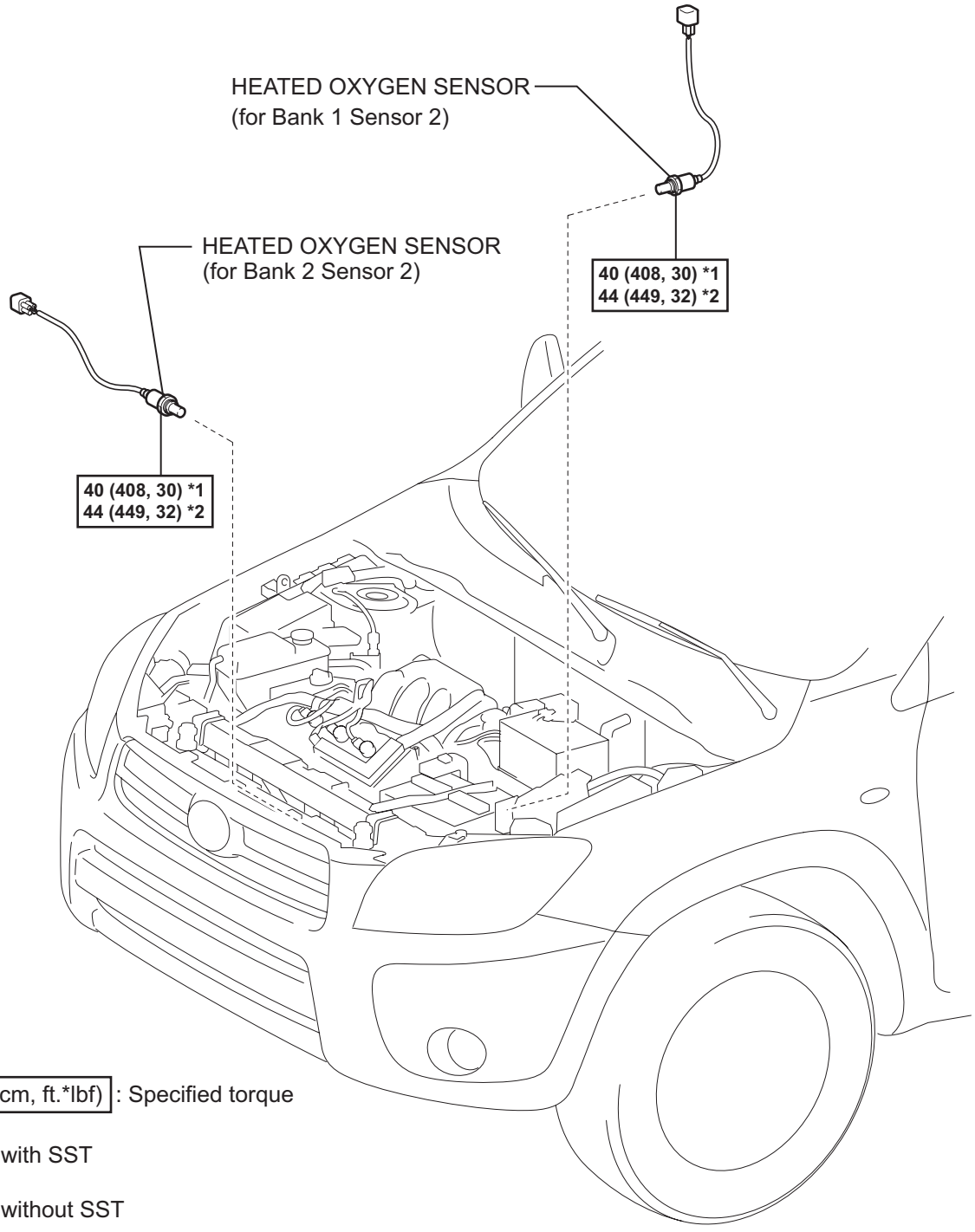

N*m (kgf*cm, ft.*lbf) : Specified torque

*1: for use with SST

*2: for use without SST

T

A136121E01

EC

VACUUM SWITCHING VALVE

COMPONENTS

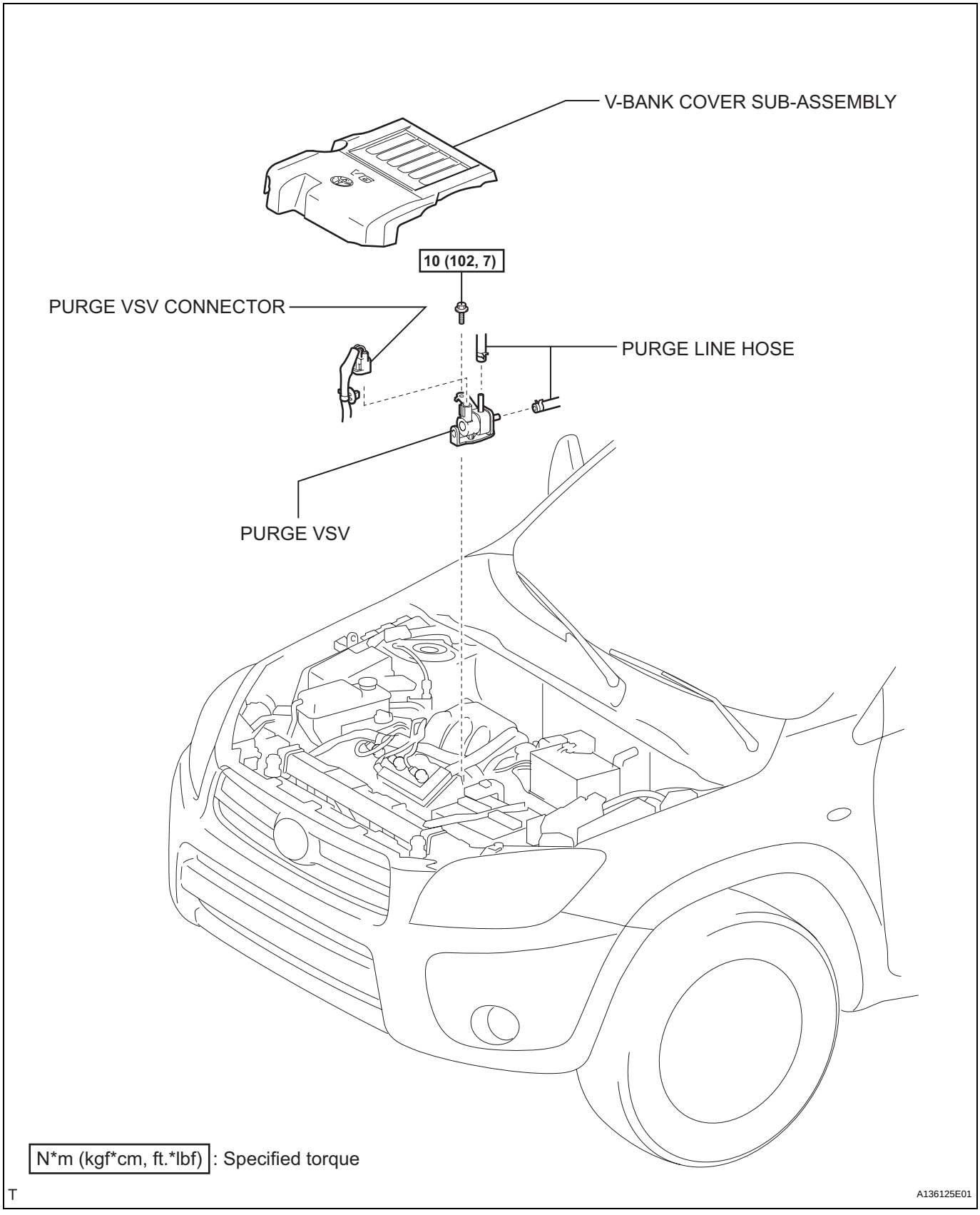

EC

REMOVAL

1. **DISCONNECT CABLE FROM NEGATIVE BATTERY TERMINAL**
   CAUTION:
   Wait at least 90 seconds after disconnecting the cable from the negative (-) battery terminal to prevent airbag and seat belt pretensioner activation.
2. **REMOVE V-BANK COVER SUB-ASSEMBLY (See page EM-21)**
3. **REMOVE PURGE VSV**
   (a) Disconnect the purge VSV connector.
   (b) Disconnect the wire harness clamp.
   (c) Disconnect the 2 purge line hoses from the purge VSV.
   (d) Remove the bolt and purge VSV.

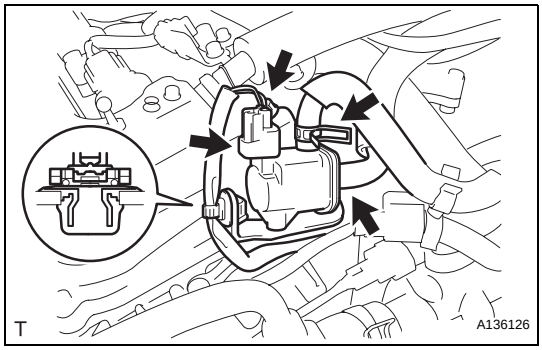

INSPECTION

1. **INSPECT PURGE VSV**
   (a) Measure the resistance of the purge VSV.
   Standard resistance

Tester Connection	Condition	Specified Condition
1 - 2	20°C (68°F)	23 to 26 Ω
1 - Body ground 2 - Body ground	-	10 MΩ or higher

If the result is not as specified, replace the purge VSV.

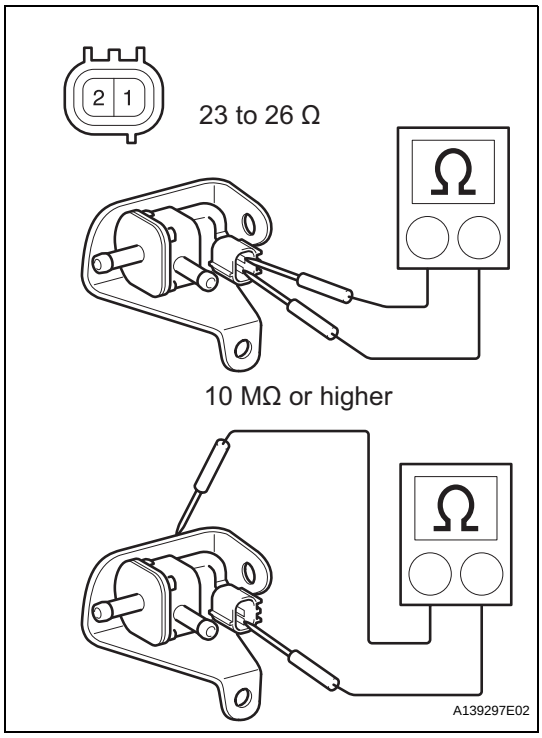

(b) Check the operation of the purge VSV.
   (1) Check that air does not flow from port E to port F.

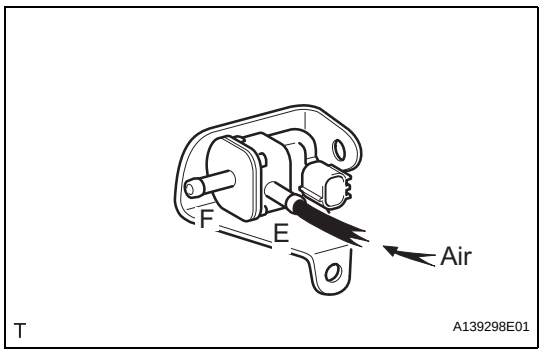

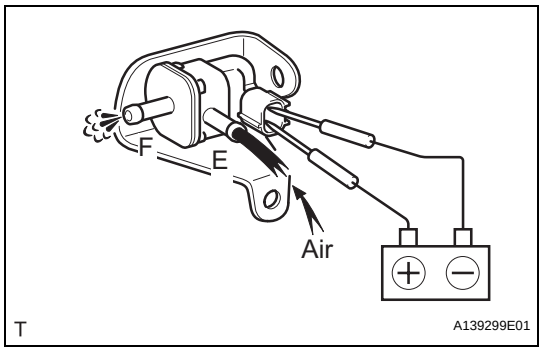

(2) Apply battery voltage across the terminals.
(3) Check that air flows from port E to port F.
If the result is not as specified, replace the purge VSV.

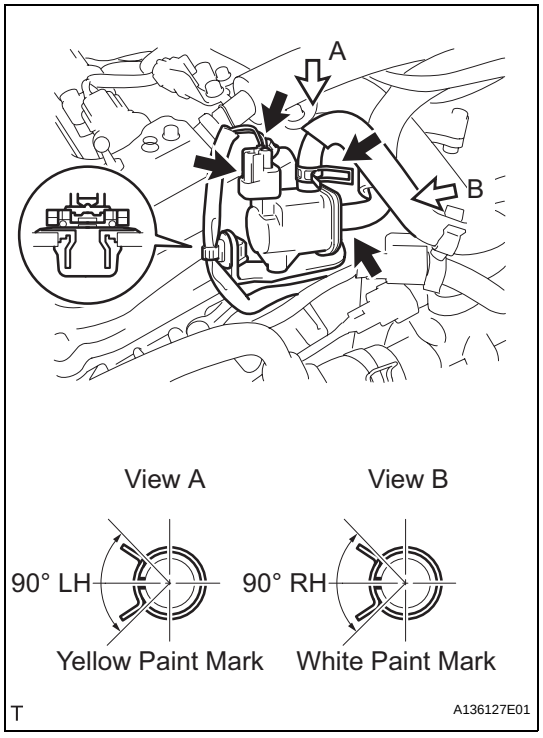

INSTALLATION

1. INSTALL PURGE VSV

(a) Install the purge VSV with the bolt.
Torque: 10 N*m (102 kgf*cm, 7 in.*lbf)
(b) Connect the 2 purge line hoses to the purge VSV.
(c) Connect the wire harness clamp.
(d) Connect the purge VSV connector.

2. INSTALL V-BANK COVER SUB-ASSEMBLY (See page EM-42)

3. CONNECT CABLE TO NEGATIVE BATTERY TERMINAL

EC

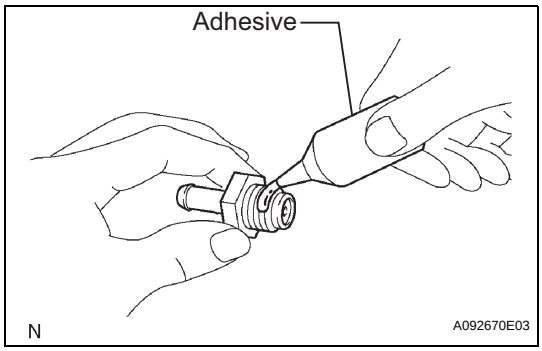

INSTALLATION

1. INSTALL VENTILATION VALVE SUB-ASSEMBLY

(a) Apply adhesive to 2 or 3 threads of the ventilation valve.

Adhesive:

Toyota genuine adhesive 1324, three bond 1324 or equivalent

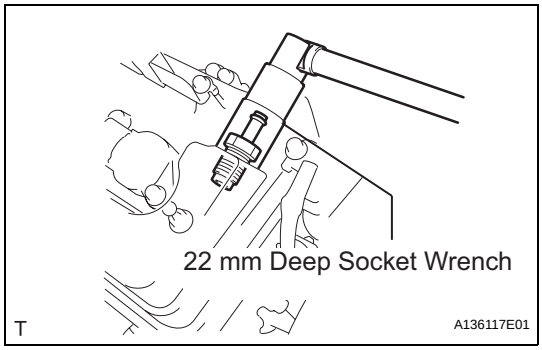

(b) Using a 22 mm deep socket wrench, install the ventilation valve.

Torque: 27 N*m (275 kgf*cm, 20 ft.*lbf)

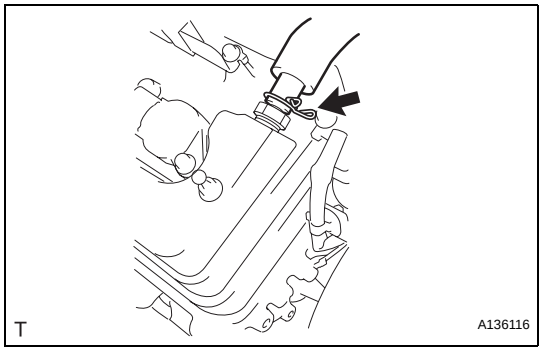

(c) Connect the ventilation hose.

2. INSTALL V-BANK COVER SUB-ASSEMBLY (See page EM-43)

3. CHECK FOR ENGINE OIL LEAKS

EC

VENTILATION VALVE

COMPONENTS

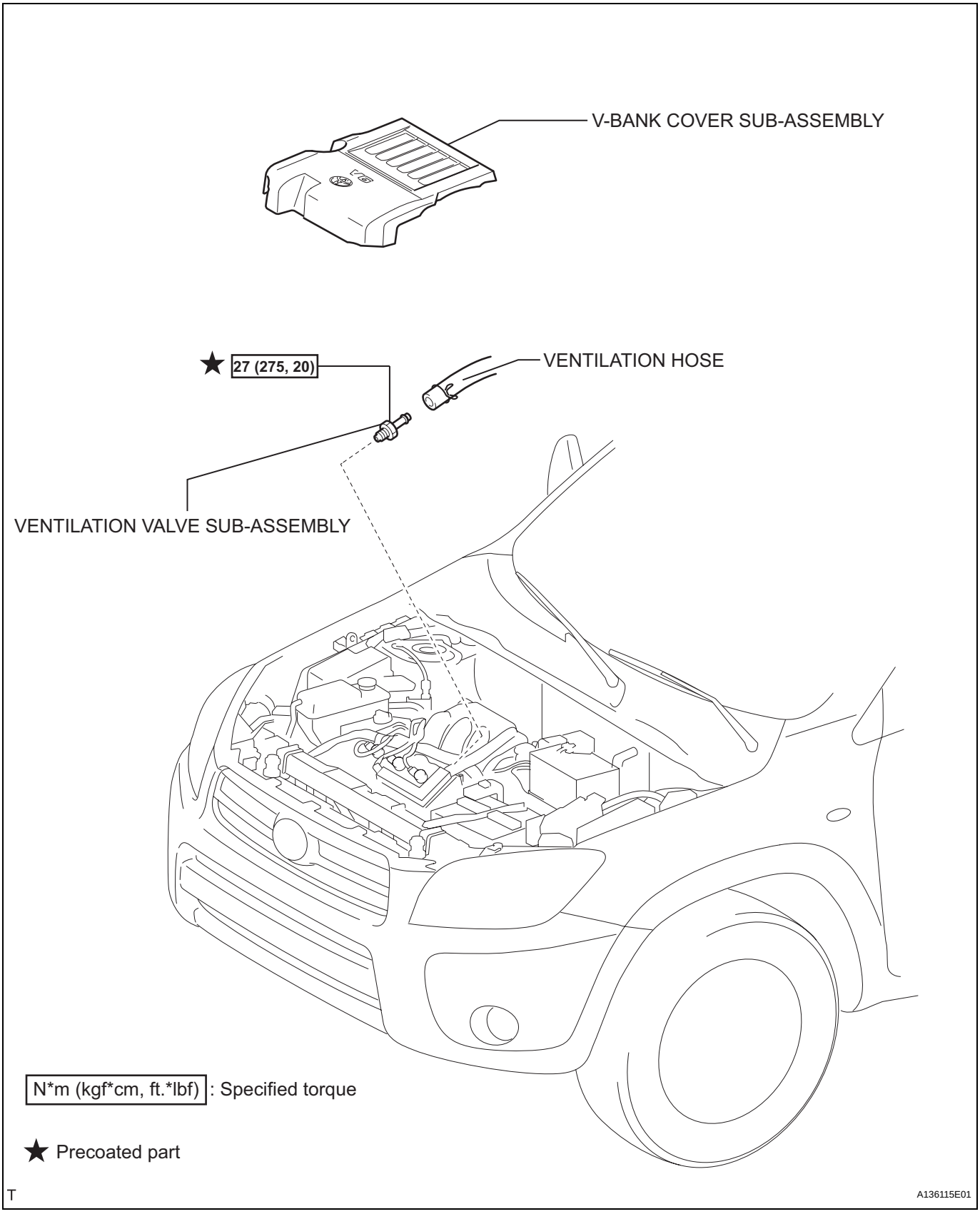

EC

REMOVAL

1. **REMOVE V-BANK COVER SUB-ASSEMBLY (See page EM-21)**

2. **REMOVE VENTILATION VALVE SUB-ASSEMBLY**
   (a) Disconnect the ventilation hose from the ventilation valve.

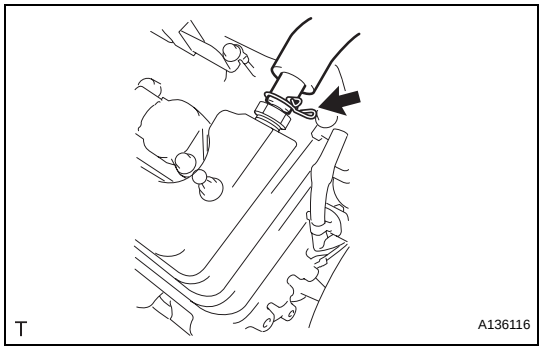

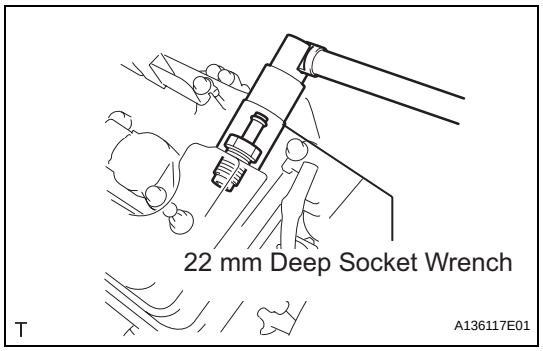

   (b) Using a 22 mm deep socket wrench, remove the ventilation valve.

INSPECTION

1. **INSPECT VENTILATION VALVE SUB-ASSEMBLY**
   (a) Install a clean hose to the ventilation valve.
   (b) Check the ventilation valve operation.
      (1) Blow air into the cylinder head side, and check that air passes through easily.
      CAUTION:
      Do not suck air through the valve.
      Petroleum substances inside the valve are hazardous to your health.

      (2) Blow air into the intake manifold side, and check that air passes through with difficulty.
      If the result is not as specified, replace the ventilation valve sub-assembly.
   (c) Remove the clean hose from the ventilation valve.

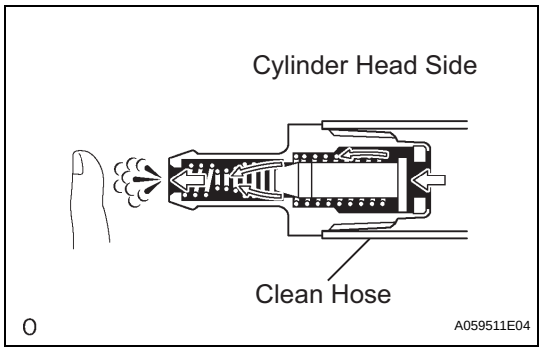

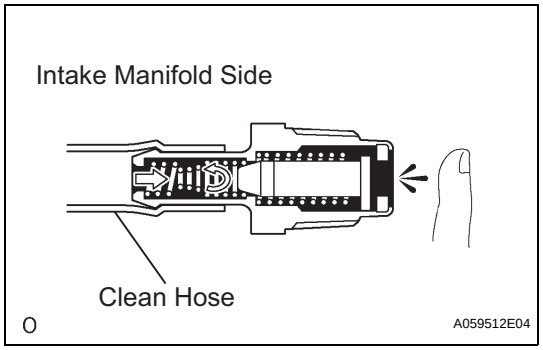

EC

ES

REMOVAL

1. **DISCONNECT CABLE FROM NEGATIVE BATTERY TERMINAL**
   CAUTION:
   Wait at least 90 seconds after disconnecting the cable from the negative (-) battery terminal to prevent airbag and seat belt pretensioner activation.

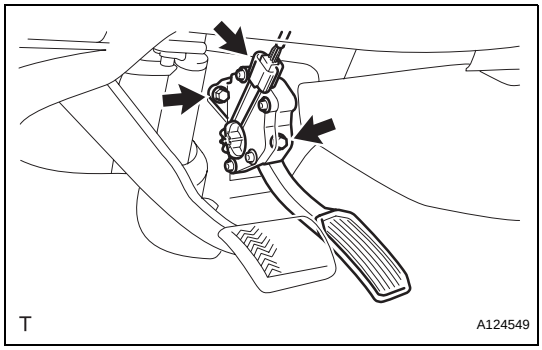

2. **REMOVE ACCELERATOR PEDAL ROD**
   (a) Disconnect the accelerator pedal position sensor connector.
   (b) Remove the 2 bolts and accelerator pedal rod.

INSTALLATION

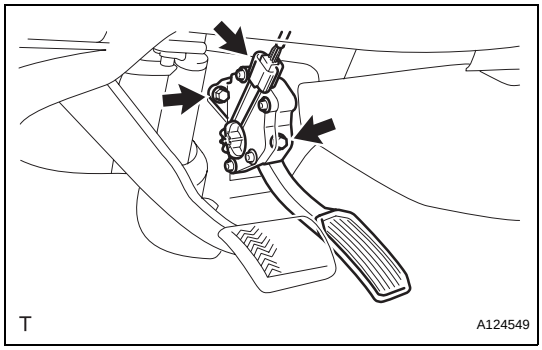

1. **INSTALL ACCELERATOR PEDAL ROD**
   (a) Install the accelerator pedal rod with the 2 bolts.
   Torque: 5.4 N*m (55 kgf*cm, 48 in.*lbf)
   (b) Connect the accelerator pedal position sensor connector.

2. **CONNECT CABLE TO NEGATIVE BATTERY TERMINAL**

ACCELERATOR PEDAL ROD

COMPONENTS

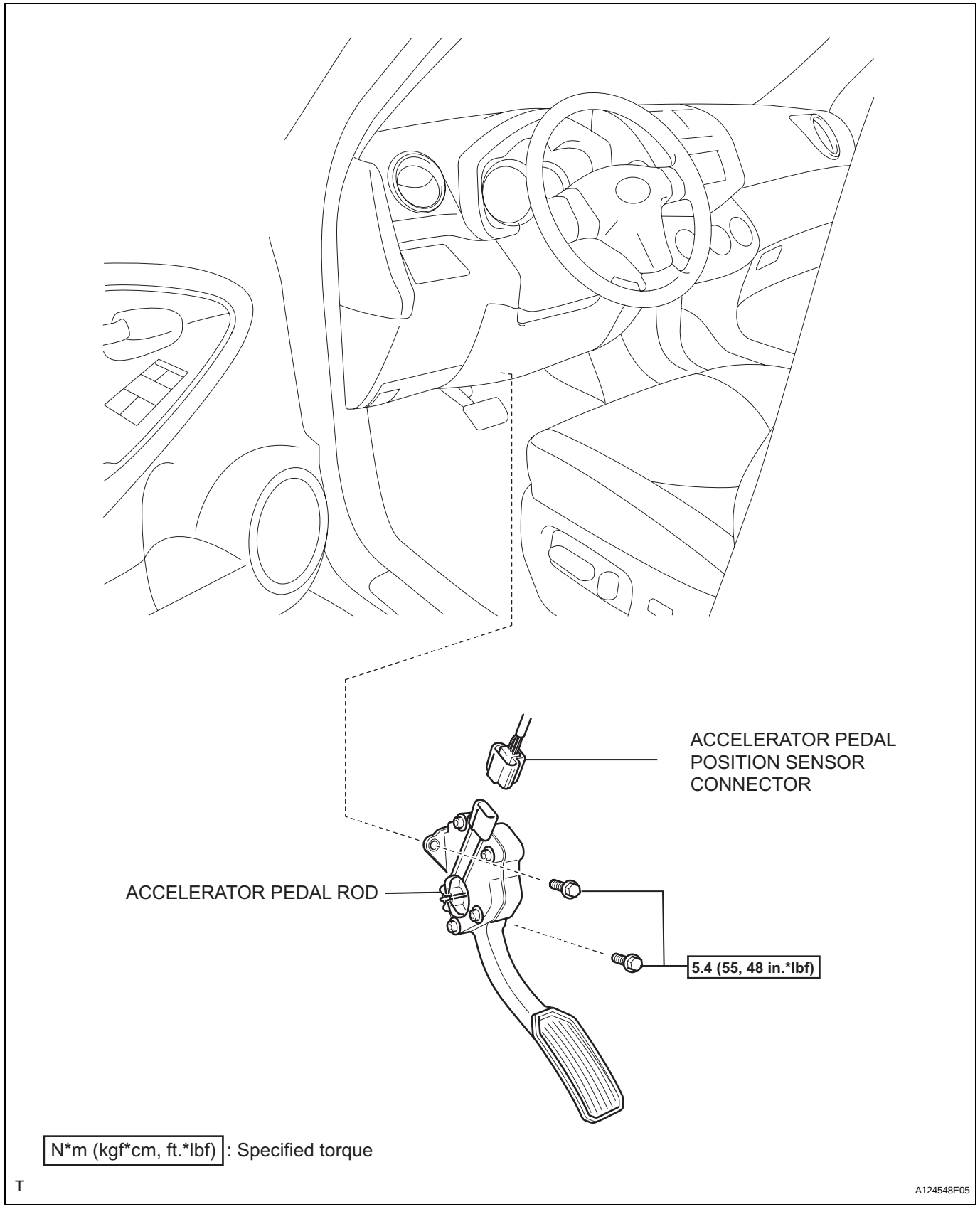

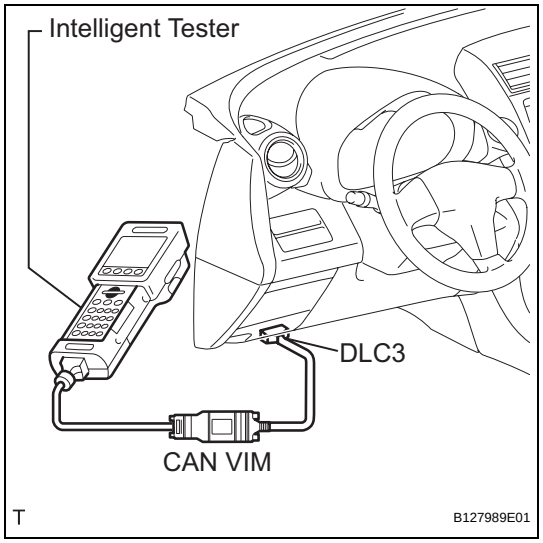

ON-VEHICLE INSPECTION

1. CHECK ACCELERATOR PEDAL ROD

(a) Check the voltage.

(1) Connect the intelligent tester to the DLC3.

(2) Turn the ignition switch ON.

(3) Turn the intelligent tester ON.

(4) Select the menu items: DIAGNOSIS / ENHANCED OBD II / DATA LIST / ALL / ACCEL POS #1, ACCEL POS #2.

(5) Operate the accelerator pedal, and then check that the ACCEL POS #1 and ACCEL POS #2 values are within the specifications.

Standard voltage:

ACCEL POS #1

Accelerator Pedal Condition	Specified Condition
Released	0.5 to 1.1 V
Depressed	2.5 to 4.5 V

ACCEL POS #2

Accelerator Pedal Condition	Specified Condition
Released	1.2 to 2.0 V
Depressed	3.4 to 5.0 V

If the result is not as specified, check the accelerator pedal rod, wire harness or ECM.

ES

REMOVAL

1. **DISCONNECT CABLE FROM NEGATIVE BATTERY TERMINAL**
   CAUTION:
   Wait at least 90 seconds after disconnecting the cable from the negative (-) battery terminal to prevent airbag and seat belt pretensioner activation.
2. **REMOVE ENGINE ASSEMBLY**
   (a) Remove the engine (see page EM-21).
3. **REMOVE INTAKE AIR SURGE TANK ASSEMBLY (See page EM-27)**
4. **REMOVE CAMSHAFT TIMING OIL CONTROL VALVE ASSEMBLY**
   (a) Disconnect the 4 oil control valve connectors.
   (b) Remove the 4 bolts and 4 oil control valves.
   (c) Remove the O-ring from each oil control valve.

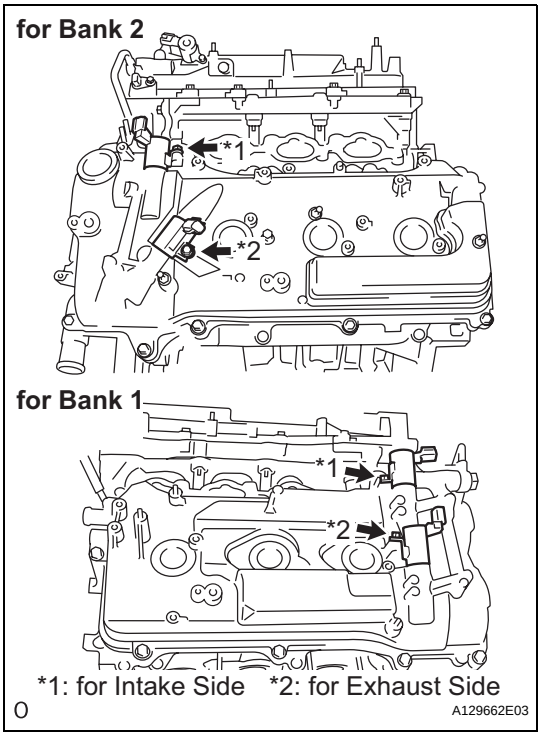

INSPECTION

1. **INSPECT CAMSHAFT TIMING OIL CONTROL VALVE ASSEMBLY**
   (a) Measure the resistance of the oil control valve.
   Standard resistance

Tester Connection	Specified Condition
1 (+B) - 2 (GND)	6.9 to 7.9 Ω at 20°C (68°F)

If the result is not as specified, replace the oil control valve assembly.

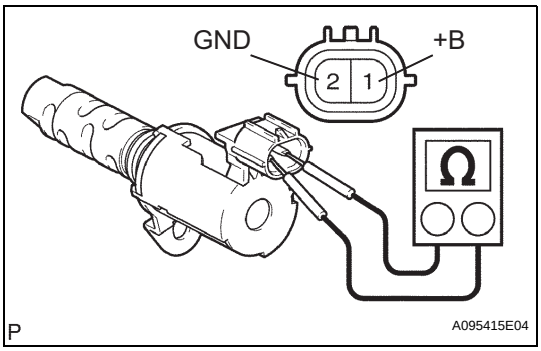

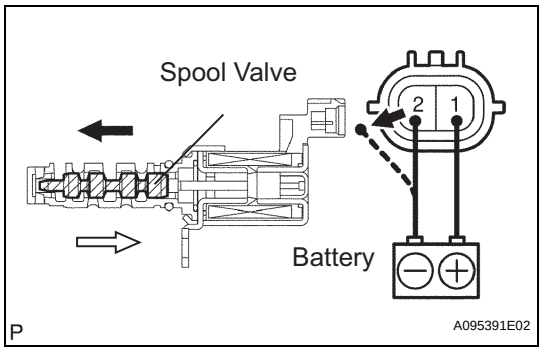

(b) Check the operation.
(1) Connect the battery's positive (+) lead to terminal 1 and negative (-) lead to terminal 2, and check the movement of the valve.
OK

Condition	Specified Condition
Battery positive (+) voltage is applied	Valve moves in black arrow direction shown in illustration
Battery positive (+) voltage is cut off	Valve moves in white arrow direction shown in illustration

NOTICE:
Check that the spool valve is not stuck.
HINT:
The spool valve may not return if foreign objects are caught in it. This may cause subtle pressure leaks to the advance side, and a DTC may be set.

ES

INSTALLATION

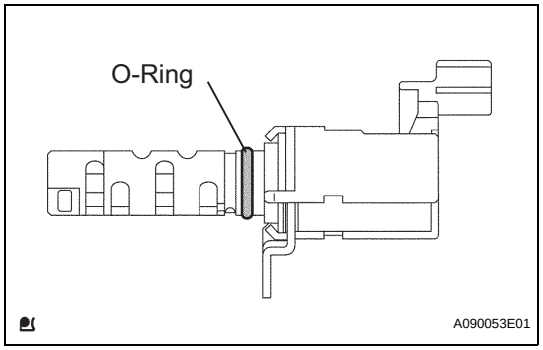

1. INSTALL CAMSHAFT TIMING OIL CONTROL VALVE ASSEMBLY
(a) Apply a light coat of engine oil to new 4 O-rings of the oil control valves.
(b) Install the O-rings to the 4 oil control valves.

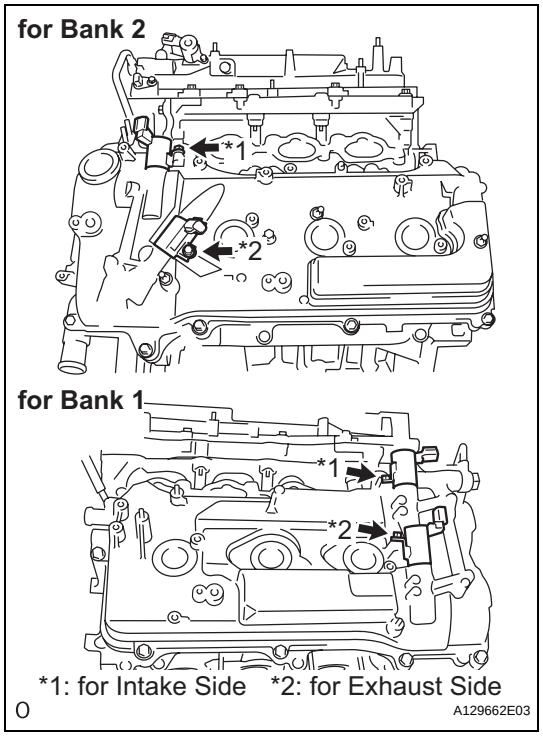

(c) Install the 4 oil control valves with the 4 bolts.
Torque: 9.0 N*m (92 kgf*cm, 80 in.*lbf)
NOTICE:
Make sure that the O-ring is not cracked or jammed.
(d) Connect the 4 oil control valve connectors.

2. INSTALL INTAKE AIR SURGE TANK ASSEMBLY (See page EM-34)

3. INSTALL ENGINE ASSEMBLY
(a) Install the engine (see page EM-31).

4. CONNECT CABLE TO NEGATIVE BATTERY TERMINAL

5. CHECK FOR ENGINE OIL LEAKS
(a) Start the engine, and check that there are no oil leaks.

CAMSHAFT TIMING OIL CONTROL VALVE ASSEMBLY

COMPONENTS

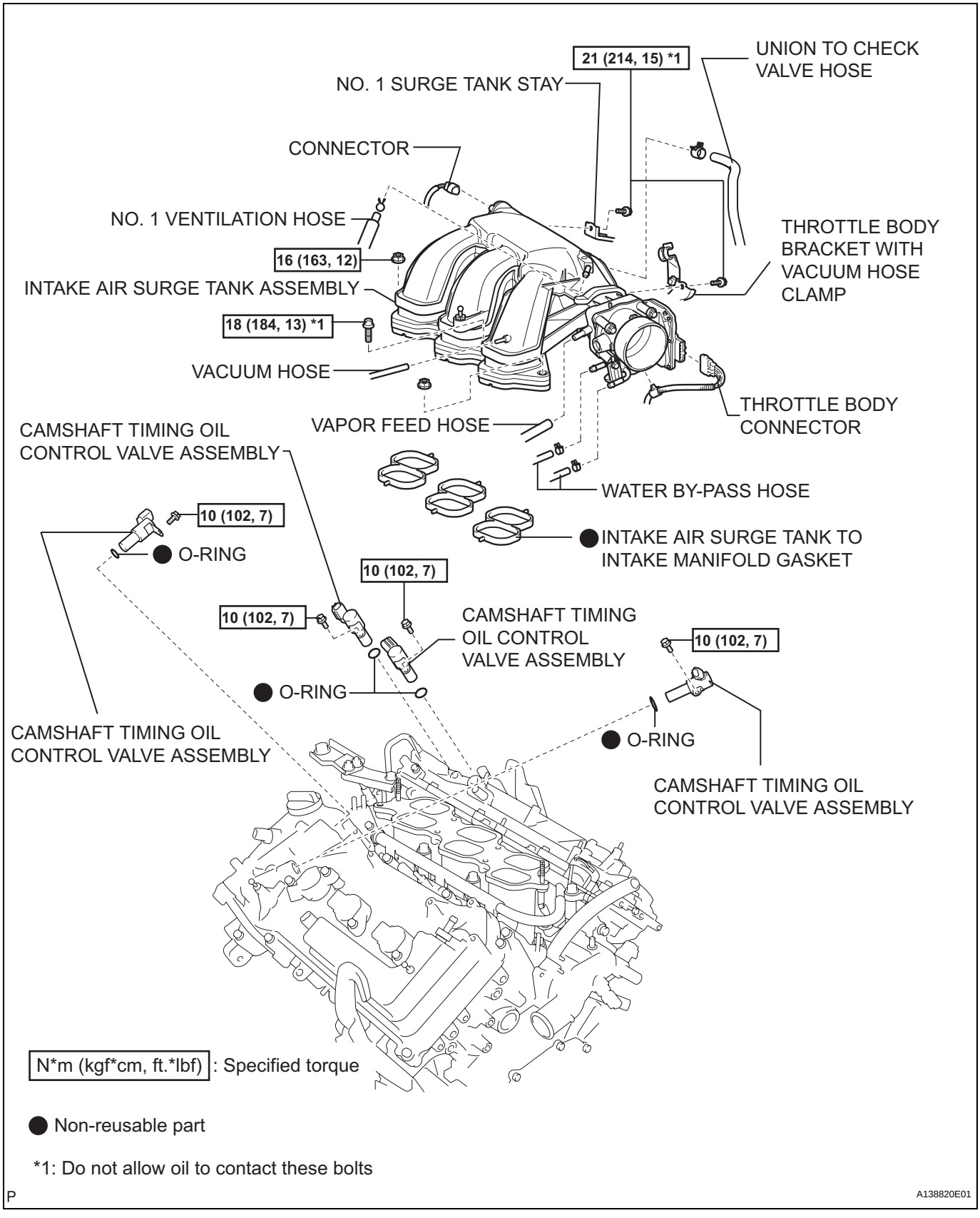

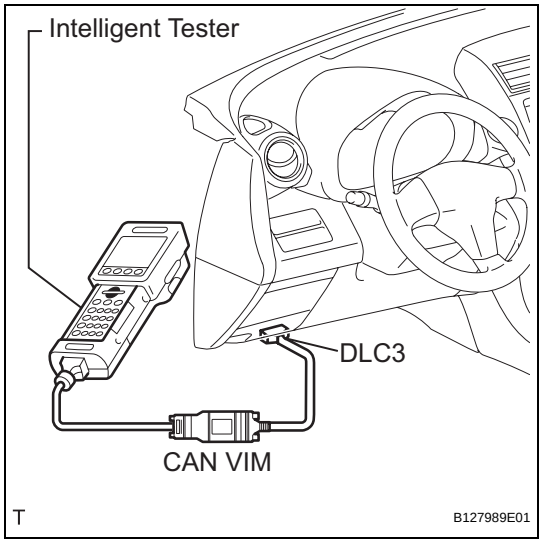

ON-VEHICLE INSPECTION

1. CHECK CAMSHAFT TIMING OIL CONTROL VALVE ASSEMBLY

(a) Check the operation.

(1) Connect the intelligent tester to the DLC3.

(2) Turn the ignition switch ON.

(3) Turn the intelligent tester main switch ON.

(4) Start and warm up the engine.

(5) Select the menu items: DIAGNOSIS / ENHANCED OBD II / ACTIVE TEST / VVT CTRL B1.

(6) Operate the oil control valve using the intelligent tester, and then check the engine speed.

Standard condition

Condition	Specified Condition
Oil control valve is OFF	Normal engine speed
Oil control valve is ON	Rough idling or engine stalls

If the operation is not as specified, check the oil control valve, wire harness and ECM.

ES

CIRCUIT OPENING RELAY

ON-VEHICLE INSPECTION

1. DISCONNECT CABLE FROM NEGATIVE BATTERY TERMINAL

CAUTION:

Wait at least 90 seconds after disconnecting the cable from the negative (-) battery terminal to prevent airbag and seat belt pretensioner activation.

2. INSPECT INSTRUMENT PANEL JUNCTION BLOCK

NOTICE:

The circuit opening (C/OPN) relay is built into the instrument panel junction block.

(a) Measure the resistance between the terminals.

ES

Instrument Panel Junction Block (Front View)

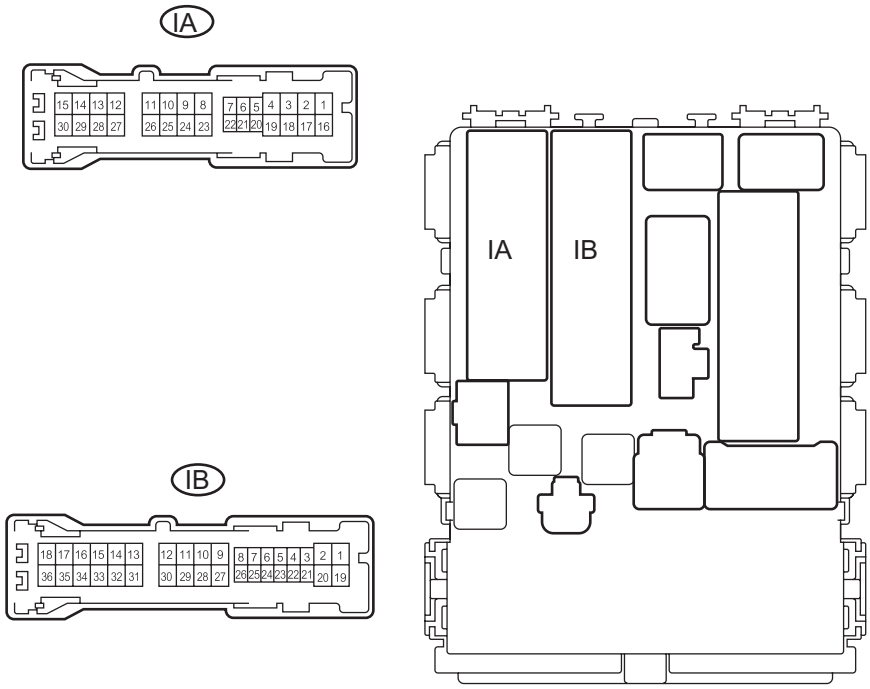

H

E114510E25

Standard resistance

Tester Connection	Specified Condition
1B-11 - 1A-8	10 kΩ or higher
1B-11 - 1A-8	Below 1 Ω (when battery voltage is applied to terminals 1E-5 and 1D-1)

If the result is not as specified, replace the instrument panel junction block.

3. CONNECT CABLE TO NEGATIVE BATTERY TERMINAL

ES

REMOVAL

1. **DISCHARGE REFRIGERANT FROM REFRIGERATION SYSTEM (See page AC-172)**
2. **DRAIN ENGINE COOLANT (See page CO-8)**
3. **DISCONNECT CABLE FROM NEGATIVE BATTERY TERMINAL**
   CAUTION:
   Wait at least 90 seconds after disconnecting the cable from the negative (-) battery terminal to prevent airbag and seat belt pretensioner activation.
4. **REMOVE RADIATOR ASSEMBLY**
   (a) Remove the radiator assembly (see page CO-36).
5. **REMOVE FAN AND GENERATOR V BELT (See page EM-8)**
6. **DISCONNECT COMPRESSOR WITH PULLEY ASSEMBLY (See page AC-220)**
7. **REMOVE CRANKSHAFT POSITION SENSOR**
   (a) Disconnect the sensor connector.
   (b) Remove the bolt and sensor.

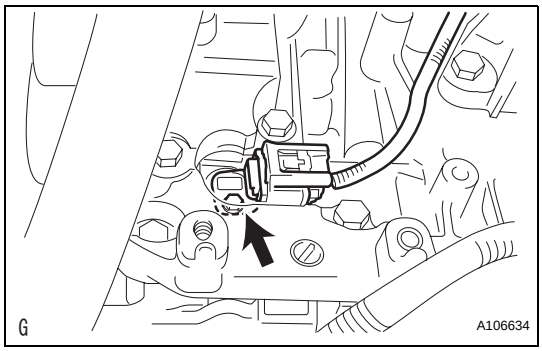

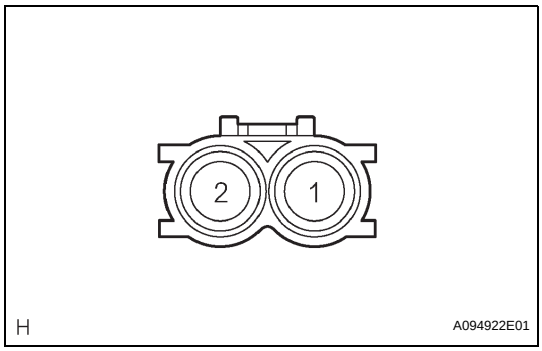

INSPECTION

1. **INSPECT CRANKSHAFT POSITION SENSOR**
   (a) Measure the resistance between the terminals.
   Standard resistance

Temperature	Specified Condition
Cold	1,630 to 2,740 Ω
Hot	2,065 to 3,225 Ω

NOTICE:
In the table above, the terms "Cold" and "Hot" refer to the temperature of the coils. "Cold" means approximately -10 to 50°C (14 to 122°F). "Hot" means approximately 50 to 100°C (122 to 212°F).
If the resistance is not as specified, replace the sensor.

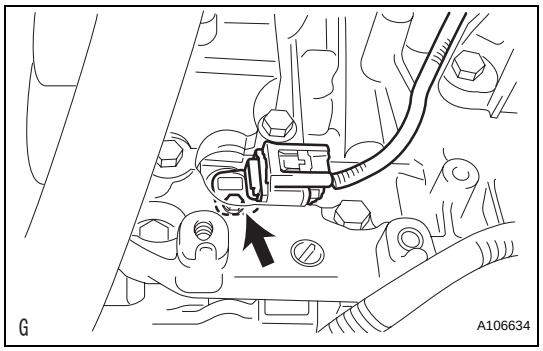

INSTALLATION

1. **INSTALL CRANKSHAFT POSITION SENSOR**
   (a) Apply a coat of engine oil to an O-ring of the sensor.
   (b) Install the sensor with the bolt.
   Torque: 10 N*m (102 kgf*cm, 7 ft.*lbf)
   (c) Connect the sensor connector.
2. **INSTALL COMPRESSOR WITH PULLEY ASSEMBLY (See page AC-221)**
3. **INSTALL FAN AND GENERATOR V BELT (See page EM-8)**
4. **INSTALL RADIATOR ASSEMBLY**
   (a) Install the radiator assembly (see page CO-40).
5. **CONNECT CABLE TO NEGATIVE BATTERY TERMINAL**
6. **CHARGE REFRIGERANT (See page AC-172)**
7. **ADD ENGINE COOLANT (See page CO-8)**
8. **CHECK FOR LEAKAGE OF REFRIGERANT (See page AC-173)**
9. **CHECK FOR ENGINE COOLANT LEAKS (See page CO-1)**

CRANKSHAFT POSITION SENSOR

COMPONENTS

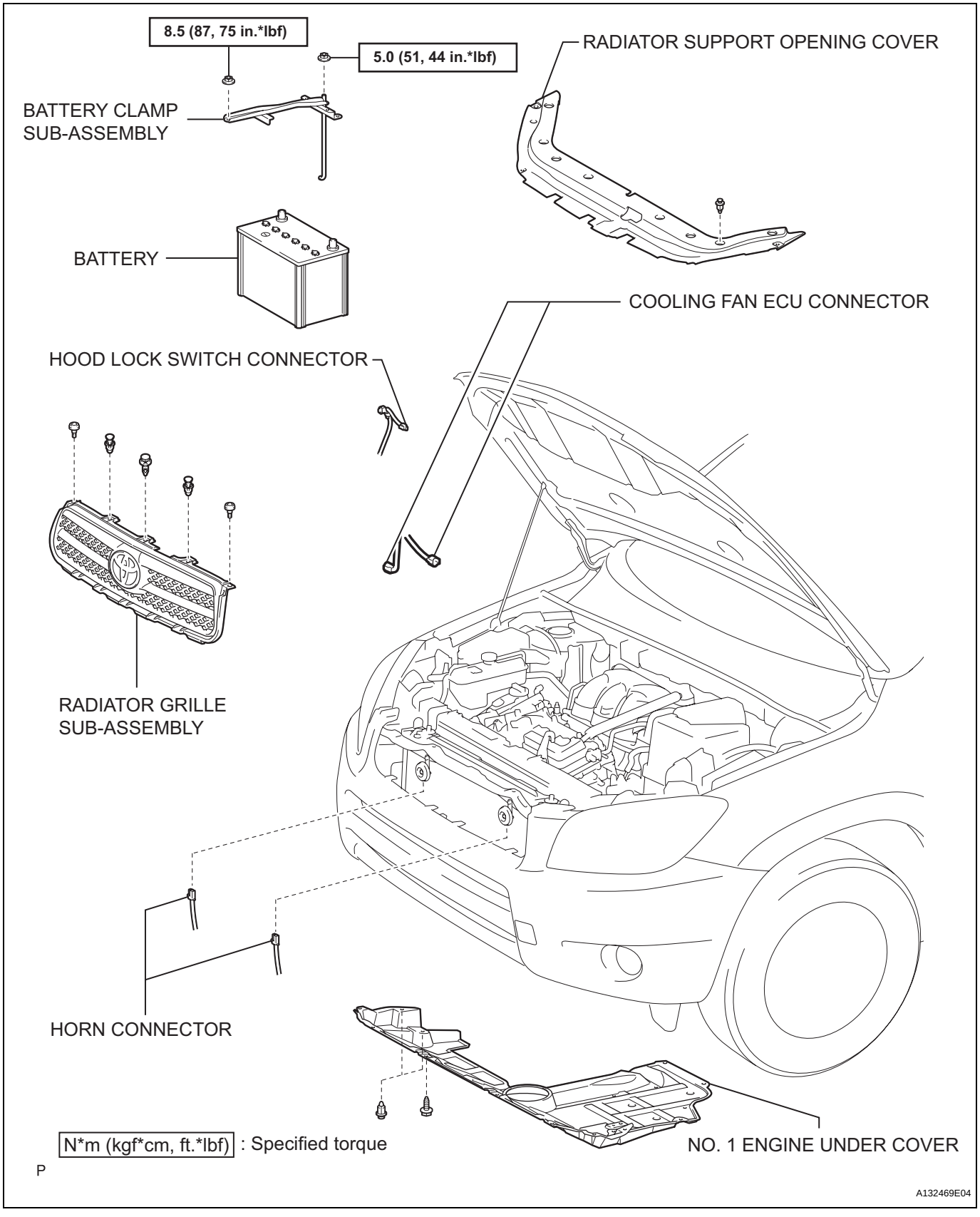

ES

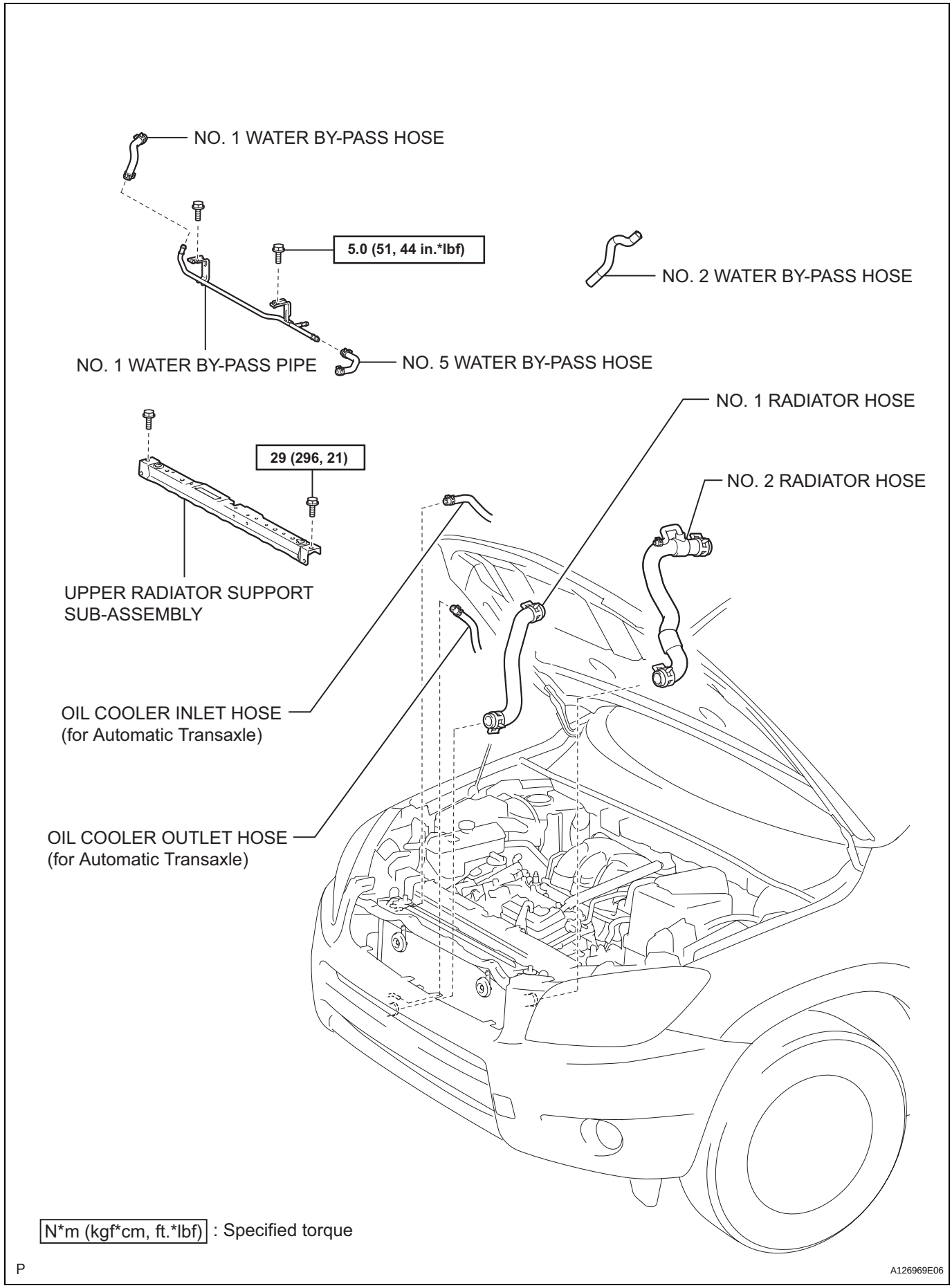
NO. 1 WATER BY-PASS HOSE
5.0 (51, 44 in.*lbf)
NO. 2 WATER BY-PASS HOSE
NO. 1 WATER BY-PASS PIPE
NO. 5 WATER BY-PASS HOSE
NO. 1 RADIATOR HOSE
29 (296, 21)
NO. 2 RADIATOR HOSE
UPPER RADIATOR SUPPORT SUB-ASSEMBLY
OIL COOLER INLET HOSE (for Automatic Transaxle)
OIL COOLER OUTLET HOSE (for Automatic Transaxle)
N*m (kgf*cm, ft.*lbf) : Specified torque
P
A126969E06

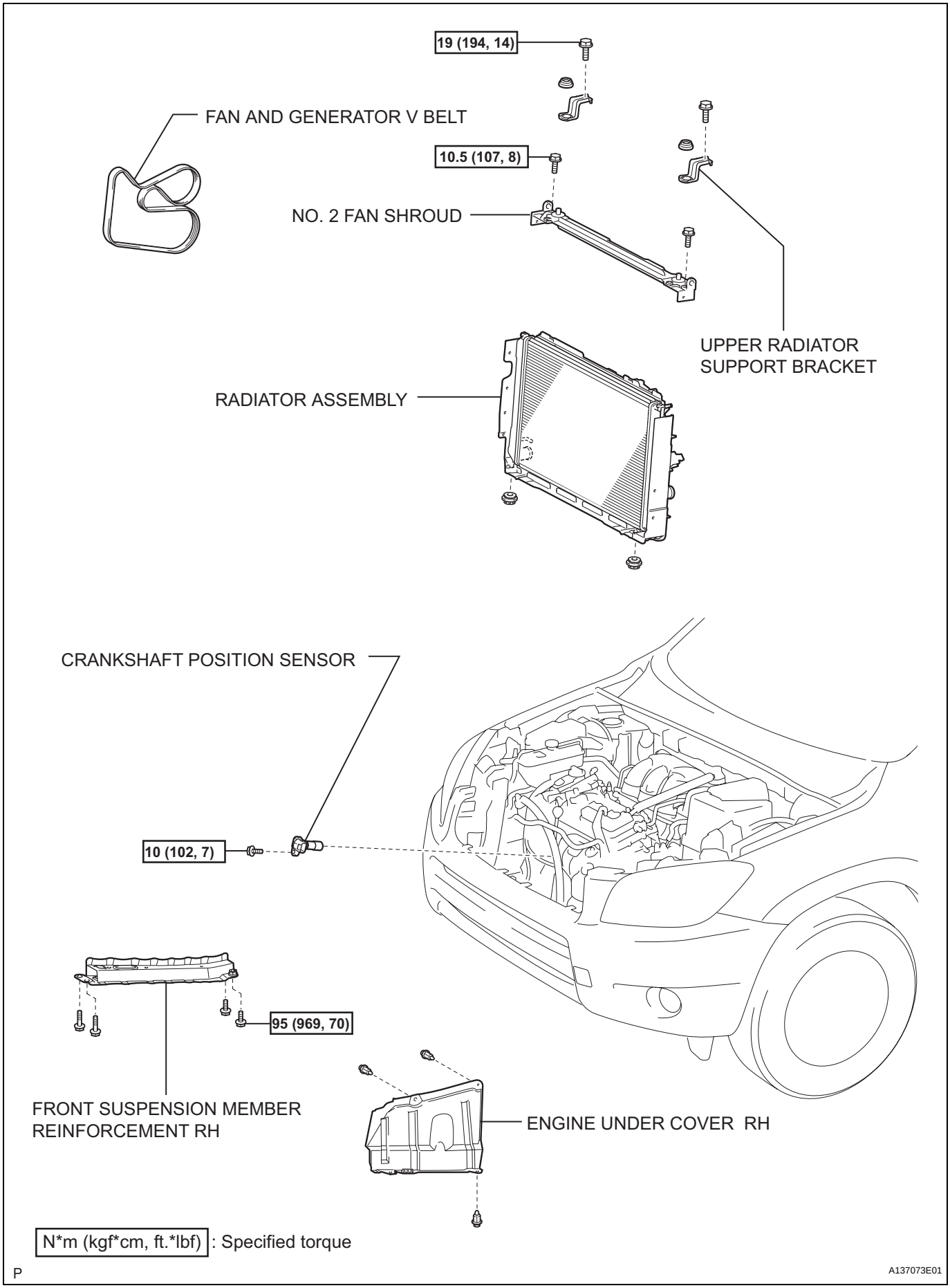
19 (194, 14)
FAN AND GENERATOR V BELT
10.5 (107, 8)
NO. 2 FAN SHROUD
UPPER RADIATOR SUPPORT BRACKET
RADIATOR ASSEMBLY
CRANKSHAFT POSITION SENSOR
10 (102, 7)
95 (969, 70)
FRONT SUSPENSION MEMBER REINFORCEMENT RH
ENGINE UNDER COVER RH
N*m (kgf*cm, ft.*lbf) : Specified torque
P
A137073E01

ES

ES

REMOVAL

1. **DISCONNECT CABLE FROM NEGATIVE BATTERY TERMINAL**
   CAUTION:
   Wait at least 90 seconds after disconnecting the cable from the negative (-) battery terminal to prevent airbag and seat belt pretensioner activation.
2. **REMOVE AIR CLEANER CAP (See page EM-23)**
3. **REMOVE AIR CLEANER CASE (See page EM-23)**
4. **REMOVE ECM**
   (a) Remove the 3 bolts of the ECM bracket.

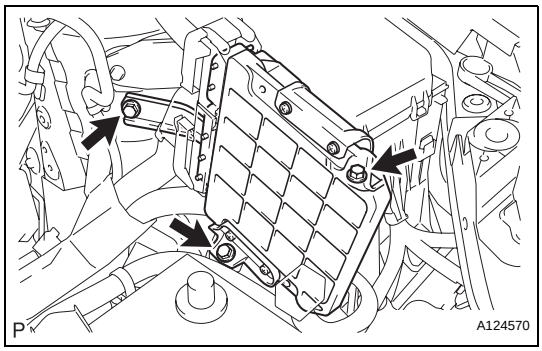

   (b) Disconnect the 2 ECM connectors.
   NOTICE:
   After disconnecting the connector, make sure that dirt, water and other foreign matter does not contact the connecting part of the connector.
      (1) Raise the 2 levers while pushing the locks on the 2 levers, and disconnect the 2 ECM connectors.
   (c) Remove the ECM with bracket.

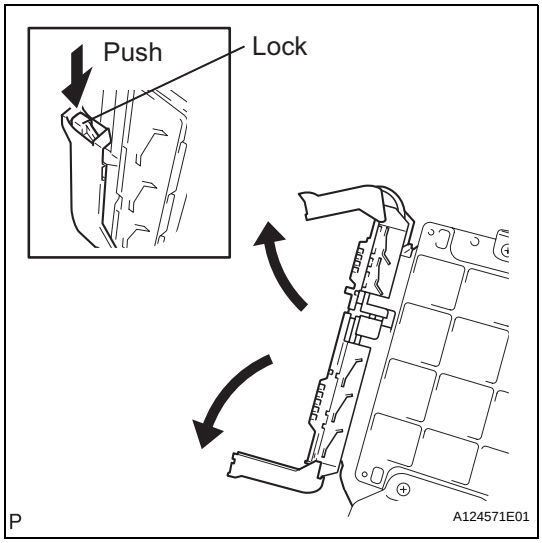

   (d) Remove the 4 screws and 2 ECM brackets.

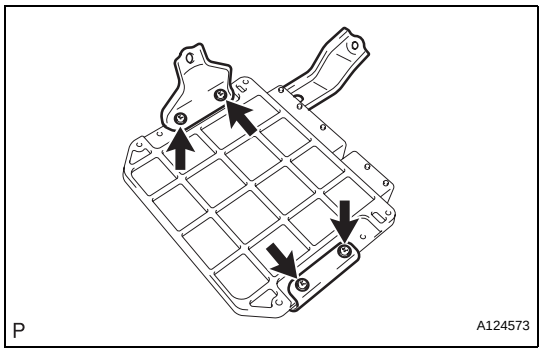

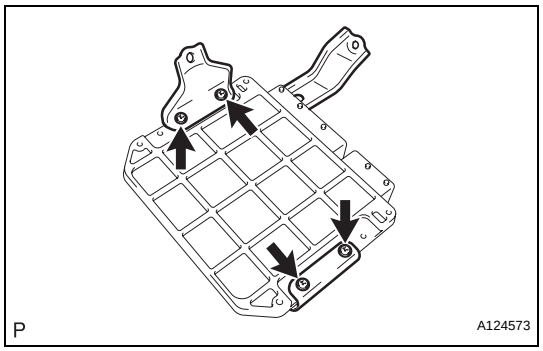

INSTALLATION

1. **INSTALL ECM**
   (a) Install the 2 brackets to the ECM with the 4 screws.
   Torque: 3.0 N*m (30 kgf*cm, 27 in.*lbf)

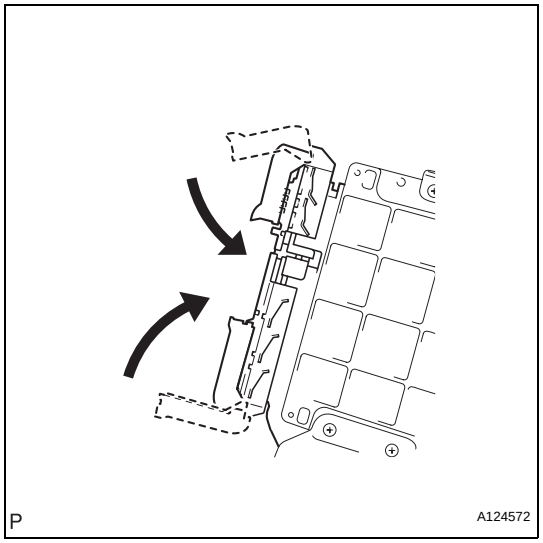

   (b) Connect the 2 ECM connectors.
   NOTICE:
   When connecting the connector, make sure that dirt, water and other foreign matter does not become stuck between the connector and other part.
      (1) Connect the 2 ECM connectors and lower the 2 levers.
      NOTICE:
      Make sure that the 2 levers are securely lowered.

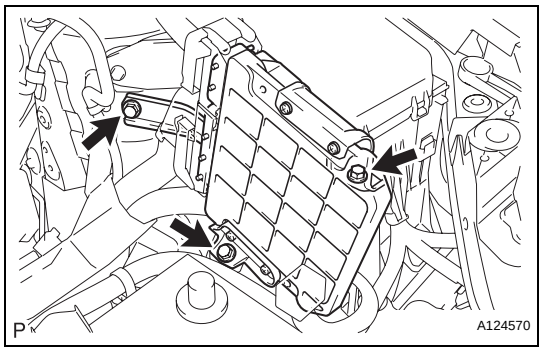

   (c) Install the ECM with the 3 bolts.
   Torque: 6.5 N*m (66 kgf*cm, 57 in.*lbf)

2. **INSTALL AIR CLEANER CASE (See page EM-39)**
3. **INSTALL AIR CLEANER CAP (See page EM-39)**
4. **CONNECT CABLE TO NEGATIVE BATTERY TERMINAL**
5. **PERFORM REGISTRATION**
   (a) When replacing the ECM, the Vehicle Identification Number (VIN) must be input into the replacement the new ECM (see page ES-14).
   (b) When replacing the ECM, perform the vehicle stability control system recognition in the ECM (see page CC-12).
6. **RESET MEMORY**
   (a) 2WD:
   When replacing the ECM, perform the RESET MEMORY procedure (A/T initialization) (see page AX-20).
   (b) 4WD:
   When replacing the ECM, perform the RESET MEMORY procedure (A/T initialization) (see page AX-20).

ES

ECM

COMPONENTS

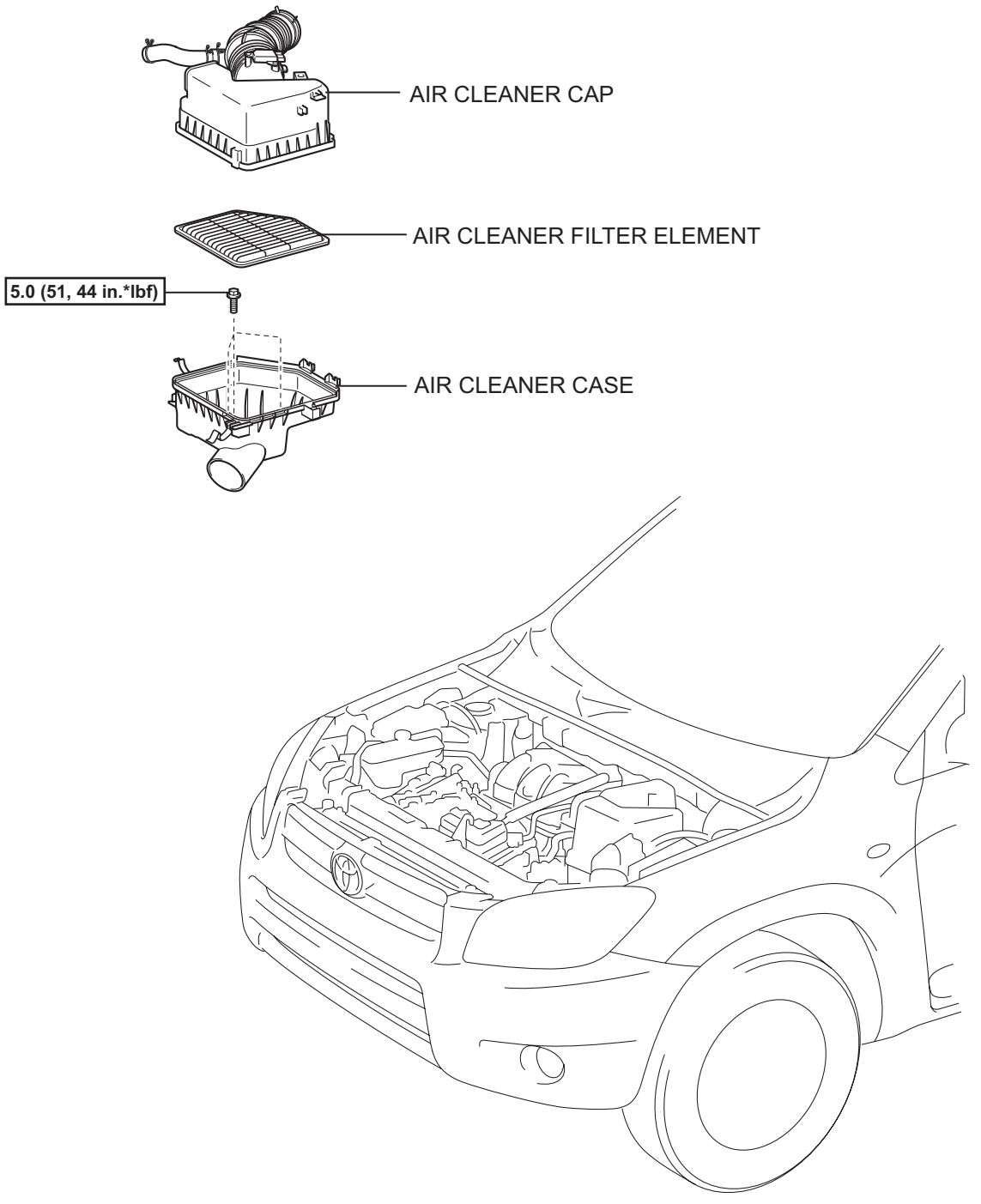

N*m (kgf*cm, ft.*lbf) : Specified torque

Y

A138055E01

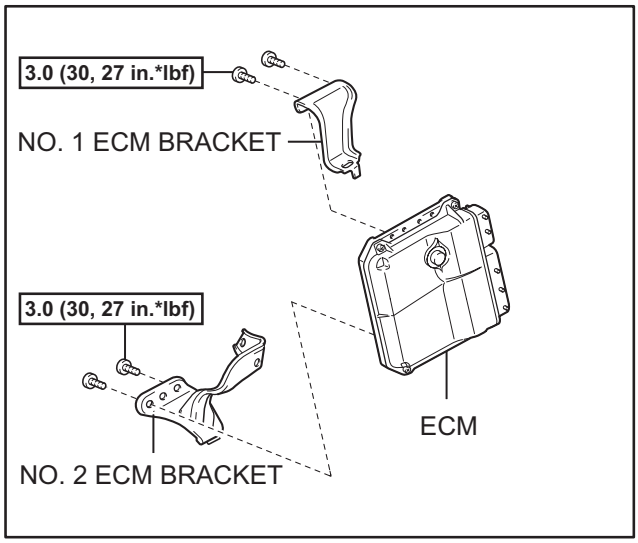

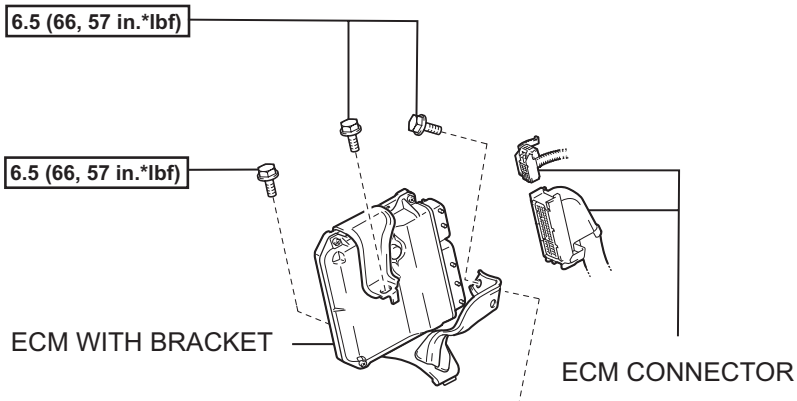

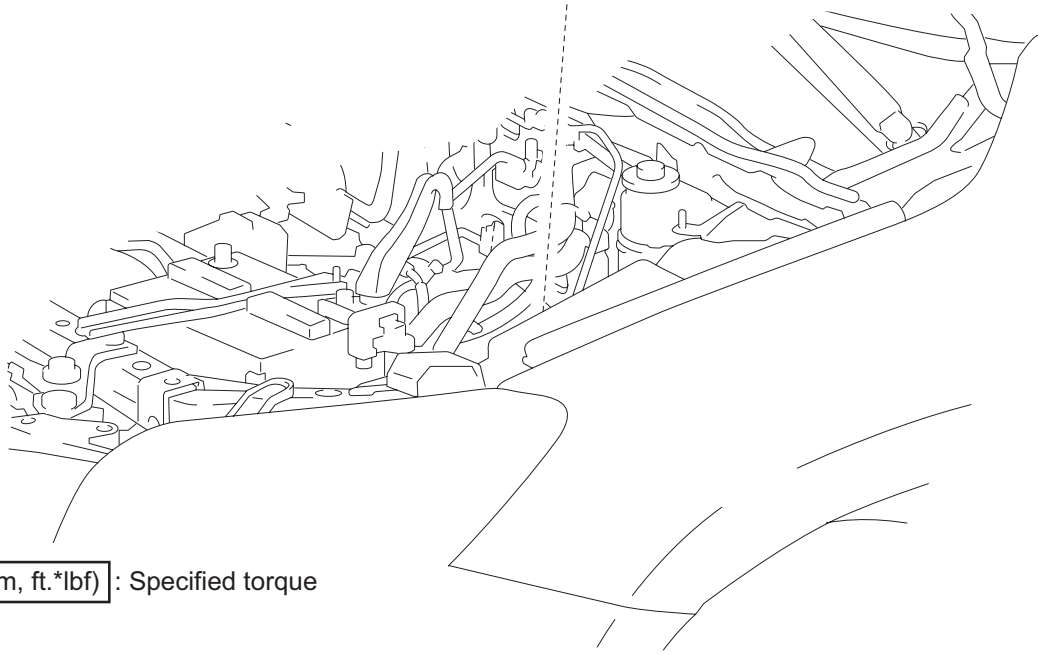

N*m (kgf*cm, ft.*lbf) : Specified torque

P

A126673E01

ES

INSPECTION

1. INSPECT ENGINE COOLANT TEMPERATURE SENSOR

(a) Measure the resistance of the sensor.

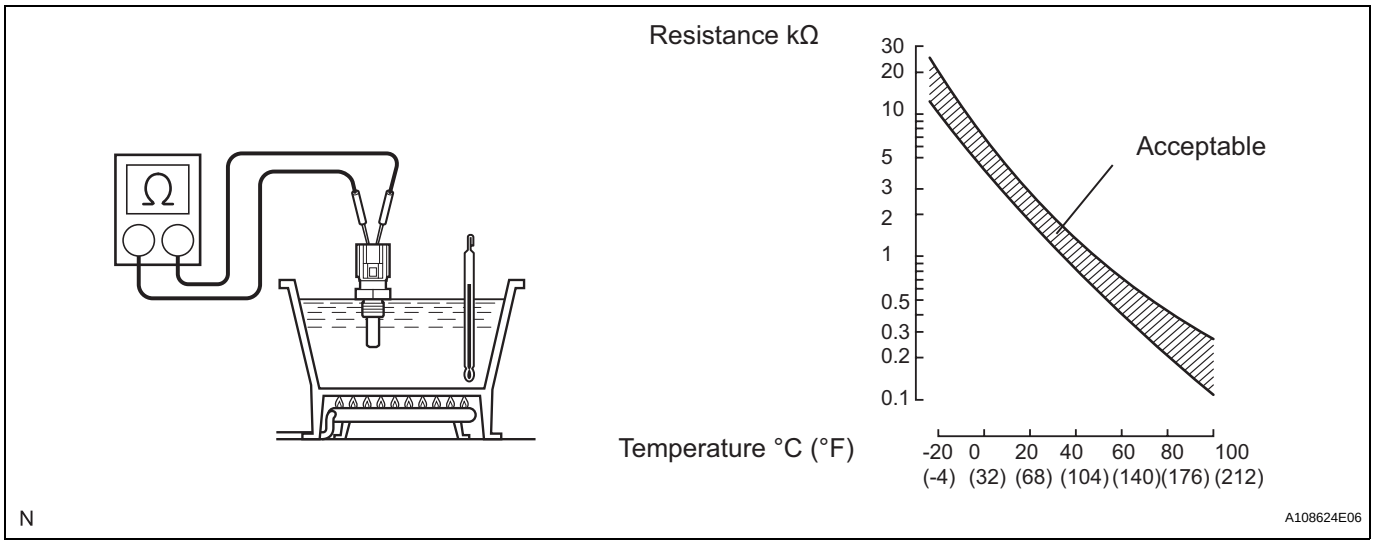

Standard resistance

Tester Connection	Condition	Specified Condition
1 (E2) - 2 (THW)	20°C (68°F)	2.32 to 2.59 kΩ
1 (E2) - 2 (THW)	80°C (176°F)	0.310 to 0.326 kΩ

NOTICE:
If checking the sensor in water, be careful not to allow water to contact the terminals. After checking, wipe the water off the sensor.

If the result is not as specified, replace the sensor.

INSTALLATION

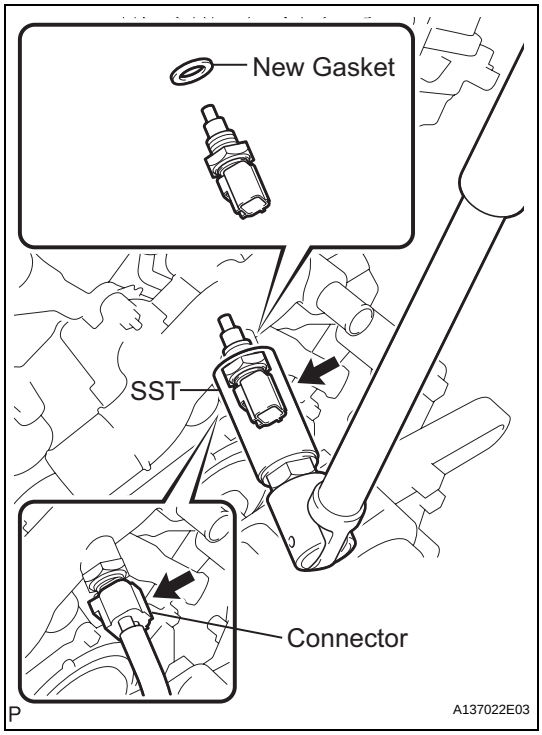

1. INSTALL ENGINE COOLANT TEMPERATURE SENSOR

(a) Install a new gasket onto the sensor.

(b) Using SST, install the sensor.

SST 09817-33190

Torque: 19.6 N*m (200 kgf*cm, 14 ft.*lbf)

(c) Connect the sensor connector.

2. CONNECT CABLE TO NEGATIVE BATTERY TERMINAL

3. ADD ENGINE COOLANT (See page CO-8)

4. CHECK FOR COOLANT LEAKS (See page CO-1)

ENGINE COOLANT TEMPERATURE SENSOR

COMPONENTS

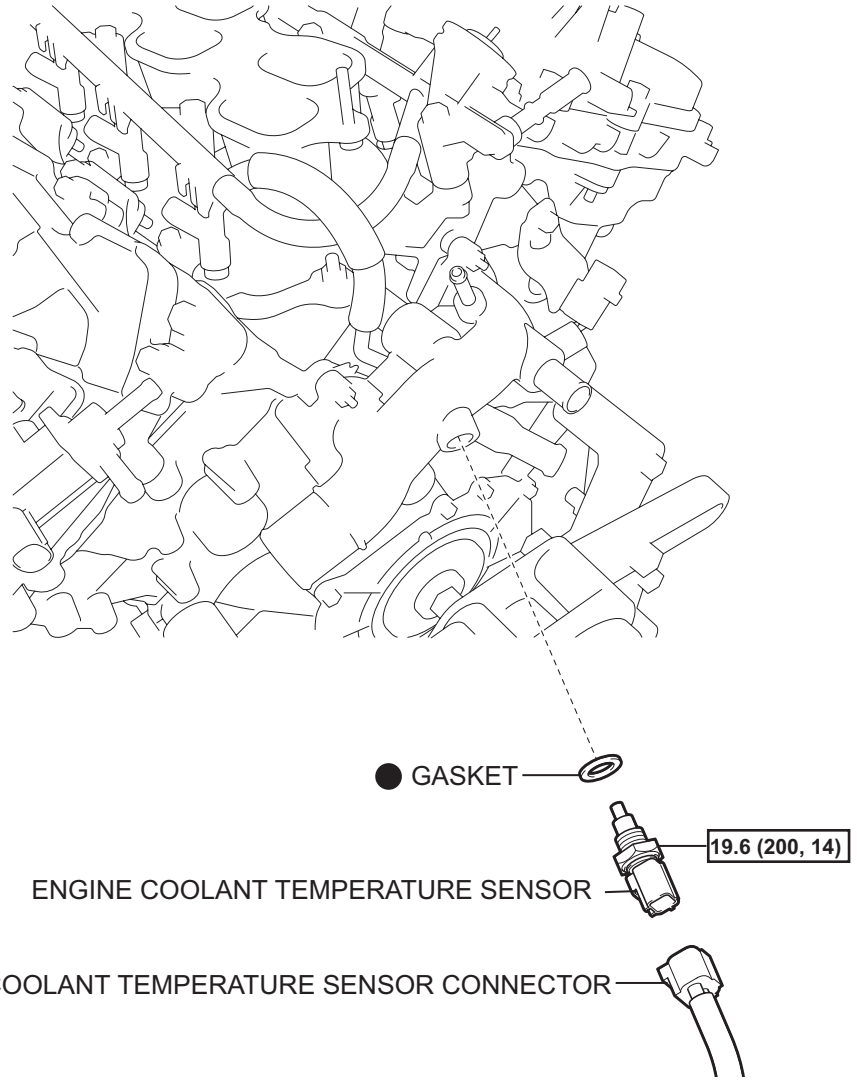

N*m (kgf*cm, ft.*lbf) : Specified torque

● Non-reusable part

P

A137021E01

REMOVAL

1. **DRAIN ENGINE COOLANT (See page CO-8)**
2. **DISCONNECT CABLE FROM NEGATIVE BATTERY TERMINAL**
   CAUTION:
   Wait at least 90 seconds after disconnecting the cable from the negative (-) battery terminal to prevent airbag and seat belt pretensioner activation.
3. **REMOVE ENGINE COOLANT TEMPERATURE SENSOR**
   (a) Disconnect the sensor connector.
   (b) Using SST, remove the sensor and gasket.
   SST 09817-33190

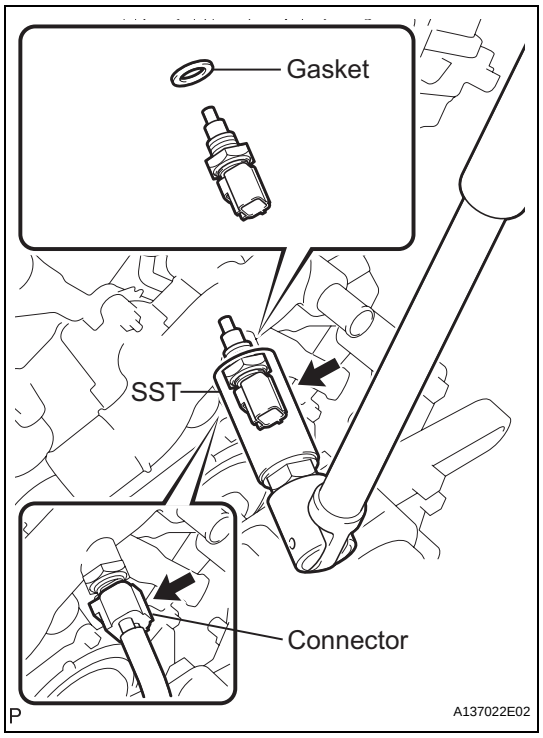

ES

FUEL PUMP RELAY

ON-VEHICLE INSPECTION

1. DISCONNECT CABLE FROM NEGATIVE BATTERY TERMINAL

CAUTION:

Wait at least 90 seconds after disconnecting the cable from the negative (-) battery terminal to prevent airbag and seat belt pretensioner activation.

2. REMOVE FUEL PUMP RELAY

(a) Remove the fuel pump relay from the engine room No. 1 relay block.

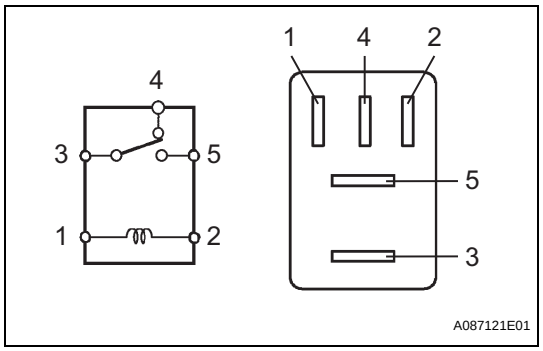

3. INSPECT RELAY

(a) Measure the resistance of the fuel pump relay.

Standard resistance

Tester Connection	Specified Condition
3 - 4	Below 1 Ω
3 - 5	Below 1 Ω (when battery voltage is applied to terminals 1 and 2)
3 - 5	10 kΩ or more
3 - 4	10 kΩ or more (when battery voltage is applied to terminals 1 and 2)

If the result is not as specified, replace the relay.

4. INSTALL FUEL PUMP RELAY

5. CONNECT CABLE TO NEGATIVE BATTERY TERMINAL

ES

IG1 RELAY

ON-VEHICLE INSPECTION

1. DISCONNECT CABLE FROM NEGATIVE BATTERY TERMINAL

CAUTION:

Wait at least 90 seconds after disconnecting the cable from the negative (-) battery terminal to prevent airbag and seat belt pretensioner activation.

2. REMOVE IG1 RELAY

(a) Remove the IG1 relay from the instrument panel junction block.

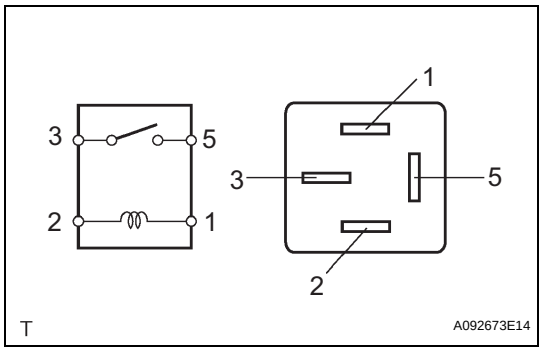

3. INSPECT IG1 RELAY

(a) Measure the resistance of the IG1 relay.

Standard resistance

Tester Connection	Specified Condition
3 - 5	10 kΩ or higher
3 - 5	Below 1 Ω (when battery voltage is applied to terminals 1 and 2)

If the result is not as specified, replace the relay.

4. INSTALL IG1 RELAY

5. CONNECT CABLE TO NEGATIVE BATTERY TERMINAL

ES

IG2 RELAY

ON-VEHICLE INSPECTION

1. DISCONNECT CABLE FROM NEGATIVE BATTERY TERMINAL

CAUTION:
Wait at least 90 seconds after disconnecting the cable from the negative (-) battery terminal to prevent airbag and seat belt pretensioner activation.

2. REMOVE IG2 RELAY

(a) Remove the engine room No. 1 relay block cover.
(b) Remove the IG2 relay from the engine room No. 1 relay block.

3. INSPECT IG2 RELAY

(a) Measure the resistance of the IG2 relay.
Standard resistance

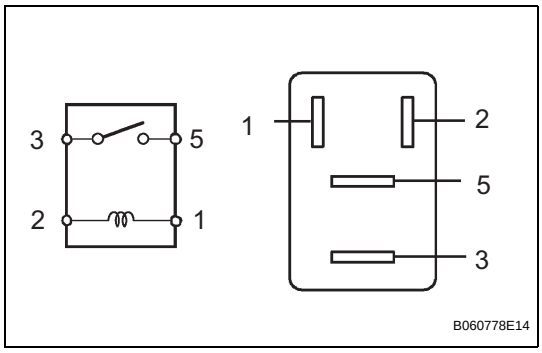

Tester Connection	Specified Condition
3 - 5	10 kΩ or higher
3 - 5	Below 1 Ω (when battery voltage is applied to terminals 1 and 2)

If the result is not as specified, replace the relay.

4. INSTALL IG2 RELAY

5. CONNECT CABLE TO NEGATIVE BATTERY TERMINAL

INTEGRATION RELAY

ON-VEHICLE INSPECTION

1. DISCONNECT CABLE FROM NEGATIVE BATTERY TERMINAL

CAUTION:

Wait at least 90 seconds after disconnecting the cable from the negative (-) battery terminal to prevent airbag and seat belt pretensioner activation.

2. INSPECT INTEGRATION RELAY

NOTICE:

- **The EFI relay is built into the integration relay (unit A: EFI MAIN).**
- **Some relays are built into the integration relay. The integration relay cannot be disassembled. If there is a malfunction in the circuit of the integration relay, replace the integration relay.**

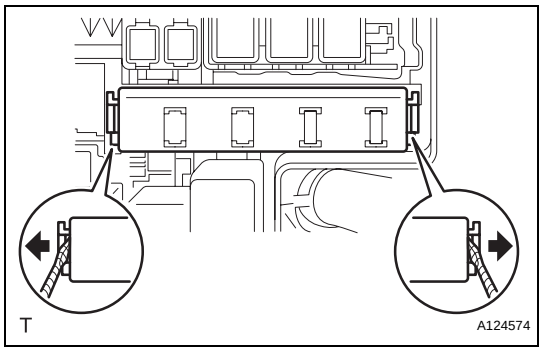

(a) Using a screwdriver, detach the 2 claws and disconnect the integration relay from the engine room No. 1 junction block.

HINT:

Tape the screwdriver tip before use.

(b) Disconnect the 3 connectors from the integration relay.

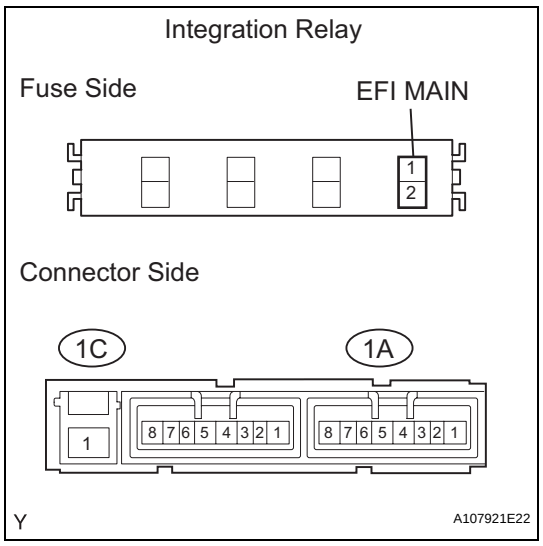

(c) Inspect the EFI MAIN relay.

(1) Check the resistance of the EFI MAIN fuse.

If the result is not as specified, replace the EFI MAIN fuse.

(2) Measure the resistance of the integration relay.

Standard resistance

Tester Connection	Specified Condition
1A-4 - 1C-1	10 kΩ or higher
1A-4 - 1A-1	
1A-4 - 1C-1	Below 1 Ω (when battery voltage is applied to terminals 1A-3 and 1A-2)
1A-4 - 1A-1	

If the result is not as specified, replace the integration relay.

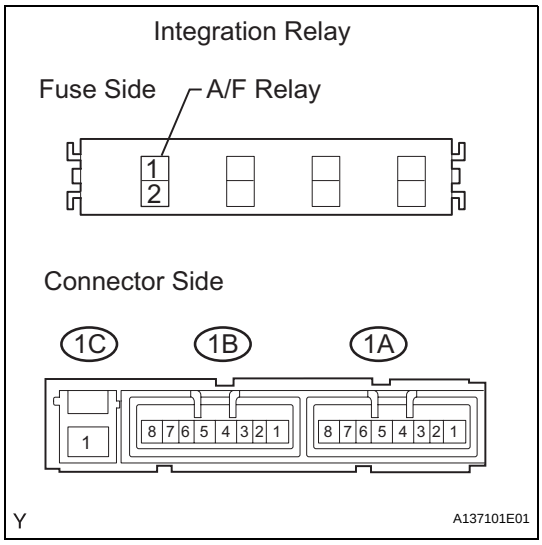

(d) Inspect the A/F relay.
(1) Check the resistance of the A/F fuse.
If the result is not as specified, replace the A/F fuse.
(2) Measure the resistance of the integration relay.
Standard resistance

Tester Connection	Specified Condition
1B-8 - 1C-1	10 kΩ or higher
1B-8 - 1B-5	
1B-8 - 1C-1	Below 1 Ω (when battery voltage is applied to terminals 1B-6 and 1B-7)
1B-8 - 1B-5	

If the result is not as specified, replace the integration relay.

3. CONNECT CABLE TO NEGATIVE BATTERY TERMINAL

ES

KNOCK SENSOR

COMPONENTS

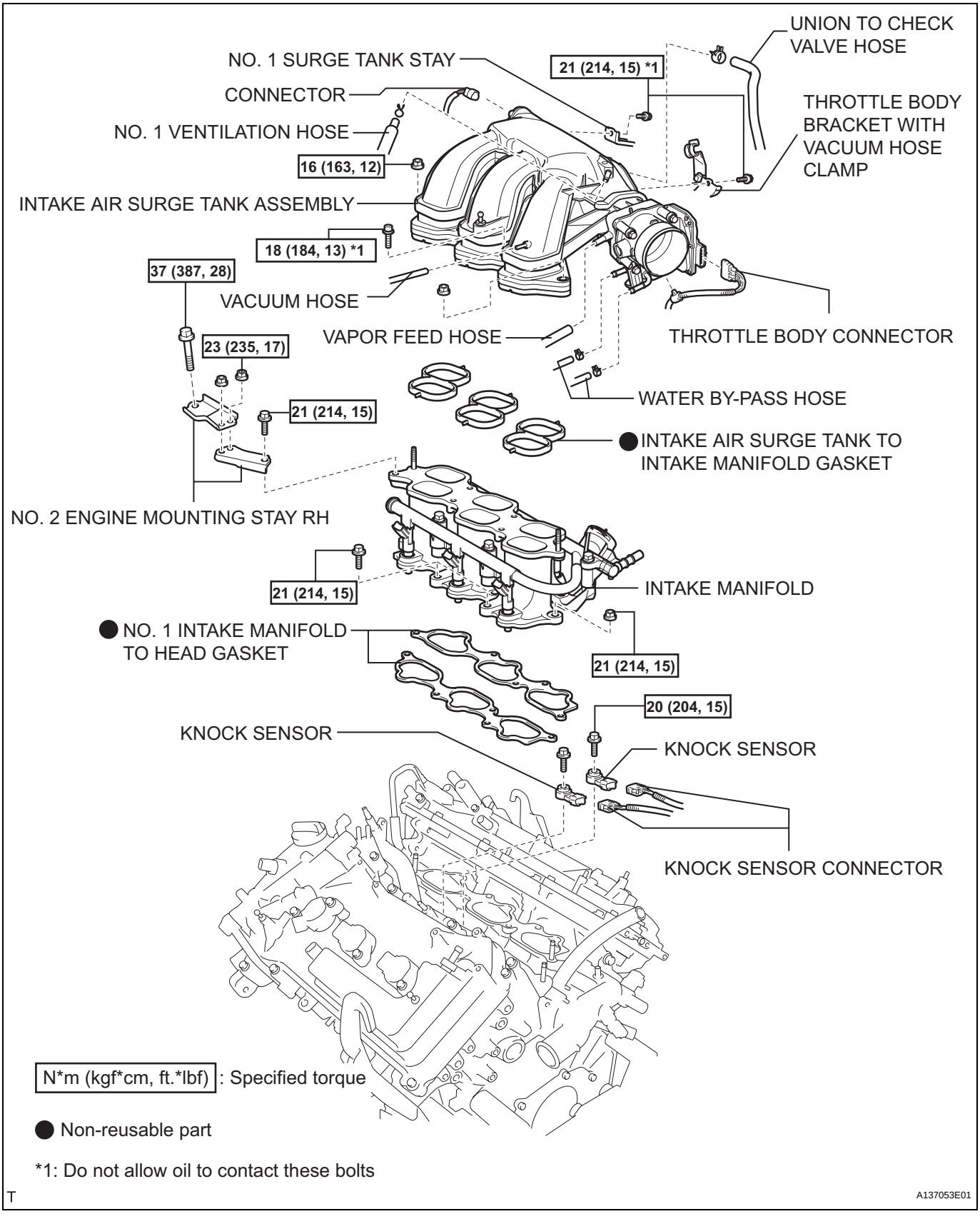

REMOVAL

1. **DISCONNECT CABLE FROM NEGATIVE BATTERY TERMINAL**
   CAUTION:
   Wait at least 90 seconds after disconnecting the cable from the negative (-) battery terminal to prevent airbag and seat belt pretensioner activation.
2. **REMOVE ENGINE ASSEMBLY**
   (a) Remove the engine (see page EM-21).
3. **REMOVE INTAKE AIR SURGE TANK ASSEMBLY (See page EM-27)**
4. **REMOVE INTAKE MANIFOLD (See page EM-28)**
5. **REMOVE KNOCK SENSOR**
   (a) Disconnect the 2 sensor connectors.
   (b) Remove the 2 bolts and 2 sensors.

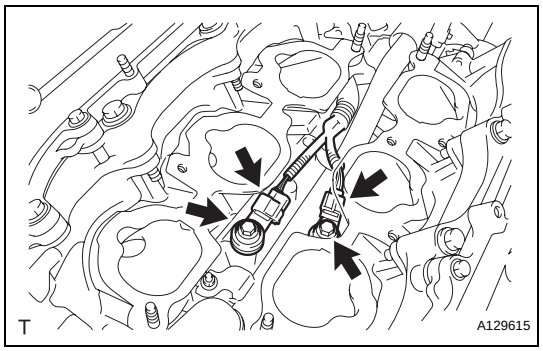

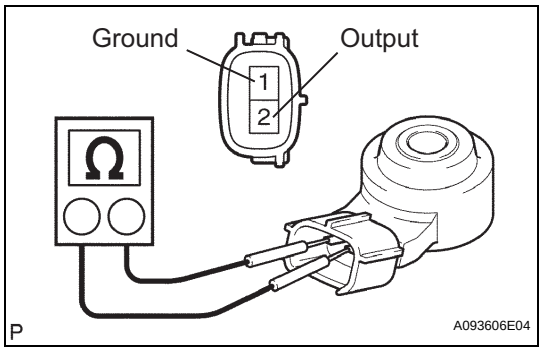

INSPECTION

1. **INSPECT KNOCK SENSOR**
   (a) Measure the resistance of the sensor.
   Standard resistance

Tester Connection	Condition	Specified Condition
1 (Ground) - 2 (Output)	20°C (68°F)	120 to 280 kΩ

If the result is not as specified, replace the knock sensor.

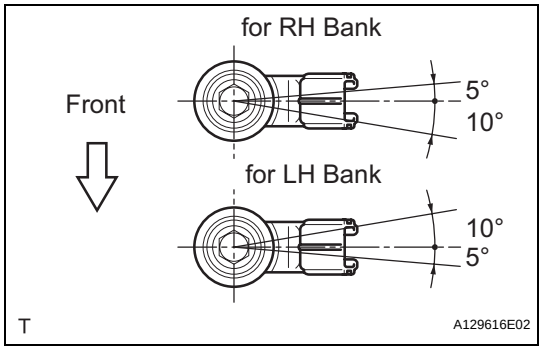

INSTALLATION

1. **INSTALL KNOCK SENSOR**
   (a) Install the 2 sensors with the 2 bolts as shown in the illustration.
   Torque: 20 N*m (205 kgf*cm, 15 ft.*lbf)
   NOTICE:
   Make sure that the knock sensor is in the correct position.
   (b) Connect the 2 sensor connectors.
2. **INSTALL INTAKE MANIFOLD (See page EM-33)**
3. **INSTALL INTAKE AIR SURGE TANK ASSEMBLY (See page EM-34)**
4. **INSTALL ENGINE ASSEMBLY**
   (a) Install the engine (see page EM-31).
5. **CONNECT CABLE TO NEGATIVE BATTERY TERMINAL**

6. **CHECK FOR ENGINE COOLANT LEAKS (See page CO-1)**
7. **CHECK FOR FUEL LEAKS**
8. **CHECK FOR ENGINE OIL LEAKS (See page LU-6)**

REMOVAL

1. DISCONNECT CABLE FROM NEGATIVE BATTERY TERMINAL

CAUTION:

Wait at least 90 seconds after disconnecting the cable from the negative (-) battery terminal to prevent airbag and seat belt pretensioner activation.

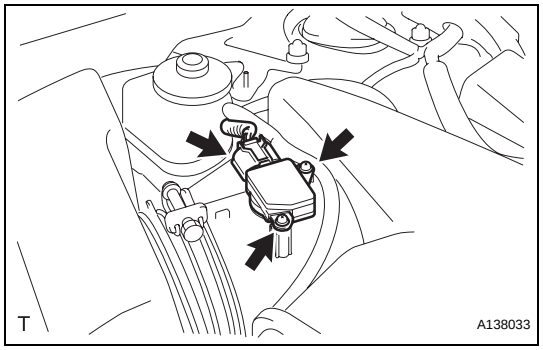

2. REMOVE MASS AIR FLOW METER

(a) Disconnect the mass air flow meter connector.

(b) Remove the 2 screws and mass air flow meter.

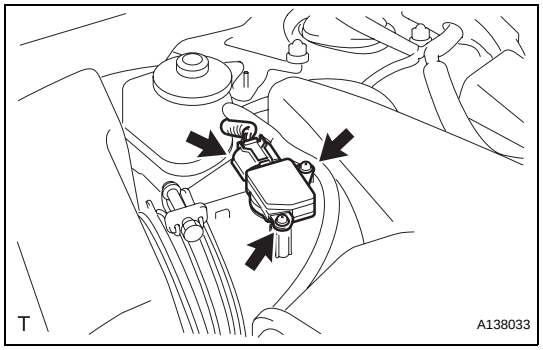

INSTALLATION

1. INSTALL MASS AIR FLOW METER

(a) Install the mass air flow meter with the 2 screws.

NOTICE:

Make sure that the O-ring is not cracked or jammed when installing it.

(b) Connect the mass air flow meter connector.

2. CONNECT CABLE TO BATTERY NEGATIVE TERMINAL

MASS AIR FLOW METER

COMPONENTS

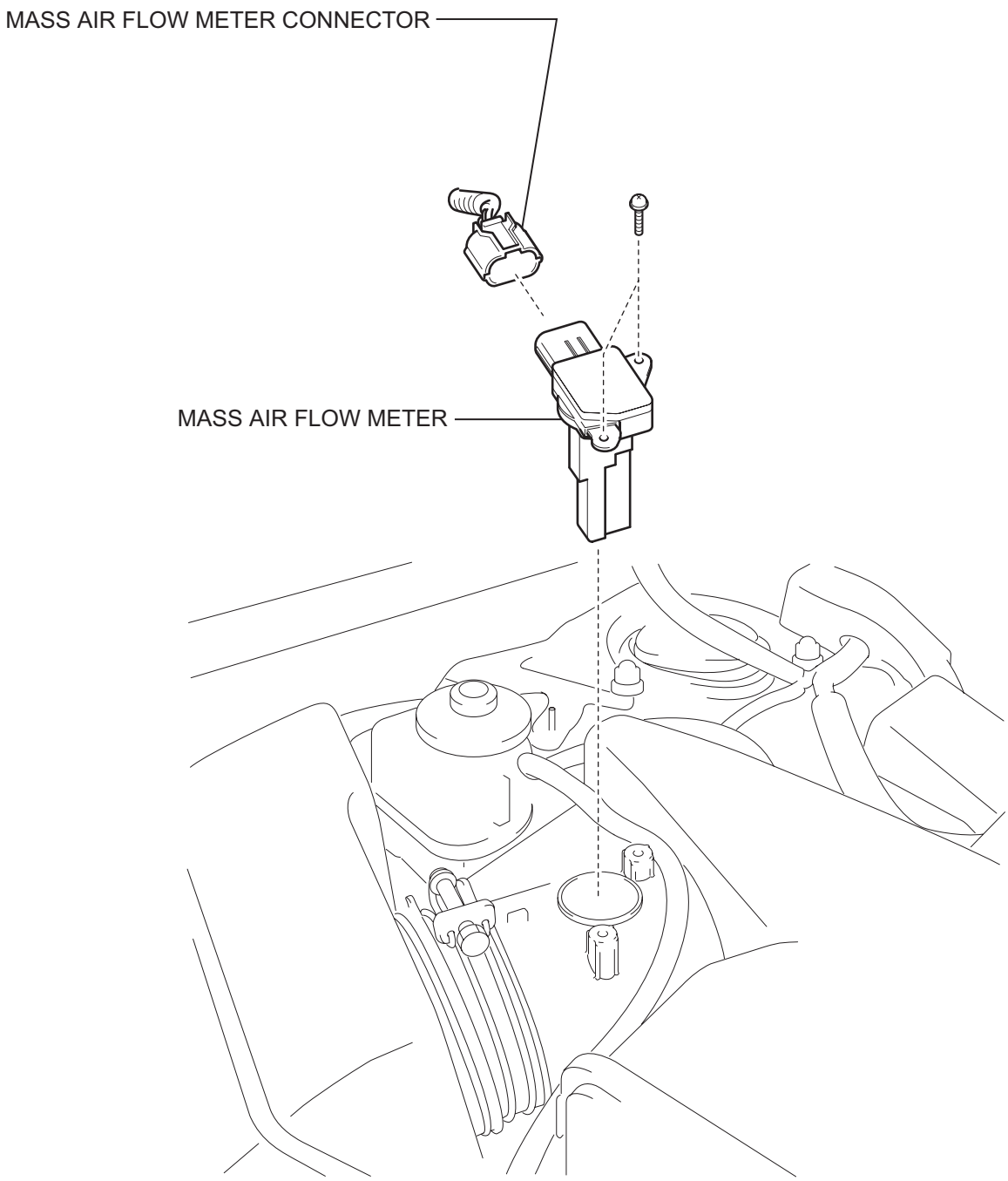

T

A138035E01

ON-VEHICLE INSPECTION

NOTICE:

- **Perform the MAF meter inspection according to the procedures below.**
- **Only replace the MAF meter when both the LONG FT#1 value and MAF value in the DATA LIST (with the engine stopped) are not within the normal operating range.**

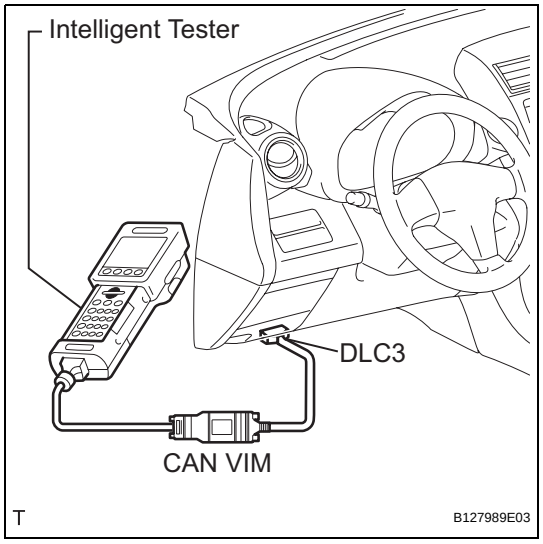

1. INSPECT MASS AIR FLOW METER

(a) Perform confirmation driving pattern.

(1) Connect the intelligent tester to the DLC3.

(2) Turn the ignition switch ON.

(3) Turn the tester ON.

(4) Clear the DTCs (see page ES-39).

(5) Start the engine and warm it up with all accessory switches OFF until the engine coolant temperature is 75°C (167°F) or more.

(6) Drive the vehicle at 50 km/h (31 mph) or more for 3 to 5 minutes*1.

(7) Allow the engine to idle for 2 minutes*2.

(8) Perform steps *1 and *2 at least 3 times.

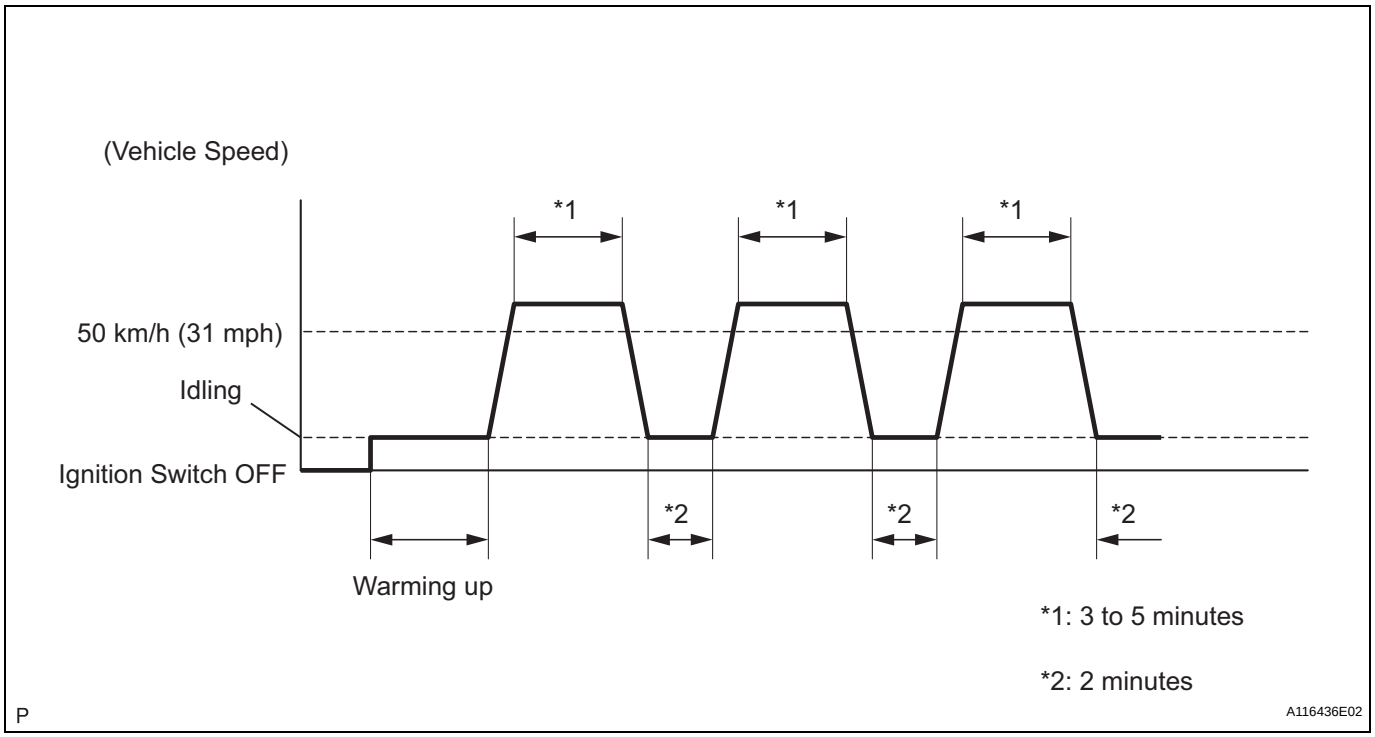

(b) Read the value using the intelligent tester (LONG FT#1).

(1) Select the following menu items: DIAGNOSIS / ENHANCED OBD II / DATA LIST / PRIMARY / LONG FT#1.

(2) Read the values displayed on the tester.

Standard value:

Within -15 to +15%

If the result is not within the specified range, perform the inspection below.

(c) Read the value using the intelligent tester (MAF).

NOTICE:

- **Turn off the engine.**
- **Perform the inspection with the vehicle indoors and on a level surface.**
- **Perform the inspection of the MAF meter while it is installed to the air cleaner case (installed to the vehicle).**
- **During the test, do not use the exhaust air duct to perform suction on the exhaust pipe.**

(1) Turn the ignition switch to ACC.

(2) Turn the ignition switch ON (do not run the engine).

(3) Turn the tester ON.

(4) Select the following menu items: DIAGNOSIS / ENHANCED OBD II / DATA LIST / PRIMARY / MAF.

(5) Wait 30 seconds, and read the values on the intelligent tester.

Standard condition:

Less than 0.55 g/sec.

- If the result is not as specified, replace the MAF meter.
- If the result is within the specified range, inspect the cause of the extremely rich or lean air-fuel ratio (see page ES-176).

ES

PARTS LOCATION

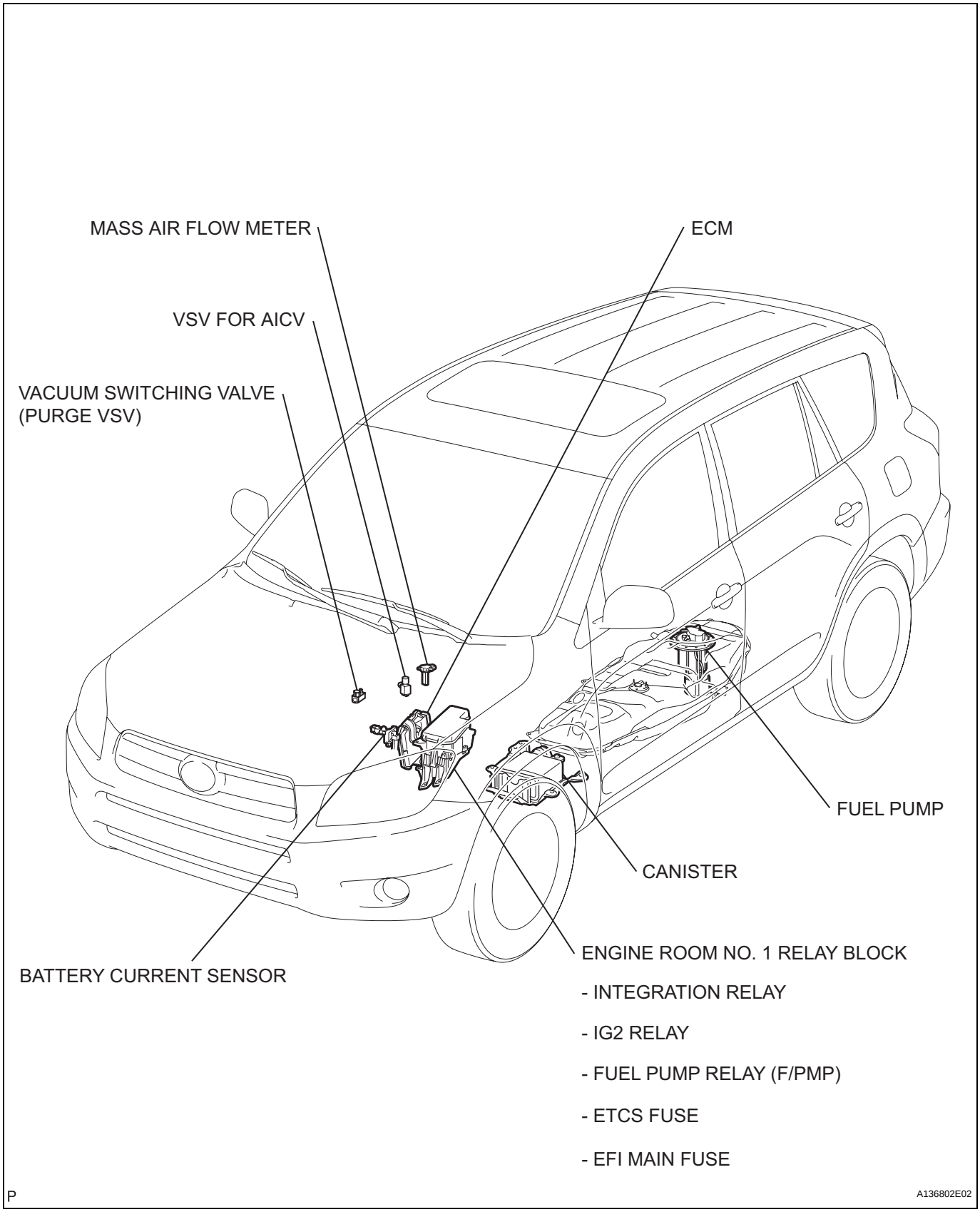

ES

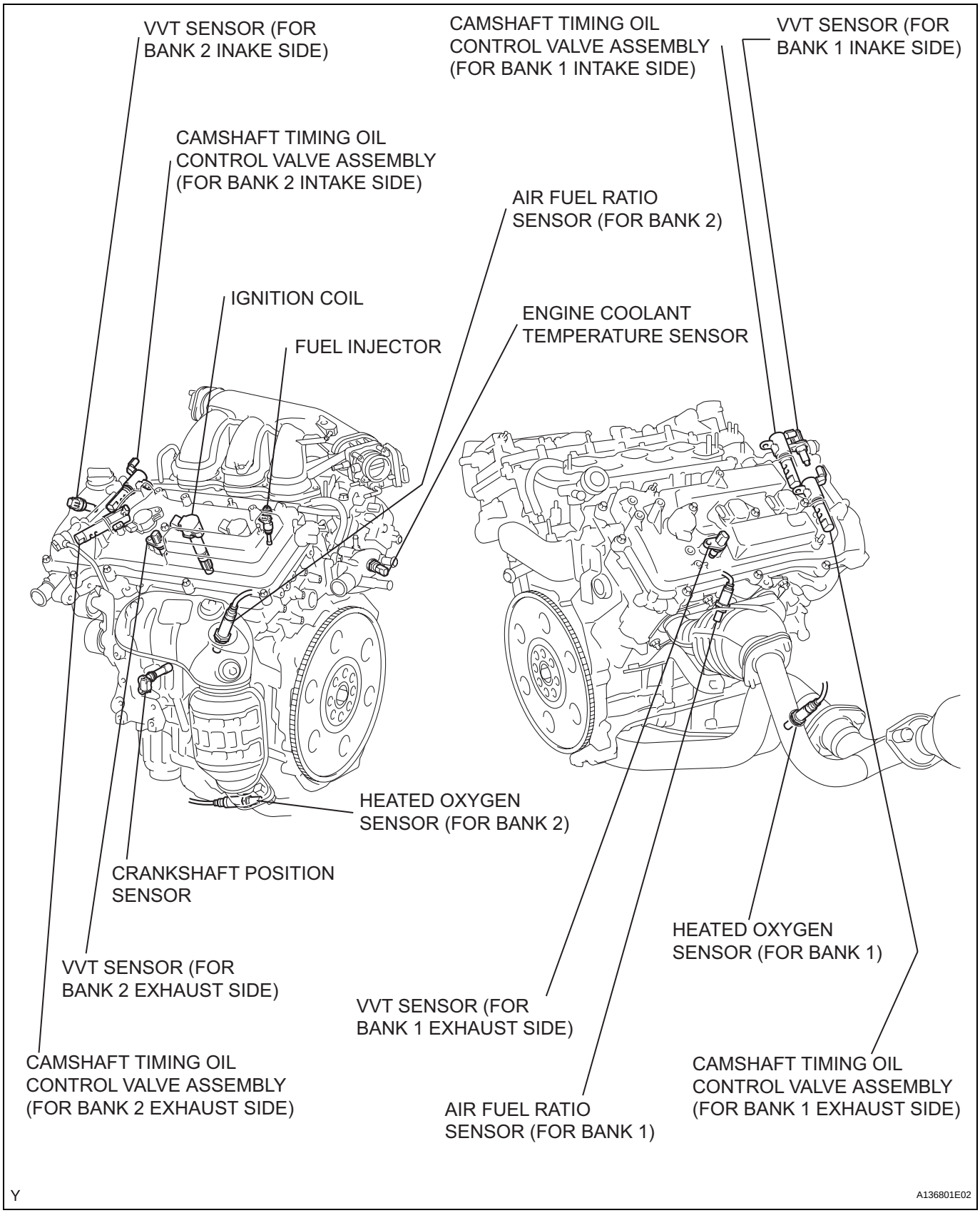
VVT SENSOR (FOR BANK 2 INAKE SIDE)
CAMSHAFT TIMING OIL CONTROL VALVE ASSEMBLY (FOR BANK 1 INTAKE SIDE)
VVT SENSOR (FOR BANK 1 INAKE SIDE)
CAMSHAFT TIMING OIL CONTROL VALVE ASSEMBLY (FOR BANK 2 INTAKE SIDE)
AIR FUEL RATIO SENSOR (FOR BANK 2)
IGNITION COIL
ENGINE COOLANT TEMPERATURE SENSOR
FUEL INJECTOR
HEATED OXYGEN SENSOR (FOR BANK 2)
CRANKSHAFT POSITION SENSOR
HEATED OXYGEN SENSOR (FOR BANK 1)
VVT SENSOR (FOR BANK 2 EXHAUST SIDE)
VVT SENSOR (FOR BANK 1 EXHAUST SIDE)
CAMSHAFT TIMING OIL CONTROL VALVE ASSEMBLY (FOR BANK 2 EXHAUST SIDE)
AIR FUEL RATIO SENSOR (FOR BANK 1)
CAMSHAFT TIMING OIL CONTROL VALVE ASSEMBLY (FOR BANK 1 EXHAUST SIDE)
Y
A136801E02

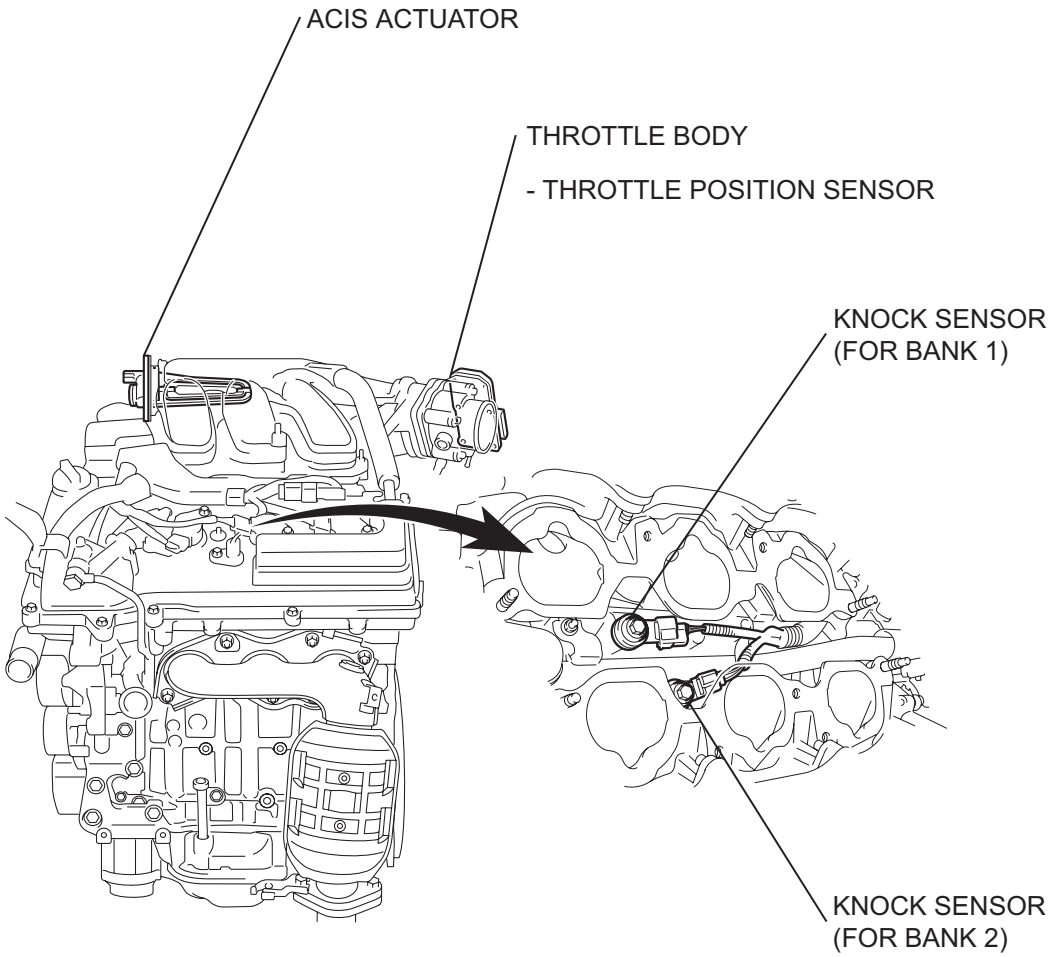

ES

Y

A139337E01

ES

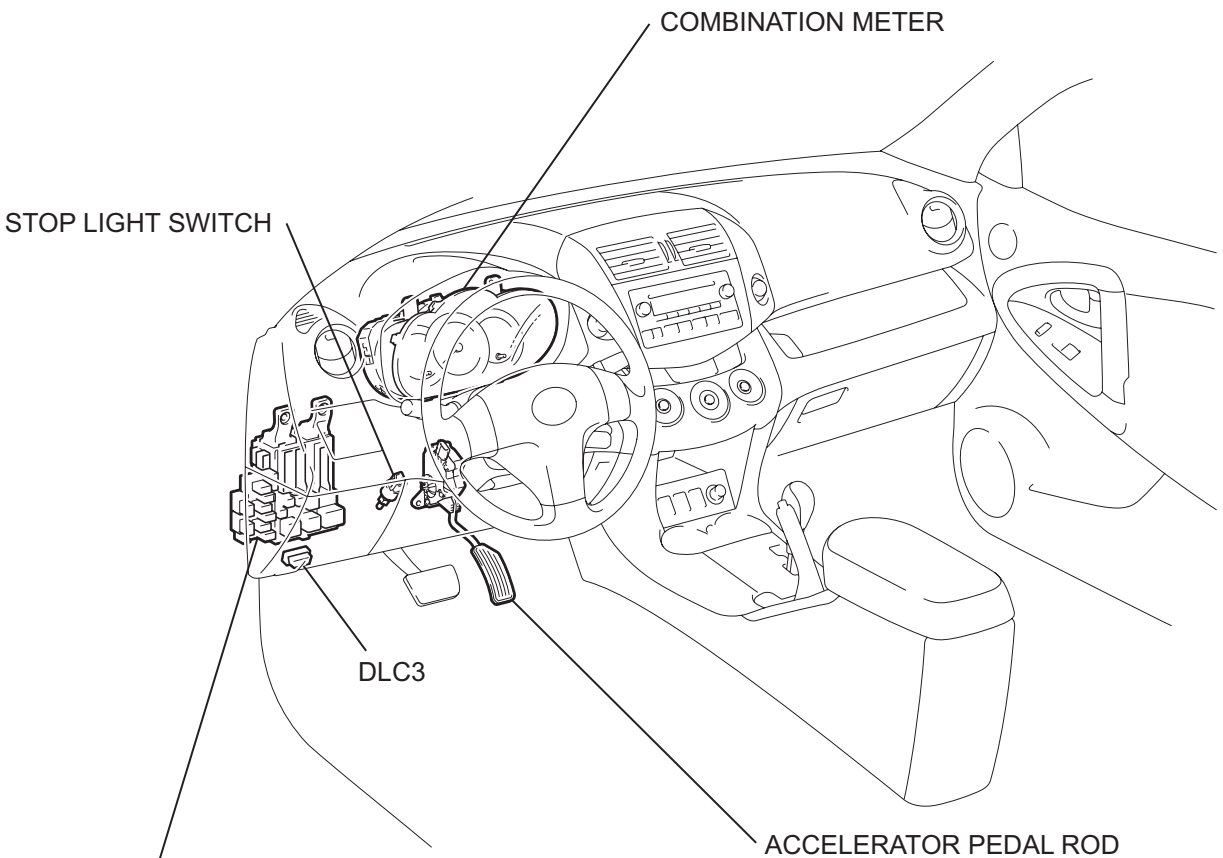

P

A127722E03

SYSTEM DIAGRAM

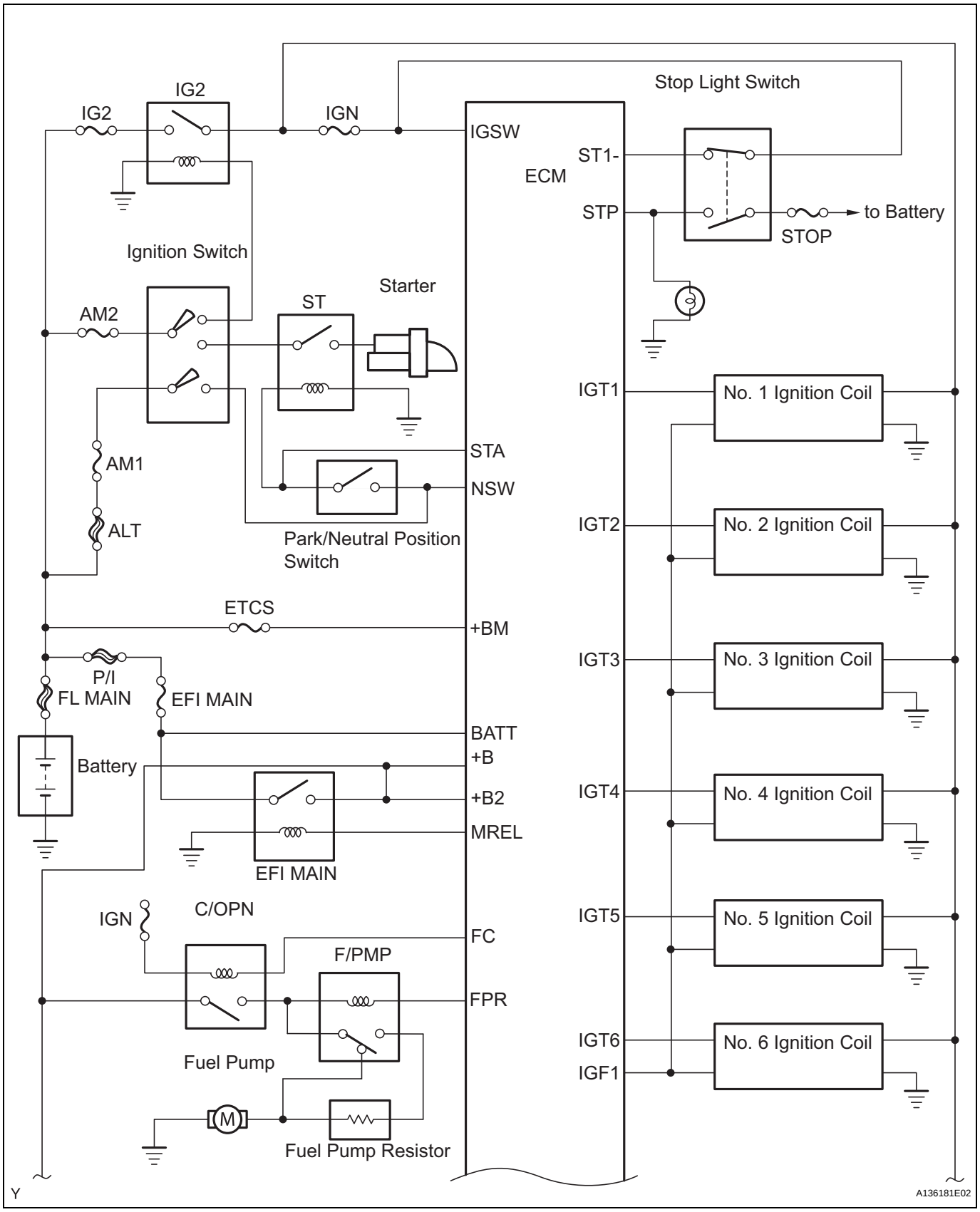

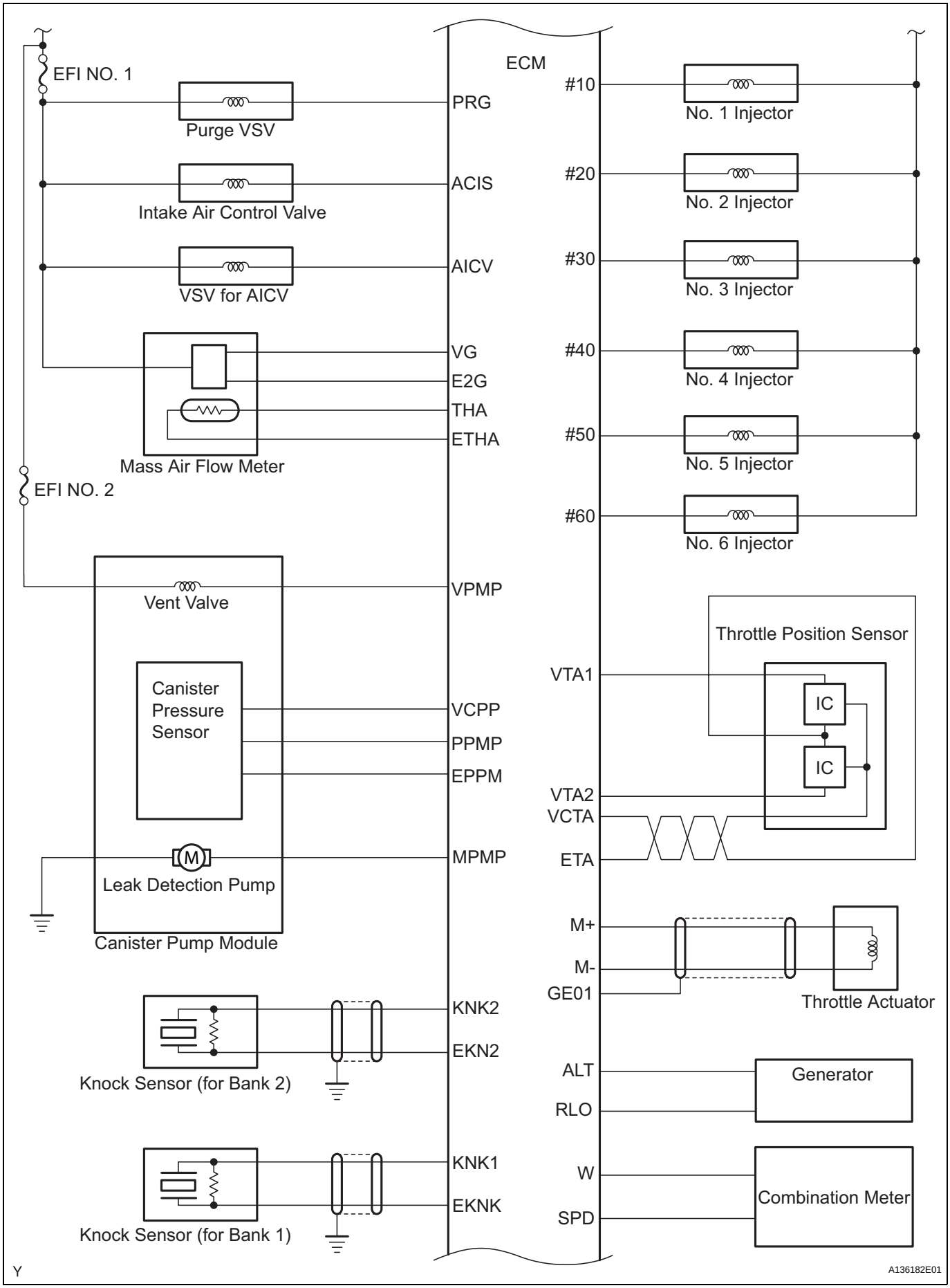
ECM
EFI NO. 1
Purge VSV
PRG
Intake Air Control Valve
ACIS
VSV for AICV
AICV
VG
E2G
THA
ETHA
Mass Air Flow Meter
EFI NO. 2
Vent Valve
VPMP
Canister Pressure Sensor
VCPP
PPMP
EPPM
MPMP
Leak Detection Pump
Canister Pump Module
KNK2
EKN2
Knock Sensor (for Bank 2)
KNK1
EKNK
Knock Sensor (for Bank 1)
#10
No. 1 Injector
#20
No. 2 Injector
#30
No. 3 Injector
#40
No. 4 Injector
#50
No. 5 Injector
#60
No. 6 Injector
Throttle Position Sensor
VTA1
IC
IC
VTA2
VCTA
ETA
M+
M-
GE01
Throttle Actuator
ALT
RLO
Generator
W
SPD
Combination Meter
Y
A136182E01

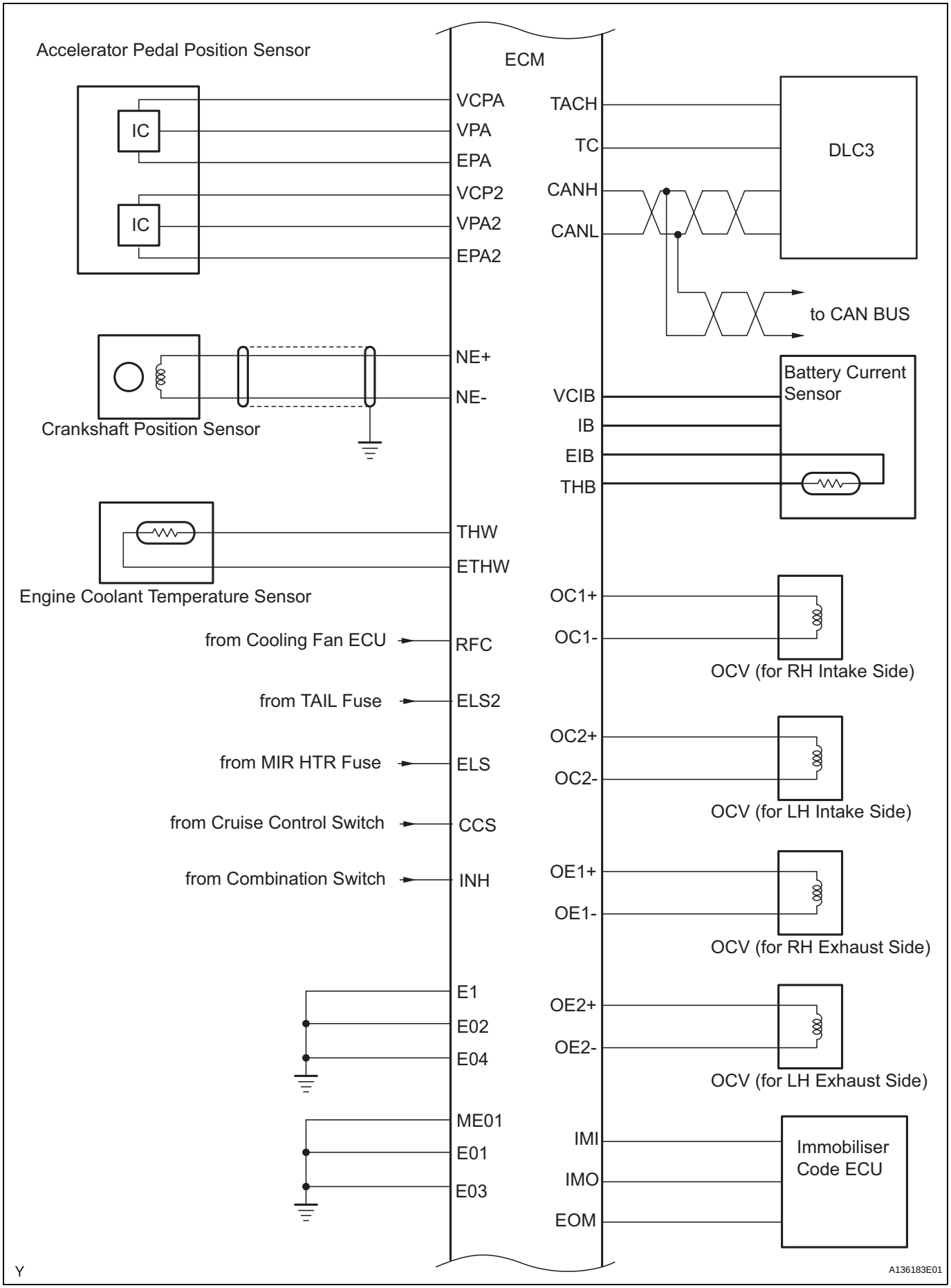
Accelerator Pedal Position Sensor
IC
IC
ECM
VCPA
VPA
EPA
VCP2
VPA2
EPA2
TACH
TC
CANH
CANL
DLC3
to CAN BUS
NE+
NE-
Crankshaft Position Sensor
Battery Current Sensor
VCIB
IB
EIB
THB
THW
ETHW
Engine Coolant Temperature Sensor
OC1+
OC1-
OCV (for RH Intake Side)
from Cooling Fan ECU
RFC
from TAIL Fuse
ELS2
OC2+
OC2-
OCV (for LH Intake Side)
from MIR HTR Fuse
ELS
from Cruise Control Switch
CCS
from Combination Switch
INH
OE1+
OE1-
OCV (for RH Exhaust Side)
E1
E02
E04
OE2+
OE2-
OCV (for LH Exhaust Side)
ME01
E01
E03
IMI
IMO
EOM
Immobiliser Code ECU
Y
A136183E01

ES

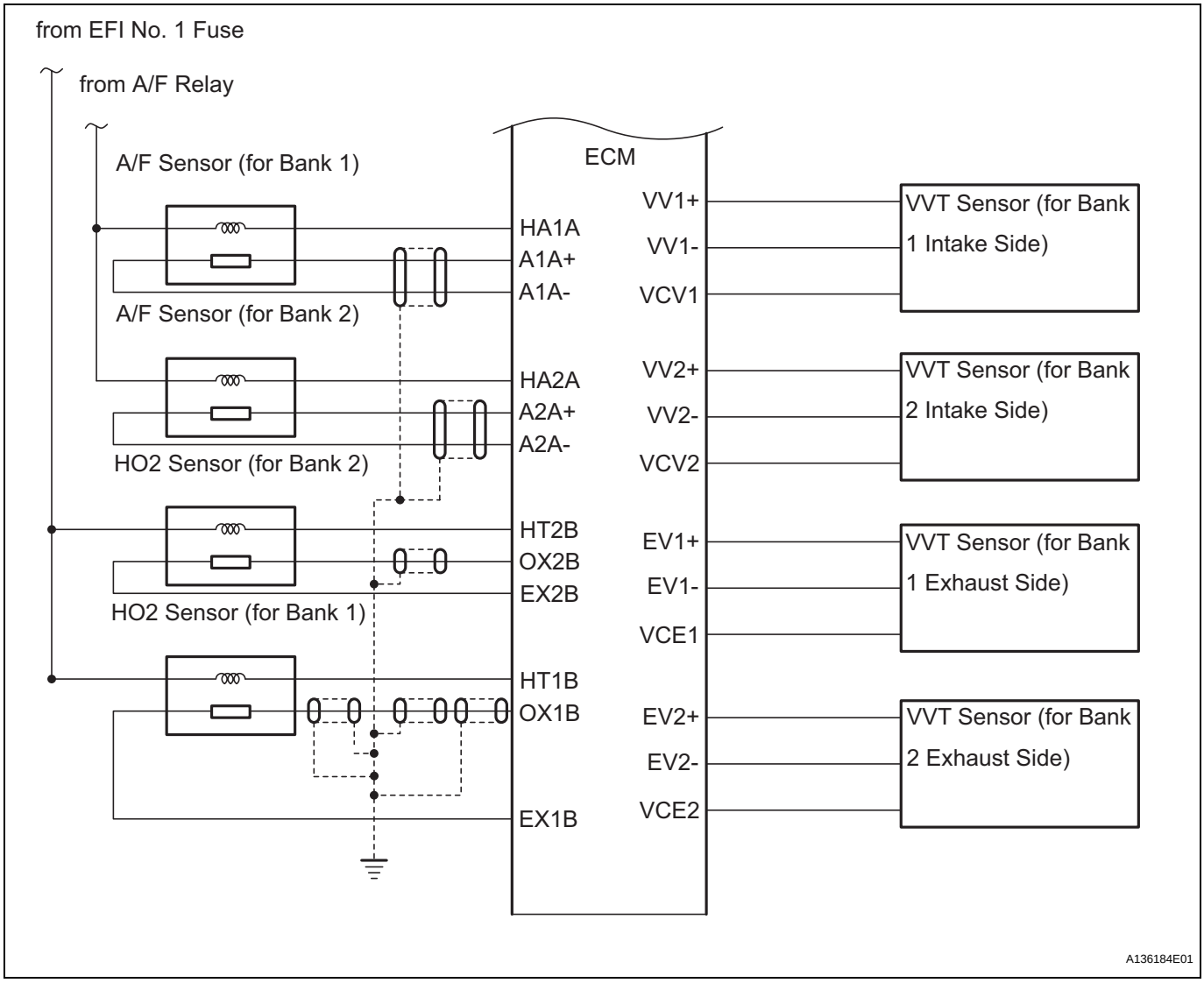
from EFI No. 1 Fuse
from A/F Relay
A/F Sensor (for Bank 1)
A/F Sensor (for Bank 2)
HO2 Sensor (for Bank 2)
HO2 Sensor (for Bank 1)
ECM
HA1A
A1A+
A1A-
HA2A
A2A+
A2A-
HT2B
OX2B
EX2B
HT1B
OX1B
EX1B
VV1+
VV1-
VCV1
VV2+
VV2-
VCV2
EV1+
EV1-
VCE1
EV2+
EV2-
VCE2
VVT Sensor (for Bank 1 Intake Side)
VVT Sensor (for Bank 2 Intake Side)
VVT Sensor (for Bank 1 Exhaust Side)
VVT Sensor (for Bank 2 Exhaust Side)
A136184E01

HOW TO PROCEED WITH TROUBLESHOOTING

HINT:
*: Use the intelligent tester.

1	VEHICLE BROUGHT TO WORKSHOP

NEXT

2	CUSTOMER PROBLEM ANALYSIS

NEXT

3	CONNECT INTELLIGENT TESTER TO DLC3*

HINT:
If the display indicates a communication fault in the tester, inspect the DLC3.

NEXT

4	CHECK DTC AND FREEZE FRAME DATA*

HINT:
Record or print DTCs and freeze frame data, if necessary.

NEXT

5	CLEAR DTC AND FREEZE FRAME DATA*

NEXT

6	CONDUCT VISUAL INSPECTION

NEXT

7	SET CHECK MODE DIAGNOSIS*

NEXT

8	CONFIRM PROBLEM SYMPTOMS

HINT:
If the engine does not start, first perform the "CHECK DTC" procedures and "CONDUCT BASIC INSPECTION" procedures below.

Result	Proceed to
Malfunction does not occur	A
Malfunction occurs	B

B → GO TO STEP 10

ES

A

9	SIMULATE SYMPTOMS

NEXT

10	CHECK DTC*

Result	Proceed to
Malfunction code	A
No code	B

B → GO TO STEP 12

A

11	REFER TO DTC CHART

NEXT

GO TO STEP 14

12	CONDUCT BASIC INSPECTION

Result	Proceed to
Malfunctioning parts not confirmed	A
Malfunctioning parts confirmed	B

B → GO TO STEP 17

A

13	REFER TO PROBLEM SYMPTOMS TABLE

Result	Proceed to
Malfunctioning circuit confirmed	A
Malfunctioning parts confirmed	B

B → GO TO STEP 17

A

14	CHECK ECM POWER SOURCE CIRCUIT

NEXT

15	CONDUCT CIRCUIT INSPECTION

Result	Proceed to
Malfunction not confirmed	A
Malfunction confirmed	B

B → GO TO STEP 18

A

16	CHECK FOR INTERMITTENT PROBLEMS

NEXT

GO TO STEP 18

17	CONDUCT PARTS INSPECTION

NEXT

18	IDENTIFY PROBLEM

NEXT

19	ADJUST AND/OR REPAIR

NEXT

20	CONDUCT CONFIRMATION TEST

NEXT

END

CHECK FOR INTERMITTENT PROBLEMS

HINT:
Inspect the vehicle's ECM using check mode. Intermittent problems are easier to detect with the intelligent tester when the ECM is in check mode. In check mode, the ECM uses 1 trip detection logic, which is more sensitive to malfunctions than normal mode (default), which uses 2 trip detection logic.

1. Clear the DTCs (see page ES-39).
2. Switch the ECM from normal mode to check mode using the intelligent tester (see page ES-42).
3. Perform a simulation test.
4. Check and wiggle the harness(es), connector(s) and terminal(s).

BASIC INSPECTION

When a malfunction is not confirmed by the DTC check, troubleshooting should be carried out in all circuits considered to be possible causes of the problem. In many cases, by carrying out the basic engine check shown in the following flowchart, the location of the problem can be found quickly and efficiently. Therefore, using this check is essential when performing engine troubleshooting.

ES

1 CHECK BATTERY VOLTAGE

NOTICE:
Conduct this check with the engine stopped and ignition switch OFF.

Result	Proceed to
11 V or more	OK
Below 11 V	NG

NG → **CHARGE OR REPLACE BATTERY**

OK

2 CHECK WHETHER ENGINE WILL CRANK

NG → **PROCEED TO PROBLEM SYMPTOMS TABLE**

OK

3 CHECK WHETHER ENGINE STARTS

NG → **GO TO STEP 6**

OK

4 CHECK AIR FILTER

(a) Visually check that the air filter is not excessively contaminated with dirt or oil.

NG → **REPLACE AIR FILTER**

OK

5 CHECK IDLING SPEED

NG → **TROUBLESHOOT IDLING SPEED AND PROCEED TO NEXT STEP**

OK

6	CHECK FUEL PRESSURE

NG → TROUBLESHOOT FUEL PRESSURE AND PROCEED TO NEXT STEP

OK

7	CHECK FOR SPARK

NG → TROUBLESHOOT SPARK AND PROCEED TO NEXT STEP

OK

PROCEED TO PROBLEM SYMPTOMS TABLE

REGISTRATION

NOTICE:
The Vehicle Identification Number (VIN) must be input into the replacement ECM.
HINT:
The VIN is a 17-digit alphanumeric number. The intelligent tester is required to register the VIN.

1. DESCRIPTION

This registration section consists of 3 parts: Input Instructions, Read VIN and Write VIN.

(a) Input Instructions: Explains the general VIN input instructions when using the intelligent tester.

(b) Read VIN: Explains the VIN reading process in a flowchart. This process allows the VIN stored in the ECM to be read in order to confirm that the two VINs, provided with the vehicle and stored in the vehicle's ECM, are the same.

(c) Write VIN: Explains the VIN writing process in a flowchart. This process allows the VIN to be input into the ECM. If the ECM is changed, or the vehicle VIN and ECM VIN do not match, the VIN can be registered or overwritten in the ECM by following this procedure.

2. INPUT INSTRUCTIONS

(a) Intelligent Tester
The arrow buttons (UP, DOWN, RIGHT and LEFT) and numerical buttons (0 to 9) are used to input the VIN.

(b) Cursor Operation
To move the cursor around the tester screen, press the RIGHT and LEFT buttons.

(c) Alphabetical Character Input
(1) Press the UP and DOWN buttons to select the desired alphabetical character.
(2) After selection, the cursor should move.

(d) Numeric Character Input
(1) Press the numerical button corresponding to the number that you want to input.
(2) After input, the cursor should move.
HINT:
Numerical characters can also be selected by using the UP and DOWN buttons.

(e) Correction
(1) When correcting the input character(s), put the cursor onto the character using the RIGHT and LEFT buttons.
(2) Select or input the correct character using the UP/DOWN buttons, or the numerical buttons.

(f) Finishing Input Operation
(1) Make sure that the input VIN matches the vehicle VIN after input.
(2) Press the ENTER button on the tester.

3. READ VIN

(a) Confirm the vehicle VIN.
(b) Connect the intelligent tester to the DLC3.
(c) Turn the ignition switch ON.
(d) Turn the tester ON.
(e) Select the following menu items: DIAGNOSIS / ENHANCED OBD II / VIN.

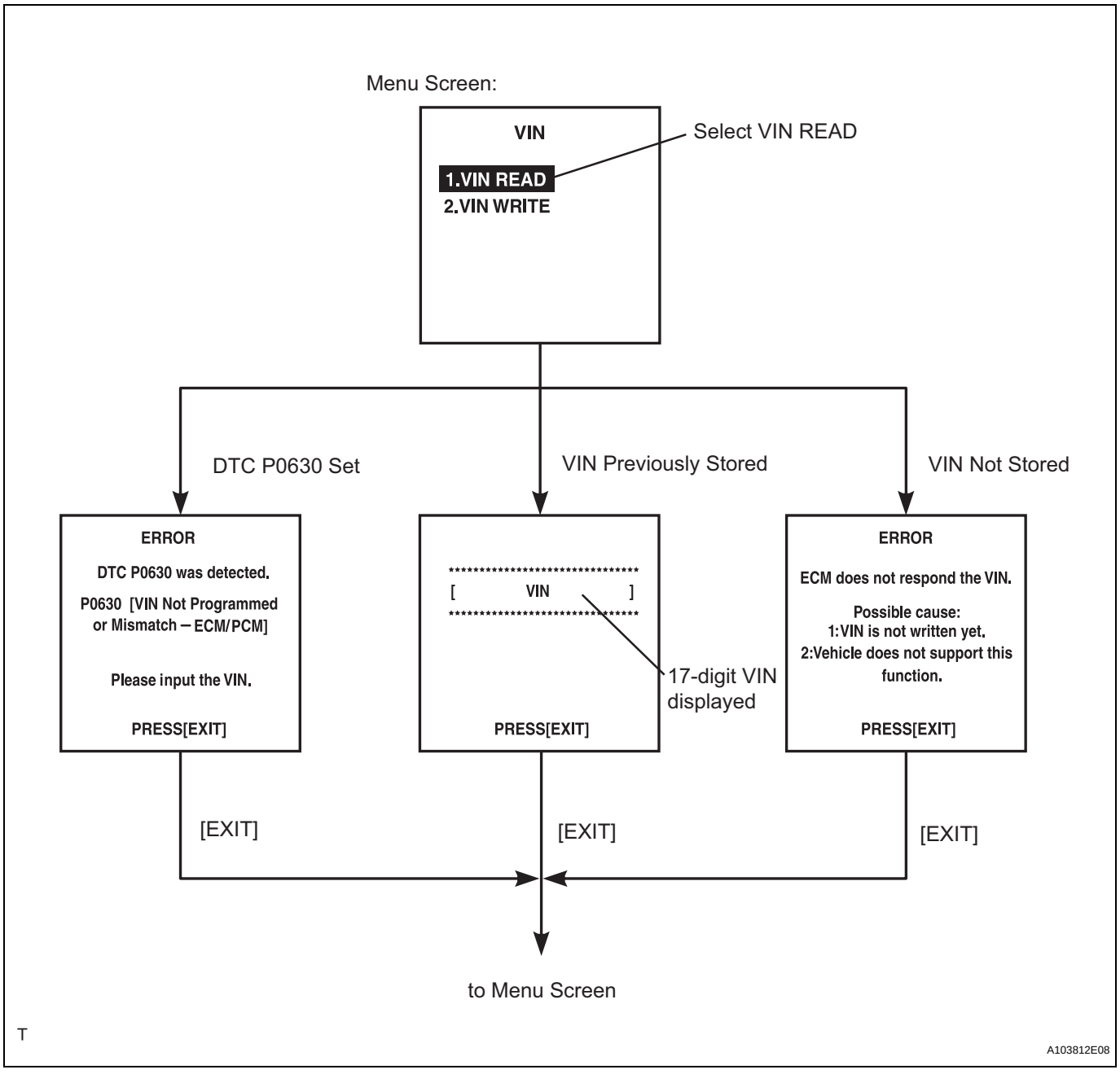

4. WRITE VIN

(a) Confirm the vehicle VIN.
(b) Connect the intelligent tester to the DLC3.
(c) Turn the ignition switch ON.
(d) Turn the tester ON.

(e) Select the following menu items: DIAGNOSIS / ENHANCED OBD II / VIN.

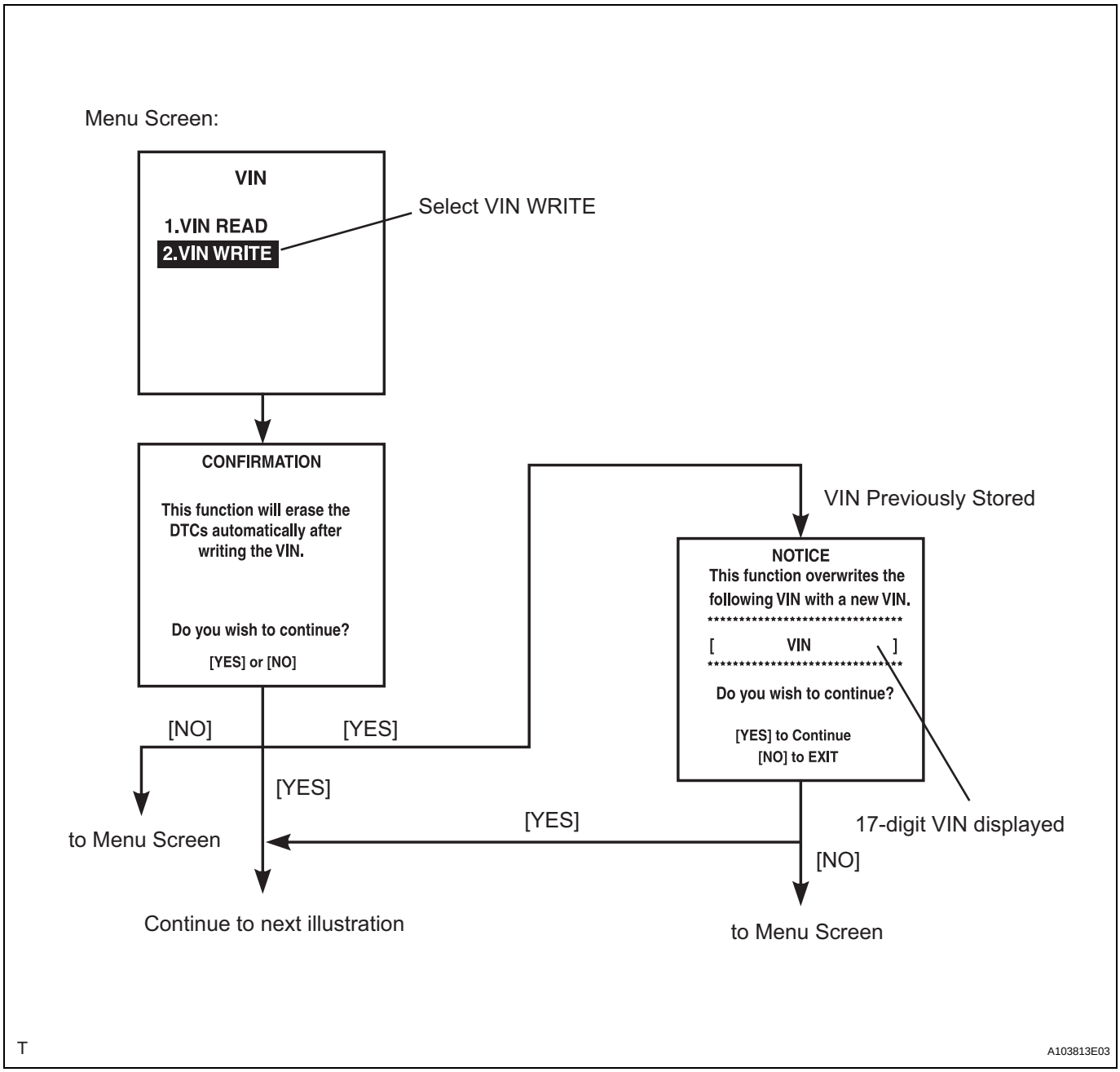

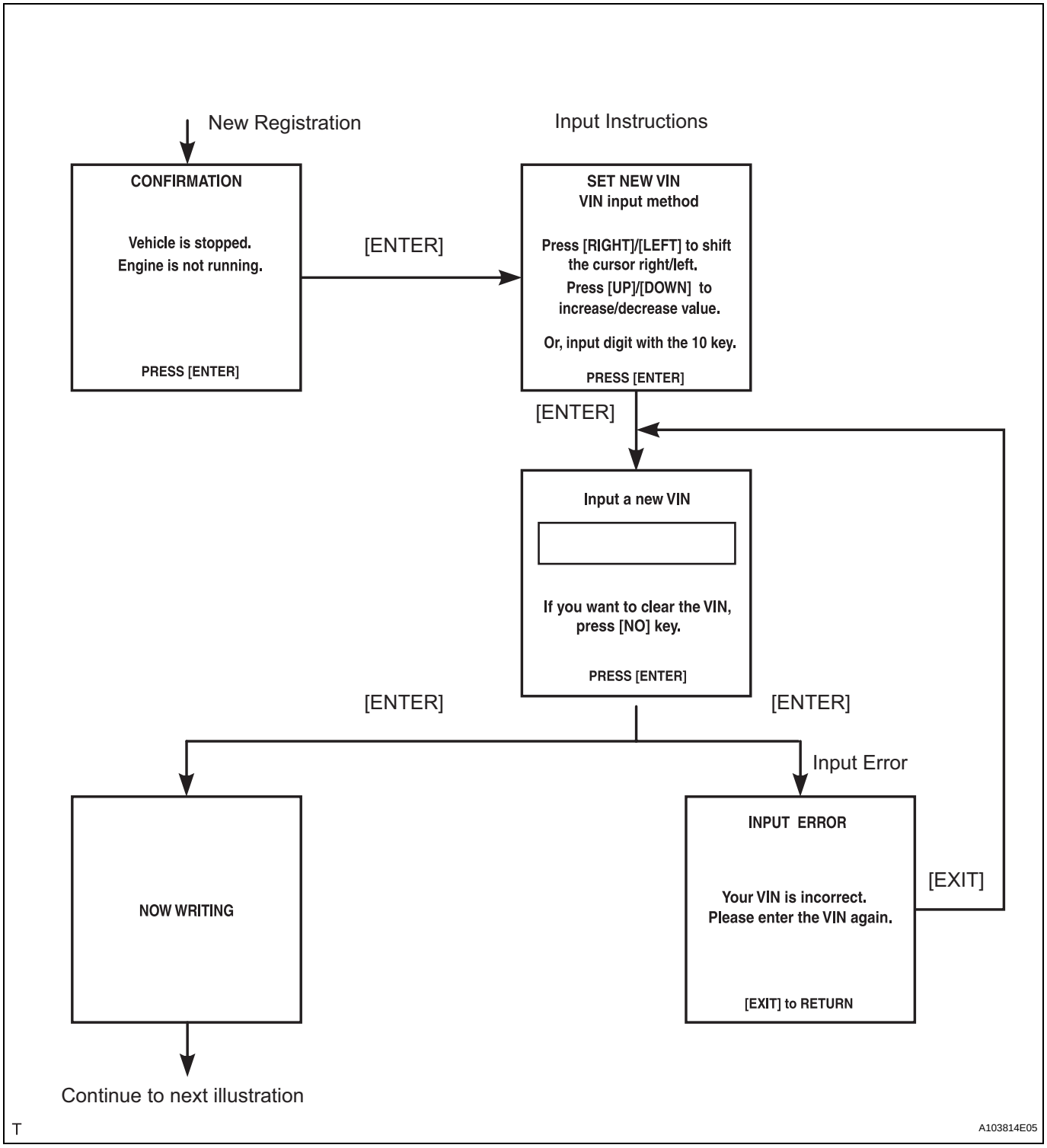
New Registration
Input Instructions
CONFIRMATION
Vehicle is stopped.
Engine is not running.
PRESS [ENTER]
[ENTER]
SET NEW VIN
VIN input method
Press [RIGHT]/[LEFT] to shift the cursor right/left.
Press [UP]/[DOWN] to increase/decrease value.
Or, input digit with the 10 key.
PRESS [ENTER]
[ENTER]
Input a new VIN
If you want to clear the VIN, press [NO] key.
PRESS [ENTER]
[ENTER]
[ENTER]
Input Error
NOW WRITING
INPUT ERROR
Your VIN is incorrect.
Please enter the VIN again.
[EXIT] to RETURN
[EXIT]
Continue to next illustration
T
A103814E05

ES

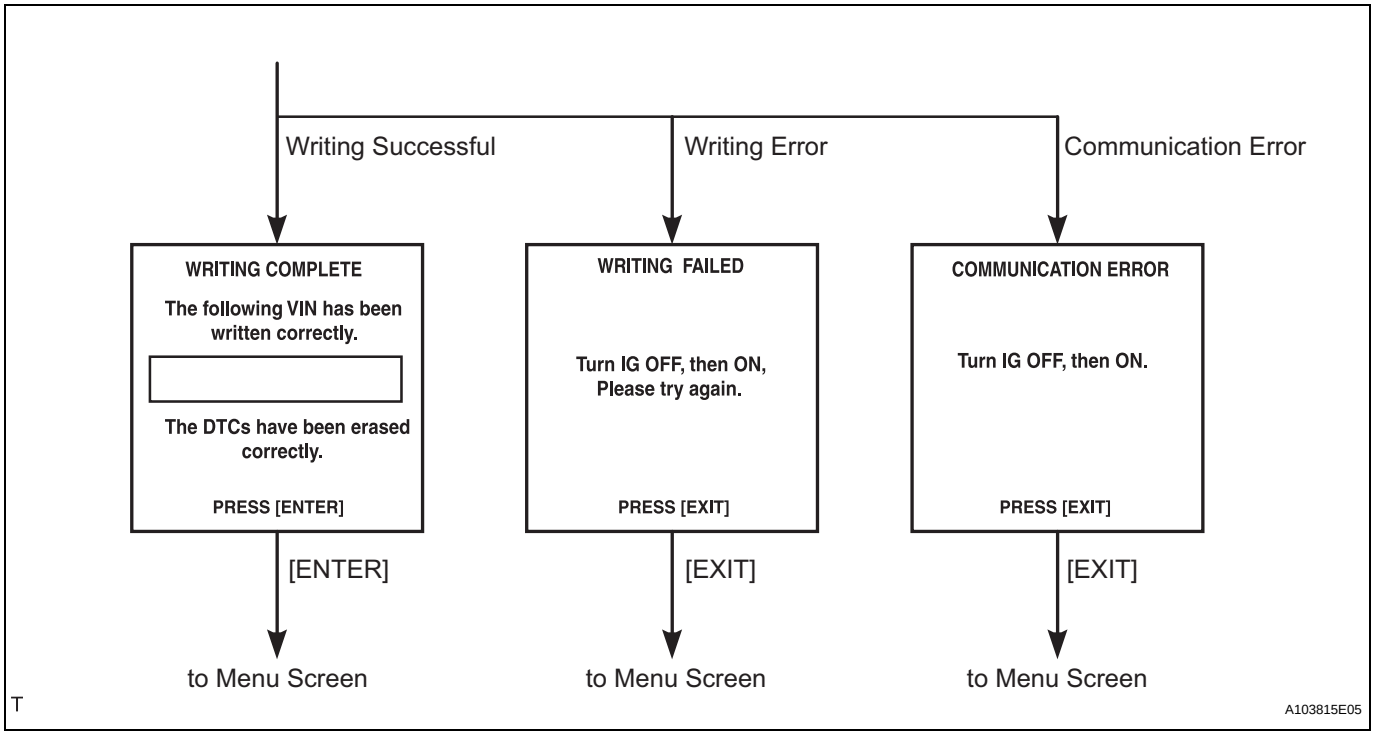
Writing Successful
Writing Error
Communication Error
WRITING COMPLETE
The following VIN has been written correctly.
The DTCs have been erased correctly.
PRESS [ENTER]
WRITING FAILED
Turn IG OFF, then ON, Please try again.
PRESS [EXIT]
COMMUNICATION ERROR
Turn IG OFF, then ON.
PRESS [EXIT]
[ENTER]
[EXIT]
[EXIT]
to Menu Screen
to Menu Screen
to Menu Screen
A103815E05

ES

CHECKING MONITOR STATUS

The purpose of the monitor result (mode 06) is to allow access to the results of on-board diagnostic monitoring tests of specific components/systems that are not continuously monitored. Examples are catalysts, evaporative emissions (EVAP) and thermostats.

The monitor result allows the OBD II scan tool to display the monitor status, test value, minimum test limit and maximum test limit. These data are displayed after the vehicle has been driven to run the monitor.

When the test value is not between the minimum and maximum test limits, the ECM (PCM) interprets this as a malfunction. If the test value is on the borderline of the test limits, the component is likely to malfunction in the near future.

Perform the following procedures to view the monitor status. Although these procedures refer to the Lexus/Toyota diagnostic tester, the monitor status can be checked using a generic OBD II scan tool. Refer to your scan tool operator's manual for specific procedural information.

1. PERFORM MONITOR DRIVE PATTERN

(a) Connect the intelligent tester to the DLC3.

(b) Turn the ignition switch and the tester ON.

(c) Clear the DTCs (see page ES-39).

(d) Run the vehicle in accordance with the applicable drive pattern described in READINESS MONITOR DRIVE PATTERN (see page ES-22). Do not turn the ignition switch OFF.

NOTE:

The test results will be lost if the ignition switch is turned OFF.

2. ACCESS MONITOR RESULT

(a) Select the following items from the intelligent tester menus: DIAGNOSIS, ENHANCED OBD II, MONITOR INFO and MONITOR RESULT. The monitor status appears after the component name.

- INCMP: The component has not been monitored yet.
- PASS: The component is functioning normally.
- FAIL: The component is malfunctioning.

(b) Confirm that the component is either PASS or FAIL.

(c) Select the component and press ENTER. The accuracy test value appears if the monitor status is either PASS or FAIL.

3. CHECK COMPONENT STATUS

(a) Compare the test value with the minimum test limit (MIN LIMIT) and maximum test limit (MAX LIMIT).

(b) If the test value is between the minimum and maximum test limits, the component is functioning normally. If not, the component is malfunctioning. The test value is usually not near the test limits. If the test value is on the borderline of the test limits, the component is likely to malfunction in the near future.
HINT:
The monitor result might on rare occasions be PASS even if the malfunction indicator lamp (MIL) is illuminated. This indicates the system malfunctioned on a previous driving cycle. This might be caused by an intermittent problem.

4. MONITOR RESULT INFORMATION

If you use a generic scan tool, multiply the test value by the scaling value listed below.

A/F Sensor (Bank 1 Sensor 1)

Monitor ID	Test ID	Scaling	Unit	Description
$01	$8E	Multiply by 0.001	V	A/F sensor deterioration level
$01	$91	Multiply by 0.004	mA	A/F sensor current

A/F Sensor (Bank 2 Sensor 1)

Monitor ID	Test ID	Scaling	Unit	Description
$05	$8E	Multiply by 0.001	V	A/F sensor deterioration level
$05	$91	Multiply by 0.004	mA	A/F sensor current

HO2 Sensor (Bank 1 Sensor 2)

Monitor ID	Test ID	Scaling	Unit	Description
$02	$07	Multiply by 0.001	V	Minimum sensor voltage
$02	$08	Multiply by 0.001	V	Maximum sensor voltage
$02	$8F	Multiply by 0.0003	g	Maximum oxygen storage capacity

HO2 Sensor (Bank 2 Sensor 2)

Monitor ID	Test ID	Scaling	Unit	Description
$06	$07	Multiply by 0.001	V	Minimum sensor voltage
$06	$08	Multiply by 0.001	V	Maximum sensor voltage
$06	$8F	Multiply by 0.0003	g	Maximum oxygen storage capacity

Catalyst (Bank 1)

Monitor ID	Test ID	Scaling	Unit	Description
$21	$A9	Multiply by 0.0003	No dimension	Oxygen storage capacity of catalyst

Catalyst (Bank 2)

Monitor ID	Test ID	Scaling	Unit	Description
$22	$A9	Multiply by 0.0003	No dimension	Oxygen storage capacity of catalyst

EVAP

Monitor ID	Test ID	Scaling	Unit	Description
$3D	$C9	Multiply by 0.001	kPa	Test value for small leak (P0456)
$3D	$CA	Multiply by 0.001	kPa	Test value for gross leak (P0455)
$3D	$CB	Multiply by 0.001	kPa	Test value for leak detection pump stuck OFF (P2401)
$3D	$CD	Multiply by 0.001	kPa	Test value for leak detection pump stuck ON (P2402)
$3D	$CE	Multiply by 0.001	kPa	Test value for vent valve stuck OFF (P2420)
$3D	$CF	Multiply by 0.001	kPa	Test value for vent valve stuck ON (P2419)
$3D	$D0	Multiply by 0.001	kPa	Test value for reference orifice low flow (P043E)

Monitor ID	Test ID	Scaling	Unit	Description
$3D	$D1	Multiply by 0.001	kPa	Test value for reference orifice high flow (P043F)
$3D	$D4	Multiply by 0.001	kPa	Test value for purge VSV stuck closed (P0441)
$3D	$D5	Multiply by 0.001	kPa	Test value for purge VSV stuck open (P0441)
$3D	$D7	Multiply by 0.001	kPa	Test value for purge flow insufficient (P0441)

Rear Oxygen Sensor Heater

Monitor ID	Test ID	Scaling	Unit	Description
$42	$91	Multiply by 0.001	Ohm	Oxygen sensor heater resistance bank 1 sensor 2
$46	$91	Multiply by 0.001	Ohm	Oxygen sensor heater resistance bank 2 sensor 2

Misfire

Monitor ID	Test ID	Scaling	Unit	Description
$A1	$0B	Multiply by 1	Time	Exponential Weighted Moving Average (EWMA) misfire for all cylinders: EWMA = Total misfire counts for last driving cycle * 0.1 + Last EWMA * 0.9 Misfire counts for last 10 driving cycles - Total
$A1	$0C	Multiply by 1	Time	Ignition switch ON: Total misfire counts for last driving cycle Engine running: Total misfire counts for current driving cycle Misfire counts for last or current driving cycle - all cylinders
$A2	$0B	Multiply by 1	Time	Exponential Weighted Moving Average (EWMA) misfire for cylinder 1: EWMA = Total misfire counts for last driving cycle * 0.1 + Last EWMA * 0.9 Misfire counts for last 10 driving cycles - Total
$A2	$0C	Multiply by 1	Time	Ignition switch ON: Total misfire counts for last driving cycle Engine running: Total misfire counts for current driving cycle Misfire counts for last or current driving cycle - cylinder 1
$A3	$0B	Multiply by 1	Time	Exponential Weighted Moving Average (EWMA) misfire for cylinder 2: EWMA = Total misfire counts for last driving cycle * 0.1 + Last EWMA * 0.9 Misfire counts for last 10 driving cycles - Total
$A3	$0C	Multiply by 1	Time	Ignition switch ON: Total misfire counts for last driving cycle Engine running: Total misfire counts for current driving cycle Misfire counts for last or current driving cycle - cylinder 2
$A4	$0B	Multiply by 1	Time	Exponential Weighted Moving Average (EWMA) misfire for cylinder 3: EWMA = Total misfire counts for last driving cycle * 0.1 + Last EWMA * 0.9 Misfire counts for last 10 driving cycles - Total
$A4	$0C	Multiply by 1	Time	Ignition switch ON: Total misfire counts for last driving cycle Engine running: Total misfire counts for current driving cycle Misfire counts for last or current driving cycle - cylinder 3
$A5	$0B	Multiply by 1	Time	Exponential Weighted Moving Average (EWMA) misfire for cylinder 4: EWMA = Total misfire counts for last driving cycle * 0.1 + Last EWMA * 0.9 Misfire counts for last 10 driving cycles - Total
$A5	$0C	Multiply by 1	Time	Ignition switch ON: Total misfire counts for last driving cycle Engine running: Total misfire counts for current driving cycle Misfire counts for last or current driving cycle - cylinder 4
$A6	$0B	Multiply by 1	Time	Exponential Weighted Moving Average (EWMA) misfire for cylinder 5: EWMA = Total misfire counts for last driving cycle * 0.1 + Last EWMA * 0.9 Misfire counts for last 10 driving cycles - Total
$A6	$0C	Multiply by 1	Time	Ignition switch ON: Total misfire counts for last driving cycle Engine running: Total misfire counts for current driving cycle Misfire counts for last or current driving cycle - cylinder 5

Monitor ID	Test ID	Scaling	Unit	Description
$A7	$0B	Multiply by 1	Time	Exponential Weighted Moving Average (EWMA) misfire for cylinder 6: EWMA = Total misfire counts for last driving cycle * 0.1 + Last EWMA * 0.9 Misfire counts for last 10 driving cycles - Total
$A7	$0C	Multiply by 1	Time	Ignition switch ON: Total misfire counts for last driving cycle Engine running: Total misfire counts for current driving cycle Misfire counts for last or current driving cycle - cylinder 6

READINESS MONITOR DRIVE PATTERN

1. PURPOSE OF READINESS TESTS

- The On-Board Diagnostic (OBD II) system is designed to monitor the performance of emission related components, and indicate any detected abnormalities with DTC (Diagnostic Trouble Codes). Since various components need to be monitored during different driving conditions, the OBD II system is designed to run separate monitoring programs called Readiness Monitors.
- The intelligent tester's software must be version 9.0 or newer to view the Readiness Monitor Status. To view the status, select the following menu items: DIAGNOSIS / ENHANCED OBD II / MONITOR INFO / MONITOR STATUS.
- When the Readiness Monitor status reads COMPL (complete), the necessary conditions have been met for running the performance tests for that Readiness Monitor.
- A generic OBD II scan tool can also be used to view the Readiness Monitor status.

HINT:

Many state Inspection and Maintenance (I/M) programs require a vehicle's Readiness Monitor status to show COMPL before beginning emission tests.

The Readiness Monitor will be reset to INCMPL (incomplete) if:

- The ECM has lost battery power or blown a fuse.
- DTCs have been cleared.
- The conditions for running the Readiness Monitor have not been met.

If the Readiness Monitor status shows INCMPL, follow the appropriate Readiness Monitor Drive Pattern to change the status to COMPL.

CAUTION:

Strictly observe posted speed limits, traffic laws, and road conditions when performing these drive patterns.

NOTICE:

These drive patterns represent the fastest method of satisfying all conditions necessary to achieve complete status for each specific Readiness Monitor.

In the event of a drive pattern being interrupted (possibly due to factors such as traffic conditions), the drive pattern can be resumed. In most cases, the Readiness Monitor will still achieve complete status upon completion of the drive pattern.

To ensure completion of the Readiness Monitors, avoid sudden changes in vehicle load and speed (driving up and down hills and/or sudden acceleration).

2. CATALYST MONITOR (ACTIVE AIR-FUEL RATIO CONTROL TYPE)

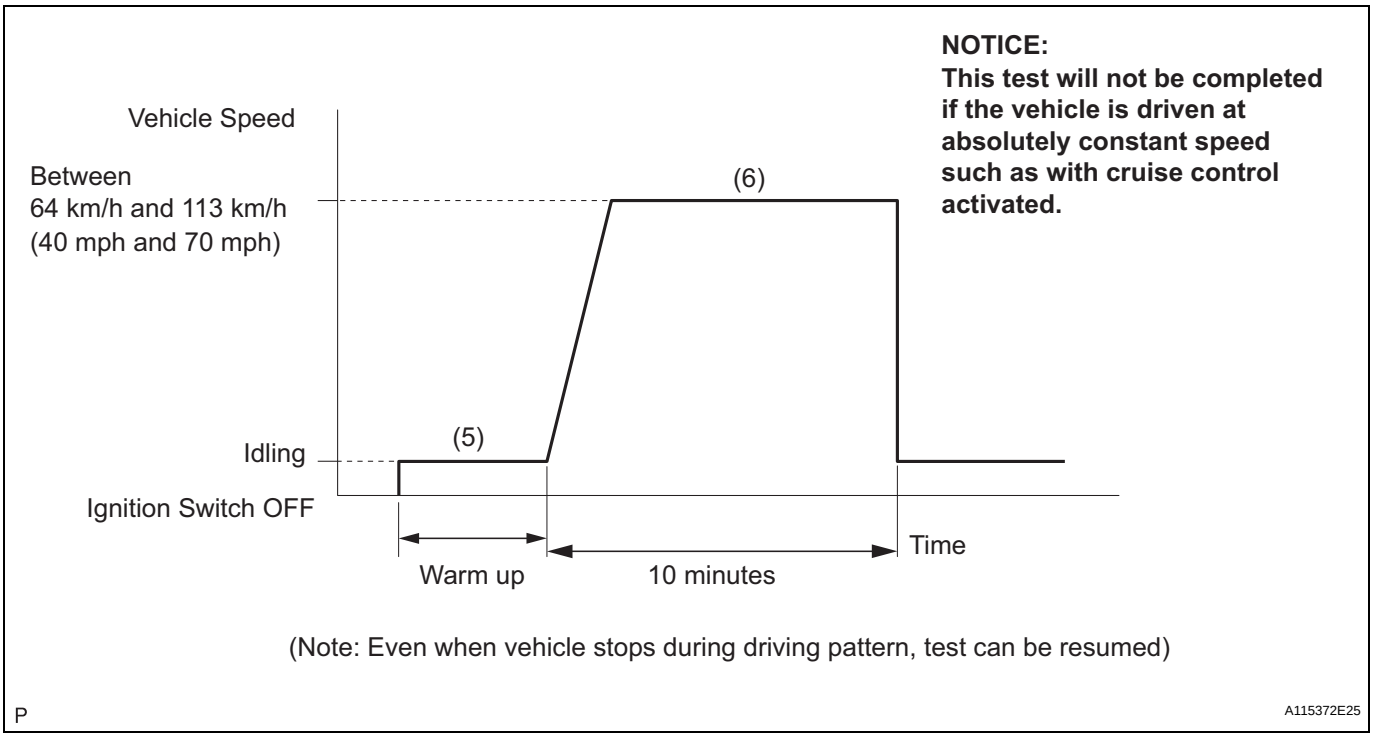

(a) Preconditions
The monitor will not run unless:
- The MIL is OFF.

(b) Drive Pattern
(1) Connect the intelligent tester to the DLC3.
(2) Turn the ignition switch ON.
(3) Turn the tester ON.
(4) Clear DTCs (if set) (see page ES-39).
(5) Start the engine and warm it up.
(6) Drive the vehicle at between 40 mph and 70 mph (64 km/h and 113 km/h) for at least 10 minutes.

(c) Monitor Status
Check the Readiness Monitor status displayed on the tester.
If the status does not switch to COMPL (complete), extend the driving time.

3. EVAP SYSTEM MONITOR (KEY OFF TYPE)

(a) Preconditions
The monitor will not run unless:
– The fuel tank is less than 90% full.
– The altitude is less than 8,000 ft. (2,450 m).
– The vehicle is stationary.
– The engine coolant temperature is between 4.4°C and 35°C (40°F and 95°F).
– The intake air temperature is between 4.4°C and 35°C (40°F and 95°F).
– Vehicle was driven in a city area (or on freeway) for 10 minutes or more.

(b) Monitor Conditions
(1) Turn the ignition switch OFF and wait for 6 hours.
HINT:
Do not start the engine until checking Readiness Monitor status. If the engine is started, the step described above must be repeated.

(c) Monitor Status
(1) Connect the intelligent tester to the DLC3.
(2) Turn the ignition switch ON.
(3) Turn the tester ON.
(4) Check the Readiness Monitor status displayed on the tester.

If the status does not switch to COMPL (complete), restart the engine, make sure that the preconditions have been met, and then perform the Monitor Conditions again.

ES

4. AIR-FUEL RATIO (A/F) AND HEATED OXYGEN (HO2) SENSOR MONITORS (ACTIVE AIR-FUEL RATIO CONTROL TYPE)

Monitor Drive Pattern

ECT: 75°C (167°F) or more

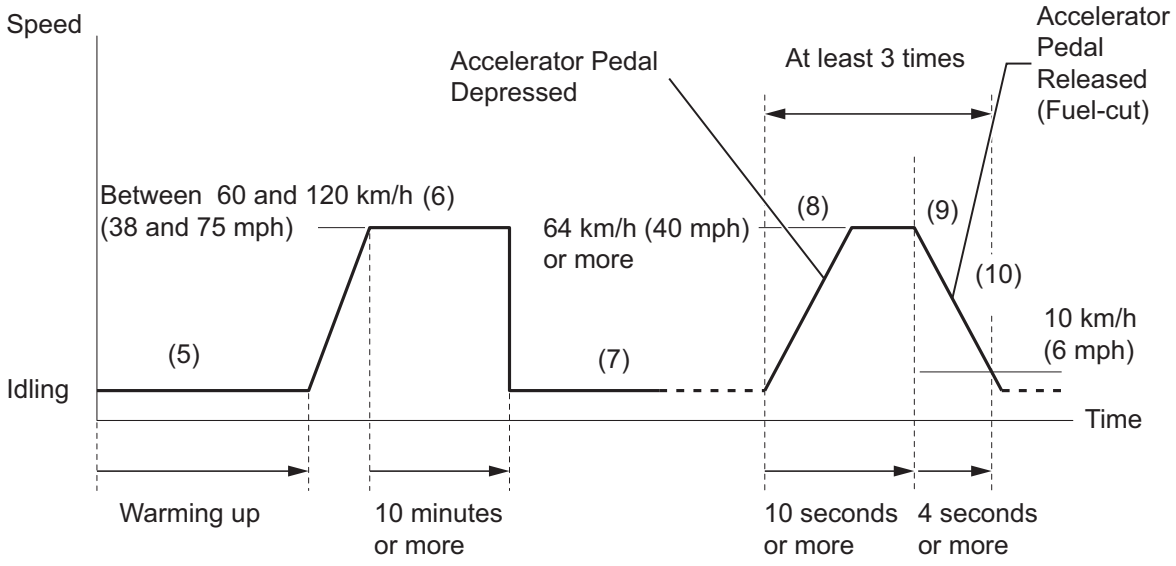

P A115374E08

(a) Preconditions
The monitor will not run unless:
– 2 minutes or more have elapsed since the engine was started.
– The Engine Coolant Temperature (ECT) is 75°C (167°F) or more.
– Cumulative driving time at a vehicle speed of 48 km/h (30 mph) or more exceeds 6 minutes.

– Air-fuel ratio feedback control is performed.

(b) Drive Pattern for front A/F sensor and HO2 sensor
(1) Connect the intelligent tester to the DLC3.
(2) Turn the ignition switch ON.
(3) Turn the tester ON.
(4) Clear DTCs (see page ES-39).
(5) Start the engine, and warm it up until the ECT reaches 75°C (167°F) or higher.
(6) Drive the vehicle at between 60 km/h (38 mph) and 120 km/h (75 mph) for at least 10 minutes.
(7) Change the transmission to 2nd gear.
(8) Accelerate the vehicle to 64 km/h (40 mph) or more by depressing the accelerator pedal for at least 10 seconds.
(9) Soon after performing step (8) above, release the accelerator pedal for at least 4 seconds without depressing the brake pedal in order to execute fuel-cut control.
(10) Allow the vehicle to decelerate until the vehicle speed declines to less than 10 km/h (6 mph).
(11) Repeat steps from (8) through (10) above at least 3 times in one driving cycle.

(c) Monitor Status
(1) Check the Readiness Monitor status displayed on the tester.
(2) If the status does not switch to COMPL (complete), make sure that the preconditions have been met, and then perform steps from (5) through (11) in the Drive Pattern above.

5. AIR-FUEL RATIO (A/F) AND HEATED OXYGEN (HO2) SENSOR HEATER MONITORS (FRONT A/F AND REAR HO2 SENSOR TYPE)

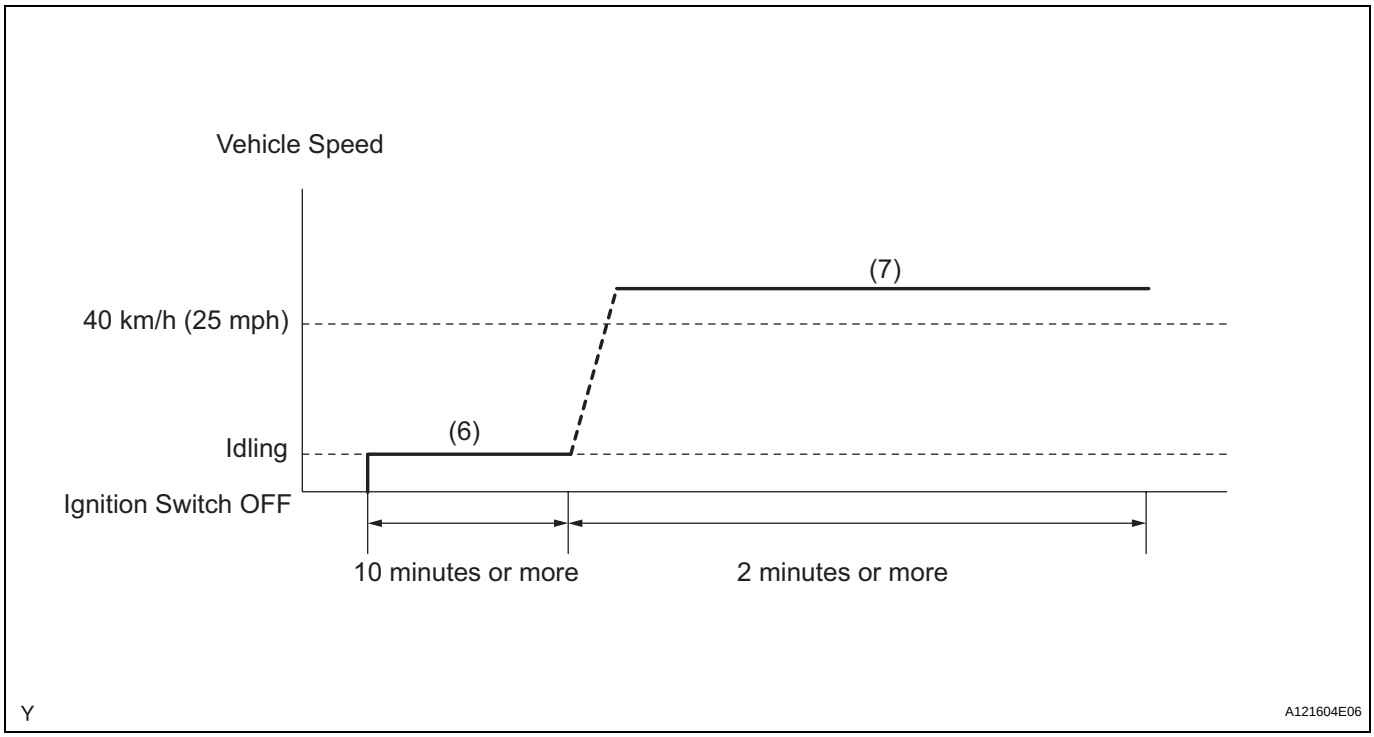

(a) Preconditions
The monitor will not run unless:
– The MIL is OFF.

(b) Drive Pattern
(1) Connect the intelligent tester to the DLC3.
(2) Turn the ignition switch ON.
(3) Turn the tester ON.
(4) Clear DTCs (if set) (see page ES-39).
(5) Start the engine.
(6) Allow the engine to idle for 10 minutes or more.
(7) Drive the vehicle at 40 km/h (25 mph) or more for at least 2 minutes.

(c) Monitor Status
(1) Check the Readiness Monitor status displayed on the tester.
If the status does not switch to COMPL (complete), make sure that the preconditions have been met, and repeat steps from (5) to (7) described in the Drive Pattern above.

PROBLEM SYMPTOMS TABLE

HINT:
Use the table below to help determine the cause of the problem symptom. The potential causes of the symptoms are listed in order of probability in the "Suspected area" column of the table. Check each symptom by checking the suspected areas in the order they are listed. Replace parts as necessary.

Symptom	Suspected area	See page
Engine does not crank (Does not start)	1. Battery	CH-5
	2. Starter	ST-8
	3. Starter relay	ST-16
	4. Park/neutral position switch	AX-132
	5. Immobiliser system	EI-3
No initial combustion (Does not start)	1. ECM power source circuit	ES-402
	2. Crankshaft position sensor	ES-448
	3. VVT sensor	ES-214
	4. Ignition system	IG-5
	5. Fuel pump control circuit	ES-414
	6. ECM	ES-470
	7. VC output circuit	ES-408
Engine cranks normally but difficult to start	1. Fuel pump control circuit	ES-414
	2. Compression	EM-3
Difficult to start with cold engine	1. Ignition system	IG-5
	2. Spark plug	IG-7
	3. Fuel pump control circuit	ES-414
	4. Injector	FU-15
Difficult to start with warm engine	1. Injector	FU-15
	2. Ignition system	IG-5
	3. Spark plug	IG-7
	4. Fuel pump control circuit	ES-414
High engine idle speed	1. Electronic throttle control system	ES-311
	2. A/C signal circuit	-
	3. ECM power source circuit	ES-402
	4. Acoustic Control Induction System (ACIS)	ES-423
Low engine idle speed (Poor idling)	1. Electronic throttle control system	ES-311
	2. A/C signal circuit	-
	3. Fuel pump control circuit	ES-414
	4. Air induction system	IT-5
	5. Acoustic Control Induction System (ACIS)	ES-423
	6. PCV hose	-

Symptom	Suspected area	See page
Rough idling	1. Compression	EM-3
	2. Spark plug	IG-7
	3. Injector	FU-15
	4. Ignition system	IG-5
	5. Fuel pump control circuit	ES-414
	6. Electronic throttle control system	ES-311
	7. Air induction system	IT-5
	8. Acoustic Control Induction System (ACIS)	ES-423
	9. PCV hose	-
	10. Mass air flow meter	ES-435
Idle hunting	1. Electronic throttle control system	ES-311
	2. Air induction system	IT-5
	3. ECM power source circuit	ES-402
	4. Acoustic Control Induction System (ACIS)	ES-423
Hesitation/Poor acceleration	1. Fuel pump control circuit	ES-414
	2. Spark plug	IG-7
	3. Ignition system	IG-5
	4. Injector	FU-15
	5. Mass air flow meter	ES-435
	6. Electronic throttle control system	ES-311
	7. Air induction system	IT-5
	8. Compression	EM-3
	9. Air Intake Control System (AICS)	ES-426
Surging (Poor driveability)	1. Spark plug	IG-7
	2. Fuel pump control circuit	ES-414
	3. Ignition system	IG-5
	4. Injector	FU-15
	5. Mass air flow meter	ES-435
	6. Variable valve timing system	ES-439
	7. Compression	EM-3
Engine stalls soon after starting	1. Fuel pump control circuit	ES-414
	2. Spark plug	IG-7
	3. Ignition system	IG-5
	4. Injector	FU-15
	5. Variable valve timing system	ES-439
	6. Electronic throttle control system	ES-311
	7. Air induction system	IT-5
	8. PCV hose	-
	9. Compression	EM-3
Engine stalls only during A/C operation	1. A/C signal circuit	-
	2. ECM	ES-470
Unable/difficult to refuel	1. Refueling valve (canister)	-

TERMINALS OF ECM

1. CHECK ECM

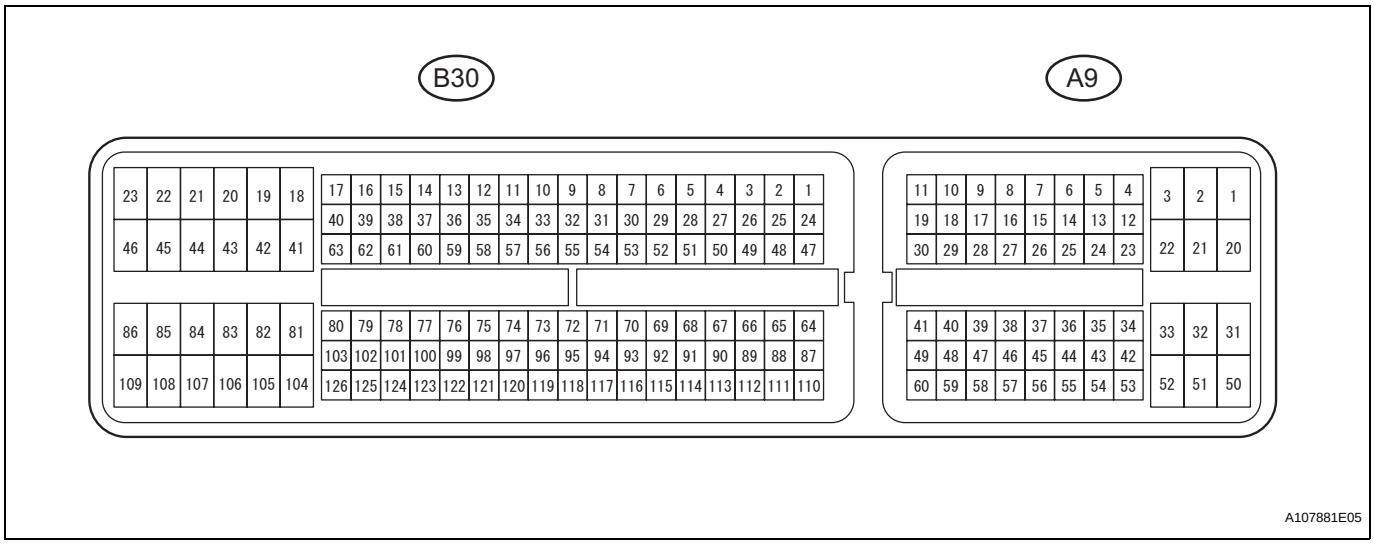

(a) Measure the voltage of the ECM connector.
HINT:
The standard normal voltage between each pair of ECM terminals is shown in the table below. The appropriate conditions for checking each pair of terminals are also indicated. The result of checks should be compared with the standard normal voltage for that pair of terminals, displayed in the Specified Condition column. The illustration above can be used as a reference to identify the ECM terminal locations.

Symbol (Terminal No.)	Wiring Color	Terminal Description	Condition	Specified Condition
BATT (A9-20) - E1 (B30-81)	W - BR	Battery (for measuring battery voltage and for ECM memory)	Always	9 to 14 V
+BM (A9-3) - E1 (B30-81)	LG - BR	Power source of throttle actuator	Always	9 to 14 V
IGSW (A9-28) - E1 (B30-81)	B - BR	Ignition switch	Ignition switch ON	9 to 14 V
+B (A9-2) - E1 (B30-81)	B - BR	Power source of ECM	Ignition switch ON	9 to 14 V
+B2 (A9-1) - E1 (B30-81)	B - BR	Power source of ECM	Ignition switch ON	9 to 14 V
OC1+ (B30-58) - OC1- (B30-57)	W - B	Camshaft timing oil control valve (OCV)	Ignition switch ON	Pulse generation (see waveform 1)
OC2+ (B30-52) - OC2- (B30-51)	BR - B	Camshaft timing oil control valve (OCV) (Intake side (bank 2))	Ignition switch ON	Pulse generation (see waveform 1)
OE1+ (B30-56) - OE1- (B30-55)	R - LG	Camshaft timing oil control valve (OCV) (Exhaust side (bank 1))	Ignition switch ON	Pulse generation (see waveform 1)
OE2+ (B30-50) - OE2- (B30-49)	W - B	Camshaft timing oil control valve (OCV) (Exhaust side (bank 2))	Ignition switch ON	Pulse generation (see waveform 1)
MREL (A9-44) - E1 (B30-81)	O - BR	EFI relay	Ignition switch ON	9 to 14 V
VG (B30-72) - E2G (B30-73)	GR - L-G	Mass air flow meter	Idling, Shift lever position P or N, A/C switch OFF	0.5 to 3.0 V
THA (B30-71) - ETHA (B30-74)	P - G-R	Intake air temperature sensor	Idling, Intake air temperature 20°C (68°F)	0.5 to 3.4 V

ES

Symbol (Terminal No.)	Wiring Color	Terminal Description	Condition	Specified Condition
THW (B30-79) - ETHW (B30-78)	L - BR	Engine coolant temperature sensor	Idling, Engine coolant temperature 80°C (176°F)	0.2 to 1.0 V
VCTA (B30-96) - ETA (B30-97)	B - W	Power source of throttle position sensor (specific voltage)	Ignition switch ON	4.5 to 5.5 V
VTA1 (B30-98) - ETA (B30-97)	Y - W	Throttle position sensor (for engine control)	Ignition switch ON, Throttle valve fully closed	0.5 to 1.1 V
			Ignition switch ON, Throttle valve fully open	3.3 to 4.9 V
VTA2 (B30-99) - ETA (B30-97)	GR - W	Throttle position sensor (for sensor malfunction detection)	Ignition switch ON, Throttle valve fully closed	2.1 to 3.1 V
			Ignition switch ON, Throttle valve fully open	4.6 to 5.0 V
VPA (A9-55) - EPA (A9-59)	W - Y	Accelerator pedal position sensor (for engine control)	Ignition switch ON, Accelerator pedal released	0.5 to 1.1 V
			Ignition switch ON, Accelerator pedal fully depressed	2.6 to 4.5 V
VPA2 (A9-56) - EPA2 (A9-60)	R - O	Accelerator pedal position sensor (for sensor malfunctioning detection)	Ignition switch ON, Accelerator pedal released	1.2 to 2.0 V
			Ignition switch ON, Accelerator pedal fully depressed	3.4 to 5.0 V
VCPA (A9-57) - EPA (A9-59)	B - Y	Power source of accelerator pedal position sensor (for VPA)	Ignition switch ON	4.5 to 5.5 V
VCP2 (A9-58) - EPA2 (A9-60)	L - O	Power source of accelerator pedal position sensor (for VPA2)	Ignition switch ON	4.5 to 5.5 V
HA1A (B30-86) - E04 (B30-23) HA2A (B30-109) - E04 (B30-23)	G - BR B - BR	A/F sensor heater	Idling	Below 3.0 V
			Ignition switch ON	9 to 14 V
A1A+ (B30-93) - E1 (B30-81)	W -BR	A/F sensor	Ignition switch ON	3.3 V*
A1A- (B30-116) - E1 (B30-81)	BR - BR	A/F sensor	Ignition switch ON	3.0 V*
A2A+ (B30-120) - E1 (B30-81)	L - BR	A/F sensor	Ignition switch ON	3.3 V*
A2A- (B30-119) - E1 (B30-81)	Y - BR	A/F sensor	Ignition switch ON	3.0 V*
HT1B (B30-48) - E03 (B30-104) HT2B (B30-47) - E03 (B30-104)	LG - BR Y - BR	Heated oxygen sensor heater	Idling	Below 3.0 V
			Ignition switch ON	9 to 14 V
OX1B (B30-88) - EX1B (B30-65) OX2B (B30-87) - EX2B- (B30-64)	W - GR B - B-W	Heated oxygen sensor	Engine speed maintained at 2,500 rpm for 2 minutes after warming up sensor	Pulse generation (see waveform 2)
#10 (B30-45) - E01 (B30-22) #20 (B30-85) - E01 (B30-22) #30 (B30-44) - E01 (B30-22) #40 (B30-84) - E01 (B30-22) #50 (B30-43) - E01 (B30-22) #60 (B30-83) - E01 (B30-22)	Y - BR W - BR B - BR BR - BR L - BR G - BR	Injector	Ignition switch ON	9 to 14 V
			Idling	Pulse generation (see waveform 3)
KNK1 (B30-95) - EKNK (B30-94) KNK2 (B30-118) - EKN2 (B30-117)	R - G B - W	Knock sensor	Engine speed maintained at 4,000 rpm after warming up engine	Pulse generation (see waveform 4)
VCV1 (B30-115) - E1 (B30-81)	G-R - BR	Power source for VVT sensor (specific voltage)	Ignition switch ON	4.5 to 5.0 V
VCV2 (B30-113) - E1 (B30-81)	V - BR	Power source for VVT sensor (specific voltage)	Ignition switch ON	4.5 to 5.0 V
VCE1 (B30-114) - E1 (B30-81)	GR - BR	Power source for VVT sensor specific voltage)	Ignition switch ON	4.5 to 5.0 V
VCE2 (B30-112) - E1 (B30-81)	Y - BR	Power source for VVT sensor (specific voltage)	Ignition switch ON	4.5 to 5.0 V
VV1+ (B30-69) - VV1- (B30-92)	P - L-B	Variable valve timing (VVT) sensor (Intake side (bank 1))	Idling	Pulse generation (see waveform 5)

ES

Symbol (Terminal No.)	Wiring Color	Terminal Description	Condition	Specified Condition
VV2+ (B30-67) - VV2- (B30-90)	W - B	Variable valve timing (VVT) sensor (Intake side (bank 2))	Idling	Pulse generation (see waveform 5)
EV1+ (B30-68) - EV1- (B30-91)	Y - G	Variable valve timing (VVT) sensor (Exhaust side (bank 1))	Idling	Pulse generation (see waveform 5)
EV2+ (B30-66) - EV2- (B30-89)	R - L	Variable valve timing (VVT) sensor (Exhaust side (bank 2))	Idling	Pulse generation (see waveform 5)
NE+ (B30-110) - NE- (B30-111)	G - R	Crankshaft position sensor	Idling	Pulse generation (see waveform 5)
IGT1 (B30-40) - E1 (B30-81) IGT2 (B30-39) - E1 (B30-81) IGT3 (B30-38) - E1 (B30-81) IGT4 (B30-37) - E1 (B30-81) IGT5 (B30-36) - E1 (B30-81) IGT6 (B30-35) - E1 (B30-81)	W - BR G-R - BR G - BR LG - BR P - BR V - BR	Ignition coil (ignition signal)	Idling	Pulse generation (see waveform 6)
IGF1 (B30-106) - E1 (B30-81)	Y - BR	Ignition coil (ignition confirmation signal)	Ignition switch ON	4.5 to 5.5 V
			Idling	Pulse generation (see waveform 6)
PRG (B30-108) - E1 (B30-81)	LG - BR	Purge VSV	Ignition switch ON	9 to 14 V
			Idling	Pulse generation (see waveform 7)
SPD (A9-8) - E1 (B30-81)	V - BR	Speed signal from combination meter	Driving at 20 km/h (12 mph)	Pulse generation (see waveform 8)
STA (A9-48) - E1 (B30-81)	LG - BR	Starter signal	Cranking	5.5 V or more
NSW (B30-62) - E1 (B30-81)	G-R - BR	Starter relay control	Ignition switch ON	Below 1.5 V
			Cranking	6.0 V or more
STP (A9-36) - E1 (B30-81)	L - BR	Stop light switch	Brake pedal depressed	7.5 to 14 V
			Brake pedal released	Below 1.5 V
ST1- (A9-35) - E1 (B30-81)	GR - BR	Stop light switch (opposite to STP terminal)	Ignition switch ON, Brake pedal depressed	Below 1.5 V
			Ignition switch ON, Brake pedal released	7.5 to 14 V
M+ (B30-19) - ME01 (B30-20)	G - BR	Throttle actuator	Idling with warm engine	Pulse generation (see waveform 9)
M- (B30-18) - ME01 (B30-20)	R - BR	Throttle actuator	Idling with warm engine	Pulse generation (see waveform 10)
FC (A9-7) - E1 (B30-81)	W - BR	Fuel pump control	Ignition switch ON	9 to 14 V
			Idling	Below 1.5 V
FPR (B30-59) - E1 (B30-81)	W - BR	Fuel pump control	Cranking	9 to 14 V
FPR (B30-59) - E1 (B30-81)	W - BR	Fuel pump control	Idling	9 to 14 V
W (A9-24) - E1 (B30-81)	R - BR	MIL	Ignition switch ON	Below 1.5 V
			Idling	9 to 14 V
TC (A9-27) - E1 (B30-81)	G - BR	Terminal TC of DLC3	Ignition switch ON	9 to 14 V
TACH (A9-15) - E1 (B30-81)	GR - BR	Engine speed	Idling	Pulse generation (see waveform 11)
VPMP (A9-42) - E1 (B30-81)	W - BR	Vent valve (built into canister pump module)	Ignition switch ON	9 to 14 V
MPMP (A9-34) - E1 (B30-81)	B - BR	Leak detection pump (built into canister pump module)	Leak detection pump OFF	Below 3 V
			Leak detection pump ON	9 to 14 V
VCPP (B30-75) - EPPM (B30-76)	V - BR	Power source for canister pressure sensor (specific voltage)	Ignition switch ON	4.5 to 5.5 V

ES

Symbol (Terminal No.)	Wiring Color	Terminal Description	Condition	Specified Condition
PPMP (B30-77) - EPPM (B30-76)	L - BR	Canister pressure sensor (built into canister pump module)	Ignition switch ON	3 to 3.6 V
ELS (A9-31) - E1 (B30-81)	O - BR	Electric load	Taillight switch ON	7.5 to 14 V
			Taillight switch OFF	Below 1.5 V
ELS2 (A9-33) - E1 (B30-81)	G - BR	Electric load	Defogger switch ON	7.5 to 14 V
			Defogger switch OFF	Below 1.5 V
ALT (B30-32) - E1 (B30-81)	P - BR	Generator	Ignition switch ON	9 to 14 V
CANH (A9-41) - E1 (B30-81)	Y - BR	CAN communication line	Ignition switch ON	Pulse generation (see waveform 12)
CANL (A9-49) - E1 (B30-81)	W - BR	CAN communication line	Ignition switch ON	Pulse generation (see waveform 13)
VCIB (B30-80) - EIB (B30-101)	LG - P	Battery current sensor	Ignition switch ON	4.5 to 5.5 V
IB (B30-100) - EIB (B30-101)	R - P	Battery current sensor	Ignition switch ON	0.5 to 2.5 V
THB (B30-103) - EIB (B30-101)	G-R - P	Battery temperature sensor	Ignition switch ON, battery temperature -30 to 80°C (-22 to 176°F)	0.5 to 4.5 V
RLO (B30-31) - E1 (B30-81)	Y - BR	Generator	After engine warmed up, during charging control, vehicle driven at constant speed	Pulse generation (see waveform 14)
RLO (B30-31) - E1 (B30-81)	Y - BR	Generator	After engine warmed up, during charging control, vehicle accelerated	Pulse generation (see waveform 15)
RLO (B30-31) - E1 (B30-81)	Y - BR	Generator	After engine warmed up, during charging control, vehicle decelerated	Pulse generation (see waveform 16)
AICV (A9-4) - E1 (B30-81)	L - BR	VSV for air intake control system operation signal	Ignition switch ON	9 to 14 V
ACIS (B30-107) - E1 (B30-81)	R - BR	VSV for ACIS (Acoustic Control Induction System) operation signal	Ignition switch ON	9 to 14 V

ES

HINT:
*: The ECM terminal voltage is constant regardless of the output voltage from the sensor.

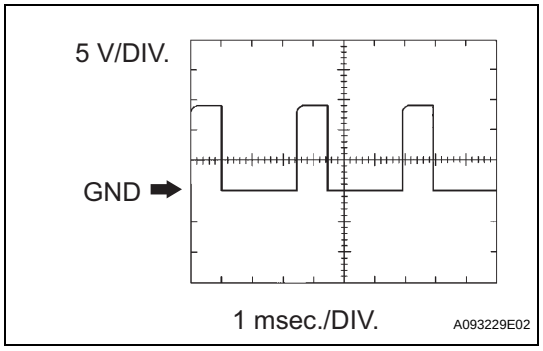

(b) WAVEFORM 1
Camshaft timing oil control valve (OCV)

Symbol (Terminal No.)	Between OC1+ and OC1- Between OC2+ and OC2- Between OE1+ and OE1- Between OE2+ and OE2-
Tester Range	5 V/DIV., 1 msec./DIV.
Condition	Idling

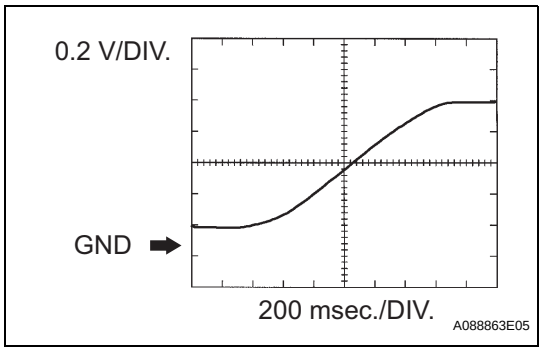

(c) WAVEFORM 2
Heated oxygen sensor

Symbol (Terminal No.)	Between OX1B and EX1B Between OX2B and EX2B
Tester Range	0.2 V/DIV., 200 msec./DIV.
Condition	Engine speed maintained at 2,500 rpm for 2 minutes after warming up sensor

HINT:
In DATA LIST, item O2S B1 S2 shows the ECM input values from the heated oxygen sensor.

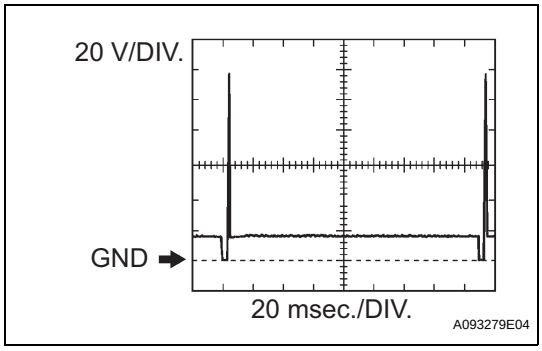

(d) WAVEFORM 3
Injector No. 1 (to No. 4) injection signal

Symbol (Terminal No.)	Between #10 (to #60) and E01
Tester Range	20 V/DIV., 20 msec./DIV.
Condition	Idling

HINT:
The wavelength becomes shorter as the engine rpm increases.

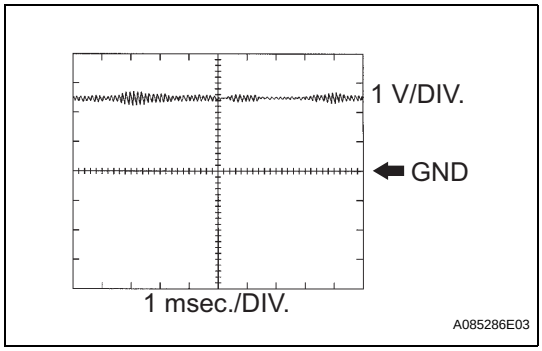

(e) WAVEFORM 4
Knock sensor

Symbol (Terminal No.)	Between KNK1 and EKNK Between KNK2 and EKN2
Tester Range	1 V/DIV., 1 msec./DIV.
Condition	Engine speed maintained at 4,000 rpm after warming up engine

HINT:
- The wavelength becomes shorter as the engine rpm increases.
- The waveforms and amplitudes displayed differ slightly depending on the vehicle.

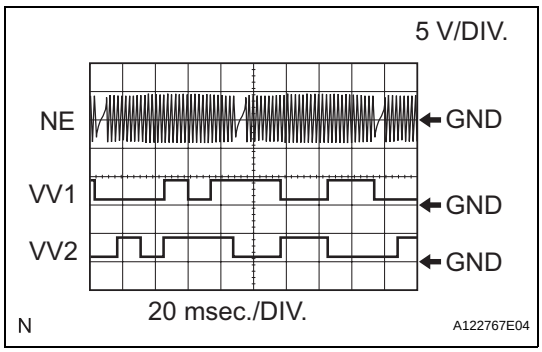

(f) WAVEFORM 5
Crankshaft position sensor and Camshaft position sensor

Symbol (Terminal No.)	Between NE+ and NE- Between VV1+ and VV1- Between EV1+ and EV1- Between VV2+ and VV2- Between EV2+ and EV2-
Tester Range	5 V/DIV., 20 msec./DIV.
Condition	Idling

HINT:
The wavelength becomes shorter as the engine rpm increases.

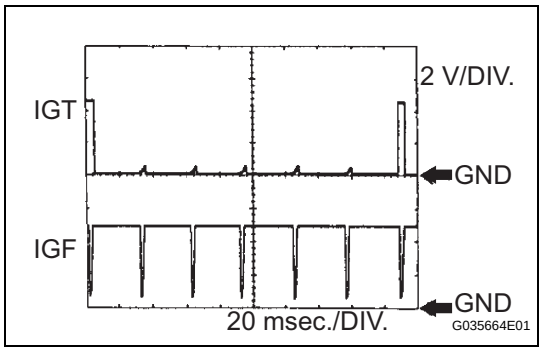

(g) WAVEFORM 6
Igniter IGT signal (from ECM to igniter) and Igniter IGF signal (from igniter to ECM)

Symbol (Terminal No.)	Between IGT (1 to 6) and E1 Between IGF1 and E1
Tester Range	2 V/DIV., 20 msec./DIV.
Condition	Idling

HINT:
The wavelength becomes shorter as the engine rpm increases.

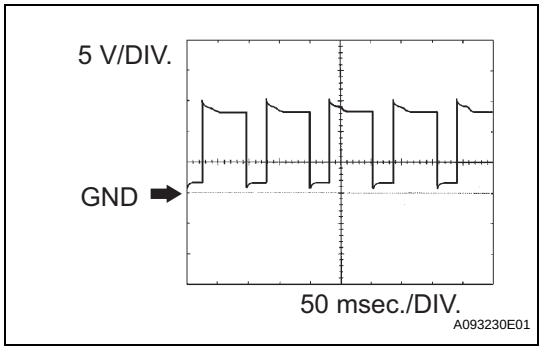

(h) WAVEFORM 7
Purge VSV

Symbol (Terminal No.)	Between PRG and E1
Tester Range	5 V/DIV., 50 msec./DIV.
Condition	Idling

HINT:
If the waveform is not similar to the illustration, check the waveform again after idling for 10 minutes or more.

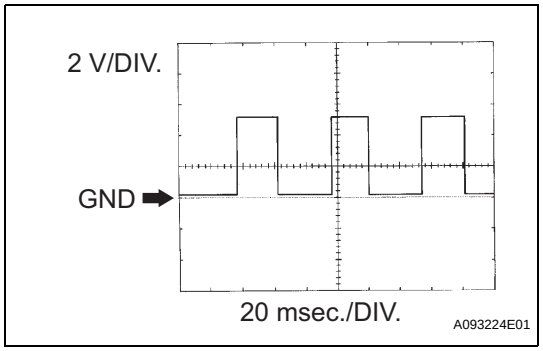

(i) WAVEFORM 8
Vehicle speed signal

Symbol (Terminal No.)	Between SPD and E1
Tester Range	2 V/DIV., 20 msec./DIV.
Condition	Driving at 20 km/h (12 mph)

HINT:
The wavelength becomes shorter as the vehicle speed increases.

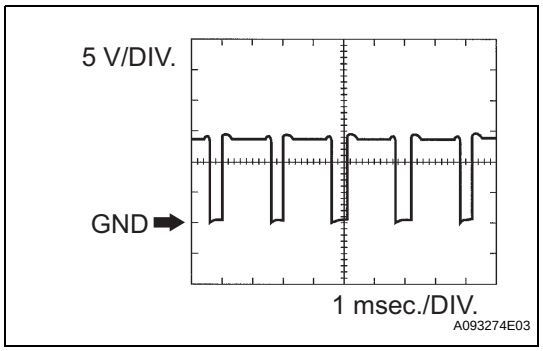

(j) WAVEFORM 9
Throttle actuator positive terminal

Symbol (Terminal No.)	Between M+ and ME01
Tester Range	5 V/DIV., 1 msec./DIV.
Condition	Idling with warm engine

HINT:
The duty ratio varies depending on the throttle actuator operation.

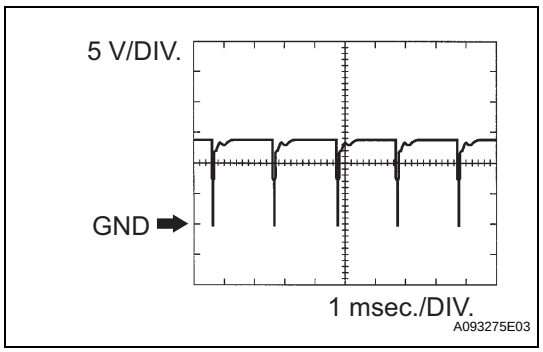

(k) WAVEFORM 10
Throttle actuator negative terminal

Symbol (Terminal No.)	Between M- and ME01
Tester Range	5 V/DIV., 1 msec./DIV.
Condition	Idling with warm engine

HINT:
The duty ratio varies depending on the throttle actuator operation.

ES

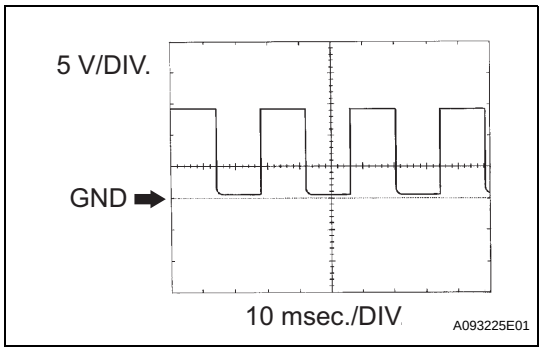

(l) WAVEFORM 11
Engine speed signal

Symbol (Terminal No.)	Between TACH and E1
Tester Range	5 V/DIV., 10 msec./DIV.
Condition	Idling

HINT:
The wavelength becomes shorter as the engine rpm increases.

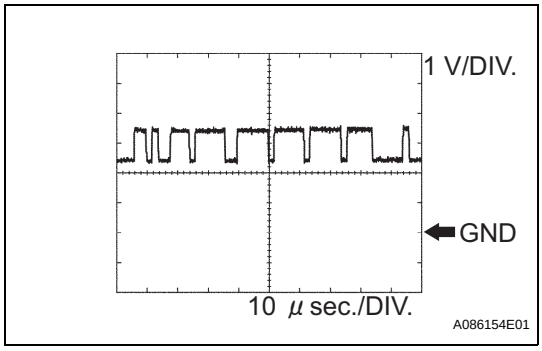

(m) WAVEFORM 12
CAN communication signal

Symbol (Terminal No.)	Between CANH and E1
Tester Range	1 V/DIV., 10 μsec./DIV.
Condition	Engine stops and ignition switch ON

HINT:
The waveform varies depending on the CAN communication signal.

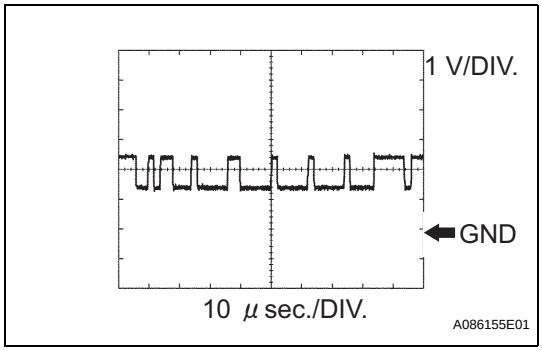

(n) WAVEFORM 13
CAN communication signal

Symbol (Terminal No.)	Between CANL and E1
Tester Range	1 V/DIV., 10 μsec./DIV.
Condition	Engine stops and ignition switch ON

HINT:
The waveform varies depending on the CAN communication signal.

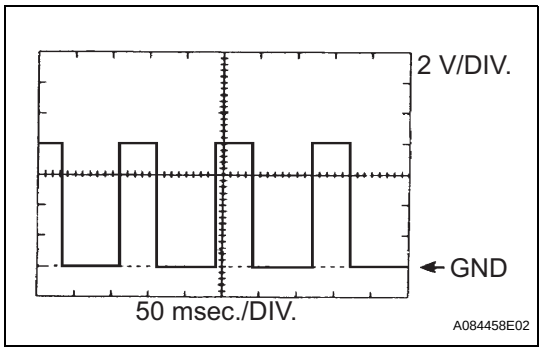

(o) WAVEFORM 14
Generator

Symbol (Terminal No.)	Between RLO and E1
Tester Range	2 V/DIV., 50 msec./DIV.
Condition	After engine warmed up, during charging control, vehicle driven at constant speed

HINT:
A constant value is not output, as the duty ratio varies depending on the electrical load and battery condition.

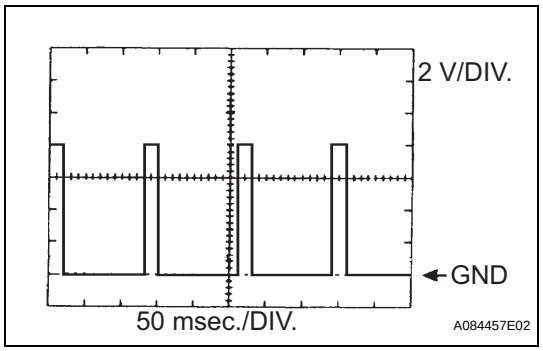

(p) WAVEFORM 15
Generator

Symbol (Terminal No.)	Between RLO and E1
Tester Range	2 V/DIV., 50 msec./DIV.
Condition	After engine warmed up, during charging control, vehicle accelerated

HINT:
A constant value is not output, as the duty ratio varies depending on the electrical load and battery condition.

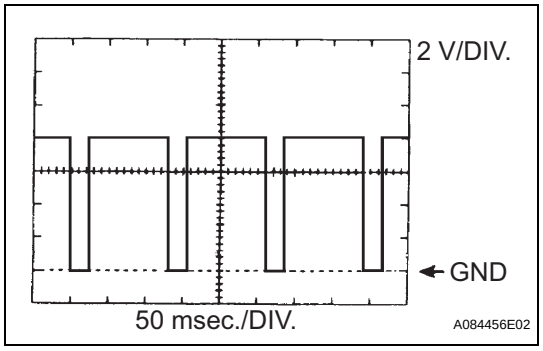

(q) WAVEFORM 16
Generator

Symbol (Terminal No.)	Between RLO and E1
Tester Range	2 V/DIV., 50 msec./DIV.
Condition	After engine warmed up, during charging control, vehicle decelerated

HINT:
A constant value is not output, as the duty ratio varies depending on the electrical load and battery condition.

DIAGNOSIS SYSTEM

1. DESCRIPTION

When troubleshooting OBD II (On-Board Diagnostics) vehicles, the intelligent tester (complying with SAE J1987) must be connected to the DLC3 (Data Link Connector 3) of the vehicle. Various data in the vehicle's ECM (Engine Control Module) can be then read.

OBD II regulations require that the vehicle's on-board computer illuminate the MIL (Malfunction Indicator Lamp) on the instrument panel when the computer detects a malfunction in:

(a) The emission control system components.
(b) The powertrain control components (which affect vehicle emissions).
(c) The computer itself.

In addition, if the applicable DTCs (Diagnostic Trouble Codes) prescribed by SAE J2012 are not recorded on 3 consecutive trips, the MIL turns off automatically but the DTCs remain recorded in the ECM memory.

To check DTCs, connect the intelligent tester to the DLC3. The tester displays DTCs, freeze frame data, and a variety of the engine data. The DTCs and freeze frame data can be erased with the tester (see page ES-39).

In order to enhance OBD function on vehicles and develop the Off-Board diagnosis system, CAN (Controller Area Network) communication is introduced in this system. It minimizes the gap between technician skills and vehicle technology. CAN is a network, which uses a pair of data transmission lines, spanning multiple computers and sensors. It allows high speed communication between the systems and simplifies the wire harness connection.

Since this system is equipped with the CAN communication, connecting the CAN VIM (Vehicle Interface Module) to the intelligent tester is necessary to display any information from the ECM. (Also the communication between the intelligent tester and the ECM uses CAN communication signals.) When confirming the DTCs and any data of the ECM, connect the CAN VIM between the DLC3 and the intelligent tester.

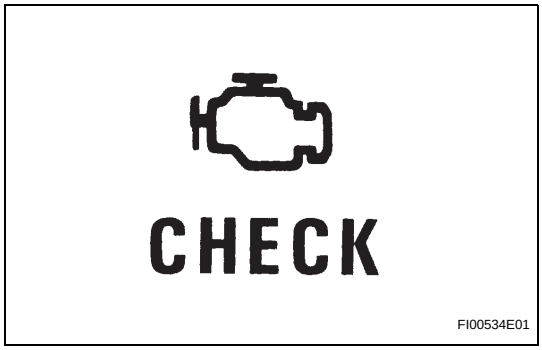

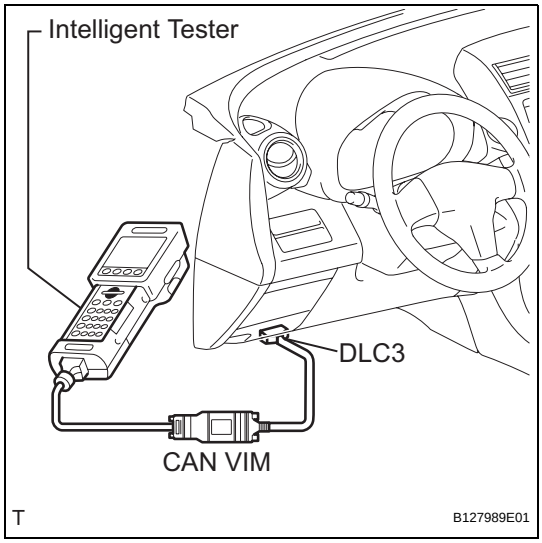

2. NORMAL MODE AND CHECK MODE

The diagnosis system operates in normal mode during normal vehicle use. In normal mode, 2 trip detection logic is used to ensure accurate detection of malfunctions. Check mode is also available as an option for technicians. In check mode, 1 trip detection logic is used for simulating malfunction symptoms and increasing the system's ability to detect malfunctions, including intermittent problems (intelligent tester only) (see page ES-42).

3. 2 TRIP DETECTION LOGIC

When a malfunction is first detected, the malfunction is temporarily stored in the ECM memory (1st trip). If the same malfunction is detected during the next subsequent drive cycle, the MIL is illuminated (2nd trip).

4. FREEZE FRAME DATA

Freeze frame data records the engine conditions (fuel system, calculated engine load, engine coolant temperature, fuel trim, engine speed, vehicle speed, etc.) when malfunctions are detected. When troubleshooting, freeze frame data can help determine if the vehicle was moving or stationary, if the engine was warmed up or not, if the air-fuel ratio was lean or rich, and other data from the time the malfunction occurred.

5. DLC3 (Data Link Connector 3)

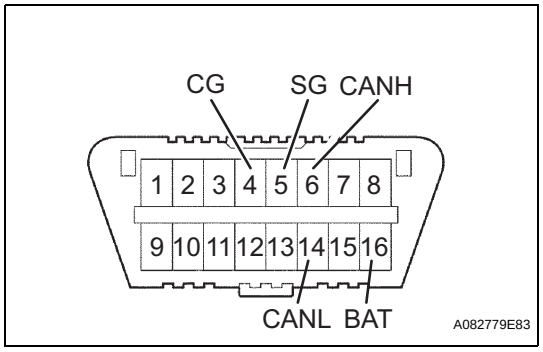

Symbol (Terminal No.)	Terminal Description	Condition	Specified Condition
SIL (7) - SG (5)	Bus "+" line	During transmission	Pulse generation
CG (4) - Body ground	Chassis ground	Always	Below 1 Ω
SG (5) - Body ground	Signal ground	Always	Below 1 Ω
BAT (16) - Body ground	Battery positive	Always	9 to 14 V
CANH (6) - CANL (14)	CAN bus line	Ignition switch OFF*	54 to 69 Ω
CANH (6) - Battery positive	HIGH-level CAN bus line	Ignition switch OFF*	6 kΩ or higher
CANH (6) - CG (4)	HIGH-level CAN bus line	Ignition switch OFF*	200 Ω or higher
CANL (14) - Battery positive	LOW-level CAN bus line	Ignition switch OFF*	6 kΩ or higher
CANL (14) - CG (4)	LOW-level CAN bus line	Ignition switch OFF*	200 Ω or higher

NOTICE:

***: Before measuring the resistance, leave the vehicle as is for at least 1 minute and do not operate the ignition switch, any other switches or the doors.**

If the result is not as specified, the DLC3 may have a malfunction. Repair or replace the harness and connector.

HINT:

The DLC3 is the interface prepared for reading various data from the vehicle's ECM. After connecting the cable of the intelligent tester to the CAN VIM, turn the ignition switch ON and turn the tester ON. If a communication failure message is displayed on the tester screen (on the tester: UNABLE TO CONNECT TO VEHICLE), a problem exists in either the vehicle or tester. In order to identify the location of the problem, connect the tester to another vehicle.

If communication is normal: Inspect the DLC3 on the original vehicle.
If communication is still not possible: The problem is probably in the tester itself. Consult the Service Department listed in the instruction manual.

6. BATTERY VOLTAGE

Standard battery voltage:

11 to 14 V

If the voltage is below 11 V, replace or recharge the battery before proceeding.

7. MIL (Malfunction Indicator Lamp)

(a) The MIL is illuminated when the ignition switch is first turned ON (the engine is not running).

(b) The MIL should turn OFF when the engine is started. If the MIL remains illuminated, the diagnosis system has detected a malfunction or abnormality in the system.
HINT:
If the MIL is not illuminated when the ignition switch is first turned ON, check the MIL circuit (see page ES-430).

8. ALL READINESS

For the vehicle, using the intelligent tester allows readiness codes corresponding to all DTCs to be read. When diagnosis (normal or malfunctioning) has been complete, readiness codes are set. Select the following menu items on the intelligent tester: ENHANCED OBD II / MONITOR STATUS.

DTC CHECK / CLEAR

NOTICE:
When the diagnosis system is changed from normal mode to check mode or vice versa, all DTCs and freeze frame data recorded in normal mode are erased. Before changing modes, always check and make a note of any DTCs and freeze frame data.
HINT:

- DTCs which are stored in the ECM can be displayed on the intelligent tester. The intelligent tester can display current and pending DTCs.
- Some DTCs are not set if the ECM does not detect the same malfunction again during a second consecutive driving cycle. However, such malfunctions, detected on only one occasion, are stored as pending DTCs.

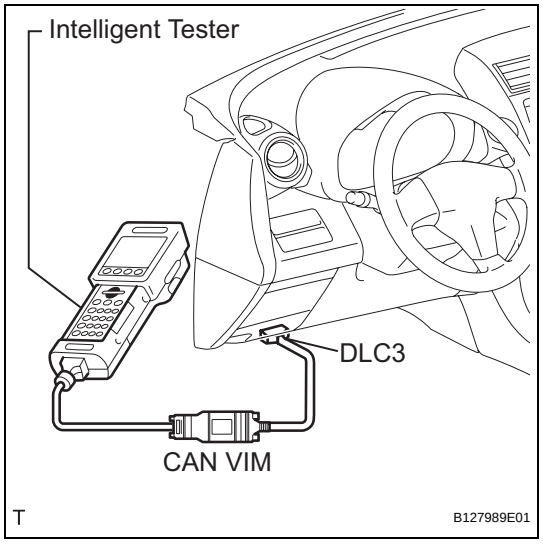

1. CHECK DTC (Using intelligent tester)
(a) Connect the intelligent tester to the DLC3.
(b) Turn the ignition switch ON.
(c) Turn the tester ON.
(d) Select the following menu items: DIAGNOSIS / ENHANCED OBD II / DTC INFO / CURRENT CODES or PENDING CODES.
(e) Check the DTC(s) and freeze frame data, and then write them down.
(f) Check the details of the DTC(s) (see page ES-56).

2. CLEAR DTC (Using intelligent tester)
(a) Connect the intelligent tester to the DLC3.
(b) Turn the ignition switch ON.
(c) Turn the tester ON.
(d) Select the following menu items: DIAGNOSIS / ENHANCED OBD II / DTC INFO / CLEAR CODES.
(e) Press the YES button.

3. CLEAR DTC (Without using intelligent tester)
(a) Perform either of the following operations.
(1) Disconnect the cable from the negative (-) battery terminal for more than 1 minute.
(2) Remove the EFI and ETCS fuses from the engine room relay block (located inside the engine compartment) for more than 1 minute.

FREEZE FRAME DATA

1. DESCRIPTION

Freeze frame data records the engine conditions (fuel system, calculated load, engine coolant temperature, fuel trim, engine speed, vehicle speed, etc.) when a malfunction is detected. When troubleshooting, it can help determine if the vehicle was running or stopped, the engine was warmed up or not, the air-fuel ratio was Lean or Rich, and other data from the time the malfunction occurred.

HINT:

If it is impossible to duplicate the problem even though a DTC is detected, confirm the freeze frame data.

The ECM records engine conditions in the form of freeze frame data every 0.5 seconds. Using the intelligent tester, 5 separate sets of freeze frame data can be checked.

– 3 data sets before the DTC was set.
– 1 data set when the DTC was set.
– 1 data set after the DTC was set.

These data sets can be used to simulate the condition of the vehicle around the time of the occurrence of the malfunction. The data may assist in identifying the cause of the malfunction, and in judging whether it was temporary or not.

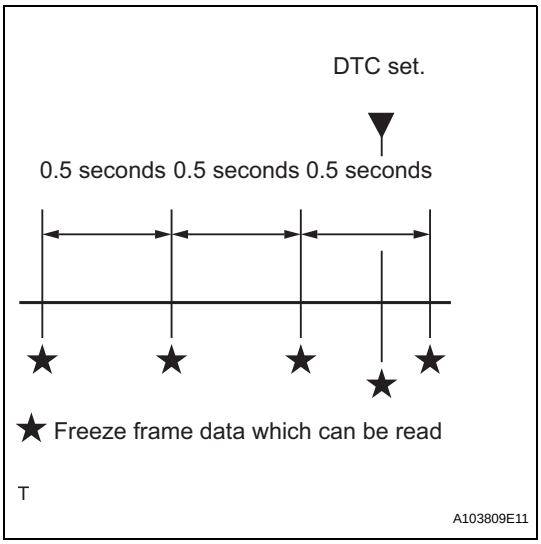

2. LIST OF FREEZE FRAME DATA

LABEL (Intelligent Tester Display)	Measurement Item	Diagnostic Note
INJECTOR	Injection period of No. 1 cylinder	-
IGN ADVANCE	Ignition advance	-
CALC LOAD	Calculated load	Calculated load by ECM
VEHICLE LOAD	Vehicle load	-
MAF	Mass air flow volume	If approximately 0.0 g/sec.: • Mass air flow meter power source circuit open or short • VG circuit open or short If 160.0 g/sec. or more: • E2G circuit open
ENGINE SPD	Engine speed	-
VEHICLE SPD	Vehicle speed	Speed indicated on speedometer
COOLANT TEMP	Engine coolant temperature	If -40°C (-40°F), sensor circuit open If 140°C (284°F) or more, sensor circuit shorted
INTAKE AIR	Intake air temperature	If -40°C (-40°F), sensor circuit open If 140°C (284°F) or more, sensor circuit shorted
AIR-FUEL RATIO	Ratio compared to stoichiometric level	-
PURGE DENSITY	Learning value of purge density	-
EVAP PURGE FLOW	Ratio of evaporative purge flow to intake air volume	-
EVAP PURGE VSV	EVAP purge VSV duty ratio	-
KNOCK CRRT VAL	Correction learning value of knocking	-

LABEL (Intelligent Tester Display)	Measurement Item	Diagnostic Note
KNOCK FB VAL	Feedback value of knocking	-
ACCEL POS #1	Absolute Accelerator Pedal Position (APP) No.1	-
ACCEL POS #2	Absolute APP No. 2	-
THROTTLE POS	Throttle sensor positioning	-
THROTTLE POS	Throttle position	-
THROTTLE POS #2	Throttle sensor positioning #2	-
THROTTLE MOT	Throttle motor	-
O2S B1 S2 O2S B2 S2	Heated oxygen sensor output	Performing INJ VOL or A/F CONTROL function of ACTIVE TEST enables technician to check output voltage of sensor
AFS B1 S1 AFS B2 S1	A/F sensor output	Performing INJ VOL or A/F CONTROL function of ACTIVE TEST enables technician to check output voltage of sensor
TOTAL FT #1 TOTAL FT #2	Total fuel trim	-
SHORT FT #1 SHORT FT #2	Short-term fuel trim	Short-term fuel compensation used to maintain air-fuel ratio at stoichiometric air-fuel ratio
LONG FT #1 LONG FT #2	Long-term fuel trim	Overall fuel compensation carried out in long-term to compensate a continual deviation of short-term fuel trim from central valve
O2FT B1 S2 O2FT B2 S2	Fuel trim at heated oxygen sensor	-
AF FT B1 S1 AF FT B2 S1	Fuel trim at A/F sensor	-
AFS B1 S1 AFS B2 S1	A/F sensor current	-
CAT TEMP B1S1 CAT TEMP B2S1	Estimated catalyst temperature (sensor 1)	-
CAT TEMP B1S2 CAT TEMP B2S2	Estimated catalyst temperature (sensor 2)	-
S O2S B1S2 S O2S B2S2	Sub heated oxygen sensor impedance (sensor 2)	-
INI COOL TEMP	Engine coolant temperature at engine start	-
INI INTAKE TEMP	Intake air temperature at engine start	-
INJ VOL	Injection volume	-
STARTER SIG	Starter switch (STSW) signal	-
PS SW	Power steering signal	-
PS SIGNAL	Power steering signal (history)	Signal status usually ON until ignition switch turned OFF
CTP SW	Closed throttle position switch	-
A/C SIGNAL	A/C signal	-
PNP SW (NSW)	Park/Neutral Position (PNP) switch signal	-
ELECT LOAD SIG	Electrical load signal	-
STOP LIGHT SW	Stop light switch	-
BATTERY VOLTAGE	Battery voltage	-
ATM PRESSURE	Atmosphere pressure	-
FUEL PMP SP CTL	Fuel pump speed control status	-
ACIS VSV	VSV for Acoustic Control Induction System (ACIS)	-
EVAP (Purge) VSV	EVAP Purge VSV	-
FUEL PUMP/SPD	Fuel pump/speed status	-

LABEL (Intelligent Tester Display)	Measurement Item	Diagnostic Note
VVT CTRL B1 VVT CTRL B2	VVT control status	-
VACUUM PUMP	Key-off EVAP system leak detection pump status	(see page ES-369)
EVAP VENT VAL	Key-off EVAP system vent valve status	-
FAN MOTOR	Electric fan motor	-
AICV VSV	VSV for Air Intake Control System (AICS)	-
TC/TE1	TC and CG (TE1) terminals of DLC3	-
FC IDL	Fuel cut idle	ON: when throttle valve fully closed and engine speed over 3,500 rpm
FC TAU	Fuel cut during very light load	Fuel cut being performed under very light load to prevent engine combustion from becoming incomplete
IGNITION	Ignition counter	-
CYL #1	Cylinder #1 misfire	Only displayed during idling
CYL #2	Cylinder #2 misfire	Only displayed during idling
CYL #3	Cylinder #3 misfire	Only displayed during idling
CYL #4	Cylinder #4 misfire	Only displayed during idling
CYL #5	Cylinder #5 misfire	Only displayed during idling
CYL #6	Cylinder #6 misfire	Only displayed during idling
CYL ALL	All cylinders misfire	Only displayed during idling
MISFIRE RPM	Engine speed when misfire occurred	-
MISFIRE LOAD	Engine load when misfire occurred	-
MISFIRE MARGIN	Margin to detect engine misfire	-
ENG RUN TIME	Accumulated engine running time	-
TIME DTC CLEAR	Cumulative time after DTC cleared	-
DIST DTC CLEAR	Accumulated distance from DTC cleared	-
WU CYC DTC CLEAR	Warm-up cycle after DTC cleared	-

CHECK MODE PROCEDURE

HINT:
Intelligent tester only:
Compared to normal mode, check mode is more sensitive to malfunctions. Therefore, check mode can detect the malfunctions that cannot be detected by normal mode.
NOTICE:
All the stored DTCs and freeze frame data are erased if: 1) the ECM is changed from normal mode to check mode or vice versa; or 2) the ignition switch is turned from ON to ACC or OFF while in check mode. Before changing modes, always check and make a note of any DTCs and freeze frame data.

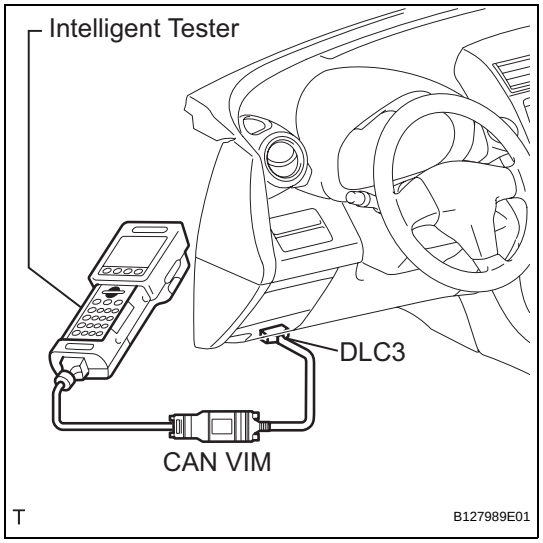

1. CHECK MODE PROCEDURE (Using intelligent tester)

(a) Check and ensure the following conditions:
  (1) Battery positive voltage 11 V or more.
  (2) Throttle valve fully closed.
  (3) Transmission in the P or N position.
  (4) A/C switch OFF.
(b) Turn the ignition switch OFF.
(c) Connect the intelligent tester to the DLC3.
(d) Turn the ignition switch ON.
(e) Turn the tester ON.
(f) Select the following menu items: DIAGNOSIS / ENHANCED OBD II / CHECK MODE.
(g) Switch the ECM from normal mode to check mode.

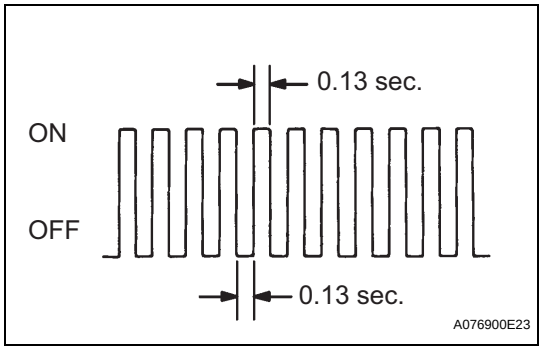

(h) Make sure the MIL flashes as shown in the illustration.
(i) Start the engine.
(j) Make sure the MIL turns off.
(k) Simulate the conditions of the malfunction described by the customer.
(l) Check DTCs and freeze frame data using the tester.

FAIL-SAFE CHART

If any of the following DTCs are set, the ECM enters fail-safe mode to allow the vehicle to be driven temporarily.

DTC	Component	Fail-Safe Operation	Fail-Safe Deactivation Condition
P0031, P0032, P0051 and P0052	Air-Fuel Ratio (A/F) Sensor Heater	ECM turns off A/F sensor heater.	Ignition switch OFF
P0037, P0038, P0057 and P0058	Heated Oxygen (HO2) Sensor Heater	ECM turns off HO2 sensor heater.	Ignition switch OFF
P0100, P0102 and P0103	Mass Air Flow (MAF) Meter	ECM calculates ignition timing according to engine speed and throttle valve position.	Pass condition detected
P0110, P0112 and P0113	Intake Air Temperature (IAT) Sensor	ECM estimates IAT to be 20°C (68°F).	Pass condition detected
P0115, P0117 and P0118	Engine Coolant Temperature (ECT) Sensor	ECM estimates ECT to be 80°C (176°F).	Pass condition detected
P0120, P0121, P0122, P0123, P0220, P0222, P0223, P0604, P0606, P0607, P0657, P2102, P2103, P2111, P2112, P2118, P2119 and P2135	Electronic Throttle Control System (ETCS)	ECM cuts off throttle actuator current and throttle valve returned to 6° throttle position by return spring. ECM then adjusts engine output by controlling fuel injection (intermittent fuel-cut) and ignition timing in accordance with accelerator pedal opening angle to allow vehicle to continue at minimal speed*.	Pass condition detected and then ignition switch turned OFF
P0327, P0328, P0332 and P0333	Knock Sensor	ECM sets ignition timing to maximum retard.	Ignition switch OFF
P0351 to P0356	Igniter	ECM cuts fuel.	Pass condition detected
P1550, P1551, P1552 and P1602	Generator	Alternator command is fixed.	Pass condition detected
P2120, P2121, P2122, P2123, P2125, P2127, P2128 and P2138	Accelerator Pedal Position (APP) Sensor	APP sensor has 2 sensor circuits: Main and Sub. If either circuit malfunctions, ECM controls engine using other circuit. If both circuits malfunction, ECM regards accelerator pedal as being released. As a result, throttle valve closed and engine idles.	Pass condition detected and then ignition switch turned OFF

HINT:

*: The vehicle can be driven slowly when the accelerator pedal is depressed firmly and slowly. If the accelerator pedal is depressed quickly, the vehicle may speed up and slow down erratically.

DATA LIST / ACTIVE TEST

1. DATA LIST

HINT:

By reading the DATA LIST displayed on the intelligent tester, values can be checked, including those of the switches, sensors, and actuators, without removing any parts. Reading the DATA LIST as the first step of troubleshooting is one method of shortening diagnostic time.

NOTICE:

In the table below, the values listed under Normal Condition are for reference only. Do not depend solely on these values when determining whether or not a part is faulty.

(a) Warm up the engine.
(b) Turn the ignition switch OFF.
(c) Connect the intelligent tester to the DLC3.
(d) Turn the ignition switch ON.
(e) Turn the tester ON.
(f) Select the following menu items: DIAGNOSIS / ENHANCED OBD II / DATA LIST.
(g) Check the values by referring to the table below.

ECM:

Tester Display	Measurement Item/Range	Normal Condition*	Diagnostic Note
INJECTOR	Injection period of No. 1 cylinder: Min.: 0 ms, Max.: 32.64 ms	1.2 to 2.4 ms: Idling	-
IGN ADVANCE	Ignition timing advance for No. 1 cylinder: Min.: -64 deg, Max.: 63.5 deg	BTDC 7 to 24 deg: Idling	-
CALC LOAD	Load calculated by ECM: Min.: 0%, Max.: 100%	• 10 to 20%: Idling • 10 to 20%: Running without load at 2,500 rpm	Load value
VEHICLE LOAD	Vehicle load: Min.: 0%, Max.: 25,700%	Actual vehicle load	Load percentage in terms of maximum intake air flow amount
MAF	Air flow rate from MAF meter: Min.: 0 g/sec., Max.: 655.35 g/sec.	2 to 5 g/sec.: Idling 8 to 19 g/sec.: Running without load at 2,500 rpm	If value approximately 0.0 g/sec.: • Mass air flow meter power source circuit open • VG circuit open or short If value 160.0 g/sec. or more: • E2G circuit open
ENGINE SPD	Engine speed: Min.: 0 rpm, Max.: 16,383.75 rpm	600 to 700 rpm: Idling	-
VEHICLE SPD	Vehicle speed: Min.: 0 km/h, Max.: 255 km/h	Actual vehicle speed	Speed indicated on speedometer
COOLANT TEMP	Engine coolant temperature: Min.: -40°C, Max.: 140°C	80 to 100°C (176 to 212°F): After warming up	• If -40°C (-40°F): sensor circuit open • If 140°C (284°F) or more: sensor circuit shorted
INTAKE AIR	Intake air temperature: Min.: -40°C, Max.: 140°C	Equivalent to ambient air temperature	• If -40°C (-40°F): sensor circuit open • If 140°C (284°F) or more: sensor circuit shorted
AIR-FUEL RATIO	Ratio compared to stoichiometric level: Min.: 0, Max.: 1.999	0.8 to 1.2: Idling	-
PURGE DENSITY	Learning value of purge density: Min.: -50, Max.: 350	-40 to 0: Idling	Service data

Tester Display	Measurement Item/Range	Normal Condition*	Diagnostic Note
EVAP PURGE FLOW	Ratio of evaporative purge flow to intake air volume: Min.: 0%, Max.: 102.4%	0 to 8%: Idling	-
EVAP PURGE VSV	EVAP (PURGE) VSV control duty: Min.: 0%, Max.: 100%	0 to 100%: Idling	Order signal from ECM
VAPOR PRES PUMP	Vapor pressure: Min.: 33.853 kPa, Max.: 125.596 kPa	0 kPa: Fuel tank cap removed	EVAP system pressure monitored by canister pressure sensor
VAPOR PRES CALC	Vapor pressure (calculated): Min.: -5.632 kPa, Max.: 715.264 kPa	0 kPa: Fuel tank cap removed	EVAP system pressure monitored by canister pressure sensor
KNOCK CRRT VAL	Correction learning value of knocking: Min: -64°CA, Max.: 1,984°CA	0 to 22°CA: Driving at 70 km/h (44 mph)	Service data
KNOCK FB VAL	Feedback value of knocking: Min: -64°CA, Max.: 1,984°CA	-22 to 0°CA: Driving at 70 km/h (44 mph)	Service data
CLUTCH	Clutch current: Min.: 0 A, Max.: 2.49 A	-	-
ACCEL POS #1	Absolute Accelerator Pedal Position (APP) No. 1: Min.: 0%, Max.: 100%	10 to 22%: Accelerator pedal released 54 to 86%: Accelerator pedal fully depressed	Read value with ignition switch ON (Do not start engine)
ACCEL POS #2	Absolute APP No. 2: Min.: 0%, Max.: 100%	12 to 42%: Accelerator pedal released 66 to 98%: Accelerator pedal fully depressed	Read value with ignition switch ON (Do not start engine)
ACCEL POS #1	APP sensor No. 1 voltage: Min.: 0 V, Max.: 4.98 V	-	ETCS freeze data
ACCEL POS #2	APP sensor No. 2 voltage: Min.: 0 V, Max.: 4.98 V	-	ETCS freeze data
ACCEL POS #1	APP sensor No. 1 voltage: Min.: 0 V, Max.: 5 V	0.5 to 1.1 V: Accelerator pedal released 2.6 to 4.5 V: Accelerator pedal fully depressed	Read value with ignition switch ON (Do not start engine)
ACCEL POS #2	APP sensor No. 2 voltage: Min.: 0 V, Max.: 5 V	1.2 to 2.0 V: Accelerator pedal released 3.4 to 5.0 V: Accelerator pedal fully depressed	Read value with ignition switch ON (Do not start engine)
ACCEL IDL POS	Whether or not accelerator pedal position sensor detecting idle: ON or OFF	ON: Idling	-
THRTL LEARN VAL	Throttle valve fully closed (learned value): Min.: 0 V, Max.: 5 V	0.4 to 0.8 V	-
ACCEL SSR #1 AD	Accelerator fully closed value No. 1 (AD): Min.: 0 V, Max.: 4.98 V	-	ETCS service data
ACCEL LRN VAL#1	Accelerator fully closed learning value No. 1: Min.: 0 deg, Max.: 124.512 deg	-	ETCS service data
ACCEL LRN VAL#2	Accelerator fully closed learning value No. 2: Min.: 0 deg, Max.: 124.512 deg	-	ETCS service data
FAIL #1	Whether or not fail safe function executed: ON or OFF	ON: ETCS has failed	-
FAIL #2	Whether or not fail safe function executed: ON or OFF	ON: ETCS has failed	-
ST1	Starter signal: ON or OFF	ON: Cranking	-

Tester Display	Measurement Item/Range	Normal Condition*	Diagnostic Note
SYS GUARD JUDGE	System guard: ON or OFF	-	ETCS service data
OPN MALFUNCTION	Open side malfunction: ON or OFF	-	ETCS service data
THROTTLE POS	Absolute throttle position sensor: Min.: 0%, Max.: 100%	• 10 to 24%: Throttle fully closed • 64 to 96%: Throttle fully open	• Calculated value based on VTA1 • Read value with ignition switch ON (Do not start engine)
THROTTL IDL POS	Whether or not throttle position sensor detecting idle: ON or OFF	ON: Idling	-
THRTL REQ POS	Throttle requirement position: Min.: 0 V, Max.: 5 V	0.5 to 1.0 V: Idling	-
THROTTLE POS	Throttle position: Min.: 0%, Max.: 100%	0 to 18%: Idling	Calculated value based on VTA1
THROTTLE POS #2	Absolute throttle position sensor No. 2: Min.: 0%, Max.: 100%	-	Calculated value based on VTA2
THROTTLE POS #1	Throttle position sensor No. 1 output voltage: Min.: 0 V, Max.: 4.98 V	-	ETCS freeze data
THROTTLE POS #2	Throttle position sensor No. 2 output voltage: Min.: 0 V, Max.: 4.98 V	-	ETCS freeze data
THROTTLE POS #1	Throttle position sensor No. 1 output voltage: Min.: 0 V, Max.: 5 V	• 0.5 to 1.2 V: Throttle fully closed • 3.2 to 4.8 V: Throttle fully open	-
THROTTLE POS #2	Throttle position sensor No. 2 output voltage: Min.: 0 V, Max.: 5 V	• 2.0 to 2.9 V: Throttle fully closed • 4.6 to 5.0 V: Throttle fully open	Read value with ignition switch ON (Do not start engine)
THRTL COMND VAL	Throttle position command value: Min.: 0 V, Max.: 4.9804 V	0.5 to 4.8 V	Read value with ignition switch ON (Do not start engine)
THROTTLE SSR #1	Throttle sensor opener position No. 1: Min.: 0 V, Max.: 4.9804 V	0.6 to 0.9 V	ETCS service data
THROTTLE SSR #2	Throttle sensor opener position No. 2: Min.: 0 V, Max.: 4.9804 V	2.2 to 2.6 V	ETCS service data
THRTL SSR #1 AD	Throttle position sensor No. 1 output voltage (AD): Min.: 0 V, Max.: 4.9804 V	0.6 to 0.9 V	ETCS service data
THROTTLE MOT	Whether or not throttle actuator control permitted: ON or OFF	ON: Idling	Read value with ignition switch ON (Do not start engine)
THROTTLE MOT	Throttle actuator current: Min.: 0 A, Max.: 80 A	0 to 3.0 A: Idling	-
THROTTLE MOT	Throttle actuator: Min.: 0%, Max.: 100%	0.5 to 40%: Idling	-
THROTTLE MOT	Throttle actuator current: Min.: 0 A, Max.: 19.92 A	0 to 3.0 A: Idling	-
THROTL OPN DUTY	Throttle actuator opening duty ratio: Min.: 0%, Max.: 100%	0 to 40%: Idling	• When accelerator pedal depressed, duty ratio increased • Read value with ignition switch ON (Do not start engine)

Tester Display	Measurement Item/Range	Normal Condition*	Diagnostic Note
THROTL CLS DUTY	Throttle actuator closed duty ratio: Min.: 0%, Max.: 100%	0 to 40%: Idling	• When accelerator pedal released quickly, duty ratio increased • Read value with ignition switch ON (Do not start engine)
THRTL MOT (OPN)	Throttle actuator duty ratio (open): Min.: 0%, Max.: 100%	-	ETCS service data
THRTL MOT (CLS)	Throttle actuator duty ratio (closed): Min.: 0%, Max.: 100%	-	ETCS service data
O2S B1 S2	Heated oxygen sensor output voltage for bank 1 sensor 2: Min.: 0 V Max.: 1.275 V	0.1 to 0.9 V: Driving at 70 km/h (44 mph)	Performing INJ VOL or A/F CONTROL function of ACTIVE TEST enables technician to check output voltage of sensor
O2S B2 S2	Heated oxygen sensor output voltage for bank 2 sensor 2: Min.: 0 V Max.: 1.275 V	0.1 to 0.9 V: Driving at 70 km/h (44 mph)	Performing INJ VOL or A/F CONTROL function of ACTIVE TEST enables technician to check output voltage of sensor
AFS B1 S1	A/F sensor output voltage for bank 1 sensor 1: Min.: 0 V Max.: 7.999 V	2.8 to 3.8 V: Idling	Performing INJ VOL or A/F CONTROL function of ACTIVE TEST enables technician to check output voltage of sensor
AFS B2 S1	A/F sensor output voltage for bank 2 sensor 1: Min.: 0 V Max.: 7.999 V	2.8 to 3.8 V: Idling	Performing INJ VOL or A/F CONTROL function of ACTIVE TEST enables technician to check output voltage of sensor
TOTAL FT #1	Total fuel trim of bank 1 Average value for fuel system system of bank 1: Min.: -0.5, Max.: 0.496	-0.2 to 0.2: Idling	-
TOTAL FT #2	Total fuel trim of bank 2 Average value for fuel system system of bank 2: Min.: -0.5, Max.: 0.496	-0.2 to 0.2: Idling	-
SHORT FT #1	Short-term fuel trim of bank 1: Min.: -100%, Max.: 99.2%	-20 to 20%	Short-term fuel compensation used to maintain air-fuel ratio at stoichiometric air-fuel ratio
SHORT FT #2	Short-term fuel trim of bank 2: Min.: -100%, Max.: 99.2%	-20 to 20%	Short-term fuel compensation used to maintain air-fuel ratio at stoichiometric air-fuel ratio
LONG FT #1	Long-term fuel trim of bank 1: Min.: -100%, Max.: 99.2%	-20 to 20%	Overall fuel compensation carried out in long-term to compensate for continual deviation of short-term fuel trim from central value
LONG FT #2	Long-term fuel trim of bank 2: Min.: -100%, Max.: 99.2%	-20 to 20%	Overall fuel compensation carried out in long-term to compensate for continual deviation of short-term fuel trim from central value
FUEL SYS #1	Fuel system status (Bank 1): OL or CL or OL DRIVE or OL FAULT or CL FAULT	CL: Idling after warming up	• OL (Open Loop): Has not yet satisfied conditions to go closed loop • CL (Closed Loop): Using A/F sensor as feedback for fuel control • OL DRIVE: Open loop due to driving conditions (fuel enrichment) • OL FAULT: Open loop due to detected system fault • CL FAULT: Closed loop but A/F sensor, which used for fuel control malfunctioning

Tester Display	Measurement Item/Range	Normal Condition*	Diagnostic Note
FUEL SYS #2	Fuel system status (Bank 2): OL or CL or OL DRIVE or OL FAULT or CL FAULT	CL: Idling after warming up	• OL (Open Loop): Has not yet satisfied conditions to go closed loop • CL (Closed Loop): Using A/F sensor as feedback for fuel control • OL DRIVE: Open loop due to driving conditions (fuel enrichment) • OL FAULT: Open loop due to detected system fault • CL FAULT: Closed loop but A/F sensor, which used for fuel control malfunctioning
O2FT B1 S2	Short-term fuel trim associated with bank 1 sensor 2: Min.: -100%, Max.: 99.2%	-20 to 20%	Same as SHORT FT #1
O2FT B2 S2	Short-term fuel trim associated with bank 2 sensor 2: Min.: -100%, Max.: 99.2%	-20 to 20%	Same as SHORT FT #2
AF FT B1 S1	Short-term fuel trim associated with bank 1 sensor 1: Min.: 0, Max.: 1.999	• Value less than 1 (0.000 to 0.999) =Lean • Stoichiometric air-fuel ratio=1 • Value greater than 1 (1.001 to 1.999) = Rich	-
AF FT B2 S1	Short-term fuel trim associated with bank 2 sensor 1: Min.: 0, Max.: 1.999	• Value less than 1 (0.000 to 0.999) =Lean • Stoichiometric air-fuel ratio=1 • Value greater than 1 (1.001 to 1.999) = Rich	-
AFS B1 S1	A/F sensor current: Min.: -128 mA, Max.: 127.99 mA	-	-
AFS B2 S1	A/F sensor current: Min.: -128 mA, Max.: 127.99 mA	-	-
CAT TEMP B1S1	Estimated catalyst temperature (bank 1 sensor 1): Min.: -40°C, Max.: 6,513.5°C	-	-
CAT TEMP B1S2	Estimated catalyst temperature (bank 1 sensor 2): Min.: -40°C, Max.: 6,513.5°C	-	-
CAT TEMP B2S1	Estimated catalyst temperature (bank 2 sensor 1): Min.: -40°C, Max.: 6,513.5°C	-	-
CAT TEMP B2S2	Estimated catalyst temperature (bank 2 sensor 2): Min.: -40°C, Max.: 6,513.5°C	-	-
S O2S B1S2	Sub heated oxygen sensor impedance (bank 1 sensor2): Min.: 0 Ω, Max.: 21247.68 Ω	-	-
S O2S B2S2	Sub heated oxygen sensor impedance (bank 2 sensor2): Min.: 0 Ω, Max.: 21247.68 Ω	-	-
INI COOL TEMP	Engine coolant temperature at engine start: Min.: -40°C, Max.: 120°C	Close to ambient air temperature	-
INI INTAKE TEMP	Intake air temperature at engine start: Min.: -40°C, Max.: 120°C	Close to ambient air temperature	-
INJ VOL	Injection volume (cylinder 1): Min.: 0 ml, Max.: 2.048 ml	Max.: 0.5 ml	Quantity of fuel injected over 10 injections

Tester Display	Measurement Item/Range	Normal Condition*	Diagnostic Note
STARTER SIG	Starter signal: ON or OFF	ON: Cranking	-
PS SW	Power steering signal: ON or OFF	ON: Power steering operation	-
PS SIGNAL	Power steering signal (history): ON or OFF	ON: When steering wheel first turned after battery terminals connected	Signal status usually ON until battery terminals disconnected
CTP SW	Closed throttle position switch: ON or OFF	• ON: Throttle fully closed • OFF: Throttle open	-
A/C SIGNAL	A/C signal: ON or OFF	ON: A/C ON	-
PNP SW [NSW]	PNP switch status: ON or OFF	ON: P or N position	-
ELECT LOAD SIG	Electrical load signal: ON or OFF	ON: Headlights or defogger turned ON	-
STOP LIGHT SW	Stop light switch: ON or OFF	ON: Brake pedal depressed	-
+BM	Whether or not electric throttle control system power input: ON or OFF	ON: Idling	-
+BM VOLTAGE	+BM voltage: Min.: 0, Max.: 19.922	10 to 15 V: Idling	ETCS service data
BATTERY VOLTAGE	Battery voltage: Min.: 0 V, Max.: 65.535 V	9 to 14 V: Idling	-
ACTUATOR POWER	Actuator power supply: ON or OFF	ON: Idling	ETCS service data
ATM PRESSURE	Atmospheric pressure: Min.: 0 kPa, Max.: 255 kPa	Equivalent to atmospheric pressure (absolute pressure)	-
BATTERY CURRENT	Battery current: Min.: -100 A, Max.: 100 A	-	-
BATTERY TEMP	Battery temperature: Min.: -45 °C, Max.: 156.4 °C	-	-
ALT OUTPUT DUTY	Generator output duty ratio: Min.: 0%, Max.: 100%	-	During charge control
ALT V NORMAL	Request output voltage: Min.: 0 V, Max.: 20 V	9 to 14 V	Not during alternator forced activation
ALT V ACT TST	Request output voltage: Min.: 0 V, Max.: 20 V	-	During alternator forced activation
FUEL PMP SP CTL	Fuel pump speed control status: ON or OFF	Idling: ON	Active Test support data
ACIS VSV	VSV for Acoustic Control Induction System Status: ON or OFF	-	ON: Open OFF: Closed
EVAP (Purge) VSV	Purge VSV status: ON or OFF	-	Active Test support data
FUEL PUMP / SPD	Fuel pump status: ON or OFF	-	Active Test support data
VVT CTRL B1	VVT control (bank 1) status: ON or OFF	-	Active Test support data
VVT CTRL B2	VVT control (bank 2) status: ON or OFF	-	Active Test support data
VACUUM PUMP	Key-off EVAP system leak detection pump status: ON or OFF	-	Active Test support data
EVAP VENT VAL	Key-off EVAP system vent valve status: ON or OFF	-	Active Test support data
FAN MOTOR	Electric fan motor: ON or OFF	ON: Electric fan motor operating	Active Test support data

Tester Display	Measurement Item/Range	Normal Condition*	Diagnostic Note
AICV VSV	VSV for Air Intake Control System Status: ON or OFF	-	-
TC/TE1	TC and CG (TE1) terminal of DLC3: ON or OFF	-	Active Test support data
VVTL AIM ANGL#1	VVT aim angle bank 1 Intake side): Min.: 0%, Max.: 100%	-	Target angle during intrusive operation
VVT CHNG ANGL#1	VVT change angle (bank 1 Intake side): Min.: 0°FR, Max.: 60°FR	0 to 5°FR: Idling	Displacement angle during intrusive operation
VVT OCV DUTY B1	VVT OCV operation duty (bank 1 Intake side): Min.: 0%, Max.: 100%	0 to 100%	Requested duty value for intrusive operation
VVT EX HOLD B1	VVT exhaust hold duty ratio learning value (bank 1 Exhaust side): Min.: 0%, Max.: 100%	10 to 50%: Idling	Requested duty value for intrusive operation
VVT EX CHG ANG1	VVT change angle (bank 1 Exhaust side): Min.: 0° FR, Max.: 60° FR	0 to 5° FR: Idling	Displacement angle during intrusive operation
VVT EX OCV D B1	VVT OCV operation duty (bank 1 Exhaust side): Min.: 0%, Max.: 100%	0 to 100%	Requested duty value for intrusive operation
VVTL AIM ANGL #2	VVT aim angle (bank 2 Intake side): Min.: 0%, Max.: 100%	-	Target angle during intrusive operation
VVT CHNG ANGL #2	VVT change angle (bank 2 Intake side): Min.: 0° FR, Max.: 60° FR	0 to 5° FR: Idling	Displacement angle during intrusive operation
VVT OCV DUTY B2	VVT OCV operation duty (bank 2 Intake side): Min.: 0%, Max.: 100%	0 to 100%	Requested duty value for intrusive operation
VVT EX HOLD B2	VVT exhaust hold duty ratio learning value (bank 2 Exhaust side): Min.: 0%, Max.: 100%	10 to 50%: Idling	Requested duty value for intrusive operation
VVT EX CHG ANG2	VVT change angle (bank 2 Exhaust side): Min.: 0° FR, Max.: 60° FR	0 to 5° FR: Idling	Displacement angle during intrusive operation
VVT EX OCV D B2	VVT exhaust operation duty (bank 2 Exhaust side): Min.: 0%, Max.: 100%	0 to 100%	Requested duty value for intrusive operation
FC IDL	Fuel cut idle: ON or OFF	ON: Fuel cut operation	FC IDL = "ON" when throttle valve fully closed and engine speed over 2,800 rpm
FC TAU	Fuel cut TAU (Fuel cut during very light load): ON or OFF	ON: Fuel cut operating	Fuel cut being performed under very light load to prevent engine combustion from becoming incomplete
IGNITION	Ignition counter: Min.: 0, Max.: 800	0 to 800	-
CYL #1	Misfire ratio of cylinder 1: Min.: 0, Max.: 255	0	This item displayed only during idling
CYL #2	Misfire ratio of cylinder 2: Min.: 0, Max.: 255	0	This item displayed only during idling
CYL #3	Misfire ratio of cylinder 3: Min.: 0, Max.: 255	0	This item displayed only during idling
CYL #4	Misfire ratio of cylinder 4: Min.: 0, Max.: 255	0	This item displayed only during idling

Tester Display	Measurement Item/Range	Normal Condition*	Diagnostic Note
CYL #5	Misfire ratio of cylinder 5: Min.: 0, Max.: 255	0	This item displayed only during idling
CYL #6	Misfire ratio of cylinder 6: Min.: 0, Max.: 255	0	This item displayed only during idling
CYL ALL	All cylinders misfire rate: Min.: 0, Max.: 255	0 to 35	-
MISFIRE RPM	Engine RPM for first misfire range: Min.: 0 rpm, Max.: 6,375 rpm	0 rpm: Misfire 0	-
MISFIRE LOAD	Engine load for first misfire range: Min.: 0 g/rev, Max.: 3.98 g/rev	0 g/rev: Misfire 0	-
MISFIRE MARGIN	Misfire monitoring: Min.: -100%, Max.: 99.22%	-100 to 99.22%	Misfire detecting margin
#CODES	#Codes: Min.: 0, Max.: 255	-	Number of detected DTCs
CHECK MODE	Check mode: ON or OFF	ON: Check mode ON	(see page ES-42)
SPD TEST	Check mode result for vehicle speed sensor: COMPL or INCMPL	-	-
MISFIRE TEST	Check mode result for misfire monitor: COMPL or INCMPL	-	-
OXS1 TEST	Check mode result for HO2 sensor (bank 1): COMPL or INCMPL	-	-
OXS2 TEST	Check mode result for HO2 sensor (bank 2): COMPL or INCMPL	-	-
A/F SSR TEST B1	Check mode result for air-fuel ratio sensor (bank 1): COMPL or INCMPL	-	-
A/F SSR TEST B2	Check mode result for air-fuel ratio sensor (bank 2): COMPL or INCMPL	-	-
MIL	MIL status: ON or OFF	ON: MIL ON	-
MIL ON RUN DIST	MIL ON run distance: Min.: 0 km, Max.: 65,535 km	Distance driven after DTC detected	-
MIL ON RUN TIME	Running time from MIL ON: Min.: 0 minutes, Max.: 65,535 minutes	Running time after MIL ON	-
ENG RUN TIME	Engine run time: Min.: 0 seconds, Max.: 65,535 seconds	Time after engine start	-
TIME DTC CLEAR	Time after DTC cleared: Min.: 0 minutes, Max.: 65,535 minutes	Time after DTCs erased	-
DIST DTC CLEAR	Distance after DTC cleared: Min.: 0 km, Max.: 65,535 km	Distance driven after DTCs erased	-
WU CYC DTC CLEAR	Warm-up cycle after DTC cleared: Min.: 0, Max.: 255	-	Number of warm-up cycles after DTC cleared
OBD CERT	OBD requirement	OBD2	-
#CARB CODES	Number of emission related DTCs	-	-
COMP MON	Comprehensive component monitor: NOT AVL or AVAIL	-	-
FUEL MON	Fuel system monitor: NOT AVL or AVAIL	-	-

Tester Display	Measurement Item/Range	Normal Condition*	Diagnostic Note
MISFIRE MON	Misfire monitor: NOT AVL or AVAIL	-	-
O2S (A/FS) HTR	O2S (A/FS) heater monitor: NOT AVL or AVAIL	-	-
O2S (A/FS) HTR	O2S (A/FS) heater monitor: COMPL or INCMPL	-	-
O2S (A/FS) MON	O2S (A/FS) monitor: NOT AVL or AVAIL	-	-
O2S (A/FS) MON	O2S (A/FS) monitor: COMPL or INCMPL	-	-
EVAP MON	EVAP monitor: NOT AVL or AVAIL	-	-
EVAP MON	EVAP monitor: COMPL or INCMPL	-	-
CAT MON	Catalyst monitor: NOT AVL or AVAIL	-	-
CAT MON	Catalyst monitor: COMPL or INCMPL	-	-
CCM ENA	Comprehensive component monitor: UNABLE or ENABLE	-	-
CCM CMPL	Comprehensive component monitor: COMPL or INCMPL	-	-
FUEL ENA	Fuel system monitor: UNABLE or ENABLE	-	-
FUEL CMPL	Fuel system monitor: COMPL or INCMPL	-	-
MISFIRE ENA	Misfire monitor: UNABLE or ENABLE	-	-
MISFIRE CMPL	Misfire monitor: COMPL or INCMPL	-	-
EGR ENA	EGR monitor: UNABLE or ENABLE	-	-
EGR CMPL	EGR monitor: COMPL or INCMPL	-	-
HTR ENA	O2S (A/FS) heater monitor: UNABLE or ENABLE	-	-
HTR CMPL	O2S (A/FS) heater monitor: COMPL or INCMPL	-	-
O2S (A/FS) ENA	O2S (A/FS) monitor: UNABLE or ENABLE	-	-
O2S (A/FS) CMPL	O2S (A/FS) monitor: COMPL or INCMPL	-	-
ACRF ENA	A/C monitor: UNABLE or ENABLE	-	-
ACRF CMPL	A/C monitor: COMPL or INCMPL	-	-
AIR ENA	2nd Air monitor: UNABLE or ENABLE	-	-
AIR CMPL	2nd Air monitor: COMPL or INCMPL	-	-
EVAP ENA	EVAP monitor: UNABLE or ENABLE	-	-
EVAP CMPL	EVAP monitor: COMPL or INCMPL	-	-
HCAT ENA	Heated catalyst monitor: UNABLE or ENABLE	-	-

Tester Display	Measurement Item/Range	Normal Condition*	Diagnostic Note
HCAT CMPL	Heated catalyst monitor: COMPL or INCMPL	-	-
CAT ENA	Catalyst monitor: UNABLE or ENABLE	-	-
CAT CMPL	Catalyst monitor: COMPL or INCMPL	-	-
MODEL CODE	Model code information	-	Identifying model code: GSA3#
ENGINE TYPE	Engine type information	-	Identifying engine type: 2GRFE
CYLINDER NUMBER	Cylinder number: Min.: 0, Max.: 255	-	Identifying cylinder number: 6
TRANSMISSION	Transmission type information	-	Identifying transmission type: 5AT
DESTINATION	Destination information	-	Identifying destination: A (America)
MODEL YEAR	Model year: Min.: 1900, Max.: 2155	-	Identifying model year: 200#
SYSTEM	Engine system information	-	Identifying engine system: GASLIN (gasoline engine)

ES

HINT:

*: If no idling conditions are specified, the transmission gear selector lever should be in the N or P position, and the A/C switch and all accessory switches should be OFF.

2. ACTIVE TEST

HINT:

Performing the ACTIVE TEST enables components including the relays, VSV (Vacuum Switching Valve) and actuators, to be operated without removing any parts. The ACTIVE TEST can be performed with the intelligent tester. Performing the ACTIVE TEST as the first step of troubleshooting is one method of shortening diagnostic time.

The DATA LIST can be displayed during the ACTIVE TEST.

(a) Connect the intelligent tester to the DLC3.
(b) Turn the ignition switch ON.
(c) Turn the tester ON.
(d) Select the following menu items: DIAGNOSIS / ENHANCED OBD II / ACTIVE TEST.
(e) Perform the ACTIVE TEST by referring to the table below.

ECM:

Tester Display	Test Part	Control Range	Diagnostic Note
INJ VOL	Change injection volume	-12.5 to 24.8%	• All injectors tested at same time • Perform test at less than 3,000 rpm • Injection volume can be changed in 0.2% graduations within control range

Tester Display	Test Part	Control Range	Diagnostic Note
A/F CONTROL	Change injection volume	Decrease by 12.5% or increase by 24.8%	• Perform test at less than 3,000 rpm • A/F CONTROL enables checking and graphing of A/F (Air-Fuel Ratio) sensor and Heated Oxygen (HO2) sensor voltage outputs • To conduct test, select following menu items: ACTIVE TEST / A/F CONTROL / USER DATA / AFS B1S1 and O2S B1S2; then press YES and ENTER followed by F4.
FUEL PMP SP CTL	Fuel pump speed control	ON (low speed) / OFF (high speed)	Test possible when following conditions met: • Ignition switch ON • Engine is stopped
INTAKE CTL VSV1	Activate the VSV for Acoustic Control Induction System (ACIS)	ON/OFF	-
EVAP VSV (ALONE)	Activate purge VSV control	ON/OFF	-
VVT CTRL B1	Turn on and off OCV (Oil Control Valve) for VVT (Bank 1)	ON/OFF	• Engine stalls or idles roughly when OCV turned ON • Normal engine running or idling when OCV OFF • Test possible while vehicle stopped and engine idling
VVT CTRL B2	Turn on and off OCV (Oil Control Valve) for VVT (Bank 2)	ON/OFF	• Engine stalls or idles roughly when OCV turned ON • Normal engine running or idling when OCV OFF • Test possible while vehicle stopped and engine idling
FUEL PUMP / SPD	Activate fuel pump (C/OPN Relay)	ON/OFF	Test possible when engine stopped
TC/TE1	Turn on and off TC and TE1 connection	ON/OFF	• ON: TC and TE1 connected • OFF: TC and TE1 disconnected
FC IDL PROHBT	Prohibit idling fuel cut control	ON/OFF	-
COOLING FAN	Control electric cooling fan	ON/OFF	-
ETCS OPEN SLOW	Control the ETCS (throttle actuator)	ON: Throttle valve opens slowly	Test possible when following conditions met: • Engine stopped • Shift position in P • Fully depressing accelerator pedal (APP: 59° or more)
ETCS CLOSE SLOW	Control the ETCS (throttle actuator)	ON: Throttle valve closes slowly	
ETCS OPEN FAST	Control the ETCS (throttle actuator)	ON: Throttle valve opens fast	
ETCS CLOSE FAST	Control the ETCS (throttle actuator)	ON: Throttle valve closes fast	
VVT B1	Control the VVT (bank 1 Intake Side)	-128 to 127% This valve added to present OCV control duty 100%: Maximum advance -100% : Maximum retard	-
VVT B2	Control the VVT (bank 2 Intake Side)	-128 to 127% This valve added to present OCV control duty 100%: Maximum advance -100% : Maximum retard	-
VVT EX B1	Control the VVT (bank 1 Exhaust Side)	-128 to 127% This valve added to present OCV control duty 100%: Maximum retard -100%: Maximum advance	-

Tester Display	Test Part	Control Range	Diagnostic Note
VVT EX B2	Control the VVT (bank 2 Exhaust Side)	-128 to 127% This valve added to present OCV control duty 100%: Maximum retard -100%: Maximum advance	-
VACUUM PUMP	Activate the leak detection pump	ON/OFF	-
VENT VALVE	Activate the vent valve	ON/OFF	-
AICV VSV	Activate the VSV for Air Intake Control System (AICS)	ON/OFF	-
ALT VOL	Request output voltage of generator regulator during forced activation	12.5 to 14.8 V	Engine running
FUEL CUT #1	Cylinder #1 injector fuel cut	ON/OFF	Test possible during vehicle stopping and engine idling ON: Injector fuel cut and ignition stop
FUEL CUT #2	Cylinder #2 injector fuel cut	ON/OFF	
FUEL CUT #3	Cylinder #3 injector fuel cut	ON/OFF	
FUEL CUT #4	Cylinder #4 injector fuel cut	ON/OFF	
FUEL CUT #5	Cylinder #5 injector fuel cut	ON/OFF	
FUEL CUT #6	Cylinder #6 injector fuel cut	ON/OFF	

ES

3. SYSTEM CHECK

HINT:

Performing a SYSTEM CHECK enables the system, which consists of multiple actuators, to be operated without removing any parts. In addition, it can show whether or not any DTCs are set, and can detect potential malfunctions in the system. The SYSTEM CHECK can be performed with the intelligent tester.

(a) Connect the intelligent tester to the DLC3.
(b) Turn the ignition switch ON.
(c) Turn the tester ON.
(d) Select the following menu items: DIAGNOSIS / ENHANCED OBD II / SYSTEM CHECK.
(e) Perform the SYSTEM CHECK by referring to the table below.

ECM:

Tester Display	Test Part	Control Range	Diagnostic Note
EVAP SYS CHECK (AUTO OPERATION)	Perform 5 steps in order to operate EVAP key-off monitor automatically	-	• If no DTCs in PENDING CODE after performing this test, system functioning normally • 35°C (95°F) or less • Refer to EVAP system
EVAP SYS CHECK (MANUAL OPERATION)	Perform 5 steps in order to operate EVAP key-off monitor manually	-	• Used to detect malfunctioning parts • 35°C (95°F) or less • Refer to EVAP system

DIAGNOSTIC TROUBLE CODE CHART

HINT:
Parameters listed in the chart may be different than your readings depending on the type of instrument and other factors.
If any DTCs are displayed during a check mode DTC check, check the trouble area for the DTCs listed in the table below.
For details of each DTC, refer to the "See page" below.

SFI system

DTC No.	Detection Item	Trouble Area	MIL	Memory	See page
P0010	Camshaft Position "A" Actuator Circuit (Bank 1)	1. Open or short in Oil Control Valve (OCV) circuit for intake camshaft (bank 1) 2. OCV for intake camshaft (bank 1) 3. ECM	Comes on	DTC stored	ES-74
P0011	Camshaft Position "A" - Timing Over-Advanced or System Performance (Bank 1)	1. Valve timing 2. OCV for intake camshaft (bank 1) 3. OCV filter (bank 1) 4. Intake camshaft (bank 1) timing gear assembly 5. ECM	Comes on	DTC stored	ES-78
P0012	Camshaft Position "A" - Timing Over-Retarded (Bank 1)	Same as DTC P0011	Comes on	DTC stored	ES-78
P0013	Camshaft Position "B" Actuator Circuit / Open (Bank 1)	1. Open or short in OCV for exhaust camshaft (bank 1) circuit 2. OCV for exhaust camshaft (bank 1) 3. ECM	Comes on	DTC stored	ES-86
P0014	Camshaft Position "B" - Timing Over-Advanced or System Performance (Bank 1)	1. Valve timing 2. OCV for exhaust camshaft (bank 1) 3. OCV filter (bank 1) 4. Exhaust camshaft 5. ECM	Comes on	DTC stored	ES-90
P0015	Camshaft Position "B" - Timing Over-Retarded (Bank 1)	1. Valve timing 2. OCV for exhaust camshaft (bank 1) 3. OCV filter (bank 1) 4. Exhaust camshaft 5. ECM	Comes on	DTC stored	ES-90
P0016	Crankshaft Position - Camshaft Position Correlation (Bank 1 Sensor A)	1. Mechanical system (Timing chain has jumped tooth or chain stretched) 2. ECM	Comes on	DTC stored	ES-98
P0017	Crankshaft Position - Camshaft Position Correlation (Bank 1 Sensor B)	1. Mechanical system (Timing chain has jumped tooth or chain stretched) 2. ECM	Comes on	DTC stored	ES-98
P0018	Crankshaft Position - Camshaft Position Correlation (Bank 2 Sensor A)	1. Mechanical system (Timing chain has jumped tooth or chain stretched) 2. ECM	Comes on	DTC stored	ES-98

DTC No.	Detection Item	Trouble Area	MIL	Memory	See page
P0019	Crankshaft Position - Camshaft Position Correlation (Bank 2 Sensor B)	1. Mechanical system (Timing chain has jumped tooth or chain stretched) 2. ECM	Comes on	DTC stored	ES-98
P0020	Camshaft Position "A" Actuator Circuit (Bank 2)	1. Open or short in OCV circuit for intake camshaft (bank 2) 2. OCV for intake camshaft (bank 2) 3. ECM	Comes on	DTC stored	ES-74
P0021	Camshaft Position "A" - Timing Over-Advanced or System Performance (Bank 2)	1. Valve timing 2. Oil Control Valve (OCV) for intake camshaft (bank 2) 3. OCV filter (bank 2) 4. Intake camshaft (bank 2) timing gear assembly 5. ECM	Comes on	DTC stored	ES-78
P0022	Camshaft Position "A" - Timing Over-Retarded (Bank 2)	1. Valve timing 2. OCV for intake camshaft (bank 2) 3. OCV filter (bank 2) 4. Intake camshaft (bank 2) timing gear assembly 5. ECM	Comes on	DTC stored	ES-78
P0023	Camshaft Position "B" Actuator Circuit / Open (Bank 2)	1. Open or short in OCV for exhaust camshaft (bank 2) circuit 2. OCV for exhaust camshaft (bank 2) 3. ECM	Comes on	DTC stored	ES-86
P0024	Camshaft Position "B" - Timing Over-Advanced or System Performance (Bank 2)	1. Valve timing 2. OCV for exhaust camshaft (bank 2) 3. OCV filter (bank 2) 4. Exhaust camshaft timing gear assembly 5. ECM	Comes on	DTC stored	ES-90
P0025	Camshaft Position "B" - Timing Over-Retarded (Bank 2)	1. Valve timing 2. OCV for exhaust camshaft (bank 2) 3. OCV filter (bank 2) 4. Exhaust camshaft timing gear assembly 5. ECM	Comes on	DTC stored	ES-90
P0031	Oxygen (A/F) Sensor Heater Control Circuit Low (Bank 1 Sensor 1)	1. Open in Air-Fuel Ratio (A/F) sensor heater circuit 2. A/F sensor heater (bank 1 sensor 1) 3. Integration relay 4. ECM	Comes on	DTC stored	ES-101
P0032	Oxygen (A/F) Sensor Heater Control Circuit High (Bank 1 Sensor 1)	1. Short in A/F sensor heater circuit 2. A/F sensor heater (bank 1 sensor 1) 3. Integration relay 4. ECM	Comes on	DTC stored	ES-101

DTC No.	Detection Item	Trouble Area	MIL	Memory	See page
P0037	Oxygen Sensor Heater Control Circuit Low (Bank 1 Sensor 2)	1. Open in Heated Oxygen (HO2) sensor heater circuit 2. HO2 sensor heater (bank 1 sensor 2) 3. Integration relay (EFI MAIN relay) 4. ECM	Comes on	DTC stored	ES-107
P0038	Oxygen Sensor Heater Control Circuit High (Bank 1 Sensor 2)	1. Short in HO2 sensor heater circuit 2. HO2 sensor heater (bank 1 sensor 2) 3. Integration relay (EFI MAIN relay) 4. ECM	Comes on	DTC stored	ES-107
P0051	Oxygen (A/F) Sensor Heater Control Circuit Low (Bank 2 Sensor 1)	1. Open in A/F sensor heater (bank 2 sensor 1) circuit 2. A/F sensor heater (bank 2 sensor 1) 3. Integration relay 4. ECM	Comes on	DTC stored	ES-101
P0052	Oxygen (A/F) Sensor Heater Control Circuit High (Bank 2 Sensor 1)	1. Short in A/F sensor heater circuit (bank 2 sensor 1) circuit 2. A/F sensor heater (bank 2 sensor 1) 3. Integration relay 4. ECM	Comes on	DTC stored	ES-101
P0057	Oxygen Sensor Heater Control Circuit Low (Bank 2 Sensor 2)	1. Open in Heated Oxygen (HO2) sensor heater circuit 2. HO2 sensor heater (bank 2 sensor 2) 3. Integration relay (EFI MAIN relay) 4. ECM	Comes on	DTC stored	ES-107
P0058	Oxygen Sensor Heater Control Circuit High (Bank 2 Sensor 2)	1. Short in HO2 sensor heater circuit 2. HO2 sensor heater (bank 2 sensor 2) 3. Integration relay (EFI MAIN relay) 4. ECM	Comes on	DTC stored	ES-107
P0100	Mass or Volume Air Flow Circuit	1. Open or short in Mass Air Flow (MAF) meter circuit 2. MAF meter 3. ECM	Comes on	DTC stored	ES-115
P0101	Mass Air Flow Circuit Range / Performance Problem	1. MAF meter 2. Air induction system 3. PCV hose connections	Comes on	DTC stored	ES-122
P0102	Mass or Volume Air Flow Circuit Low Input	1. Open or short in MAF meter circuit 2. MAF meter 3. ECM	Comes on	DTC stored	ES-115
P0103	Mass or Volume Air Flow Circuit High Input	1. Open or short in MAF meter circuit 2. MAF meter 3. ECM	Comes on	DTC stored	ES-115

DTC No.	Detection Item	Trouble Area	MIL	Memory	See page
P0110	Intake Air Temperature Circuit Malfunction	1. Open or short in Intake Air Temperature (IAT) sensor circuit 2. IAT sensor (built into MAF meter) 3. ECM	Comes on	DTC stored	ES-125
P0111	Intake Air Temperature Sensor Gradient Too High	Mass air flow meter	Comes on	DTC stored	ES-131
P0112	Intake Air Temperature Circuit Low Input	1. Short in IAT sensor circuit 2. IAT sensor (built into MAF meter) 3. ECM	Comes on	DTC stored	ES-125
P0113	Intake Air Temperature Circuit High Input	1. Open in IAT sensor circuit 2. IAT sensor (built into MAF meter) 3. ECM	Comes on	DTC stored	ES-125
P0115	Engine Coolant Temperature Circuit Malfunction	1. Open or short in Engine Coolant Temperature (ECT) sensor circuit 2. ECT sensor 3. ECM	Comes on	DTC stored	ES-134
P0116	Engine Coolant Temperature Circuit Range / Performance Problem	1. Thermostat 2. ECT sensor	Comes on	DTC stored	ES-140
P0117	Engine Coolant Temperature Circuit Low Input	1. Short in ECT sensor circuit 2. ECT sensor 3. ECM	Comes on	DTC stored	ES-134
P0118	Engine Coolant Temperature Circuit High Input	1. Open in ECT sensor circuit 2. ECT sensor 3. ECM	Comes on	DTC stored	ES-134
P0120	Throttle / Pedal Position Sensor / Switch "A" Circuit Malfunction	1. Throttle Position (TP) sensor (built into throttle body) 2. ECM	Comes on	DTC stored	ES-143
P0121	Throttle / Pedal Position Sensor / Switch "A" Circuit Range / Performance Problem	TP sensor (built into throttle body)	Comes on	DTC stored	ES-150
P0122	Throttle / Pedal Position Sensor / Switch "A" Circuit Low Input	1. TP sensor (built into throttle body) 2. Short in VTA1 circuit 3. Open in VC circuit 4. ECM	Comes on	DTC stored	ES-143
P0123	Throttle / Pedal Position Sensor / Switch "A" Circuit High Input	1. TP sensor (built into throttle body) 2. Open in VTA1 circuit 3. Open in E2 circuit 4. Short between VC and VTA1 circuits 5. ECM	Comes on	DTC stored	ES-143

DTC No.	Detection Item	Trouble Area	MIL	Memory	See page
P0125	Insufficient Coolant Temperature for Closed Loop Fuel Control	1. Cooling system 2. ECT sensor 3. Thermostat	Comes on	DTC stored	ES-152
P0128	Coolant Thermostat (Coolant Temperature Below Thermostat Regulating Temperature)	1. Thermostat 2. Cooling system 3. ECT sensor 4. ECM	Comes on	DTC stored	ES-155
P0136	Oxygen Sensor Circuit Malfunction (Bank 1 Sensor 2)	1. Open or short in HO2 sensor (bank 1 sensor 2) circuit 2. HO2 sensor (bank 1 sensor 2) 3. HO2 sensor heater (bank 1 sensor 2) 4. Air-Fuel Ratio (A/F) sensor (bank 1 sensor 1) 5. Integration relay (EFI MAIN relay) 6. Gas leakage from exhaust system	Comes on	DTC stored	ES-158
P0137	Oxygen Sensor Circuit Low Voltage (Bank 1 Sensor 2)	1. Open in HO2 sensor (bank 1 sensor 2) circuit 2. HO2 sensor (bank 1 sensor 2) 3. HO2 sensor heater (bank 1 sensor 2) 4. Integration relay (EFI MAIN relay) 5. Gas leakage from exhaust system	Comes on	DTC stored	ES-158
P0138	Oxygen Sensor Circuit High Voltage (Bank 1 Sensor 2)	1. Short in HO2 sensor (bank 1 sensor 2) circuit 2. HO2 sensor (bank 1 sensor 2) 3. ECM internal circuit malfunction	Comes on	DTC stored	ES-158
P0141	Oxygen Sensor Heater Circuit Malfunction (Bank 1 Sensor 2)	1. Open or short in HO2 sensor heater circuit 2. HO2 sensor heater (bank 1 sensor 2) 3. Integration relay (EFI MAIN relay) 4. ECM	Comes on	DTC stored	ES-107
P0156	Oxygen Sensor Circuit Malfunction (Bank 2 Sensor 2)	1. Open or short in HO2 sensor (bank 2 sensor 2) circuit 2. HO2 sensor (bank 2 sensor 2) 3. HO2 sensor heater (bank 2 sensor 2) 4. Air-Fuel Ratio (A/F) sensor (bank 2 sensor 1) 5. Integration relay (EFI MAIN relay) 6. Gas leakage from exhaust system	Comes on	DTC stored	ES-158

DTC No.	Detection Item	Trouble Area	MIL	Memory	See page
P0157	Oxygen Sensor Circuit Low Voltage (Bank 2 Sensor 2)	1. Open in HO2 sensor (bank 2 sensor 2) circuit 2. HO2 sensor (bank 2 sensor 2) 3. HO2 sensor heater (bank 2 sensor 2) 4. integration relay (EFI MAIN relay) 5. Gas leakage from exhaust system	Comes on	DTC stored	ES-158
P0158	Oxygen Sensor Circuit High Voltage (Bank 2 Sensor 2)	1. Short in HO2 sensor (bank 2 sensor 2) circuit 2. HO2 sensor (bank 2 sensor 2) 3. ECM internal circuit malfunction	Comes on	DTC stored	ES-158
P0161	Oxygen Sensor Heater Circuit Malfunction (Bank 2 Sensor 2)	1. Open or short in HO2 sensor heater circuit 2. HO2 sensor heater (bank 2 sensor 2) 3. Integration relay (EFI MAIN relay) 4. ECM	Comes on	DTC stored	ES-107
P0171	System Too Lean (Bank 1)	1. Air induction system 2. Injector blockage 3. MAF meter 4. ECT sensor 5. Fuel pressure 6. Gas leakage from exhaust system 7. Open or short in A/F sensor (bank 1 sensor 1) circuit 8. A/F sensor (bank 1 sensor 1) 9. A/F sensor heater (bank 1 sensor 1) 10. Integration relay 11. A/F sensor heater and integration relay circuits 12. PCV valve and hose 13. PCV hose connections 14. ECM	Comes on	DTC stored	ES-176

ES

DTC No.	Detection Item	Trouble Area	MIL	Memory	See page
P0172	System Too Rich (Bank 1)	1. Injector leakage or blockage 2. MAF meter 3. ECT sensor 4. Ignition system 5. Fuel pressure 6. Gas leakage from exhaust system 7. Open or short in A/F sensor (bank 1 sensor 1) circuit 8. A/F sensor (bank 1 sensor 1) 9. A/F sensor heater (bank 1 sensor 1) 10. Integration relay 11. A/F sensor heater and integration relay circuits 12. ECM	Comes on	DTC stored	ES-176
P0174	System Too Lean (Bank 2)	1. Air induction system 2. Injector blockage 3. Mass Air Flow (MAF) meter 4. Engine Coolant Temperature (ECT) sensor 5. Fuel pressure 6. Gas leakage from exhaust system 7. Open or short in A/F sensor (bank 2 sensor 1) circuit 8. A/F sensor (bank 2 sensor 1) 9. A/F sensor heater (bank 2 sensor 1) 10. Integration relay 11. A/F sensor heater and integration relay circuits 12. PCV valve and hose 13. PCV hose connections 14. ECM	Comes on	DTC stored	ES-176
P0175	System Too Rich (Bank 2)	1. Injector leakage or blockage 2. MAF meter 3. ECT sensor 4. Ignition system 5. Fuel pressure 6. Gas leakage from exhaust system 7. Open or short in A/F sensor (bank 2 sensor 1) circuit 8. A/F sensor (bank 2 sensor 1) 9. A/F sensor heater (bank 2 sensor 1) 10. Integration relay 11. A/F sensor heater and integration relay circuits 12. ECM	Comes on	DTC stored	ES-176

DTC No.	Detection Item	Trouble Area	MIL	Memory	See page
P0220	Throttle / Pedal Position Sensor / Switch "B" Circuit	1. TP sensor (built into throttle body) 2. ECM	Comes on	DTC stored	ES-143
P0222	Throttle / Pedal Position Sensor / Switch "B" Circuit Low Input	1. TP sensor (built into throttle body) 2. Short in VTA2 circuit 3. Open in VC circuit 4. ECM	Comes on	DTC stored	ES-143
P0223	Throttle / Pedal Position Sensor / Switch "B" Circuit High Input	1. TP sensor (built into throttle body) 2. Open in VTA2 circuit 3. Open in E2 circuit 4. Short between VC and VTA2 circuits 5. ECM	Comes on	DTC stored	ES-143
P0230	Fuel Pump Primary Circuit	1. Open or short in F/PMP relay circuit 2. F/PMP relay 3. ECM	-	DTC stored	ES-185
P0300	Random / Multiple Cylinder Misfire Detected	1. Open or short in engine wire harness 2. Connector connection 3. Vacuum hose connection 4. Ignition system 5. Injector 6. Fuel pressure 7. MAF meter 8. ECT sensor 9. Compression pressure 10. Valve clearance 11. Valve timing 12. PCV valve and hose 13. PCV hose connections 14. Air induction system 15. ECM	Comes on/Blinks*1	DTC stored	ES-189
P0301	Cylinder 1 Misfire Detected	Same as DTC P0300	Comes on/Blinks*1	DTC stored	ES-189
P0302	Cylinder 2 Misfire Detected	Same as DTC P0300	Comes on/Blinks*1	DTC stored	ES-189
P0303	Cylinder 3 Misfire Detected	Same as DTC P0300	Comes on/Blinks*1	DTC stored	ES-189
P0304	Cylinder 4 Misfire Detected	Same as DTC P0300	Comes on/Blinks*1	DTC stored	ES-189
P0305	Cylinder 5 Misfire Detected	Same as DTC P0300	Comes on/Blinks*1	DTC stored	ES-189
P0306	Cylinder 6 Misfire Detected	Same as DTC P0300	Comes on/Blinks*1	DTC stored	ES-189
P0327	Knock Sensor 1 Circuit Low Input (Bank 1 or Single Sensor)	1. Short in knock sensor circuit (bank 1) 2. Knock sensor (bank 1) 3. ECM	Comes on	DTC stored	ES-201

DTC No.	Detection Item	Trouble Area	MIL	Memory	See page
P0328	Knock Sensor 1 Circuit High Input (Bank 1 or Single Sensor)	1. Open in knock sensor circuit (bank 1) 2. Knock sensor (bank 1) 3. ECM	Comes on	DTC stored	ES-201
P0332	Knock Sensor 2 Circuit Low Input (Bank 2)	1. Short in knock sensor circuit (bank 2) 2. Knock sensor (bank 2) 3. ECM	Comes on	DTC stored	ES-201
P0333	Knock Sensor 2 Circuit High Input (Bank 2)	1. Open in knock sensor circuit (bank 2) 2. Knock sensor (bank 2) 3. ECM	Comes on	DTC stored	ES-201
P0335	Crankshaft Position Sensor "A" Circuit	1. Open or short in Crankshaft Position (CKP) sensor circuit 2. CKP sensor 3. CKP sensor plate 4. ECM	Comes on	DTC stored	ES-207
P0339	Crankshaft Position Sensor "A" Circuit Intermittent	Same as DTC P0335	-	DTC stored	ES-207
P0340	Camshaft Position Sensor Circuit Malfunction	1. Open or short in VVT sensor circuit for intake camshaft 2. VVT sensor for intake camshaft 3. Camshaft timing gear for intake camshaft 4. Jumped tooth of timing chain for intake camshaft 5. ECM	Comes on	DTC stored	ES-214
P0342	Camshaft Position Sensor "A" Circuit Low Input (Bank 1 or Single Sensor)	1. Open or short in VVT sensor circuit for intake camshaft 2. VVT sensor for intake camshaft 3. Camshaft timing gear for intake camshaft 4. Jumped tooth of timing chain for intake camshaft 5. ECM	Comes on	DTC stored	ES-214
P0343	Camshaft Position Sensor "A" Circuit High Input (Bank 1 or Single Sensor)	1. Open or short in VVT sensor for intake camshaft circuit 2. VVT sensor for intake camshaft 3. Camshaft timing gear for intake camshaft 4. Jumped tooth of timing chain for intake camshaft 5. ECM	Comes on	DTC stored	ES-214

DTC No.	Detection Item	Trouble Area	MIL	Memory	See page
P0345	Camshaft Position Sensor "A" Circuit (Bank 2)	1. Open or short in VVT sensor for intake camshaft circuit 2. VVT sensor for intake camshaft 3. Camshaft timing gear for intake camshaft 4. Jumped tooth of timing chain for intake camshaft 5. ECM	Comes on	DTC stored	ES-214
P0347	Camshaft Position Sensor "A" Circuit Low Input (Bank 2)	1. Open or short in VVT sensor for intake camshaft circuit 2. VVT sensor for intake camshaft 3. Camshaft timing gear for intake camshaft 4. Jumped tooth of timing chain for intake camshaft 5. ECM	Comes on	DTC stored	ES-214
P0348	Camshaft Position Sensor "A" Circuit High Input (Bank 2)	1. Open or short in VVT sensor for intake camshaft circuit 2. VVT sensor for intake camshaft 3. Camshaft timing gear for intake camshaft 4. Jumped tooth of timing chain for intake camshaft 5. ECM	Comes on	DTC stored	ES-214
P0351	Ignition Coil "A" Primary / Secondary Circuit	1. Ignition system 2. Open or short in IGF1 or IGT circuit (1 to 6) between ignition coil with igniter and ECM 3. No. 1 to No. 6 ignition coils with igniters 4. ECM	Comes on	DTC stored	ES-220
P0352	Ignition Coil "B" Primary / Secondary Circuit	Same as DTC P0351	Comes on	DTC stored	ES-220
P0353	Ignition Coil "C" Primary / Secondary Circuit	Same as DTC P0351	Comes on	DTC stored	ES-220
P0354	Ignition Coil "D" Primary / Secondary Circuit	Same as DTC P0351	Comes on	DTC stored	ES-220
P0355	Ignition Coil "E" Primary / Secondary Circuit	Same as DTC P0351	Comes on	DTC stored	ES-220
P0356	Ignition Coil "F" Primary / Secondary Circuit	Same as DTC P0351	Comes on	DTC stored	ES-220

DTC No.	Detection Item	Trouble Area	MIL	Memory	See page
P0365	Camshaft Position Sensor "B" Circuit (Bank 1)	1. Open or short in VVT sensor for exhaust camshaft circuit 2. VVT sensor for exhaust camshaft 3. Exhaust camshaft 4. Jumped tooth of timing chain 5. ECM	Comes on	DTC stored	ES-229
P0367	Camshaft Position Sensor "B" Circuit Low Input (Bank 1)	1. Open or short in VVT sensor for exhaust camshaft circuit 2. VVT sensor for exhaust camshaft 3. Exhaust camshaft 4. Jumped tooth of timing chain 5. ECM	Comes on	DTC stored	ES-229
P0368	Camshaft Position Sensor "B" Circuit High Input (Bank 1)	1. Open or short in VVT sensor for exhaust camshaft circuit 2. VVT sensor for exhaust camshaft 3. Exhaust camshaft 4. Jumped tooth of timing chain 5. ECM	Comes on	DTC stored	ES-229
P0390	Camshaft Position Sensor "B" Circuit (Bank 2)	1. Open or short in VVT sensor for exhaust camshaft circuit 2. VVT sensor for exhaust camshaft 3. Exhaust camshaft 4. Jumped tooth of timing chain 5. ECM	Comes on	DTC stored	ES-229
P0392	Camshaft Position Sensor "B" Circuit Low Input (Bank 2)	1. Open or short in VVT sensor for exhaust camshaft circuit 2. VVT sensor for exhaust camshaft 3. Exhaust camshaft 4. Jumped tooth of timing chain 5. ECM	Comes on	DTC stored	ES-229
P0393	Camshaft Position Sensor "B" Circuit High Input (Bank 2)	1. Open or short in VVT sensor for exhaust camshaft circuit 2. VVT sensor for exhaust camshaft 3. Exhaust camshaft 4. Jumped tooth of timing chain 5. ECM	Comes on	DTC stored	ES-229

DTC No.	Detection Item	Trouble Area	MIL	Memory	See page
P0420	Catalyst System Efficiency Below Threshold (Bank 1)	1. Front exhaust pipe (with Three-Way Catalytic Converter) 2. Gas leakage from exhaust system 3. A/F sensor (bank 1 sensor 1) 4. HO2 sensor (bank 1 sensor 2)	Comes on	DTC stored	ES-234
P0430	Catalyst System Efficiency Below Threshold (Bank 2)	1. Front exhaust pipe (with TWC) 2. Gas leakage from exhaust system 3. A/F sensor (bank 2 sensor 1) 4. HO2 sensor (bank 2 sensor 2)	Comes on	DTC stored	ES-234
P043E	Evaporative Emission System Reference Orifice Clog Up	1. Canister pump module 2. Connector / wire harness (between canister pump module and ECM) 3. Leakage from EVAP system 4. ECM	Comes on	DTC stored	ES-241
P043F	Evaporative Emission System Reference Orifice High Flow	1. Canister pump module 2. Connector / wire harness (between canister pump module and ECM) 3. Leakage from EVAP system 4. ECM	Comes on	DTC stored	ES-241
P0441	Evaporative Emission Control System Incorrect Purge Flow	1. Purge VSV 2. Connector/wire harness (Purge VSV - ECM) 3. Canister pump module 4. Leakage from EVAP system 5. Leakage from EVAP line (Purge VSV - Intake manifold) 6. ECM	Comes on	DTC stored	ES-245
P0450	Evaporative Emission Control System Pressure Sensor / Switch	1. Canister pump module 2. EVAP system hose (pipe from air inlet port to canister pump module, canister filter, fuel tank vent hose) 3. ECM	Comes on	DTC stored	ES-252

DTC No.	Detection Item	Trouble Area	MIL	Memory	See page
P0451	Evaporative Emission Control System Pressure Sensor Range / Performance	1. Canister pump module 2. Connector/wire harness (Canister pump module - ECM) 3. EVAP system hose (pipe from air inlet port to canister pump module, canister filter, fuel tank vent hose) 4. ECM	Comes on	DTC stored	ES-252
P0452	Evaporative Emission Control System Pressure Sensor / Switch Low Input	Same as DTC P0451	Comes on	DTC stored	ES-252
P0453	Evaporative Emission Control System Pressure Sensor / Switch High Input	Same as DTC P0451	Comes on	DTC stored	ES-252
P0455	Evaporative Emission Control System Leak Detected (Gross Leak)	1. Fuel tank cap (loose) 2. Leakage from EVAP line (Canister - Fuel tank) 3. Leakage from EVAP line (Purge VSV - Canister) 4. Canister pump module 5. Leakage from fuel tank 6. Leakage from canister	Comes on	DTC stored	ES-262
P0456	Evaporative Emission Control System Leak Detected (Very Small Leak)	Same as DTC P0455	Comes on	DTC stored	ES-262
P0500	Vehicle Speed Sensor "A"	1. Open or short in speed signal circuit 2. Vehicle speed sensor 3. Combination meter 4. ECM 5. Skid control ECU	Comes on	DTC stored	ES-266
P0504	Brake Switch "A" / "B" Correlation	1. Short in stop light switch signal circuit 2. STOP fuse 3. IGN fuse 4. Stop light switch 5. ECM	-	DTC stored	ES-271
P0505	Idle Control System Malfunction	1. ETCS (Electronic Throttle Control System) 2. Air induction system 3. PCV hose connections 4. ECM	Comes on	DTC stored	ES-275

DTC No.	Detection Item	Trouble Area	MIL	Memory	See page
P050A	Cold Start Idle Air Control System Performance	1. Throttle body assembly 2. MAF meter 3. Air induction system 4. PCV hose connections 5. VVT system 6. Air cleaner filter element 7. ECM	Comes on	DTC stored	ES-279
P050B	Cold Start Ignition Timing Performance	Same as DTC P050A	Comes on	DTC stored	ES-279
P0516	Battery Temperature Sensor Circuit Low	1. Battery current sensor 2. Short in battery current sensor circuit 3. ECM	-	DTC stored	ES-285
P0517	Battery Temperature Sensor Circuit High	1. Battery current sensor 2. Open in battery current sensor circuit 3. ECM	-	DTC stored	ES-285
P0560	System Voltage	1. Open in back up power source circuit 2. Battery 3. Battery terminals 4. EFI MAIN fuse 5. ECM	Comes on	DTC stored	ES-287
P0604	Internal Control Module Random Access Memory (RAM) Error	ECM	Comes on	DTC stored	ES-291
P0606	ECM / PCM Processor	ECM	Comes on/-*2	DTC stored	ES-291
P0607	Control Module Performance	ECM	Comes on	DTC stored	ES-291
P0617	Starter Relay Circuit High	1. Park/Neutral Position (PNP) switch 2. ST relay circuit 3. Ignition switch 4. ECM	Comes on	DTC stored	ES-293
P0630	VIN not Programmed or Mismatch - ECM / PCM	ECM	Comes on	DTC stored	ES-298
P0657	Actuator Supply Voltage Circuit / Open	ECM	Comes on	DTC stored	ES-291
P0724	Brake Switch "B" Circuit High	1. Short in stop light switch circuit 2. Stop light switch 3. ECM	Comes on	DTC stored	ES-300
P1550	Battery Current Sensor Circuit	1. Open or short in battery current sensor circuit 2. Battery current sensor 3. ECM	-	DTC stored	ES-303
P1551	Battery Current Sensor Circuit Low	1. Short in battery current sensor circuit 2. Battery current sensor 3. ECM	-	DTC stored	ES-303

DTC No.	Detection Item	Trouble Area	MIL	Memory	See page
P1552	Battery Current Sensor Circuit High	1. Open in battery current sensor circuit 2. Battery current sensor 3. ECM	-	DTC stored	ES-303
P1602	Deterioration of Battery	1. Battery 2. ECM back-up power source circuit	-	DTC stored	ES-306
P2102	Throttle Actuator Control Motor Circuit Low	1. Open in throttle actuator circuit 2. Throttle actuator 3. ECM	Comes on	DTC stored	ES-307
P2103	Throttle Actuator Control Motor Circuit High	1. Short in throttle actuator circuit 2. Throttle actuator 3. Throttle valve 4. Throttle body assembly 5. ECM	Comes on	DTC stored	ES-307
P2111	Throttle Actuator Control System - Stuck Open	1. Throttle actuator 2. Throttle body assembly 3. Throttle valve	Comes on	DTC stored	ES-311
P2112	Throttle Actuator Control System - Stuck Closed	Same as DTC P2111	Comes on	DTC stored	ES-311
P2118	Throttle Actuator Control Motor Current Range / Performance	1. Open in ETCS power source circuit 2. Battery 3. Battery terminals 4. ETCS fuse 5. ECM	Comes on	DTC stored	ES-314
P2119	Throttle Actuator Control Throttle Body Range / Performance	1. ETCS 2. ECM	Comes on	DTC stored	ES-321
P2120	Throttle / Pedal Position Sensor / Switch "D" Circuit	1. Accelerator Pedal Position (APP) sensor 2. ECM	Comes on	DTC stored	ES-324
P2121	Throttle / Pedal Position Sensor / Switch "D" Circuit Range / Performance	1. APP sensor 2. ECM	Comes on	DTC stored	ES-331
P2122	Throttle / Pedal Position Sensor / Switch "D" Circuit Low Input	1. APP sensor 2. Open in VCP1 circuit 3. Open or ground short in VPA circuit 4. ECM	Comes on	DTC stored	ES-324
P2123	Throttle / Pedal Position Sensor / Switch "D" Circuit High Input	1. APP sensor 2. Open in EPA circuit 3. ECM	Comes on	DTC stored	ES-324
P2125	Throttle / Pedal Position Sensor / Switch "E" Circuit	1. APP sensor 2. ECM	Comes on	DTC stored	ES-324
P2127	Throttle / Pedal Position Sensor / Switch "E" Circuit Low Input	1. APP sensor 2. Open in VCP2 circuit 3. Open or ground short in VPA2 circuit 4. ECM	Comes on	DTC stored	ES-324

DTC No.	Detection Item	Trouble Area	MIL	Memory	See page
P2128	Throttle / Pedal Position Sensor / Switch "E" Circuit High Input	1. APP sensor 2. Open in EPA2 circuit 3. ECM	Comes on	DTC stored	ES-324
P2135	Throttle / Pedal Position Sensor / Switch "A" / "B" Voltage Correlation	1. Short between VTA1 and VTA2 circuits 2. TP sensor (built into throttle body) 3. ECM	Comes on	DTC stored	ES-143
P2138	Throttle / Pedal Position Sensor / Switch "D" / "E" Voltage Correlation	1. Short between VPA and VPA2 circuits 2. APP sensor 3. ECM	Comes on	DTC stored	ES-324
P2195	Oxygen (A/F) Sensor Signal Stuck Lean (Bank 1 Sensor 1)	1. Open or short in A/F sensor (bank 1 sensor 1) circuit 2. A/F sensor (bank 1 sensor 1) 3. A/F sensor heater (bank 1 sensor 1) 4. Integration relay 5. A/F sensor heater and integration relay circuits 6. Air induction system 7. Fuel pressure 8. Injector 9. ECM	Comes on	DTC stored	ES-334
P2196	Oxygen (A/F) Sensor Signal Stuck Rich (Bank 1 Sensor 1)	Same as DTC P2195	Comes on	DTC stored	ES-334
P2197	Oxygen (A/F) Sensor Signal Stuck Lean (Bank 2 Sensor 1)	1. Open or short in A/F sensor (bank 2 sensor 1) circuit 2. A/F sensor (bank 2 sensor 1) 3. A/F sensor heater (bank 2 sensor 1) 4. Integration relay 5. A/F sensor heater and integration relay circuits 6. Air induction system 7. Fuel pressure 8. Injector 9. ECM	Comes on	DTC stored	ES-334
P2198	Oxygen (A/F) Sensor Signal Stuck Rich (Bank 2 Sensor 1)	1. Open or short in A/F sensor (bank 2 sensor 1) circuit 2. A/F sensor (bank 2 sensor 1) 3. A/F sensor heater (bank 2 sensor 1) 4. Integration relay 5. A/F sensor heater and integration relay circuits 6. Air induction system 7. Fuel pressure 8. Injector 9. ECM	Comes on	DTC stored	ES-334

DTC No.	Detection Item	Trouble Area	MIL	Memory	See page
P2238	Oxygen (A/F) Sensor Pumping Current Circuit Low (Bank 1 Sensor 1)	1. Open or short in A/F sensor (bank 1 sensor 1) circuit 2. A/F sensor (bank 1 sensor 1) 3. A/F sensor heater (bank 1 sensor 1) 4. Integration relay 5. A/F sensor heater and integration relay circuits 6. ECM	Comes on	DTC stored	ES-350
P2239	Oxygen (A/F) Sensor Pumping Current Circuit High (Bank 1 Sensor 1)	Same as DTC P2238	Comes on	DTC stored	ES-350
P2241	Oxygen (A/F) Sensor Pumping Current Circuit Low (Bank 2 Sensor 1)	1. Open or short in A/F sensor (bank 2 sensor 1) circuit 2. A/F sensor (bank 2 sensor 1) 3. A/F sensor heater (bank 2 sensor 1) 4. Integration relay 5. A/F sensor heater and integration relay circuits 6. ECM	Comes on	DTC stored	ES-350
P2242	Oxygen (A/F) Sensor Pumping Current Circuit High (Bank 2 Sensor 1)	1. Open or short in A/F sensor (bank 2 sensor 1) circuit 2. A/F sensor (bank 2 sensor 1) 3. A/F sensor heater (bank 2 sensor 1) 4. Integration relay 5. A/F sensor heater and integration relay circuits 6. ECM	Comes on	DTC stored	ES-350
P2252	Oxygen (A/F) Sensor Reference Ground Circuit Low (Bank 1 Sensor 1)	Same as DTC P2238	Comes on	DTC stored	ES-350
P2253	Oxygen (A/F) Sensor Reference Ground Circuit High (Bank 1 Sensor 1)	Same as DTC P2238	Comes on	DTC stored	ES-350
P2255	Oxygen (A/F) Sensor Reference Ground Circuit Low (Bank 2 Sensor 1)	Same as DTC P2241	Comes on	DTC stored	ES-350
P2256	Oxygen (A/F) Sensor Reference Ground Circuit High (Bank 2 Sensor 1)	Same as DTC P2241	Comes on	DTC stored	ES-350
P2401	Evaporative Emission Leak Detection Pump Stuck OFF	1. Canister pump module 2. Connector / wire harness (between canister pump module and ECM) 3. ECM 4. Leakage from EVAP system	Comes on	DTC stored	ES-241

DTC No.	Detection Item	Trouble Area	MIL	Memory	See page
P2402	Evaporative Emission Leak Detection Pump Stuck ON	1. Canister pump module 2. Connector / wire harness (between canister pump module and ECM) 3. ECM	Comes on	DTC stored	ES-241
P2419	Evaporative Emission System Switching Valve Control Circuit Low	1. Canister pump module 2. Connector / wire harness (between canister pump module and ECM) 3. ECM	Comes on	DTC stored	ES-241
P2420	Evaporative Emission System Switching Valve Control Circuit High	1. Canister pump module 2. Connector / wire harness (between canister pump module and ECM) 3. ECM	Comes on	DTC stored	ES-356
P2610	ECM / PCM Internal Engine Off Timer Performance	ECM	Comes on	DTC stored	ES-360
P2A00	A/F Sensor Circuit Slow Response (Bank 1 Sensor 1)	1. Open or short in A/F sensor circuit (bank 1 sensor 1) 2. A/F sensor (bank 1 sensor 1) 3. ECM	Comes on	DTC stored	ES-362
P2A03	A/F Sensor Circuit Slow Response (Bank 2 Sensor 1)	1. Open or short in A/F sensor circuit (bank 2 sensor 1) 2. A/F sensor (bank 2 sensor 1) 3. ECM	Comes on	DTC stored	ES-362

HINT:
*1: MIL flashes when a catalyst damaged misfire is detected.
*2: MIL does not flash when A/F sensor transistor malfunction and sub O2 sensor transistor malfunction are detected.

DTC	P0010	Camshaft Position "A" Actuator Circuit (Bank 1)

DTC	P0020	Camshaft Position "A" Actuator Circuit (Bank 2)

DESCRIPTION

- This DTC is designed to detect opens or shorts in the camshaft oil control valve (OCV) circuit. If the OCV's duty-cycle is excessively high or low while the engine is running, the ECM will illuminate the MIL and set the DTC.
- The VVT (variable valve timing) system adjusts the intake valve timing to improve the driveability. The engine oil pressure turns the camshaft actuator to adjust the valve timing. The OCV is a solenoid valve and switches the engine oil line. The valve moves when the ECM applies the 12 volts to the solenoid. The ECM changes the energizing time to the solenoid (duty-cycle) in accordance with the camshaft position, crankshaft position, throttle position, etc.

ES

VVT System

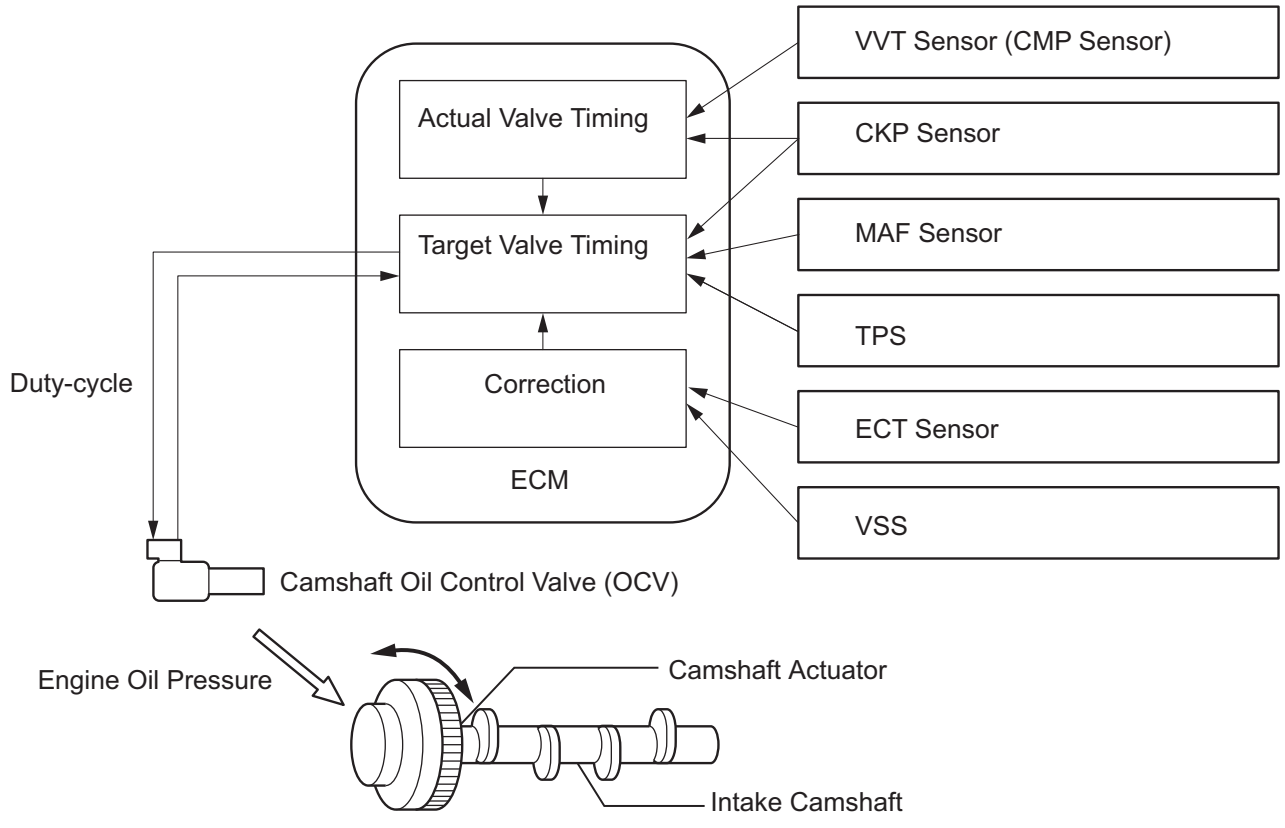

DTC No.	DTC Detection Condition	Trouble Area
P0010	Open or short in OCV for intake camshaft (bank 1) circuit (1 trip detection logic)	• Open or short in OCV for intake camshaft (bank 1) circuit • OCV for intake camshaft (bank 1) • ECM

DTC No.	DTC Detection Condition	Trouble Area
P0020	Open or short in OCV for intake camshaft (bank 2) circuit (1 trip detection logic)	• Open or short in OCV for intake camshaft (bank 2) circuit • OCV for intake camshaft (bank 2) • ECM

HINT:
This DTC relates to the Oil Control Valve (OCV).

MONITOR DESCRIPTION

This DTC is designed to detect opens or shorts in the camshaft oil control valve (OCV) circuit. If the OCV's duty-cycle is excessively high or low while the engine is running, the ECM will illuminate the MIL and set the DTC.

MONITOR STRATEGY

ES

Related DTCs	P0010: VVT OCV range check (bank 1) P0020: VVT OCV range check (bank 2)
Required Sensors/Components (Main)	VVT OCV
Required Sensors/Components (Related)	-
Frequency of Operation	Continuous
Duration	1 second
MIL Operation	Immediate
Sequence of Operation	None

TYPICAL ENABLING CONDITIONS

Monitor runs whenever following DTCs not present	None
All of following conditions met	-
Starter	OFF
Ignition switch	ON
Time after ignition switch OFF to ON	0.5 seconds or more

TYPICAL MALFUNCTION THRESHOLDS

One of following conditions met	-
A. All of following conditions met	-
Battery voltage	11 to 13 V
Target duty ratio	Less than 70%
Output signal duty ratio	100%
B. All of following conditions met	-
Battery voltage	13 V or more
Target duty ratio	Less than 80%
Output signal duty ratio	100%
C. Both of following conditions met	-
Current cut status	Not cut
Output signal duty ratio	3% or less

COMPONENT OPERATING RANGE

VVT OCV duty ratio	3 to 100%

WIRING DIAGRAM

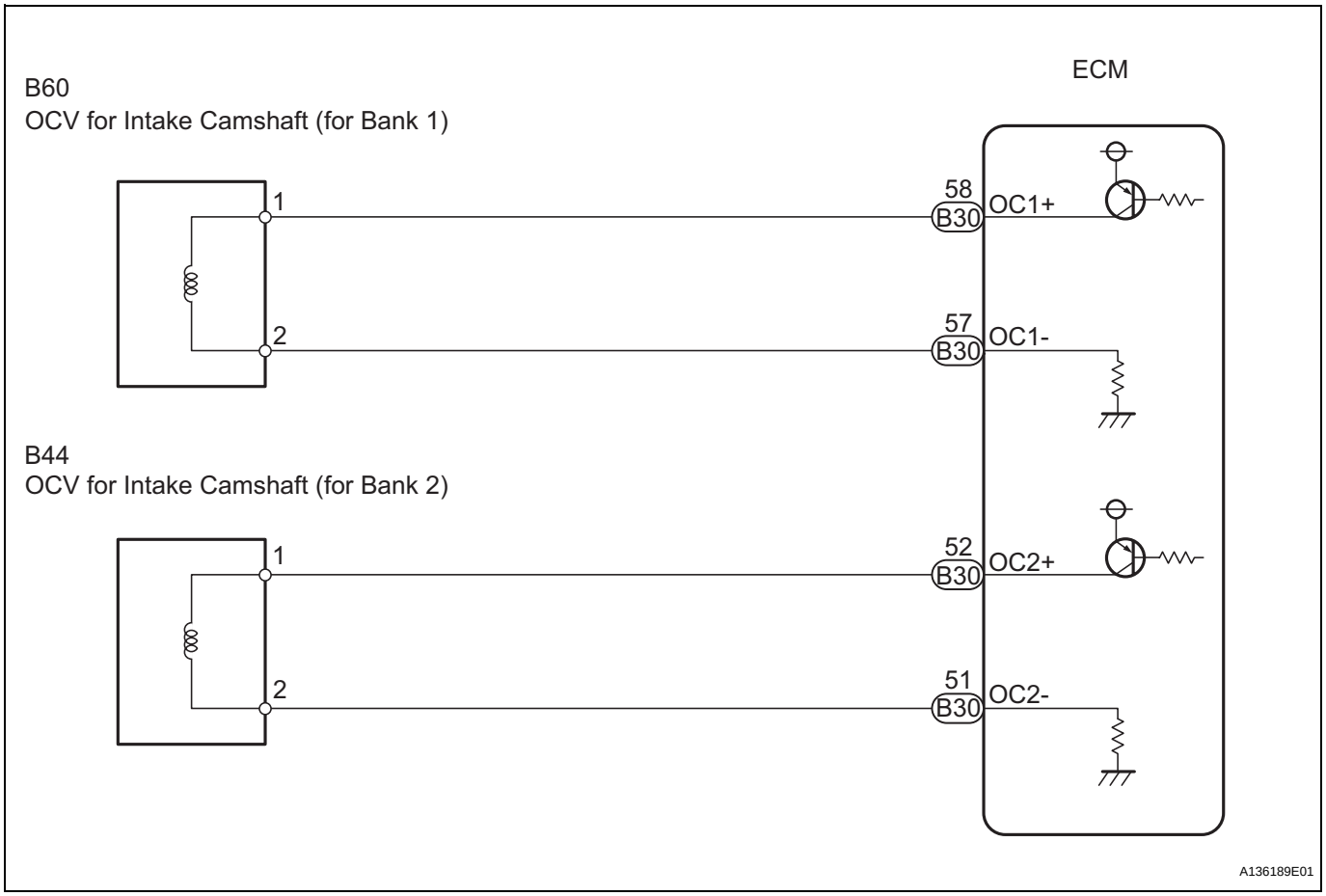

ES

INSPECTION PROCEDURE

HINT:

Read freeze frame data using the intelligent tester. Freeze frame data records the engine condition when malfunctions are detected. When troubleshooting, freeze frame data can help determine if the vehicle was moving or stationary, if the engine was warmed up or not, if the air-fuel ratio was lean or rich, and other data from the time the malfunction occurred.

1	CHECK DTC

(a) Clear DTC after recording the freeze frame data and DTC.
(b) Turn the ignition switch OFF.
(c) Allow the engine to idle and check DTC.
(d) Check that P0010 or P0020 is present.

OK:

P0010 or P0020 is present.

OK → **CHECK FOR INTERMITTENT PROBLEMS**

NG

2	INSPECT CAMSHAFT TIMING OIL CONTROL VALVE ASSEMBLY

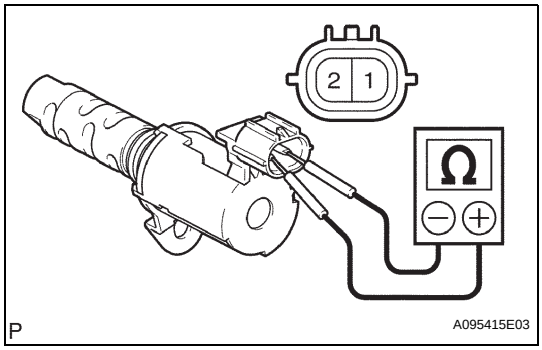

(a) Disconnect the B44 or B60 OCV connector.
(b) Measure the resistance between the terminals of the OCV.
Standard resistance:
6.9 to 7.9 Ω at 20°C (68°F)
(c) Reconnect the OCV connector.

NG → **REPLACE CAMSHAFT TIMING OIL CONTROL VALVE ASSEMBLY**

ES

OK

3	CHECK WIRE HARNESS (OCV - ECM)

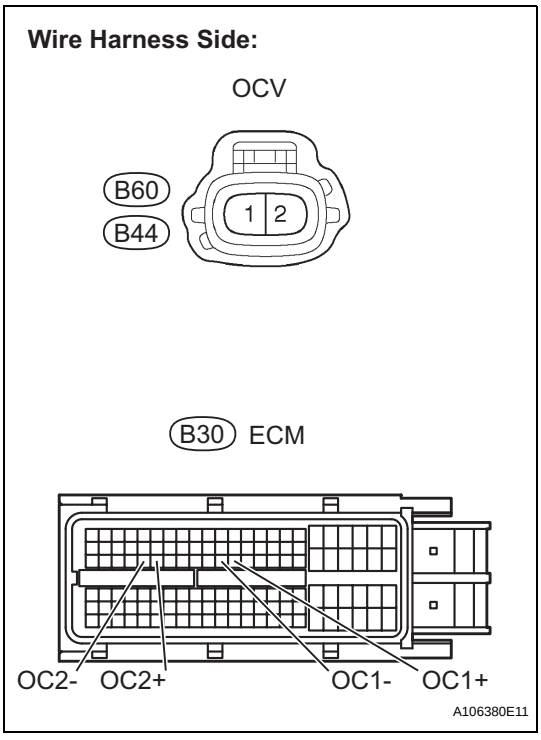

(a) Disconnect the B44 or B60 OCV connector.
(b) Disconnect the B30 ECM connector.
(c) Measure the resistance of the wire harness side connectors.
Standard resistance

Tester Connection	Specified Condition
B60-1 - B30-58 (OC1+)	Below 1 Ω
B44-1 - B30-52 (OC2+)	Below 1 Ω
B60-2 - B30-57 (OC1-)	Below 1 Ω
B44-2 - B30-51 (OC2-)	Below 1 Ω
B60-1 or B30-58 (OC1+) - Body ground	10 kΩ or higher
B44-1 or B30-52 (OC2+) - Body ground	10 kΩ or higher
B60-2 or B30-57 (OC1-) - Body ground	10 kΩ or higher
B44-2 or B30-51 (OC2-) - Body ground	10 kΩ or higher

(d) Reconnect the OCV connector.
(e) Reconnect the ECM connector.

NG → **REPAIR OR REPLACE HARNESS AND CONNECTOR**

OK

REPLACE ECM

DTC	P0011	Camshaft Position "A" - Timing Over-Advanced or System Performance (Bank 1)
DTC	P0012	Camshaft Position "A" - Timing Over-Retarded (Bank 1)
DTC	P0021	Camshaft Position "A" - Timing Over-Advanced or System Performance (Bank 2)
DTC	P0022	Camshaft Position "A" - Timing Over-Retarded (Bank 2)

DESCRIPTION

The VVT system includes the ECM, Oil Control Valve (OCV) and VVT controller. The ECM sends a target duty-cycle control signal to the OCV. This control signal regulates the oil pressure supplied to the VVT controller. Camshaft timing control is performed according to engine operating conditions such as the intake air volume, throttle valve position and engine coolant temperature. The ECM controls the OCV, based on the signals transmitted by several sensors. The VVT controller regulates the intake camshaft angle using oil pressure through the OCV. As a result, the relative positions of the camshaft and crankshaft are optimized, the engine torque and fuel economy improve, and the exhaust emissions decrease under overall driving conditions. The ECM detects the actual intake valve timing using signals from the camshaft and crankshaft position sensors, and performs feedback control. This is how the target intake valve timing is verified by the ECM.

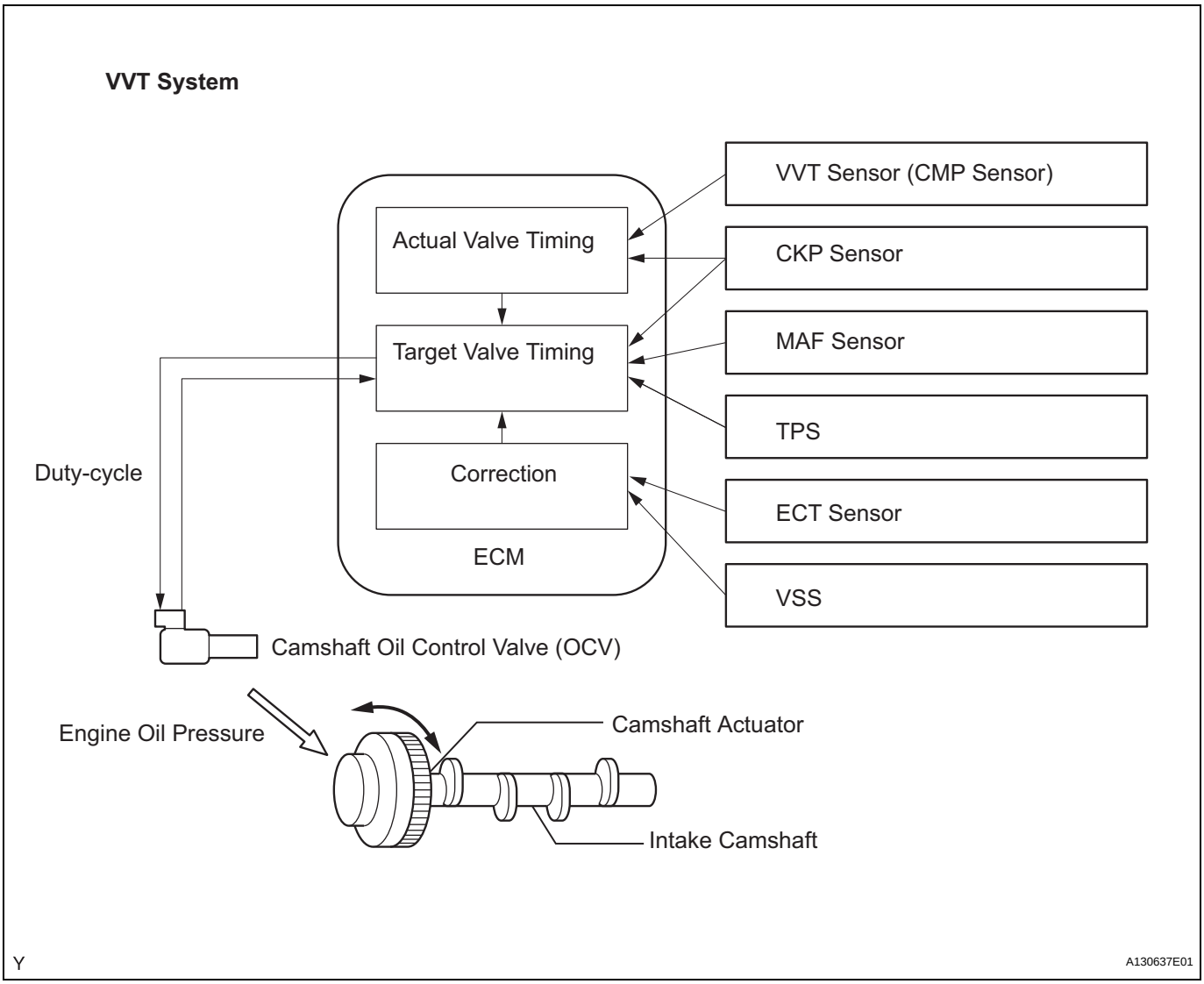

DTC No.	DTC Detection Condition	Trouble Area
P0011 P0021	Valve timing is not adjusted in valve timing advance range (1 trip detection logic)	• Valve timing • OCV for intake camshaft • OCV filter • Intake camshaft timing gear assembly • ECM
P0012 P0022	Valve timing is not adjusted in valve timing retard range (2 trip detection logic)	• Valve timing • OCV for intake camshaft • OCV filter • Intake camshaft timing gear assembly • ECM

MONITOR DESCRIPTION

The ECM optimizes the intake valve timing using the VVT (Variable Valve Timing) system to control the intake camshaft. The VVT system includes the ECM, the Oil Control Valve (OCV) and the VVT controller. The ECM sends a target duty-cycle control signal to the OCV. This control signal regulates the oil pressure supplied to the VVT controller. The VVT controller can advance or retard the intake camshaft. If the difference between the target and actual intake valve timings is large, and changes in the actual intake valve timing are small, the ECM interprets this as the VVT controller stuck malfunction and sets a DTC.

Example:

A DTC is set when the following conditions 1, 2 and 3 are met:

1. The difference between the target and actual intake valve timing is more than 5°CA (Crankshaft Angle) and the condition continues for more than 4.5 seconds.
2. It takes 5 seconds or more to change the valve timing by 5°CA.
3. After above conditions 1 and 2 are met, the OCV is forcibly activated 63 times or more.

DTC P0011 and P0021 (Advanced Cam Timing) is subject to 1 trip detection logic.
DTC P0012 and P0022 (Retarded Cam Timing) is subject to 2 trip detection logic.
These DTCs indicate that the VVT controller cannot operate properly due to OCV malfunctions or the presence of foreign objects in the OCV.
The monitor will run if all of the following conditions are met:
– The engine is warm (the engine coolant temperature is 75°C [167°F] or more).
– The vehicle has been driven at more than 64 km/h (40 mph) for 3 minutes.
– The engine has idled for 3 minutes.

MONITOR STRATEGY

Related DTCs	P0011: Advanced camshaft timing (bank 1) P0012: Retarded camshaft timing (bank 1) P0021: Advanced camshaft timing (bank 2) P0022: Retarded camshaft timing (bank 2)
Required Sensors/Components (Main)	VVT OCV and VVT Actuator
Required Sensors/Components (Related)	Crankshaft position sensor, Camshaft position sensor and Engine coolant temperature sensor
Frequency of Operation	Once per driving cycle
Duration	Within 10 seconds
MIL Operation	Advanced camshaft timing: Immediate Retarded camshaft timing: 2 driving cycles
Sequence of Operation	None

TYPICAL ENABLING CONDITIONS

Monitor runs whenever following DTCs not present	P0100 - P0103 (MAF meter) P0115 - P0118 (ECT sensor) P0125 (Insufficient ECT for closed loop) P0335 (CKP sensor) P0340 (CMP sensor) P0351 - P0356 (Igniter)
Battery voltage	11 V or more
Engine RPM	500 to 4,000 rpm
ECT	75°C (167°F) to 100°C (212°F)

TYPICAL MALFUNCTION THRESHOLDS

Advanced camshaft timing:

Valve timing	No change at advanced valve timing

Retard camshaft timing:

Valve timing	No change at retarded valve timing

If the difference between the target and actual camshaft timings is greater than the specified value, the ECM operates the VVT actuator.
Then, the ECM monitors the camshaft timing change for 5 seconds.

WIRING DIAGRAM

Refer to DTC P0010 (see page ES-76).

INSPECTION PROCEDURE

HINT:
DTC P0011, P0012, P0021 or P0022 may be set when foreign objects in the engine oil are caught in some parts of the system. The DTC will remain set even if the system returns to normal after a short time. Foreign objects are filtered out by the oil filter.
HINT:

Abnormal bank	Advanced timing over (Valve timing is out of specified range)	Retarded timing over (Valve timing is out of specified range)
Bank 1	P0011	P0021
Bank 2	P0012	P0022

- If DTC P0011 or P0012 is displayed, check the right bank VVT system for intake camshaft circuit (bank 1).
- Bank 1 refers to the bank that includes No. 1 cylinder.
- If DTC P0021 or P0022 is displayed, check the left bank VVT system for intake camshaft circuit (bank 2).
- Bank 2 refers to the bank that does not include No. 1 cylinder.
- Read freeze frame data using the intelligent tester. Freeze frame data records the engine condition when malfunctions are detected. When troubleshooting, freeze frame data can help determine if the vehicle was moving or stationary, if the engine was warmed up or not, if the air-fuel ratio was lean or rich, and other data from the time the malfunction occurred.

ES

1	CHECK ANY OTHER DTCS OUTPUT (IN ADDITION TO DTC P0011, P0012, P0021 OR P0022)

(a) Connect the intelligent tester to the DLC3.
(b) Turn the ignition switch ON and turn the tester ON.
(c) Select the following menu items: DIAGNOSIS / ENHANCED OBD II / DTC INFO / CURRENT CODES.
(d) Read DTCs.

Result

Display (DTC Output)	Proceed to
P0011, P0012, P0021 or P0022	A
P0011, P0012, P0021 or P0022 and other DTCs	B

HINT:
If any DTCs other than P0011, P0012, P0021 or P0022 are output, troubleshoot those DTCs first.

B → GO TO DTC CHART

A

2	PERFORM ACTIVE TEST USING INTELLIGENT TESTER (OPERATE OCV)

(a) Connect the intelligent tester to the DLC3.
(b) Start the engine and turn the tester ON.
(c) Warm up the engine.
(d) On the tester, select the following menu items: DIAGNOSIS / ENHANCED OBD II / ACTIVE TEST / VVT CTRL B1 or VVT CTRL B2.
(e) Check the engine speed while operating the Oil Control Valve (OCV) using the tester.

OK

Tester Operation	Specified Condition
OCV OFF	Normal engine speed
OCV ON	Engine idles roughly or stalls (soon after OCV switched from OFF to ON)

NG → **Go to step 4**

OK ↓

3	CHECK WHETHER DTC OUTPUT RECURS (DTC P0011, P0012, P0021 OR P0022)

(a) Connect the intelligent tester to the DLC3.
(b) Turn the ignition switch ON and turn the tester ON.
(c) Clear DTCs (see page ES-39).
(d) Start the engine and warm it up.
(e) Switch the ECM from normal mode to check mode using the tester.
(f) Drive the vehicle for more than 10 minutes.
(g) Read DTCs using the tester.
OK:
No DTC output.

NG → **Go to step 4**

OK ↓

END

4	CHECK VALVE TIMING (CHECK FOR LOOSE AND JUMPED TEETH ON TIMING CHAIN)

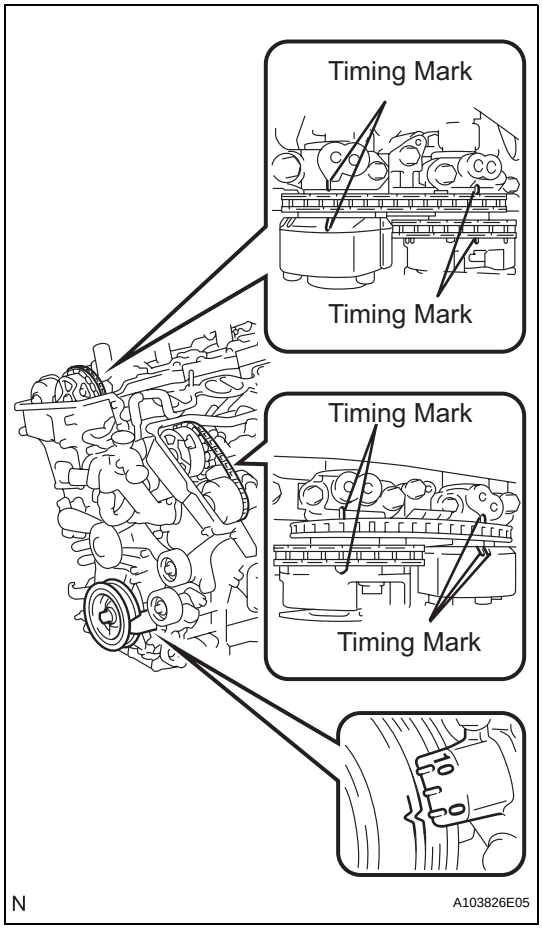

(a) Remove the cylinder head cover.
(b) Turn the crankshaft pulley, and align its groove with the timing mark "0" on the timing chain cover.
(c) Check that the timing marks on the camshaft timing sprocket and camshaft timing gear are facing upward as shown in the illustration.
If not, turn the crankshaft 1 revolution (360°), then align the marks as above.
OK:
Timing marks on camshaft timing gears are aligned as shown in the illustration.
(d) Reinstall the cylinder head cover.

NG → **ADJUST VALVE TIMING**

OK

5	INSPECT CAMSHAFT TIMING OIL CONTROL VALVE ASSEMBLY (OCV)

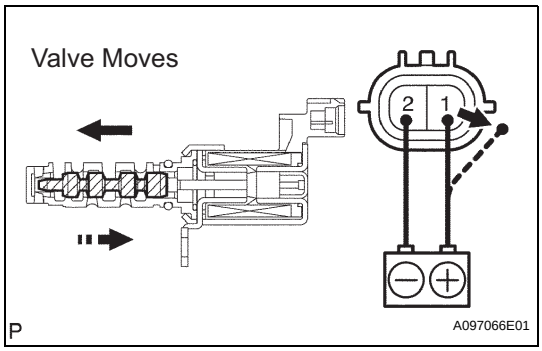

(a) Remove the OCV.
(b) Measure the resistance between the terminals of the OCV.
Standard resistance:
6.9 to 7.9 Ω at 20°C (68°F)
(c) Apply the positive battery voltage to terminal 1 and negative battery voltage to terminal 2. Check the valve operation.
OK:
Valve moves quickly.
(d) Reinstall the OCV.

NG → **REPLACE CAMSHAFT TIMING OIL CONTROL VALVE ASSEMBLY**

OK

6	INSPECT OIL CONTROL VALVE FILTER AND PIPE

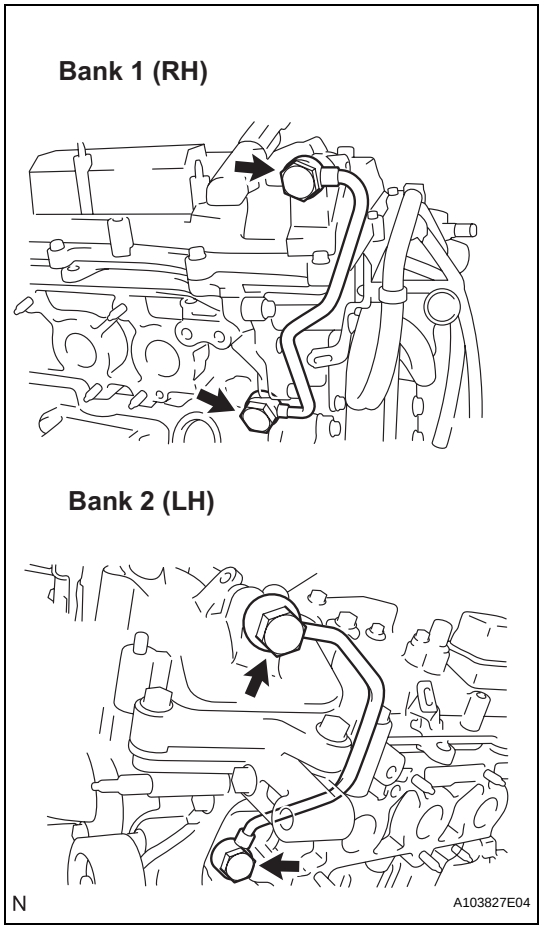

(a) Remove the oil pipe No. 1 or No. 2.
(b) Remove the OCV filter.
(c) Check that the filter is not clogged.
OK:
Filter is not clogged.
(d) Reinstall the OCV filter.
(e) Reinstall the oil pipe No. 1 or No. 2.

NG → **CLEAN OIL CONTROL VALVE FILTER AND PIPE**

OK

7	REPLACE CAMSHAFT TIMING GEAR ASSEMBLY

NEXT

8	CHECK WHETHER DTC OUTPUT RECURS

(a) Connect the intelligent tester to the DLC3.
(b) Turn the ignition switch ON and turn the tester ON.
(c) Clear DTCs (see page ES-39).
(d) Start the engine and warm it up.
(e) Switch the ECM from normal mode to check mode using the tester.
(f) Drive the vehicle for more than 10 minutes.
(g) Read output DTCs using the tester.
Standard:
No DTC output.

HINT:
DTC P0011, P0012, P0021 or P0022 is output when foreign objects in engine oil are caught in some parts of the system. These codes will stay registered even if the system returns to normal after a short time. These foreign objects are then captured by the oil filter, thus eliminating the source of the problem.

OK → **SYSTEM OK**

NG

REPLACE ECM

DTC	P0013	Camshaft Position "B" Actuator Circuit / Open (Bank 1)

DTC	P0023	Camshaft Position "B" Actuator Circuit / Open (Bank 2)

DESCRIPTION

- This DTC is designed to detect opens or shorts in the camshaft oil control valve (OCV) circuit. If the OCV's duty-cycle is excessively high or low while the engine is running, the ECM will illuminate the MIL and set the DTC.
- The VVT (variable valve timing) system adjusts the intake valve timing to improve the driveability. The engine oil pressure turns the camshaft actuator to adjust the valve timing. The OCV is a solenoid valve and switches the engine oil line. The valve moves when the ECM applies the 12 volts to the solenoid. The ECM changes the energizing time to the solenoid (duty-cycle) in accordance with the camshaft position, crankshaft position, throttle position, etc.

ES

VVT System

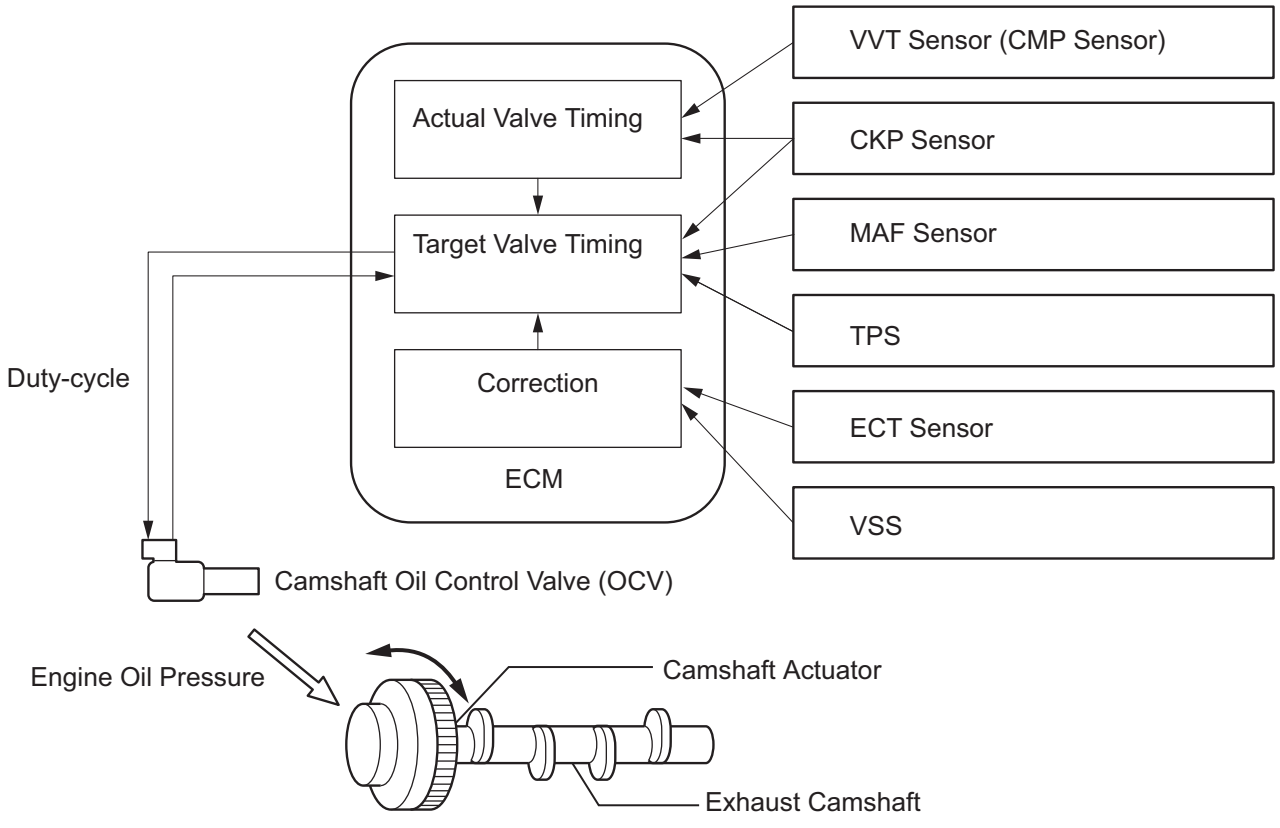

Y

A130637E02

DTC No.	DTC Detection Condition	Trouble Area
P0013	Open or short in OCV for exhaust camshaft (bank 1) circuit (1 trip detection logic)	• Open or short in OCV for exhaust camshaft (bank 1) circuit • OCV for exhaust camshaft (bank 1) • ECM
P0023	Open or short in OCV for exhaust camshaft (bank 2) circuit (1 trip detection logic)	• Open or short in OCV for exhaust camshaft (bank 2) circuit • OCV for exhaust camshaft (bank 2) • ECM

MONITOR DESCRIPTION

This DTC is designed to detect opens or shorts in the camshaft oil control valve (OCV) circuit. If the OCV's duty-cycle is excessively high or low while the engine is running, the ECM will illuminate the MIL and set the DTC.

ES

MONITOR STRATEGY

Related DTCs	P0013: Exhaust camshaft OCV (bank 1) P0023: Exhaust camshaft OCV (bank 2)
Required sensors / components (Main)	Exhaust camshaft OCV
Required sensors / components (Sub)	-
Frequency of operation	Continuous
Duration	1 second
MIL operation	Immediate
Sequence of operation	None

TYPICAL ENABLING CONDITIONS

Monitor runs whenever following DTCs not present	None
All of following conditions met	-
Starter	OFF
Ignition switch	ON
Time after ignition switch OFF to ON	0.5 seconds or more

One of following conditions met	-
A. All of following conditions met	-
Battery voltage	11 to 13 V
Target duty ratio	Less than 70%
Output signal duty ratio	100%
B. All of following conditions met	-
Battery voltage	13 V or more
Target duty ratio	Less than 80%
Output signal duty ratio	100%

TYPICAL MALFUNCTION THRESHOLDS

Exhaust VVT oil control valve condition	No operation record

COMPONENT OPERATING RANGE

OCV duty-cycle	4 to 100% when engine running

WIRING DIAGRAM

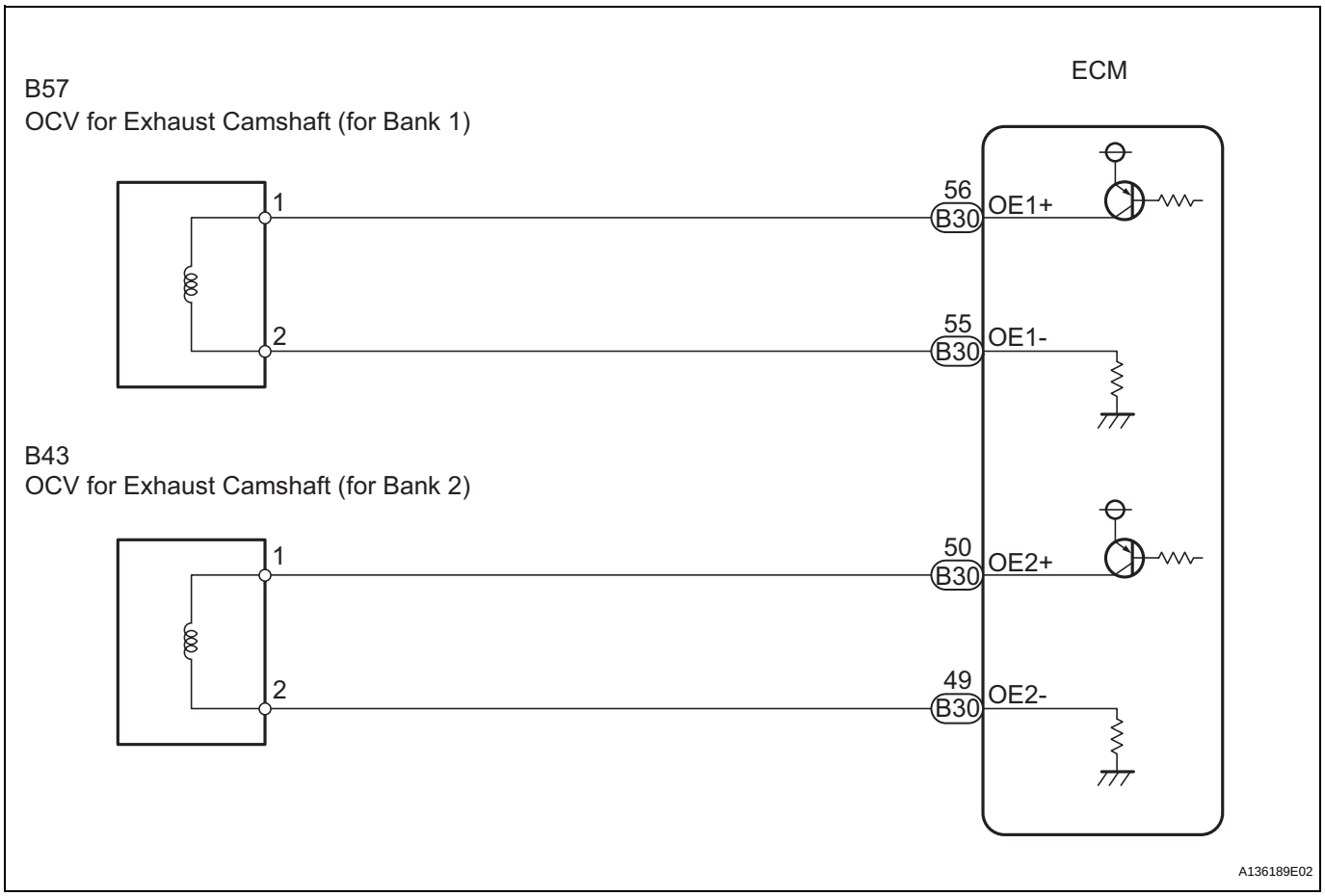

ES

INSPECTION PROCEDURE

HINT:

- If DTC P0013 is displayed, check the bank 1 VVT system for exhaust camshaft circuit.
- Bank 1 refers to the bank that includes No. 1 cylinder.
- If DTC P0023 is displayed, check the bank 2 VVT system for exhaust camshaft circuit.
- Bank 2 refers to the bank that does not include No. 1 cylinder.
- Read freeze frame data using the intelligent tester. The ECM records vehicle and driving condition information as freeze frame data the moment a DTC is stored. When troubleshooting, freeze frame data can be helpful in determining whether the vehicle was running or stopped, whether the engine was warmed up or not, whether the air-fuel ratio was lean or rich, as well as other data recorded at the time of a malfunction (See page ES-40).

1	CHECK DTC (DTC P0013 OR P0023)

(a) Connect the intelligent tester to the DLC3.
(b) Clear DTC after recording the freeze frame data and DTC.
(c) Turn the ignition switch OFF.
(d) Allow the engine to idle and check DTC.
(e) Check that P0013 or P0023 is present.

OK:

P0013 or P0023 is present

NG	CHECK FOR INTERMITTENT PROBLEMS

OK

2 **INSPECT CAMSHAFT TIMING OIL CONTROL VALVE ASSEMBLY**

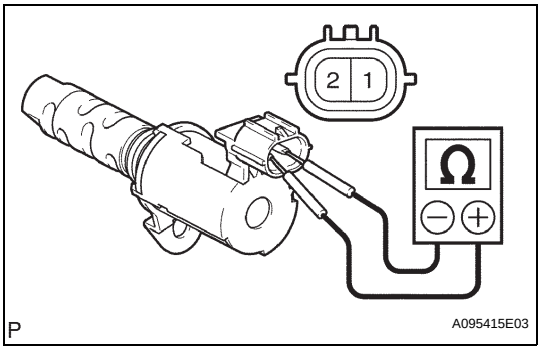

(a) Disconnect the B43 or B57 OCV connector.
(b) Remove the OCV.
(c) Measure the resistance between the terminals of the OCV.
Standard resistance:
6.9 to 7.9 Ω at 20°C (68°F)
(d) Reconnect the OCV connector.

NG → **REPLACE CAMSHAFT TIMING OIL CONTROL VALVE ASSEMBLY**

ES

OK

3 **CHECK WIRE HARNESS (OCV - ECM)**

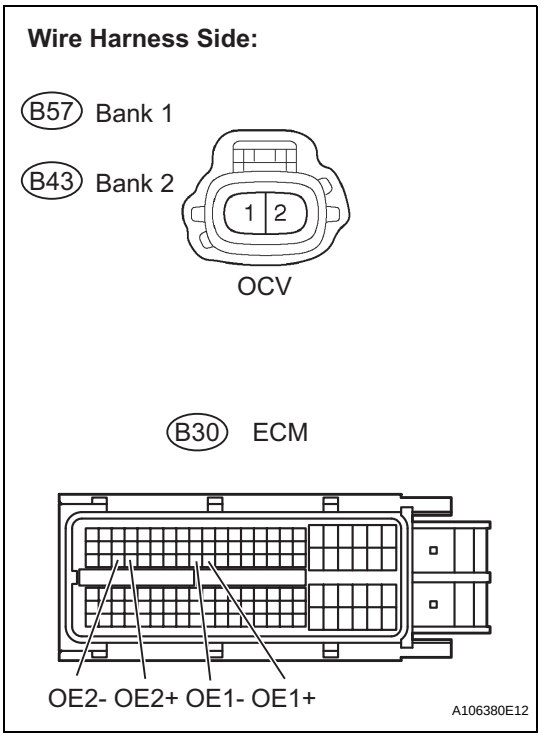

(a) Disconnect the B43 or B57 OCV connector.
(b) Disconnect the B30 ECM connector.
(c) Measure the resistance.
Standard resistance

Tester Connection	Specified Condition
B57-1 - B30-56 (OE1+)	Below 1 Ω
B57-2 - B30-55 (OE1-)	Below 1 Ω
B43-1 - B30-50 (OE2+)	Below 1 Ω
E43-2 - B30-49 (OE2-)	Below 1 Ω
B57-1 or B30-56 (OE1+) - Body ground	10 kΩ or higher
B57-2 or B30-55 (OE1-) - Body ground	10 kΩ or higher
B43-1 or B30-50 (OE2+) - Body ground	10 kΩ or higher
E43-2 or B30-49 (OE2-) - Body ground	10 kΩ or higher

(d) Reconnect the OCV connector.
(e) Reconnect the ECM connector.

NG → **REPAIR OR REPLACE HARNESS AND CONNECTOR**

OK

REPLACE ECM

DTC	P0014	Camshaft Position "B" - Timing Over-Advanced or System Performance (Bank 1)
DTC	P0015	Camshaft Position "B" - Timing Over-Retarded (Bank 1)
DTC	P0024	Camshaft Position "B" - Timing Over-Advanced or System Performance (Bank 2)
DTC	P0025	Camshaft Position "B" - Timing Over-Retarded (Bank 2)

DESCRIPTION

HINT:

If DTC P0014, P0015, P0024 or P0025 is present, check the VVT (Variable Valve Timing) system.

The Variable Valve Timing (VVT) system includes the ECM, OCV and VVT controller. The ECM sends a target duty-cycle control signal to the OCV. This control signal regulates the oil pressure supplied to the VVT controller. Camshaft timing control is performed according to engine operating conditions such as the intake air volume, throttle valve position and engine coolant temperature. The ECM controls the OCV based on the signals transmitted by several sensors. The VVT controller regulates the exhaust camshaft angle using oil pressure through the OCV. As a result, the relative positions of the camshaft and crankshaft are optimized, the engine torque and fuel economy improve, and the exhaust emissions decrease under overall driving conditions. The ECM detects the actual exhaust valve timing using signals from the camshaft and crankshaft position sensors, and performs feedback control. This is how the target exhaust valve timing is verified by the ECM.

VVT System

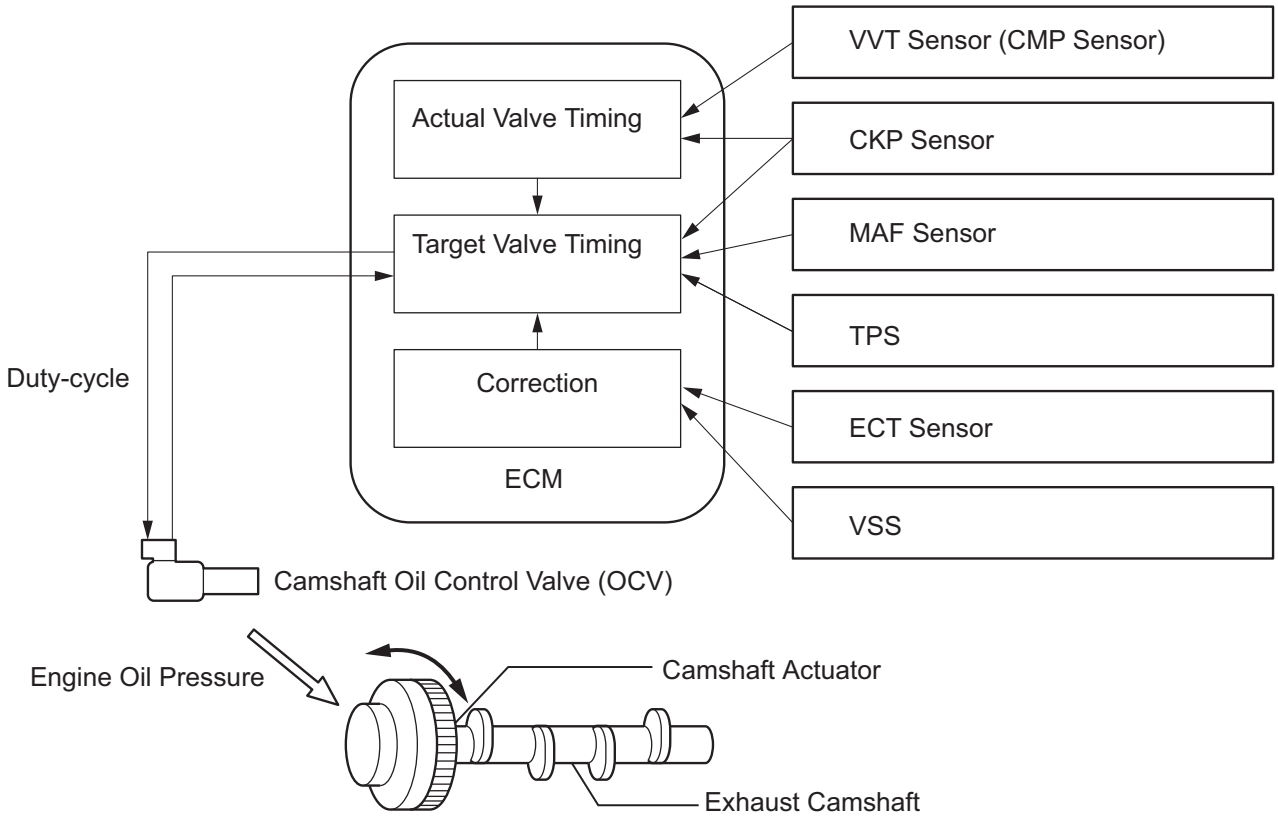

Y

A130637E02

DTC No.	DTC Detection Condition	Trouble Area
P0014 P0024	Advanced cam timing: With warm engine and engine speed of between 500 rpm and 4,000 rpm, all conditions (a), (b) and (c) are met (2 trip detection logic): (a) Difference between target and actual exhaust valve timing more than 5°CA (Crankshaft Angle) for 4.5 seconds (b) Current exhaust valve timing fixed (timing changes less than 5°CA in 5 seconds) (c) Variations in VVT controller timing more than 19°CA of maximum delayed timing (advanced)	• Valve timing • Oil control valve (OCV) for exhaust camshaft • OCV filter • Exhaust camshaft • ECM
P0015 P0025	Retarded cam timing: With warm engine and engine speed of between 500 rpm and 4,000 rpm, all conditions (a), (b) and (c) are met (1 trip detection logic): (a) Difference between target and actual exhaust valve timing more than 5°CA (Crankshaft Angle) for 4.5 seconds (b) Current exhaust valve timing fixed (timing changes less than 5°CA in 5 seconds) (c) Variations in VVT controller timing more than 19°CA or less of maximum delayed timing (retarded)	• Valve timing • OCV for exhaust camshaft • OCV filter • Exhaust camshaft • ECM

MONITOR DESCRIPTION

1. The ECM optimizes the exhaust valve timing using the VVT (Variable Valve Timing) system to control the exhaust camshaft. The VVT system includes the ECM, Oil Control Valve (OCV) and VVT controller.
2. The ECM sends a target duty-cycle control signal to the OCV. This control signal regulates the oil pressure supplied to the VVT controller. The VVT controller can advance or retard the exhaust camshaft.
   If the difference between the target and actual exhaust valve timing is large, and changes in actual exhaust valve timing are small, the ECM interprets this as the VVT controller stuck malfunction and sets a DTC.
   Example:
   A DTC is set when the following conditions A, B and C are met:
   A The difference between the target and actual exhaust valve timing is more than 5°CA (Crankshaft Angle) and the condition continues for more than 4.5 seconds (Procedure "A").
   B It takes 5 seconds or more to change the valve timing by 5°CA (Procedure "B").
   C After above procedures "A" and "B" are met, the OCV is forcibly activated 63 times or more.
3. DTCs P0014 and P0024 (Advanced Cam Timing) are subject to 1 trip detection logic.
4. DTCs P0015 and P0025 (Retarded Cam Timing) are subject to 2 trip detection logic.
   These DTCs indicate that the VVT controller cannot operate properly due to OCV malfunctions or the presence of foreign objects in the OCV.
5. The monitor will not run unless the following conditions are met:
   (a) The engine is warm (the engine coolant temperature is 75°C [167°F] or more).
   (b) The vehicle has been driven at more than 40 mph (64 km/h) for 3 minutes.
   (c) The engine has idled for 3 minutes.

ES

MONITOR STRATEGY

Related DTCs	P0014: Advanced camshaft timing (bank 1) P0015: Retarded camshaft timing (bank 1) P0024: Advanced camshaft timing (bank 2) P0025: Retarded camshaft timing (bank 2)
Required sensors / components (Main)	VVT OCV and VVT Actuator
Required sensors / components (Related)	Crankshaft position sensor, Camshaft position sensor and Engine coolant temperature sensor
Frequency of operation	Once per driving cycle
Duration	Within 10 seconds
MIL operation	Advanced camshaft timing (bank 1): Immediate Advanced camshaft timing (bank 2): Immediate Retarded camshaft timing (bank 1): 2 driving cycles Retarded camshaft timing (bank 2): 2 driving cycles
Sequence of operation	None

TYPICAL ENABLING CONDITIONS

Monitor runs whenever following DTCs are not present	P0100 - P0103 (MAF sensor) P0115 - P0118 (ECT sensor) P0125 (insufficient ECT for closed loop) P0335 (CKP sensor) P0340 (VVT sensor) P0351 - P0356 (igniter)
Battery voltage	11 V or more
Engine RPM	500 to 4,000 rpm
Engine coolant temperature	75 to 100°C (167 to 212°F)

TYPICAL MALFUNCTION THRESHOLDS

Advanced camshaft timing:

Valve timing	No change

Valve timing	Advanced position

Retarded camshaft timing:

Valve timing	No change
Valve timing	Retarded position

WIRING DIAGRAM

Refer to DTC P0013 (see page ES-88).

INSPECTION PROCEDURE

HINT:

Abnormal bank	Advanced timing over (Valve timing is out of specified range)	Retarded timing over (Valve timing is out of specified range)
Bank 1	P0014	P0015
Bank 2	P0024	P0025

- If DTC P0014 or P0015 is displayed, check the bank 1 VVT system for exhaust camshaft circuit.
- Bank 1 refers to the bank that includes cylinder No. 1.
- If DTC P0024 or P0025 is displayed, check the bank 2 VVT system for exhaust camshaft circuit.
- Bank 2 refers to the bank that does not include cylinder No. 1.
- Read freeze frame data using the intelligent tester. The ECM records vehicle and driving condition information as freeze frame data the moment a DTC is stored. When troubleshooting, freeze frame data can be helpful in determining whether the vehicle was running or stopped, whether the engine was warmed up or not, whether the air-fuel ratio was lean or rich, as well as other data recorded at the time of a malfunction (See page ES-40).

1	**CHECK ANY OTHER DTCS OUTPUT (IN ADDITION TO DTC P0014, P0015, P0024 OR P0025)**

(a) Connect the intelligent tester to the DLC3.
(b) Turn the ignition switch ON and turn the tester ON.
(c) Enter the following menus: DIAGNOSIS / ENHANCED OBD II / DTC INFO / CURRENT CODES.
(d) Read DTCs.

Result

Display (DTC output)	Proceed to
P0014, P0015, P0024 or P0025	A
P0014, P0015, P0024 or P0025 and other DTCs	B

HINT:
If any DTCs other than P0014, P0015, P0024 or P0025 are output, troubleshoot those DTCs first.

B → **GO TO DTC CHART**

A

2	**PERFORM ACTIVE TEST BY INTELLIGENT TESTER (OPERATE OCV)**

(a) Connect the intelligent tester to the DLC3.
(b) Turn the tester ON.
(c) Warm up the engine.

(d) Enter the following menus: DIAGNOSIS / ENHANCED OBD II / ACTIVE TEST / VVT CTRL B1 or VVT CTRL B2.
(e) Check the engine speed while operating the Oil Control Valve (OCV) using the tester.

OK

Tester Operation	Specified Condition
OCV OFF	Normal engine speed
OCV ON	Engine idles roughly or stalls (soon after OCV switched from OFF to ON)

NG → **Go to step 4**

OK

ES

3 CHECK WHETHER DTC OUTPUT RECURS (DTC P0014, P0015, P0024 OR P0025)

(a) Connect the intelligent tester to the DLC3.
(b) Turn the tester ON.
(c) Clear DTCs (See page ES-39).
(d) Warm up the engine.
(e) Switch the ECM from normal mode to check mode using the tester (See page ES-42).
(f) Drive the vehicle for more than 10 minutes.
(g) Read DTCs using the tester.
OK:
No DTC output.

NG → **Go to step 4**

OK

END

4	CHECK VALVE TIMING (CHECK FOR LOOSE AND JUMPED TEETH ON TIMING CHAIN)

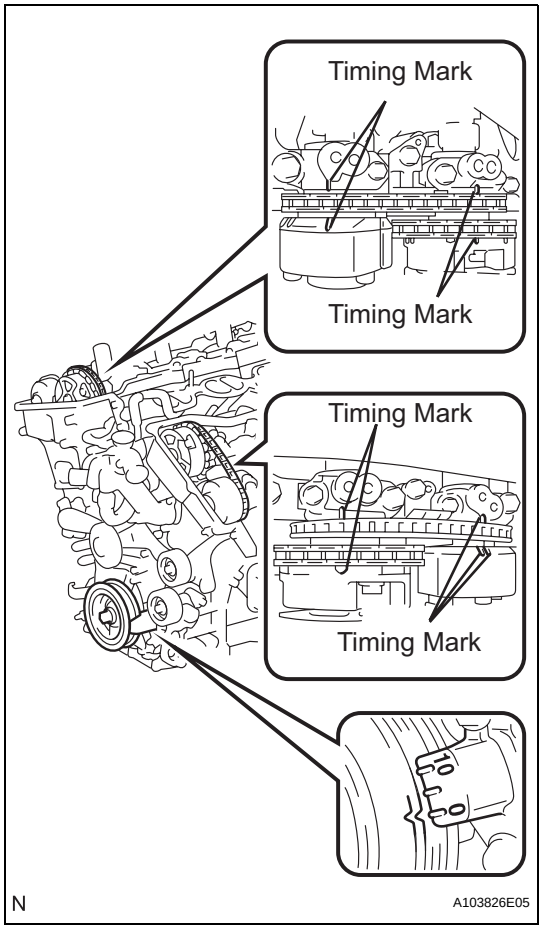

(a) Remove the cylinder head cover RH and LH.
(b) Turn the crankshaft pulley, and align its groove with the timing mark "0" of the timing chain cover.
(c) Check that the timing marks of the camshaft timing gears are aligned with the timing marks of the bearing cap as shown in the illustration.
If not, turn the crankshaft 1 revolution (360°), then align the marks as above.
OK:
Timing marks on crankshaft timing gears are aligned as shown in the illustration.
(d) Reinstall the cylinder head cover.

NG → **ADJUST VALVE TIMING**

OK

5	INSPECT CAMSHAFT TIMING OIL CONTROL VALVE ASSEMBLY (OCV FOR EXHAUST CAMSHAFT)

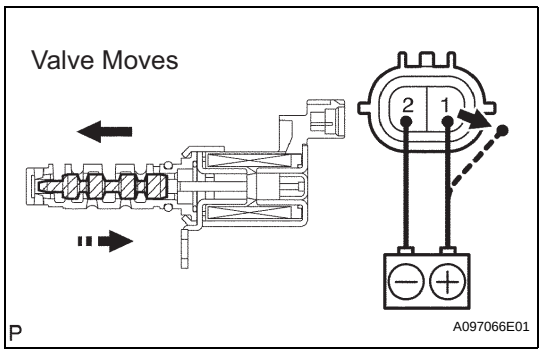

(a) Remove the OCV.
(b) Measure the resistance between the terminals of the OCV.
Standard resistance:
6.9 to 7.9 Ω at 20°C (68°F)
(c) Apply the positive battery voltage to terminal 1 and negative battery voltage to terminal 2. Check the valve operation.
OK:
Valve moves quickly.
(d) Reinstall the OCV.

NG → **REPLACE CAMSHAFT TIMING OIL CONTROL VALVE ASSEMBLY**

OK

6	INSPECT OIL CONTROL VALVE FILTER AND PIPE

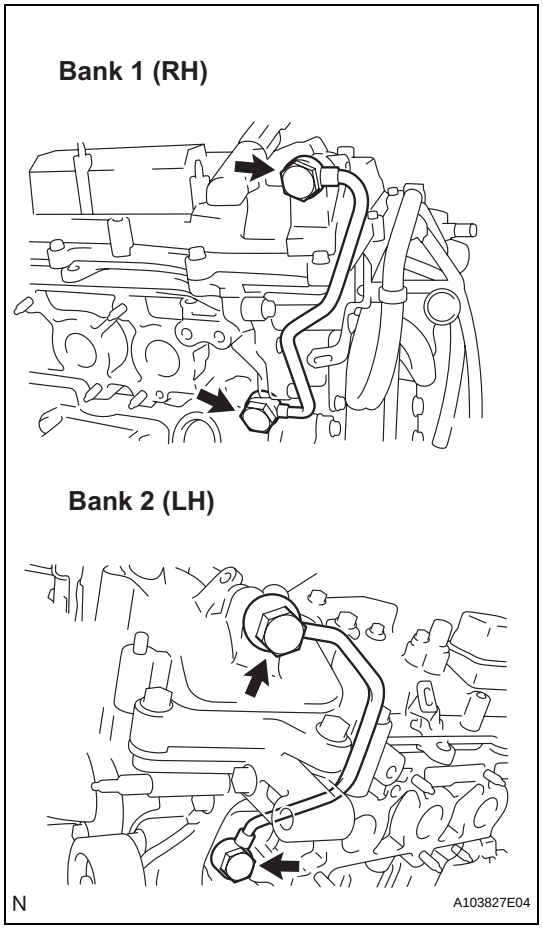

(a) Remove the oil pipe No. 1 or No. 2.
(b) Remove the oil control valve filter.
(c) Check that the filter and pipe are not clogged.
OK:
Filter is not clogged.
(d) Reinstall the oil control valve filter.
(e) Reinstall the oil pipe No. 1 or No. 2.

NG → **CLEAN OIL CONTROL VALVE FILTER AND PIPE**

OK

7	REPLACE EXHAUST CAMSHAFT

NEXT

8	CHECK WHETHER DTC OUTPUT RECURS

(a) Connect the intelligent tester to the DLC3.
(b) Turn the tester ON.
(c) Clear DTCs.
(d) Warm up the engine.
(e) Switch the ECM from normal mode to check mode using the intelligent tester (see page ES-42).
(f) Drive the vehicle for more than 10 minutes or more.
(g) Read output DTCs using the intelligent tester.
OK:
No DTC output.

ES

HINT:
DTC P0014, P0015, P0024 or P0025 is output when foreign objects in engine oil are caught in some parts of the system. These codes will stay registered even if the system returns to normal after a short time. These foreign objects are then captured by the oil filter, thus eliminating the source of the problem.

OK → **SYSTEM IS OK**

NG

REPLACE ECM

DTC	P0016	Crankshaft Position - Camshaft Position Correlation (Bank 1 Sensor A)

DTC	P0017	Crankshaft Position - Camshaft Position Correlation (Bank 1 Sensor B)

DTC	P0018	Crankshaft Position - Camshaft Position Correlation (Bank 2 Sensor A)

DTC	P0019	Crankshaft Position - Camshaft Position Correlation (Bank 2 Sensor B)

DESCRIPTION

In the VVT (Variable Valve Timing) system, the appropriate intake and exhaust valve open and close timing is controlled by the ECM. The ECM performs intake and exhaust valve control by performing the following: 1) controlling the camshaft and camshaft timing oil control valve, and operating the camshaft timing gear; and 2) changing the relative positions of the gaps between the camshaft and crankshaft.

DTC No.	DTC Detection Condition	Trouble Area
P0016	Deviation in crankshaft position sensor signal and VVT sensor 1 (for intake camshaft bank 1) signal (2 trip detection logic)	• Mechanical system (Timing chain has jumped tooth or chain stretched) • ECM
P0017	Deviation in crankshaft position sensor signal and VVT sensor 1 (for exhaust camshaft bank 1) signal (2 trip detection logic)	• Mechanical system (Timing chain has jumped tooth or chain stretched) • ECM
P0018	Deviation in crankshaft position sensor signal and VVT sensor 2 (for intake camshaft bank 2) signal (2 trip detection logic)	• Mechanical system (Timing chain has jumped tooth or chain stretched) • ECM
P0019	Deviation in crankshaft position sensor signal and VVT sensor 2 (for exhaust camshaft bank 2) signal (2 trip detection logic)	• Mechanical system (Timing chain has jumped tooth or chain stretched) • ECM

MONITOR DESCRIPTION

To monitor the correlation of the intake camshaft position and crankshaft position, the ECM checks the VVT learning value while the engine is idling. The VVT learning value is calibrated based on the camshaft position and crankshaft position. The intake valve timing is set to the most retarded angle while the engine is idling. If the VVT learning value is out of the specified range in consecutive driving cycles, the ECM illuminates the MIL and sets the DTC P0016 (bank 1) or P0018 (bank 2).

To monitor the correlation of the exhaust camshaft position and crankshaft position, the ECM checks the VVT learning value while the engine is idling. The VVT learning value is calibrated based on the camshaft position and crankshaft position. The exhaust valve timing is set to the most advanced angle while the engine is idling. If the VVT learning value is out of the specified range in consecutive driving cycles, the ECM illuminates the MIL and sets the DTC P0017 (bank 1) or P0019 (bank 2).

MONITOR STRATEGY

Related DTCs	P0016: Camshaft timing misalignment at idling (bank 1 intake side) P0017: Camshaft timing misalignment at idling (bank 1 exhaust side) P0018: Camshaft timing misalignment at idling (bank 2 intake side) P0019: Camshaft timing misalignment at idling (bank 2 exhaust side)
Required Sensors/Components	VVT actuator
Required Sensors/Components	Camshaft position sensor, Crankshaft position sensor
Frequency of Operation	Once per driving cycle

Duration	Within 1 minute
MIL Operation	2 driving cycles
Sequence of Operation	None

TYPICAL ENABLING CONDITIONS

Monitor runs whenever following DTCs not present	P0011 (VVT system 1 - advanced) P0012 (VVT system 1 - retarded) P0021 (VVT system 2 - advanced) P0022 (VVT system 2 - retarded) P0115 - P0118 (ECT sensor)
VVT feedback mode	Executing
VVT	Maximum advanced or retarded position
Engine RPM	500 to 1,000 rpm

ES

TYPICAL MALFUNCTION THRESHOLDS

Intake side:

One of following conditions met	-
VVT learning value when camshaft maximum retarded	Less than 18.5°CA
VVT learning value when camshaft maximum retarded	More than 43.5°CA

Exhaust side:

One of following conditions met	-
VVT learning value when camshaft maximum retarded	Less than 77°CA
VVT learning value when camshaft maximum retarded	More than 102°CA

WIRING DIAGRAM

Refer to DTC P0335 (see page ES-207).

INSPECTION PROCEDURE

HINT:

Read freeze frame data using the intelligent tester. Freeze frame data records the engine condition when malfunctions are detected. When troubleshooting, freeze frame data can help determine if the vehicle was moving or stationary, if the engine was warmed up or not, if the air-fuel ratio was lean or rich, and other data from the time the malfunction occurred.

1	**CHECK VALVE TIMING (CHECK FOR LOOSE AND JUMPED TOOTH OF TIMING CHAIN) (See page ES-90)**

NG → **Go to step 3**

OK

2	**REPLACE ECM**

NEXT → **Go to step 4**

3	ADJUST VALVE TIMING

NEXT

4	CHECK WHETHER DTC OUTPUT RECURS

NOTICE:
After replacing the ECM or adjusting intake valve timing, confirm that the DTC output does not recur.

(a) Connect the intelligent tester to the DLC3.
(b) Turn the ignition switch ON.
(c) Turn the tester ON.
(d) Clear DTCs (see page ES-39).
(e) Switch the ECM from normal mode to check mode using the tester (see page ES-42).
(f) Start the engine and warm it up.
(g) Allow the engine to idle for 1 minute or more, and then drive the vehicle for 1 minute or more.
(h) Confirm that no DTC is set, using the tester.
OK:
No DTC output

NEXT

END

DTC	P0031	Oxygen (A/F) Sensor Heater Control Circuit Low (Bank 1 Sensor 1)

DTC	P0032	Oxygen (A/F) Sensor Heater Control Circuit High (Bank 1 Sensor 1)

DTC	P0051	Oxygen (A/F) Sensor Heater Control Circuit Low (Bank 2 Sensor 1)

DTC	P0052	Oxygen (A/F) Sensor Heater Control Circuit High (Bank 2 Sensor 1)

ES

DESCRIPTION

Refer to DTC P2195 (see page ES-334).

HINT:

- Although the DTC titles say oxygen sensor, these DTCs relate to the Air-Fuel Ratio (A/F) sensor.
- Sensor 1 refers to the sensor mounted in front of the Three-Way Catalytic Converter (TWC) and located near the engine assembly.
- When one of these DTCs is set, the ECM enters fail-safe mode. The ECM turns off the A/F sensor heater in fail-safe mode. Fail-safe mode continues until the ignition switch is turned OFF.
- The ECM provides a pulse width modulated control circuit to adjust the current through the heater. The A/F sensor heater circuit uses a relay on the B+ side of the circuit.

Reference (System Diagram of Bank 1 Sensor 1):

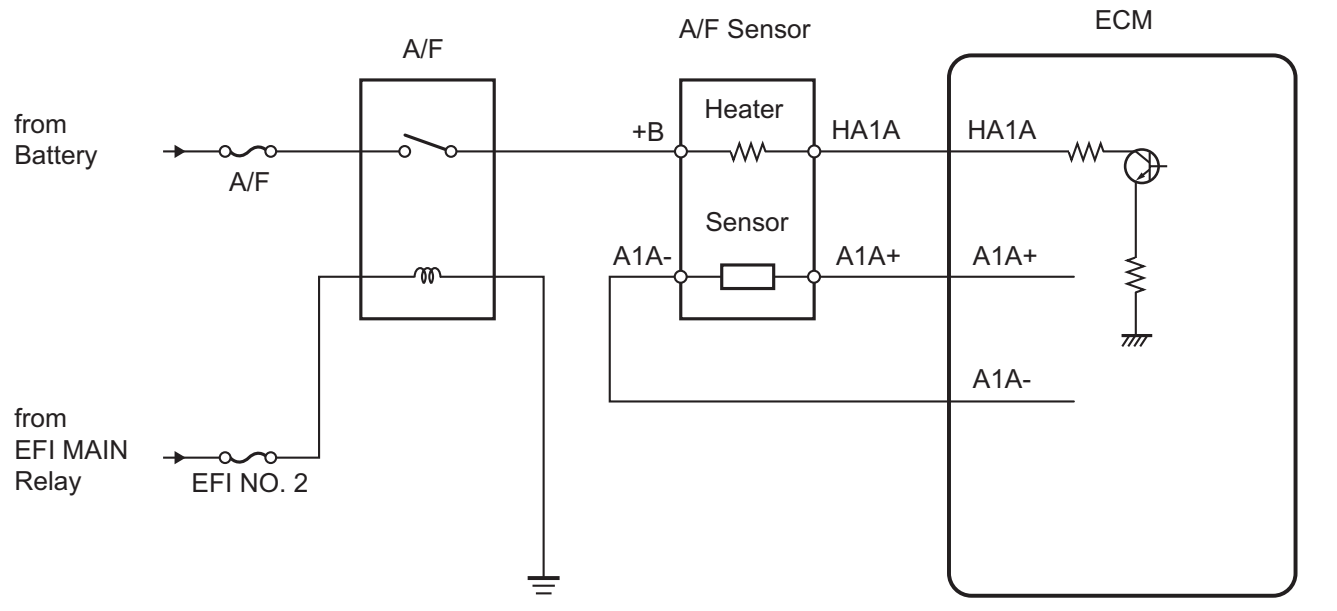

DTC No.	DTC Detection Condition	Trouble Area
P0031 P0051	Air-Fuel Ratio (A/F) sensor heater current less than 0.8 A (1 trip detection logic)	• Open in A/F sensor heater circuit • A/F sensor heater (sensor 1) • Integration relay • ECM

DTC No.	DTC Detection Condition	Trouble Area
P0032 P0052	Air-Fuel Ratio (A/F) sensor heater current fail (1 trip detection logic)	• Short in A/F sensor heater circuit • A/F sensor heater (sensor 1) • Integration relay • ECM

HINT:
- Bank 1 refers to the bank that includes cylinder No. 1.
- Bank 2 refers to the bank that does not include cylinder No. 1.
- Sensor 1 refers to the sensor closest to the engine assembly.
- Sensor 2 refers to the sensor farthest away from the engine assembly.

MONITOR DESCRIPTION

The ECM uses information from the Air-Fuel Ratio (A/F) sensor to regulate the air-fuel ratio and keep it close to the stoichiometric level. This maximizes the ability of the Three-Way Catalytic Converter (TWC) to purify the exhaust gases.

The A/F sensor detects oxygen levels in the exhaust gas and transmits the information to the ECM. The inner surface of the sensor element is exposed to the outside air. The outer surface of the sensor element is exposed to the exhaust gas. The sensor element is made of platinum coated zirconia and includes an integrated heating element.

The zirconia element generates a small voltage when there is a large difference in the oxygen concentrations between the exhaust gas and outside air. The platinum coating amplifies this voltage generation.

The A/F sensor is more efficient when heated. When the exhaust gas temperature is low, the sensor cannot generate useful voltage signals without supplementary heating. The ECM regulates the supplementary heating using a duty-cycle approach to adjust the average current in the sensor heater element. If the heater current is outside the normal range, the signal transmitted by the A/F sensor becomes inaccurate. As a result, the ECM is unable to regulate air-fuel ratio properly.

When the current in the A/F sensor heater is outside the normal operating range, the ECM interprets this as a malfunction in the sensor heater and sets a DTC.

Example:

The ECM sets DTC P0032 or P0052 when the current in the A/F sensor heater is more than 10 A. Conversely, when the heater current is less than 0.8 A, DTC P0031 or P0051 is set.

MONITOR STRATEGY

Related DTCs	P0031: A/F sensor heater (bank 1) open/short (Low electrical current) P0032: A/F sensor heater (bank 1) open/short (High electrical current) P0051: A/F sensor heater (bank 2) open/short (Low electrical current) P0052: A/F sensor heater (bank 2) open/short (High electrical current)
Required Sensors/Components (Main)	A/F sensor heater
Required Sensors/Components (Related)	-
Frequency of Operation	Continuous
Duration	10 seconds
MIL Operation	Immediate
Sequence of Operation	None

TYPICAL ENABLING CONDITIONS

All:

Monitor runs whenever following DTCs not present	None

P0031 and P0051:

Battery voltage	10.5 V or more
A/F sensor heater duty-cycle ratio	50% or more
Time after engine start	10 seconds or more

P0032 and P0052:

Time after engine start	10 seconds or more

TYPICAL MALFUNCTION THRESHOLDS

P0031 and P0051:

A/F sensor heater current	Less than 0.8 A

P0032 and P0052:

Hybrid IC high current limiter port	Fail

COMPONENT OPERATING RANGE

A/F sensor heater current	0.9 to 9.9 A

ES

WIRING DIAGRAM

Refer to DTC P2195 (see page ES-339).

INSPECTION PROCEDURE

HINT:

Read freeze frame data using the intelligent tester. Freeze frame data records the engine condition when malfunctions are detected. When troubleshooting, freeze frame data can help determine if the vehicle was moving or stationary, if the engine was warmed up or not, if the air-fuel ratio was lean or rich, and other data from the time the malfunction occurred.

1 INSPECT AIR-FUEL RATIO SENSOR (HEATER RESISTANCE)

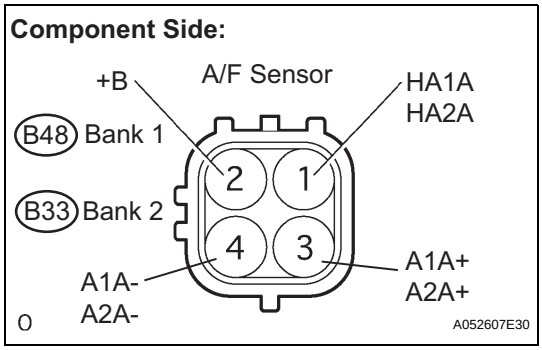

(a) Disconnect the B33 or B48 A/F sensor connector.

(b) Measure the resistance of the A/F sensor connector.

Standard resistance
Bank 1

Tester Connection	Specified Condition	Specified Condition
1 (HA1A) - 2 (+B)	20°C (68°F)	1.8 to 3.4 Ω
1 (HA1A) - 4(A1A-)	-	10 kΩ or higher

Standard resistance
Bank 2

Tester Connection	Specified Condition	Specified Condition
1 (HA2A) - 2 (+B)	20°C (68°F)	1.8 to 3.4 Ω
1 (HA2A) - 4 (A2A-)	-	10 kΩ or higher

(c) Reconnect the A/F sensor connector.

NG → **REPLACE AIR-FUEL RATIO SENSOR**

OK

2 CHECK TERMINAL VOLTAGE (+B OF A/F SENSOR)

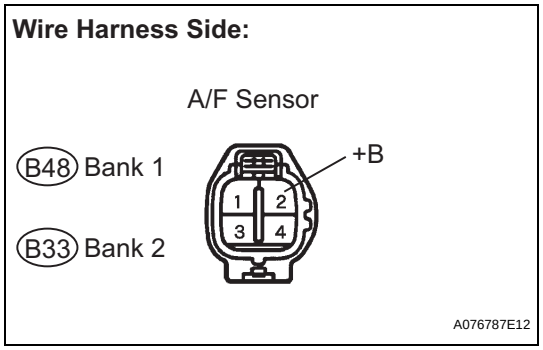

(a) Disconnect the B33 or B48 A/F sensor connector.
(b) Turn the ignition switch ON.
(c) Measure the voltage between the terminals of the B33 or B48 A/F sensor connector and body ground.
Standard voltage

Tester Connection	Specified Condition
B33-2 (+B) - Body ground	9 to 14 V
B48-2 (+B) - Body ground	9 to 14 V

(d) Reconnect the A/F sensor connector.

OK → **Go to step 5**

NG

3 INSPECT INTEGRATION RELAY (A/F RELAY)

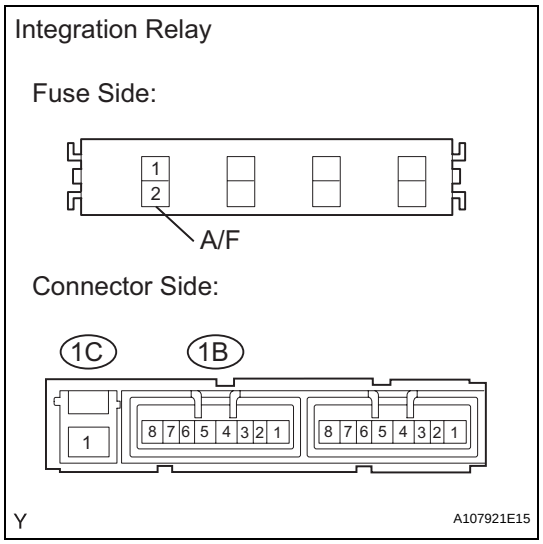

(a) Remove the integration relay from the engine room No. 1 relay block.
(b) Inspect the A/F fuse.
(1) Remove the A/F fuse from the integration relay.
(2) Measure the A/F fuse resistance.
Standard resistance:
Below 1 Ω
(3) Reinstall the A/F fuse.
(c) Inspect the A/F relay.
(1) Measure the A/F relay resistance.
Standard resistance

Tester Connection	Specified Condition
1C-1 - 1B-8	10 kΩ or higher
	Below 1 Ω (Apply battery voltage between terminals 1B-6 and 1B-7)

(d) Reinstall the integration relay.

NG → **REPLACE INTEGRATION RELAY**

OK

ES

4	CHECK WIRE HARNESS (INTEGRATION RELAY - A/F SENSOR AND BODY GROUND)

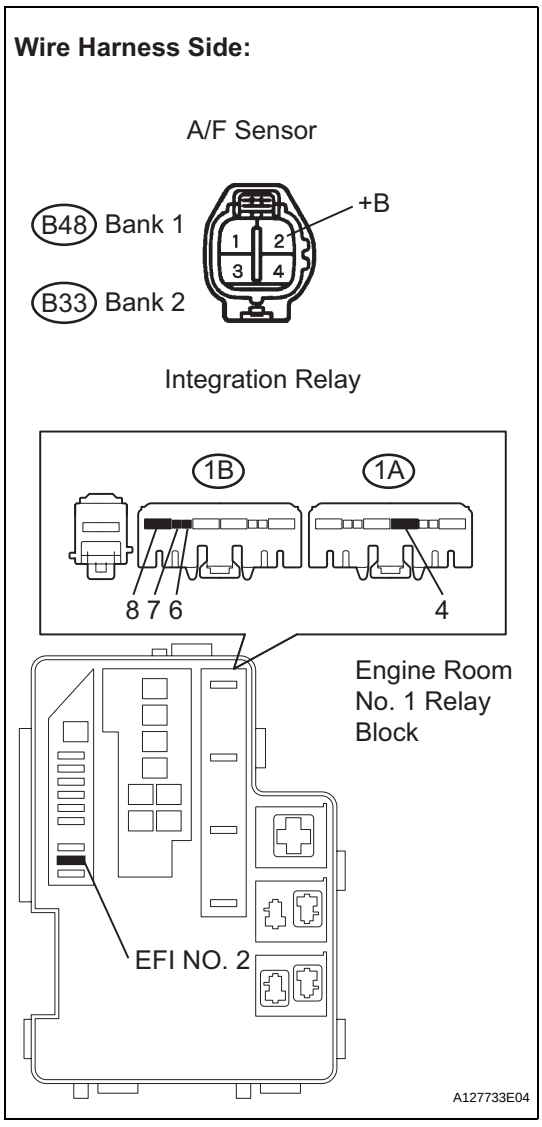

(a) Check the EFI NO. 2 fuse.
(b) Disconnect the B33 or B48 A/F sensor connector.
(c) Remove the integration relay from the engine room No. 1 relay block.
(d) Measure the resistance.

Standard resistance

Tester Connection	Specified Condition
B48-2 (+B) - 1B-8	Below 1 Ω
B33-2 (+B) - 1B-8	Below 1 Ω
1A-4 - 1B-6	Below 1 Ω
1B-7 - Body ground	Below 1 Ω
B48-2 (+B) or 1B-8 - Body ground	10 kΩ or higher
B33-2 (+B) or 1B-8 - Body ground	10 kΩ or higher
1A-4 or 1B-6 - Body ground	10 kΩ or higher

(e) Reconnect the A/F sensor connector.
(f) Reinstall the integration relay.

NG → **REPAIR OR REPLACE HARNESS AND CONNECTOR**

OK

CHECK ECM POWER SOURCE CIRCUIT

5 CHECK WIRE HARNESS (A/F SENSOR - ECM)

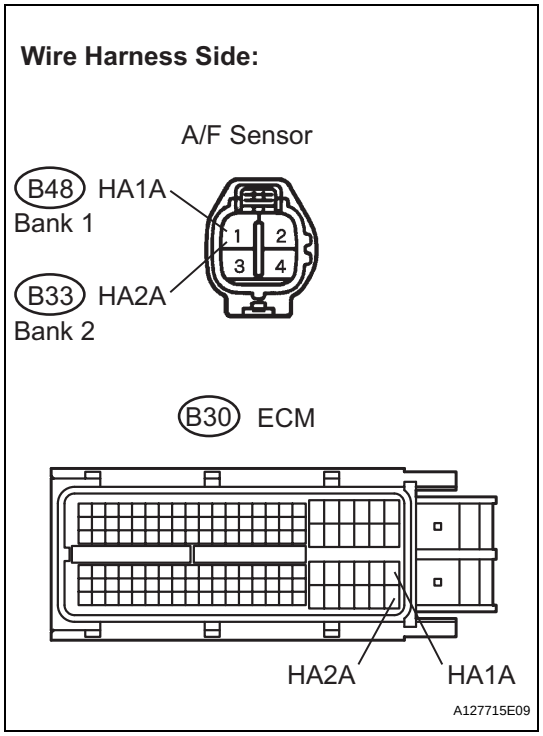

(a) Disconnect the B33 or B48 A/F sensor connector.
(b) Disconnect the B30 ECM connector.
(c) Measure the resistance.

Standard resistance

Tester Connection	Specified Condition
B48-1 (HA1A) - B30-86 (HA1A)	Below 1 Ω
B33-1 (HA2A) - B30-109 (HA2A)	Below 1 Ω
B48-1 (HA1A) or B30-86 (HA1A) - Body ground	10 kΩ or higher
B33-1 (HA2A) or B30-109 (HA2A) - Body ground	10 kΩ or higher

(d) Reconnect the A/F sensor connector.
(e) Reconnect the ECM connector.

NG → **REPAIR OR REPLACE HARNESS AND CONNECTOR**

OK

6 CHECK WHETHER DTC OUTPUT RECURS

(a) Connect the intelligent tester to the DLC3.
(b) Turn the ignition switch ON.
(c) Turn the tester ON.
(d) Clear DTCs (see page ES-39).
(e) Start the engine.
(f) Allow the engine to idle for 1 minute or more.
(g) Select the following menu items: DIAGNOSIS / ENHANCED OBD II / DTC INFO / CURRENT CODES.
(h) Read DTCs.

Result

Display (DTC Output)	Proceed to
No output	A
P0031, P0032, P0051 or P0052	B

B → **REPLACE ECM**

A

CHECK FOR INTERMITTENT PROBLEMS

DTC	P0037	Oxygen Sensor Heater Control Circuit Low (Bank 1 Sensor 2)
DTC	P0038	Oxygen Sensor Heater Control Circuit High (Bank 1 Sensor 2)
DTC	P0057	Oxygen Sensor Heater Control Circuit Low (Bank 2 Sensor 2)
DTC	P0058	Oxygen Sensor Heater Control Circuit High (Bank 2 Sensor 2)
DTC	P0141	Oxygen Sensor Heater Circuit Malfunction (Bank 1 Sensor 2)
DTC	P0161	Oxygen Sensor Heater Circuit Malfunction (Bank 2 Sensor 2)

ES

DESCRIPTION

Refer to DTC P0136 (see page ES-158).

HINT:

- When any of these DTCs are set, the ECM enters fail-safe mode. The ECM turns off the Heated Oxygen (HO2) Sensor heater in fail-safe mode. Fail-safe mode continues until the ignition switch is turned OFF.
- The ECM provides a pulse width modulated control circuit to adjust the current through the heater. The HO2 sensor heater circuit uses a relay on the B+ side of the circuit.

Reference (System Diagram of Bank 1 Sensor 2):

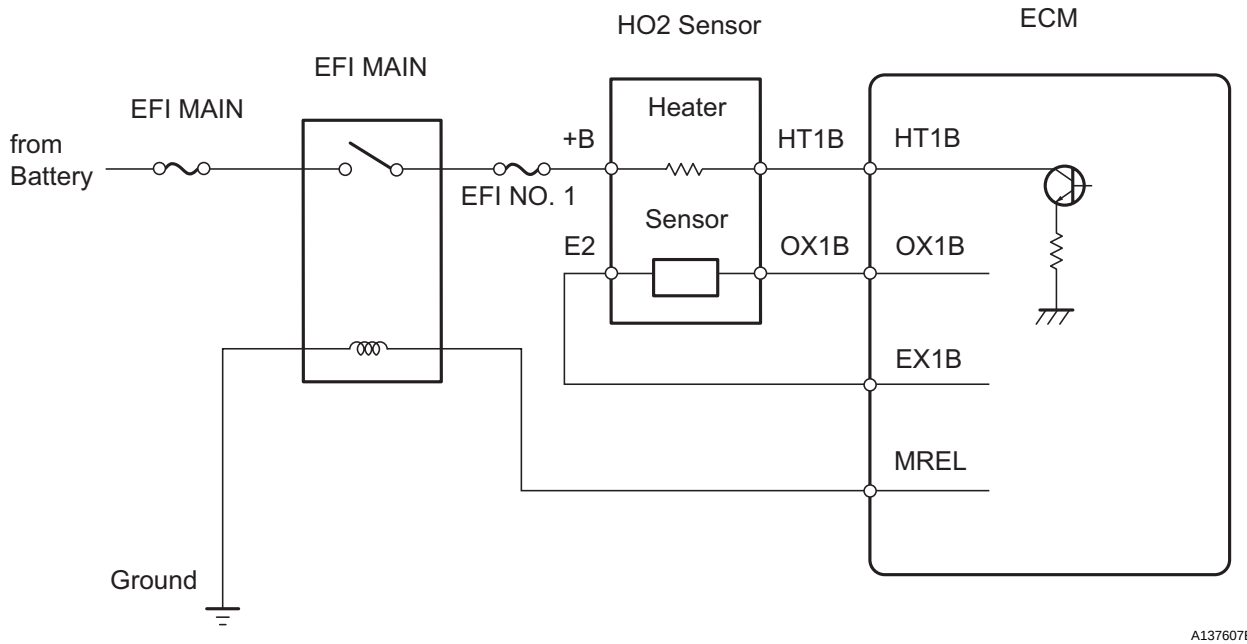

DTC No.	DTC Detection Condition	Trouble Area
P0037 P0057	Heated Oxygen (HO2) sensor heater current less than 0.3 A (1 trip detection logic)	• Open in HO2 sensor heater circuit • HO2 sensor heater (sensor 2) • Integration relay (EFI MAIN relay) • ECM
P0038 P0058	Heated Oxygen (HO2) sensor heater current more than 2 A (1 trip detection logic)	• Short in HO2 sensor heater circuit • HO2 sensor heater (sensor 2) • Integration relay (EFI MAIN relay) • ECM
P0141 P0161	Cumulative heater resistance correction value exceeds threshold (2 trip detection logic)	• Open or short in HO2 sensor heater circuit • HO2 sensor heater (sensor 2) • Integration relay (EFI MAIN relay) • ECM

HINT:
- Bank 1 refers to the bank that includes cylinder No. 1.
- Bank 2 refers to the bank that does not include cylinder No. 1.
- Sensor 1 refers to the sensor closest to the engine assembly.
- Sensor 2 refers to the sensor farthest away from the engine assembly.

ES

MONITOR DESCRIPTION

The sensing position of the Heated Oxygen (HO2) sensor has a zirconia element which is used to detect the oxygen concentration in the exhaust gas. If the zirconia element is at the appropriate temperature, and the difference between the oxygen concentrations surrounding the inside and outside surfaces of the sensor is large, the zirconia element generates voltage signals. In order to increase the oxygen concentration detecting capacity of the zirconia element, the ECM supplements the heat from the exhaust with heat from a heating element inside the sensor.

Heated oxygen sensor heater range check (P0037, P0038, P0057 and P0058):

The ECM monitors the current applied to the O2 sensor heater to check the heater for malfunctions. If the current is below the threshold value, the ECM determines that there is an open circuit in the heater. If the current is above the threshold value, the ECM determines that there is a short circuit in the heater.

The ECM constantly monitors the current applied to the heater. If the ECM detects an open or short circuit, the ECM turns the MIL on and sets a DTC.

If a malfunction is detected, the ECM cuts off the current applied to the heater.

Example:

The ECM sets DTC P0038 or P0058 when the current in the HO2 sensor heater is more than 2 A. Conversely, when the heater current is less than 0.3 A, DTC P0037 or P0057 is set.

Heated oxygen sensor heater performance (P0141 and P0161):

After the accumulated heater ON time exceeds 100 seconds, the ECM calculates the heater resistance using the battery voltage and the current applied to the heater.

If the resistance is above the threshold value, the ECM determines that there is a malfunction in the HO2 sensor heater and set DTC P0141 or P0161.

MONITOR STRATEGY

Related DTCs	P0037: Heated oxygen sensor heater (bank 1) range check (Low electrical current) P0038: Heated oxygen sensor heater (bank 1) range check (High electrical current) P0057: Heated oxygen sensor heater (bank 2) range check (Low electrical current) P0058: Heated oxygen sensor heater (bank 2) range check (High electrical current) P0141: Heated oxygen sensor heater performance (bank 1) P0161: Heated oxygen sensor heater performance (bank 2)
Required Sensors/Components (Main)	Heated oxygen sensor heater
Required Sensors/Components (Related)	-
Frequency of Operation	Continuous: P0037, P0038, P0057 and P0058 Once per driving cycle: P0141 and P0161

Duration	2 second: P0037, P0038, P0057 and P0058 10 seconds: P0141 and P0161
MIL Operation	Immediate: P0037, P0038, P0057 and P0058 2 driving cycles: P0141 and P0161
Sequence of Operation	None

TYPICAL ENABLING CONDITIONS

All:

Monitor runs whenever following DTCs not present	None

P0037 and P0057:

Battery voltage	10.5 to 20 V

P0038 and P0058:

Battery voltage	10.5 to 20 V

P0141 or P0161 (Heater performance monitor check):

All of following conditions met:	-
Battery voltage	10.5 V or more
Fuel cut	OFF
Time after fuel cut ON to OFF	30 seconds or more
Accumulated heater ON time	100 seconds or more

TYPICAL MALFUNCTION THRESHOLDS

P0037 and P0057:

Heater current	Less than 0.3 A

P0038 and P0058:

Heater current	More than 2 A

P0141 or P0161 (Heater performance monitor check):

Accumulated heater resistance	Varies with sensor element temperature (Example: More than 23 Ω)

COMPONENT OPERATING RANGE

Heated Oxygen (HO2) sensor heater current	0.4 to 1 A (when engine idles, HO2 sensor warmed up and battery voltage 11 to 14 V)

WIRING DIAGRAM

Refer to DTC P0136 (see page ES-165).

CONFIRMATION DRIVING PATTERN

These DTCs are detected when the engine idles for 110 seconds or more.

INSPECTION PROCEDURE

HINT:

Sensor 2 refers to the sensor mounted behind the Three-Way Catalytic Converter (TWC) and located far from the engine assembly.

Read freeze frame data using the intelligent tester. Freeze frame data records the engine condition when malfunctions are detected. When troubleshooting, freeze frame data can help determine if the vehicle was moving or stationary, if the engine was warmed up or not, if the air-fuel ratio was lean or rich, and other data from the time the malfunction occurred.

1 INSPECT HEATED OXYGEN SENSOR (HEATER RESISTANCE)

Component Side:

HO2 Sensor (bank 1)

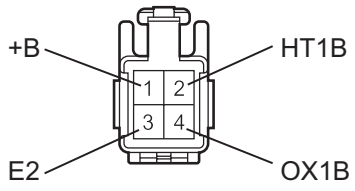

HO2 Sensor (bank 2)

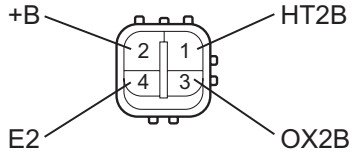

A136185E01

(a) Disconnect the B19 or E35 Heated Oxygen (HO2) sensor connector.
(b) Measure the resistance of the HO2 sensor connector.
Standard resistance
Bank 1

Tester Connection	Specified Condition
2 (HT1B) - 1 (+B)	11 to 16 Ω at 20°C (68°F)
2 (HT1B) - 3 (E2)	10 kΩ or higher

Standard resistance
Bank 2

Tester Connection	Specified Condition
1 (HT2B) - 2 (+B)	11 to 16 Ω at 20°C (68°F)
1 (HT2B) - 4 (E2)	10 kΩ or higher

(c) Reconnect the HO2 sensor connector.

NG → **REPLACE HEATED OXYGEN SENSOR**

OK

2 CHECK TERMINAL VOLTAGE (+B OF HO2 SENSOR)

Wire Harness Side:

HO2 Sensor (Bank 1)

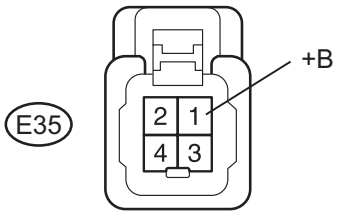

HO2 Sensor (Bank 2)

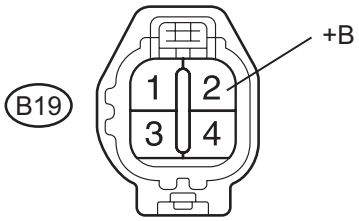

A136186E01

(a) Disconnect the B19 or E35 HO2 sensor connector.
(b) Turn the ignition switch ON.
(c) Measure the voltage between the terminals of the B19 or E35 HO2 sensor connector and body ground.
Standard voltage

Tester Connection	Specified Condition
E35-1 (+B) - Body ground	9 to 14 V
B19-2 (+B) - Body ground	9 to 14 V

(d) Reconnect the HO2 sensor connector.

OK → **Go to step 5**

NG

3	INSPECT INTEGRATION RELAY (EFI MAIN RELAY)

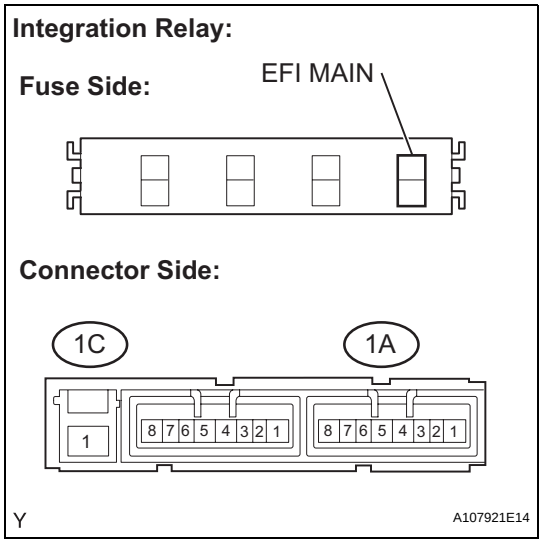

(a) Remove the integration relay from the engine room No. 1 relay block.

(b) Inspect the EFI MAIN fuse.
  (1) Remove the EFI MAIN fuse from the integration relay.
  (2) Measure the EFI MAIN fuse resistance.
    Standard resistance:
      Below 1 Ω

(c) Inspect the EFI MAIN relay.
  (1) Measure the EFI MAIN relay resistance.
    Standard resistance

Tester Connection	Specified Condition
1C-1 - 1A-4	10 kΩ or higher
	Below 1 Ω (Apply battery voltage between terminals 1A-2 and 1A-3)

(d) Reinstall the integration relay.

NG → **REPLACE INTEGRATION RELAY**

OK

4	CHECK WIRE HARNESS (HO2 SENSOR - EFI RELAY)

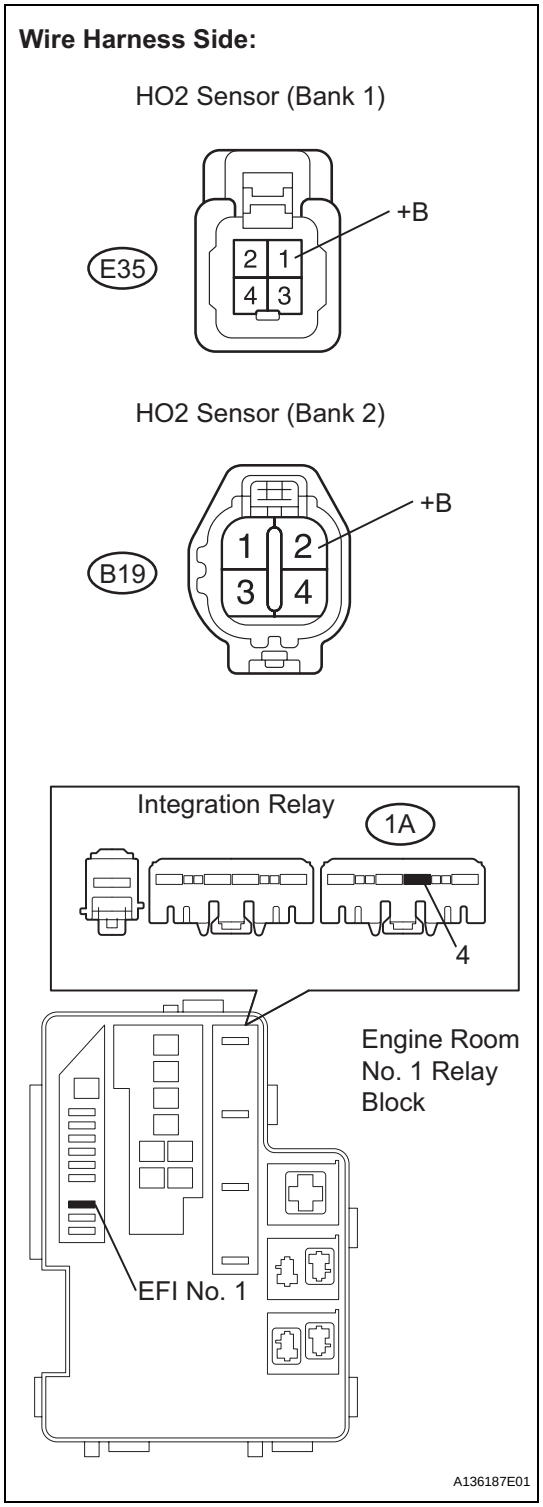

(a) Check the EFI No. 1 fuse.
(b) Disconnect the B19 or E35 HO2 sensor connector.
(c) Remove the integration relay from the engine room No. 1 relay block.
(d) Check the resistance.

Standard resistance

Tester Connection	Specified Condition
E35-1 (+B) - 1A-4	Below 1 Ω
B19-2 (+B) - 1A-4	Below 1 Ω
E35-1 (+B) or 1A-4 - Body ground	10 kΩ or higher
B19-2 (+B) or 1A-4 - Body ground	10 kΩ or higher

(e) Reconnect the HO2 sensor connector.
(f) Reinstall the integration relay.

NG → **REPAIR OR REPLACE HARNESS AND CONNECTOR**

OK

CHECK ECM POWER SOURCE CIRCUIT

ES

5 CHECK WIRE HARNESS (HO2 SENSOR - ECM)

Wire Harness Side:

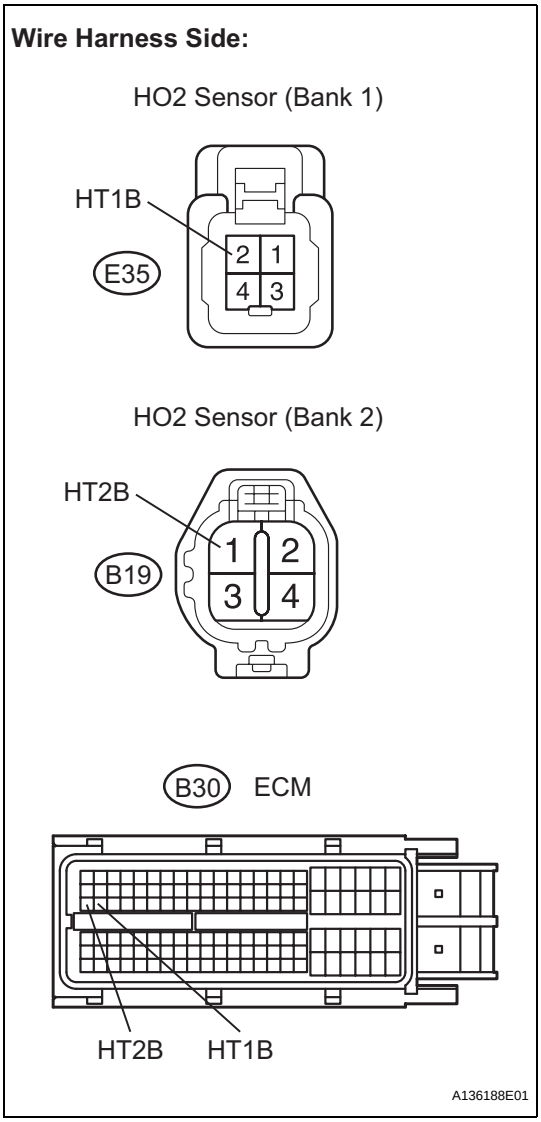

(a) Disconnect the B19 or E35 HO2 sensor connector.
(b) Disconnect the B30 ECM connector.
(c) Measure the resistance.

Standard resistance

Tester Connection	Specified Condition
E35-2 (HT1B) - B30-48 (HT1B)	Below 1 Ω
B19-1 (HT2B) - B30-47 (HT2B)	Below 1 Ω
E35-2 (HT1B) or B30-48 (HT1B) - Body ground	10 kΩ or higher
B19-1 (HT2B) or B30-47 (HT1B) - Body ground	10 kΩ or higher

(d) Reconnect the HO2 sensor connector.
(e) Reconnect the ECM connector.

NG → **REPAIR OR REPLACE HARNESS AND CONNECTOR**

OK

6 CHECK WHETHER DTC OUTPUT RECURS

(a) Connect the intelligent tester to the DLC3.
(b) Turn the ignition switch ON.
(c) Turn the tester ON.
(d) Clear DTCs (see page ES-39).
(e) Start the engine.
(f) Allow the engine to idle for 2 minutes or more.
(g) Select the following menu items: DIAGNOSIS / ENHANCED OBD II / DTC INFO / CURRENT CODES.
(h) Read DTCs.

Result

Display (DTC Output)	Proceed to
No output	A

Display (DTC Output)	Proceed to
P0037, P0038, P0057, P0058, P0141 and/or P0161	B

B → REPLACE ECM

A

CHECK FOR INTERMITTENT PROBLEMS

DTC	P0100	Mass or Volume Air Flow Circuit

DTC	P0102	Mass or Volume Air Flow Circuit Low Input

DTC	P0103	Mass or Volume Air Flow Circuit High Input

DESCRIPTION

The Mass Air Flow (MAF) meter is a sensor that measures the amount of air flowing through the throttle valve.
The ECM uses this information to determine the fuel injection time and to provide the appropriate air-fuel ratio.
Inside the MAF meter, there is a heated platinum wire which is exposed to the flow of intake air.
By applying a specific electrical current to the wire, the ECM heats it to a given temperature. The flow of incoming air cools both the wire and an internal thermistor, affecting their resistance. To maintain a constant current value, the ECM varies the voltage applied to these components in the MAF meter. The voltage level is proportional to the airflow through the sensor, and the ECM uses it to calculate the intake air volume.
The circuit is constructed so that the platinum hot wire and the temperature sensor create a bridge circuit, and the power transistor is controlled so that the potentials of A and B remain equal to maintain the predetermined temperature.
HINT:
When any of these DTCs are set, the ECM enters fail-safe mode. During fail-safe mode, the ignition timing is calculated by the ECM, according to the engine RPM and throttle valve position. Fail-safe mode continues until a pass condition is detected.

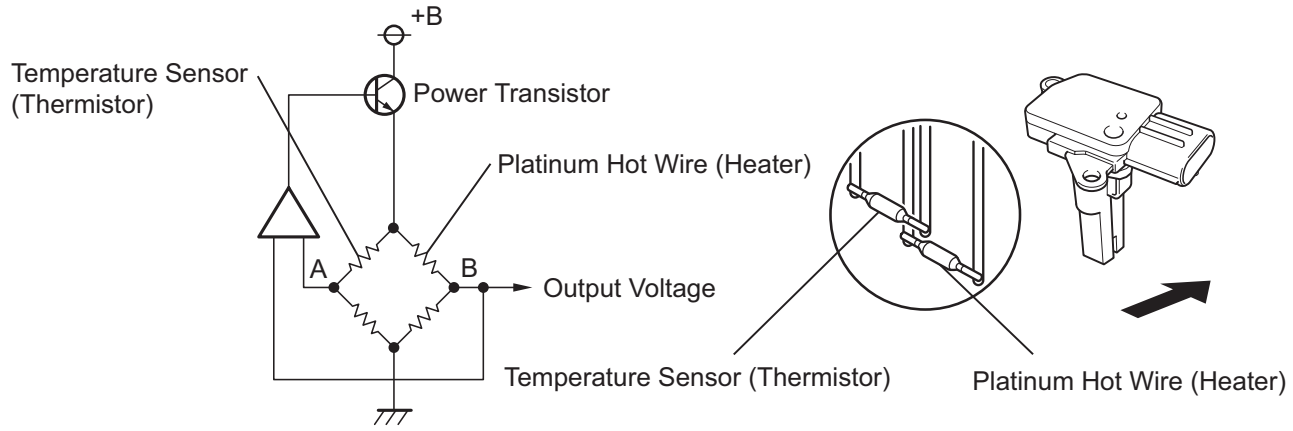

DTC No.	DTC Detection Condition	Trouble Area
P0100	MAF meter voltage less than 0.2 V, or more than 4.9 V for 3 seconds (1 trip detection logic)	• Open or short in MAF meter circuit • MAF meter • ECM
P0102	MAF meter voltage less than 0.2 V for 3 seconds (1 trip detection logic)	• Open or short in MAF meter circuit • MAF meter • ECM
P0103	MAF meter voltage more than 4.9 V for 3 seconds (1 trip detection logic)	• Open or short in MAF meter circuit • MAF meter • ECM

HINT:
When any of these DTCs are set, check the air-flow rate by selecting the following menu items on the intelligent tester: DIAGNOSIS / ENHANCED OBD II / DATA LIST / PRIMARY / MAF.

Mass Air Flow Rate (g/sec.)	Malfunction
Approximately 0.0	• Open in Mass Air Flow (MAF) meter power source circuit • Open or short in VG circuit
271.0 or more	• Open in E2G circuit

MONITOR DESCRIPTION

If there is a defect in the MAF meter or an open or short circuit, the voltage level deviates from the normal operating range. The ECM interprets this deviation as a malfunction in the MAF meter and sets a DTC.
Example:
When the sensor output voltage remains less than 0.2 V, or more than 4.9 V, for more than 3 seconds, the ECM sets a DTC.
If the malfunction is not repaired successfully, a DTC is set 3 seconds after the engine is next started.

ES

MONITOR STRATEGY

Related DTCs	P0100: MAF meter range check (Fluctuating) P0102: MAF meter range check (Low voltage) P0103: MAF meter range check (High voltage)
Required Sensors/Components (Main)	MAF meter
Required Sensors/Components (Related)	Crankshaft position sensor
Frequency of Operation	Continuous
Duration	3 seconds
MIL Operation	Immediate: Engine RPM less than 4,000 rpm 2 driving cycles: Engine RPM 4,000 rpm or more
Sequence of Operation	None

TYPICAL ENABLING CONDITIONS

Monitor runs whenever following DTCs not present	None

TYPICAL MALFUNCTION THRESHOLDS

P0100:

MAF meter voltage	Less than 0.2 V, or more than 4.9 V

P0102:

MAF meter voltage	Less than 0.2 V

P0103:

MAF meter voltage	More than 4.9 V

COMPONENT OPERATING RANGE

MAF meter voltage	0.4 V to 2.2 V

WIRING DIAGRAM

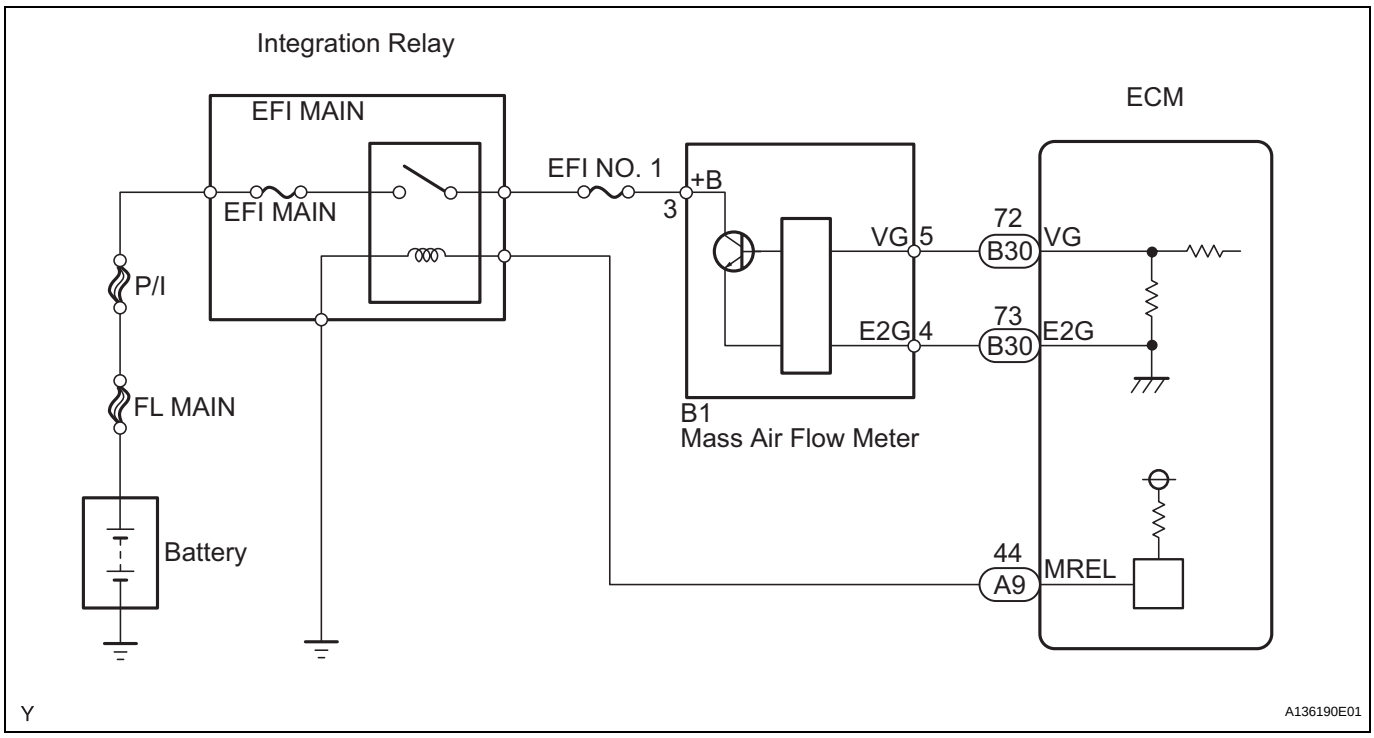

INSPECTION PROCEDURE

HINT:
Read freeze frame data using the intelligent tester. Freeze frame data records the engine condition when malfunctions are detected. When troubleshooting, freeze frame data can help determine if the vehicle was moving or stationary, if the engine was warmed up or not, if the air-fuel ratio was lean or rich, and other data from the time the malfunction occurred.

1	READ VALUE USING INTELLIGENT TESTER (MASS AIR FLOW RATE)

(a) Connect the intelligent tester to the DLC3.
(b) Start the engine.
(c) Turn the tester ON.
(d) Select the following menu items: DIAGNOSIS / ENHANCED OBD II / DATA LIST / PRIMARY / MAF.
(e) Read the values displayed on the tester.

Result

Mass Air Flow Rate (g/sec.)	Proceed to
0.0	A
271.0 or more	B
Between 1.0 and 270.0 (*1)	C

HINT:
*1: The value must change when the throttle valve is open or closed with the engine running.

B	Go to step 6
C	CHECK FOR INTERMITTENT PROBLEMS

A

2 INSPECT MASS AIR FLOW METER (POWER SOURCE VOLTAGE)

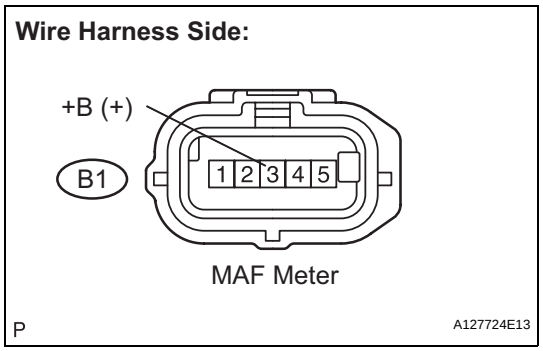

(a) Disconnect the B1 Mass Air Flow (MAF) meter connector.
(b) Turn the ignition switch ON.
(c) Measure the voltage between the terminal of the wire harness side connector and body ground.
Standard voltage

Tester Connection	Specified Condition
B1-3 (+B) - Body ground	9 to 14 V

(d) Reconnect the MAF meter connector.

NG → **Go to step 5**

ES

OK

3 INSPECT MASS AIR FLOW METER (VG VOLTAGE)

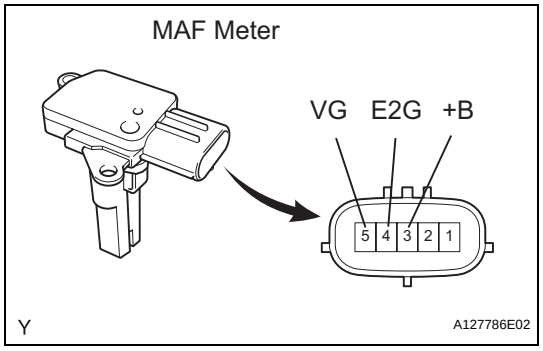

(a) Output voltage inspection.
(1) Apply battery voltage across terminals +B and E2G.
(2) Connect the positive (+) tester probe to terminal VG, and negative (-) tester probe to terminal E2G.
(3) Measure the voltage.
Standard voltage

Tester Connection	Specified Condition
5 (VG) - 4 (E2G)	0.2 to 4.9 V

NG → **REPLACE MASS AIR FLOW METER**

OK

4	CHECK WIRE HARNESS (MASS AIR FLOW METER - ECM)

Wire Harness Side:

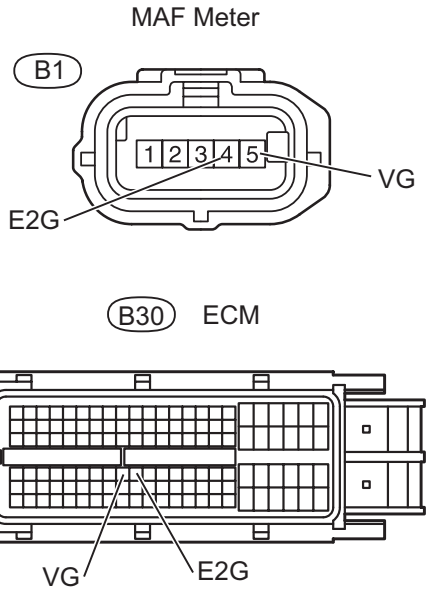

(a) Disconnect the B1 MAF meter connector.
(b) Disconnect the B30 ECM connector.
(c) Measure the resistance.

Standard resistance

Tester Connection	Specified Condition
B1-5 (VG) - B30-72 (VG)	Below 1 Ω
B1-4 (E2G) - B30-73 (E2G)	Below 1 Ω

B1-5 (VG) or B30-72 (VG) - Body ground	10 kΩ or higher

(d) Reconnect the MAF meter connector.
(e) Reconnect the ECM connector.

NG → **REPAIR OR REPLACE HARNESS AND CONNECTOR**

OK

REPLACE ECM

5	CHECK WIRE HARNESS (MASS AIR FLOW METER - INTEGRATION RELAY)

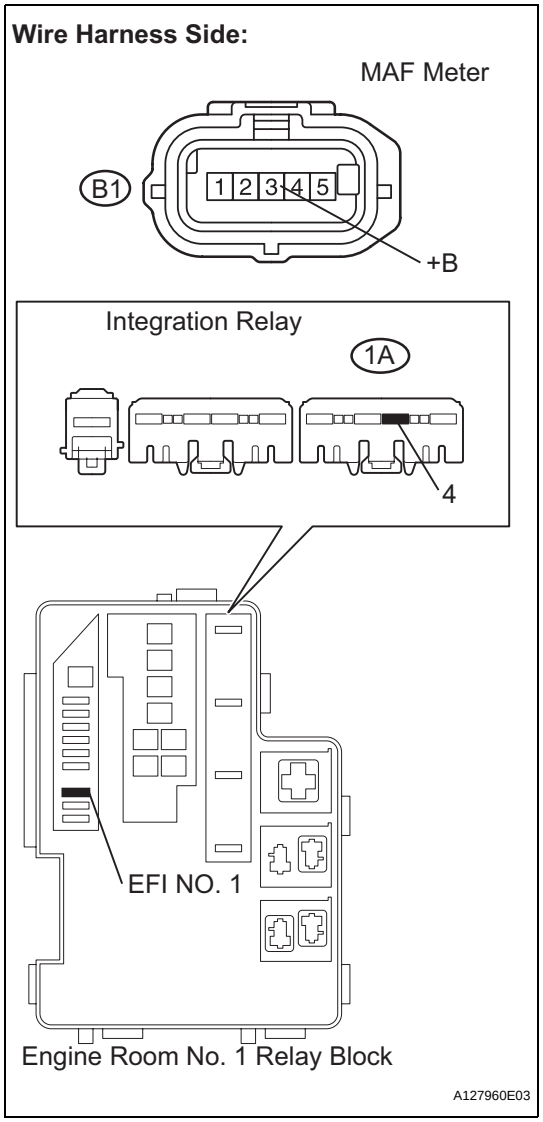

(a) Check the EFI NO. 1 fuse.
(b) Disconnect the B1 MAF meter connector.
(c) Remove the integration relay from the engine room No. 1 relay block.
(d) Measure the resistance.
Standard resistance

Tester Connection	Specified Condition
B1-3 (+B) - 1A-4	Below 1 Ω
B1-3 (+B) or 1A-4 - Body ground	10 kΩ or higher

(e) Reconnect the MAF meter connector.
(f) Reinstall the integration relay.

ES

NG → **REPAIR OR REPLACE HARNESS AND CONNECTOR**

OK

CHECK ECM POWER SOURCE CIRCUIT

6	CHECK WIRE HARNESS (SENSOR GROUND)

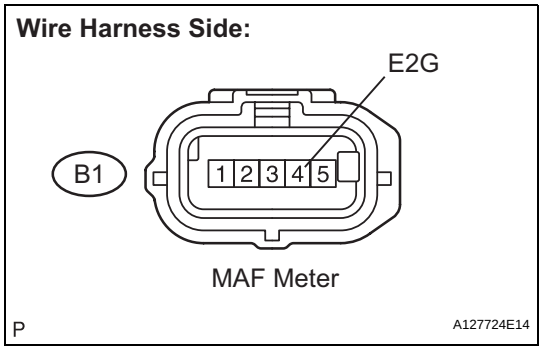

(a) Disconnect the B1 MAF meter connector.
(b) Measure the resistance.
Standard resistance

Tester Connection	Specified Condition
B1-4 (E2G) - Body ground	Below 1 Ω

OK → **REPLACE MASS AIR FLOW METER**

NG

7	CHECK WIRE HARNESS (MASS AIR FLOW METER - ECM)

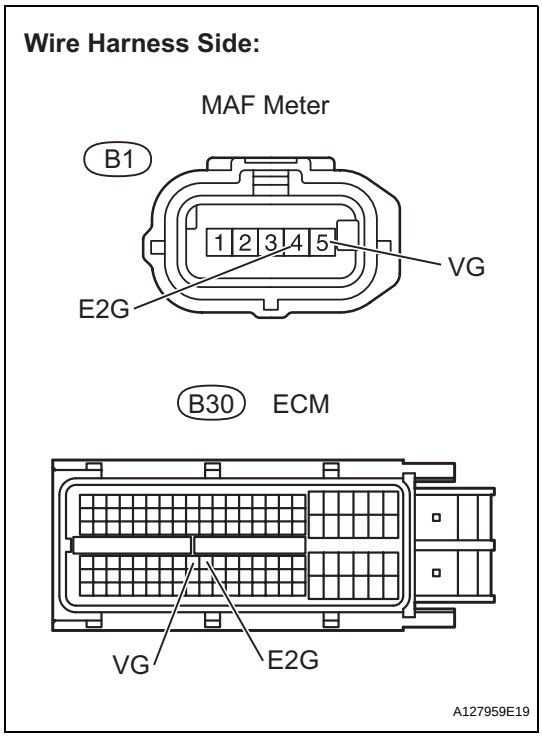

(a) Disconnect the B1 MAF meter connector.
(b) Disconnect the B30 ECM connector.
(c) Measure the resistance.
Standard resistance

Tester Connection	Specified Condition
B1-5 (VG) - B30-72 (VG)	Below 1 Ω
B1-4 (E2G) - B30-73 (E2G)	Below 1 Ω
B1-5 (VG) or B30-72 (VG) - Body ground	10 kΩ or higher

(d) Reconnect the MAF meter connector.
(e) Reconnect the ECM connector.

NG → **REPAIR OR REPLACE HARNESS AND CONNECTOR**

OK

REPLACE ECM

DTC	P0101	Mass Air Flow Circuit Range / Performance Problem

DESCRIPTION

Refer to DTC P0100 (see page ES-115).

DTC No.	DTC Detection Condition	Trouble Area
P0101	Conditions (a), (b), (c), (d) and (e) continue for more than 10 seconds (2 trip detection logic): (a) Engine running (b) Engine coolant temperature 70°C (158°F) or higher (c) Throttle Position (TP) sensor voltage 0.24 V or more (d) Average engine load value ratio less than 0.81, or more than 1.15 (varies with estimated engine load) Average engine load value ratio = Average engine load based on MAF meter output / Average engine load estimated from driving conditions (e) Average air-fuel ratio less than -20%, or more than 20%	• Mass Air Flow (MAF) meter • Air induction system • PCV hose connections

ES

MONITOR DESCRIPTION

The MAF meter is a sensor that measures the amount of air flowing through the throttle valve. The ECM uses this information to determine the fuel injection time and to provide an appropriate air-fuel ratio. Inside the MAF meter, there is a heated platinum wire which is exposed to the flow of intake air. By applying a specific electrical current to the wire, the ECM heats it to a specific temperature. The flow of incoming air cools both the wire and an internal thermistor, affecting their resistance. To maintain a constant current value, the ECM varies the voltage applied to these components of the MAF meter. The voltage level is proportional to the airflow through the sensor, and the ECM uses it to calculate the intake air volume.
The ECM monitors the average engine load value ratio to check the MAF meter for malfunctions. The average engine load value ratio is obtained by comparing the average engine load calculated from the MAF meter output to the average engine load estimated from the driving conditions, such as the engine speed and the throttle opening angle. If the average engine load value ratio is below the threshold value, the ECM determines that the intake air volume is low, and if the average engine load value ratio is above the threshold value, the ECM determines that the intake air volume is high.
If this is detected in 2 consecutive driving cycles, the MIL is illuminated and a DTC is set.

MONITOR STRATEGY

Related DTCs	P0101: Mass air flow meter rationality
Required Sensors/Components (Main)	Mass air flow meter
Required Sensors/Components (Related)	Crankshaft Position (CKP) sensor, Engine Coolant Temperature (ECT) sensor and Throttle Position (TP) sensor
Frequency of Operation	Continuous
Duration	10 seconds
MIL Operation	2 driving cycles
Sequence of Operation	None

TYPICAL ENABLING CONDITIONS

Monitor runs whenever following DTCs not present	P0115 - P0118 (ECT sensor) P0120 - P0223, P2135 (TP sensor) P0125 (Insufficient ECT for closed loop) P0335 (CKP sensor) P0340 (CMP sensor)
Throttle position (TP sensor voltage)	0.24 V or more
Engine	Running
Battery voltage	10.5 V or more

Engine coolant temperature	70°C (158°F) or more
IAT sensor circuit	OK
ECT sensor circuit	OK
CKP sensor circuit	OK
TP sensor circuit	OK
Canister pressure sensor circuit	OK
EVAP leak detection pump	OK
EVAP vent valve	OK

TYPICAL MALFUNCTION THRESHOLDS

Both of following conditions 1 and 2 met	-
1. Averaged engine load value ratio	Less than 0.81, or more than 1.15 (varies with estimated engine load)
2. Averaged air-fuel ratio	Less than -20%, or more than 20%

ES

WIRING DIAGRAM

Refer to DTC P0100 (see page ES-117).

CONFIRMATION DRIVING PATTERN

HINT:
Performing this confirmation pattern will activate the mass air flow performance monitor.

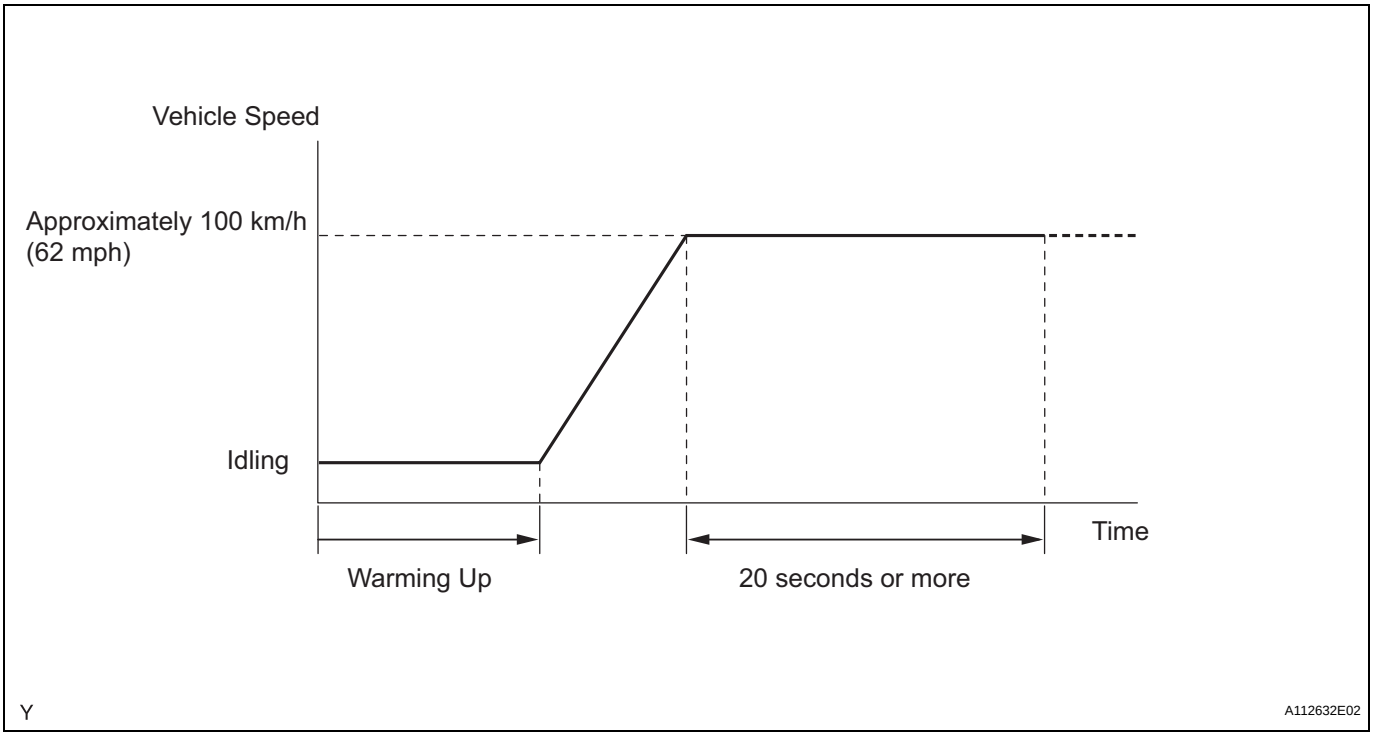

1. Connect the intelligent tester to the DLC3.
2. Turn the ignition switch ON.
3. Turn the tester ON.
4. Clear DTCs (see page ES-39).
5. Start the engine, and warm it up until the engine coolant temperature reaches 70°C (158°F) or higher.
6. Drive the vehicle at approximately 100 km/h (62 mph) for 20 seconds or more.
7. On the tester, select the following menu items: DIAGNOSIS / ENHANCED OBD II / DTC INFO / PENDING CODES and check if any DTCs (any pending DTCs) are set.

INSPECTION PROCEDURE

HINT:
Read freeze frame data using the intelligent tester. Freeze frame data records the engine condition when malfunctions are detected. When troubleshooting, freeze frame data can help determine if the vehicle was moving or stationary, if the engine was warmed up or not, if the air-fuel ratio was lean or rich, and other data from the time the malfunction occurred.

1 CHECK ANY OTHER DTCS OUTPUT (IN ADDITION TO DTC P0101)

(a) Connect the intelligent tester to the DLC3.
(b) Turn the ignition switch ON.
(c) Turn the tester ON.
(d) Select the following menu items: DIAGNOSIS / ENHANCED OBD II / DTC INFO / CURRENT CODES.
(e) Read DTCs.

Result

Display (DTC Output)	Proceed to
P0101	A
P0101 and other DTCs	B

HINT:
If any DTCs other than P0101 are output, troubleshoot those DTCs first.

B → **GO TO DTC CHART**

A

2 CHECK AIR INDUCTION SYSTEM

(a) Check the air induction system for vacuum leakage.
OK:
No leakage from air induction system.

NG → **REPAIR OR REPLACE AIR INDUCTION SYSTEM**

OK

3 CHECK PCV HOSE CONNECTIONS

OK:
PCV hose is connected correctly and is not damaged.

NG → **REPAIR OR REPLACE PCV HOSE**

OK

REPLACE MASS AIR FLOW METER

DTC	P0110	Intake Air Temperature Circuit Malfunction

DTC	P0112	Intake Air Temperature Circuit Low Input

DTC	P0113	Intake Air Temperature Circuit High Input

DESCRIPTION

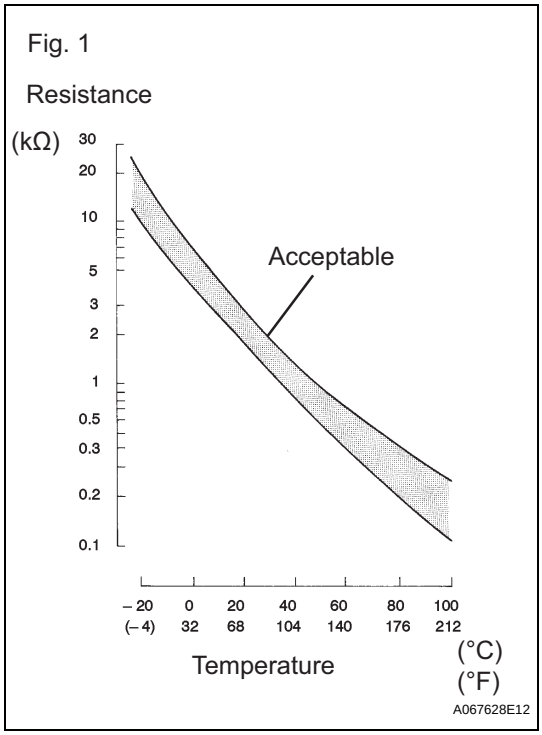

The Intake Air Temperature (IAT) sensor, mounted on the Mass Air Flow (MAF) meter, monitors the IAT. The IAT sensor has a built-in thermistor with a resistance that varies according to the temperature of the intake air. When the IAT is low, the resistance of the thermistor increases. When the temperature is high, the resistance drops. These variations in resistance are transmitted to the ECM as voltage changes (see Fig. 1).

The IAT sensor is powered by a 5 V supply from the THA terminal of the ECM, via resistor R.

Resistor R and the IAT sensor are connected in series. When the resistance value of the IAT sensor changes, according to changes in the IAT, the voltage at terminal THA also varies. Based on this signal, the ECM increases the fuel injection volume when the engine is cold to improve driveability.

HINT:

When any of DTCs P0110, P0112 and P0113 are set, the ECM enters fail-safe mode. During fail-safe mode, the IAT is estimated to be 20°C (68°F) by the ECM. Fail-safe mode continues until a pass condition is detected.

DTC No.	DTC Detection Condition	Trouble Area
P0110	Open or short in IAT sensor circuit for 0.5 seconds (1 trip detection logic)	• Open or short in IAT sensor circuit • IAT sensor (built into MAF meter) • ECM
P0112	Short in IAT sensor circuit for 0.5 seconds (1 trip detection logic)	• Short in IAT sensor circuit • IAT sensor (built into MAF meter) • ECM
P0113	Open in IAT sensor circuit for 0.5 seconds (1 trip detection logic)	• Open in IAT sensor circuit • IAT sensor (built into MAF meter) • ECM

HINT:
When any of these DTCs are set, check the IAT by selecting the following menu items on the intelligent tester: DIAGNOSIS / ENHANCED OBD II / DATA LIST / PRIMARY / INTAKE AIR.

Temperature Displayed	Malfunction
-40°C (-40°F)	Open circuit
140°C (284°F) or higher	Short circuit

MONITOR DESCRIPTION

The ECM monitors the sensor voltage and uses this value to calculate the IAT. When the sensor output voltage deviates from the normal operating range, the ECM interprets this as a malfunction in the IAT sensor and sets a DTC.
Example:
If the sensor output voltage is more than 4.91 V for 0.5 seconds or more, the ECM determines that there is an open in the IAT sensor circuit, and sets DTC P0113. Conversely, if the output voltage is less than 0.18 V for 0.5 seconds or more, the ECM determines that there is a short in the sensor circuit, and sets DTC P0112.
If the malfunction is not repaired successfully, a DTC is set 0.5 seconds after the engine is next started.

MONITOR STRATEGY

Related DTCs	P0110: IAT sensor range check (Fluctuating) P0112: IAT sensor range check (Low voltage) P0113: IAT sensor range check (High voltage)
Required Sensors/Components (Main)	IAT sensor
Required Sensors/Components (Related)	-
Frequency of Operation	Continuous
Duration	0.5 seconds
MIL Operation	Immediate
Sequence of Operation	None

TYPICAL ENABLING CONDITIONS

Monitor runs whenever following DTCs not present	None

TYPICAL MALFUNCTION THRESHOLDS

P0110:

IAT sensor voltage	Less than 0.18 V, or more than 4.91 V

P0112:

IAT sensor voltage [IAT]	Less than 0.18 V [More than 140°C (284°F)]

P0113:

IAT sensor voltage [IAT]	More than 4.91 V [Less than -40°C (-40°F)]

COMPONENT OPERATING RANGE

IAT sensor voltage [IAT]	0.18 to 4.91 V [-40°C to 140°C (-40°F to 284°F)]

WIRING DIAGRAM

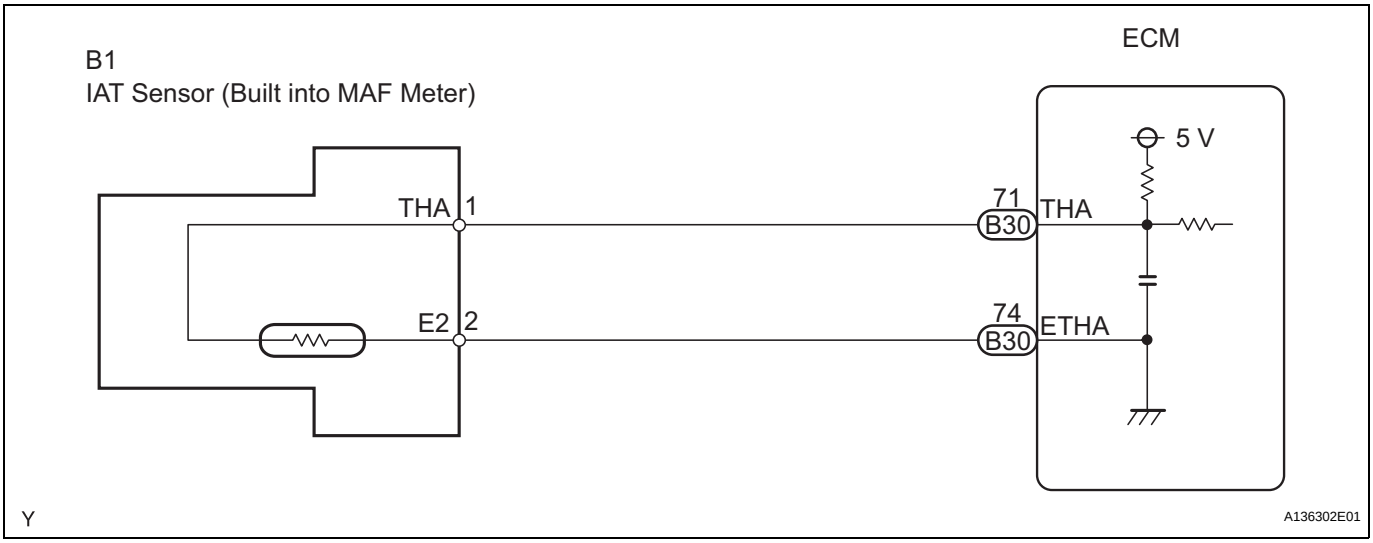

ES

INSPECTION PROCEDURE

HINT:
Read freeze frame data using the intelligent tester. Freeze frame data records the engine condition when malfunctions are detected. When troubleshooting, freeze frame data can help determine if the vehicle was moving or stationary, if the engine was warmed up or not, if the air-fuel ratio was lean or rich, and other data from the time the malfunction occurred.

1	READ OUTPUT DTC

(a) Connect the intelligent tester to the DLC3.
(b) Turn the ignition switch ON and turn the intelligent tester ON.
(c) Select the following menu items: DIAGNOSIS / ENHANCED OBD II / DTC INFO / CURRENT CODES.
(d) Read DTCs.

Result

Display (DTC Output)	Proceed to
P0110	A
P0112	B
P0113	C

B	Go to step 6
C	Go to step 3

A

2	READ VALUE USING INTELLIGENT TESTER (INTAKE AIR TEMPERATURE)

(a) Connect the intelligent tester to the DLC3.
(b) Turn the ignition switch ON.
(c) Turn the tester ON.

(d) Select the following menu items: DIAGNOSIS / ENHANCED OBD II / DATA LIST / PRIMARY / INTAKE AIR.
(e) Read the value displayed on the tester.
Standard:
Same as actual Intake Air Temperature (IAT).

Result

Temperature Displayed	Proceed to
-40°C (-40°F)	A
140°C (284°F) or higher	B
Same as actual IAT	C

HINT:
- If there is an open circuit, the intelligent tester indicates -40°C (-40°F).
- If there is a short circuit, the intelligent tester indicates 140°C (284°F) or higher.

ES

B → **Go to step 5**

C → **CHECK FOR INTERMITTENT PROBLEMS**

A

3 READ VALUE USING INTELLIGENT TESTER (CHECK FOR OPEN IN WIRE HARNESS)

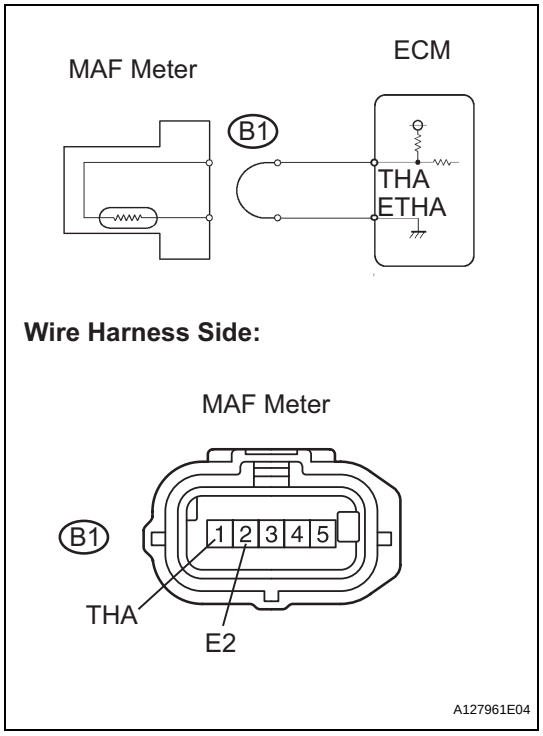

(a) Disconnect the B1 Mass Air Flow (MAF) meter connector.
(b) Connect terminals THA and E2 of the MAF meter wire harness side connector.
(c) Connect the intelligent tester to the DLC3.
(d) Turn the ignition switch ON.
(e) Turn the tester ON.
(f) Select the following menu items: DIAGNOSIS / ENHANCED OBD II / DATA LIST / PRIMARY / INTAKE AIR.
(g) Read the value displayed on the tester.
Standard value:
140°C (284°F) or higher
(h) Reconnect the MAF meter connector.

OK → **CONFIRM GOOD CONNECTION TO SENSOR. IF OK, REPLACE MASS AIR FLOW METER**

NG

4	CHECK WIRE HARNESS (MASS AIR FLOW METER - ECM)

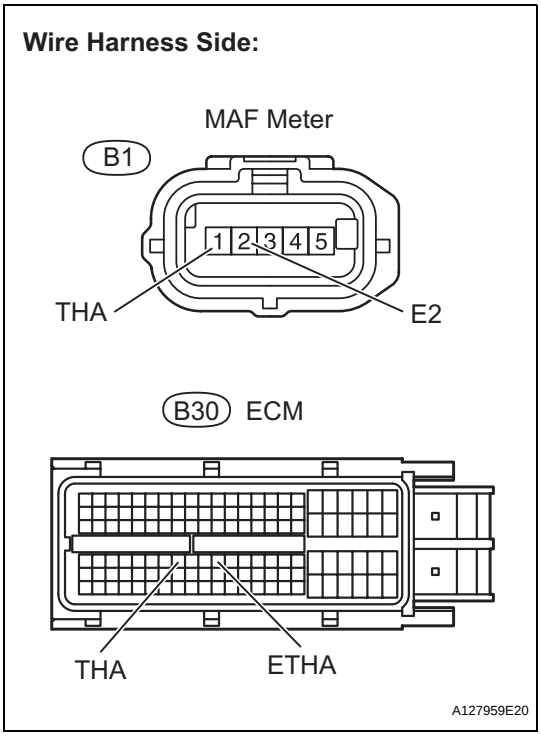

(a) Disconnect the B1 MAF meter connector.
(b) Disconnect the B30 ECM connector.
(c) Measure the resistance.
Standard resistance

Tester Connection	Specified Condition
B1-1 (THA) - B30-71 (THA)	Below 1 Ω
B1-2 (E2) - B30-74 (ETHA)	Below 1 Ω

(d) Reconnect the MAF meter connector.
(e) Reconnect the ECM connector.

NG → **REPAIR OR REPLACE HARNESS AND CONNECTOR**

OK

CONFIRM GOOD CONNECTION TO ECM. IF OK, REPLACE ECM

5	READ VALUE USING INTELLIGENT TESTER (CHECK FOR SHORT IN WIRE HARNESS)

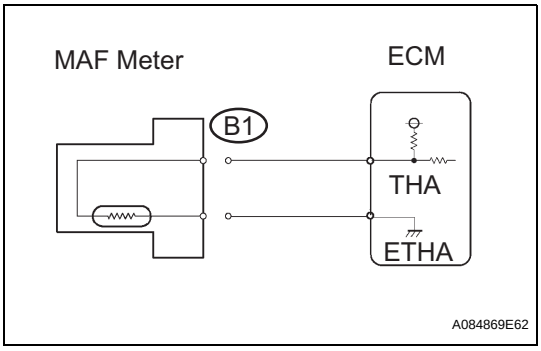

(a) Disconnect the B1 MAF meter connector.
(b) Connect the intelligent tester to the DLC3.
(c) Turn the ignition switch ON.
(d) Turn the tester ON.
(e) Select the following menu items: DIAGNOSIS / ENHANCED OBD II / DATA LIST / PRIMARY / INTAKE AIR.
(f) Read the value displayed on the tester.
Standard value:
-40°C (-40°F)
(g) Reconnect the MAF meter connector.

OK → **REPLACE MASS AIR FLOW METER**

NG

6	CHECK WIRE HARNESS (MASS AIR FLOW METER - ECM)

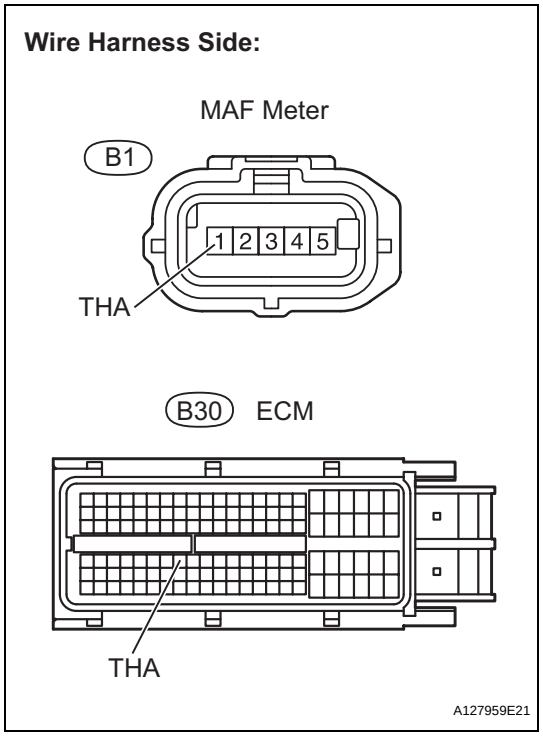

(a) Disconnect the B1 MAF meter connector.
(b) Disconnect the B30 ECM connector.
(c) Measure the resistance.

Standard resistance

Tester Connection	Specified Condition
B1-1 (THA) or B30-71 (THA) - Body ground	10 kΩ or higher

(d) Reconnect the MAF meter connector.
(e) Reconnect the ECM connector.

NG → **REPAIR OR REPLACE HARNESS AND CONNECTOR**

OK

REPLACE ECM

ES

DTC	P0111	Intake Air Temperature Sensor Gradient Too High

DESCRIPTION

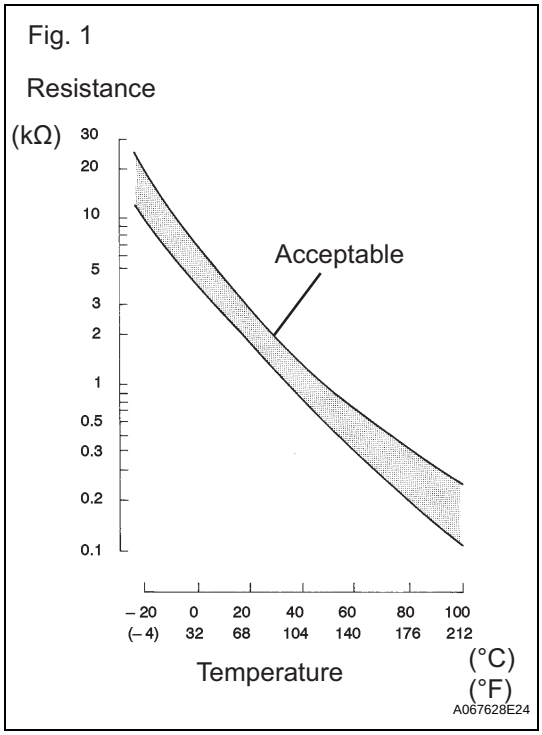

The Intake Air Temperature (IAT) sensor, mounted on the Mass Air Flow (MAF) meter, monitors the IAT. The IAT sensor has a built-in thermistor with a resistance that varies according to the temperature of the intake air. When the IAT is low, the resistance of the thermistor increases. When the temperature is high, the resistance drops. These variations in resistance are transmitted to the ECM as voltage changes (See Fig. 1).
The IAT sensor is powered by a 5 V supply from the THA terminal of the ECM, via resistor R.
Resistor R and the IAT sensor are connected in series. When the resistance value of the IAT sensor changes, according to changes in the IAT, the voltage at terminal THA also varies. Based on this signal, the ECM increases the fuel injection volume when the engine is cold to improve driveability.

DTC No.	DTC Detection Condition	Trouble Area
P0111	When either condition below is met: 1. The intake air temperature rise is large, from the previous trip warm-up to the following trip (2 trip detection logic). 2. When the change in the intake air temperature after engine start is less than the threshold value.	Mass air flow meter assembly

MONITOR DESCRIPTION

The ECM performs OBD II monitoring based on the values from the intake air temperature sensor. If there is no change of the sensor value within the normal range, the ECM will not be able to perform OBD II monitoring or will misdiagnose that there is a malfunction in the sensor. The ECM detects the stuck intake air temperature sensor value by performing monitoring after the ignition switch is turned OFF or the engine is started (short soak or long soak).

MONITOR STRATEGY

Related DTCs	P0111: Intake air temperature sensor rationality (After engine stop) P0111: Intake air temperature sensor rationality (After cold engine start)
Required Sensors/Components (Main)	Intake Air Temperature (IAT) sensor
Required Sensors/Components (Sub)	-
Frequency of Operation	Once per driving cycle
Duration	5 hours or more
MIL Operation	2 driving cycles
Sequence of Operation	None

TYPICAL ENABLING CONDITIONS

All:

Monitor runs whenever following DTCs are not present	None

After engine stop:

Time after engine start	10 seconds or more
Battery voltage	10.5 V or more
ECT sensor circuit	OK
ECT change since engine	Less than 180°C (356°F)
ECT before engine stop	70°C (158°F) or more
Time that MAF is low before engine stop	70 minutes
Accumulated MAF amount before engine stop	1,893 g or more
Key-off duration	30 minutes

After cold engine start:

Key-off duration	5 hours
Time after engine start	10 seconds or more
ECT sensor circuit	OK
ECT	70°C (158°F) or more
Accumulated MAF amount	1,893 g or more
Either of the following conditions 1 or 2 is met:	-
1. Duration while engine load is low	120 seconds or more
2. Duration while engine load is high	10 seconds or more

TYPICAL MALFUNCTION THRESHOLDS

After engine stop:

IAT change	Less than 1°C (2°F)

After cold engine start:

IAT change	Less than 1°C (2°F)

WIRING DIAGRAM

Refer to DTC P0110 (see page ES-117).

INSPECTION PROCEDURE

1	**CHECK ANY OTHER DTCS OUTPUT (IN ADDITION TO DTC P0111)**

(a) Connect the intelligent tester to the DLC3.

(b) Turn the ignition switch ON.
(c) Turn the tester ON.
(d) Enter the following menus: DIAGNOSIS / ENHANCED OBD II / DTC INFO / CURRENT CODES.
(e) Read DTCs.

Result

Display (DTC Output)	Proceed to
P0111 and other DTCs	A
P0111	B

HINT:
If any DTCs other than P0111 are output, troubleshoot those DTCs first.

B → **REPLACE MASS AIR FLOW METER**

A → **GO TO DTC CHART**

DTC	P0115	Engine Coolant Temperature Circuit Malfunction

DTC	P0117	Engine Coolant Temperature Circuit Low Input

DTC	P0118	Engine Coolant Temperature Circuit High Input

DESCRIPTION

A thermistor, whose resistance value varies according to the ECT, is built into the Engine Coolant Temperature (ECT) sensor.
The structure of the sensor and its connection to the ECM are the same as those of the Intake Air Temperature (IAT) sensor.
HINT:
When any of DTCs P0115, P0117 and P0118 are set, the ECM enters fail-safe mode. During fail-safe mode, the ECT is estimated to be 80°C (176°F) by the ECM. Fail-safe mode continues until a pass condition is detected.

DTC No.	DTC Detection Condition	Trouble Area
P0115	Open or short in ECT sensor circuit for 0.5 seconds (1 trip detection logic)	• Open or short in ECT sensor circuit • ECT sensor • ECM
P0117	Short in ECT sensor circuit for 0.5 seconds (1 trip detection logic)	• Short in ECT sensor • ECT sensor • ECM
P0118	Open in ECT sensor circuit for 0.5 seconds (1 trip detection logic)	• Open in ECT sensor circuit • ECT sensor • ECM

HINT:
When any of these DTCs are set, check the ECT by selecting the following menu items on the intelligent tester: DIAGNOSIS / ENHANCED OBD II / DATA LIST / PRIMARY / COOLANT TEMP.

Temperature Displayed	Malfunction
-40°C (-40°F)	Open circuit
140°C (284°F) or higher	Short circuit

MONITOR DESCRIPTION

The Engine Coolant Temperature (ECT) sensor is used to monitor the ECT. The ECT sensor has a thermistor with a resistance that varies according to the temperature of the engine coolant. When the coolant temperature is low, the resistance in the thermistor increases. When the temperature is high, the resistance drops. These variations in resistance are reflected in the output voltage from the sensor. The ECM monitors the sensor voltage and uses this value to calculate the ECT. When the sensor output voltage deviates from the normal operating range, the ECM interprets this as a fault in the ECT sensor and sets a DTC.
Example:
If the sensor output voltage is more than 4.91 V for 0.5 seconds or more, the ECM determines that there is an open in the ECT sensor circuit, and sets DTC P0118. Conversely, if the voltage output is less than 0.14 V for 0.5 seconds or more, the ECM determines that there is a short in the sensor circuit, and sets DTC P0117.
If the malfunction is not repaired successfully, a DTC is set 0.5 seconds after the engine is next started.

MONITOR STRATEGY

Related DTCs	P0115: ECT sensor range check (Fluctuating) P0117: ECT sensor range check (Low voltage) P0118: ECT sensor range check (High voltage)
Required Sensors/Components (Main)	ECT sensor
Required Sensors/Components (Related)	-
Frequency of Operation	Continuous
Duration	0.5 seconds
MIL Operation	Immediate
Sequence of Operation	None

TYPICAL ENABLING CONDITIONS

Monitor runs whenever following DTCs not present	None

ES

TYPICAL MALFUNCTION THRESHOLDS

P0115:

ECT sensor voltage	Less than 0.14 V, or more than 4.91 V

P0117:

ECT sensor voltage [ECT]	Less than 0.14 V [More than 140°C (284°F)]

P0118:

ECT sensor voltage [ECT]	More than 4.91 V [Less than -40°C (-40°F)]

COMPONENT OPERATING RANGE

ECT sensor voltage [ECT]	0.14 to 4.91 V [-40°C to 140°C (-40°F to 284°F)]

WIRING DIAGRAM

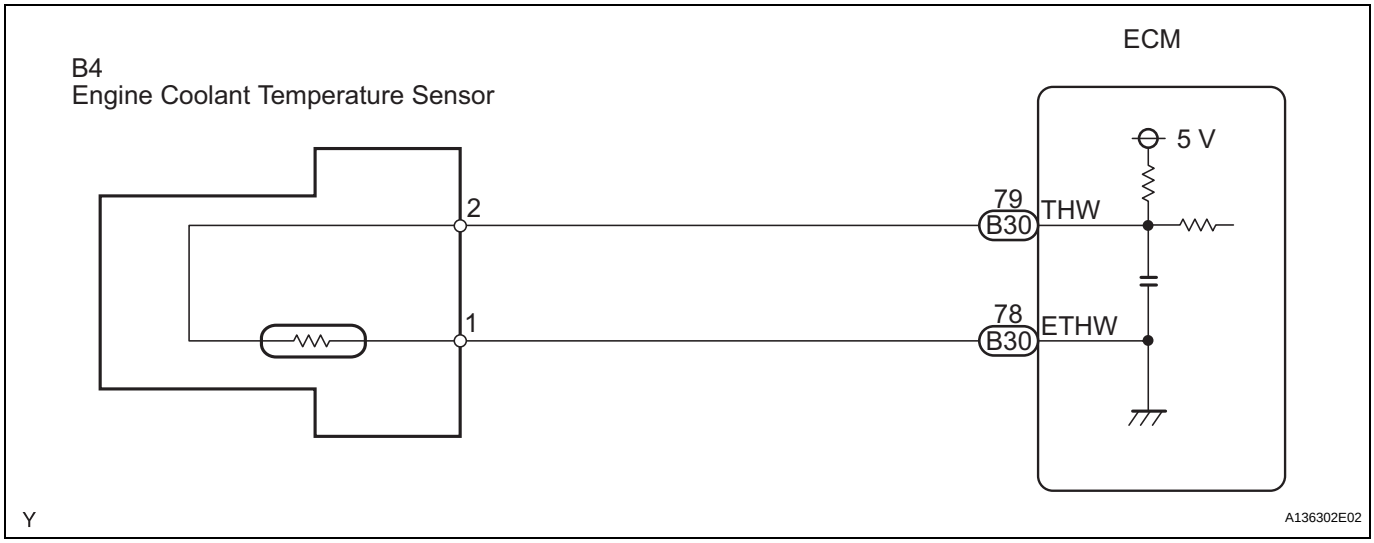

INSPECTION PROCEDURE

HINT:
Read freeze frame data using the intelligent tester. Freeze frame data records the engine condition when malfunctions are detected. When troubleshooting, freeze frame data can help determine if the vehicle was moving or stationary, if the engine was warmed up or not, if the air-fuel ratio was lean or rich, and other data from the time the malfunction occurred.

1 READ OUTPUT DTC

(a) Connect the intelligent tester to the DLC3.
(b) Turn the ignition switch ON and turn the intelligent tester ON.
(c) Select the following menu items: DIAGNOSIS / ENHANCED OBD II / DTC INFO / CURRENT CODES.
(d) Read DTCs.

Result

Display (DTC Output)	Proceed to
P0115	A
P0117	B
P0118	C

B → **Go to step 5**

C → **Go to step 3**

A

2 READ VALUE USING INTELLIGENT TESTER (ENGINE COOLANT TEMPERATURE)

(a) Connect the intelligent tester to the DLC3.
(b) Turn the ignition switch ON.
(c) Turn the tester ON.
(d) Select the following menu items: DIAGNOSIS / ENHANCED OBD II / DATA LIST / PRIMARY / COOLANT TEMP.
(e) Read the value displayed on the tester.

Standard value:
Between 80°C and 100°C (167°F and 212°F) with warm engine.

Result

Temperature Displayed	Proceed to
-40°C (-40°F)	A
140°C (284°F) or higher	B
Between 80°C and 100°C (176°F and 212°F)	C

HINT:
- If there is an open circuit, the intelligent tester indicates -40°C (-40°F).
- If there is a short circuit, the intelligent tester indicates 140°C (284°F) or higher.

B → **Go to step 5**

C → CHECK FOR INTERMITTENT PROBLEMS

A

3	READ VALUE USING INTELLIGENT TESTER (CHECK FOR OPEN IN WIRE HARNESS)

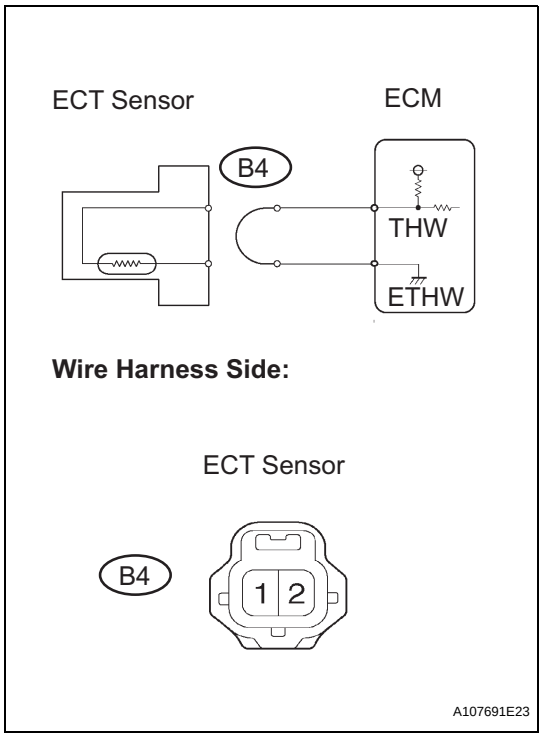

(a) Disconnect the B4 Engine Coolant Temperature (ECT) sensor connector.
(b) Connect terminals 1 and 2 of the ECT sensor connector on the wire harness side.
(c) Connect the intelligent tester to the DLC3.
(d) Turn the ignition switch ON.
(e) Turn the tester ON.
(f) Select the following menu items: DIAGNOSIS / ENHANCED OBD II / DATA LIST / PRIMARY / COOLANT TEMP.
(g) Read the value displayed on the tester.
Standard value:
140°C (284°F) or higher.
(h) Reconnect the ECT sensor connector.

OK → **CONFIRM GOOD CONNECTION TO SENSOR. IF OK, REPLACE ENGINE COOLANT TEMPERATURE SENSOR**

NG

ES

4	CHECK WIRE HARNESS (ENGINE COOLANT TEMPERATURE SENSOR - ECM)

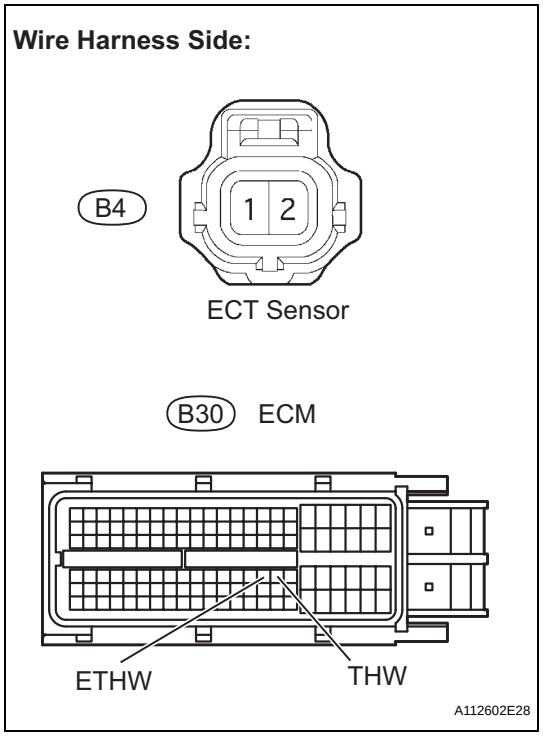

(a) Disconnect the B4 ECT sensor connector.
(b) Disconnect the B30 ECM connector.
(c) Measure the resistance.
Standard resistance

Tester Connection	Specified Condition
B4-2 - B30-79 (THW)	Below 1 Ω
B4-1 - B30-78 (ETHW)	Below 1 Ω

(d) Reconnect the ECT sensor connector.
(e) Reconnect the ECM connector.

NG → **REPAIR OR REPLACE HARNESS AND CONNECTOR**

OK

GOOD CONNECTION TO ECM. IF OK, REPLACE ECM

5	READ VALUE USING INTELLIGENT TESTER (CHECK FOR SHORT IN WIRE HARNESS)

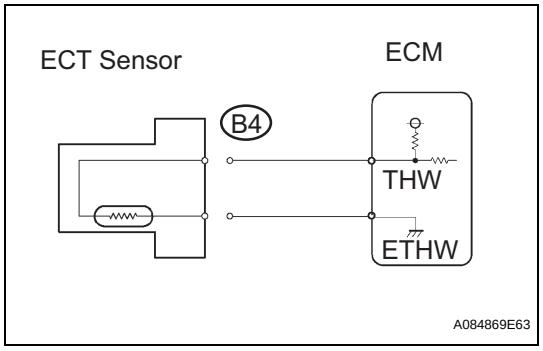

(a) Disconnect the B4 ECT sensor connector.
(b) Connect the intelligent tester to the DLC3.
(c) Turn the ignition switch ON.
(d) Turn the tester ON.
(e) Select the following menu items: DIAGNOSIS / ENHANCED OBD II / DATA LIST / PRIMARY / COOLANT TEMP.
(f) Read the value displayed on the tester.
Standard value:
-40°C (-40°F)
(g) Reconnect the ECT sensor connector.

OK → **REPLACE ENGINE COOLANT TEMPERATURE SENSOR**

NG

ES

6	CHECK WIRE HARNESS (ENGINE COOLANT TEMPERATURE SENSOR - ECM)

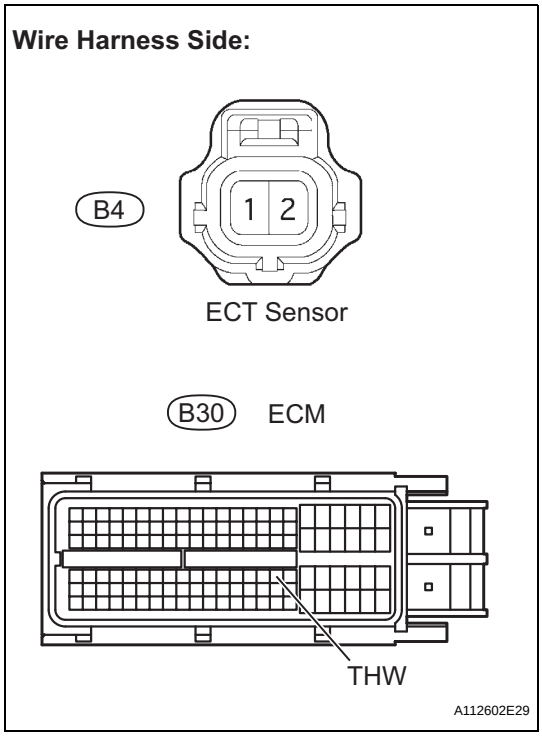

(a) Disconnect the B4 ECT sensor connector.
(b) Disconnect the B30 ECM connector.
(c) Measure the resistance.

Standard resistance

Tester Connection	Specified Condition
B4-2 or B30-79 (THW) - Body ground	10 kΩ or higher

(d) Reconnect the ECT sensor connector.
(e) Reconnect the ECM connector.

NG → **REPAIR OR REPLACE HARNESS AND CONNECTOR**

OK

REPLACE ECM

ES

DTC	P0116	Engine Coolant Temperature Circuit Range / Performance Problem

DESCRIPTION

Refer to DTC P0115 (see page ES-134).

DTC No.	DTC Detection Condition	Trouble Area
P0116	When either of following conditions met (2 trip detection logic): • When cold engine started and engine warmed up, Engine Coolant Temperature (ECT) sensor value does not change. • After warmed up engine started, ECT sensor value does not change when engine stopped and then next cold engine start performed.	• Thermostat • ECT sensor

ES

MONITOR DESCRIPTION

Engine coolant temperature (ECT) sensor cold start monitor

When a cold engine start is performed and then the engine is warmed up, if the ECT sensor value does not change, it is determined that a malfunction has occurred. If this is detected in 2 consecutive driving cycles, the MIL is illuminated and a DTC is set.

ECT sensor soak monitor

After a warmed up engine is started, if the ECT sensor value does not change when the engine is stopped and then the next cold engine start is performed, it is determined that a malfunction has occurred. If this is detected in 2 consecutive driving cycles, the MIL is illuminated and a DTC is set.

MONITOR STRATEGY

Related DTCs	P0116: Engine coolant temperature (ECT) sensor cold start monitor P0116: ECT sensor soak monitor
Required Sensors/Components (Main)	ECT sensor
Required Sensors/Components (Related)	None
Frequency of Operation	Once per driving cycle
Duration	5 hours or more
MIL Operation	2 driving cycles
Sequence of Operation	None

TYPICAL ENABLING CONDITIONS

ECT Sensor cold start monitor:

Monitor runs whenever following DTCs not present	P0100 to P0103: Mass Air Flow (MAF) meter P0110 to P0113: Intake Air Temperature (IAT) sensor
Battery voltage	10.5 V or more
Time after engine start	1 second or more
ECT at engine start	Less than 60°C (140°F)
IAT sensor circuit	OK
Soak time	5 hours or more
Accumulated MAF	1,176 g or more
Engine	Running
Fuel cut	OFF
Difference between ECT at engine start and IAT	Less than 40°C (72°F)

ECT Sensor soak monitor:

Monitor runs whenever following DTCs not present	P0100 to P0103: MAF meter
Battery voltage	10.5 V or more

Engine	Running
Soak time	5 hours or more
Either (a) or (b) condition met	-
(a) ECT	60°C (140°F) or more
(b) Accumulated MAF	2,029 g or more

TYPICAL MALFUNCTION THRESHOLDS

ECT Sensor cold start monitor:

ECT sensor value change	Less than 5°C (9°F)

ECT Sensor soak monitor:

Difference between current ECT sensor value and previous ECT sensor value when engine stopped	Less than 5°C (9°F)

ES

COMPONENT OPERATING RANGE

ECT	ECT sensor value changes in accordance with actual ECT

INSPECTION PROCEDURE

HINT:

- If any of DTCs P0115, P0117, P0118 or P0125 are set simultaneously with DTC P0116, the ECT sensor may have an open or a short circuit. Troubleshoot those DTCs first.
- Read freeze frame data using the intelligent tester. Freeze frame data records the engine condition when malfunctions are detected. When troubleshooting, freeze frame data can help determine if the vehicle was moving or stationary, if the engine was warmed up or not, if the air-fuel ratio was lean or rich, and other data from the time the malfunction occurred.

1	CHECK ANY OTHER DTCS OUTPUT (IN ADDITION TO DTC P0116)

(a) Connect the intelligent tester to the DLC3.
(b) Turn the ignition switch ON.
(c) Turn the tester ON.
(d) Select the following menu items: DIAGNOSIS / ENHANCED II / DTC INFO / CURRENT CODES.
(e) Read the DTC.

Result

Display (DTC Output)	Proceed to
P0116	A
P0116 and other DTCs	B

B → GO TO DTC CHART

A

2	INSPECT THERMOSTAT

(a) Remove the thermostat (see page CO-15).
(b) Measure the valve opening temperature of the thermostat.
Standard value:
80°C to 84°C (176°F to 183°F)

HINT:
In addition to the above check, confirm that the valve is completely closed when the temperature is below the standard.

(c) Reinstall the thermostat (see page CO-15).

NG → **REPLACE THERMOSTAT**

OK

REPLACE ENGINE COOLANT TEMPERATURE SENSOR

DTC	P0120	Throttle / Pedal Position Sensor / Switch "A" Circuit Malfunction
DTC	P0122	Throttle / Pedal Position Sensor / Switch "A" Circuit Low Input
DTC	P0123	Throttle / Pedal Position Sensor / Switch "A" Circuit High Input
DTC	P0220	Throttle / Pedal Position Sensor / Switch "B" Circuit
DTC	P0222	Throttle / Pedal Position Sensor / Switch "B" Circuit Low Input
DTC	P0223	Throttle / Pedal Position Sensor / Switch "B" Circuit High Input
DTC	P2135	Throttle / Pedal Position Sensor / Switch "A" / "B" Voltage Correlation

DESCRIPTION

The TP sensor is mounted on the throttle body, and detects the opening angle of the throttle valve. This sensor is a non-contact type. It uses Hall-effect elements in order to yield accurate signals even in extreme driving conditions, such as at high speeds as well as very low speeds.

The TP sensor has 2 sensor circuits, each of which transmits a signal, VTA1 and VTA2. VTA1 is used to detect the throttle valve angle and VTA2 is used to detect malfunctions in VTA1. The sensor signal voltages vary between 0 V and 5 V in proportion to the throttle valve opening angle, and are transmitted to the VTA terminals of the ECM.

As the valve closes, the sensor output voltage decreases and as the valve opens, the sensor output voltage increases. The ECM calculates the throttle valve opening angle according to these signals and controls the throttle actuator in response to driver inputs. These signals are also used in calculations such as air-fuel ratio correction, power increase correction and fuel-cut control.

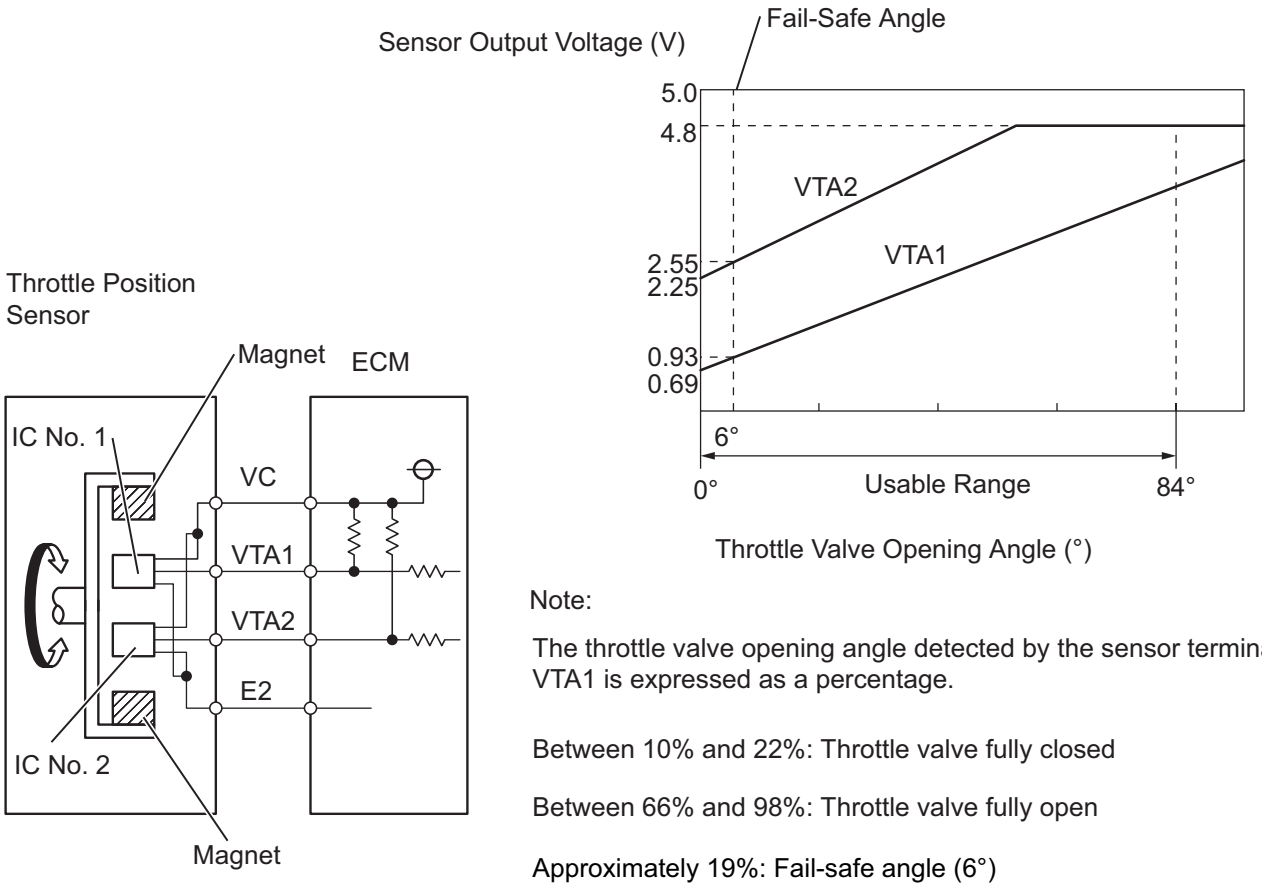

Note:

The throttle valve opening angle detected by the sensor terminal VTA1 is expressed as a percentage.

Between 10% and 22%: Throttle valve fully closed

Between 66% and 98%: Throttle valve fully open

Approximately 19%: Fail-safe angle (6°)

A122493E05

DTC No.	DTC Detection Condition	Trouble Area
P0120	Output voltage of VTA1 quickly fluctuates beyond lower and upper malfunction thresholds for 2 seconds when accelerator pedal depressed (1 trip detection logic)	• Throttle Position (TP) sensor (built into throttle body) • ECM
P0122	Output voltage of VTA1 0.2 V or less for 2 seconds when accelerator pedal depressed (1 trip detection logic)	• TP sensor (built into throttle body) • Short in VTA1 circuit • Open in VC circuit • ECM
P0123	Output voltage of VTA1 4.535 V or more for 2 seconds when accelerator pedal depressed (1 trip detection logic)	• TP sensor (built into throttle body) • Open in VTA1 circuit • Open in E2 circuit • Short between VC and VTA1 circuits • ECM
P0220	Output voltage of VTA2 quickly fluctuates beyond lower and upper malfunction thresholds for 2 seconds when accelerator pedal depressed (1 trip detection logic)	• TP sensor (built into throttle body) • ECM

DTC No.	DTC Detection Condition	Trouble Area
P0222	Output voltage of VTA2 1.75 V or less for 2 seconds when accelerator pedal depressed (1 trip detection logic)	• TP sensor (built into throttle body) • Short in VTA2 circuit • Open in VC circuit • ECM
P0223	Output voltage of VTA2 4.8 V or more, and VTA1 between 0.2 V and 2.02 V for 2 seconds when accelerator pedal depressed (1 trip detection logic)	• TP sensor (built into throttle body) • Open in VTA2 circuit • Open in E2 circuit • Short between VC and VTA2 circuits • ECM
P2135	Either condition (a) or (b) met (1 trip detection logic): (a) Difference between output voltages of VTA1 and VTA2 0.02 V or less for 0.5 seconds or more (b) Output voltage of VTA1 0.2 V or less, and VTA2 1.75 V or less, for 0.4 seconds or more	• Short between VTA1 and VTA2 circuits • TP sensor (built into throttle body) • ECM

HINT:

- When any of these DTCs are set, check the throttle valve opening angle by selecting the following menu items on the intelligent tester: DIAGNOSIS / ENHANCED OBD II / DATA LIST / ETCS / THROTTLE POS #1 AND THROTTLE POS #2.
- THROTTLE POS #1 denotes the VTA1 signal, and THROTTLE POS #2 denotes the VTA2 signal.

Reference (Normal Condition)

Tester Display	Accelerator Pedal Fully Released	Accelerator Pedal Fully Depressed
THROTTLE POS #1	**0.5 to 1.1 V**	**3.3 to 4.9 V**
THROTTLE POS #2	**2.1 to 3.1 V**	**4.6 to 5.0 V**

MONITOR DESCRIPTION

The ECM uses the Throttle Position (TP) sensor to monitor the throttle valve opening angle. There are several checks that the ECM performs to confirm the proper operation of the TP sensor.

- A specific voltage difference is expected between the sensor terminals, VTA1 and VTA2, for each throttle valve opening angle. If the difference between VTA1 and VTA2 is incorrect, the ECM interprets this as a malfunction in the sensor, and sets a DTC.
- VTA1 and VTA2 each have a specific voltage range. If VTA1 or VTA2 is outside the normal operating range, the ECM interprets this as a malfunction in the sensor, and sets a DTC.
- VTA1 and VTA2 should never be close to the same voltage level. If VTA1 is within 0.02 V of VTA2, the ECM determines that there is a short circuit in the sensor, and sets a DTC.

If the malfunction is not repaired successfully, a DTC is set 10 seconds after the engine is next started.

MONITOR STRATEGY

Related DTCs	P0120: Throttle position sensor 1 range check (Fluctuating) P0122: Throttle position sensor 1 range check (Low voltage) P0123: Throttle position sensor 1 range check (High voltage) P0220: Throttle position sensor 2 range check (Fluctuating) P0222: Throttle position sensor 2 range check (Low voltage) P0223: Throttle position sensor 2 range check (High voltage) P2135: Throttle position sensor range check (Correlation)
Required Sensors/Components (Main)	Throttle position sensor
Required Sensors/Components (Related)	-
Frequency of Operation	Continuous
Duration	2 seconds: P0120, P0122, P0123, P0220, P0222 and P0223 (Accelerator pedal ON) 10 seconds: P0120, P0122, P0123, P0220, P0222 and P0223 (Accelerator pedal OFF) 0.5 seconds: P2135 Case 1 0.4 seconds: P2135 Case 2
MIL Operation	Immediate
Sequence of Operation	None

TYPICAL ENABLING CONDITIONS

Monitor runs whenever following DTCs not present	None
Either of following conditions A or B met	-
A. Ignition switch ON	0.012 seconds or more
B. Electronic throttle actuator power	ON

TYPICAL MALFUNCTION THRESHOLDS

P0120:

VTA1 voltage	0.2 V or less, or 4.535 V or more

P0122:

VTA1 voltage	0.2 V or less

P0123:

VTA1 voltage	4.535 V or more

P0220:

VTA2 voltage	1.75 V or less, or 4.8 V or more

P0222:

VTA2 voltage	1.75 V or less

P0223:

VTA2 voltage when VTA1 0.2 V or more, and 2.02 V or less	4.8 V or more

P2135 Case 1:

Difference between VTA1 and VTA2 voltages	0.02 V or less

P2135 Case 2:

VTA1 voltage	0.2 V or less
VTA2 voltage	1.75 V or less

COMPONENT OPERATING RANGE

VTA1 voltage	0.69 to 4.05 V
VTA2 voltage	2.25 to 4.8 V

FAIL-SAFE

When any of these DTCs, as well as other DTCs relating to ETCS (Electronic Throttle Control System) malfunctions, are set, the ECM enters fail-safe mode. During fail-safe mode, the ECM cuts the current to the throttle actuator off, and the throttle valve is returned to a 6° throttle angle by the return spring. The ECM then adjusts the engine output by controlling the fuel injection (intermittent fuel-cut) and ignition timing, in accordance with the accelerator pedal opening angle, to allow the vehicle to continue at a minimal speed. If the accelerator pedal is depressed firmly and gently, the vehicle can be driven slowly. Fail-safe mode continues until a pass condition is detected, and the ignition switch is then turned OFF.

WIRING DIAGRAM

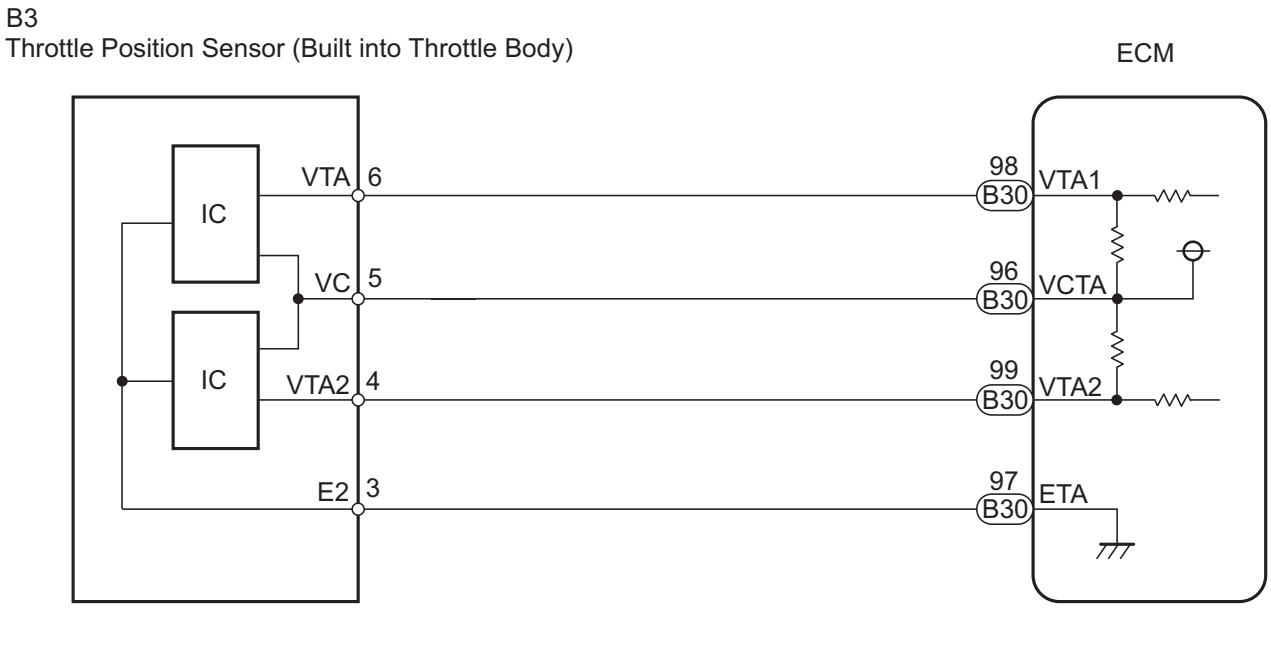

INSPECTION PROCEDURE

HINT:

- These DTCs relate to the Throttle Position (TP) sensor.
- Read freeze frame data using the intelligent tester. Freeze frame data records the engine condition when malfunctions are detected. When troubleshooting, freeze frame data can help determine if the vehicle was moving or stationary, if the engine was warmed up or not, if the air-fuel ratio was lean or rich, and other data from the time the malfunction occurred.

1	READ VALUE USING INTELLIGENT TESTER (THROTTLE POS #1 AND THROTTLE POS #2)

(a) Connect the intelligent tester to the DLC3.
(b) Turn the ignition switch ON and turn the tester ON.
(c) Select the following menu items: DIAGNOSIS / ENHANCED OBD II / DATA LIST / ETCS / THROTTLE POS #1 and THROTTLE POS #2.
(d) Check the values displayed on the tester.

Result

TP#1 (VTA1) When Accelerator Pedal Released	TP#2 (VTA2) When Accelerator Pedal Released	TP#1 (VTA1) When Accelerator Pedal Depressed	TP#2 (VTA2) When Accelerator Pedal Depressed	Trouble Area	Proceed to
0 to 0.2 V	0 to 0.2 V	0 to 0.2 V	0 to 0.2 V	VC circuit open	A
4.5 to 5.0 V	4.5 to 5.0 V	4.5 to 5.0 V	4.5 to 5.0 V	E2 circuit open	
0 to 0.2 V, or 4.5 to 5.0 V	2.4 to 3.4 V (Fail-safe)	0 to 0.2 V, or 4.5 to 5.0 V	2.4 to 3.4 V (Fail-safe)	VTA1 circuit open or ground short	
0.7 to 1.3 V (Fail-safe)	0 to 0.2 V, or 4.5 to 5.0 V	0.7 to 1.3 V (Fail-safe)	0 to 0.2 V, or 4.5 to 5.0 V	VTA2 circuit open or ground short	
0.5 to 1.1 V	2.1 to 3.1 V	3.3 to 4.9 V (Not fail-safe)	4.6 to 5.0 V (Not fail-safe)	TP sensor circuit normal	B

HINT:
TP#1 denotes THROTTLE POS #1, and TP#2 denotes THROTTLE POS #2.

B → Go to step 5

A

2 CHECK WIRE HARNESS (THROTTLE POSITION SENSOR - ECM)

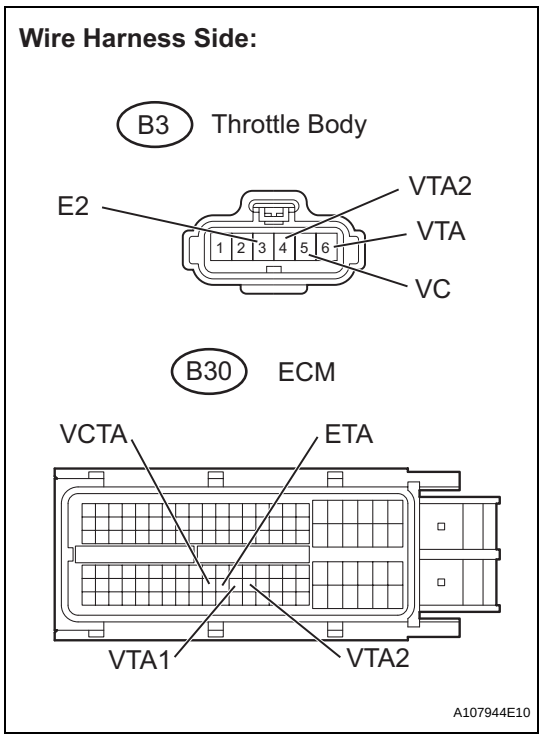

(a) Disconnect the B3 throttle body connector.
(b) Disconnect the B30 ECM connector.
(c) Measure the resistance.

Standard resistance

Tester Connection	Specified Condition
B3-5 (VC) - B30-96 (VCTA)	Below 1 Ω
B3-6 (VTA) - B30-98 (VTA1)	Below 1 Ω
B3-4 (VTA2) - B30-99 (VTA2)	Below 1 Ω
B3-3 (E2) - B30-97 (ETA)	Below 1 Ω
B3-5 (VC) or B30-96 (VCTA) - Body ground	10 kΩ or higher
B3-6 (VTA) or B30-98 (VTA1) - Body ground	10 kΩ or higher
B3-4 (VTA2) or B30-99 (VTA2) - Body ground	10 kΩ or higher

(d) Reconnect the throttle body connector.
(e) Reconnect the ECM connector.

NG → REPAIR OR REPLACE HARNESS AND CONNECTOR

OK

3 INSPECT ECM (VC VOLTAGE)

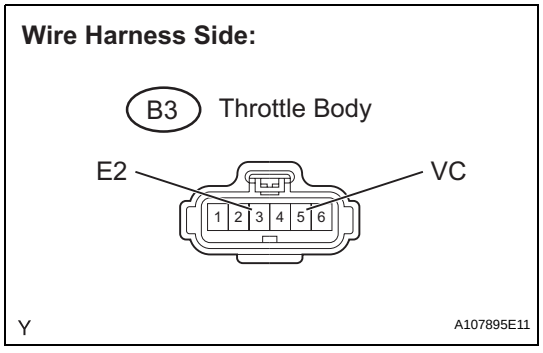

(a) Disconnect the B3 throttle body connector.
(b) Turn the ignition switch ON.
(c) Measure the voltage between the terminals of the throttle body connector.

Standard voltage

Tester Connection	Specified Condition
B3-5 (VC) - B3-3 (E2)	4.5 to 5.5 V

(d) Reconnect the throttle body connector.

NG → REPLACE ECM

OK

4	REPLACE THROTTLE BODY ASSEMBLY

NEXT

5	CHECK WHETHER DTC OUTPUT RECURS (THROTTLE POSITION SENSOR DTCS)

(a) Connect the intelligent tester to the DLC3.
(b) Turn the ignition switch ON and turn the tester ON.
(c) Clear DTCs (see page ES-39).
(d) Start the engine.
(e) Allow the engine to idle for 15 seconds or more.
(f) Select the following menu items: DIAGNOSIS / ENHANCED OBD II / DTC INFO / CURRENT CODES.
(g) Read DTCs.

ES

Result

Display (DTC Output)	Proceed to
P0120, P0122, P0123, P0220, P0222, P0223 and/or P2135	A
No output	B

B → SYSTEM OK

A

REPLACE ECM

DTC	P0121	Throttle / Pedal Position Sensor / Switch "A" Circuit Range / Performance Problem

DESCRIPTION

Refer to DTC P0120 (see page ES-143).

DTC No.	DTC Detection Condition	Trouble Area
P0121	Difference between VTA1 and VTA2 voltages less than 0.8 V, or more than 1.6 V for 2 seconds (1 trip detection logic)	TP sensor (built into throttle body)

MONITOR DESCRIPTION

The ECM uses the TP sensor to monitor the throttle valve opening angle.
This sensor transmits two signals: VTA1 and VTA2. VTA1 is used to detect the throttle opening angle and VTA2 is used to detect malfunctions in VTA1. The ECM performs several checks to confirm the proper operation of the TP sensor and VTA1.
For each throttle opening angle, a specific voltage difference is expected between the outputs of VTA1 and VTA2. If the output voltage difference between the two signals deviates from the normal operating range, the ECM interprets this as a malfunction of the TP sensor. The ECM illuminates the MIL and sets the DTC.
If the malfunction is not repaired successfully, the DTC is set 2 seconds after the engine is next started.

MONITOR STRATEGY

Related DTCs	P0121: TP sensor rationality
Required Sensors/Components (Main)	TP sensor
Required Sensors/Components (Related)	-
Frequency of Operation	Continuous
Duration	Within 2 seconds
MIL Operation	Immediate
Sequence of Operation	None

TYPICAL ENABLING CONDITIONS

Monitor runs whenever following DTCs not present	P0120 - P0223, P2135 (TP sensor)
Either of following conditions A or B set	-
A. Ignition switch	ON
B. Electric throttle motor power	ON

TYPICAL MALFUNCTION THRESHOLDS

Difference in voltage between VTA1 and VTA2 TP sensor 1 - [TP sensor 2 x 0.8 (corrected by learning value)]	Less than 0.8 V, or more than 1.6 V

FAIL-SAFE

When this DTC, as well as other DTCs relating to ETCS (Electronic Throttle Control System) malfunctions, is set, the ECM enters fail-safe mode. During fail-safe mode, the ECM cuts the current to the throttle actuator off, and the throttle valve is returned to a 6° throttle angle by the return spring. The ECM then adjusts the engine output by controlling the fuel injection (intermittent fuel-cut) and ignition timing, in accordance with the accelerator pedal opening angle, to allow the vehicle to continue at a minimal speed. If the accelerator pedal is depressed firmly and gently, the vehicle can be driven slowly. Fail-safe mode continues until a pass condition is detected, and the ignition switch is then turned OFF.

INSPECTION PROCEDURE

HINT:

- This DTC relates to the Throttle Position (TP) sensor.
- Read freeze frame data using the intelligent tester. Freeze frame data records the engine condition when malfunctions are detected. When troubleshooting, freeze frame data can help determine if the vehicle was moving or stationary, if the engine was warmed up or not, if the air-fuel ratio was lean or rich, and other data from the time the malfunction occurred.

1	CHECK ANY OTHER DTCS OUTPUT (IN ADDITION TO DTC P0121)

(a) Connect the intelligent tester to the DLC3.
(b) Turn the ignition switch ON.
(c) Turn the tester ON.
(d) Select the following menu items: DIAGNOSIS / ENHANCED OBD II / DTC INFO / CURRENT CODES.
(e) Read DTCs.

Result

Display (DTC output)	Proceed to
P0121	A
P0121 and other DTCs	B

B → GO TO DTC CHART

A

REPLACE THROTTLE BODY ASSEMBLY

DTC	P0125	Insufficient Coolant Temperature for Closed Loop Fuel Control

DESCRIPTION

Refer to DTC P0115 (see page ES-134).

DTC No.	DTC Detection Condition	Trouble Area
P0125	Engine Coolant Temperature (ECT) does not reach closed-loop enabling temperature for 20 minutes (this period varies with engine start ECT) (2 trip detection logic)	• ECT sensor • Cooling system • Thermostat

MONITOR DESCRIPTION

The resistance of the ECT sensor varies in proportion to the actual ECT. The ECT supplies a constant voltage to the sensor and monitors the signal output voltage of the sensor. The signal voltage output varies according to the changing resistance of the sensor. After the engine is started, the ECT is monitored through this signal. If the ECT sensor indicates that the engine is not yet warm enough for closed-loop fuel control, despite a specified period of time having elapsed since the engine was started, the ECM interprets this as a malfunction in the sensor or cooling system and sets the DTC.
Example:
The ECT is 0°C (32°F) at engine start. After about 1 minute running time, the ECT sensor still indicates that the engine is not warm enough to begin closed-loop fuel (air-fuel ratio feedback) control. The ECM interprets this as a malfunction in the sensor or cooling system and sets the DTC.

ES

MONITOR STRATEGY

Related DTCs	P0125: Insufficient engine coolant temperature for closed-loop fuel control
Required Sensors/Components (Main)	Thermostat, cooling system
Required Sensors/Components (Related)	Engine coolant temperature sensor and mass air flow meter
Frequency of Operation	Once per driving cycle
Duration	54.5 seconds or more: Engine coolant temperature at engine start -3.34°C (26°F) or more 93 seconds or more: Engine coolant temperature at engine start -4.45° to -3.34°C (24° to 26°F) 20 minutes or more: Engine coolant temperature at engine start less than -4.45°C (24°F)
MIL Operation	2 driving cycles
Sequence of Operation	None

TYPICAL ENABLING CONDITIONS

Monitor runs whenever following DTCs not present	P0100 - P0103 (MAF meter) P0110 - P0113 (IAT sensor) P0115 - P0118 (ECT sensor)
Thermostat failure	Not detected

TYPICAL MALFUNCTION THRESHOLDS

Time until actual engine coolant temperature reaches closed-loop fuel control enabling temperature	54.5 seconds or more: Engine coolant temperature at engine start -3.34°C (26°F) or more 93 seconds or more: Engine coolant temperature at engine start -4.45° to -3.34°C (24° to 26°F) 20 minutes or more: Engine coolant temperature at engine start less than -4.45°C (24°F)

WIRING DIAGRAM

Refer to DTC P0115 (see page ES-135).

INSPECTION PROCEDURE

HINT:

- If any of DTCs P0115, P0116, P0117 or P0118 are set simultaneously with DTC P0125, the Engine Coolant Temperature (ECT) sensor may have an open or a short circuit. Troubleshoot those DTCs first.
- Read freeze frame data using the intelligent tester. Freeze frame data records the engine condition when malfunctions are detected. When troubleshooting, freeze frame data can help determine if the vehicle was moving or stationary, if the engine was warmed up or not, if the air-fuel ratio was lean or rich, and other data from the time the malfunction occurred.

ES

1	CHECK ANY OTHER DTCS OUTPUT (IN ADDITION TO DTC P0125)

(a) Connect the intelligent tester to the DLC3.
(b) Turn the ignition switch ON.
(c) Turn the tester ON.
(d) Select the following menu items: DIAGNOSIS / ENHANCED OBD II / DTC INFO / CURRENT CODES.
(e) Read DTCs.

Result

Display (DTC Output)	Proceed to
P0125	A
P0125 and other DTCs	B

HINT:
If any DTCs other than P0125 are output, troubleshoot those DTCs first.

B → GO TO DTC CHART

A

2	INSPECT THERMOSTAT

(a) Remove the thermostat (see page CO-15).
(b) Check the valve opening temperature of the thermostat.
Standard value:
80 to 84°C (176 to 183°F)
HINT:
In addition to the above check, confirm that the valve is completely closed when the temperature is below the standard.
(c) Reinstall the thermostat (see page CO-15).

NG → REPLACE THERMOSTAT

OK

3	CHECK COOLING SYSTEM

(a) Check for defects in the cooling system that might cause the system to be too cold, such as abnormal radiator fan operation or any modifications.

NG → **REPAIR OR REPLACE COOLING SYSTEM**

OK

REPLACE ENGINE COOLANT TEMPERATURE SENSOR

DTC	P0128	Coolant Thermostat (Coolant Temperature Below Thermostat Regulating Temperature)

DESCRIPTION

This DTC is set when the Engine Coolant Temperature (ECT) does not reach 75°C (167°F) despite sufficient engine warm-up time having elapsed.

DTC No.	DTC Detection Condition	Trouble Area
P0128	Conditions (a), (b) and (c) met for 5 seconds (2 trip detection logic): (a) Cold start (b) Engine warmed up (c) ECT less than 75°C (167°F)	• Thermostat • Cooling system • ECT sensor • ECM

ES

MONITOR DESCRIPTION

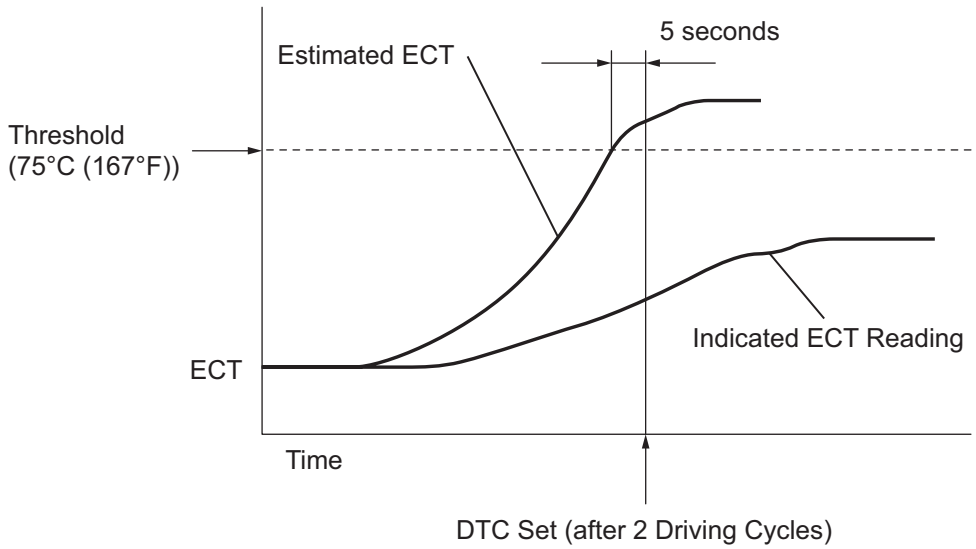

Y

A121605E02

The ECM estimates the ECT based on the starting temperature, engine loads, and engine speeds. The ECM then compares the estimated temperature with the actual ECT. When the estimated ECT reaches 75°C (167°F), the ECM checks the actual ECT. If the actual ECT is less than 75°C (167°F), the ECM interprets this as a malfunction in the thermostat or the engine cooling system and sets the DTC.

MONITOR STRATEGY

Related DTCs	P0128: Coolant Thermostat
Required Sensors/Components (Main)	Thermostat
Required Sensors/Components (Related)	Engine Coolant Temperature (ECT) sensor, Intake Air Temperature (IAT) sensor, Vehicle speed sensor

Frequency of Operation	Once per driving cycle
Duration	900 seconds
MIL Operation	2 driving cycles
Sequence of Operation	None

TYPICAL ENABLING CONDITIONS

Monitor runs whenever following DTCs not present	P0010 , P0020 (VVT OCV) P0011 (VVT System 1 - Advance) P0012 (VVT System 1 - Retard) P0021 (VVT System 2 - Advance) P0022 (VVT System 2 - Retard) P0031, P0032, P0051, P0052 (A/F sensor heater - Sensor 1) P0100 - P0103 (MAF meter) P0110 - P0113 (IAT sensor) P0115 - P0118 (ECT sensor) P0125 (Insufficient ECT for Closed Loop) P0171, P0172 (Fuel system) P0300 - P0304 (Misfire) P0335 (CKP sensor) P0340 (CMP sensor) P0351 - P0354 (Igniter) P0500 (VSS) P2196, P2198 (A/F sensor - rationality) P2A00, P2A03 (A/F sensor - slow response)
Battery voltage	11 V or more
Either of following conditions 1 or 2 met:	-
1. All of following conditions met:	-
• ECT at engine start - IAT at engine start	-15 to 7°C (-27 to 12.6°F)
• ECT at engine start	-10 to 56°C (14 to 133°F)
• IAT at engine start	-10 to 56°C (14 to 133°F)
2. All of following conditions met:	-
• ECT at engine start - IAT at engine start	More than 7°C (12.6 °F)
• ECT at engine start	56°C (133°F) or less
• IAT at engine start	-10°C (14°F) or more
Accumulated time at 128 km/h (80 mph) or more of vehicle speed	Less than 20 seconds

TYPICAL MALFUNCTION THRESHOLDS

Duration that both of following conditions (a) and (b) met	5 seconds or more
(a) Estimated ECT	75°C (167°F) or more
(b) ECT sensor output	Below 75°C (167°F)

INSPECTION PROCEDURE

HINT:

- This DTC relates to the thermostat.
- Read freeze frame data using the intelligent tester. Freeze frame data records the engine condition when malfunctions are detected. When troubleshooting, freeze frame data can help determine if the vehicle was moving or stationary, if the engine was warmed up or not, if the air-fuel ratio was lean or rich, and other data from the time the malfunction occurred.

1	**CHECK ANY OTHER DTCS OUTPUT (IN ADDITION TO DTC P0128)**

(a) Connect the intelligent tester to the DLC3.
(b) Turn the ignition switch ON.

(c) Turn the tester ON.
(d) Select the following menu items: DIAGNOSIS / ENHANCED OBD II / DTC INFO / CURRENT CODES.
(e) Read DTCs.

Result

Display (DTC Output)	Proceed to
P0128	A
P0128 and other DTCs	B

HINT:
If any DTCs other than P0128 are output, troubleshoot those DTCs first.

B → **GO TO DTC CHART**

ES

A

2 CHECK COOLING SYSTEM

(a) Check for defects in the cooling system that might cause the system to be too cold, such as abnormal radiator fan operation or any modifications.

NG → **REPAIR OR REPLACE COOLING SYSTEM**

OK

3 INSPECT THERMOSTAT

(a) Remove the thermostat (see page CO-15).
(b) Measure the valve opening temperature of the thermostat.
Standard value:
80 to 84°C (176 to 183°F)
HINT:
In addition to the above check, confirm that the valve is completely closed when the temperature is below the standard.
(c) Reinstall the thermostat (see page CO-15).

NG → **REPLACE THERMOSTAT**

OK

REPLACE ECM

DTC	P0136	Oxygen Sensor Circuit Malfunction (Bank 1 Sensor 2)
DTC	P0137	Oxygen Sensor Circuit Low Voltage (Bank 1 Sensor 2)
DTC	P0138	Oxygen Sensor Circuit High Voltage (Bank 1 Sensor 2)
DTC	P0156	Oxygen Sensor Circuit Malfunction (Bank 2 Sensor 2)
DTC	P0157	Oxygen Sensor Circuit Low Voltage (Bank 2 Sensor 2)
DTC	P0158	Oxygen Sensor Circuit High Voltage (Bank 2 Sensor 2)

DESCRIPTION

In order to obtain a high purification rate of the carbon monoxide (CO), hydrocarbon (HC) and nitrogen oxide (NOx) components in the exhaust gas, a TWC is used. For the most efficient use of the TWC, the air-fuel ratio must be precisely controlled so that it is always close to the stoichiometric air-fuel level. For the purpose of helping the ECM to deliver accurate air-fuel ratio control, a Heated Oxygen (HO2) sensor is used.

The HO2 sensor is located behind the TWC, and detects the oxygen concentration in the exhaust gas. Since the sensor is integrated with the heater that heats the sensing portion, it is possible to detect the oxygen concentration even when the intake air volume is low (the exhaust gas temperature is low).

When the air-fuel ratio becomes lean, the oxygen concentration in the exhaust gas is rich. The HO2 sensor informs the ECM that the post-TWC air-fuel ratio is lean (low voltage, i.e. less than 0.45 V).

Conversely, when the air-fuel ratio is richer than the stoichiometric air-fuel level, the oxygen concentration in the exhaust gas becomes lean. The HO2 sensor informs the ECM that the post-TWC air-fuel ratio is rich (high voltage, i.e. more than 0.45 V). The HO2 sensor has the property of changing its output voltage drastically when the air-fuel ratio is close to the stoichiometric level.

The ECM uses the supplementary information from the HO2 sensor to determine whether the air-fuel ratio after the TWC is rich or lean, and adjusts the fuel injection time accordingly. Thus, if the HO2 sensor is working improperly due to internal malfunctions, the ECM is unable to compensate for deviations in the primary air-fuel ratio control.

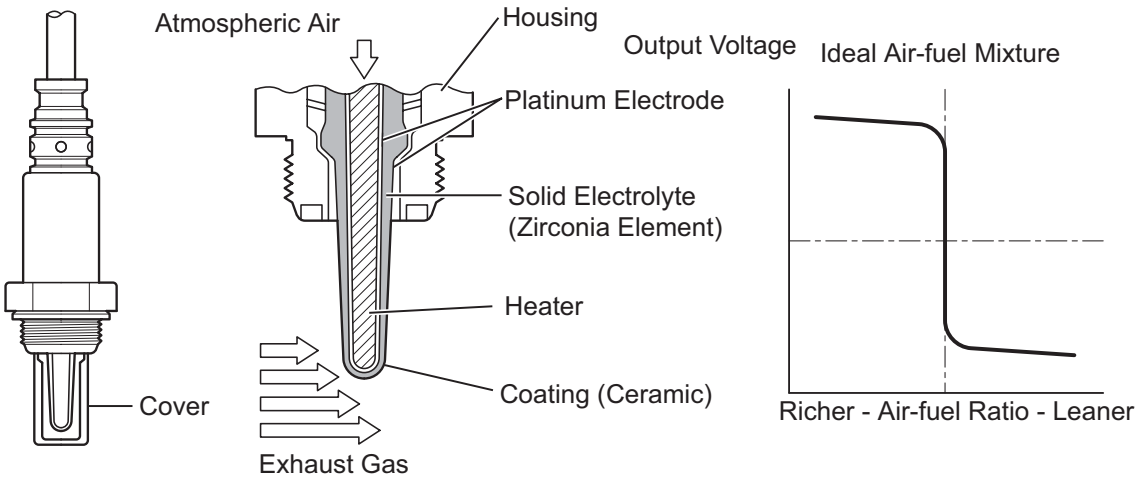

P

A115539E07

DTC No.	DTC Detection Condition	Trouble Area
P0136 P0156	• Abnormal voltage output: During active air-fuel ratio control, following conditions (a) and (b) met for certain period of time (2 trip detection logic): (a) Heated Oxygen (HO2) sensor voltage does not decrease to less than 0.59 V (b) HO2 sensor voltage does not increase to more than 0.21 V • Low impedance: Sensor impedance less than 5 Ω for more than 30 seconds when ECM presumes sensor to be warmed up and operating normally (2 trip detection logic)	• Open or short in HO2 sensor (sensor 2) circuit • HO2 sensor (sensor 2) • HO2 sensor heater (sensor 2) • Air-fuel Ratio (A/F) sensor (sensor 1) • Integration relay (EFI MAIN relay) • Gas leakage from exhaust system
P0137 P0157	• Low voltage (open): During active air-fuel ratio control, following conditions (a) and (b) met for certain period of time (2 trip detection logic): (a) HO2 sensor voltage output less than 0.21 V (b) Target air-fuel ratio rich • High impedance: Sensor impedance 15 kΩ or more for more than 90 seconds when ECM presumes sensor to be warmed up and operating normally (2 trip detection logic)	• Open in HO2 sensor (sensor 2) circuit • HO2 sensor (sensor 2) • HO2 sensor heater (sensor 2) • Integration relay (EFI MAIN relay) • Gas leakage from exhaust system
P0138 P0158	• High voltage (short): During active air-fuel ratio control, following conditions (a) and (b) met for certain period of time (2 trip detection logic): (a) HO2 sensor voltage output more than 0.59 V (b) Target air-fuel ratio lean • Extremely high voltage (short): HO2 sensor voltage output exceeds 1.2 V for more than 10 seconds (2 trip detection logic)	• Short in HO2 sensor (sensor 2) circuit • HO2 sensor (sensor 2) • ECM internal circuit malfunction

MONITOR DESCRIPTION

Active Air-Fuel Ratio Control

The ECM usually performs air-fuel ratio feedback control so that the Air-Fuel Ratio (A/F) sensor output indicates a near stoichiometric air-fuel level. This vehicle includes active air-fuel ratio control in addition to regular air-fuel ratio control. The ECM performs active air-fuel ratio control to detect any deterioration in the Three-Way Catalytic Converter (TWC) and Heated Oxygen (HO2) sensor malfunctions (refer to the diagram below).

Active air-fuel ratio control is performed for approximately 15 to 20 seconds while driving with a warm engine. During active air-fuel ratio control, the air-fuel ratio is forcibly regulated to become lean or rich by the ECM. If the ECM detects a malfunction, one of the following DTCs is set: DTC P0136 or P0156 (abnormal voltage output), P0137 or P0157 (open circuit) and P0138 or P0158 (short circuit).

Abnormal Voltage Output of HO2 Sensor (DTC P0136 and P0156)

While the ECM is performing active air-fuel ratio control, the air-fuel ratio is forcibly regulated to become rich or lean. If the sensor is not functioning properly, the voltage output variation is small. For example, when the HO2 sensor voltage does not decrease to less than 0.21 V and does not increase to more than 0.59 V during active air-fuel ratio control, the ECM determines that the sensor voltage output is abnormal and sets DTC P0136 or P0156.

ES

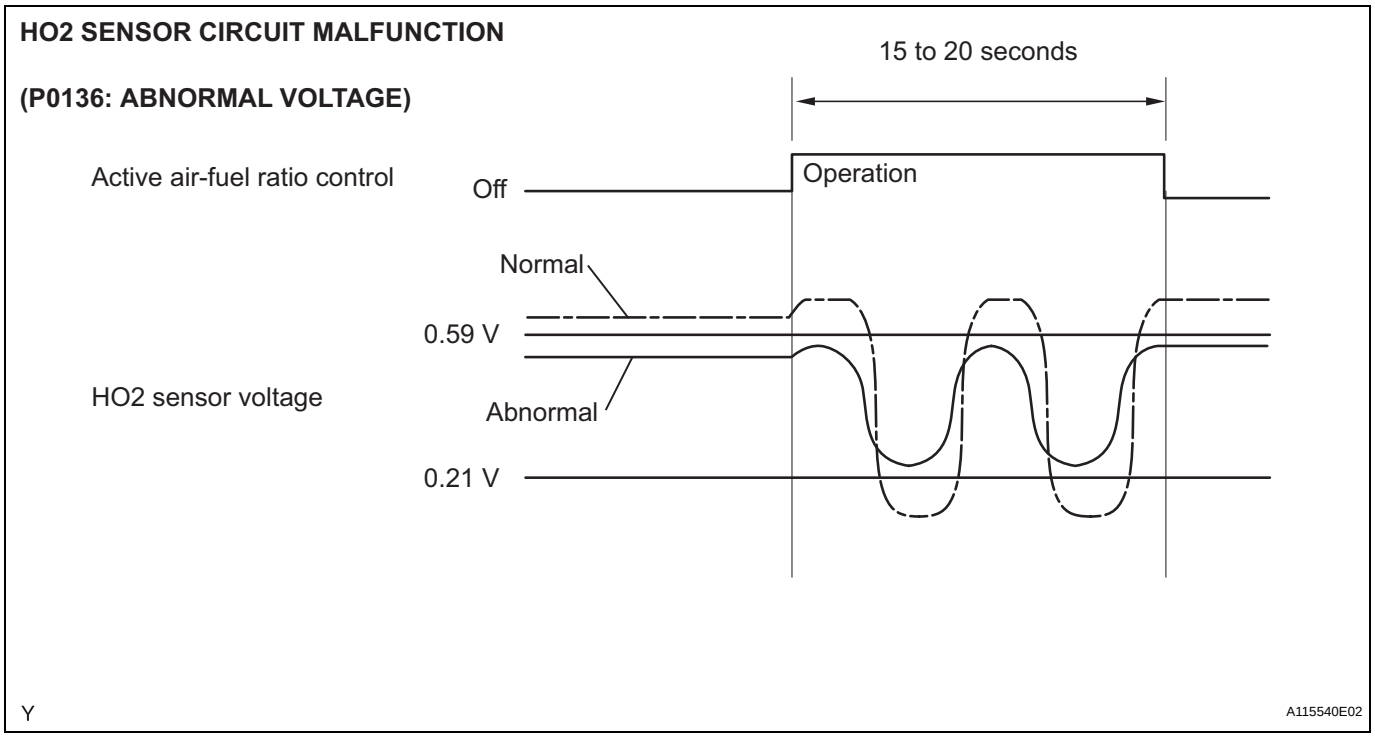

Open or Short in Heated Oxygen (HO2) Sensor Circuit (DTC P0137 and P0157 or P0138 and P0158)

During active air-fuel ratio control, the ECM calculates the Oxygen Storage Capacity (OSC)* of the Three-Way Catalytic Converter (TWC) by forcibly regulating the air-fuel ratio to become rich or lean. If the HO2 sensor has an open or short, or the voltage output of the sensor decreases significantly, the OSC indicates an extraordinarily high value. Even if the ECM attempts to continue regulating the air-fuel ratio to become rich or lean, the HO2 sensor output does not change.

While performing active air-fuel ratio control, when the target air-fuel ratio is rich and the HO2 sensor voltage output is 0.21 V or less (lean), the ECM interprets this as an abnormally low sensor output voltage and sets DTC P0137 or P0157. When the target air-fuel ratio is lean and the voltage output is 0.59 V or more (rich) during active air-fuel ratio control, the ECM determines that the sensor voltage output is abnormally high, and sets DTC P0138 or P0158.

HINT:

DTC P0138 or P0158 is also set if the HO2 sensor voltage output is more than 1.2 V for 10 seconds or more.

*: The TWC has the capability to store oxygen. The OSC and the emission purification capacity of the TWC are mutually related. The ECM determines whether the catalyst has deteriorated based on the calculated OSC value (see page ES-234).

HO2 SENSOR CIRCUIT LOW VOLTAGE

(P0137 and P0157: OPEN)

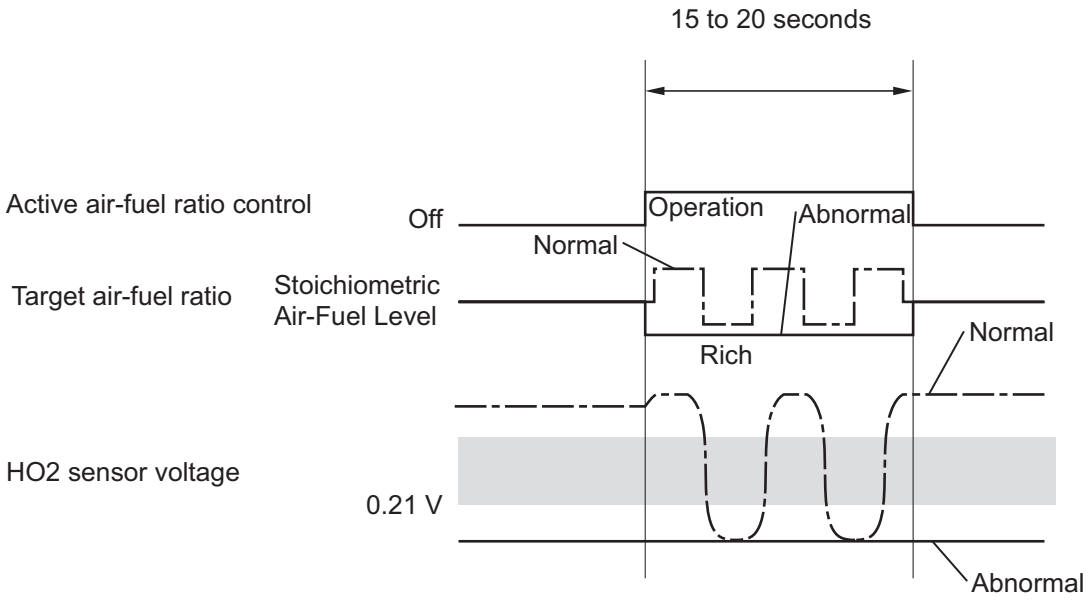

HO2 SENSOR CIRCUIT HIGH VOLTAGE

(P0138 and P0158: SHORT)

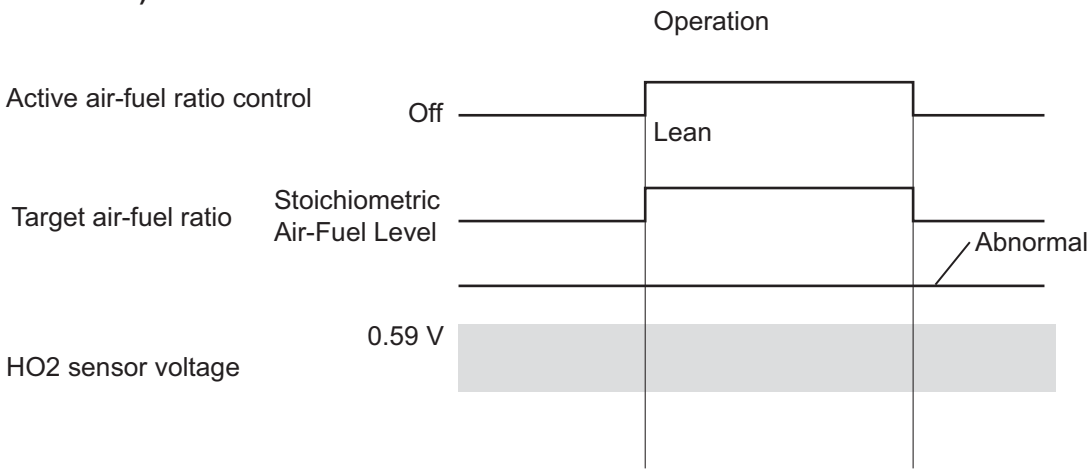

Y

A115541E06

High or Low Impedance of Heated Oxygen (HO2) Sensor (DTC P0136 and P0156 or P0137 and P157)

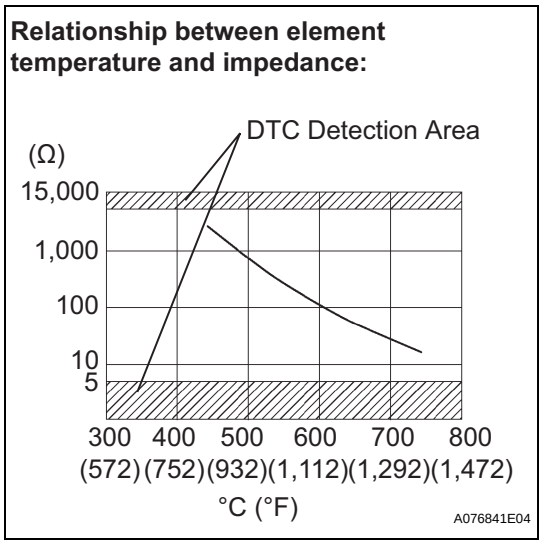

During normal air-fuel ratio feedback control, there are small variations in the exhaust gas oxygen concentration. In order to continuously monitor the slight variations in the HO2 sensor signal while the engine is running, the impedance* of the sensor is measured by the ECM. The ECM determines that there is a malfunction in the sensor when the measured impedance deviates from the standard range.
*: The effective resistance in an alternating current electrical circuit.
HINT:

- The impedance cannot be measured using an ohmmeter.
- DTC P0136 and P0156 indicate the deterioration of the HO2 sensor. The ECM sets this DTC by calculating the impedance of the sensor when the typical enabling conditions are satisfied (2 driving cycles).
- DTC P0137 and P0157 indicate an open or short circuit in the HO2 sensor (2 driving cycles). The ECM sets this DTC when the impedance of the sensor exceeds the threshold 15 kΩ.

MONITOR STRATEGY

Related DTCs	P0136: Heated oxygen sensor (bank 1) output voltage (Abnormal voltage output) P0136: Heated oxygen sensor (bank 1) impedance (Low) P0137: Heated oxygen sensor (bank 1) output voltage (Low voltage) P0137: Heated oxygen sensor (bank 1) impedance (High) P0138: Heated oxygen sensor (bank 1) output voltage (High voltage) P0138: Heated oxygen sensor (bank 1) output voltage (Extremely high) P0156: Heated oxygen sensor (bank 2) output voltage (Abnormal voltage output) P0156: Heated oxygen sensor (bank 2) impedance (Low) P0157: Heated oxygen sensor (bank 2) output voltage (Low voltage) P0157: Heated oxygen sensor (bank 2) impedance (High) P0158: Heated oxygen sensor (bank 2) output voltage (High voltage) P0158: Heated oxygen sensor (bank 2) output voltage (Extremely high)
Required Sensors/Components (Main)	Heated oxygen sensor
Required Sensors/Components (Related)	Crankshaft position sensor, engine coolant temperature sensor, mass air flow meter and throttle position sensor
Frequency of Operation	Once per driving cycle: Active air-fuel ratio control detection Continuous: Other
Duration	20 seconds: Active air-fuel ratio control detection 90 seconds: Heated oxygen sensor impedance (High) 30 seconds: Heated oxygen sensor impedance (Low) 10 seconds: Output voltage (Stuck high)
MIL Operation	2 driving cycles

Sequence of Operation	None

TYPICAL ENABLING CONDITIONS

All:

Monitor runs whenever following DTCs not present	P0031, P0032, P0051, P0052 (A/F Sensor heater - Sensor 1) P0037, P0038, P0057, P0058 (O2 Sensor heater - Sensor 2) P0100 - P0103 (MAF meter) P0110 - P0113 (IAT sensor) P0115 - P0118 (ECT sensor) P0120 - P0223, P2135 (TP sensor) P0125 (Insufficient ECT for Closed Loop) P0171, P0172 (Fuel system) P0300 - P0304 (Misfire) P0335 (CKP sensor) P0340 (CMP sensor) P0455, P0456 (EVAP system) P0500 (VSS) P2196, P2198 (A/F Sensor - rationality) P2A00, P2A03 (A/F Sensor - slow response)

ES

Heated Oxygen Sensor Output Voltage (Abnormal Voltage Output, High Voltage and Low Voltage):

Active air-fuel ratio control	Executing
Active air-fuel ratio control begins when all of following conditions met:	-
Battery voltage	11 V or more
Engine coolant temperature	75°C (167°F) or more
Idling	OFF
Engine RPM	Less than 3,200 rpm
A/F sensor status	Activated
Fuel system status	Closed loop
Fuel cut	OFF
Engine load	10 to 70%
Shift position	4th

Heated Oxygen Sensor Impedance (Low):

Battery voltage	11 V or more
Estimated rear HO2 sensor temperature	Less than 700°C (1,292°F)
ECM monitor	Completed
DTC P0606	Not set

Heated Oxygen Sensor Impedance (High):

Battery voltage	11 V or more
Estimated rear HO2 sensor temperature	450°C (842°F) or more
ECM monitor	Completed
DTC P0606	Not set

Heated Oxygen Sensor Output Voltage (Extremely High):

Battery voltage	11 V or more
Time after engine start	2 seconds or more

TYPICAL MALFUNCTION THRESHOLDS

Heated Oxygen Sensor Output Voltage (Abnormal Voltage Output):

Either of following conditions met:	1 or 2
1. All of following conditions (a), (b) and (c) met	-
(a) Commanded air-fuel ratio	14.3 or less
(b) Rear HO2 sensor voltage	0.21 to 0.59 V

(c) OSC (Oxygen Storage Capacity of Catalyst)	2 g or more
2. All of following conditions (d), (e) and (f) met	-
(d) Commanded air-fuel ratio	14.9 or more
(e) Rear HO2 sensor voltage	0.21 to 0.59 V
(f) OSC	2 g or more

Heated Oxygen Sensor Output Voltage (Low):

All of following conditions (a), (b) and (c) met	-
(a) Commanded air-fuel ratio	14.3 or less
(b) Rear HO2 sensor voltage	Less than 0.21 V
(c) OSC	2 g or more

Heated Oxygen Sensor Output Voltage (High):

All of following conditions (a), (b) and (c) met	-
(a) Commanded air-fuel ratio	14.9 or more
(b) Rear HO2 sensor voltage	More than 0.59 V
(c) OSC	2 g or more

Heated Oxygen Sensor Impedance (Low):

Duration of following condition met	30 seconds or more
Heated oxygen sensor impedance	Less than 5 Ω

Heated Oxygen Sensor Impedance (High):

Duration of following condition met	90 seconds or more
Heated oxygen sensor impedance	15 kΩ or more

Heated Oxygen Sensor Output Voltage (Extremely High):

Duration of following condition met	10 seconds or more
Heated oxygen sensor voltage	1.2 V or more

COMPONENT OPERATING RANGE

Duration of following condition met	30 seconds or more
Heated oxygen sensor voltage	Varies between 0.1 and 0.9 V

MONITOR RESULT

Refer to CHECKING MONITOR STATUS (see page ES-19).

WIRING DIAGRAM

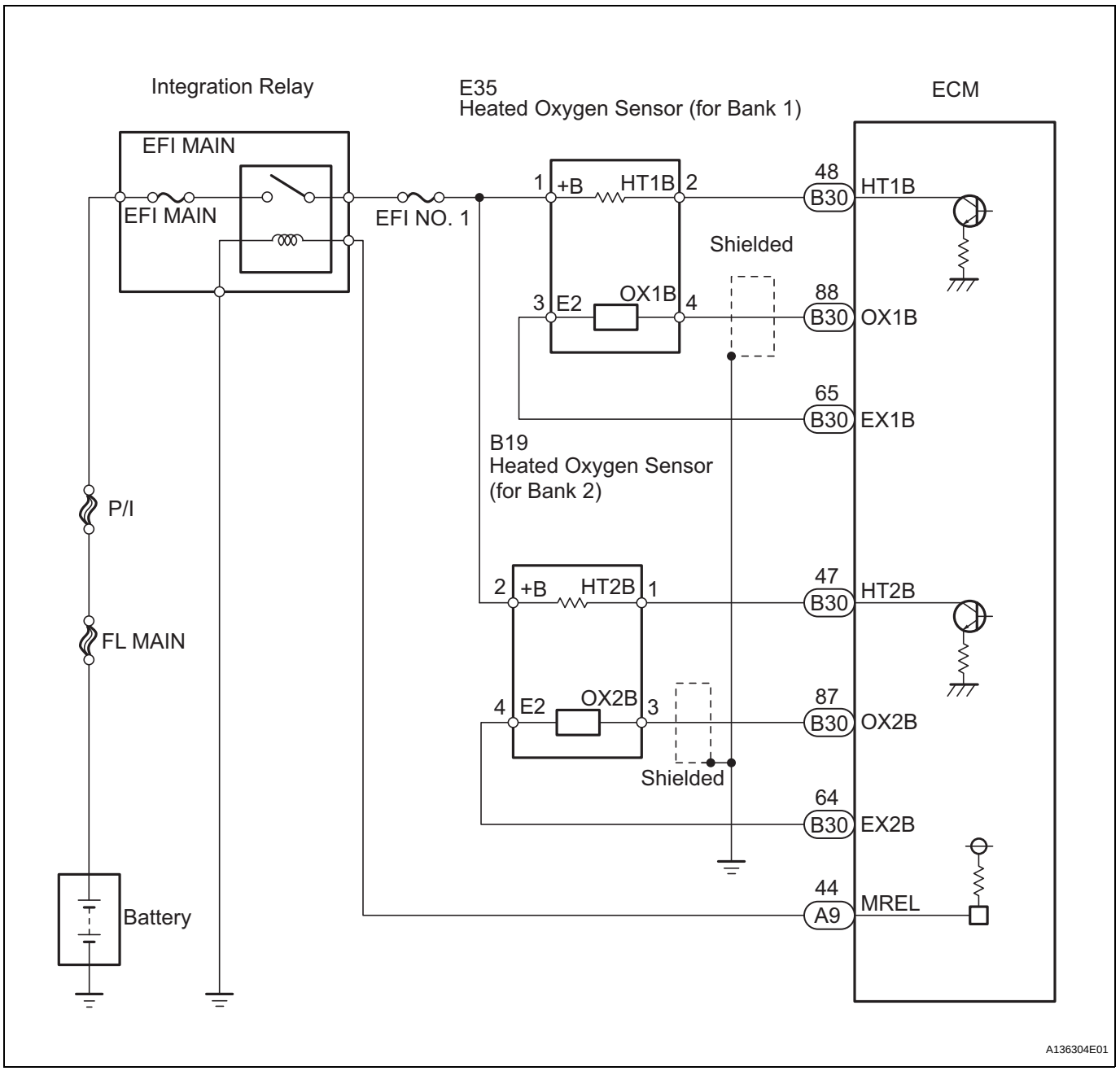

CONFIRMATION DRIVING PATTERN

HINT:

- This confirmation driving pattern is used in the "PERFORM CONFIRMATION DRIVING PATTERN" procedure of the following diagnostic troubleshooting procedure.
- Performing this confirmation pattern will activate the Heated Oxygen (HO2) sensor monitor. (The catalyst monitor is performed simultaneously.) This is very useful for verifying the completion of a repair.

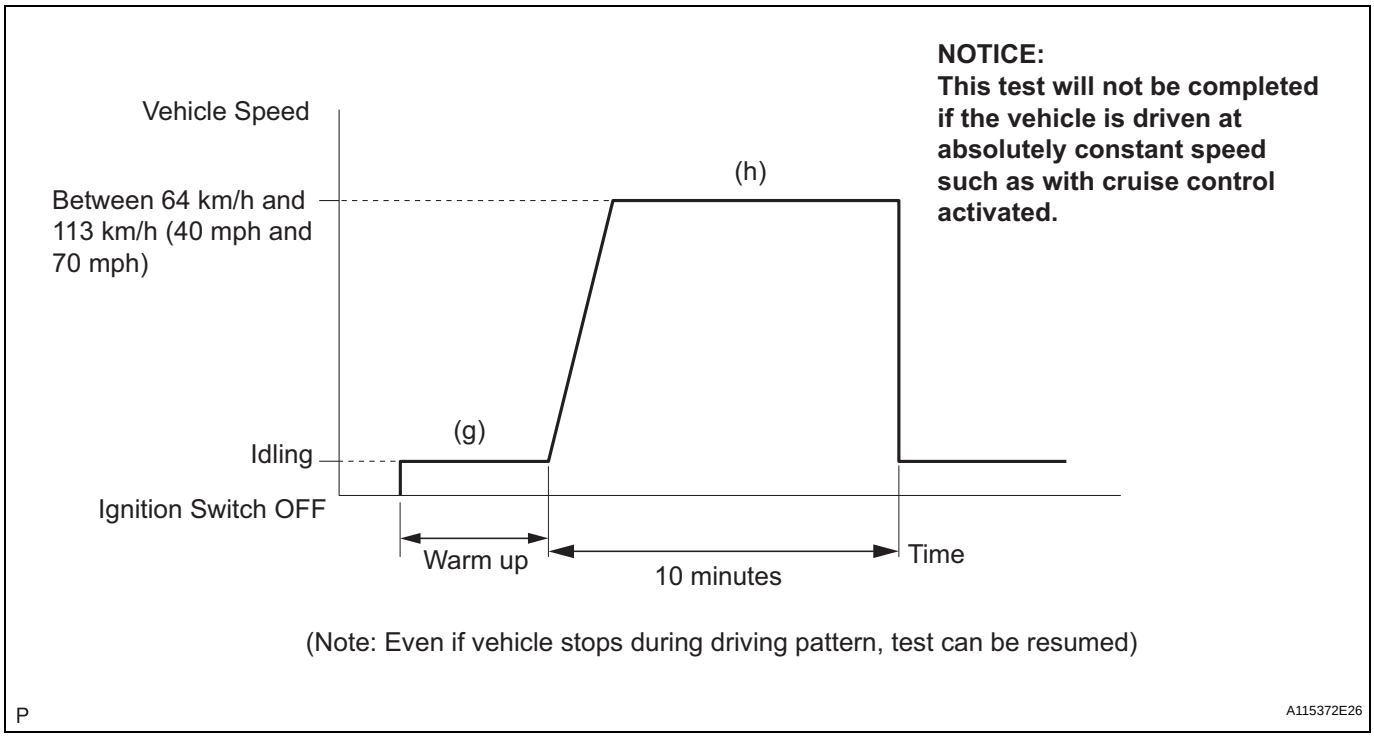

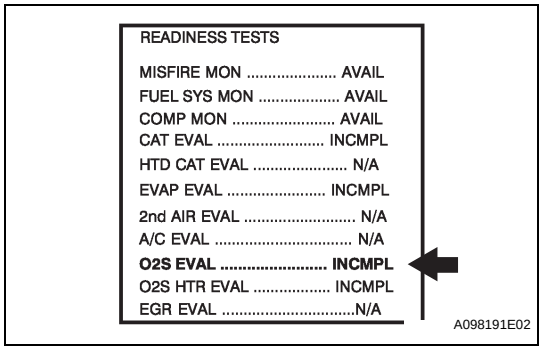

(a) Connect the intelligent tester to the DLC3.
(b) Turn the ignition switch ON.
(c) Turn the tester ON.
(d) Clear DTCs (if set) (see page ES-39).
(e) Select the following menu items: DIAGNOSIS / CARB OBD II / READINESS TESTS.
(f) Check that O2S EVAL is INCMPL (incomplete).
(g) Start the engine and warm it up.
(h) Drive the vehicle at between 64 km/h and 113 km/h (40 mph and 70 mph) for at least 10 minutes.
(i) Note the state of the Readiness Tests items. Those items will change to COMPL (complete) as the O2S EVAL monitor operates.
(j) On the tester, select the following menu items: DIAGNOSIS / ENHANCED OBD II / DTC INFO / PENDING CODES. Then check if any DTCs (any pending DTCs) are set.
HINT:
If O2S EVAL does not change to COMPL, and any pending DTCs fail to set, extend the driving time.

INSPECTION PROCEDURE

HINT:
Sensor 2 refers to the sensor mounted behind the Three-Way Catalytic Converter (TWC) and located far from the engine assembly.
HINT:
Intelligent tester only:

Malfunctioning areas can be identified by performing the A/F CONTROL function provided in the ACTIVE TEST. The A/F CONTROL function can help to determine whether the Air-Fuel Ratio (A/F) sensor, Heated Oxygen (HO2) sensor and other potential trouble areas are malfunctioning.
The following instructions describe how to conduct the A/F CONTROL operation using the intelligent tester.

(a) Connect the intelligent tester to the DLC3.
(b) Start the engine and turn the tester ON.
(c) Warm up the engine at an engine speed of 2,500 rpm for approximately 90 seconds.
(d) On the tester, select the following menu items: DIAGNOSIS / ENHANCED OBD II / ACTIVE TEST / A/F CONTROL.
(e) Perform the A/F CONTROL operation with the engine idling (press the RIGHT or LEFT button to change the fuel injection volume).
(f) Monitor the voltage outputs of the A/F and HO2 sensors (AFS B1 S1 and O2S B1 S2 or AFS B2 S1 and O2S B2 S2) displayed on the tester.

ES

HINT:

- The A/F CONTROL operation lowers the fuel injection volume by 12.5% or increases the injection volume by 25%.
- The sensors react in accordance with increases and decreases in the fuel injection volume.

Standard

Tester Display (Sensor)	Injection Volume	Status	Voltage
AFS B1 S1 (A/F)	+25%	Rich	Less than 3.0
	-12.5%	Lean	More than 3.35
AFS B2 S1 (A/F)	+25%	Rich	Less than 3.0
	-12.5%	Lean	More than 3.35
O2S B1 S2 (HO2)	+25%	Rich	More than 0.55
	-12.5%	Lean	Less than 0.4
O2S B2 S2 (HO2)	+25%	Rich	More than 0.55
	-12.5%	Lean	Less than 0.4

NOTICE:
The A/F sensor has an output delay of a few seconds and the HO2 sensor has a maximum output delay of approximately 20 seconds.

Case	A/F Sensor (Sensor 1) Output Voltage		HO2 Sensor (Sensor 2) Output Voltage		Main Suspected Trouble Area
1	Injection Volume +25% -12.5%		Injection Volume +25% -12.5%		-
	Output Voltage More than 3.35 V Less than 3.0 V		Output Voltage More than 0.5 V Less than 0.4 V		
2	Injection Volume +25% -12.5%		Injection Volume +25% -12.5%		• A/F sensor • A/F sensor heater • A/F sensor circuit
	Output Voltage Almost no reaction	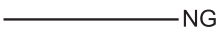	Output Voltage More than 0.5 V Less than 0.4 V		

Case	A/F Sensor (Sensor 1) Output Voltage		HO2 Sensor (Sensor 2) Output Voltage		Main Suspected Trouble Area
3	Injection Volume +25% -12.5%		Injection Volume +25% -12.5%		• HO2 sensor • HO2 sensor heater • HO2 sensor circuit
	Output Voltage More than 3.35 V Less than 3.0 V		Output Voltage Almost no reaction		
4	Injection volume +25% -12.5%		Injection Volume +25% -12.5%		• Injector • Fuel pressure • Gas leakage from exhaust system (Air-fuel ratio extremely lean or rich)
	Output Voltage Almost no reaction		Output Voltage Almost no reaction		

ES

Following the A/F CONTROL procedure enables technicians to check and graph the voltage outputs of both the A/F and HO2 sensors.
To display the graph, select the following menu items on the tester: DIAGNOSIS / ENHANCED OBD II / ACTIVE TEST / A/F CONTROL / USER DATA / AFS B1 S1 and O2S B1 S2 or AFS B2 S1 and O2S B2 S2; then press the YES button and then the ENTER button followed by the F4 button.
HINT:

- Read freeze frame data using the intelligent tester. Freeze frame data records the engine condition when malfunctions are detected. When troubleshooting, freeze frame data can help determine if the vehicle was moving or stationary, if the engine was warmed up or not, if the air-fuel ratio was lean or rich, and other data from the time the malfunction occurred.
- If the OX1B wire from the ECM connector is short-circuited to the +B wire, DTC P0138 will be set.
- If the OX2B wire from the ECM connector is short-circuited to the +B wire, DTC P0158 will be set.

1	READ OUTPUT DTC

(a) Connect the intelligent tester to the DLC3.
(b) Turn the ignition switch ON and turn the tester ON.
(c) Select the following menu items: DIAGNOSIS / ENHANCED OBD II / DTC INFO / CURRENT CODES.
(d) Read DTCs.

Result

Display (DTC output)	Proceed to
P0138 or P0158	A
P0137 or P0157	B
P0136 or P0156	C

B → Go to step 14

C → Go to step 7

A

2	READ VALUE USING INTELLIGENT TESTER (OUTPUT VOLTAGE OF HEATED OXYGEN SENSOR)

(a) Connect the intelligent tester to the DLC3.
(b) Turn the ignition switch ON and turn the tester ON.

(c) Select the following menu items: DIAGNOSIS / ENHANCED OBD II / DATA LIST / PRIMARY / O2S B1 S2 or O2S B2 S2.
(d) Allow the engine to idle.
(e) Read the Heated Oxygen (HO2) sensor output voltage while idling.

Result

HO2 Sensor Output Voltage	Proceed to
More than 1.2 V	A
Less than 1.0 V	B

B → **Go to step 5**

A

ES

3 CHECK WIRE HARNESS (CHECK FOR SHORT)

Wire Harness Side:

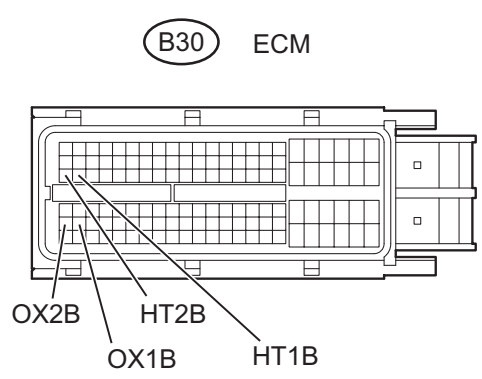

(a) Turn the ignition switch OFF and wait for 5 minutes.
(b) Disconnect the B30 ECM connector.
(c) Measure the resistance.
Standard resistance

Tester Connection	Specified Condition
B30-48 (HT1B) - B30-88 (OX1B)	10 kΩ or higher
B30-47 (HT2B) - B30-87 (OX2B)	10 kΩ or higher

(d) Reconnect the ECM connector.

OK → **REPLACE ECM**

NG

4	INSPECT HEATED OXYGEN SENSOR (CHECK FOR SHORT)

Component Side:

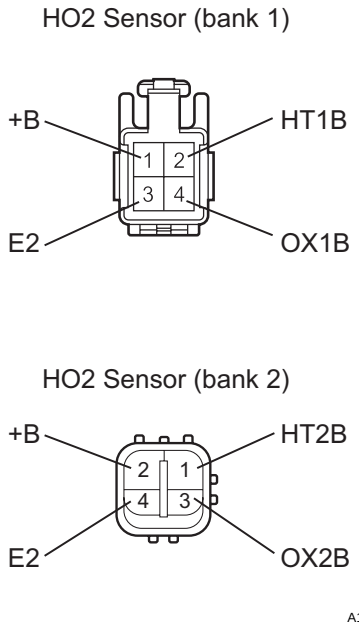

(a) Disconnect the B19 or E35 HO2 sensor connector.
(b) Measure the resistance.

Standard resistance (bank 1)

Tester Connection	Specified Condition
1 (+B) - 3 (E2)	10 kΩ or higher
1 (+B) - 4 (OX1B)	10 kΩ or higher

Standard resistance (bank 2)

Tester Connection	Specified Condition
2 (+B) - 4 (E2)	10 kΩ or higher
2 (+B) - 3 (OX2B)	10 kΩ or higher

(c) Reconnect the HO2 sensor connector.

NG → REPLACE HEATED OXYGEN SENSOR

OK

REPAIR OR REPLACE HARNESS AND CONNECTOR

5	PERFORM CONFIRMATION DRIVING PATTERN

NEXT

6	CHECK WHETHER DTC OUTPUT RECURS (DTC P0138 OR P0158)

(a) On the intelligent tester, select the following menu items: DIAGNOSIS / ENHANCED OBD II / DTC INFO / CURRENT CODES.
(b) Read DTCs.

Result

Display (DTC Output)	Proceed to
P0138 or P0158	A
No output	B

B → CHECK FOR INTERMITTENT PROBLEMS

A

REPLACE HEATED OXYGEN SENSOR

7	READ VALUE USING INTELLIGENT TESTER (OUTPUT VOLTAGE OF HEATED OXYGEN SENSOR)

(a) Connect the intelligent tester to the DLC3.
(b) Turn the ignition switch ON and turn the tester ON.
(c) Start the engine.
(d) Select the following menu items: DIAGNOSIS / ENHANCED OBD II / DATA LIST / PRIMARY / O2S B1 S2 or O2S B2 S2.
(e) After warming up the engine, run the engine at an engine speed of 2,500 rpm for 3 minutes.
(f) Read the output voltage of the HO2 sensor when the engine rpm is suddenly increased.
HINT:
Quickly accelerate the engine to 4,000 rpm 3 times using the accelerator pedal.
Standard voltage:
Fluctuates between 0.4 V or less and 0.5 V or more.

NG → **Go to step 14**

OK

8	PERFORM CONFIRMATION DRIVING PATTERN

NEXT

9	CHECK WHETHER DTC OUTPUT RECURS (DTC P0136 OR P0156)

(a) On the intelligent tester, select the following menu items: DIAGNOSIS / ENHANCED OBD II / DTC INFO / CURRENT CODES.
(b) Read DTCs.

Result

Display (DTC Output)	Proceed to
P0136 or P0156	A
No output	B

B → **CHECK FOR INTERMITTENT PROBLEMS**

A

10	REPLACE HEATED OXYGEN SENSOR

NEXT

11	PERFORM CONFIRMATION DRIVING PATTERN

NEXT

12	CHECK WHETHER DTC OUTPUT RECURS (DTC P0136 OR P0156)

(a) On the intelligent tester, select the following menu items: DIAGNOSIS / ENHANCED OBD II / DTC INFO / CURRENT CODES.
(b) Read DTCs.

Result

Display (DTC Output)	Proceed to
P0136 or P0156	A
No output	B

ES

B → REPAIR COMPLETE

A

13	PERFORM ACTIVE TEST USING INTELLIGENT TESTER (INJECTION VOLUME)

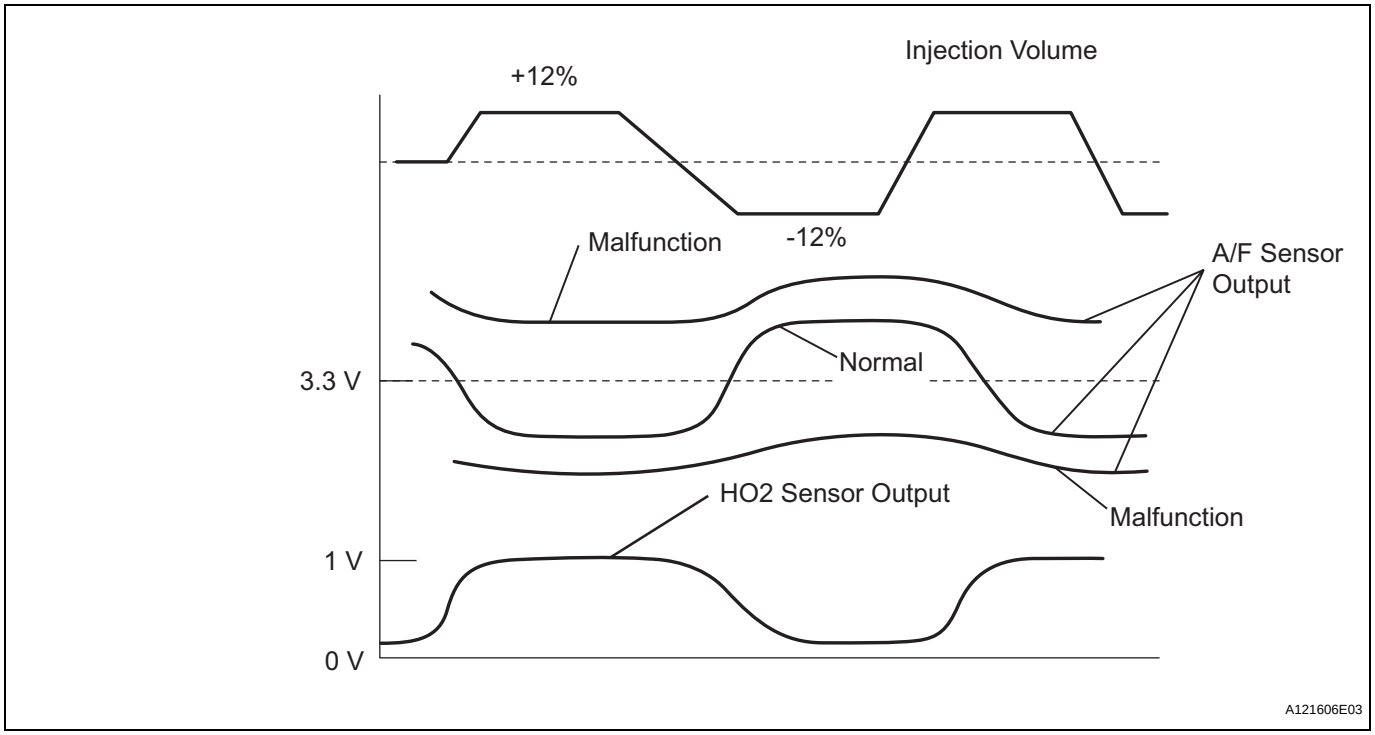

(a) Connect the intelligent tester to the DLC3.
(b) Start the engine and turn the tester ON.
(c) Warm up the engine.
(d) Select the following menu items: DIAGNOSIS / ENHANCED OBD II / ACTIVE TEST / INJ VOL.

(e) Change the fuel injection volume using the tester, and monitor the voltage output of Air-Fuel Ratio (A/F) and HO2 sensors displayed on the tester.

HINT:

- Change the fuel injection volume within the range of -12% and +12%. The injection volume can be changed in 1% graduations within the range.
- The A/F sensor is displayed as AFS B1 S1 or AFS B2 S1, and the HO2 sensor is displayed as O2S B1 S2 or O2S B2 S2, on the intelligent tester.

Result

Tester Display (Sensor)	Voltage Variation	Proceed to
AFS B1 S1 (A/F) AFS B2 S1 (A/F)	Alternates between more and less than 3.3 V	OK
	Remains at more than 3.3 V	NG
	Remains at less than 3.3 V	NG

HINT:

A normal HO2 sensor voltage (O2S B1 S2 or O2S B2 S2) reacts in accordance with increases and decreases in fuel injection volumes. When the A/F sensor voltage remains at either less or more than 3.3 V despite the HO2 sensor indicating a normal reaction, the A/F sensor is malfunctioning.

NG → **REPLACE AIR-FUEL RATIO SENSOR**

OK ↓

CHECK AND REPAIR EXTREMELY RICH OR LEAN ACTUAL AIR-FUEL RATIO (INJECTOR, FUEL PRESSURE, GAS LEAKAGE FROM EXHAUST SYSTEM, ETC.)

14 **CHECK FOR EXHAUST GAS LEAK**

OK:

No gas leakage.

NG → **REPAIR OR REPLACE EXHAUST GAS LEAKAGE POINT**

OK ↓

15 **INSPECT HEATED OXYGEN SENSOR (HEATER RESISTANCE) (See page ES-117)**

NG → **REPLACE HEATED OXYGEN SENSOR**

OK ↓

16 **INSPECT INTEGRATION RELAY (EFI MAIN RELAY) (See page ES-118)**

NG → **REPLACE INTEGRATION RELAY**

OK

17	CHECK WIRE HARNESS (HEATED OXYGEN SENSOR - ECM)

Wire Harness Side:

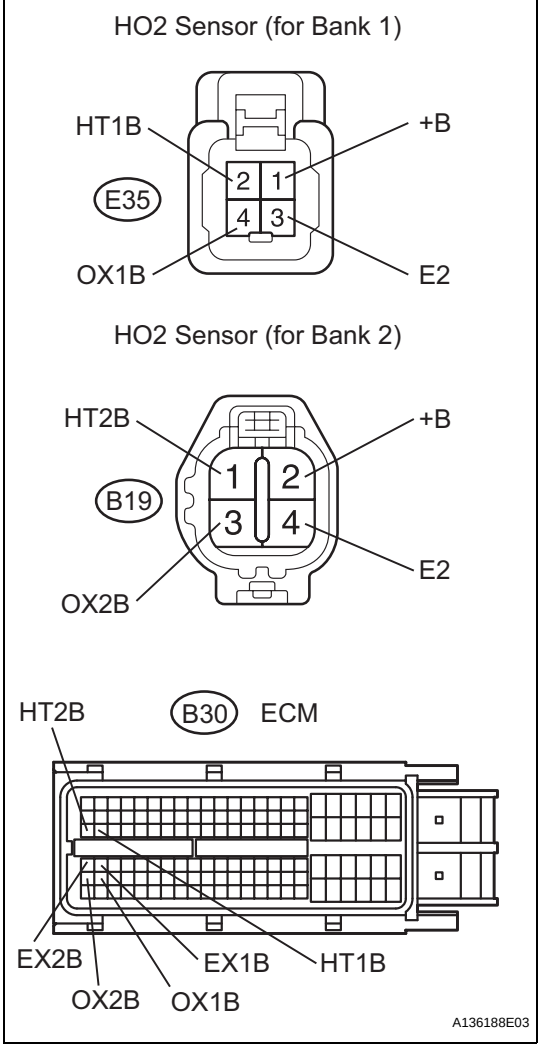

(a) Disconnect the B19 or E35 HO2 sensor connector.
(b) Turn the ignition switch ON.
(c) Measure the voltage between the +B terminal of the HO2 sensor connector and body ground.

Standard voltage

Tester Connection	Specified Condition
E35-1 (+B) - Body ground	9 to 14 V
B19-2 (+B) - Body ground	9 to 14 V

(d) Turn the ignition switch OFF.
(e) Disconnect the B30 ECM connector.
(f) Measure the resistance.

Standard resistance

Tester Connection	Specified Condition
E35-2 (HT1B) - B30-48 (HT1B)	Below 1 Ω
E35-4 (OX1B) - B30-88 (OX1B)	Below 1 Ω
E35-3 (E2) - B30-65 (EX1B)	Below 1 Ω
B19-1 (HT2B) - B30-47 (HT2B)	Below 1 Ω
B19-3 (OX2B) - B30-87 (OX2B)	Below 1 Ω
B19-4 (E2) - B30-64 (EX2B)	Below 1 Ω
E35-2 (HT1B) or B30-48 (HT1B) - Body ground	10 kΩ or higher
E35-4 (OX1B) or B30-88 (OX1B) - Body ground	10 kΩ or higher
E35-3 (E2) or B30-65 (EX1B) - Body ground	10 kΩ or higher
B19-1 (HT2B) or B30-47 (HT2B) - Body ground	10 kΩ or higher
B19-3 (OX2B) or B30-87 (OX2B) - Body ground	10 kΩ or higher
B19-4 (E2) or B30-64 (EX2B) - Body ground	10 kΩ or higher

(g) Reconnect the HO2 sensor connector.
(h) Reconnect the ECM connector.

ES

Reference (System Diagram of Bank 1 Sensor 2):

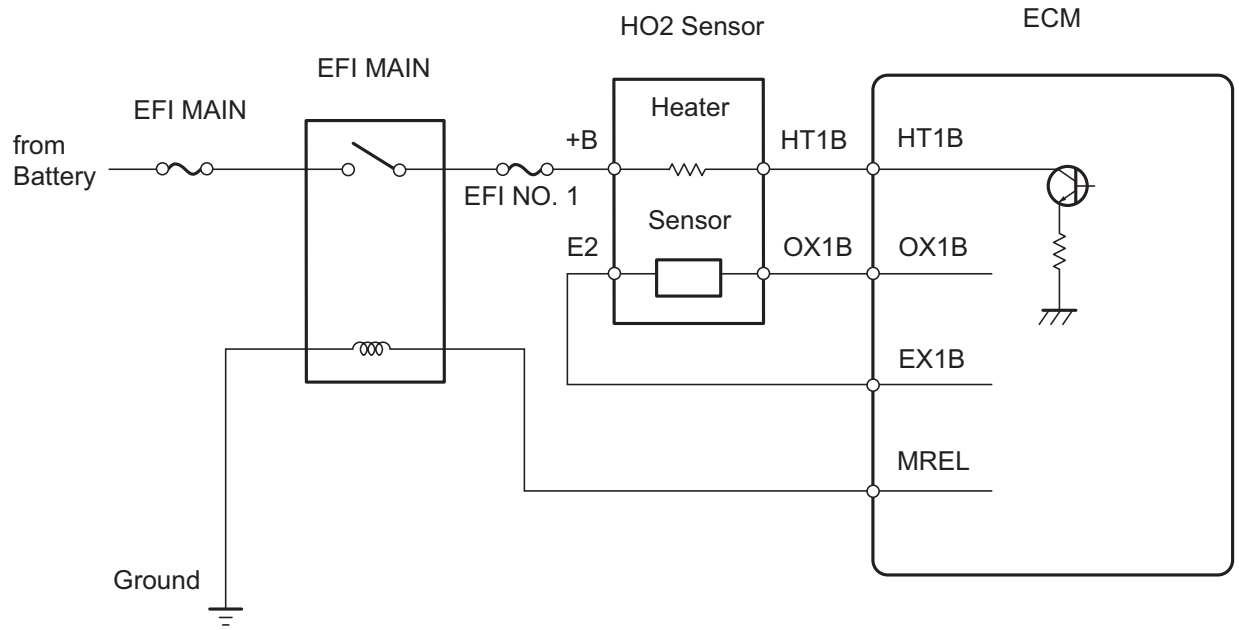

ES

NG → **REPAIR OR REPLACE HARNESS AND CONNECTOR**

OK

REPLACE HEATED OXYGEN SENSOR

DTC	P0171	System Too Lean (Bank 1)

DTC	P0172	System Too Rich (Bank 1)

DTC	P0174	System Too Lean (Bank 2)

DTC	P0175	System Too Rich (Bank 2)

DESCRIPTION

The fuel trim is related to the feedback compensation value, not to the basic injection time. The fuel trim consists of both the short-term and the long-term fuel trims.

The short-term fuel trim is fuel compensation that is used to constantly maintain the air-fuel ratio at stoichiometric levels. The signal from the Air-Fuel Ratio (A/F) sensor indicates whether the air-fuel ratio is rich or lean compared to the stoichiometric ratio. This triggers a reduction in the fuel injection volume if the air-fuel ratio is rich and an increase in the fuel injection volume if it is lean.

Factors such as individual engine differences, wear over time and changes in operating environment cause short-term fuel term to vary from the central value. The long-term fuel trim, which controls overall fuel compensation, compensates for long-term deviations in the fuel trim from the central value caused by the short-term fuel trim compensation.

ES

DTC No.	DTC Detection Condition	Trouble Area
P0171 P0174	With warm engine and stable air-fuel ratio feedback, fuel trim considerably in error to lean side (2 trip detection logic)	• Air induction system • Injector blockage • Mass Air Flow (MAF) meter • Engine Coolant Temperature (ECT) sensor • Fuel pressure • Gas leakage from exhaust system • Open or short in A/F sensor (sensor 1) circuit • A/F sensor (sensor 1) • A/F sensor heater (sensor 1) • Integration relay • A/F sensor heater and integration relay circuits • PCV valve and hose • PCV hose connections • ECM
P0172 P0175	With warm engine and stable air-fuel ratio feedback, fuel trim considerably in error to rich side (2 trip detection logic)	• Injector leakage or blockage • MAF meter • ECT sensor • Ignition system • Fuel pressure • Gas leakage from exhaust system • Open or short in A/F sensor (sensor 1) circuit • A/F sensor (sensor 1) • A/F sensor heater (sensor 1) • Integration relay • A/F sensor heater and integration relay circuits • ECM

HINT:

- When DTC P0171 or P0174 is set, the actual air-fuel ratio is on the lean side. When DTC P0172 or P0175 is set, the actual air-fuel ratio is on the rich side.
- If the vehicle runs out of fuel, the air-fuel ratio is lean and DTC P0171 or P0174 may be set. The MIL is then illuminated.
- When the total of the short-term and long-term fuel trim values is within the malfunction threshold (and the engine coolant temperature is more than 75°C [167°F]), the system is functioning normally.

MONITOR DESCRIPTION

Under closed-loop fuel control, fuel injection volumes that deviate from those estimated by the ECM cause changes in the long-term fuel trim compensation value. The long-term fuel trim is adjusted when there are persistent deviations in the short-term fuel trim values. Deviations from the ECM's estimated fuel injection volumes also affect the average fuel trim learning value, which is a combination of the average short-term fuel trim (fuel feedback compensation value) and the average long-term fuel trim (learning value of the air-fuel ratio). If the average fuel trim learning value exceeds the malfunction threshold, the ECM interprets this as a fault in the fuel system and sets a DTC.
Example:
The average fuel trim learning value is +35% or more or -35% or less, the ECM interprets this as a fuel system malfunction.

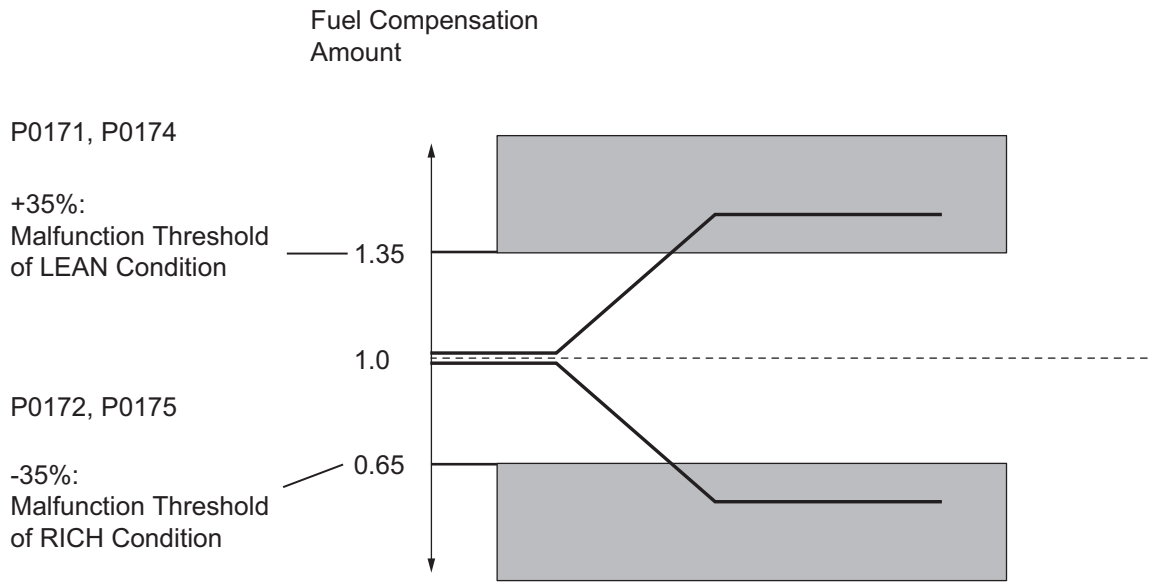

MONITOR STRATEGY

Related DTCs	P0171: Fuel trim lean (bank 1) P0172: Fuel trim rich (bank 1) P0174: Fuel trim lean (bank 2) P0175: Fuel trim rich (bank 2)
Required Sensors/Components (Main)	Fuel system
Required Sensors/Components (Related)	A/F sensor, Mass air flow meter, Crankshaft position sensor
Frequency of Operation	Continuous
Duration	Within 10 seconds
MIL Operation	2 driving cycles
Sequence of Operation	None

TYPICAL ENABLING CONDITIONS

Monitor runs whenever following DTCs not present	P0010, P0020 (VVT OCV) P0011 (VVT System 1 - Advance) P0012 (VVT System 1 - Retard) P0021 (VVT System 2 - Advance) P0022 (VVT System 2 - Retard) P0031, P0032, P0051, P0052 (A/F sensor heater - Sensor 1) P0100 - P0103 (MAF meter) P0115 - P0118 (ECT sensor) P0120 - P0223, P2135 (TP sensor) P0125 (Insufficient ECT for Closed Loop) P0335 (CKP sensor) P0340 (CMP sensor) P0351 - P0354 (Igniter) P0500 (VSS)
Fuel system status	Closed loop
Battery voltage	11 V or more
Either of following conditions 1 or 2 set	-
1. Engine RPM	Below 1,100 rpm
2. Intake air amount per revolution	0.22 g/rev or more
Catalyst monitor	Not executed

ES

TYPICAL MALFUNCTION THRESHOLDS

Purge-cut	Executing
Either of following conditions 1 or 2 met	-
1. Average of short-term fuel trim and long-term fuel trim	35% or more (varies with ECT)
2. Average of short-term fuel trim and long-term fuel trim	-35% or less (varies with ECT)

WIRING DIAGRAM

Refer to DTC P2195 (see page ES-339).

INSPECTION PROCEDURE

HINT:

- Read freeze frame data using the intelligent tester. Freeze frame data records the engine condition when malfunctions are detected. When troubleshooting, freeze frame data can help determine if the vehicle was moving or stationary, if the engine was warmed up or not, if the air-fuel ratio was lean or rich, and other data from the time the malfunction occurred.
- A low A/F sensor voltage could be caused by a rich air-fuel mixture. Check for conditions that would cause the engine to run rich.
- A high A/F sensor voltage could be caused by a lean air-fuel mixture. Check for conditions that would cause the engine to run lean.

1	**CHECK ANY OTHER DTCS OUTPUT (IN ADDITION TO DTC P0171, P0172, P0174 OR P0175)**

(a) Connect the intelligent tester to the DLC3.
(b) Turn the ignition switch ON and turn the tester ON.
(c) Select the following menu items: DIAGNOSIS / ENHANCED OBD II / DTC INFO / CURRENT CODES.
(d) Read DTCs.

Result

Display (DTC Output)	Proceed to
P0171, P0172, P0174 or P0175	A

Display (DTC Output)	Proceed to
P0171, P0172, P0174 or P0175 and other DTCs	B

HINT:
If any DTCs other than P0171, P0172, P0174 or P0175 are output, troubleshoot those DTCs first.

B → GO TO DTC CHART

A

2 PERFORM ACTIVE TEST USING INTELLIGENT TESTER (A/F CONTROL)

(a) Connect the intelligent tester to the DLC3.
(b) Start the engine and turn the tester ON.
(c) Warm up the engine at an engine speed of 2,500 rpm for approximately 90 seconds.
(d) On the tester, select the following menu items: DIAGNOSIS / ENHANCED OBD II / ACTIVE TEST / A/F CONTROL.
(e) Perform the A/F CONTROL operation with the engine in an idling condition (press the RIGHT or LEFT button to change the fuel injection volume).
(f) Monitor the output voltages of A/F and HO2 sensors (AFS B1S1 and O2S B1S2 or AFS B2S1 and O2S B2S2) displayed on the tester.

Result:

The A/F sensor reacts in accordance with increases and decreases in the fuel injection volume:
+25% = Rich output:
Less than 3.0 V
-12.5% = Lean output:
More than 3.35 V

NOTICE:

The A/F sensor has an output delay of a few seconds and the HO2 sensor has a maximum output delay of approximately 20 seconds.

Case	A/F Sensor (Sensor 1) Output Voltage		HO2 Sensor (Sensor 2) Output Voltage		Main Suspected Trouble Area
1	Injection Volume +25% -12.5%		Injection Volume +25% -12.5%		-
	Output Voltage More than 3.35 V Less than 3.0 V		Output Voltage More than 0.5 V Less than 0.4 V		
2	Injection Volume +25% -12.5%		Injection Volume +25% -12.5%		• A/F sensor • A/F sensor heater • A/F sensor circuit
	Output Voltage Almost no reaction	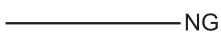	Output Voltage More than 0.5 V Less than 0.4 V		

Case	A/F Sensor (Sensor 1) Output Voltage		HO2 Sensor (Sensor 2) Output Voltage		Main Suspected Trouble Area
3	Injection volume +25% -12.5%		Injection Volume +25% -12.5%		Extremely rich or lean actual air-fuel ratio • Injector leakage or blockage • Gas leakage from exhaust system • Fuel pressure • MAF meter • ECT sensor • Air induction system • PCV hose connections
	Output Voltage Almost no reaction		Output Voltage Almost no reaction		

Following the A/F CONTROL procedure enables technicians to check and graph the voltage outputs of both the A/F and HO2 sensors.
To display the graph, select the following menu items on the tester: DIAGNOSIS / ENHANCED OBD II / ACTIVE TEST / A/F CONTROL / USER DATA / AFS B1S1 and O2S B1S2 or AFS B2S1 and O2S B2S2; then press the YES button and then the ENTER button followed by the F4 button.

ES

Result

Result	Proceed to
Case 1	C
Case 2	B
Case 3	A

B → **Go to step 11**

C → **Go to step 15**

A

3 READ VALUE USING INTELLIGENT TESTER (MAF)

(a) Connect the intelligent tester to the DLC3.
(b) Turn the ignition switch ON and turn the tester ON.
(c) Select the following menu items: DIAGNOSIS / ENHANCED OBD II / DATA LIST / PRIMARY / MAF and COOLANT TEMP.
(d) Allow the engine to idle until the COOLANT TEMP reaches 75°C (167°F) or more.
(e) Read the MAF with the engine in an idling condition and at an engine speed of 2,500 rpm.
Standard:
MAF while engine idling: Between 1 g/sec. and 3 g/sec. (shift position: N; A/C: OFF).
MAF at engine speed of 2,500 rpm: Between 2 g/sec. and 6 g/sec. (shift position: N; A/C: OFF).

NG → **REPLACE MASS AIR FLOW METER**

OK

4	READ VALUE USING INTELLIGENT TESTER (COOLANT TEMP)

(a) Connect the intelligent tester to the DLC3.
(b) Turn the ignition switch ON and turn the tester ON.
(c) Select the following menu items: DIAGNOSIS / ENHANCED OBD II / DATA LIST / PRIMARY / COOLANT TEMP.
(d) Read the COOLANT TEMP twice, when the engine is both cold and warmed up.
Standard:
With cold engine: Same as ambient air temperature.
With warm engine: Between 75°C and 100°C (167°F and 212°F).

NG → **REPLACE ENGINE COOLANT TEMPERATURE SENSOR**

OK

5	CHECK PCV HOSE CONNECTIONS

(a) Check for PCV hose connections.
OK:
PCV hose is connected correctly and is not damaged.

NG → **REPAIR OR REPLACE PCV HOSE**

OK

6	CHECK AIR INDUCTION SYSTEM

(a) Check the air induction system for vacuum leakage.
OK:
No leakage from air induction system.

NG → **REPAIR OR REPLACE AIR INDUCTION SYSTEM**

OK

7	CHECK FOR SPARKS AND IGNITION (See page ES-204)

NG → **REPAIR OR REPLACE IGNITION SYSTEM**

OK

8	CHECK FOR EXHAUST GAS LEAK

(a) Check for exhaust gas leakage.

OK:
No gas leakage.

NG → **REPAIR OR REPLACE EXHAUST SYSTEM**

OK

9	CHECK FUEL PRESSURE

(a) Check the fuel pressure (see page FU-6).
Standard pressure:
304 to 343 kPa (3.1 to 3.5 kgf/cm^2, 44.1 to 49.7 psi)

NG → **REPAIR OR REPLACE FUEL SYSTEM**

OK

ES

10	INSPECT FUEL INJECTOR (INJECTION AND VOLUME)

(a) Check the injection volume (see page FU-11).
Standard injection volume:
45 to 58 cm^3 (2.9 to 3.5 cu. in.) per 15 seconds

NG → **REPLACE FUEL INJECTOR**

OK

11	INSPECT AIR-FUEL RATIO SENSOR (HEATER RESISTANCE) (See page ES-110)

NG → **REPLACE AIR-FUEL RATIO SENSOR**

OK

12	INSPECT INTEGRATION RELAY (A/F RELAY) (See page ES-111)

NG → **REPLACE INTEGRATION RELAY**

OK

13	CHECK WIRE HARNESS (A/F SENSOR - ECM) (See page ES-354)

NG → **REPAIR OR REPLACE HARNESS AND CONNECTOR**

OK

14	REPLACE AIR-FUEL RATIO SENSOR

NEXT

15	PERFORM CONFIRMATION DRIVING PATTERN

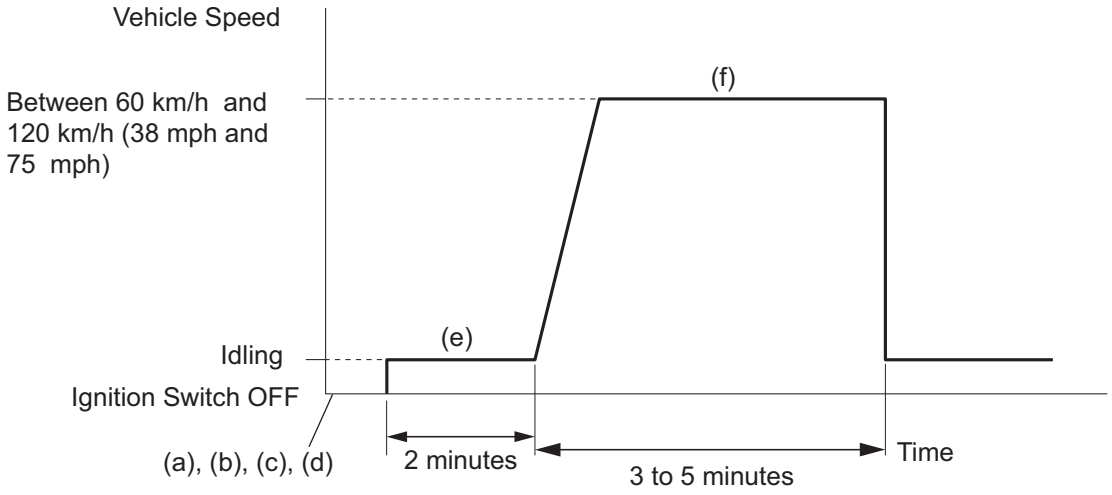

(a) Connect the intelligent tester to the DLC3.
(b) Turn the ignition switch ON and turn the tester ON.
(c) Clear DTCs (see page ES-39).
(d) Switch the ECM from normal mode to check mode using the tester (see page ES-42).
(e) Start the engine and warm it up with all the accessories switched OFF.
(f) Drive the vehicle at between 60 km/h and 120 km/h (38 mph and 75 mph) and at an engine speed of between 1,400 rpm and 3,200 rpm for 3 to 5 minutes.
HINT:
If the system is still malfunctioning, the MIL will be illuminated during step (f).
NOTICE:
If the conditions in this test are not strictly followed, no malfunction will be detected.

NEXT

16	CHECK WHETHER DTC OUTPUT RECURS (DTC P0171, P0172, P0174 OR P0175)

(a) On the intelligent tester, select the following menu items: DIAGNOSIS / ENHANCED OBD II / DTC INFO / CURRENT CODES.
(b) Read DTCs.

Result

Display (DTC Output)	Proceed to
No output	A
P0171, P0172, P0174 or P0175	B

B → Go to step 3

A → END

DTC	P0230	Fuel Pump Primary Circuit

DESCRIPTION

- This DTC is designed to detect a malfunction in the fuel pump (F/PMP) relay circuit. When the system is normal, the battery voltage is applied to FPR terminal of the ECM while the F/PMP relay is turned OFF. If the battery voltage is not applied to the FPR terminal while the F/PMP relay is OFF, the ECM interprets this as a malfunction. The ECM then illuminates the MIL and sets a DTC.
- The F/PMP relay switches the fuel pump speed according to the engine conditions. The fuel pump operates when the ECM receives the starter-operating signal (STA) and crankshaft-rotating signal (NE). The F/PMP relay is turned ON while the engine is idling or operating at low load. This causes current to flow through the fuel pump resistor to the fuel pump. The fuel pump then operates at low speed. The F/PMP relay is turned OFF while the engine is cranking or operating at high load. The fuel pump then operates at normal speed.

DTC No.	DTC Detection Condition	Trouble Area
P0230	Open or short in F/PMP relay circuit (1 trip detection logic)	• Open or short in F/PMP relay circuit • F/PMP relay • ECM

WIRING DIAGRAM

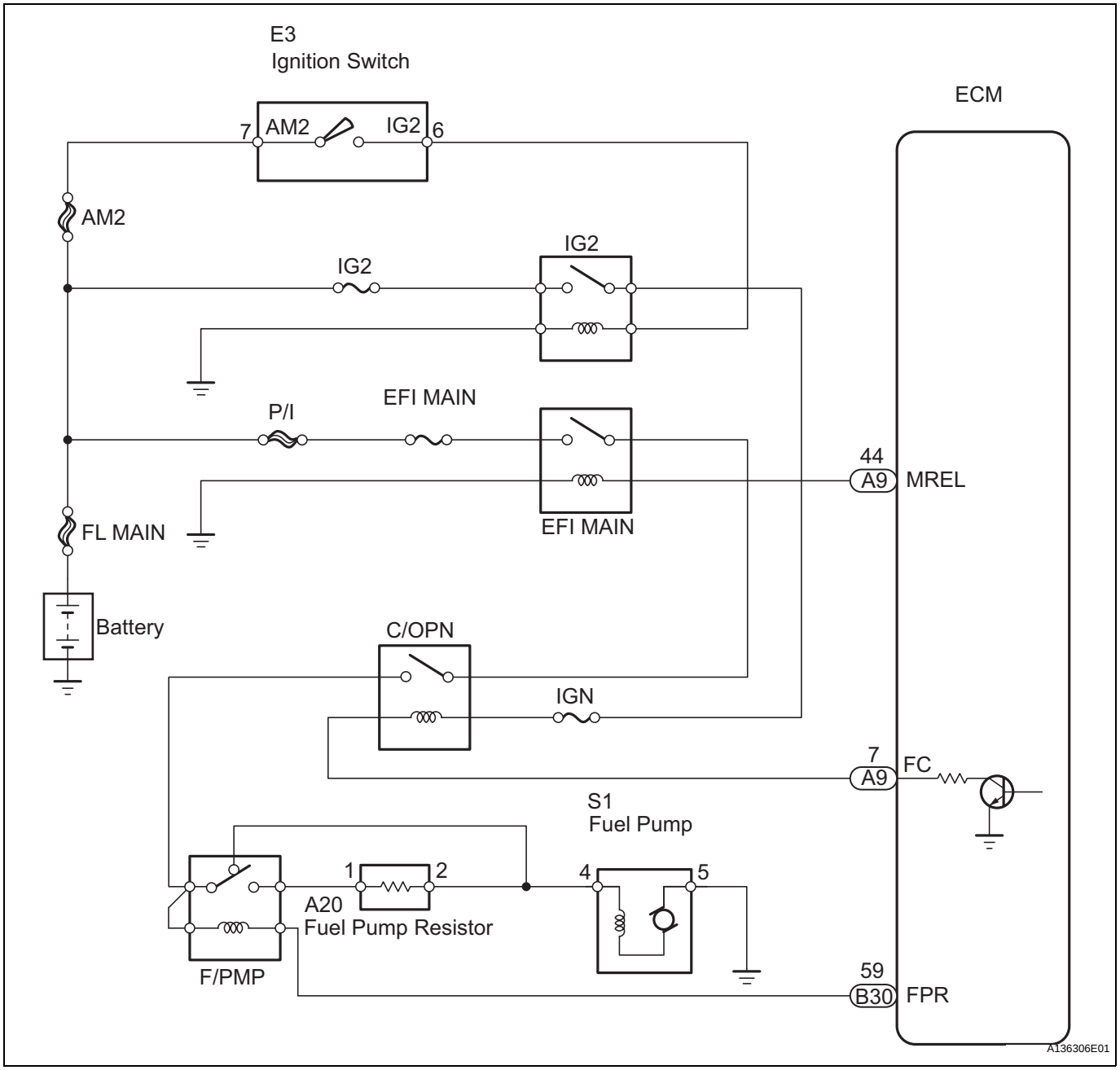

This troubleshooting procedure is based on the premise that the engine is started. If the engine is not started, proceed to the problem symptoms table (see page ES-27).

INSPECTION PROCEDURE

1	PERFORM ACTIVE TEST BY INTELLIGENT TESTER

(a) Connect the intelligent tester to the DLC3.
(b) Turn the ignition switch ON and turn the intelligent tester ON.
(c) Enter the following menus: DIAGNOSIS / ENHANCED OBD II / ACTIVE TEST / FUEL PUMP SP CTL.
(d) Check the operation of the relay while operating it using the intelligent tester.

OK:
Operating noise can be heard from the relay.

OK → **CHECK INTERMITTENT PROBLEMS**

NG

2	INSPECT FUEL PUMP RELAY (Marking: F/PMP)

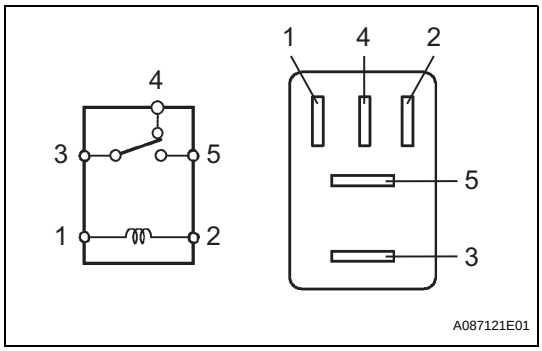

(a) Remove the F/PMP relay from the engine room No. 1 relay block.
(b) Measure the resistance according to the value(s) in the table below.

Standard resistance

Tester Connection	Specified Condition
3 - 4	Below 1 Ω
3 - 5	10 kΩ or more
3 - 4	10 kΩ or more (when battery voltage is applied to terminals 1 and 2)
3 - 5	Below 1 Ω (when battery voltage is applied to terminals 1 and 2)

NG → **REPLACE FUEL PUMP RELAY (Marking: F/PMP)**

OK

ES

3	CHECK WIRE HARNESS (F/PMP RELAY - ECM)

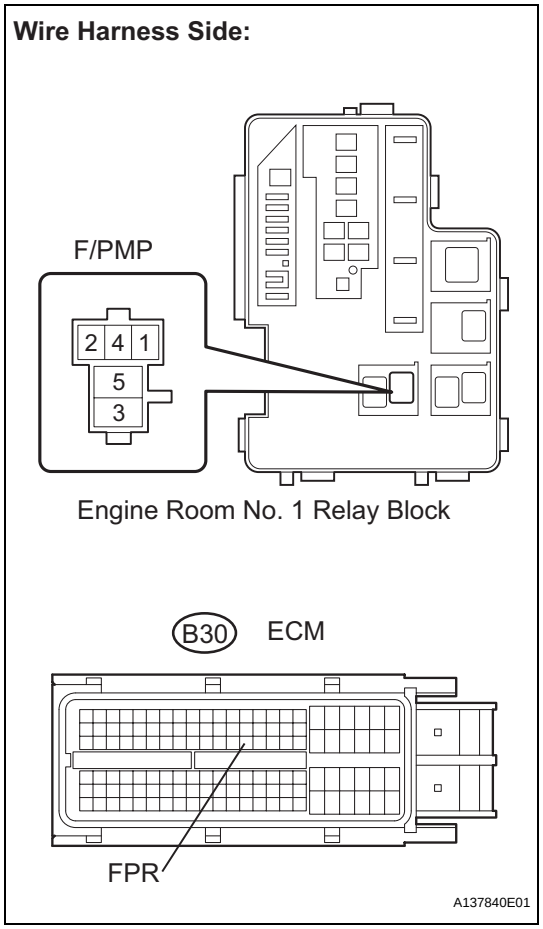

(a) Remove the F/PMP relay from the engine room No. 1 relay block.
(b) Disconnect the B30 ECM connector.
(c) Measure the resistance according to the value(s) in the table below.

Standard resistance

Tester Connection	Specified Condition
F/PMP relay terminal 1- B30-59 (FPR)	Below 1 Ω
F/PMP relay terminal 1 or B30-59 (FPR) - Body Ground	10 kΩ or higher

NG → **REPAIR OR REPLACE HARNESS AND CONNECTOR**

OK

REPLACE ECM

ES

DTC	P0300	Random / Multiple Cylinder Misfire Detected

DTC	P0301	Cylinder 1 Misfire Detected

DTC	P0302	Cylinder 2 Misfire Detected

DTC	P0303	Cylinder 3 Misfire Detected

DTC	P0304	Cylinder 4 Misfire Detected

DTC	P0305	Cylinder 5 Misfire Detected

ES

DTC	P0306	Cylinder 6 Misfire Detected

DESCRIPTION

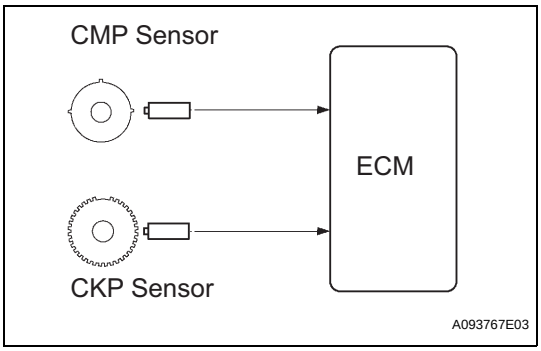

When the engine misfires, high concentrations of hydrocarbons (HC) enter the exhaust gas. Extremely high HC concentration levels can cause increases in exhaust emission levels. High concentrations of HC can also cause increases in the Three-Way Catalytic Converter (TWC) temperature, which may cause damage to the TWC. To prevent these increases in emissions and to limit the possibility of thermal damage, the ECM monitors the misfire rate. When the temperature of the TWC reaches the point of thermal degradation, the ECM blinks the MIL. To monitor misfires, the ECM uses both the Camshaft Position (CMP) sensor and the Crankshaft Position (CKP) sensor. The CMP sensor is used to identify any misfiring cylinders and the CKP sensor is used to measure variations in the crankshaft rotation speed. Misfires are counted as when the crankshaft rotation speed variations exceed predetermined thresholds. If the misfire rate exceeds the threshold level, and could cause emission deterioration, the ECM illuminates the MIL and sets a DTC.

DTC No.	DTC Detection Condition	Trouble Area
P0300	Simultaneous misfiring of several cylinders detected (2 trip detection logic)	• Open or short in engine wire harness • Connector connection • Vacuum hose connections • Ignition system • Injector • Fuel pressure • Mass Air Flow (MAF) meter • Engine Coolant Temperature (ECT) sensor • Compression pressure • Valve clearance • Valve timing • PCV valve and hose • PCV hose connections • Air induction system • ECM
P0301 P0302 P0303 P0304 P0305 P0306	Misfiring of specific cylinder detected (2 trip detection logic)	

When DTCs for misfiring cylinders are randomly set, but DTC P0300 is not set, it indicates that misfires have been detected in different cylinders at different times. DTC P0300 is only set when several misfiring cylinders are detected at the same time.

MONITOR DESCRIPTION

The ECM illuminates the MIL and sets a DTC when either of the following conditions, which could cause emission deterioration, is detected (2 trip detection logic).

- Within the first 1,000 crankshaft revolutions of the engine starting, an excessive misfiring rate (approximately 20 to 50 misfires per 1,000 crankshaft revolutions) occurs once.
- After the first 1,000 crankshaft revolutions, an excessive misfiring rate (approximately 20 to 50 misfires per 1,000 crankshaft revolutions) occurs 4 times in sequential crankshaft revolutions.

The ECM flashes the MIL and sets a DTC when either of the following conditions, which could cause Three-Way Catalytic Converter (TWC) damage, is detected (2 trip detection logic).

- In every 200 crankshaft revolutions at a high engine rpm, the threshold misfiring percentage is recorded once.
- In every 200 crankshaft revolutions at a normal engine rpm, the threshold misfiring percentage is recorded 3 times.

ES

MONITOR STRATEGY

Related DTCs	P0300: Multiple cylinder misfire P0301: Cylinder 1 misfire P0302: Cylinder 2 misfire P0303: Cylinder 3 misfire P0304: Cylinder 4 misfire P0305: Cylinder 5 misfire P0306: Cylinder 6 misfire
Required Sensors/Components (Main)	Crankshaft position sensor and Camshaft position sensor
Required Sensors/Components (Related)	Engine coolant temperature and intake air temperature sensors and Mass air flow meter
Frequency of Operation	Continuous
Duration	1,000 to 4,000 crankshaft revolutions: Emission related misfire 200 to 600 crankshaft revolutions: Catalyst damaged misfire
MIL Operation	2 driving cycles: Emission related misfire MIL flashes immediately: Catalyst damaged misfire
Sequence of Operation	None

TYPICAL ENABLING CONDITIONS

Misfire:

Monitor runs whenever following DTCs not present	P0100 - P0103 (MAF meter) P0110 - P0113 (IAT sensor) P0115 - P0118 (ECT sensor) P0120 - P0223, P2135 (TP sensor) P0125 (Insufficient ECT for Closed Loop) P0327, P0328 (Knock sensor) P0335 (CKP sensor) P0340 (CMP sensor) P0500 (VSS)
Battery voltage	8 V or more
VVT system	Not operated by scan tool
Engine RPM	450 to 6,500 rpm
Either of following conditions (a) or (b) met	-
(a) ECT at engine start	More than -7°C (19°F)
(b) ECT	More than 20°C (68°F)
Fuel cut	OFF

Monitor period of emission-related-misfire:

First 1,000 revolutions after engine start, or Check Mode	Crankshaft 1,000 revolutions
Except above	Crankshaft 1,000 revolutions x 4

Monitor period of catalyst-damaged-misfire (MIL blinks):

All of following conditions 1, 2 and 3 met	Crankshaft 200 revolutions x 3
1. Driving cycles	1st
2. Check mode	OFF
3. Engine RPM	Less than 2,600 rpm
Except above	Crankshaft 200 revolutions

TYPICAL MALFUNCTION THRESHOLDS

Monitor period of emission-related-misfire:

Misfire rate	1% or more

Monitor period of catalyst-damaged-misfire (MIL blinks):

Number of misfire per 200 revolutions	94 or more (varies with intake air amount and RPM)

MONITOR RESULT

Refer to CHECKING MONITOR STATUS (see page ES-19).

WIRING DIAGRAM

Wiring diagram of the ignition system.

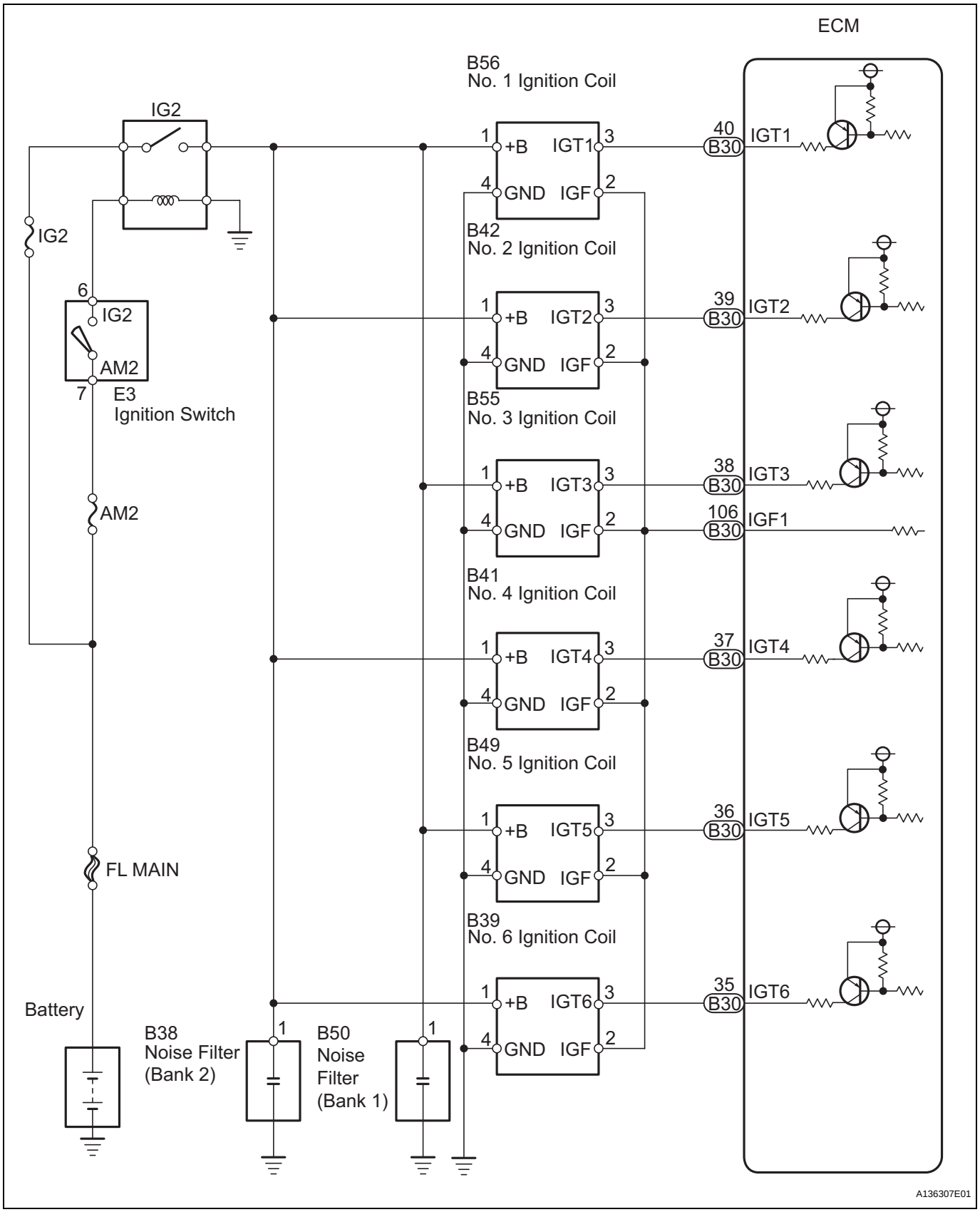

Wiring diagram of the injector circuit.

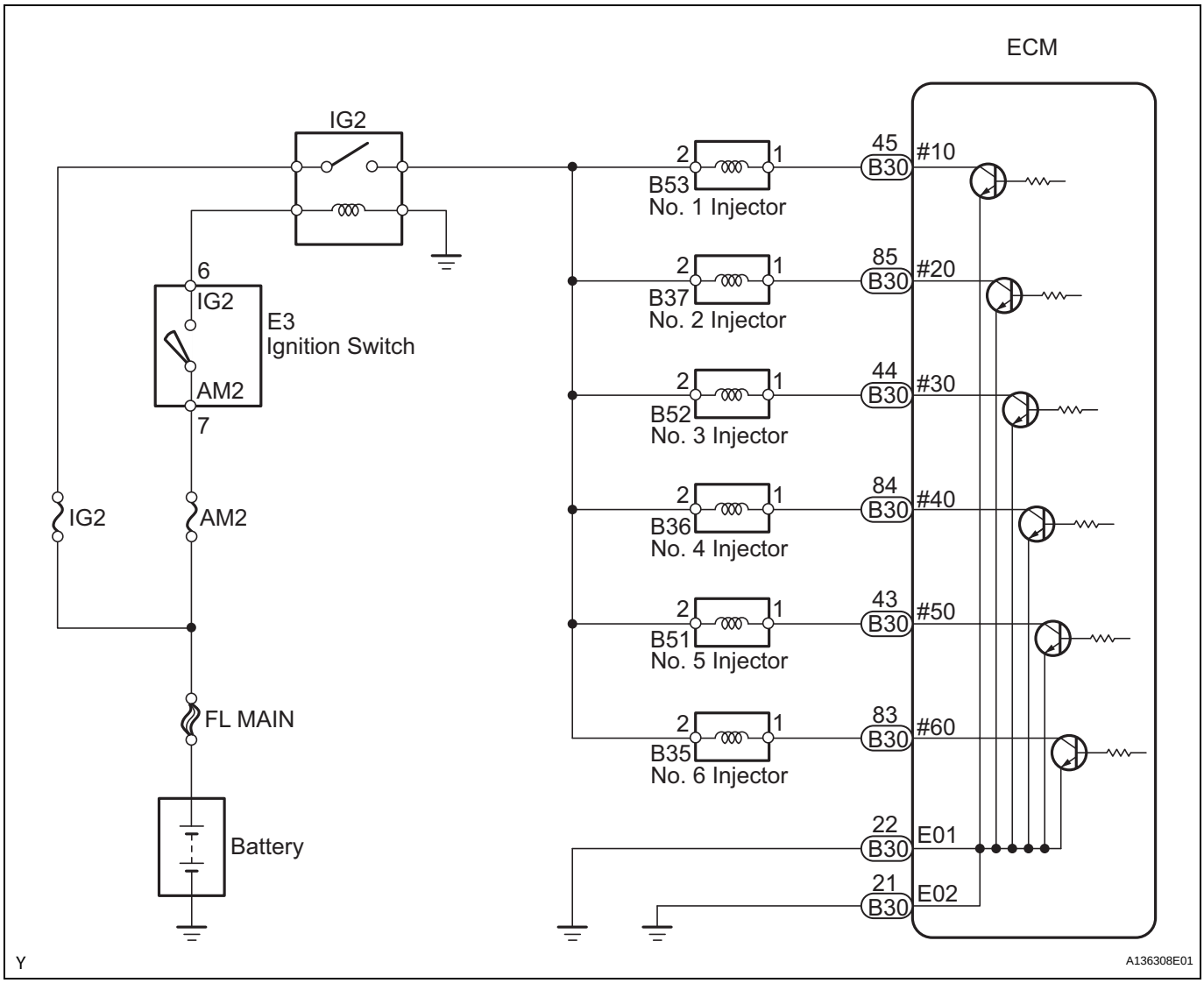

CONFIRMATION DRIVING PATTERN

1. Connect the intelligent tester to the DLC3.
2. Turn the ignition switch ON.
3. Turn the tester ON.
4. Record the DTC(s) and freeze frame data.
5. Using the tester, switch the ECM from normal mode to check mode (see page ES-42).
6. Read the misfire counts of each cylinder (CYL #1 to #6) with the engine in an idling condition. If any misfire count is displayed, skip the following confirmation driving pattern.
7. Drive the vehicle several times with the conditions, such as engine rpm and engine load, shown in MISFIRE RPM and MISFIRE LOAD in the DATA LIST.
   HINT:
   In order to store misfire DTCs, it is necessary to drive the vehicle for the period of time shown in the table below, with the MISFIRE RPM and MISFIRE LOAD in the DATA LIST.

Engine RPM	Duration
Idling	3.5 minutes or more
1,000	3 minutes or more
2,000	1.5 minutes or more
3,000	1 minute or more

8. Check whether misfires have occurred by checking DTCs and freeze frame data.
   HINT:
   Do not turn the ignition switch OFF until the stored DTC(s) and freeze frame data have been recorded. When the ECM returns to normal mode (default), the stored DTC(s), freeze frame data and other data will be erased.
9. Record the DTC(s), freeze frame data and misfire counts.
10. Turn the ignition switch OFF and wait for at least 5 seconds.

INSPECTION PROCEDURE

HINT:

- If any DTCs other than misfire DTCs are output, troubleshoot those DTCs first.
- Read freeze frame data using the intelligent tester. Freeze frame data records the engine condition when malfunctions are detected. When troubleshooting, freeze frame data can help determine if the vehicle was moving or stationary, if the engine was warmed up or not, if the air-fuel ratio was lean or rich, and other data from the time the malfunction occurred.
- If the misfire does not recur when the vehicle is brought to the workshop, reproduce the conditions stored in the freeze frame data.
- If the misfire still cannot be reproduced even though the conditions stored in the freeze frame data have been duplicated, one of the following factors is considered to be a possible cause of the problem:
  (a) The fuel level is low.
  (b) Improper fuel is used.
  (c) The spark plugs are dirty.
  (d) The problem is complex due to multiple factors.
- After finishing repairs, check that no misfires occur in each cylinder (CYL #1, #2, #3, #4, #5 and #6).
- Be sure to confirm that no misfiring cylinder DTCs are set again by conducting the confirmation driving pattern, after the repairs.
- For 6 and 8 cylinder engines, the ECM intentionally does not set the specific misfiring cylinder DTCs at high engine RPM. If misfires only occur during high engine RPM driving, only DTC P0300 is set.
  In the event of DTC P0300 being present, perform the following operations:
  (a) Clear the DTC (see page ES-39).
  (b) Start the engine and conduct the confirmation driving pattern.
  (c) Read the misfiring rates of each cylinder or DTC(s) using the tester.
  (d) Repair the cylinder(s) that has a high misfiring rate or is indicated by the DTC.
  (e) After finishing repairs, conduct the confirmation driving pattern again, in order to verify that DTC P0300 is not set.
- When either SHORT FT #1 or LONG FT #1 in the freeze frame data is outside the range of +-20%, the air-fuel ratio may be rich (-20% or less) or lean (+20% or more).
- When the COOLANT TEMP in the freeze frame data is less than 75°C (167°F), the misfires occurred only while warming up the engine.

1	CHECK ANY OTHER DTCS OUTPUT (IN ADDITION TO MISFIRE DTCS)

(a) Connect the intelligent tester to the DLC3.
(b) Turn the ignition switch ON.
(c) Turn the tester ON.
(d) Select the following menu items: DIAGNOSIS / ENHANCED OBD II / DTC INFO / CURRENT CODES.
(e) Read DTCs.

Result

Display (DTC Output)	Proceed to
P0300, P0301, P0302, P0303, P0304, P0305 and/or P0306	A
P0300, P0301, P0302, P0303, P0304, P0305 and/or P0306 and other DTCs	B

HINT:
If any DTCs other than P0300, P0301, P0302, P0303, P0304, P0305 and P0306 are output, troubleshoot those DTCs first.

B → GO TO DTC CHART

A

2 READ VALUE USING INTELLIGENT TESTER (MISFIRE RPM AND MISFIRE LOAD)

(a) Connect the intelligent tester the DLC3.
(b) Turn the ignition switch ON and turn the tester ON.
(c) Select the following menu items: DIAGNOSIS / ENHANCED OBD II / DATA LIST / MISFIRE / MISFIRE RPM and MISFIRE LOAD.
(d) Read and note the MISFIRE RPM and MISFIRE LOAD (engine load) values.
HINT:
The MISFIRE RPM and MISFIRE LOAD indicate the vehicle conditions under which the misfire occurred.

NEXT

3 CHECK PCV HOSE CONNECTIONS

OK:
PCV hose is connected correctly and is not damaged.

NG → **REPAIR OR REPLACE PCV HOSE**

OK

4 CHECK MISFIRE COUNT (CYL #1, #2, #3, #4, #5 AND #6)

(a) Connect the intelligent tester to the DLC3.
(b) Turn the ignition switch ON.
(c) Turn the tester ON.
(d) Clear DTCs (see page ES-39).
(e) Select the following menu items: DIAGNOSIS / ENHANCED OBD II / DATA LIST / MISFIRE / CYL #1, #2, #3, #4, #5 and #6.
(f) Allow the engine to idle.
(g) Read each value for CYL #1 to #6 displayed on the tester. If no misfire counts occur in any cylinders, perform the following procedures:
(1) Shift the gear selector lever to the D position.
(2) Check the CYL #1 to #6.
(3) If misfire counts are still not displayed, perform steps (h) and (i) and then check the misfire counts again.
(h) Drive the vehicle with the MISFIRE RPM and MISFIRE LOAD noted in the "READ VALUE USING INTELLIGENT TESTER (MISFIRE RPM AND MISFIRE LOAD)" procedures above.

(i) Read the CYL #1 to #6 or DTCs displayed on the tester.

Result

Misfire Count	Proceed to
Most misfires occur in only 1 or 2 cylinders	A
3 cylinders or more have equal misfire counts	B

HINT:

- If it is difficult to reproduce misfires for each cylinder, check the DATA LIST item called MISFIRE MARGIN. Try to find vehicle driving conditions that lower the MISFIRE MARGIN value. Values above 30% are considered normal.
- If the freeze frame data's record of the ECT is below 75°C (167°F), the misfire may be detected only when the engine is cold.
- If the freeze frame data's record of the ENGINE RUN TIME is below 120 seconds, the misfire may be detected immediately after the engine is started.

ES

B → **Go to step 14**

A

5 PERFORM ACTIVE TEST USING INTELLIGENT TESTER (FUEL CUT #1 TO #6)

(a) Allow the engine to idle.
(b) Select the following menu items: DIAGNOSIS / ENHANCED OBD II / ACTIVE TEST / FUEL CUT#1 (to #6).
(c) If a cylinder has a high misfire count, cut fuel to that cylinder. Compare the misfire count of the cylinder before fuel cut and after fuel cut.

Result

Misfire Count in Each Cylinder	Proceed to
Misfire count of cylinder before fuel cut and after fuel cut roughly same	A
Misfire count of cylinder before fuel cut lower than after fuel cut	B

NOTICE:
This ACTIVE TEST cannot be performed while the vehicle is being driven.

HINT:
If the misfire count of the cylinder before and after the fuel cut are roughly the same, the cylinder is misfiring.
If the misfire count of the cylinder before the fuel cut is lower than after the fuel cut, the cylinder misfires sometimes.

B → **Go to step 11**

A

6	CHECK SPARK PLUG

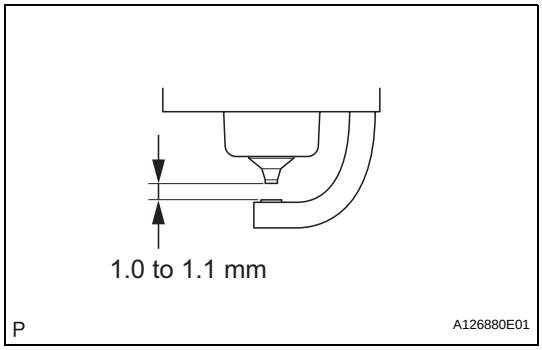

(a) Remove the ignition coil and the spark plug of the misfiring cylinder.
(b) Measure the spark plug electrode gap.
Standard gap:
1.0 to 1.1 mm (0.039 to 0.043 in.)
(c) Check the electrode for carbon deposits.
Recommended spark plug:

Manufacturer	Product
DENSO	FK20HR11

NOTICE:
If the electrode gap is larger than standard, replace the spark plug. Do not adjust the electrode gap.

NG → **REPLACE SPARK PLUG**

OK

7	CHECK FOR SPARKS AND IGNITION

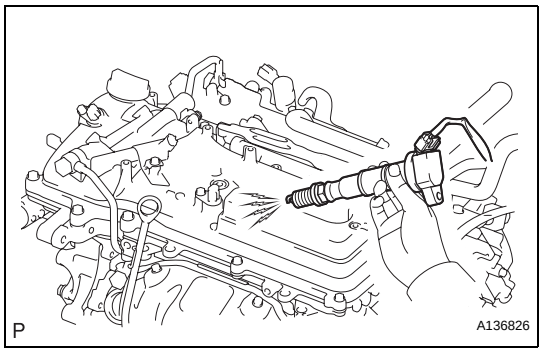

(a) Disconnect the injector connectors to prevent the engine from starting.
(b) Remove the ignition coil from the cylinder head.
(c) Install the spark plug onto the ignition coil.
(d) Attach the spark plug assembly to the cylinder head.
(e) Crank the engine for less than 2 seconds and check the spark.
OK:
Sparks jump across electrode gap.
(f) Install the ignition coil.
(g) Reconnect the injector connectors.

NG → **Go to step 9**

OK

8	CHECK CYLINDER COMPRESSION PRESSURE OF MISFIRING CYLINDER

(a) Measure the cylinder compression pressure of the misfiring cylinder.

OK → **Go to step 10**

NG

CHECK ENGINE TO DETERMINE CAUSE OF LOW COMPRESSION

9	CHANGE TO NORMAL SPARK PLUG AND CHECK SPARK OF MISFIRING CYLINDER

(a) Change the installed spark plug to a spark plug that functions normally.
(b) Perform a spark test.
CAUTION:
Always disconnect all injector connectors.
NOTICE:
Do not crank the engine for more than 2 seconds.
(1) Install the spark plug to the ignition coil and connect the ignition coil connector.
(2) Disconnect the injector connector.
(3) Ground the spark plug.
(4) Check if sparks occur while the engine is being cranked.
OK:
Sparks jump across electrode gap.

ES

NG → **REPLACE IGNITION COIL ASSEMBLY THEN CONFIRM THAT THERE IS NO MISFIRE**

OK

REPLACE SPARK PLUG

10	INSPECT ECM TERMINAL OF MISFIRING CYLINDER (#10, #20, #30, #40, #50 AND /OR #60 VOLTAGE)

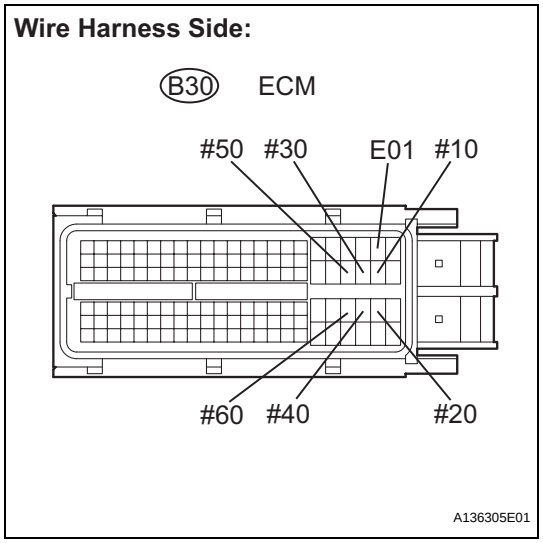

(a) Disconnect the B30 ECM connector.
(b) Turn the ignition switch ON.
(c) Measure the voltage between the terminals of the ECM connector.
Standard voltage

Tester Connection	Specified Condition
B30-45 (#10) - B30-22 (E01)	9 to 14 V
B30-85 (#20) - B30-22 (E01)	9 to 14 V
B30-44 (#30) - B30-22 (E01)	9 to 14 V
B30-84 (#40) - B30-22 (E01)	9 to 14 V
B30-43 (#50) - B30-22 (E01)	9 to 14 V
B30-83 (#60) - B30-22 (E01)	9 to 14 V

OK → **Go to step 12**

NG

11	CHECK WIRE HARNESS (INJECTOR - ECM)

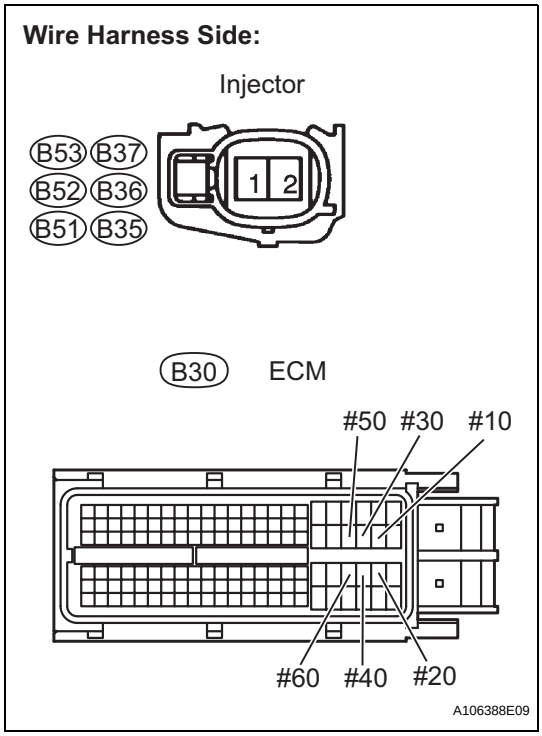

(a) Disconnect the injector connector (of the misfiring cylinder).
(b) Disconnect the B30 ECM connector.
(c) Turn the ignition switch ON.
(d) Measure the resistance and voltage between the injector and the ECM connector terminals.

Standard voltage

Cylinder	Tester Connection	Specified Condition
No. 1	B53-2 - Ground	9 to 14 V
No. 2	B37-2 - Ground	9 to 14 V
No. 3	B52-2 - Ground	9 to 14 V
No. 4	B36-2 - Ground	9 to 14 V
No. 5	B51-2 - Ground	9 to 14 V
No. 6	B35-2 - Ground	9 to 14 V

Standard resistance

Cylinder	Tester Connection	Specified Condition
No. 1	B53-1 - Ground	10 kΩ or higher
	B53-1 - B30-45 (#10)	Below 1 Ω
No. 2	B37-1 - Ground	10 kΩ or higher
	B37-1 - B30-85 (#20)	Below 1 Ω
No. 3	B52-1 - Ground	10 kΩ or higher
	B52-1 - B30-44 (#30)	Below 1 Ω
No. 4	B36-1 - Ground	10 kΩ or higher
	B36-1 - B30-84 (#40)	Below 1 Ω
No. 5	B51-1 - Ground	10 kΩ or higher
	B51-1 - B30-43 (#50)	Below 1 Ω
No. 6	B35-1 - Ground	10 kΩ or higher
	B35-1 - B30-83 (#60)	Below 1 Ω

(e) Reconnect the injector connector.
(f) Reconnect the ECM connector.

NG → **REPAIR OR REPLACE HARNESS AND CONNECTOR**

OK

12	CHECK FUEL INJECTOR OF MISFIRING CYLINDER

(a) Check the injector injection (whether fuel volume is high or low, and whether injection pattern is poor).

NG → **REPLACE FUEL INJECTOR ASSEMBLY**

OK

13	CHECK VALVE CLEARANCE OF MISFIRING CYLINDER

NG → ADJUST VALVE CLEARANCE

OK

14	CHECK AIR INDUCTION SYSTEM

(a) Check the air induction system for vacuum leakage.
OK:
No leakage from air induction system.

NG → REPAIR OR REPLACE AIR INDUCTION SYSTEM

OK

15	CHECK VALVE TIMING (See page ES-90)

NG → ADJUST VALVE TIMING

OK

16	CHECK FUEL PRESSURE

(a) Check the fuel pressure (see page FU-6).

NG → CHECK AND REPLACE FUEL PUMP, PRESSURE REGULATOR, FUEL PIPE LINE AND FILTER

OK

17	READ VALUE USING INTELLIGENT TESTER (COOLANT TEMP) (See page ES-188)

NG → REPLACE ENGINE COOLANT TEMPERATURE SENSOR

OK

18	READ VALUE USING INTELLIGENT TESTER (MAF) (See page ES-187)

NG → REPLACE MASS AIR FLOW METER

OK

CHECK FOR INTERMITTENT PROBLEMS

DTC	P0327	Knock Sensor 1 Circuit Low Input (Bank 1 or Single Sensor)

DTC	P0328	Knock Sensor 1 Circuit High Input (Bank 1 or Single Sensor)

DTC	P0332	Knock Sensor 2 Circuit Low Input (Bank 2)

DTC	P0333	Knock Sensor 2 Circuit High Input (Bank 2)

DESCRIPTION

ES

Flat type knock sensors (non-resonant type) have structures that can detect vibrations: between approximately 6 kHz and 15 kHz.
A knock sensor is fitted onto the engine block to detect engine knocking.
The knock sensor contains a piezoelectric element which generates a voltage when it becomes deformed. The voltage is generated when the engine block vibrates due to knocking. Any occurrence of engine knocking can be suppressed by delaying the ignition timing.

DTC No.	DTC Detection Condition	Trouble Area
P0327 P0332	Output voltage of knock sensor less than 0.5 V (1 trip detection logic)	• Short in knock sensor circuit • Knock sensor • ECM
P0328 P0333	Output voltage of knock sensor more than 4.5 V (1 trip detection logic)	• Open in knock sensor circuit • Knock sensor • ECM

HINT:
When any of DTCs P0327, P0328, P0332 and P0333 are set, the ECM enters fail-safe mode. During fail-safe mode, the ignition timing is delayed to its maximum retardation. Fail-safe mode continues until the ignition switch is turned OFF.
Reference: Inspection using an oscilloscope

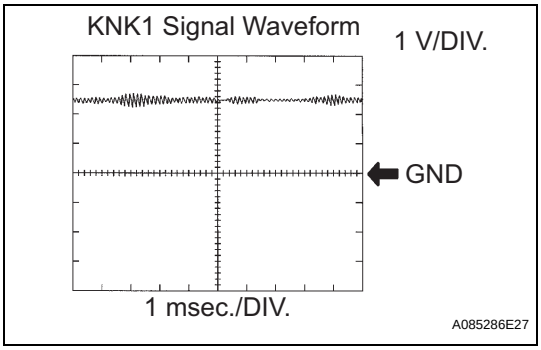

The correct waveform is as shown.

Item	Content
Terminal	KNK1 - EKNK KNK2 - EKN2
Equipment Setting	1 V/DIV. 1 msec./DIV.
Condition	Keep engine speed at 4,000 rpm with warm engine

MONITOR DESCRIPTION

If the output voltage transmitted by the knock sensor remains low or high for more than 1 second, the ECM interprets this as a malfunction in the sensor circuit, and sets a DTC.
The monitor for DTCs P0327, P0328, P0332 and P0333 begins to run when 5 seconds have elapsed since the engine was started.
If the malfunction is not repaired successfully, DTC P0327, P0328, P0332 or P0333 is set 5 seconds after the engine is next started.

MONITOR STRATEGY

Related DTCs	P0327: Knock sensor (bank 1) range check (Low voltage) P0328: Knock sensor (bank 1) range check (High voltage) P0332: Knock sensor (bank 2) range check (Low voltage) P0333: Knock sensor (bank 2) range check (High voltage)
Required Sensors/Components (Main)	Knock sensor
Required Sensors/Components (Related)	-
Frequency of Operation	Continuous
Duration	1 second
MIL Operation	Immediate
Sequence of Operation	None

TYPICAL ENABLING CONDITIONS

Monitor runs whenever following DTCs not present	None
Battery voltage	10.5 V or more
Time after engine start	5 seconds or more

TYPICAL MALFUNCTION THRESHOLDS

Knock Sensor Range Check (Low voltage) P0327 and P0332:

Knock sensor voltage	Less than 0.5 V

Knock Sensor Range Check (High voltage) P0328 and P0333:

Knock sensor voltage	More than 4.5 V

WIRING DIAGRAM

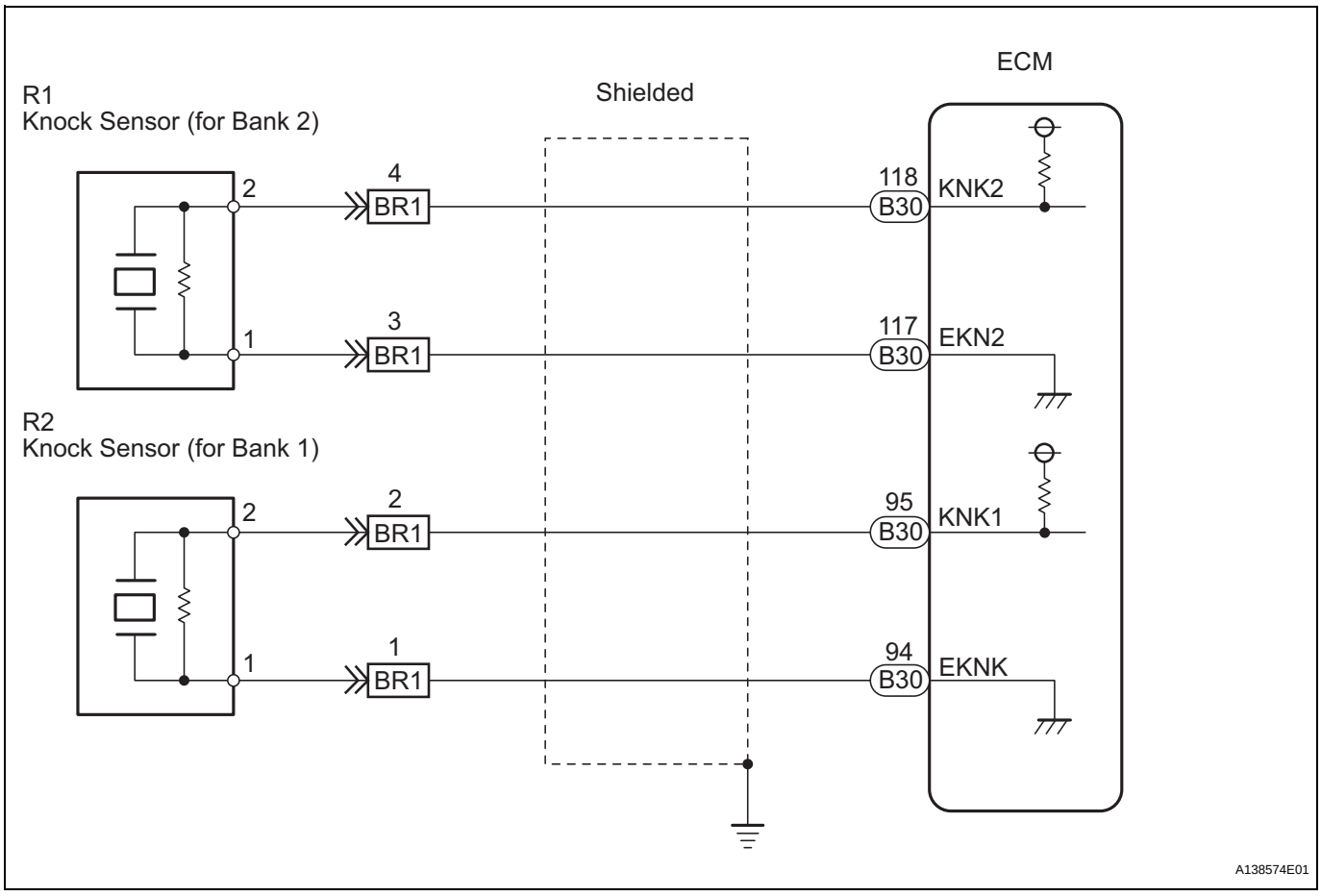

INSPECTION PROCEDURE

HINT:

- DTCs P0327 and P0328 are for the bank 1 knock sensor circuit.
- DTCs P0332 and P0333 are for the bank 2 knock sensor circuit.
- Read freeze frame data using the intelligent tester. Freeze frame data records the engine condition when malfunctions are detected. When troubleshooting, freeze frame data can help determine if the vehicle was moving or stationary, if the engine was warmed up or not, if the air-fuel ratio was lean or rich, and other data from the time the malfunction occurred.

1	READ DTC OUTPUT (CHECK KNOCK SENSOR CIRCUIT)

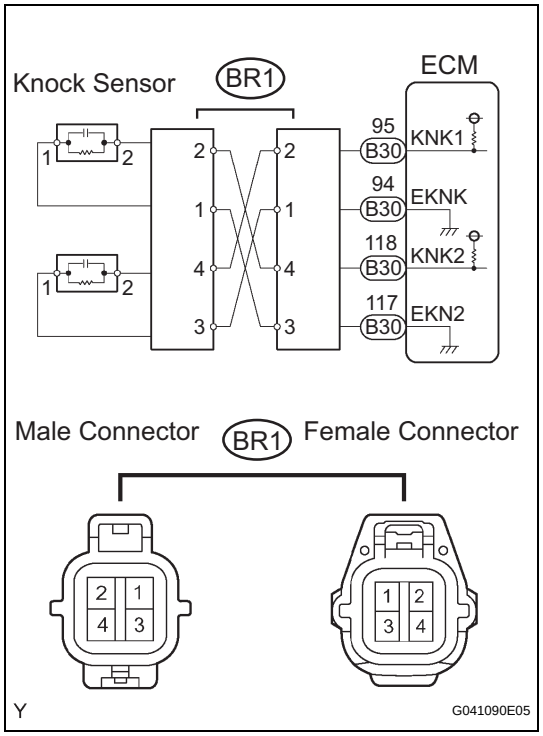

(a) Disconnect the BR1 connector.
(b) Using lead wires, connect the connectors as follows:

Male Connector - Female Connector
Terminal 2 - Terminal 4
Terminal 1 - Terminal 3
Terminal 4 - Terminal 2
Terminal 3 - Terminal 1

(c) Warm up the engine.
(d) Run the engine at 3,000 rpm for 10 seconds or more.
(e) Connect the intelligent tester to the DLC3.
(f) Turn the ignition switch ON and turn the intelligent tester ON.
(g) DIAGNOSIS / ENHANCED OBD II / DTC INFO / CURRENT CODES.
(h) Read DTCs.

Result

Display	Proceed to
DTCs are same as when vehicle brought in P0327, P0328 → P0327, P0328 or P0332, P0333 → P0332, P0333	**A**
DTCs are different from when vehicle brought in P0327, P0328 → P0332, P0333 or P0332, P0333 → P0327, P0328	**B**

(i) Reconnect the BR1 connector.

B → **Go to step 4**

A

ES

2	CHECK WIRE HARNESS (CONNECTOR - ECM)

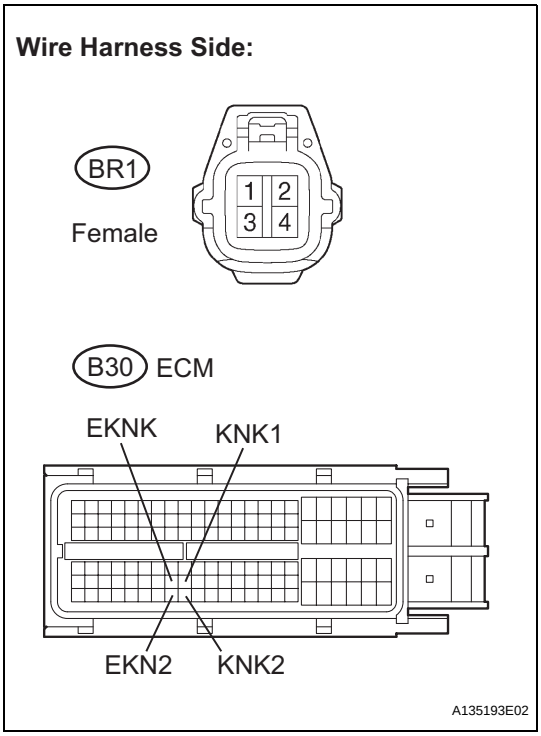

(a) Disconnect the BR1 connector.
(b) Disconnect the B30 ECM connector.
(c) Measure the resistance according to the value(s) in the table below.

Standard resistance

Tester Connection	Specified Condition
BR1 female connector 2 - B30-95 (KNK1)	Below 1 Ω
BR1 female connector 1 - B30-94 (EKNK)	Below 1 Ω
BR1 female connector 4 - B30-118 (KNK2)	Below 1 Ω
BR1 female connector 3 - B30-117 (EKN2)	Below 1 Ω
BR1 female connector 2 or B30-95 (KNK1) - Body ground	10 kΩ or higher
BR1 female connector 1 or B30-94 (EKNK) - Body ground	10 kΩ or higher
BR1 female connector 4 or B30-118 (KNK2) - Body ground	10 kΩ or higher
BR1 female connector 3 or B30-117 (EKN2) - Body ground	10 kΩ or higher

(d) Reconnect the BR1 connector.
(e) Reconnect the ECM connector.

NG → **REPAIR OR REPLACE HARNESS AND CONNECTOR**

OK

3	INSPECT ECM (VOLTAGE)

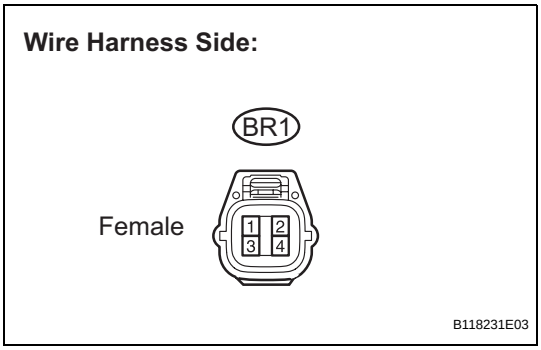

(a) Disconnect the BR1 connector.
(b) Turn the ignition switch ON.
(c) Measure the voltage according to the value(s) in the table below.

Standard voltage

Tester Connection	Specified Condition
CV1 female connector 2 - 1	4.5 to 5.5 V
CV1 female connector 4 - 3	4.5 to 5.5 V

(d) Reconnect the BR1 connector.

NG → **REPLACE ECM**

OK

CHECK FOR INTERMITTENT PROBLEMS

4 INSPECT KNOCK SENSOR

Wire Harness Side:

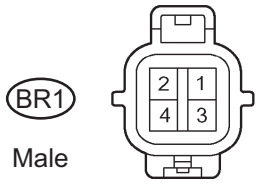

G042949E05

(a) Disconnect the BR1 connector.
(b) Measure the resistance according to the value(s) in the table below.

Standard resistance

Tester Connection	Condition	Specified Condition
BR1 male connector 1 - 2	20°C (68°F)	120 to 280 kΩ
BR1 male connector 3- 4	20°C (68°F)	120 to 280 kΩ

(c) Reconnect the BR1 connector.

OK → **CHECK FOR INTERMITTENT PROBLEMS**

NG

5 CHECK WIRE HARNESS (CONNECTOR - KNOCK SENSOR)

Wire Harness Side:

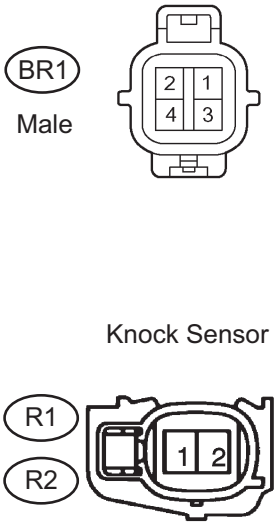

A135025E02

HINT:
- If DTC P0327 or Po328 has changed to P0332 or P0333, check the knock sensor circuit on the right bank side.
- If DTC P0332 or P0333 has changed to P0327 or P0328, check the knock sensor circuit on the left bank side.

(a) Disconnect the BR1 connector.
(b) Disconnect the R1 and R2 knock sensor connectors.
(c) Measure the resistance according to the value(s) in the table below.

Standard resistance

Tester Connection	Specified Condition
BR1 male connector 2 - R2-2	Below 1 Ω
BR1 male connector 1 - R2-1	Below 1 Ω
BR1 male connector 4 - R1-2	Below 1 Ω
BR1 male connector 3 - R1-2	Below 1 Ω
BR1 male connector 2 or R2-2 - Body ground	10 kΩ or higher
BR1 male connector 1 or R2-1 - Body ground	10 kΩ or higher
BR1 male connector 4 or R1-2 - Body ground	10 kΩ or higher
BR1 male connector 3 or R1-2 - Body ground	10 kΩ or higher

(d) Reconnect the BR1 connector.
(e) Reconnect the knock sensor connectors.

NG → **REPAIR OR REPLACE HARNESS AND CONNECTOR**

OK

REPLACE KNOCK SENSOR

ES

DTC	P0335	Crankshaft Position Sensor "A" Circuit

DTC	P0339	Crankshaft Position Sensor "A" Circuit Intermittent

DESCRIPTION

The Crankshaft Position (CKP) sensor system consists of a CKP sensor plate and a pickup coil.
The sensor plate has 34 teeth and is installed on the crankshaft. The pickup coil is made of wound copper wire, an iron core and magnet. The sensor plate rotates and, as each tooth passes through the pickup coil, a pulse signal is created. The pickup coil generates 34 signals per engine revolution. Based on these signals, the ECM calculates the crankshaft position and engine RPM. Using these calculations, the fuel injection time and ignition timing are controlled.

ES

DTC No.	DTC Detection Condition	Trouble Area
P0335	When either condition below is met: • No CKP sensor signal to ECM while cranking (1 trip detection logic) • No CKP sensor signal to ECM at engine speed of 600 rpm or more (1 trip detection logic)	• Open or short in CKP sensor circuit • CKP sensor • CKP sensor plate • ECM
P0339	Under conditions (a), (b) and (c), no CKP sensor signal to ECM for 0.05 seconds or more (1 trip detection logic): (a) Engine speed 1,000 rpm or more (b) Starter signal OFF (c) 3 seconds or more have elapsed since starter signal switched from ON to OFF	• Open or short in CKP sensor circuit • CKP sensor • CKP sensor plate • ECM

Reference: Inspection using an oscilloscope.

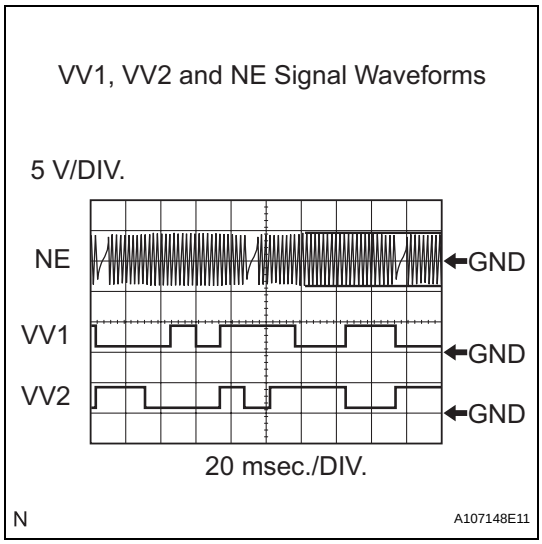

HINT:
- The correct waveform is as shown.
- VV1+ and VV2+ stand for the VVT sensor signal, and NE+ stands for the CKP sensor signal.
- Grounding failure of the shielded wire may cause noise in waveforms.

Item	Content
Terminal	VV1+ - VV1- VV2+ - VV2- NE+ - NE-
Equipment Setting	5 V/DIV., 20 msec./DIV.
Condition	Cranking or idling

MONITOR DESCRIPTION

If there is no signal from the CKP sensor despite the engine revolving, the ECM interprets this as a malfunction of the sensor.
If the malfunction is not repaired successfully, a DTC is set 10 seconds after the engine is next started.

MONITOR STRATEGY

Related DTCs	P0335: CKP sensor range check or rationality
Required Sensors/Components (Main)	CKP sensor
Required Sensors/Components (Related)	CMP sensor
Frequency of Operation	Continuous
Duration	3 times
MIL Operation	Immediate
Sequence of Operation	None

TYPICAL ENABLING CONDITIONS

All:

Monitor runs whenever following DTCs not present	None

Case 1:

Time after starter OFF to ON	0.3 seconds or more
Number of CMP sensor signal pulse	6 times
Battery voltage	7 V or more
CMP sensor circuit failure	Not detected
Ignition switch	ON

Case 2:

Starter	OFF
Engine speed	600 rpm or more
Time after starter from ON to OFF	3 seconds or more

TYPICAL MALFUNCTION THRESHOLDS

Case 1:

Number of CKP sensor signal pulse	132 or less, and 174 or more

Case 2:

Engine speed signal	No signal

COMPONENT OPERATING RANGE

CKP sensor	• CKP sensor output voltage fluctuates while crankshaft revolving • 34 CKP sensor signals per crankshaft revolution

WIRING DIAGRAM

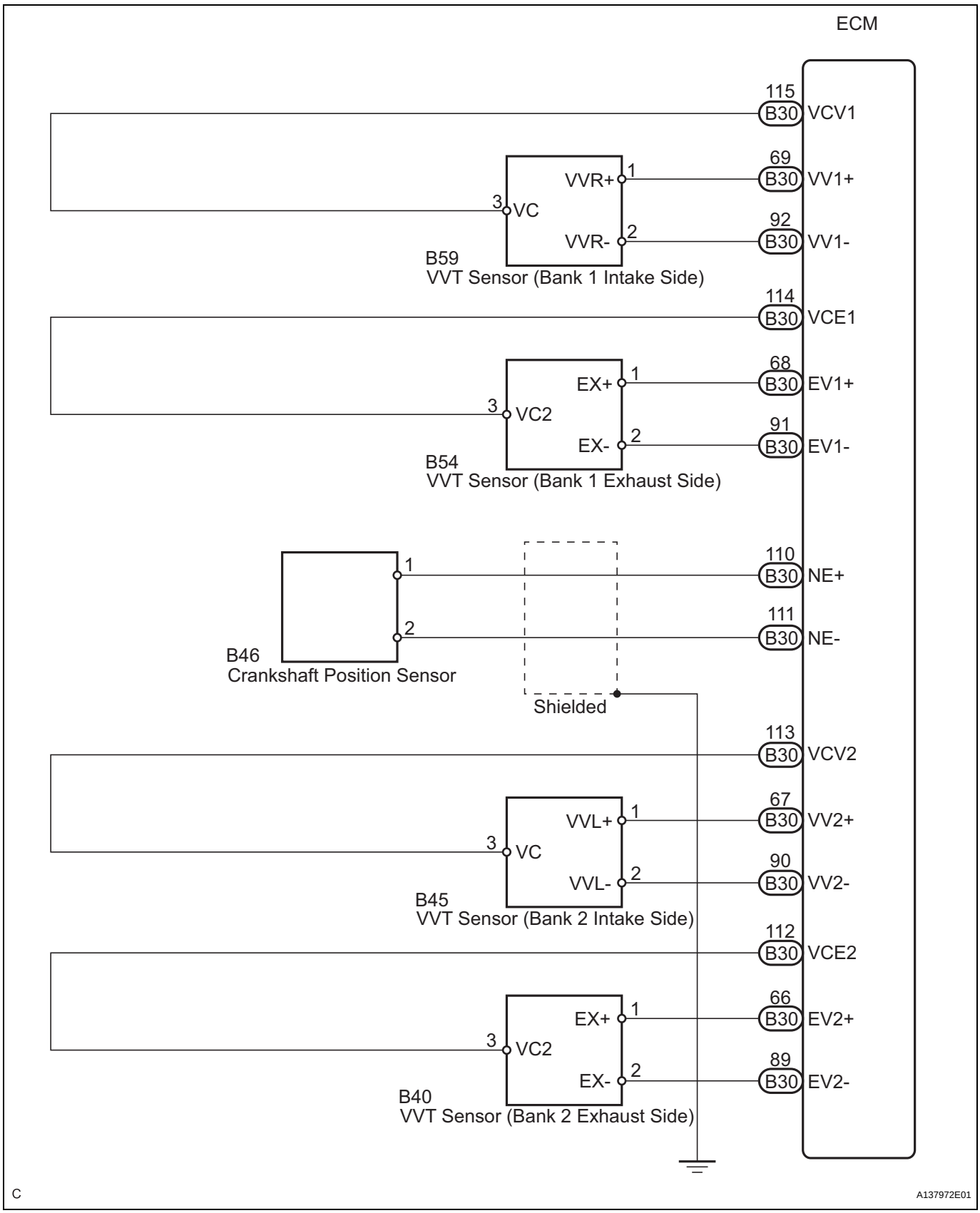

INSPECTION PROCEDURE

HINT:

- If no problem is found through this diagnostic troubleshooting procedure, troubleshoot the engine mechanical systems.
- Check the engine speed. The engine speed can be checked by using the intelligent tester. To check, follow the operation below:
  (a) Connect the intelligent tester to the DLC3.
  (b) Start the engine.
  (c) Turn the tester ON.
  (d) Select the following menu items: DIAGNOSIS / ENHANCED OBD II / DATA LIST / PRIMARY / ENGINE SPD.
  The engine speed may be indicated as zero despite the engine revolving normally. This is caused by a lack of NE signals from the Crankshaft Position (CKP) sensor. Alternatively, the engine speed may be indicated as lower than the actual engine speed if the CKP sensor output voltage is insufficient.
- Read freeze frame data using the intelligent tester. Freeze frame data records the engine condition when malfunctions are detected. When troubleshooting, freeze frame data can help determine if the vehicle was moving or stationary, if the engine was warmed up or not, if the air-fuel ratio was lean or rich, and other data from the time the malfunction occurred.

ES

1	READ VALUE USING INTELLIGENT TESTER (ENGINE SPD)

(a) Connect the intelligent tester to the DLC3.
(b) Turn the ignition switch ON.
(c) Turn the tester ON.
(d) Select the following menu items: DIAGNOSIS / ENHANCED OBD II / DATA LIST / PRIMARY / ENGINE SPD.
(e) Start the engine.
(f) Read the values displayed on the tester while the engine is running.
Standard:
Correct values are displayed.
HINT:
- To check the engine speed change, display the graph on the tester.
- If the engine does not start, check the engine speed while cranking.
- If the engine speed indicated on the tester remains at zero (0), there may be an open or short in the Crankshaft Position (CKP) sensor circuit.

OK → **CHECK FOR INTERMITTENT PROBLEMS**

NG

2 INSPECT CRANKSHAFT POSITION SENSOR (RESISTANCE)

Component Side:

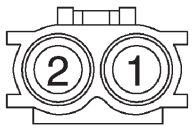

CKP Sensor

A078431E14

(a) Disconnect the B46 CKP sensor connector.
(b) Measure the resistance between terminals 1 and 2.
Standard resistance

Tester Connection	Condition	Specified Condition
1 - 2	Cold	985 to 1,600 Ω
1 - 2	Hot	1,265 to 1,890 Ω

HINT:
The terms "Cold" and "Hot" refer to the temperature of the sensor. Cold means approximately -10 to 50°C (14 to 122°F). Hot means approximately 50 to 100°C (122 to 212°F).

(c) Reconnect the CKP sensor connector.

NG → **REPLACE CRANKSHAFT POSITION SENSOR**

OK

3 CHECK WIRE HARNESS (CRANKSHAFT POSITION SENSOR - ECM)

Wire Harness Side:

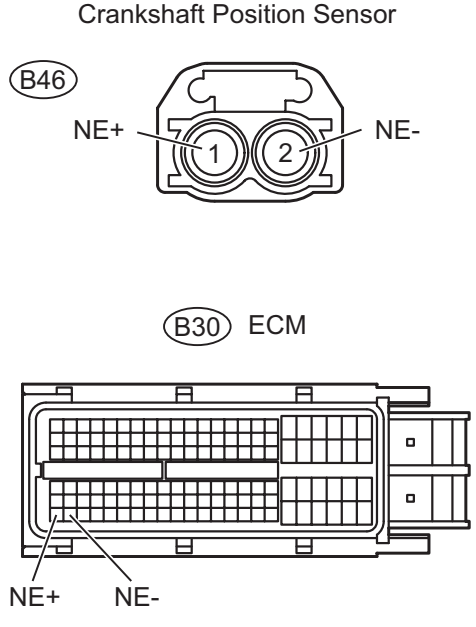

A107850E03

(a) Disconnect the B46 CKP sensor connector.
(b) Disconnect the B30 ECM connector.
(c) Measure the resistance.
Standard resistance

Tester Connection	Specified Condition
B46-1 (NE+) - B30-110 (NE+)	Below 1 Ω
B46-2 (NE-) - B30-111 (NE-)	Below 1 Ω
B46-1 (NE+) or B30-110 (NE+) - Body ground	10 kΩor higher
B46-2 (NE-) or B30-111 (NE-) - Body ground	10 kΩor higher

(d) Reconnect the ECM connector.
(e) Reconnect the CKP sensor connector.

NG → **REPAIR OR REPLACE HARNESS AND CONNECTOR**

OK

4	CHECK SENSOR INSTALLATION (CRANKSHAFT POSITION SENSOR)

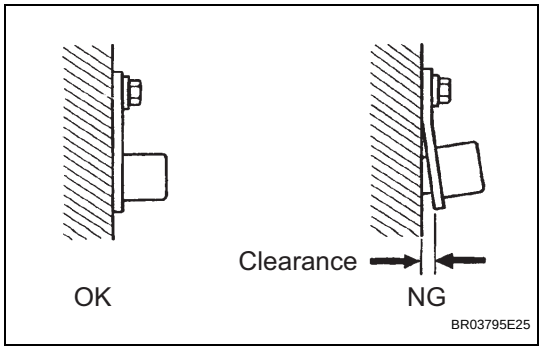

(a) Check the CKP sensor installation.
OK:
Sensor is installed correctly.

NG → **SECURELY REINSTALL SENSOR**

OK

5	CHECK CRANKSHAFT POSITION SENSOR PLATE (TEETH OF SENSOR PLATE)

(a) Check the teeth of the sensor plate.
OK:
Sensor plate does not have any cracks or deformation.

NG → **REPLACE CRANKSHAFT POSITION SENSOR PLATE**

OK

6	REPLACE CRANKSHAFT POSITION SENSOR

NEXT

7	CHECK WHETHER DTC OUTPUT RECURS

(a) Connect the intelligent tester to the DLC3.
(b) Turn the ignition switch ON.
(c) Turn the tester ON.
(d) Clear DTCs (see page ES-39).
(e) Start the engine.
(f) Select the following menu items: DIAGNOSIS / ENHANCED OBD II / DTC INFO / CURRENT CODES.
(g) Read DTCs.

Result

Display (DTC Output)	Proceed to
No output	A
P0335 or P0339	B

HINT:
If the engine does not start, replace the ECM.

B → **REPLACE ECM**

ES

A

END

DTC	P0340	Camshaft Position Sensor Circuit Malfunction

DTC	P0342	Camshaft Position Sensor "A" Circuit Low Input (Bank 1 or Single Sensor)

DTC	P0343	Camshaft Position Sensor "A" Circuit High Input (Bank 1 or Single Sensor)

DTC	P0345	Camshaft Position Sensor "A" Circuit (Bank 2)

DTC	P0347	Camshaft Position Sensor "A" Circuit Low Input (Bank 2)

DTC	P0348	Camshaft Position Sensor "A" Circuit High Input (Bank 2)

ES

DESCRIPTION

The intake camshaft's Variable Valve Timing (VVT) sensor (VV1, 2 signal) consists of a magnet and MRE (Magnetic Resistance Element).

The VVT camshaft drive gear has a sensor plate with 3 teeth on its outer circumference. When the gear rotates, changes occur in the air gaps between the sensor plate and MRE, which affects the magnetic field. As a result, the resistance of the MRE material fluctuates. The VVT sensor converts the gear rotation data to pulse signals, uses the pulse signals to determine the camshaft angle, and sends it to the ECM.

The crankshaft angle sensor plate has 34 teeth. The pickup coil generates 34 signals for each engine revolution. Based on a combination of the VVT signal and NE signal, the ECM detects the crankshaft angle. Then the ECM uses this data to control fuel injection time and injection timing. Also, based on the NE signal, the ECM detects the engine speed.

DTC No.	DTC Detection Condition	Trouble Area
P0340 P0345	When either condition below is met: • Input voltage to ECM remains less than 0.3 V, or more than 4.7 V for 4 seconds, when 2 or more seconds have elapsed after turning ignition switch ON (1 trip detection logic) • No VVT sensor signal to ECM during cranking (1 trip detection logic)	• Open or short in VVT sensor circuit for intake camshaft • VVT sensor for intake camshaft • Camshaft timing gear for intake camshaft • Jumped tooth of timing chain for intake camshaft • ECM
P0342 P0347	Output voltage of VVT sensor less than 0.3 V for 4 seconds (1 trip detection logic)	• Open or short in VVT sensor circuit for intake camshaft • VVT sensor for intake camshaft • Camshaft timing gear for intake camshaft • Jumped tooth of timing chain for intake camshaft • ECM
P0343 P0348	Output voltage of VVT sensor more than 4.7 V for 4 seconds (1 trip detection logic)	• Open or short in VVT sensor for intake camshaft circuit • VVT sensor for intake camshaft • Camshaft timing gear for intake camshaft • Jumped tooth of timing chain for intake camshaft • ECM

Reference: Inspection using an oscilloscope

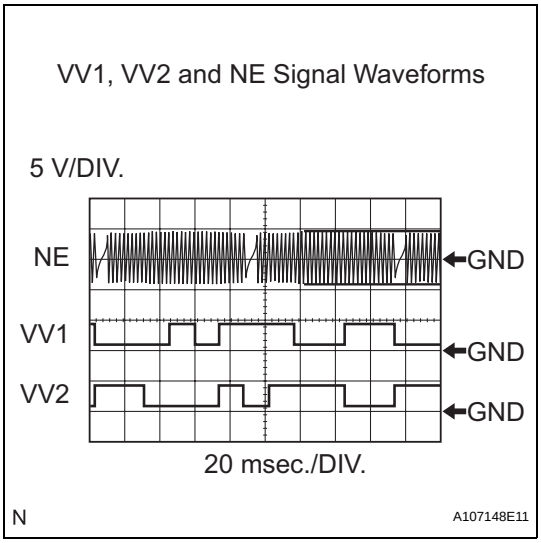

HINT:
- The correct waveform is as shown.
- VV1+ and VV2+ stand for the VVT sensor signal, and NE+ stands for the CKP sensor signal.

Item	Content
Terminal	NE+ - NE- VV1+ - VV1- VV2+ - VV2-
Equipment Setting	5 V/DIV. 20 msec./DIV.
Condition	Cranking or idling

MONITOR DESCRIPTION

If no signal is transmitted by the VVT sensor despite the engine revolving, or the rotations of the camshaft and the crankshaft are not synchronized, the ECM interprets this as a malfunction of the sensor.

MONITOR STRATEGY

Related DTCs	P0340: VVT sensor (bank 1) open/short P0340: VVT position/Crankshaft position misalignment (bank 1) P0342: VVT position sensor (bank 1) range check (low voltage) P0343: VVT position sensor (bank 1) range check (high voltage) P0345: VVT sensor (bank 2) open/short P0345: VVT position/Crankshaft position misalignment (bank 2) P0347: VVT position sensor (bank 2) range check (low voltage) P0348: VVT position sensor (bank 2) range check (high voltage)
Required Sensors/Components (Main)	VVT position sensor (bank 1 and 2)
Required Sensors/Components (Sub)	Crankshaft position sensor
Frequency of Operation	Continuous
Duration	5 seconds
MIL Operation	2 driving cycles: P0340 (cranking), P0345 (cranking) Immediate: Others
Sequence of Operation	None

TYPICAL ENABLING CONDITIONS

All:

Monitor runs whenever following DTCs are not present	None

P0340 (Engine running):

Engine speed	600 rpm or more
Starter	OFF

P0345 (Engine running):

Engine speed	600 rpm or more
Battery voltage	8 V or more
Starter	OFF
Ignition switch	ON

P0340, P0345 (Cranking):

Starter	ON
Minimum battery voltage	Less than 11 V

P0340, P0342, P0343 (Chattering, Low voltage, High voltage):

Starter	OFF
Ignition switch	ON
Time after ignition switch OFF to ON	2 seconds or more

P0345, P0347, P0348 (Chattering, Low voltage, High voltage):

Starter	OFF
Ignition switch	ON
Time after ignition switch OFF to ON	2 seconds or more
Battery Voltage	8 V or more

TYPICAL MALFUNCTION THRESHOLDS

P0340 (Engine running):

Camshaft position and crankshaft position phase	Misaligned
Camshaft position signal	No signal

P0340 (Cranking):

Camshaft position signal	No signal

P0340 (Chattering):

Camshaft position sensor voltage	Less than 0.3 V, or more than 4.7 V

P0342 (Low voltage):

Camshaft position sensor voltage	Less than 0.3 V

P0343 (High voltage):

Camshaft position sensor voltage	More than 4.7 V

P0345 (Engine running, cranking):

VVT sensor signal	No signal

P0345 (Chattering):

VVT sensor voltage	Less than 0.3 V, or more than 4.7 V

P0347 (Low voltage):

VVT sensor voltage	Less than 0.3 V

P0348 (High voltage):

VVT sensor voltage	More than 4.7 V

COMPONENT OPERATING RANGE

VVT sensor voltage	0.3 to 4.7 V

WIRING DIAGRAM

Refer to DTC P0335 (See page ES-209).

INSPECTION PROCEDURE

HINT:

Read freeze frame data using the intelligent tester. The ECM records vehicle and driving condition information as freeze frame data the moment a DTC is stored. When troubleshooting, freeze frame data can be helpful in determining whether the vehicle was running or stopped, whether the engine was warmed up or not, whether the air-fuel ratio was lean or rich, as well as other data recorded at the time of a malfunction (See page ES-40).

ES

1	CHECK WIRE HARNESS (SENSOR POWER SOURCE)

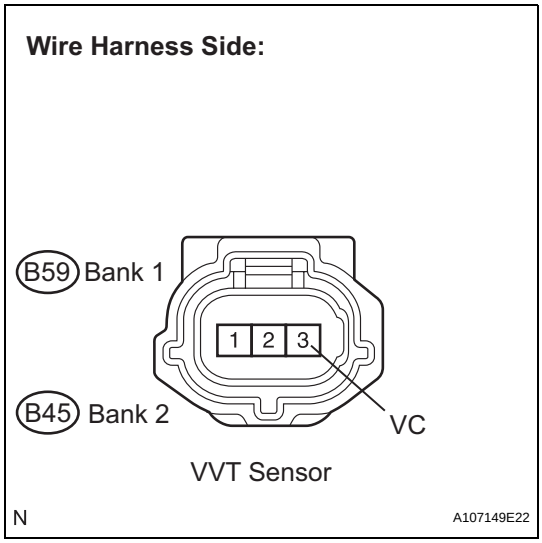

(a) Disconnect the B59 or B45 VVT sensor connector.

(b) Measure the voltage according to the value(s) in the table below.

Standard voltage

Tester Connection	Specified Condition
B59-3 (VC) - Body ground	4.5 to 5.0 V
B45-3 (VC) - Body ground	4.5 to 5.0 V

(c) Reconnect the VVT sensor connector.

NG → **REPAIR OR REPLACE HARNESS AND CONNECTOR**

OK

2 CHECK WIRE HARNESS (VVT SENSOR FOR INTAKE CAMSHAFT - ECM)

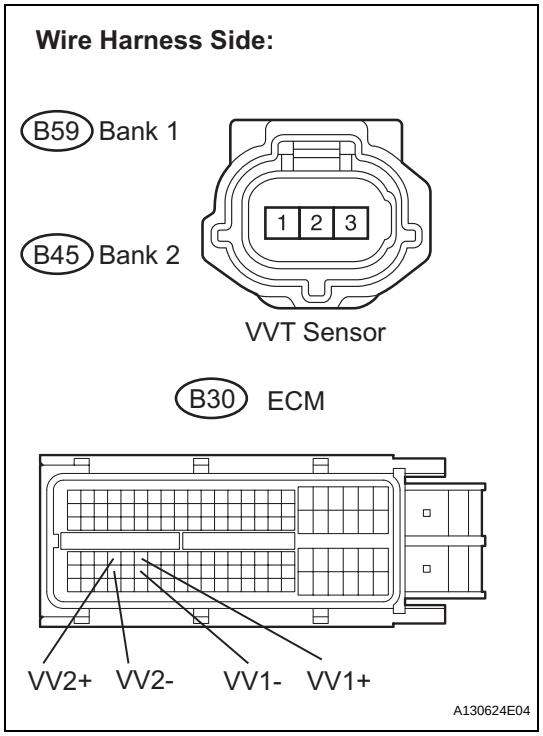

(a) Disconnect the B59 or B45 VVT sensor connector.
(b) Disconnect the B30 ECM connector.
(c) Measure the resistance according to the value(s) in the table below.

Standard resistance

Tester Connection	Specified Condition
B59-1 (VVR+) - B30-69 (VV1+)	Below 1 Ω
B59-2 (VVR-) - B30-92 (VV1-)	Below 1 Ω
B45-1 (VVL+) - B30-67 (VV2+)	Below 1 Ω
B45-2 (VVL-) - B30-90 (VV2-)	Below 1 Ω
B59-1 (VVR+) or B30-69 (VV1+) - Body ground	10 kΩ or higher
B59-2 (VVR-) or B30-92 (VV1-) - Body ground	10 kΩ or higher
B45-1 (VVL+) or B30-67 (VV2+) - Body ground	10 kΩ or higher
B45-2 (VVL-) or B30-90 (VV2-) - Body ground	10 kΩ or higher

(d) Reconnect the VVT sensor connector.
(e) Reconnect the ECM connector.

NG → **REPAIR OR REPLACE HARNESS AND CONNECTOR**

OK

3 CHECK SENSOR INSTALLATION (VVT SENSOR FOR INTAKE CAMSHAFT)

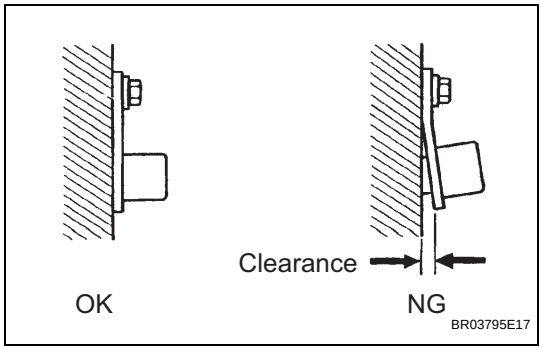

(a) Check the CKP sensor installation.

OK:

Sensor is installed correctly.

NG → **SECURELY REINSTALL SENSOR**

OK

4 CHECK CAMSHAFT TIMING GEAR ASSEMBLY (TEETH OF PLATE)

(a) Check the teeth of the signal plate.

OK:

Sensor plate teeth do not have any cracks or deformation.

NG → **REPLACE CAMSHAFT TIMING GEAR ASSEMBLY**

OK

5	REPLACE VVT SENSOR

NEXT

6	CHECK WHETHER DTC OUTPUT RECURS

(a) Connect the intelligent tester to the DLC3.
(b) Turn the ignition switch ON.
(c) Turn the tester ON.
(d) Clear DTCs.
(e) Start the engine.
(f) Select the following menu items: DIAGNOSIS / ENHANCED OBD II / DTC INFO / PENDING CODES.
(g) Read DTCs.

Result

Display (DTC Output)	Proceed to
No output	A
P0340, P0342, P0343, P0345, P0347 or P0348	B

HINT:
If the engine does not start, replace the ECM.

B → REPLACE ECM

A

END

DTC	P0351	Ignition Coil "A" Primary / Secondary Circuit
DTC	P0352	Ignition Coil "B" Primary / Secondary Circuit
DTC	P0353	Ignition Coil "C" Primary / Secondary Circuit
DTC	P0354	Ignition Coil "D" Primary / Secondary Circuit
DTC	P0355	Ignition Coil "E" Primary / Secondary Circuit
DTC	P0356	Ignition Coil "F" Primary / Secondary Circuit

DESCRIPTION

HINT:

- These DTCs indicate malfunctions relating to the primary circuit.
- If DTC P0351 is set, check No. 1 ignition coil with igniter circuit.
- If DTC P0352 is set, check No. 2 ignition coil with igniter circuit.
- If DTC P0353 is set, check No. 3 ignition coil with igniter circuit.
- If DTC P0354 is set, check No. 4 ignition coil with igniter circuit.
- If DTC P0355 is set, check No. 5 ignition coil with igniter circuit.
- If DTC P0356 is set, check No. 6 ignition coil with igniter circuit.

A Direct Ignition System (DIS) is used on this vehicle.

The DIS is a 1-cylinder ignition system in which each cylinder is ignited by one ignition coil and one spark plug is connected to the end of each secondary wiring. A powerful voltage, generated in the secondary wiring, is applied directly to each spark plug. The sparks of the spark plugs pass from the center electrode to the ground electrodes.

The ECM determines the ignition timing and transmits the ignition (IGT) signals to each cylinder. Using the IGT signal, the ECM turns the power transistor inside the igniter on and off. The power transistor, in turn, switches on and off the current to the primary coil. When the current to the primary coil is cut off, a powerful voltage is generated in the secondary coil. This voltage is applied to the spark plugs, causing them to spark inside the cylinders. As the ECM cuts the current to the primary coil, the igniter sends back an ignition confirmation (IGF) signal to the ECM, for each cylinder ignition.

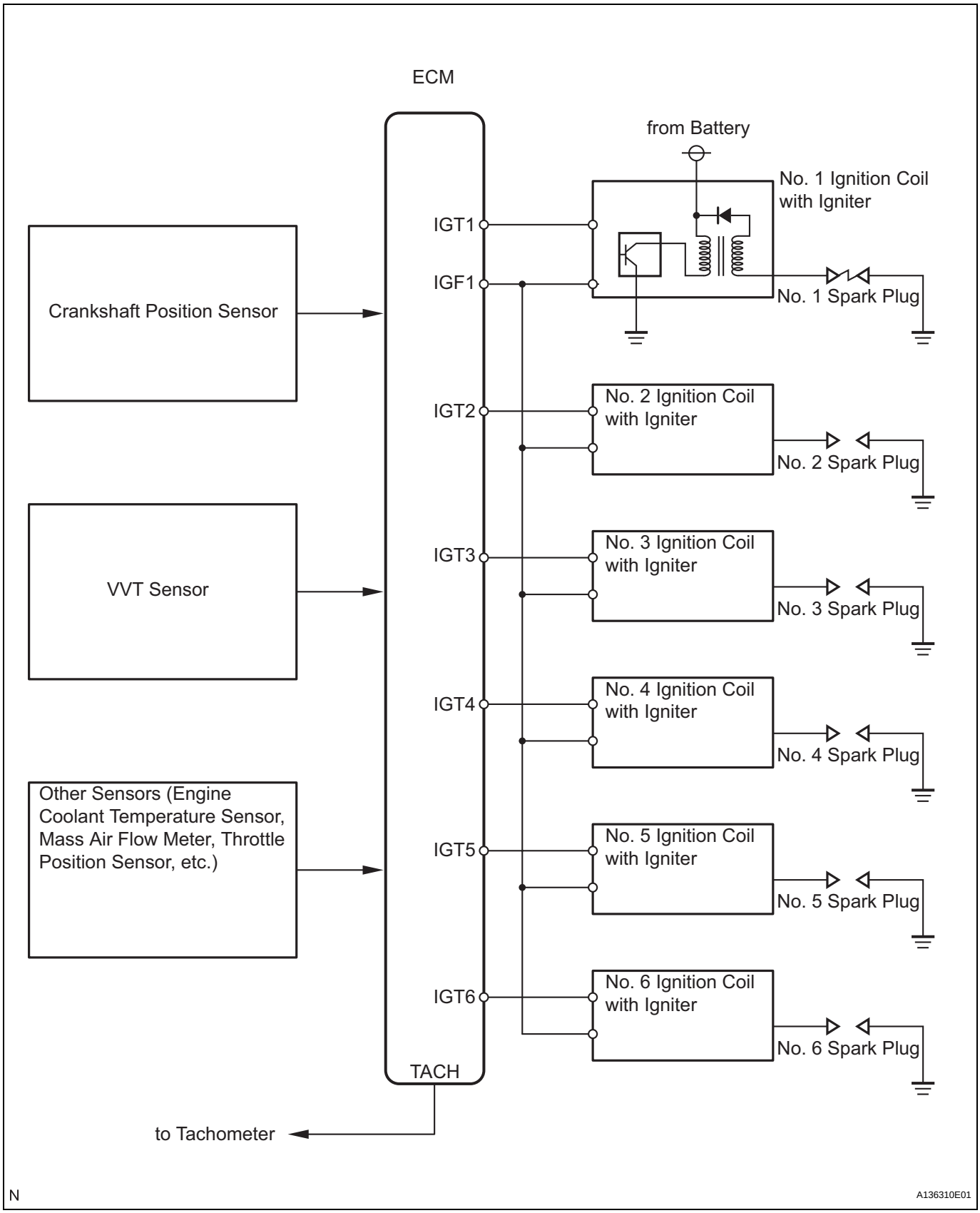
ECM
from Battery
No. 1 Ignition Coil with Igniter
IGT1
IGF1
No. 1 Spark Plug
Crankshaft Position Sensor
No. 2 Ignition Coil with Igniter
IGT2
No. 2 Spark Plug
VVT Sensor
No. 3 Ignition Coil with Igniter
IGT3
No. 3 Spark Plug
No. 4 Ignition Coil with Igniter
IGT4
No. 4 Spark Plug
Other Sensors (Engine Coolant Temperature Sensor, Mass Air Flow Meter, Throttle Position Sensor, etc.)
No. 5 Ignition Coil with Igniter
IGT5
No. 5 Spark Plug
No. 6 Ignition Coil with Igniter
IGT6
No. 6 Spark Plug
TACH
to Tachometer
N
A136310E01

DTC No.	DTC Detection Condition	Trouble Area
P0351 P0352 P0353 P0354 P0355 P0356	No IGF signal to ECM while engine running (1 trip detection logic)	• Ignition system • Open or short in IGF1 or IGT circuit (1 to 6) between ignition coil with igniter and ECM • No. 1 to No. 6 ignition coils with igniters • ECM

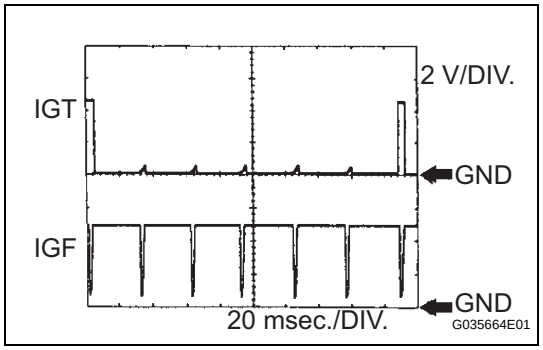

Reference: Inspection using an oscilloscope.
While cranking or idling the engine, check the waveform between terminals IGT (1 to 6) and E1, and IGF1 and E1 of the ECM connector.

Item	Content
Terminal	CH1: IGT1, IGT2, IGT3, IGT4, IGT5, IGT6 - E1 CH2: IGF1 - E1
Equipment Setting	2 V/DIV. 20 msec./DIV.
Condition	Cranking or idling

MONITOR DESCRIPTION

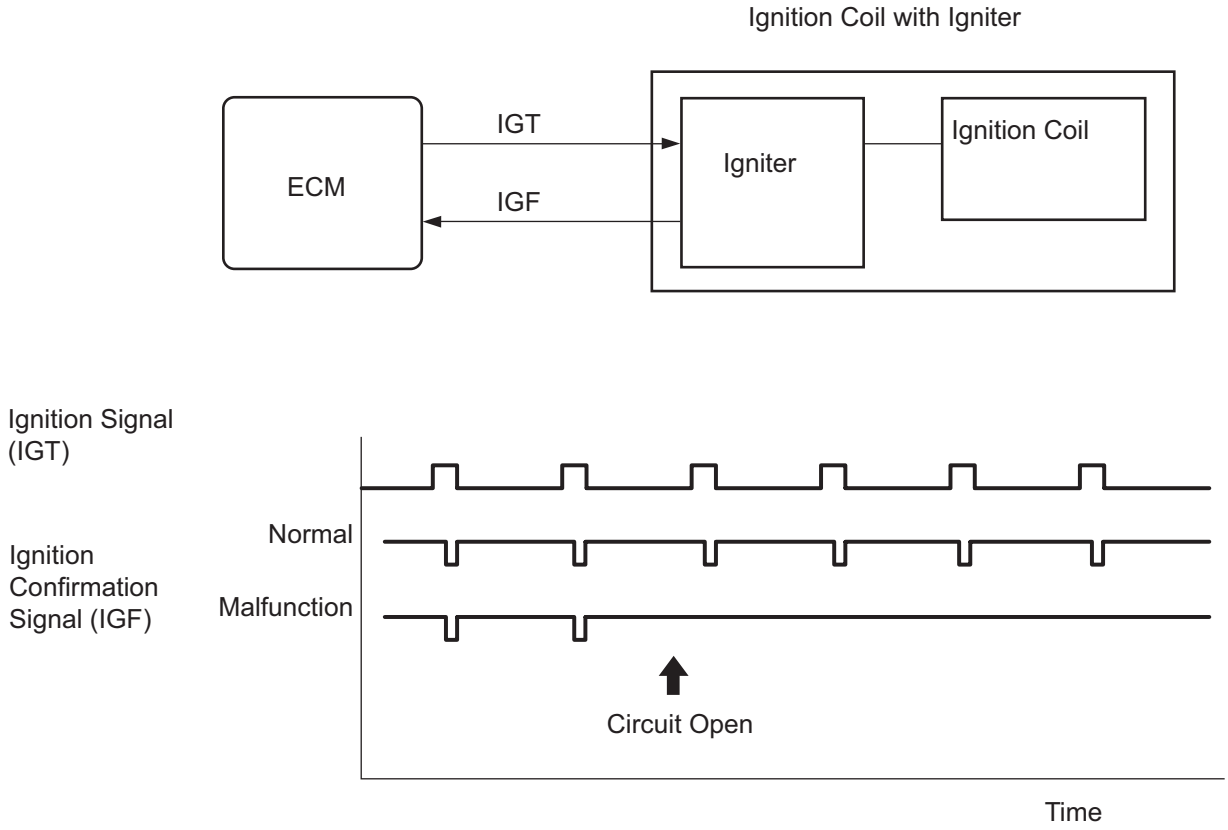

If the ECM does not receive any IGF signals despite transmitting the IGT signal, it interprets this as a fault in the igniter and sets a DTC.
If the malfunction is not repaired successfully, a DTC is set 1 second after the engine is next started.

MONITOR STRATEGY

Related DTCs	P0351: Igniter (cylinder 1) malfunction P0352: Igniter (cylinder 2) malfunction P0353: Igniter (cylinder 3) malfunction P0354: Igniter (cylinder 4) malfunction P0355: Igniter (cylinder 5) malfunction P0356: Igniter (cylinder 6) malfunction
Required Sensors/Components (Main)	Igniter
Required Sensors/Components (Related)	Crankshaft position sensor
Frequency of Operation	Continuous
Duration	About 1 second
MIL Operation	Immediate
Sequence of Operation	None

TYPICAL ENABLING CONDITIONS

Monitor runs whenever following DTCs not present	None
Either of following conditions A or B met	-
A. Engine RPM	1,500 rpm or less
B. Starter	OFF
Either of following conditions C or D met	-
C. Both of following conditions (a) and (b) met	-
(a) Engine speed	500 rpm or less
(b) Battery voltage	6 V or more
D. All of following conditions (a), (b) and (c) met	-
(a) Engine speed	More than 500 rpm
(b) Battery voltage	10 V or more
(c) Number of sparks after CPU reset	5 sparks or more

TYPICAL MALFUNCTION THRESHOLDS

IGF signal	ECM does not receive any IGF signal despite ECM sending IGT signal to igniter

COMPONENT OPERATING RANGE

IGF signal	Igniter transmits IGF signal when it receives IGT signal from ECM

WIRING DIAGRAM

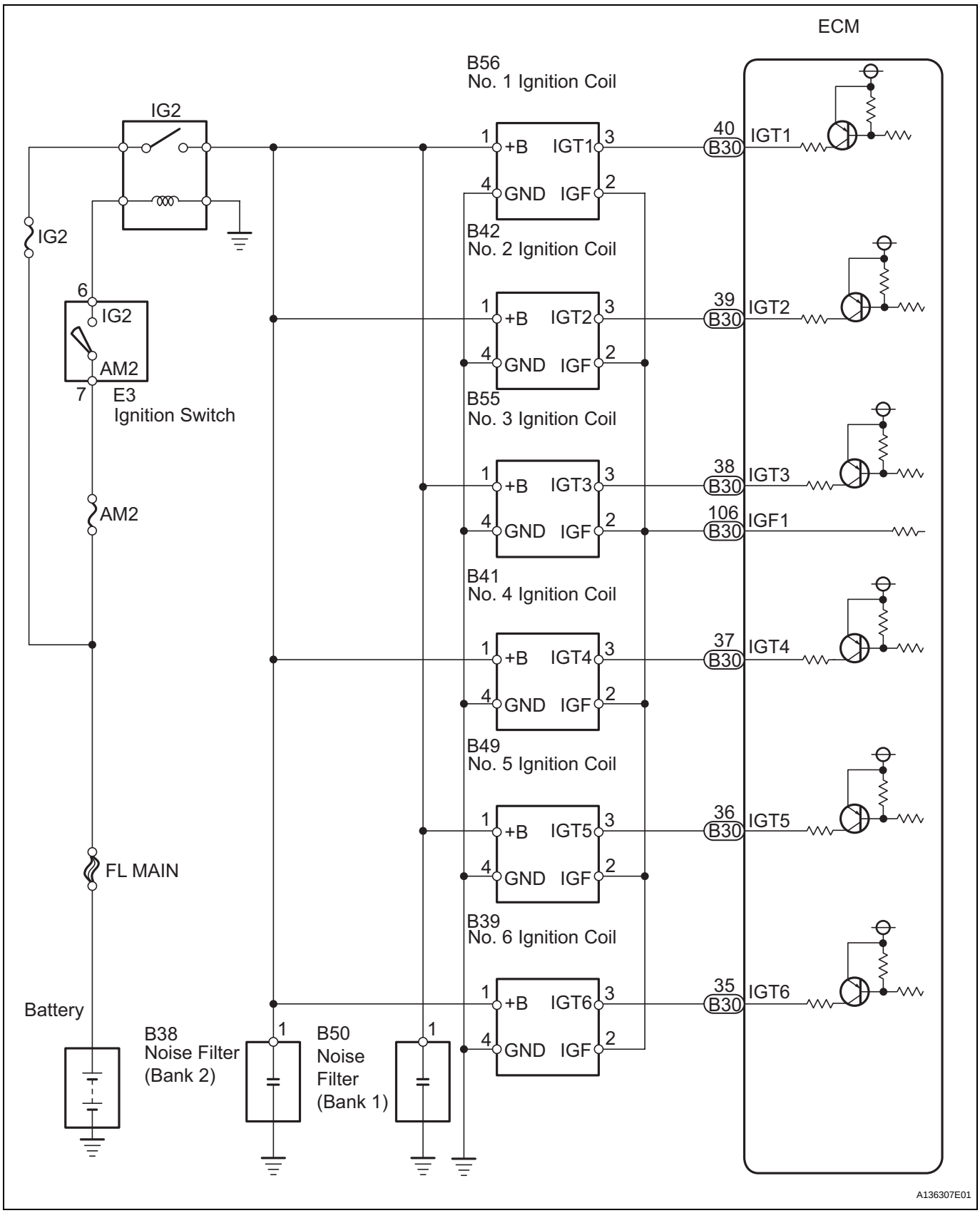

INSPECTION PROCEDURE

HINT:

Read freeze frame data using the intelligent tester. Freeze frame data records the engine condition when malfunctions are detected. When troubleshooting, freeze frame data can help determine if the vehicle was moving or stationary, if the engine was warmed up or not, if the air-fuel ratio was lean or rich, and other data from the time the malfunction occurred.

1	INSPECT IGNITION COIL ASSEMBLY (POWER SOURCE)

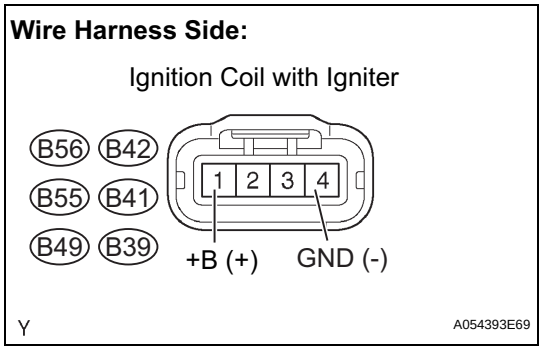

(a) Disconnect the ignition coil with igniter connector.

(b) Measure the resistance.

Standard resistance

Tester Connection	Specified Condition
B56-4 (GND) - Body ground	Below 1 Ω
B42-4 (GND) - Body ground	Below 1 Ω
B55-4 (GND) - Body ground	Below 1 Ω
B41-4 (GND) - Body ground	Below 1 Ω
B49-4 (GND) - Body ground	Below 1 Ω
B39-4 (GND) - Body ground	Below 1 Ω

(c) Turn the ignition switch ON.

(d) Measure the voltage between the terminals of the wire harness side connector.

Standard voltage

Tester Connection	Specified Condition
B56-1 (+B) - B56-4 (GND)	9 to 14 V
B42-1 (+B) - B42-4 (GND)	9 to 14 V
B55-1 (+B) - B55-4 (GND)	9 to 14 V
B41-1 (+B) - B41-4 (GND)	9 to 14 V
B49-1 (+B) - B49-4 (GND)	9 to 14 V
B39-1 (+B) - B39-4 (GND)	9 to 14 V

(e) Reconnect the ignition coil with igniter connector.

NG → **REPAIR OR REPLACE HARNESS AND CONNECTOR**

OK

ES

2	CHECK WIRE HARNESS (IGNITION COIL ASSEMBLY - ECM)

Wire Harness Side:

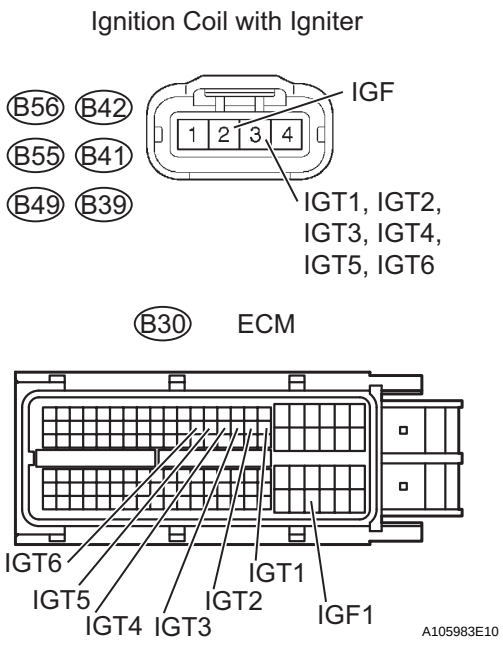

(a) Disconnect the ignition coil with connector.
(b) Disconnect the B30 ECM connector.
(c) Measure the resistance.

Standard resistance

Tester Connection	Specified Condition
B56-2 (IGF) - B30-106 (IGF1)	Below 1 Ω
B42-2 (IGF) - B30-106 (IGF1)	Below 1 Ω
B55-2 (IGF) - B30-106 (IGF1)	Below 1 Ω
B41-2 (IGF) - B30-106 (IGF1)	Below 1 Ω
B49-2 (IGF) - B30-106 (IGF1)	Below 1 Ω
B39-2 (IGF) - B30-106 (IGF1)	Below 1 Ω
B56-3 (IGT1) - B30-40 (IGT1)	Below 1 Ω
B42-3 (IGT2) - B30-39 (IGT2)	Below 1 Ω
B55-3 (IGT3) - B30-38 (IGT3)	Below 1 Ω
B41-3 (IGT4) - B30-37 (IGT4)	Below 1 Ω
B49-3 (IGT5) - B30-36 (IGT5)	Below 1 Ω
B39-3 (IGT6) - B30-35 (IGT6)	Below 1 Ω
B56-2 (IGF) or B30-106 (IGF1) - Body ground	10 kΩor higher
B42-2 (IGF) or B30-106 (IGF1) - Body ground	10 kΩor higher
B55-2 (IGF) or B30-106 (IGF1) - Body ground	10 kΩor higher
B41-2 (IGF) or B30-106 (IGF1) - Body ground	10 kΩor higher
B49-2 (IGF) or B30-106 (IGF1) - Body ground	10 kΩor higher
B39-2 (IGF) or B30-106 (IGF1) - Body ground	10 kΩor higher
B56-3 (IGT1) or B30-40 (IGT1) - Body ground	10 kΩor higher
B42-3 (IGT2) or B30-39 (IGT2) - Body ground	10 kΩor higher
B55-3 (IGT3) or B30-38 (IGT3) - Body ground	10 kΩor higher
B41-3 (IGT4) or B30-37 (IGT4) - Body ground	10 kΩor higher
B49-3 (IGT5) or B30-36 (IGT5) - Body ground	10 kΩor higher
B39-3 (IGT6) or B30-35 (IGT6) - Body ground	10 kΩor higher

(d) Reconnect the ECM connector.
(e) Reconnect the ignition coil with igniter connector.

NG → **REPAIR OR REPLACE HARNESS AND CONNECTOR**

OK

3	CHECK WHETHER DTC OUTPUT RECURS (DTC P0351, P0352, P0353, P0354, P0355 OR P0356)

(a) Connect the intelligent tester to the DLC3.
(b) Turn the ignition switch ON and turn the tester ON.
(c) Clear DTCs (see page ES-39).
(d) Shuffle arrangement of the ignition coils with igniters (among No. 1 to No. 6 cylinders).
NOTICE:
Do not shuffle the connectors.
(e) Perform a simulation test.
(f) Check DTCs displayed on the tester.

Result

Display (DTC Output)	Proceed to
Same DTC output	A
Different ignition coil DTC output	B

B → **REPLACE IGNITION COIL ASSEMBLY**

A → **REPLACE ECM**

ES

DTC	P0365	Camshaft Position Sensor "B" Circuit (Bank 1)

DTC	P0367	Camshaft Position Sensor "B" Circuit Low Input (Bank 1)

DTC	P0368	Camshaft Position Sensor "B" Circuit High Input (Bank 1)

DTC	P0390	Camshaft Position Sensor "B" Circuit (Bank 2)

ES

DTC	P0392	Camshaft Position Sensor "B" Circuit Low Input (Bank 2)

DTC	P0393	Camshaft Position Sensor "B" Circuit High Input (Bank 2)

DESCRIPTION

The exhaust camshaft's Variable Valve Timing (VVT) sensor (EV1, 2 signal) consists of a magnet and MRE (Magnetic Resistance Element).
The exhaust camshaft has a sensor plate with 3 teeth on its outer circumference.
When the exhaust camshaft rotates, changes occur in the air gaps between the 3 teeth and MRE, which affects the magnet. As a result, the resistance of the MRE material fluctuates. The VVT sensor converts the exhaust camshaft rotation data to pulse signals, uses the pulse signals to determine the camshaft angle, and sends it to the ECM.

DTC No.	DTC Detection Condition	Trouble Area
P0365 P0390	When either condition below is met: • Input voltage to ECM remains less than 0.3 V, or more than 4.7 V for more than 4 seconds, when 2 or more seconds have elapsed after turning ignition switch ON (1 trip detection logic) • No VVT sensor signal to ECM during cranking (1 trip detection logic)	• Open or short in VVT sensor for exhaust camshaft circuit • VVT sensor for exhaust camshaft • Exhaust camshaft • Jumped tooth of timing chain • ECM
P0367 P0392	Output voltage of VVT sensor less than 0.3 V 4 seconds (1 trip detection logic)	• Open or short in VVT sensor for exhaust camshaft circuit • VVT sensor for exhaust camshaft • Exhaust camshaft • Jumped tooth of timing chain • ECM
P0368 P0393	Output voltage of VVT sensor more than 4.7 V 4 seconds (1 trip detection logic)	• Open or short in VVT sensor for exhaust camshaft circuit • VVT sensor for exhaust camshaft • Exhaust camshaft • Jumped tooth of timing chain • ECM

Reference: Inspection using an oscilloscope

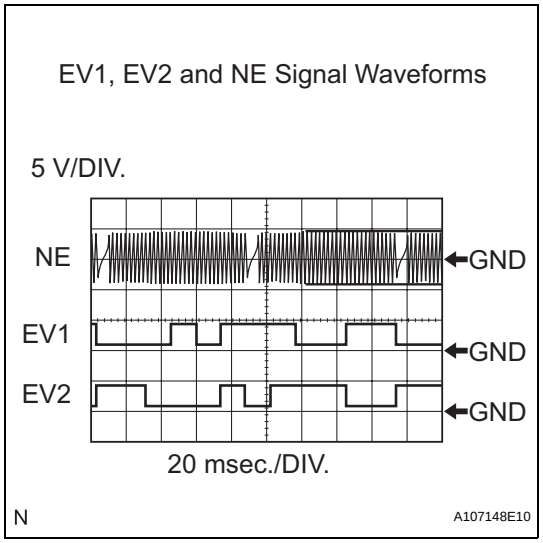

HINT:
- The correct waveform is as shown.
- EV1+ and EV2+ stand for the VVT sensor signal, and NE+ stands for the CKP sensor signal.

Item	Content
Terminal	NE+ - NE- EV1+ - EV1- EV2+ - EV2-
Equipment Setting	5 V/DIV. 20 msec./DIV.
Condition	Cranking or idling

MONITOR DESCRIPTION

If no signal is transmitted by the VVT sensor despite the engine revolving, or the rotations of the camshaft and the crankshaft are not synchronized, the ECM interprets this as a malfunction of the sensor.

MONITOR STRATEGY

Related DTCs	P0365: VVT sensor (bank 1) open/short P0365: VVT position/Crankshaft position misalignment (bank 1) P0367: VVT position sensor (bank 1) range check (low voltage) P0368: VVT position sensor (bank 1) range check (high voltage) P0390: VVT sensor (bank 2) open/short P0390: VVT position/Crankshaft position misalignment (bank 2) P0392: VVT position sensor (bank 2) range check (low voltage) P0393: VVT position sensor (bank 2) range check (high voltage)
Required Sensors/Components (Main)	VVT position sensor (bank 1 and 2)
Required Sensors/Components (Sub)	Crankshaft position sensor
Frequency of Operation	Continuous
Duration	4 seconds
MIL Operation	2 driving cycles: P0365, P0390 (cranking) Immediate: Others
Sequence of Operation	None

TYPICAL ENABLING CONDITIONS

All:

Monitor runs whenever following DTCs are not present	None

Chattering, Low voltage, High voltage:

Starter	OFF
Ignition switch	ON
Time after ignition switch OFF to ON	2 seconds or more
Battery voltage	8 V or more

P0365, P0390 (Engine running):

Engine speed	600 rpm or more
Battery voltage	8 V or more
Starter	OFF
Ignition switch	ON

P0365, P0390 (Cranking):

Starter	ON
Minimum battery voltage	Less than 11 V

TYPICAL MALFUNCTION THRESHOLDS

P0365, P0390 (Chattering):

Exhaust camshaft position sensor voltage	Less than 0.3 V, or more than 4.7 V

P0367, P0392 (Low voltage):

Exhaust camshaft position sensor voltage	Less than 0.3 V

P0368, P0393 (High voltage):

Exhaust camshaft position sensor voltage	More than 4.7 V

P0365, P0390 (Engine running, Cranking):

Exhaust camshaft position signal	No signal

COMPONENT OPERATING RANGE

VVT sensor voltage	0.3 to 4.7 V

WIRING DIAGRAM

Refer to DTC P0335 (See page ES-209).

INSPECTION PROCEDURE

Read freeze frame data using the intelligent tester. The ECM records vehicle and driving condition information as freeze frame data the moment a DTC is stored. When troubleshooting, freeze frame data can be helpful in determining whether the vehicle was running or stopped, whether the engine was warmed up or not, whether the air-fuel ratio was lean or rich, as well as other data recorded at the time of a malfunction (See page ES-40).

1 CHECK WIRE HARNESS (SENSOR POWER SOURCE)

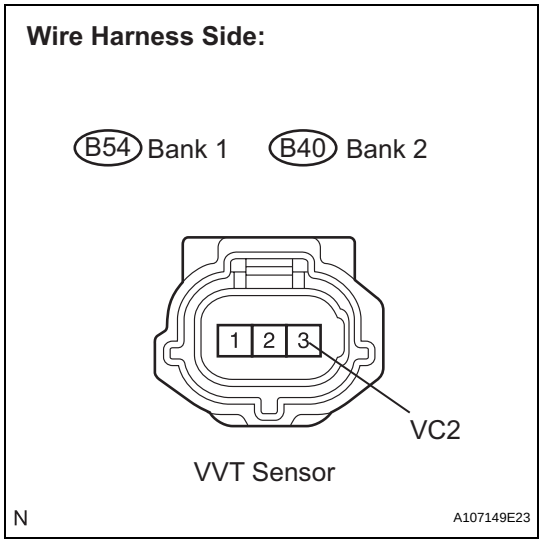

(a) Disconnect the B54 or B40 VVT sensor connector.
(b) Measure the voltage according to the value(s) in the table below.

Standard voltage

Tester Connection	Specified Condition
B54-3 (VC2) - Body ground	4.5 to 5.0 V
B40-3 (VC2) - Body ground	4.5 to 5.0 V

(c) Reconnect the VVT sensor connector.

NG → **REPAIR OR REPLACE HARNESS AND CONNECTOR**

OK

2 CHECK WIRE HARNESS (VVT SENSOR - ECM)

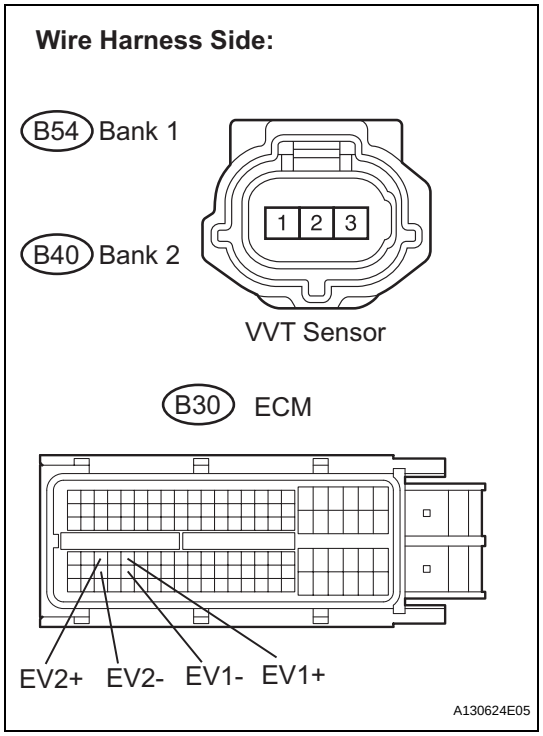

(a) Disconnect the B54 or B40 VVT sensor connector.
(b) Disconnect the B30 ECM connector.
(c) Measure the resistance according to the value(s) in the table below.

Standard resistance (Check for open)

Tester Connection	Specified Condition
B54-1 (EX+) - B30-68 (EV1+)	Below 1 Ω
B54-2 (EX-) - B30-91 (EV1-)	Below 1 Ω
B40-1 (EX+) - B30-66 (EV2+)	Below 1 Ω
B40-2 (EX-) - B30-89 (EV2-)	Below 1 Ω
B54-1 (EX+) or B30-68 (EV1+) - Body ground	10 kΩ or higher
B54-2 (EX-) or B30-91 (EV1-) - Body ground	10 kΩ or higher
B40-1 (EX+) or B30-66 (EV2+) - Body ground	10 kΩ or higher
B40-2 (EX-) or B30-89 (EV2-) - Body ground	10 kΩ or higher

(d) Reconnect the VVT sensor connector.
(e) Reconnect the ECM connector.

NG → **REPAIR OR REPLACE HARNESS AND CONNECTOR**

OK

ES

3	CHECK SENSOR INSTALLATION (VVT SENSOR FOR EXHAUST CAMSHAFT)

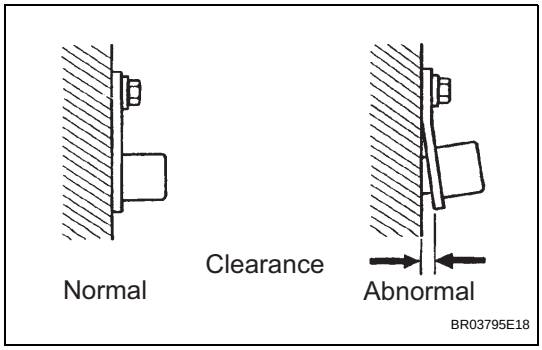

(a) Check the VVT sensor installation.
OK:
Sensor is installed correctly.

NG → **SECURELY REINSTALL SENSOR**

ES

OK

4	CHECK EXHAUST CAMSHAFT

(a) Check the teeth of the camshaft.

NG → **REPLACE EXHAUST CAMSHAFT**

OK

5	REPLACE VVT SENSOR

NEXT

6	CHECK WHETHER DTC OUTPUT RECURS

(a) Connect the intelligent tester to the DLC3.
(b) Turn the ignition switch ON.
(c) Turn the tester ON.
(d) Clear DTCs (see page ES-39).
(e) Start the engine.
(f) Select the following menu items: DIAGNOSIS / ENHANCED OBD II / DTC INFO / PENDING CODES.
(g) Read DTCs.

Result

Display (DTC Output)	Proceed to
No output	A
P0365, P0352, P0353, P0354, P0355 or P0356	B

HINT:
If the engine does not start, replace the ECM.

B → **REPLACE ECM**

A

END

DTC	P0420	Catalyst System Efficiency Below Threshold (Bank 1)

DTC	P0430	Catalyst System Efficiency Below Threshold (Bank 2)

MONITOR DESCRIPTION

The ECM uses sensors mounted in front of and behind the Three-Way Catalytic Converter (TWC) to monitor its efficiency.

The first sensor, the Air-Fuel Ratio (A/F) sensor, sends pre-catalyst information to the ECM. The second sensor, the Heated Oxygen (HO2) sensor, sends post-catalyst information to the ECM.

In order to detect any deterioration in the TWC, the ECM calculates the Oxygen Storage Capacity (OSC) of the TWC. This calculation is based on the voltage output of the HO2 sensor while performing active air-fuel ratio control, rather than the conventional detecting method, which uses the locus ratio.

The OSC value is an indication of the oxygen storage capacity of the TWC. When the vehicle is being driven with a warm engine, active air-fuel ratio control is performed for approximately 15 to 20 seconds. When it is performed, the ECM deliberately sets the air-fuel ratio to lean or rich levels. If the rich-lean cycle of the HO2 sensor is long, the OSC becomes greater. There is a direct correlation between the OSCs of the HO2 sensor and the TWC.

The ECM uses the OSC value to determine the state of the TWC. If any deterioration has occurred, it illuminates the MIL and sets the DTC.

DTC No.	DTC Detection Condition	Trouble Area
P0420	OSC value smaller than standard value under active air-fuel ratio control (2 trip detection logic)	• Front exhaust pipe (with TWC) • Gas leakage from exhaust system • Air-Fuel Ratio (A/F) sensor (bank 1 sensor 1) • Heated Oxygen (HO2) sensor (bank 1 sensor 2)
P0430	OSC value smaller than standard value under active air-fuel ratio control (2 trip detection logic)	• Gas leakage from exhaust system • Air-Fuel Ratio (A/F) sensor (bank 2 sensor 1) • Heated Oxygen (HO2) sensor (bank 2 sensor 2) • Exhaust manifold (TWC)

HINT:

- Bank 1 refers to the bank that includes No. 1 cylinder.
- Bank 2 refers to the bank that does not include No. 1 cylinder.
- Sensor 1 refers to the sensor closest to the engine assembly.
- Sensor 2 refers to the sensor farthest away from the engine assembly.

MONITOR STRATEGY

Related DTCs	P0420: Catalyst Deterioration (bank 1) P0430: Catalyst Deterioration (bank 2)
Required Sensors/Components (Main)	A/F sensor and HO2 sensor
Required Sensors/Components (Related)	Intake air temperature sensor, mass air flow meter, crankshaft position sensor and engine coolant temperature sensor
Frequency of Operation	Once per driving cycle
Duration	About 30 seconds
MIL Operation	2 driving cycles
Sequence of Operation	None

TYPICAL ENABLING CONDITIONS

Monitor runs whenever following DTCs not present	P0011 (VVT System 1 - Advance) P0012 (VVT System 1 - Retard) P0021 (VVT System 2 - Advance) P0022 (VVT System 2 - Retard) P0031, P0032, P0051, P0052 (A/F Sensor heater - Sensor 1) P0037, P0038, P0057, P0058 (O2 Sensor heater - Sensor 2) P0100 - P0103 (MAF meter) P0115 - P0118 (ECT sensor) P0120 - P0223, P2135 (TP sensor) P0125 (Insufficient ECT for Closed Loop) P0136, P0156 (O2 Sensor - Sensor 2) P0171, P0172 (Fuel system) P0300 - P0306 (Misfire) P0335 (CKP sensor) P0340 (CMP sensor) P0351 - P0356 (Igniter) P0500 (VSS) P2196, P2198 (A/F Sensor - rationality) P2A00, P2A03 (A/F Sensor - slow response)
Battery voltage	11 V or more
Intake air temperature	-10°C (14°F) or more
Engine coolant temperature	75°C (167°F) or more
Atmospheric pressure	76 kPa (570 mmHg) or more
Idling	OFF
Engine RPM	Less than 3,200 rpm
A/F sensor status	Activated
Fuel system status	Closed loop
Engine load	10 to 70%
All of following conditions (a), (b) and (c) met	-
(a) Mass air flow rate	5 to 60 g/sec.
(b) Estimated front catalyst temperature	600 to 750°C (1,112 to 1,382°F)
(c) Estimated rear catalyst temperature	100 to 900°C (212 to 1,652°F)
EVAP system monitor	The monitor has not run yet or the vacuum introduction has been completed
A/F sensor monitor	Completed
Rear HO2 sensor heater monitor	Completed
Shift position	4th or higher

TYPICAL MALFUNCTION THRESHOLDS

Oxygen Storage Capacity (OSC) of Three-Way Catalytic Converter (TWC)	Less than 0.046 g

MONITOR RESULT

Refer to CHECKING MONITOR STATUS (see page ES-19).

CONFIRMATION DRIVING PATTERN

HINT:

Performing this confirmation pattern will activate the catalyst monitor. This is very useful for verifying the completion of a repair.

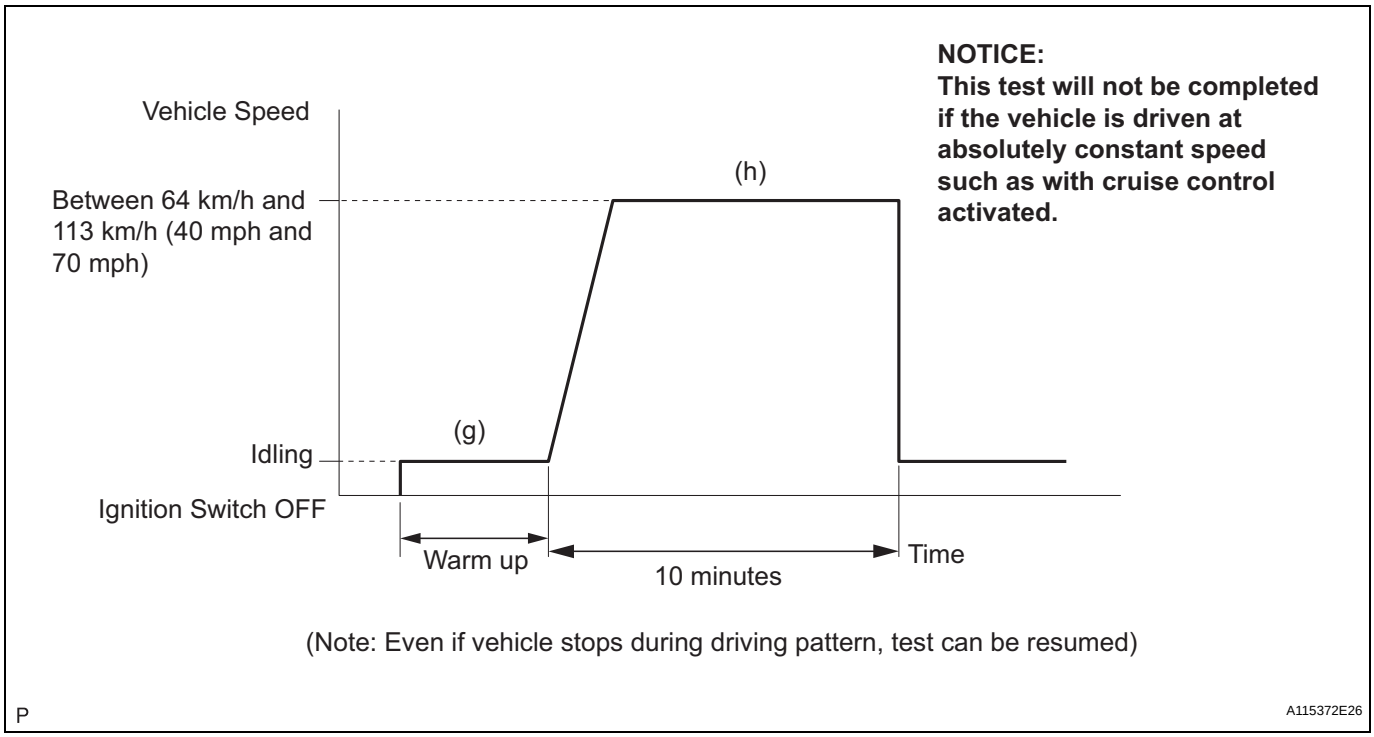

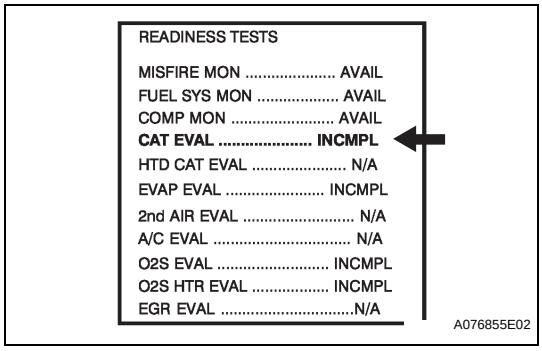

(a) Connect the intelligent tester to the DLC3.
(b) Turn the ignition switch ON.
(c) Turn the tester ON.
(d) Clear DTCs (if set) (see page ES-39).
(e) Select the following menu items: DIAGNOSIS / ENHANCED OBD II / DATA LIST / USER DATA / CAT CMPL.
(f) Check that CAT CMPL is INCMPL (incomplete).
(g) Start the engine and warm it up.
(h) Drive the vehicle at between 64 km/h and 113 km/h (40 mph and 70 mph) for at least 10 minutes.
(i) Note the state of the Readiness Tests items. Those items will change to COMPL (complete) as CAT CMPL monitor operates.
(j) On the tester, select the following menu items: DIAGNOSIS / ENHANCED OBD II / DTC INFO / PENDING CODES and check if any DTCs (any pending DTCs) are set.
HINT:
If CAT CMPL does not change to COMPL, and any pending DTCs fail to set, extend the driving time.

CONDITIONING FOR SENSOR TESTING

HINT:
Perform the operation with the engine speeds and time durations described below prior to checking the waveforms of the A/F and HO2 sensors. This is in order to activate the sensors sufficiently to obtain the appropriate inspection results.

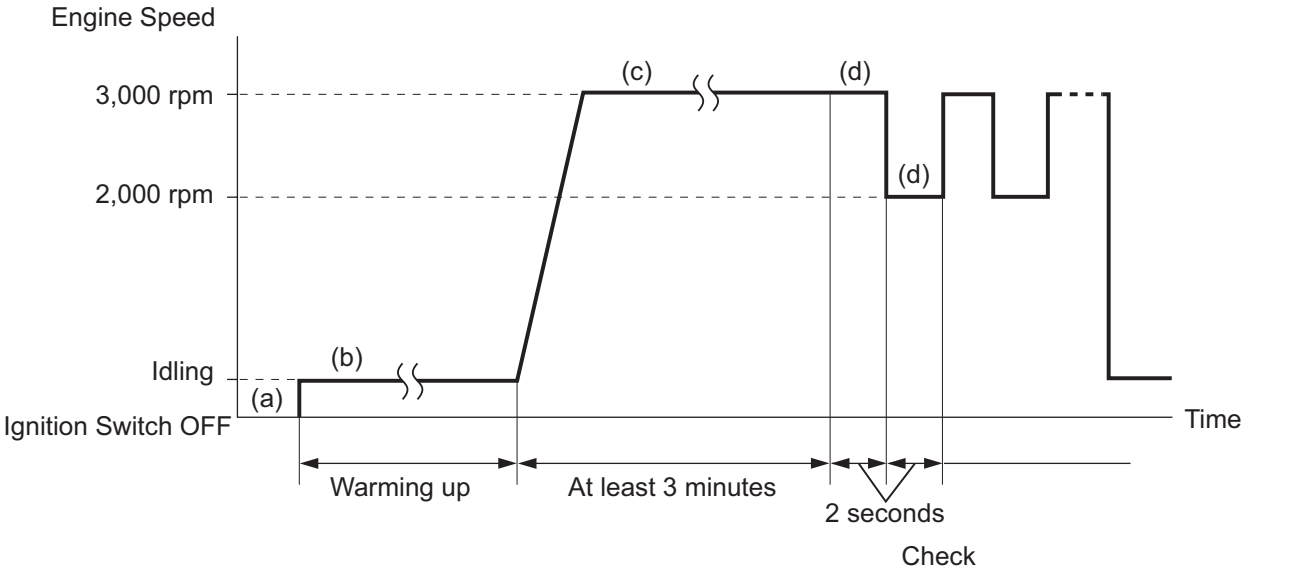

(a) Connect the intelligent tester to the DLC3.
(b) Start the engine and warm it up with all the accessories switched OFF, until the engine coolant temperature stabilizes.
(c) Run the engine at an engine speed of between 2,500 rpm and 3,000 rpm for at least 3 minutes.
(d) While running the engine at 3,000 rpm and 2,000 rpm alternating at 2 second intervals, check the waveforms of the A/F and HO2 sensors using the tester.
HINT:

- If either voltage output of the Air-Fuel Ratio (A/F) or Heated Oxygen (HO2) sensor does not fluctuate, or there is a noise in the waveform of either sensor, the sensor may be malfunctioning.
- If the voltage outputs of both the sensors remain lean or rich, the air-fuel ratio may be extremely lean or rich. In such cases, perform the following A/F CONTROL using the intelligent tester.
- If the Three-Way Catalytic Converter (TWC) has deteriorated, the HO2 sensor (located behind the TWC) voltage output fluctuates up and down frequently, even under normal driving conditions (active air-fuel ratio control is not performed).

Voltage output when active air-fuel ratio control not performed:

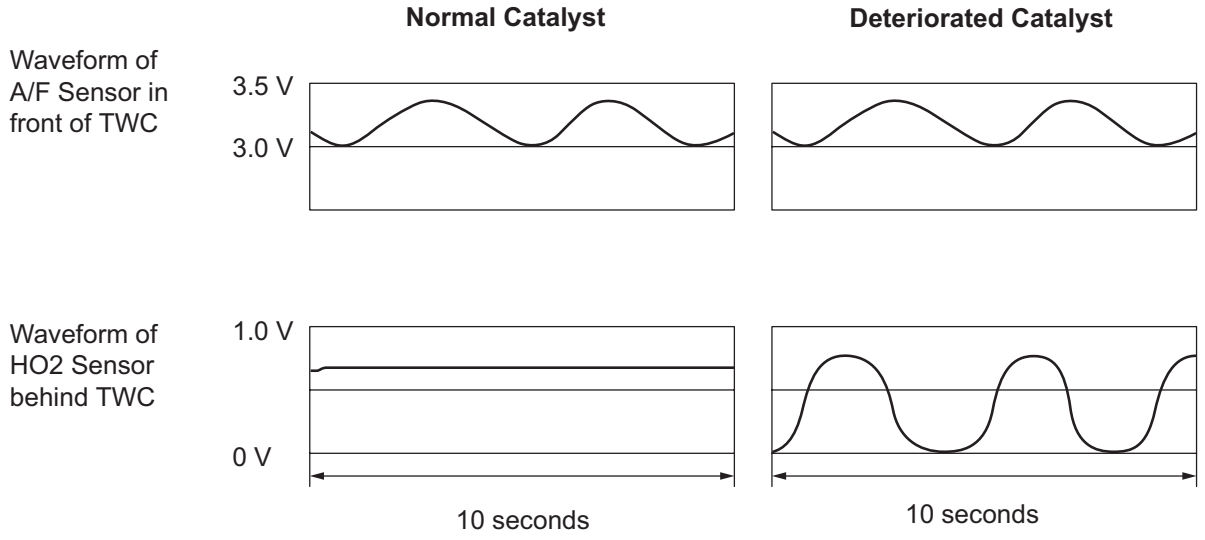

INSPECTION PROCEDURE

HINT:
Read freeze frame data using the intelligent tester. Freeze frame data records the engine condition when malfunctions are detected. When troubleshooting, freeze frame data can help determine if the vehicle was moving or stationary, if the engine was warmed up or not, if the air-fuel ratio was lean or rich, and other data from the time the malfunction occurred.

1	CHECK ANY OTHER DTCS OUTPUT (IN ADDITION TO DTC P0420 OR P0430)

(a) Connect the intelligent tester to the DLC3.
(b) Turn the ignition switch ON and turn the tester ON.
(c) Select the following menu items: DIAGNOSIS / ENHANCED OBD II / DTC INFO / CURRENT CODES.
(d) Read DTCs.

Result

Display (DTC Output)	Proceed to
P0420 or P0430	A
P0420 or P0430 and other DTCs	B

HINT:
If any DTCs other than P0420 or P0430 are output, troubleshoot those DTCs first.

B → GO TO DTC CHART

A

2	PERFORM ACTIVE TEST USING INTELLIGENT TESTER (A/F CONTROL)

(a) Connect the intelligent tester to the DLC3.
(b) Start the engine and turn the tester ON.

(c) Warm up the engine at an engine speed of 2,500 rpm for approximately 90 seconds.
(d) On the tester, select the following menu items: DIAGNOSIS / ENHANCED OBD II / ACTIVE TEST / A/F CONTROL.
(e) Perform the A/F CONTROL operation with the engine in an idling condition (press the RIGHT or LEFT button to change the fuel injection volume).
(f) Monitor the voltage outputs of the A/F and HO2 sensors (AFS B1 S1 and O2S B1 S2 or AFS B2 S1 and O2S B2 S2) displayed on the tester.

Result:

A/F sensor reacts in accordance with increases and decreases in fuel injection volume:
+25% = Rich output:
Less than 3.0 V
-12.5% = Lean output:
More than 3.35 V

NOTICE:
The A/F sensor has an output delay of a few seconds and the HO2 sensor has a maximum output delay of approximately 20 seconds.

Case	A/F Sensor (Sensor 1) Output Voltage		HO2 Sensor (Sensor 2) Output Voltage		Main Suspected Trouble Area
1	Injection Volume +25% -12.5%		Injection Volume +25% -12.5%		• Catalyst • Exhaust gas leakage
	Output Voltage More than 3.35 V Less than 3.0 V		Output Voltage More than 0.5 V Less than 0.4 V		
2	Injection Volume +25% -12.5%		Injection Volume +25% -12.5%		• A/F sensor • A/F sensor heater • A/F sensor circuit
	Output Voltage Almost no reaction		Output Voltage More than 0.5 V Less than 0.4 V		
3	Injection Volume +25% -12.5%		Injection Volume +25% -12.5%		• HO2 sensor • HO2 sensor heater • HO2 sensor circuit
	Output Voltage More than 3.35 V Less than 3.0 V		Output Voltage Almost no reaction		
4	Injection volume +25% -12.5%		Injection Volume +25% -12.5%		Extremely rich or lean actual air-fuel ratio • Injector • Fuel pressure • Gas leakage from exhaust system
	Output Voltage Almost no reaction		Output Voltage Almost no reaction		

Following the A/F CONTROL procedure enables technicians to check and graph the voltage outputs of both the A/F and HO2 sensors.

To display the graph, select the following menu items on the tester: DIAGNOSIS / ENHANCED OBD II / ACTIVE TEST / A/F CONTROL / USER DATA / AFS B1 S1 and O2S B1 S2 or AFS B2 S1 and O2S B2 S2; then press the YES button and then the ENTER button followed by the F4 button.

Result

Result	Proceed to
Case 1	A
Case 2	B
Case 3	C
Case 4	D

B → REPLACE AIR-FUEL RATIO SENSOR

C → Go to step 4

D → CHECK CAUSE OF EXTREMELY RICH OR LEAN ACTUAL AIR-FUEL RATIO, REPLACE FAULTY AREA AND GO TO NEXT STEP

A

3 CHECK FOR EXHAUST GAS LEAKAGE

OK:
No gas leakage.

NG → REPAIR OR REPLACE EXHAUST GAS LEAKAGE POINT

OK

REPLACE THREE-WAY CATALYTIC CONVERTER (BOTH FRONT AND REAR CATALYSTS (FRONT EXHAUST PIPE))

4 CHECK FOR EXHAUST GAS LEAKAGE

OK:
No gas leakage.

NG → REPAIR OR REPLACE EXHAUST GAS LEAKAGE POINT

OK

REPLACE HEATED OXYGEN SENSOR

DTC	P043E	Evaporative Emission System Reference Orifice Clog Up

DTC	P043F	Evaporative Emission System Reference Orifice High Flow

DTC	P2401	Evaporative Emission Leak Detection Pump Stuck OFF

DTC	P2402	Evaporative Emission Leak Detection Pump Stuck ON

DTC	P2419	Evaporative Emission System Switching Valve Control Circuit Low

DTC SUMMARY

DTC	Monitoring Item	Malfunction Detection Condition	Trouble Area	Detection Timing	Detection Logic
P043E	Reference orifice clogged	P043E, P043F, P2401, P2402 and P2419 present when one of following conditions met during key-off EVAP monitor: • Reference orifice clogged • Reference orifice high-flow • Leak detection pump OFF malfunction • Leak detection pump ON malfunction • Vent valve ON (close) malfunction	• Canister pump module (Reference orifice, leak detection pump, vent valve) • Connector/wire harness (Canister pump module - ECM) • EVAP system hose (pipe from air inlet port to canister pump module, canister filter, fuel tank vent hose) • ECM	While ignition switch OFF	2 trip
P043F	Reference orifice high-flow				
P2401	Leak detection pump stuck OFF				
P2402	Leak detection pump stuck ON				
P2419	Vent valve stuck closed				

HINT:
The reference orifice is located inside the canister pump module.

DESCRIPTION

The description can be found in the EVAP (Evaporative Emission) System (see page ES-371).

INSPECTION PROCEDURE

Refer to the EVAP System (see page ES-376).

MONITOR DESCRIPTION

5 hours* after the ignition switch is turned OFF, the leak detection pump creates negative pressure (vacuum) in the EVAP system. The ECM monitors for leaks and actuator malfunctions based on the EVAP pressure.
HINT:
*: If the engine coolant temperature is not below 35°C (95°F) 5 hours after the ignition switch is turned OFF, the monitor check starts 2 hours later. If it is still not below 35°C (95°F) 7 hours after the ignition switch is turned OFF, the monitor check starts 2.5 hours later.

Sequence	Operation	Description	Duration
-	ECM activation	Activated by soak timer 5, 7 or 9.5 hours after ignition switch turned OFF.	-
A	Atmospheric pressure measurement	Vent valve turned OFF (vent) and EVAP system pressure measured by ECM in order to register atmospheric pressure. If pressure in EVAP system not between 76 kPa-a and 110 kPa-a (570 mmHg-a and 825 mmHg-a), ECM cancels EVAP system monitor.	10 seconds
B	First reference pressure measurement	In order to determine reference pressure, leak detection pump creates negative pressure (vacuum) through reference orifice and then ECM checks if leak detection pump and vent valve operate normally.	60 seconds
C	EVAP system pressure measurement	Vent valve turned ON (closed) to shut EVAP system. Negative pressure (vacuum) created in EVAP system, and EVAP system pressure then measured. Write down measured value as it will be used in leak check. If EVAP pressure does not stabilize within 15 minutes, ECM cancels EVAP system monitor.	15 minutes*
D	Purge VSV monitor	Purge VSV opened and then EVAP system pressure measured by ECM. Large increase indicates normality.	10 seconds
E	Second reference pressure measurement	After second reference pressure measurement, leak check performed by comparing first and second reference pressure. If stabilized system pressure higher than second reference pressure, ECM determines that EVAP system leaking.	60 seconds
-	Final check	Atmospheric pressure measured and then monitoring result recorded by ECM.	-

*: If only a small amount of fuel is in the fuel tank, it takes longer for the EVAP pressure to stabilize.

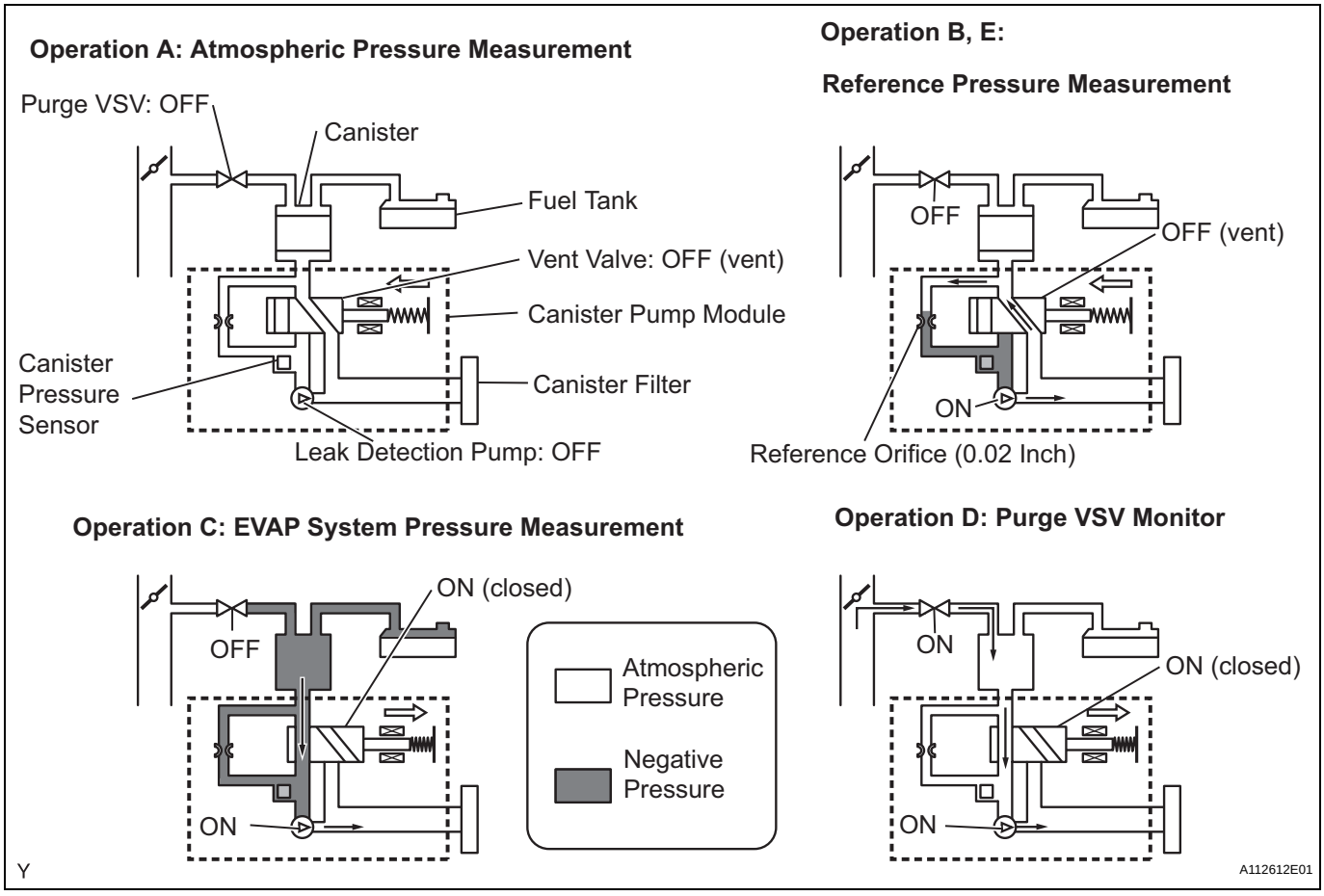

The leak detection pump creates negative pressure through the reference orifice. When the system is normal, the EVAP pressure is between 724 to 752 mmHg* and saturated within a minute. If not, the ECM interprets this as a malfunction. The ECM will illuminate the MIL and set DTC if this malfunction is detected in consecutive drive cycles.

*: Typical value.

EVAP Pressure during EVAP key-off monitor

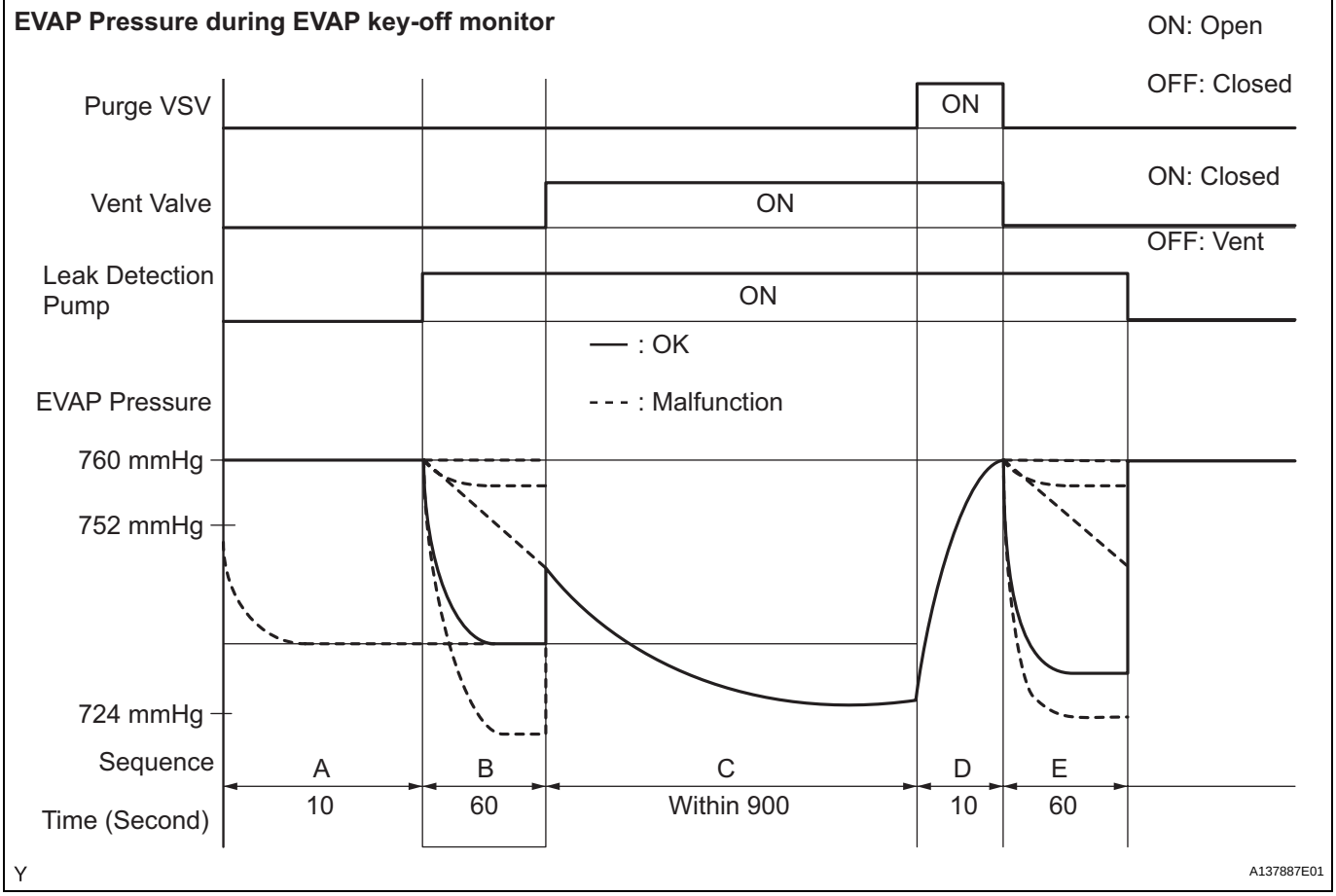

MONITOR STRATEGY

Required Sensors/Components	Canister pump module
Frequency of Operation	Once per driving cycle
Duration	Within 2 minutes
MIL Operation	2 driving cycles
Sequence of Operation	None

TYPICAL ENABLING CONDITIONS

Monitor runs whenever following DTCs not present	None
EVAP key-off monitor runs when all of following conditions met	-
Atmospheric pressure	70 to 110 kPa-a (525 to 825 mmHg-a)
Battery voltage	10.5 V or more
Vehicle speed	Below 4 km/h (2.5 mph)
Ignition switch	OFF
Time after key off	5 or 7 or 9.5 hours
Canister pressure sensor malfunction (P0450, P0451, P0452 and P0453)	Not detected
Purge VSV	Not operated by scan tool
Vent valve	Not operated by scan tool
Leak detection pump	Not operated by scan tool
Both of following conditions met before key off	Conditions 1 and 2
1. Duration that vehicle driven	5 minutes or more
2. EVAP purge operation	Performed

ECT	4.4° to 35°C (40° to 95°F)
IAT	4.4° to 35°C (40° to 95°F)

1. Key-off monitor sequence 1 to 8

1. Atmospheric pressure measurement

Next sequence run if following condition set	-
Atmospheric pressure change	Less than 0.3 kPa-g (2.25 mmHg-g) in 1 second

2. First reference pressure measurement

Next sequence run if all of following conditions set	Condition 1, 2 and 3
1. EVAP pressure just after reference pressure measurement started	-1 kPa-g (-7.5 mmHg-g) or less
2. Reference pressure	-4.85 to -1.057 kPa-g (-36.4 to -7.93 mmHg-g)
3. Reference pressure	Saturated within 60 seconds

3. Vent valve stuck closed check

Next sequence run if following condition set	-
EVAP pressure change after vent valve ON (closed)	0.3 kPa-g (2.25 mmHg-g) or more

4. Vacuum introduction

Next sequence run if following condition set	-
EVAP pressure	Saturated within 15 minutes

5. Purge VSV stuck closed check

Next sequence run if following condition set	-
EVAP pressure change after purge VSV ON (open)	0.3 kPa-g (2.25 mmHg-g) or more

6. Second reference pressure measurement

Next sequence run if all of following conditions set	Condition 1, 2, 3 and 4
1. EVAP pressure just after reference pressure	-1 kPa-g (-7.5 mmHg-g) or less
2. Reference pressure	-4.85 to -1.057 kPa-g (-36.4 to -7.93 mmHg-g)
3. Reference pressure	Saturated within 60 seconds
4. Reference pressure difference between first and second	Less than 0.7 kPa-g (5.25 mmHg-g)

7. Leak check

Next sequence run if following condition set	-
EVAP pressure when vacuum introduction complete	Second reference pressure or less

8. Atmospheric pressure measurement

EVAP monitor complete if following condition set	-
Atmospheric pressure difference between sequence 1 and 8	Within 0.3 kPa-g (2.25 mmHg-g)

TYPICAL MALFUNCTION THRESHOLDS

"Saturated" indicates that the EVAP pressure change is less than 0.286 kPa-g (2.14 mmHg-g) in 60 seconds.

One of following conditions met	-
EVAP pressure just after reference pressure measurement started	More than -1 kPa-g (-7.5 mmHg-g)
Reference pressure	Less than -4.85 kPa-g (-36.4 mmHg-g)
Reference pressure	-1.057 kPa-g (-7.93 mmHg-g) or more
Reference pressure	Not saturated within 60 seconds
Reference pressure difference between first and second	0.7 kPa-g (5.25 mmHg-g) or more

MONITOR RESULT

Refer to CHECKING MONITOR STATUS (see page ES-19).

DTC	P0441	Evaporative Emission Control System Incorrect Purge Flow

DTC SUMMARY

DTC	Monitoring Item	Malfunction Detection Condition	Trouble Area	Detection Timing	Detection Logic
P0441	Purge VSV (Vacuum Switching Valve) stuck open	Leak detection pump creates negative pressure (vacuum) in EVAP system and EVAP system pressure measured. Reference pressure measured at start and at end of leak check. If stabilized pressure higher than [second reference pressure x 0.2], ECM determines that purge VSV stuck open.	• Purge VSV • Connector/wire harness (Purge VSV - ECM) • ECM • Canister pump module • Leakage from EVAP system	While ignition switch OFF	2 trip
	Purge VSV stuck closed	After EVAP leak check performed, purge VSV turned ON (open), and atmospheric air introduced into EVAP system. Reference pressure measured at start and at end of check. If pressure does not return to near atmospheric pressure, ECM determines that purge VSV stuck closed.	• Purge VSV • Connector/wire harness (Purge VSV - ECM) • ECM • Canister pump module • Leakage from EVAP system	While ignition switch OFF	2 trip
	Purge flow	While engine running, following conditions successively met: • Negative pressure not created in EVAP system when purge VSV turned ON (open) • EVAP system pressure change less than 0.5 kPa-g (3.75 mmHg-g) when vent valve turned ON (closed) • Atmospheric pressure change before and after purge flow monitor less than 0.1 kPa-g (0.75 mmHg-g)	• Purge VSV • Connector/wire harness (Purge VSV - ECM) • Leakage from EVAP line (Purge VSV - Intake manifold) • ECM	While engine running	2 trip

DESCRIPTION

The description can be found in the EVAP (Evaporative Emission) System (see page ES-371).

INSPECTION PROCEDURE

Refer to the EVAP System (see page ES-376).

MONITOR DESCRIPTION

The two monitors, Key-Off and Purge Flow, are used to detect malfunctions relating to DTC P0441. The Key-Off monitor is initiated by the ECM internal timer, known as the soak timer, 5 hours* after the ignition switch is turned OFF. The purge flow monitor runs while the engine is running.

1. KEY-OFF MONITOR

   5 hours* after the ignition switch is turned OFF, the leak detection pump creates negative pressure (vacuum) in the EVAP system. The ECM monitors for leaks and actuator malfunctions based on the EVAP pressure.

   HINT:

   *: If the engine coolant temperature is not below 35°C (95°F) 5 hours after the ignition switch is turned OFF, the monitor check starts 2 hours later. If it is still not below 35°C (95°F) 7 hours after the ignition switch is turned OFF, the monitor check starts 2.5 hours later.

Sequence	Operation	Description	Duration
-	ECM activation	Activated by soak timer 5, 7 or 9.5 hours after ignition switch turned OFF.	-

Sequence	Operation	Description	Duration
A	Atmospheric pressure measurement	Vent valve turned OFF (vent) and EVAP system pressure measured by ECM in order to register atmospheric pressure. If pressure in EVAP system not between 76 kPa-a and 110 kPa-a (570 mmHg-a and 825 mmHg-a), ECM cancels EVAP system monitor.	10 seconds
B	First reference pressure measurement	In order to determine reference pressure, leak detection pump creates negative pressure (vacuum) through reference orifice and then ECM checks if leak detection pump and vent valve operate normally.	60 seconds
C	EVAP system pressure measurement	Vent valve turned ON (closed) to shut EVAP system. Negative pressure (vacuum) created in EVAP system, and EVAP system pressure then measured. Write down measured value as it will be used in leak check. If EVAP pressure does not stabilize within 15 minutes, ECM cancels EVAP system monitor.	15 minutes*
D	Purge VSV monitor	Purge VSV opened and then EVAP system pressure measured by ECM. Large increase indicates normality.	10 seconds
E	Second reference pressure measurement	After second reference pressure measurement, leak check performed by comparing first and second reference pressure. If stabilized system pressure higher than second reference pressure, ECM determines that EVAP system leaking.	60 seconds
-	Final check	Atmospheric pressure measured and then monitoring result recorded by ECM.	-

*: If only a small amount of fuel is in the fuel tank, it takes longer for the EVAP pressure to stabilize.

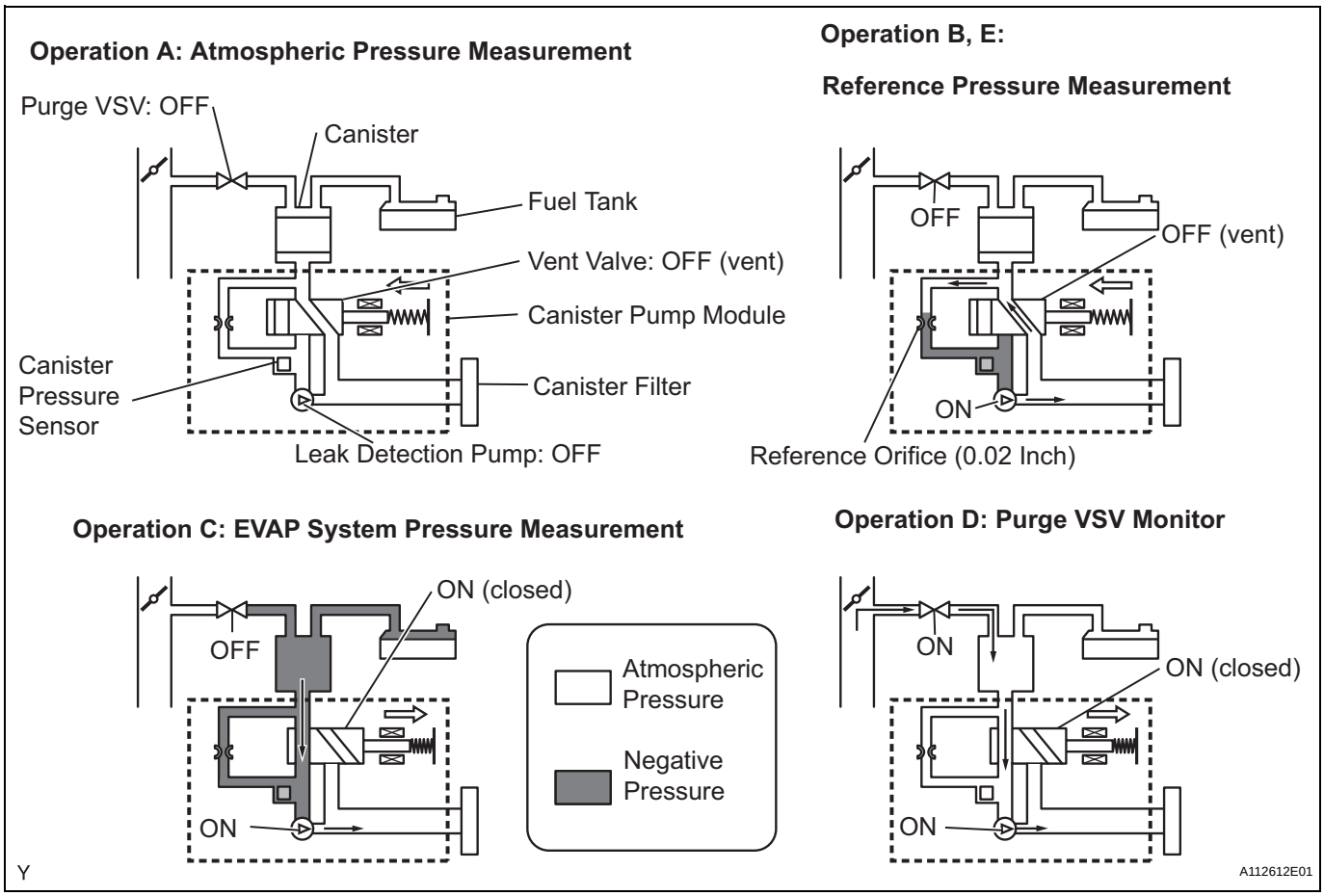

(a) Purge VSV stuck open

In operation C, the leak detection pump creates negative pressure (vacuum) in the EVAP system. The EVAP system pressure is then measured by the ECM using the canister pressure sensor. If the stabilized system pressure is higher than [second reference pressure x 0.2], the ECM interprets this as the purge VSV (Vacuum Switching Valve) being stuck open. The ECM illuminates the MIL and sets the DTC (2 trip detection logic).

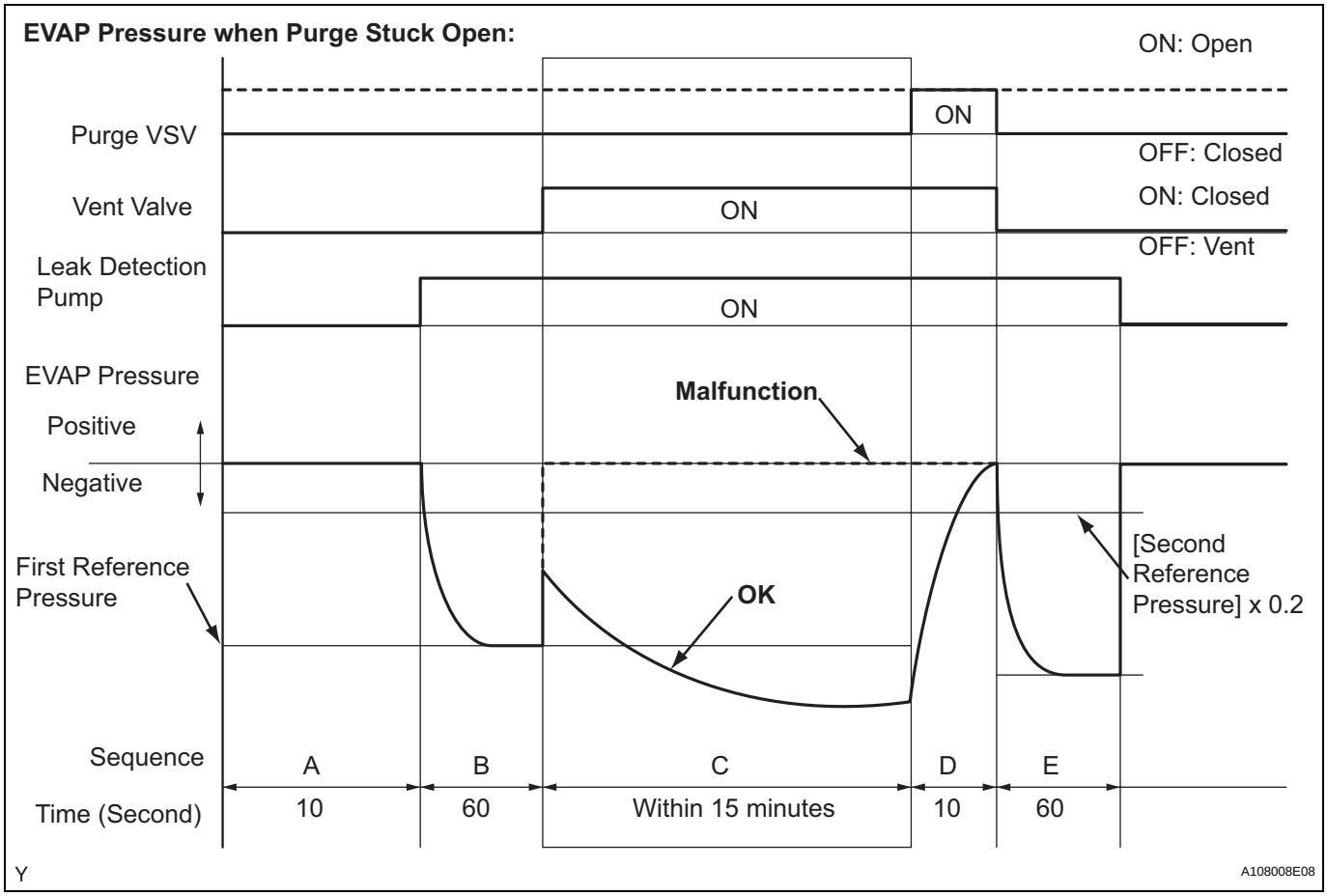

(b) Purge VSV stuck closed

In operation D, the canister pressure sensor measures the EVAP system pressure. The pressure measurement for the purge VSV monitor is begun when the purge VSV is turned ON (open) after the EVAP leak check. When the measured pressure indicates an increase of 0.3 kPa-g (2.25 mmHg-g) or more, the purge VSV is functioning normally. If the pressure does not increase, the ECM interprets this as the purge VSV being stuck closed. The ECM illuminates the MIL and sets the DTC (2 trip detection logic).

EVAP Pressure when Purge VSV Stuck Closed:

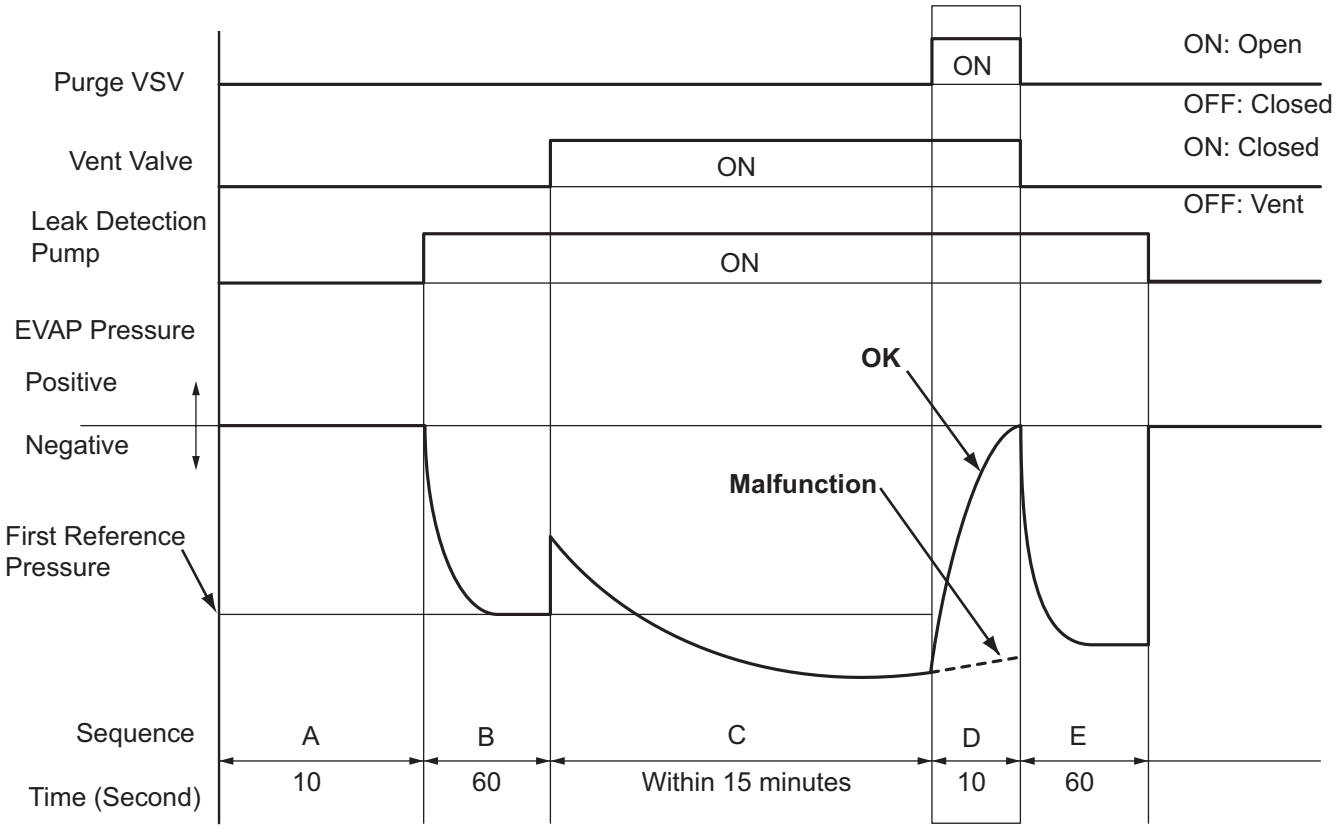

Y A106059E08

2. PURGE FLOW MONITOR

EVAP Pressure During Purge Flow Monitor:

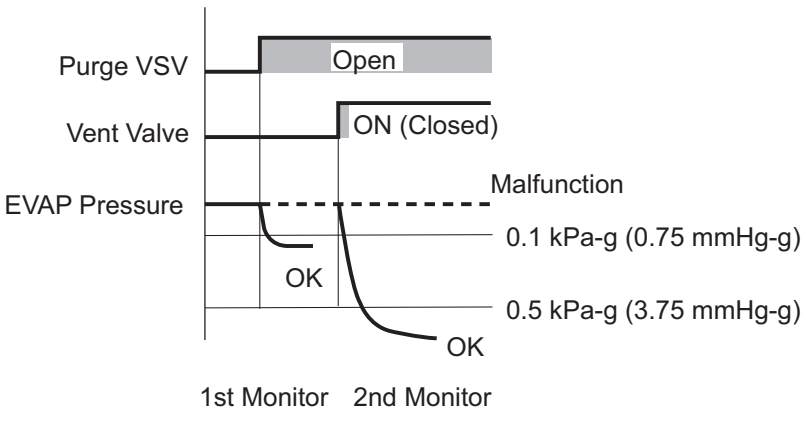

Y A112640E01

The purge flow monitor consists of the two step monitors. The 1st monitor is conducted every time and the 2nd monitor is activated if necessary.

- The 1st monitor
  While the engine is running and the purge VSV is ON (open), the ECM monitors the purge flow by measuring the EVAP pressure change. If negative pressure is not created, the ECM begins the 2nd monitor.
- The 2nd monitor
  The vent valve is turned ON (closed) and the EVAP pressure is then measured. If the variation in the pressure is less than 0.5 kPa-g (3.75 mmHg-g), the ECM interprets this as the purge VSV being stuck closed, and illuminates the MIL and sets DTC P0441 (2 trip detection logic).

Atmospheric pressure check:
In order to ensure reliable malfunction detection, the variation between the atmospheric pressures, before and after conduction of the purge flow monitor, is measured by the ECM.

OBD II MONITOR SPECIFICATIONS

1. Key-off Monitor

Monitor Strategy

Required Sensors/Components	Purge VSV and canister pump module
Frequency of Operation	Once per driving cycle
Duration	Within 15 minutes (varies with fuel in tank)
MIL Operation	2 driving cycles
Sequence of Operation	None

Typical Enabling Conditions

EVAP key-off monitor runs when all of following conditions met	-
Atmospheric pressure	70 to 110 kPa-a (525 to 825 mmHg-a)
Battery voltage	10.5 V or more
Vehicle speed	Below 4 km/h (2.5 mph)
Ignition switch	OFF
Time after key off	5 or 7 or 9.5 hours
Canister pressure sensor malfunction (P0450, P0451, P0452 and P0453)	Not detected
Purge VSV	Not operated by scan tool
Vent valve	Not operated by scan tool
Leak detection pump	Not operated by scan tool
Both of following conditions met before key off	Conditions 1 and 2
1. Duration that vehicle driven	5 minutes or more
2. EVAP purge operation	Performed
ECT	4.4 to 35°C (40° to 95°F)
IAT	4.4 to 35°C (40° to 95°F)

2. Key-off monitor sequence 1 to 8

1. Atmospheric pressure measurement

Next sequence run if following condition set	-
Atmospheric pressure change	Less than 0.3 kPa-g (2.25 mmHg-g) in 1 second

2. First reference pressure measurement

Next sequence run if all of following conditions set	Condition 1, 2 and 3
1. EVAP pressure just after reference pressure measurement started	-1 kPa-g (-7.5 mmHg-g) or less
2. Reference pressure	-4.85 to -1.057 kPa-g (-36.4 to -7.93 mmHg-g)
3. Reference pressure	Saturated within 60 seconds

3. Vent valve stuck closed check

Next sequence run if following condition set	-
EVAP pressure change after vent valve ON (closed)	0.3 kPa-g (2.25 mmHg-g) or more

4. Vacuum introduction

Next sequence run if following condition set	-
EVAP pressure	Saturated within 15 minutes

5. Purge VSV stuck closed check

Next sequence run if following condition set	-
EVAP pressure change after purge VSV ON (open)	0.3 kPa-g (2.25 mmHg-g) or more

6. Second reference pressure measurement

Next sequence run if all of following conditions set	Condition 1, 2, 3 and 4
1. EVAP pressure just after reference pressure	-1 kPa-g (-7.5 mmHg-g) or less
2. Reference pressure	-4.85 to -1.057 kPa-g (-36.4 to -7.93 mmHg-g)
3. Reference pressure	Saturated within 60 seconds
4. Reference pressure difference between first and second	Less than 0.7 kPa-g (5.25 mmHg-g)

7. Leak check

Next sequence run if following condition set	-
EVAP pressure when vacuum introduction complete	Second reference pressure or less

8. Atmospheric pressure measurement

EVAP monitor complete if following condition set	-
Atmospheric pressure difference between sequence 1 and 8	Within 0.3 kPa-g (2.25 mmHg-g)

Typical Malfunction Thresholds

Purge VSV stuck open:	-
EVAP pressure when vacuum introduction complete	Higher than reference pressure x 0.2

Purge VSV stuck closed:	-
EVAP pressure change after purge VSV ON (open)	Less than 0.3 kPa-g (2.25 mmHg-g)

OBD II MONITOR SPECIFICATIONS

1. Purge Flow Monitor

Monitor Strategy

Required Sensors/Components	Purge VSV and canister pump module
Frequency of Operation	Once per driving cycle
Duration	Within 10 minutes
MIL Operation	2 driving cycles
Sequence of Operation	None

Typical Enabling Conditions

Monitor runs whenever following DTCs not present	P0011 (VVT System 1 - Advance) P0012 (VVT System 1 - Retard) P0021 (VVT System 2 - Advance) P0022 (VVT System 2 - Retard) P0100 - P0103 (MAF meter) P0110 - P0113 (IAT sensor) P0115 - P0118 (ECT sensor) P0120 - P0223, P2135 (TP sensor) P0125 (Insufficient ECT for Closed Loop) P0171, P0172 (Fuel system) P0300 - P0306 (Misfire) P0335 (CKP sensor) P0340 (CMP sensor) P0351 - P0354 (Igniter) P0450 - P0453 (EVAP press sensor) P0500 (VSS)
Engine	Running

ECT	4.4°C (40°F) or more
IAT	4.4°C (40°F) or more
Canister pressure sensor malfunction	Not detected
Purge VSV	Not operated by scan tool
EVAP system check	Not operated by scan tool
Battery voltage	10 V or more
Purge duty cycle	8% or more

Typical Malfunction Thresholds

Both of following conditions met	Conditions 1 and 2
1. EVAP pressure change when purge operation started	Less than 0.1 kPa-g (0.75 mmHg-g)
2. EVAP pressure change during purge operation when vent valve closed	Less than 0.5 kPa-g (3.75 mmHg-g)

ES

MONITOR RESULT

Refer to CHECKING MONITOR STATUS (see page ES-19).

DTC	P0450	Evaporative Emission Control System Pressure Sensor / Switch

DTC	P0451	Evaporative Emission Control System Pressure Sensor Range / Performance

DTC	P0452	Evaporative Emission Control System Pressure Sensor / Switch Low Input

DTC	P0453	Evaporative Emission Control System Pressure Sensor / Switch High Input

DTC SUMMARY

DTC	Monitoring Item	Malfunction Detection Condition	Trouble Area	Detection Timing	Detection Logic
P0450	Canister pressure sensor voltage fluctuation abnormal	Sensor output voltage rapidly fluctuates beyond upper and lower malfunction thresholds for 0.5 seconds.	• Canister pump module • EVAP system hose (pipe from air inlet port to canister pump module, canister filter, fuel tank vent hose) • ECM	• EVAP monitoring (ignition switch OFF) • Ignition switch ON	1 trip
P0451	Canister pressure sensor noise	Sensor output voltage fluctuates frequently within certain time period.	• Canister pump module • Connector/wire harness (Canister pump module - ECM) • EVAP system hose (pipe from air inlet port to canister pump module, canister filter, fuel tank vent hose) • ECM	• EVAP monitoring (ignition switch OFF) • Engine running	2 trip
	Canister pressure sensor signal becomes fixed/flat	Sensor output voltage does not vary within certain time period.	• Canister pump module • Connector/wire harness (Canister pump module - ECM) • EVAP system hose (pipe from air inlet port to canister pump module, canister filter, fuel tank vent hose) • ECM	• EVAP monitoring (ignition switch OFF)	2 trip
P0452	Canister pressure sensor low input	EVAP pressure less than 42.1 kPa for 0.5 seconds.	• Canister pump module • Connector/wire harness (Canister pump module - ECM) • EVAP system hose (pipe from air inlet port to canister pump module, canister filter, fuel tank vent hose) • ECM	• Ignition switch ON • EVAP monitoring (ignition switch OFF)	1 trip

DTC	Monitoring Item	Malfunction Detection Condition	Trouble Area	Detection Timing	Detection Logic
P0453	Canister pressure sensor high input	EVAP pressure more than 123.8 kPa for 0.5 seconds.	• Canister pump module • Connector/wire harness (Canister pump module - ECM) • EVAP system hose (pipe from air inlet port to canister pump module, canister filter, fuel tank vent hose) • ECM	• Ignition switch ON • EVAP monitoring (ignition switch OFF)	1 trip

HINT:
The canister pressure sensor is built into the canister pump module.

ES

DESCRIPTION

The description can be found in the EVAP (Evaporative Emission) System (see page ES-371).

MONITOR DESCRIPTION

Canister Pressure Sensor Specification:

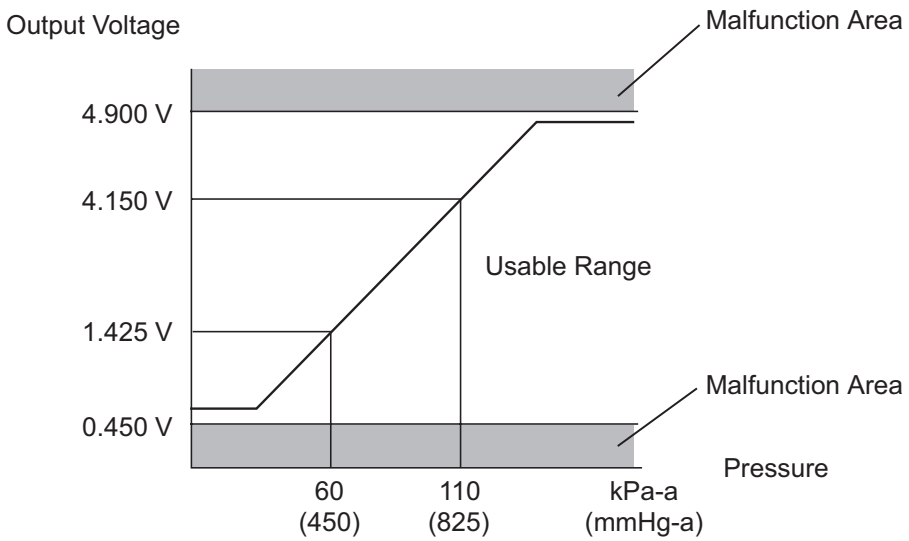

HINT:

Standard atmospheric pressure is 101.3 kPa-a (760 mmHg-a)

A115543E05

1. DTC P0450: Canister pressure sensor abnormal fluctuation
   If the canister pressure sensor output [pressure] rapidly fluctuates between less than 42.1 kPa-a (315.9 mmHg-a) and more than 123.8 kPa-a (928.4 mmHg-a), the ECM interprets this as an open or short circuit malfunction in the canister pressure sensor or its circuit, and stops the EVAP (Evaporative Emission) system monitor. The ECM then illuminates the MIL and sets the DTC (1 trip detection logic).

2. DTC P0451: Canister pressure sensor noise or fixed/flat
   If the canister pressure sensor voltage output fluctuates rapidly for 10 seconds, the ECM stops the EVAP system monitor. The ECM interprets this as noise from the canister pressure sensor, and stops the EVAP system monitor. The ECM then illuminates the MIL and sets the DTC.
   Alternatively, if the sensor voltage output does not change for 10 seconds, the ECM interprets this as the sensor being fixed/flat, and stops the monitor. The ECM then illuminates the MIL and sets the DTC. (Both the malfunctions are detected by 2 trip detection logic.)
3. DTC P0452: Canister pressure sensor voltage low
   If the canister pressure sensor output [pressure] is below 42.1 kPa-a (315.9 mmHg-a), the ECM interprets this as an open or short circuit malfunction in the canister pressure sensor or its circuit, and stops the EVAP system monitor. The ECM then illuminates the MIL and sets the DTC (1 trip detection logic).
4. DTC P0453: Canister pressure sensor voltage high
   If the canister pressure sensor output [pressure] is 123.8 kPa-a (928.4 mmHg-a) or more, the ECM interprets this as an open or short circuit malfunction in the canister pressure sensor or its circuit, and stops the EVAP system monitor. The ECM then illuminates the MIL and sets the DTC (1 trip detection logic).

MONITOR STRATEGY

Required Sensors/Components	Canister pump module
Frequency of Operation	Once per driving cycle: P0451 sensor fixed/flat Continuous: P0451 sensor noise, P0450, P0452 and P0453
Duration	0.5 seconds: P0450, P0452 and P0453 2 minutes: P0451
MIL Operation	Immediate: P0450, P0452 and P0453 2 driving cycles: P0451
Sequence of Operation	None

TYPICAL ENABLING CONDITIONS

P0451 (Noise monitor):

Monitor runs whenever following DTCs not present	None
Atmospheric pressure (absolute pressure)	70 to 110 kPa-a (525 to 825 mmHg-a)
Battery voltage	10.5 V or more
Intake air temperature	4.4 to 35°C (40 to 95°F)
Canister pressure sensor malfunction (P0450, P0452, 0453)	Not detected
Either of following conditions met	A or B
A. Engine condition	Running
B. Time after key off	5 or 7 or 9.5 hours

P0451 (Fixed/flat monitor):

Monitor runs whenever following DTCs not present	None
Battery voltage	10.5 V or more
Intake air temperature	4.4 to 35°C (40 to 95°F)
Canister pressure sensor malfunction (P0450, P0452, 0453)	Not detected
Atmospheric pressure (absolute pressure)	70 to 110 kPa-a (525 to 825 mmHg-a)
Time after key off	5 or 7 or 9.5 hours

P0450, P0452 and P0453:

Monitor runs whenever following DTCs not present	None
Either of following conditions met	(a) or (b)
(a) Ignition switch	ON
(b) Soak timer	ON

TYPICAL MALFUNCTION THRESHOLDS

P0450: Canister pressure sensor chattering

EVAP pressure	Less than 42.1 kPa-a (315.9 mmHg-a), or more than 123.8 kPa-a (928.4 mmHg-a)

P0451: Canister pressure sensor noise

Frequency that EVAP pressure change 0.3 kPa-g (2.25 mmHg-g) or more	10 times or more in 10 seconds

P0451: Canister pressure sensor fixed/flat

EVAP pressure change during reference pressure	Less than 0.65 kPa-g (4.87 mmHg-g)

P0452: Canister pressure sensor low voltage

EVAP pressure	Less than 42.1 kPa-a (315.9 mmHg-a)

P0453: Canister pressure sensor high voltage

EVAP pressure	More than 123.8 kPa-a (928.4 mmHg-a)

WIRING DIAGRAM

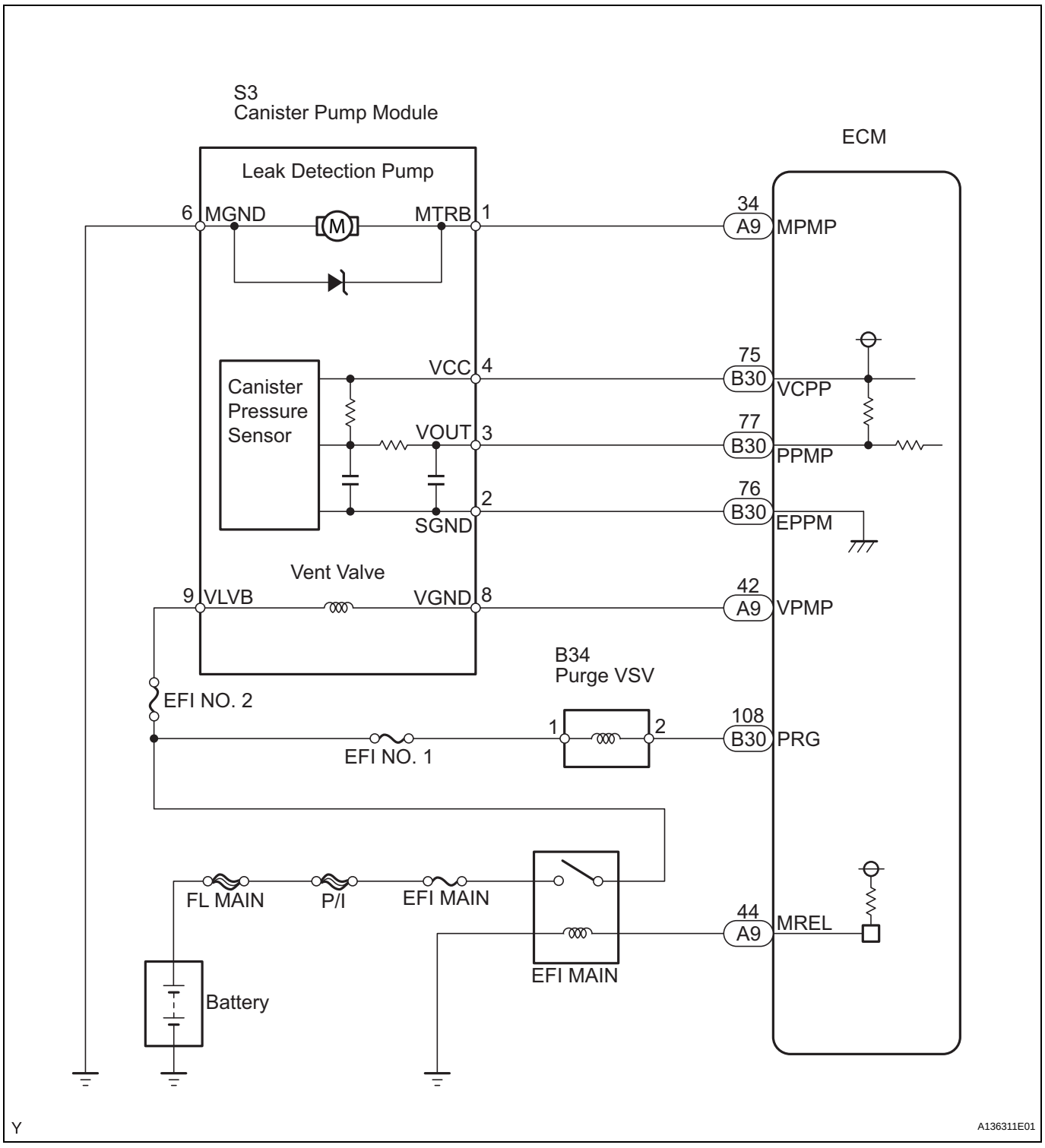

INSPECTION PROCEDURE

NOTICE:

- **When a vehicle is brought into the workshop, leave it as it is. Do not change the vehicle condition. For example, do not tighten the fuel cap.**
- **Do not disassemble the canister pump module.**
- **The intelligent tester is required to conduct the following diagnostic troubleshooting procedure.**

1	CONFIRM DTC AND EVAP PRESSURE

(a) Connect the intelligent tester to the DLC3.
(b) Turn the ignition switch ON (do not start the engine).
(c) Turn the tester ON.
(d) Select the following menu items: DIAGNOSIS / ENHANCED OBD II / DTC INFO / CURRENT CODES.
(e) Read DTCs.
(f) Select the following menu items: DIAGNOSIS / ENHANCED OBD II / DATA LIST / EVAP / EVAP VAPOR PRESS.
(g) Read the EVAP (Evaporative Emission) pressure displayed on the tester.

ES

Result

Display (DTC Output)	Test Result	Suspected Trouble Area	Proceed to
P0451	-	Canister pressure sensor	C
P0452	Less than 45 kPa-a (430 mmHg-a)	• Wire harness/connector (ECM - Canister pressure sensor) • Canister pressure sensor • Short in ECM circuit	A
P0453	More than 120 kPa-a (900 mmHg-a)	• Wire harness/connector (ECM - Canister pressure sensor) • Canister pressure sensor • Open in ECM circuit	B

B → Go to step 4

C → GO TO EVAP SYSTEM

A

2	CHECK WIRE HARNESS (CANISTER PUMP MODULE - ECM)

Wire Harness Side:

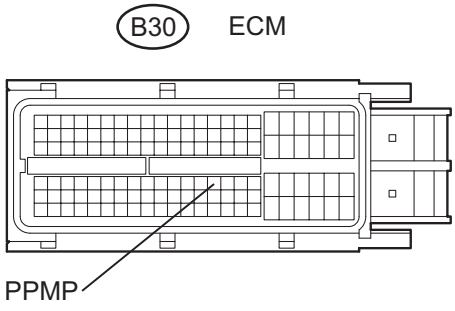

(a) Turn the ignition switch OFF.
(b) Disconnect the B30 ECM connector.
(c) Measure the resistance between PPMP terminal of the ECM connector and the body ground.

Result

Test Result	Suspected Trouble Area	Proceed to
10 Ω or less	• Wire harness/connector (ECM - Canister pressure sensor) • Short in canister pressure sensor circuit	A
10 kΩ or more	• Wire harness/connector (ECM - Canister pressure sensor) • Short in ECM circuit	B

(d) Reconnect the ECM connector.

B → **Go to step 7**

A

3 CHECK WIRE HARNESS (CANISTER PUMP MODULE - ECM)

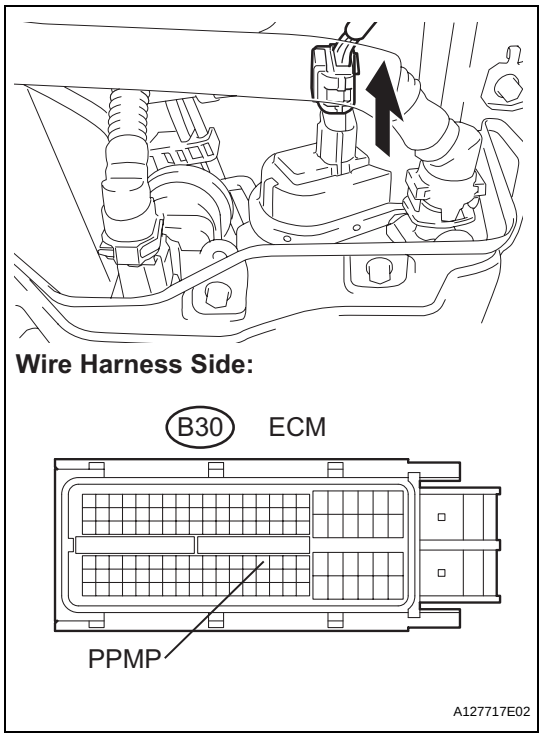

(a) Disconnect the S3 canister pump module connector.
(b) Disconnect the B30 ECM connector.
(c) Measure the resistance between PPMP terminal of the ECM connector and the body ground.

Result

Test Result	Suspected Trouble Area	Proceed to
10 kΩ or more	Short in canister pressure sensor circuit	A
10 Ω or less	Short in wire harness/connector (ECM - Canister pressure sensor)	B

(d) Reconnect the canister pump module connector.
(e) Reconnect the ECM connector.

A → **Go to step 5**

B → **Go to step 6**

4	CHECK WIRE HARNESS (CANISTER PUMP MODULE - ECM)

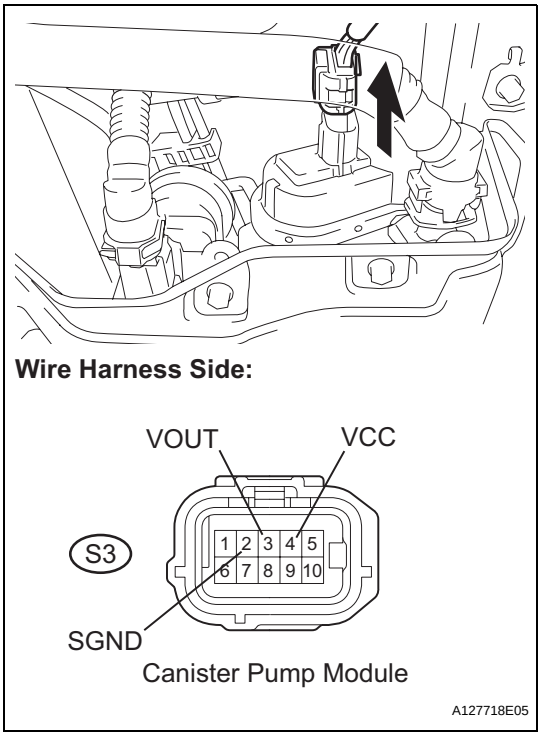

(a) Disconnect the S3 canister pump module connector.
(b) Turn the ignition switch ON.
(c) Measure the voltage and resistance of the canister connector.

Standard

Tester Connection	Specified Condition
S3-4 (VCC) - Body ground	4.5 to 5.5 V
S3-3 (VOUT) - Body ground	4.5 to 5.5 V
S3-2 (SGND) - Body ground	100 Ω or less

Result

Test Result	Suspected Trouble Area	Proceed to
Voltage and resistance within standard ranges	Open in canister pressure sensor circuit	A
Voltage and resistance outside standard ranges	Open in wire harness/connector (ECM - Canister pressure sensor)	B

(d) Reconnect the canister pump module connector.

A	Go to step 5
B	Go to step 6

5	REPLACE CHARCOAL CANISTER ASSEMBLY

(a) Replace the canister assembly (see page EC-10).

NOTICE:
When replacing the canister, check the canister pump module interior and related pipes for water, fuel and other liquids. If liquids are present, check for disconnections and/or cracks in the following: 1) the pipe from the air inlet port to the canister pump module; 2) the canister filter; and 3) the fuel tank vent hose.

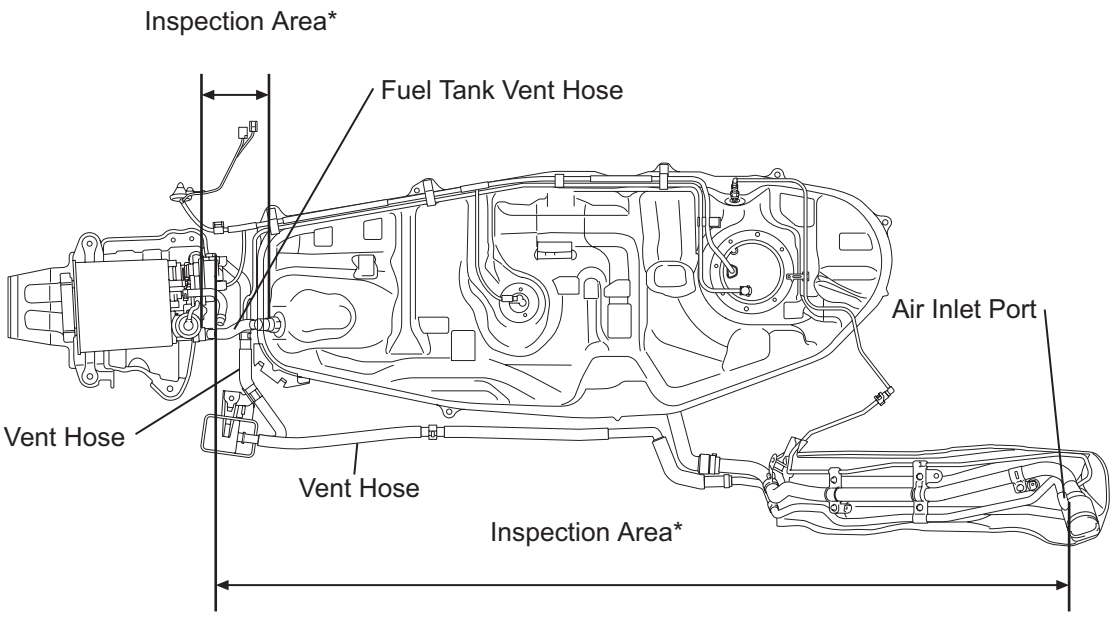

ES

NEXT → Go to step 8

6	REPAIR OR REPLACE HARNESS AND CONNECTOR

HINT:
If the exhaust tailpipe has been removed, go to the next step before reinstalling it.

NEXT → Go to step 8

7	REPLACE ECM

(a) Replace the ECM (see page ES-429).

NEXT → Go to step 8

8	CHECK WHETHER DTC OUTPUT RECURS (AFTER REPAIR)

(a) Connect the intelligent tester to the DLC3.
(b) Turn the ignition switch ON and turn the tester ON.
(c) Wait for at least 60 seconds.
(d) On the tester, select the following menu items: DIAGNOSIS / ENHANCED OBD II / DTC INFO / PENDING CODES.

HINT:
If no pending DTCs are displayed on the tester, the repair has been successfully completed.

NEXT

COMPLETED

DTC	P0455	Evaporative Emission Control System Leak Detected (Gross Leak)

DTC	P0456	Evaporative Emission Control System Leak Detected (Very Small Leak)

DTC SUMMARY

DTCs	Monitoring Item	Malfunction Detection Condition	Trouble Area	Detection Timing	Detection Logic
P0455	EVAP gross leak	Leak detection pump creates negative pressure (vacuum) in EVAP system and EVAP system pressure measured. Reference pressure measured at start and at end of leak check. If stabilized pressure higher than [second reference pressure x 0.2], ECM determines that EVAP system has large leak.	• Fuel tank cap (loose) • Leakage from EVAP line (Canister - Fuel tank) • Leakage from EVAP line (Purge VSV - Canister) • Canister pump module • Leakage from fuel tank • Leakage from canister	While ignition switch OFF	2 trip
P0456	EVAP small leak	Leak detection pump creates negative pressure (vacuum) in EVAP system and EVAP system pressure measured. Reference pressure measured at start and at end of leak check. If stabilized pressure higher than second reference pressure, ECM determines that EVAP system has small leak.	• Fuel tank cap (loose) • Leakage from EVAP line (Canister - Fuel tank) • Leakage from EVAP line (Purge VSV - Canister) • Canister pump module • Leakage from fuel tank • Leakage from canister	While ignition switch OFF	2 trip

ES

DESCRIPTION

The description can be found in the EVAP (Evaporative Emission) System (see page ES-371).

INSPECTION PROCEDURE

Refer to the EVAP System (see page ES-376).

MONITOR DESCRIPTION

5 hours* after the ignition switch is turned OFF, the leak detection pump creates negative pressure (vacuum) in the EVAP system. The ECM monitors for leaks and actuator malfunctions based on the EVAP pressure.

HINT:

*: If the engine coolant temperature is not below 35°C (95°F) 5 hours after the ignition switch is turned OFF, the monitor check starts 2 hours later. If it is still not below 35°C (95°F) 7 hours after the ignition switch is turned OFF, the monitor check starts 2.5 hours later.

Sequence	Operation	Description	Duration
-	ECM activation	Activated by soak timer 5, 7 or 9.5 hours after ignition switch turned OFF.	-
A	Atmospheric pressure measurement	Vent valve turned OFF (vent) and EVAP system pressure measured by ECM in order to register atmospheric pressure. If pressure in EVAP system not between 76 kPa-a and 110 kPa-a (570 mmHg-a and 825 mmHg-a), ECM cancels EVAP system monitor.	10 seconds
B	First reference pressure measurement	In order to determine reference pressure, leak detection pump creates negative pressure (vacuum) through reference orifice and then ECM checks if leak detection pump and vent valve operate normally.	60 seconds
C	EVAP system pressure measurement	Vent valve turned ON (closed) to shut EVAP system. Negative pressure (vacuum) created in EVAP system, and EVAP system pressure then measured. Write down measured value as it will be used in leak check. If EVAP pressure does not stabilize within 15 minutes, ECM cancels EVAP system monitor.	15 minutes*

Sequence	Operation	Description	Duration
D	Purge VSV monitor	Purge VSV opened and then EVAP system pressure measured by ECM. Large increase indicates normality.	10 seconds
E	Second reference pressure measurement	After second reference pressure measurement, leak check performed by comparing first and second reference pressure. If stabilized system pressure higher than second reference pressure, ECM determines that EVAP system leaking.	60 seconds
-	Final check	Atmospheric pressure measured and then monitoring result recorded by ECM.	-

*: If only a small amount of fuel is in the fuel tank, it takes longer for the EVAP pressure to stabilize.

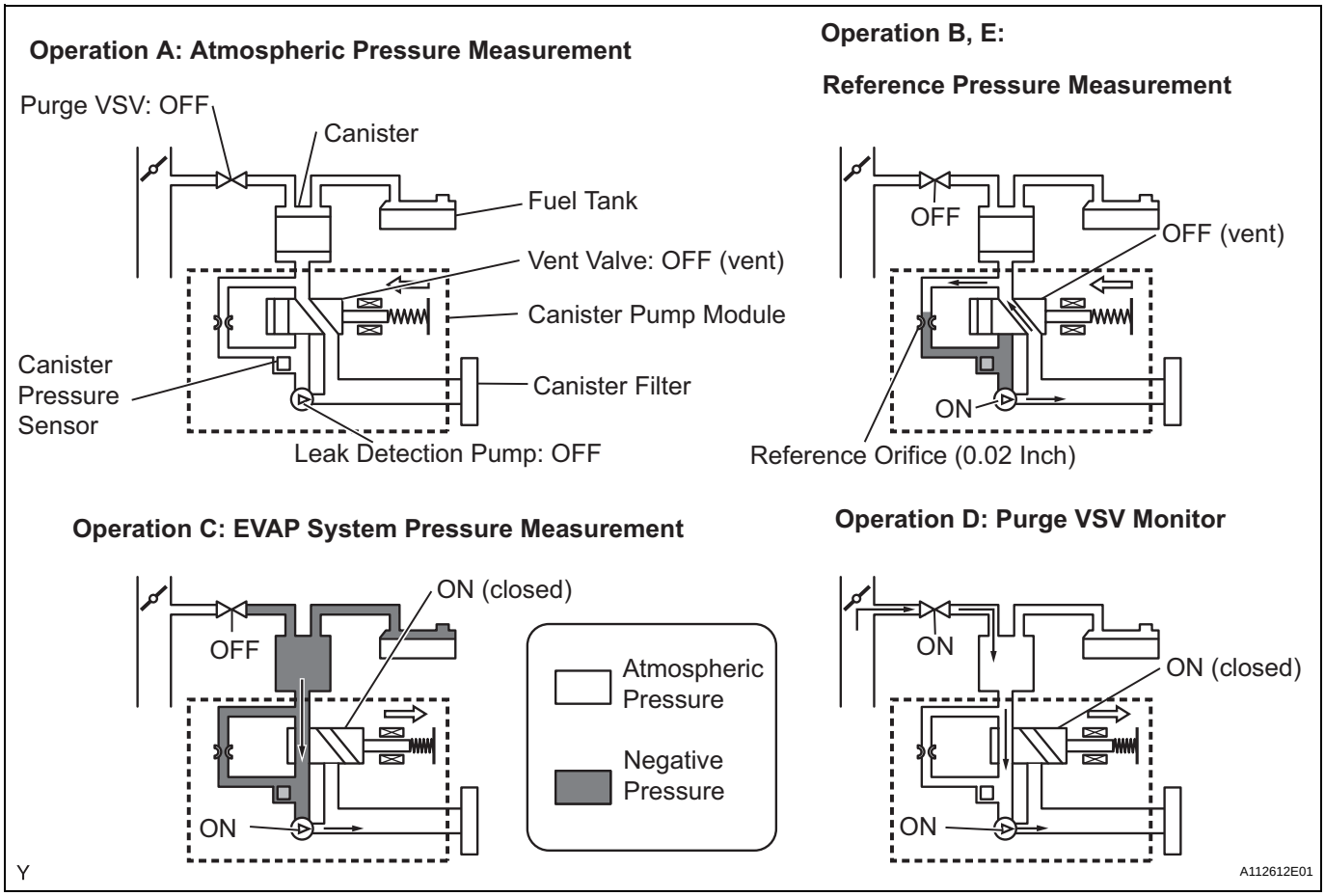

(a) P0455: EVAP gross leak

In operation C, the leak detection pump creates negative pressure (vacuum) in the EVAP system and the EVAP system pressure is measured. If the stabilized system pressure is higher than [second reference pressure x 0.2] (near atmospheric pressure), the ECM determines that the EVAP system has a large leakage, illuminates the MIL and sets the DTC (2 trip detection logic).

(b) P0456: EVAP very small leak

In operation C, the leak detection pump creates negative pressure (vacuum) in the EVAP system and the EVAP system pressure is measured. If the stabilized system pressure is higher than the second reference pressure, the ECM determines that the EVAP system has a small leakage, illuminates the MIL and sets the DTC (2 trip detection logic).

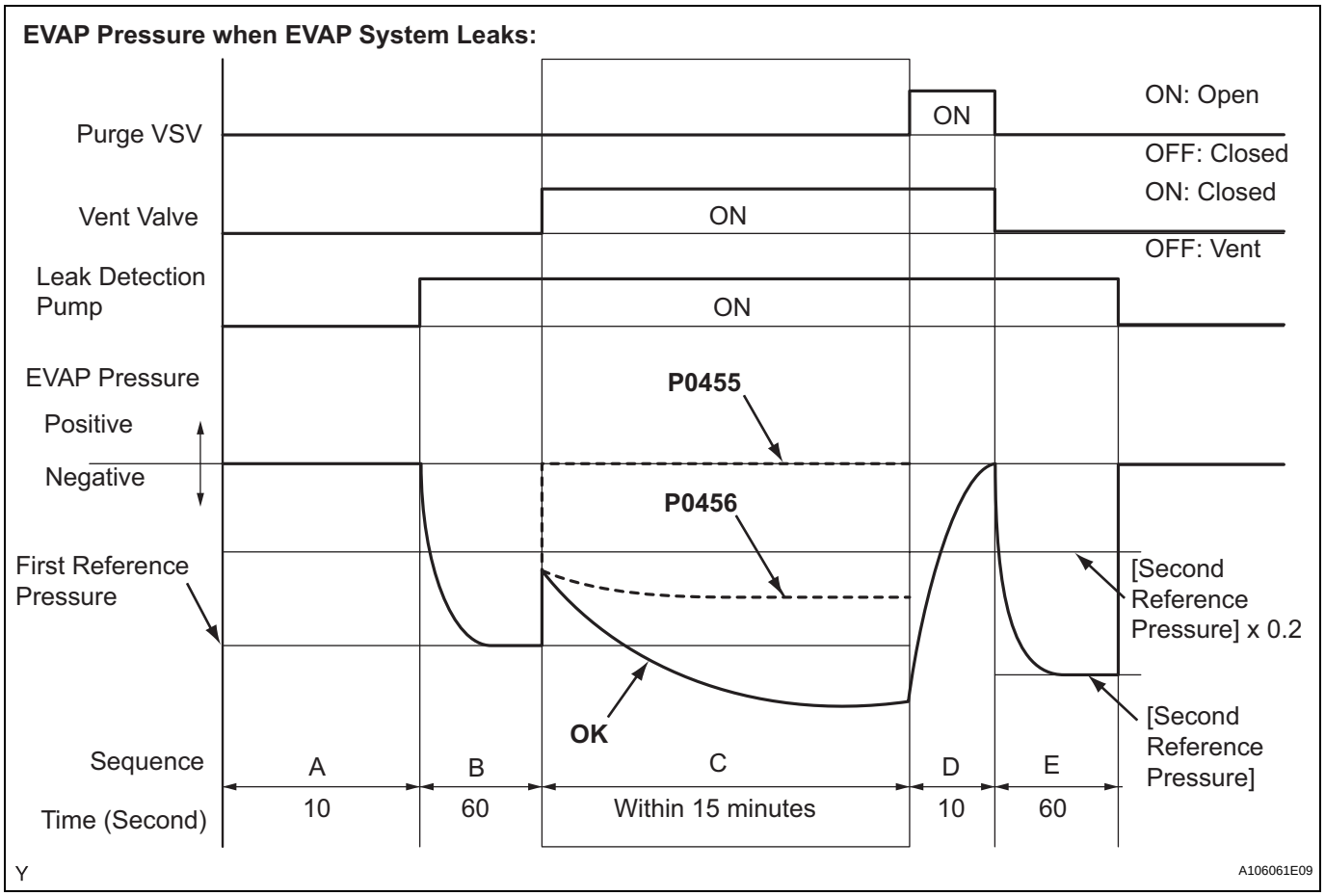

MONITOR STRATEGY

Required Sensors/Components	Purge VSV and canister pump module
Frequency of Operation	Once per driving cycle
Duration	Within 15 minutes (varies with amount of fuel in tank)
MIL Operation	2 driving cycles
Sequence of Operation	None

TYPICAL ENABLING CONDITIONS

Monitor runs whenever following DTCs not present	None
EVAP key-off monitor runs when all of following conditions met	-
Atmospheric pressure	70 to 110 kPa-a (525 to 825 mmHg-a)
Battery voltage	10.5 V or more
Vehicle speed	Below 4 km/h (2.5 mph)
Ignition switch	OFF
Time after key off	5 or 7 or 9.5 hours
Canister pressure sensor malfunction (P0450, P0451, P0452 and P0453)	Not detected
Purge VSV	Not operated by scan tool
Vent valve	Not operated by scan tool

Leak detection pump	Not operated by scan tool
Both of following conditions met before key off	Conditions 1 and 2
1. Duration that vehicle driven	5 minutes or more
2. EVAP purge operation	Performed
ECT	4.4 to 35°C (40 to 95°F)
IAT	4.4 to 35°C (40 to 95°F)

1. Key-off monitor sequence 1 to 8

1. Atmospheric pressure measurement

Next sequence run if following condition set	-
Atmospheric pressure change	Less than 0.3 kPa-g (2.25 mmHg-g) in 1 second

2. First reference pressure measurement

Next sequence run if all of following conditions set	Condition 1, 2 and 3
1. EVAP pressure just after reference pressure measurement started	-1 kPa-g (-7.5 mmHg-g) or less
2. Reference pressure	-4.85 to -1.057 kPa-g (-36.4 to -7.93 mmHg-g)
3. Reference pressure	Saturated within 60 seconds

3. Vent valve stuck closed check

Next sequence run if following condition set	-
EVAP pressure change after vent valve ON (closed)	0.3 kPa-g (2.25 mmHg-g) or more

4. Vacuum introduction

Next sequence run if following condition set	-
EVAP pressure	Saturated within 15 minutes

5. Purge VSV stuck closed check

Next sequence run if following condition set	-
EVAP pressure change after purge VSV ON (open)	0.3 kPa-g (2.25 mmHg-g) or more

6. Second reference pressure measurement

Next sequence run if all of following conditions set	Condition 1, 2, 3 and 4
1. EVAP pressure just after reference pressure	-1 kPa-g (-7.5 mmHg-g) or less
2. Reference pressure	-4.85 to -1.057 kPa-g (-36.4 to -7.93 mmHg-g)
3. Reference pressure	Saturated within 60 seconds
4. Reference pressure difference between first and second	Less than 0.7 kPa-g (5.25 mmHg-g)

7. Leak check

Next sequence run if following condition set	-
EVAP pressure when vacuum introduction complete	Second reference pressure or less

8. Atmospheric pressure measurement

EVAP monitor complete if following condition set	-
Atmospheric pressure difference between sequence 1 and 8	Within 0.3 kPa-g (2.25 mmHg-g)

TYPICAL MALFUNCTION THRESHOLDS

P0455: EVAP gross leak

EVAP pressure when vacuum introduction complete	Higher than reference pressure x 0.2

P0456: EVAP small leak

EVAP pressure when vacuum introduction complete	Between reference pressure and reference pressure x 0.2

MONITOR RESULT

Refer to CHECKING MONITOR STATUS (see page ES-19).

DTC	P0500	Vehicle Speed Sensor "A"

DESCRIPTION

The speed sensor detects the wheel speed and sends the appropriate signals to the skid control ECU. The skid control ECU converts these wheel speed signals into a 4-pulse signal and outputs it to the ECM via the combination meter. The ECM determines the vehicle speed based on the frequency of these pulse signals.

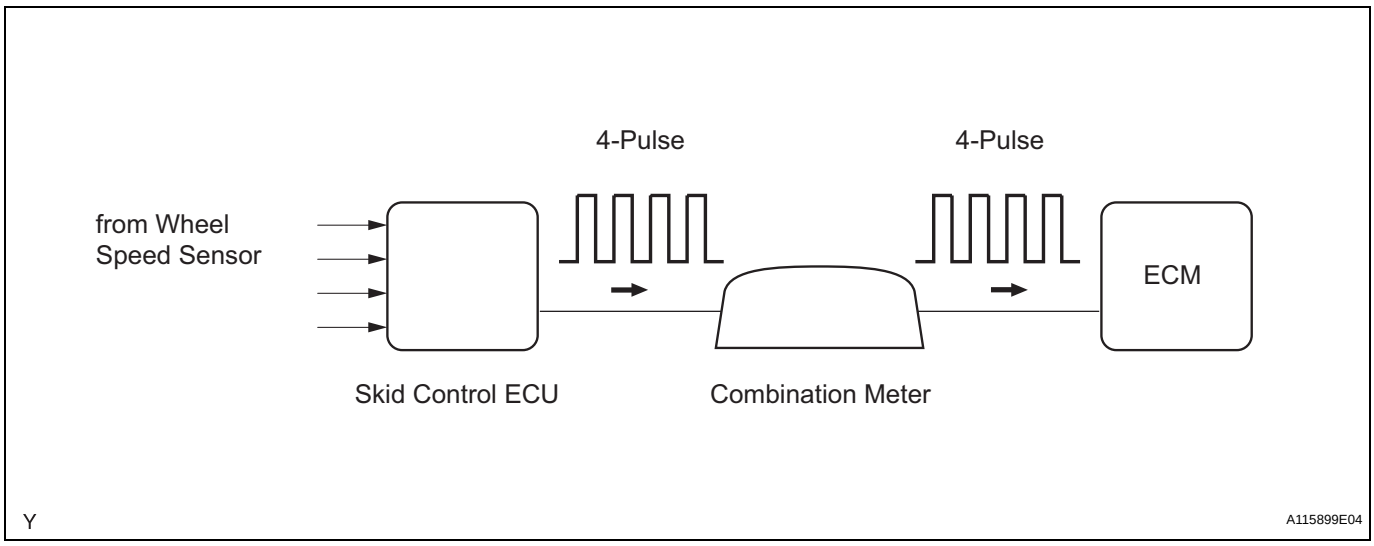

DTC No.	DTC Detection Condition	Trouble Area
P0500	While vehicle being driven, no vehicle speed sensor signal transmitted to ECM (1 trip detection logic)	• Open or short in speed signal circuit • Vehicle speed sensor • Combination meter • ECM • Skid control ECU

MONITOR DESCRIPTION

The ECM assumes that the vehicle is being driven, when the indicated engine speed is more than 2,300 rpm and 30 seconds have elapsed since the Park/Neutral Position (PNP) switch was turned OFF. If there is no speed signal from the combination meter, despite these conditions being met, the ECM interprets this as a malfunction in the speed signal circuit. The ECM then illuminates the MIL and sets the DTC.

MONITOR STRATEGY

Related DTCs	P0500: Vehicle speed sensor "A" pulse input error
Required Sensors/Components (Main)	Vehicle Speed Sensor (VSS), Combination meter and Skid control ECU
Required Sensors/Components (Related)	Park/Neutral Position (PNP) switch, Engine Coolant Temperature (ECT) sensor, Crankshaft Position (CKP) sensor, Throttle Position (TP) sensor and Mass Air Flow (MAF) meter
Frequency of Operation	Continuous
Duration	2 seconds
MIL Operation	Immediate
Sequence of Operation	None

TYPICAL ENABLING CONDITIONS

Monitor runs whenever following DTCs not present	P0120 - P0223, P2135 (TP sensor)
Either of following conditions (a) or (b) met:	-

(a) Following conditions 1 and 2 met:	-
1. ECT and ECT sensor	20°C (68°F) or more, and sensor does not malfunction (P0115 or P0116)
2. Time after PNP switch turned OFF	10 seconds or more
(b) Following conditions 1 and 2 met:	-
1. ECT and ECT sensor	Less than 20°C (68°F), and sensor malfunction (P0115 or P0116)
2. Time after PNP switch turned OFF	30 seconds or more
Time after ignition switch turned ON	More than 0.5 seconds

TYPICAL MALFUNCTION THRESHOLDS

Vehicle speed sensor signal	No pulse input

ES

WIRING DIAGRAM

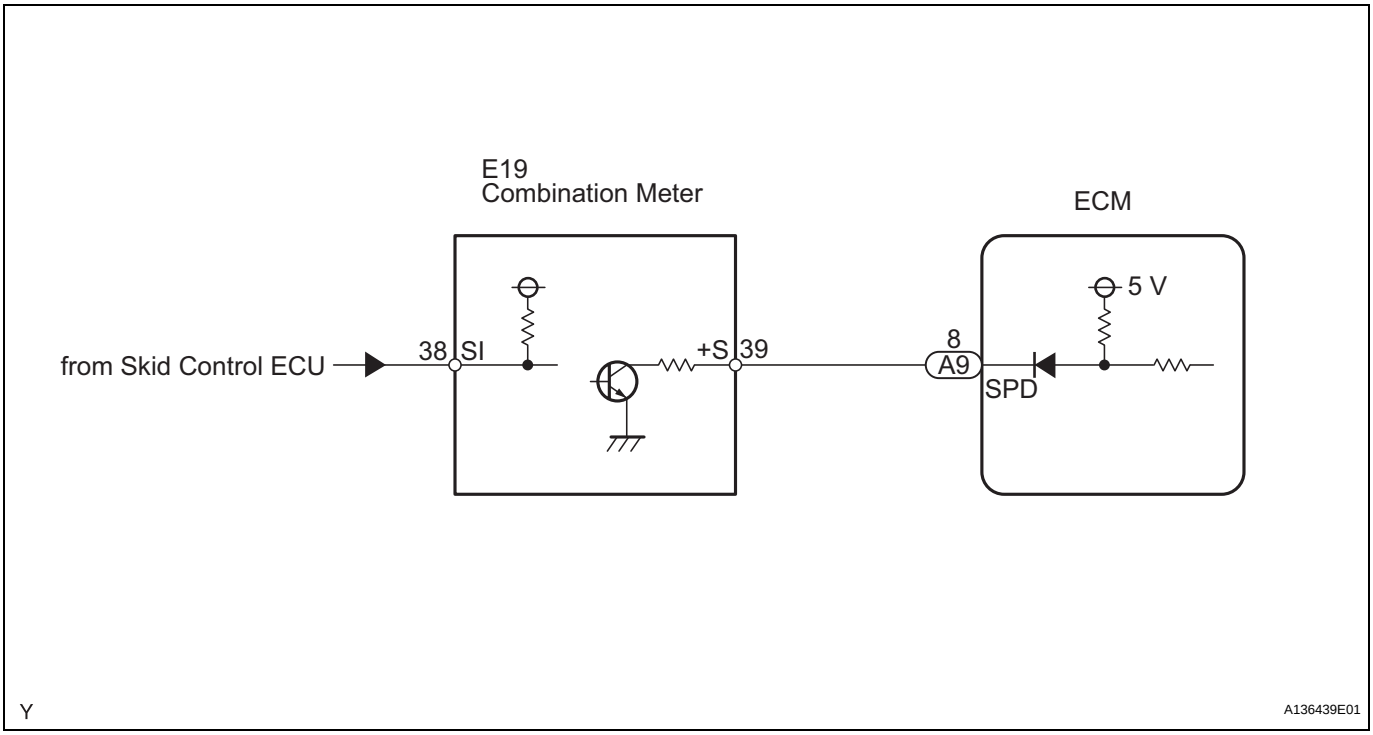

INSPECTION PROCEDURE

HINT:
Read freeze frame data using the intelligent tester. Freeze frame data records the engine condition when malfunctions are detected. When troubleshooting, freeze frame data can help determine if the vehicle was moving or stationary, if the engine was warmed up or not, if the air-fuel ratio was lean or rich, and other data from the time the malfunction occurred.

1	**CHECK OPERATION OF SPEEDOMETER**

(a) Drive the vehicle and check whether the operation of the speedometer in the combination meter is normal.
HINT:
- The vehicle speed sensor is operating normally if the speedometer reading is normal.

- If the speedometer does not operate, check it by following the procedure described in Speedometer Malfunction (see page ME-41).

NG → **GO TO MALFUNCTION IN SPEEDOMETER**

OK

2 READ VALUE USING INTELLIGENT TESTER (VEHICLE SPD)

(a) Connect the intelligent tester to the DLC3.
(b) Turn the ignition switch ON.
(c) Turn the tester ON.
(d) Select the following menu items: DIAGNOSIS / ENHANCED OBD II / DATA LIST / PRIMARY / VEHICLE SPD.
(e) Drive the vehicle.
(f) Read the value displayed on the tester.
OK:
Vehicle speeds displayed on tester and speedometer display are equal.

OK → **CHECK FOR INTERMITTENT PROBLEMS**

NG

3 CHECK COMBINATION METER ASSEMBLY (+S VOLTAGE)

Wire Harness Side:

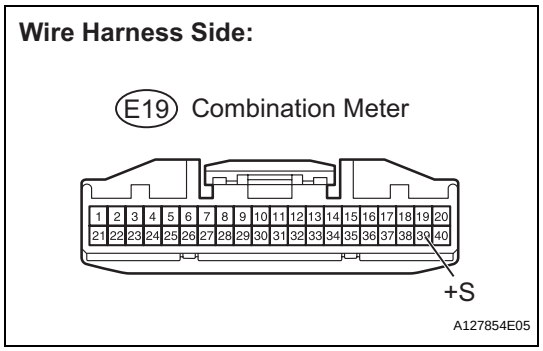

(a) Disconnect the E19 combination meter connector.
(b) Turn the ignition switch ON.
(c) Measure the voltage between the terminal of the combination meter and the body ground.
Standard voltage

Tester Connection	Specified Condition
E19-39 (+S) - Body ground	4.5 to 5.5 V

(d) Reconnect the combination meter connector.

NG → **Go to step 5**

OK

4	CHECK COMBINATION METER ASSEMBLY (SPD SIGNAL WAVEFORM)

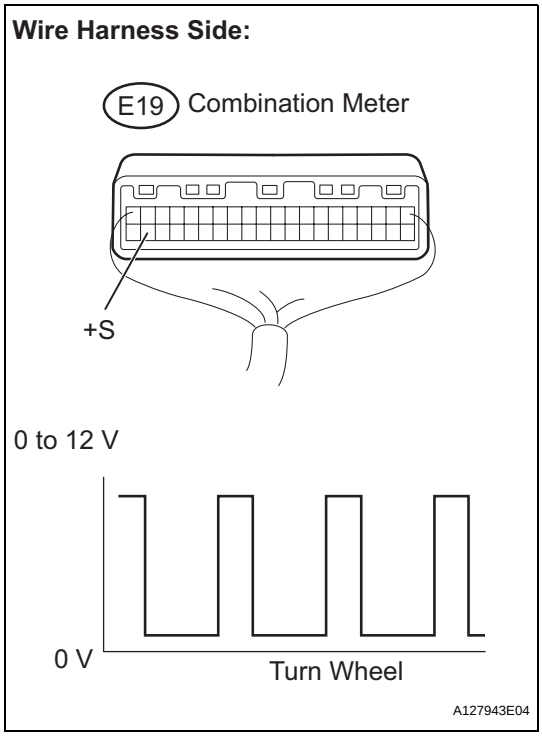

(a) Shift the transmission gear selector lever to the neutral position.
(b) Jack up the vehicle.
(c) Turn the ignition switch ON.
(d) Check the voltage between the terminal of the combination meter and the body ground while the wheel is turned slowly.

Standard voltage

Tester Connection	Specified Condition
E19-39 (+S) - Body ground	Voltage generated intermittently

HINT:
The output voltage should fluctuate up and down, similarly to the diagram, when the wheel is turned slowly.

NG → **REPLACE COMBINATION METER ASSEMBLY**

OK

5	CHECK WIRE HARNESS (COMBINATION METER ASSEMBLY - ECM)

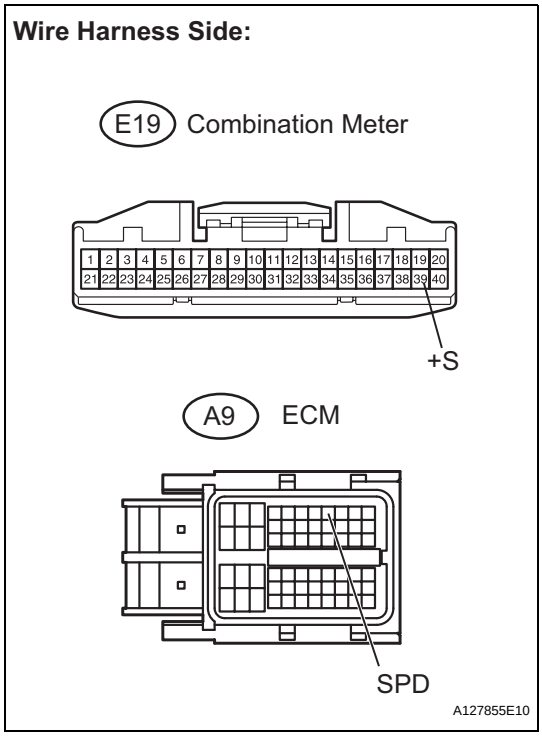

(a) Disconnect the E19 combination meter connector.
(b) Disconnect the A9 ECM connector.
(c) Measure the resistance.

Standard resistance

Tester Connection	Specified Condition
E19-39 (+S) - A9-8 (SPD)	Below 1 Ω
E19-39 (+S) or A9-8 (SPD) - Body ground	10 kΩ or higher

(d) Reconnect the combination meter connector.
(e) Reconnect the ECM connector.

NG → **REPAIR OR REPLACE HARNESS AND CONNECTOR**

OK

REPLACE ECM

DTC	P0504	Brake Switch "A" / "B" Correlation

DESCRIPTION

The stop light switch is a duplex system that transmits two signals: STP and ST1-. These two signals are used by the ECM to monitor whether or not the brake system is working properly. If the signals, which indicate the brake pedal is being depressed and released, are detected simultaneously, the ECM interprets this as a malfunction in the stop light switch and sets the DTC.

HINT:

The normal conditions are as shown in the table below. The signals can be read using the intelligent tester.

Signal	Brake Pedal Released	In Transition	Brake Pedal Depressed
STP	OFF	ON	ON
ST1-	ON	ON	OFF

DTC No.	DTC Detection Condition	Trouble Area
P0504	Conditions (a), (b) and (c) continue for 0.5 seconds or more (1 trip detection logic): (a) Ignition switch ON (b) Brake pedal released (c) STP signal OFF when ST1- signal OFF	• Short in stop light switch signal circuit • STOP fuse • IGN fuse • Stop light switch • ECM

WIRING DIAGRAM

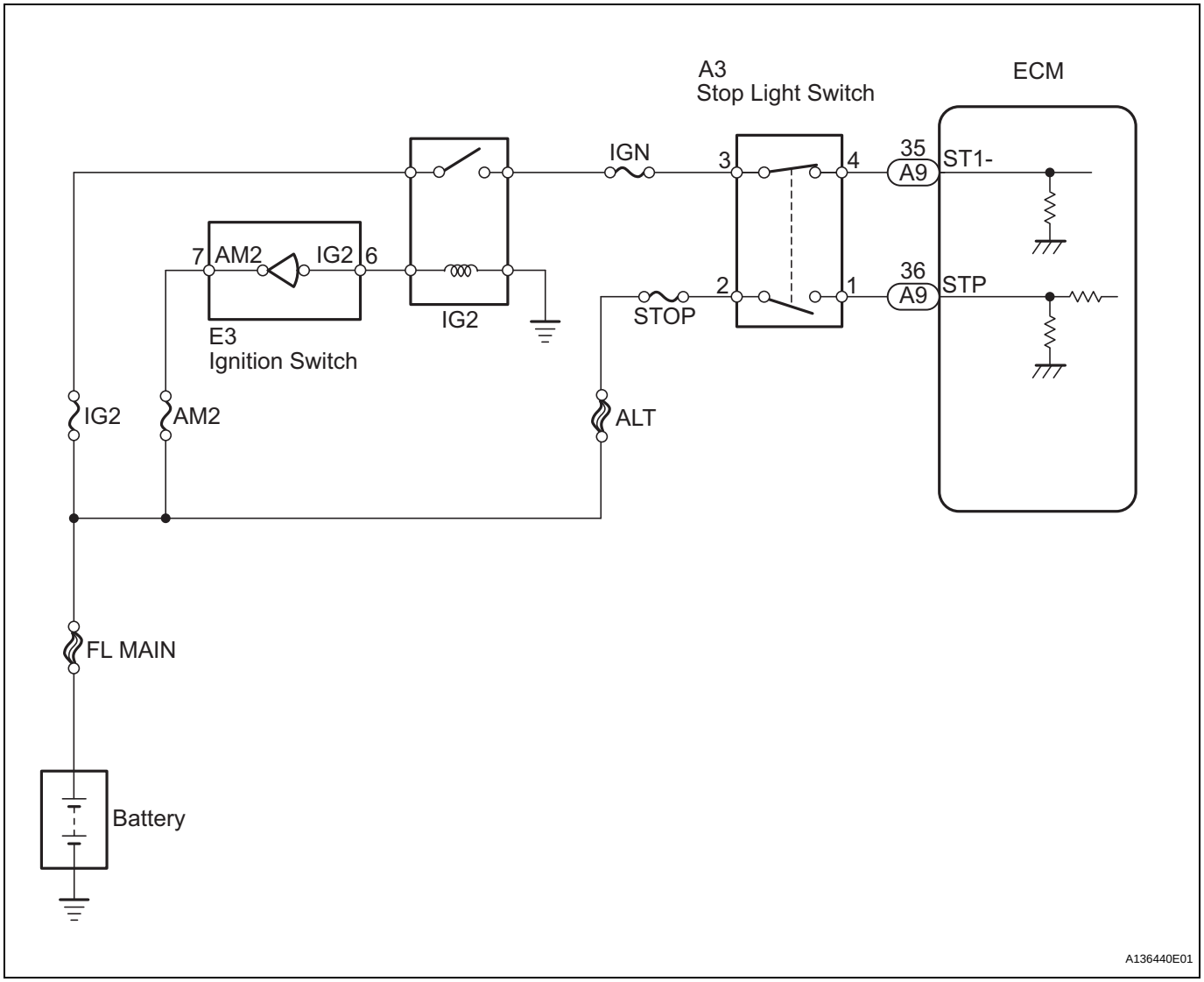

ES

INSPECTION PROCEDURE

HINT:

- Read freeze frame data using the intelligent tester. Freeze frame data records the engine condition when malfunctions are detected. When troubleshooting, freeze frame data can help determine if the vehicle was moving or stationary, if the engine was warmed up or not, if the air-fuel ratio was lean or rich, and other data from the time the malfunction occurred.
- STP signal conditions can be checked using the intelligent tester.
  (a) Connect the intelligent tester to the DLC3.
  (b) Turn the ignition switch ON.
  (c) Turn the tester ON.
  (d) Select the following menu items: DIAGNOSIS / ENHANCED OBD II / DATA LIST / PRIMARY / STOP LIGHT SW.
  (e) Check the STP signal when the brake pedal is depressed and released.

Brake Pedal Operation	Specified Condition
Depressed	STP signal ON
Released	STP signal OFF

1 CHECK STOP LIGHT SWITCH ASSEMBLY (TERMINAL B VOLTAGE)

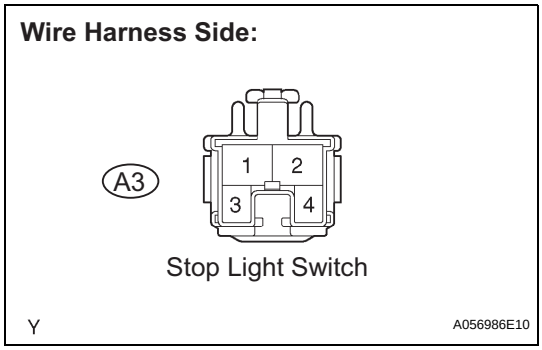

(a) Disconnect the A3 stop light switch connector.
(b) Measure the voltage between the terminals of the A3 stop light switch connector and body ground.
Standard voltage

Tester Connection	Condition	Specified Condition
A3-2 - Body ground	Always	9 to 14 V
A3-3 - Body ground	Ignition switch ON	9 to 14 V

(c) Reconnect the stop light switch connector.

NG → **Go to step 4**

OK

2 INSPECT STOP LIGHT SWITCH ASSEMBLY

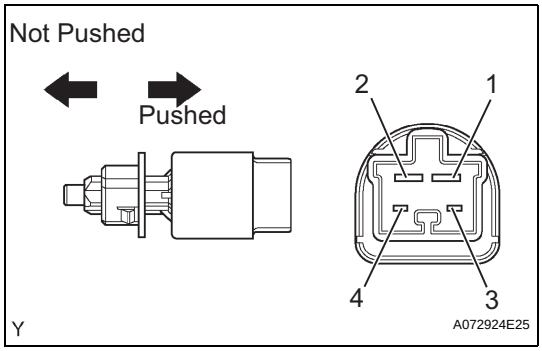

(a) Remove the stop light switch.
(b) Check the resistance.
Standard resistance

Tester Connection	Switch Position	Specified Condition
1 - 2	Switch pin not pushed	Below 1 Ω
	Switch pin pushed	10 kΩ or higher
3 - 4	Switch pin not pushed	10 kΩ or higher
	Switch pin pushed	Below 1 Ω

(c) Reinstall the stop light switch.

NG → **REPLACE STOP LIGHT SWITCH ASSEMBLY**

OK

3 CHECK ECM (STP AND ST1 - VOLTAGE)

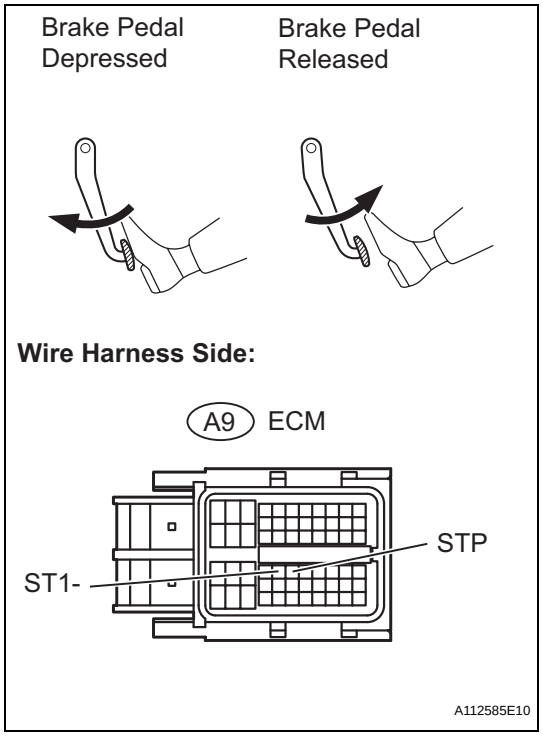

(a) Disconnect the A9 ECM connector.
(b) Turn the ignition switch ON.
(c) Measure the voltage between the terminals ST1- and STP of the A9 ECM connector and body ground.
Standard voltage

Tester Connection	Brake Pedal Operation	Specified Condition
A9-35 (ST1-) - Body ground	Released	9 to 14 V
	Depressed	0 to 3 V
A9-36 (STP) - Body ground	Released	0 to 3 V
	Depressed	9 to 14 V

(d) Reconnect the ECM connector.

ES

NG → **REPAIR OR REPLACE HARNESS AND CONNECTOR**

OK

REPLACE ECM

4 INSPECT FUSE (STOP AND IGN FUSE)

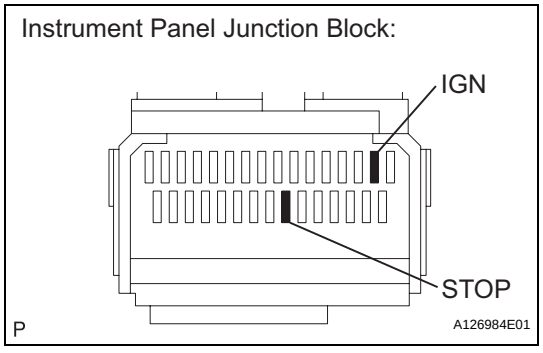

(a) Remove the STOP and IGN fuses from the instrument panel junction block.
(b) Measure the resistance.
Standard resistance:
Below 1 Ω
(c) Reinstall the STOP and IGN fuses.

NG → **CHECK FOR SHORTS IN ALL HARNESSES AND CONNECTORS CONNECTED TO FUSE AND REPLACE FUSE**

OK

REPAIR OR REPLACE HARNESS AND CONNECTOR

DTC	P0505	Idle Control System Malfunction

DESCRIPTION

The idling speed is controlled by the ETCS (Electronic Throttle Control System). The ETCS is comprised of: 1) the one valve type throttle body; 2) the throttle actuator, which operates the throttle valve; 3) the Throttle Position (TP) sensor, which detects the opening angle of the throttle valve; 4) the Accelerator Pedal Position (APP) sensor, which detects the accelerator pedal position; and 5) the ECM, which controls the ETCS. Based on the target idling speed, the ECM controls the throttle actuator to provide the proper throttle valve opening angle.

DTC No.	DTC Detection Condition	Trouble Area
P0505	Idling speed continues to vary greatly from target idling speed (2 trip detection logic)	• ETCS • Air induction system • PCV hose connections • ECM

ES

MONITOR DESCRIPTION

The ECM monitors the idling speed and idling air flow volume to conduct Idle Speed Control (ISC). The ECM determines that the ISC system is malfunctioning if the following conditions apply:

- The learned idling air flow volume remains at the maximum or minimum volume 5 times or more during a drive cycle.
- After driving at 10 km/h (6.25 mph) or more, the actual engine idling speed varies from the target idling speed by between 100 rpm and 200 rpm, 5 times or more during a drive cycle.

Example:

If the actual idling speed varies from the target idling speed by more than 200 rpm* 5 times during a drive cycle, the ECM illuminates the MIL and sets the DTC.

HINT:

*: Threshold idling speed varies with engine load.

Example:

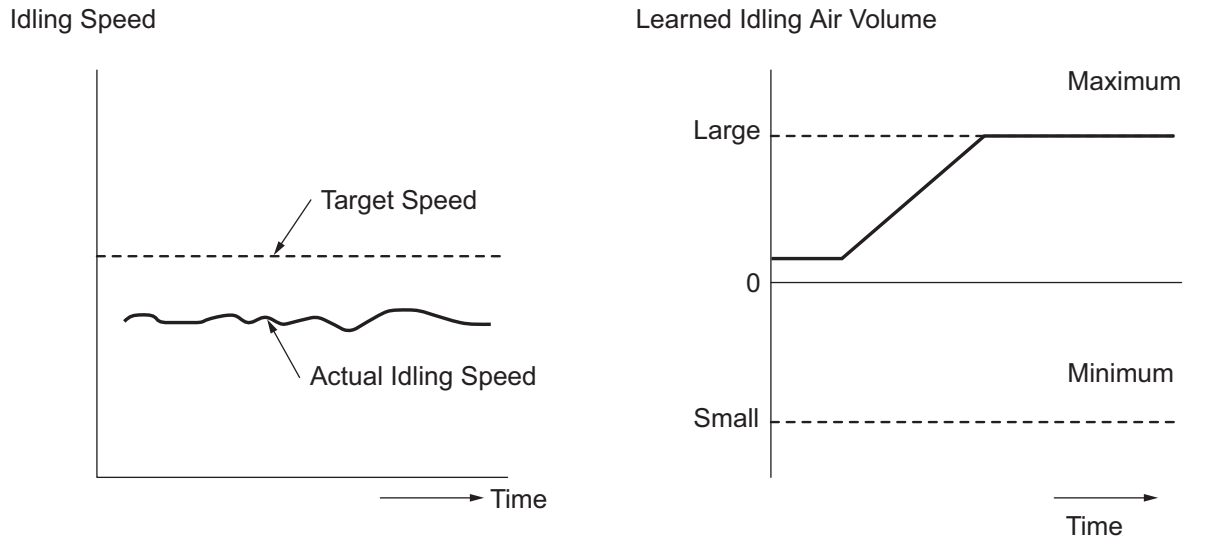

Y

A121611E02

ES

MONITOR STRATEGY

Related DTCs	P0505: ISC function
Required Sensors/Components (Main)	ETCS
Required Sensors/Components (Related)	Crankshaft position sensor, Engine coolant temperature sensor, and Vehicle speed sensor
Frequency of Operation	Once per driving cycle
Duration	10 minutes
MIL Operation	2 driving cycles
Sequence of Operation	None

TYPICAL ENABLING CONDITIONS

Engine	Running

TYPICAL MALFUNCTION THRESHOLDS

Either of following conditions 1 or 2 met	-
1. Frequency that both of following conditions (a) and (b) set	5 times or more
(a) Engine rpm - Target engine rpm	Less than -100 rpm, or more than 150 rpm
(b) Vehicle condition	Stop after vehicle was driven at 10 km/h (6.25 mph) or more
2. Frequency that both of following conditions (c) and (d) set	Once
(c) Engine rpm - Target engine rpm	Less than -100 rpm, or more than 150 rpm
(d) IAC flow rate learning value	1.3 L/sec. or less, or 8.5 L/sec. or more

INSPECTION PROCEDURE

HINT:

- The following conditions may also cause DTC P0505 to be set:
  (a) The floor carpet overlapping slightly onto the accelerator pedal, causing the accelerator pedal to be slightly depressed and therefore the throttle valve position to be slightly open.
  (b) The accelerator pedal being not fully released.
- Read freeze frame data using the intelligent tester. Freeze frame data records the engine condition when malfunctions are detected. When troubleshooting, freeze frame data can help determine if the vehicle was moving or stationary, if the engine was warmed up or not, if the air-fuel ratio was lean or rich, and other data from the time the malfunction occurred.

1 CHECK ANY OTHER DTCS OUTPUT (IN ADDITION TO DTC P0505)

(a) Connect the intelligent tester to the DLC3.
(b) Turn the ignition switch ON.
(c) Turn the tester ON.
(d) Select the following menu items: DIAGNOSIS / ENHANCED OBD II / DTC INFO / CURRENT CODES.
(e) Read DTCs.

Result

Display (DTC Output)	Proceed to
P0505	A
P0505 and other DTCs	B

HINT:
If any DTCs other than P0505 are output, troubleshoot those DTCs first.

B → **GO TO DTC CHART**

A

2 CHECK PCV HOSE CONNECTIONS

OK:
PCV hose is connected correctly and is not damaged.

NG → **REPAIR OR REPLACE PCV HOSE**

OK

3 CHECK AIR INDUCTION SYSTEM

(a) Check the air induction system for vacuum leakage.
OK:
No leakage from air induction system.

NG → **REPAIR OR REPLACE AIR INDUCTION SYSTEM**

OK

4	CHECK THROTTLE VALVE

(a) Check the throttle valve condition.
OK:
Throttle valve is not contaminated with foreign objects and moves smoothly.

NG → **REPLACE THROTTLE BODY ASSEMBLY**

OK ↓

REPLACE ECM

DTC	P050A	Cold Start Idle Air Control System Performance

DTC	P050B	Cold Start Ignition Timing Performance

DESCRIPTION

The Electronic Throttle Control System (ETCS) controls the engine idling speed. The ETCS operates the throttle actuator to open and close the throttle valve, and adjusts the intake air amount to achieve the target idling speed.
In addition, the ECM retards the ignition timing and the ETCS increases the intake air amount to quickly increase the catalyst temperature at cold start to reduce emissions.

DTC No.	DTC Detection Condition	Trouble Area
P050A	Accumulated intake air amount during 10 seconds of idling after cold start is less than threshold (2 trip detection logic)	• Throttle body assembly • Mass air flow meter • Air induction system • PCV hose connections • VVT system • Air cleaner filter element • ECM
P050B	Ignition timing retard value insufficient for 5 seconds or more during 10 seconds of P050A monitoring duration at cold start (2 trip detection logic)	• Throttle body assembly • Mass air flow meter • Air induction system • PCV hose connections • VVT system • Air cleaner filter element • ECM

ES

MONITOR DESCRIPTION

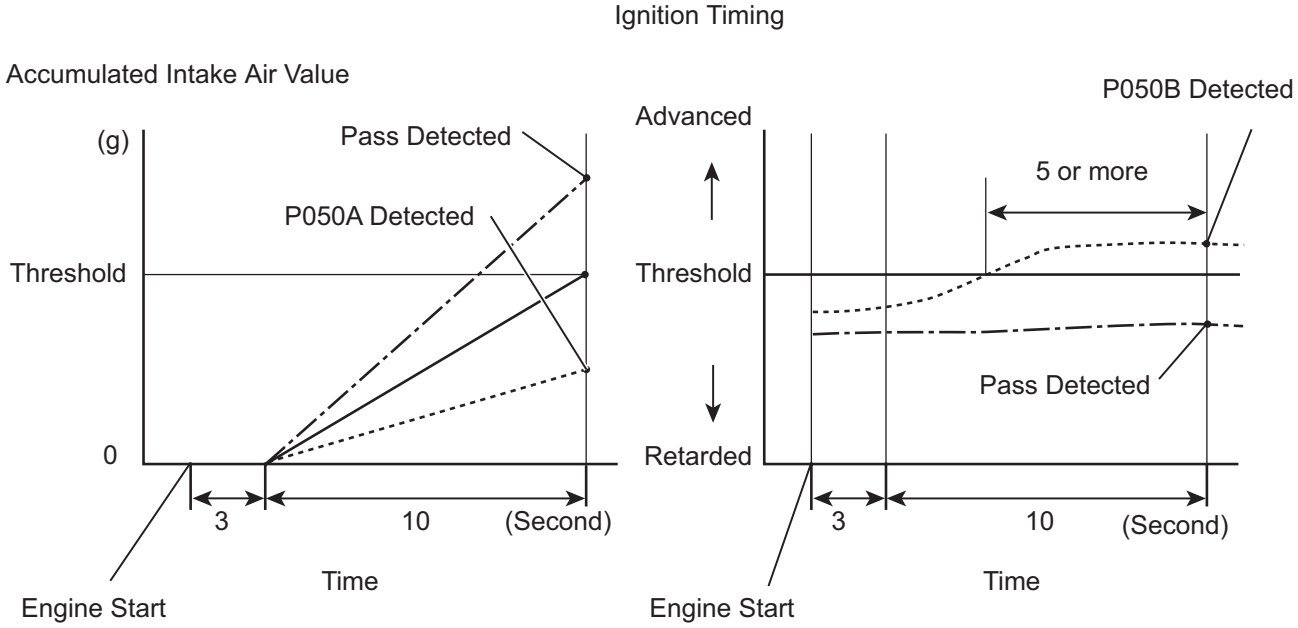

The ECM monitors the intake air amount during idling and the ignition timing.
When the Engine Coolant Temperature (ECT) is between -10°C and 50 °C (14°F and 122°F), the ECM calculates the idling intake air amount for 10 seconds, beginning 3 seconds after the engine starts.
When the accumulated value is below the threshold, the ECM interprets this as a malfunction in the Idle Speed Control (ISC) system at cold start.
The ECM also monitors the ignition timing at cold start, and judges it to be incorrect when it is advanced to the same value for a warm engine for 5 seconds or more of the 10 second monitoring period.
Example:
P050A is detected when all conditions below are met (2 trip detection logic).
1. The ECT is between -10°C and 50 °C (14°F and 122°F) when the engine starts.
2. The engine idles for 13 seconds after engine start.
3. The accumulated intake air amount is below the threshold.

The ECM sets the DTC and illuminates the MIL 13 seconds after the engine is next started.

NOTICE:

When the negative battery terminal is disconnected during inspection or repairs, the ISC learning values are cleared. The ISC learning must be performed by warming up the engine and idling for 5 minutes with the ECT at 75°C (167°F) or more because DTCs cannot be detected with the ISC learning values cleared.

ES

MONITOR STRATEGY

Related DTCs	P050A: Idle speed control problem at cold P050B: Idle ignition timing problem at cold
Required Sensors/Components (Main)	Mass air flow meter
Required Sensors/Components (Related)	Engine Coolant Temperature (ECT) sensor, Throttle position sensor, Vehicle speed sensor
Frequency of Operation	Once per driving cycle
Duration	10 seconds
MIL Operation	2 driving cycles
Sequence of Operation	None

TYPICAL ENABLING CONDITIONS

P050A:

Battery voltage	8 V or more
Time after engine start	3 seconds or more
Starter	OFF
ECT at engine start	-10°C (14°F) or more
ECT	-10 to 50°C (14 to 122°F)
Engine idling time	3 seconds or more
Fuel-cut	OFF
Vehicle speed	Less than 3 km/h (1.875 mph)
Time after shift position changed (A/T)	1 second or more
Atmospheric pressure	76 kPa (570 mmHg) or more

P050B:

Battery voltage	8 V or more
Time after engine start	3 seconds or more
Starter	OFF
ECT at engine start	-10°C (14°F) or more
ECT	-10 to 50°C (14 to 122°F)
Engine idling time	3 seconds or more
Fuel-cut	OFF
Vehicle speed	Less than 3 km/h (1.875 mph)

TYPICAL MALFUNCTION THRESHOLDS

P050A:

Accumulated air flow amount (A/T)	Varies with ECT (Example: Less than 20 g)

P050B:

Accumulated time when ignition timing retard is cut off	5 seconds or more

INSPECTION PROCEDURE

HINT:
Read freeze frame data using the intelligent tester. Freeze frame data records the engine condition when malfunctions are detected. When troubleshooting, freeze frame data can help determine if the vehicle was moving or stationary, if the engine was warmed up or not, if the air-fuel ratio was lean or rich, and other data from the time the malfunction occurred.

ES

1	CHECK ANY OTHER DTCS OUTPUT (IN ADDITION TO DTC P050A AND/OR P050B)

(a) Connect the intelligent tester to the DLC3.
(b) Turn the ignition switch ON.
(c) Turn the tester ON.
(d) Select the following menu items: DIAGNOSIS / ENHANCED OBD II / DTC INFO / CURRENT CODES.
(e) Read the DTCs.

Result

Display (DTC Output)	Proceed to
P050A and/or P050B	A
P050A and/or P050B and other DTCs	B

HINT:
If any DTCs other than P050A and P050B are output, troubleshoot those DTCs first.

B → GO TO DTC CHART

A

2	READ VALUE USING INTELLIGENT TESTER (FUEL TRIM)

HINT:
Calculate the total fuel trim values to check the characteristic deviation of the mass air flow meter.
(a) Connect the intelligent tester to the DLC3.
(b) Turn the ignition switch ON.
(c) Turn the tester ON.
(d) Select the following menu items: DIAGNOSIS / ENHANCED OBD II / DATA LIST / PRIMARY / SHORT FT #1 and LONG FT #1.
(e) Read the values displayed on the tester.
(f) Add together the SHORT FT #1 and LONG FT #1 values to obtain the total FUEL TRIM.
OK:
Total of SHORT FT #1 and LONG FT #1 values is between -20% and 20%.

OK → Go to step 12

NG

3	PERFORM ACTIVE TEST USING INTELLIGENT TESTER (OPERATE OCV)

(a) Connect the intelligent tester to the DLC3.
(b) Start the engine and turn the tester ON.
(c) Warm up the engine.
(d) Select the following menu items: DIAGNOSIS / ENHANCED OBD II / ACTIVE TEST / VVT CTRL B1.
(e) Check the engine speed while operating the Oil Control Valve (OCV) using the tester.

OK

Tester Operation	Specified Condition
OCV OFF	Normal engine speed
OCV ON	Engine idles roughly or stalls (soon after OCV switched from OFF to ON)

NG → Go to step 8

OK

4	CHECK PCV HOSE CONNECTIONS

OK:
PCV hose is connected correctly and is not damaged.

NG → Go to step 9

OK

5	CHECK AIR INDUCTION SYSTEM

(a) Check the air induction system for vacuum leakage.
OK:
No leakage from air induction system.

NG → Go to step 10

OK

6	CHECK AIR CLEANER FILTER ELEMENT SUB-ASSEMBLY

(a) Visually check that the air cleaner filter element is not excessively contaminated with dirt or oil.
OK:
Air cleaner filter element is not excessively contaminated with dirt or oil.

NG → Go to step 11

OK

7	REPLACE MASS AIR FLOW METER

NEXT → Go to step 15

8	CHECK AND REPAIR VVT SYSTEM

NEXT → Go to step 15

ES

9	REPAIR OR REPLACE PCV HOSE

NEXT → Go to step 15

10	REPAIR OR REPLACE AIR INDUCTION SYSTEM

NEXT → Go to step 15

11	REPLACE AIR CLEANER FILTER ELEMENT SUB-ASSEMBLY

NEXT → Go to step 15

12	CHECK THROTTLE VALVE

(a) Check for deposits around the throttle valve and throttle valve condition.

OK:

No deposits around throttle valve and throttle valve moves smoothly.

NG → Go to step 14

OK

13	REPLACE ECM

NEXT → Go to step 15

14	REPAIR OR REPLACE THROTTLE BODY ASSEMBLY

NEXT → Go to step 15

15	CHECK WHETHER DTC OUTPUT RECURS (DTC P050A AND/OR P050B)

NOTICE:
In this operation, the engine must be cold (the same level as the engine coolant temperature recorded in the freeze frame data).

(a) Connect the intelligent tester to the DLC3.
(b) Turn the ignition switch ON.
(c) Turn the tester ON.
(d) Clear DTCs (see page ES-39).
(e) Switch the ECM from normal mode to check mode using the tester (see page ES-42).
(f) Start the engine and idle it for a minute.
OK:
Stable, fast idling.
(g) Read DTCs.
OK:
No DTC output.

NEXT

END

DTC	P0516	Battery Temperature Sensor Circuit Low

DTC	P0517	Battery Temperature Sensor Circuit High

DESCRIPTION

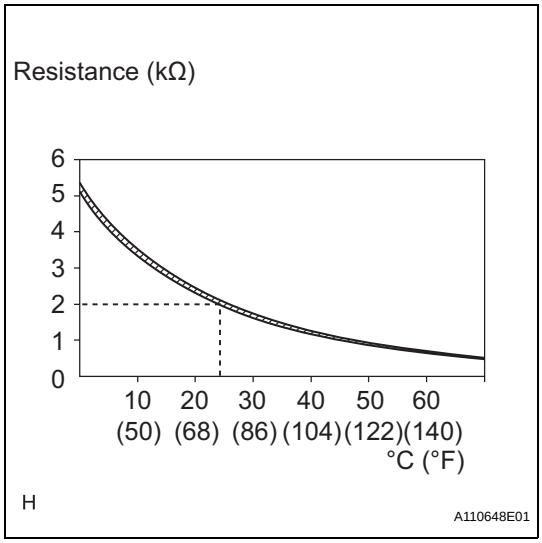

The battery temperature sensor installed on the battery current sensor detects battery temperature.
A thermistor is integrated into the battery temperature sensor, and the resistance in the battery temperature sensor changes according to the battery temperature.
The resistance of the thermistor in the battery temperature sensor decreases as the battery temperature increases. The resistance increases as the temperature decreases.
The battery temperature sensor is connected to the ECM. The ECM supplies 5 V from the THB terminal to the battery temperature sensor through resistor R.
The battery temperature sensor and resistor R are connected in series. This results in fluctuations in the voltage supplied from the THB terminal when the resistance changes according to the battery temperature.
The ECM determines the battery temperature according to fluctuations in voltage. When the battery temperature is high, the ECM determines to reduce the amount of current supplied from the generator in order to protect the battery.

DTC No.	DTC Detection Condition	Trouble Area
P0516	Battery temperature sensor output value is 0.2 V or less for 0.5 seconds or more with the ignition switch ON (1 trip detection logic)	• Battery current sensor • Short in battery temperature sensor circuit • ECM
P0517	Battery temperature sensor output value is 4.8 V or more for 0.5 seconds or more with the ignition switch ON (1 trip detection logic)	• Battery current sensor • Open in battery temperature sensor circuit • ECM

WIRING DIAGRAM

Refer to DTC P1550 (see page ES-304).

INSPECTION PROCEDURE

1 INSPECT BATTERY CURRENT SENSOR

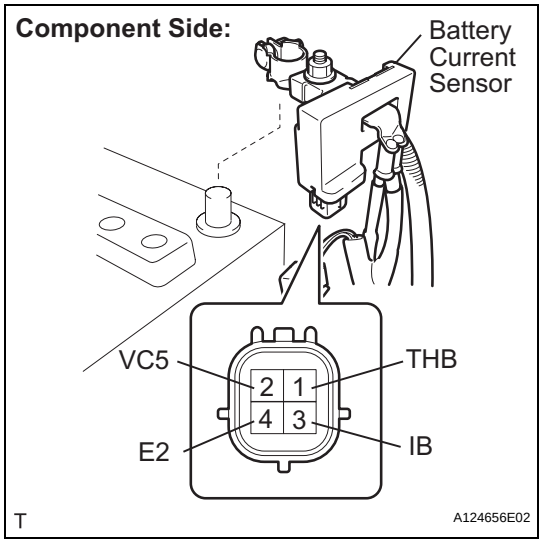

(a) Disconnect the B29 battery current sensor connector.
(b) Measure the resistance.

Standard resistance

Tester Connection	Condition	Specified Condition
1 (THB) - 4 (E2)	24 to 26°C (75.2 to 78.8°F)	1.91 to 2.065 kΩ

NG → **REPLACE BATTERY CURRENT SENSOR**

OK

2 CHECK WIRE HARNESS (BATTERY CURRENT SENSOR - ECM)

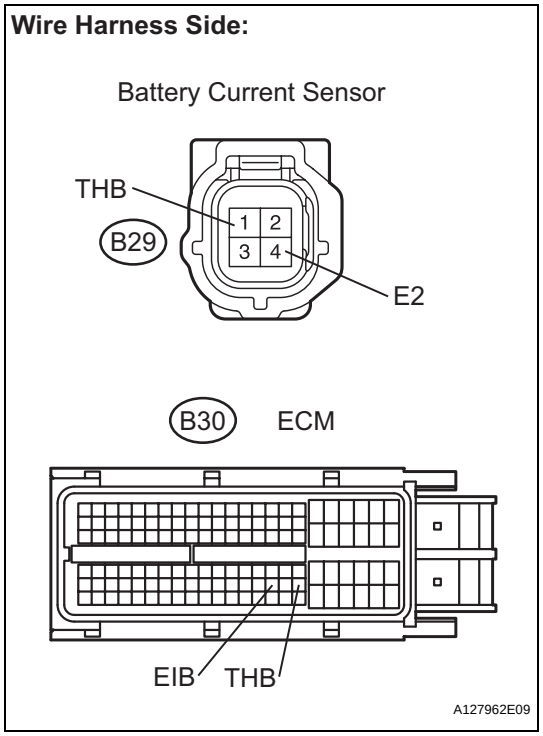

(a) Disconnect the B29 battery current sensor connector.
(b) Disconnect the B30 ECM connectors.
(c) Measure the resistance of the wire harness side connectors.

Standard resistance

Tester Connection	Specified Condition
B29-1 (THB) - B30-103 (THB)	Below 1 Ω
B29-4 (E2) - B30-101 (EIB)	Below 1 Ω
B29-1 (THB) or B30-103 (THB) - Body ground	10 kΩ or higher

NG → **REPAIR OR REPLACE HARNESS AND CONNECTOR**

OK

REPLACE ECM

ES

DTC	P0560	System Voltage

DESCRIPTION

The battery supplies electricity to the ECM even when the ignition switch is in the OFF position. This power allows the ECM to store data such as DTC history, freeze frame data and fuel trim values. If the battery voltage falls below a minimum level, the memory is cleared and the ECM determines that there is a malfunction in the power supply circuit. When the engine is next started, the ECM illuminates the MIL and sets the DTC.

DTC No.	DTC Detection Condition	Trouble Area
P0560	Open in ECM back up power source circuit (1 trip detection logic)	• Open in back up power source circuit • Battery • Battery terminals • EFI MAIN fuse • ECM

ES

HINT:

If DTC P0560 is set, the ECM does not store other DTCs or the data stored in the ECM are partly erased.

MONITOR STRATEGY

Related DTCs	P0560: ECM system voltage
Required Sensors/Components (Main)	ECM
Required Sensors/Components (Related)	-
Frequency of Operation	Continuous
Duration	3 seconds
MIL Operation	Immediate (MIL illuminated after next engine start)
Sequence of Operation	None

TYPICAL ENABLING CONDITIONS

Monitor runs whenever following DTCs not present	None

TYPICAL MALFUNCTION THRESHOLDS

ECM power source	Less than 3.5 V

WIRING DIAGRAM

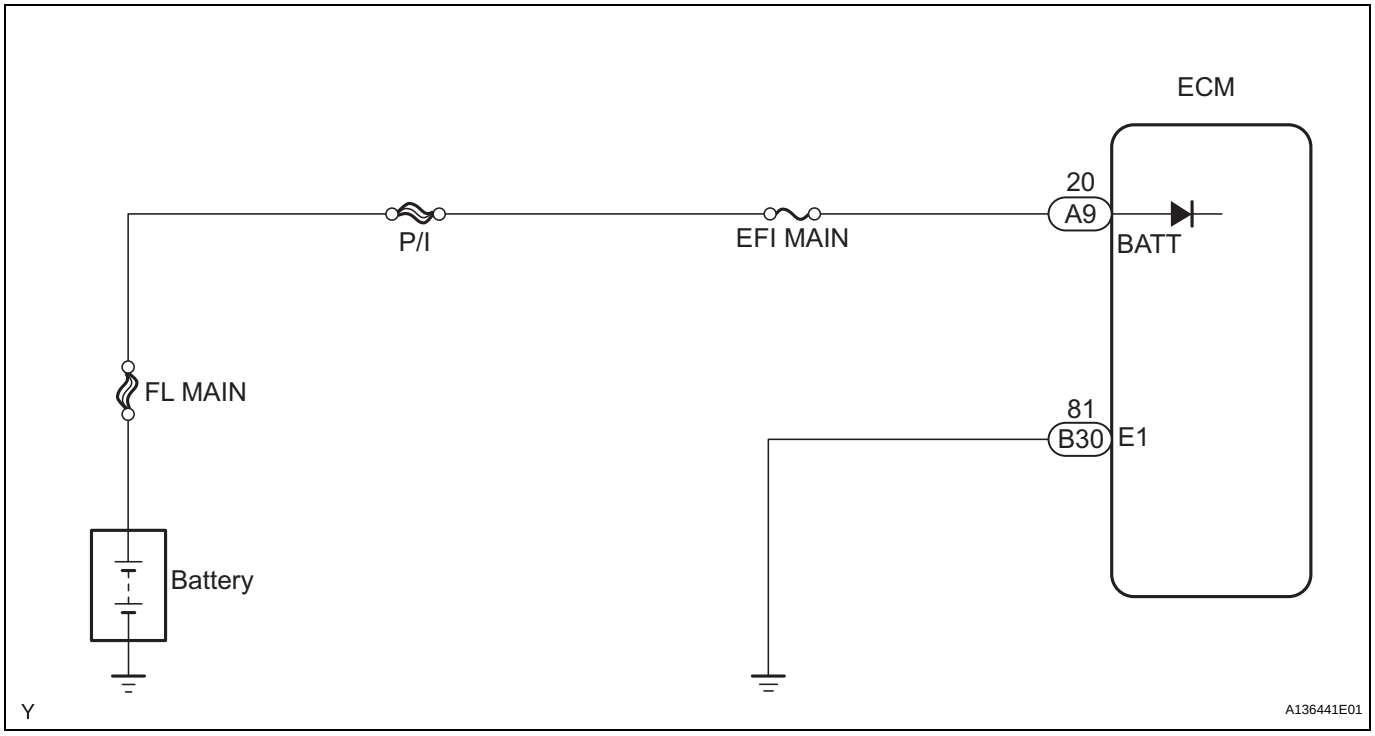

ES

INSPECTION PROCEDURE

HINT:

Read freeze frame data using the intelligent tester. Freeze frame data records the engine condition when malfunctions are detected. When troubleshooting, freeze frame data can help determine if the vehicle was moving or stationary, if the engine was warmed up or not, if the air-fuel ratio was lean or rich, and other data from the time the malfunction occurred.

1	CHECK FUSE (EFI MAIN AND P/I)

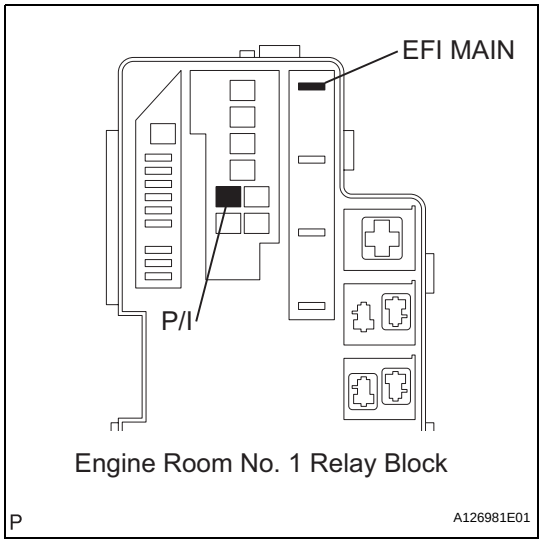

Engine Room No. 1 Relay Block

(a) Remove the EFI MAIN fuse and P/I fuse from the engine room No. 1 relay block.

(b) Measure the resistance of the EFI MAIN fuse and P/I fuse.

Standard resistance:

Below 1 Ω

(c) Reinstall the EFI MAIN fuse and P/I fuse.

NG → **CHECK FOR SHORTS IN ALL HARNESSES AND CONNECTORS CONNECTED TO FUSE AND REPLACE FUSE**

OK

2	CHECK WIRE HARNESS (ECM - EFI MAIN FUSE, EFI MAIN FUSE - BATTERY)

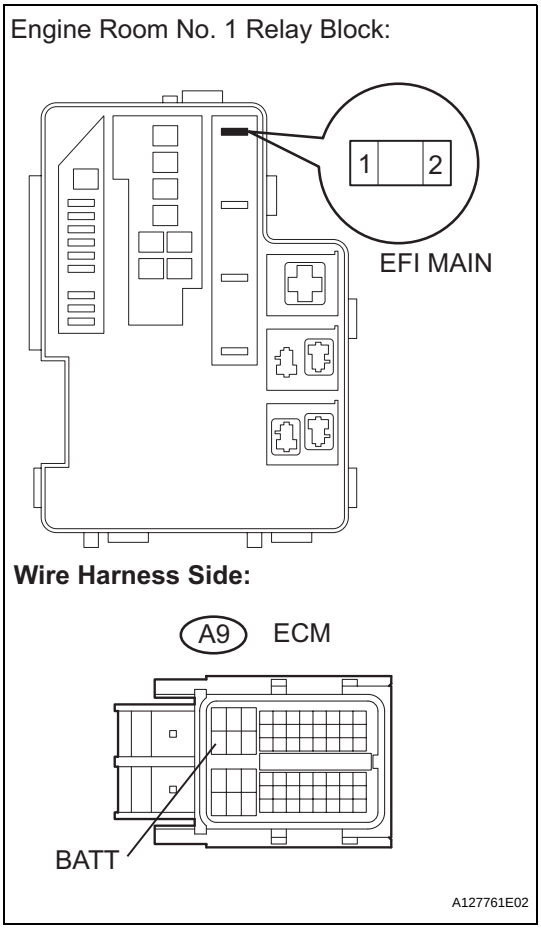

(a) Check the harness and the connector between the EFI MAIN fuse and ECM.
  (1) Remove the EFI MAIN fuse from the engine No. 1 room relay block.
  (2) Disconnect the A9 ECM connector.
  (3) Measure the resistance.
  Standard resistance

Tester Connection	Specified Condition
EFI MAIN fuse terminal 2 - A9-20 (BATT)	Below 1 Ω
EFI MAIN fuse terminal 2 or A9-20 (BATT) - Body ground	10 kΩ or higher

  (4) Reconnect the ECM connector.
  (5) Reinstall the EFI MAIN fuse.

(b) Check the harness and the connector between the EFI MAIN fuse and battery.
  (1) Remove the EFI MAIN fuse from the engine room No. 1 relay block.
  (2) Disconnect the positive battery terminal.
  (3) Measure the resistance.
  Standard resistance

Tester Connection	Specified Condition
Battery positive terminal - EFI MAIN fuse terminal 1	Below 1 Ω
Battery positive terminal or EFI MAIN fuse terminal 1- Body ground	10 kΩ or higher

  (4) Reconnect the positive battery terminal.
  (5) Reinstall the EFI MAIN fuse.

NG → **REPAIR OR REPLACE HARNESS AND CONNECTOR**

OK ↓

3	INSPECT BATTERY

(a) Check that the battery is not depleted.
OK:
Battery is not depleted

NG → **REPLACE BATTERY**

OK ↓

4	CHECK BATTERY TERMINAL

(a) Check that the battery terminals are not loose or corroded.

OK:
Battery terminals are not loose or corroded

NG → **REPAIR OR REPLACE BATTERY TERMINAL**

OK ↓

5	CHECK WHETHER DTC OUTPUT RECURS

(a) Connect the intelligent tester to the DLC3.
(b) Turn the ignition switch ON and turn the tester ON.
(c) Clear DTCs (see page ES-39).
(d) Turn the ignition switch OFF and turn the tester OFF.
(e) Start the engine and turn the tester ON.
(f) Select the following menu items: DIAGNOSIS / ENHANCED OBD II / DTC INFO / CURRENT CODES.
(g) Read DTCs.

ES

Result

Display (DTC Output)	Proceed to
P0560	A
No output	B

B → **CHECK FOR INTERMITTENT PROBLEMS**

A ↓

REPLACE ECM

DTC	P0604	Internal Control Module Random Access Memory (RAM) Error

DTC	P0606	ECM / PCM Processor

DTC	P0607	Control Module Performance

DTC	P0657	Actuator Supply Voltage Circuit / Open

DESCRIPTION

ES

The ECM continuously monitors its own internal memory status, internal circuits, and output signals transmitted to the throttle actuator. This self-check ensures that the ECM is functioning properly. If any malfunction is detected, the ECM sets the appropriate DTC and illuminates the MIL.
The ECM memory status is diagnosed by internal mirroring of the main CPU and the sub CPU to detect Random Access Memory (RAM) errors. The two CPUs also perform continuous mutual monitoring. The ECM illuminates the MIL and sets a DTC if: 1) outputs from the two CPUs are different or deviate from the standards, 2) the signals sent to the throttle actuator deviate from the standards, 3) a malfunction is found in the throttle actuator supply voltage, and 4) any other ECM malfunction is found.

DTC No.	DTC Detection Condition	Trouble Area
P0604 P0606 P0607 P0657	ECM internal error (1 trip detection logic)	ECM

MONITOR STRATEGY

Related DTCs	P0604: ECM RAM error P0606: ECM range check P0607: ECM CPU malfunction P0657: ETCS power supply
Required Sensors/Components (Main)	ECM
Required Sensors/Components (Related)	-
Frequency of Operation	Once per driving cycle: P0657 Continuous: P0604, P0606 and P0607
Duration	Within 60 seconds
MIL Operation	Immediate
Sequence of Operation	None

TYPICAL ENABLING CONDITIONS

Monitor runs whenever following DTCs not present	None

TYPICAL MALFUNCTION THRESHOLDS

ECM RAM errors (P0604):

RAM mirror check	Fail

ECM CPU range check (P0606):

Either of following conditions met:	-
Difference between throttle valve position of main CPU and throttle valve position of sub CPU	0.3 V or more
Difference between accelerator pedal position of main CPU and accelerator pedal position of sub CPU	0.3 V or more

ECM CPU malfunction (P0607):

Either A or B met	-
A. All of following conditions (a), (b) and (c) met	-
(a) CPU reset	1 time or more
(b) Learned TP - learned APP	0.4 V or more
(c) Electronic throttle actuator	OFF
B. CPU reset	2 times or more

ETCS power supply (P0657):

ETCS power supply when ignition switch turned ON	7 V or more

INSPECTION PROCEDURE

Read freeze frame data using the intelligent tester. Freeze frame data records the engine condition when malfunctions are detected. When troubleshooting, freeze frame data can help determine if the vehicle was moving or stationary, if the engine was warmed up or not, if the air-fuel ratio was lean or rich, and other data from the time the malfunction occurred.

ES

1	**CHECK ANY OTHER DTCS OUTPUT (IN ADDITION TO DTC P0604, P0606, P0607 or P0657)**

(a) Connect the intelligent tester to the DLC3.
(b) Turn the ignition switch ON.
(c) Turn the tester ON.
(d) Select the following menu items: DIAGNOSIS / ENHANCED OBD II / DTC INFO / CURRENT CODES.
(e) Read DTCs.

Result

Display (DTC Output)	Proceed to
P0604, P0606, P0607 or P0657	A
P0604, P0606, P0607 or P0657 and other DTCs	B

B → **GO TO DTC CHART**

A →

REPLACE ECM

DTC	P0617	Starter Relay Circuit High

DESCRIPTION

While the engine is being cranked, the positive battery voltage is applied to terminal STA of the ECM. If the ECM detects the Starter Control (STA) signal while the vehicle is being driven, it determines that there is a malfunction in the STA circuit. The ECM then illuminates the MIL and sets the DTC.
This monitor runs when the vehicle is driven at 20 km/h (12.4 mph) for over 20 seconds.

DTC No.	DTC Detection Condition	Trouble Area
P0617	When conditions (a), (b) and (c) met, positive (+B) battery voltage 10.5 V or more applied to ECM for 20 seconds (1 trip detection logic) (a) Vehicle speed 20 km/h (12.4 mph) or more (b) Engine speed 1,000 rpm or more (c) STA signal ON	• Park/Neutral Position (PNP) switch • Starter relay circuit • Ignition switch • ECM

ES

MONITOR STRATEGY

Related DTCs	P0617: Starter signal
Required Sensors/Components (Main)	STARTER relay, PNP switch, Clutch start switch and Ignition switch
Required Sensors/Components (Related)	Vehicle Speed Sensor (VSS), Crankshaft Position (CKP) sensor
Frequency of Operation	Continuous
Duration	20 seconds
MIL Operation	Immediate
Sequence of Operation	None

TYPICAL ENABLING CONDITIONS

Monitor runs whenever following DTCs not present	None
Battery voltage	10.5 V or more
Vehicle speed	20 km/h (12.43 mph) or more
Engine speed	1,000 rpm or more

TYPICAL MALFUNCTION THRESHOLDS

Starter signal	ON

WIRING DIAGRAM

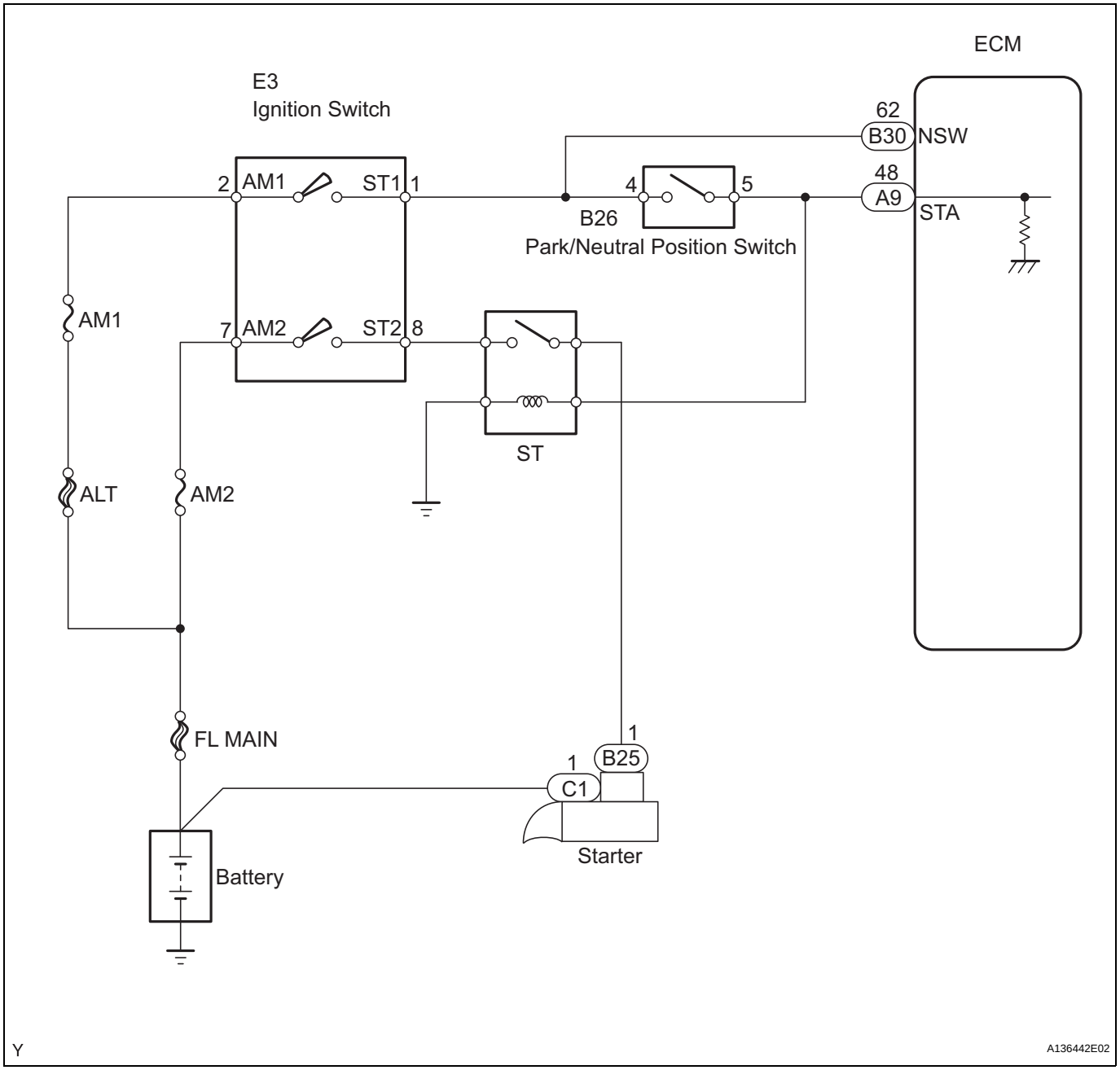

ES

INSPECTION PROCEDURE

HINT:

- The following troubleshooting flowchart is based on the premise that the engine is cranked normally. If the engine will not crank, proceed to the problem symptoms table (see page ES-27).
- Read freeze frame data using the intelligent tester. Freeze frame data records the engine condition when malfunctions are detected. When troubleshooting, freeze frame data can help determine if the vehicle was moving or stationary, if the engine was warmed up or not, if the air-fuel ratio was lean or rich, and other data from the time the malfunction occurred.

1	**READ VALUE USING INTELLIGENT TESTER (STARTER SIGNAL)**

(a) Connect the intelligent tester to the DLC3.
(b) Turn the ignition switch ON and turn the tester ON.

(c) Select the following menu items: DIAGNOSIS / ENHANCED OBD II / DATA LIST / PRIMARY / STARTER SIG.
(d) Check the value displayed on the tester when the ignition switch is turned to the ON and START positions.

OK

Ignition Switch Position	STARTER SIG
ON	OFF
START	ON

OK → **CHECK FOR INTERMITTENT PROBLEMS**

NG

ES

2 INSPECT PARK/NEUTRAL POSITION SWITCH ASSEMBLY

Component Side:

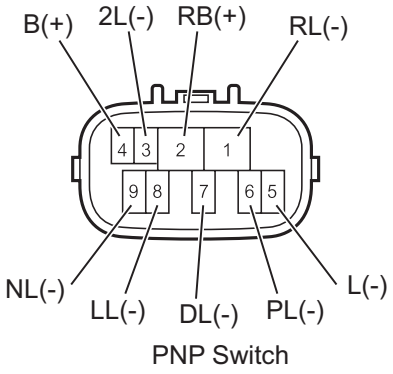

(a) Disconnect the B26 PNP switch connector.
(b) Measure the resistance when the transmission gear selector lever is moved to each position.

Standard resistance

Gear Selector Lever Position	Tester Connection	Specified Condition
P	2 (RB) - 6 (PL), 4 (B) - 5 (L)	Below 1 Ω
R	1 (RL) - 2 (RB)	Below 1 Ω
N	2 (RB) - 9 (NL), 4 (B) - 5 (L)	Below 1 Ω
D	2 (RB) - 7 (DL)	Below 1 Ω
2	2 (RB) - 3 (2L)	Below 1 Ω
L	2 (RB) - 8 (LL)	Below 1 Ω

(c) Reconnect the PNP switch connector.

OK → **Go to step 5**

NG

3 REPLACE PARK/NEUTRAL POSITION SWITCH ASSEMBLY

NEXT

4 READ VALUE USING INTELLIGENT TESTER (STARTER SIGNAL)

(a) Connect the intelligent tester to the DLC3.
(b) Turn the ignition switch ON and turn the tester ON.
(c) Select the following menu items: DIAGNOSIS / ENHANCED OBD II / DATA LIST / PRIMARY / STARTER SIG.
(d) Check the value displayed on the tester when the ignition switch is turned to the ON and START positions.

OK

Ignition Switch Position	STARTER SIG
ON	OFF
START	ON

OK → SYSTEM OK

NG

5 INSPECT IGNITION SWITCH ASSEMBLY

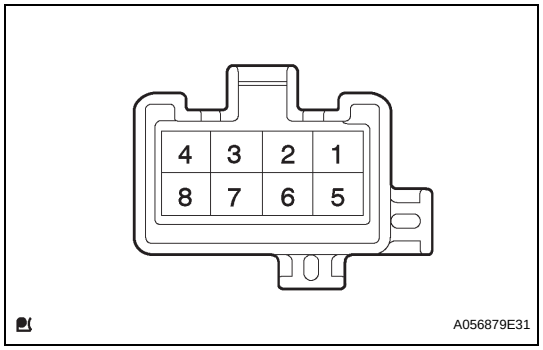

(a) Disconnect the E3 ignition switch connector.
(b) Check the resistance.

Standard resistance

Tester Connection	Ignition Switch Position	Specified Condition
All Terminals	LOCK	10 kΩ or higher
2 (AM1) - 3 (ACC)	ACC	Below 1 Ω
2 (AM1) - 3 (ACC), 2 (AM1) - 4 (IG1), 6 (IG2) - 7 (AM2)	ON	
1 (ST1) - 2 (AM1), 2 (AM1) - 4 (IG1), 6 (IG2) - 7 (AM2), 7 (AM2) - 8 (ST2)	START	

(c) Reconnect the ignition switch connector.

OK → Go to step 7

NG

6 REPLACE IGNITION SWITCH ASSEMBLY

NEXT

7 READ VALUE USING INTELLIGENT TESTER (STARTER SIGNAL)

(a) Connect the intelligent tester to the DLC3.
(b) Turn the ignition switch ON and turn the tester ON.
(c) Select the following menu items: DIAGNOSIS / ENHANCED OBD II / DATA LIST / PRIMARY / STARTER SIG.
(d) Check the value displayed on the tester when the ignition switch is turned to the ON and START positions.

OK

Ignition Switch Position	STARTER SIG
ON	OFF
START	ON

OK → SYSTEM OK

NG

8	REPAIR OR REPLACE HARNESS AND CONNECTOR (PNP SWITCH - STA TERMINAL OF ECM)

NEXT

9	CHECK WHETHER DTC OUTPUT RECURS

(a) Connect the intelligent tester to the DLC3.
(b) Turn the ignition switch ON.
(c) Turn the tester ON.
(d) Clear DTCs (see page ES-39).
(e) Drive the vehicle at more than 20 km/h (12.43 mph) for over 20 seconds.
(f) Select the following menu items: DIAGNOSIS / ENHANCED OBD II / DTC INFO / CURRENT CODES.
(g) Read DTCs.

Result

Display (DTC Output)	Proceed to
P0617	A
No DTC	B

B → SYSTEM OK

A

REPLACE ECM

DTC	P0630	VIN not Programmed or Mismatch - ECM / PCM

DESCRIPTION

DTC P0630 is set when the Vehicle Identification Number (VIN) is not stored in the Engine Control Module (ECM) or the input VIN is incorrect. Input the VIN with the intelligent tester.

DTC No.	DTC Detection Condition	Trouble Area
P0630	When either condition blow is met: (1 trip detection logic) • VIN not stored in ECM • Input VIN incorrect	ECM

MONITOR STRATEGY

Related DTCs	P0630: VIN not programmed
Required Sensors/Components (Main)	ECM
Required Sensors/Components (Related)	-
Frequency of Operation	Continuous
Duration	0.325 seconds
MIL Operation	Immediate
Sequence of Operation	None

ES

TYPICAL ENABLING CONDITIONS

Battery voltage	8 V or more
Ignition switch	ON
Starter	OFF

TYPICAL MALFUNCTION THRESHOLDS

VIN code	Not programmed

COMPONENT OPERATING RANGE

VIN code	Programmed

INSPECTION PROCEDURE

1	READ CURRENT DTC

(a) Connect the intelligent tester to the DLC3.
(b) Turn the ignition switch ON and turn the tester ON.
(c) Select the following menu items: DIAGNOSIS / ENHANCED OBD II / DTC INFO / CURRENT CODES.
(d) Read DTCs.

Result

Display (DTC Output)	Proceed to
P0630	A
P0630 and other DTCs	B

If any DTCs other than P0630 are output, troubleshoot those DTCs first.

NOTICE:
If P0630 is set, the VIN must be input to the ECM using the intelligent tester. However, all DTCs are cleared automatically by the tester when the VIN is input. If DTCs other than P0630 are set, check them first.

B	**GO TO DTC CHART**

A

2	**INPUT VIN WITH INTELLIGENT TESTER**

(a) Refer to the REGISTRATION (see page ES-16).

NEXT

ES

END

DTC	P0724	Brake Switch "B" Circuit High

DESCRIPTION

The purpose of this circuit is to prevent the engine from stalling while driving in the lock-up condition when the brakes are suddenly applied.
When the brake pedal is depressed, this switch sends a signal to the ECM. Then the ECM cancels the operation of the lock-up clutch while braking is in progress.

DTC No.	DTC Detection Condition	Trouble Area
P0724	Stop light switch remains ON even when vehicle is driven in GO (30 km/h (18.63 mph) or more) and STOP (less than 3 km/h (1.86 mph)) pattern 5 times (2 trip detection logic)	• Short in stop light switch signal circuit • Stop light switch • ECM

MONITOR DESCRIPTION

ES

This DTC indicates that the stop light switch remains ON. When the stop light switch remains ON during GO and STOP driving, the ECM interprets this as a fault in the stop light switch. Then the MIL illuminates and the ECM stores the DTC. The vehicle must GO (30 km/h (18.63 mph) or more) and STOP (less than 3 km/h (1.86 mph)) 5 times for 2 driving cycles in order for the DTC to be output.

MONITOR STRATEGY

Related DTCs	P0724: Stop light switch/Range check/Rationality
Required sensors/Components	Stop light switch, Vehicle speed sensor
Frequency of operation	Continuous
Duration	GO and STOP 5 times
MIL operation	2 driving cycles
Sequence of operation	None

TYPICAL ENABLING CONDITIONS

The monitor will run whenever this DTC is not present.	None
Battery voltage	8 V or more
Starter	OFF
Ignition switch	ON
GO (Vehicle speed is 30 km/h (18.63 mph) or more)	Once
STOP (Vehicle speed is less than 3 km/h (1.86 mph))	Once

TYPICAL MALFUNCTION THRESHOLDS

Brake switch	Stuck ON

WIRING DIAGRAM

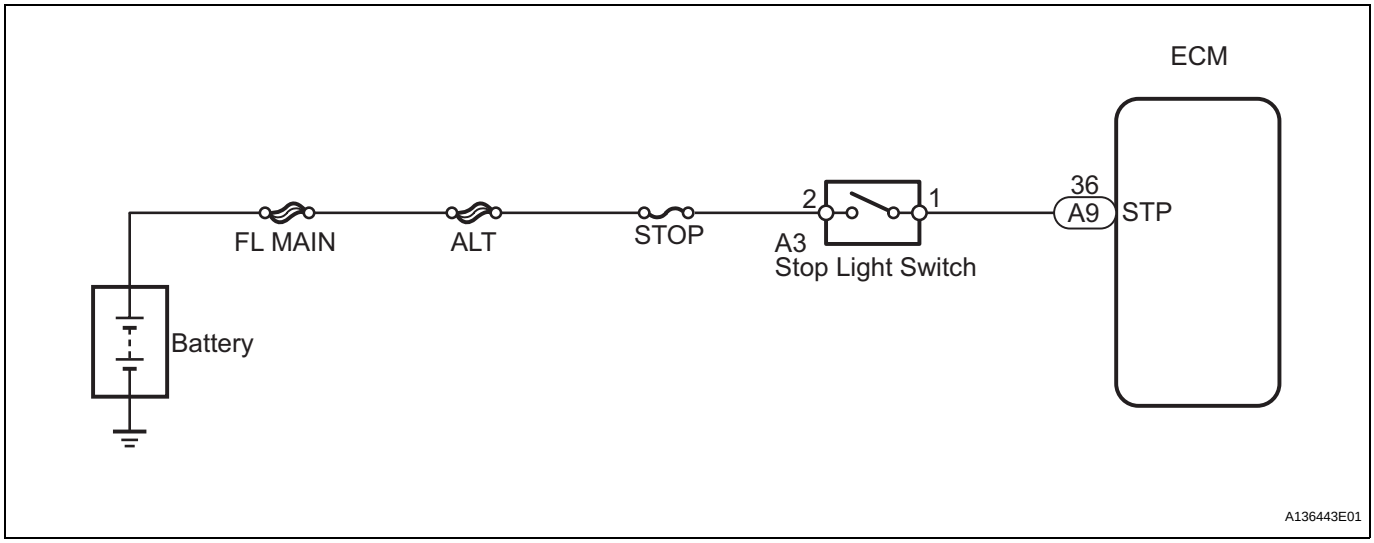

ES

INSPECTION PROCEDURE

HINT:
Using the intelligent tester's DATA LIST allows switch, sensor, actuator and other item values to be read without removing any parts. Reading the DATA LIST early in troubleshooting is one way to save time.
NOTICE:
In the table below, the values listed under "Normal Condition" are reference values. Do not depend solely on these reference values when deciding whether a part is faulty or not.

1. Warm up the engine.
2. Turn the ignition switch OFF.
3. Connect the intelligent tester to the CAN VIM. Then connect the CAN VIM to the DLC3.
4. Turn the ignition switch ON.
5. Turn the intelligent tester ON.
6. Enter the following menus: DIAGNOSIS / ENHANCED OBD II / DATA LIST.
7. Follow the instructions on the tester and read the DATA LIST.

Item	Measurement Item/ Range (Display)	Normal Condition	Diagnostic Note
STOP LIGHT SW	Stop light switch status/ ON or OFF	• Brake pedal is depressed: ON • Brake pedal is released: OFF	-

1	INSPECT STOP LIGHT SWITCH

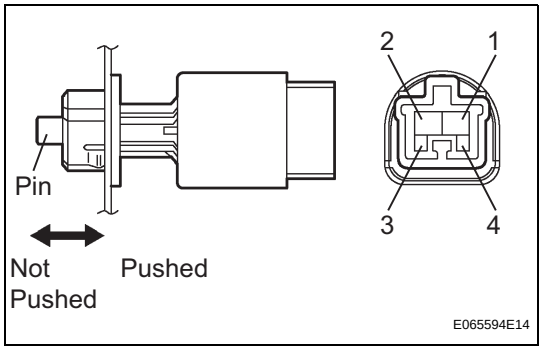

(a) Remove the A3 stop light switch.
(b) Measure the resistance of the switch.
Standard resistance

Tester Connection	Switch Condition	Specified Condition
1 - 2	Pin pushed (pedal released)	Below 1 Ω
1 - 2	Pin not pushed (pedal depressed)	10 kΩ or higher
3 - 4	Pin pushed (pedal released)	10 kΩ or higher
3 - 4	Pin not pushed (pedal depressed)	Below 1 Ω

NG → REPLACE STOP LIGHT SWITCH

OK

2 CHECK WIRE HARNESS (ECM - BATTERY)

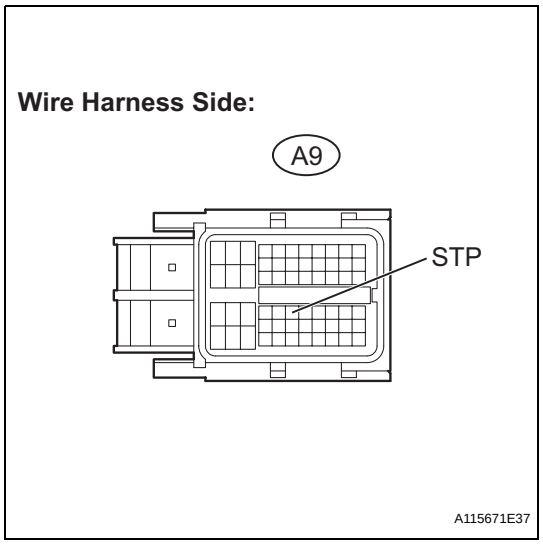

(a) Measure the voltage of the wire harness side connector.
Standard voltage

Tester Connection	Condition	Specified Condition
A9-36 (STP) - Body ground	Brake pedal is depressed	10 to 14 V
A9-36 (STP) - Body ground	Brake pedal is released	Below 1 V

NG → REPAIR OR REPLACE HARNESS AND CONNECTOR

OK

REPLACE ECM

ES

DTC	P1550	Battery Current Sensor Circuit

DTC	P1551	Battery Current Sensor Circuit Low

DTC	P1552	Battery Current Sensor Circuit High

DESCRIPTION

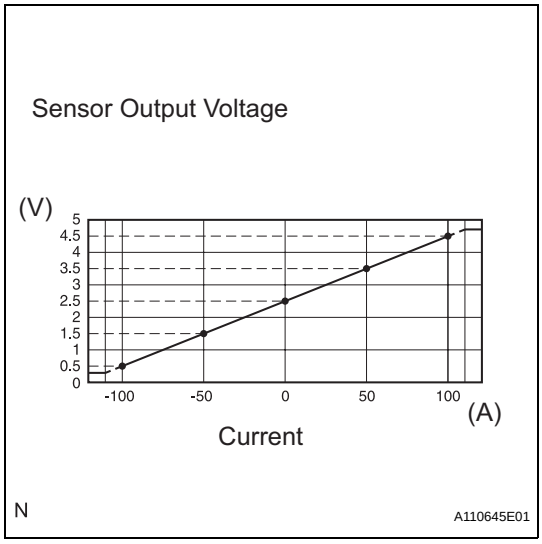

The battery current sensor installed on the positive (+) battery terminal detects the amount of current supplied from the generator.
The battery current sensor changes current to voltage (at the positive (+) battery terminal) and sends it to the ECM. The ECM controls the voltage of the generator based on the signals from the battery current sensor.

DTC No.	DTC Detection Condition	Trouble Area
P1550	The following condition continues for 10 seconds or more with the ignition switch ON (1 trip detection logic): • Difference between the maximum and minimum current values of the battery current sensor is 1 A or less	• Open or short in battery current sensor circuit • Battery current sensor assembly • ECM
P1551	Battery current sensor output value is 0.2 V or less for 0.5 seconds or more with the ignition switch ON (1 trip detection logic)	• Short in battery current sensor circuit • Battery current sensor assembly • ECM
P1552	Battery current sensor output value is 4.8 V or more for 0.5 seconds or more with the ignition switch ON (1 trip detection logic)	• Open in battery current sensor circuit • Battery current sensor assembly • ECM

WIRING DIAGRAM

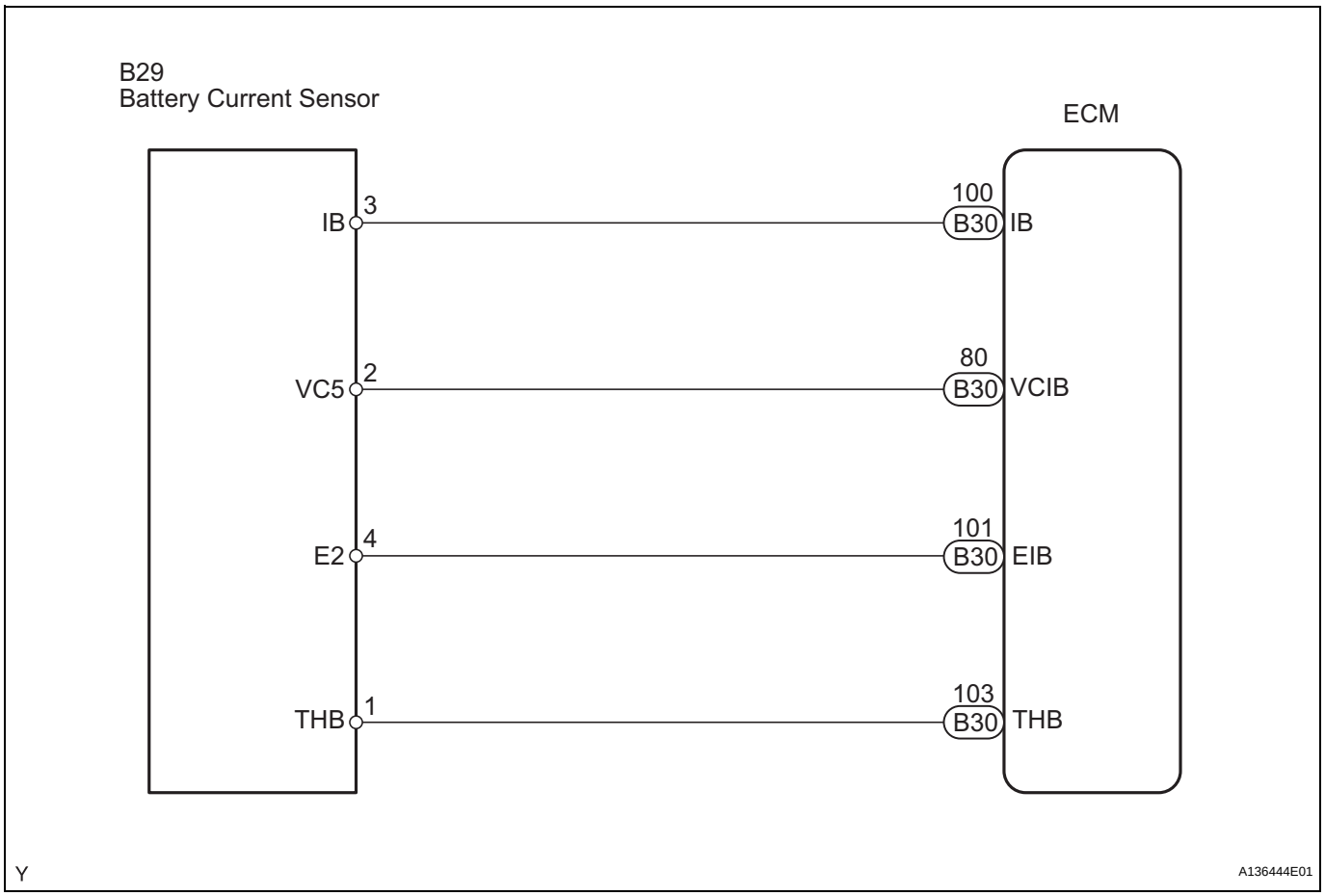

ES

INSPECTION PROCEDURE

HINT:

- If DTCs related to different systems that have terminal E2 as the ground terminal are output simultaneously, terminal E2 may have an open circuit.
- Read freeze frame data using the intelligent tester. Freeze frame data records the engine conditions when malfunctions are detected. When troubleshooting, freeze frame data can help determine if the vehicle was running or stopped, if the engine was warmed up or not, if the air-fuel ratio was lean or rich, and other data from the time the malfunction occurred.

1 INSPECT BATTERY CURRENT SENSOR ASSEMBLY

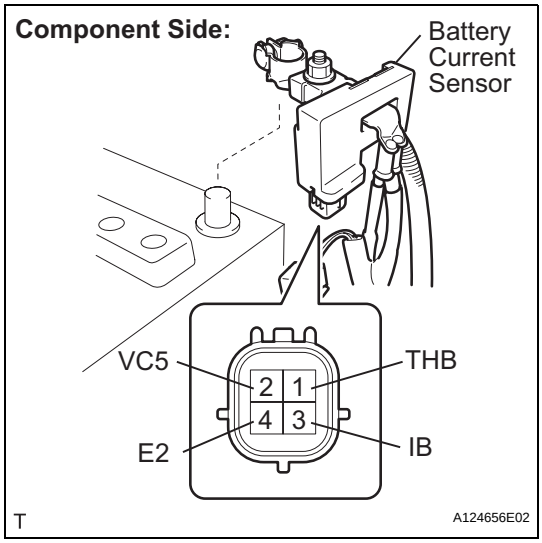

(a) Disconnect the B29 battery current sensor connector.
(b) Measure the resistance of the battery current sensor.

Standard resistance

Tester Connection	Specified Condition
2 (VC5) - 4 (E2)	3 to 10 kΩ
2 (VC5) - 3 (IB)	Below 0.5 kΩ
3 (IB) - 4 (E2)	3 to 10 kΩ

HINT:
The resistance differs according to the tester type.

NG → **REPLACE BATTERY CURRENT SENSOR ASSEMBLY**

OK

2 CHECK WIRE HARNESS (BATTERY CURRENT SENSOR - ECM)

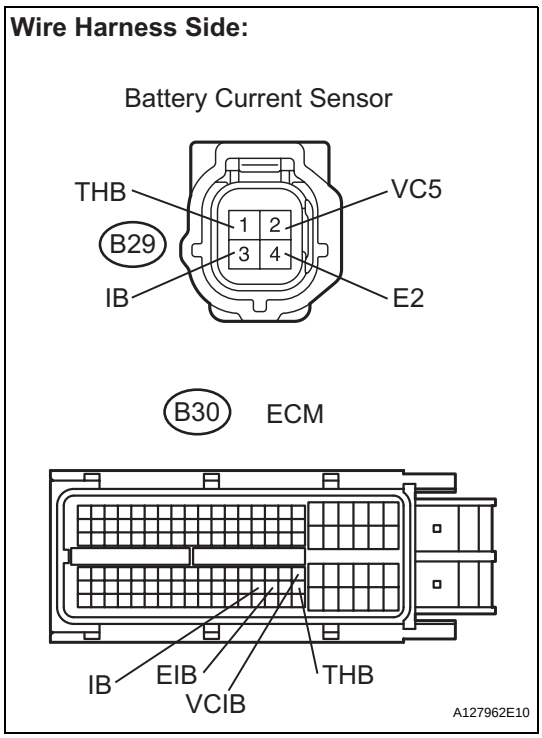

(a) Disconnect the B29 battery current sensor connector.
(b) Disconnect the B30 ECM connectors.
(c) Measure the resistance of the wire harness side connectors.

Standard resistance

Tester Connection	Specified Condition
B29-3 (IB) - B30-100 (IB)	Below 1 Ω
B29-2 (VC5) - B30-80 (VCIB)	Below 1 Ω
B29-4 (E2) - B30-101 (EIB)	Below 1 Ω
B29-1 (THB) - B30-103 (THB)	Below 1 Ω
B29-3 (IB) or B30-100 (IB) - Body ground	10 kΩ or higher
B29-2 (VC5) or B30-80 (VCIB) - Body ground	10 kΩ or higher
B29-1 (THB) or B30-103 (THB) - Body ground	10 kΩ or higher

NG → **REPAIR OR REPLACE HARNESS AND CONNECTOR**

OK

REPLACE ECM

DTC	P1602	Deterioration of Battery

DESCRIPTION

The ECM determines the battery power according to the voltage of the BATT terminal while the engine is running (not cranking).

DTC No.	DTC Detection Condition	Trouble Area
P1602	Battery power is 0% (1 trip detection logic)	• Battery • ECM back-up power source circuit

INSPECTION PROCEDURE

1 INSPECT BATTERY

(a) Inspect the battery specific gravity.
  (1) Check the specific gravity of each cell.
    Standard gravity:
    1.25 to 1.29 at 20°C (68°F)

(b) Inspect the battery voltage.
  (1) After the vehicle is driven for 20 minutes, stop the engine.
  (2) Turn the ignition switch ON, and turn on the headlights, blower fan and defogger for 1 minute.
  (3) Turn the ignition switch OFF.
  (4) Measure the battery voltage.
    Standard voltage:
    9.6 V or more

NG → **REPLACE BATTERY**

OK

CHECK ECU POWER SOURCE CIRCUIT

DTC	P2102	Throttle Actuator Control Motor Circuit Low

DTC	P2103	Throttle Actuator Control Motor Circuit High

DESCRIPTION

The throttle actuator is operated by the ECM and opens and closes the throttle valve using gears.
The opening angle of the throttle valve is detected by the Throttle Position (TP) sensor, which is mounted on the throttle body. The TP sensor provides feedback to the ECM. This feedback allows the ECM to appropriately control the throttle actuator and monitor the throttle opening angle as the ECM responds to driver inputs.
HINT:
This ETCS (Electronic Throttle Control System) does not use a throttle cable.

DTC No.	DTC Detection Condition	Trouble Area
P2102	Conditions (a) and (b) continue for 2.0 seconds (1 trip detection logic): (a) Throttle actuator duty ratio 80% or more (b) Throttle actuator current less than 0.5 A	• Open in throttle actuator circuit • Throttle actuator • ECM
P2103	Either of following conditions met (1 trip detection logic): • Hybrid IC diagnosis signal failure • Hybrid IC current limiter port failure	• Short in throttle actuator circuit • Throttle actuator • Throttle valve • Throttle body assembly • ECM

MONITOR DESCRIPTION

The ECM monitors the electrical current through the electronic actuator, and detects malfunctions and open circuits in the throttle actuator based on this value. If the current is outside the standard range, the ECM determines that there is a malfunction in the throttle actuator. In addition, if the throttle valve does not function properly (for example, stuck on), the ECM determines that there is a malfunction. The ECM then illuminates the MIL and sets a DTC.
Example:
When the electrical current is less than 0.5 A and the throttle actuator duty ratio exceeds 80%, the ECM interprets this as the current being outside the standard range, and illuminates the MIL and sets a DTC. If the malfunction is not repaired successfully, a DTC is set when the engine is quickly revved to a high rpm several times after the engine is started and has idled for 5 seconds.

MONITOR STRATEGY

Related DTCs	P2102: Throttle actuator current (low current) P2103: Throttle actuator current (high current)
Required Sensors/Components (Main)	Throttle actuator (throttle body)
Required Sensors/Components (Related)	None
Frequency of Operation	Continuous
Duration	2 seconds: P2102 0.1 seconds or 0.6 seconds: P2103
MIL Operation	Immediate
Sequence of Operation	None

TYPICAL ENABLING CONDITIONS

Monitor runs whenever following DTCs not present	None

P2102:

Throttle actuator	Activated
Duty-cycle ratio to open throttle actuator	80% or more

Throttle actuator power supply	8 V or more

P2103:

Throttle actuator	Activated
Throttle actuator power supply	8 V or more
Battery voltage	8 V or more
Starter	OFF

TYPICAL MALFUNCTION THRESHOLDS

P2102:

Throttle actuator current	Less than 0.5 A

P2103:

Either of the following condition is met	Condition 1 or 2
1. Hybrid IC diagnosis signal	Fail for 25 times
2. Hybrid IC current limiter port	Fail for 0.6 seconds

ES

FAIL-SAFE

When either of these DTCs, or other DTCs relating to ETCS (Electronic Throttle Control System) malfunctions, are set, the ECM enters fail-safe mode. During fail-safe mode, the ECM cuts the current to the throttle actuator off, and the throttle valve is returned to a 6° throttle angle by the return spring. The ECM then adjusts the engine output by controlling the fuel injection (intermittent fuel-cut) and ignition timing, in accordance with the accelerator pedal opening angle, to allow the vehicle to continue at a minimal speed. If the accelerator pedal is depressed firmly and gently, the vehicle can be driven slowly. Fail-safe mode continues until a pass condition is detected, and the ignition switch is then turned OFF.

WIRING DIAGRAM

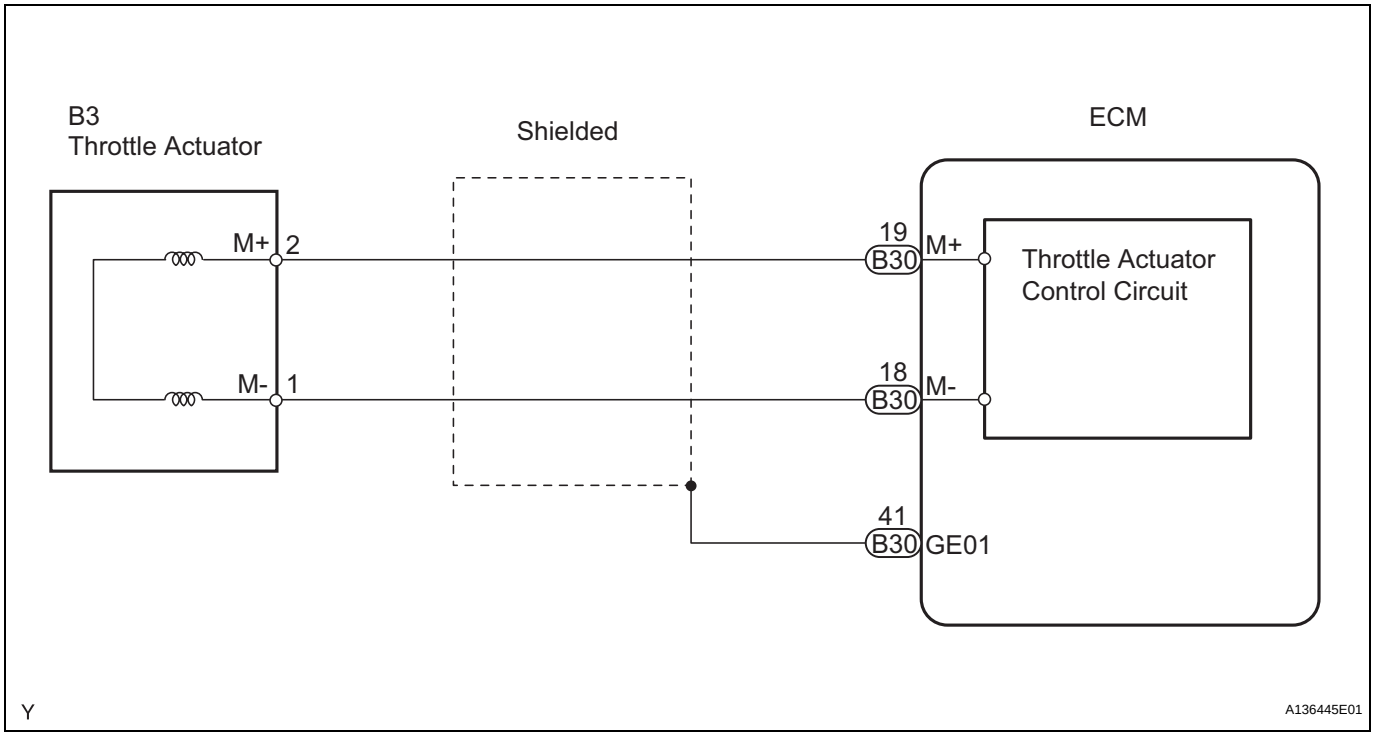

INSPECTION PROCEDURE

HINT:

- Read freeze frame data using the intelligent tester. Freeze frame data records the engine condition when malfunctions are detected. When troubleshooting, freeze frame data can help determine if the vehicle was moving or stationary, if the engine was warmed up or not, if the air-fuel ratio was lean or rich, and other data from the time the malfunction occurred.
- The throttle actuator current (THROTTLE MOT) and the throttle actuator duty ratio (THROTL OPN DUTY / THROTL CLS DUTY) can be read using the intelligent tester. However, the ECM shuts off the throttle actuator current when the ETCS malfunctions.

1 INSPECT THROTTLE BODY (RESISTANCE OF THROTTLE ACTUATOR)

Component Side:

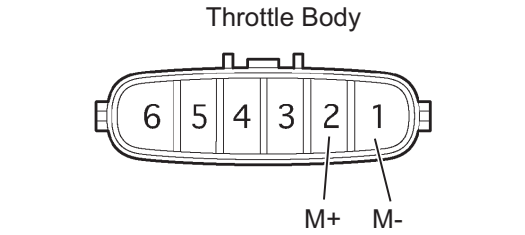

(a) Disconnect the B3 throttle body connector.
(b) Measure the resistance of the throttle actuator.
Standard resistance

Tester Connection	Specified Condition
2 (M+) - 1 (M-)	0.3 to 100 Ω at 20°C (68°F)

(c) Reconnect the throttle body connector.

NG → **REPLACE THROTTLE BODY ASSEMBLY**

OK

2 CHECK WIRE HARNESS (THROTTLE ACTUATOR - ECM)

Wire Harness Side:

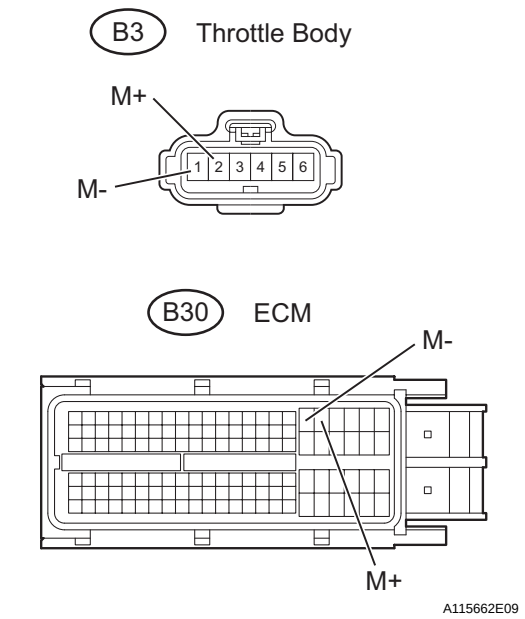

(a) Disconnect the B3 throttle body connector.
(b) Disconnect the B30 ECM connector.
(c) Measure the resistance.
Standard resistance

Tester Connection	Specified Condition
B3-2 (M+) - B30-19 (M+)	Below 1 Ω
B3-1 (M-) - B30-18 (M-)	Below 1 Ω
B3-2 (M+) or B30-19 (M+) - Body ground	10 kΩ or higher
B3-1 (M-) or B30-18 (M-) - Body ground	10 kΩ or higher

(d) Reconnect the throttle body connector.
(e) Reconnect the ECM connector.

NG → **REPAIR OR REPLACE HARNESS AND CONNECTOR**

OK

3	INSPECT THROTTLE BODY ASSEMBLY

(a) Check for foreign objects between the throttle valve and the housing.
OK:
No foreign objects between throttle valve and housing.

NG → **REMOVE FOREIGN OBJECT AND CLEAN THROTTLE BODY**

OK

4	INSPECT THROTTLE VALVE

(a) Check if the throttle valve opens and closes smoothly.
OK:
Throttle valve opens and closes smoothly.

NG → **REPLACE THROTTLE BODY ASSEMBLY**

OK

REPLACE ECM

DTC	P2111	Throttle Actuator Control System - Stuck Open

DTC	P2112	Throttle Actuator Control System - Stuck Closed

DESCRIPTION

The throttle actuator is operated by the ECM, and opens and closes the throttle valve using gears. The opening angle of the throttle valve is detected by the Throttle Position (TP) sensor, which is mounted on the throttle body. The TP sensor provides feedback to the ECM so that it can control the throttle actuator (throttle valve) appropriately in response to driver inputs.
HINT:
This ETCS (Electronic Throttle Control System) does not use a throttle cable.

DTC No.	DTC Detection Condition	Trouble Area
P2111	Throttle actuator does not close when signaled by ECM (1 trip detection logic)	• Throttle actuator • Throttle body assembly • Throttle valve
P2112	Throttle actuator does not open when signaled by ECM (1 trip detection logic)	• Throttle actuator • Throttle body assembly • Throttle valve

MONITOR DESCRIPTION

The ECM determines that there is a malfunction in the ETCS when the throttle valve remains at a fixed angle despite a high drive current from the ECM. The ECM illuminates the MIL and sets a DTC.
If the malfunction is not repaired successfully, a DTC is set when the accelerator pedal is fully depressed and released quickly (to fully open and close the throttle valve) after the engine is next started.

MONITOR STRATEGY

Related DTCs	P2111: Throttle actuator stuck open P2112: Throttle actuator stuck closed
Required Sensors/Components (Main)	Throttle actuator
Required Sensors/Components (Related)	-
Frequency of Operation	Continuous
Duration	0.5 seconds
MIL Operation	Immediate
Sequence of Operation	None

TYPICAL ENABLING CONDITIONS

All:

Monitor runs whenever following DTCs not present	None
Throttle actuator	ON
Throttle actuator duty calculation	Executing
Throttle position sensor	Fail determined
Throttle actuator current-cut operation	Not executing
Throttle actuator power supply	4 V or higher
Throttle actuator	Fail determined

P2111 (Throttle actuator stuck open):

All of following conditions met	-
Throttle actuator current	2 A or more
Duty cycle to close throttle	80% or more

P2112 (Throttle actuator stuck closed):

All of following conditions met	-
Throttle actuator current	2 A or more
Duty cycle to open throttle	80% or more

TYPICAL MALFUNCTION THRESHOLDS

TP sensor voltage change	No change

FAIL-SAFE

When either of these DTCs, or other DTCs relating to ETCS (Electronic Throttle Control System) malfunctions, are set, the ECM enters fail-safe mode. During fail-safe mode, the ECM cuts the current to the throttle actuator off, and the throttle valve is returned to a 6° throttle angle by the return spring. The ECM then adjusts the engine output by controlling the fuel injection (intermittent fuel-cut) and ignition timing, in accordance with the accelerator pedal opening angle, to allow the vehicle to continue at a minimal speed. If the accelerator pedal is depressed firmly and gently, the vehicle can be driven slowly. Fail-safe mode continues until a pass condition is detected, and the ignition switch is then turned OFF.

WIRING DIAGRAM

Refer to DTC P2102 (see page ES-308).

INSPECTION PROCEDURE

HINT:

Read freeze frame data using the intelligent tester. Freeze frame data records the engine condition when malfunctions are detected. When troubleshooting, freeze frame data can help determine if the vehicle was moving or stationary, if the engine was warmed up or not, if the air-fuel ratio was lean or rich, and other data from the time the malfunction occurred.

1	CHECK ANY OTHER DTCS OUTPUT (IN ADDITION TO DTC P2111 OR P2112)

(a) Connect the intelligent tester to the DLC3.
(b) Turn the ignition switch ON.
(c) Turn the tester ON.
(d) Select the following menu items: DIAGNOSIS / ENHANCED OBD II / DTC INFO / CURRENT CODES.
(e) Read DTCs.

Result

Display (DTC Output)	Proceed to
P2111 or P2112	A
P2111 or P2112 and other DTCs	B

HINT:

If any DTCs other than P2111 or P2112 are output, troubleshoot those DTCs first.

B → GO TO DTC CHART

A

2	INSPECT THROTTLE BODY ASSEMBLY (VISUALLY CHECK THROTTLE VALVE)

(a) Check for contamination between the throttle valve and the housing. If necessary, clean the throttle body. And check that the throttle valve moves smoothly.
OK:
Throttle valve is not contaminated with foreign objects and moves smoothly.

NG → **REPLACE THROTTLE BODY ASSEMBLY**

OK ↓

3	CHECK WHETHER DTC OUTPUT RECURS (DTC P2111 OR P2112)

(a) Connect the intelligent tester to the DLC3.
(b) Turn the ignition switch ON.
(c) Turn the tester ON.
(d) Clear DTCs (see page ES-39).
(e) Start the engine, and fully depress and release the accelerator pedal quickly (to fully open and close the throttle valve).
(f) Select the following menu items: DIAGNOSIS / ENHANCED OBD II / DTC INFO / CURRENT CODES.
(g) Read DTCs.

Result

Display (DTC Output)	Proceed to
No DTC	A
P2111 or P2112	B

B → **REPLACE ECM**

A ↓

CHECK FOR INTERMITTENT PROBLEMS

DTC	P2118	Throttle Actuator Control Motor Current Range / Performance

DESCRIPTION

The ETCS (Electronic Throttle Control System) has a dedicated power supply circuit. The voltage (+BM) is monitored and when it is low (less than 4 V), the ECM determines that there is a malfunction in the ETCS and cuts off the current to the throttle actuator.
When the voltage becomes unstable, the ETCS itself becomes unstable. For this reason, when the voltage is low, the current to the throttle actuator is cut. If repairs are made and the system returns to normal, turn the ignition switch OFF. The ECM then allows the current to flow to the throttle actuator so that it can be restarted.
HINT:
The ETCS does not use a throttle cable.

ES

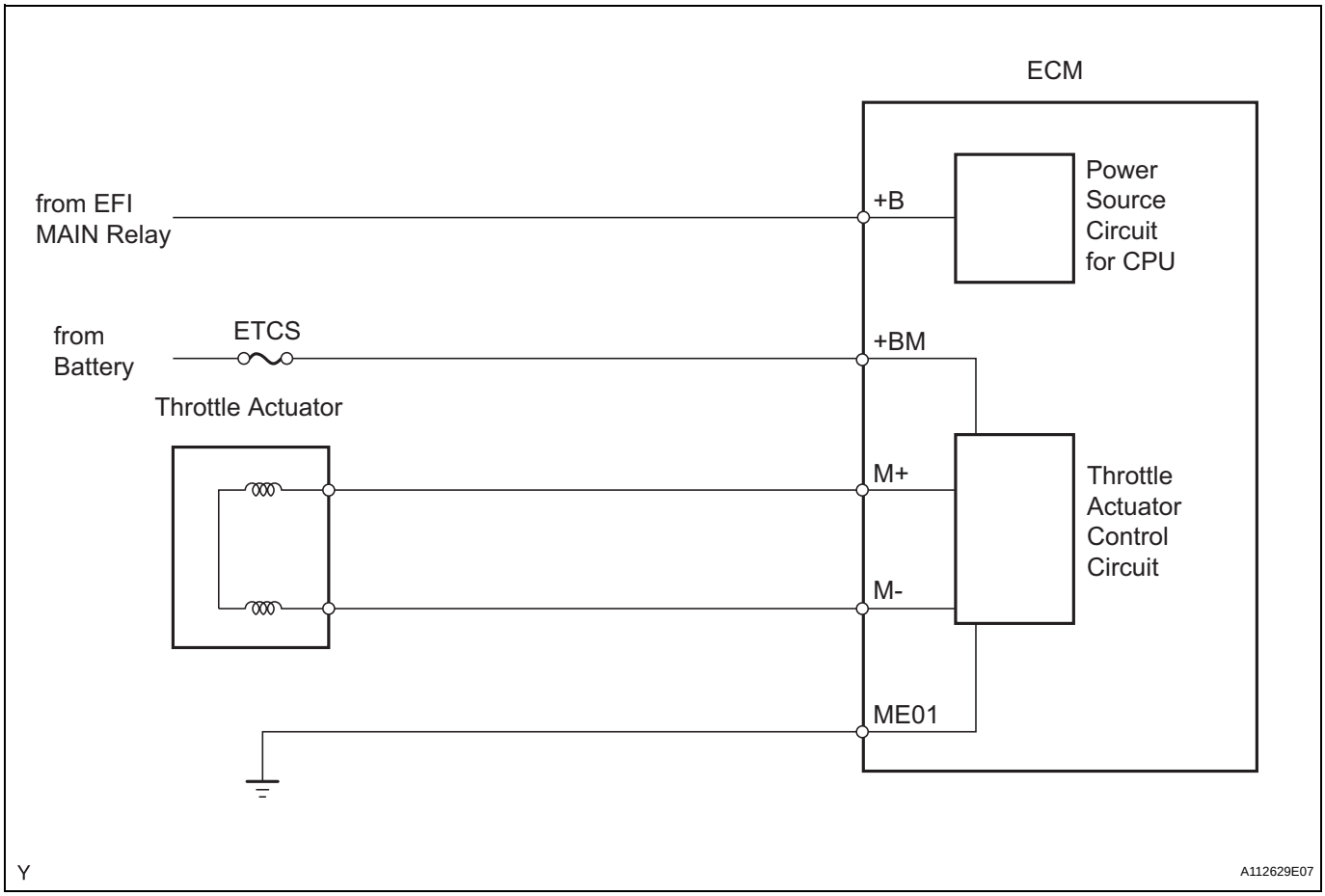

DTC No.	DTC Detection Condition	Trouble Area
P2118	Open in ETCS power source (+BM) circuit (1 trip detection logic)	• Open in ETCS power source circuit • Battery • Battery terminals • ETCS fuse • ECM

MONITOR DESCRIPTION

The ECM monitors the battery supply voltage applied to the throttle actuator.
When the power supply voltage (+BM) drops below 4 V for 0.8 seconds or more, the ECM interprets this as an open in the power supply circuit (+BM). The ECM illuminates the MIL and sets the DTC.
If the malfunction is not repaired successfully, the DTC is set 5 seconds after the engine is next started.

MONITOR STRATEGY

Related DTCs	P2118: Throttle actuator power supply
Required Sensors/Components (Main)	Throttle actuator, throttle valve, ETCS fuse
Required Sensors/Components (Related)	None
Frequency of Operation	Continuous
Duration	0.8 seconds
MIL Operation	Immediate
Sequence of Operation	None

TYPICAL ENABLING CONDITIONS

Monitor runs whenever following DTCs not present	None
Battery voltage	8 V or more
Electronic throttle actuator power	ON

TYPICAL MALFUNCTION THRESHOLDS

Throttle actuator power supply voltage (+BM)	Less than 4 V

COMPONENT OPERATING RANGE

Throttle actuator power supply voltage (+BM)	9 to 14 V

FAIL-SAFE

When this DTC, or other DTCs relating to ETCS (Electronic Throttle Control System) malfunctions, are set, the ECM enters fail-safe mode. During fail-safe mode, the ECM cuts the current to the throttle actuator off, and the throttle valve is returned to a 6° throttle angle by the return spring. The ECM then adjusts the engine output by controlling the fuel injection (intermittent fuel-cut) and ignition timing, in accordance with the accelerator pedal opening angle, to allow the vehicle to continue at a minimal speed. If the accelerator pedal is depressed firmly and gently, the vehicle can be driven slowly.
Fail-safe mode continues until a pass condition is detected, and the ignition switch is then turned OFF.

WIRING DIAGRAM

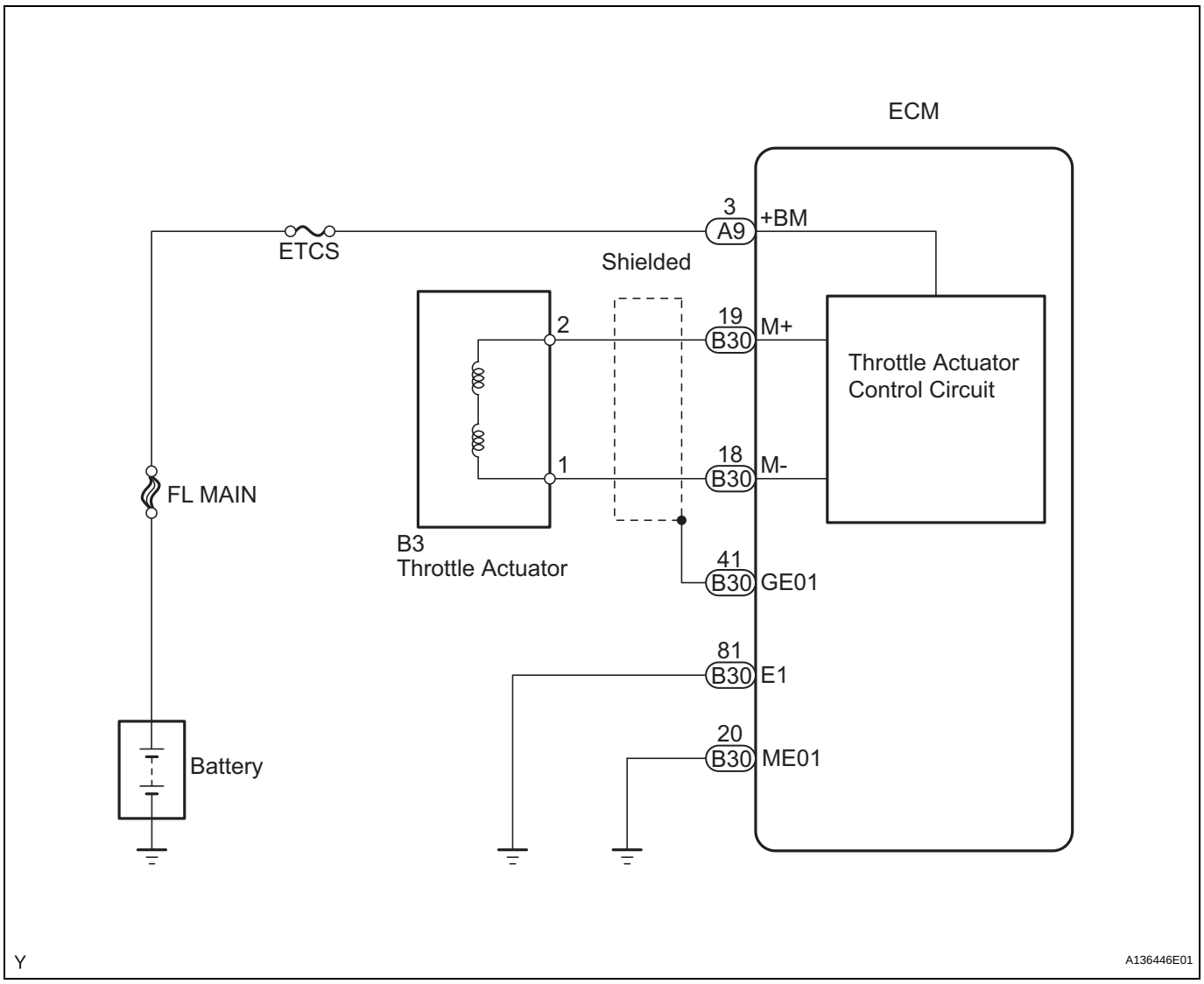

ES

INSPECTION PROCEDURE

HINT:

Read freeze frame data using the intelligent tester. Freeze frame data records the engine condition when malfunctions are detected. When troubleshooting, freeze frame data can help determine if the vehicle was moving or stationary, if the engine was warmed up or not, if the air-fuel ratio was lean or rich, and other data from the time the malfunction occurred.

1	READ VALUE USING INTELLIGENT TESTER (+BM VOLTAGE)

(a) Connect the intelligent tester to the DLC3.
(b) Turn the ignition switch ON.
(c) Turn the tester ON.
(d) Select the following menu items: DIAGNOSIS / ENHANCED OBD II / DATA LIST / +BM VOLTAGE.
(e) Read the value displayed on the tester.
Standard voltage:
9 to 14 V

OK → Go to step 5

NG

2	CHECK FUSE (ETCS FUSE)

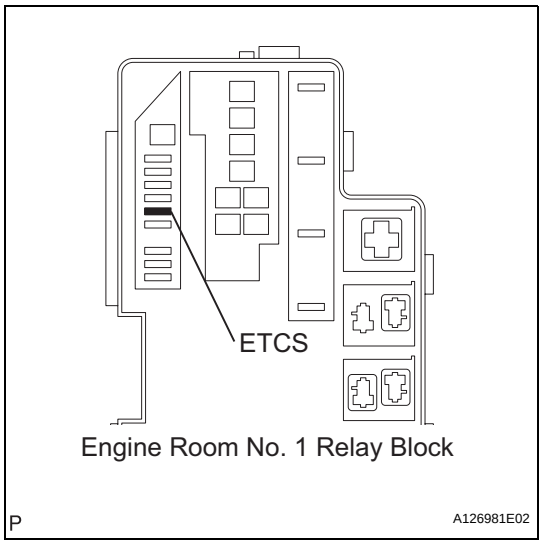

(a) Remove the ETCS fuse from the engine room No. 1 relay block.
(b) Measure the ETCS fuse resistance.
Standard resistance:
Below 1 Ω
(c) Reinstall the ETCS fuse.

NG → **CHECK FOR SHORTS IN ALL HARNESSES AND CONNECTORS CONNECTED TO FUSE AND REPLACE FUSE**

OK

ES

3	CHECK WIRE HARNESS (ECM - ETCS FUSE, ETCS FUSE - BATTERY)

Engine Room No. 1 Relay Block:

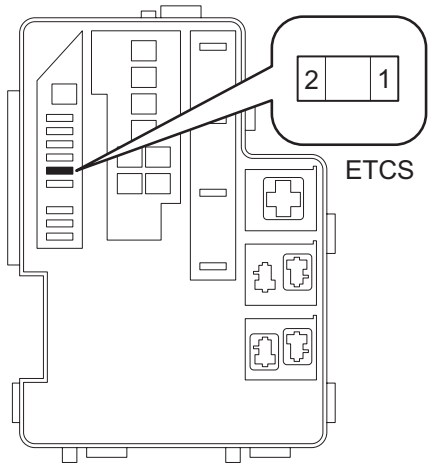

Wire Harness Side:

ECM

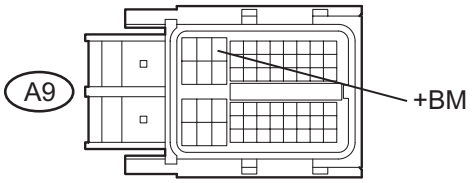

A127766E03

(a) Check the harness and connector between the ETCS fuse and ECM.
  (1) Remove the ETCS fuse from the engine room No. 1 relay block.
  (2) Disconnect the A9 ECM connector.
  (3) Measure the resistance.
  Standard resistance

Tester Connection	Specified Condition
ETCS fuse terminal 2 - A9-3 (+BM)	Below 1 Ω
ETCS fuse terminal 2 or A9-3 (+BM) - Body ground	10 kΩ or higher

  (4) Reinstall the ETCS fuse.
  (5) Reconnect the ECM connector.

(b) Check the harness and connector between the ETCS fuse and positive battery cable.
  (1) Remove the ETCS fuse from the engine room No. 1 relay block.
  (2) Disconnect the cable from the positive (+) battery terminal.
  (3) Check the resistance.
  Standard resistance

Tester Connection	Specified Condition
Positive battery cable - ETCS fuse terminal 1	Below 1 Ω
Positive battery cable or ETCS fuse terminal 1 - Body ground	10 kΩ or higher

  (4) Reinstall the ETCS fuse.
  (5) Reconnect the cable to the positive (+) battery terminal.

NG → **REPAIR OR REPLACE HARNESS AND CONNECTOR**

OK

ES

4	INSPECT ECM (+BM VOLTAGE)

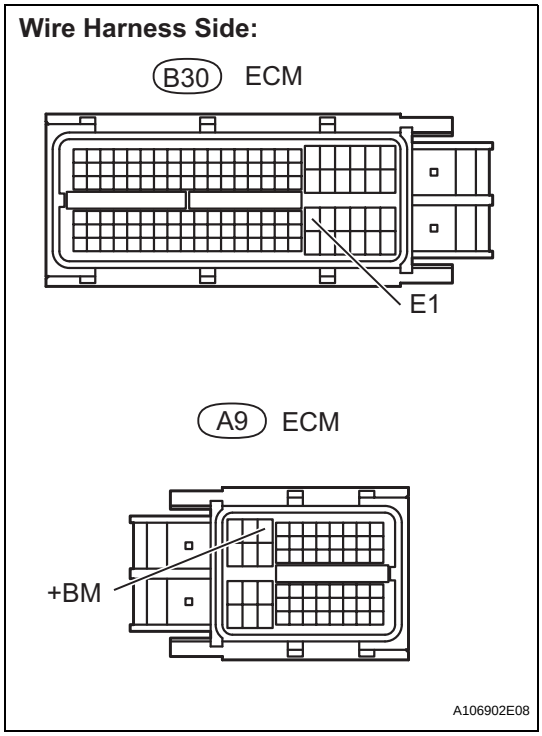

(a) Disconnect the A9 and B30 ECM connectors.
(b) Measure the voltage between the terminals of the A9 and B30 ECM connectors.
Standard voltage

Tester Connection	Specified Condition
A9-3 (+BM) - B30-81 (E1)	9 to 14 V

(c) Reconnect the ECM connectors.

NG → **REPAIR OR REPLACE HARNESS AND CONNECTOR (TERMINAL E1 - BODY GROUND)**

OK

REPLACE ECM

5	INSPECT BATTERY

(a) Check that the battery is not depleted.
OK:
Battery is not depleted

NG → **REPLACE BATTERY**

OK

6	CHECK BATTERY TERMINAL

(a) Check that the battery terminals and ECM ground are not loose or corroded.
OK:
Battery terminals and ECM ground are not loose or corroded

NG → **REPAIR OR REPLACE BATTERY TERMINAL**

OK

CHECK FOR INTERMITTENT PROBLEMS

DTC	P2119	Throttle Actuator Control Throttle Body Range / Performance

DESCRIPTION

The Electronic Throttle Control System (ETCS) is composed of the throttle actuator, Throttle Position (TP) sensor, Accelerator Pedal Position (APP) sensor, and ECM. The ECM operates the throttle actuator to regulate the throttle valve in response to driver inputs. The TP sensor detects the opening angle of the throttle valve, and provides the ECM with feedback so that the throttle valve can be appropriately controlled by the ECM.

DTC No.	DTC Detection Condition	Trouble Area
P2119	Throttle valve opening angle continues to vary greatly from target opening angle (1 trip detection logic)	• ETCS • ECM

ES

MONITOR DESCRIPTION

The ECM determines the actual opening angle of the throttle valve from the TP sensor signal. The actual opening angle is compared to the target opening angle commanded by the ECM. If the difference between these two values is outside the standard range, the ECM interprets this as a malfunction in the ETCS. The ECM then illuminates the MIL and sets the DTC.
If the malfunction is not repaired successfully, the DTC is set when the accelerator pedal is quickly released (to close the throttle valve) after the engine speed reaches 5,000 rpm by the accelerator pedal being fully depressed (fully open the throttle valve).

MONITOR STRATEGY

Related DTCs	P2119: ETCS malfunction
Required Sensors/Components (Main)	Throttle actuator
Required Sensors/Components (Related)	-
Frequency of Operation	Continuous
Duration	Within 1 second
MIL Operation	Immediate
Sequence of Operation	None

TYPICAL ENABLING CONDITIONS

Monitor runs whenever following DTCs not present	None
Throttle actuator	ON
Throttle actuator duty calculation	Executing
Throttle position sensor	Fail determined
Throttle actuator current-cut operation	Not executing
Throttle actuator power supply	4 V or higher
Throttle actuator	Fail determined

TYPICAL MALFUNCTION THRESHOLDS

Either of following conditions A or B met	-
A. Difference between commanded closed throttle position and current closed throttle position	0.3 V or more for 1 second
B. Difference between commanded open throttle position and current open throttle position	0.3 V or more for 0.6 seconds

FAIL-SAFE

When this DTC, or other DTCs relating to ETCS (Electronic Throttle Control System) malfunctions, are set, the ECM enters fail-safe mode. During fail-safe mode, the ECM cuts the current to the throttle actuator off, and the throttle valve is returned to a 6° throttle angle by the return spring. The ECM then adjusts the engine output by controlling the fuel injection (intermittent fuel-cut) and ignition timing, in accordance with the accelerator pedal opening angle, to allow the vehicle to continue at a minimal speed. If the accelerator pedal is depressed firmly and gently, the vehicle can be driven slowly.
Fail-safe mode continues until a pass condition is detected, and the ignition switch is then turned OFF.

WIRING DIAGRAM

Refer to DTC P2102 (see page ES-308).

INSPECTION PROCEDURE

HINT:
Read freeze frame data using the intelligent tester. Freeze frame data records the engine condition when malfunctions are detected. When troubleshooting, freeze frame data can help determine if the vehicle was moving or stationary, if the engine was warmed up or not, if the air-fuel ratio was lean or rich, and other data from the time the malfunction occurred.

ES

1	CHECK ANY OTHER DTCS OUTPUT (IN ADDITION TO DTC P2119)

(a) Connect the intelligent tester to the DLC3.
(b) Turn the ignition switch ON.
(c) Turn the tester ON.
(d) Select the following menu items: DIAGNOSIS / ENHANCED OBD II / DTC INFO / CURRENT CODES.
(e) Read DTCs.

Result

Display (DTC Output)	Proceed to
P2119	A
P2119 and other DTCs	B

HINT:
If any DTCs other than P2119 are output, troubleshoot those DTCs first.

B → GO TO DTC CHART

A

2	CHECK WHETHER DTC OUTPUT RECURS (DTC P2119)

(a) Connect the intelligent tester to the DLC3.
(b) Turn the ignition switch ON.
(c) Turn the tester ON.
(d) Clear DTCs (see page ES-39).
(e) Allow the engine to idle for 15 seconds.
CAUTION:
Exercise extreme care and take precautions in steps (f) and (g) below. Failure to do so may result in the vehicle unexpectedly rolling away.
(f) Securely apply the parking brake and move the gear selector lever to the D position.

(g) While depressing the brake pedal securely, fully depress the accelerator pedal for 5 seconds.
(h) On the tester, select the following menu items: DIAGNOSIS / ENHANCED OBD II / DTC INFO / CURRENT CODES.
(i) Read DTCs.
HINT:
The output voltage of the throttle position sensor can be checked during step (g) using the intelligent tester. Variations in the output voltage indicate that the throttle actuator is in operation. To check the output voltage using the intelligent tester, select the following menu items: DIAGNOSIS / ENHANCED OBD II / DATA LIST / ETCS / THROTTLE POS #1.

OK:

No DTC output.

NG → **REPLACE THROTTLE BODY ASSEMBLY**

OK

CHECK FOR INTERMITTENT PROBLEMS

DTC	P2120	Throttle / Pedal Position Sensor / Switch "D" Circuit
DTC	P2122	Throttle / Pedal Position Sensor / Switch "D" Circuit Low Input
DTC	P2123	Throttle / Pedal Position Sensor / Switch "D" Circuit High Input
DTC	P2125	Throttle / Pedal Position Sensor / Switch "E" Circuit
DTC	P2127	Throttle / Pedal Position Sensor / Switch "E" Circuit Low Input
DTC	P2128	Throttle / Pedal Position Sensor / Switch "E" Circuit High Input
DTC	P2138	Throttle / Pedal Position Sensor / Switch "D" / "E" Voltage Correlation

DESCRIPTION

HINT:

This ETCS (Electronic Throttle Control System) does not use a throttle cable.

The APP sensor is mounted on the accelerator pedal bracket and has 2 sensor circuits: VPA (main) and VPA2 (sub). This sensor is a non-contact type and uses Hall-effect elements in order to yield accurate signals even in extreme driving conditions, such as at high speeds as well as very low speeds. The voltage, which is applied to terminals VPA and VPA2 of the ECM, varies between 0.5 V and 4.5 V in proportion to the operating angle of the accelerator pedal (throttle valve). A signal from VPA indicates the actual accelerator pedal opening angle (throttle valve opening angle) and is used for engine control. A signal from VPA2 conveys the status of the VPA circuit and is used to check the APP sensor itself.

The ECM monitors the actual accelerator pedal opening angle (throttle valve opening angle) through the signals from VPA and VPA2, and controls the throttle actuator according to these signals.

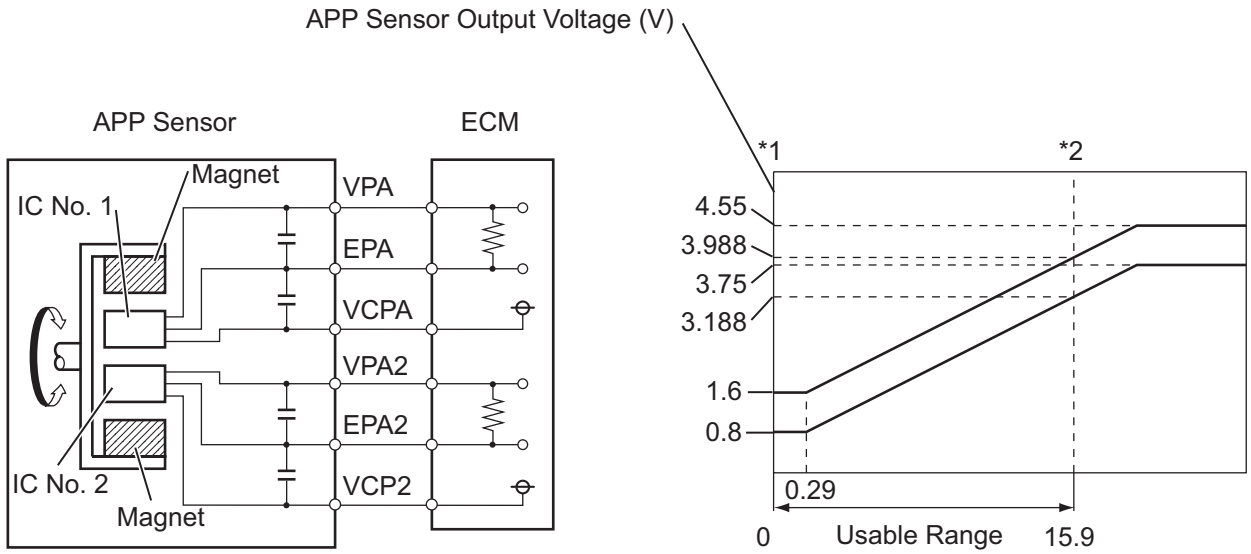

Y

A112620E03

DTC No.	DTC Detection Condition	Trouble Area
P2120	VPA fluctuates rapidly beyond upper and lower malfunction thresholds for 0.5 seconds or more (1 trip detection logic)	• APP sensor • ECM
P2122	VPA 0.4 V or less for 0.5 seconds or more when accelerator pedal fully released (1 trip detection logic)	• APP sensor • Open in VCP1 circuit • Open or ground short in VPA circuit • ECM
P2123	VPA 4.8 V or more for 2.0 seconds or more (1 trip detection logic)	• APP sensor • Open in EPA circuit • ECM
P2125	VPA2 fluctuates rapidly beyond upper and lower malfunction thresholds for 0.5 seconds or more (1 trip detection logic)	• APP sensor • ECM
P2127	VPA2 1.2 V or less for 0.5 seconds or more when accelerator pedal fully released (1 trip detection logic)	• APP sensor • Open in VCP2 circuit • Open or ground short in VPA2 circuit • ECM
P2128	Conditions (a) and (b) continue for 2.0 seconds or more (1 trip detection logic): (a) VPA2 4.8 V or more (b) VPA between 0.4 V and 3.45 V	• APP sensor • Open in EPA2 circuit • ECM
P2138	Condition (a) or (b) continues for 2.0 seconds or more (1 trip detection logic): (a) Difference between VPA and VPA2 0.02 V or less (b) VPA 0.4 V or less and VPA2 1.2 V or less	• Short between VPA and VPA2 circuits • APP sensor • ECM

HINT:
When any of these DTCs are set, check the APP sensor voltage by selecting the following menu items on the intelligent tester: DIAGNOSIS / ENHANCED OBD II / DATA LIST / PRIMARY / ACCEL POS #1 and ACCEL POS #2.

Trouble Area	ACCEL POS #1 When AP Released	ACCEL POS #2 When AP Released	ACCEL POS #1 When AP Depressed	ACCEL POS #2 When AP Depressed
VCP circuit open	0 to 0.2 V	0 to 0.2 V	0 to 0.2 V	0 to 0.2 V
Open or ground short in VPA circuit	0 to 0.2 V	1.2 to 2.0 V	0 to 0.2 V	3.4 to 4.7 V
Open or ground short in VPA2 circuit	0.5 to 1.1 V	0 to 0.2 V	2.6 to 4.5 V	0 to 0.2 V
EPA circuit open	4.5 to 5.0 V	4.5 to 5.0 V	4.5 to 5.0 V	4.5 to 5.0 V
Normal condition	0.5 to 1.1 V	1.2 to 2.0 V	2.6 to 4.5 V	3.4 to 4.7 V

HINT:
- Accelerator pedal positions are expressed as voltages.
- AP stands for Accelerator Pedal.

ES

MONITOR DESCRIPTION

When either output voltage of VPA or VPA2 deviates from the standard range, or the difference between the output voltages of the 2 sensor circuits is less than the threshold, the ECM determines that there is a malfunction in the APP sensor. The ECM then illuminates the MIL and sets a DTC.
Example:
When the output voltage of VPA drops below 0.4 V for more than 0.5 seconds when the accelerator pedal is fully depressed, DTC P2122 is set.
If the malfunction is not repaired successfully, a DTC is set 2 seconds after the engine is next started.

MONITOR STRATEGY

Related DTCs	P2120: APP sensor 1 range check (fluctuating) P2122: APP sensor 1 range check (low voltage) P2123: APP sensor 1 range check (high voltage) P2125: APP sensor 2 range check (fluctuating) P2127: APP sensor 2 range check (low voltage) P2128: APP sensor 2 range check (high voltage) P2138: APP sensor range check (correlation)
Required Sensors/Components (Main)	APP sensor
Required Sensors/Components (Related)	-
Frequency of Operation	Continuous
Duration	0.5 seconds: P2120, P2122, P2125 and P2127 2.0 seconds: P2123, P2128 and P2138
MIL Operation	Immediate
Sequence of Operation	None

TYPICAL ENABLING CONDITIONS

Monitor runs whenever following DTCs not present	None
Either of following conditions 1 or 2 met:	-
1. Ignition switch	ON
2. Throttle actuator power	ON

TYPICAL MALFUNCTION THRESHOLDS

P2120:

Either of following conditions 1 or 2 met:	-
1. VPA voltage when VPA2 voltage 0.04 V or more	0.4 V or less
2. VPA voltage	4.8 V or more

P2122:

VPA voltage when VPA2 voltage 0.04 V or more	0.4 V or less

P2123:

VPA voltage	4.8 V or more

P2125:

Either of following conditions 1 or 2 met:	-
1. VPA2 voltage when VPA voltage 0.04 V or more	1.2 V or less
2. VPA2 voltage when VPA voltage 0.4 to 3.45 V	4.8 V or more

P2127:

VPA2 voltage when VPA voltage 0.04 V or more	1.2 V or less

P2128:

VPA2 voltage when VPA voltage 0.4 to 3.45 V	4.8 V or more

ES

P2138:

Either of following conditions A or B met:	-
Condition A	-
Difference between VPA and VPA 2 voltages	0.02 V or less
Condition B	-
VPA voltage	0.4 V or less
VPA2 voltage	1.2 V or less

COMPONENT OPERATING RANGE

VPA voltage	0.5 to 4.7 V
VPA2 voltage	1.2 to 4.7 V
Difference between VPA and VPA2 voltages	More than 0.02 V

FAIL-SAFE

When any of DTCs P2120, P2121, P2122, P2123, P2125, P2127, P2128 and P2138 are set, the ECM enters fail-safe mode. If either of the 2 sensor circuits malfunctions, the ECM uses the remaining circuit to calculate the accelerator pedal position to allow the vehicle to continue driving. If both of the circuits malfunction, the ECM regards the accelerator pedal as being released. As a result, the throttle valve is closed and the engine idles.
Fail-safe mode continues until a pass condition is detected, and the ignition switch is turned OFF.

WIRING DIAGRAM

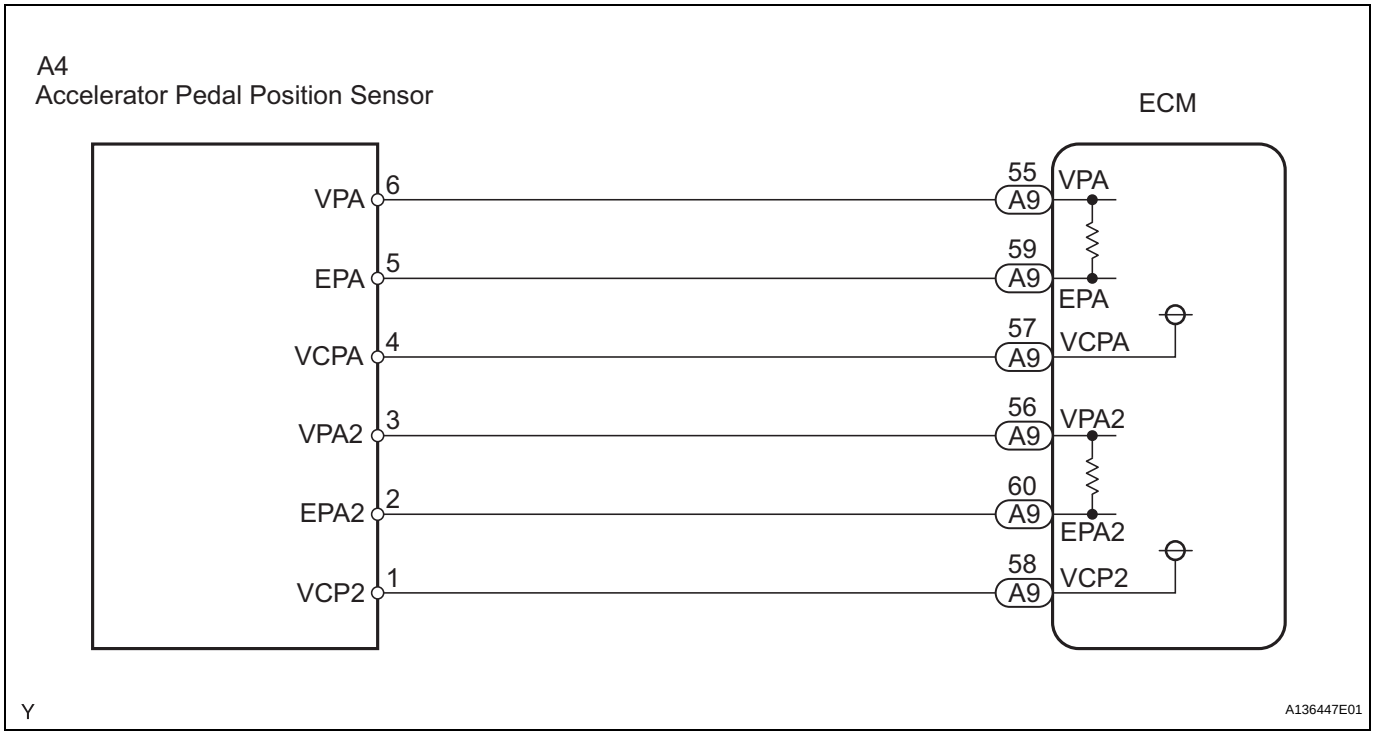

INSPECTION PROCEDURE

HINT:

- These DTCs relate to the Accelerator Pedal Position (APP) sensor.
- Read freeze frame data using the intelligent tester. Freeze frame data records the engine condition when malfunctions are detected. When troubleshooting, freeze frame data can help determine if the vehicle was moving or stationary, if the engine was warmed up or not, if the air-fuel ratio was lean or rich, and other data from the time the malfunction occurred.

1	READ VALUE USING INTELLIGENT TESTER (ACCEL POS #1 AND ACCEL POS #2)

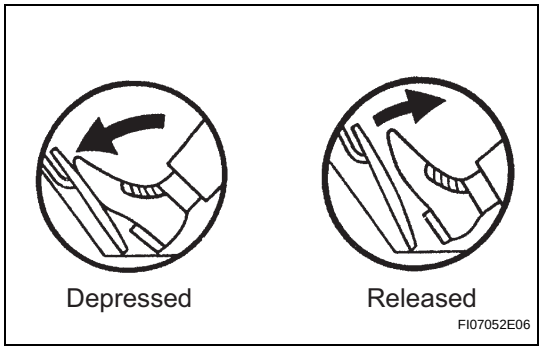

(a) Connect the intelligent tester to the DLC3.
(b) Turn the ignition switch ON and turn the tester ON.
(c) Select the following menu items: DIAGNOSIS / ENHANCED OBD II / DATA LIST / ETCS / ACCEL POS #1 and ACCEL POS #2.
(d) Read the value displayed on the tester.

Standard voltage

Accelerator Pedal Operation	ACCEL POS #1	ACCEL POS #2
Released → Depressed → Released	0.5 to 4.5 V	1.2 to 4.7 V
	Difference between ACCEL POS #1 and ACCEL POS #2 is greater than 0.02 V	Difference between ACCEL POS #1 and ACCEL POS #2 is greater than 0.02 V

OK → Go to step 5

NG

2 CHECK WIRE HARNESS (ACCELERATOR PEDAL POSITION SENSOR - ECM)

Wire Harness Side:

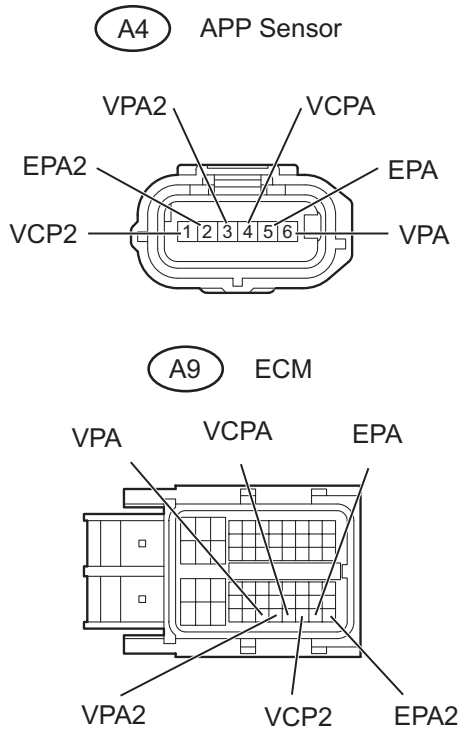

A115665E08

(a) Disconnect the A4 Accelerator Pedal Position (APP) sensor connector.
(b) Disconnect the A9 ECM connector.
(c) Measure the resistance.

Standard resistance

Tester Connection	Specified Condition
A4-6 (VPA) - A9-55 (VPA)	Below 1 Ω
A4-5 (EPA) - A9-59 (EPA)	Below 1 Ω
A4-4 (VCPA) - A9-57 (VCPA)	Below 1 Ω
A4-3 (VPA2) - A9-56 (VPA2)	Below 1 Ω
A4-2 (EPA2) - A9-60 (EPA2)	Below 1 Ω
A4-1 (VCP2) - A9-58 (VCP2)	Below 1 Ω
A4-6 (VPA) or A9-55 (VPA) - body ground	10 kΩ or higher
A4-5 (EPA) or A9-59 (EPA) - body ground	10 kΩ or higher
A4-4 (VCPA) or A9-57 (VCPA) - body ground	10 kΩ or higher
A4-3 (VPA2) or A9-56 (VPA2) - body ground	10 kΩ or higher
A4-2 (EPA2) or A9-60 (EPA2) - body ground	10 kΩ or higher
A4-1 (VCP2) or A9-58 (VCP2) - body ground	10 kΩ or higher

(d) Reconnect the APP sensor connector.
(e) Reconnect the ECM connector.

NG → **REPAIR OR REPLACE HARNESS AND CONNECTOR**

OK

3 CHECK ECM (VCPA AND VCP2 VOLTAGE)

Wire Harness Side:

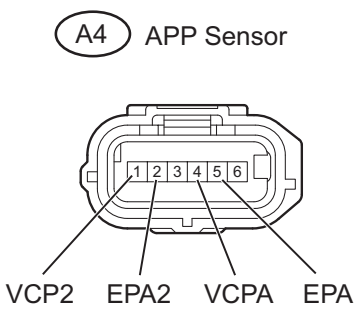

A115666E10

(a) Disconnect the A4 APP sensor connector.
(b) Turn the ignition switch ON.
(c) Measure the voltage between the terminals of the A4 APP sensor connector.

Standard voltage

Tester Connection	Specified Condition
A4-4 (VCPA) - A4-5 (EPA)	4.5 to 5.5 V
A4-1 (VCP2) - A4-2 (EPA2)	4.5 to 5.5 V

(d) Reconnect the APP sensor connector.

NG → **REPLACE ECM**

OK

4	REPLACE ACCELERATOR PEDAL ASSEMBLY

NEXT

5	CHECK WHETHER DTC OUTPUT RECURS (ACCELERATOR PEDAL POSITION SENSOR DTCS)

(a) Connect the intelligent tester to the DLC3.
(b) Turn the ignition switch ON and turn the tester ON.
(c) Clear DTCs (see page ES-39).
(d) Start the engine.
(e) Allow the engine to idle for 15 seconds.
(f) Select the following menu items: DIAGNOSIS / ENHANCED OBD II / DTC INFO / CURRENT CODES.
(g) Read DTCs.

ES

Result

Display (DTC Output)	Proceed to
P2120, P2122, P2123, P2125, P2127, P2128, and/or P2138	A
No output	B

B → SYSTEM OK

A

REPLACE ECM

DTC	P2121	Throttle / Pedal Position Sensor / Switch "D" Circuit Range / Performance

DESCRIPTION

HINT:

Refer to DTC P2120 (see page ES-324).

DTC No.	DTC Detection Condition	Trouble Area
P2121	Difference between VPA and VPA2 less than 0.4 V, or more than 1.2 V for 0.5 seconds (1 trip detection logic)	• Accelerator Pedal Position (APP) sensor • ECM

MONITOR DESCRIPTION

When the difference between the output voltages of VPA and VPA2 deviates from the standard, the ECM determines that the Accelerator Pedal Position (APP) sensor is malfunctioning. The ECM turns on the MIL and the DTC is set.

ES

MONITOR STRATEGY

Related DTCs	P2121: APP sensor rationality
Required Sensors/Components (Main)	APP sensor
Required Sensors/Components (Related)	-
Frequency of Operation	Continuous
Duration	0.5 seconds
MIL Operation	Immediate
Sequence of Operation	None

TYPICAL ENABLING CONDITIONS

Monitor runs whenever following DTCs not present	None
Either of following conditions 1 or 2 met:	-
1. Ignition switch	ON
2. Throttle actuator power	ON

TYPICAL MALFUNCTION THRESHOLDS

Difference between VPA voltage (learned value) and VPA2 voltage (learned value)	Less than 0.4 V, or more than 1.2 V

FAIL-SAFE

The APP sensor has two (main and sub) sensor circuits. If a malfunction occurs in either of the sensor circuits, the ECM detects the abnormal signal voltage difference between the two sensor circuits and switches to limp mode. In limp mode, the functioning circuit is used to calculate the accelerator pedal opening angle to allow the vehicle to continue driving. If both circuits malfunction, the ECM regards the opening angle of the accelerator pedal as being fully closed. In this case, the throttle valve remains closed as if the engine is idling.

If a pass condition is detected and then the ignition switch is turned OFF, the fail-safe operation stops and the system returns to a normal condition.

WIRING DIAGRAM

Refer to DTC P2120 (see page ES-328).

INSPECTION PROCEDURE

HINT:

- This DTC relates to the Accelerator Pedal Position (APP) sensor.
- Read freeze frame data using the intelligent tester. Freeze frame data records the engine condition when malfunctions are detected. When troubleshooting, freeze frame data can help determine if the vehicle was moving or stationary, if the engine was warmed up or not, if the air-fuel ratio was lean or rich, and other data from the time the malfunction occurred.

1 **CHECK ANY OTHER DTCS OUTPUT (IN ADDITION TO DTC P2121)**

(a) Connect the intelligent tester to the DLC3.
(b) Turn the ignition switch ON.
(c) Turn the tester ON.
(d) Select the following menu items: DIAGNOSIS / ENHANCED OBD II / DTC INFO / CURRENT CODES.
(e) Read DTCs.

Result

Display (DTC Output)	Proceed to
P2121	A
P2121 and other DTCs	B

HINT:
If any DTCs other than P2121 are output, troubleshoot those DTCs first.

B → GO TO DTC CHART

A

2 **READ VALUE USING INTELLIGENT TESTER (ACCEL POS #1 AND ACCEL POS #2)**

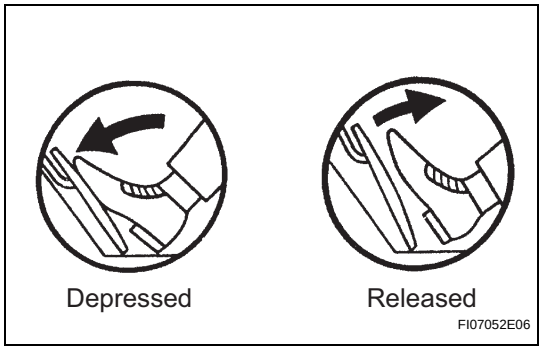

(a) Connect the intelligent tester to the DLC3.
(b) Turn the ignition switch ON and turn the tester ON.
(c) Select the following menu items: DIAGNOSIS / ENHANCED OBD II / DATA LIST / PRIMARY / ACCEL POS #1 and ACCEL POS #2.
(d) Read the values displayed on the tester.

Standard voltage

Accelerator Pedal Operations	ACCEL POS #1	ACCEL POS #2
Released	0.5 to 1.1 V	1.2 to 2.0 V
Depressed	2.6 to 4.5 V	3.4 to 4.7 V

OK → CHECK FOR INTERMITTENT PROBLEMS

NG

3 **REPLACE ACCELERATOR PEDAL ASSEMBLY**

NEXT

4	CHECK WHETHER DTC OUTPUT RECURS (DTC P2121)

(a) Connect the intelligent tester to the DLC3.
(b) Turn the ignition switch ON and turn the tester ON.
(c) Clear DTCs (see page ES-39).
(d) Start the engine.
(e) Allow the engine to idle for 15 seconds.
(f) Select the following menu items: DIAGNOSIS / ENHANCED OBD II / DTC INFO / CURRENT CODES.
(g) Read DTCs.

Result

Display (DTC Output)	Proceed to
P2121	A
No output	B

ES

B → **SYSTEM OK**

A

REPLACE ECM

DTC	P2195	Oxygen (A/F) Sensor Signal Stuck Lean (Bank 1 Sensor 1)
DTC	P2196	Oxygen (A/F) Sensor Signal Stuck Rich (Bank 1 Sensor 1)
DTC	P2197	Oxygen (A/F) Sensor Signal Stuck Lean (Bank 2 Sensor 1)
DTC	P2198	Oxygen (A/F) Sensor Signal Stuck Rich (Bank 2 Sensor 1)

ES

DESCRIPTION

The A/F sensor generates a voltage* that corresponds to the actual air-fuel ratio. This sensor voltage is used to provide the ECM with feedback so that it can control the air-fuel ratio. The ECM determines the deviation from the stoichiometric air-fuel ratio level, and regulates the fuel injection time. If the A/F sensor malfunctions, the ECM is unable to control the air-fuel ratio accurately.

The A/F sensor is of the planar type and is integrated with the heater, which heats the solid electrolyte (zirconia element). This heater is controlled by the ECM. When the intake air volume is low (the exhaust gas temperature is low), a current flows into the heater to heat the sensor in order to facilitate accurate air-fuel ratio detection. In addition, the sensor and heater portions are narrower than the conventional type. The heat generated by the heater is conducted to the solid electrolyte through the alumina, therefore the sensor activation is accelerated.

In order to obtain a high purification rate of the carbon monoxide (CO), hydrocarbon (HC) and nitrogen oxide (NOx) components in the exhaust gas, a TWC is used. For the most efficient use of the TWC, the air-fuel ratio must be precisely controlled so that it is always close to the stoichiometric level.

*: Value changes inside the ECM. Since the A/F sensor is the current output element, a current is converted into a voltage inside the ECM. Any measurements taken at the A/F sensor or ECM connectors will show a constant voltage.

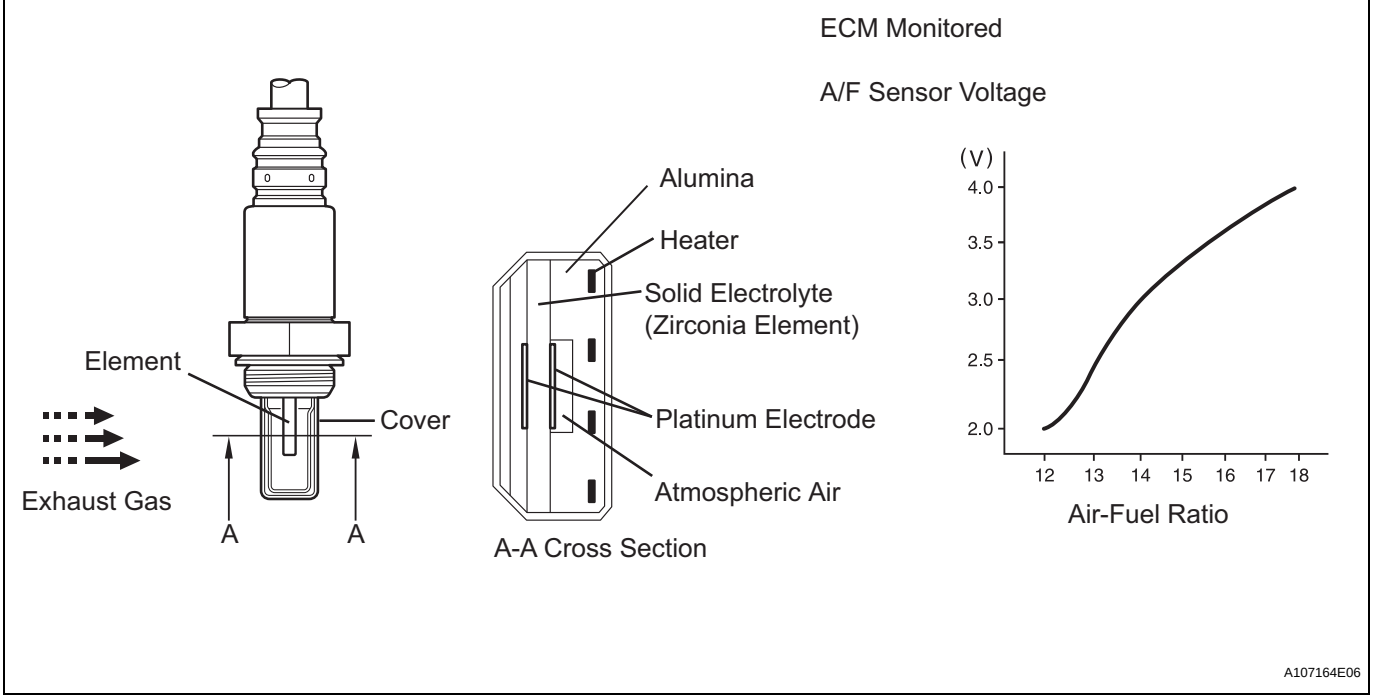

DTC No.	DTC Detection Condition	Trouble Area
P2195 P2197	Conditions (a) and (b) continue for 10 seconds or more (2 trip detection logic): (a) A/F sensor voltage more than 3.8 V for 10 seconds (b) Heated Oxygen (HO2) sensor voltage 0.15 V or more	• Open or short in A/F sensor (sensor 1) circuit • A/F sensor (sensor 1) • A/F sensor heater (sensor 1) • Integration relay • A/F sensor heater and integration relay circuits • Air induction system • Fuel pressure • Injector • ECM
	While fuel-cut operation performed (during vehicle deceleration), A/F sensor current 3.6 mA or more for 3 seconds (2 trip detection logic)	• A/F sensor • ECM
P2196 P2198	Conditions (a) and (b) continue for 10 seconds or more (2 trip detection logic): (a) A/F sensor voltage less than 2.8 V for 10 seconds (b) HO2 sensor voltage less than 0.6 V	• Open or short in A/F sensor (sensor 1) circuit • A/F sensor (sensor 1) • A/F sensor heater (sensor 1) • Integration relay • A/F sensor heater and integration relay circuits • Air induction system • Fuel pressure • Injector • ECM
	While fuel-cut operation performed (during vehicle deceleration), A/F sensor current less than 1.4 mA for 3 seconds (2 trip detection logic)	• A/F sensor • ECM

HINT:

- DTCs P2195 and P2196 indicate malfunctions related to bank 1 A/F sensor circuit.
- DTCs P2197 and P2198 indicate malfunctions related to bank 2 A/F sensor circuit.
- Bank 1 refers to the bank that includes No. 1 cylinder.
- Bank 2 refers to the bank that includes No. 2 cylinder.
- When either of these DTCs is set, check the A/F sensor output voltage by selecting the following menu items on the intelligent tester: DIAGNOSIS / ENHANCED OBD II / DATA LIST / PRIMARY / AFS B1 S1 or AFS B2 S1.
- Short-term fuel trim values can also be read using the intelligent tester.

- The ECM regulates the voltages at the A1A+ and A1A- or A2A+ and A2A- terminals of the ECM to a constant level. Therefore, the A/F sensor output voltage cannot be confirmed without using the intelligent tester.
- If the A/F sensor is malfunctioning, the ECM sets the DTC P2195, P2196, P2197 or P2198.

MONITOR DESCRIPTION

Sensor voltage detection monitor

Under the air-fuel ratio feedback control, if the A/F sensor output voltage indicates rich or lean for a certain period of time, the ECM determines that there is a malfunction in the A/F sensor. The ECM illuminates the MIL and sets a DTC.

Example:

If the A/F sensor output voltage is less than 2.8 V (very rich condition) for 10 seconds, despite the rear HO2 sensor output voltage being less than 0.6 V, the ECM sets DTC P2196 or P2198. Alternatively, if the A/F sensor output voltage is more than 3.8 V (very lean condition) for 10 seconds, despite the rear HO2 sensor output voltage being 0.15 V or more, DTC P2195 or P2197 is set.

ES

Sensor current detection monitor

A rich air-fuel mixture causes a low A/F sensor current, and a lean air-fuel mixture causes a high A/F sensor current. Therefore, the sensor output becomes low during acceleration, and it becomes high during deceleration with the throttle valve fully closed. The ECM monitors the A/F sensor current during fuel-cut and detects any abnormal current values.

If the A/F sensor output is 3.6 mA or more for more than 3 seconds of cumulative time, the ECM interprets this as a malfunction in the A/F sensor and sets DTC P2195 or P2197 (high-side stuck). If the A/F sensor output is less than 1.0 mA for more than 3 seconds of cumulative time, the ECM sets DTC P2196 or P2198 (low-side stuck).

A/F Sensor Current Monitor:

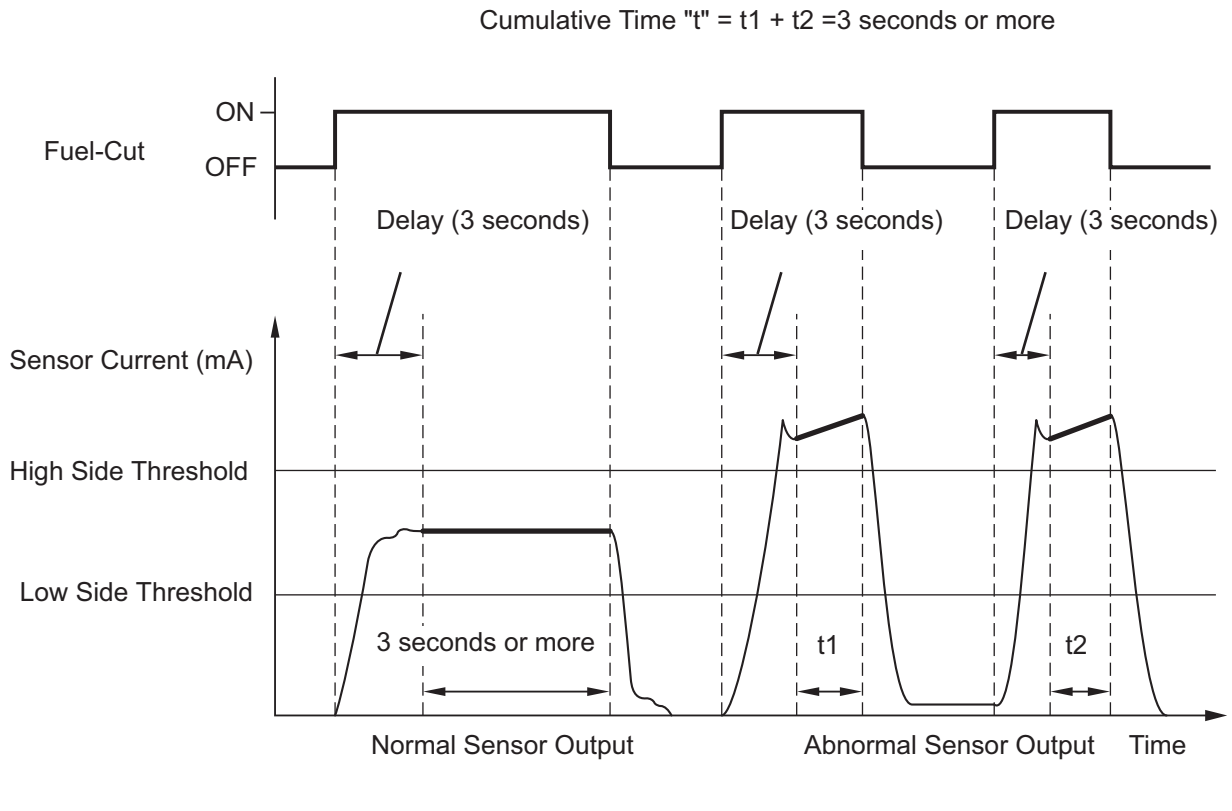

MONITOR STRATEGY

Related DTCs	P2195: A/F sensor signal stuck lean (bank 1) P2196: A/F sensor signal stuck rich (bank 1) P2197: A/F sensor signal stuck lean (bank 2) P2198: A/F sensor signal stuck rich (bank 2)
Required Sensors/Components (Main)	A/F sensor
Required Sensors/Components (Related)	HO2 sensor
Frequency of Operation	Continuous
Duration	10 seconds: Sensor voltage detection monitor 3 seconds: Sensor current detection monitor
MIL Operation	2 driving cycles
Sequence of Operation	None

TYPICAL ENABLING CONDITIONS

All

Monitor runs whenever following DTCs not present	P0031, P0032, P0051, P0052 (A/F sensor heater - Sensor 1) P0037, P0038, P0057, P0058 (O2 sensor heater - Sensor 2) P0100 - P0103 (MAF meter) P0110 - P0113 (IAT sensor) P0115 - P0118 (ECT sensor) P0120 - P0223, P2135 (TP sensor) P0125 (Insufficient ECT for Closed Loop) P0136, P0156 (O2 Sensor - Sensor 2) P0171, P0172 (Fuel system) P0300 - P0306 (Misfire) P0335 (CKP sensor) P0340 (CMP sensor) P0455, P0456 (EVAP system) P0500 (VSS)

Sensor voltage detection monitor (Lean side malfunction P2195 and P2197):

Duration while all of following conditions met	2 seconds or more
Rear HO2 sensor voltage	0.15 V or more
Time after engine start	30 seconds or more
A/F sensor status	Activated
Fuel system status	Closed-loop
Engine	Running

Sensor voltage detection monitor (Rich side malfunction P2196 and P2198):

Duration while all of following conditions met	2 seconds or more
Rear HO2 sensor voltage	Below 0.6 V
Time after engine start	30 seconds or more
A/F sensor status	Activated
Fuel system status	Closed-loop
Engine	Running

Sensor current detection monitor P2195, P2196, P2197 and P2198

Battery voltage	11 V or more
Atmospheric pressure	76 kPa (570 mmHg) or more
A/F sensor status	Activated
Continuous time of fuel cut	3 to 10 seconds
ECT	75°C (167°F) or more

TYPICAL MALFUNCTION THRESHOLDS

Sensor voltage detection monitor (Lean side malfunction P2195 and P2197):

A/F sensor voltage	More than 3.8 V for 10 seconds

Sensor voltage detection monitor (Rich side malfunction P2196 and P2198):

A/F sensor voltage	Less than 2.8 V for 10 seconds

Sensor current detection monitor (High side malfunction P2195 and P2197):

A/F sensor current during fuel cut	3.6 mA or more

Sensor current detection monitor (Rich side malfunction P2196 and P2198):

A/F sensor current during fuel cut	Less than 1.4 mA

MONITOR RESULT

Refer to CHECKING MONITOR STATUS (see page ES-19).

WIRING DIAGRAM

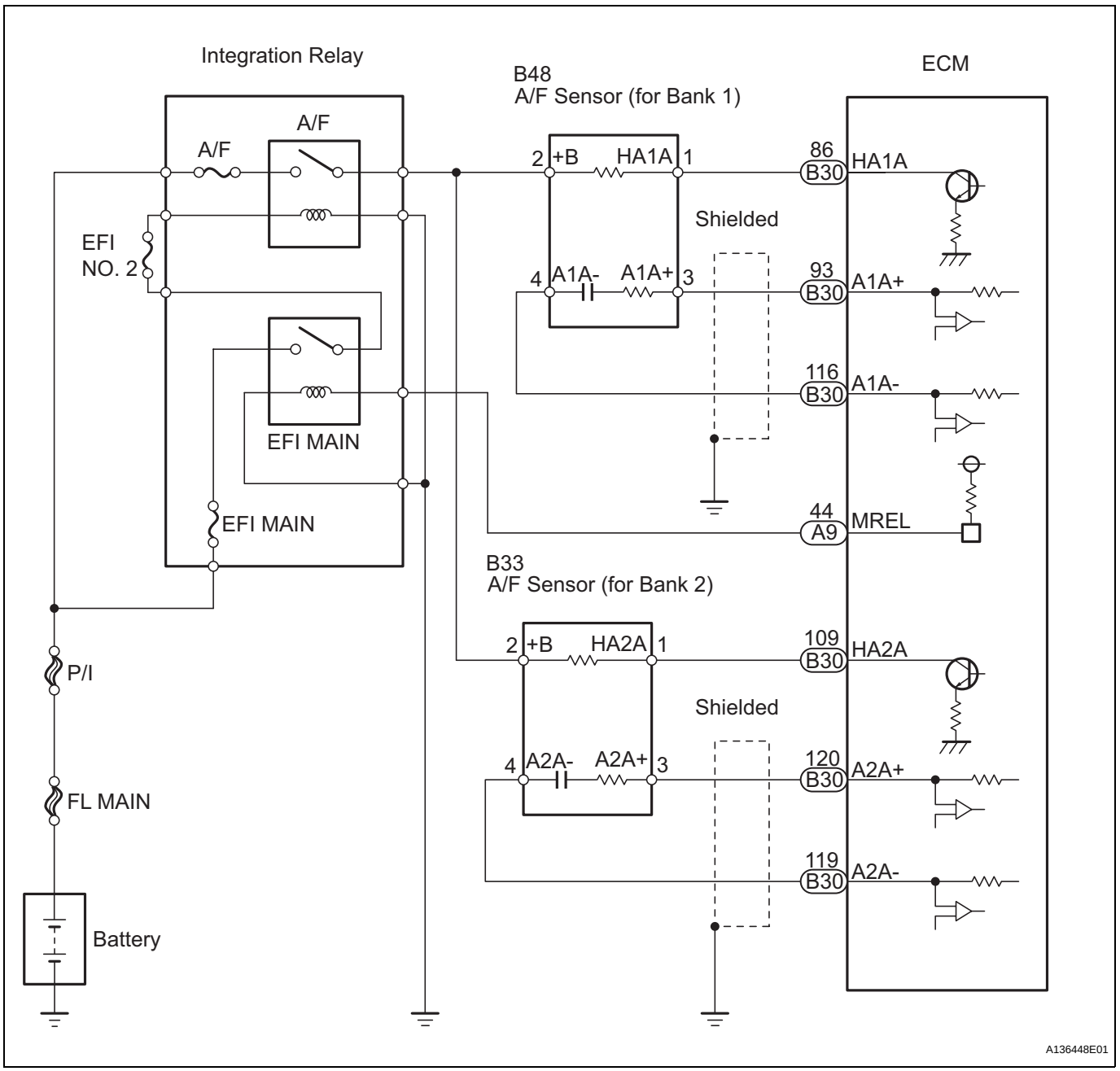

CONFIRMATION DRIVING PATTERN

This confirmation driving pattern is used in the "PERFORM CONFIRMATION DRIVING PATTERN" procedure of the following diagnostic troubleshooting procedure.

Monitor Drive Pattern:

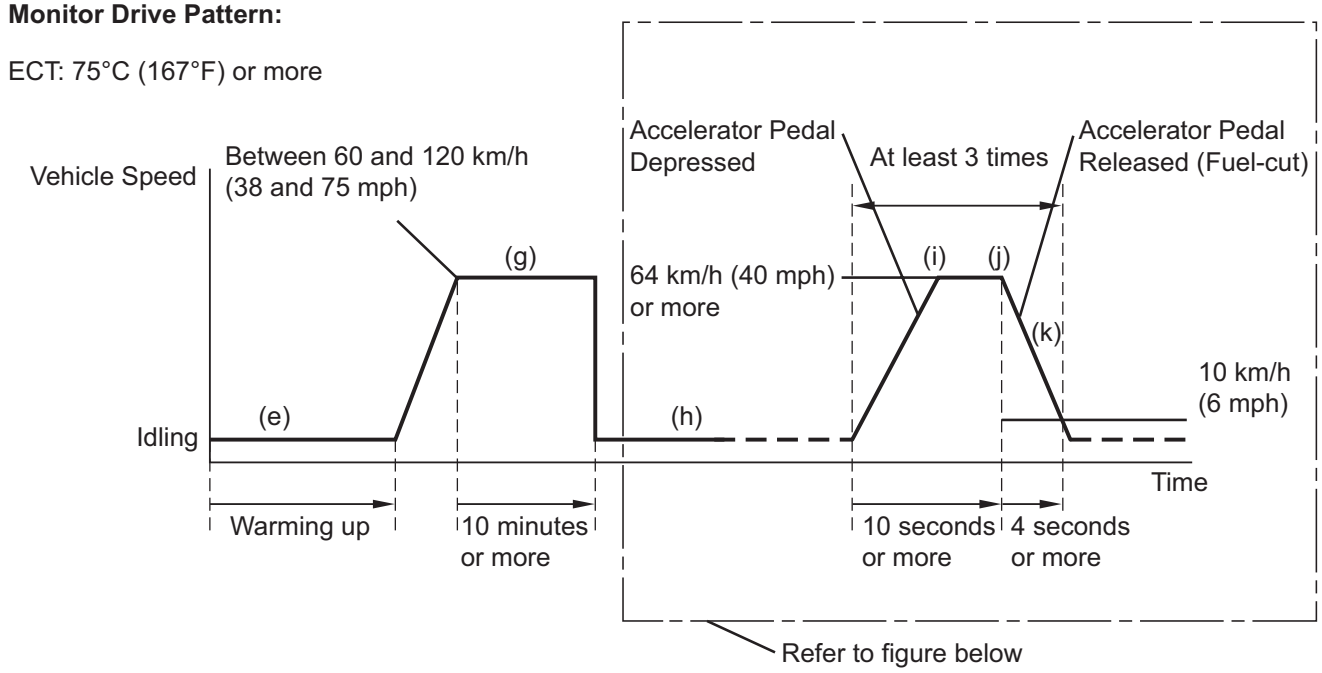

Driving Pattern Detail for (h) through (k):

Cumulative Detection Period "t" = t1 + t2 + t3 = 3 seconds or more

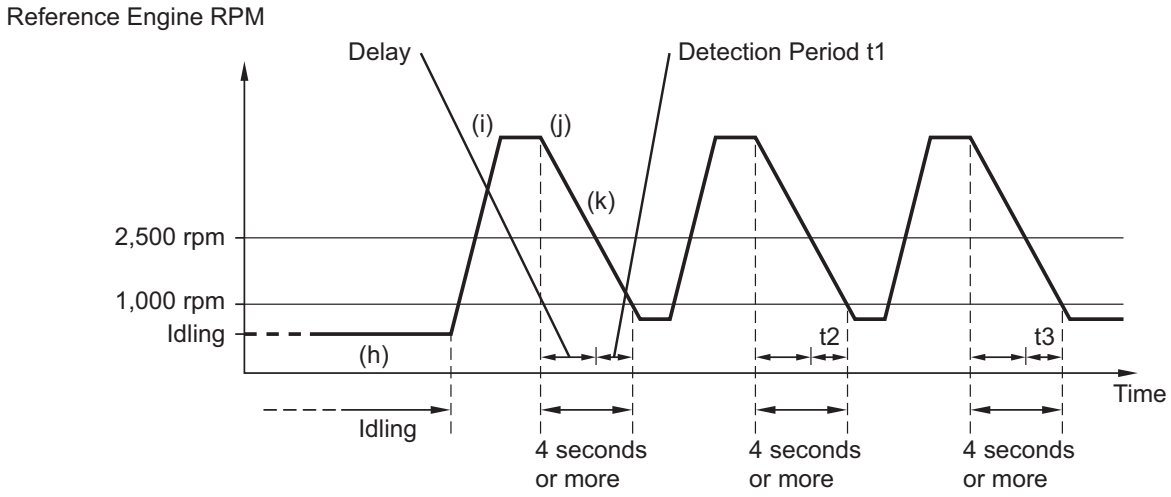

(a) Connect the intelligent tester to the DLC3.
(b) Turn the ignition switch ON.
(c) Turn the tester ON.
(d) Clear DTCs (see page ES-39).
(e) Start the engine, and warm it up until the ECT reaches 75°C (167°F) or higher.
(f) On the intelligent tester, select the following menu items to check the fuel-cut status: DIAGNOSIS / ENHANCED OBD II / DATA LIST / USER DATA / FC IDL.
(g) Drive the vehicle at between 60 km/h (38 mph) and 120 km/h (75 mph) for at least 10 minutes.
(h) Change the transmission to 2nd gear.

ES

(i) Drive the vehicle at proper vehicle speed to perform fuel-cut operation.
HINT:
Fuel-cut is performed when the following conditions are met:
- Accelerator pedal fully released.
- Engine speed is 2,500 rpm or more (fuel injection returns at 1,000 rpm).

(j) Accelerate the vehicle to 64 km/h (40 mph) or more by depressing the accelerator pedal for at least 10 seconds.
(k) Soon after performing step (j) above, release the accelerator pedal for at least 4 seconds without depressing the brake pedal, in order to execute fuel-cut control.
(l) Allow the vehicle to decelerate until the vehicle speed declines to less than 10 km/h (6 mph).
(m) Repeat steps (h) through (k) above at least 3 times in one driving cycle.
HINT:
Completion of all A/F sensor monitors is required to change the value in TEST RESULT.
CAUTION:
Strictly observe posted speed limits, traffic laws, and road conditions when performing these drive patterns.

ES

INSPECTION PROCEDURE

HINT:
- Although the DTC titles say oxygen sensor, these DTCs relate to the Air-Fuel Ratio (A/F) sensor.
- Sensor 1 refers to the sensor mounted in front of the Three-Way Catalytic Converter (TWC) and located near the engine assembly.
- DTC P2A00 may be set when the air-fuel ratio is stuck rich or lean.
- Read freeze frame data using the intelligent tester. Freeze frame data records the engine condition when malfunctions are detected. When troubleshooting, freeze frame data can help determine if the vehicle was moving or stationary, if the engine was warmed up or not, if the air-fuel ratio was lean or rich, and other data from the time the malfunction occurred.
- A low A/F sensor voltage could be caused by a rich air-fuel mixture. Check for conditions that would cause the engine to run rich.
- A high A/F sensor voltage could be caused by a lean air-fuel mixture. Check for conditions that would cause the engine to run lean.

HINT:
Intelligent tester only:
Malfunctioning areas can be identified by performing the A/F CONTROL function provided in the ACTIVE TEST. The A/F CONTROL function can help to determine whether the Air-fuel Ratio (A/F) sensor, Heated Oxygen (HO2) sensor and other potential trouble areas are malfunctioning.
The following instructions describe how to conduct the A/F CONTROL operation using the intelligent tester.
(a) Connect the intelligent tester to the DLC3.
(b) Start the engine and turn the tester ON.
(c) Warm up the engine at an engine speed of 2,500 rpm for approximately 90 seconds.
(d) On the tester, select the following menu items: DIAGNOSIS / ENHANCED OBD II / ACTIVE TEST / A/F CONTROL.
(e) Perform the A/F CONTROL operation with the engine idling (press the RIGHT or LEFT button to change the fuel injection volume).
(f) Monitor the output voltages of the A/F and HO2 sensors (AFS B1 S1 and O2S B1 S2 or AFS B2 S1 and O2S B2 S2) displayed on the tester.
HINT:
- The A/F CONTROL operation lowers the fuel injection volume by 12.5% or increases the injection volume by 25%.
- The sensors react in accordance with increases and decreases in the fuel injection volume.

Standard

Tester Display (Sensor)	Injection Volume	Status	Voltage
AFS B1 S1 (A/F)	+25%	Rich	Less than 3.0
	-12.5%	Lean	More than 3.35
O2S B1 S2 (HO2)	+25%	Rich	More than 0.55
	-12.5%	Lean	Less than 0.4
AFS B2 S1 (A/F)	+25%	Rich	Less than 3.0
	-12.5%	Lean	More than 3.35
O2S B2 S2 (HO2)	+25%	Rich	More than 0.55
	-12.5%	Lean	Less than 0.4

NOTICE:
The A/F sensor has an output delay of a few seconds and the HO2 sensor (sensor 2) output has a maximum output delay of approximately 20 seconds.

ES

Case	A/F Sensor (Sensor 1) Output Voltage		HO2 Sensor (Sensor 2) Output Voltage		Main Suspected Trouble Area
1	Injection Volume +25% -12.5%		Injection Volume +25% -12.5%		-
	Output Voltage More than 3.35 V Less than 3.0 V		Output Voltage More than 0.5 V Less than 0.4 V		
2	Injection Volume +25% -12.5%		Injection Volume +25% -12.5%		• A/F sensor • A/F sensor heater • A/F sensor circuit
	Output Voltage Almost no reaction		Output Voltage More than 0.5 V Less than 0.4 V		
3	Injection Volume +25% -12.5%		Injection Volume +25% -12.5%		• HO2 sensor • HO2 sensor heater • HO2 sensor circuit
	Output Voltage More than 3.35 V Less than 3.0 V		Output Voltage Almost no reaction	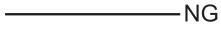	
4	Injection volume +25% -12.5%		Injection Volume +25% -12.5%		• Injector • Fuel pressure • Gas leakage from exhaust system (Air-fuel ratio extremely lean or rich)
	Output Voltage Almost no reaction		Output Voltage Almost no reaction	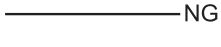	

Following the A/F CONTROL procedure enables technicians to check and graph the voltage outputs of both the A/F and HO2 sensors.
To display the graph, select the following menu items on the tester: DIAGNOSIS / ENHANCED OBD II / ACTIVE TEST / A/F CONTROL / USER DATA / AFS B1 S1 and O2S B1 S2 or AFS B2 S1 and O2S B2 S2; then press the YES button and then the ENTER button followed by the F4 button.

1	CHECK ANY OTHER DTCS OUTPUT (IN ADDITION TO P2195, P2196, P2197 OR P2198)

(a) Connect the intelligent tester to the DLC3.
(b) Turn the ignition switch ON.

(c) Turn the tester ON.
(d) Select the following menu items: DIAGNOSIS / ENHANCED OBD II / DTC INFO / CURRENT CODES.
(e) Read DTCs.

Result

Display (DTC Output)	Proceed to
P2195, P2196, P2197 or P2198	A
P2195, P2196, P2197 or P2198 and other DTCs	B

HINT:
If any DTCs relating to the A/F sensor (DTCs for the A/F sensor heater or A/F sensor admittance) are output, troubleshoot those DTCs first.

B → **GO TO DTC CHART**

ES

A

2 READ VALUE USING INTELLIGENT TESTER (TEST VALUE OF A/F SENSOR)

(a) Connect the intelligent tester to the DLC3.
(b) Turn the ignition switch ON and turn the tester ON.
(c) Clear DTCs (see page ES-39).
(d) Drive the vehicle in accordance with the driving pattern described in the CONFIRMATION DRIVING PATTERN.
(e) Select the following menu items: DIAGNOSIS / ENHANCED OBD II / MONITOR INFO / MONITOR STATUS.
(f) Check that the status of O2S MON is COMPL.
If the status is still INCMPL, drive the vehicle according to the driving pattern again.
HINT:
- AVAIL indicates that the component has not been monitored yet.
- COMPL indicates that the component is functioning normally.
- INCMPL indicates that the component is malfunctioning.

(g) Select the following menu items: DIAGNOSIS / ENHANCED OBD II / MONITOR INFO / TEST RESULT / RANGE B1 S1; then press the ENTER button.
(h) Check the test value of the A/F sensor output current during fuel-cut.

Result

Test Value	Proceed to
Within normal range (1.0 mA or more, and less than 3.6 mA)	A
Outside normal range (Less than 1.0 mA, or 3.6 mA or more)	B

B → **Go to step 12**

A

3	READ VALUE USING INTELLIGENT TESTER (OUTPUT VOLTAGE OF A/F SENSOR)

(a) Connect the intelligent tester to the DLC3.
(b) Start the engine.
(c) Turn the tester ON.
(d) Warm up the A/F sensor at an engine speed of 2,500 rpm for 90 seconds.
(e) On the tester, select the following menu items: DIAGNOSIS / ENHANCED OBD II / SNAPSHOT / MANUAL SNAPSHOT / USER DATA / AFS B1 S1 or AFS B2 S1 and ENGINE SPD.
(f) Check the A/F sensor voltage 3 times, when the engine is in each of the following conditions:
(1) While idling (check for at least 30 seconds).
(2) At an engine speed of approximately 2,500 rpm (without any sudden changes in engine speed).
(3) Raise the engine speed to 4,000 rpm and then quickly release the accelerator pedal so that the throttle valve is fully closed.

ES

Standard voltage

Condition	A/F Sensor Voltage Variation	Reference
(1) and (2)	Remains at approximately 3.3 V	3.1 V to 3.5 V
(3)	Increases to 3.8 V or more	This occurs during engine deceleration (when fuel-cut performed)

HINT:
- For more information, see the diagrams below.

Normal Condition:

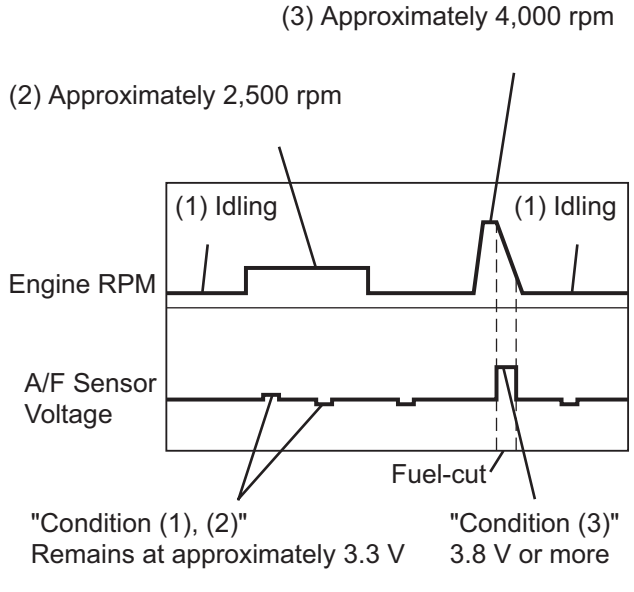

Malfunction Condition:

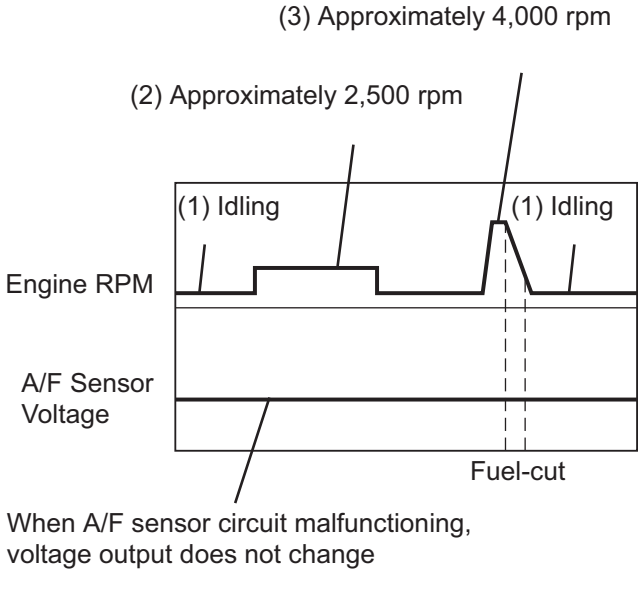

N

A107161E08

- If the output voltage of the A/F sensor remains at approximately 3.3 V (see Malfunction Condition diagram) under any conditions, including those above, the A/F sensor may have an open circuit. (This will also happen if the A/F sensor heater has an open circuit.)
- If the output voltage of the A/F sensor remains at either approximately 3.8 V or more, or 2.8 V or less (see Malfunction Condition diagram) under any conditions, including those above, the A/F sensor may have a short circuit.
- The ECM stops fuel injection (fuel cut) during engine deceleration. This causes a lean condition and results in a momentary increase in the A/F sensor output voltage.
- The ECM must establish a closed throttle valve position learning value to perform fuel cut. If the battery terminal has been reconnected, the vehicle must be driven over 16 km/h (10 mph) to allow the ECM to learn the closed throttle valve position.
- When the vehicle is driven:
  The output voltage of the A/F sensor may be below 2.8 V during fuel enrichment. For the vehicle, this translates to a sudden increase in speed with the accelerator pedal fully depressed when trying to overtake another vehicle. The A/F sensor is functioning normally.
- The A/F sensor is a current output element; therefore, the current is converted into a voltage inside the ECM. Measuring the voltage at the connectors of the A/F sensor or ECM will show a constant voltage result.

ES

NG → **Go to step 9**

OK

4	PERFORM CONFIRMATION DRIVING PATTERN

NEXT

5	CHECK WHETHER DTC OUTPUT RECURS (DTC P2195, P2196, P2197 OR P2198)

(a) Read DTCs using the intelligent tester.
(b) Select the following menu items: DIAGNOSIS / ENHANCED OBD II / DTC INFO / PENDING CODES.

Result

Display (DTC Output)	Proceed to
P2195, P2196, P2197 or P2198	A
No output	B

B → **END**

A

6	REPLACE AIR-FUEL RATIO SENSOR

NEXT

7	PERFORM CONFIRMATION DRIVING PATTERN

NEXT

8	CHECK WHETHER DTC OUTPUT RECURS (DTC P2195, P2196, P2197 OR P2198)

(a) Read DTCs using the intelligent tester.
(b) Select the following menu items: DIAGNOSIS / ENHANCED OBD II / DTC INFO / PENDING CODES.

Result

Display (DTC Output)	Proceed to
No output	A
P2195, P2196, P2197 or P2198	B

B → REPLACE ECM

A

END

9	INSPECT AIR-FUEL RATIO SENSOR (HEATER RESISTANCE) (See page ES-110)

NG → REPLACE AIR-FUEL RATIO SENSOR

OK

10	INSPECT INTEGRATION RELAY (A/F RELAY) (See page ES-111)

NG → REPLACE INTEGRATION RELAY

OK

11	CHECK WIRE HARNESS (A/F SENSOR - ECM)

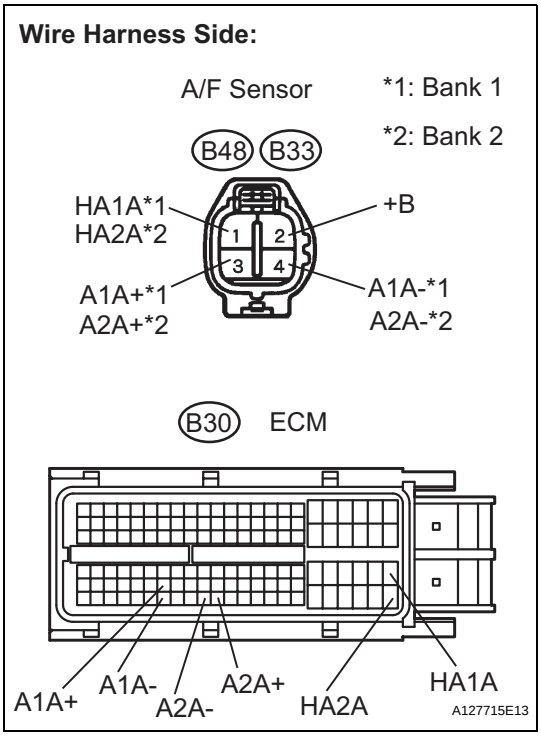

(a) Disconnect the B33 or B48 A/F sensor connector.
(b) Turn the ignition switch ON.
(c) Measure the voltage between the +B terminal of the A/F sensor connector and body ground.

Standard voltage

Tester Connection	Specified Condition
B33-2 (+B) - Body ground	9 to 14 V
B48-2 (+B) - Body ground	9 to 14 V

(d) Turn the ignition switch OFF.
(e) Disconnect the B30 ECM connector.
(f) Measure the resistance.

Standard resistance

Tester Connection	Specified Condition
B48-1 (HA1A) - B30-86 (HA1A)	Below 1 Ω
B48-3 (A1A+) - B30-93 (A1A+)	Below 1 Ω
B48-4 (A1A-) - B30-116 (A1A-)	Below 1 Ω
B33-1 (HA2A) - B30-109 (HA2A)	Below 1 Ω
B33-3 (A2A+) - B30-120 (A2A+)	Below 1 Ω
B33-4 (A2A-) - B30-119 (A2A-)	Below 1 Ω
B48-1 (HA1A) or B30-86 (HA1A) - Body ground	10 kΩ or higher
B48-3 (A1A+) or B30-93 (A1A+) - Body ground	10 kΩ or higher
B48-4 (A1A-) or B30-116 (A1A-) - Body ground	10 kΩ or higher
B33-1 (HA2A) or B30-109 (HA2A) - Body ground	10 kΩ or higher
B33-3 (A2A+) or B30-120 (A2A+) - Body ground	10 kΩ or higher
B33-4 (A2A-) or B30-119 (A2A-) - Body ground	10 kΩ or higher

(g) Reconnect the ECM connector.
(h) Reconnect the A/F sensor connector.

ES

Reference (System Diagram of Bank 1 Sensor 1):

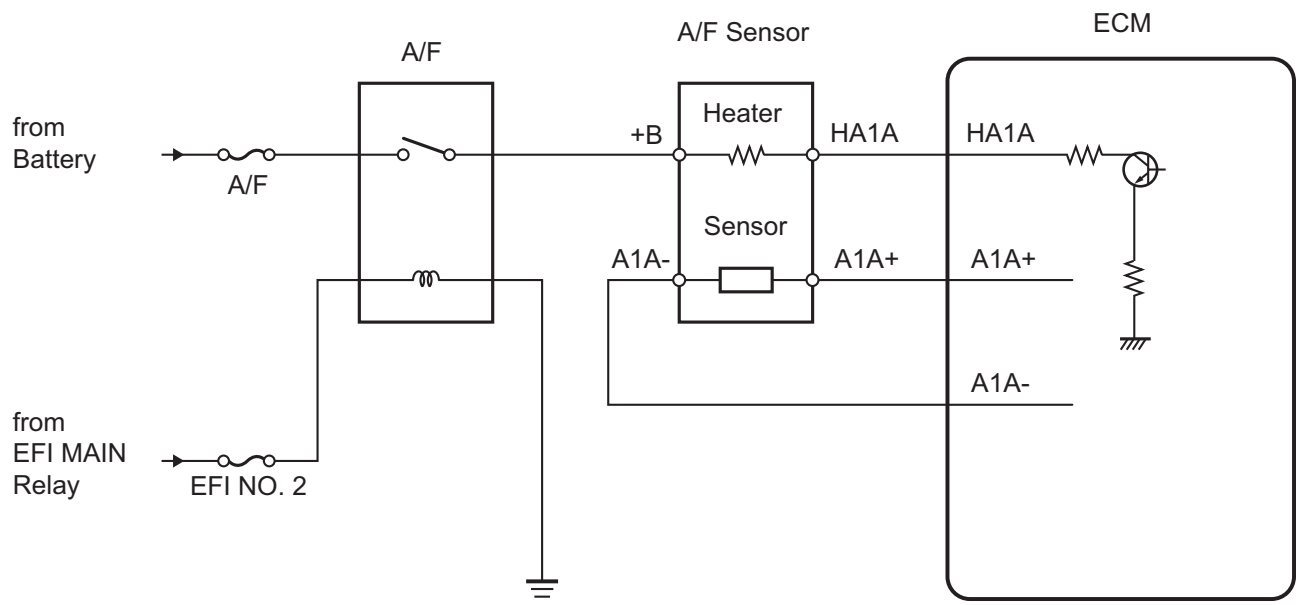

ES

NG → **REPAIR OR REPLACE HARNESS AND CONNECTOR**

OK

12	**REPLACE AIR-FUEL RATIO SENSOR**

NEXT

13	**PERFORM CONFIRMATION DRIVING PATTERN**

NEXT

14	**CHECK WHETHER DTC OUTPUT RECURS (DTC P2195, P2196, P2197 OR P2198)**

(a) Read DTCs using the intelligent tester.
(b) Select the following menu items: DIAGNOSIS / ENHANCED OBD II / DTC INFO / PENDING CODES.

Result

Display (DTC Output)	Proceed to
No output	A
P2195, P2196, P2197 or P2198	B

B → **REPLACE ECM**

A

END

DTC	P2238	Oxygen (A/F) Sensor Pumping Current Circuit Low (Bank 1 Sensor 1)
DTC	P2239	Oxygen (A/F) Sensor Pumping Current Circuit High (Bank 1 Sensor 1)
DTC	P2241	Oxygen (A/F) Sensor Pumping Current Circuit Low (Bank 2 Sensor 1)
DTC	P2242	Oxygen (A/F) Sensor Pumping Current Circuit High (Bank 2 Sensor 1)
DTC	P2252	Oxygen (A/F) Sensor Reference Ground Circuit Low (Bank 1 Sensor 1)
DTC	P2253	Oxygen (A/F) Sensor Reference Ground Circuit High (Bank 1 Sensor 1)
DTC	P2255	Oxygen (A/F) Sensor Reference Ground Circuit Low (Bank 2 Sensor 1)
DTC	P2256	Oxygen (A/F) Sensor Reference Ground Circuit High (Bank 2 Sensor 1)

ES

DESCRIPTION

Refer to DTC P2195 (see page ES-334).

DTC No.	DTC Detection Condition	Trouble Area
P2238 P2241	• Case 1: Condition (a) or (b) continues for 5.0 seconds or more (2 trip detection logic): (a) AF+ voltage 0.5 V or less (b) (AF+) - (AF-) = 0.1 V or less • Case 2: A/F sensor admittance: Less than 0.022 1/Ω (2 trip detection logic)	• Open or short in A/F sensor (sensor 1) circuit • A/F sensor (sensor 1) • A/F sensor heater (sensor 1) • Integration relay • A/F sensor heater and integration relay circuits • ECM
P2239 P2242	AF+ voltage more than 4.5 V for 5.0 seconds or more (2 trip detection logic)	• Open or short in A/F sensor (sensor 1) circuit • A/F sensor (sensor 1) • A/F sensor heater (sensor 1) • Integration relay • A/F sensor heater and integration relay circuits • ECM
P2252 P2255	AF- voltage 0.5 V or less for 5.0 seconds or more (2 trip detection logic)	• Open or short in A/F sensor (sensor 1) circuit • A/F sensor (sensor 1) • A/F sensor heater (sensor 1) • Integration relay • A/F sensor heater and integration relay circuits • ECM

DTC No.	DTC Detection Condition	Trouble Area
P2253 P2256	AF- voltage more than 4.5 V for 5.0 seconds or more (2 trip detection logic)	• Open or short in A/F sensor (sensor 1) circuit • A/F sensor (sensor 1) • A/F sensor heater (sensor 1) • Integration relay • A/F sensor heater and integration relay circuits • ECM

HINT:
- DTCs P2238, P2239, P2252 and P2253 indicate malfunctions related to the bank 1 A/F sensor circuit.
- DTCs P2241, P2242, P2255 and P2256 indicate malfunctions related to the bank 2 A/F sensor circuit.
- Bank 1 refers to the bank that includes cylinder No. 1.
- Bank 2 refers to the bank that includes cylinder No. 2.

MONITOR DESCRIPTION

ES

The Air-Fuel Ratio (A/F) sensor varies its output voltage in proportion to the air-fuel ratio. If the A/F sensor impedance (alternating current resistance) or output voltage deviates greatly from the standard range, the ECM determines that there is an open or short in the A/F sensor circuit.

MONITOR STRATEGY

Related DTCs	P2238: A/F sensor (bank 1) open circuit between AF+ and AF- P2238: A/F sensor (bank 1) short circuit between AF+ and AF- P2238: A/F sensor (bank 1) short circuit between AF+ and GND P2239: A/F sensor (bank 1) short circuit between AF+ and +B P2252: A/F sensor (bank 1) short circuit between AF- and GND P2253: A/F sensor (bank 1) short circuit between AF- and +B P2241: A/F sensor (bank 2) open circuit between AF+ and AF- P2241: A/F sensor (bank 2) short circuit between AF+ and AF- P2241: A/F sensor (bank 2) short circuit between AF+ and GND P2242: A/F sensor (bank 2) short circuit between AF+ and +B P2255: A/F sensor (bank 2) short circuit between AF- and GND P2256: A/F sensor (bank 2) short circuit between AF- and +B
Required Sensors/Components (Main)	A/F sensor
Required Sensors/Components (Related)	Engine Coolant Temperature (ECT) sensor, Crankshaft position sensor
Frequency of Operation	Once per driving cycle
Duration	10 seconds: A/F sensor open circuit between AF+ and AF- 5 seconds: Other
MIL Operation	2 driving cycles
Sequence of Operation	None

TYPICAL ENABLING CONDITIONS

Monitor runs whenever following DTCs not present	P0031, P0032, P0051, P0052 (A/F sensor heater - Sensor 1) P0100 - P0103 (MAF meter) P0110 - P0113 (IAT sensor) P0115 - P0118 (ECT sensor) P0120 - P0223, P2135 (TP sensor) P0125 (Insufficient ECT for Closed Loop) P0171, P0172 (Fuel system) P0300 - P0306 (Misfire) P0335 (CKP sensor) P0340 (CMP sensor) P0455, P0456 (EVAP system) P0500 (VSS)

P2238 and P2241 (open circuit between AF+ and AF-):

AF+ terminal voltage	0.5 to 4.5 V
AF- terminal voltage	0.5 to 4.5 V
Difference between AF+ and AF- terminal voltages	0.1 to 0.8 V
ECT	5°C (41°F) or more (varies with ECT at engine start)

Engine	Running
Fuel-cut	OFF
Time after fuel-cut OFF	5 seconds or more
A/F sensor heater	ON
Battery voltage	10.5 V or more
Ignition switch	ON
Time after ignition switch is turned from OFF to ON	5 seconds or more

Other:

Battery voltage	10.5 V or more
Ignition switch	ON
Time after ignition switch is turned from OFF to ON	5 seconds or more

TYPICAL MALFUNCTION THRESHOLDS

P2238 and P2241 (Open circuit between AF+ and AF-):

A/F sensor admittance	Below 0.022 1/Ω

P2238 and P2241 (Short circuit between AF+ and GND):

AF+ terminal voltage	0.5 V or less

P2238 and P2241 (Short circuit between AF+ and AF-):

Difference between AF+ and AF- terminal voltages	0.1 V or less

P2239 and P2242 (Short circuit between AF+ and +B):

AF+ terminal voltage	More than 4.5 V

P2252 and P2255 (Short circuit between AF- and GND):

AF- terminal voltage	0.5 V or less

P2253 and P2256 (Short circuit between AF- and +B):

AF- terminal voltage	More than 4.5 V

WIRING DIAGRAM

Refer to DTC P2195 (see page ES-339).

INSPECTION PROCEDURE

HINT:

- Although the DTC titles say oxygen sensor, these DTCs relate to the Air-Fuel Ratio (A/F) sensor.
- Sensor 1 refers to the sensor mounted in front of the Three-Way Catalytic Converter (TWC) and located near the engine assembly.

HINT:

Intelligent tester only:

Malfunctioning areas can be identified by performing the A/F CONTROL function provided in the ACTIVE TEST. The A/F CONTROL function can help to determine whether the Air-Fuel Ratio (A/F) sensor, Heated Oxygen (HO2) sensor and other potential trouble areas are malfunctioning.

The following instructions describe how to conduct the A/F CONTROL operation using the intelligent tester.

(a) Connect the intelligent tester to the DLC3.

(b) Start the engine and turn the tester ON.

(c) Warm up the engine at an engine speed of 2,500 rpm for approximately 90 seconds.

(d) On the tester, select the following menu items: DIAGNOSIS / ENHANCED OBD II / ACTIVE TEST / A/F CONTROL.

(e) Perform the A/F CONTROL operation with the engine idling (press the RIGHT or LEFT button to change the fuel injection volume).

(f) Monitor the output voltages of the A/F and HO2 sensors (AFS B1 S1 and O2S B1 S2 or AFS B2 S1 and O2S B2 S2) displayed on the tester.
HINT:

- The A/F CONTROL operation lowers the fuel injection volume by 12.5% or increases the injection volume by 25%.
- The sensors react in accordance with increases and decreases in the fuel injection volume.

Standard

Tester Display (Sensor)	Injection Volume	Status	Voltage
AFS B1 S1 (A/F)	+25%	Rich	Less than 3.0
	-12.5%	Lean	More than 3.35
O2S B1 S2 (HO2)	+25%	Rich	More than 0.55
	-12.5%	Lean	Less than 0.4
AFS B2 S1 (A/F)	+25%	Rich	Less than 3.0
	-12.5%	Lean	More than 3.35
O2S B2 S2 (HO2)	+25%	Rich	More than 0.55
	-12.5%	Lean	Less than 0.4

ES

NOTICE:
The A/F sensor has an output delay of a few seconds and the HO2 sensor has a maximum output delay of approximately 20 seconds.

Case	A/F Sensor (Sensor 1) Output Voltage		HO2 Sensor (Sensor 2) Output Voltage		Main Suspected Trouble Area
1	Injection Volume +25% -12.5%		Injection Volume +25% -12.5%		-
	Output Voltage More than 3.35 V Less than 3.0 V		Output Voltage More than 0.5 V Less than 0.4 V		
2	Injection Volume +25% -12.5%		Injection Volume +25% -12.5%		• A/F sensor • A/F sensor heater • A/F sensor circuit
	Output Voltage Almost no reaction		Output Voltage More than 0.5 V Less than 0.4 V		
3	Injection Volume +25% -12.5%		Injection Volume +25% -12.5%		• HO2 sensor • HO2 sensor heater • HO2 sensor circuit
	Output Voltage More than 3.35 V Less than 3.0 V		Output Voltage Almost no reaction		
4	Injection volume +25% -12.5%		Injection Volume +25% -12.5%		• Injector • Fuel pressure • Gas leakage from exhaust system (Air-fuel ratio extremely lean or rich)
	Output Voltage Almost no reaction	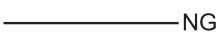	Output Voltage Almost no reaction	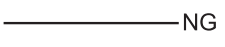	

Following the A/F CONTROL procedure enables technicians to check and graph the output voltages of both the A/F and HO2 sensors.

To display the graph, select the following menu items on the tester: DIAGNOSIS / ENHANCED OBD II / ACTIVE TEST / A/F CONTROL / USER DATA / AFS B1 S1 and O2S B1 S2 or AFS B2 S1 and O2S B2 S2; then press the YES button and then the ENTER button followed by the F4 button.
HINT:
Read freeze frame data using the intelligent tester. Freeze frame data records the engine condition when malfunctions are detected. When troubleshooting, freeze frame data can help determine if the vehicle was moving or stationary, if the engine was warmed up or not, if the air-fuel ratio was lean or rich, and other data from the time the malfunction occurred.

1 **INSPECT AIR-FUEL RATIO SENSOR (HEATER RESISTANCE) (See page ES-110)**

NG → **REPLACE AIR-FUEL RATIO SENSOR**

OK

2 **INSPECT INTEGRATION RELAY (A/F RELAY) (See page ES-111)**

NG → **REPLACE INTEGRATION RELAY**

OK

3 **CHECK WIRE HARNESS (A/F SENSOR - ECM) (See page ES-354)**

NG → **REPAIR OR REPLACE HARNESS AND CONNECTOR**

OK

4 **REPLACE AIR-FUEL RATIO SENSOR**

NEXT

5 **CHECK WHETHER DTC OUTPUT RECURS**

(a) Connect the intelligent tester to the DLC3.
(b) Turn the ignition switch ON and turn the tester ON.
(c) Clear DTCs (see page ES-39).
(d) Start the engine.
(e) Allow the engine to idle for 5 minutes or more.
(f) Select the following menu items: DIAGNOSIS / ENHANCED OBD II / DTC INFO / PENDING CODES.
(g) Read pending DTCs.

Result

Display (DTC Output)	Proceed to
No output	A
P2238, P2239, P2252, P2253, P2241, P2242, P2255 or P2256	B

B → **REPLACE ECM**

A

END

DTC	P2420	Evaporative Emission System Switching Valve Control Circuit High

DTC SUMMARY

DTC	Monitoring Item	Malfunction Detection Condition	Trouble Area	Detection Timing	Detection Logic
P2420	Vent valve stuck open (vent)	Following condition met during key-off EVAP monitor: • EVAP pressure change when vent valve closed (ON) less than 0.3 kPa-g (2.25 mmHg-g)	• Canister pump module (Reference orifice, leak detection pump, vent valve) • Connector/wire harness (Canister pump module - ECM) • ECM	While ignition switch OFF	2 trip

HINT:
The vent valve is built into the canister pump module.

ES

DESCRIPTION

The description can be found in the EVAP (Evaporative Emission) System (see page ES-371).

INSPECTION PROCEDURE

Refer to the EVAP System (see page ES-376).

MONITOR DESCRIPTION

5 hours* after the ignition switch is turned OFF, the leak detection pump creates negative pressure (vacuum) in the EVAP system. The ECM monitors for leaks and actuator malfunctions based on the EVAP pressure.
HINT:
*: If the engine coolant temperature is not below 35°C (95°F) 5 hours after the ignition switch is turned OFF, the monitor check starts 2 hours later. If it is still not below 35°C (95°F) 7 hours after the ignition switch is turned OFF, the monitor check starts 2.5 hours later.

Sequence	Operation	Description	Duration
-	ECM activation	Activated by soak timer 5, 7 or 9.5 hours after ignition switch turned OFF.	-
A	Atmospheric pressure measurement	Vent valve turned OFF (vent) and EVAP system pressure measured by ECM in order to register atmospheric pressure. If pressure in EVAP system not between 76 kPa-a and 110 kPa-a (570 mmHg-a and 825 mmHg-a), ECM cancels EVAP system monitor.	10 seconds
B	First reference pressure measurement	In order to determine reference pressure, leak detection pump creates negative pressure (vacuum) through reference orifice and then ECM checks if leak detection pump and vent valve operate normally.	60 seconds
C	EVAP system pressure measurement	Vent valve turned ON (closed) to shut EVAP system. Negative pressure (vacuum) created in EVAP system, and EVAP system pressure then measured. Write down measured value as it will be used in leak check. If EVAP pressure does not stabilize within 15 minutes, ECM cancels EVAP system monitor.	15 minutes*
D	Purge VSV monitor	Purge VSV opened and then EVAP system pressure measured by ECM. Large increase indicates normality.	10 seconds
E	Second reference pressure measurement	After second reference pressure measurement, leak check performed by comparing first and second reference pressure. If stabilized system pressure higher than second reference pressure, ECM determines that EVAP system leaking.	60 seconds
-	Final check	Atmospheric pressure measured and then monitoring result recorded by ECM.	-

*: If only a small amount of fuel is in the fuel tank, it takes longer for the EVAP pressure to stabilize.

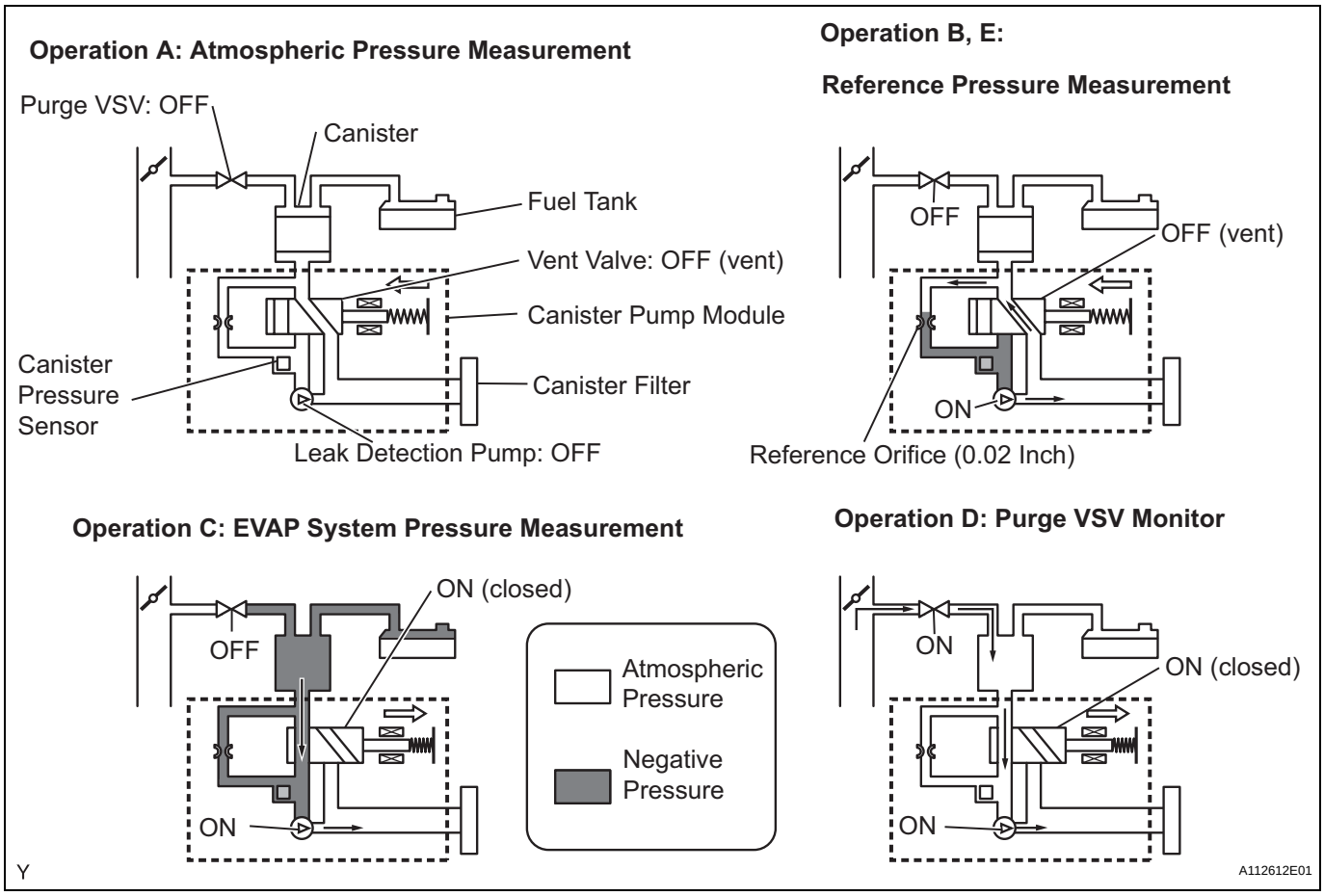

P2420: Vent valve stuck open (vent)

In operation C, the vent valve turns ON (closes) and the EVAP system pressure is then measured by the ECM, using the canister pressure sensor, to conduct an EVAP leak check. If the pressure does not increase when the vent valve is open, the ECM interprets this as the vent valve being stuck open. The ECM illuminates the MIL and sets the DTC.

EVAP Pressure when Vent Valve Stuck OFF:

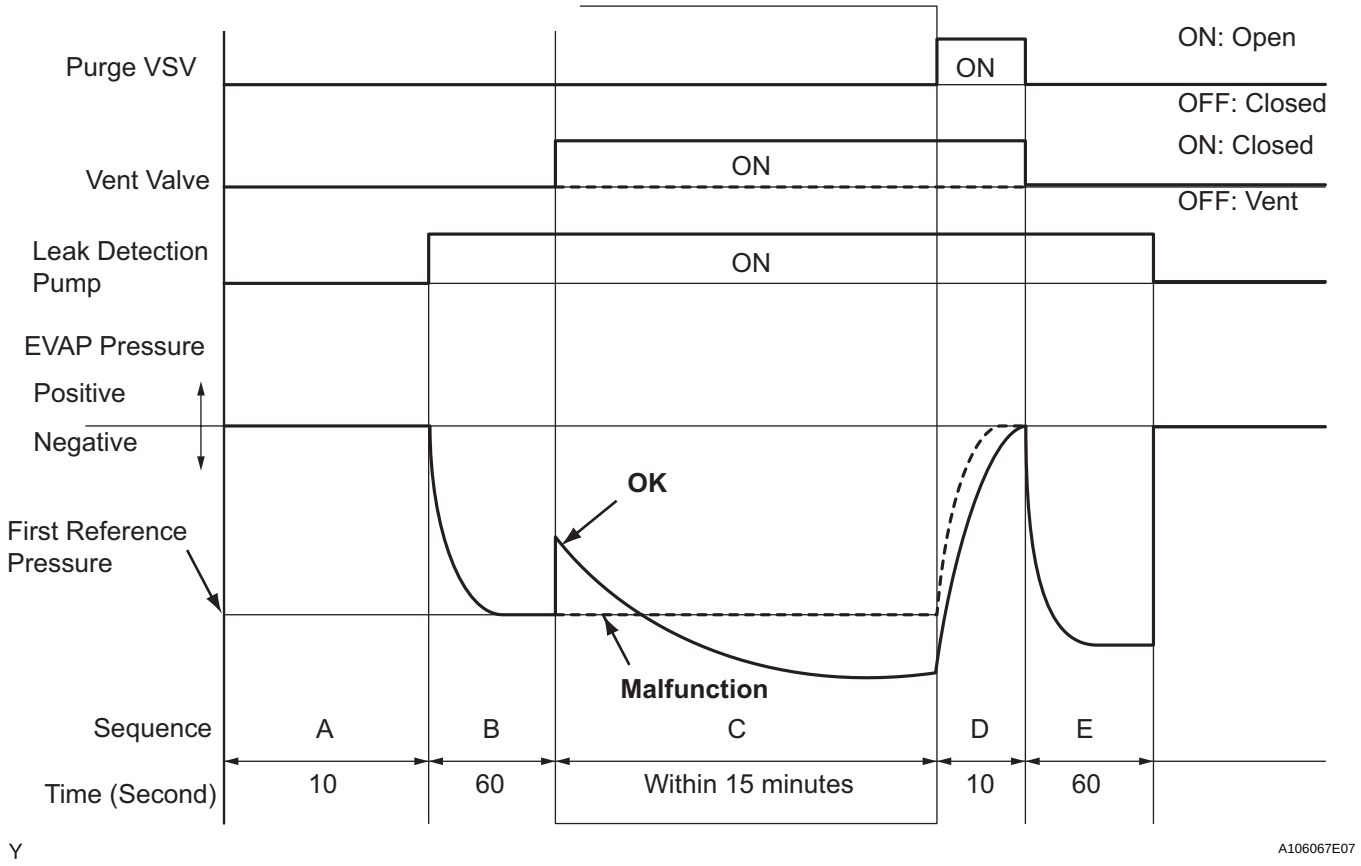

MONITOR STRATEGY

Required Sensors/Components	Purge VSV and canister pump module
Frequency of Operation	Once per driving cycle
Duration	Within 2 minutes (varies with amount of fuel in tank)
MIL Operation	2 driving cycles
Sequence of Operation	None

TYPICAL ENABLING CONDITIONS

Monitor runs whenever following DTCs not present	None
EVAP key-off monitor runs when all of following conditions met	-
Atmospheric pressure	70 to 110 kPa-a (525 to 825 mmHg-a)
Battery voltage	10.5 V or more
Vehicle speed	Below 4 km/h (2.5 mph)
Ignition switch	OFF
Time after key off	5 or 7 or 9.5 hours
Canister pressure sensor malfunction (P0450, P0451, P0452 and P0453)	Not detected
Purge VSV	Not operated by scan tool
Vent valve	Not operated by scan tool
Leak detection pump	Not operated by scan tool
Both of following conditions met before key off	Conditions 1 and 2
1. Duration that vehicle driven	5 minutes or more
2. EVAP purge operation	Performed

ECT	4.4 to 35°C (40 to 95°F)
IAT	4.4 to 35°C (40 to 95°F)

1. Key-off monitor sequence 1 to 8

1. Atmospheric pressure measurement

Next sequence run if following condition set	-
Atmospheric pressure change	Less than 0.3 kPa-g (2.25 mmHg-g) in 1 second

2. First reference pressure measurement

Next sequence run if all of following conditions set	Condition 1, 2 and 3
1. EVAP pressure just after reference pressure measurement started	-1 kPa-g (-7.5 mmHg-g) or less
2. Reference pressure	-4.85 to -1.057 kPa-g (-36.4 to -7.93 mmHg-g)
3. Reference pressure	Saturated within 60 seconds

3. Vent valve stuck closed check

Next sequence run if following condition set	-
EVAP pressure change after vent valve ON (closed)	0.3 kPa-g (2.25 mmHg-g) or more

4. Vacuum introduction

Next sequence run if following condition set	-
EVAP pressure	Saturated within 15 minutes

5. Purge VSV stuck closed check

Next sequence run if following condition set	-
EVAP pressure change after purge VSV ON (open)	0.3 kPa-g (2.25 mmHg-g) or more

6. Second reference pressure measurement

Next sequence run if all of following conditions set	Condition 1, 2, 3 and 4
1. EVAP pressure just after reference pressure	-1 kPa-g (-7.5 mmHg-g) or less
2. Reference pressure	-4.85 to -1.057 kPa-g (-36.4 to -7.93 mmHg-g)
3. Reference pressure	Saturated within 60 seconds
4. Reference pressure difference between first and second	Less than 0.7 kPa-g (5.25 mmHg-g)

7. Leak check

Next sequence run if following condition set	-
EVAP pressure when vacuum introduction complete	Second reference pressure or less

8. Atmospheric pressure measurement

EVAP monitor complete if following condition set	-
Atmospheric pressure difference between sequence 1 and 8	Within 0.3 kPa-g (2.25 mmHg-g)

TYPICAL MALFUNCTION THRESHOLDS

EVAP pressure change after EVAP canister vent valve ON	Less than 0.3 kPa-g (2.25 mmHg-g)

MONITOR RESULT

Refer to CHECKING MONITOR STATUS (see page ES-19).

DTC	P2610	ECM / PCM Internal Engine Off Timer Performance

DTC SUMMARY

DTC	Monitoring Item	Malfunction Detection Condition	Trouble Area	Detection Timing	Detection Logic
P2610	Soak timer (built into ECM)	ECM internal malfunction	ECM	Engine running	2 trip

DESCRIPTION

To ensure the accuracy of the EVAP (Evaporative Emission) monitor values, the soak timer, which is built into the ECM, measures 5 hours (+-15 minutes) from when the ignition switch is turned OFF, before the monitor is run. This allows the fuel to cool down, which stabilizes the EVAP pressure. When 5 hours have elapsed, the ECM turns on.

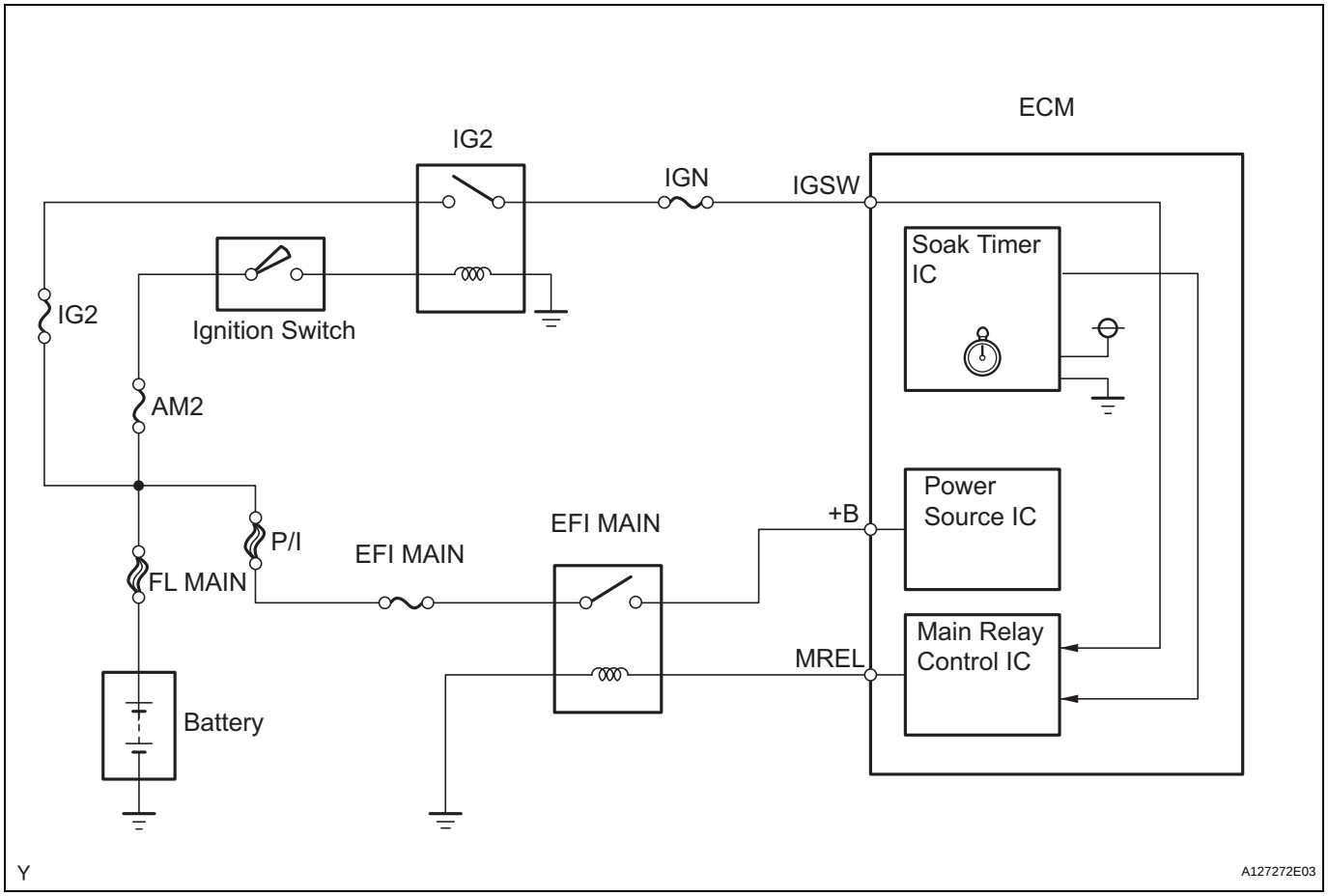

MONITOR DESCRIPTION

5 hours after the ignition switch is turned OFF, the soak timer activates the ECM to begin the EVAP system monitor. While the engine is running, the ECM monitors the synchronization of the soak timer and the CPU clock. If these two are not synchronized, the ECM interprets this as a malfunction, illuminates the MIL and sets the DTC (2 trip detection logic).

MONITOR STRATEGY

Required Sensors/Components	ECM
Frequency of Operation	Once per driving cycle

Duration	10 minutes
MIL Operation	2 driving cycles
Sequence of Operation	None

TYPICAL ENABLING CONDITIONS

Monitor runs whenever following DTC not present	None
Ignition switch	ON
Engine	Running
Battery voltage	8 V or more
Starter	OFF

TYPICAL MALFUNCTION THRESHOLDS

ES

Soak timer measurement when ECM CPU clock counts 10 minutes	Less than 7 minutes, or more than 13 minutes

INSPECTION PROCEDURE

HINT:

- DTC P2610 is set if an internal ECM problem is detected. Diagnostic procedures are not required. ECM replacement is necessary.
- Read freeze frame data using the intelligent tester. Freeze frame data records the engine condition when malfunctions are detected. When troubleshooting, freeze frame data can help determine if the vehicle was moving or stationary, if the engine was warmed up or not, if the air-fuel ratio was lean or rich, and other data from the time the malfunction occurred.

1	**REPLACE ECM**

(a) Replace the ECM (see page ES-429).

NEXT

2	**CHECK WHETHER DTC OUTPUT RECURS**

(a) Connect the intelligent tester to the DLC3.
(b) Turn the ignition switch ON.
(c) Turn the tester ON.
(d) Clear DTCs (see page ES-39).
(e) Start the engine and wait for 10 minutes or more.
(f) On the tester, select the following menu items: DIAGNOSIS / ENHANCED OBD II / DTC INFO / PENDING CODES.
(g) If no pending DTC is displayed, the repair has been successfully completed.

NEXT

END

DTC	P2A00	A/F Sensor Circuit Slow Response (Bank 1 Sensor 1)

DTC	P2A03	A/F Sensor Circuit Slow Response (Bank 2 Sensor 1)

DESCRIPTION

Refer to DTC P2195 (see page ES-334).

DTC No.	DTC Detection Condition	Trouble Area
P2A00	Calculated value of air-fuel ratio (A/F) sensor response rate deterioration level less than threshold (2 trip detection logic)	• Open or short in A/F sensor circuit (bank 1) • A/F sensor (bank 1) • ECM
P2A03	Calculated value of air-fuel ratio (A/F) sensor response rate deterioration level less than threshold (2 trip detection logic)	• Open or short in A/F sensor circuit (bank 2) • A/F sensor (bank 2) • ECM

ES

MONITOR DESCRIPTION

After the engine is warmed up, the ECM performs air-fuel ratio feedback control to maintain the air-fuel ratio at the stoichiometric level. In addition, active A/F control is performed for approximately 10 seconds after the preconditions are met in order to measure the A/F sensor response rate. During active A/F control, the ECM forcibly increases and decreases the injection volume a certain amount, based on the stoichiometric air-fuel ratio learned during normal air-fuel ratio control, and measures the A/F sensor response rate. The ECM receives a signal from the A/F sensor while performing active A/F control and uses it to calculate the A/F sensor response rate deterioration level.
If the A/F sensor response rate deterioration level is less than the threshold, the ECM interprets this as a malfunction and sets the DTC.

Air-Fuel Ratio Sensor Output:

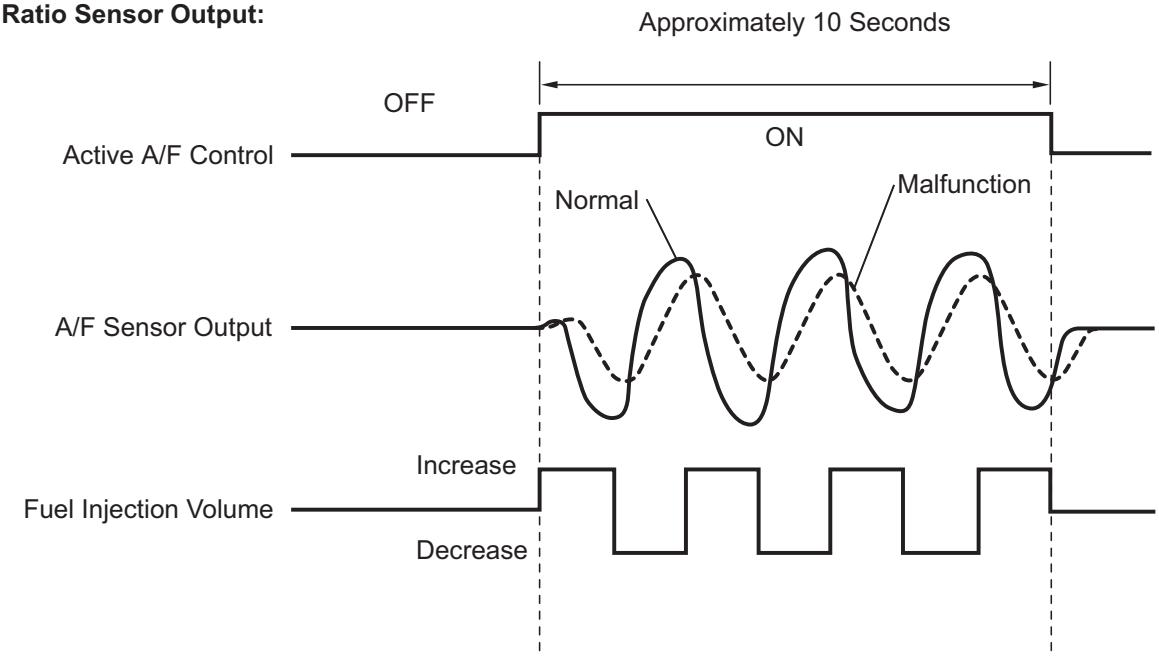

CONFIRMATION DRIVING PATTERN

HINT:
Performing this confirmation pattern will activate the A/F sensor response monitor.

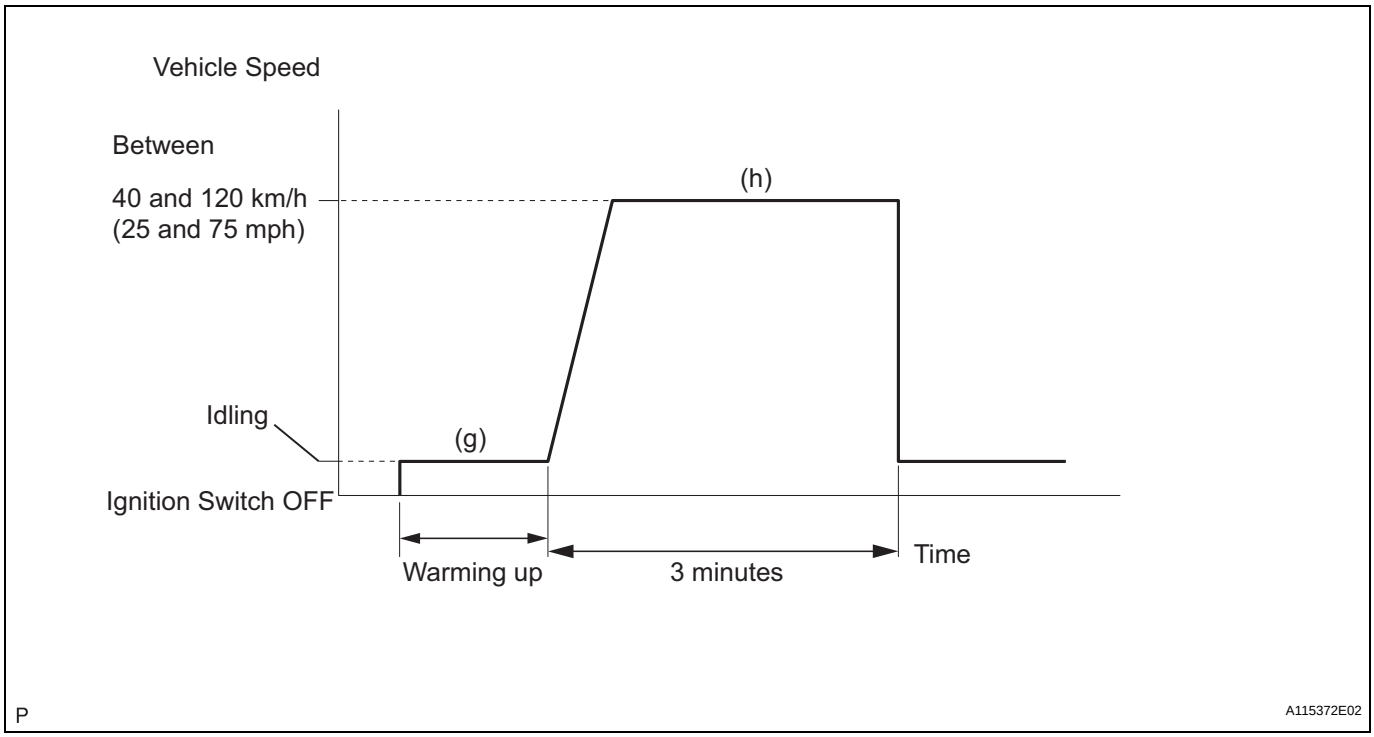

(a) Connect the intelligent tester to the DLC3.

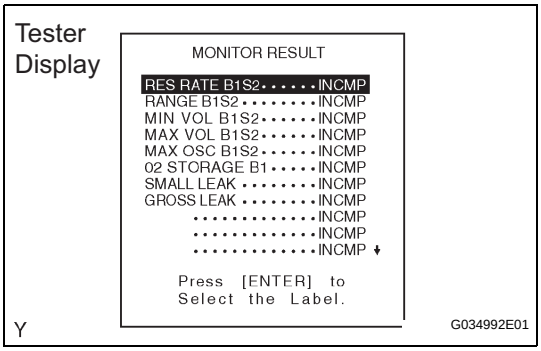

(b) Turn the ignition switch ON.
(c) Turn the tester ON.
(d) Clear DTCs (if set) (see page ES-39).
(e) Select the following menu items: DIAGNOSIS / ENHANCED OBD II / MONITOR INFO / MONITOR RESULT.
(f) Check that RES RATE B1S1 is INCOMP.
(g) Start the engine and warm it up.
(h) Drive the vehicle at a constant speed of between 40 km/h and 120 km/h (25 mph and 75 mph) for 3 minutes.
(i) Check the monitor result values on the intelligent tester by selecting the following menu items: DIAGNOSIS / ENHANCED OBD II / MONITOR INFO / TEST RESULT.
(j) If the values indicated on the tester do not change, perform READINESS MONITOR DRIVE PATTERN for the A/F sensor and the heated oxygen sensor (see page ES-22).
HINT:
Completion of all A/F sensor monitors is required to change the value in TEST RESULT.
(k) Note the value of the Monitor Result.
(l) Select the following menu items: DIAGNOSIS / ENHANCED OBD II / DTC INFO / PENDING CODES.
(m) Check if any DTCs (any pending DTCs) are set.

MONITOR STRATEGY

Related DTCs	P2A00: Air-Fuel Ratio (A/F) sensor slow response (bank 1) P2A03: Air-Fuel Ratio (A/F) sensor slow response (bank 2)
Required Sensors/Components (Main)	A/F sensor
Required Sensors/Components (Related)	Vehicle speed sensor, Crankshaft position sensor
Frequency of Operation	Once per driving cycle
Duration	10 to 15 seconds
MIL Operation	2 driving cycles
Sequence of Operation	None

TYPICAL ENABLING CONDITIONS

Monitor runs whenever following DTCs not present	P0031, P0032, P0051, P0052 (A/F Sensor heater - Sensor 1) P0100 - P0103 (MAF meter) P0110 - P0113 (IAT sensor) P0115 - P0118 (ECT sensor) P0120 - P0223, P2135 (TP sensor) P0125 (Insufficient ECT for Closed Loop) P0171, P0172 (Fuel system) P0300 - P0306 (Misfire) P0335 (CKP sensor) P0340 (CMP sensor) P0455, P0456 (EVAP system) P0500 (VSS) P2196, P2198 (A/F Sensor - rationality)
Active A/F control	Performing
Active A/F control performed when following conditions met	-
Engine coolant temperature	75°C (167°F) or more
Battery voltage	11 V or more
Idle	OFF
Engine RPM	Less than 4,000 rpm
A/F sensor status	Activated
Fuel-cut	OFF
Engine load	10 to 70%
Shift position	2 or more
Catalyst monitor	Not yet
Intake air amount	2.5 to 15 g/sec.

TYPICAL MALFUNCTION THRESHOLDS

Response rate deterioration level	Less than 0.18 V

MONITOR RESULT

Refer to CHECKING MONITOR STATUS (see page ES-19).

WIRING DIAGRAM

Refer to DTC P2195 (see page ES-339).

INSPECTION PROCEDURE

HINT:
Intelligent tester only:

Malfunctioning areas can be identified by performing the A/F CONTROL function provided in the ACTIVE TEST. The A/F CONTROL function can help to determine whether the Air-Fuel Ratio (A/F) sensor, Heated Oxygen (HO2) sensor and other potential trouble areas are malfunctioning.
The following instructions describe how to conduct the A/F CONTROL operation using the intelligent tester.
(a) Connect the intelligent tester to the DLC3.
(b) Start the engine and turn the tester ON.
(c) Warm up the engine at an engine speed of 2,500 rpm for approximately 90 seconds.
(d) On the tester, select the following menu items: DIAGNOSIS / ENHANCED OBD II / ACTIVE TEST / A/F CONTROL.
(e) Perform the A/F CONTROL operation with the engine idling (press the RIGHT or LEFT button to change the fuel injection volume).
(f) Monitor the voltage outputs of the A/F and HO2 sensors (AFS B1 S1 and O2S B1 S2 or AFS B2 S1 and O2S B2 S2) displayed on the tester.

ES

HINT:
- The A/F CONTROL operation lowers the fuel injection volume by 12.5% or increases the injection volume by 25%.
- The sensors react in accordance with increases and decreases in the fuel injection volume.

Standard

Tester Display (Sensor)	Injection Volume	Status	Voltage
AFS B1 S1 (A/F)	+25%	Rich	Less than 3.0
	-12.5%	Lean	More than 3.35
O2S B1 S2 (HO2)	+25%	Rich	More than 0.55
	-12.5%	Lean	Less than 0.4
AFS B2 S1 (A/F)	+25%	Rich	Less than 3.0
	-12.5%	Lean	More than 3.35
O2S B2 S2 (HO2)	+25%	Rich	More than 0.55
	-12.5%	Lean	Less than 0.4

NOTICE:
The A/F sensor has an output delay of a few seconds and the HO2 sensor has a maximum output delay of approximately 20 seconds.

Case	A/F Sensor (Sensor 1) Output Voltage		HO2 Sensor (Sensor 2) Output Voltage		Main Suspected Trouble Area
1	Injection Volume +25% -12.5%		Injection Volume +25% -12.5%		-
	Output Voltage More than 3.35 V Less than 3.0 V		Output Voltage More than 0.5 V Less than 0.4 V		
2	Injection Volume +25% -12.5%		Injection Volume +25% -12.5%		• A/F sensor • A/F sensor heater • A/F sensor circuit
	Output Voltage Almost no reaction		Output Voltage More than 0.5 V Less than 0.4 V		

Case	A/F Sensor (Sensor 1) Output Voltage		HO2 Sensor (Sensor 2) Output Voltage		Main Suspected Trouble Area
3	Injection Volume +25% -12.5%		Injection Volume +25% -12.5%		• HO2 sensor • HO2 sensor heater • HO2 sensor circuit
	Output Voltage More than 3.35 V Less than 3.0 V		Output Voltage Almost no reaction		
4	Injection volume +25% -12.5%		Injection Volume +25% -12.5%		• Injector • Fuel pressure • Gas leakage from exhaust system (Air-fuel ratio extremely lean or rich)
	Output Voltage Almost no reaction		Output voltage Almost no reaction		

ES

Following the A/F CONTROL procedure enables technicians to check and graph the voltage outputs of both the A/F and HO2 sensors.
To display the graph, select the following menu items on the tester: DIAGNOSIS / ENHANCED OBD II / ACTIVE TEST / A/F CONTROL / USER DATA / AFS B1 S1 and O2S B1 S2 or AFS B2 S1 and O2S B2 S2; then press the YES button and then the ENTER button followed by the F4 button.
HINT:

- Sensor 1 refers to the sensor mounted in front of the Three-Way Catalytic Converter (TWC) and located near the engine assembly.
- DTC P2A00 indicates malfunctions related to the bank 1 A/F sensor.
- DTC P2A03 indicates malfunctions related to the bank 2 A/F sensor.
- Bank 1 refers to the bank that includes cylinder No. 1.
- Bank 2 refers to the bank that includes cylinder No. 2.
- DTC P2A00 or P2A03 may be set when the air-fuel ratio is stuck rich or lean.
- A low A/F sensor voltage could be caused by a rich air-fuel mixture. Check for conditions that would cause the engine to run rich.
- A high A/F sensor voltage could be caused by a lean air-fuel mixture. Check for conditions that would cause the engine to run lean.
- Read freeze frame data using the intelligent tester. Freeze frame data records the engine condition when malfunctions are detected. When troubleshooting, freeze frame data can help determine if the vehicle was moving or stationary, if the engine was warmed up or not, if the air-fuel ratio was lean or rich, and other data from the time the malfunction occurred.

1	CHECK ANY OTHER DTCS OUTPUT (IN ADDITION TO DTC P2A00 AND/OR P2A03)

(a) Connect the intelligent tester to the DLC3.
(b) Turn the ignition switch ON.
(c) Turn the tester ON.
(d) Select the following menu items: DIAGNOSIS / ENHANCED OBD II / DTC INFO / CURRENT CODES.
(e) Read DTCs.

Result

Display (DTC Output)	Proceed to
P2A00 and/or P2A03	A
P2A00 and/or P2A03 and other DTCs	B

HINT:
If any DTCs relating to the A/F sensor (DTCs for the A/F sensor heater or A/F sensor admittance) are output, troubleshoot those DTCs first.

B → GO TO DTC CHART

A

2 INSPECT AIR-FUEL RATIO SENSOR (HEATER RESISTANCE) (See page ES-110)

NG → REPLACE AIR-FUEL RATIO SENSOR

OK

ES

3 CHECK WIRE HARNESS (ECM - AIR-FUEL RATIO SENSOR) (See page ES-354)

NG → REPAIR OR REPLACE HARNESS AND CONNECTOR

OK

4 PERFORM CONFIRMATION DRIVING PATTERN

NEXT

5 CHECK WHETHER DTC OUTPUT RECURS (DTC P2A00 AND/OR P2A03)

(a) Connect the intelligent tester to the DLC3.
(b) Turn the ignition switch ON and turn the tester ON.
(c) Select the following menu items: DIAGNOSIS / ENHANCED OBD II / DTC INFO / PENDING CODES.
(d) Read pending DTCs.

Result

Display (DTC Output)	Proceed to
P2A00 and/or P2A03	A
No output	B

B → CHECK FOR INTERMITTENT PROBLEMS

A

6 REPLACE AIR-FUEL RATIO SENSOR

NEXT

7	PERFORM CONFIRMATION DRIVING PATTERN

NEXT

8	CHECK WHETHER DTC OUTPUT RECURS (DTC P2A00 AND/OR P2A03)

(a) Connect the intelligent tester to the DLC3.
(b) Turn the ignition switch ON and turn the tester ON.
(c) Select the following menu items: DIAGNOSIS / ENHANCED OBD II / DTC INFO / PENDING CODES.
(d) Read pending DTCs.

Result

Display (DTC Output)	Proceed to
No output	A
P2A00 and/or P2A03	B

B → REPLACE ECM

A

END

ES

EVAP System

RELATED DTCS

DTC	Monitoring Item	See page
P043E	Reference orifice clogged (built into canister pump module)	ES-241
P043F	Reference orifice high-flow (built into canister pump module)	
P0441	• Purge VSV (Vacuum Switching Valve) stuck closed • Purge VSV stuck open • Purge flow	ES-245
P0450	Canister pressure sensor (built into canister pump module) voltage abnormal fluctuation	ES-252
P0451	• Canister pressure sensor (built into canister pump module) noise • Canister pressure sensor (built into canister pump module) signal becomes fixed/flat	
P0452	Canister pressure sensor (built into canister pump module) voltage low	
P0453	Canister pressure sensor (built into canister pump module) voltage high	
P0455	EVAP gross leak	ES-262
P0456	EVAP small leak	
P2401	Leak detection pump stuck OFF (built into canister pump module)	ES-241
P2402	Leak detection pump stuck ON (built into canister pump module)	
P2419	Vent valve stuck closed (built into canister pump module)	ES-241
P2420	Vent valve stuck open (vent) (built into canister pump module)	ES-356
P2610	Soak timer (built into ECM)	ES-360

If any EVAP system DTCs are set, the malfunctioning area can be determined using the table below.

DTCs / Malfunctioning Areas	P043E P043F	P0441	P0450	P0451	P0452	P0453	P0455	P0456	P2401 P2402	P2419	P2420
Reference orifice clogged	●								●	●	
Reference orifice high-flow	●								●	●	
Purge VSV stuck open		●					●				
Purge VSV stuck closed		●									
Canister pressure sensor fixed output				●							
Canister pressure sensor noise				●							
Canister pressure sensor low output			●		●						
Canister pressure sensor high output			●			●					
Gross leak		●					●				
Small leak								●			
Leak detection pump stuck OFF	●								●	●	
Leak detection pump stuck ON	●								●	●	
Vent valve stuck closed	●								●	●	
Vent valve stuck open (vent)											●

Y

A106731E11

NOTICE:
If the reference pressure difference between the first and second checks is greater than the specification, all the DTCs relating to the reference pressure (P043E, P043F, P2401, P2402 and P2419) are stored.

DESCRIPTION

Location of EVAP (Evaporative Emission) System:

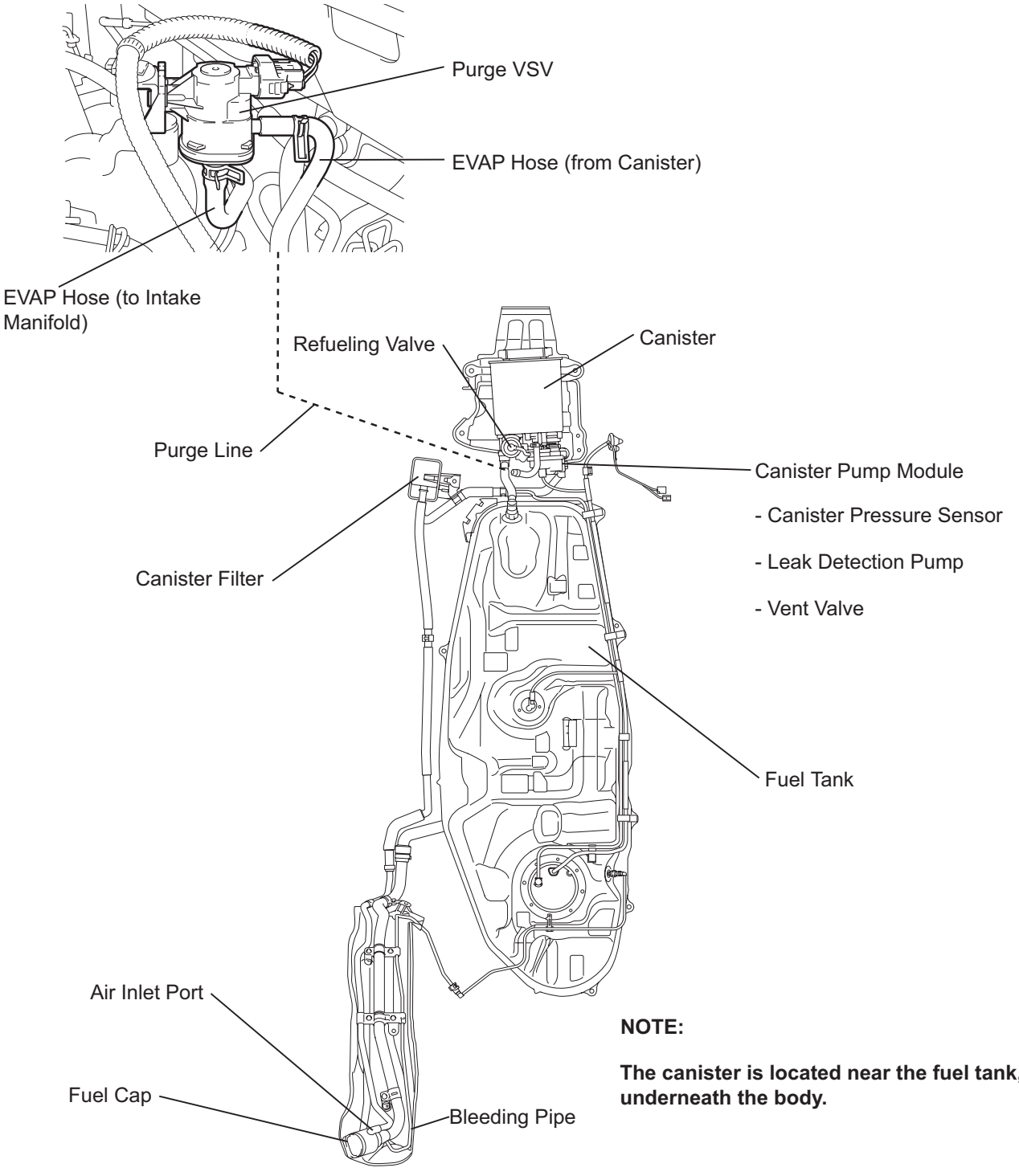

NOTE:

The canister is located near the fuel tank, underneath the body.

A137888E02

EVAP System Circuit:

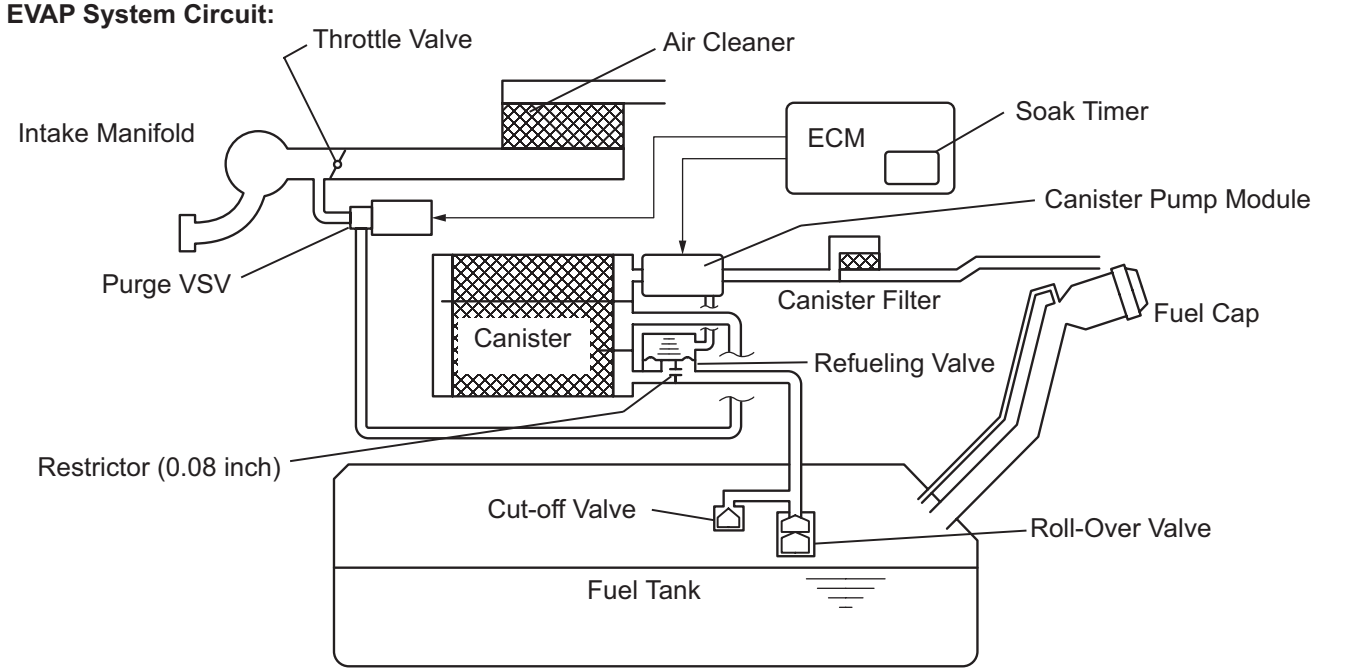

NOTICE:

In this vehicle's EVAP system, turning ON the vent valve does not seal off the EVAP system. To check for leaks in the EVAP system, disconnect the air inlet vent hose and apply pressure from the atmospheric side of the canister.

While the engine is running, if a predetermined condition (closed-loop, etc.) is met, the purge VSV is opened by the ECM and stored fuel vapors in the canister are purged into the intake manifold. The ECM changes the duty cycle ratio of the purge VSV to control purge flow volume.

The purge flow volume is also determined by the intake manifold pressure. Atmospheric pressure is allowed into the canister through the vent valve to ensure that the purge flow is maintained when the negative pressure (vacuum) is applied to the canister.

The following two monitors run to confirm the appropriate EVAP system operation.

1. Key-off monitor

This monitor checks for EVAP (Evaporative Emission) system leaks and canister pump module malfunctions. The monitor starts 5 hours* after the ignition switch is turned OFF. At least 5 hours are required for the fuel to cool down to stabilize the EVAP pressure, thus making the EVAP system monitor more accurate.

The leak detection pump creates negative pressure (vacuum) in the EVAP system and the pressure is measured. Finally, the ECM monitors for leaks from the EVAP system, and malfunctions in both the canister pump module and purge VSV, based on the EVAP pressure.

HINT:

*: If the engine coolant temperature is not below 35°C (95°F) 5 hours after the ignition switch is turned OFF, the monitor check starts 2 hours later. If it is still not below 35°C (95°F) 7 hours after the ignition switch is turned OFF, the monitor check starts 2.5 hours later.

2. Purge flow monitor

The purge flow monitor consists of 2 monitors. The 1st monitor is conducted every time and the 2nd monitor is activated if necessary.

- The 1st monitor
  While the engine is running and the purge VSV (Vacuum Switching Valve) is ON (open), the ECM monitors the purge flow by measuring the EVAP pressure change. If negative pressure is not created, the ECM begins the 2nd monitor.

- The 2nd monitor
  The vent valve is turned OFF (open) and the EVAP pressure is measured. If the variation in the pressure is less than 0.5 kPa-g (3.75 mmHg-g), the ECM interprets this as the purge VSV being stuck closed, and illuminates the MIL and sets DTC P0441 (2 trip detection logic).

Atmospheric pressure check:
In order to ensure reliable malfunction detection, the variation between the atmospheric pressures, before and after conduction of the purge flow monitor, is measured by the ECM.

EVAP Purge Flow:

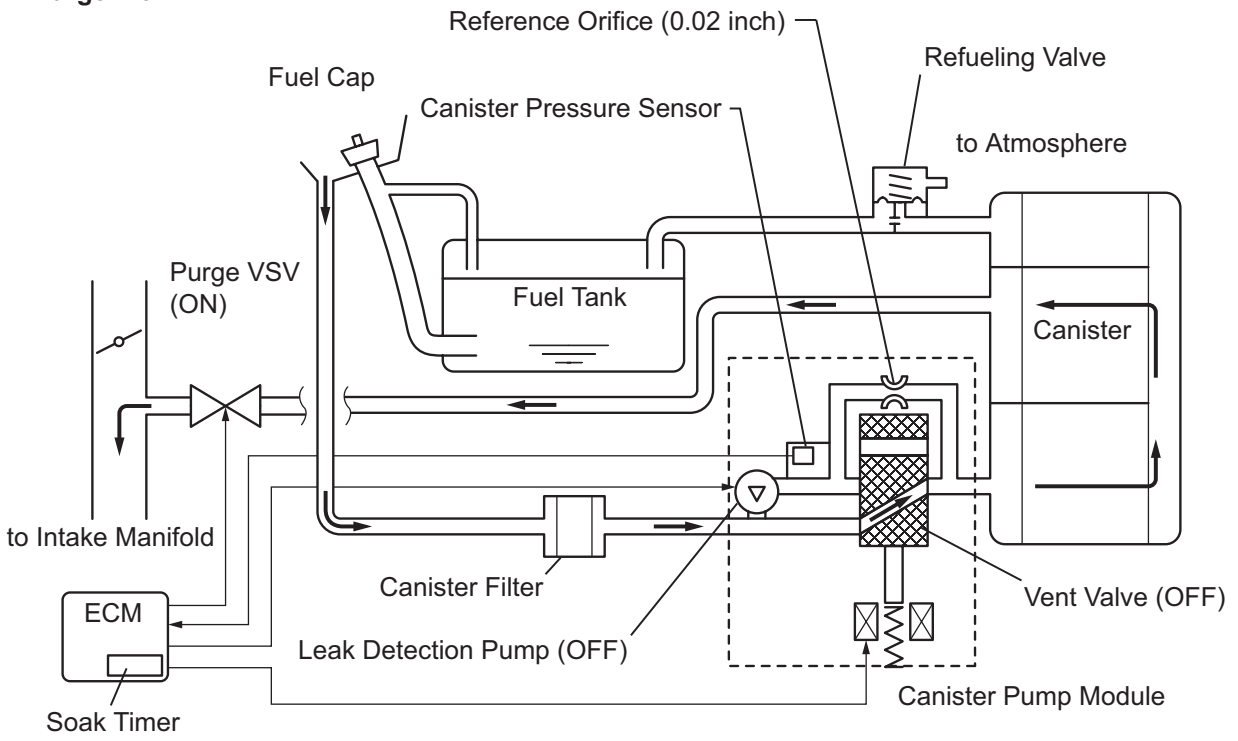

Y

A122571E05

Component	Operation
Canister	Contains activated charcoal to absorb EVAP (Evaporative Emissions) generated in fuel tank.
Cut-off valve	Located in fuel tank. Valve floats and closes when fuel tank 100% full.
Purge VSV (Vacuum Switching Valve)	Opens or closes line between canister and intake manifold. ECM uses purge VSV to control EVAP purge flow. In order to discharge EVAP absorbed by canister to intake manifold, ECM opens purge VSV. EVAP discharge volume to intake manifold controlled by purge VSV duty cycle ratio (current-carrying time) (Open: ON; Closed: OFF).
Refueling valve	Controls EVAP pressure from fuel tank to canister. Valve consists of diaphragm, spring and restrictor (diameter: 0.08 inch). When fuel vapor and pressure inside fuel tank increase, valve opens. While EVAP purged, valve closes and restrictor prevents large amount of vacuum from affecting pressure in fuel tank. Valve opened while refueling.
Roll-over valve	Located in fuel tank. Valve closed by its own weight when vehicle overturns to prevent fuel from spilling out.
Soak timer	Built into ECM. To ensure accurate EVAP monitor, measures 5 hours (+-15 min) after ignition switch turned OFF. This allows fuel to cool down, stabilizing EVAP pressure. When approximately 5 hours elapsed, ECM activates (refer to fig. 3).
Canister pump module	Consists of (a) to (d) below. Canister pump module cannot be disassembled.
(a) Vent valve	Vents and closes EVAP system. When ECM turns valve ON, EVAP system closed. When ECM turns valve OFF, EVAP system vented. Negative pressure (vacuum) created in EVAP system to check for EVAP leaks by closing purge VSV, turning on vent valve (closed) and operating leak detection pump (refer to fig. 1).
(b) Canister pressure sensor	Indicates pressure as voltages. ECM supplies regulated 5 V to canister pressure sensor, and uses feedback from sensor to monitor EVAP system pressure (refer to fig. 2).

Component	Operation
(c) Leak detection pump	Creates negative pressure (vacuum) in EVAP system for leak check.
(d) Reference orifice	Has opening with 0.02 inch diameter. Vacuum produced through orifice by closing purge VSV, turning off vent valve and operating leak detection pump, to monitor reference pressure. Reference pressure indicates small leak of EVAP.

Canister Pump Module (fig. 1):

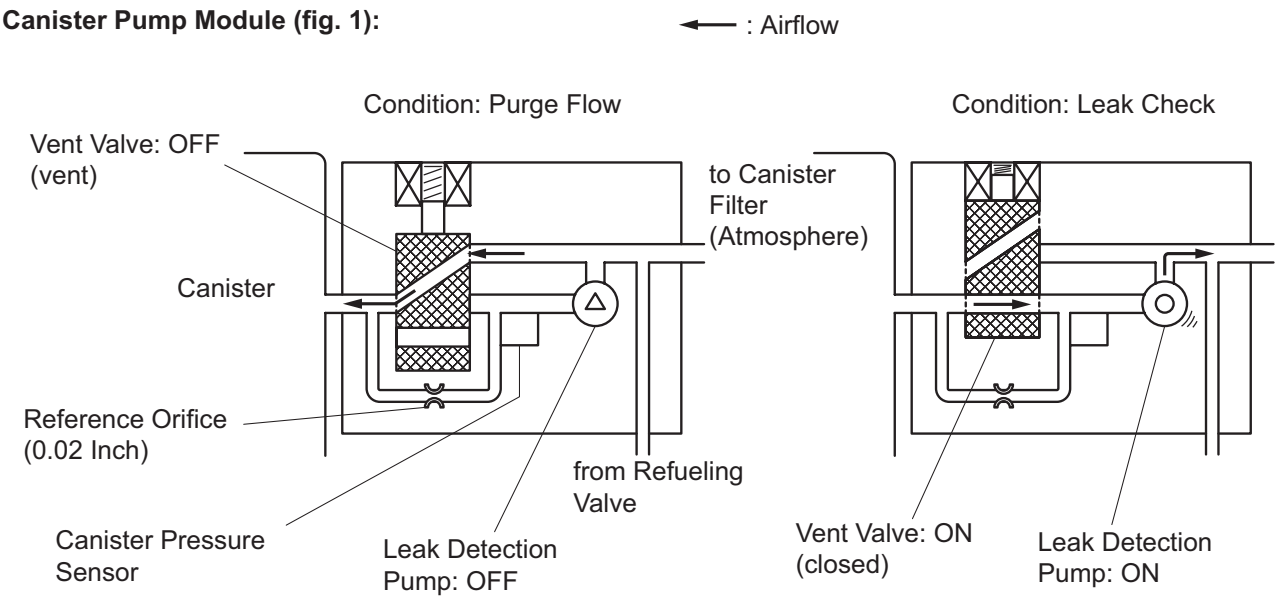

Y

A115902E05

Canister Pressure Sensor Specification (fig. 2):

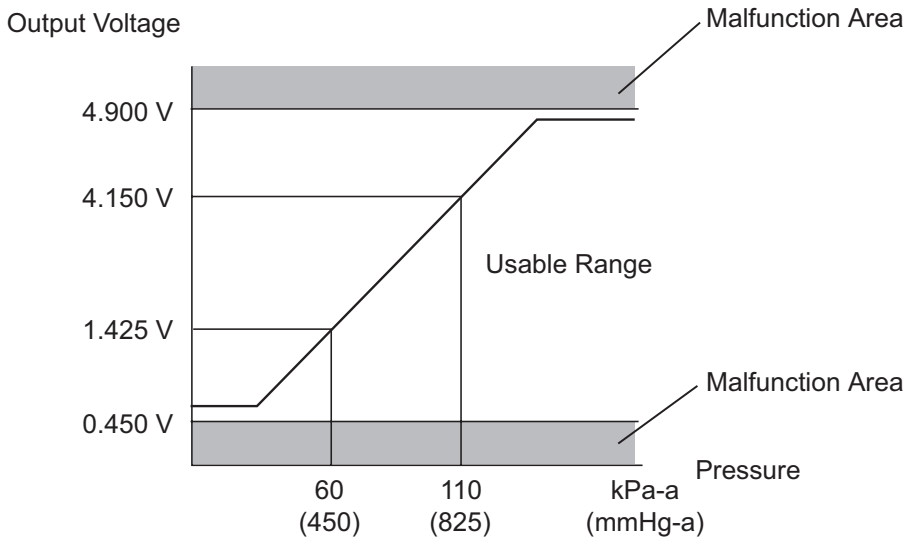

HINT:

Standard atmospheric pressure is 101.3 kPa-a (760 mmHg-a)

A115543E06

Soak Timer Circuit (fig. 3):

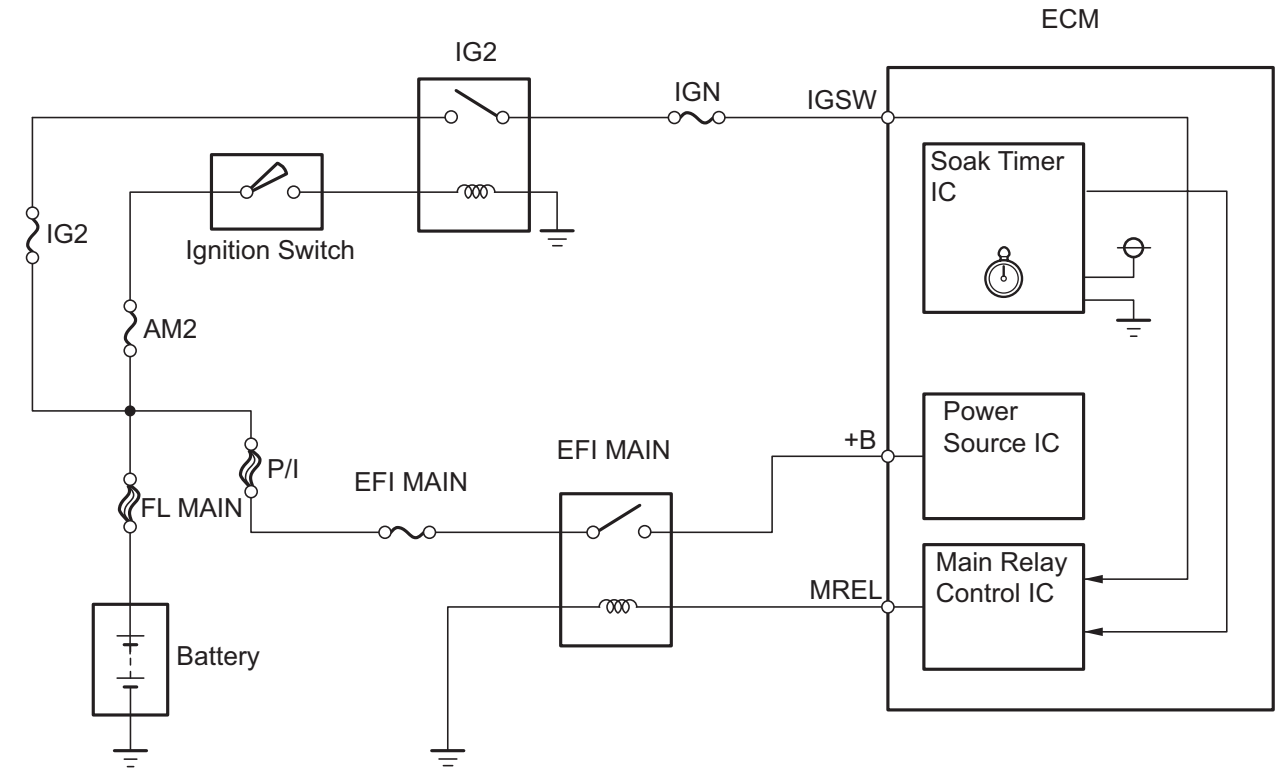

WIRING DIAGRAM

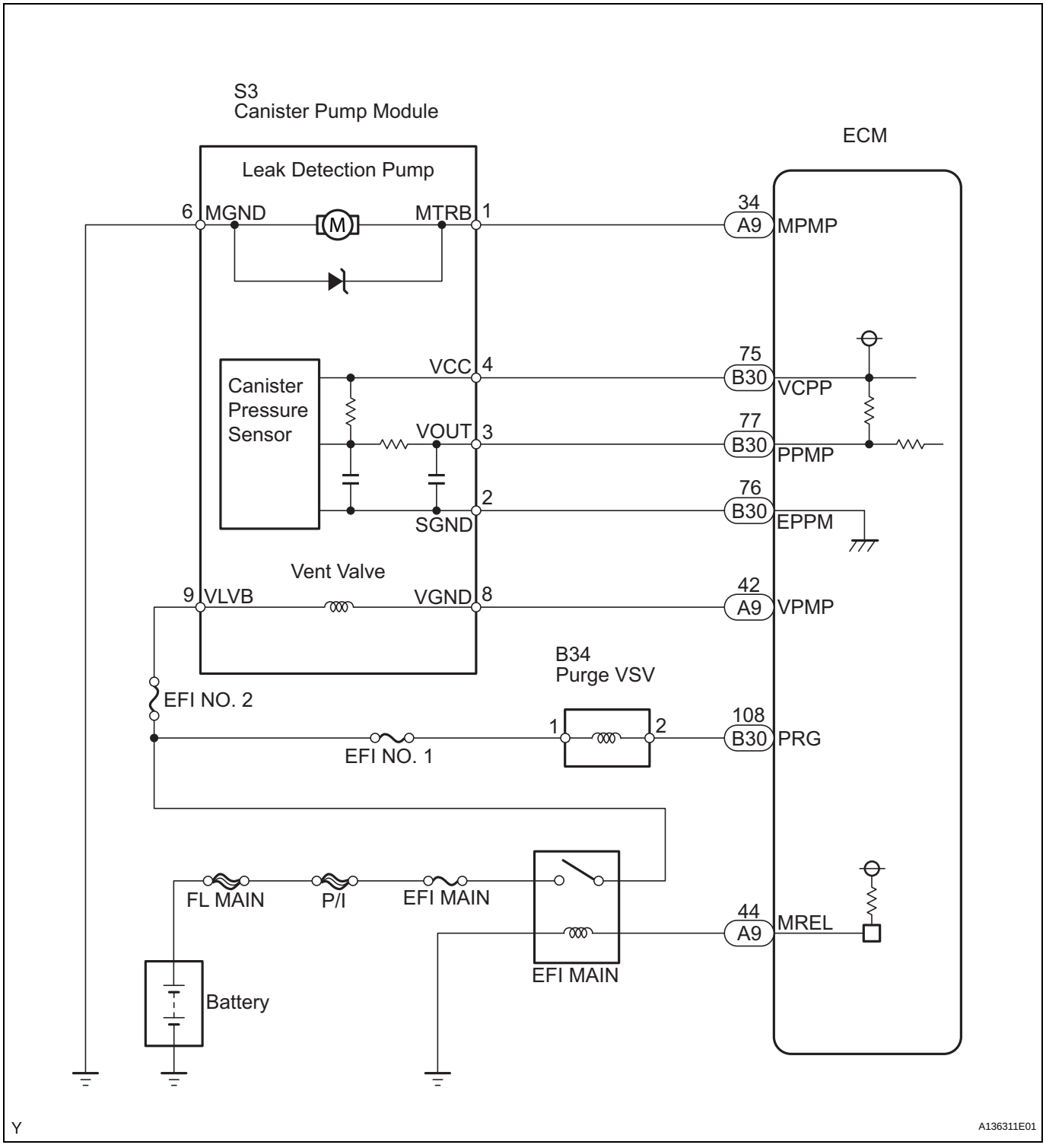

INSPECTION PROCEDURE

NOTICE:

The intelligent tester is required to conduct the following diagnostic troubleshooting procedure.

HINT:

- Using intelligent tester monitor results enables the EVAP (Evaporative Emission) system to be confirmed.

- Read freeze frame data using the intelligent tester. Freeze frame data records the engine condition when malfunctions are detected. When troubleshooting, freeze frame data can help determine if the vehicle was moving or stationary, if the engine was warmed up or not, if the air-fuel ratio was lean or rich, and other data from the time the malfunction occurred.

1	**CONFIRM DTC**

(a) Turn the ignition switch OFF and wait for 10 seconds.
(b) Turn the ignition switch ON.
(c) Turn the ignition switch OFF and wait for 10 seconds.
(d) Connect the intelligent tester to the DLC3.
(e) Turn the ignition switch ON and turn the tester ON.
(f) Select the following menu items: DIAGNOSIS / ENHANCED OBD II / DTC INFO / CURRENT CODES.
(g) Confirm DTCs and freeze frame data.
If any EVAP system DTCs are set, the malfunctioning area can be determined using the table below.
NOTICE:
If the reference pressure difference between the first and second checks is greater than the specification, all the DTCs relating to the reference pressure (P043E, P043F, P2401, P2402 and P2419) are stored.

ES

Malfunctioning Areas \ DTCs	P043E P043F	P0441	P0450	P0451	P0452	P0453	P0455	P0456	P2401 P2402	P2419	P2420
Reference orifice clogged	●								●	●	
Reference orifice high-flow	●								●	●	
Purge VSV stuck open		●					●				
Purge VSV stuck closed		●									
Canister pressure sensor fixed output				●							
Canister pressure sensor noise				●							
Canister pressure sensor low output			●		●						
Canister pressure sensor high output			●			●					
Gross leak		●					●				
Small leak								●			
Leak detection pump stuck OFF	●								●	●	
Leak detection pump stuck ON	●								●	●	
Vent valve stuck closed	●								●	●	
Vent valve stuck open (vent)											●

Y

A106731E11

NEXT

2	PERFORM EVAP SYSTEM CHECK (AUTO OPERATION)

NOTICE:

- **The EVAP SYSTEM CHECK (AUTO OPERATION) consists of 5 steps performed automatically by the intelligent tester. It takes a maximum of approximately 18 minutes.**
- **Do not perform the EVAP SYSTEM CHECK when the fuel tank is more than 90% full because the cut-off valve may be closed, making the fuel tank leak check unavailable.**
- **Do not run the engine during this operation.**
- **When the temperature of the fuel is 35°C (95°F) or more, a large amount of vapor forms and any check results become inaccurate. When performing the EVAP SYSTEM CHECK, keep the temperature below 35°C (95°F).**

(a) Clear DTCs (see page ES-39).

(b) On the tester, select the following menu items: DIAGNOSIS / ENHANCED OBD II / SYSTEM CHECK / EVAP SYS CHECK / AUTO OPERATION.
(c) After the EVAP SYSTEM CHECK is completed, check for pending DTCs by selecting the following menu items: DIAGNOSIS / ENHANCED OBD II / DTC INFO / PENDING CODES.
HINT:
If no pending DTCs are displayed, perform the MONITOR CONFIRMATION (see "Diagnostic Help" menu). After this confirmation, check for pending DTCs. If no DTCs are displayed, the EVAP system is normal.

NEXT

ES

3	PERFORM EVAP SYSTEM CHECK (MANUAL OPERATION)

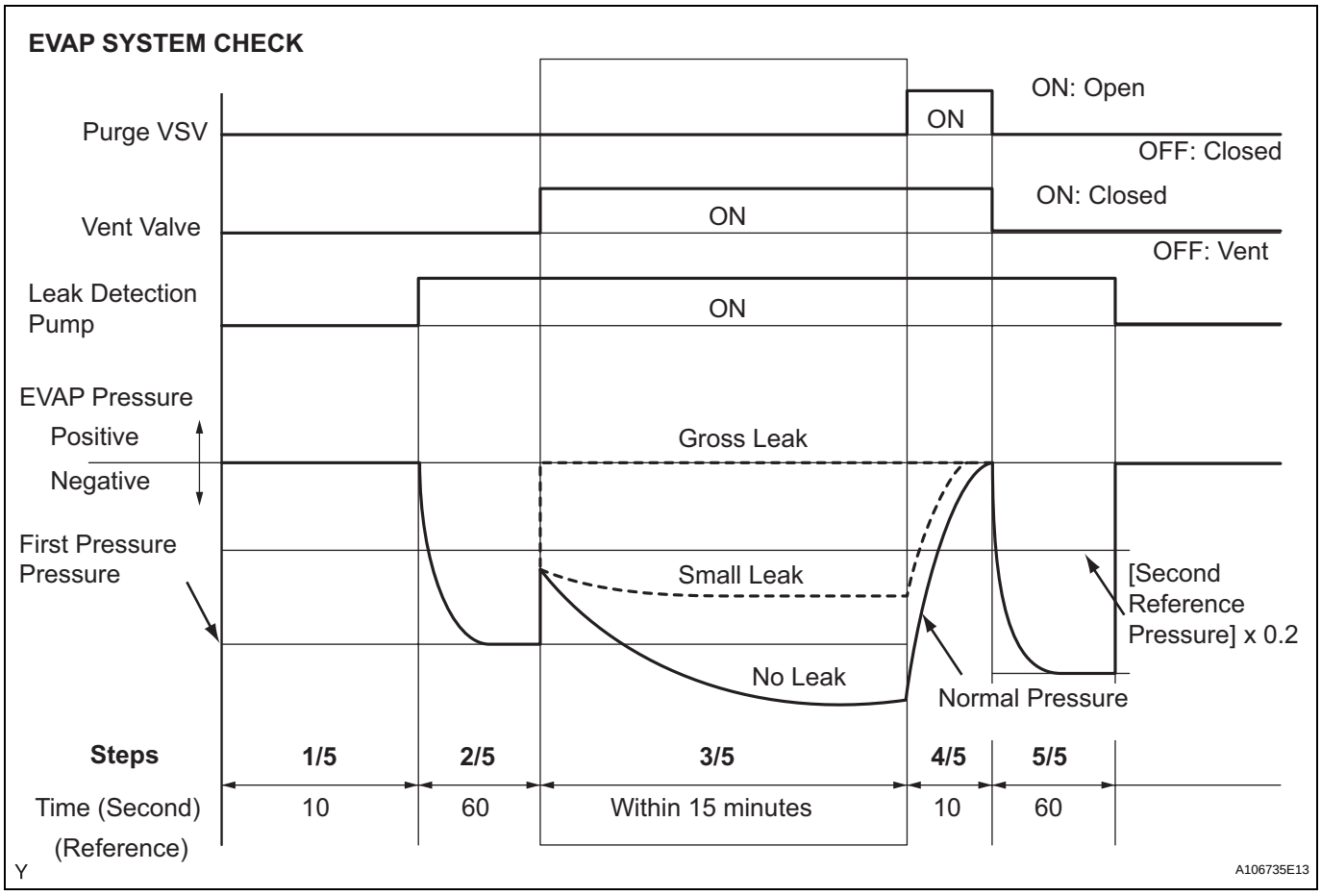

NOTICE:

- **In the EVAP SYSTEM CHECK (MANUAL OPERATION), perform the series of 5 EVAP SYSTEM CHECK steps manually using the intelligent tester.**
- **Do not perform the EVAP SYSTEM CHECK when the fuel tank is more than 90% full because the cut-off valve may be closed, making the fuel tank leak check unavailable.**
- **Do not run the engine during this operation.**

- **When the temperature of the fuel is 35°C (95°F) or more, a large amount of vapor forms and any check results become inaccurate. When performing the EVAP SYSTEM CHECK, keep the temperature below 35°C (95°F).**

(a) Clear DTCs (See page ES-39).
(b) Select the following menu items: DIAGNOSIS / ENHANCED OBD II / SYSTEM CHECK / EVAP SYS CHECK / MANUAL OPERATION.

NEXT

4	PERFORM EVAP SYSTEM CHECK (STEP 1/5)

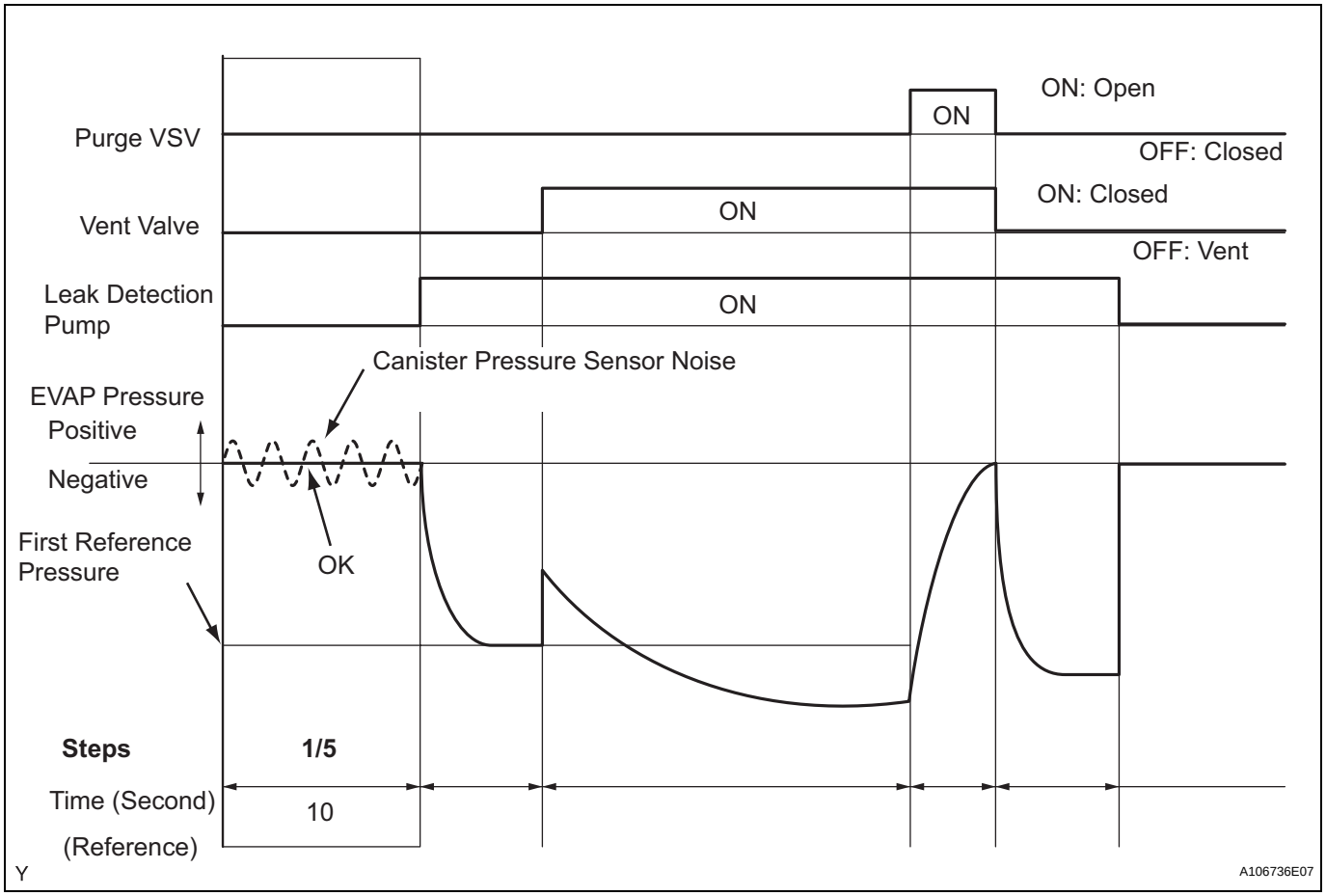

(a) Check the EVAP pressure in step 1/5.

Result

DTCs*	Test Result	Suspected Trouble Area	Proceed to
-	Virtually no variation in EVAP pressure	Not yet determined	A
P0451	EVAP pressure fluctuates by +-0.3 kPa-g (2.25 mmHg-g) or more	Canister pressure sensor noise	B

*: These DTCs are already present in the ECM when the vehicle arrives and are confirmed in the "CONFIRM DTC" procedures above.

B → Go to step 29

A

5	PERFORM EVAP SYSTEM CHECK (STEP 1/5 TO 2/5)

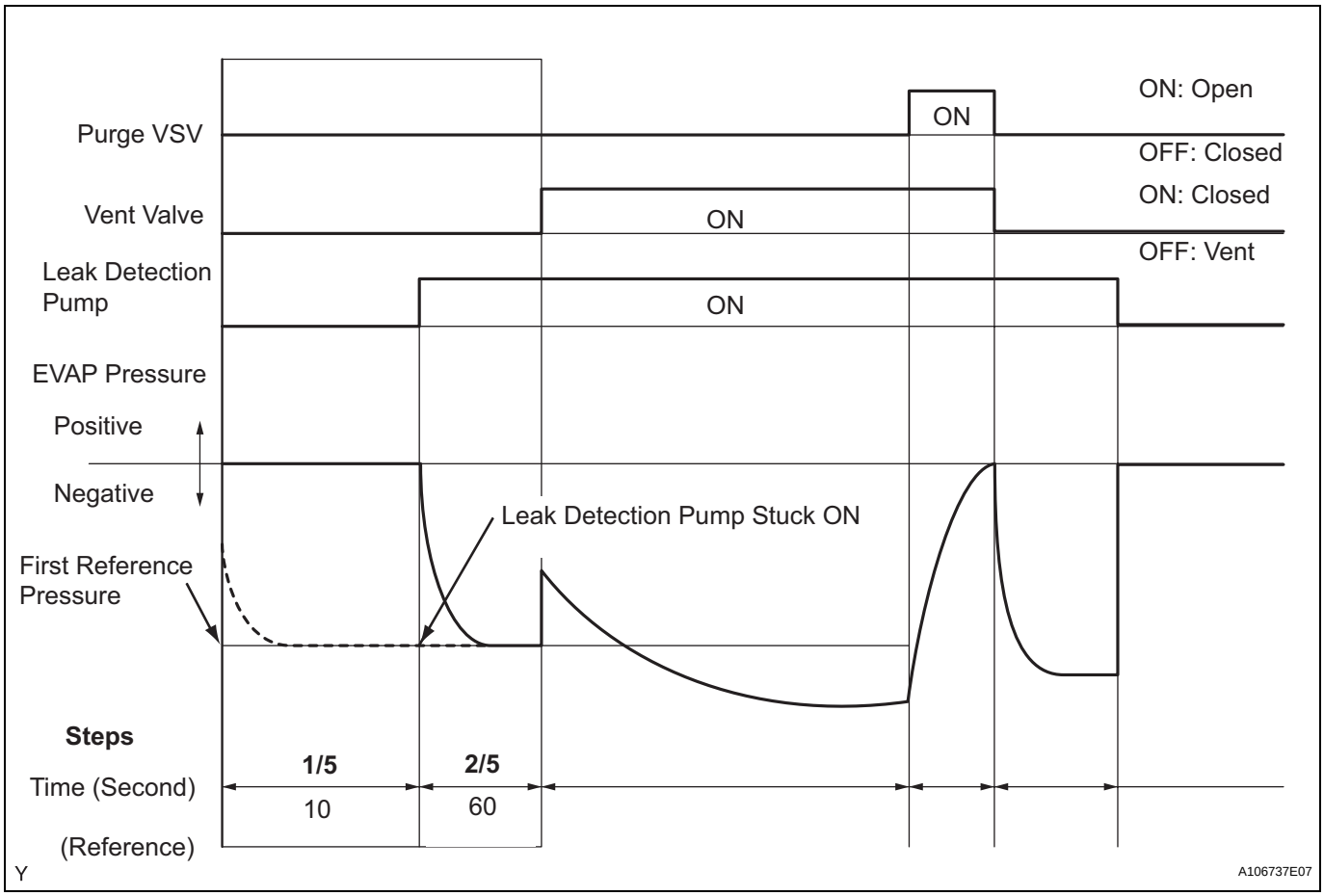

(a) Check the EVAP pressure in steps 1/5 and 2/5.

Result

DTCs*	Test Result	Suspected Trouble Area	Proceed to
-	Virtually no variation in EVAP pressure during step 1/5. Then decreases to reference pressure	Not yet determined	A
P2402	Small difference between EVAP pressures during steps 1/5 and 2/5	Leak detection pump stuck ON	B

*: These DTCs are already present in the ECM when the vehicle arrives and are confirmed in the "CONFIRM DTC" procedures above.
HINT:
The first reference pressure is the value determined in step 2/5.

B → Go to step 22

A

6	PERFORM EVAP SYSTEM CHECK (STEP 2/5)

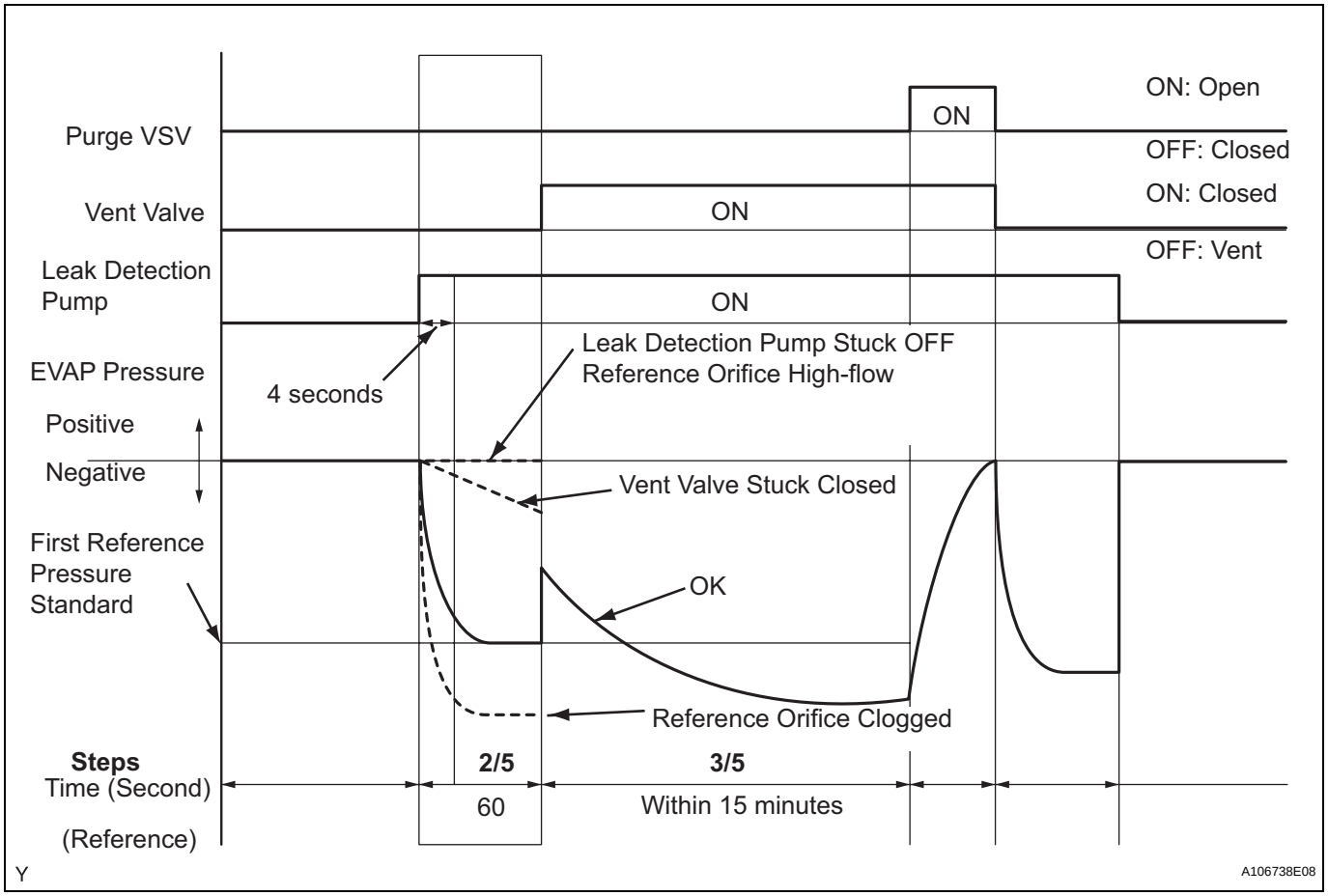

HINT:
Make a note of the pressures checked in steps (a) and (b) below.
(a) Check the EVAP pressure 4 seconds after the leak detection pump is activated*.
*: The leak detection pump begins to operate as step 1/5 finishes and step 2/5 starts.
(b) Check the EVAP pressure again when it has stabilized. This pressure is the reference pressure.

Result

DTCs*	Test Result	Suspected Trouble Area	Proceed to
-	EVAP pressure in step (b) between -4.85 kPa-g and -1.057 kPa-g (-36.4 mmHg-g and -7.93 mmHg-g)	Not yet determined	A
P043F and P2401	EVAP pressure in step (b) -1.057 kPa-g (-7.93 mmHg-g) or more	• Reference orifice high-flow • Leak detection pump stuck OFF	B
P043E	EVAP pressure in step (b) below -4.85 kPa-g (-36.4 mmHg-g)	Reference orifice clogged	C
P2419	EVAP pressure in step (a) more than -1.057 kPa-g (-7.93 mmHg-g)	Vent valve stuck closed	D

*: These DTCs are already present in the ECM when the vehicle arrives and are confirmed in the "CONFIRM DTC" procedures above.

B	Go to step 11
C	Go to step 29
D	Go to step 20

A

7	PERFORM EVAP SYSTEM CHECK (STEP 2/5 TO 3/5)

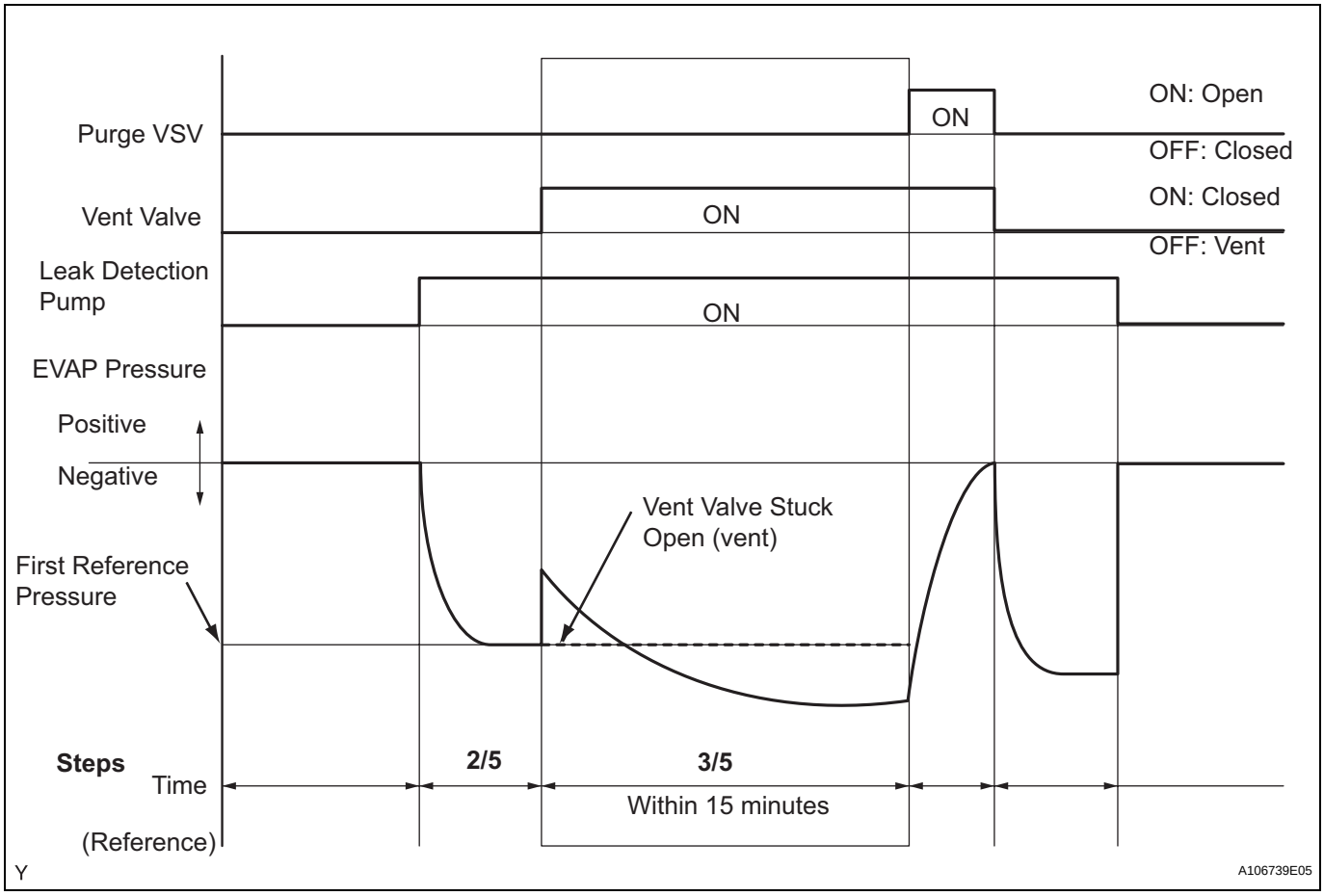

(a) Check the EVAP pressure increase in step 3/5.

Result

DTCs*	Test Result	Suspected Trouble Area	Proceed to
-	EVAP pressure increases by 0.3 kPa-g (2.25 mmHg-g) or more within 10 seconds of proceeding from step 2/5 to step 3/5	Not yet determined	A
P2420	No variation in EVAP pressure despite proceeding from step 2/5 to step 3/5	Vent valve stuck open (vent)	B
P0451	No variation in EVAP pressure during steps 1/5 through 3/5	Canister pressure sensor output value stuck	C

*: These DTCs are already present in the ECM when the vehicle arrives and are confirmed in the "CONFIRM DTC" procedures above.

B	Go to step 19

C → Go to step 29

A

8	PERFORM EVAP SYSTEM CHECK (STEP 3/5)

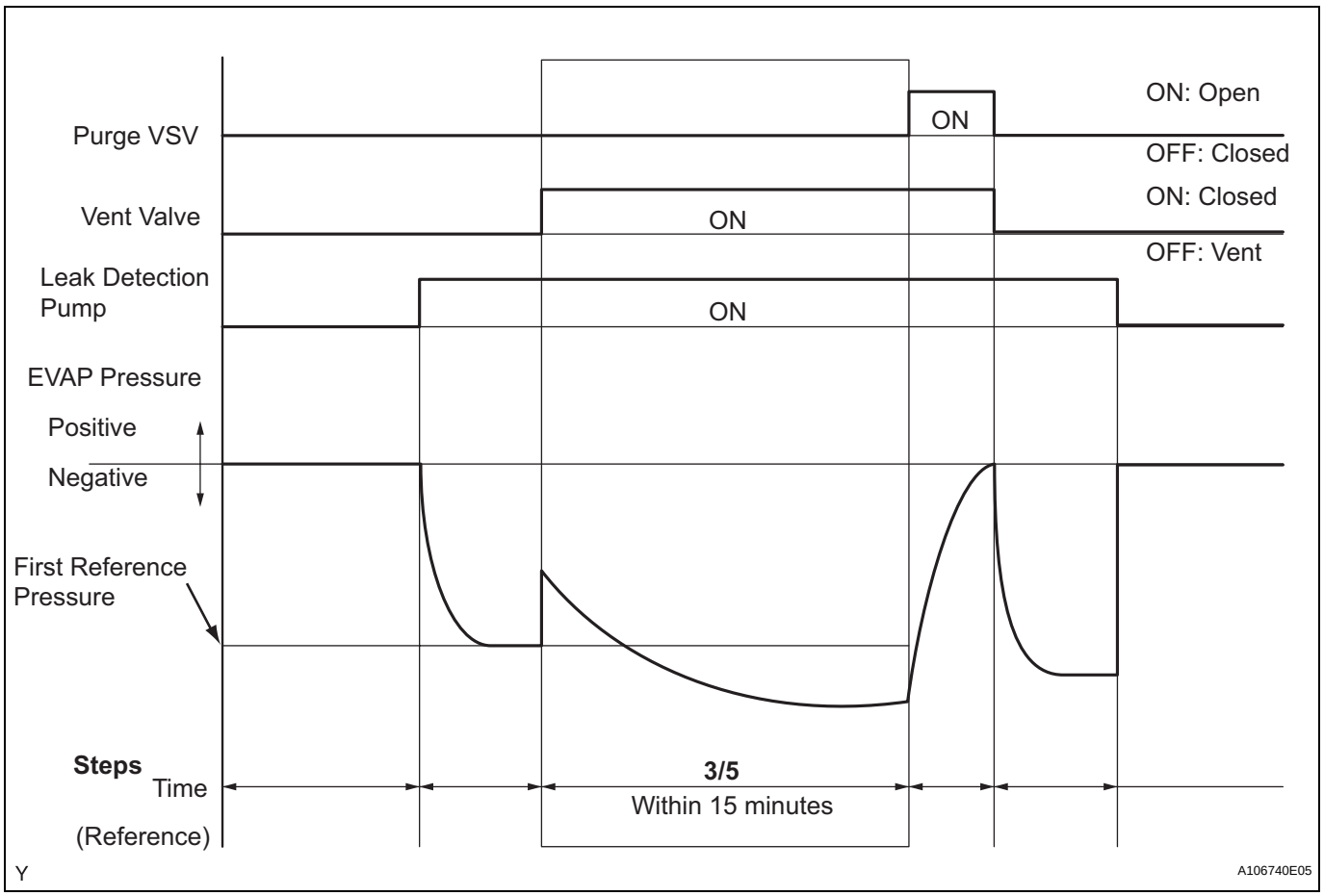

(a) Wait until the EVAP pressure change is less than 0.1 kPa-g (0.75 mmHg-g) for 30 seconds.
(b) Measure the EVAP pressure and record it.
HINT:
A few minutes are required for the EVAP pressure to become saturated. When there is little fuel in the fuel tank, it takes up to 15 minutes.

NEXT

ES

9	PERFORM EVAP SYSTEM CHECK (STEP 4/5)

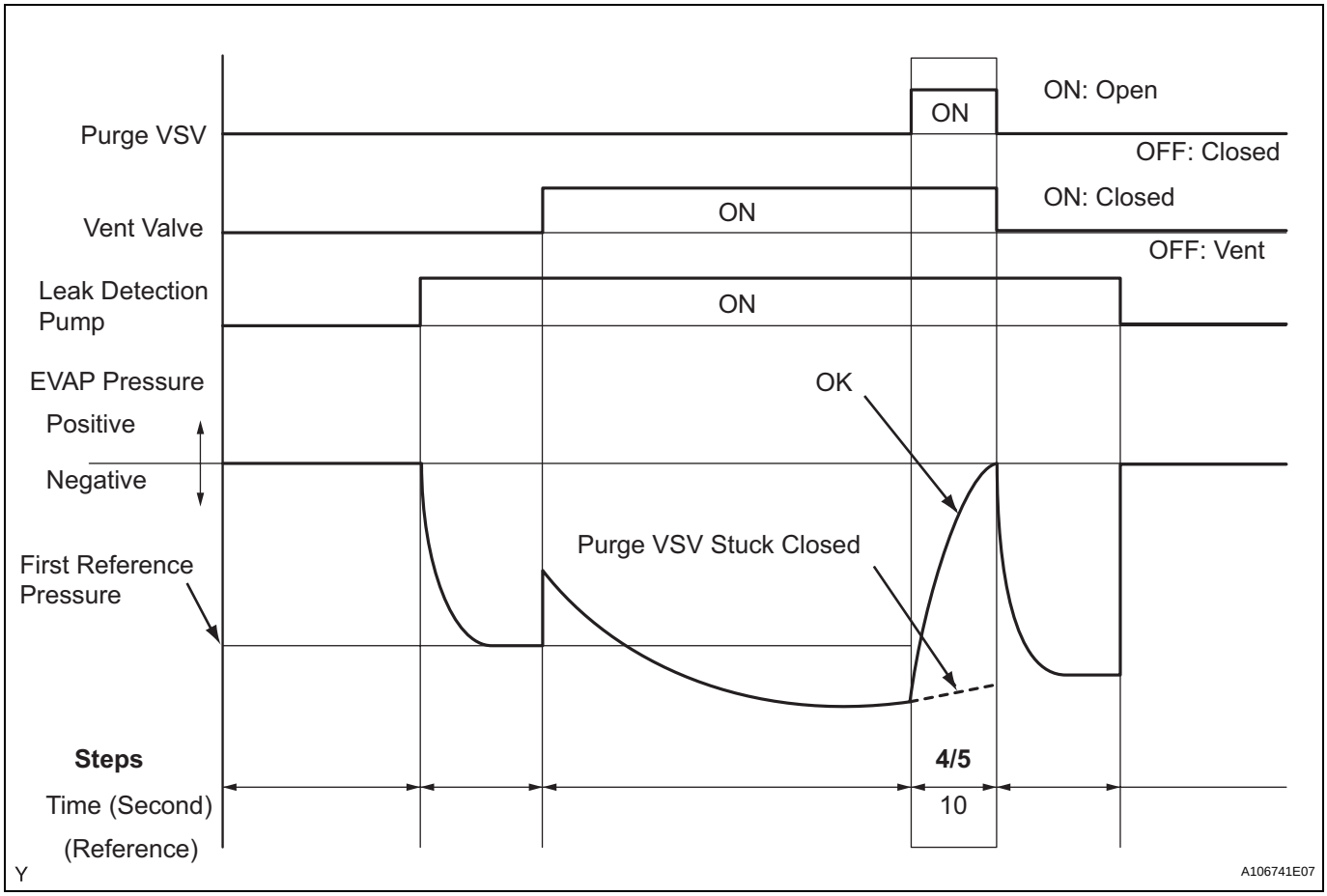

(a) Check the EVAP pressure in step 4/5.

Result

DTCs*	Test Result	Suspected Trouble Area	Proceed to
-	EVAP pressure increases by 0.3 kPa-g (2.25 mmHg-g) or more within 10 seconds of proceeding from step 3/5 to step 4/5	Not yet determined	A
P0441	EVAP pressure increases by 0.3 kPa-g (2.25 mmHg-g) or more within 10 seconds of proceeding from step 3/5 to step 4/5	Problems in EVAP hose between purge VSV and intake manifold	B
P0441	Variation in EVAP pressure less than 0.3 kPa-g (2.25 mmHg-g) for 10 seconds, after proceeding from step 3/5 to step 4/5	Purge VSV stuck closed	C

*: These DTCs are already present in the ECM when the vehicle arrives and are confirmed in the "CONFIRM DTC" procedures above.

B → Go to step 15

C → Go to step 12

A

10	PERFORM EVAP SYSTEM CHECK (STEP 5/5)

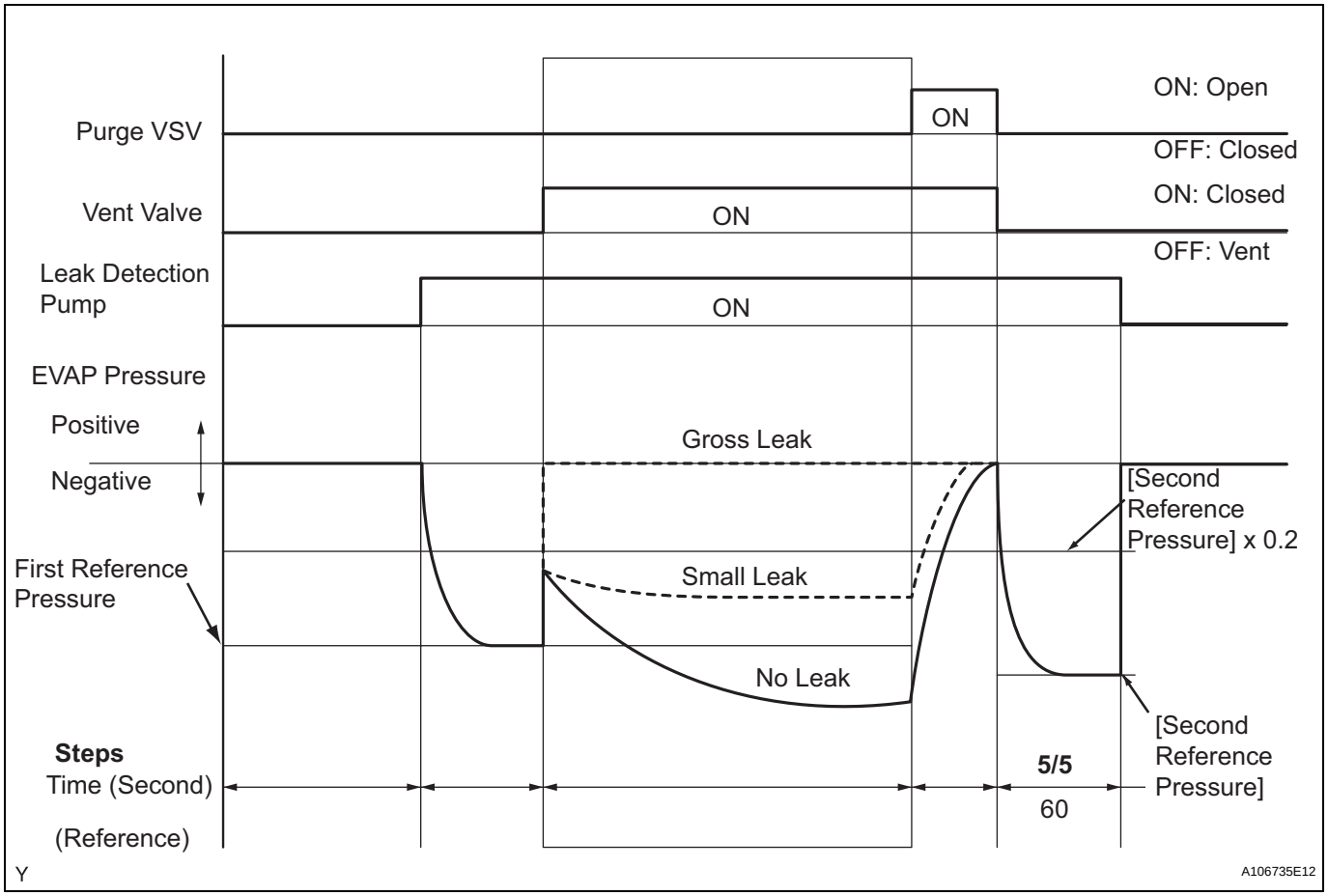

(a) Check the EVAP pressure in step 5/5.
(b) Compare the EVAP pressure in step 3/5 and the second reference pressure (step 5/5).

Result

DTCs*	Test Result	Suspected Trouble Area	Proceed to
-	EVAP pressure (step 3/5) lower than second reference pressure (step 5/5)	Not yet determined (no leakage from EVAP system)	A
P0441 and P0455	EVAP pressure (step 3/5) higher than [second reference pressure (step 5/5) x 0.2]	• Purge VSV stuck open • EVAP gross leak	B
P0456	EVAP pressure (step 3/5) higher than second reference pressure (step 5/5)	EVAP small leak	B

*: These DTCs are already present in the ECM when the vehicle arrives and are confirmed in the "CONFIRM DTC" procedures above.

A	Go to step 35
B	Go to step 12

11	PERFORM EVAP SYSTEM CHECK (STEP 3/5)

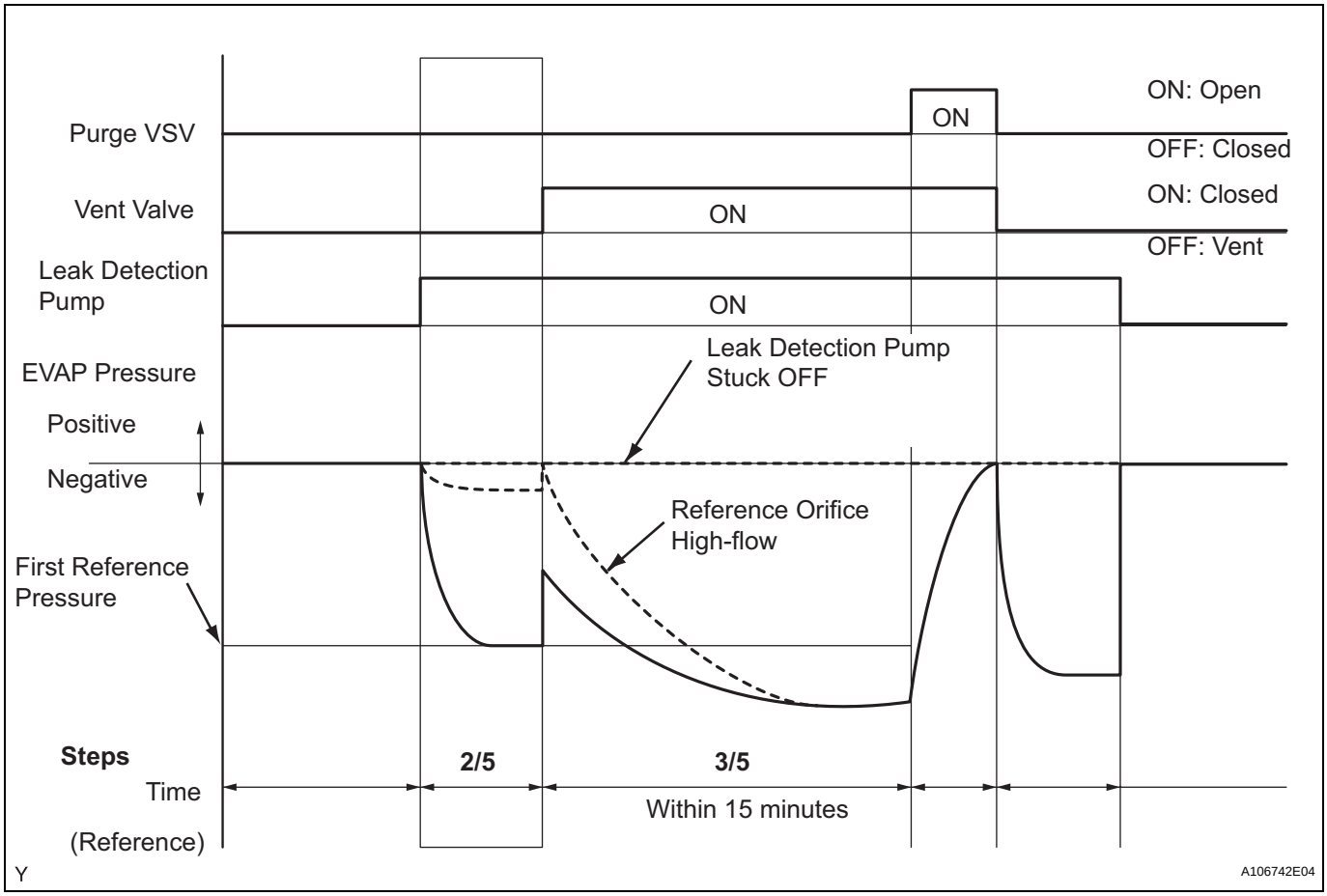

(a) Check the EVAP pressure in step 3/5.

Result

DTCs*	Test Result	Suspected Trouble Area	Proceed to
P043F	EVAP pressure less than [reference pressure] measured at 2/5	Reference orifice high-flow	A
P2401	EVAP pressure almost same as [reference pressure] measured at 2/5	Leak detection pump stuck OFF	B

*: These DTCs are already present in the ECM when the vehicle arrives and are confirmed in the "CONFIRM DTC" procedures above.
HINT:
The first reference pressure is the value determined in step 2/5.

A	Go to step 29
B	Go to step 22

12 PERFORM ACTIVE TEST USING INTELLIGENT TESTER (PURGE VSV)

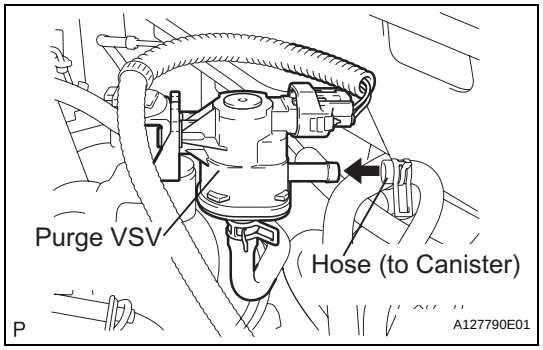

(a) On the intelligent tester, select the following menu items: DIAGNOSIS / ENHANCED OBD II / ACTIVE TEST / EVAP VSV (ALONE).
(b) Disconnect the hose (connected to the canister) from the purge VSV.
(c) Start the engine.
(d) Using the tester, turn off the purge VSV (EVAP VSV: OFF).
(e) Use your finger to confirm that the purge VSV has no suction.
(f) Using the tester, turn on the purge VSV (EVAP VSV: ON).
(g) Use your finger to confirm that the purge VSV has suction.

ES

Result

Test Result	Suspected Trouble Area	Proceed to
No suction when purge VSV turned OFF, and suction applied when turned ON	Purge VSV normal	A
Suction applied when purge VSV turned OFF	Purge VSV stuck open	B
No suction when purge VSV turned ON	• Purge VSV stuck closed • Problems with EVAP hose between purge VSV and intake manifold	C

(h) Reconnect the hose.

B → Go to step 14

C → Go to step 15

A

13 CHECK FUEL CAP ASSEMBLY

(a) Check that the fuel cap is correctly installed and confirm the fuel cap meets OEM specifications.
(b) Tighten the fuel cap until a few click sounds are heard.
HINT:
If an EVAP tester is available, check the fuel cap using the tester.
1. Remove the fuel cap and install it onto a fuel cap adapter.
2. Connect an EVAP tester pump hose to the adapter, and pressurize the cap to 3.2 to 3.7 kPa (24 to 28 mmHg) using an EVAP tester pump.
3. Seal the adapter and wait for 2 minutes.
4. Check the pressure. If the pressure is 2 kPa (15 mmHg) or more, the fuel cap is normal.

Result

Test Result	Suspected Trouble Area	Proceed to
Fuel cap correctly installed	-	A

Test Result	Suspected Trouble Area	Proceed to
Fuel cap loose	• Fuel cap improperly installed • Defective fuel cap • Fuel cap does not meet OEM specifications	B
Defective fuel cap	-	B
No fuel cap	-	C

(c) Reinstall the fuel cap.

A	Go to step 28
B	Go to step 26
C	Go to step 27

ES

14 INSPECT PURGE VSV

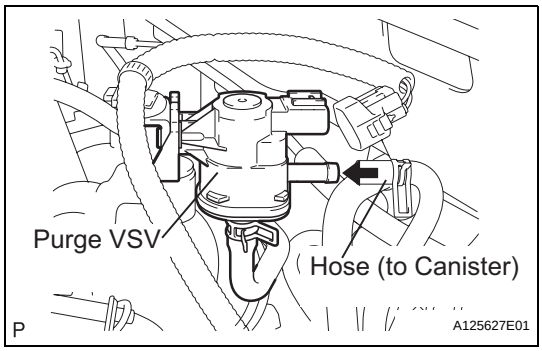

(a) Turn the ignition switch OFF.
(b) Disconnect the B34 purge VSV connector.
(c) Disconnect the hose (connected to the canister) from the purge VSV.
(d) Start the engine.
(e) Use your finger to confirm that the purge VSV has no suction.

Result

Test Result	Suspected Trouble Area	Proceed to
No suction	ECM	A
Suction applied	Purge VSV	B

(f) Reconnect the purge VSV connector.
(g) Reconnect the hose.

A	Go to step 34
B	Go to step 30

15 CHECK EVAP HOSE (PURGE VSV - INTAKE MANIFOLD)

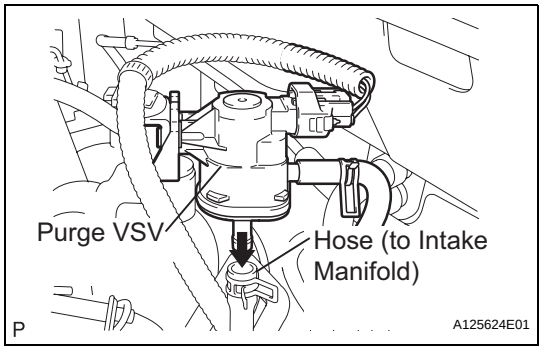

(a) Disconnect the hose (connected to the intake manifold) from the purge VSV.
(b) Start the engine.
(c) Use your finger to confirm that the hose has suction.

Result

Test Result	Suspected Trouble Area	Proceed to
Suction applied	EVAP hose between purge VSV and intake manifold normal	A
No suction	• Intake manifold port • EVAP hose between purge VSV and intake manifold	B

(d) Reconnect the hose.

B → Go to step 25

A

16 INSPECT PURGE VSV

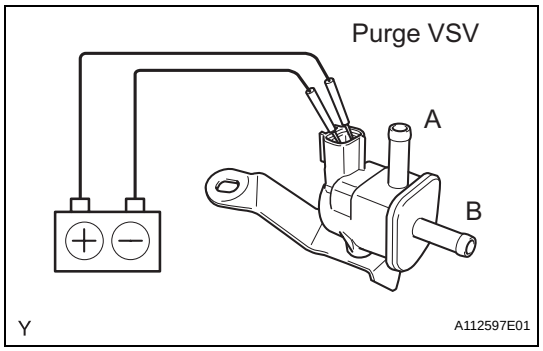

(a) Remove the purge VSV.
(b) Apply the battery voltage to the terminals of the purge VSV.
(c) Using an air gun, confirm that air flows from port A to port B.

Result

Test Result	Suspected Trouble Area	Proceed to
Air flows	-	A
No air flow	Purge VSV	B

(d) Install the purge VSV.

B → Go to step 30

A

17 CHECK WIRE HARNESS (POWER SOURCE OF PURGE VSV)

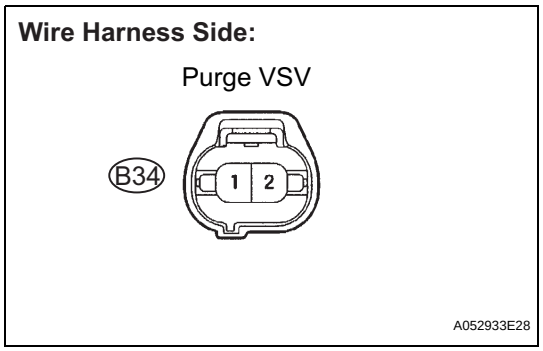

(a) Disconnect the B34 purge VSV connector.
(b) Turn the ignition switch ON.
(c) Measure the voltage between terminal 1 of the purge VSV connector and the body ground.

Result

Test Result	Suspected Trouble Area	Proceed to
9 to 14 V	Normal	A
Other than result above	Wire harness or connectors between purge VSV and ECM	B

(d) Reconnect the purge VSV connector.

B	Go to step 31

A

18	CHECK WIRE HARNESS (PURGE VSV - ECM)

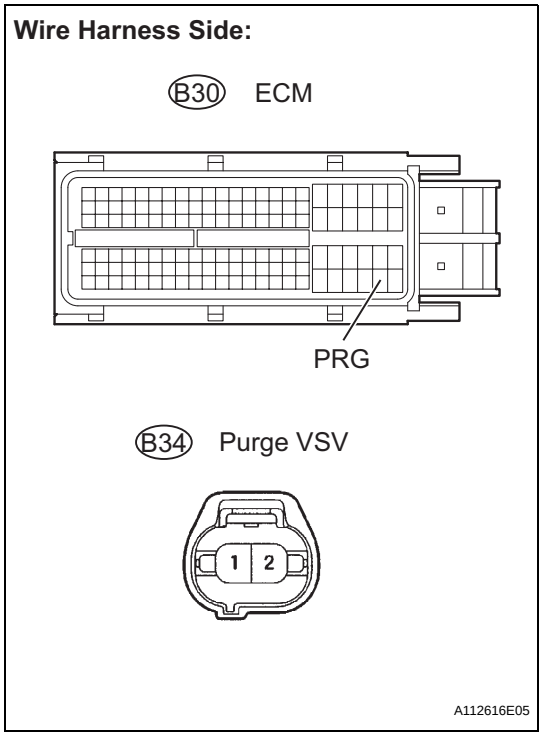

(a) Disconnect the B30 ECM connector and the B34 purge VSV connector.
(b) Measure the resistance.

Standard resistance

Tester Connection	Specified Condition
B30-108 (PRG) - B34-2 (Purge VSV)	Below 1 Ω
B30-108 (PRG) - Body ground	10 kΩ or higher
B34-2 (Purge VSV) - Body ground	10 kΩ or higher

(c) Reconnect the purge VSV connector.
(d) Reconnect the ECM connector.

OK	Go to step 34
NG	Go to step 31

ES

19 INSPECT CANISTER PUMP MODULE (POWER SOURCE FOR VENT VALVE)

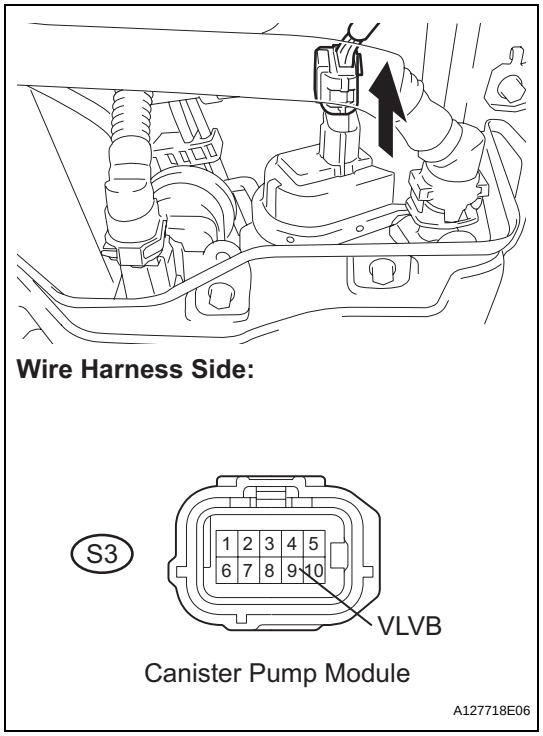

(a) Turn the ignition switch OFF.
(b) Disconnect the S3 canister pump module connector.
(c) Turn the ignition switch ON.
(d) Measure the voltage between VLVB terminal of the canister pump module connector and the body ground.

Result

Test Result	Suspected Trouble Area	Proceed to
9 to 14 V	1. Wire harness between vent valve and ECM 2. Vent valve 3. ECM	A
Below 3 V	Power source wire harness of vent valve	B

(e) Reconnect the canister pump module connector.

B → Go to step 31

A

20 INSPECT CANISTER PUMP MODULE (VENT VALVE OPERATION)

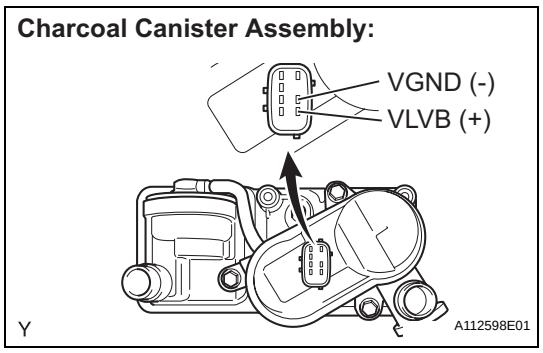

(a) Turn the ignition switch OFF.
(b) Disconnect the S3 canister pump module connector.
(c) Apply the battery voltage to VLVB and VGND terminals of the canister pump module.
(d) Touch the canister pump module to confirm the vent valve operation.

Result

Test Result	Suspected Trouble Area	Proceed to
Operating	1. Wire harness between vent valve and ECM 2. ECM	A

Test Result	Suspected Trouble Area	Proceed to
Not operating	Vent valve	B

(e) Reconnect the canister connector.

B	Go to step 29

A

21 CHECK WIRE HARNESS (ECM - CANISTER PUMP MODULE)

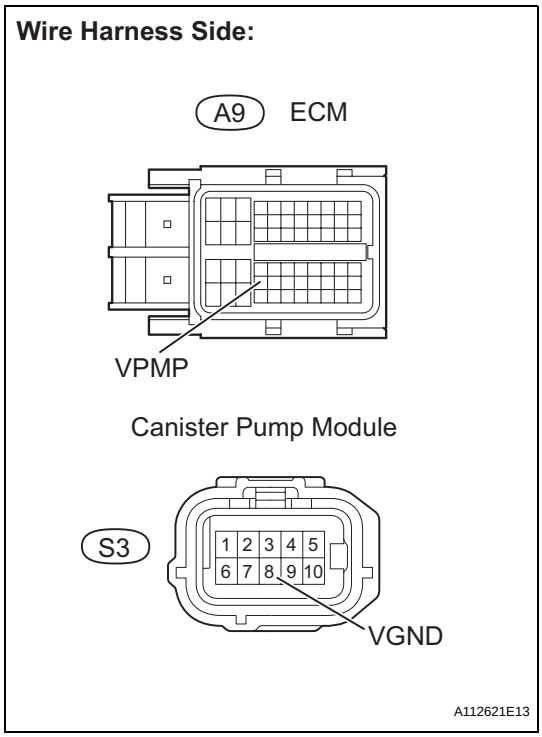

(a) Disconnect the A9 ECM connector.
(b) Disconnect the S3 canister pump module connector.
(c) Measure the resistance between VPMP terminal of the ECM connector and VGND terminal of the canister pump module connector.

Result

Test Result	Suspected Trouble Area	Proceed to
Below 1 Ω	ECM	A
10 kΩ or higher	Wire harness between ECM and canister pump module	B

(d) Reconnect the ECM connector.
(e) Reconnect the canister pump module connector.

A	Go to step 34
B	Go to step 31

22	PERFORM ACTIVE TEST USING INTELLIGENT TESTER (VACUUM PUMP (ALONE))

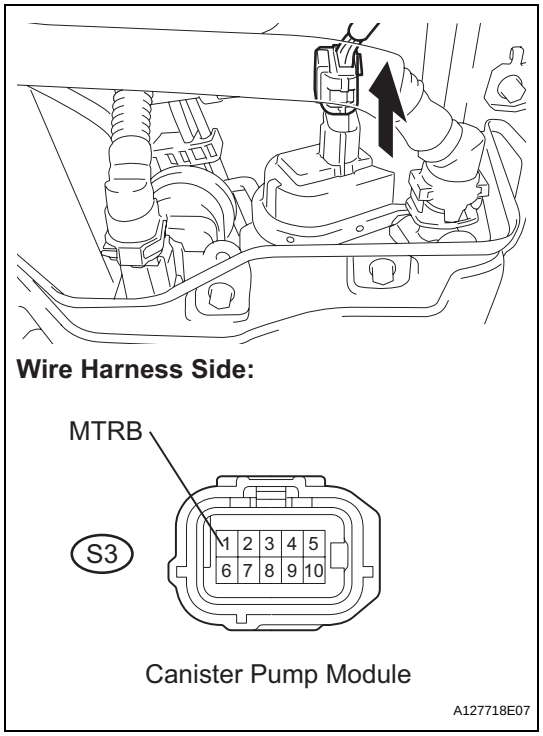

(a) Turn the ignition switch OFF.
(b) Disconnect the S3 canister pump module connector.
(c) Turn the ignition switch ON.
(d) On the intelligent tester, select the following menu items: DIAGNOSIS / ENHANCED OBD II / ACTIVE TEST / VACUUM PUMP.
(e) Measure the voltage between MTRB terminal 1 of the canister pump module connector and the body ground when the leak detection pump is turned ON and OFF using the tester.

ES

Result

Test Result	Suspected Trouble Area	Proceed to
Below 3 V when OFF 9 to 14 V when ON	1. Wire harness between leak detection pump and body ground 2. Leak detection pump	A
Below 3 V when OFF and ON	1. Wire harness between leak detection pump and ECM 2. ECM	B

B → Go to step 24

A

23	CHECK WIRE HARNESS (CANISTER PUMP MODULE - BODY GROUND)

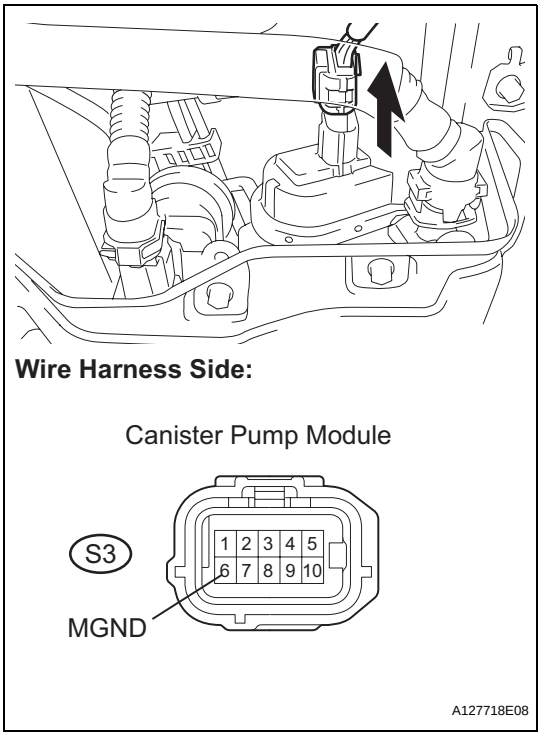

(a) Turn the ignition switch OFF.
(b) Disconnect the S3 canister pump module connector.
(c) Check the resistance between MGND terminal of the canister pump module connector and the body ground.

Result

Test Result	Suspected Trouble Area	Proceed to
Below 1 Ω	Leak detection pump	A
10 kΩ or higher	Wire harness between canister pump module and body ground	B

(d) Reconnect the canister pump module connector.

A	Go to step 29
B	Go to step 31

24 CHECK WIRE HARNESS (ECM - CANISTER PUMP MODULE)

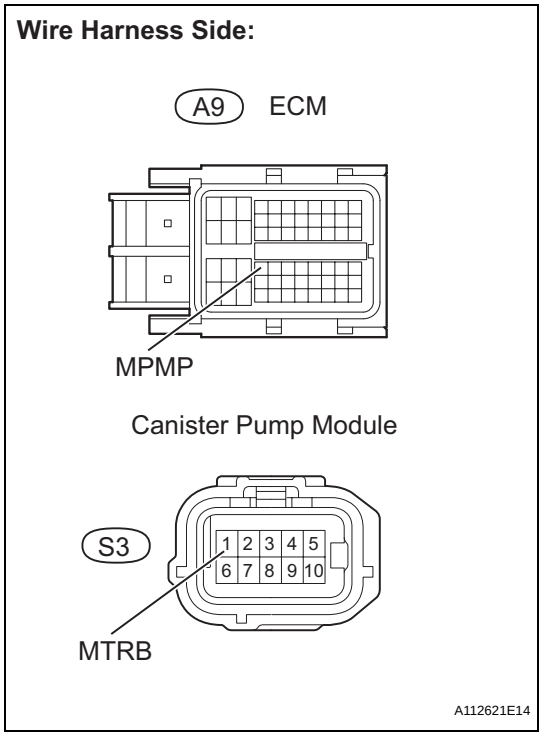

(a) Turn the ignition switch OFF.
(b) Disconnect the S3 canister pump module connector.
(c) Disconnect the A9 ECM connector.
(d) Measure the resistance between MPMP terminal of the ECM connector and MTRB terminal of the canister pump module connector.

Result

Test Result	Suspected Trouble Area	Proceed to
Below 1 Ω	ECM	A
10 kΩ or higher	Wire harness between ECM and canister pump module	B

(e) Reconnect the canister pump module connector.
(f) Reconnect the ECM connector.

A	Go to step 34
B	Go to step 31

25 INSPECT INTAKE MANIFOLD (EVAP PURGE PORT)

(a) Stop the engine.
(b) Disconnect the EVAP hose from the intake manifold.
(c) Start the engine.
(d) Use your finger to confirm that the port of the intake manifold has suction.

Result

Test Result	Suspected Trouble Area	Proceed to
Suction applied	EVAP hose between intake manifold and purge VSV	A
No suction	Intake manifold	B

(e) Reconnect the EVAP hose.

A	Go to step 32
B	Go to step 33

26	CORRECTLY REINSTALL OR REPLACE FUEL CAP

HINT:
- When reinstalling the fuel cap, tighten it until a few click sounds are heard.
- When replacing the fuel cap, use a fuel cap that meets OEM specifications, and install it until a few click sounds are heard.

NEXT	Go to step 36

27	REPLACE FUEL CAP

ES

HINT:
When installing the fuel cap, tighten it until a few click sounds are heard.

NEXT	Go to step 36

28	LOCATE EVAP LEAK PART

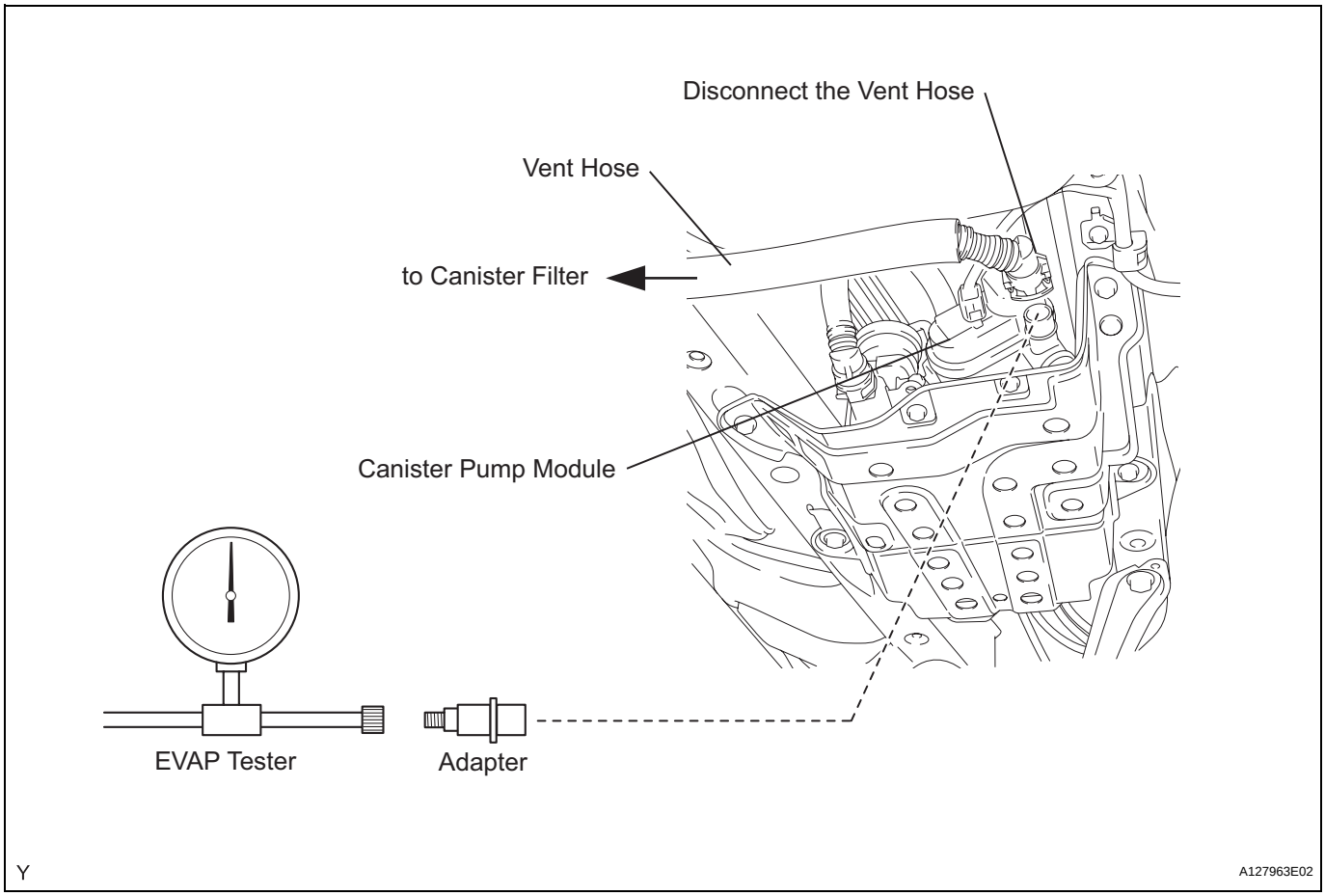

(a) Disconnect the vent hose.
(b) Connect the EVAP tester to the canister pump module with the adapter.

(c) Pressurize the EVAP system to 3.2 to 3.7 kPa (24 to 28 mmHg).
(d) Apply soapy water to the piping and connecting parts of the EVAP system.
(e) Look for areas where bubbles appear. This indicates the leak point.
(f) Repair or replace the leak point.
HINT:
Disconnect the hose between the canister and the fuel tank from the canister. Block the canister side and conduct an inspection. In this way, the fuel tank can be excluded as an area suspected of causing fuel leaks.

NEXT	Go to step 36

ES

29	REPLACE CHARCOAL CANISTER ASSEMBLY

(a) Replace the canister assembly (see page EC-10).
NOTICE:
When replacing the canister, check the canister pump module interior and related pipes for water, fuel and other liquids. If liquids are present, check for disconnections and/or cracks in the following: 1) the pipe from the air inlet port to the canister pump module; 2) the canister filter; and 3) the fuel tank vent hose.

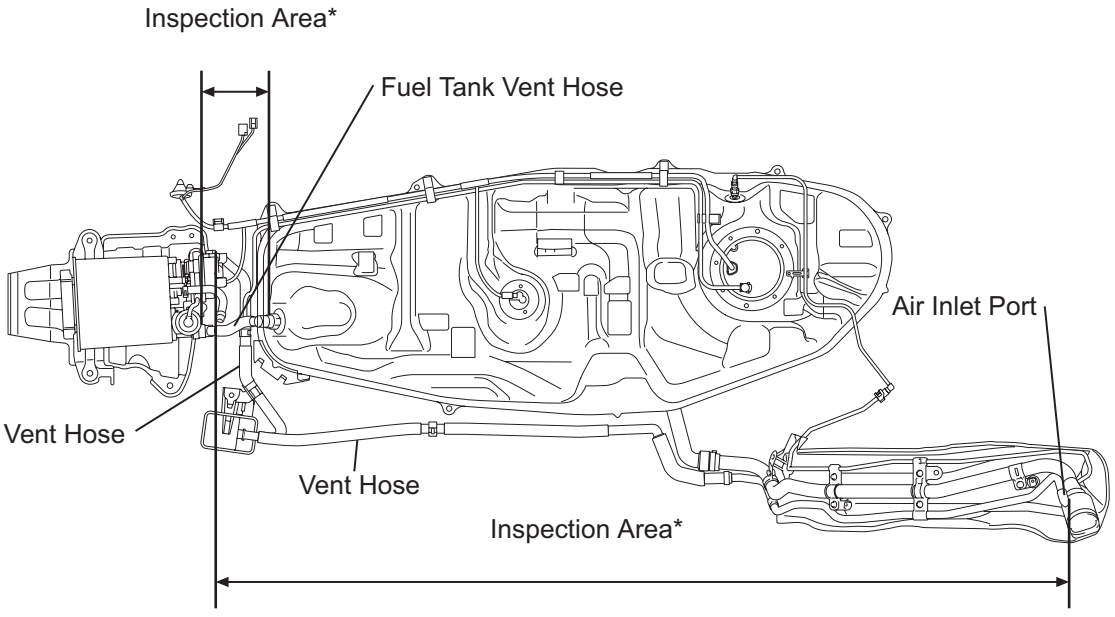

*: Check for disconnection and/or cracks

P A127720E01

NEXT → Go to step 36

30 REPLACE PURGE VSV

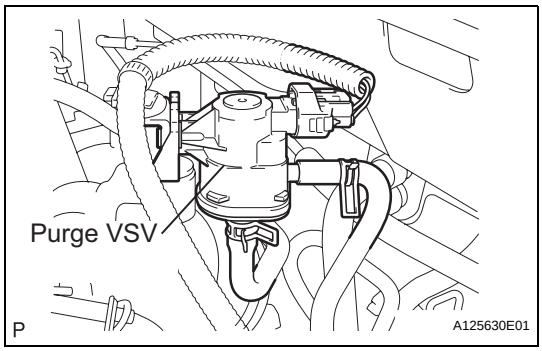

(a) Disconnect the connector and the hoses from the purge VSV.
(b) Remove the purge VSV.
(c) Install a new purge VSV.
(d) Reconnect the connector and hoses.

NEXT → Go to step 36

ES

31 REPAIR OR REPLACE HARNESS AND CONNECTOR

NEXT → Go to step 36

32 REPLACE EVAP HOSE (INTAKE MANIFOLD - PURGE VSV)

NEXT → Go to step 36

33 INSPECT INTAKE MANIFOLD (EVAP PURGE PORT)

(a) Check that the EVAP purge port of the intake manifold is not clogged. If necessary, replace the intake manifold.

NEXT → Go to step 36

34 REPLACE ECM

(a) Replace the ECM (see page ES-429).

NEXT → Go to step 36

35 REPAIR OR REPLACE PARTS AND COMPONENTS INDICATED BY OUTPUT DTCS

(a) Repair the malfunctioning areas indicated by the DTCs that had been confirmed when the vehicle was brought in.

NEXT → Go to step 36

36	PERFORM EVAP SYSTEM CHECK (AUTO OPERATION)

NOTICE:

- **The EVAP SYSTEM CHECK (AUTO OPERATION) consists of 5 steps performed automatically by the intelligent tester. It takes a maximum of approximately 18 minutes.**
- **Do not perform the EVAP SYSTEM CHECK when the fuel tank is more than 90% full because the cut-off valve may be closed, making the fuel tank leak check unavailable.**
- **Do not run the engine in this step.**
- **When the temperature of the fuel is 35°C (95°F) or more, a large amount of vapor forms and any check results become inaccurate. When performing an EVAP SYSTEM CHECK, keep the temperature below 35°C (95°F).**

(a) Clear DTCs (see page ES-39).

(b) On the intelligent tester, select the following menu items: DIAGNOSIS / ENHANCED OBD II / SYSTEM CHECK / EVAP SYS CHECK / AUTO OPERATION.

(c) After the SYSTEM CHECK is completed, check for pending DTCs by selecting the following menu items: DIAGNOSIS / ENHANCED OBD II / DTC INFO / PENDING CODES.
HINT:
If no pending DTCs are found, the repair has been successfully completed.

ES

NEXT

COMPLETED

CONFIRMATION DRIVING PATTERN

HINT:
After a repair, check Monitor Status by performing the Key-Off Monitor Confirmation and Purge Flow Monitor Confirmation described below.

1. KEY-OFF MONITOR CONFIRMATION

(a) Preconditions
The monitor will not run unless:
- The vehicle has been driven for 10 minutes or more (in a city area or on a freeway)
- The fuel tank is less than 90% full
- The altitude is less than 8,000 ft (2,400 m)
- The Engine Coolant Temperature (ECT) is between 4.4°C and 35°C (40°F and 95°F)
- The Intake Air Temperature (IAT) is between 4.4°C and 35°C (40°F and 95°F)
- The vehicle remains stationary (the vehicle speed is 0 km/h [0 mph])

(b) Monitor Conditions
1. Allow the engine to idle for at least 5 minutes.
2. Turn the ignition switch OFF and wait for 6 hours (8 or 10.5 hours).
HINT:
Do not start the engine until checking MONITOR STATUS. If the engine is started, the steps described above must be repeated.

(c) Monitor Status
1. Connect the intelligent tester to the DLC3.
2. Turn the ignition switch ON and turn the tester ON.
3. Select the following menu items: DIAGNOSIS / ENHANCED OBD II / MONITOR STATUS.
4. Check the Monitor Status displayed on the tester.
HINT:
If INCMP is displayed, the monitor is not complete. Make sure that the preconditions have been met, and perform the Monitor Conditions again.

2. PURGE FLOW MONITOR CONFIRMATION (P0441)

HINT:
Perform this monitor confirmation after the Key-Off Monitor Confirmation shows COMPL (complete).

(a) Preconditions
The monitor will not run unless:
- The vehicle has been driven for 10 minutes or more (in a city area or on a freeway)
- The ECT is between 4.4°C and 35°C (40°F and 95°F)
- The IAT is between 4.4°C and 35°C (40°F and 95°F)

(b) Monitor Conditions
1. Release the pressure from the fuel tank by removing and reinstalling the fuel cap.
2. Warm the engine up until the ECT reaches more than 75°C (167°F).
3. Increase the engine speed to 3,000 rpm once.
4. Allow the engine to idle and turn A/C ON for 1 minute.

(c) Monitor Status
1. Turn the ignition switch OFF (if ON or the engine is running).
2. Connect the intelligent tester to the DLC3.
3. Turn the ignition switch ON and turn the tester ON.
4. Select the following menu items: DIAGNOSIS / ENHANCED OBD II / MONITOR STATUS.
5. Check the Monitor Status displayed on the tester.
HINT:
If INCMP is displayed, the monitor is not complete. Make sure that the preconditions have been met, and perform the Monitor Conditions again.

MONITOR RESULT

Refer to CHECKING MONITOR STATUS (See page ES-19).

ECM Power Source Circuit

DESCRIPTION

When the ignition switch is turned ON, the battery voltage is applied to the IGSW of the ECM. The output signal from the MREL terminal of the ECM causes a current to flow to the coil, closing the contacts of the integration relay (EFI MAIN relay) and supplying power to either terminal +B or +B2 of the ECM.

WIRING DIAGRAM

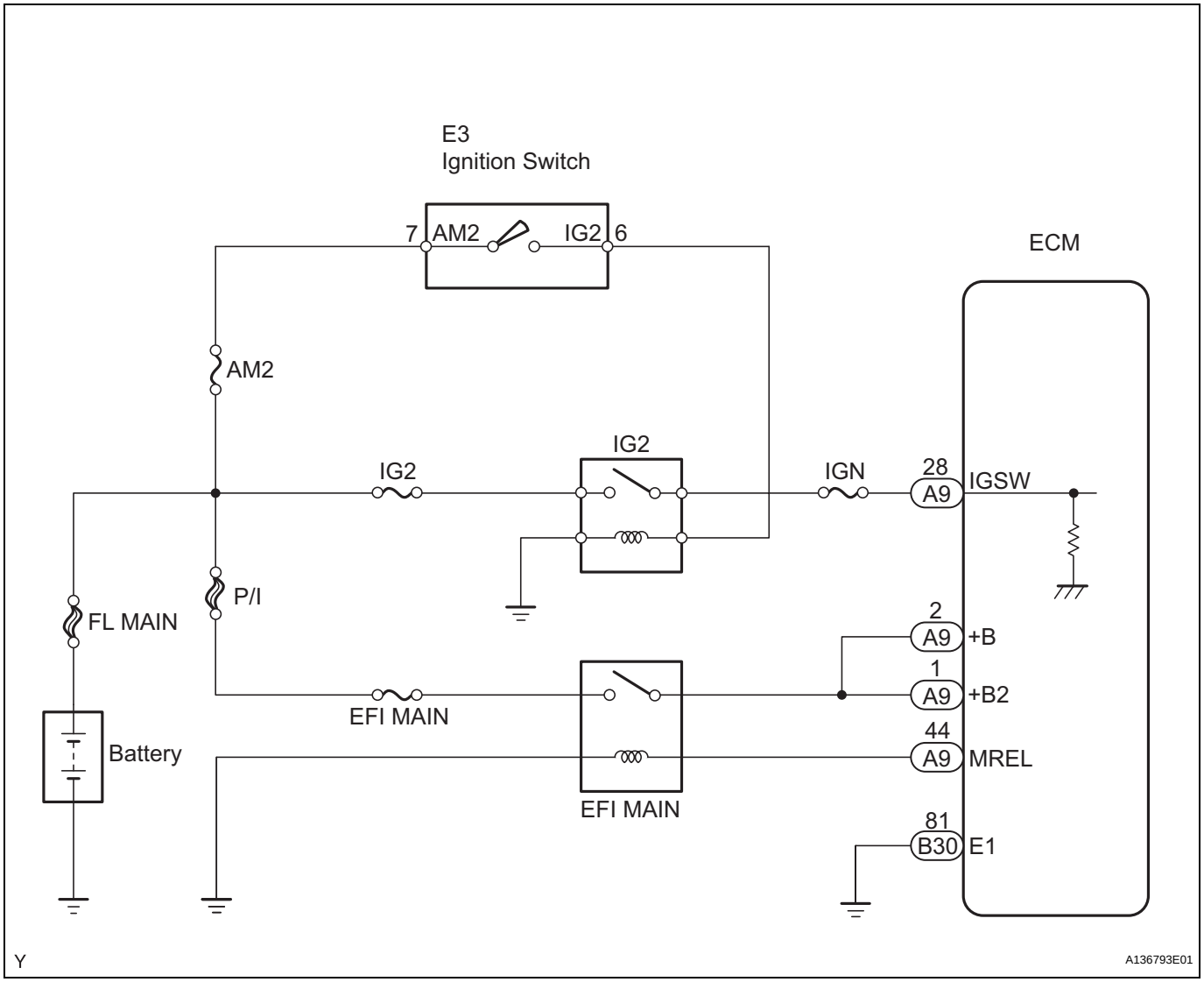

ES

INSPECTION PROCEDURE

1	INSPECT FUSES (P/I, AM2, IG2, EFI MAIN AND IGN)

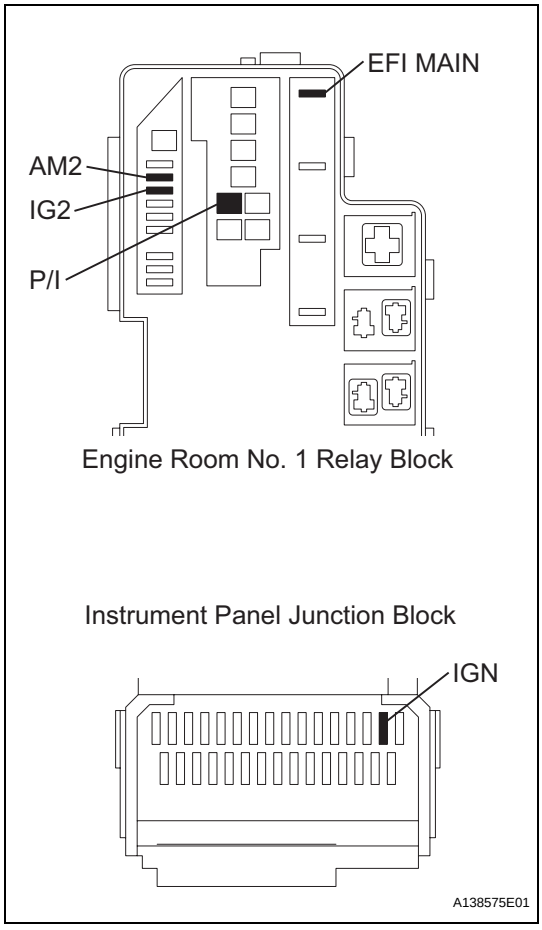

(a) Remove the P/I fuse, AM2 fuse, IG2 fuse and EFI MAIN fuse from the engine room No. 1 relay block.
(b) Remove the IGN fuse from the instrument panel junction block.
(c) Measure the resistance of the fuses.
Standard resistance:
Below 1 Ω
(d) Reinstall the fuses.

NG → **CHECK FOR SHORT IN ALL HARNESSES AND CONNECTORS CONNECTED TO FUSE AND REPLACE FUSE**

OK

ES

2 INSPECT RELAY (IG2, EFI MAIN)

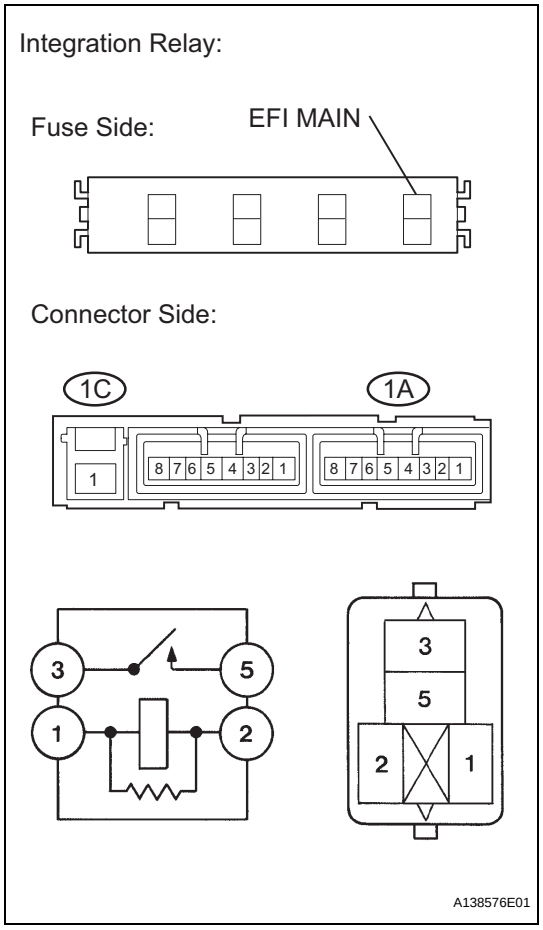

(a) Remove the integration relay and IG2 relay from the engine room No. 1 relay block.
(b) Measure the resistance between the terminals of the integration relay.
Standard resistance

Tester Connection	Specified Condition
1C-1 - 1A-4	10 kΩ or higher
	Below 1 Ω (When battery voltage is applied to terminals 1A-2 and 1A-3)

(c) Measure the resistance between the terminals of the IG2 relay.
Standard resistance

Tester Connection	Specified Condition
3 - 5	10 kΩ or higher
	Below 1 Ω (When battery voltage is applied to terminals 1 and 2)

(d) Reinstall the relay.

NG → **REPLACE RELAY**

OK

3 CHECK WIRE HARNESS (ECM - BODY GROUND)

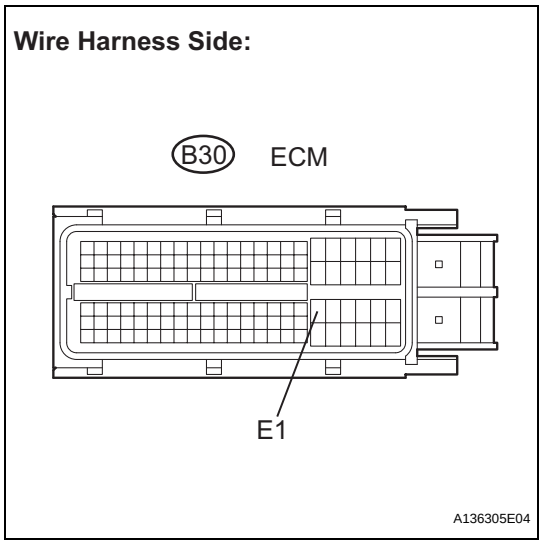

(a) Disconnect the B30 ECM connector.
(b) Measure the resistance.
Standard resistance

Tester Connection	Specified Condition
B30-81 (E1) - Body ground	Below 1 Ω

(c) Reconnect the ECM connector.

NG → **REPAIR OR REPLACE HARNESS AND CONNECTOR**

OK

4	INSPECT ECM (IGSW VOLTAGE)

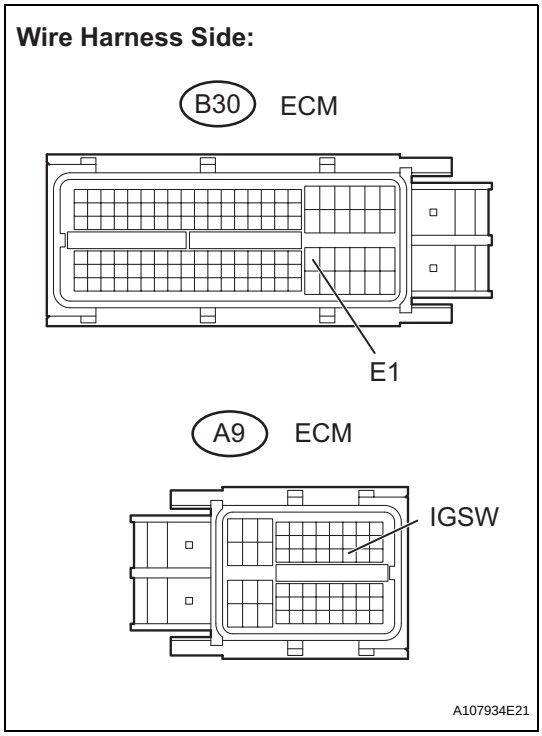

(a) Disconnect the B30 and A9 ECM connectors.
(b) Turn the ignition switch ON.
(c) Measure the voltage between the terminals of the B30 and A9 ECM connectors.

Standard voltage

Tester Connection	Specified Condition
A9-28 (IGSW) - B30-81 (E1)	9 to 14 V

(d) Reconnect the ECM connector.

OK → **REPLACE ECM**

NG

ES

5	CHECK WIRE HARNESS (RELAY BLOCK, ECM, IGNITION SWITCH, BATTERY)

Wire Harness Side:

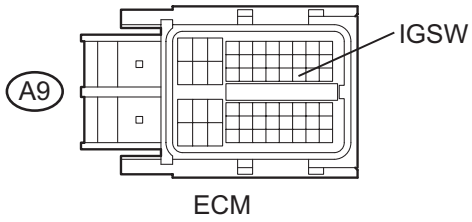

ECM

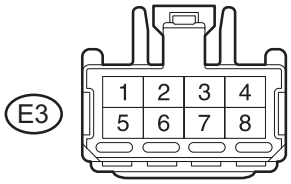

Ignition Switch

Engine Room No. 1 Relay Block

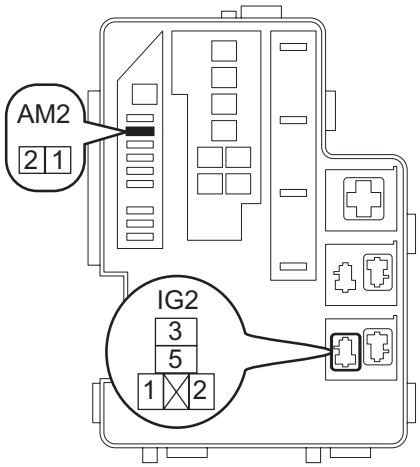

A138577E01

(a) Disconnect the A9 ECM connector.
(b) Disconnect the E3 ignition switch connector.
(c) Disconnect the cable from the battery positive terminal.
(d) Remove the AM2 fuse and IG2 relay.
(e) Measure the resistance between the terminals.

Standard resistance

Tester Connection	Specified Condition
A9-28 (IGSW) - IG2 relay terminal 5	Below 1 Ω
IG2 relay terminal 2 - Body ground	Below 1 Ω
Positive (+) battery cable - IG2 relay terminal 3	Below 1 Ω
Positive (+) battery cable - AM2 fuse terminal 1	Below 1 Ω
E3-7 (AM2) - AM2 fuse terminal 2	Below 1 Ω
E3-6 (IG2) - IG2 relay terminal 1	Below 1 Ω
A9-28 (IGSW) or IG2 relay terminal 5 - Body ground	10 kΩ or higher
Positive (+) battery cable or AM2 fuse terminal 1 - Body ground	10 kΩ or higher
Positive (+) battery cable or IG2 relay terminal 3 - Body ground	10 kΩ or higher
E3-7 (AM2) or AM2 fuse terminal 2 - Body ground	10 kΩ or higher
E3-6 (IG2) or IG2 relay terminal 1 - Body ground	10 kΩ or higher

(f) Reinstall the relay and fuse.
(g) Reconnect the connectors.

NG → **REPAIR OR REPLACE HARNESS AND CONNECTOR**

OK

6	INSPECT IGNITION SWITCH (See page ES-303)

NG → **REPLACE IGNITION SWITCH**

OK

7	CHECK WIRE HARNESS (INTEGRATION RELAY - ECM, BATTERY AND BODY GROUND)

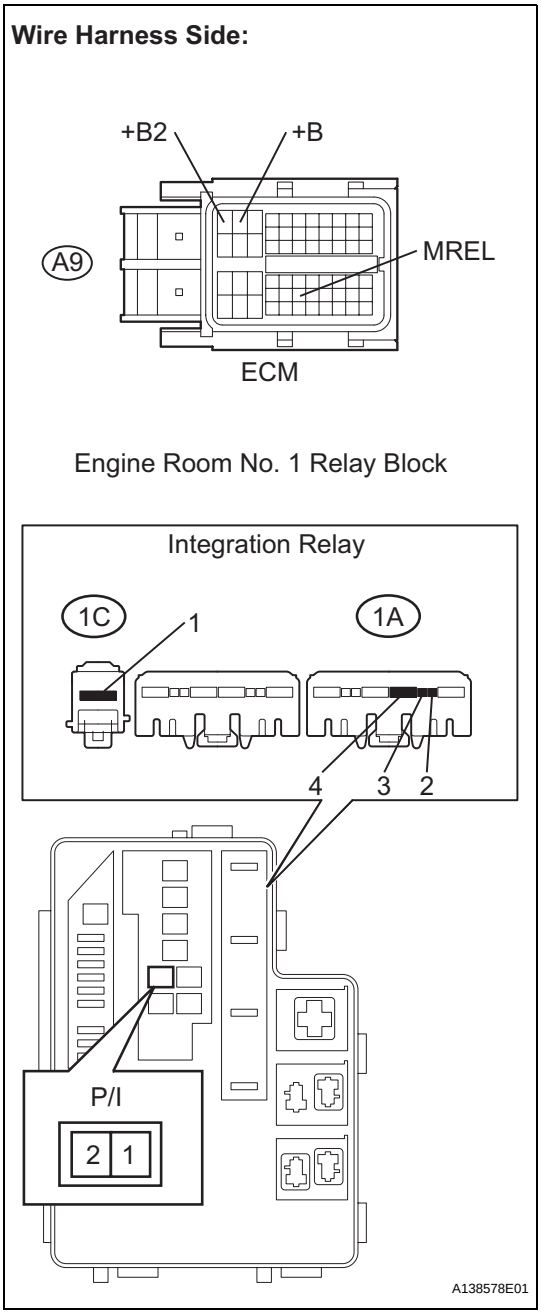

(a) Disconnect the A9 ECM connector.
(b) Disconnect the cable from the battery positive terminal.
(c) Remove the integration relay from the engine room No. 1 relay block.
(d) Disconnect the integration relay connector.
(e) Remove the P/I fuse from the engine room No. 1 relay block.
(f) Measure the resistance between the terminals.
Standard resistance (Check for open)

Tester Connection	Specified Condition
A9-2 (+B) - 1A-4	Below 1 Ω
A9-1 (+B2) - 1A-4	Below 1 Ω
A9-44 (MREL) - 1A-2	Below 1 Ω
P/I fuse terminal 2 - 1C-1	Below 1 Ω
P/I fuse terminal 1 - Positive (+) battery cable	Below 1 Ω
1A-3 - Body ground	Below 1 Ω
A9-2 (+B) or 1A-4 - Body ground	10 kΩ or higher
A9-1 (+B2) or 1A-4 - Body ground	10 kΩ or higher
A9-44 (MREL) or 1A-2 - Body ground	10 kΩ or higher
P/I fuse terminal 2 or 1C-1 - Body ground	10 kΩ or higher
P/I fuse terminal 1 or Positive (+) battery cable - Body ground	10 kΩ or higher

(g) Reconnect the connectors.
(h) Reconnect the cable to the battery positive terminal.
(i) Reinstall the integration relay and P/I fuse.

NG → **REPAIR OR REPLACE HARNESS AND CONNECTOR**

OK

REPAIR OR REPLACE ENGINE ROOM NO. 1 RELAY BLOCK

VC Output Circuit

DESCRIPTION

The ECM constantly generates 5 V power from the battery voltages supplied to the +B (BATT) terminal to operate the microprocessor. The ECM also provides this power to the sensors through the VC output circuit.

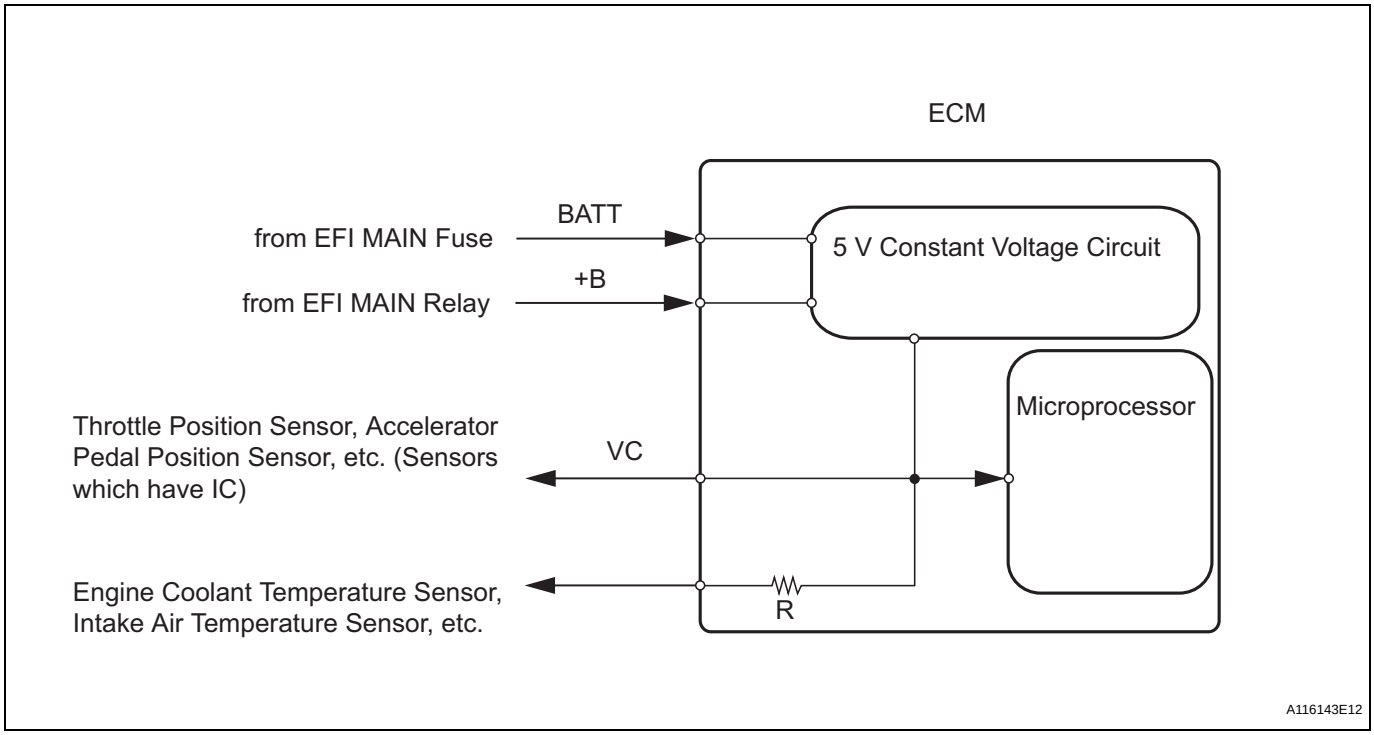

When the VC circuit is short-circuited, the microprocessor in the ECM and sensors that are supplied with power through the VC circuit are inactivated because the power is not supplied from the VC circuit. Under this condition, the system does not start up and the MIL does not illuminate even if the system malfunctions.

HINT:

Under normal conditions, the MIL is illuminated for several seconds when the ignition switch is first turned ON. The MIL goes off when the engine is started.

WIRING DIAGRAM

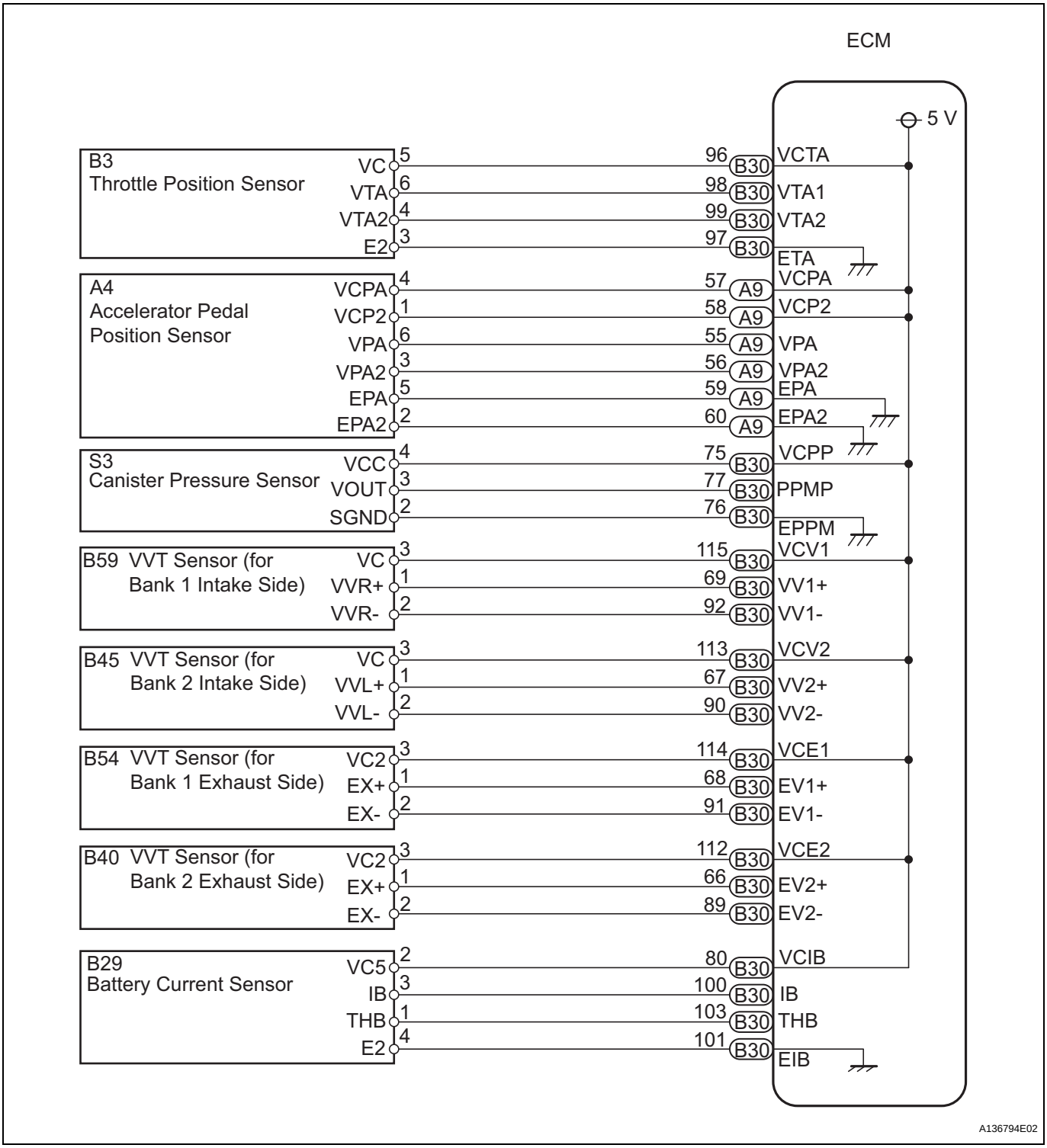

INSPECTION PROCEDURE

1	**CHECK MIL**

(a) Check that the Malfunction Indicator Lamp (MIL) lights up when turning the ignition switch ON.

OK:

MIL lights up

OK → SYSTEM OK

NG

2 CHECK COMMUNICATION BETWEEN INTELLIGENT TESTER AND ECM

(a) Connect the intelligent tester to the DLC3.
(b) Turn the ignition switch ON and tester ON.
(c) Check the communication between the tester and ECM.

Result

Result	Proceed to
Communication is possible	A
Communication is not possible	B

A → GO TO MIL CIRCUIT

B

3 CHECK MIL (THROTTLE POSITION SENSOR)

(a) Disconnect the B3 throttle body connector.
(b) Turn the ignition switch ON.
(c) Check the MIL.

Result

Result	Proceed to
MIL illuminates	A
MIL does not illuminate	B

(d) Reconnect the throttle body connector.

A → REPLACE THROTTLE BODY ASSEMBLY

B

4 CHECK MIL (ACCELERATOR PEDAL POSITION SENSOR)

(a) Disconnect the A4 accelerator pedal position sensor connector.
(b) Turn the ignition switch ON.
(c) Check the MIL.

Result

Result	Proceed to
MIL illuminates	A
MIL does not illuminate	B

(d) Reconnect the accelerator pedal position sensor connector.

A → REPLACE ACCELERATOR PEDAL POSITION SENSOR

B

5	CHECK MIL (CANISTER PUMP MODULE)

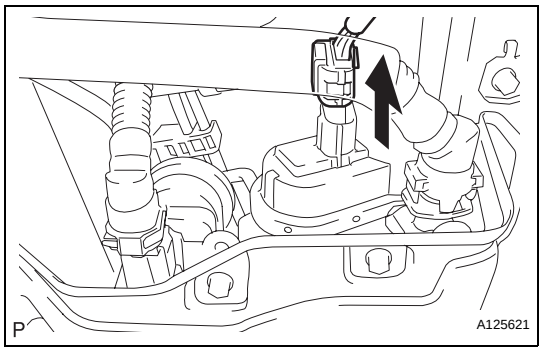

(a) Disconnect the S3 canister pump module connector.
(b) Turn the ignition switch ON.
(c) Check the MIL.

ES

Result

Result	Proceed to
MIL illuminates	A
MIL does not illuminate	B

(d) Reconnect the canister pump module connector.

A → **REPLACE CHARCOAL CANISTER ASSEMBLY**

B

6	CHECK MIL (BATTERY CURRENT SENSOR)

(a) Disconnect the B29 battery current sensor connector.
(b) Turn the ignition switch ON.
(c) Check the MIL.

Result

Result	Proceed to
MIL illuminates	A
MIL does not illuminate	B

(d) Reconnect the battery current sensor connector.

A → **REPLACE BATTERY CURRENT SENSOR**

B

7	CHECK MIL (VVT SENSOR FOR BANK 1 INTAKE SIDE)

(a) Disconnect the B59 VVT sensor connector.
(b) Turn the ignition switch ON.
(c) Check the MIL.

Result

Result	Proceed to
MIL illuminates	A
MIL does not illuminate	B

(d) Reconnect the VVT sensor connector.

A → **REPLACE VVT SENSOR (FOR BANK 1 INTAKE SIDE)**

B

8	CHECK MIL (VVT SENSOR FOR BANK 2 INTAKE SIDE)

(a) Disconnect the B45 VVT sensor connector.
(b) Turn the ignition switch ON.
(c) Check the MIL.

Result

Result	Proceed to
MIL illuminates	A
MIL does not illuminate	B

(d) Reconnect the VVT sensor connector.

A → **REPLACE VVT SENSOR (FOR BANK 2 INTAKE SIDE)**

B

9	CHECK MIL (VVT SENSOR FOR BANK 1 EXHAUST SIDE)

(a) Disconnect the B54 VVT sensor connector.
(b) Turn the ignition switch ON.
(c) Check the MIL.

Result

Result	Proceed to
MIL illuminates	A
MIL does not illuminate	B

(d) Reconnect the VVT sensor connector.

A → **REPLACE VVT SENSOR (FOR BANK 1 EXHAUST SIDE)**

B

10	CHECK MIL (VVT SENSOR FOR BANK 2 EXHAUST SIDE)

(a) Disconnect the B40 VVT sensor connector.
(b) Turn the ignition switch ON.
(c) Check the MIL.

Result

Result	Proceed to
MIL illuminates	A
MIL does not illuminate	B

(d) Reconnect the VVT sensor connector.

ES

A → REPLACE VVT SENSOR (FOR BANK 2 EXHAUST SIDE)

B

11	CHECK WIRE HARNESS

(a) Disconnect the B3 throttle body connector.
(b) Disconnect the A4 accelerator pedal position sensor connector.
(c) Disconnect the S3 canister pump module connector.
(d) Disconnect the B29 battery current sensor connector.
(e) Disconnect the B59 VVT sensor connector.
(f) Disconnect the B45 VVT sensor connector.
(g) Disconnect the B54 VVT sensor connector.
(h) Disconnect the B40 VVT sensor connector.
(i) Disconnect the A9 and B30 ECM connectors.
(j) Measure the resistance.

Standard resistance

Tester Connection	Specified Condition
B30-96 (VCTA) - Body ground	10 kΩ or higher
A9-57 (VCPA) - Body ground	10 kΩ or higher
A9-58 (VCP2) - Body ground	10 kΩ or higher
B30-75 (VCPP) - Body ground	10 kΩ or higher
B30-80 (VCIB) - Body ground	10 kΩ or higher
B30-115 (VCV1) - Body ground	10 kΩ or higher
B30-113 (VCV2) - Body ground	10 kΩ or higher
B30-114 (VCE1) - Body ground	10 kΩ or higher
B30-112 (VCE2) - Body ground	10 kΩ or higher

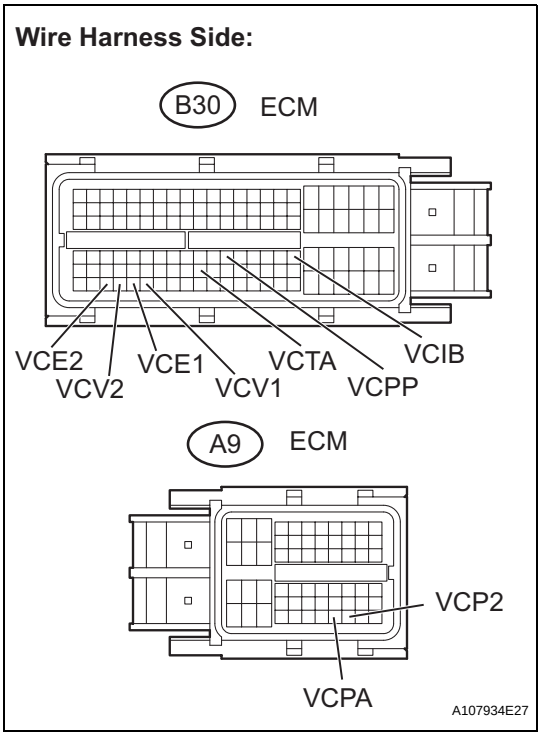

(k) Reconnect the throttle body connector.
(l) Reconnect the accelerator pedal position sensor connector.
(m) Reconnect the canister pump module connector.
(n) Reconnect the battery current sensor connector.
(o) Reconnect the VVT sensor connector.
(p) Reconnect the ECM connectors.

NG → REPAIR OR REPLACE HARNESS AND CONNECTOR

OK

REPLACE ECM

Fuel Pump Control Circuit

DESCRIPTION

The F/PMP relay switches the fuel pump speed according to the engine conditions. The fuel pump operates when the ECM receives the starter-operating signal (STA) and crankshaft-rotating signal (NE). The F/PMP relay is turned ON while the engine is idling or operating at low load. This causes current to flow through the fuel pump resistor to the fuel pump. The fuel pump then operates at low speed. The F/PMP relay is turned OFF while the engine is cranking or operating at high load. The fuel pump then operates at normal speed.

WIRING DIAGRAM

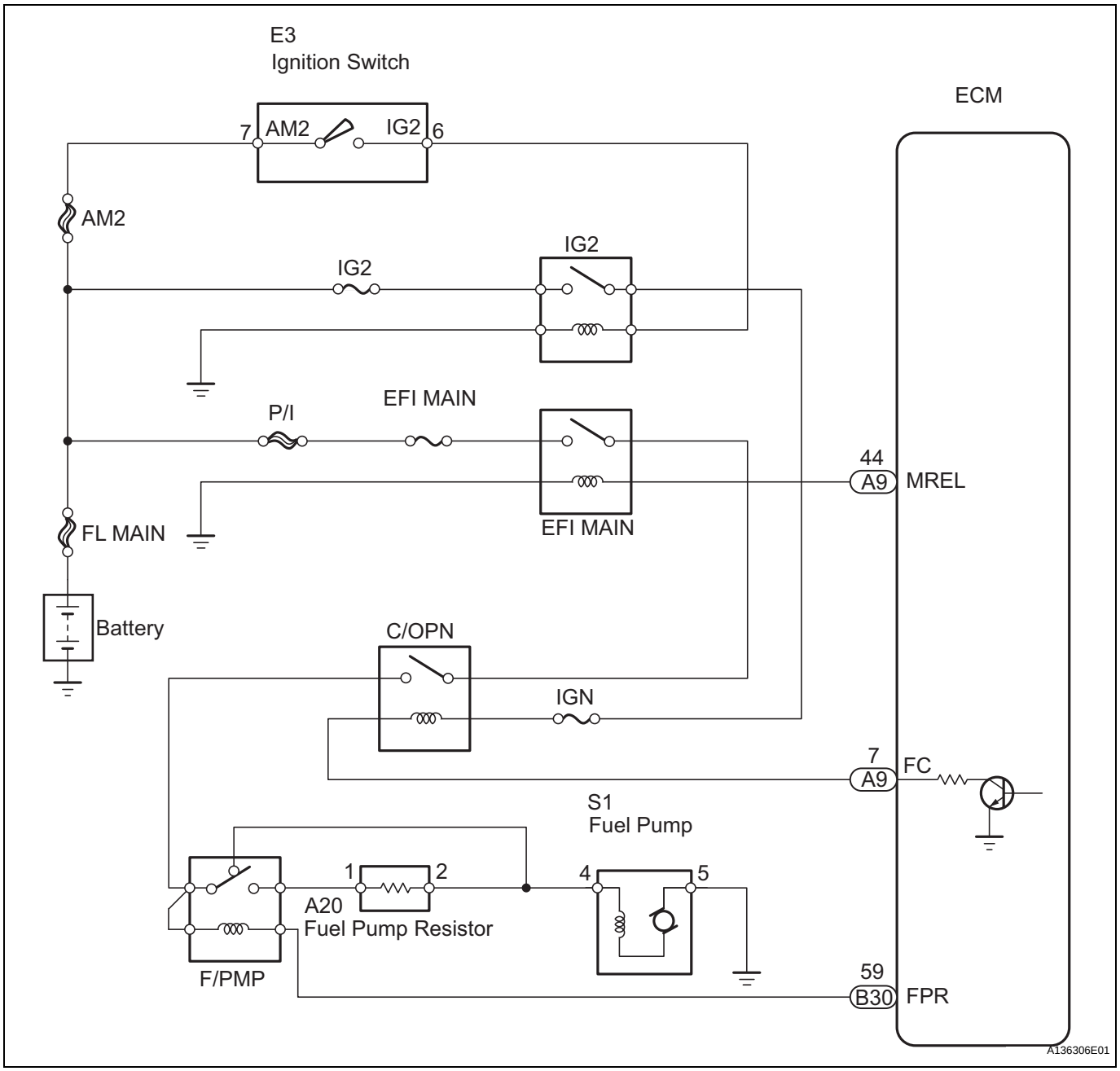

INSPECTION PROCEDURE

1	PERFORM ACTIVE TEST USING INTELLIGENT TESTER (FUEL PUMP/SPD)

(a) Connect the intelligent tester to the DLC3.
(b) Turn the ignition switch ON and turn the tester ON.
(c) Select the following menu items: DIAGNOSIS / ENHANCED OBD II / ACTIVE TEST / FUEL PUMP / SPD.
(d) Check whether the fuel pump operating sound occurs when performing the Active Test on the tester.
OK:
Fuel pump operating sound occurs.

ES

OK → **Go to step 12**

NG

2	INSPECT INSTRUMENT PANEL JUNCTION BLOCK ASSEMBLY (C/OPN RELAY INPUT VOLTAGE)

Instrument Panel Junction Block:

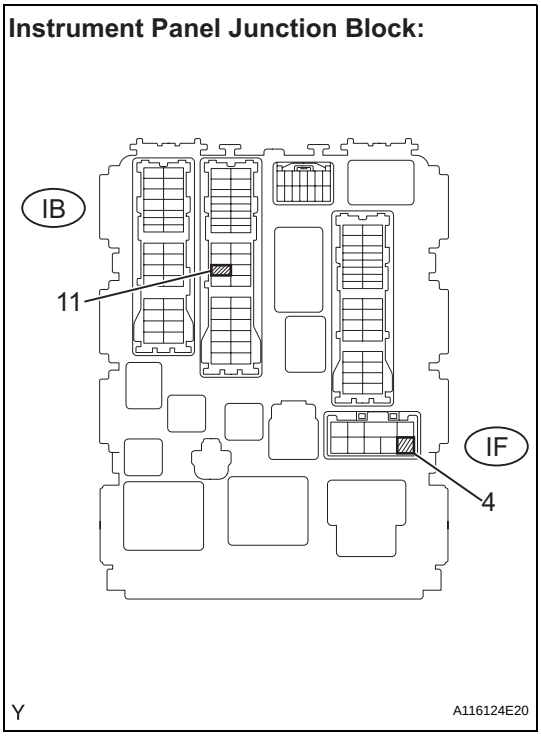

(a) Measure the voltage between the terminal of the instrument panel junction block and the body ground when the ignition switch is turned ON and OFF.
Standard voltage

Tester Connection	Ignition Switch Condition	Specified Condition
IB-11 - Body ground	OFF	Below 1 V
IF-4 - Body ground		
IB-11 - Body ground	ON	9 to 14 V
IF-4 - Body ground		

OK → **Go to step 4**

NG

3	CHECK WIRE HARNESS (INSTRUMENT PANEL JUNCTION BLOCK - INTEGRATION RELAY AND IG2 RELAY)

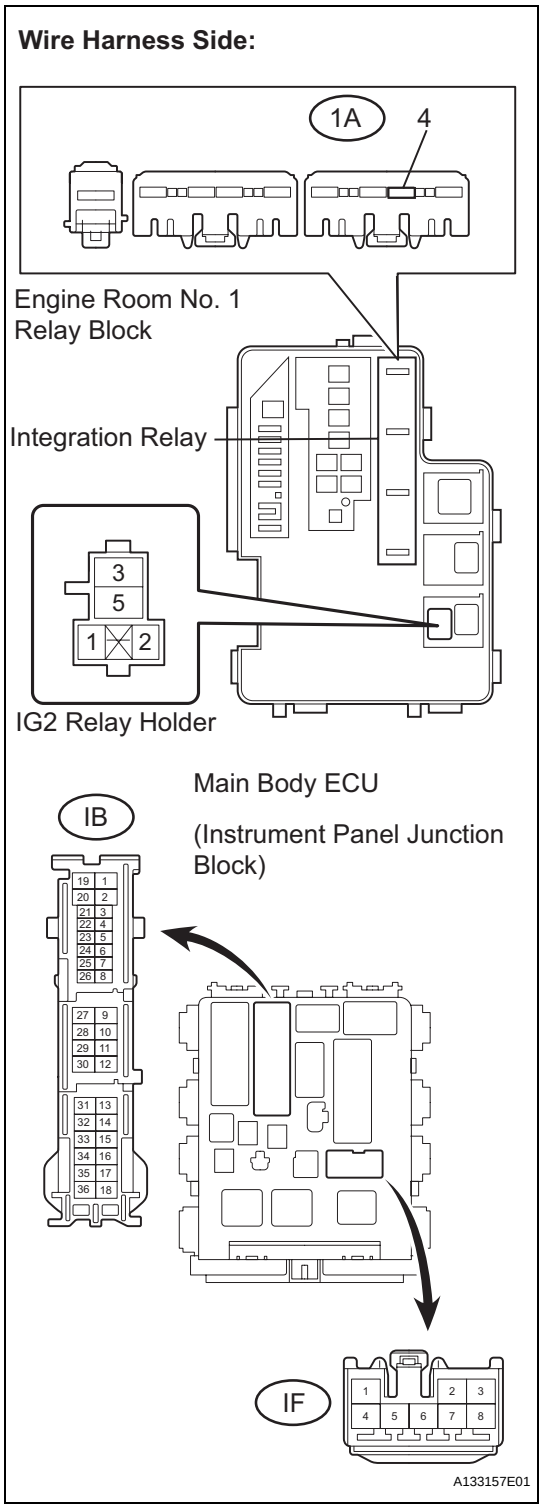

(a) Remove the integration relay and IG2 relay from the engine room No. 1 relay block.
(b) Disconnect the instrument panel junction block connector.
(c) Measure the resistance.
Standard resistance

Tester Connection	Specified Condition
IG2 relay 5 - IF-4	Below 1 Ω
1A-4 - IB-11	Below 1 Ω
IF-4 - Body ground	10 kΩor higher
IB-11 - Body ground	10 kΩor higher

(d) Reinstall the integration relay and IG2 relay.
(e) Reconnect the instrument panel junction block connector.

NG → **REPAIR OR REPLACE HARNESS AND CONNECTOR**

OK

GO TO ECM POWER SOURCE CIRCUIT

ES

4	INSPECT INSTRUMENT PANEL JUNCTION BLOCK ASSEMBLY (C/OPN RELAY)

Instrument Panel Junction Block:

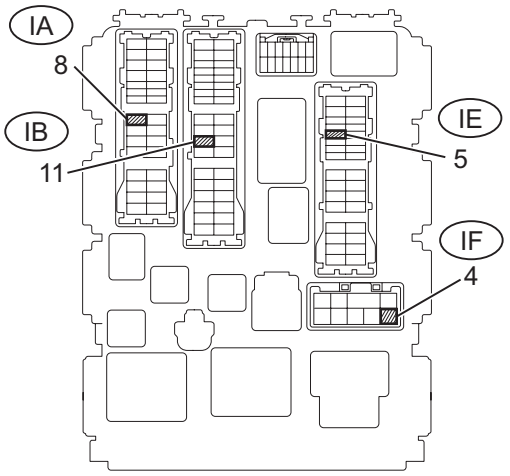

(a) Remove the instrument panel junction block.
(b) Measure the C/OPN relay resistance.
Standard resistance

Tester Connection	Specified Condition
IB-11 - IA-8	10 kΩ or higher
	Below 1 Ω (when battery voltage is applied to terminals IF-4 and IE-5)

HINT:
Relay coil circuit between IF-4 and IE-5 is through IGN fuse.
(c) Reinstall the instrument panel junction block.

NG → **REPLACE INSTRUMENT PANEL JUNCTION BLOCK ASSEMBLY**

OK

ES

5	CHECK WIRE HARNESS (INSTRUMENT PANEL JUNCTION BLOCK - ECM)

Wire Harness Side:

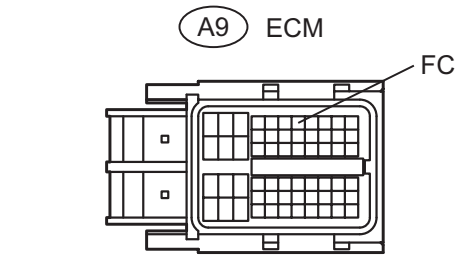

Main Body ECU

(Instrument Panel Junction Block)

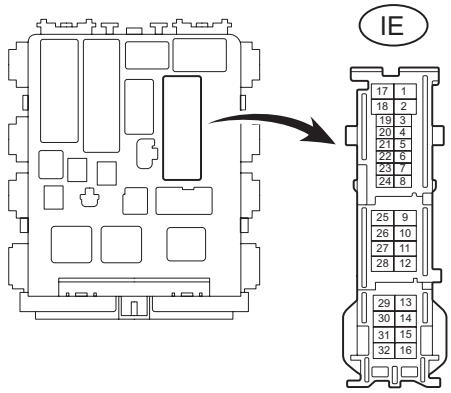

(a) Disconnect the A9 ECM connector.
(b) Disconnect the IE connector from the instrument panel junction block.
(c) Measure the resistance.
Standard resistance

Tester Connection	Specified Condition
IE-5 - A9-7 (FC)	Below 1Ω
IE-5 or A9-7 (FC) - Body ground	10 kΩ or higher

(d) Reconnect the instrument panel junction block and the ECM connectors.

NG → **REPAIR OR REPLACE HARNESS AND CONNECTOR**

OK

6	PERFORM ACTIVE TEST USING INTELLIGENT TESTER (FUEL PMP SP CTL)

(a) Connect the intelligent tester to the DLC3.
(b) Turn the ignition switch ON and turn the tester ON.
(c) Select the following menu items: DIAGNOSIS / ENHANCED OBD II / ACTIVE TEST / FUEL PMP SP CTL.
(d) Check the operation of the relay while operating it using the intelligent tester.
OK:
Operating noise can be heard from the relay.

OK → **Go to step 9**

NG

7	INSPECT F/PMP RELAY (See page ES-194)

NG → **REPLACE F/PMP RELAY**

ES

OK

8	CHECK WIRE HARNESS (F/PMP RELAY - ECM AND INSTRUMENT PANEL JUNCTION BLOCK)

Wire Harness Side:

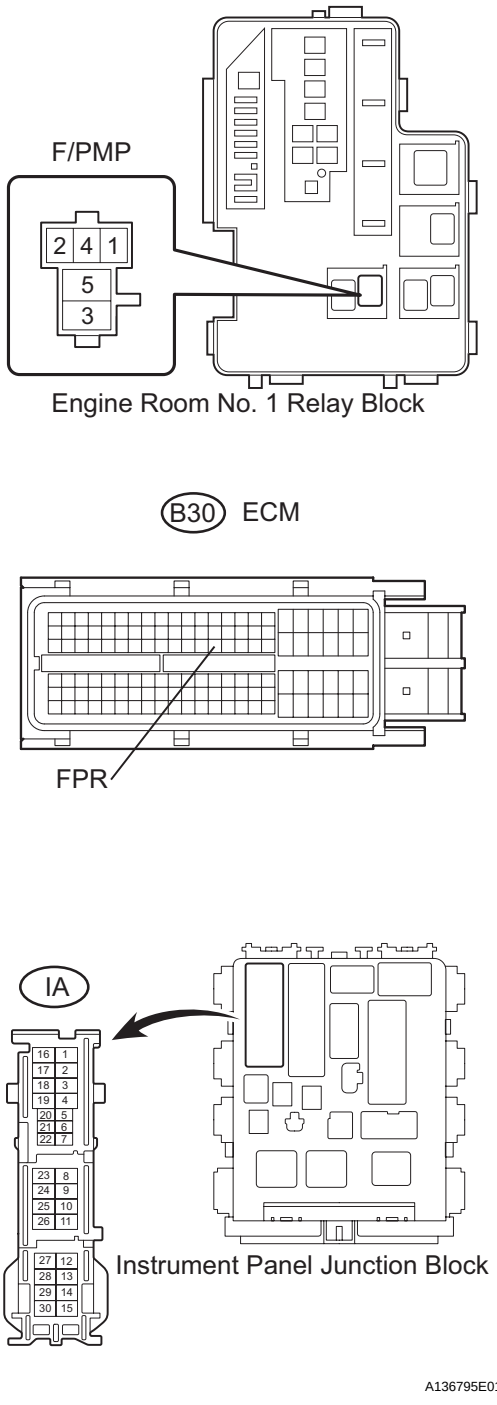

(a) Remove the F/PMP relay from the engine room No. 1 relay block.
(b) Disconnect the B30 ECM connector.
(c) Disconnect the IA instrument panel junction block connector.
(d) Measure the resistance.

Standard resistance

Tester Connection	Specified Condition
F/PMP relay terminal 1 - B30-59 (FPR)	Below 1 Ω
F/PMP relay terminal 2 - IA-8	Below 1 Ω
F/PMP relay terminal 3 - IA-8	Below 1 Ω
F/PMP relay terminal 1 or B30-59 (FPR) - Body ground	10 kΩ or higher
F/PMP relay terminal 2 or IA-8 - Body ground	10 kΩ or higher
F/PMP relay terminal 3 or IA-8 - Body ground	10 kΩ or higher

(e) Reconnect the ECM connector
(f) Reconnect the instrument panel junction block connector.
(g) Reinstall the F/PMP relay.

NG → **REPAIR OR REPLACE HARNESS AND CONNECTOR**

OK

9	CHECK WIRE HARNESS (F/PMP - FUEL PUMP AND PUMP RESISTOR)

Wire Harness Side:

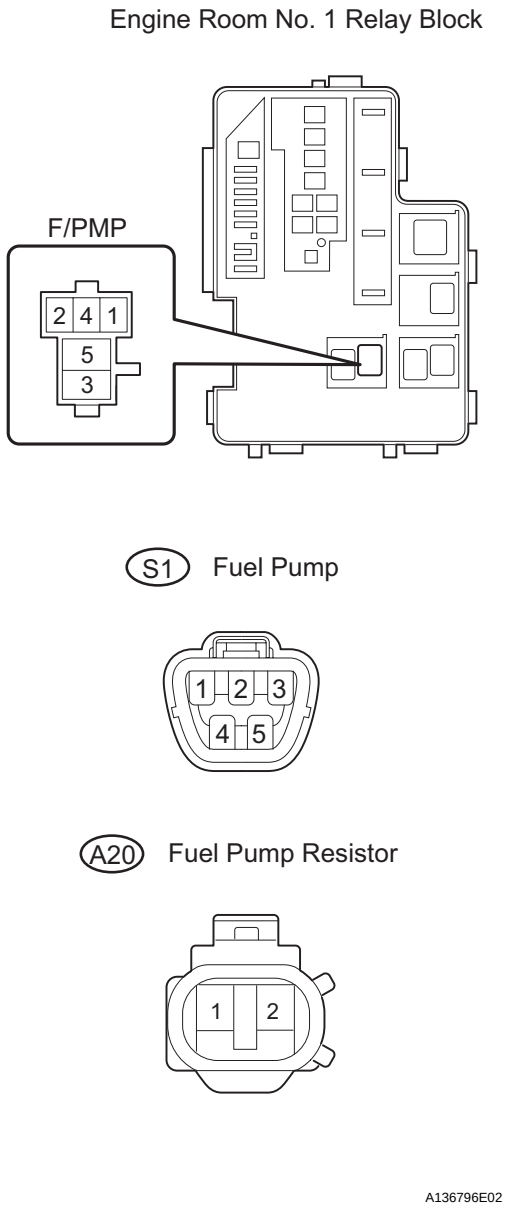

(a) Remove the F/PMP relay from the engine room No. 1 relay block.
(b) Disconnect the S1 fuel pump connector.
(c) Disconnect the A20 fuel pump resistor connector.
(d) Measure the resistance.

Standard resistance

Tester Connection	Specified Condition
F/PMP relay terminal 4 - S1-4	Below 1 Ω
F/PMP relay terminal 5 - A20-1	Below 1 Ω
A20-2 - S1-4	Below 1 Ω
S1-5 - Body ground	Below 1 Ω
F/PMP relay terminal 4 or S1-4 - Body ground	10 kΩ or higher
F/PMP relay terminal 5 or A20-1 - Body ground	10 kΩ or higher
A20-2 or S1-4 - Body ground	10 kΩ or higher

(e) Reconnect the fuel pump resistor connector.
(f) Reconnect the fuel pump connector.
(g) Reinstall the F/PMP relay.

NG → **REPAIR OR REPLACE HARNESS AND CONNECTOR**

OK

ES

10	INSPECT FUEL PUMP

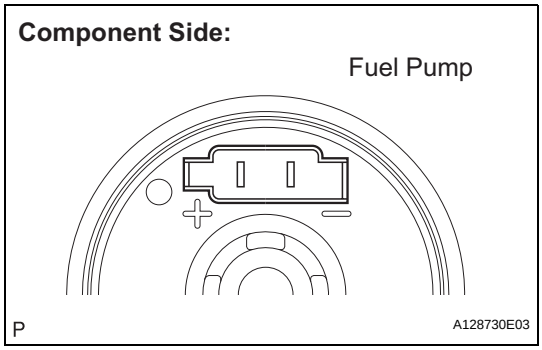

(a) Inspect fuel pump resistance.
  (1) Measure the resistance between the terminals.
  Standard resistance:
  0.2 to 3.0 Ω at 20°C(68°F)

(b) Inspect fuel pump operation.
  (1) Apply the battery voltage to both the terminals. Check that the pump operates.
  NOTICE:
  - **These tests must be done quickly (within 10 seconds) to prevent the coil from burning out.**
  - **Keep the fuel pump as far away from the battery as possible.**
  - **Always turn the voltage on and off on the battery side, not the fuel pump side.**

NG → **REPLACE FUEL PUMP**

OK

11	INSPECT FUEL PUMP RESISTOR

(a) Measure the resistance of the fuel pump resistor.
Standard resistance:
0.30 to 0.34 Ω at 20°C (68°F)

NG → **REPLACE FUEL PUMP RESISTOR**

OK

REPLACE ECM

12	READ VALUE USING INTELLIGENT TESTER (STARTER SIG)

(a) Connect the intelligent tester to the DLC3.
(b) Turn the ignition switch ON and turn the tester ON.
(c) Select the following menu items: DIAGNOSIS / ENHANCED OBD II / DATA LIST / PRIMARY / STARTER SIG.
(d) Check the result when the ignition switch is turned ON and START.
OK

Ignition Switch Position	STARTER SIG
ON	OFF
START	ON

NG → **REPAIR OR REPLACE STARTING SYSTEM**

OK

13	READ VALUE USING INTELLIGENT TESTER (ENGINE SPD)

(a) Connect the intelligent tester to the DLC3.
(b) Turn the ignition switch ON and turn the tester ON.
(c) Select the following menu items: DIAGNOSIS / ENHANCED OBD II / DATA LIST / PRIMARY / ENGINE SPD.
(d) Read the values displayed on the tester while cranking.
Standard:
Values are displayed continuously.

NG → **REPAIR OR REPLACE CRANKSHAFT POSITION SENSOR CIRCUIT**

ES

OK

REPLACE ECM

ACIS Control Circuit

DESCRIPTION

This circuit opens and closes the Intake Air Control Valve (IACV) in response to changes in the engine load in order to increase the intake efficiency (ACIS: Acoustic Control Induction System).
When the engine speed is between 0 and 4,450 rpm and the throttle valve opening angle is 60° or more, the ECM supplies current to the VSV (ON status), to close the IACV. Under other conditions, the VSV is usually OFF and the IACV is open.

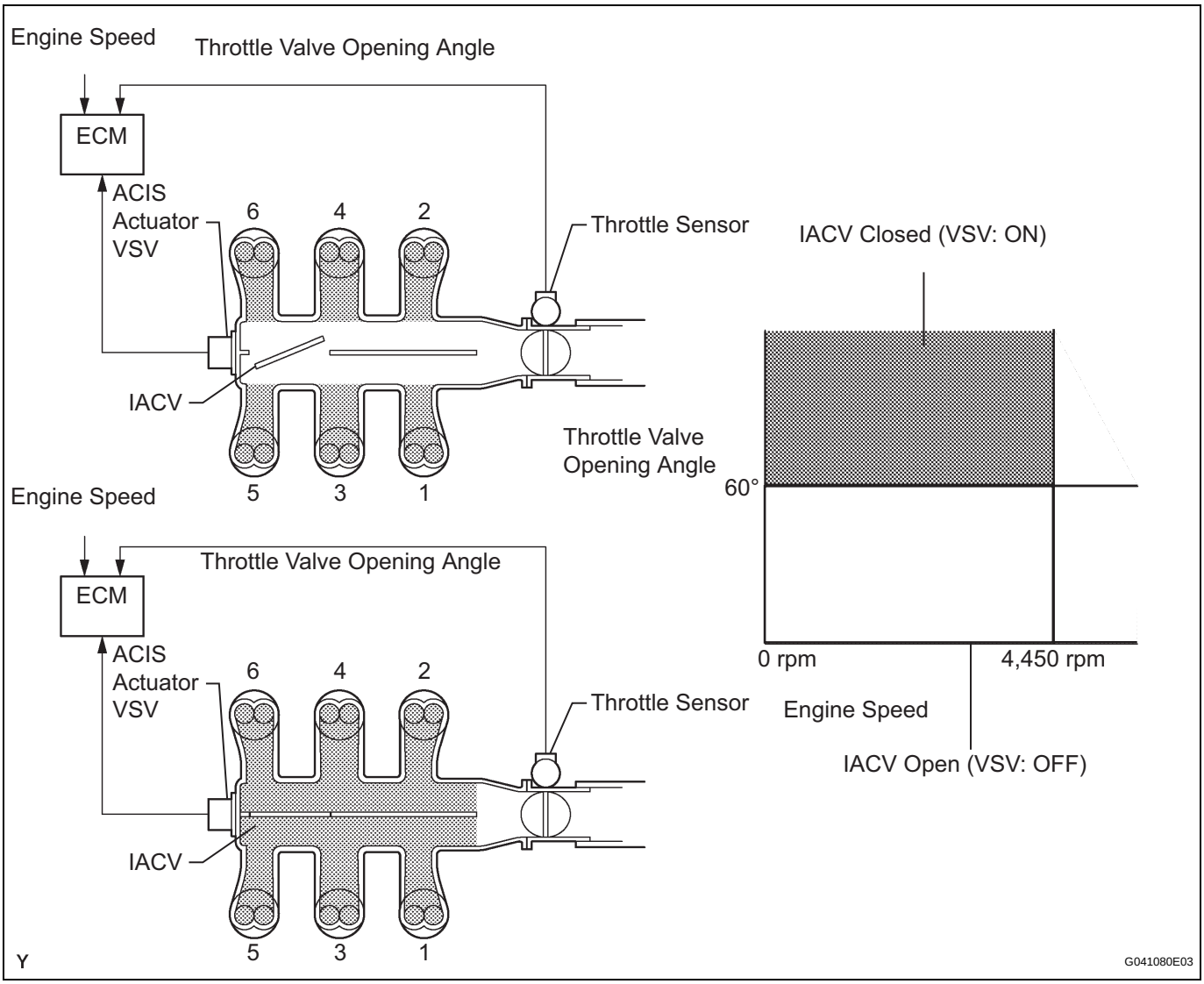

WIRING DIAGRAM

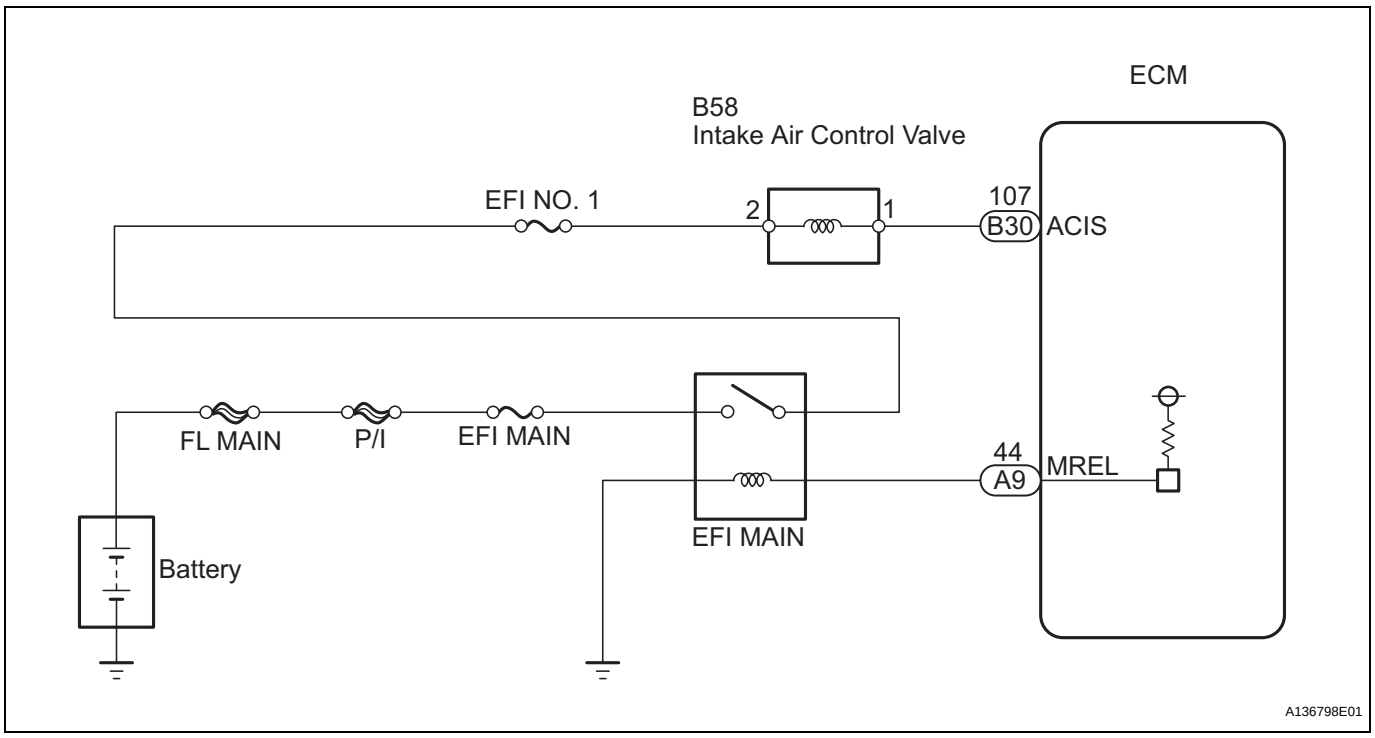

INSPECTION PROCEDURE

1	PERFORM ACTIVE TEST BY INTELLIGENT TESTER (OPERATE VSV FOR ACIS)

(a) Connect the intelligent tester to the DLC3.
(b) Start the engine and turn the intelligent tester on.
(c) Select the following menu items: DIAGNOSIS / ENHANCED OBD II / ACTIVE TEST / INTAKE CTL VSV1. Operate the VSV for ACIS.
OK:
Operational noise can be heard.

OK	PROCEED TO NEXT CIRCUIT INSPECTION SHOWN IN PROBLEM SYMPTOMS TABLE

NG

2	CHECK INTAKE AIR CONTROL VALVE (OPERATION)

Component Side:



Intake Air Control Valve

E121181E01

(a) Disconnect the B58 air intake valve connector.
(b) Apply battery voltage between the terminals of the air intake valve connector.
(c) Check the air intake valve operation.
OK:
Operational noise can be heard.

NG	REPLACE INTAKE AIR SURGE TANK

OK

3	CHECK WIRE HARNESS (INTAKE AIR CONTROL VALV - ECM, INTEGRATION RELAY)

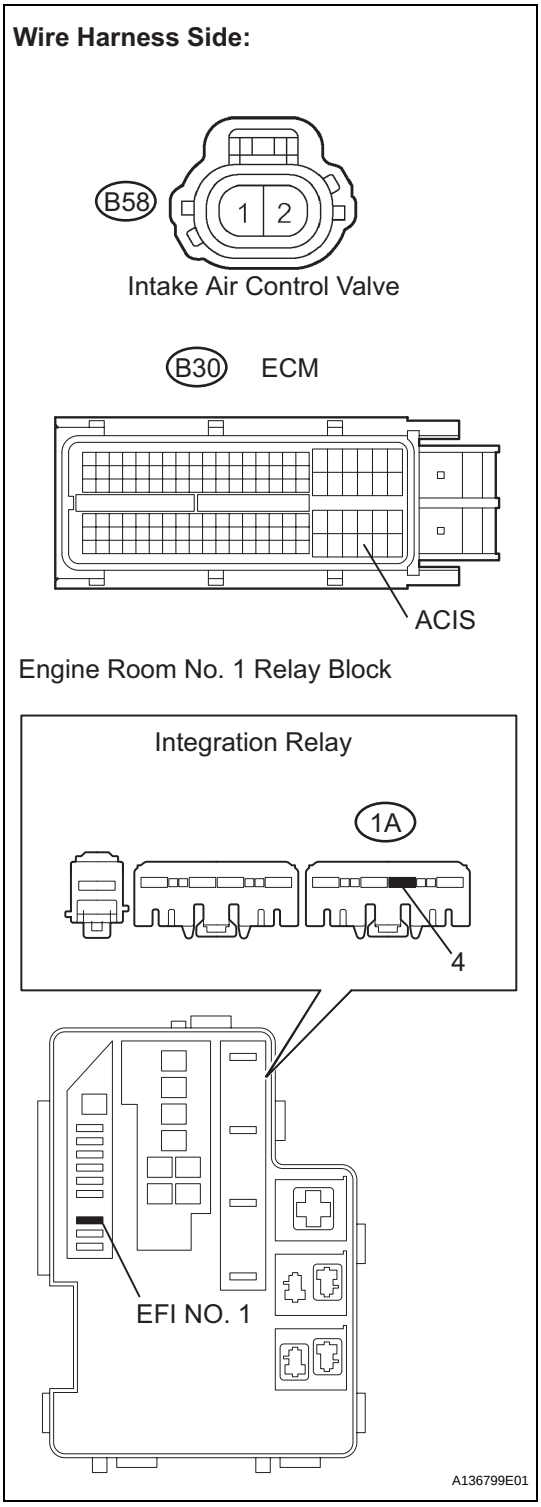

(a) Remove the EFI NO. 1 fuse from the engine room No. 1 relay block.
(b) Check the EFI NO. 1 fuse.
(c) Reinstall the EFI NO. 1 fuse.
(d) Disconnect the B58 intake air control valve connector.
(e) Disconnect the B30 ECM connector.
(f) Remove the integration relay from the engine room No. 1 relay block.
(g) Disconnect the 1A integration relay connector.
(h) Measure the resistance of the wire harness side connectors.

Standard resistance

Tester Connection	Specified Condition
B58-1 - B30-107 (ACIS)	Below 1 Ω
B58-2 - 1A-4	Below 1 Ω
B58-1 or B30-107 (ACIS) - Body ground	10 kΩ or higher
B58-2 or 1A-4 - Body ground	10 kΩ or higher

(i) Reconnect the intake air control valve connector.
(j) Reconnect the ECM connector.
(k) Reconnect the integration relay connector.
(l) Reinstall the integration relay.

NG → **REPAIR OR REPLACE HARNESS AND CONNECTOR**

OK

REPLACE ECM

Air Intake Control Circuit

DESCRIPTION

The air cleaner is equipped with 2 inlets, one of which is opened or closed by the Air Intake Control Valve (AICV). This system reduces intake noise and increases engine power at low to high engine speeds range.

When the engine is operating in the low-to-mid speed range, this control operates the AICV to close one of the air cleaner inlets. When the engine speed is more than 3,600 rpm and the opening angle of the throttle valve is more than 60°, the ECM activates the VSV and opens the AICV.

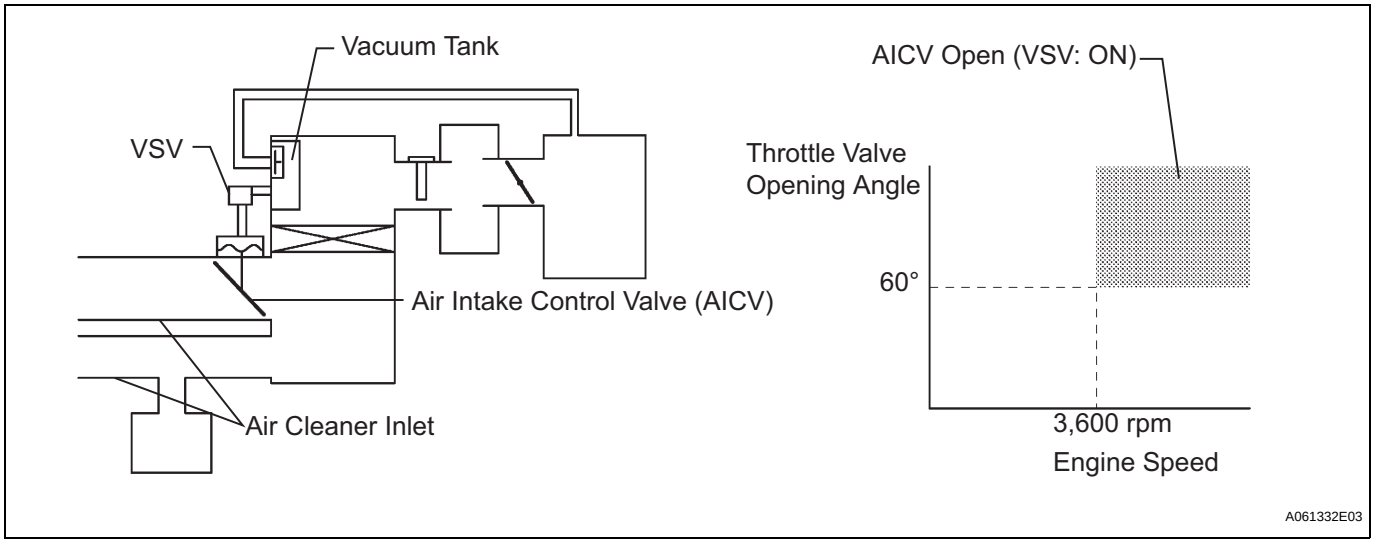

ES

WIRING DIAGRAM

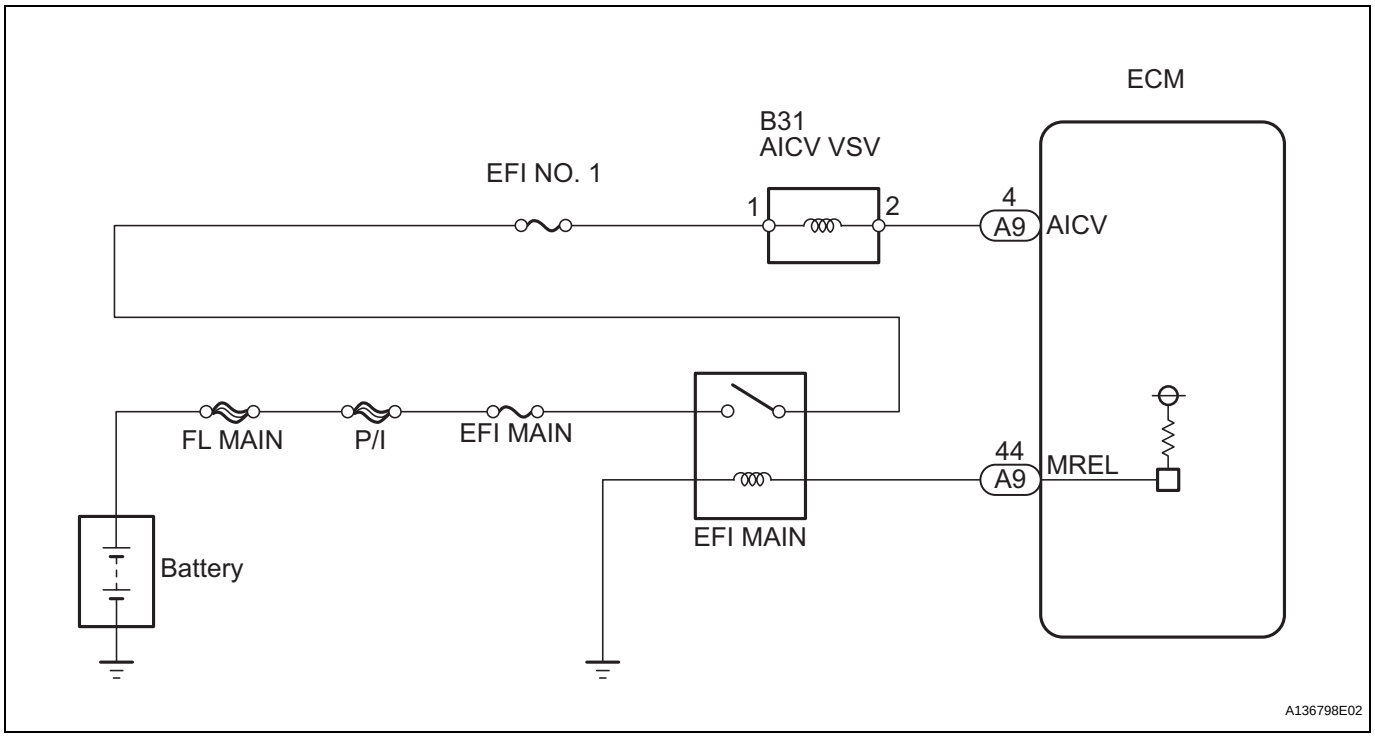

INSPECTION PROCEDURE

1	PERFORM ACTIVE TEST BY INTELLIGENT TESTER (AICV VSV)

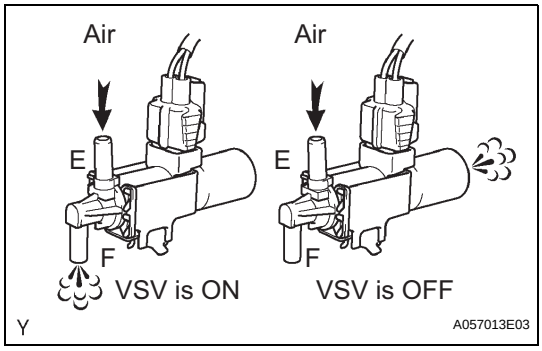

(a) Turn the ignition switch ON and turn the intelligent tester ON.
(b) Select the following menu items: DIAGNOSIS / ENHANCED OBD II / ACTIVE TEST / AICV VSV.
(c) Check the operation of the VSV when the VSV is operated by the intelligent tester.

Standard

Tester Operation	Specified Condition
VSV is ON	Air from port E flows out through port F
VSV is OFF	Air from port E flows out through the air filter

OK → **Go to step 4**

NG

2	INSPECT AICV VSV

(a) Inspect the AICV VSV (See page IT-6).

NG → **REPLACE INTAKE AIR CONTROL VALVE ASSEMBLY**

OK

ES

3	CHECK WIRE HARNESS (AICV VSV - ECM AND INTEGRATION RELAY)

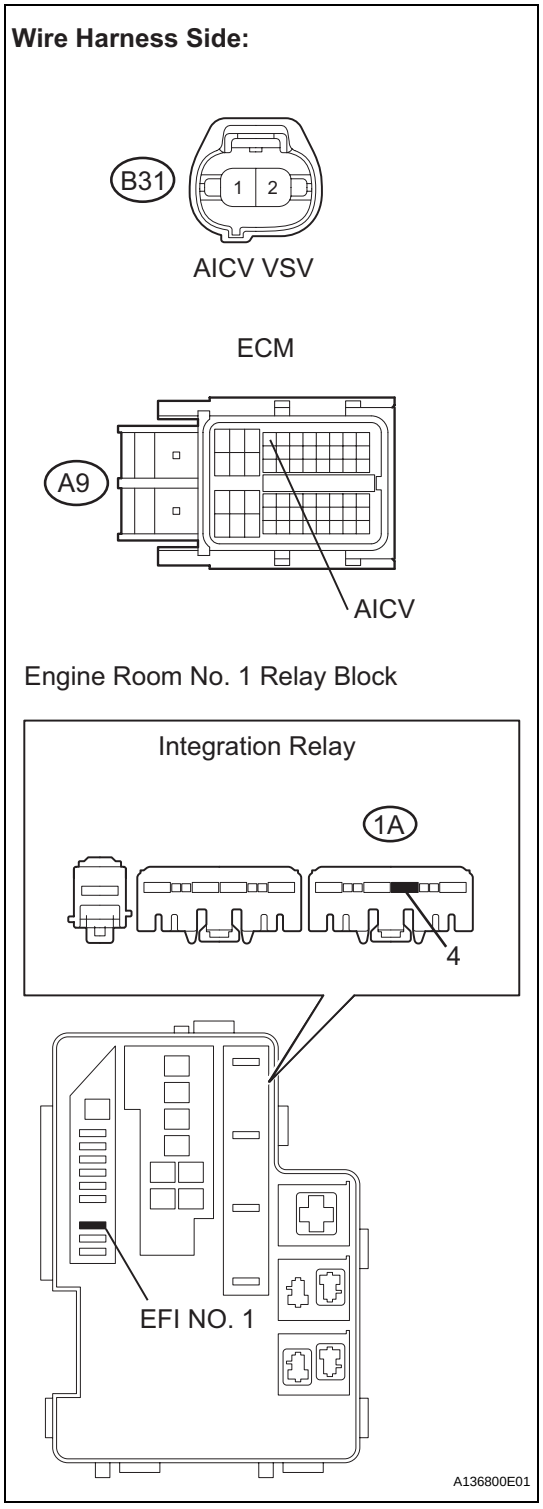

(a) Remove the EFI NO. 1 fuse from the engine room No. 1 relay block.
(b) Check the EFI NO. 1 fuse.
(c) Reinstall the EFI NO. 1 fuse.
(d) Disconnect the B31 AICV VSV connector.
(e) Disconnect the A9 ECM connector.
(f) Remove the integration relay from the engine room No. 1 relay block.
(g) Disconnect the 1A integration relay connector.
(h) Measure the resistance of the wire harness side connectors.

Standard resistance

Tester Connection	Specified Condition
B31-2 - A9-4	Below 1 Ω
B31-1 - 1A-4	Below 1 Ω
B31-2 or A9-4 - Body ground	Below 10 kΩ or higher
B31-1 or 1A-4 - Body ground	Below 10 kΩ or higher

(i) Reconnect the integration relay connector.
(j) Reinstall the integration relay.
(k) Reconnect the ECM connector.
(l) Reconnect the AICV VSV connector.

NG → **REPAIR OR REPLACE HARNESS AND CONNECTOR**

OK

REPLACE ECM

ES

4	CHECK VACUUM PIPING (HOSE AND INTAKE MANIFOLD, VACUUM TANK)

NG → REPAIR OR REPLACE VACUUM LEAKAGE POINT

OK

REPAIR COMPLETED

MIL Circuit

DESCRIPTION

The MIL (Malfunction Indicator Lamp) is used to indicate vehicle malfunction detections by the ECM. When the ignition switch is turned ON, power is supplied to the MIL circuit, and the ECM provides the circuit ground which illuminates the MIL.
The MIL operation can be checked visually: When the ignition switch is first turned ON, the MIL should be illuminated and should then turn off. If the MIL remains illuminated or is not illuminated, conduct the following troubleshooting procedure using the intelligent tester.

WIRING DIAGRAM

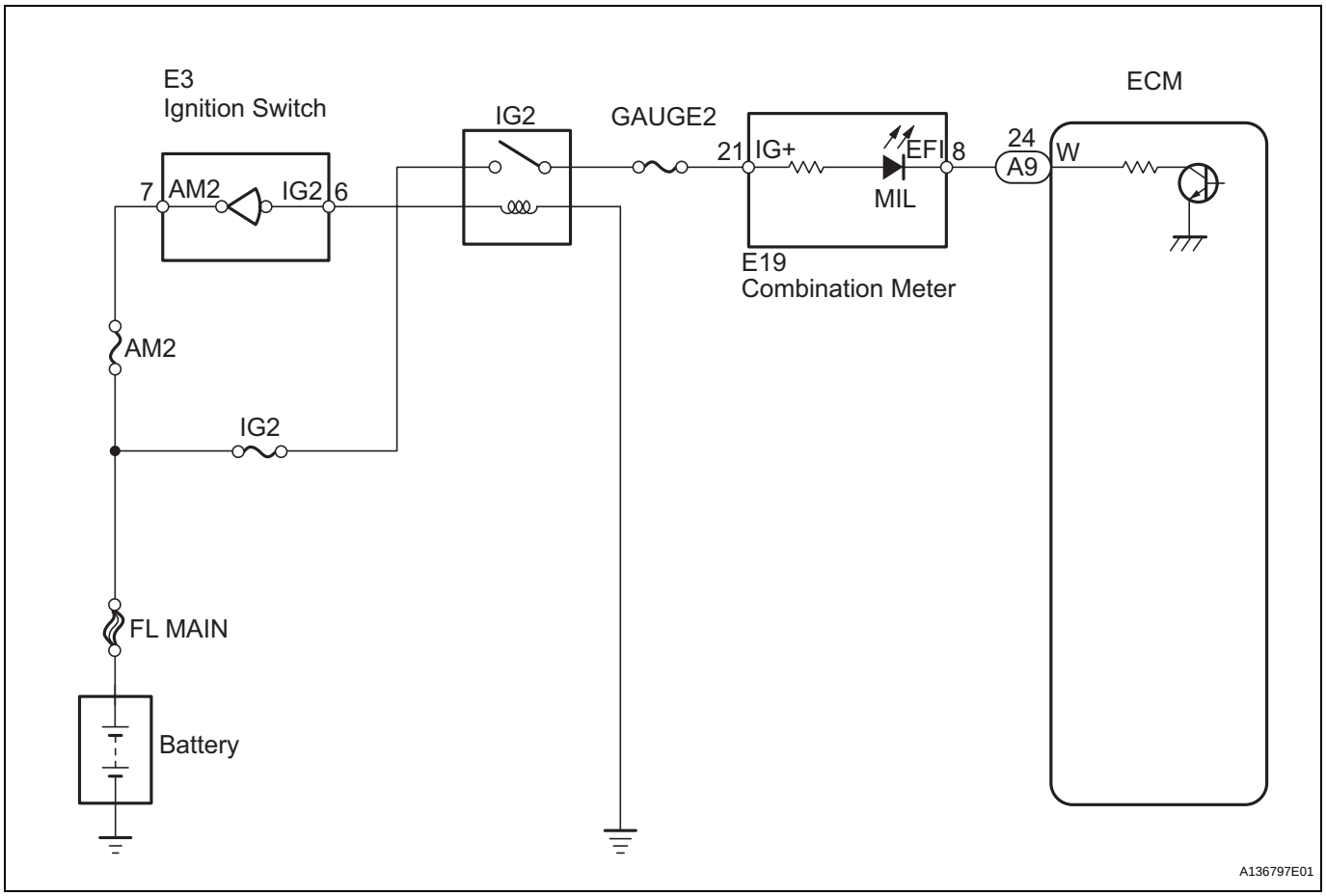

INSPECTION PROCEDURE

1	CHECK THAT MIL IS ILLUMINATED

(a) Perform troubleshooting in accordance with the table below.

Condition	Proceed to
MIL remains ON	A
MIL does not illuminate	B

B	Go to step 5

A

2	CHECK WHETHER MIL TURNS OFF

(a) Connect the intelligent tester to the DLC3.
(b) Turn the ignition switch ON and turn the tester ON.
(c) Select the following menu items: DIAGNOSIS / ENHANCED OBD II / DTC INFO / CURRENT CODES.
(d) Check if any DTCs have been stored. Note down any DTCs.
(e) Clear DTCs (see page ES-39).
(f) Check if the MIL goes off.
Standard:
MIL should go off.

ES

OK → **REPAIR CIRCUITS INDICATED BY OUTPUT DTCS**

NG

3	CHECK WIRE HARNESS (CHECK FOR SHORT IN WIRE HARNESS)

Wire Harness Side:

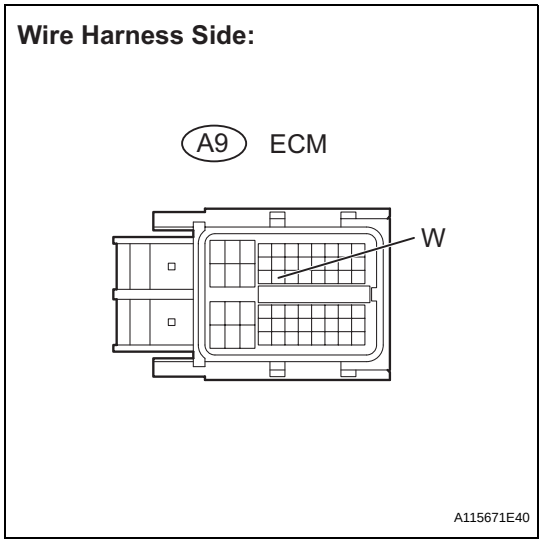

(a) Disconnect the A9 ECM connector.
(b) Turn the ignition switch ON.
(c) Check that the MIL is not illuminated.
OK:
MIL is not illuminated.
(d) Reconnect the ECM connector.

OK → **REPLACE ECM**

NG

4	CHECK WIRE HARNESS (COMBINATION METER - ECM)

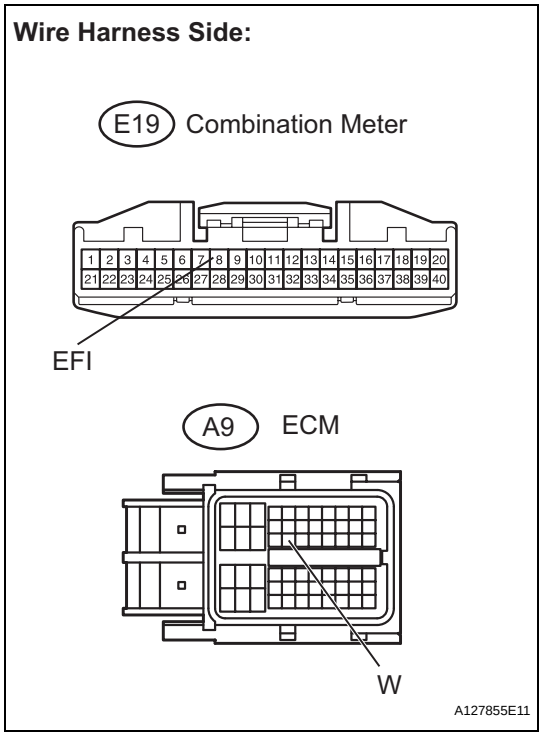

(a) Disconnect the A9 ECM connector.
(b) Disconnect the E19 combination meter connector.
(c) Measure the resistance.

Standard resistance

Tester Connection	Specified Condition
A9-24 (W) or E19-8 (EFI) - Body ground	10 kΩ or higher

(d) Reconnect the ECM connector.
(e) Reconnect the combination meter connector.

OK → **REPAIR OR REPLACE COMBINATION METER ASSEMBLY**

NG → **REPAIR OR REPLACE HARNESS AND CONNECTOR**

5	CHECK THAT MIL IS ILLUMINATED

(a) Check if the MIL is illuminated when the ignition switch is turned ON.

OK:

MIL should be illuminated.

OK → **SYSTEM OK**

NG

6	CHECK THAT ENGINE STARTS

(a) Turn the ignition switch ON.
(b) Start the engine.

Result	Proceed to
Engine starts	A
Engine does not start*	B

HINT:
*: The intelligent tester cannot communicate with the ECM.

B → GO TO VC OUTPUT CIRCUIT

A

7	INSPECT COMBINATION METER ASSEMBLY (MIL CIRCUIT)

(a) Check the MIL circuit (see page ME-17).

NG → REPAIR OR REPLACE COMBINATION METER ASSEMBLY

OK

CHECK AND REPLACE HARNESS AND CONNECTOR (COMBINATION METER - ECM)

SFI SYSTEM

PRECAUTION

NOTICE:

- **Perform RESET MEMORY (AT initialization) when replacing the automatic transmission assembly, engine assembly or ECM (see page AX-20).**
- **Perform REGISTRATION (VIN registration) when replacing the ECM (see page ES-14).**

HINT:
Initialization cannot be completed by only removing the battery.

DEFINITION OF TERMS

Terms	Definition
Monitor Description	Description of what ECM monitors and how it detects malfunctions (monitoring purpose and details).
Related DTCs	Group of diagnostic trouble codes that are output by ECM based on same malfunction detection logic.
Typical Enabling Condition	Preconditions that allow ECM to detect malfunctions. With all preconditions satisfied, ECM sets DTC when monitored value(s) exceeds malfunction threshold(s).
Sequence of Operation	Order of monitor priority, applied if multiple sensors and components involved in single malfunction detection process. Each sensor and component monitored in turn, when previous detection operation completed.
Required Sensor/Components	Sensors and components used by ECM to detect each malfunction.
Frequency of Operation	Number of times ECM checks for each malfunction during each driving cycle. "Once per driving cycle" means ECM only performs checks for that malfunction once during single driving cycle. "Continuous" means ECM performs checks for that malfunction whenever enabling conditions met.
Duration	Minimum time for which ECM must detect continuous deviation in monitored value(s) in order to set DTC. Timing begins when Typical Enabling Conditions met.
Malfunction Thresholds	Value beyond which ECM determines malfunctions exist and sets DTCs.
MIL Operation	Timing of MIL illumination after malfunction detected. "Immediate" means ECM illuminates MIL as soon as malfunction detected. "2 driving cycle" means ECM illuminates MIL if same malfunction detected second time during next sequential driving cycle.

ON-VEHICLE INSPECTION

1. CHECK THROTTLE BODY

(a) Check the throttle control motor operating sounds.
  (1) Turn the ignition switch ON.
  (2) When pressing the accelerator pedal, check the operating sound of the running motor. Make sure that no friction noises emit from the motor. If friction noise exists, replace the throttle body.

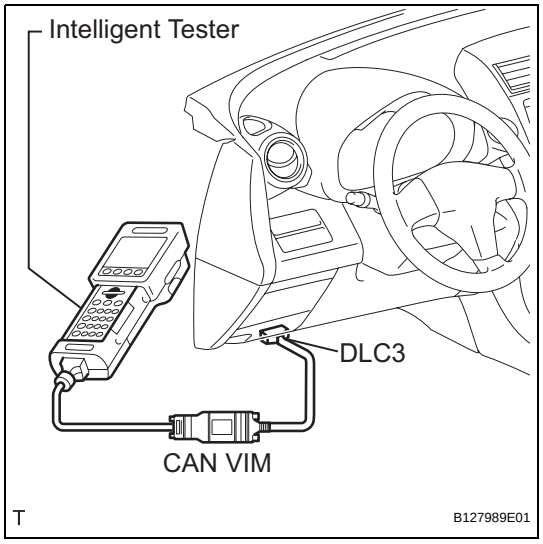

(b) Check the throttle position sensor.
  (1) Connect the intelligent tester to the DLC3.
  (2) Turn the ignition switch ON.
  (3) Push the intelligent tester main switch ON.
  (4) Enter the following menus: DIAGNOSIS / ENHANCED OBD II / DATA LIST / THROTTLE POS.
  (5) Depress the accelerator pedal. When the throttle valve is fully opened, check that the value of "THROTTLE POS" is within the specification.

Standard throttle valve opening percentage:
60% or more

NOTICE:

When checking the standard throttle valve opening percentage, the shift lever should be in the N position.

If the percentage is less than 60%, replace the throttle body.

ES

ES

REMOVAL

1. **DRAIN ENGINE COOLANT (See page CO-8)**
2. **DISCONNECT CABLE FROM NEGATIVE BATTERY TERMINAL**
   CAUTION:
   Wait at least 90 seconds after disconnecting the cable from the negative (-) battery terminal to prevent airbag and seat belt pretensioner activation.
3. **REMOVE V-BANK COVER SUB-ASSEMBLY (See page EM-21)**
4. **REMOVE AIR CLEANER CAP SUB-ASSEMBLY (See page EM-23)**
5. **REMOVE THROTTLE BODY**
   (a) Disconnect the 2 water by-pass hoses from the throttle body.

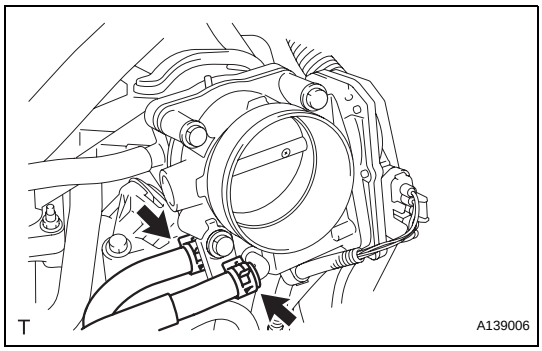

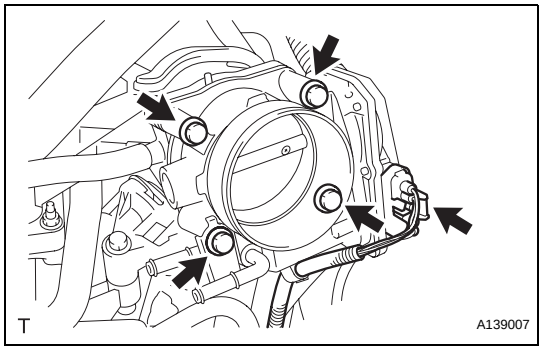

(b) Disconnect the control motor connector.
(c) Remove the 4 bolts and throttle body and wire harness clamp stay.
(d) Remove the gasket from the intake air surge tank.

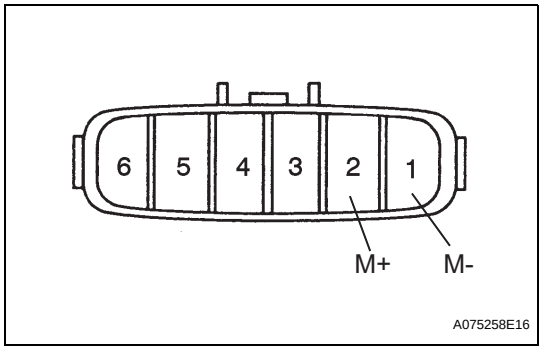

INSPECTION

1. **INSPECT THROTTLE BODY**
   (a) Measure the resistance of the throttle control motor.
   Standard resistance

Tester Connection	Condition	Specified Condition
1 (M-) - 2 (M+)	20°C (68°F)	0.3 to 100 Ω

If the result is not as specified, replace the throttle body.

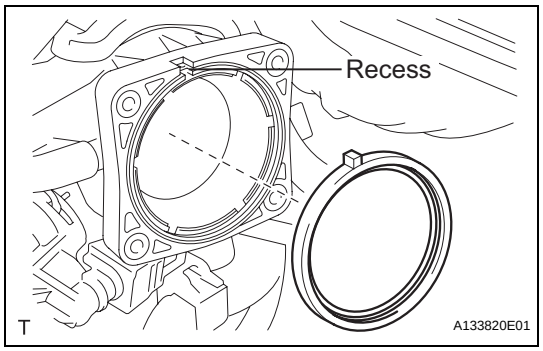

INSTALLATION

1. INSTALL THROTTLE BODY

(a) Install a new gasket to the intake air surge tank.

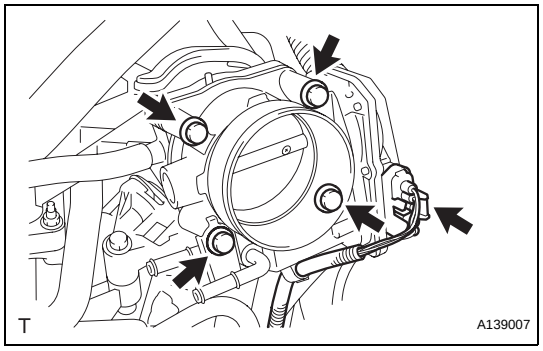

(b) Install the throttle body and wire harness clamp stay to the intake air surge tank with the 4 bolts.
Torque: 10 N*m (102 kgf*cm, 7 ft.*lbf)

(c) Connect the control motor connector.

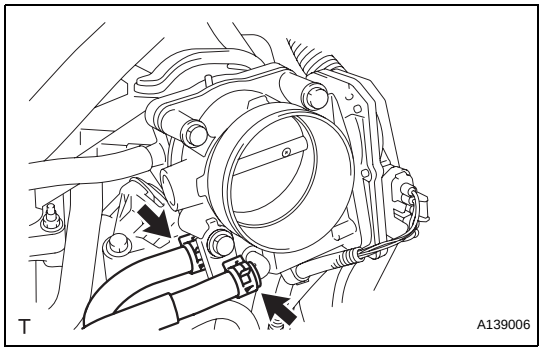

(d) Connect the 2 water by-pass hoses to the throttle body.

2. INSTALL AIR CLEANER CAP SUB-ASSEMBLY (See page EM-39)

3. CONNECT CABLE TO NEGATIVE BATTERY TERMINAL

4. ADD ENGINE COOLANT (See page CO-8)

5. CHECK FOR ENGINE COOLANT LEAKS (See page CO-1)

6. INSTALL V-BANK COVER SUB-ASSEMBLY (See page EM-41)

ES

THROTTLE BODY

COMPONENTS

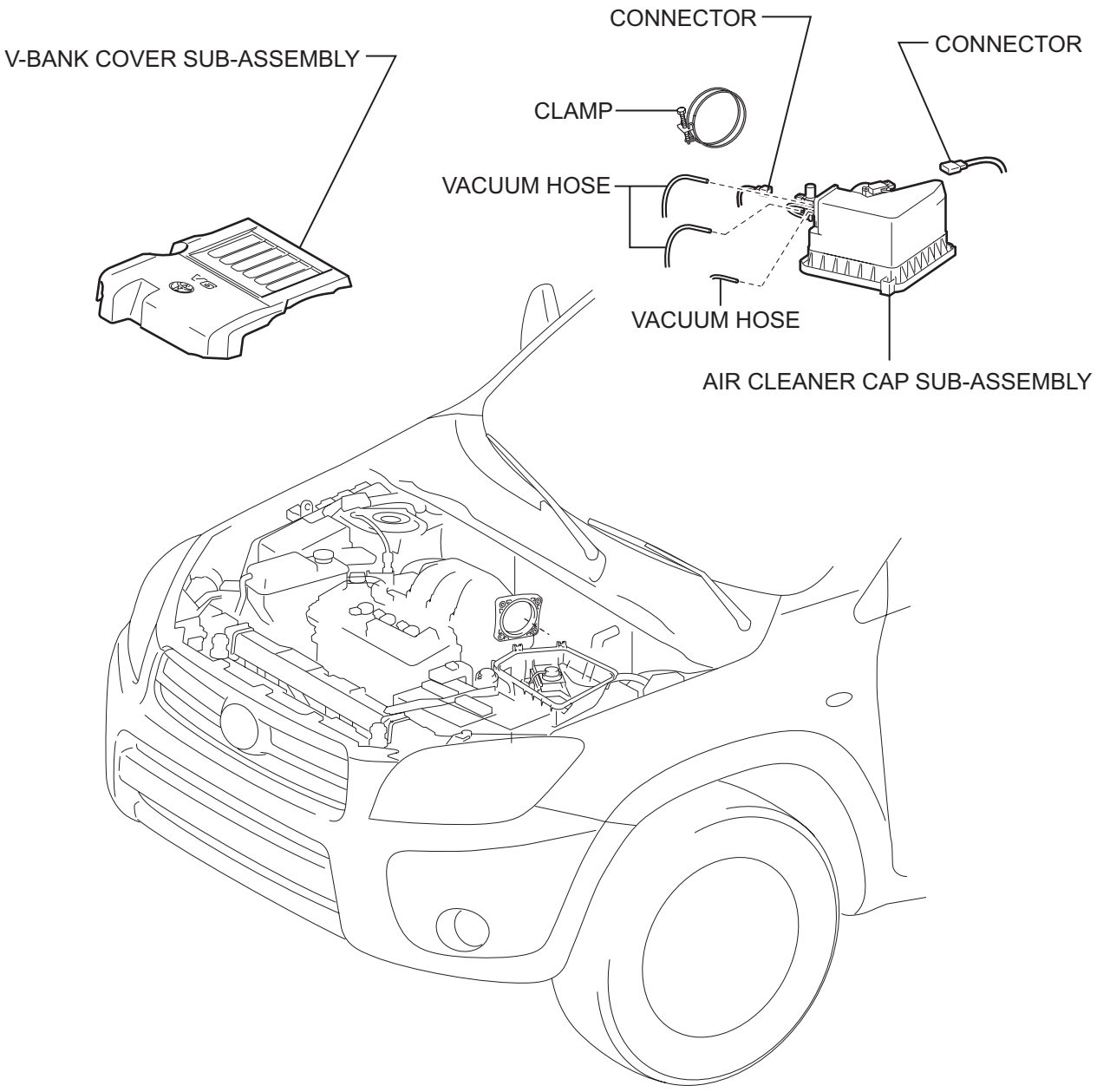

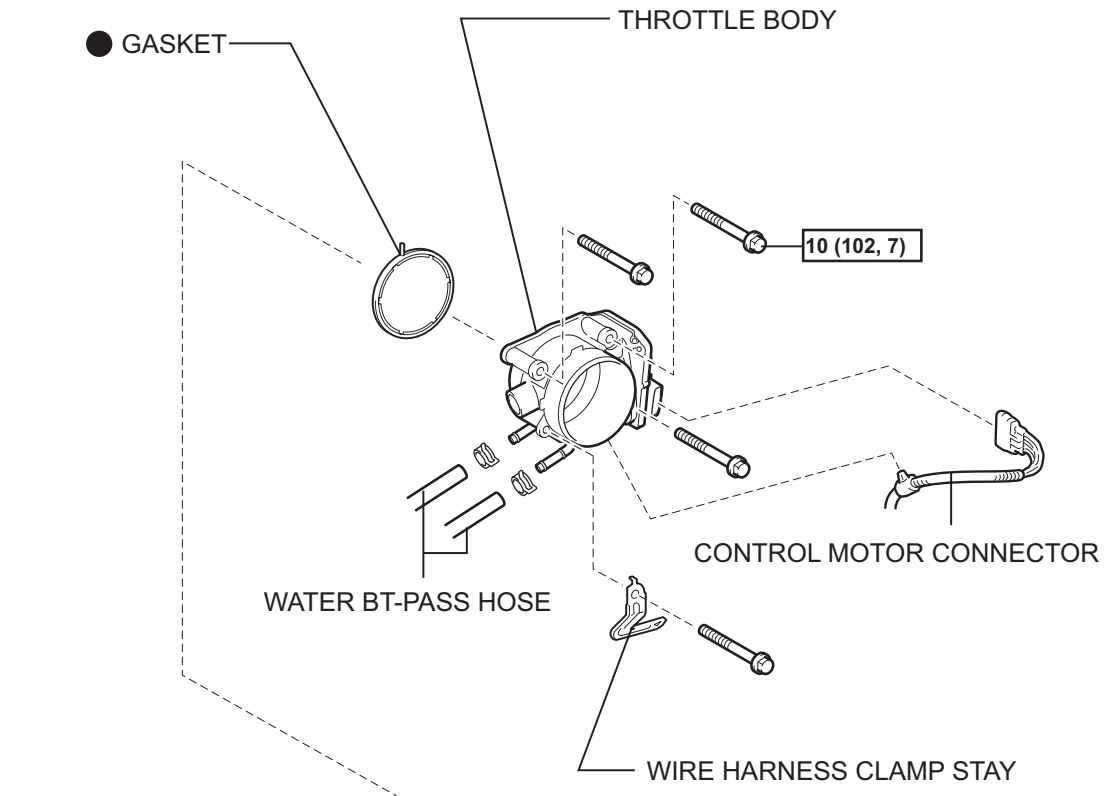

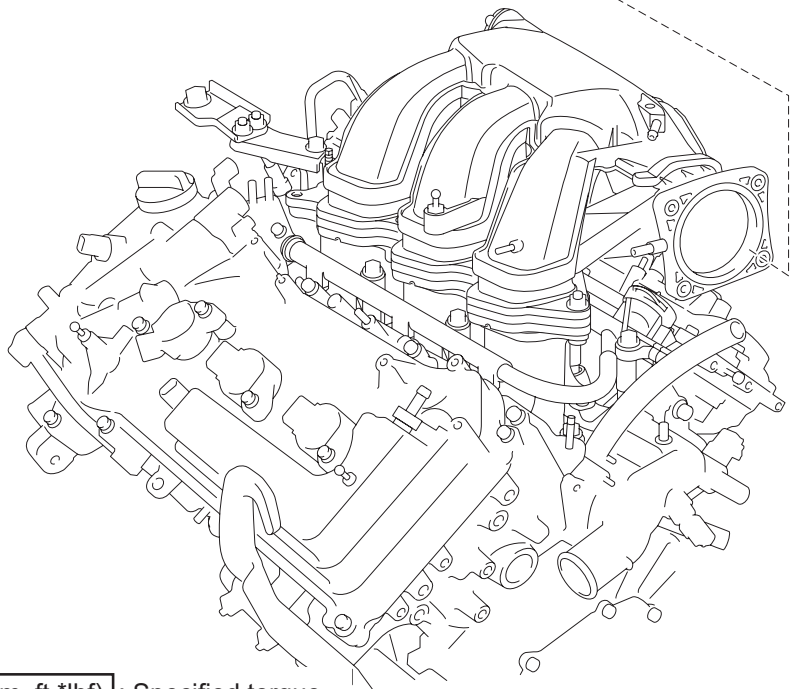

N*m (kgf*cm, ft.*lbf) : Specified torque

● Non-reusable part

P

A138822E01

for Bank 1

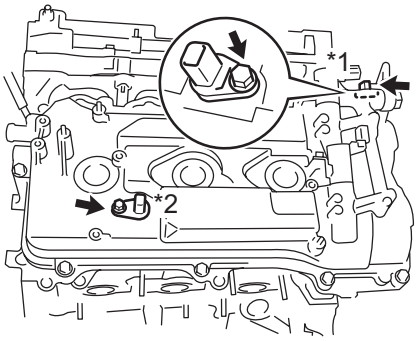

for Bank 2

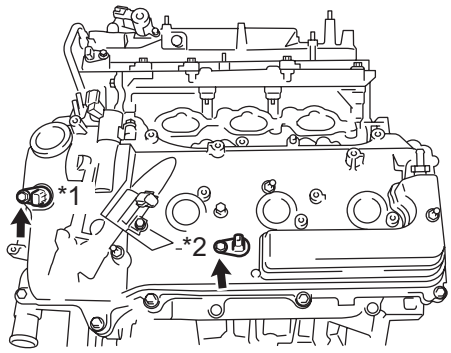

*1: for Intake Side *2: for Exhaust Side

A139005E01

INSTALLATION

1. **INSTALL VVT SENSOR**
   (a) Install the 4 sensors with the 4 bolts.
   Torque: 10 N*m (102 kgf*cm, 7 ft.*lbf)
   (b) Connect the 4 sensor connectors.
2. **INSTALL INTAKE AIR SURGE TANK ASSEMBLY (See page EM-34)**
3. **INSTALL ENGINE ASSEMBLY**
   (a) Install the engine (see page EM-31).
4. **CONNECT CABLE TO NEGATIVE BATTERY TERMINAL**

VVT SENSOR

COMPONENTS

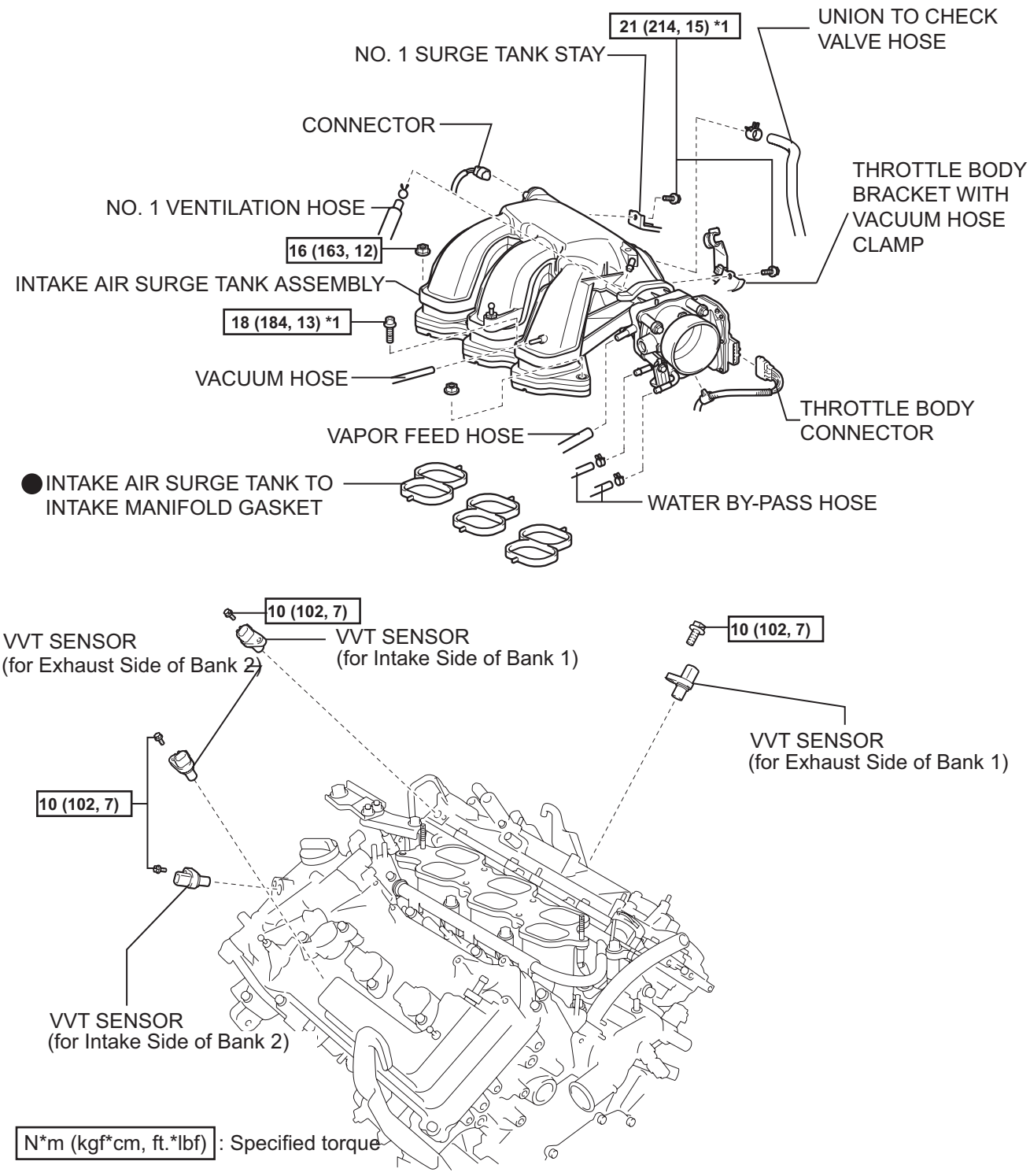

REMOVAL

1. **DISCONNECT CABLE FROM NEGATIVE BATTERY TERMINAL**
   CAUTION:
   Wait at least 90 seconds after disconnecting the cable from the negative (-) battery terminal to prevent airbag and seat belt pretensioner activation.
2. **REMOVE ENGINE ASSEMBLY**
   (a) Remove the engine (see page EM-21).
3. **REMOVE INTAKE AIR SURGE TANK ASSEMBLY (See page EM-27)**
4. **REMOVE VVT SENSOR**
   (a) Disconnect the 4 sensor connectors.
   (b) Remove the 4 bolts and 4 sensors.

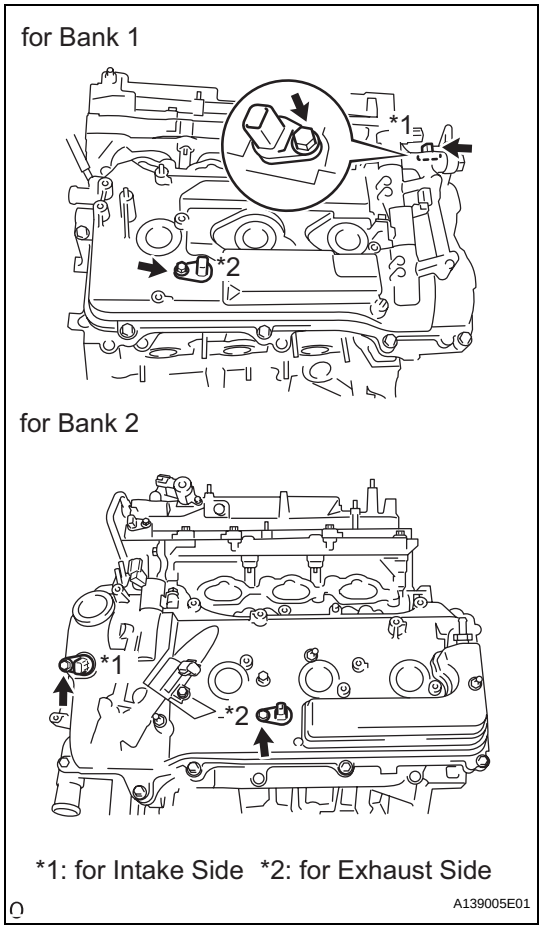

ES

DRIVE BELT

COMPONENTS

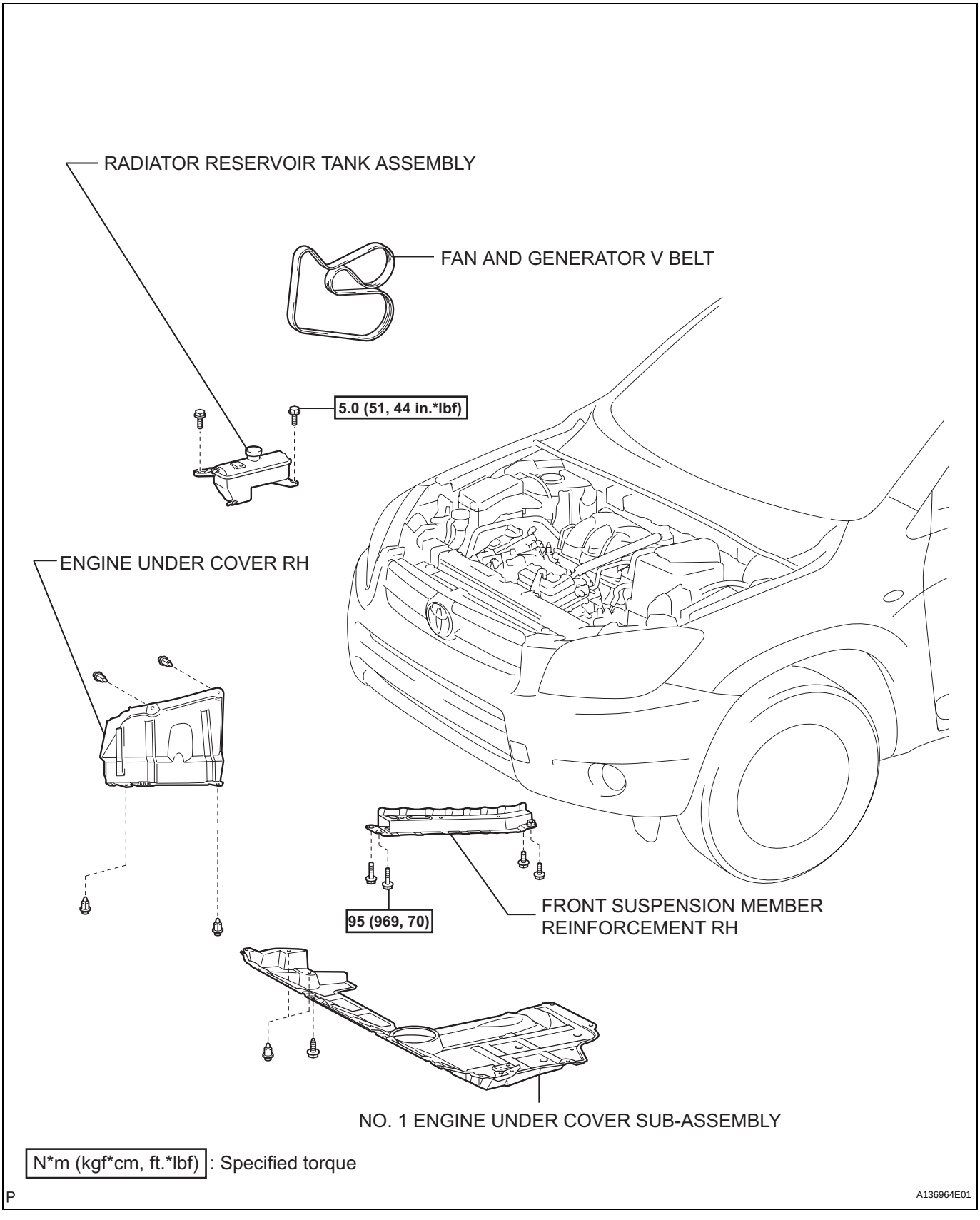

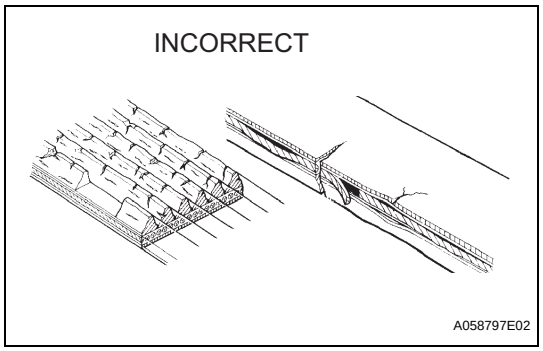

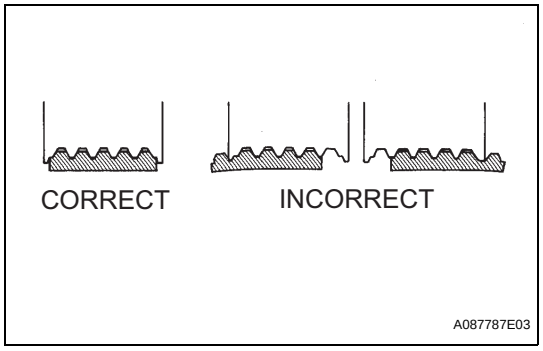

ON-VEHICLE INSPECTION

1. INSPECT FAN AND GENERATOR V BELT

(a) Visually check the drive belt for excessive wear, frayed cords, etc. If any defect is found, replace the drive belt.
HINT:
Cracks on the rib side of a drive belt are considered acceptable. If the drive belt has chunks missing from the ribs, it should be replaced.

(b) After installing the drive belt, check that it fits properly in the ribbed grooves. Check with your hand to confirm that the belt has not slipped out of the grooves on the bottom of the crank pulley.

EM

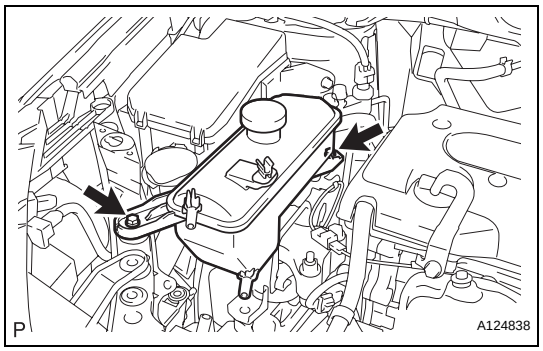

REMOVAL

1. DISCONNECT RADIATOR RESERVOIR TANK ASSEMBLY

(a) Remove the 2 bolts and disconnect the reservoir tank.

2. REMOVE NO. 1 ENGINE UNDER COVER SUB-ASSEMBLY (See page EM-21)

3. REMOVE ENGINE UNDER COVER RH

(a) Remove the 2 clips and engine under cover.

4. REMOVE FRONT SUSPENSION MEMBER REINFORCEMENT RH

(a) Remove the 4 bolts and reinforcement.

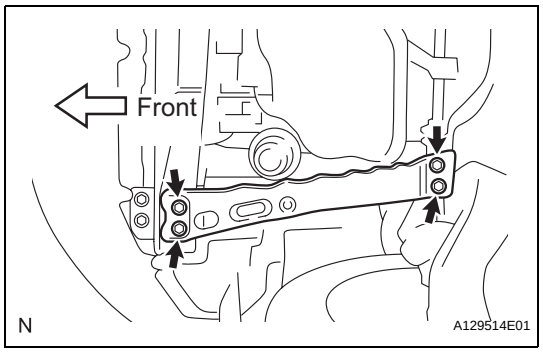

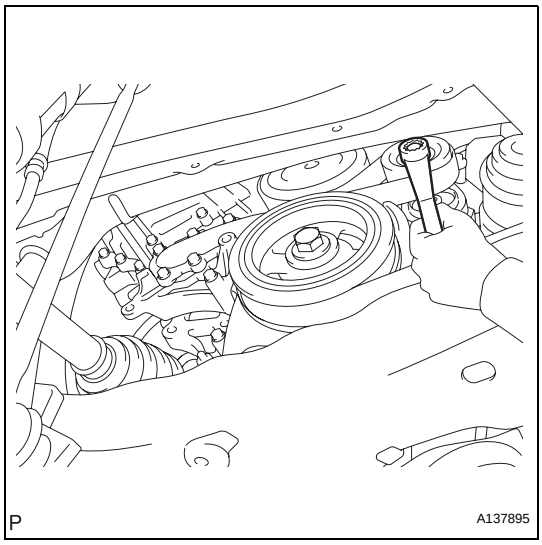

5. REMOVE FAN AND GENERATOR V BELT

(a) Rotate the tensioner pulley counterclockwise to loosen the belt tension. Then remove the V-ribbed belt.

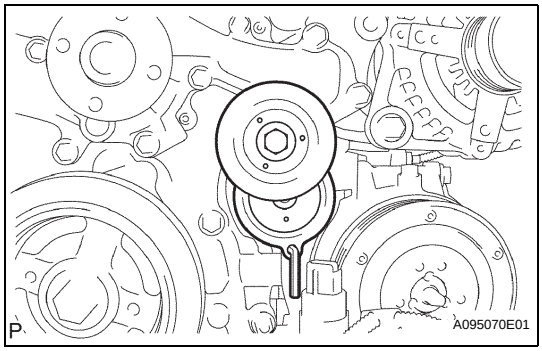

(b) While turning the belt tensioner counterclockwise, align its holes, and then insert the 5 mm bi-hexagon wrench into the holes to fix the V-ribbed belt tensioner in place.

INSTALLATION

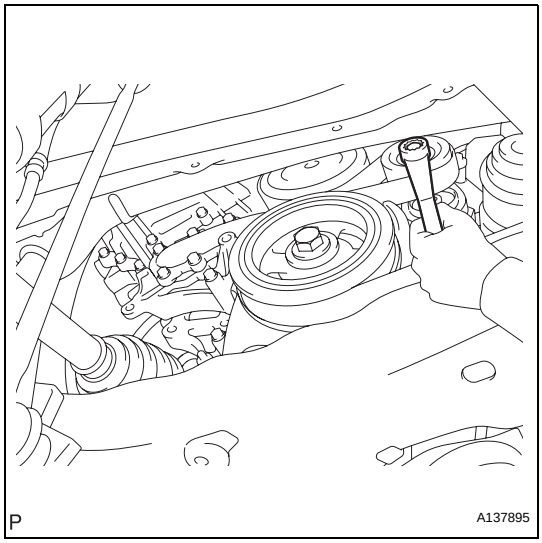

1. INSTALL FAN AND GENERATOR V BELT

(a) Rotate the tensioner pulley counterclockwise, and then install the V-ribbed belt.

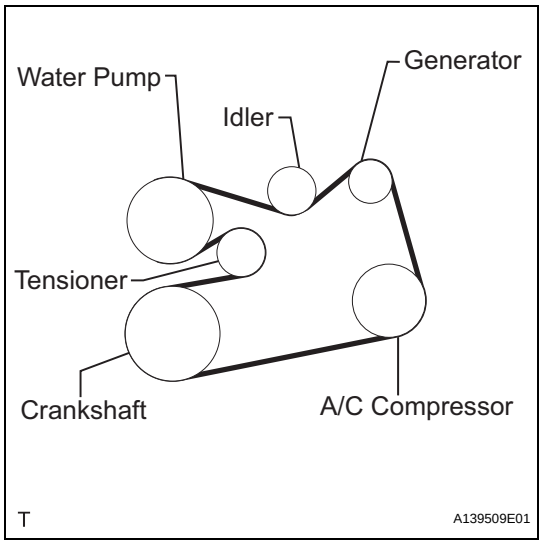

(b) If it is difficult to install the V-ribbed belt, perform the following procedure.
  (1) Put the V-ribbed belt on everything except the tensioner pulley as shown in the illustration.
  (2) While releasing the belt tension by turning the belt tensioner counterclockwise, put the V-ribbed belt on the tensioner pulley.
  NOTICE:
  - **Put the backside of the V-ribbed belt on the tensioner pulley and idler pulley.**
  - **Check that the V-ribbed belt is properly set to each pulley.**

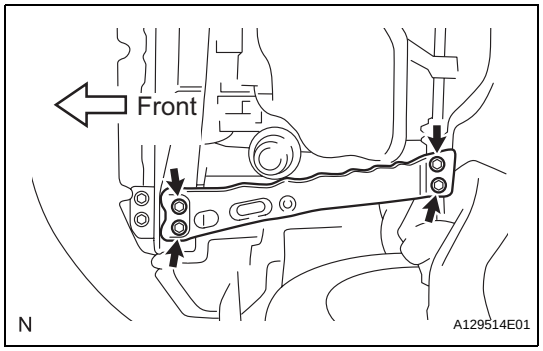

2. INSTALL FRONT SUSPENSION MEMBER REINFORCEMENT RH

(a) Install the reinforcement with the 4 bolts.
Torque: 95 N*m (969 kgf*cm, 70 ft.*lbf)

3. INSTALL ENGINE UNDER COVER RH

(a) Install the engine under cover with the 2 clips.

4. INSTALL NO. 1 ENGINE UNDER COVER (See page EM-41)

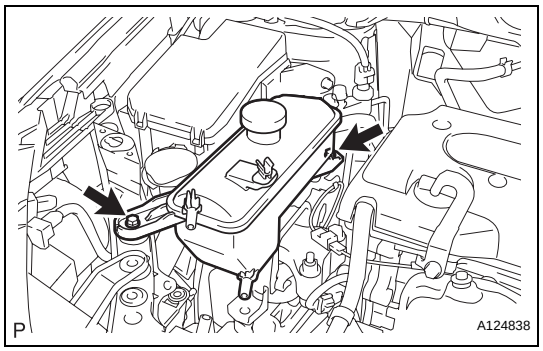

5. CONNECT RADIATOR RESERVOIR TANK ASSEMBLY

(a) Connect the reservoir tank with the 2 bolts.
Torque: 5.0 N*m (51 kgf*cm, 44 in.*lbf)

EM

REMOVAL

1. **DISCHARGE REFRIGERANT FROM REFRIGERATION SYSTEM (See page AC-172)**
2. **DISCHARGE FUEL SYSTEM PRESSURE (See page FU-13)**
3. **DISCONNECT CABLE FROM NEGATIVE BATTERY TERMINAL**
   CAUTION:
   Wait at least 90 seconds after disconnecting the cable from the negative (-) battery terminal to prevent airbag and seat belt pretensioner activation.
4. **REMOVE NO. 1 ENGINE UNDER COVER**
   (a) Remove the 4 bolts, 12 clips and under cover.
5. **REMOVE REAR ENGINE UNDER COVER RH**
   (a) Remove the 2 clips and under cover.
6. **REMOVE REAR ENGINE UNDER COVER LH**
   (a) Remove the 2 clips and under cover.
7. **REMOVE NO. 2 ENGINE UNDER COVER**
   (a) Remove the 2 clips and under cover.
8. **REMOVE FRONT FLOOR COVER (See page FU-34)**
9. **DRAIN ENGINE COOLANT (See page CO-8)**
10. **DRAIN ENGINE OIL (See page LU-4)**
11. **DRAIN AUTOMATIC TRANSAXLE FLUID**
    (a) 2WD:
    Drain automatic transaxle fluid (see page AX-172).
    (b) 4WD:
    Drain automatic transaxle fluid (see page AX-173)
12. **DRAIN TRANSFER OIL (for 4WD)**
13. **REMOVE HOOD SUB-ASSEMBLY (See page ED-4)**
14. **REMOVE V-BANK COVER SUB-ASSEMBLY**
    (a) Detach the 3 clips and remove the V-bank cover.

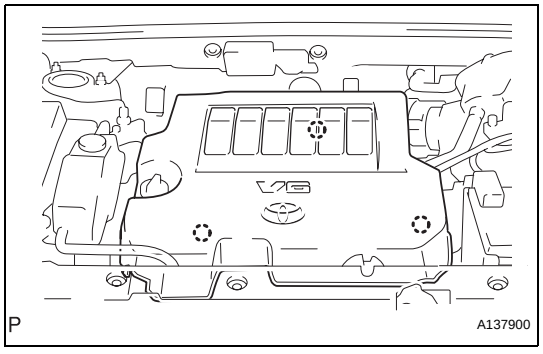

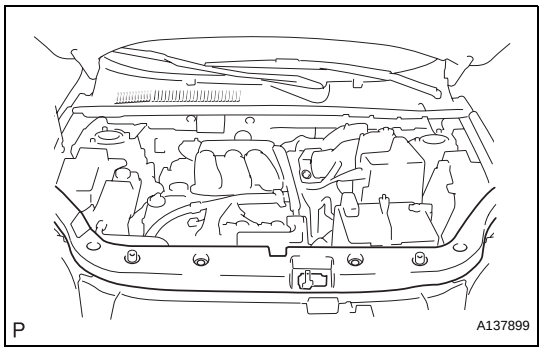

15. REMOVE RADIATOR SUPPORT OPENING COVER

(a) Remove the 9 clips and cover.

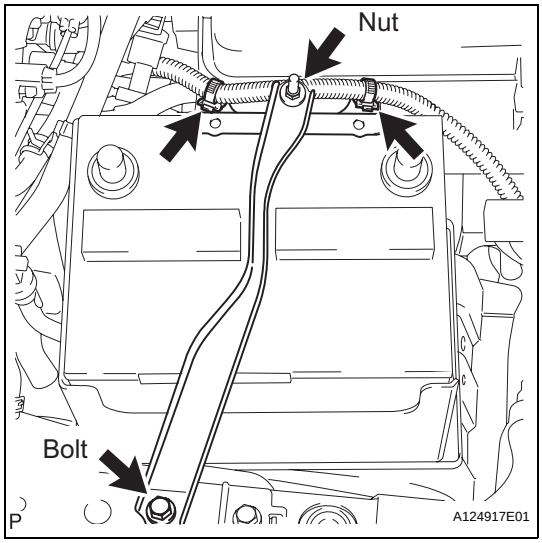

16. REMOVE BATTERY CLAMP SUB-ASSEMBLY

(a) Remove the bolt and loosen the nut.
(b) Detach the 2 wire harness clamps.
(c) Detach the hook of the battery clamp from the battery bracket front, and then remove the battery clamp.

17. REMOVE BATTERY

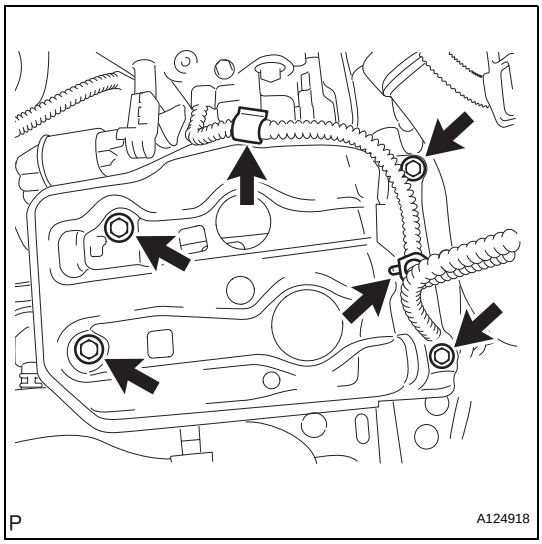

18. REMOVE FRONT BATTERY BRACKET

(a) Detach the 2 wire harness clamps.
(b) Remove the 4 bolts and front bracket.

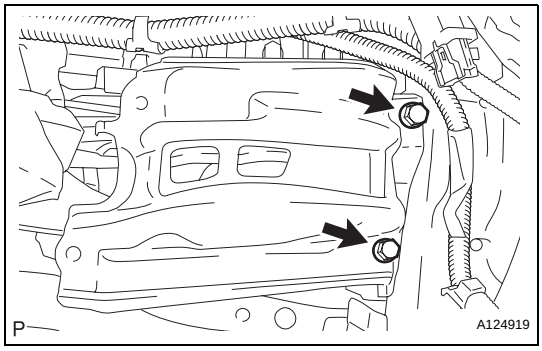

19. REMOVE BATTERY BRACKET REINFORCEMENT

(a) Remove the 2 bolts and bracket reinforcement.

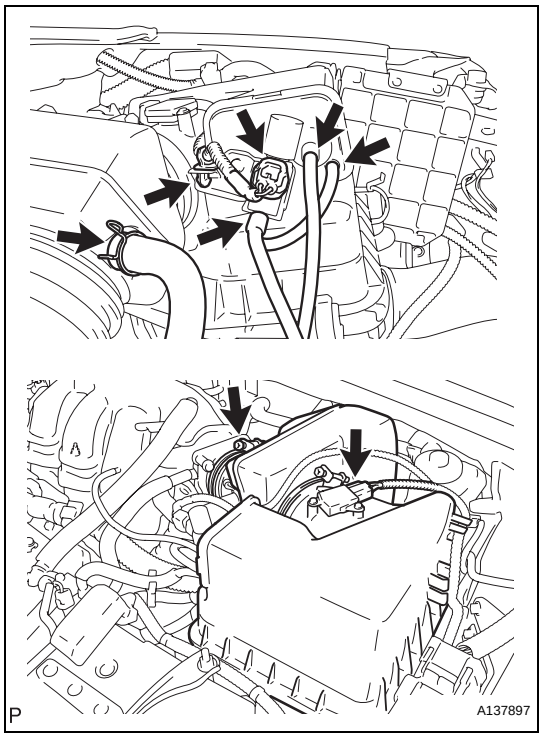

20. REMOVE AIR CLEANER CAP SUB-ASSEMBLY

(a) Disconnect the mass air flow meter connector.
(b) Disconnect the VSV (air intake control) connector.
(c) Disconnect the wire harness clamp and 3 vacuum hoses.
(d) Disconnect the No. 2 ventilation hose from the air cleaner hose.
(e) Loosen the No. 1 air cleaner hose clamp.
(f) Unfasten the 2 hook clamps, and then remove the air cleaner cap.
(g) Remove the air cleaner filter element from the air cleaner case.

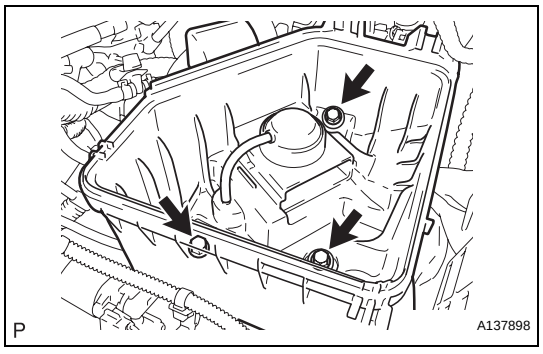

21. REMOVE AIR CLEANER CASE

(a) Disconnect the harness clamp.
(b) Remove the 3 bolts and air cleaner case.

22. DISCONNECT HOSES AND CONNECTORS

(a) Remove the engine room junction block cover (upper).
(b) Remove the nut and disconnect the engine room junction block cover (side) with 3 connectors and wire.
(c) Remove the nut and disconnect the starter wire.
(d) Disconnect the fuel hoses.
(e) Disconnect the 2 heater hoses.
(f) Disconnect the 2 ECM connectors.

23. REMOVE ECM (See page ES-470)

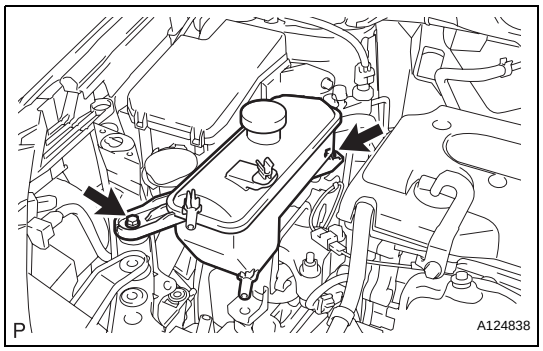

24. REMOVE RADIATOR RESERVOIR TANK ASSEMBLY

(a) Remove the 2 bolts, 2 hoses and reservoir tank.

25. REMOVE DISCHARGE HOSE SUB-ASSEMBLY (See page AC-220)

26. DISCONNECT SUCTION HOSE SUB-ASSEMBLY (See page AC-220)

27. DISCONNECT RADIATOR HOSE INLET

28. DISCONNECT RADIATOR HOSE OUTLET

29. DISCONNECT OIL COOLER HOSE

30. DISCONNECT TRANSMISSION CONTROL CABLE ASSEMBLY

(a) 2WD:
Disconnect the control cable (see page AX-154).

EM

(b) 4WD:
Disconnect the control cable (see page AX-154).

31. REMOVE FRONT EXHAUST PIPE ASSEMBLY (See page EX-3)

32. REMOVE CENTER EXHAUST PIPE ASSEMBLY (See page EX-2)

33. REMOVE PROPELLER WITH CENTER BEARING SHAFT ASSEMBLY (See page PR-3)

34. REMOVE FRONT WHEELS

35. REMOVE FRONT AXLE HUB NUT LH
(a) Remove the hub nut (see page AH-8).

36. REMOVE FRONT AXLE HUB NUT RH
(a) Remove the hub nut (see page AH-8).

37. DISCONNECT FRONT STABILIZER LINK ASSEMBLY LH (See page SP-30)

38. DISCONNECT FRONT STABILIZER LINK ASSEMBLY RH (See page SP-30)

39. DISCONNECT STEERING INTERMEDIATE SHAFT (See page PS-44)

40. DISCONNECT TIE ROD END SUB-ASSEMBLY RH (See page PS-42)

41. DISCONNECT TIE ROD END SUB-ASSEMBLY LH (See page PS-42)

42. REMOVE FRONT DRIVE SHAFT LH
(a) 2WD:
Remove the drive shaft (see page DS-10).
(b) 4WD:
Remove the drive shaft (see page DS-43).

43. REMOVE FRONT DRIVE SHAFT RH
(a) 2WD:
Remove the drive shaft (see page DS-10).
(b) 4WD:
Remove the drive shaft (see page DS-43).

44. REMOVE ENGINE WITH TRANSAXLE
(a) Install the No. 1 and No. 2 engine hangers with the 4 bolts as shown in the illustration.
Torque: 33 N*m (337 kgf*cm, 24 ft.*lbf)

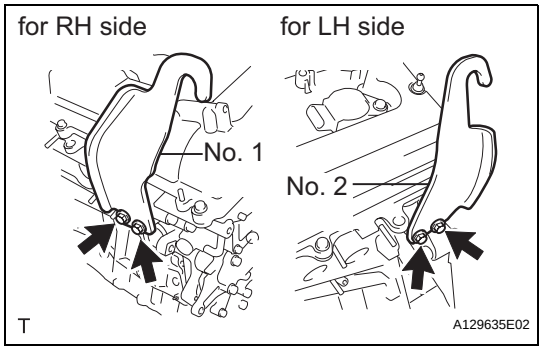

Part Name	Part No.
No. 1 engine hanger	12281-31120
No. 2 engine hanger	12282-31100
Bolt	91671-10825

HINT:
- Insert the claw of the hanger into hole of the cylinder head.
- Fit the fork part of the hanger onto the rib of the cylinder head.

(b) Install an engine sling device to the engine and hold the engine with a chain block.
CAUTION:
Do not raise the engine more than necessary. If the engine is raised excessively, the vehicle may also be lifted up.

(c) Set an engine lifter underneath the engine.

(d) Remove the column hole cover. Loosen the bolt holding the intermediate shaft, and slide the intermediate shaft.

(e) Put matchmarks on the intermediate shaft and pinion.

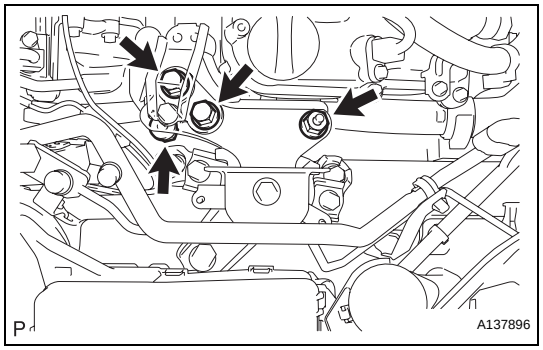

(f) Remove the 2 bolts and 2 nuts, and disconnect the engine mounting insulator RH.

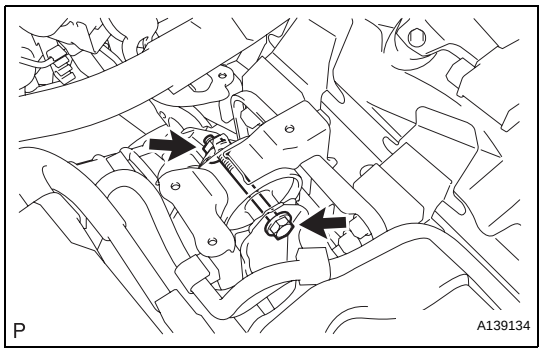

(g) Remove the bolt and nut, and disconnect the engine mounting insulator LH.

EM

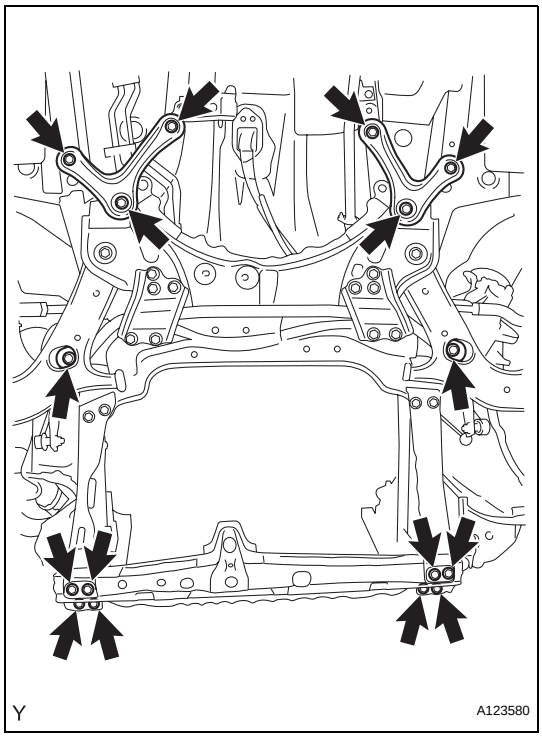

(h) Remove the 6 bolts and front suspension member brace rear RH and LH.
(i) Remove the 6 bolts, crossmember and suspension member.
(j) Using the chain block, slowly remove the engine from the vehicle and the intermediate shaft from the pinion. Then set the engine on the engine lifter.
NOTICE:
- **Make sure that the engine is clear of all wiring and hoses.**
- **While lowering the engine from the vehicle, do not allow it to contact the vehicle.**

HINT:
Place the engine on wooden blocks or an equivalent so that the engine is level.
(k) Remove the sling device from the engine.

45. REMOVE FRONT CROSSMEMBER SUB-ASSEMBLY
(a) Install a chain block.

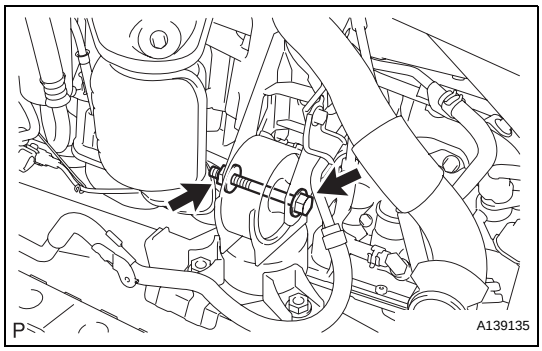

(b) Remove the bolt, nut and crossmember.

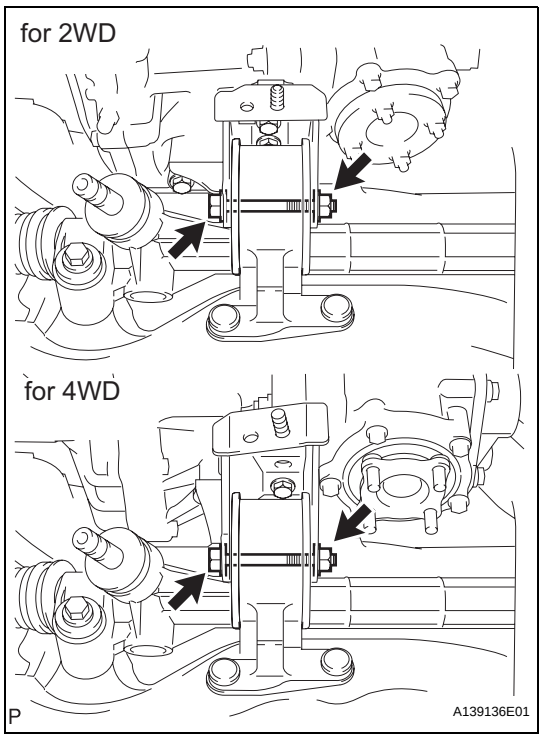

46. REMOVE FRONT SUSPENSION CROSSMEMBER SUB-ASSEMBLY
(a) Remove the bolt and suspension crossmember.

47. REMOVE ENGINE WIRE
(a) Remove the engine wire from the engine.

48. REMOVE STARTER ASSEMBLY (See page ST-6)

49. REMOVE TRANSFER ASSEMBLY (for 4WD) (See page TF-60)

50. REMOVE AUTOMATIC TRANSAXLE ASSEMBLY
(a) 2WD:
Remove the automatic transaxle (see page AX-172).
(b) 4WD:
Remove the automatic transaxle (see page AX-173).

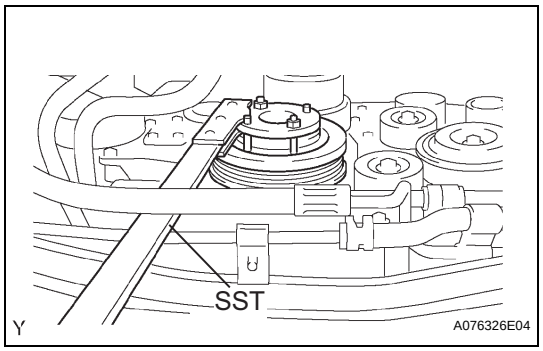

51. REMOVE DRIVE PLATE AND RING GEAR SUB-ASSEMBLY

(a) Using SST, hold the crankshaft.
SST 09213-70011, 09330-00021

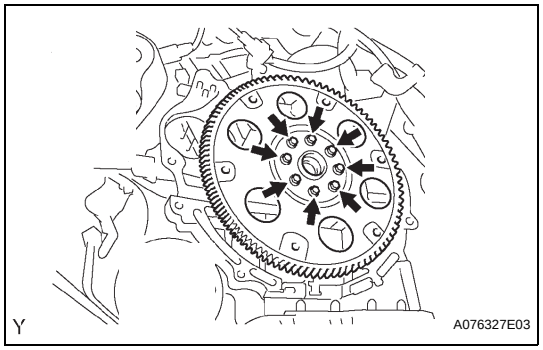

(b) Remove the 8 bolts, front spacer, drive plate and rear spacer.
NOTICE:
Do not reuse the bolts.

52. INSTALL ENGINE TO ENGINE STAND

(a) Install the engine to an engine stand. Remove the sling device and chain block from the engine.

EM

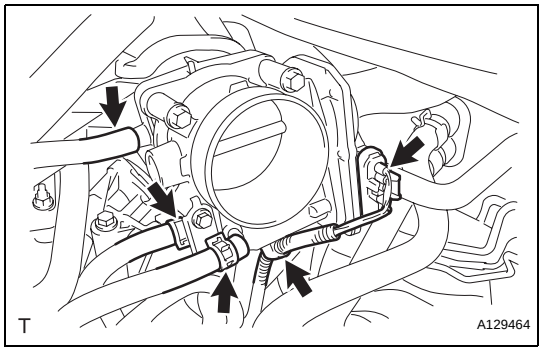

53. REMOVE INTAKE AIR SURGE TANK ASSEMBLY

(a) Disconnect the 2 water by-pass hoses from the throttle body.
(b) Disconnect the vapor feed hose.
(c) Disconnect the throttle body connector and clamp.

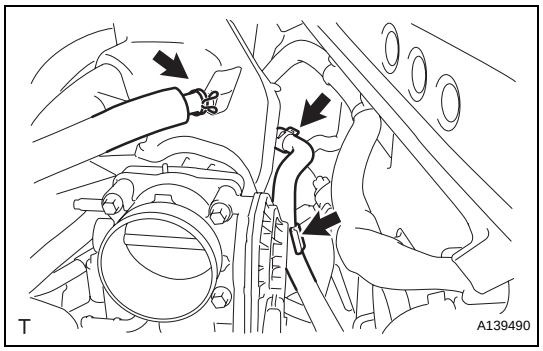

(d) Disconnect the No. 2 ventilation hose.
(e) Disconnect the union to check valve hose.

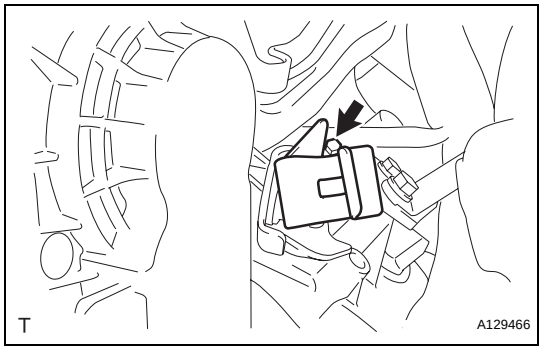

(f) Remove the bolt and vacuum hose clamp.

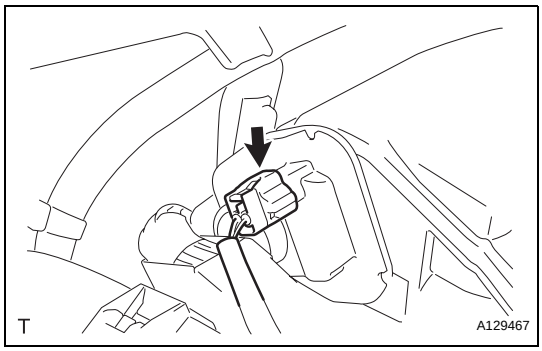

(g) Disconnect the connector.

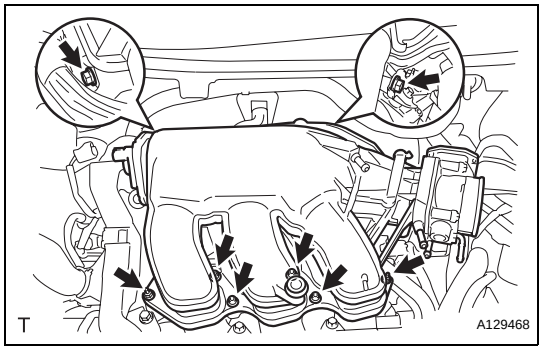

(h) Using a 5 mm socket hexagon wrench, remove the 4 bolts.
(i) Remove the 2 nuts, 2 bolts and surge tank.
(j) Remove the gasket from the surge tank.

54. REMOVE IGNITION COIL ASSEMBLY

(a) Remove the 6 bolts and 6 coils from the cylinder head.

55. REMOVE NO. 2 ENGINE MOUNTING STAY RH

(a) Remove the bolt and mounting stay.

56. REMOVE FUEL INJECTOR ASSEMBLY (See page FU-14)

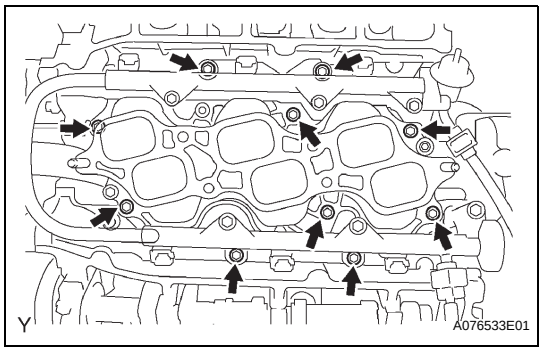

57. REMOVE INTAKE MANIFOLD

(a) Remove the 6 bolts, 4 nuts, intake manifold and 2 gaskets.

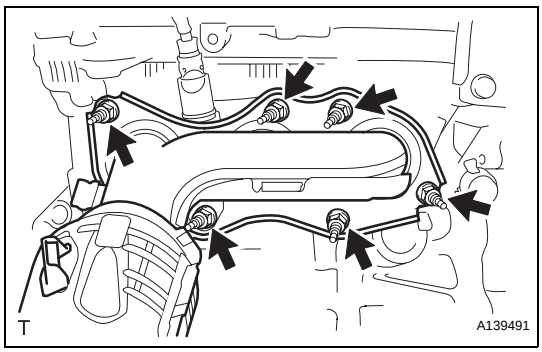

58. REMOVE EXHAUST MANIFOLD SUB-ASSEMBLY RH

(a) Disconnect the air fuel ratio sensor connector clamp.
(b) Uniformly loosen and remove the 6 nuts.
(c) Remove the manifold and gasket.

59. REMOVE FAN AND GENERATOR V BELT (See page EM-8)

60. REMOVE COMPRESSOR WITH PULLEY ASSEMBLY (See page AC-220)

61. REMOVE GENERATOR ASSEMBLY (See page CH-12)

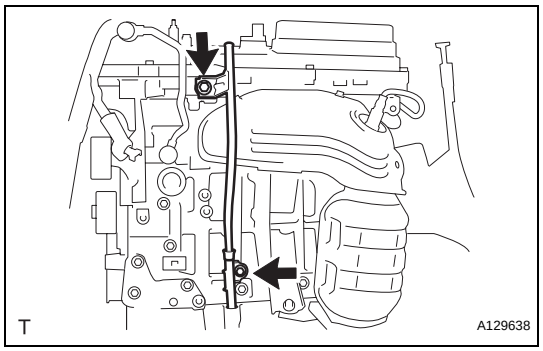

62. REMOVE OIL DIPSTICK GUIDE
(a) Remove the dipstick.
(b) Remove the 2 bolts, and the No. 1 and No. 2 guides.
(c) Remove the O-rings from the guide.

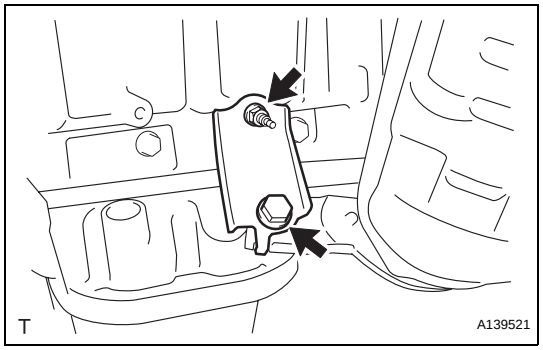

63. REMOVE NO. 2 MANIFOLD STAY
(a) Remove the bolt, nut and manifold stay.

64. REMOVE NO. 2 EXHAUST MANIFOLD HEAT INSULATOR
(a) Remove the 3 bolts and insulator.

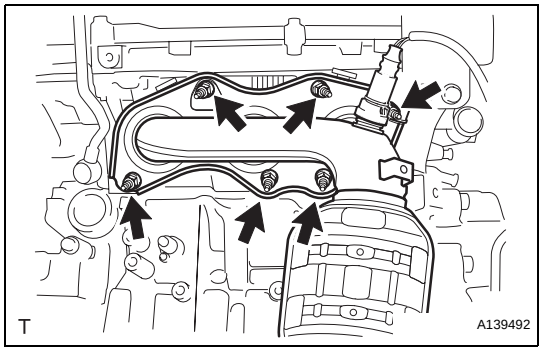

65. REMOVE EXHAUST MANIFOLD SUB-ASSEMBLY LH
(a) Uniformly loosen and remove the 6 nuts.
(b) Remove the manifold and gasket.

66. REMOVE ENGINE MOUNTING BRACKET RH
(a) Remove the 3 bolts and bracket.

67. REMOVE DRIVE SHAFT BEARING BRACKET
(a) Remove the 3 bolts and drive shaft bearing bracket.

68. REMOVE V-RIBBED BELT TENSIONER ASSEMBLY
(a) Remove the 5 bolts and V-ribbed belt tensioner assembly.

69. REMOVE NO. 2 TIMING GEAR COVER
(a) Remove the 2 bolts and gear cover.

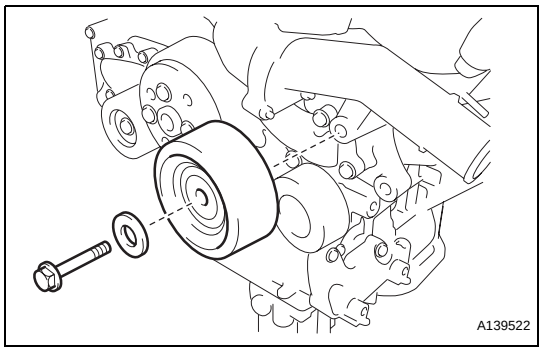

70. REMOVE NO. 2 IDLER PULLEY SUB-ASSEMBLY
(a) Remove the bolt, plate and idler pulley.

71. REMOVE WATER PUMP PULLEY (See page CO-12)

72. REMOVE NO. 1 FRONT ENGINE MOUNTING BRACKET LH
(a) Remove the 6 bolts and bracket.

EM

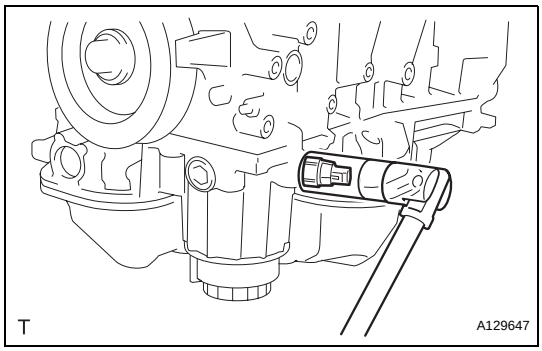

73. REMOVE ENGINE OIL PRESSURE SWITCH ASSEMBLY

(a) Using a 24 mm deep socket wrench, remove the pressure switch.

74. REMOVE KNOCK SENSOR (See page ES-459)

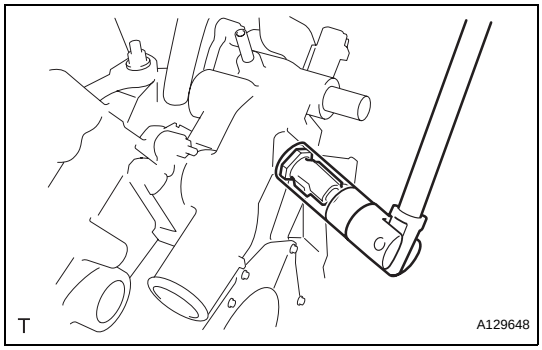

75. REMOVE ENGINE COOLANT TEMPERATURE SENSOR

(a) Using a 19 mm deep socket wrench, remove the sensor and gasket.

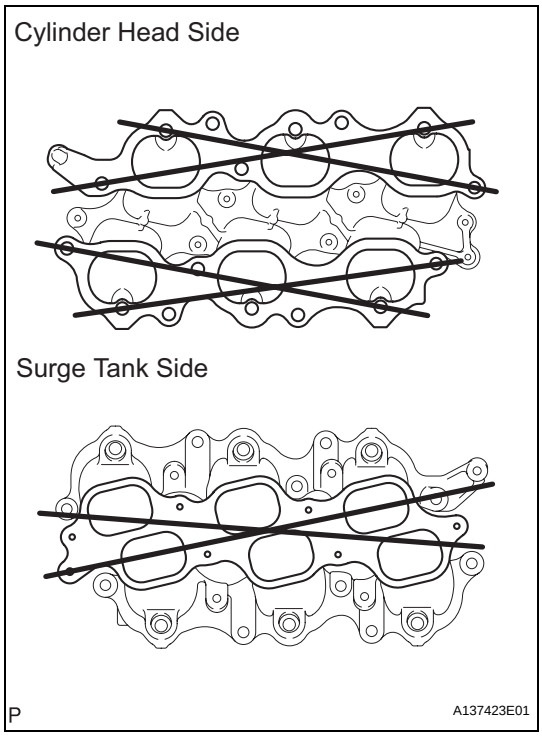

INSPECTION

1. INSPECT INTAKE MANIFOLD

(a) Using a precision straightedge and feeler gauge, measure the warpage of the contact surface of the cylinder head and intake air surge tank.

Maximum warpage

Item	Specified Condition
Intake manifold side	0.8 mm (0.031 in.)
Cylinder head side	0.2 mm (0.008 in.)

If the warpage is greater than the maximum, replace the manifold.

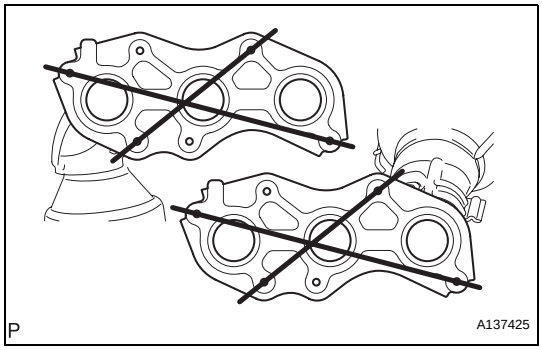

2. INSPECT EXHAUST MANIFOLD

(a) Using a precision straightedge and feeler gauge, measure the surface contacting the cylinder head for warpage.

Maximum warpage:

0.70 mm (0.0028 in.)

If the warpage is greater than the maximum, replace the manifold.

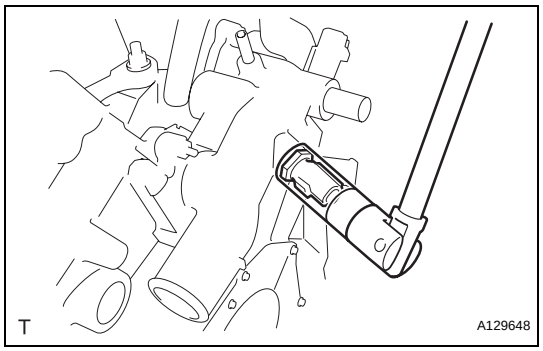

INSTALLATION

1. **INSTALL ENGINE COOLANT TEMPERATURE SENSOR**
   (a) Using a 19 mm deep socket wrench, install the sensor and a new gasket.
   Torque: 20 N*m (204 kgf*cm, 14 ft.*lbf)

2. **INSTALL KNOCK SENSOR (See page ES-459)**

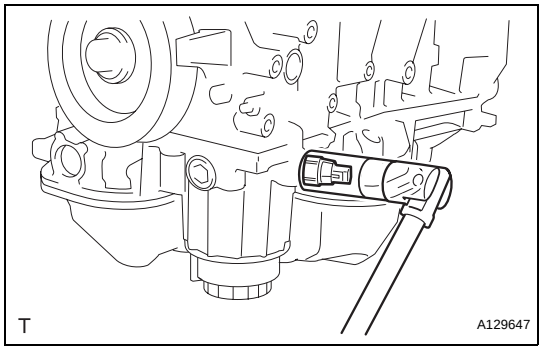

3. **INSTALL ENGINE OIL PRESSURE SWITCH ASSEMBLY**
   (a) Clean the threads of the oil pressure switch. Apply adhesive to 2 or 3 threads of the oil pressure switch.
   Adhesive:
   Toyota Genuine Adhesive 1344, Three Bond 1344 or Equivalent
   (b) Using a 24 mm deep socket wrench, install the oil pressure switch.
   Torque: 21 N*m (214 kgf*cm, 15 ft.*lbf)

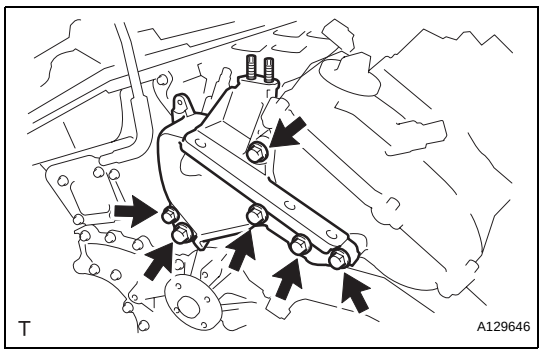

4. **INSTALL NO. 1 FRONT ENGINE MOUNTING BRACKET LH**
   (a) Install the mounting bracket with the 6 bolts.
   Torque: 54 N*m (551 kgf*cm, 40 ft.*lbf)

5. **INSTALL WATER PUMP PULLEY (See page CO-14)**

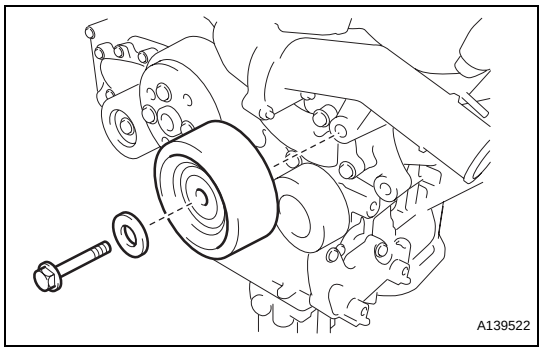

6. **INSTALL NO. 2 IDLER PULLEY SUB-ASSEMBLY**
   (a) Install the idler pulley and cover plate with the bolt.
   Torque: 43 N*m (438 kgf*cm, 32 ft.*lbf)

7. **INSTALL NO. 2 TIMING GEAR COVER**
   (a) Install the gear cover with the 2 bolts.
   Torque: 6.0 N*m (61 kgf*cm, 53 in.*lbf)

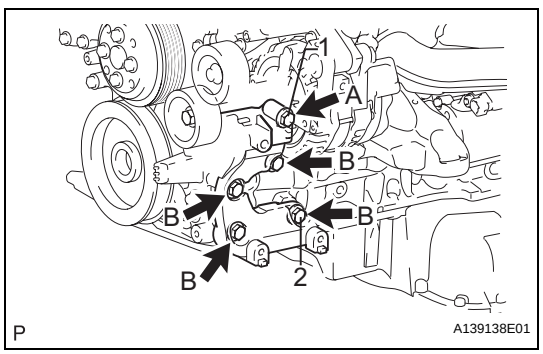

8. **INSTALL V-RIBBED BELT TENSIONER ASSEMBLY**
   (a) Temporarily install the V-ribbed belt tensioner with the 5 bolts.
   (b) Install the V-ribbed belt tensioner by tightening the bolt 1 and bolt 2 in the order shown in the illustration.
   Torque: 43 N*m (438 kgf*cm, 32 ft.*lbf)
   (c) Tighten the other bolts.
   Torque: 43 N*m (438 kgf*cm, 32 ft.*lbf)
   Each bolt length is as follows:

A	70 mm (2.76 in.)

EM

B	35 mm (1.37 in.)

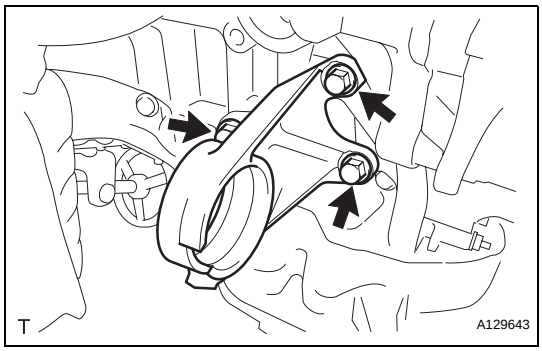

9. INSTALL DRIVE SHAFT BEARING BRACKET

(a) Install the drive shaft bearing bracket with the 3 bolts.
Torque: 64 N*m (653 kgf*cm, 47 ft.*lbf)

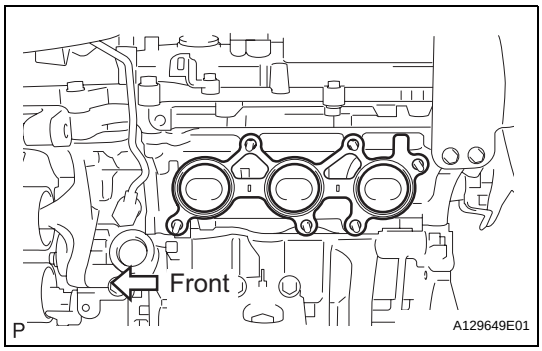

10. INSTALL EXHAUST MANIFOLD SUB-ASSEMBLY LH

(a) Install a new gasket as shown in the illustration.

(b) Install the manifold with the 6 nuts.
Torque: 21 N*m (214 kgf*cm, 15 ft.*lbf)

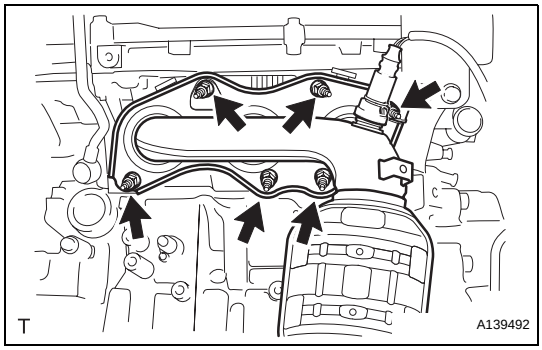

11. INSTALL NO. 2 EXHAUST MANIFOLD HEAT INSULATOR

(a) Install the No. 2 heat insulator with the 3 bolts.
Torque: 8.5 N*m (87 kgf*cm, 75 in.*lbf)

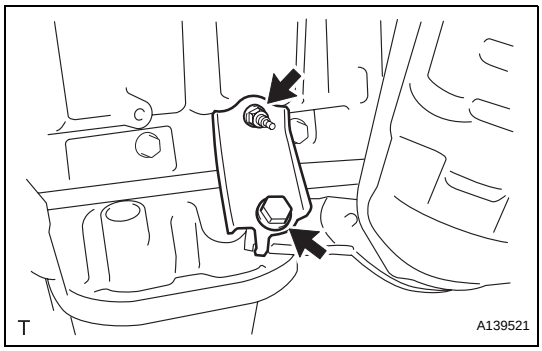

12. INSTALL NO. 2 MANIFOLD STAY

(a) Install the No. 2 manifold stay with the bolt and nut.
Torque: 34 N*m (347 kgf*cm, 25 ft.*lbf)

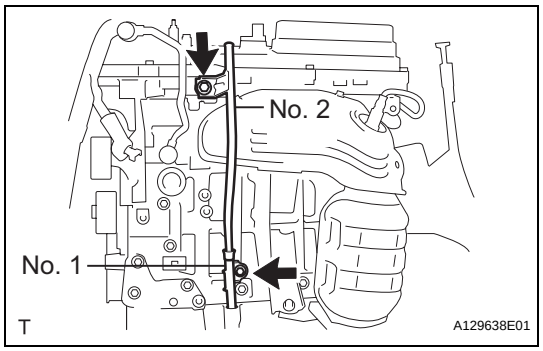

13. INSTALL OIL DIPSTICK GUIDE

(a) Install 2 new O-rings to the guide.
(b) Apply a light coat of engine oil to the O-rings.
(c) Push in the guide end into the guide hole.
(d) Install the No. 1 guide with the bolt.
Torque: 21 N*m (214 kgf*cm, 15 ft.*lbf)
(e) Install the No. 2 guide with the bolt.
Torque: 21 N*m (214 kgf*cm, 15 ft.*lbf)
(f) Install the dipstick.

14. INSTALL GENERATOR ASSEMBLY (See page CH-19)

15. INSTALL COMPRESSOR WITH PULLEY ASSEMBLY (See page AC-221)

16. INSTALL FAN AND GENERATOR V BELT (See page EM-8)

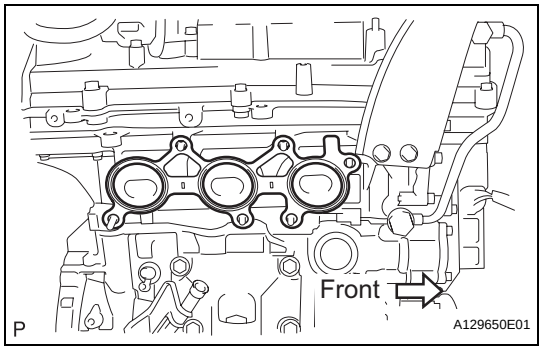

17. INSTALL EXHAUST MANIFOLD SUB-ASSEMBLY RH

(a) Install a new gasket as shown in the illustration.

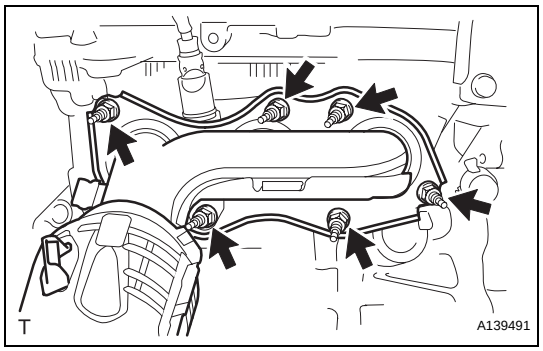

(b) Install the manifold with the 6 nuts.
Torque: 21 N*m (214 kgf*cm, 15 ft.*lbf)

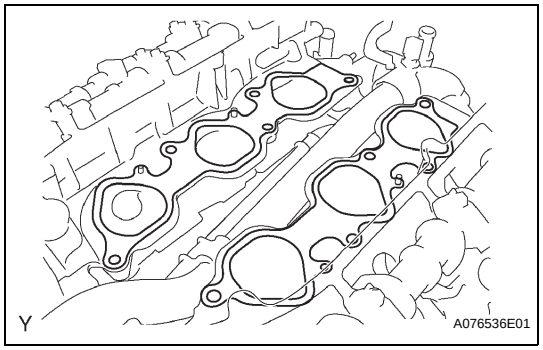

18. INSTALL INTAKE MANIFOLD

(a) Set a new gasket on each cylinder head.
NOTICE:
- **Align the port holes of the gasket and cylinder head.**
- **Be careful of the installation direction.**

(b) Set the intake manifold on the cylinder heads.

EM

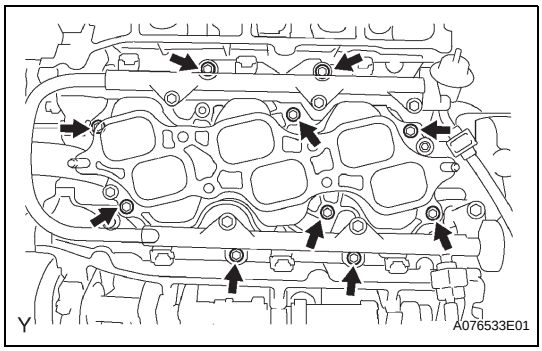

(c) Install and uniformly tighten the 6 bolts and 4 nuts in several passes.
Torque: 21 N*m (214 kgf*cm, 15 ft.*lbf)
(d) Connect the 6 fuel injector connectors.

19. INSTALL FUEL INJECTOR ASSEMBLY (See page FU-16)

20. INSTALL NO. 2 ENGINE MOUNTING STAY RH
(a) Install the mounting stay with the bolt.
Torque: 21 N*m (214 kgf*cm, 15 ft.*lbf)

21. INSTALL IGNITION COIL ASSEMBLY
(a) Install the 6 ignition coils with the 6 bolts to the cylinder head.
Torque: 10 N*m (102 kgf*cm, 7 ft.*lbf)

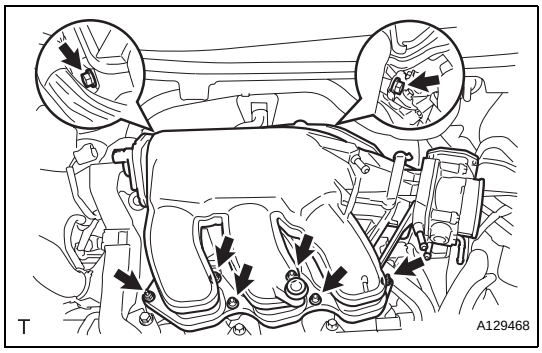

22. INSTALL INTAKE AIR SURGE TANK ASSEMBLY
NOTICE:
Make sure there is no oil on the bolts. If there is oil on the bolts, clean them before installing them.
(a) Install a new gasket to the surge tank.
(b) Using a 5 mm hexagon socket wrench, install the 4 bolts.
Torque: 18 N*m (184 kgf*cm, 13 ft.*lbf)
(c) Install the surge tank with the 2 nuts and 2 bolts.
Torque: 21 N*m (214 kgf*cm, 15 ft.*lbf) for bolt
16 N*m (163 kgf*cm, 12 ft.*lbf) for nut

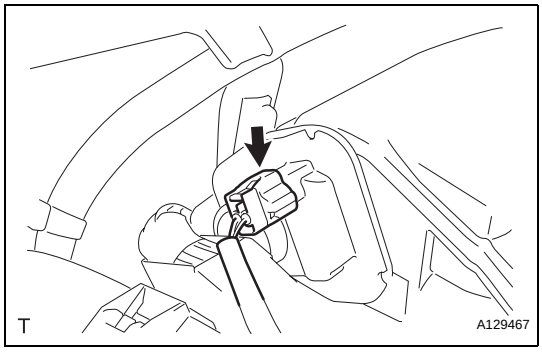

(d) Connect the connector.

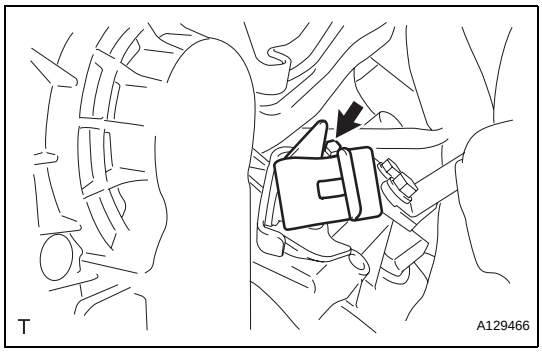

(e) Install the vacuum hose clamp with the bolt.
Torque: 5.4 N*m (55 kgf*cm, 48 in.*lbf)

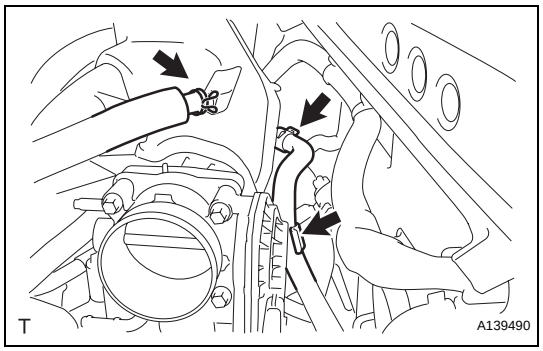

(f) Connect the union to check valve hose.
(g) Connect the No. 2 ventilation hose.

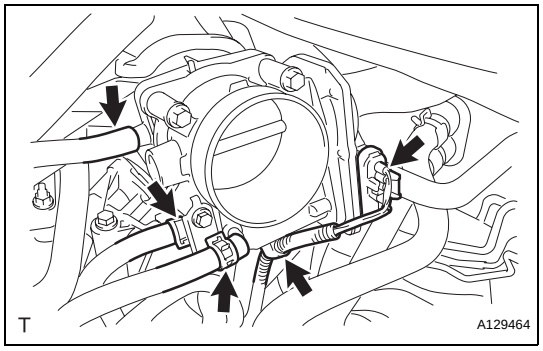

(h) Install the clamp and connect the throttle body connector.
(i) Connect the vapor feed hose.
(j) Connect the 2 water by-pass hoses to the throttle body.

23. REMOVE ENGINE FROM ENGINE STAND

(a) Install a sling device and chain block to the engine.
(b) Remove the engine from the engine stand.

EM

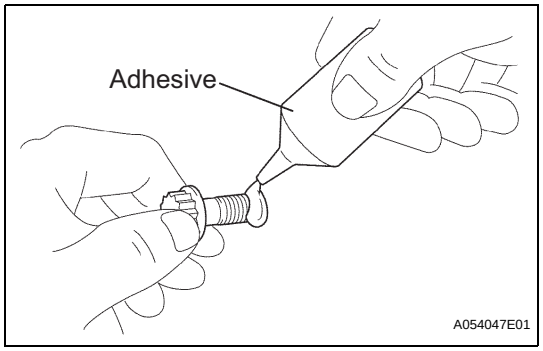

24. INSTALL DRIVE PLATE AND RING GEAR SUB-ASSEMBLY

(a) Clean the bolt and its hole.
(b) Apply adhesive to 2 or 3 threads of the bolt end.
Adhesive:
Toyota Genuine Adhesive 1324, Three Bond 1324 or Equivalent

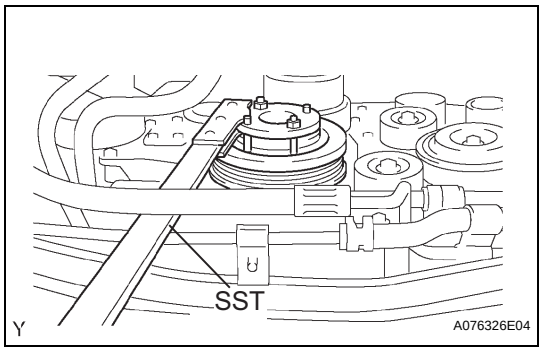

(c) Using SST, hold the crankshaft.
SST 09213-70011, 09330-00021
(d) Install the flywheel, drive plate and drive plate spacer on the crankshaft.

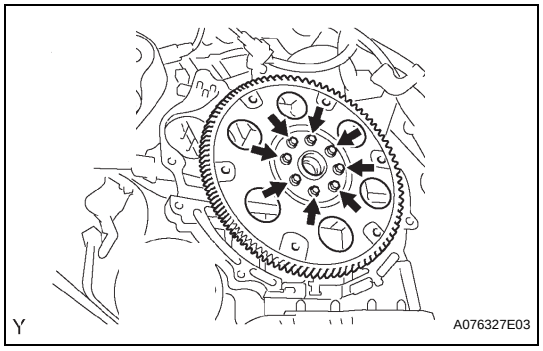

(e) Uniformly install and tighten the 8 bolts in the sequence shown in the illustration.
Torque: 178 N*m (1,815 kgf*cm, 132 ft.*lbf)
NOTICE:
Do not start the engine for at least 1 hour after the installation.

25. INSTALL AUTOMATIC TRANSAXLE ASSEMBLY

(a) 2WD:
Install the automatic transaxle (see page AX-174).

(b) 4WD:
Install the automatic transaxle (see page AX-175).

26. INSTALL TRANSFER ASSEMBLY (for 4WD) (See page TF-75)

27. INSTALL STARTER ASSEMBLY (See page ST-14)

28. INSTALL ENGINE WIRE

(a) Install the engine wire to the engine.

29. INSTALL FRONT SUSPENSION CROSSMEMBER SUB-ASSEMBLY

(a) Attach the engine together with the transaxle to the suspension crossmember and mounting.

(b) Install the bolt which secures the engine mounting bracket to the mounting insulator.
Torque: 95 N*m (969 kgf*cm, 70 ft.*lbf)

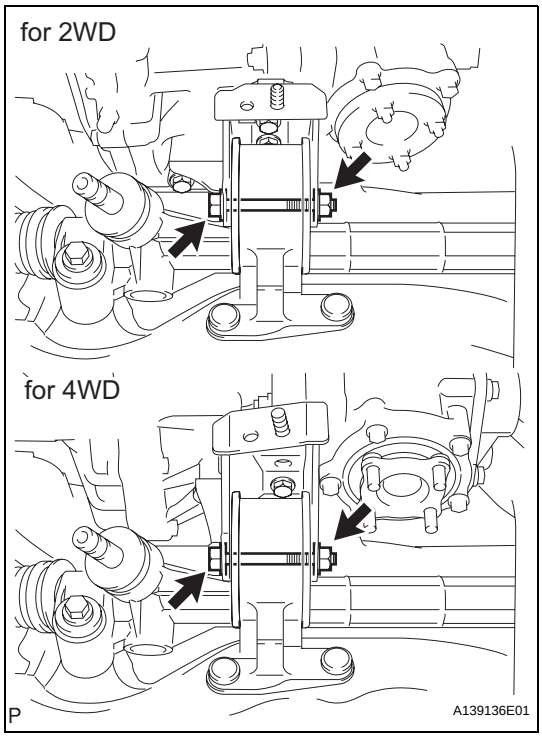

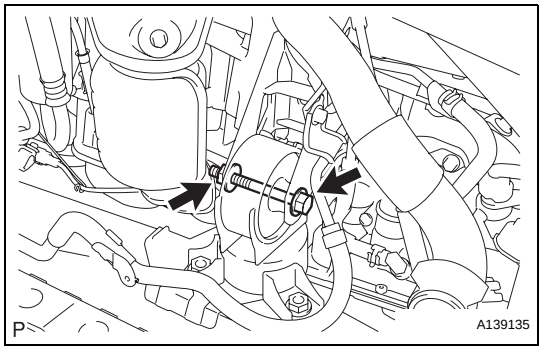

30. INSTALL FRONT CROSSMEMBER SUB-ASSEMBLY

(a) Install the bolt and nut which secures the engine mounting bracket to the mounting insulator.
Torque: 145 N*m (1,479 kgf*cm, 107 ft.*lbf)

31. INSTALL ENGINE WITH TRANSAXLE

(a) Place the engine on an engine lifter.
HINT:
Place the engine on wooden blocks or an equivalent so that the engine is level.

(b) Using the chain block, slowly install the engine to the vehicle and the intermediate shaft to the pinion.
CAUTION:
Do not raise the engine more than necessary. If the engine is raised excessively, the vehicle may also be lifted up.
NOTICE:
- **Make sure that the engine is clear of all wiring and hoses.**

- **While raising the engine into the vehicle, do not allow it to contact the vehicle.**
- **Align the matchmarks on the intermediate shaft and pinion.**

(c) Temporarily install the suspension member and crossmember with the 10 bolts.

(d) Temporarily install the member brace rear RH and LH with the 6 bolts.

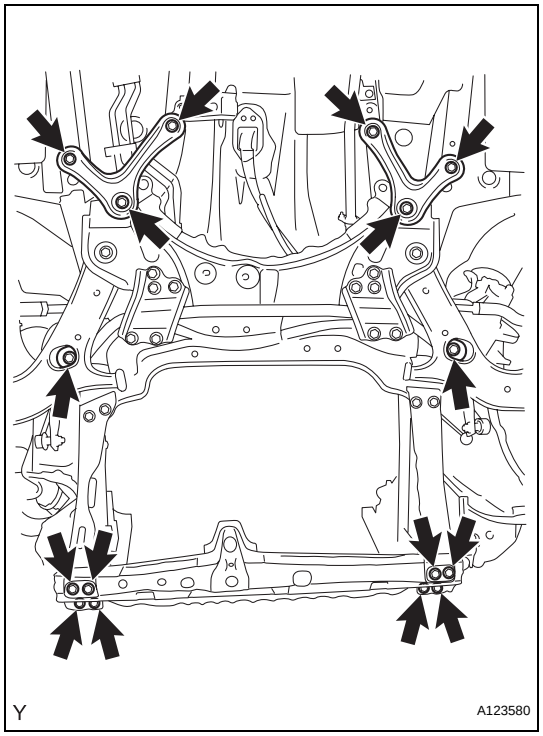

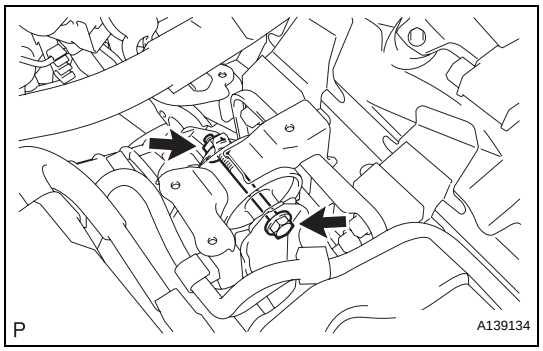

(e) Install the engine mounting insulator LH with the bolt and nut.
Torque: 56 N*m (571 kgf*cm, 41 ft.*lbf)
NOTICE:
While holding the bolt in place, tighten the nut.

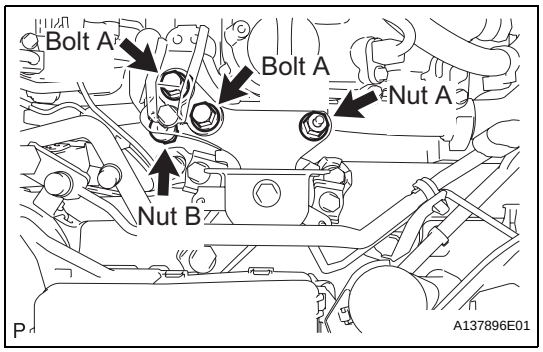

(f) Install the engine mounting insulator RH with the 2 bolts and 2 nuts.
Torque: 95 N*m (969 kgf*cm, 70 ft.*lbf) for bolt and nut A
52 N*m (530 kgf*cm, 38 ft.*lbf) for nut B

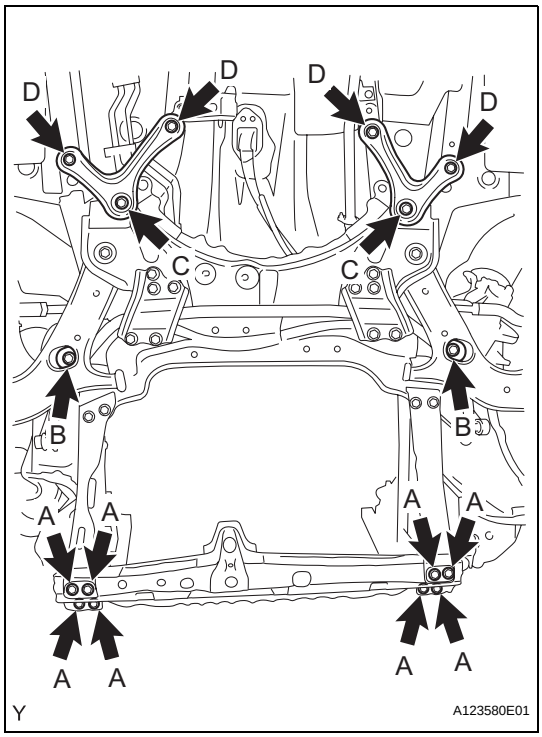

(g) Tighten the suspension member and crossmember's bolts.
Torque: 96 N*m (979 kgf*cm, 71 ft.*lbf) for bolt A
145 N*m (1,478 kgf*cm, 107 ft.*lbf) for bolt B

(h) Tighten the member brace rear's bolts.
Torque: 145 N*m (1,478 kgf*cm, 107 ft.*lbf) for bolt C
93 N*m (948 kgf*cm, 69 ft.*lbf) for bolt D

(i) Remove the sling device and chain block.

(j) Remove the 2 bolts and No. 1 and No. 2 engine hangers.

32. INSTALL FRONT DRIVE SHAFT LH

(a) 2WD:
Install the drive shaft (see page DS-33).

(b) 4WD:
Install the drive shaft (see page DS-66).

33. INSTALL FRONT DRIVE SHAFT RH

(a) 2WD:
Install the drive shaft (see page DS-33).

(b) 4WD:
Install the drive shaft (see page DS-66).

34. CONNECT TIE ROD END SUB-ASSEMBLY LH (See page PS-45)

35. CONNECT TIE ROD END SUB-ASSEMBLY RH (See page PS-45)

36. CONNECT STEERING INTERMEDIATE SHAFT (See page PS-44)

37. CONNECT FRONT STABILIZER LINK ASSEMBLY LH (See page SP-31)

38. CONNECT FRONT STABILIZER LINK ASSEMBLY RH (See page SP-31)

39. INSTALL FRONT AXLE HUB NUT LH

(a) Install the hub nut (see page AH-11).

40. INSTALL FRONT AXLE HUB NUT RH

(a) Install the hub nut (see page AH-11).

41. INSTALL FRONT WHEELS

42. INSTALL PROPELLER WITH CENTER BEARING SHAFT ASSEMBLY (See page PR-5)

43. INSTALL CENTER EXHAUST PIPE ASSEMBLY (See page EX-4)

44. INSTALL FRONT EXHAUST PIPE ASSEMBLY (See page EX-4)

45. CONNECT TRANSMISSION CONTROL CABLE ASSEMBLY

(a) 2WD:
Connect the control cable (see page AX-154).

EM

(b) 4WD:
Connect the control cable (see page AX-154).

46. CONNECT RADIATOR HOSE INLET

47. CONNECT RADIATOR HOSE OUTLET

48. CONNECT OIL COOLER HOSE

49. CONNECT SUCTION HOSE SUB-ASSEMBLY (See page AC-221)

50. INSTALL DISCHARGE HOSE SUB-ASSEMBLY (See page AC-221)

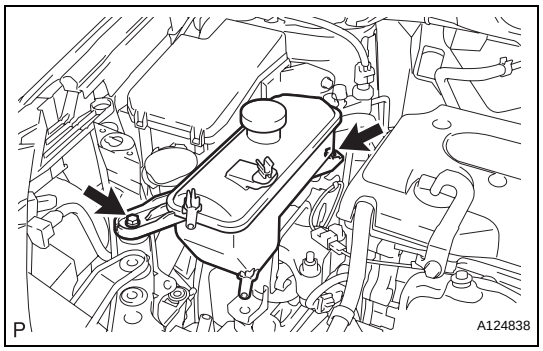

51. INSTALL RADIATOR RESERVOIR TANK ASSEMBLY
(a) Install the reservoir tank with the 2 bolts.
Torque: 5.0 N*m (51 kgf*cm, 44 in.*lbf)
(b) Connect the 2 hoses

52. INSTALL ECM (See page ES-471)

53. CONNECT HOSES AND CONNECTORS
(a) Connect the 2 ECM connectors.
(b) Connect the 2 heater hoses.
(c) Connect the fuel hoses.
(d) Connect the starter wire with the nut.
Torque: 9.8 N*m (100 kgf*cm, 7 ft.*lbf)
(e) Connect the 3 connectors and wire with the nut.
Torque: 12 N*m (122 kgf*cm, 9 ft.*lbf)
(f) Install the engine room junction block cover (upper).

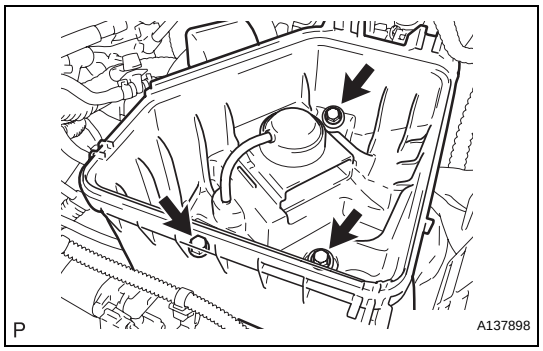

54. INSTALL AIR CLEANER CASE
(a) Install the air cleaner case with the 3 bolts.
Torque: 5.0 N*m (51 kgf*cm, 44 in.*lbf)
(b) Connect the harness clamp.

55. INSTALL AIR CLEANER CAP SUB-ASSEMBLY
(a) Install the air cleaner filter element onto the air cleaner case.

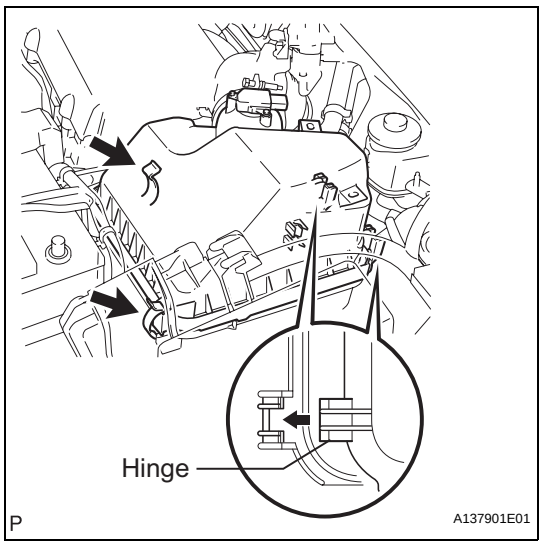

(b) Insert the hinge part of the air cleaner cap into the air cleaner case, then hang the 2 hook clamps.

EM

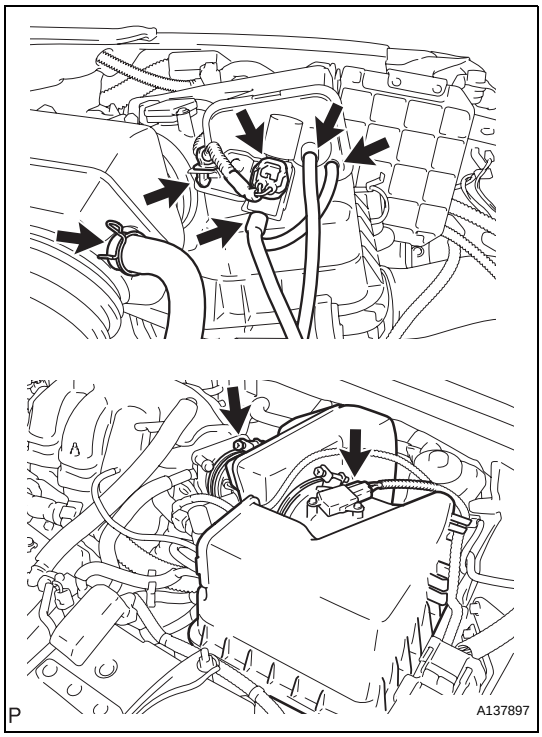

(c) Tighten the No. 1 air cleaner hose clamp.
(d) Connect the No. 2 ventilation hose to the air cleaner hose.
(e) Connect the wire harness clamp and 3 vacuum hoses.
(f) Connect the VSV (intake air control) connector.
(g) Connect the mass air flow meter connector.

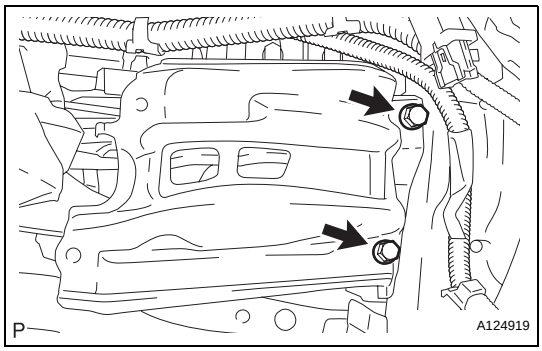

56. INSTALL BATTERY BRACKET REINFORCEMENT
(a) Install the bracket reinforcement with the 2 bolts.
Torque: 19 N*m (194 kgf*cm, 14 ft.*lbf)

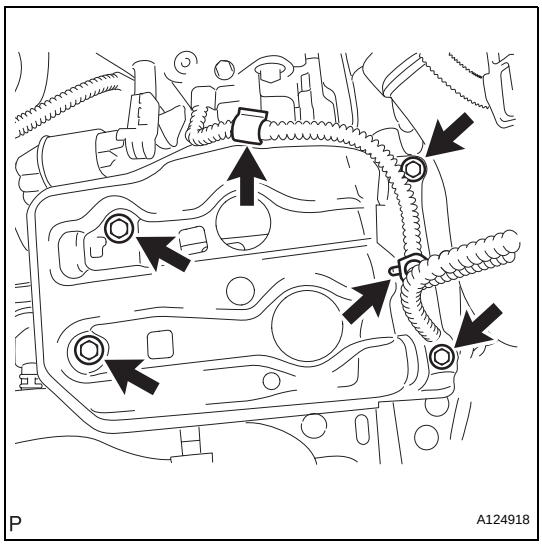

57. INSTALL FRONT BATTERY BRACKET
(a) Install the bracket front with the 4 bolts.
Torque: 19 N*m (194 kgf*cm, 14 ft.*lbf)
(b) Attach the 2 wire harness clamps.

58. INSTALL BATTERY

59. REMOVE BATTERY CLAMP SUB-ASSEMBLY
(a) Attach the hook of the battery clamp to the battery bracket front.
(b) Temporarily tighten the nut and install the bolt.
(c) Adjust the battery clamp's position.
(d) Fully tighten the nut and bolt.
Torque: 5.0 N*m (51 kgf*cm, 44 in.*lbf)
(e) Attach the 2 wire harness clamps.

60. CONNECT CABLE TO NEGATIVE BATTERY TERMINAL

61. INSTALL HOOD SUB-ASSEMBLY
(a) Install the hood (see page ED-7).
(b) Adjust the hood (see page ED-5).

62. **ADD AUTOMATIC TRANSAXLE FLUID**
    (a) 2WD:
    Add automatic transmission fluid (see page AX-177).
    (b) 4WD:
    Add automatic transmission fluid (see page AX-178).
63. **ADD TRANSFER OIL (for 4WD) (See page TF-45)**
64. **ADD ENGINE OIL (See page LU-6)**
65. **ADD ENGINE COOLANT (See page CO-8)**
66. **CHARGE REFRIGERANT (See page AC-172)**
67. **CHECK FOR LEAKAGE OF REFRIGERANT (See page AC-173)**
68. **CHECK FOR ENGINE OIL LEAKS (See page LU-6)**
69. **CHECK FOR ENGINE COOLANT LEAKS (See page CO-1)**
70. **CHECK FOR FUEL LEAKS**
71. **INSPECT EXHAUST GAS LEAKS**
72. **INSPECT SHIFT LEVER POSITION**
    (a) 2WD:
    Inspect the shift lever position (see page AX-159).
    (b) 4WD:
    Inspect the shift lever position (see page AX-158).
73. **ADJUST TRANSMISSION CONTROL CABLE**
    (a) 2WD:
    Adjust the shift lever position (see page AX-159).
    (b) 4WD:
    Adjust the shift lever position (see page AX-159).
74. **INSTALL FRONT FLOOR COVER (See page FU-39)**
75. **INSTALL NO. 2 ENGINE UNDER COVER**
    (a) Install the under cover with the 2 clips.
76. **INSTALL REAR ENGINE UNDER COVER LH**
    (a) Install the under cover with the 2 clips.
77. **INSTALL REAR ENGINE UNDER COVER RH**
    (a) Install the under cover with the 2 clips.
78. **INSTALL NO. 1 ENGINE UNDER COVER**
    (a) Install the under cover with the 4 bolts and 12 clips.

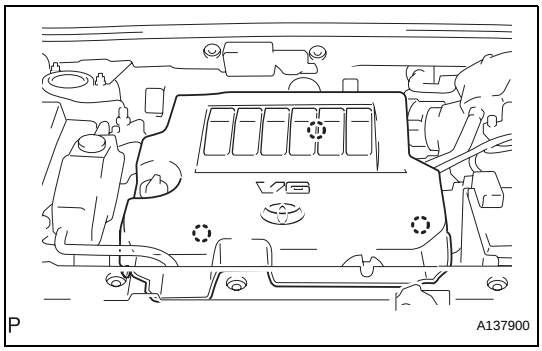

79. INSTALL V-BANK COVER SUB-ASSEMBLY

(a) Attach the 3 clips to install the engine cover.

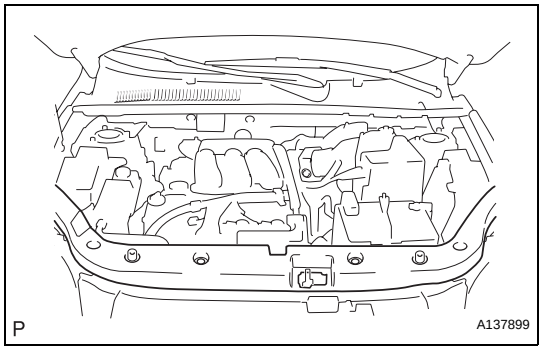

80. INSTALL RADIATOR SUPPORT OPENING COVER

(a) Install the cover with the 9 clips.

81. ADJUST FRONT WHEEL ALIGNMENT

(a) Adjust the front wheel alignment (see page SP-3).

82. INSPECT IDLE SPEED (See page EM-2)

EM

DISASSEMBLY

1. **REMOVE OIL FILLER CAP SUB-ASSEMBLY**
2. **REMOVE SPARK PLUG**
3. **REMOVE CAMSHAFT TIMING CONTROL VALVE ASSEMBLY (See page ES-440)**
4. **REMOVE VVT SENSOR (See page ES-443)**
5. **REMOVE WATER OUTLET**
   (a) Remove the 2 bolts, 4 nuts and water outlet.

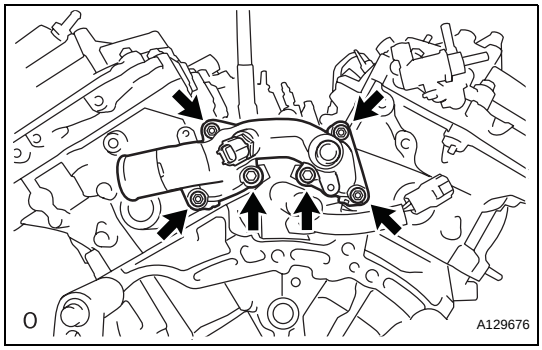

   (b) Remove the 2 gaskets and O-ring.

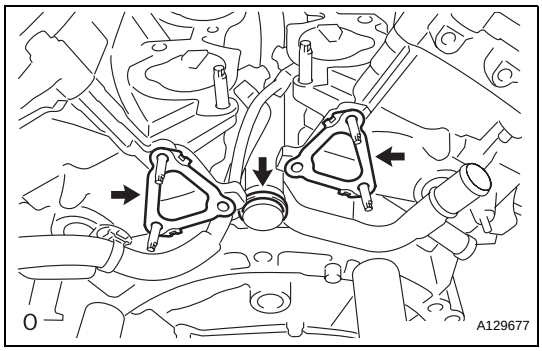

6. **REMOVE OIL PIPE**
   (a) Remove the bolt, 2 union bolts and oil pipe.
   (b) Remove the oil control valve filter RH and gaskets.

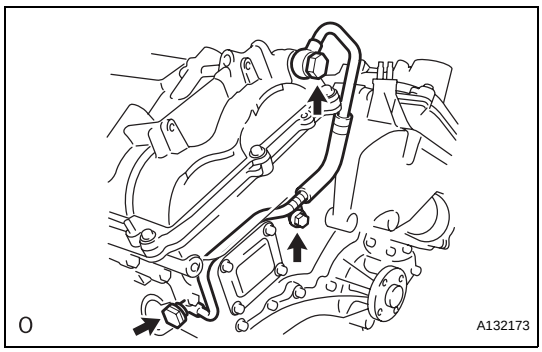

7. **REMOVE CYLINDER HEAD COVER SUB-ASSEMBLY (for Bank 1)**
   (a) Remove the 12 bolts, cylinder head cover and gasket.
   HINT:
   Make sure the removed parts are returned to the same places they were remove a from.

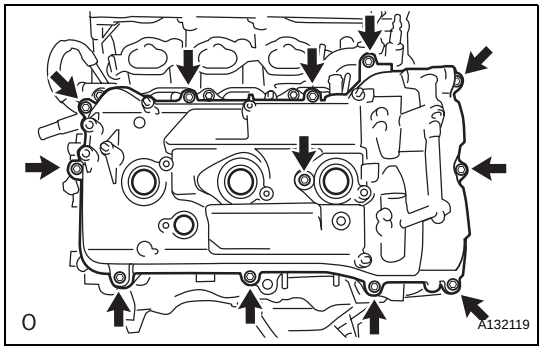

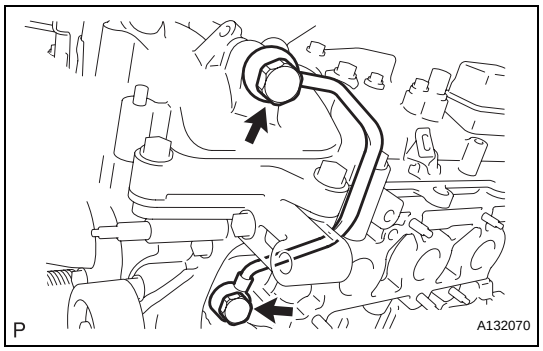

8. **REMOVE NO. 1 OIL PIPE**
   (a) Remove the 2 union bolts and oil pipe.
   (b) Remove the oil control valve filter LH and gaskets.

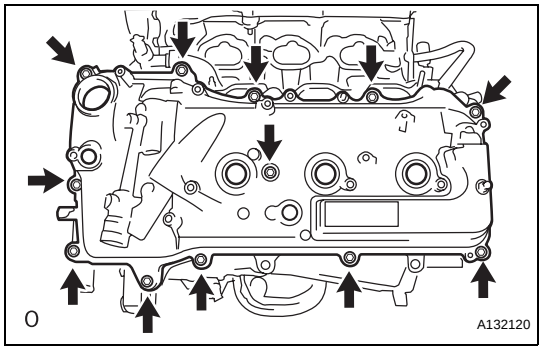

9. **REMOVE CYLINDER HEAD COVER SUB-ASSEMBLY (for Bank 2)**
   (a) Remove the 12 bolts, cylinder head cover and gasket.
   HINT:
   Make sure the removed parts are returned to the same places they were remove a from.

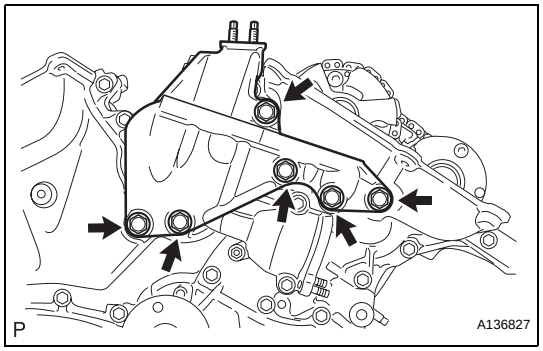

10. **REMOVE FRONT NO. 1 ENGINE MOUNTING BRACKET**
    (a) Remove the 6 bolts and mounting bracket.
11. **REMOVE WATER INLET HOUSING (See page CO-12)**
12. **REMOVE OIL FILTER CAP ASSEMBLY (See page LU-4)**
13. **REMOVE OIL FILTER ELEMENT (See page LU-5)**
14. **REMOVE NO. 2 OIL PAN SUB-ASSEMBLY (See page LU-12)**
15. **REMOVE OIL STRAINER SUB-ASSEMBLY (See page LU-13)**
16. **REMOVE OIL PAN SUB-ASSEMBLY (See page LU-13)**

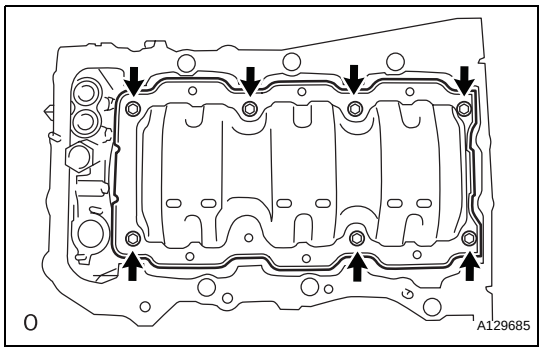

17. **REMOVE OIL PAN BAFFLE PLATE**
    (a) Remove the 7 bolts and baffle plate.

EM

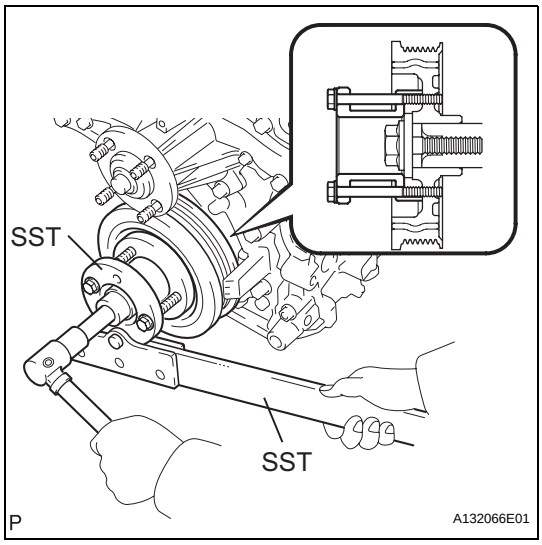

18. REMOVE CRANKSHAFT PULLEY

(a) Using SST, loosen the crankshaft pulley set bolt.
SST 09213-70011 (09213-70020), 09330-00021

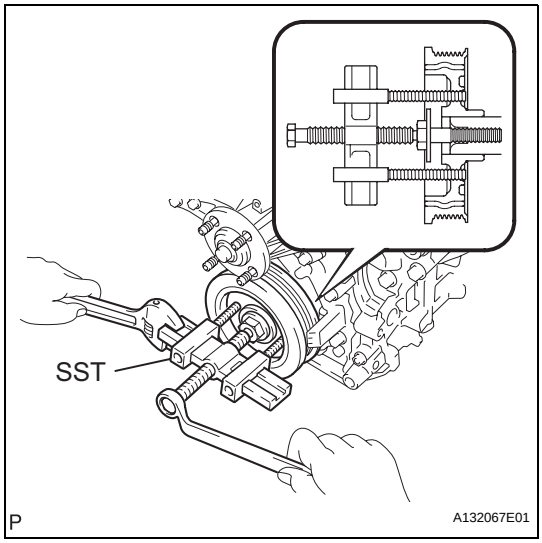

(b) Using the pulley set bolt and SST, remove the crankshaft pulley.
SST 09950-50013 (09951-05010, 09952-05010, 09953-05020, 09954-05021)

19. REMOVE WATER PUMP ASSEMBLY (See page CO-13)

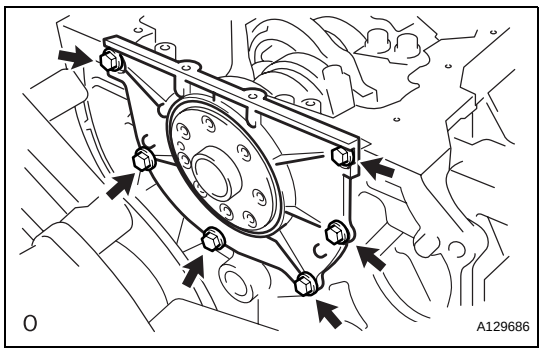

20. REMOVE ENGINE REAR OIL SEAL RETAINER

(a) Remove the 6 bolts.

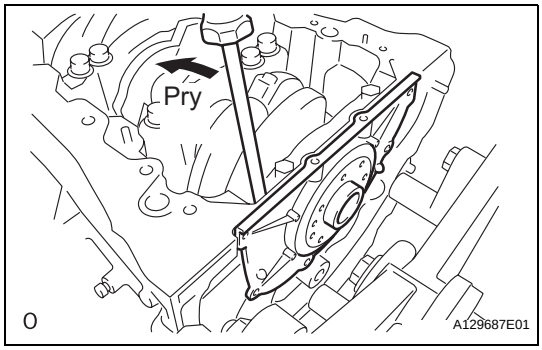

(b) Using a screwdriver, pry out the oil seal retainer.
HINT:
Tape the screwdriver tip before use.

21. REMOVE TIMING CHAIN COVER SUB-ASSEMBLY (w/ Oil Pump) (See page LU-14)

22. SET NO. 1 CYLINDER TO TDC / COMPRESSION

(a) Temporarily tighten the pulley set bolt.

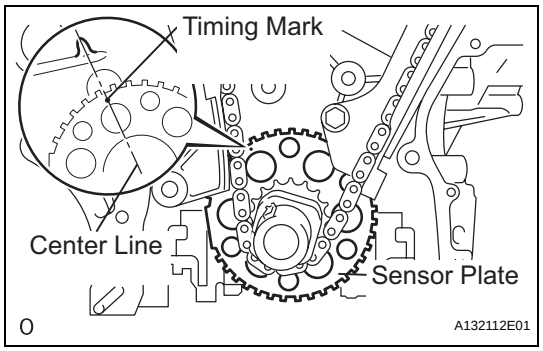

(b) Set the timing mark on the crank angle sensor plate to the RH block bore center line (TDC / compression).

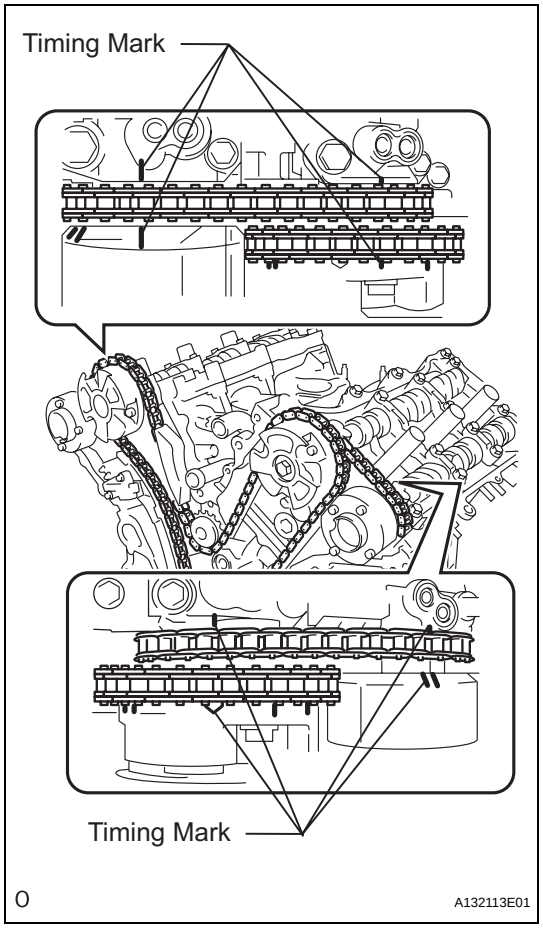

(c) Check that the timing marks of the camshaft timing gears are aligned with the timing marks of the bearing cap as shown in the illustration. If not, turn the crankshaft 1 revolution (360°) and align the timing marks as above.

EM

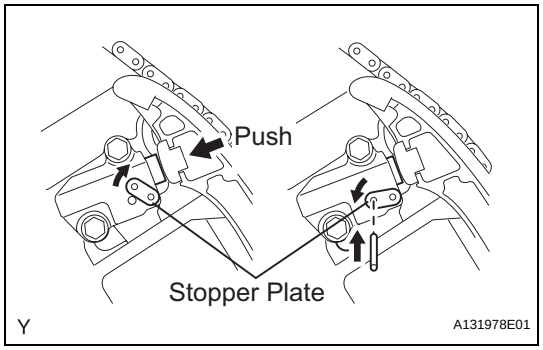

23. REMOVE NO. 1 CHAIN TENSIONER ASSEMBLY

(a) Move the stopper plate upward to release the lock, and push the plunger deep into the tensioner.
(b) Move the stopper plate downward to set the lock, and insert a hexagon wrench into the stopper plate hole.
(c) Remove the 2 bolts and chain tensioner.

24. REMOVE CHAIN TENSIONER SLIPPER

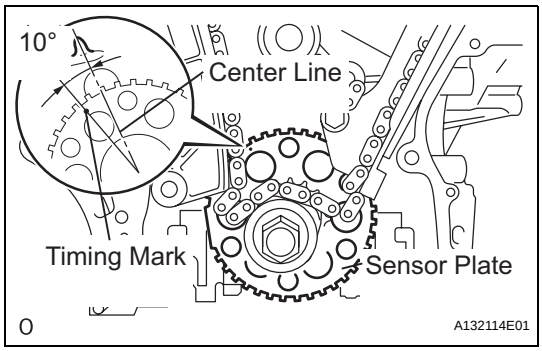

25. REMOVE NO. 1 CHAIN SUB-ASSEMBLY

(a) Turn the crankshaft counterclockwise 10° to loosen the chain of the crankshaft timing gear.

(b) Remove the chain from the crankshaft timing gear and place it on the crankshaft.

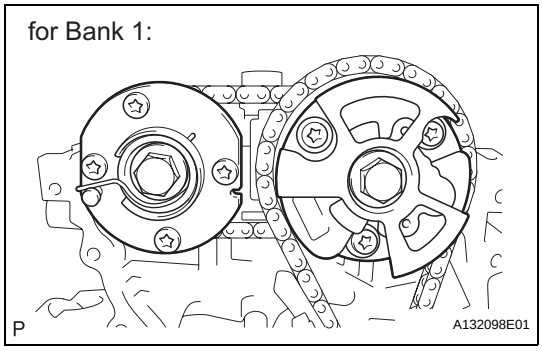

(c) Turn the camshaft timing gear on the RH bank clockwise (approximately 60°) and set it as shown in the illustration. Be sure to loosen the chain between the center banks.

(d) Remove the chain.

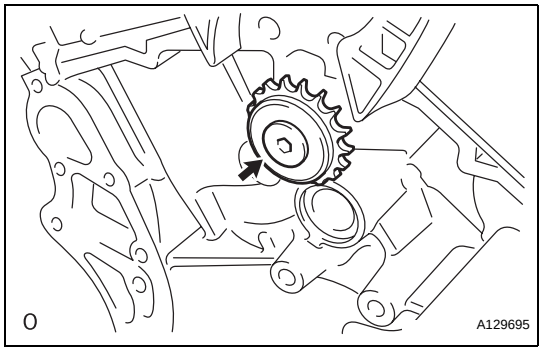

26. REMOVE IDLE SPROCKET ASSEMBLY

(a) Using a 10 mm hexagon wrench, remove the No. 2 idle gear shaft, idle sprocket and No. 1 idle gear shaft.

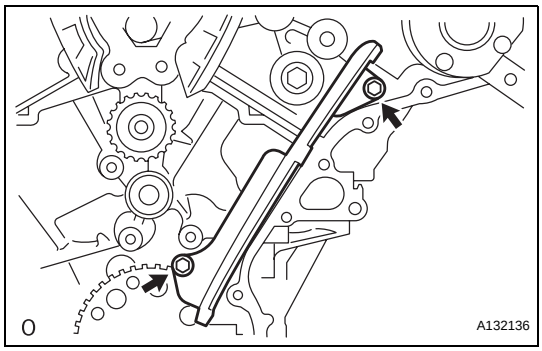

27. REMOVE NO. 1 CHAIN VIBRATION DAMPER

(a) Remove the 2 bolts and vibration damper.

28. REMOVE NO. 2 CHAIN VIBRATION DAMPERS

(a) Remove the 2 chain vibration dampers.

29. REMOVE CRANKSHAFT TIMING GEAR OR SPROCKET

(a) Remove the pulley set bolt.

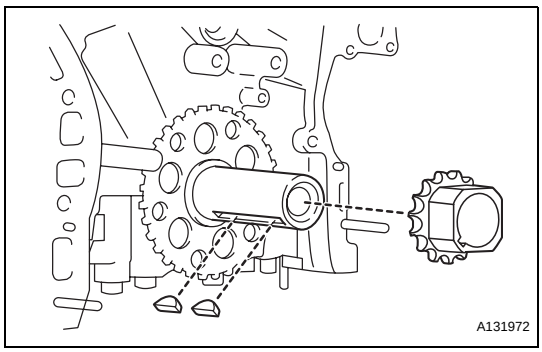

(b) Remove the crankshaft timing gear from the crankshaft.

(c) Remove the 2 pulley set keys from the crankshaft.

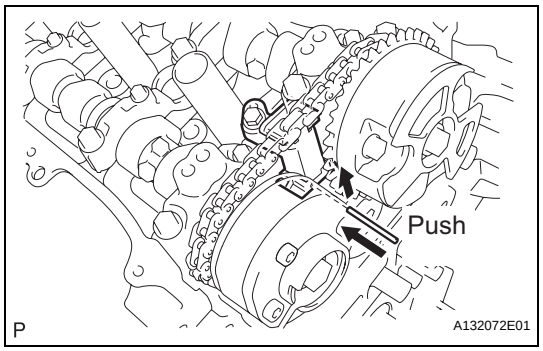

30. REMOVE CAMSHAFT TIMING GEAR ASSEMBLY (for Bank 1)

(a) While raising up the No. 2 chain tensioner, insert a pin of ϕ1.0 mm (0.039 in.) into the hole to fix it in place.

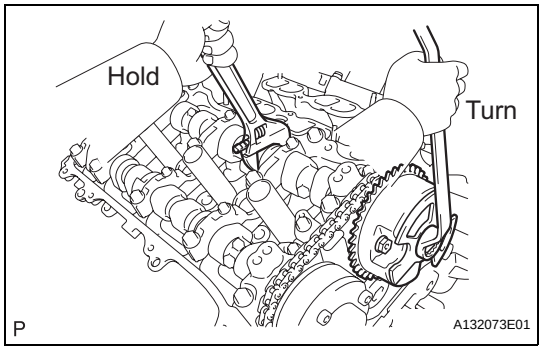

(b) Hold the hexagonal portion of the camshaft with a wrench, and remove the 2 bolts and 2 camshaft timing gears.

NOTICE:

- **Be careful not to damage the cylinder head with the wrench.**
- **Do not disassemble the camshaft timing gear.**

(c) Remove the No. 2 chain.

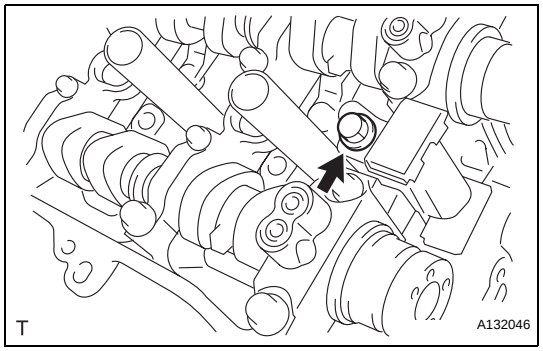

31. REMOVE NO. 2 CHAIN TENSIONER ASSEMBLY

(a) Remove the bolt and chain tensioner.

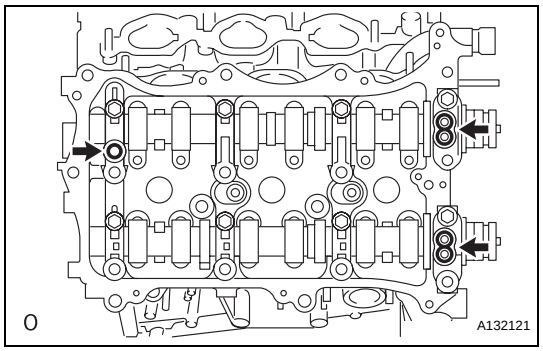

32. REMOVE CAMSHAFT (for Bank 1)

(a) Remove the 3 gaskets.

EM

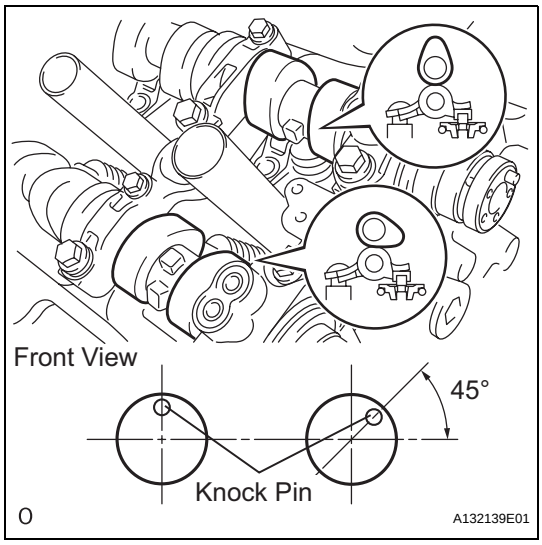

(b) Make sure that the knock pin of the camshaft is positioned as shown in the illustration.

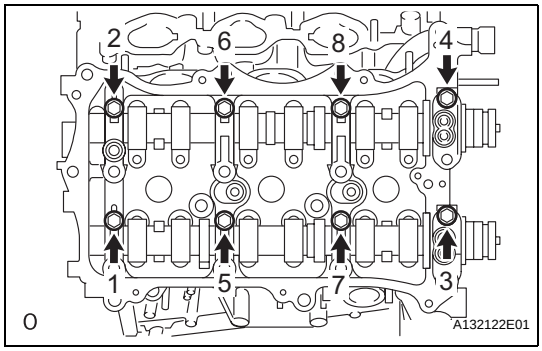

(c) Uniformly loosen and remove the 8 bearing cap bolts in the sequence shown in the illustration.

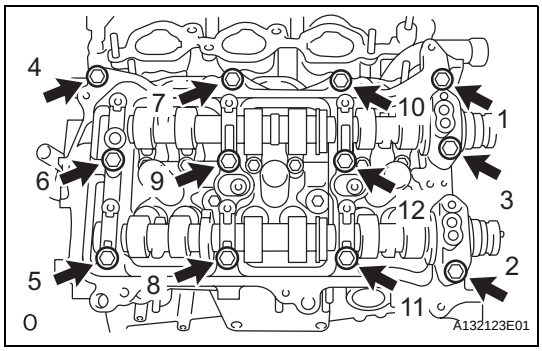

(d) Uniformly loosen and remove the 12 bearing cap bolts in the sequence shown in the illustration.
NOTICE:
Uniformly loosen the bolts while keeping the camshaft level.

(e) Remove the 5 bearing caps.

(f) Remove the No. 1 and No. 2 camshafts.

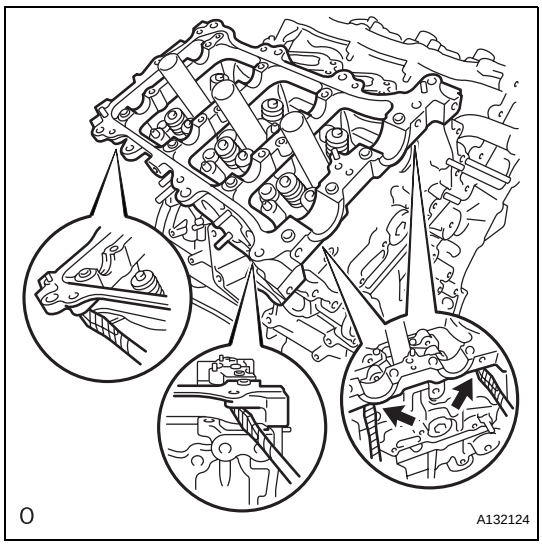

33. REMOVE CAMSHAFT HOUSING SUB-ASSEMBLY (for Bank 1)

(a) Remove the camshaft housing by prying between the cylinder head and camshaft housing with a screwdriver.
NOTICE:
Be careful not to damage the contact surfaces of the cylinder head and camshaft housing.
HINT:
Tape the screwdriver tip before use.

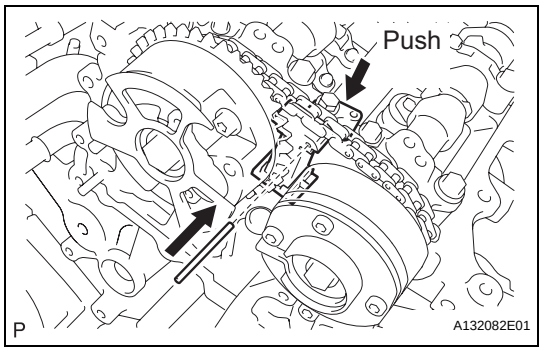

34. REMOVE CAMSHAFT TIMING GEAR ASSEMBLY (for Bank 2)

(a) While pushing down the chain tensioner, insert a pin of ϕ1.0 mm (0.039 in.) into the hole to fix it in place.

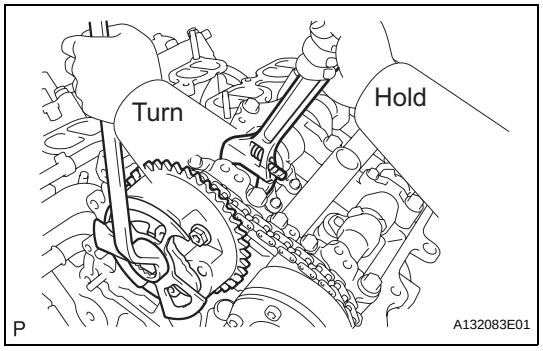

(b) Hold the hexagonal portion of the camshaft with a wrench and remove the 2 bolts and 2 camshaft timing gears.

NOTICE:

- **Be careful not to damage the cylinder head with the wrench.**
- **Do not disassemble the camshaft timing gear.**

(c) Remove the No. 2 chain.

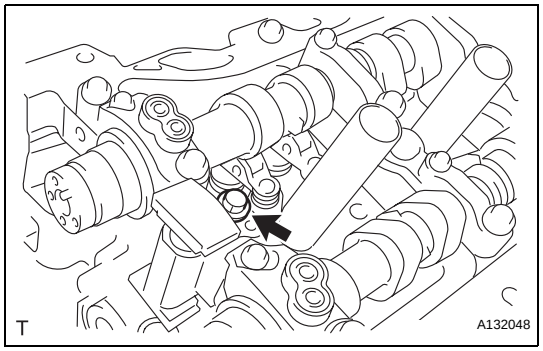

35. REMOVE NO. 3 CHAIN TENSIONER ASSEMBLY

(a) Remove the bolt and chain tensioner.

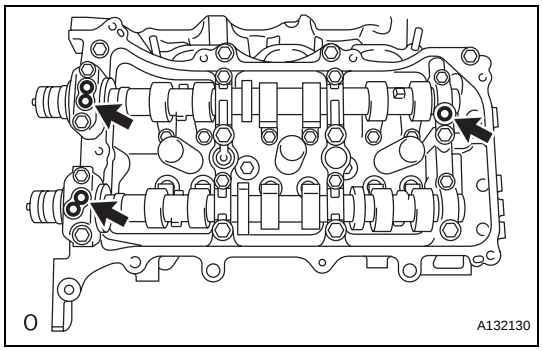

36. REMOVE CAMSHAFT SUB-ASSEMBLY (for Bank 2)

(a) Remove the 3 gaskets.

EM

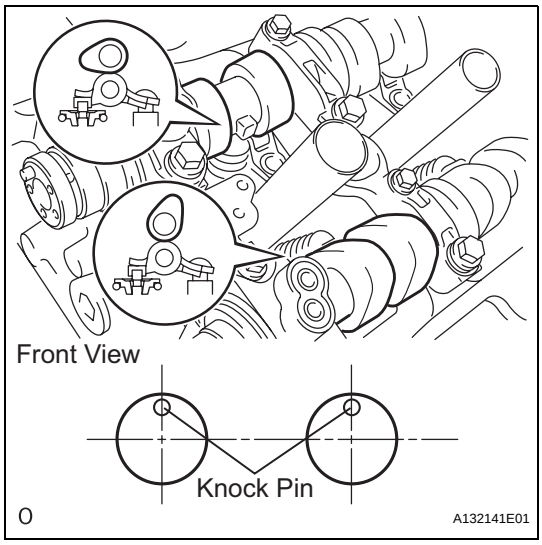

(b) Make sure that the knock pin of the camshaft is positioned as shown in the illustration.

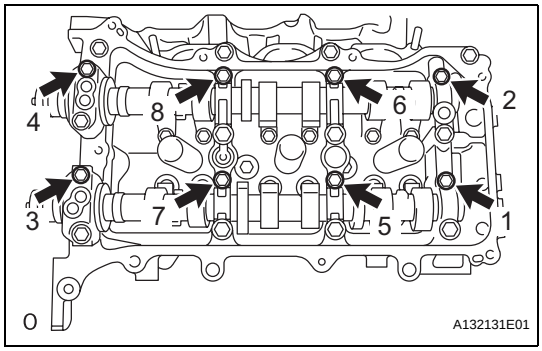

(c) Uniformly loosen and remove the 8 bearing cap bolts in the sequence shown in the illustration.

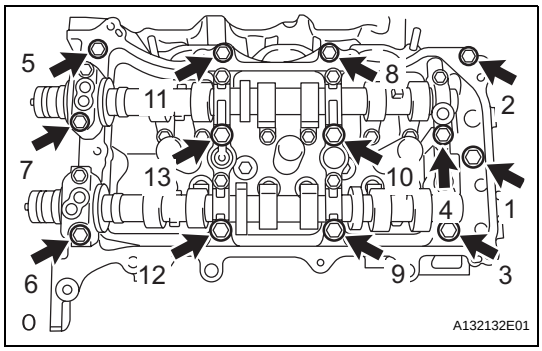

(d) Uniformly loosen and remove the 13 bearing cap bolts in the sequence shown in the illustration.
NOTICE:
Uniformly loosen the bolts while keeping the camshaft level.

(e) Remove the 5 bearing caps.

(f) Remove the No. 3 and No. 4 camshafts.

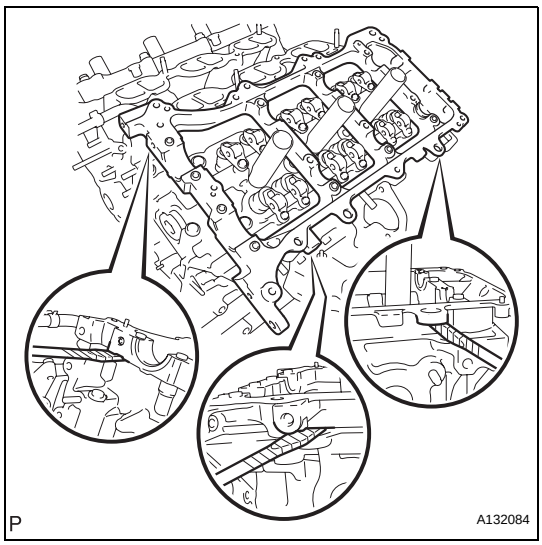

37. REMOVE CAMSHAFT HOUSING SUB-ASSEMBLY (for Bank 2)

(a) Remove the camshaft housing by prying between the cylinder head and camshaft housing with a screwdriver.
NOTICE:
Be careful not to damage the contact surfaces of the cylinder head and camshaft housing.
HINT:
Tape the screwdriver tip before use.

38. REMOVE NO. 1 VALVE ROCKER ARM SUB-ASSEMBLY

(a) Remove the 24 valve rocker arms.
HINT:
Arrange the removed parts in the correct order.

39. REMOVE VALVE LASH ADJUSTER ASSEMBLY

(a) Remove the 24 valve lash adjusters from the cylinder head.
HINT:
Arrange the removed parts in the correct order.

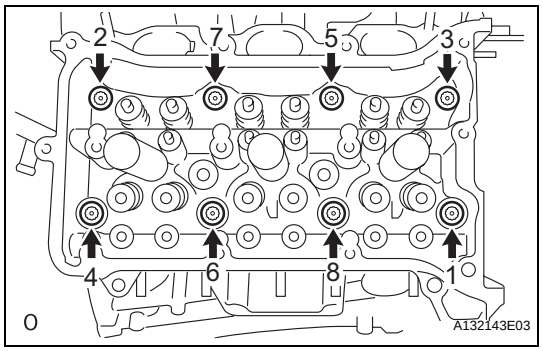

40. REMOVE CYLINDER HEAD SUB-ASSEMBLY (for Bank 1)

(a) Using a 10 mm bi-hexagon wrench, uniformly loosen the 8 bolts in the sequence shown in the illustration. Remove the 8 cylinder head bolts and plate washers.
NOTICE:
- **Be careful not to drop washers into the cylinder head.**
- **Head warpage or cracking could result from removing bolts in an incorrect order.**

HINT:
Be sure to keep the removed parts separate for each installation position.

(b) Remove the cylinder head and gasket.

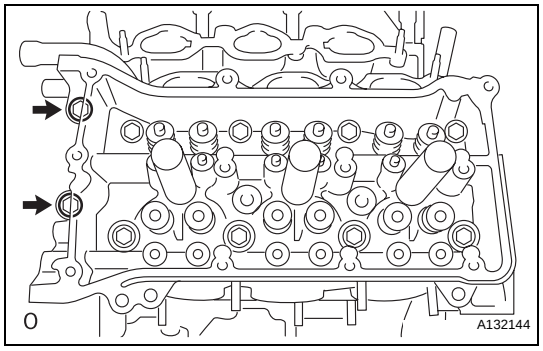

41. REMOVE CYLINDER HEAD SUB-ASSEMBLY (for Bank 2)

(a) Uniformly loosen and remove the 2 bolts in the sequence shown in the illustration.

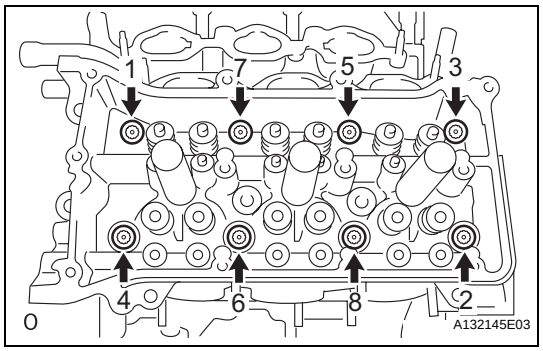

(b) Using a 10 mm bi-hexagon wrench, uniformly loosen the 8 bolts in the sequence shown in the illustration. Remove the 8 cylinder head bolts and plate washers.
NOTICE:
- **Be careful not to drop washers into the cylinder head.**
- **Head warpage or cracking could result from removing bolts in an incorrect order.**

HINT:
Be sure to keep the removed parts separate for each installation position.

(c) Remove the cylinder head and gasket.

42. REMOVE WATER INLET PIPE

(a) Disconnect the knock sensor wire.

EM

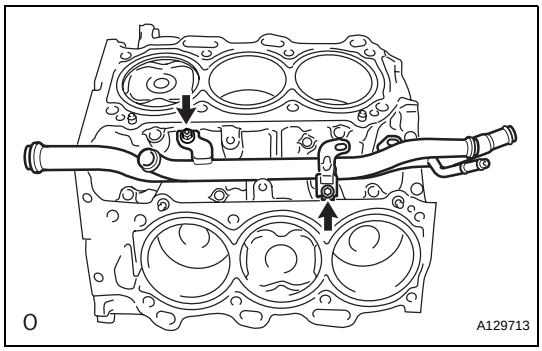

(b) Remove the 2 bolts and water outlet pipe.
(c) Disconnect the water by-pass hose.

43. REMOVE VALVE STEM CAP

(a) Remove the valve stem caps from the cylinder head.
HINT:
Arrange the removed parts in the correct order.

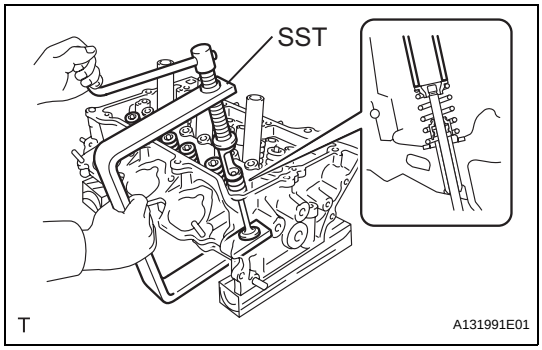

44. REMOVE INTAKE VALVE

(a) Using SST and wooden blocks, compress the compression spring and remove the valve retainer lock.
SST 09202-70020 (09202-00010)
(b) Remove the retainer, compression spring and valve.
HINT:
Arrange the removed parts in the correct order.

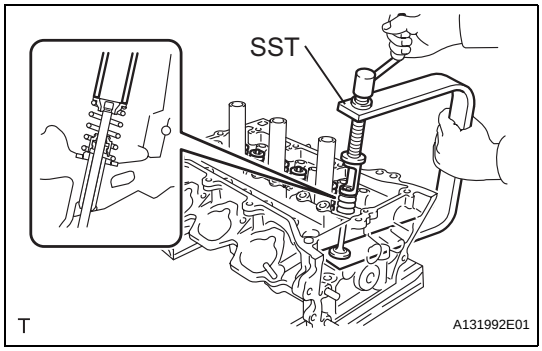

45. REMOVE EXHAUST VALVE

(a) Using SST and wooden blocks, compress the compression spring and remove the valve retainer lock.
SST 09202-70020 (09202-00010)
(b) Remove the retainer, compression spring and valve.
HINT:
Arrange the removed parts in the correct order.

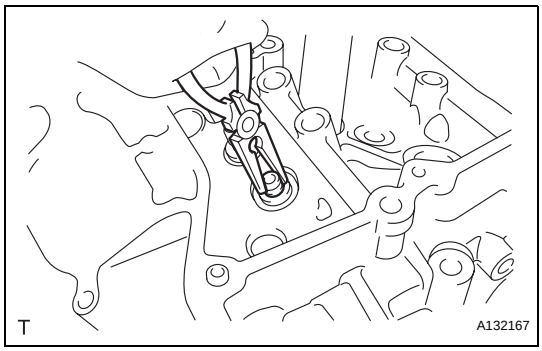

46. REMOVE VALVE STEM OIL SEAL

(a) Using needle-nose pliers, remove the oil seals.

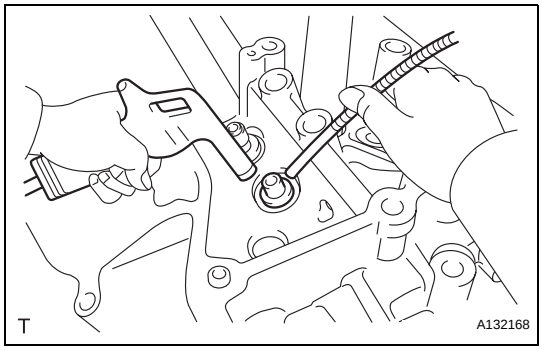

47. REMOVE VALVE SPRING SEAT

(a) Using compressed air and a magnetic finger, remove the valve spring seat by blowing air onto it.

48. REMOVE NO. 1 STRAIGHT SCREW PLUG
NOTICE:
If water leaks from the No. 1 screw plug or the plug is corroded, replace it.

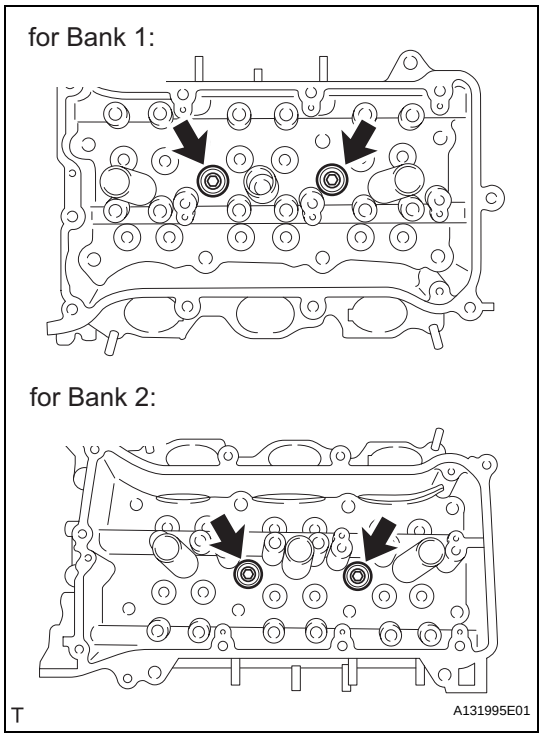

(a) Using a 10 mm hexagon wrench, remove the 4 screw plugs and 4 gaskets.

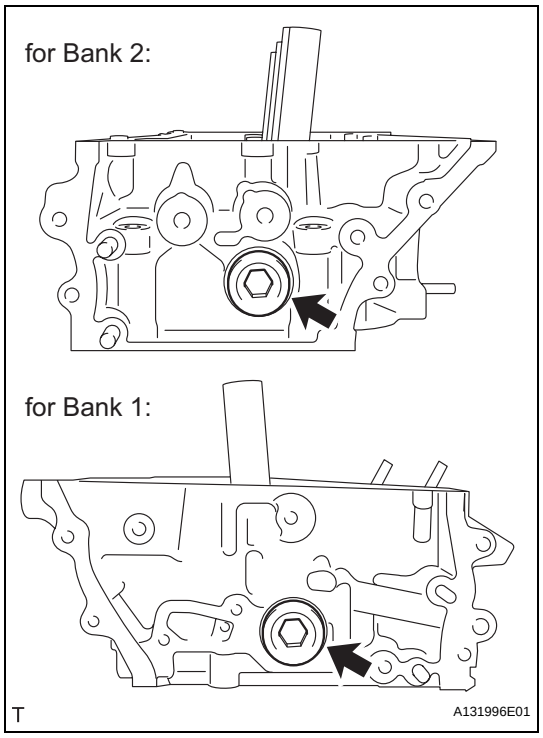

49. REMOVE NO. 2 STRAIGHT SCREW PLUG

(a) Using a 14 mm hexagon wrench, remove the 2 screw plugs and 2 gaskets.

NOTICE:

If water leaks from the No. 2 screw plug or the plug is corroded, replace it.

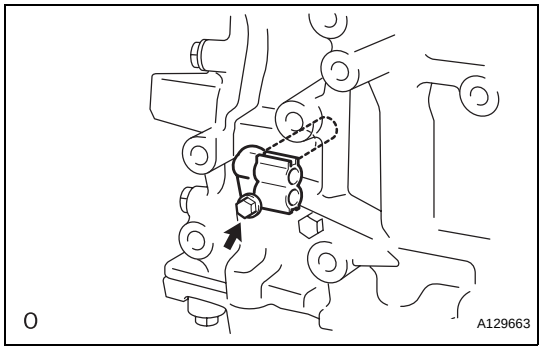

50. REMOVE CRANKSHAFT POSITION SENSOR

(a) Remove the bolt and crankshaft position sensor.

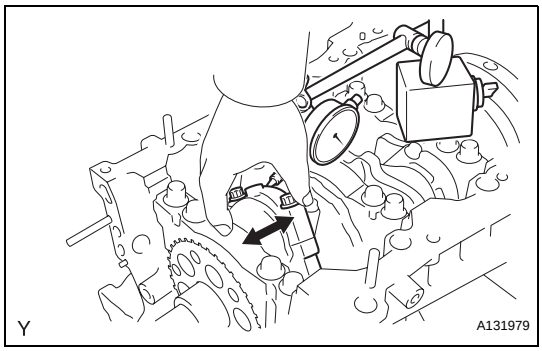

51. INSPECT CONNECTING ROD THRUST CLEARANCE

(a) Using a dial indicator, measure the thrust clearance while moving the connecting rod back and forth.
Standard thrust clearance:
0.15 to 0.40 mm (0.0059 to 0.0157 in.)
Maximum thrust clearance:
0.50 mm (0.0197 in.)
If the thrust clearance is greater than the maximum, replace one or more connecting rods as necessary.
If necessary, replace the crankshaft.

52. INSPECT CONNECTING ROD OIL CLEARANCE

(a) Check that the front mark on the connecting rod and cap are aligned to ensure the correct reassembly.
NOTICE:
The front mark on the connecting rods and caps are for ensuring the correct reassembly.

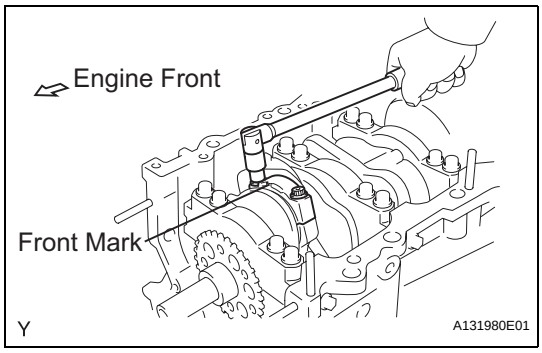

(b) Remove the 2 connecting rod cap bolts.

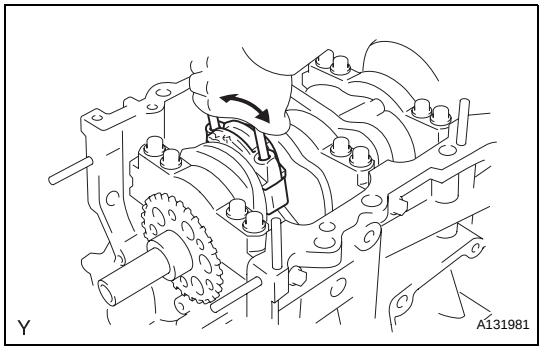

(c) Using the 2 removed connecting rod cap bolts, remove the connecting rod cap and lower bearing by wiggling the connecting rod cap right and left.
HINT:
Keep the lower bearing inserted to the connecting rod cap.
(d) Clean the crank pin and bearing.
(e) Check the crank pin and bearing for pitting and scratches.

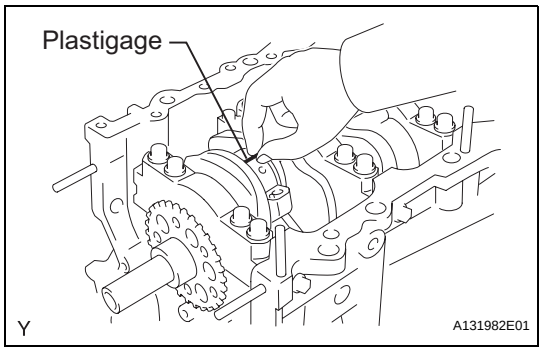

(f) Lay a strip of Plastigage on the crank pin.

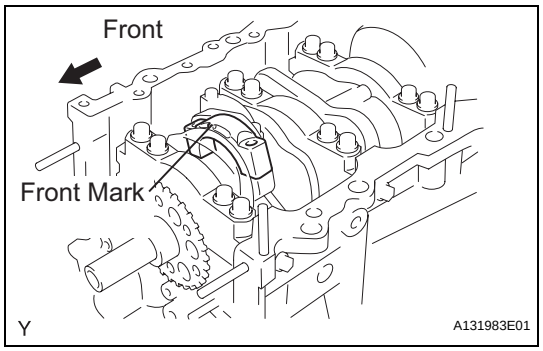

(g) Check that the front mark of the connecting rod cap is facing forward.

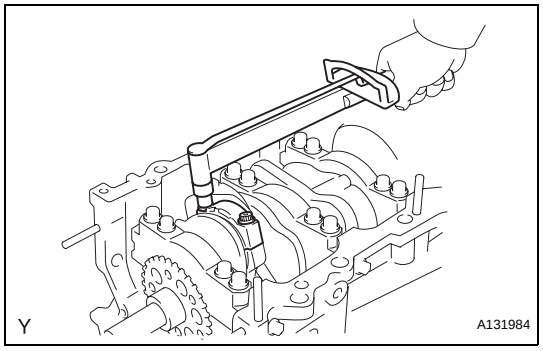

(h) Install and alternately tighten the bolts of the connecting rod cap in several steps.
NOTICE:
Do not turn the crankshaft.
Torque: 25 N*m (255 kgf*cm, 18 ft.*lbf)

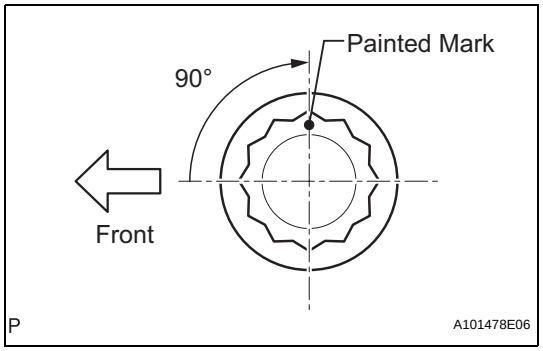

(i) Mark the front side of each connecting cap bolt with paint.
(j) Retighten the cap bolts by 90° as shown.
(k) Check that the painted mark is now at a 90° angle to the front.
NOTICE:
Do not turn the crankshaft.
(l) Remove the 2 connecting rod cap bolts.
(m) Using the 2 removed connecting rod cap bolts, remove the connecting rod cap and lower bearing by wiggling the connecting rod cap right and left.
HINT:
Keep the lower bearing inserted to the connecting rod cap.

EM

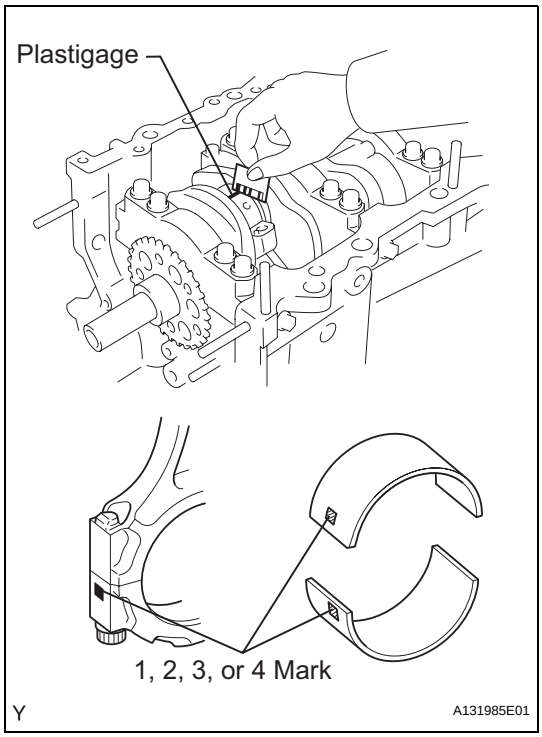

(n) Measure the Plastigage at its widest point.
Standard oil clearance:
0.045 to 0.067 mm (0.0018 to 0.0026 in.)
Maximum oil clearance:
0.070 mm (0.0028 in.)
If the oil clearance is greater than the maximum, replace the bearings. If necessary, replace the crankshaft.
HINT:
If replacing a bearing, replace it with one that has the same number as its respective connecting rod cap. Each bearing's standard thickness is indicated by a 1, 2, 3 and 4 mark on its surface.
Reference:
Connecting rod big end inside diameter

Mark	Thickness
1	56.000 to 56.006 mm (2.2047 to 2.2050 in.)
2	56.007 to 56.012 mm (2.2050 to 2.2052 in.)
3	56.013 to 56.018 mm (2.2052 to 2.2054 in.)
4	56.019 to 56.024 mm (2.2055 to 2.2057 in.)

Standard sized bearing center wall thickness

Mark	Thickness
1	1.481 to 1.484 mm (0.0583 to 0.0584 in.)
2	1.484 to 1.497 mm (0.0584 to 0.0585 in.)
3	1.487 to 1.490 mm (0.0585 to 0.0587 in.)
4	1.490 to 1.493 mm (0.0587 to 0.0588 in.)

Crankshaft pin diameter:
52.992 to 53.000 mm (2.0863 to 2.0866 in.)

(o) Completely remove the Plastigage.

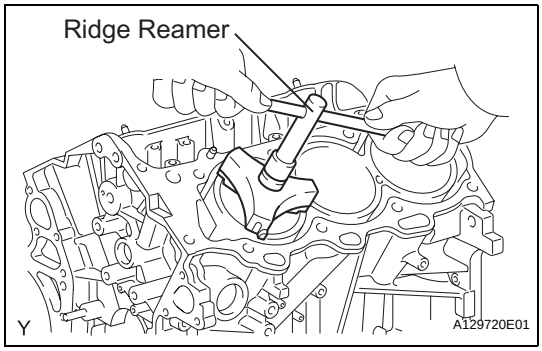

53. REMOVE PISTON SUB-ASSEMBLY WITH CONNECTING ROD

(a) Using a ridge reamer, remove all the carbon from the top of the cylinder.

(b) Push the piston, connecting rod and upper bearing through the top of the cylinder block.
HINT:
- Keep the bearing, connecting rod and cap together.
- Arrange the piston and connecting rod in the correct order.

54. REMOVE CONNECTING ROD BEARING
HINT:
Arrange the removed parts in the correct order.

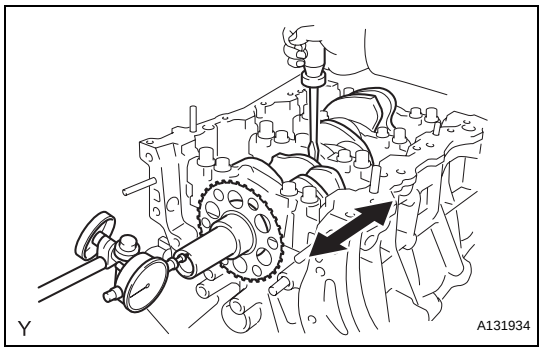

55. INSPECT CRANKSHAFT THRUST CLEARANCE

(a) Using a dial indicator, measure the thrust clearance while prying the crankshaft back and forth with a screwdriver.

Standard thrust clearance:
0.04 to 0.24 mm (0.0016 to 0.0094 in.)
Maximum thrust clearance:
0.30 mm (0.0118 in.)

If the thrust clearance is greater than the maximum, replace the thrust washers as a set. If necessary, replace the crankshaft.

Standard thrust washer thickness:
2.43 to 2.48 mm (0.0957 to 0.0976 in.)

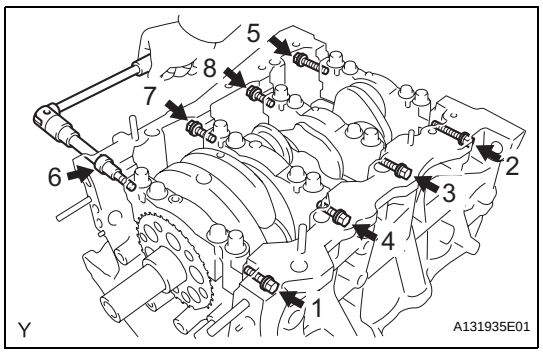

56. REMOVE CRANKSHAFT AND CRANKSHAFT OIL CLEARANCE

(a) Uniformly loosen and remove the 8 main bearing cap bolts and seal washers in several steps, in the sequence shown in the illustration.

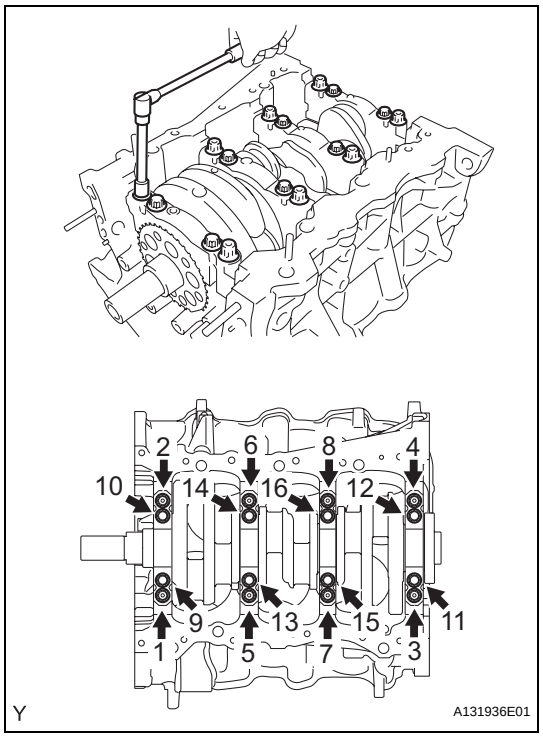

(b) Uniformly loosen the 16 bearing cap bolts in several steps, in the sequence shown in the illustration.

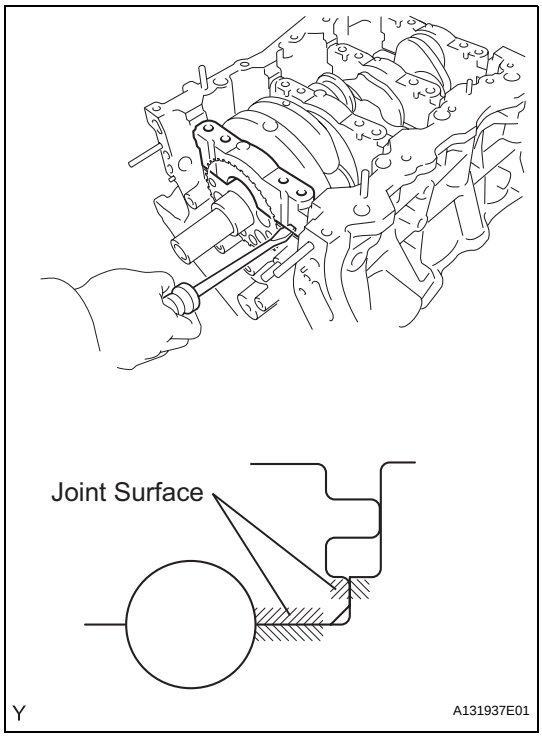

(c) Using a screwdriver, pry out the main bearing caps. Remove the 4 main bearing caps and lower bearings.
NOTICE:
- **Pry up the main cap little by little to the right and left in turns.**
- **Be careful not to damage the joint surface of the cylinder block and main bearing caps.**

(d) Clean each main journal and bearing.
(e) Check each main journal and bearing for pitting and scratches.
HINT:
If the journal or bearing is damaged, replace the bearing.
(f) Place the crankshaft on the cylinder block.

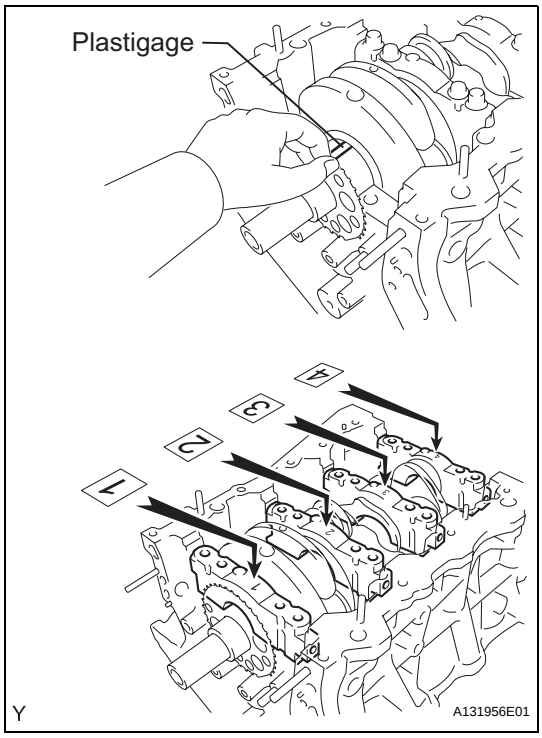

(g) Lay a strip of Plastigage across each journal.
(h) Examine the front marks and numbers and install the bearing caps on the cylinder block.
HINT:
A number is marked on each main bearing cap to indicate the installation position.
(i) Apply a light coat of engine oil on the threads and under the heads of the bearing cap bolts.
(j) Place the crankshaft bearing cap on the cylinder block.

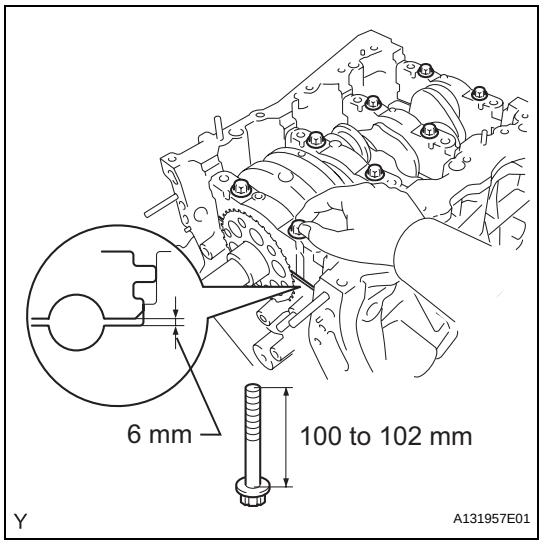

(k) Install the main bearing cap with your hand until the clearance between the main bearing cap and the cylinder block is less than 6 mm (0.23 in.) by marking the 2 internal bearing cap bolts as a guide.
Bolt length:
100 to 102 mm (3.94 to 4.02 in.)

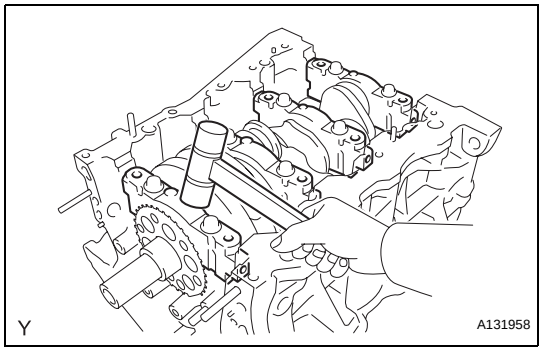

(l) Using a plastic-faced hammer, lightly tap the bearing cap to ensure a proper fit.
(m) Apply a light coat of engine oil on the threads and under the heads of the 8 main bearing cap bolts.

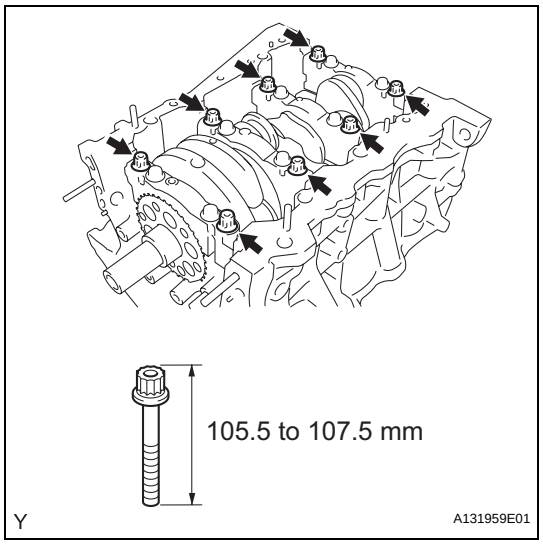

(n) Install the 8 main bearing cap bolts to the outside positions.
Bolt length:
105.5 to 107.5 mm (4.15 to 4.23 in.)
HINT:
The main bearing cap bolts are tightened in 2 progressive steps.

EM

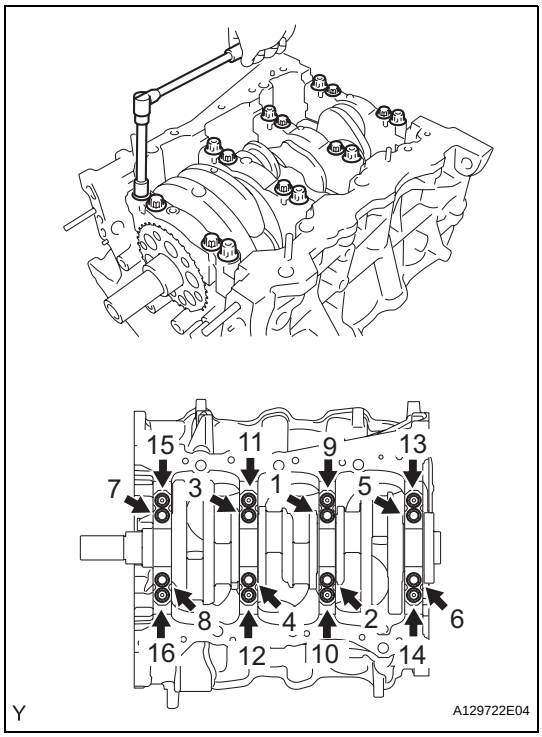

(o) Step 1
(1) Install and uniformly tighten the 16 main bearing cap bolts in the sequence shown in the illustration.
Torque: 61 N*m (622 kgf*cm, 45 ft.*lbf)
HINT:
If any of the main bearing cap bolts does not meet the torque specification, replace the main bearing cap bolt.
NOTICE:
Do not turn the crankshaft.

(p) Step 2
(1) Mark the front of the bearing cap bolts with paint.

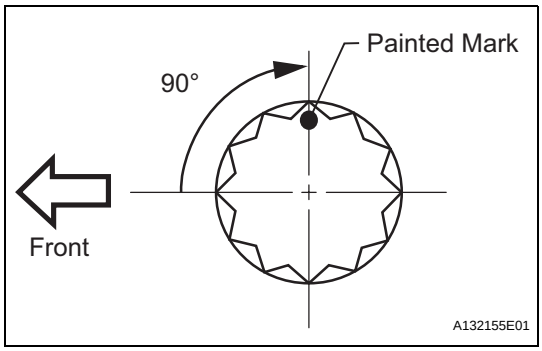

(2) Retighten the bearing cap bolts by 90° as shown in the order shown in step 1.
(3) Check that the painted mark is now at a 90° angle to the front.

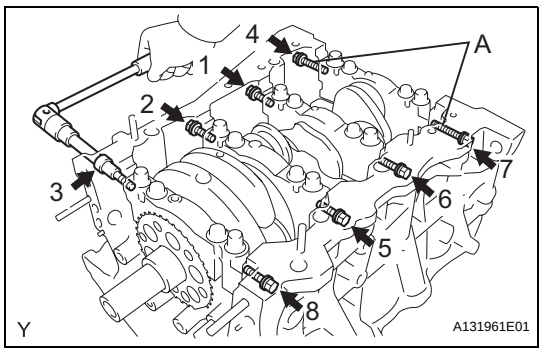

(q) Install and uniformly tighten the 8 main bearing cap bolts in several steps and in the sequence shown in the illustration.
Torque: 52 N*m (530 kgf*cm, 38 ft.*lbf)
Bolt length:
45 mm (1.77 in.) for bolt A
30 mm (1.18 in.) for except bolt A

(r) Remove the 24 bolts and bearing cap bolts.

(s) Completely remove the Plastigage.

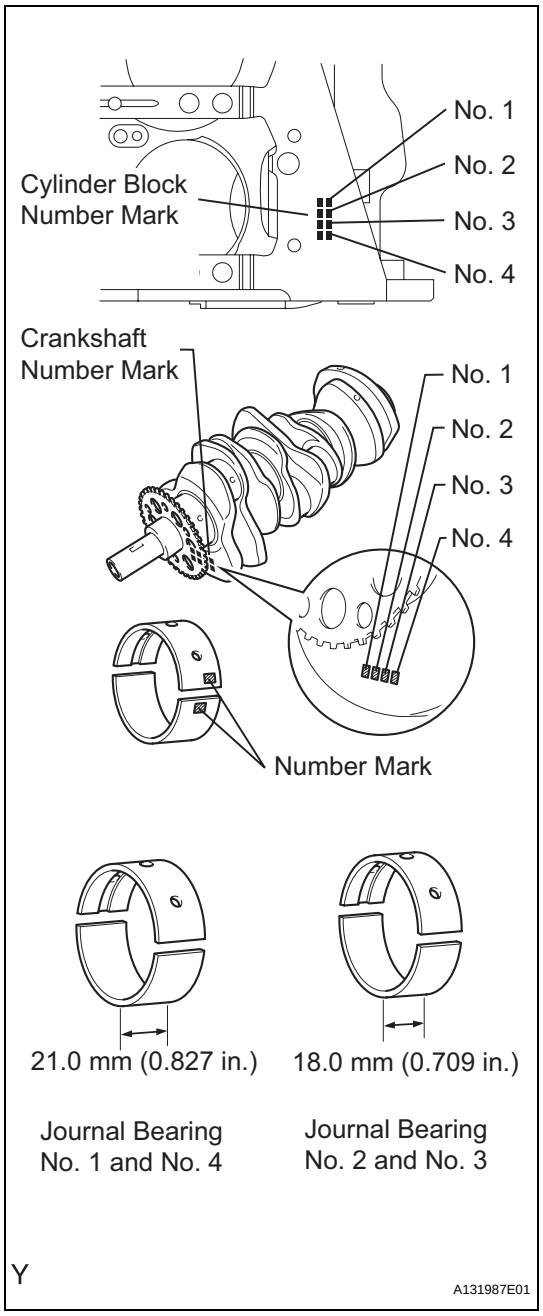

(t) If replacing a bearing, replace it with one having the same number. If the number of the bearing cannot be determined, select the correct bearing by adding together the numbers imprinted on the cylinder block and crankshaft, then refer to the table below for the appropriate bearing number. There are 5 sizes of standard bearings, marked "1", "2", "3", "4" and "5" accordingly.

Journal bearing

Use Bearing	Cylinder Block Number Mark + Crankshaft Number Mark
1	0 - 5
2	6 - 11
3	12 - 17
4	18 - 23
5	24 - 28

EXAMPLE:
Cylinder block "11" + Crankshaft "06" = Total number 17 (Use bearing "3")

EM

Standard crankshaft main journal diameter

Mark	Specified Condition
00	60.999 to 61.000 mm (2.4015 to 2.4016 in.)
01	60.998 to 60.999 mm (2.4015 to 2.4015 in.)
02	60.997 to 60.998 mm (2.4015 to 2.4015 in.)
03	60.996 to 60.997 mm (2.4014 to 2.4015 in.)
04	60.995 to 60.996 mm (2.4014 to 2.4014 in.)
05	60.994 to 60.995 mm (2.4013 to 2.4014 in.)
06	60.93 to 60.994 mm (2.4013 to 2.4013 in.)
07	60.992 to 60.993 mm (2.4013 to 2.4013 in.)
08	60.991 to 60.992 mm (2.4012 to 2.4013 in.)
09	60.990 to 60.991 mm (2.4012 to 2.4012 in.)
10	60.989 to 60.990 mm (2.4011 to 2.4012 in.)
11	60.988 to 60.989 mm (2.4.11 to 2.4011 in.)

Standard upper bearing center wall thickness No. 1 and No. 4 journal

Mark	Specified Condition
1	2.500 to 2.503 mm (0.0984 to 0.0985 in.)
2	2.503 to 2.506 mm (0.0985 to 0.0987 in.)
3	2.506 to 2.509 mm (0.0987 to 0.0988 in.)

Mark	Specified Condition
4	2.509 to 2.512 mm (0.0988 to 0.0989 in.)
5	2.512 to 2.515 mm (0.0989 to 0.0990 in.)

No. 2 and No. 3 journal

Mark	Specified Condition
1	2.478 to 2.481 mm (0.0976 to 0.0977 in.)
2	2.481 to 2.484 mm (0.0977 to 0.0978 in.)
3	2.484 to 2.487 mm (0.0978 to 0.0979 in.)
4	2.487to 2.490 mm (0.0979 to 0.0980 in.)
5	2.490 to 2.493 mm (0.0980 to 0.0981 in.)

Standard lower bearing center wall thickness
No. 1 and No. 4 journal

Mark	Specified Condition
1	2.478 to 2.481 mm (0.0976 to 0.0977 in.)
2	2.481 to 2.484 mm (0.0977 to 0.0780 in.)
3	2.484 to 2.487 mm (0.0978 to 0.0979 in.)
4	2.487 to 2.490 mm (0.0979 to 0.0980 in.)
5	2.490 to 2.493 mm (0.0980 to 0.0981 in.)

No. 2 and No. 3 journal

Mark	Specified Condition
1	2.500 to 2.503 mm (0.0984 to 0.0985 in.)
2	2.503 to 2.506 mm (0.0985 to 0.0987 in.)
3	2.506 to 2.509 mm (0.0987 to 0.0988 in.)
4	2.509 to 2.512 mm (0.0988 to 0.0989 in.)
5	2.512 to 2.515 mm (0.0989 to 0.0990 in.)

(u) Lift out the crankshaft.

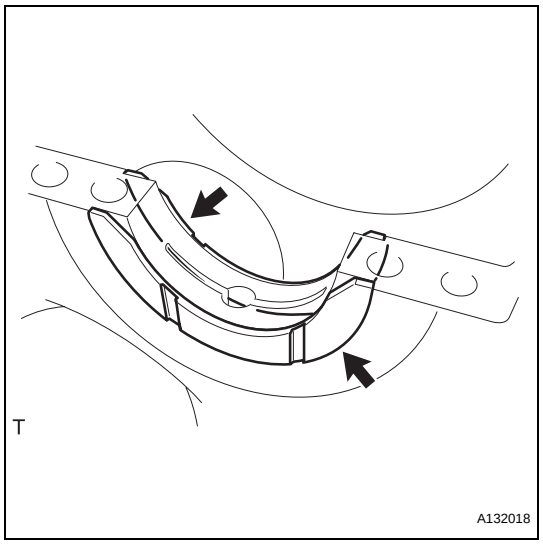

(v) Remove the upper bearings and upper thrust washers from the cylinder block.
HINT:
Arrange the bearings and thrust washers in the correct order.

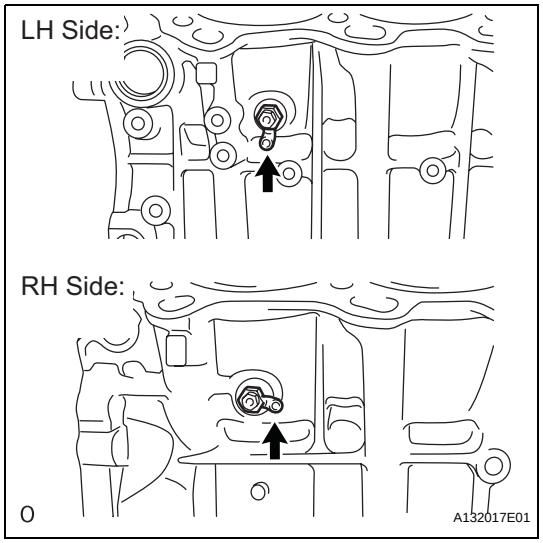

57. REMOVE CYLINDER BLOCK WATER DRAIN COCK SUB-ASSEMBLY

(a) Remove the 2 water drain cocks from the cylinder block.
(b) Remove the water drain cock plugs from the water drain cocks.

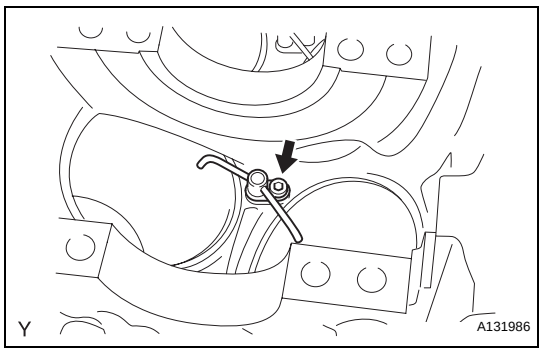

58. REMOVE NO. 1 OIL NOZZLE SUB-ASSEMBLY

(a) Using a 5 mm hexagon wrench, remove the 3 oil nozzles.
(b) Check the oil nozzles for damage or clogging.
If necessary, replace the oil nozzle.

59. REMOVE PISTON RING SET

HINT:
Arrange the piston rings in the correct order.

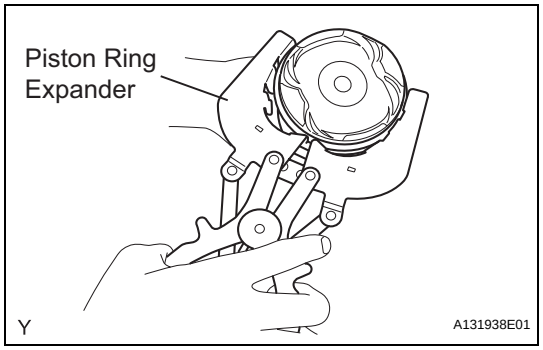

(a) Using a piston ring expander, remove the 2 compression rings.
(b) Using a piston ring expander, remove the 2 side rails.
(c) Remove the oil ring expander by hand.

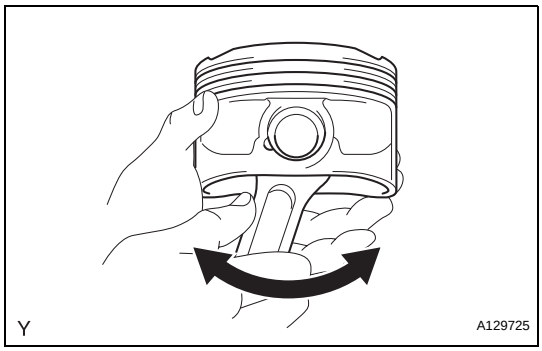

60. REMOVE PISTON WITH PIN SUB-ASSEMBLY

(a) Check the fitting condition between the piston and piston pin.

(1) Try to move the piston back and forth on the piston pin.

HINT:

If any movement is felt, replace the piston and pin as a set.

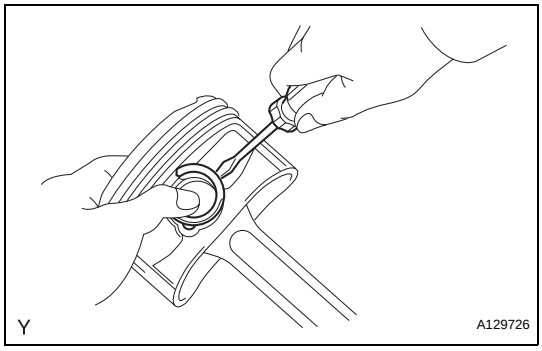

(b) Disconnect the connecting rod from the piston.

(1) Using a screwdriver, pry off the snap rings from the piston.

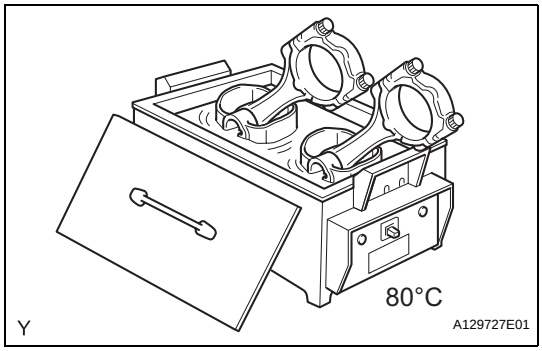

(2) Gradually heat the piston to approximately 80°C (176°F).

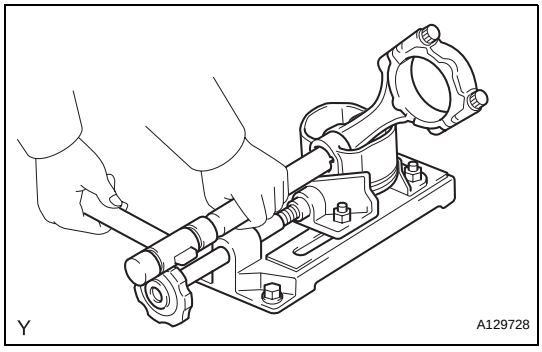

(3) Using a brass bar and plastic-faced hammer, lightly tap out the piston pin and remove the connecting rod.

HINT:

- The piston and pin are a matched set.
- Arrange the pistons, pins, rings, connecting rods and bearings in the correct order.

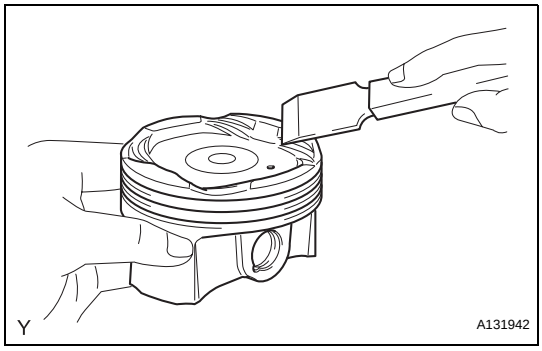

(c) Clean piston.

(1) Using a gasket scraper, remove the carbon from the piston top.

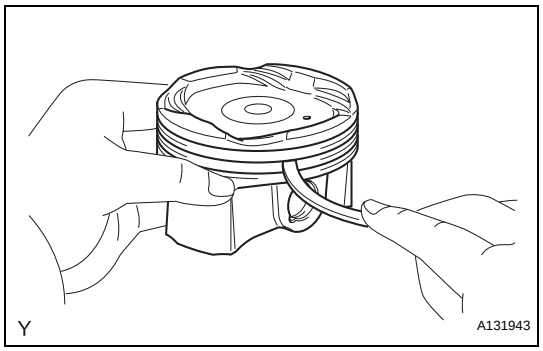

(2) Using a groove cleaning tool or broken ring, clean the piston ring grooves.

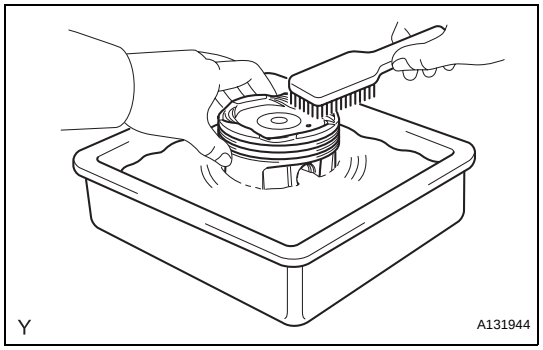

(3) Using solvent and a brush, thoroughly clean the piston.
NOTICE:
Do not use a wire brush.

INSPECTION

1. INSPECT VALVE LASH ADJUSTER ASSEMBLY

NOTICE:

- **Keep the lash adjuster free from dirt and foreign objects.**
- **Only use clean engine oil.**

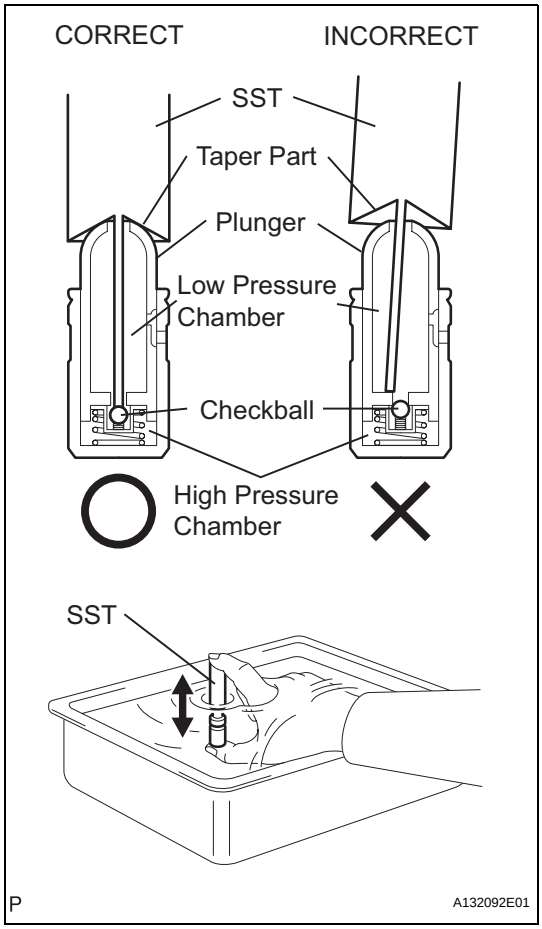

(a) Place the lash adjuster into a container full of engine oil.

(b) Insert the SST's tip into the lash adjuster's plunger and use the tip to press down on the checkball inside the plunger.
SST 09276-75010

(c) Squeeze the SST and lash adjuster together to move the plunger up and down 5 to 6 times.

(d) Check the movement of the plunger and bleed the air.
OK:
Plunger moves up and down.
NOTICE:
When bleeding high-pressure air from the compression chamber, make sure that the tip of the SST is actually pressing the checkball as shown in the illustration. If the checkball is not pressed, air will not bleed.

(e) After bleeding the air, remove SST. Then try to quickly and firmly press the plunger with a finger.
OK:
Plunger is very difficult to move.
If the result is not as specified, replace the lash adjuster.

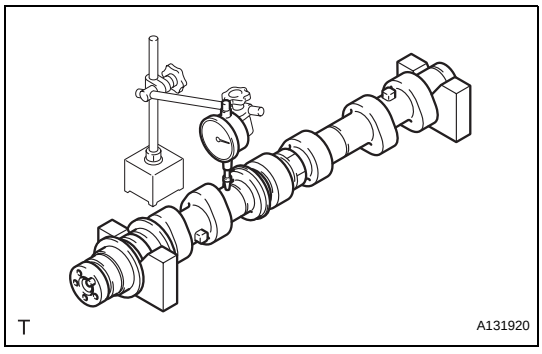

2. INSPECT CAMSHAFT

(a) Inspect the camshaft for runout.
(1) Place the camshaft on V-blocks.
(2) Using a dial indicator, measure the circle runout at the center journal.
Maximum circle runout:
0.04 mm (0.0016 in.)
If the circle runout is greater than the maximum, replace the camshaft.
HINT:
Check the oil clearance after replacing the camshaft.

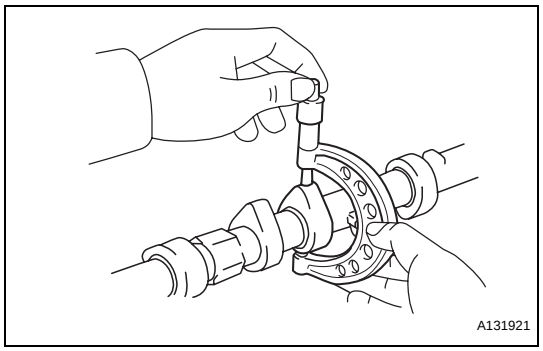

(b) Using a micrometer, measure the cam lobe height.
Standard cam lobe height

Item	Specified Condition
Intake	44.316 to 44.416 mm (1.7447 to 1.7487 in.)
Exhaust	44.262 to 44.362 mm (1.7426 to 1.7465 in.)

Maximum cam lobe height

Item	Specified Condition
Intake	44.166 mm (1.7388 in.)
Exhaust	44.112 mm (1.7367 in.)

If the cam lobe height is less than the minimum, replace the camshaft.

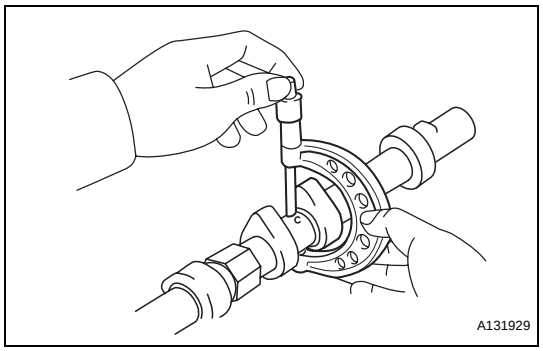

(c) Using a micrometer, measure the journal diameter.
Standard journal diameter

Item	Specified Condition
No. 1 journal	35.946 to 35.960 mm (1.4152 to 1.4157 in.)
Other journal	25.959 to 25.975 mm (1.0220 to 1.0226 in.)

If the journal diameter is not as specified, check the oil clearance.

3. INSPECT CAMSHAFT TIMING GEAR ASSEMBLY

(a) Clamp the camshaft in a vise.
NOTICE:
Be careful not to damage the camshaft in the vise.

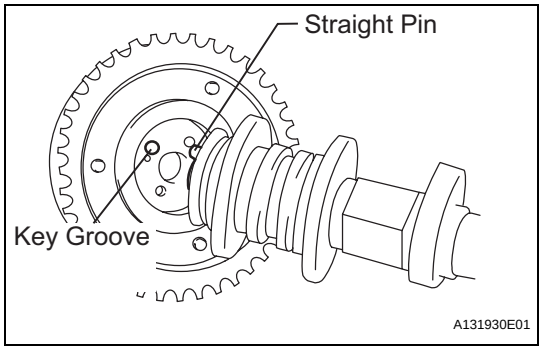

(b) Put the camshaft timing gear and camshaft together by aligning the key groove and straight pin.

(c) Lightly press the gear against the camshaft, and turn the gear. Push further at the position where the pin enters the groove.
NOTICE:
Be sure not to turn the camshaft timing gear in the retard direction (the right angle).

(d) Check that there is no clearance between the gear's fringe and the camshaft.

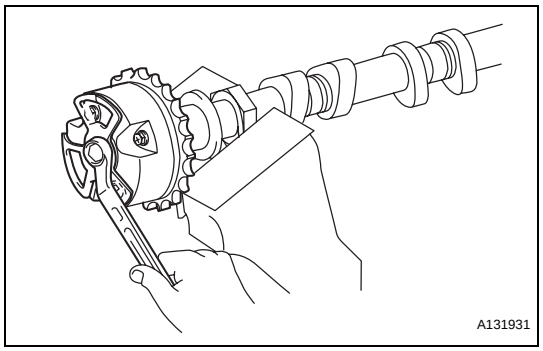

(e) Tighten the flange bolt with the camshaft timing gear fixed in place.
Torque: 100 N*m (1,020 kgf*cm, 74 ft.*lbf)

(f) Check the lock of the camshaft timing gear.
(1) Clamp the camshaft in a vise, and confirm that the camshaft timing gear is locked.
NOTICE:
Be careful not to damage the camshaft.

EM

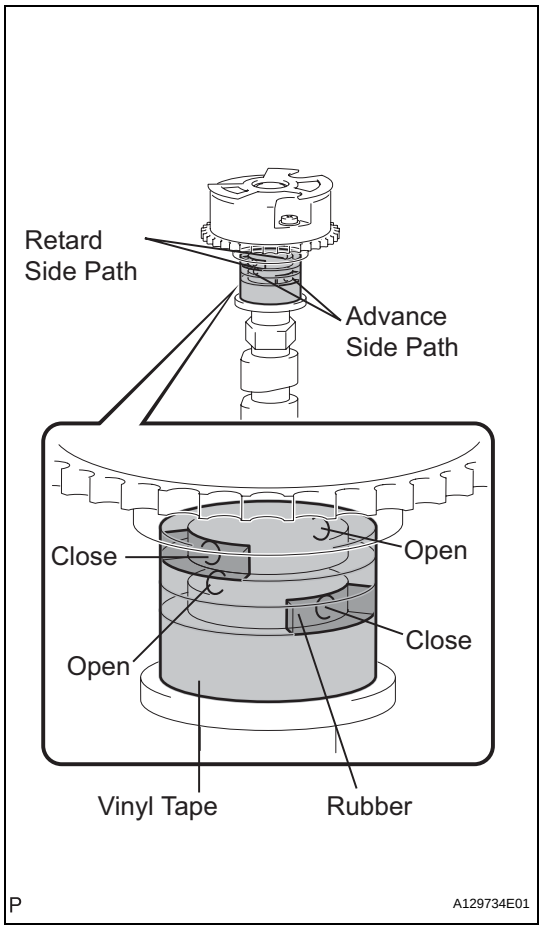

(g) Release the lock pin.
(1) Cover the 4 oil paths of the cam journal with vinyl tape as shown in the illustration.
HINT:
2 advance side paths are provided in the groove of the camshaft. Plug one of the paths with a rubber piece.
(2) Break through the tape of the advance side path and the retard side path on the opposite side to the hole of the advance side path, as shown in the illustration.

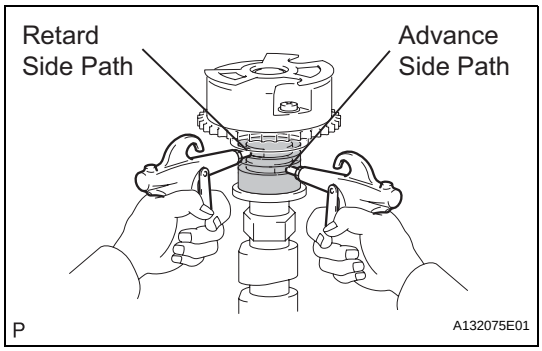

(3) Apply approximately 200 kPa (2.0 kgf/cm^2, 28 psi) of air pressure to the two broken paths.
CAUTION:
Cover the paths with a piece of cloth when applying pressure to keep oil from splashing.

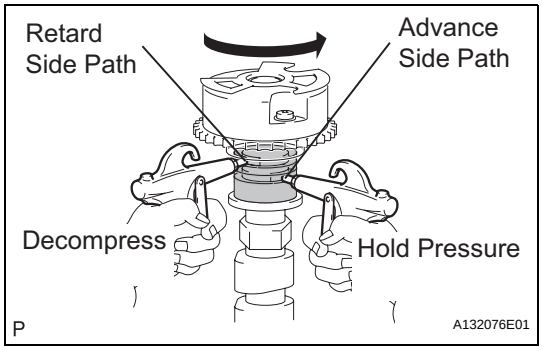

(4) Check that the camshaft timing gear revolves in the advance direction when reducing the air pressure applied to the retard side path.
HINT:
This operation releases the lock pin for the most retarded position.
(5) When the camshaft timing gear reaches the most advanced position, release the air pressure from the retard side path and advance side path, in that order.
NOTICE:
Do not release the air pressure from the advance side path first. The gear may abruptly shift in the retard direction and break the lock pin.

EM

(h) Check for smooth rotation.
(1) Turn the camshaft timing gear within its movable range (21°) 2 or 3 times, but do not turn it to the most retarded position. Make sure that the gear turns smoothly.
NOTICE:
Do not use air pressure to perform the smooth rotation check.

(i) Check the lock in the most retarded position.
(1) Confirm that the camshaft timing gear is locked at the most retarded position.

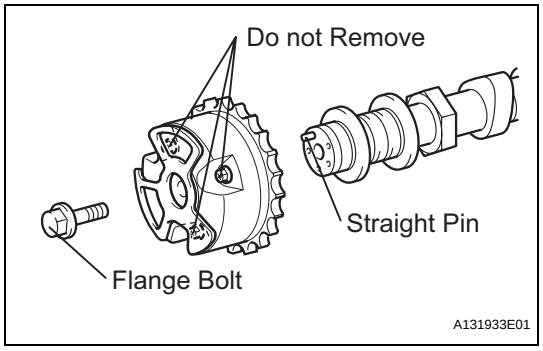

(j) Remove the flange bolt and camshaft timing gear.
NOTICE:
- **Be sure not to remove the other 3 bolts.**
- **If planning to reuse the gear, be sure to release the straight pin lock before installing the gear.**

4. INSPECT CAMSHAFT TIMING EXHAUST GEAR ASSEMBLY

(a) Clamp the camshaft in a vise.
NOTICE:
Be careful not to damage the camshaft in the vise.

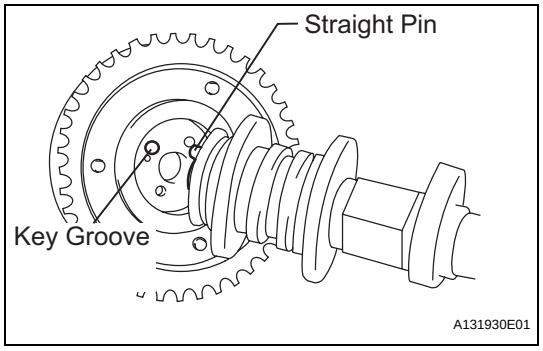

(b) Put the camshaft timing exhaust gear and camshaft together by aligning the key groove and straight pin.

(c) Lightly press the gear against the camshaft, and turn the gear. Push further at the position where the pin enters the groove.
CAUTION:
Be sure not to turn the camshaft timing exhaust gear in the retard direction (the right angle).

(d) Check that there is no clearance between the gear's fringe and the camshaft.

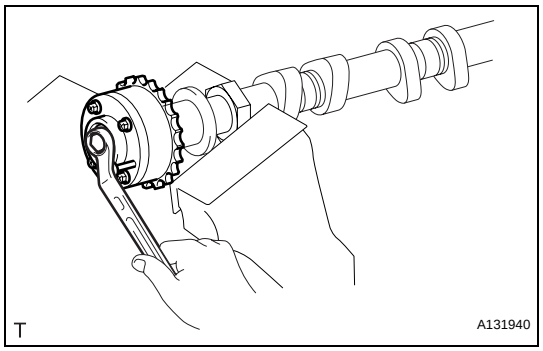

(e) Tighten the flange bolt with the camshaft timing exhaust gear fixed in place.
Torque: 100 N*m (1,020 kgf*cm, 74 ft.*lbf)

(f) Check the camshaft timing exhaust gear lock.
(1) Make sure that the camshaft timing exhaust gear is locked.

EM

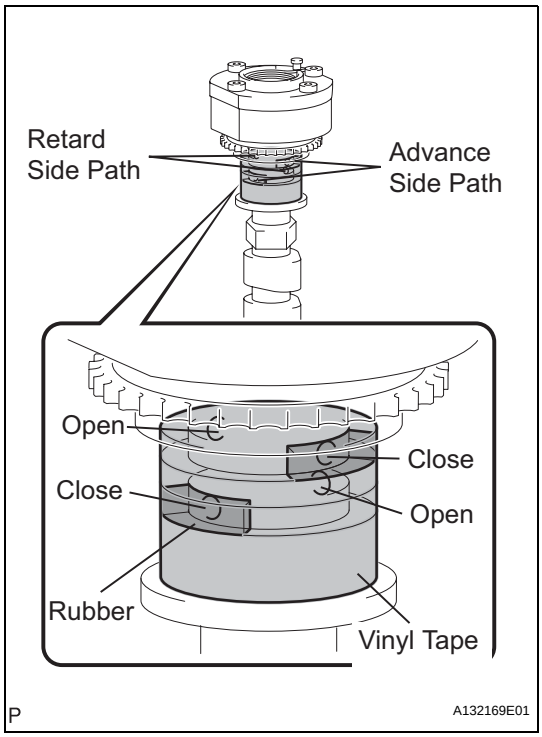

(g) Release the lock pin.
(1) Cover the 4 oil paths of the cam journal with vinyl tape as shown in the illustration.
HINT:
4 oil paths are provided in the groove. Plug 2 paths with rubber pieces.
(2) Prick a hole in the tape placed on the advance side path. Prick a hole in the tape placed on the retard side path on the opposite side to that of the advance side path, as shown in the illustration.

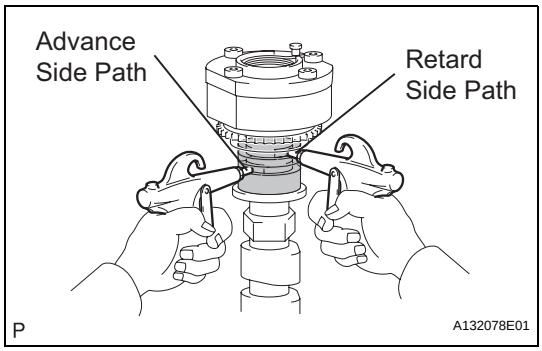

(3) Apply approximately 200 kPa (2.0 kgf/cm^2, 28 psi) of air pressure to the two broken paths (the advance side path and the retard side path).
CAUTION:
Cover the paths with a piece of cloth when applying pressure to keep oil from splashing.

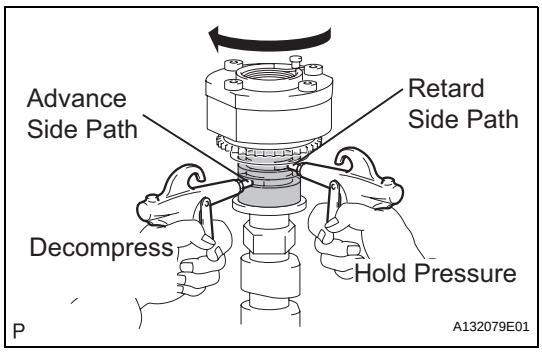

(4) Make sure that the camshaft timing exhaust gear turns in the retard direction when reducing the air pressure applied to the advance side path.
HINT:
The lock pin is released and the camshaft timing exhaust gear turns in the retard direction.
(5) When the camshaft timing exhaust gear moves to the most retarded position, release the air pressure from the advance side path, and then release the air pressure from the retard side path.
NOTICE:
Be sure to release the air pressure from the advance side path first. If the air pressure of the retard side path is released first, the camshaft timing exhaust gear may abruptly shift in the advance direction and break the lock pin or other parts.

EM

(h) Check for smooth rotation.
(1) Turn the camshaft timing exhaust gear within its movable range (18.5°) 2 or 3 times, but do not turn it to the most advanced position. Make sure that the gear turns smoothly.
NOTICE:
When the air pressure is released from the advance side path and then from the retard side path, the gear automatically returns to the most advanced position due to the advance assist spring operation and locks. Gradually release the air pressure from the retard side path before performing the smooth rotation check.

(i) Check the lock at the most advanced position.
(1) Make sure that the camshaft timing exhaust gear is locked at the most advanced position.

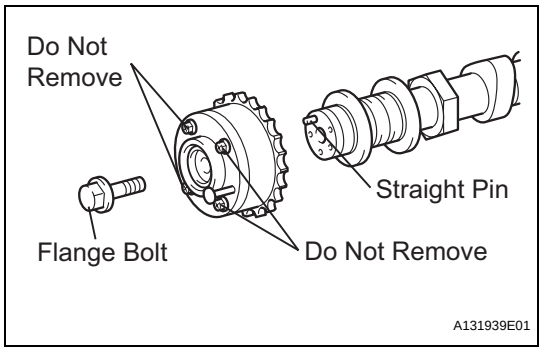

(j) Remove the flange bolt and camshaft timing exhaust gear.
NOTICE:
- **Be sure not to remove the other 3 bolts.**
- **If planning to reuse the gear, be sure to release the straight pin lock before installing the gear.**

EM

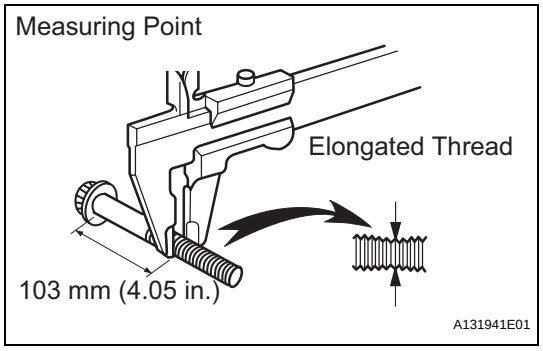

5. INSPECT CYLINDER HEAD SET BOLT

(a) Using a vernier caliper, measure the minimum diameter of the elongated thread at the measuring point.
Minimum outside diameter:
10.70 mm (0.4213 in.)
HINT:
- If a visual check reveals no excessively thin areas, check the center of the bolt (see illustration) and find the area that has the lowest diameter.
- If the diameter is less than the minimum, replace the cylinder head bolt.

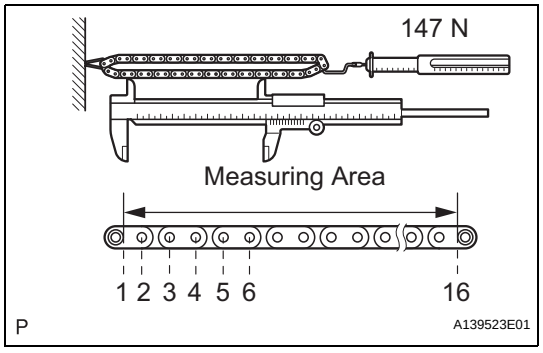

6. INSPECT CHAIN SUB-ASSEMBLY

(a) Using a spring scale, pull the chain with a force of 147 N (15 kgf, 33 lbf) as shown in the illustration.

(b) Using a vernier caliper, measure the length of 16 links.
Maximum chain elongation:
136.9 mm (5.389 in.)
If the elongation is greater than the maximum, replace the chain.
NOTICE:
Perform the measurement at 3 random places. Inspect using the average of the measurements.

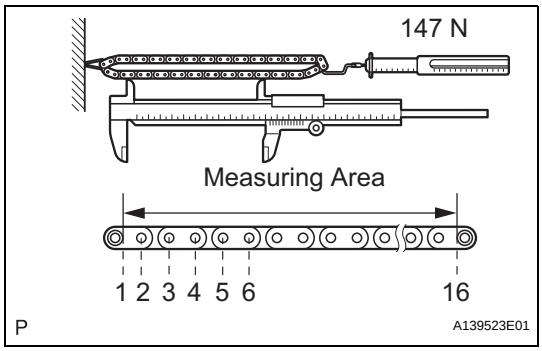

7. INSPECT NO. 2 CHAIN SUB-ASSEMBLY

(a) Pull the chain with a force of 147 N (15 kgf, 33 lbf) as shown in the illustration.

(b) Using a vernier caliper, measure the length of 16 links.

Maximum chain elongation:
137.6 mm (5.417 in.)

If the elongation is greater than the maximum, replace the chain.

NOTICE:
Perform the measurement at 3 random places.
Inspect using the average of the measurements.

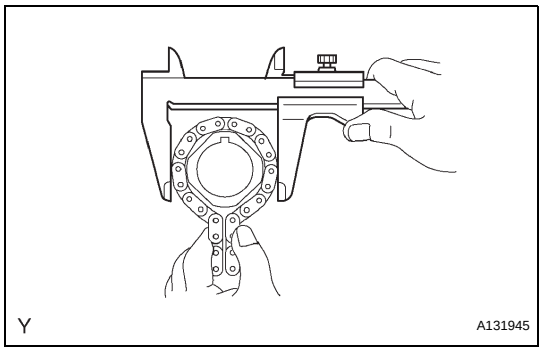

8. INSPECT CRANKSHAFT TIMING GEAR OR SPROCKET

(a) Wrap the chain around the sprocket.

(b) Using a vernier caliper, measure the sprocket diameter with the chain.

Minimum sprocket diameter (w/ chain):
61.4 mm (2.417 in.)

HINT:

- The vernier caliper must contact the chain rollers for the measurement.
- If the diameter is less than the minimum, replace the chain and sprocket.

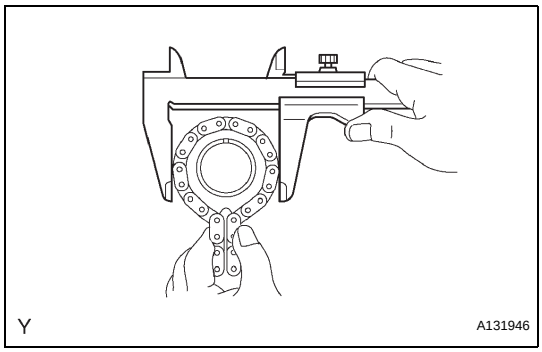

9. INSPECT IDLE SPROCKET ASSEMBLY

(a) Wrap the chain around the sprocket.

(b) Using a vernier caliper, measure the sprocket diameter with the chain.

Minimum sprocket diameter (w/ chain):
61.4 mm (2.417 in.)

HINT:

- The vernier caliper must contact the chain rollers for the measurement.
- If the diameter is less than the minimum, replace the chain and sprocket.

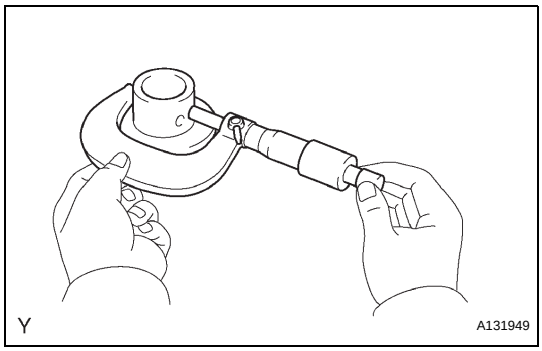

10. INSPECT IDLE GEAR SHAFT OIL CLEARANCE

(a) Using a micrometer, measure the idle gear shaft diameter.

Standard idle gear shaft diameter:
22.987 to 23.000 mm (0.9050 to 0.9055 in.)

EM

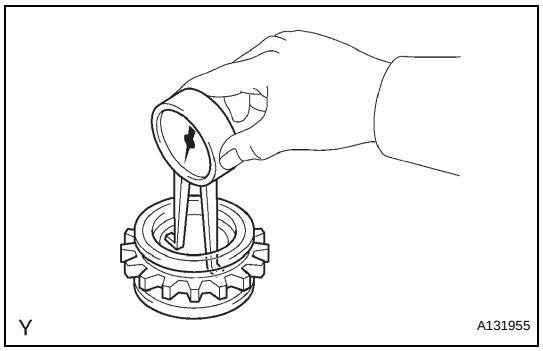

(b) Using a caliper gauge, measure the inside diameter of the idle gear.
Standard idle gear inside diameter:
23.02 to 23.03 mm (0.9062 to 0.9067 in.)

(c) Subtract the idle gear shaft diameter measurement from the idle gear inside diameter measurement.
Standard oil clearance:
0.02 to 0.043 mm (0.0001 to 0.0017 in.)
Maximum oil clearance:
0.043 mm (0.0017 in.)
If the thrust oil clearance is greater than the maximum, replace the idle gear shaft and idle gear.

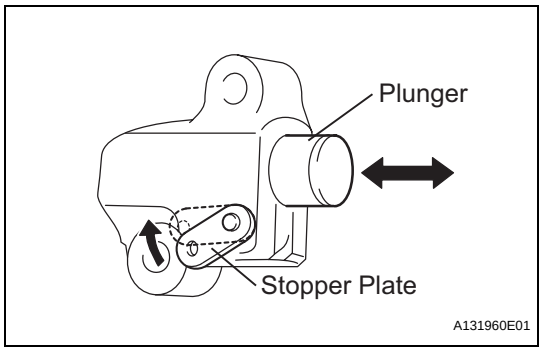

11. INSPECT NO. 1 CHAIN TENSIONER ASSEMBLY

(a) Move the stopper plate upward to release the lock. Push the plunger and check that it moves smoothly. If necessary, replace the chain tensioner.

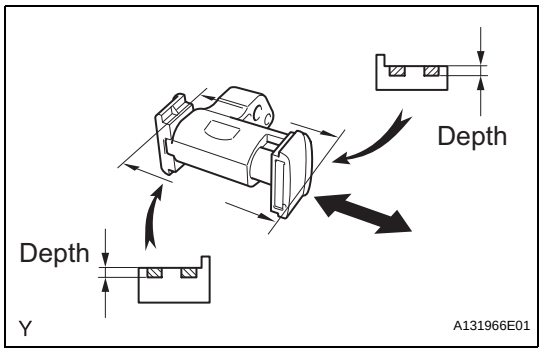

12. INSPECT NO. 2 CHAIN TENSIONER ASSEMBLY

(a) Check that the plunger moves smoothly.

(b) Measure the worn depth of the chain tensioner.
Maximum depth:
0.9 mm (0.035 in.)
If the depth is greater than the maximum, replace the chain tensioner.

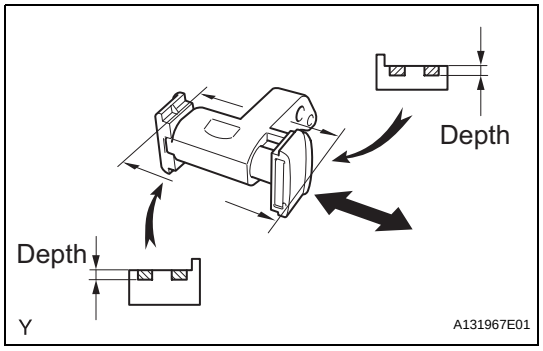

13. INSPECT NO. 3 CHAIN TENSIONER ASSEMBLY

(a) Check that the plunger moves smoothly.

(b) Measure the worn depth of the chain tensioner.
Maximum depth:
0.9 mm (0.035 in.)
If the depth is greater than the maximum, replace the chain tensioner.

EM

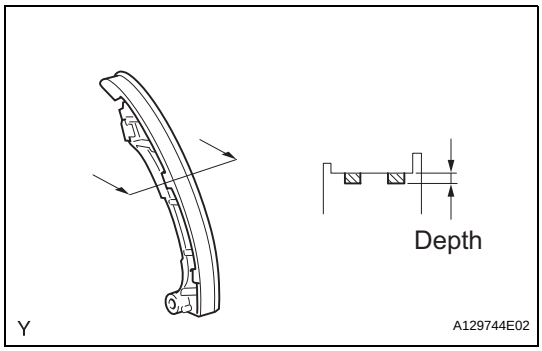

14. INSPECT CHAIN TENSIONER SLIPPER

(a) Measure the worn depth of the chain tensioner slipper.

Maximum depth:

1.0 mm (0.039 in.)

If the depth is greater than the maximum, replace the chain tensioner slipper.

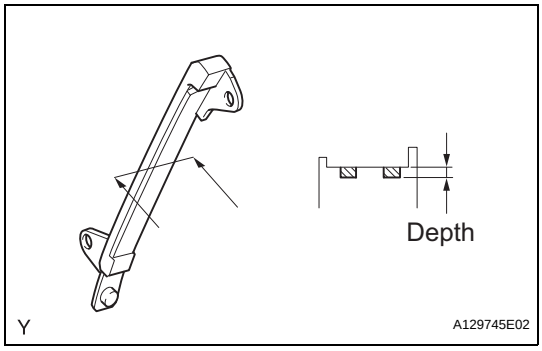

15. INSPECT NO. 1 CHAIN VIBRATION DAMPER

(a) Measure the worn depth of the chain vibration damper.

Maximum depth:

1.0 mm (0.039 in.)

If the depth is greater than the maximum, replace the chain vibration damper.

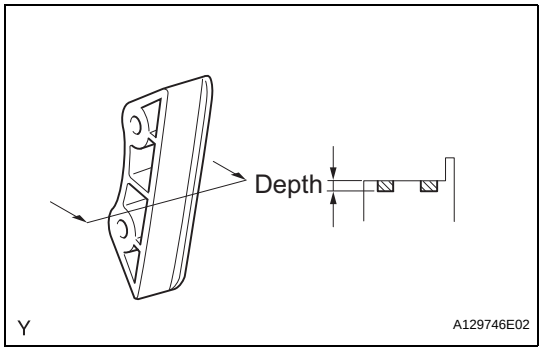

16. INSPECT NO. 2 CHAIN VIBRATION DAMPER

(a) Measure the worn depth of the chain vibration damper.

Maximum depth:

1.0 mm (0.039 in.)

If the depth is greater than the maximum, replace the chain vibration damper.

EM

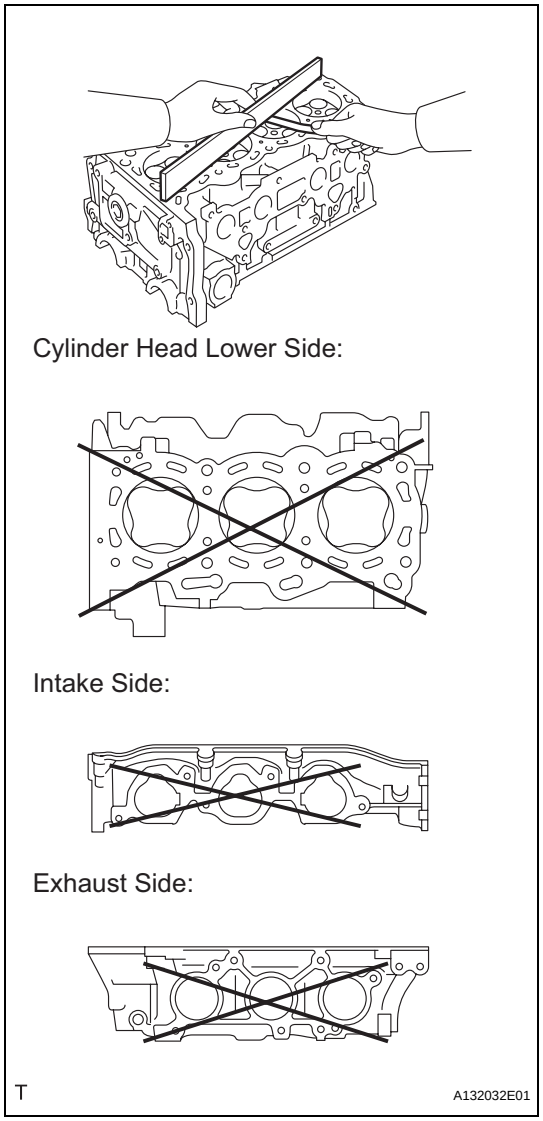

17. INSPECT CYLINDER HEAD SUB-ASSEMBLY

(a) Using a precision straightedge and feeler gauge, measure the warpage of the contact surface of the cylinder block and manifolds.

Standard warpage

Item	Specified Condition
Cylinder head lower side	0.05 mm (0.0020 in.)
Intake side	0.08 mm (0.0031 in.)
Exhaust side	0.08 mm (0.0031 in.)

Maximum warpage:
0.10 mm (0.0039 in.)

If the warpage is greater than the maximum, replace the cylinder head.

EM

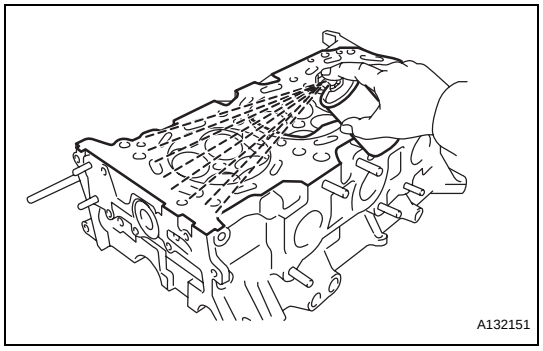

(b) Using a dye penetrate, check the intake ports, exhaust ports and cylinder surface for cracks.
If cracked, replace the cylinder head.

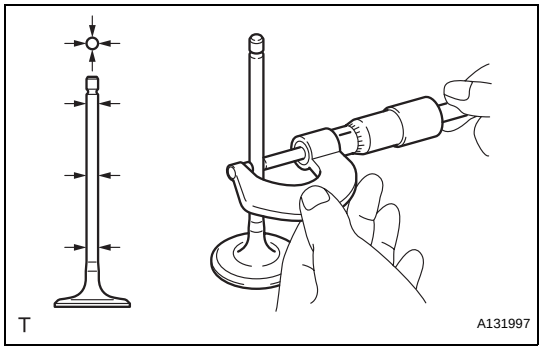

18. INSPECT INTAKE VALVE

(a) Using a micrometer, measure the diameter of the valve stem.

Standard valve stem diameter:
5.470 to 5.485 mm (0.2154 to 0.2159 in.)

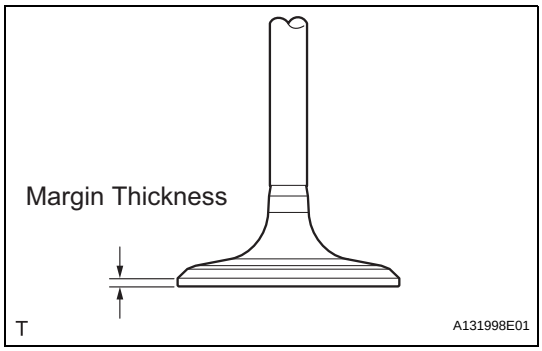

(b) Using a vernier caliper, measure the valve head margin thickness.
Standard margin thickness:
1.0 mm (0.0394 in.)
Minimum margin thickness:
0.50 mm (0.0197 in.)
If the margin thickness is less than the minimum, replace the intake valve.

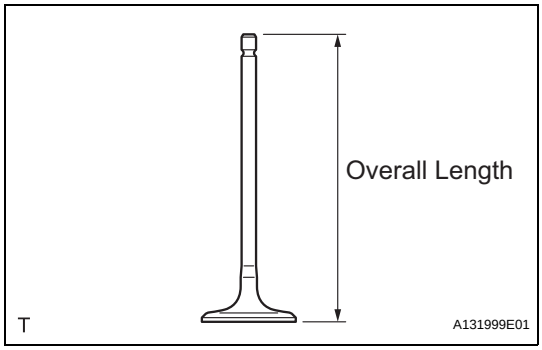

(c) Using a vernier caliper, measure the valve's overall length.
Standard overall length:
105.85 mm (4.1673 in.)
Minimum overall length:
105.35 mm (4.1476 in.)
If the overall length is less than the minimum, replace the intake valve.

EM

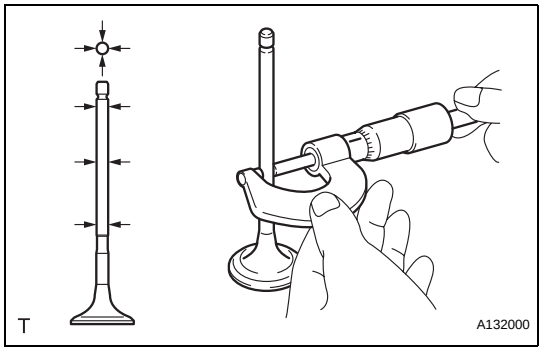

19. INSPECT EXHAUST VALVE

(a) Using a micrometer, measure the diameter of the valve stem.
Standard valve stem diameter:
5.465 to 5.480 mm (0.2151 to 0.2157 in.)

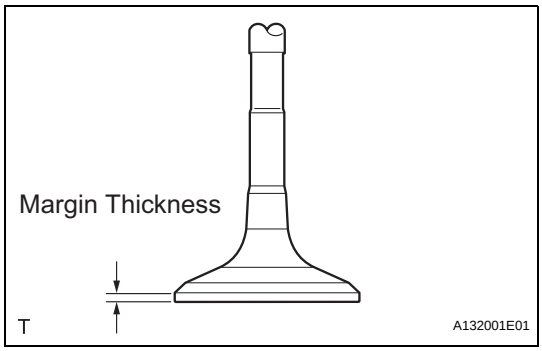

(b) Using a vernier caliper, measure the valve head margin thickness.
Standard margin thickness:
1.0 mm (0.0394 in.)
Minimum margin thickness:
0.50 mm (0.0197 in.)
If the margin thickness is less than the minimum, replace the exhaust valve.

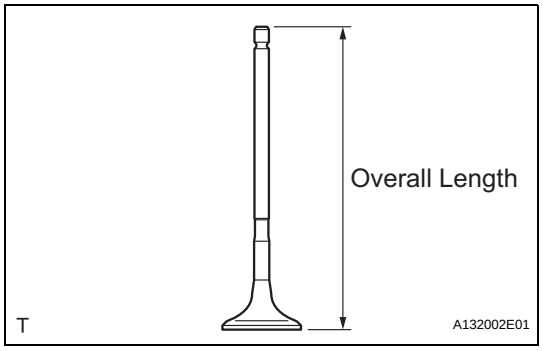

(c) Using a vernier caliper, measure the valve's overall length.
Standard overall length:
110.40 mm (4.3464 in.)
Minimum overall length:
109.90 mm (4.3268 in.)
If the overall length is less than the minimum, replace the exhaust valve.

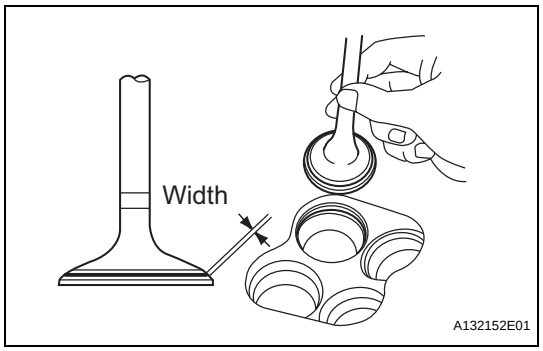

20. INSPECT INTAKE VALVE SEAT

(a) Apply a light coat of Prussian blue to the valve face.
(b) Lightly press the valve face against the valve seat.
(c) Check the valve face and valve seat by using the following procedure.
  (1) If Prussian blue appears around the entire valve face, the valve face is concentric. If not, replace the valve.
  (2) If Prussian blue appears around the entire valve seat, the guide and valve face are concentric. If not, resurface the valve seat.
  (3) Check that the valve seat contacts in the middle of the valve face with the width between 1.1 and 1.5 mm (0.043 and 0.059 in.).

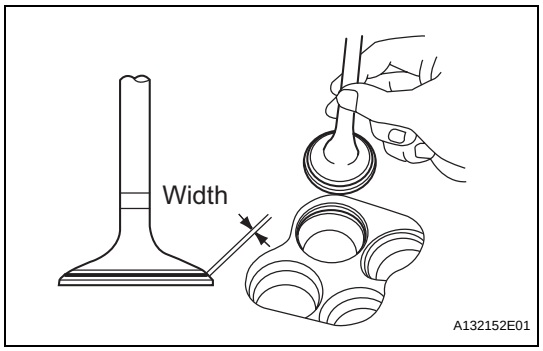

21. INSPECT EXHAUST VALVE SEAT

(a) Apply a light coat of Prussian blue to the valve face.
(b) Lightly press the valve face against the valve seat.
(c) Check the valve face and valve seat by using the following procedure.
  (1) If Prussian blue appears around the entire valve face, the valve face is concentric. If not, replace the valve.
  (2) If Prussian blue appears around the entire valve seat, the guide and valve face are concentric. If not, resurface the valve seat.
  (3) Check that the valve seat contacts in the middle of the valve face with the width between 1.2 and 1.6 mm (0.047 and 0.063 in.).

EM

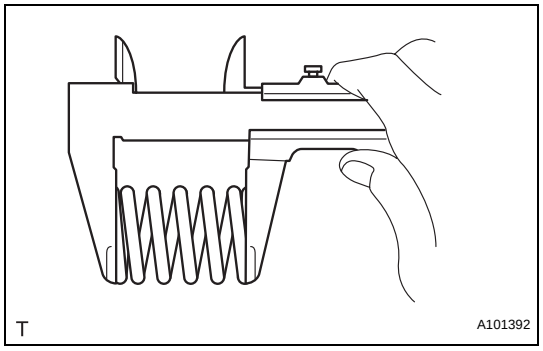

22. INSPECT INNER COMPRESSION SPRING

(a) Using a vernier caliper, measure the free length of the inner compression spring.
Standard free length:
45.46 mm (1.7898 in.)
If the free length is not as specified, replace the spring.

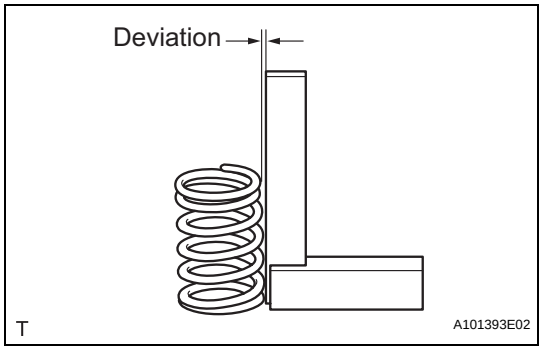

(b) Using a steel square, measure the deviation of the inner compression spring.
Maximum deviation:
1.0 mm (0.039 in.)
Maximum angle (reference):
2°
If the deviation is greater than the maximum, replace the spring.

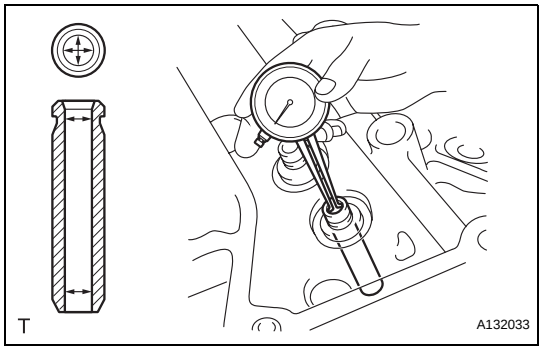

23. INSPECT VALVE GUIDE BUSH OIL CLEARANCE

(a) Using a caliper gauge, measure the inside diameter of the guide bush.

Standard bush inside diameter:
5.51 to 5.53 mm (0.2169 to 0.2177 in.)

(b) Subtract the valve stem diameter measurement from the guide bush inside diameter measurement.

Standard clearance

Item	Specified Condition
Intake	0.025 to 0.060 m (0.0010 to 0.0024 in.)
Exhaust	0.030 to 0.065 mm (0.0012 to 0.0026 in.)

Maximum oil clearance

Item	Specified Condition
Intake	0.08 mm (0.0031 in.)
Exhaust	0.10 mm (0.0039 in.)

HINT:

- If the clearance is greater than the maximum, replace the intake valve and intake guide bush.
- If the clearance is greater than the maximum, replace the exhaust valve and exhaust guide bush.

EM

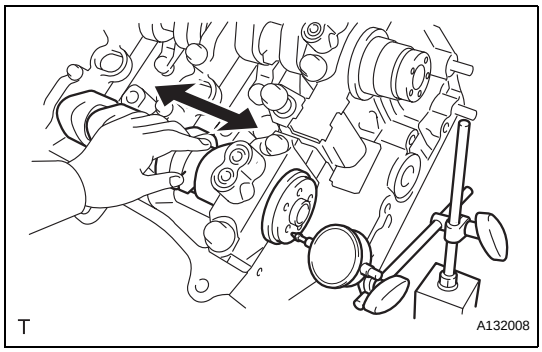

24. INSPECT CAMSHAFT THRUST CLEARANCE

(a) Inspect the bank 1 camshafts.

(1) Install the bank 1 camshafts.

(2) Using a dial indicator, measure the thrust clearance while moving the camshaft back and forth.

Standard thrust clearance:
0.08 to 0.13 mm (0.0031 to 0.0051 in.)
Maximum thrust clearance:
0.15 mm (0.006 in.)

If the thrust clearance is greater than the maximum, replace the cylinder head. If the thrust surface is damaged, replace the camshaft.

(b) Inspect the bank 2 camshafts.

(1) Install the bank 2 camshafts.

(2) Using a dial indicator, measure the thrust clearance while moving the camshaft back and forth.

Standard thrust clearance:
0.08 to 0.13 mm (0.0031 to 0.0051 in.)
Maximum thrust clearance:
0.15 mm (0.006 in.)

If the thrust clearance is greater than the maximum, replace the cylinder head. If the thrust surface is damaged, replace the camshaft.

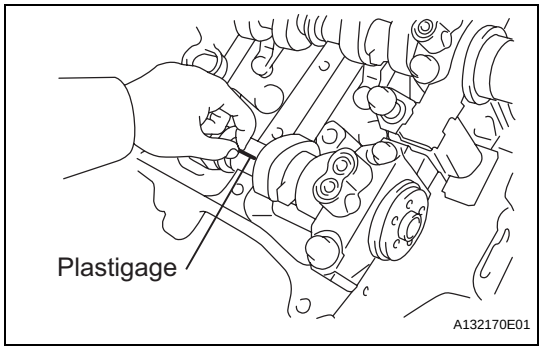

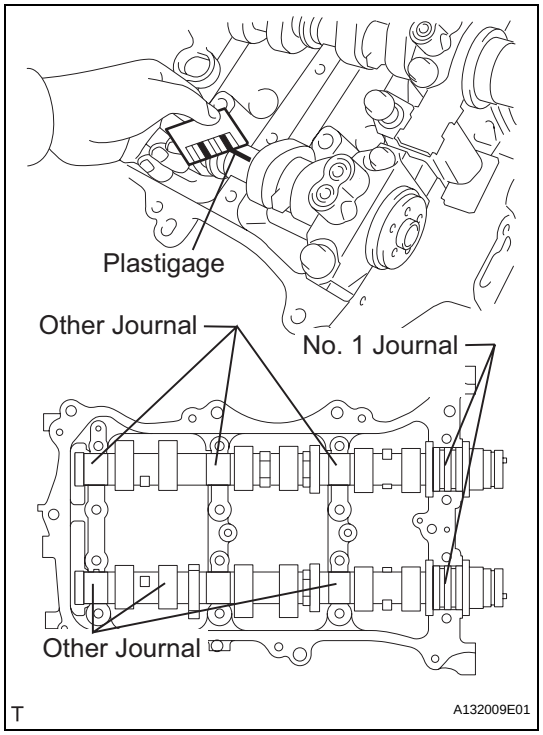

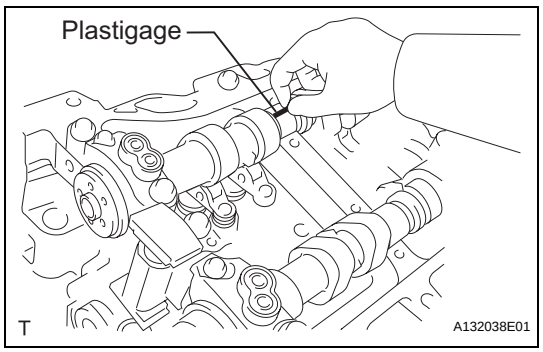

25. INSPECT CAMSHAFT OIL CLEARANCE

(a) Clean the bearing caps, camshaft housing and camshaft journals.
(b) Place the camshafts on the camshaft housing.
(c) Lay a strip of Plastigage across each of the camshaft journals.
(d) Install the bearing caps.
NOTICE:
Do not turn the camshaft.
(e) Remove the bearing caps.

(f) Measure the Plastigage at its widest point.
Standard oil clearance

Item	Specified Condition
No. 1 journal	0.040 to 0.079 mm (0.0016 to 0.0031 in.)
Other journal	0.025 to 0.062 mm (0.0010 to 0.0024 in.)

Maximum oil clearance

Item	Specified Condition
No. 1 journal	0.10 mm (0.0039 in.)
Other journal	0.09 mm (0.0035 in.)

If the oil clearance is greater than the maximum, replace the camshaft. If necessary, replace the camshaft housing.
(g) Clean the bearing caps, camshaft housing and camshaft journals.
(h) Place the camshafts on the camshaft housing.

(i) Lay a strip of Plastigage across each of the camshaft journals.
(j) Install the bearing caps.
NOTICE:
Do not turn the camshaft.
(k) Remove the bearing caps.

EM

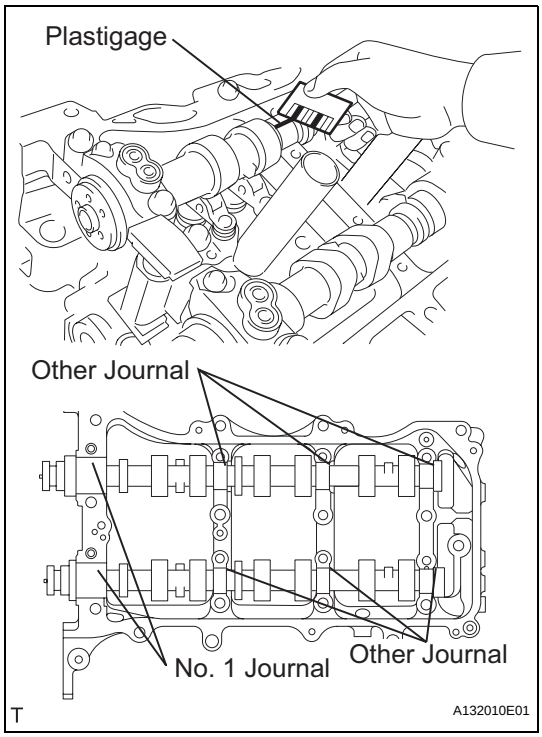

(l) Measure the Plastigage at its widest point.
Standard oil clearance

Item	Specified Condition
No. 1 journal	0.040 to 0.079 mm (0.0016 to 0.0031 in.)
Other journal	0.025 to 0.062 mm (0.0010 to 0.0024 in.)

Maximum oil clearance

Item	Specified Condition
No. 1 journal	0.10 mm (0.0039 in.)
Other journal	0.09 mm (0.0035 in.)

If the oil clearance is greater than the maximum, replace the camshaft. If necessary, replace the camshaft housing.

EM

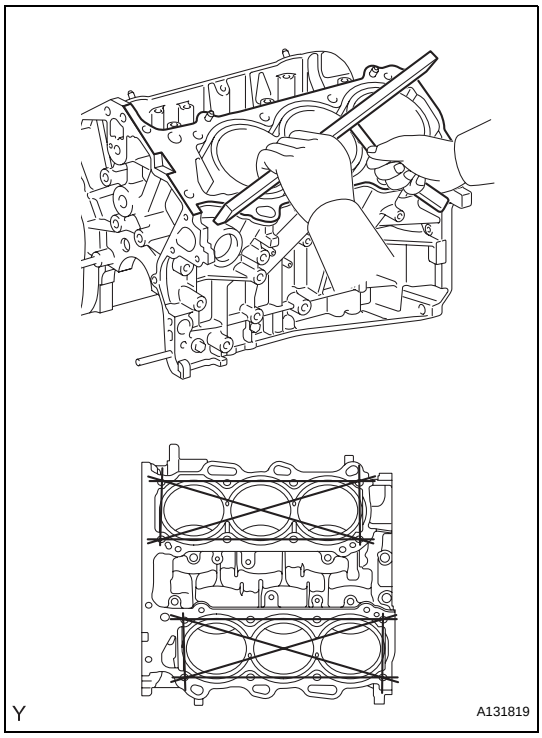

26. INSPECT CYLINDER BLOCK FOR WARPAGE

(a) Using a precision straightedge and feeler gauge, measure the warpage of the contact surface of the cylinder head gasket.
Maximum warpage:
0.07 mm (0.0028 in.)
If the warpage is greater than the maximum, replace the cylinder block.

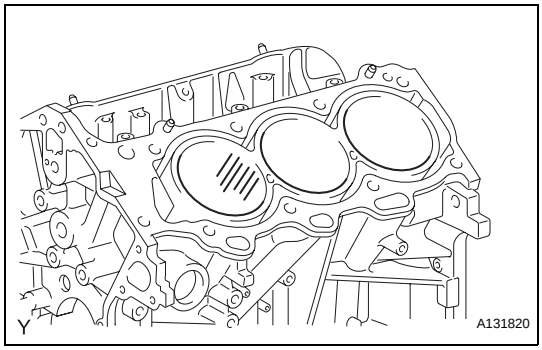

(b) Visually check the cylinder for vertical scratches.
If deep scratches are present, rebore all 6 cylinders.
If necessary, replace the cylinder block.

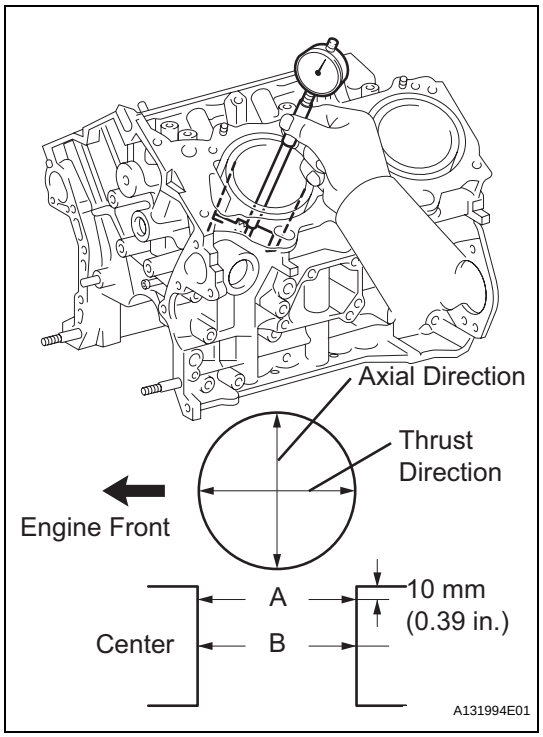

27. INSPECT CYLINDER BORE

(a) Using a cylinder gauge, measure the cylinder bore diameter at positions A and B in the thrust and axial directions.

Standard diameter:
94.000 to 94.012 mm (3.7008 to 3.7013 in.)
Maximum diameter:
94.200 mm (3.7087 in.)

If the diameter is greater than the maximum, replace the cylinder block.

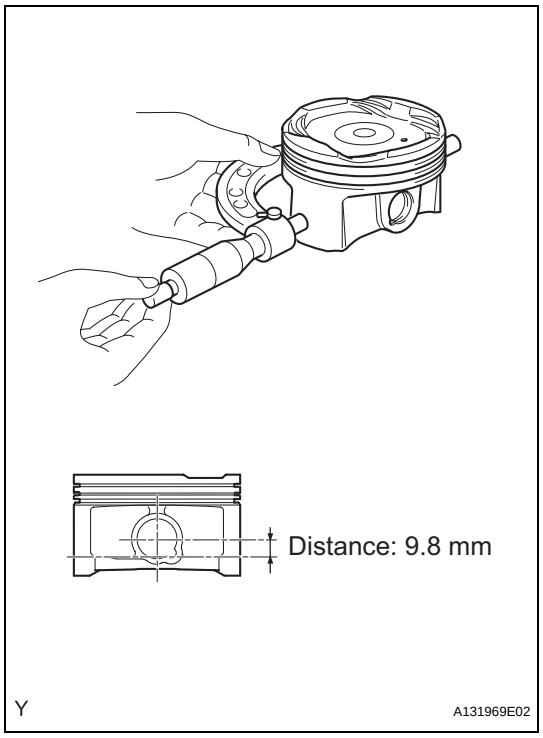

28. INSPECT PISTON SUB-ASSEMBLY WITH PIN

(a) Using a micrometer, measure the piston diameter at right angles to the piston center line where the distance from the bottom edge of the piston is as specified.

Distance:
9.8 mm (0.3858 in.)
Standard diameter:
93.960 to 93.980 mm (3.6992 to 3.6999 in.)
Maximum diameter:
93.830 mm (3.6941 in.)

29. INSPECT PISTON OIL CLEARANCE

(a) Measure the cylinder bore diameter in the thrust direction.

(b) Subtract the piston diameter measurement from the cylinder bore diameter measurement.

Standard oil clearance:
0.020 to 0.052 mm (0.0007 to 0.0020 in.)
Maximum oil clearance:
0.06 mm (0.0024 in.)

If the oil clearance is greater than the maximum, replace all the pistons. If necessary, replace the cylinder block.

EM

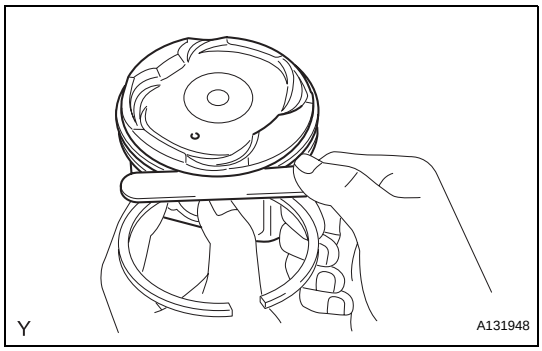

30. INSPECT RING GROOVE CLEARANCE

(a) Using a feeler gauge, measure the clearance between a new piston ring and the wall of the ring groove.

Standard ring groove clearance

Item	Specified Condition
No. 1	0.020 to 0.070 mm (0.0008 to 0.0028 in.)
No. 2	0.020 to 0.060 mm (0.0008 to 0.0024 in.)
Oil	0.070 to 0.150 mm (0.0028 to 0.0059 in.)

If the clearance is not as specified, replace the piston.

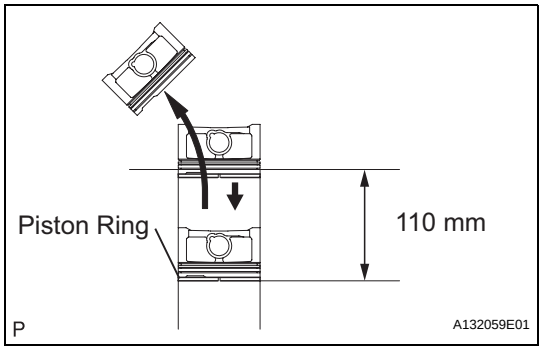

31. INSPECT PISTON RING END GAP

(a) Insert the piston ring into the cylinder bore.

(b) Using a piston, push the piston ring a little beyond the bottom of the ring travel, 110 mm (4.33 in.) from the top of the cylinder block.

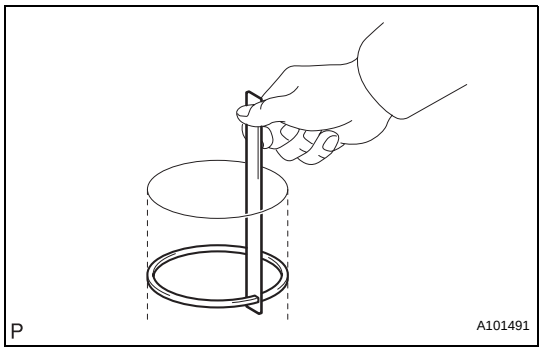

(c) Using a feeler gauge, measure the end gap.

Standard end gap

Item	Specified Condition
No. 1	0.25 to 0.35 mm (0.0098 to 0.0138 in.)
No. 2	0.50 to 0.60 mm (0.0197 to 0.0236 in.)
Oil	0.10 to 0.40 mm (0.0039 to 0.0157 in.)

Maximum end gap

Item	Specified Condition
No. 1	0.50 mm (0.0197 in.)
No. 2	0.85 mm (0.0335 in.)
Oil	0.60 mm (0.0236 in.)

If the end gap is greater than the maximum, replace the piston ring. If the end gap is greater than the maximum even with a new piston ring, replace the cylinder block.

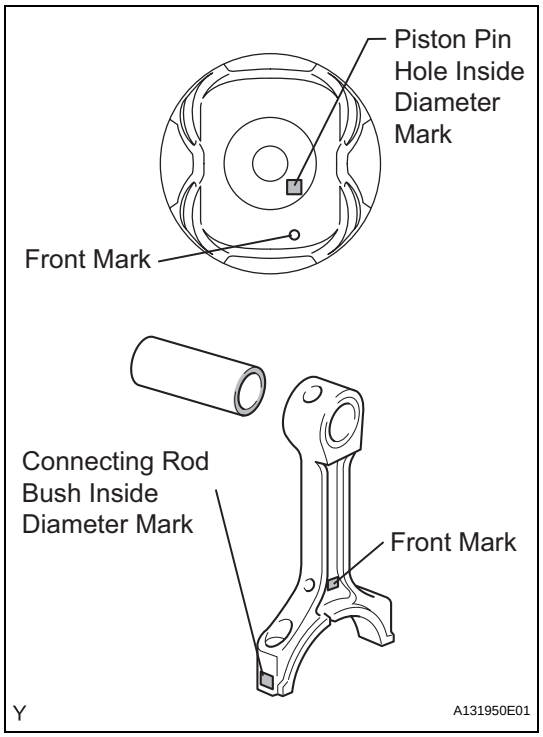

32. INSPECT PISTON PIN OIL CLEARANCE

(a) Check each mark on the piston, piston pin and connecting rod.

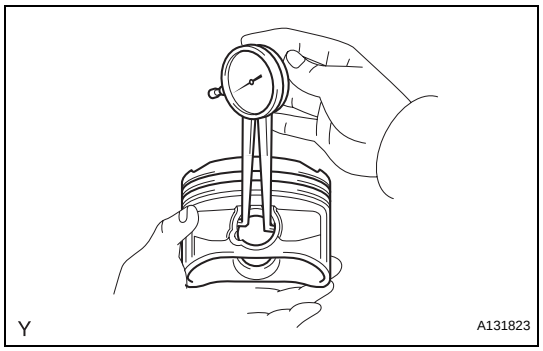

(b) Using a caliper gauge, measure the inside diameter of the piston pin hole.

Standard piston pin hole inside diameter

Mark	Specified Condition
A	22.001 to 22.004 mm (0.8662 to 0.8663 in.)
B	22.005 to 22.007 mm (0.8663 to 0.8664 in.)
C	22.008 to 22.010 mm (0.8665 to 0.8665 in.)

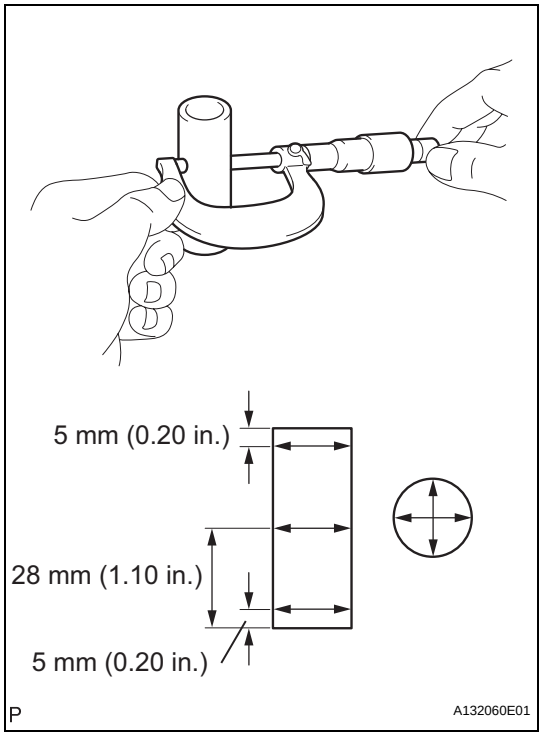

(c) Using a micrometer, measure the piston pin diameter.

Standard piston pin diameter

Mark	Specified Condition
A	21.997 to 22.000 mm (0.8660 to 0.8661 in.)
B	22.001 to 22.003 mm (0.8662 to 0.8663 in.)
C	22.004 to 22.006 mm (0.8663 to 0.8664 in.)

(d) Subtract the piston pin diameter measurement from the piston pin hole diameter measurement.

Standard oil clearance:
0.001 to 0.007 mm (0.00004 to 0.0003 in.)
Maximum oil clearance:
0.015 mm (0.0006 in.)

HINT:
If the oil clearance is greater than the maximum, replace the piston and piston pin as a set.

EM

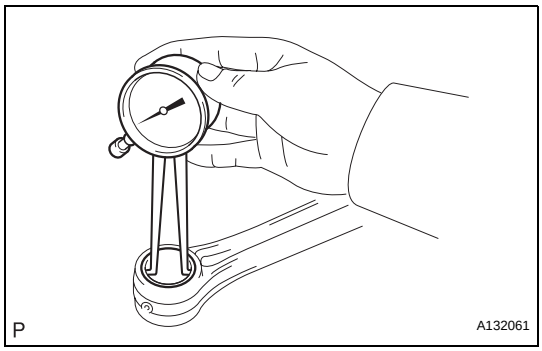

(e) Using a caliper gauge, measure the inside diameter of the connecting rod bush.

Standard bush inside diameter

Mark	Specified Condition
A	22.005 to 22.008 mm (0.8663 to 0.8665 in.)
B	22.009 to 22.011 mm (0.8665 to 0.8666 in.)
C	22.012 to 22.014 mm (0.8666 to 0.8667 in.)

(f) Subtract the piston pin diameter measurement from the bush inside diameter measurement.

Standard oil clearance:
0.005 to 0.011 mm (0.0002 to 0.0004 in.)
Maximum oil clearance:
0.03 mm (0.0012 in.)

HINT:
If the oil clearance is greater than the maximum, replace the bush. If necessary, replace the connecting rod and piston pin as a set.

EM

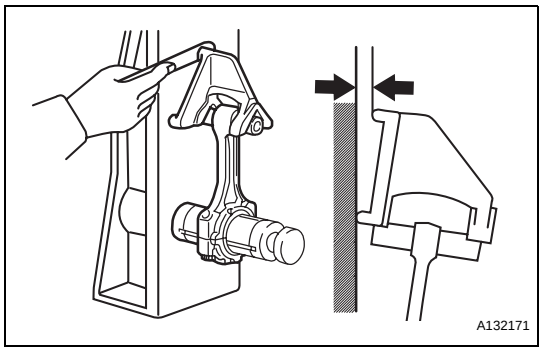

33. INSPECT CONNECTING ROD SUB-ASSEMBLY

(a) Using a rod aligner and feeler gauge, check the connecting rod alignment.

(1) Check for bend.

Maximum bend:
0.05 mm (0.0020 in.) per 100 mm (3.94 in.)
If the bend is greater than the maximum, replace the connecting rod.

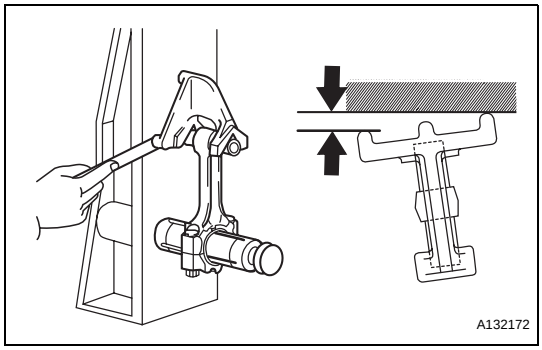

(2) Check for twist.

Maximum twist:
0.15 mm (0.0059 in.) per 100 mm (3.94 in.)
If the twist is greater than the maximum, replace the connecting rod.

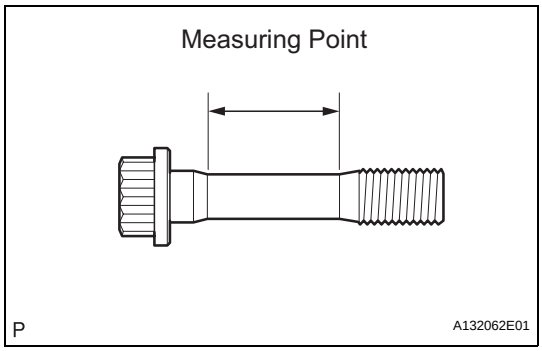

34. INSPECT CONNECTING ROD BOLT

(a) Using a vernier caliper, measure the tension portion diameter of the bolt.

Standard diameter:
7.2 to 7.3 mm (0.283 to 0.287 in.)
Minimum diameter:
7.0 mm (0.276 in.)
If the diameter is less than the minimum, replace the bolt.

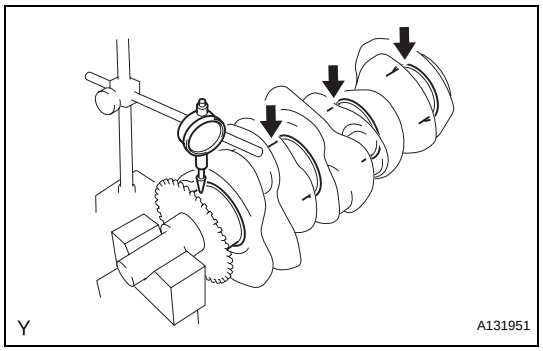

35. INSPECT CRANKSHAFT

(a) Inspect for circle runout.
  (1) Place the crankshaft on the V-blocks.
  (2) Using a dial indicator, measure the circle runout at the center journal.
  Maximum circle runout:
  0.06 mm (0.0024 in.)
  If the circle runout is greater than the maximum, replace the crankshaft.

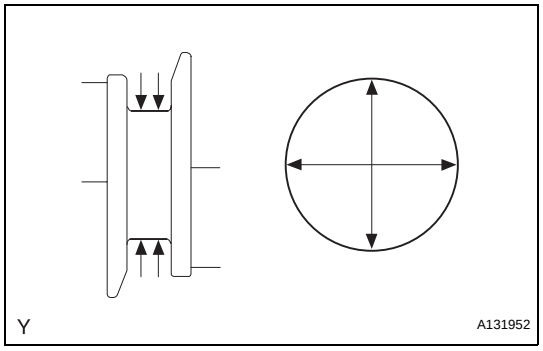

(b) Inspect the main journals.
  (1) Using a micrometer, measure the diameter of each main journal.
  Standard journal diameter:
  60.988 to 61.00 mm (2.4011 to 2.4016 in.)
  If the diameter is not as specified, check the oil clearance. If necessary, replace the crankshaft.
  (2) Check each main journal for taper and out-of-round as shown in the illustration.
  Maximum taper and out-of-round:
  0.02 mm (0.0008 in.)
  If the taper and out-of-round is greater than the maximum, replace the crankshaft.

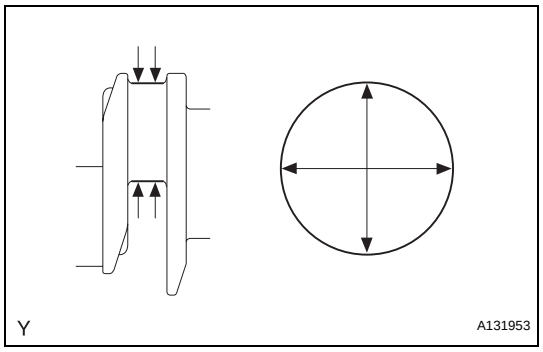

(c) Inspect the crank pin.
  (1) Using a micrometer, measure the diameter of each crank pin.
  Standard crank pin diameter:
  52.992 to 53.000 mm (2.0863 to 2.0866 in.)
  If the diameter is not as specified, check the oil clearance. If necessary, replace the crankshaft.
  (2) Check each crank pin for taper and out-of-round as shown in the illustration.
  Maximum taper and out-of-round:
  0.02 mm (0.0008 in.)
  If the taper and out-of-round is greater than the maximum, replace the crankshaft.

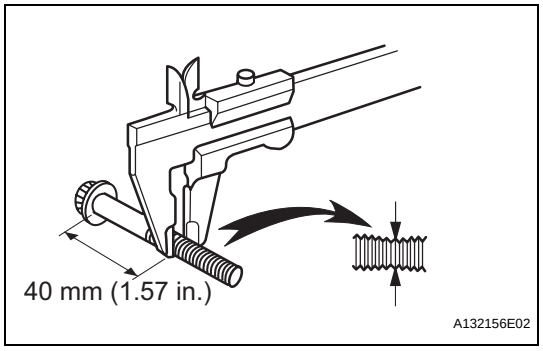

36. INSPECT CRANKSHAFT BEARING CAP SET BOLT

(a) Using a vernier caliper, measure the minimum diameter of the compressed thread at the measuring point.
  Standard diameter:
  10.8 to 11.0 mm (0.4252 to 0.4331 in.)
  Minimum diameter:
  10.70 mm (0.4213 in.)
  If the diameter is less than the minimum, replace the bolt.

EM

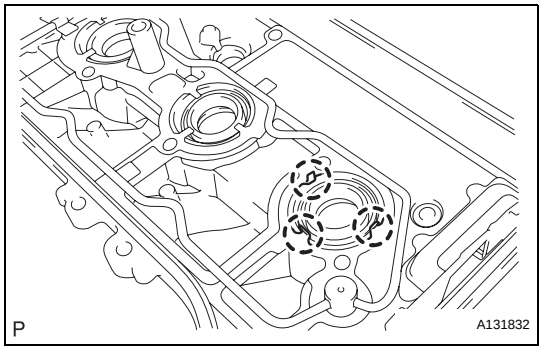

REPLACEMENT

1. REPLACE SPARK PLUG TUBE GASKET

(a) Pry up the claws of the ventilation baffle plate.

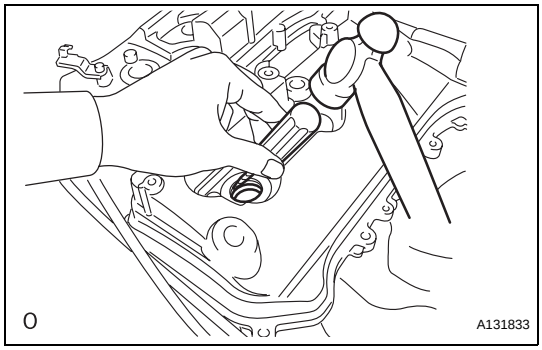

(b) Using a screwdriver with its tip taped and a hammer, tap out the 6 spark plug tube gaskets.

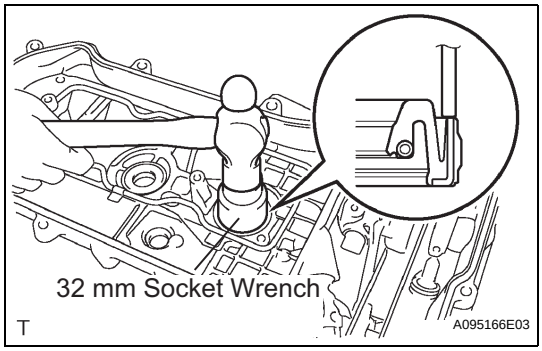

(c) Using a 32 mm socket wrench, tap in 6 new spark plug tube gaskets to the head covers.
NOTICE:
- **Keep the lip free from foreign matter.**
- **Do not tap on the oil seal at an angle.**

(d) Return the claw of the ventilation baffle plate to its original position.

2. REPLACE ENGINE REAR OIL SEAL

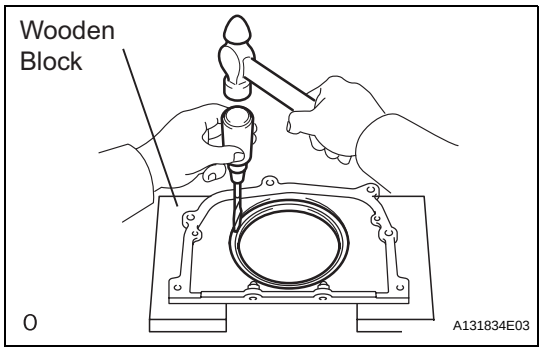

(a) Place the oil seal retainer on wooden blocks.

(b) Using a screwdriver and a hammer, tap out the oil seal.

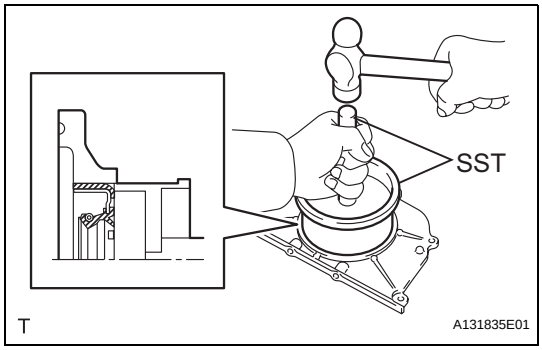

(c) Using SST, tap in a new oil seal until its surface is flush with the oil seal retainer edge.
SST 09223-15030
NOTICE:
- **Keep the lip free from foreign matter.**
- **Do not tap on the oil seal at an angle.**

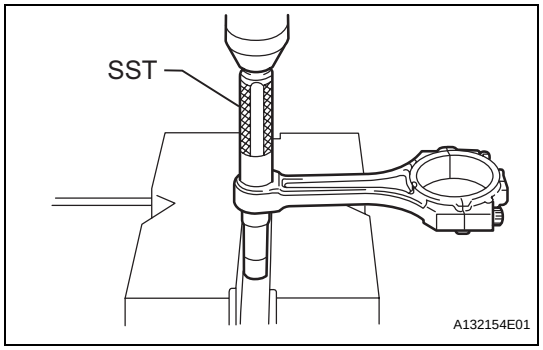

3. REPLACE CONNECTING ROD SMALL END BUSH

(a) Using SST and a press, push out the bush.
SST 09222-30010

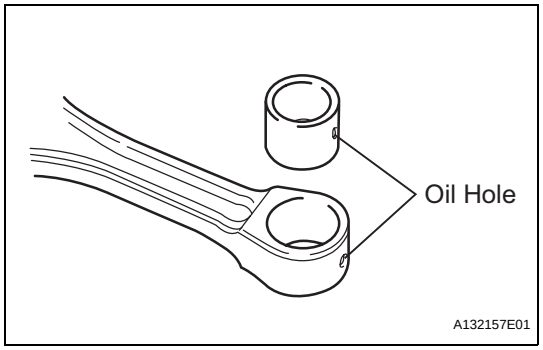

(b) Align the oil holes of the new bush and connecting rod.

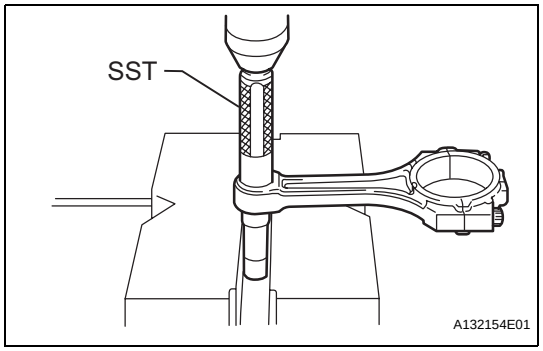

(c) Using SST and a press, push in the bush.
SST 09222-30010

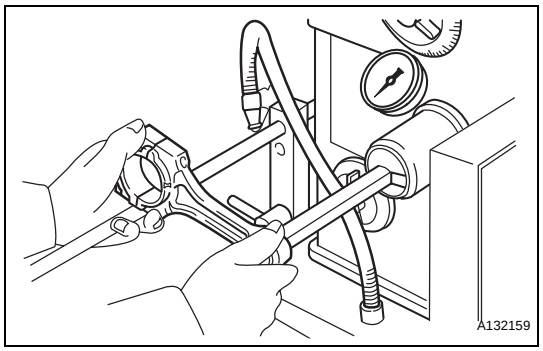

(d) Using a pin hole grinder, hone the bush to obtain the standard specified clearance between the bush and piston pin.

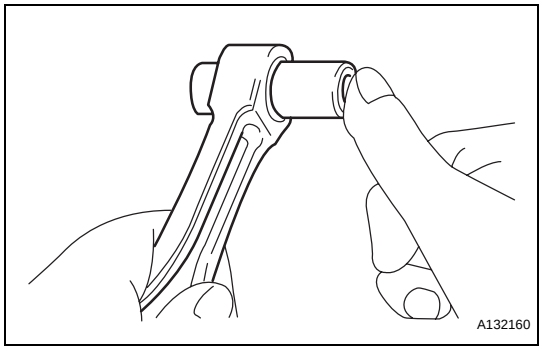

(e) Coat the piston pin with engine oil. Push the piston pin into the connecting rod with your thumb to check that the piston pin fits at normal room temperature.

4. REPLACE INTAKE VALVE GUIDE BUSH

(a) Heat the cylinder head to approximately 80 to 100°C (176 to 212°F).
(b) Place the cylinder head on wooden blocks.

EM

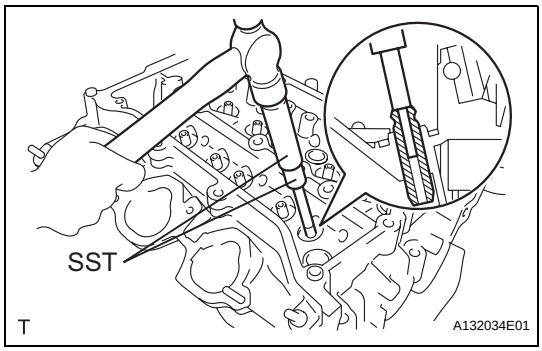

(c) Using SST and a hammer, tap out the valve guide bush.
SST 09201-10000 (09201-01050), 09950-70010 (09951-07100)

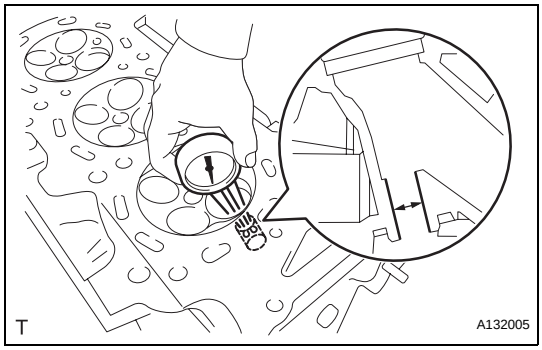

(d) Using a caliper gauge, measure the bush bore diameter of the cylinder head.
Standard cylinder bore diameter:
10.285 to 10.306 mm (0.4049 to0.4057 in.)

(e) Select a new guide bush (STD or O/S 0.05).
Standard bush bore diameter

Bush Size	Specified Condition
Use STD	10.335 to 10.356 mm (0.4069 to 0.4077 in.)
Use O/S 0.05	10.285 to 10.306 mm (0.4049 to 0.4057 in.)

HINT:
- If the bush bore diameter of the cylinder head is greater than 10.344 mm (0.4072 in.), machine the bush bore diameter to between 10.383 to 10.394 mm (0.4088 to 0.4092 in.).
- If the bush bore diameter of the cylinder head is greater than 10.344 mm (0.4072 in.), replace the cylinder head.

(f) Heat the cylinder head to approximately 80 to 100°C (176 to 212°F).

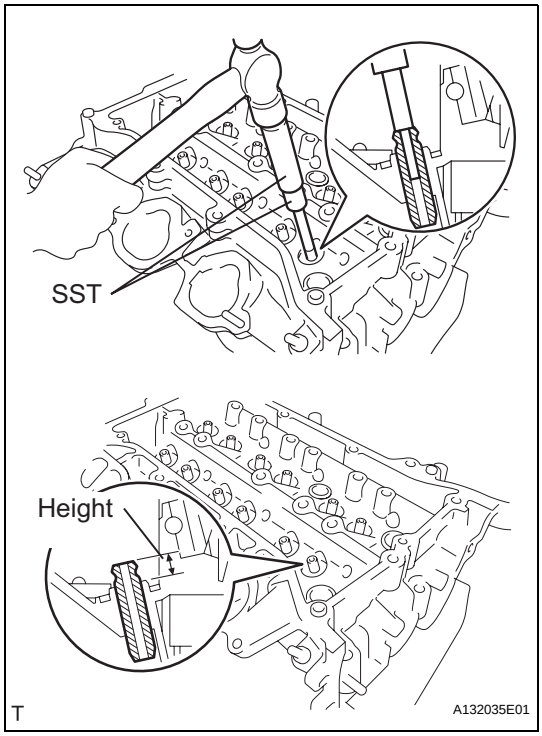

(g) Using SST and a hammer, tap in a new guide bush to the specified protrusion height.
Standard protrusion height:
9.1 to 9.9 mm (0.3582 to 0.3900 in.)
SST 09201-10000 (09201-01050), 09950-70010 (09951-07100)

EM

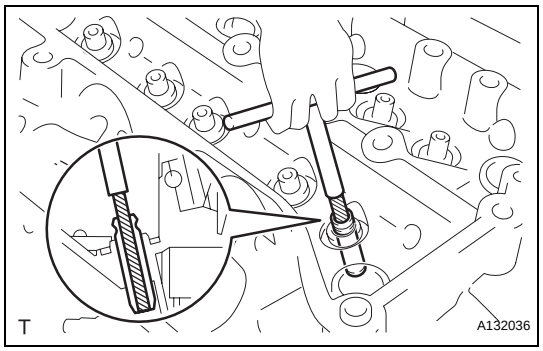

(h) Using a sharp 5.5 mm reamer, ream the guide bush to obtain the standard specified clearance between the guide bush and valve stem.

5. REPLACE EXHAUST VALVE GUIDE BUSH

(a) Heat the cylinder head to approximately 80 to 100°C (176 to 212°F).

(b) Place the cylinder head on wooden blocks.

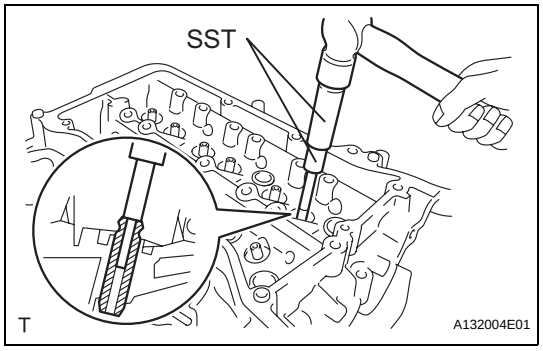

(c) Using SST and a hammer, tap out the valve guide bush.

SST 09201-10000 (09201-01050), 09950-70010 (09951-07100)

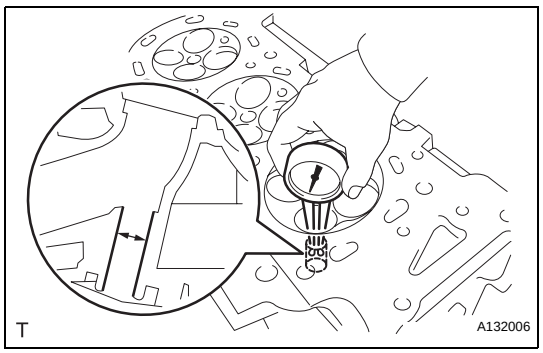

(d) Using a caliper gauge, measure the bush bore diameter of the cylinder head.

Standard cylinder bore diameter:
10.285 to 10.306 mm (0.4049 to 0.4057 in.)

(e) Select a new guide bush (STD or O/S 0.05).

Standard bush bore diameter

Bush Size	Specified Condition
Use STD	10.335 to 10.356 mm (0.4069 to 0.4077 in.)
Use O/S 0.05	10.285 to 10.306 mm (0.4049 to 0.4057 in.)

HINT:

- If the bush bore diameter of the cylinder head is greater than 10.344 mm (0.4072 in.), machine the bush bore diameter to between 10.383 to 10.394 mm (0.4088 to 0.4092 in.).
- If the bush bore diameter of the cylinder head is greater than 10.344 mm (0.4072 in.), replace the cylinder head.

(f) Heat the cylinder head to approximately 80 to 100°C (176 to 212°F).

EM

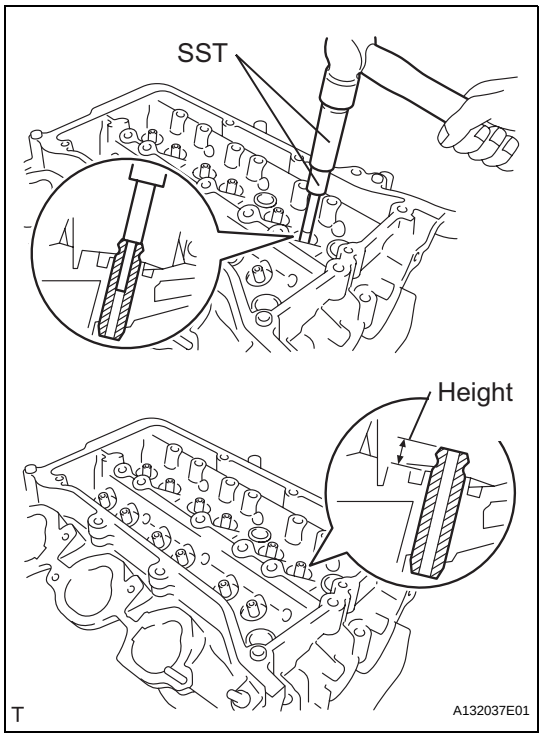

(g) Using SST and a hammer, tap in a new guide bush to the specified protrusion height.
SST 09201-10000 (09201-01050), 09950-70010 (09951-07100)
Standard protrusion height:
9.30 to 9.70 mm (0.3661 to 0.3819 in.)

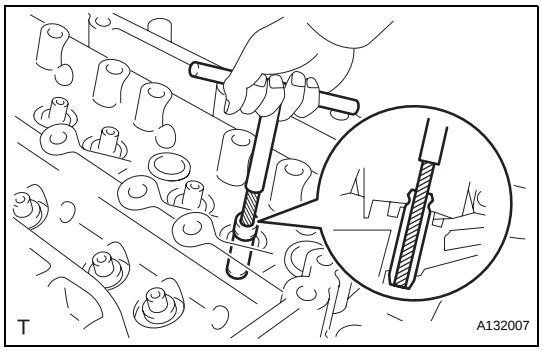

(h) Using a sharp 5.5 mm reamer, ream the guide bush to obtain the standard specified clearance between the guide bush and valve stem.

6. REPLACE CYLINDER BLOCK TIGHT PLUG
NOTICE:
If water leaks from the tight plug or the plug corrodes, replace it.
(a) Remove the tight plugs.

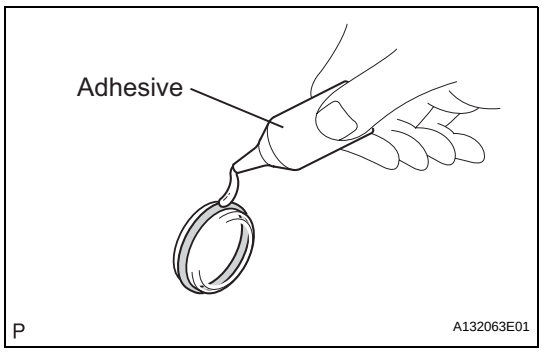

(b) Apply adhesive around the tight plug.
Adhesive:
Toyota Genuine Adhesive 1324, Three Bond 1324 or Equivalent
(c) Using SST and a hammer, tap in 2 new tight plugs as shown in the illustration.
SST 09950-60010 (09951-00340), 09950-70010 (09951-07100)

EM

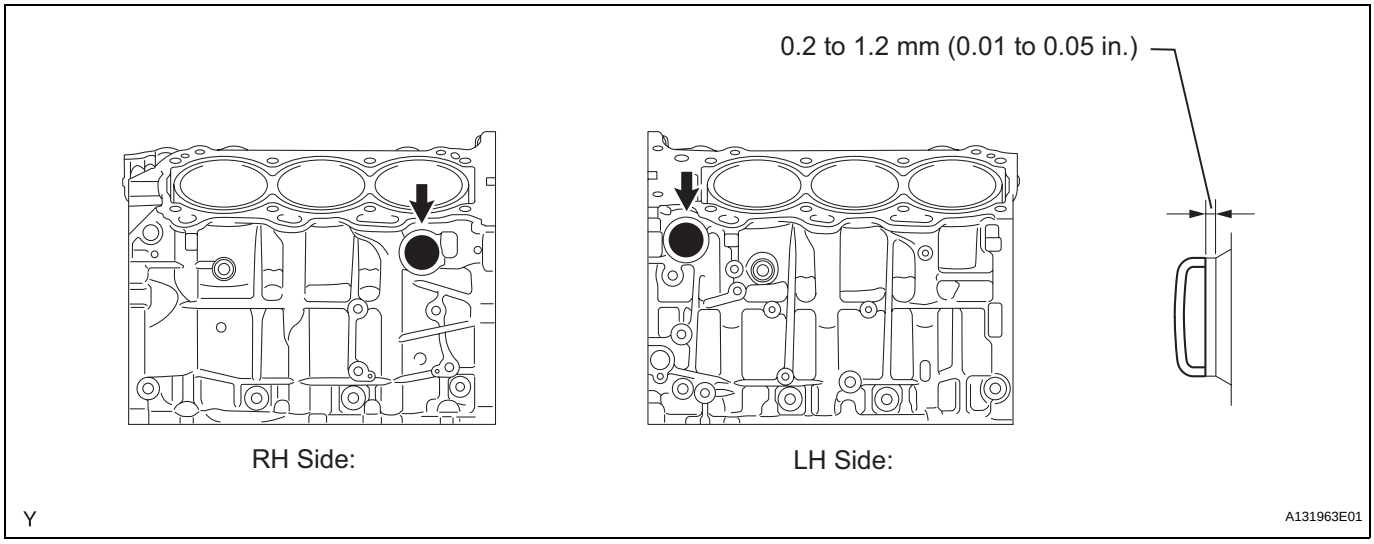

7. REPLACE CYLINDER BLOCK STUD BOLT

NOTICE:

If a stud bolt is deformed or the threads are damaged, replace it.

(a) Remove the stud bolts.

(b) Using an E8 "torx" socket wrench, install the stud bolts.

Torque: 10 N*m (102 kgf*cm, 7 ft.*lbf)

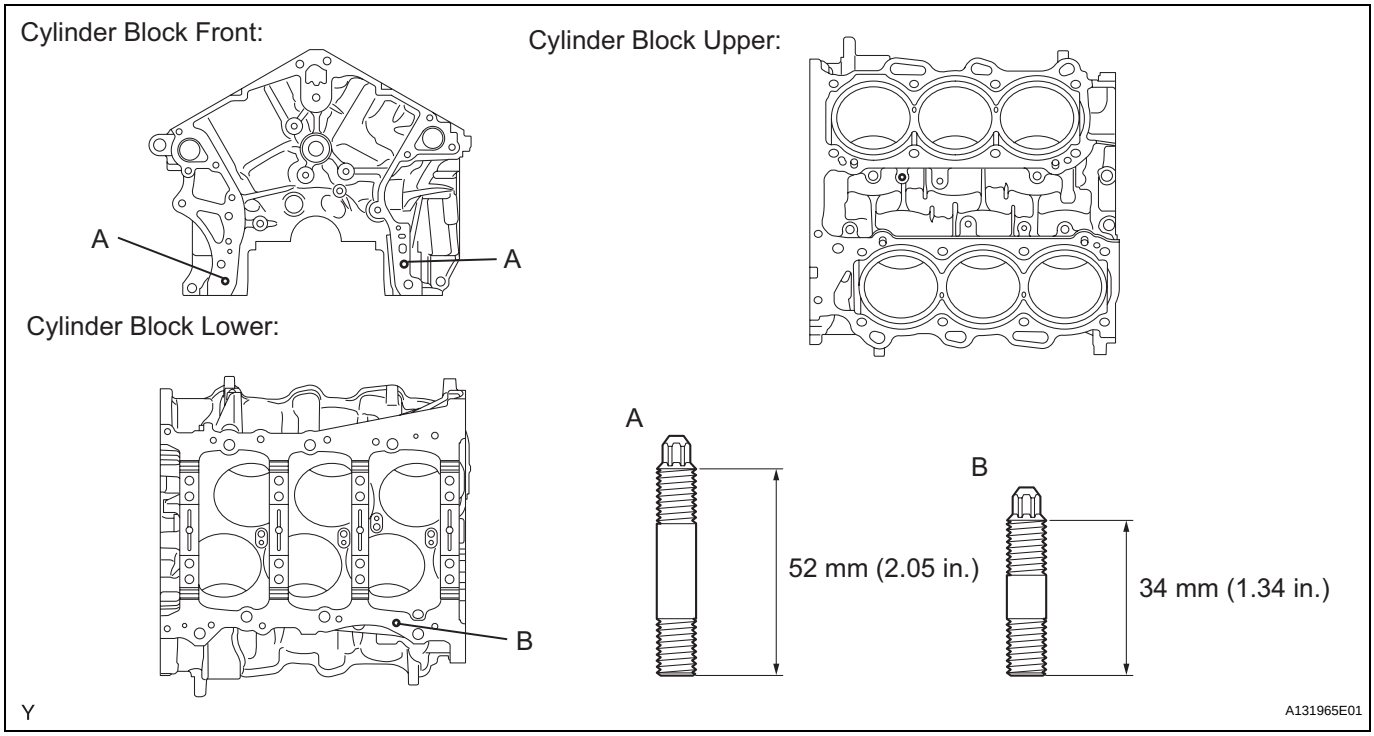

8. REPLACE CYLINDER BLOCK STRAIGHT PIN

NOTICE:

It is not necessary to remove the straight pin unless it is being replaced.

(a) Remove the straight pin.

(b) Using a plastic-faced hammer, tap in new straight pins to the cylinder block.

Standard protrusion

Item	Specified Condition
Pin A	23 mm (0.91 in.)
Pin B	6 mm (0.24 in.)
Pin C	11 mm (0.43 in.)
Pin D	9 mm (0.35 in.)

Cylinder Block Front:

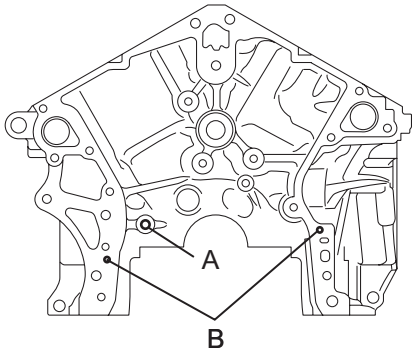

Cylinder Block Rear:

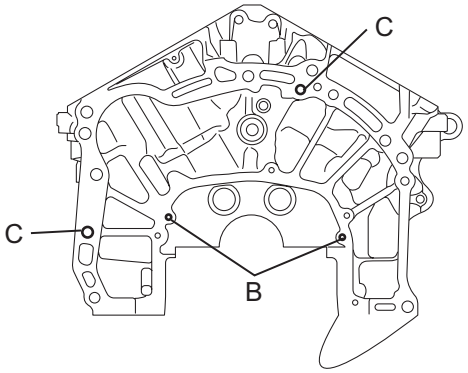

Cylinder Block Upper:

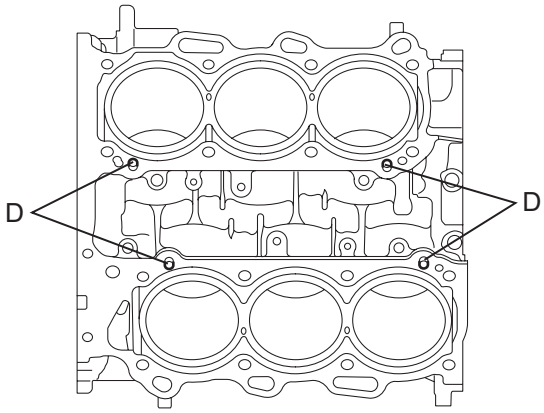

Cylinder Block Lower:

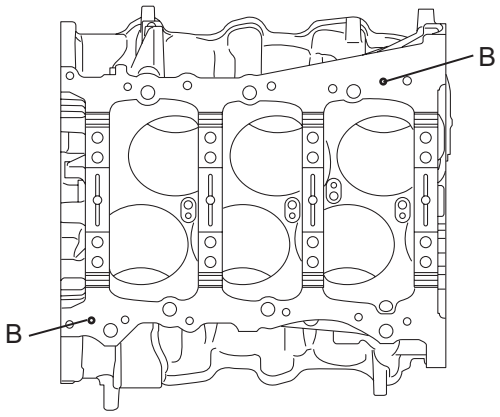

Cylinder Block RH Side:

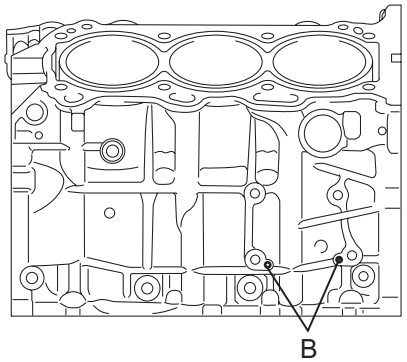

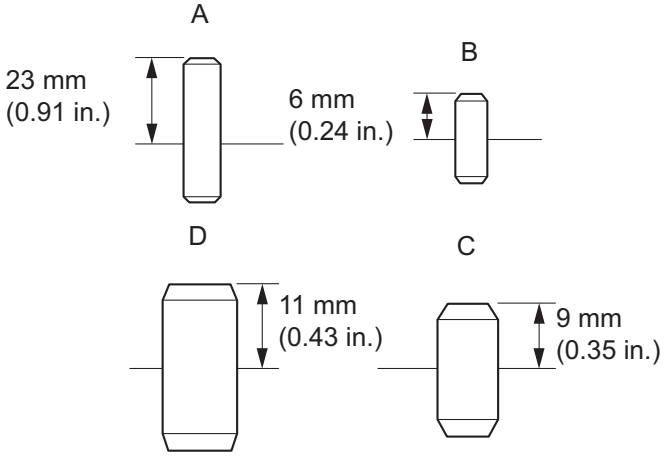

Y

A131964E01

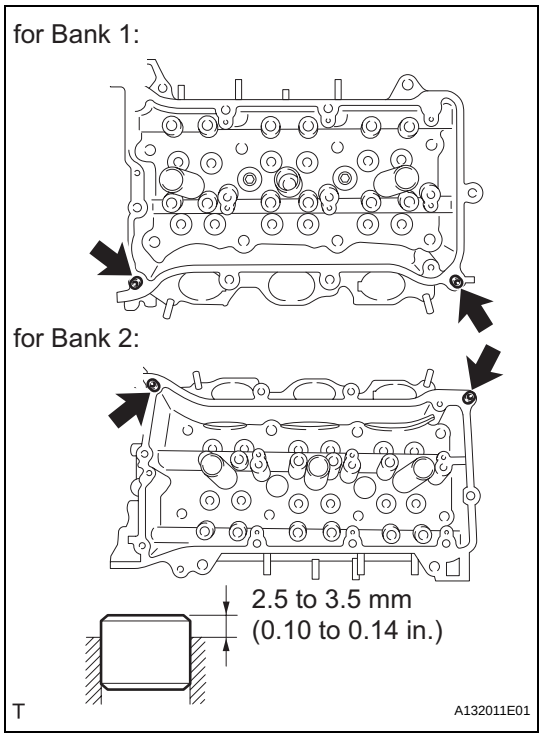

9. REPLACE CYLINDER HEAD RING PIN

NOTICE:

It is not necessary to remove the ring pin unless it is being replaced.

(a) Remove the ring pins.

(b) Using a plastic-faced hammer, tap in a new ring pin until the pin stops.

10. REPLACE CYLINDER HEAD STUD BOLT

NOTICE:

If a stud bolt is deformed or the threads are damaged, replace it.

(a) Remove the stud bolts.

(b) Using E6 and E8 "torx" socket wrenches, install the stud bolts.

Torque: 10 N*m (102 kgf*cm, 7 ft.*lbf) for stud bolts A and B
4.0 N*m (41 kgf*cm, 35 in.*lbf) for stud bolt C

EM

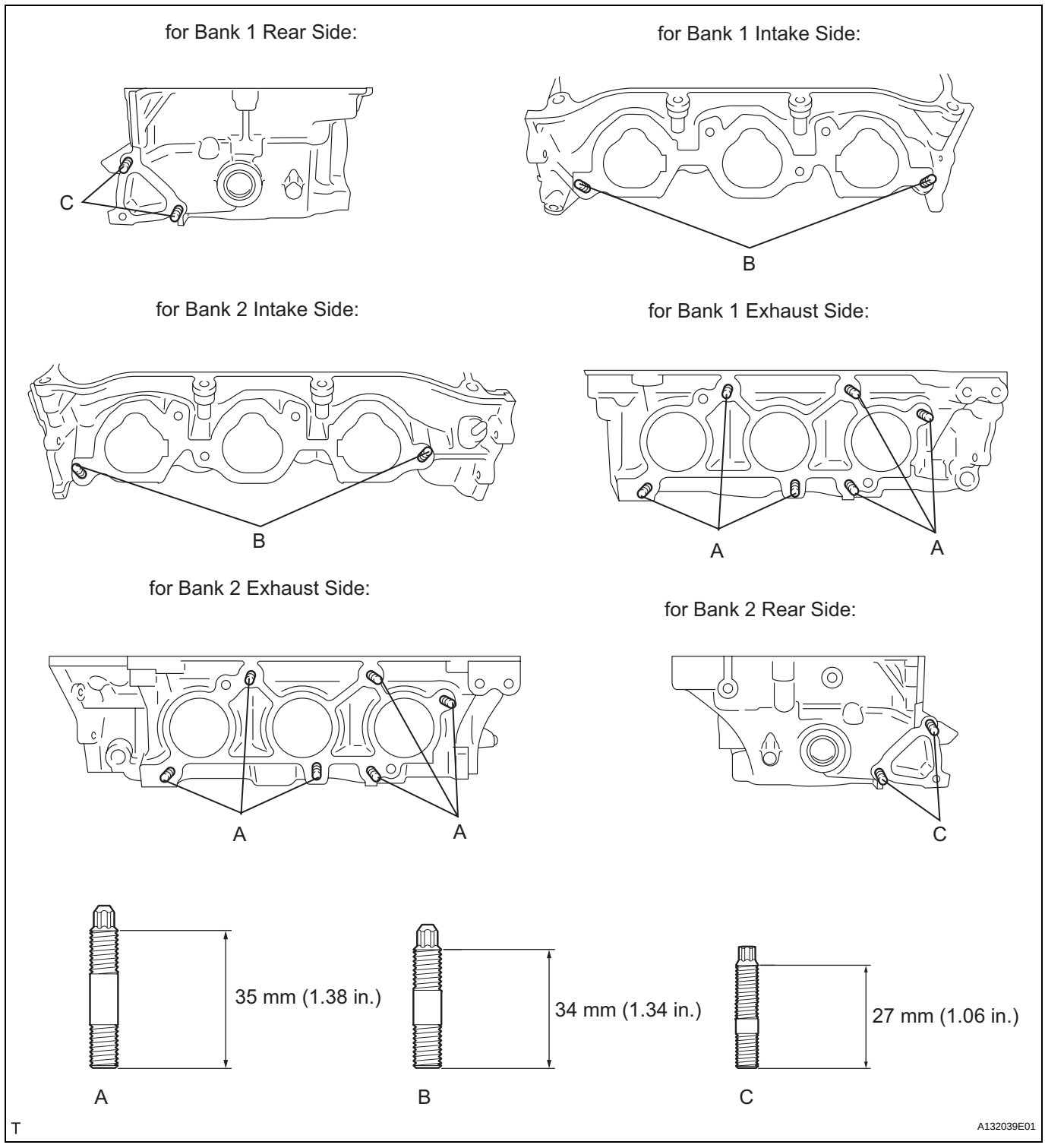

11. REPLACE CYLINDER HEAD SET STRAIGHT PIN

NOTICE:

It is not necessary to remove the straight pin unless it is being replaced.

(a) Using a plastic-faced hammer, tap in a new straight pin as shown in the illustration.

Standard protrusion height:

18.0 to 19.0 mm (0.71 to 0.75 in.)

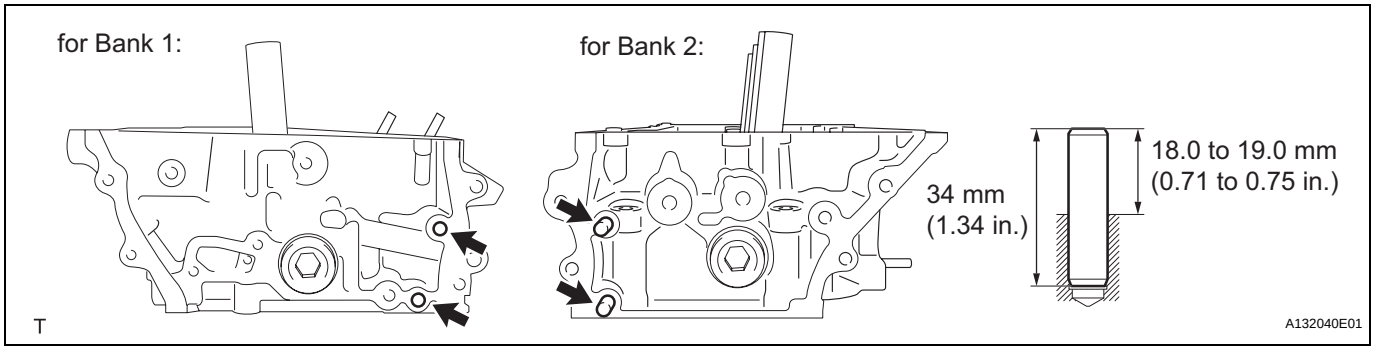

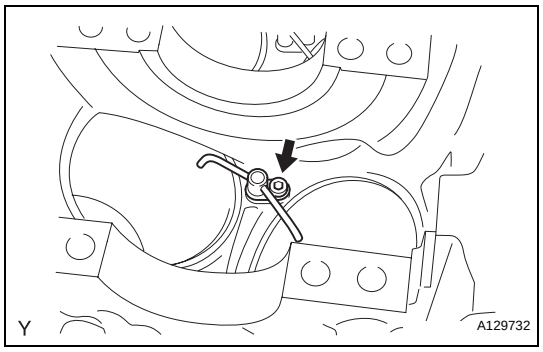

REASSEMBLY

1. INSTALL NO. 1 OIL NOZZLE SUB-ASSEMBLY

(a) Using a 5 mm hexagon wrench, install the 3 oil nozzles with the bolts.
Torque: 9.0 N*m (92 kgf*cm, 80 in.*lbf)

EM

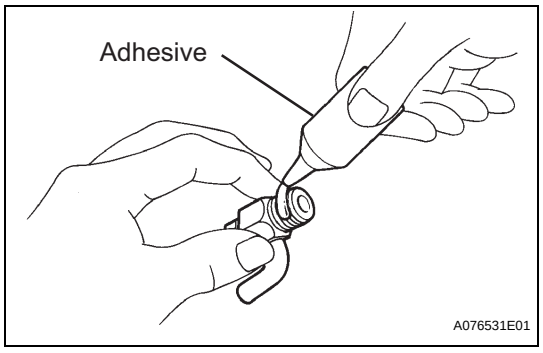

2. INSTALL CYLINDER BLOCK WATER DRAIN COCK SUB-ASSEMBLY

(a) Apply adhesive around the drain cocks.
Adhesive:
Toyota Genuine Adhesive 1324, Three Bond 1324 or Equivalent

(b) Install the cylinder block water drain cocks.
(1) Temporarily install the drain cocks.
Torque: 25 N*m (255 kgf*cm, 18 ft.*lbf)

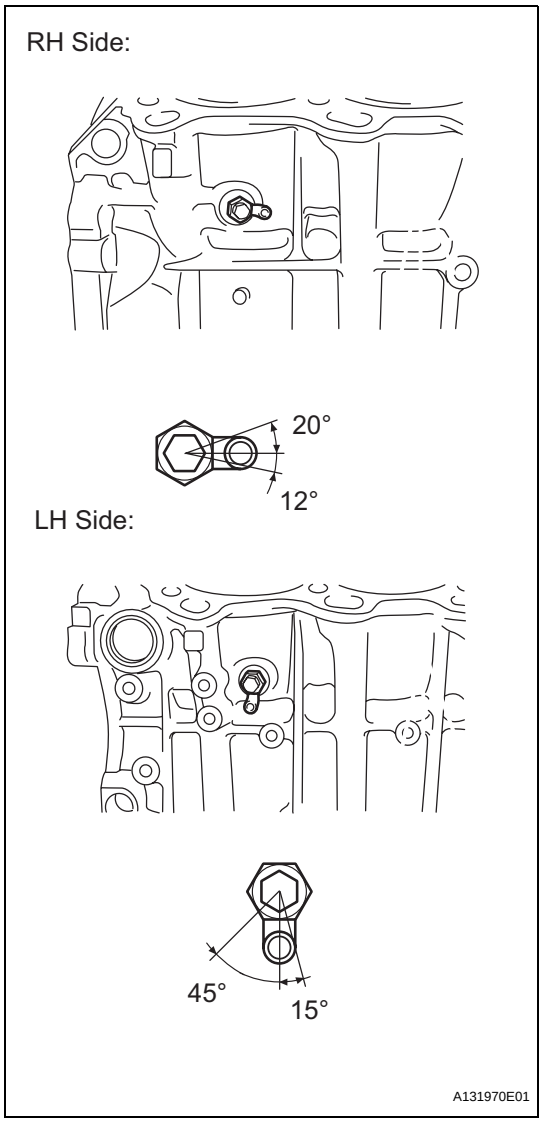

(2) Within one full rotation, tighten the drain cock to the angle shown in the illustration.
Torque: 45 N*m (459 kgf*cm, 33 ft.*lbf)
NOTICE:
Do not loosen the drain cock to adjust it. If an adjustment is necessary, remove the drain cock and reinstall it.

(c) Install the water drain cock plug to the water drain cocks.
Torque: 13 N*m (130 kgf*cm, 9 ft.*lbf)

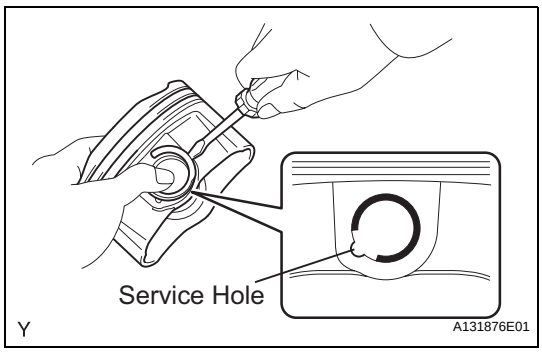

3. INSTALL PISTON WITH PIN SUB-ASSEMBLY

(a) Using a screwdriver, install a new snap ring at one end of the piston pin hole.
HINT:
Be sure that the end gap of the snap ring is not aligned with the pin hole cutout portion of the piston.

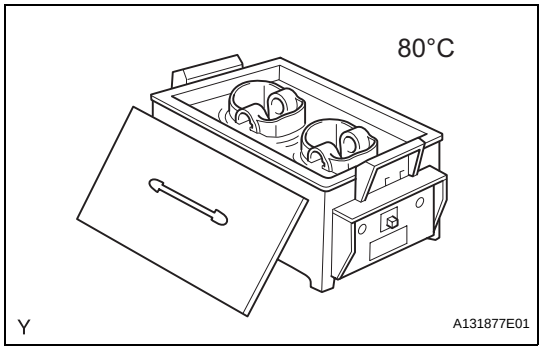

(b) Gradually heat the piston to approximately 80°C (176°F).

(c) Coat the piston pin with engine oil.

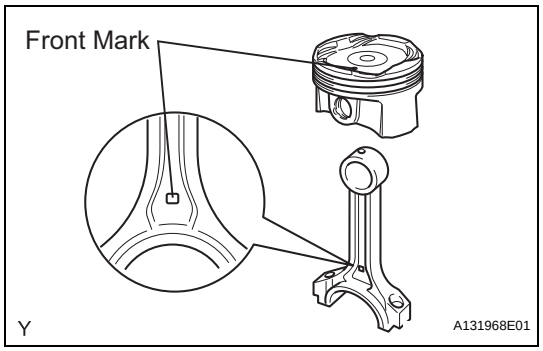

(d) Align the front marks of the piston and connecting rod, and push in the piston pin with your thumb.
HINT:
The piston and pin are a matched set.

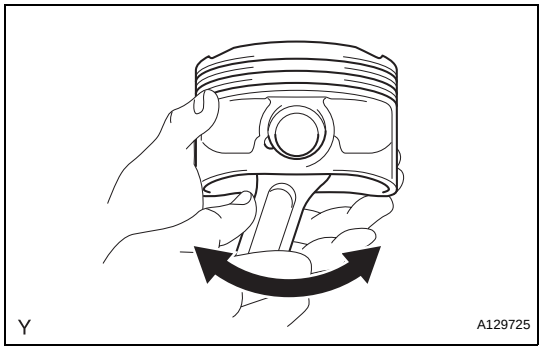

(e) Check the fitting condition between the piston and piston pin by trying to move the piston back and forth on the piston pin.

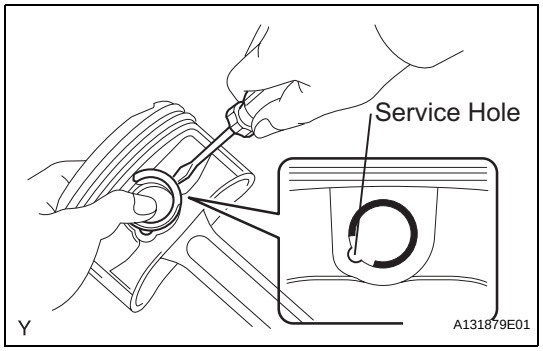

(f) Using a screwdriver, install a new snap ring at the other end of the piston pin hole.
HINT:
Be sure that the end gap of the snap ring is not aligned with the pin hole cutout portion of the piston.

4. INSTALL PISTON RING SET

(a) Install the oil ring expander and 2 side rails by hand.

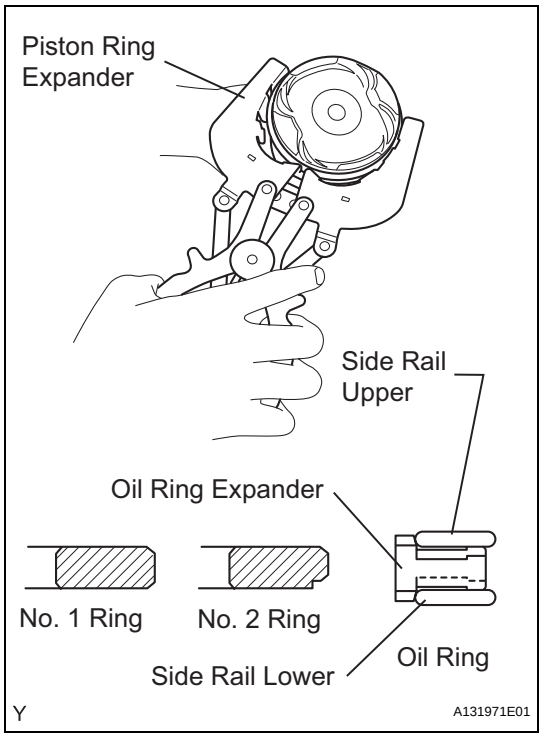

(b) Using a piston ring expander, install the 2 compression rings so that the painted marks are positioned as shown in the illustration.

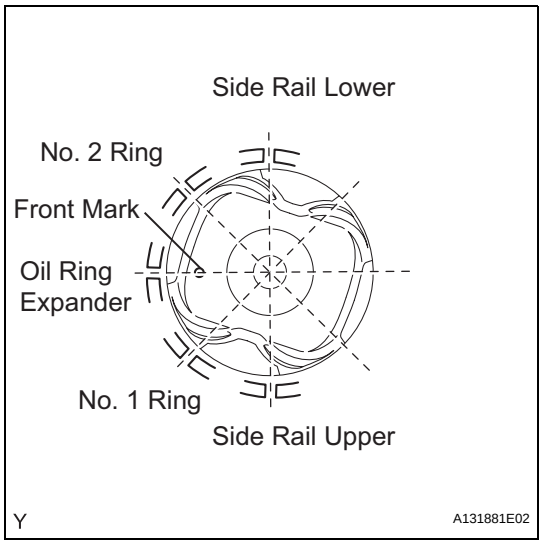

(c) Position the piston rings so that the ring ends are as shown in the illustration.
NOTICE:
Do not align the ring ends.

5. INSTALL CRANKSHAFT BEARING
NOTICE:
Main bearings come in widths between 18.0 mm (0.709 in.) and 21.0 mm (0.827 in.). Install the 21.0 mm (0.827 in.) bearings in the No. 1 and No. 4 cylinder block journal positions with the main bearing cap. Install the 18.0 mm (0.709 in.) bearings in the No. 2 and No. 3 positions.

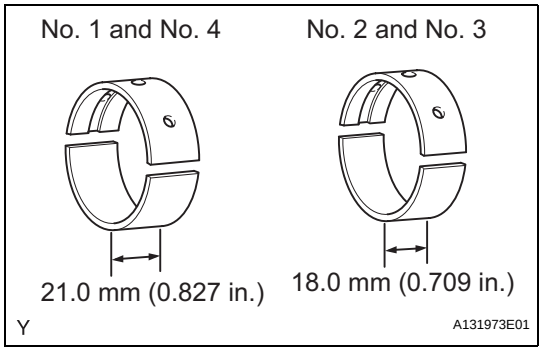

(a) Clean the main journal and both surfaces of the bearing.

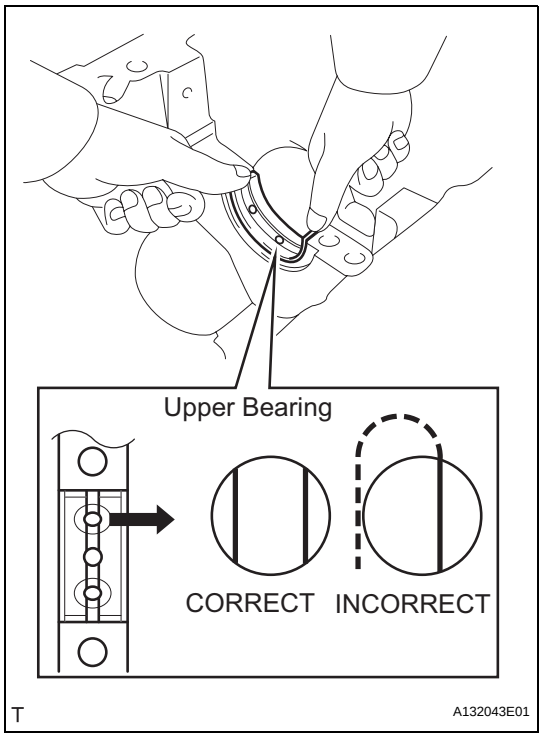

(b) Install the upper bearing.
(1) Install the upper bearing to the cylinder block as shown in the illustration.
NOTICE:
Do not apply engine oil to the bearing and its contact surface.

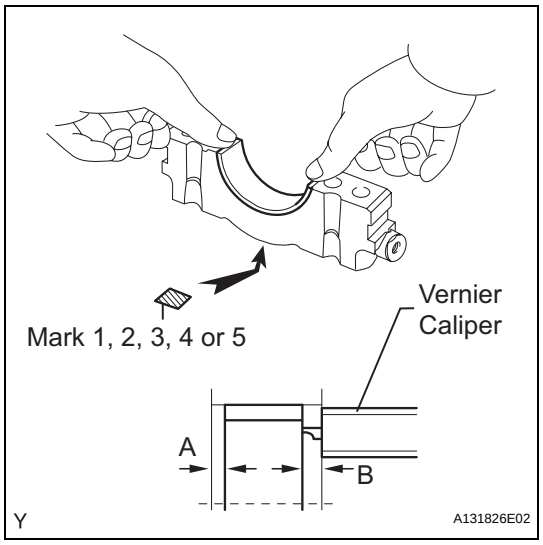

(c) Install the lower bearing.
(1) Install the lower bearing to the bearing cap.
(2) Using a vernier caliper, measure the distance between the bearing cap's edge and the lower bearing's edge.
Dimension (A - B):
0.7 mm (0.028 in.) or less.
NOTICE:
Do not apply engine oil to the bearing's contact area and underside.

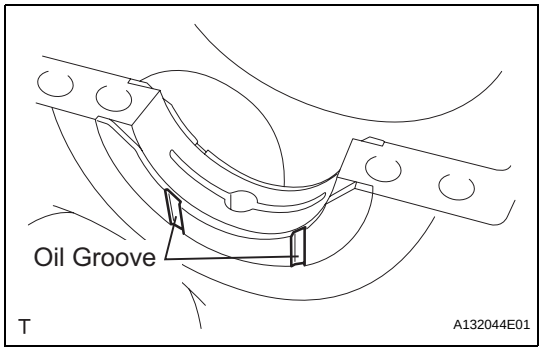

6. INSTALL CRANKSHAFT

(a) Install the 2 thrust washers under the No. 2 journal position of the cylinder block with the oil grooves facing outward.

(b) Apply engine oil to the upper bearing, then place the crankshaft on the cylinder block.

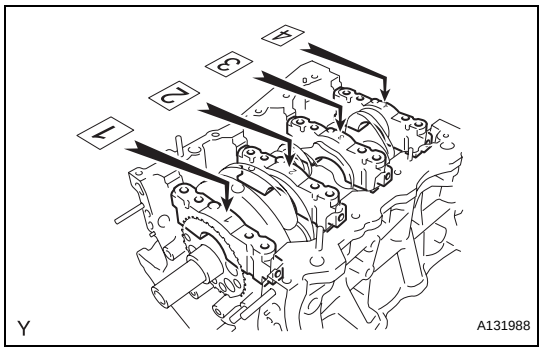

(c) Confirm the front marks and numbers of the main bearing caps and install the bearing caps on the cylinder block.
HINT:
A number is marked on each main bearing cap to indicate the installation position.

(d) Apply a light coat of engine oil on the threads and under the heads of the bearing cap bolts.

(e) Temporarily install the 8 main bearing cap bolts to the inside positions.

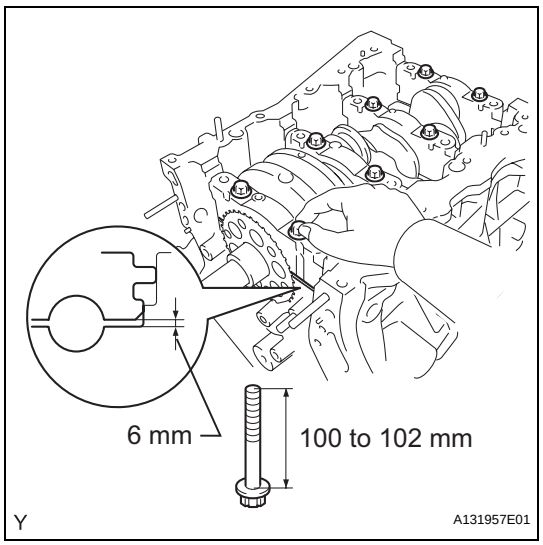

(f) Insert the main bearing cap by hand until the clearance between the main bearing cap and the cylinder block is less than 6 mm (0.23 in.) by marking the 2 internal bearing cap bolts as a guide.
Bolt length:
100.0 to 102.0 mm (3.937 to 4.016 in.)

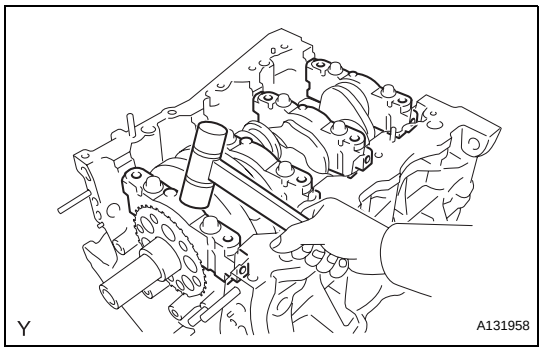

(g) Using a plastic-faced hammer, lightly tap the bearing cap to ensure a proper fit.
(h) Apply a light coat of engine oil to the threads and under the heads of the 8 main bearing cap bolts.

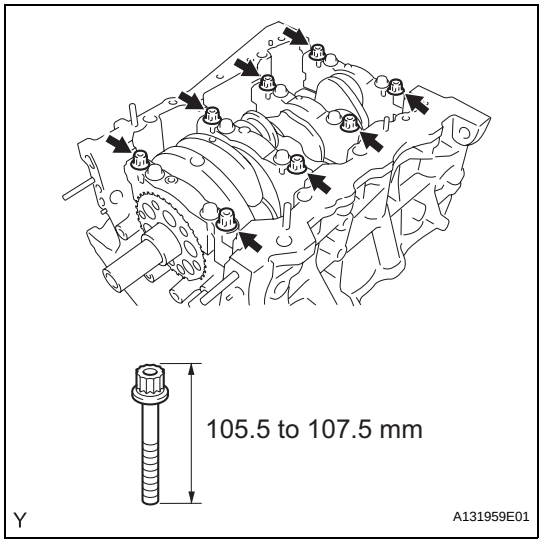

(i) Install the 8 main bearing cap bolts to the outside positions.
Bolt length:
105.5 to 107.5 mm (4.154 to 4.232 in.)
(j) Install the crankshaft bearing cap bolts.
HINT:
The main bearing cap bolts are tightened in 2 progressive steps.

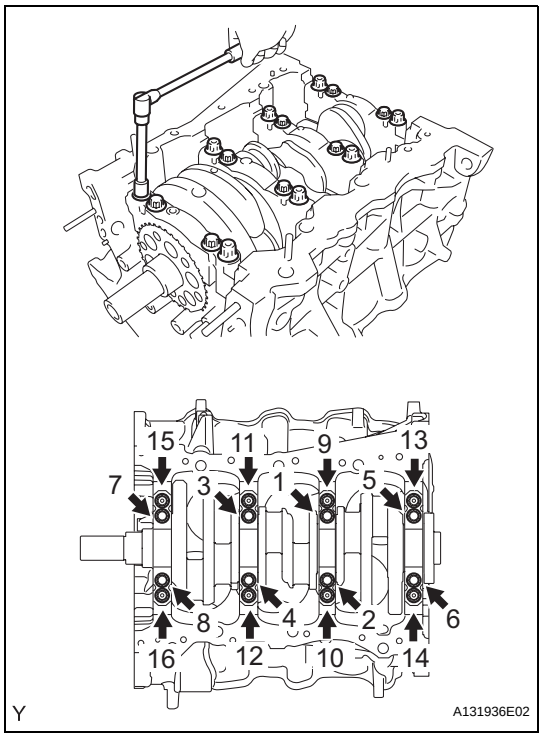

(k) Step 1
(1) Install and uniformly tighten the 16 main bearing cap bolts in the sequence shown in the illustration.
Torque: 61 N*m (622 kgf*cm, 45 ft.*lbf)
If any of the main bearing cap bolts does not meet the specified torque, replace it.

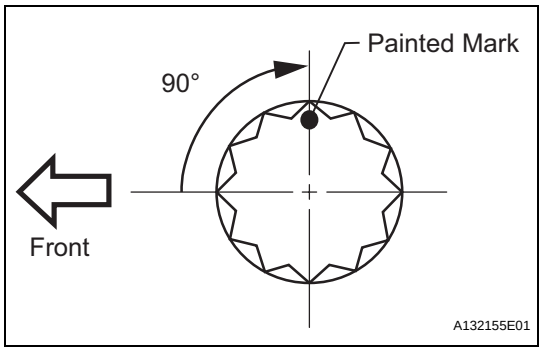

(l) Step 2
  (1) Mark the front of the bearing cap bolts with paint.
  (2) Tighten the bearing cap bolts another 90° in the order shown in step 1.
  (3) Check that the painted mark is now at a 90° angle to the front.

(m) Check that the crankshaft turns smoothly.

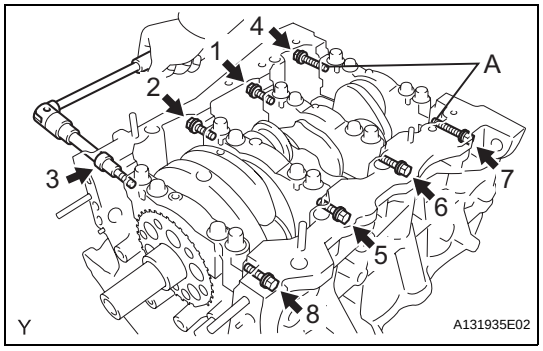

(n) Install and uniformly tighten the 8 main bearing cap bolts in several steps, in the sequence shown in the illustration.
Torque: 52 N*m (530 kgf*cm, 38 ft.*lbf)
Bolt length:
45 mm (1.77 in.) for bolt A
30 mm (1.18 in.) for except bolt A

(o) Check that the crankshaft turns smoothly.

7. INSTALL CONNECTING ROD BEARING

(a) Install the connecting rod bearing to the connecting rod and bearing cap.

(b) Using a vernier caliper, measure the distance between the connecting rod's and bearing cap's edges, and each connecting rod bearing's edge.
Dimension (A - B):
0.7 mm (0.028 in.) or less
NOTICE:
Do not apply engine oil to the bearing's contact area and underside.

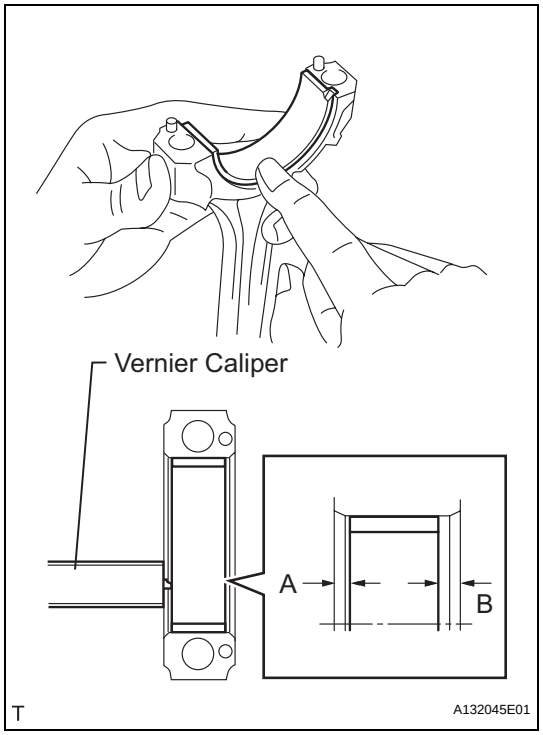

8. INSTALL PISTON SUB-ASSEMBLY WITH CONNECTING ROD

(a) Apply engine oil to the cylinder walls, the pistons, and the surfaces of the connecting rod bearings.

EM

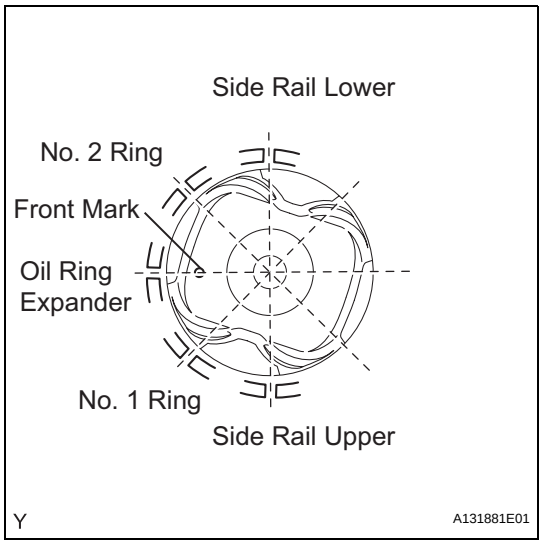

(b) Position the piston rings so that the ring ends are as shown in the illustration.
NOTICE:
Do not align the ring ends.

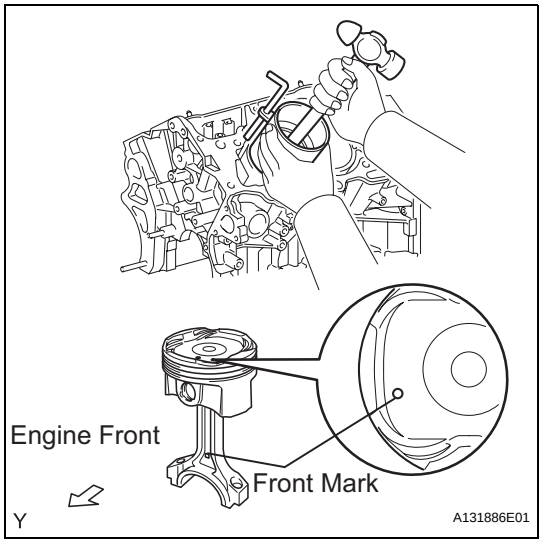

(c) Using a piston ring compressor, push the correctly numbered piston and connecting rod into the cylinder with the front mark of the piston facing forward.
NOTICE:
Match the numbered connecting rod cap with the connecting rod.

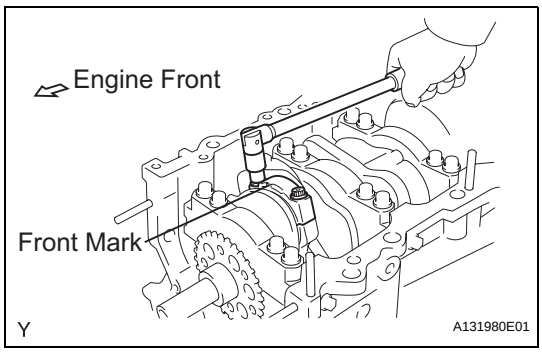

(d) Check that the front mark of the connecting rod cap is facing forward.
(e) Apply a light coat of engine oil to the threads and under the heads of the connecting rod cap bolts.
(f) Install the connecting cap bolts.
HINT:
The connecting cap bolts are tightened in 2 progressive steps.

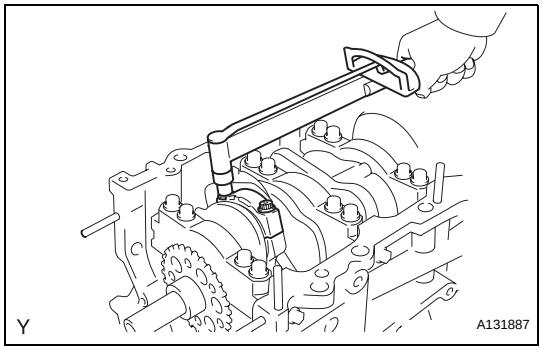

(g) Step 1
(1) Install and alternately tighten the bolts of the connecting rod cap in several steps.
Torque: 25 N*m (255 kgf*cm, 18 ft.*lbf)

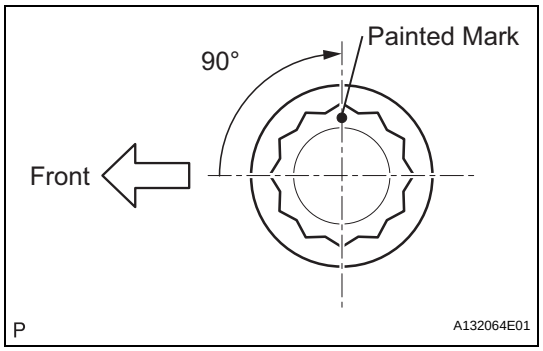

(h) Step 2
  (1) Mark the front side of each connecting cap bolt with paint.
  (2) Tighten the cap bolts another 90° as shown in the illustration in the order in step 1.
  (3) Check that the painted mark is now at a 90° angle to the front.

(i) Check that the crankshaft turns smoothly.

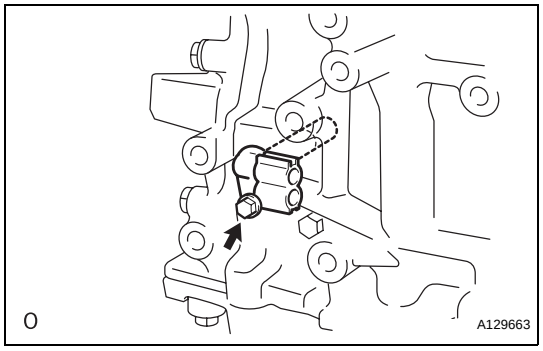

9. INSTALL CRANKSHAFT POSITION SENSOR

(a) Install the crankshaft position sensor with the bolt.
Torque: 10 N*m (102 kgf*cm, 7 ft.*lbf)

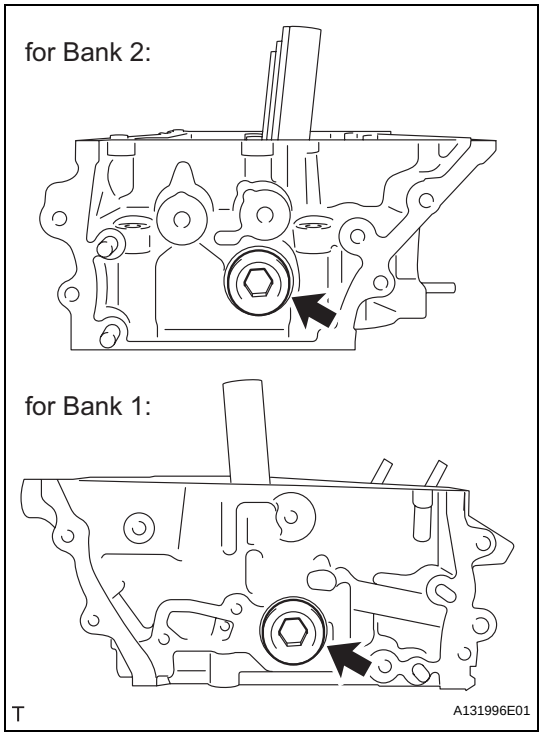

10. INSTALL NO. 2 STRAIGHT SCREW PLUG

(a) Using a 14 mm hexagon wrench, install 2 new gaskets and the 2 straight screw plugs.
Torque: 80 N*m (816 kgf*cm, 59 ft.*lbf)

EM

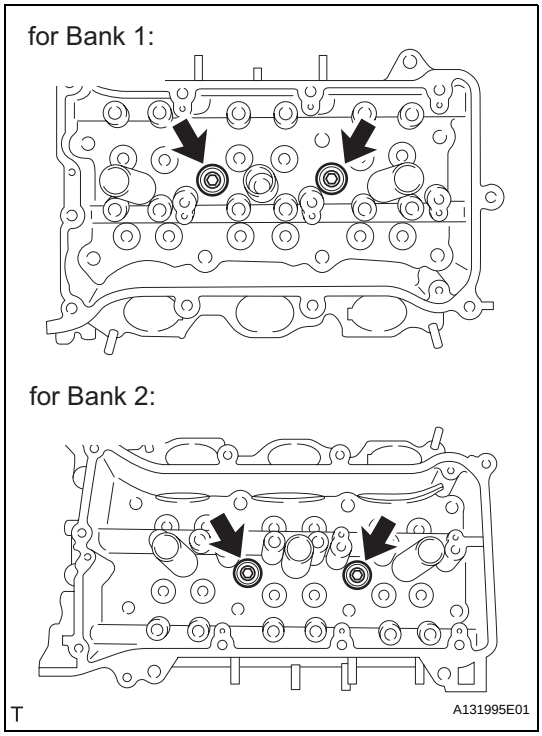

11. INSTALL NO. 1 STRAIGHT SCREW PLUG

(a) Using a 10 mm hexagon wrench, install 4 new gaskets and the straight screw plugs.
Torque: 44 N*m (449 kgf*cm, 32 ft.*lbf)

12. INSTALL VALVE SPRING SEAT

(a) Install the valve spring seats to the cylinder head.

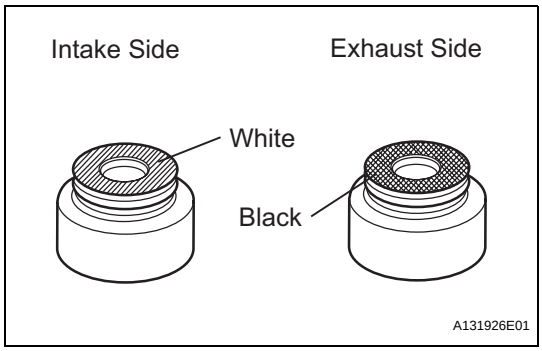

13. INSTALL INTAKE VALVE STEM OIL SEAL

(a) Apply a light coat of engine oil to new oil seals.
NOTICE:
Pay attention when installing the intake and exhaust oil seals. For example, installing the intake oil seal into the exhaust side or installing the exhaust oil seal to the intake side can cause installation problems later.
HINT:
The intake valve oil seals are white and the exhaust valve oil seals are black.

(b) Using SST, push in the oil seals.
SST 09201-41020
NOTICE:
Failure to use SST will cause the seal to be damaged or improperly seated.

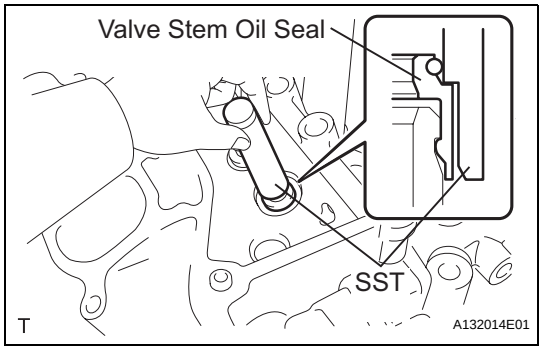

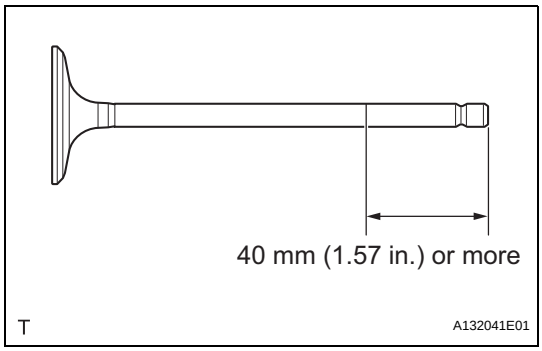

14. INSTALL INTAKE VALVE

(a) Apply plenty of engine oil to the tip area of the intake valve shown in the illustration.

(b) Install the valve, compression spring and spring retainer to the cylinder head.
NOTICE:
Install the same parts in the same combination to original locations.

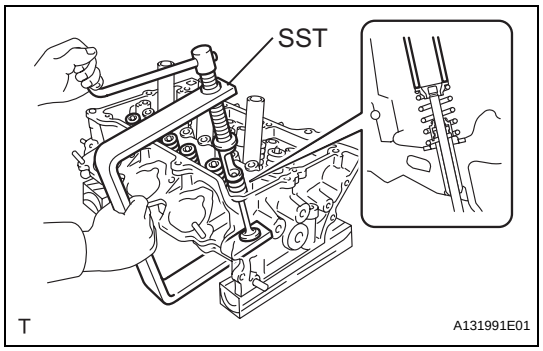

(c) Using SST and wooden blocks, compress the spring and install the retainer lock.
SST 09202-70020 (09202-00010)

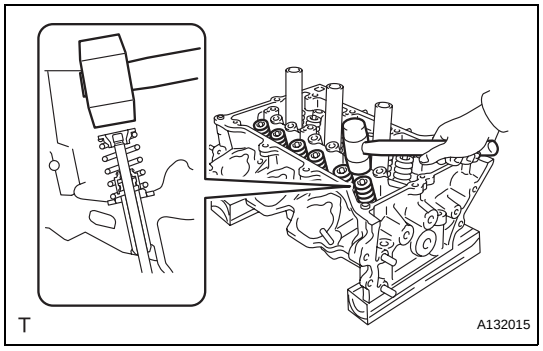

(d) Using a plastic-faced hammer, lightly tap the valve stem tip to ensure a proper fit.
NOTICE:
Be careful not to damage the retainer.

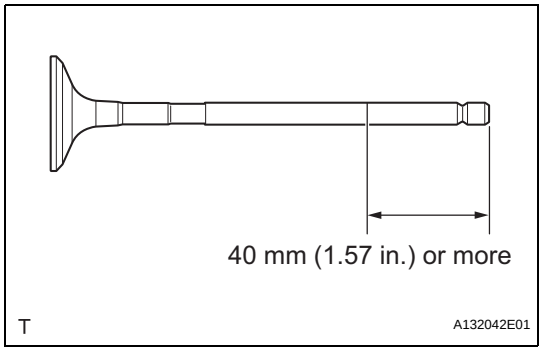

15. INSTALL EXHAUST VALVE

(a) Apply plenty of engine oil to the tip area of the exhaust valve shown in the illustration.
(b) Install the valve, compression spring and spring retainer to the cylinder head.
NOTICE:
Install the same parts in the same combination to their original locations.

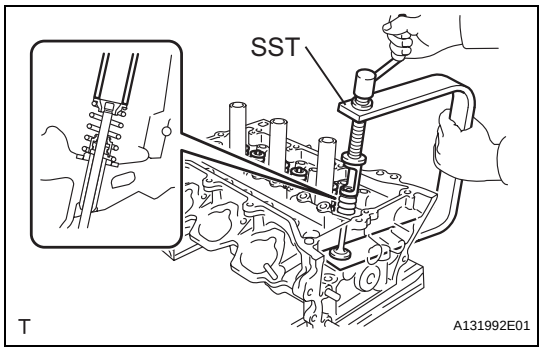

(c) Using SST and wooden blocks, compress the spring and install the retainer lock.
SST 09202-70020 (09202-00010)

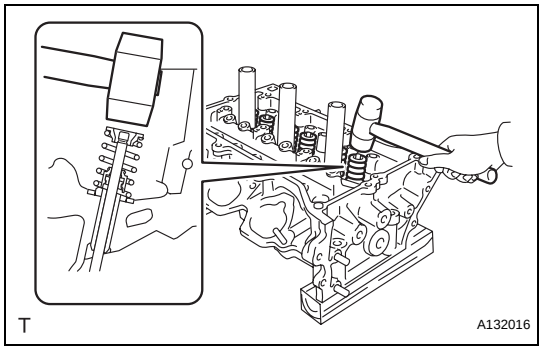

(d) Using a plastic-faced hammer, lightly tap the valve stem tip to ensure a proper fit.
NOTICE:
Be careful not to damage the retainer.

16. INSTALL VALVE STEM CAP

(a) Apply a light coat of engine oil to the valve stem caps.
(b) Install the valve stem caps to the cylinder head.

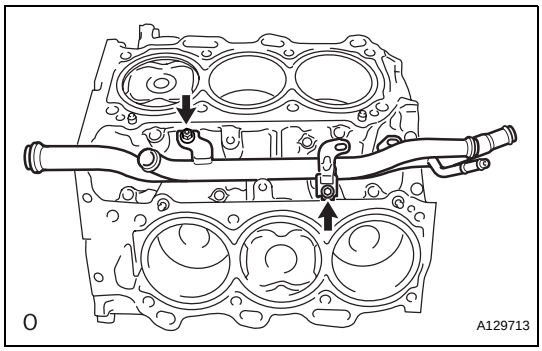

17. INSTALL WATER INLET PIPE

(a) Install the water inlet pipe with the 2 bolts.
Torque: 10 N*m (102 kgf*cm, 7 ft.*lbf)

(b) Install the water by-pass hose.

18. INSTALL CYLINDER HEAD SUB-ASSEMBLY (for Bank 1)

(a) Check the piston protrusions for each cylinder.
(1) Clean the cylinder block with solvent.
(2) Set the piston of the cylinder to be measured to slightly before TDC.

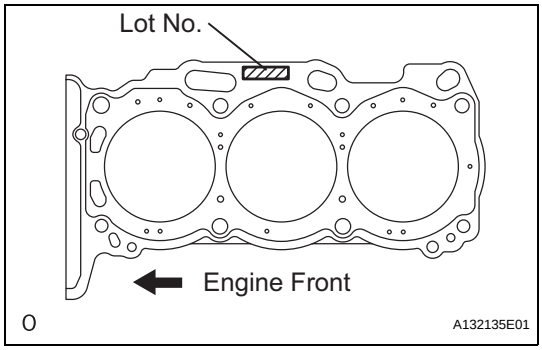

(b) Place the cylinder head gasket on the cylinder block surface with the front face of the Lot No. stamp upward.
NOTICE:
- **Be careful of the installation direction.**
- **Gently place the cylinder head in order not to damage the gasket with the bottom part of the head.**

(c) Place the cylinder head on the cylinder block.
NOTICE:
Ensure that no oil is on the mounting surface of the cylinder head.
HINT:
The cylinder head bolts are tightened in 3 progressive steps.

(d) Apply a light coat of engine oil to the threads and under the heads of the cylinder head bolts.

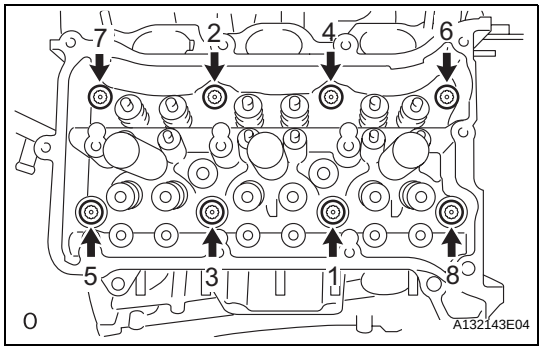

(e) Step 1
(1) Using a 10 mm bi-hexagon wrench, install and uniformly tighten the 8 cylinder head bolts with the plate washers in several steps, in the sequence shown in the illustration.
Torque: 36 N*m (367 kgf*cm, 27 ft.*lbf)

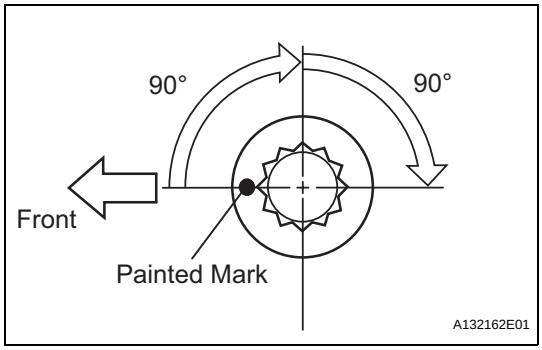

(f) Step 2
(1) Mark the cylinder head bolt head with paint as shown in the illustration.
(2) Tighten the cylinder heads bolts another 90° in the sequence shown in step 1.

(g) Step 3
(1) Tighten the cylinder head bolts by an additional 90° in the sequence shown in step 1.
(2) Check that the painted mark is now facing rearward.

19. INSTALL CYLINDER HEAD SUB-ASSEMBLY (for Bank 2)

(a) Check the piston protrusions for each cylinder.
(1) Clean the cylinder block with solvent.

(2) Set the piston of the cylinder to be measured to slightly before TDC.

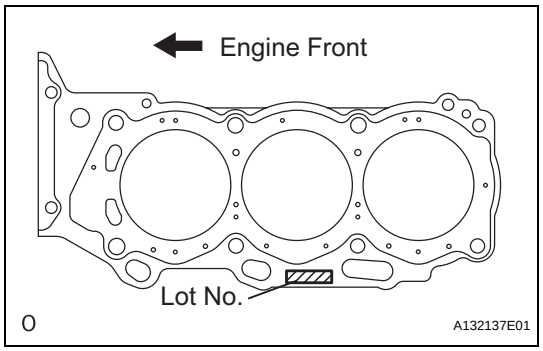

(b) Place the cylinder head gasket on the cylinder block surface with the front face of the Lot No. stamp upward.

NOTICE:

- **Be careful of the installation direction.**
- **Gently place the cylinder head in order not to damage the gasket with the bottom part of the head.**

(c) Place the cylinder head on the cylinder block.

NOTICE:

Ensure that no oil is on the mounting surface of the cylinder head.

HINT:

The cylinder head bolts are tightened in 3 progressive steps.

(d) Apply a light coat of engine oil to the threads and under the heads of the cylinder head bolts.

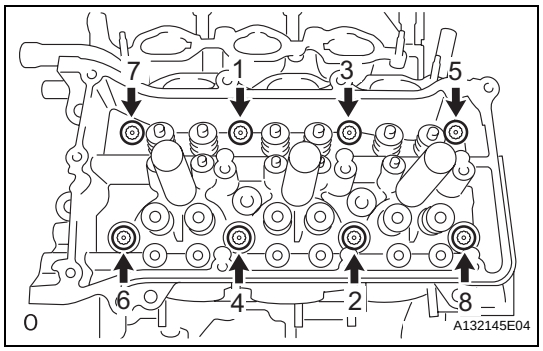

(e) Step 1

(1) Using a 10 mm bi-hexagon wrench, install and uniformly tighten the 8 cylinder head bolts with the plate washers in several steps, in the sequence shown in the illustration.

Torque: 36 N*m (367 kgf*cm, 27 ft.*lbf)

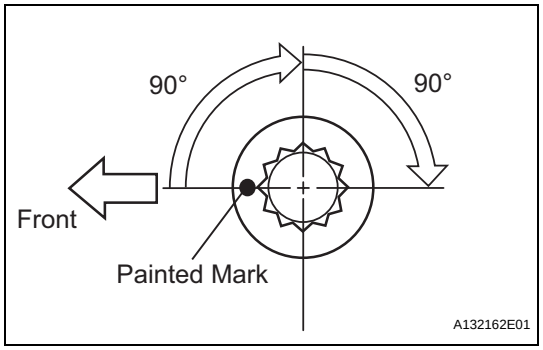

(f) Step 2

(1) Mark the cylinder head bolt heads with paint as shown in the illustration.

(2) Tighten the cylinder head bolts another 90° in the sequence shown in step 1.

(g) Step 3

(1) Tighten the cylinder head bolts by an additional 90° in the sequence shown in step 1.

(2) Check that the painted mark is now facing rearward.

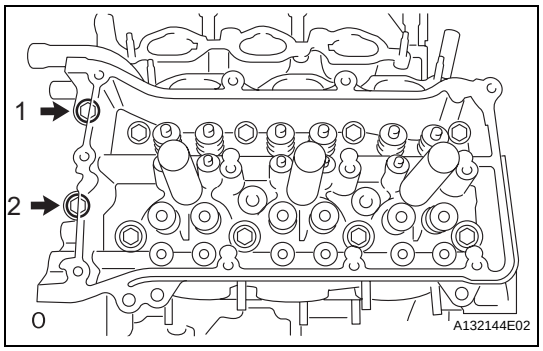

(h) Install the 2 bolts in the order shown in the illustration.

Torque: 30 N*m (306 kgf*cm, 22 ft.*lbf)

20. INSTALL VALVE LASH ADJUSTER ASSEMBLY

(a) Be sure to inspect the valve lash adjuster before installing it (see page EM-75).

(b) Install the lash adjusters.

NOTICE:

Install the lash adjuster at the same place it was removed from.

21. INSTALL NO. 1 VALVE ROCKER ARM SUB-ASSEMBLY

(a) Apply engine oil to the lash adjuster tips and valve stem cap ends.

(b) Make sure that the valve rocker arms are installed as shown in the illustration.

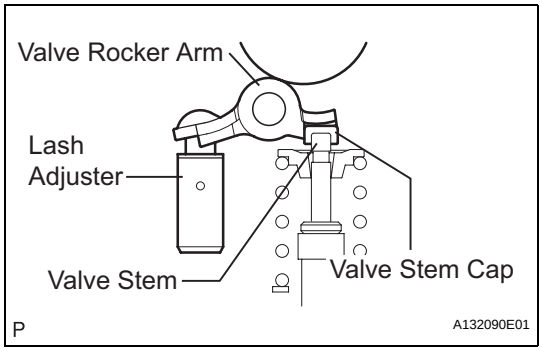

22. INSTALL CAMSHAFT BEARING CAP (for Bank 1)

(a) Apply engine oil to the camshaft journals, camshaft housings and bearing caps.

(b) Install the No. 1 camshaft and No. 2 camshaft to the camshaft housing.

(c) Confirm the marks and numbers on the camshaft bearing caps and place them each in their proper position and direction.

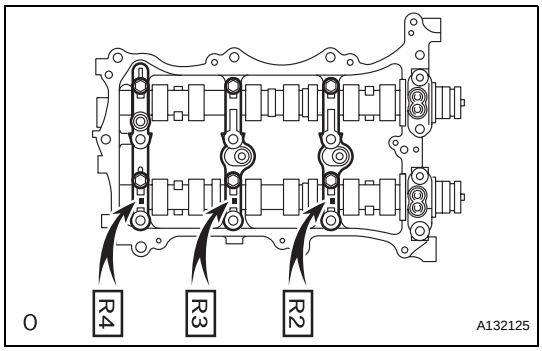

(d) Temporarily install the 8 bolts in the order shown in the illustration.

Torque: 10 N*m (102 kgf*cm, 7 ft.*lbf)

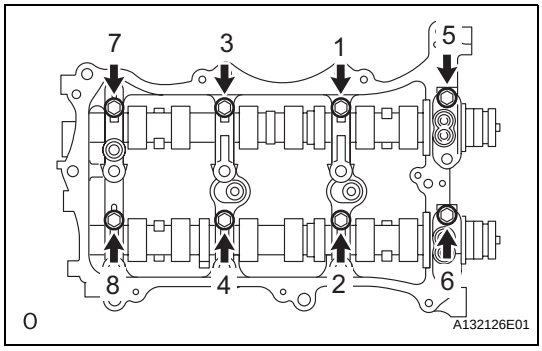

23. INSTALL CAMSHAFT HOUSING SUB-ASSEMBLY (for Bank 1)

(a) Apply seal packing in a continuous line as shown in the illustration.

Seal packing:
Toyota Genuine Seal Packing Block, Three Bond 1207B or Equivalent
Standard seal diameter:
3.5 to 4.5 mm (0.138 to 0.177 in.)
NOTICE:
- **Remove any oil from the contact surface.**
- **Install the camshaft housing within 3 minutes and tighten the bolts within 15 minutes after applying seal packing.**
- **Do not start the engine for at least 2 hours after the installation.**

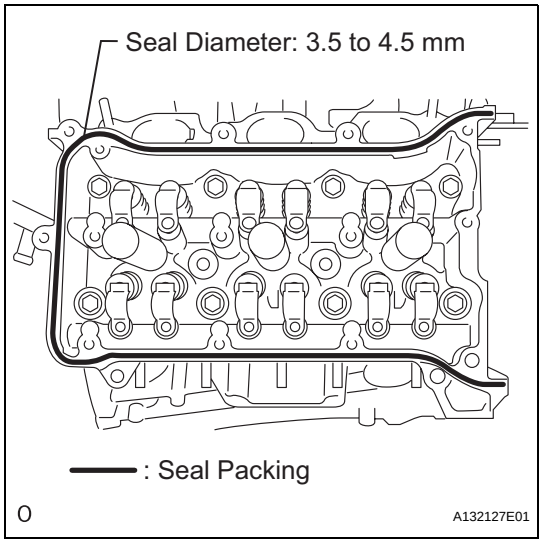

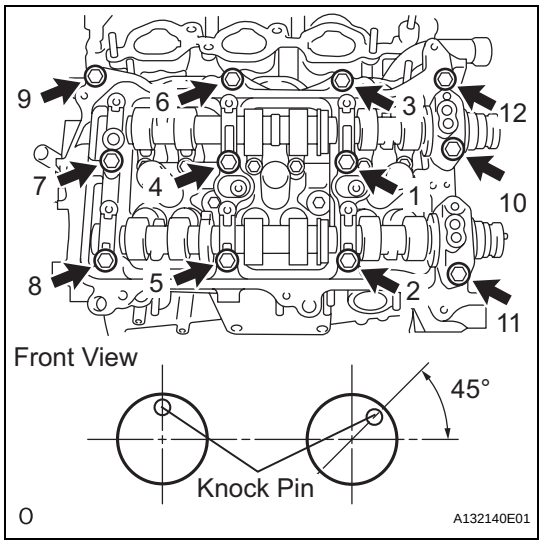

(b) Install the camshaft housing, and install the 12 bolts in the order shown in the illustration.
Torque: 28 N*m (286 kgf*cm, 21 ft.*lbf)
NOTICE:
Make sure that the knock pin of the camshaft is positioned as shown in the illustration before installing the camshaft housing.

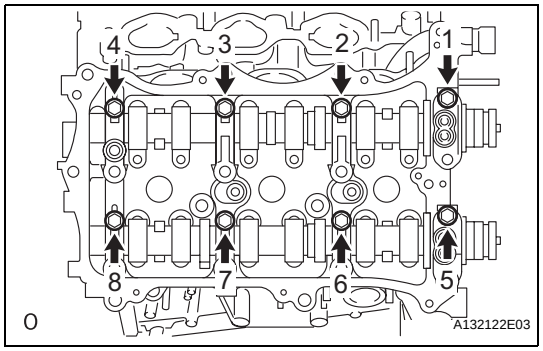

(c) Tighten the 8 bolts in the order shown in the illustration.
Torque: 16 N*m (163 kgf*cm, 12 ft.*lbf)
NOTICE:
Thoroughly wipe clean any seal packing.

EM

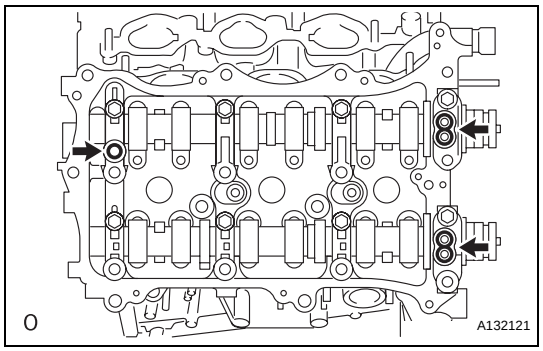

(d) Install 3 new gaskets.

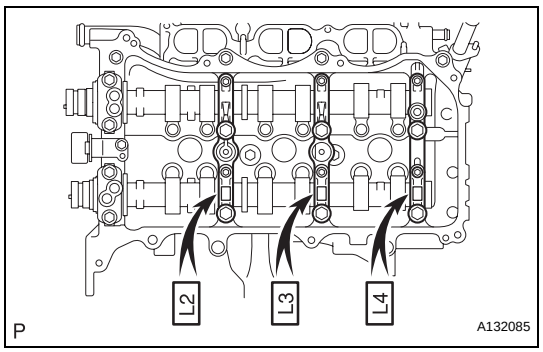

24. INSTALL CAMSHAFT BEARING CAP (for Bank 2)

(a) Apply engine oil to the camshaft journals, camshaft housings and bearing caps.
(b) Install the camshaft No. 3 and camshaft No. 4 to the camshaft housing.
(c) Confirm the marks and numbers on the camshaft bearing caps and place them each in their proper position and direction.

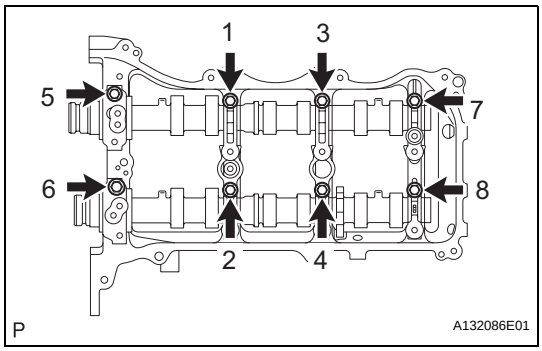

(d) Temporarily install the 8 bolts in the order shown in the illustration.
Torque: 10 N*m (102 kgf*cm, 7 ft.*lbf)

25. INSTALL CAMSHAFT HOUSING SUB-ASSEMBLY (for Bank 2)

(a) Apply seal packing in a continuous line as shown in the illustration.
Seal packing:
Toyota Genuine Seal Packing Block, Three Bond 1207B or Equivalent
Standard seal diameter:
3.5 to 4.5 mm (0.138 to 0.177 in.)
NOTICE:
- **Remove any oil from the contact surface.**
- **Install the camshaft housing within 3 minutes and tighten the bolts within 15 minutes after applying seal packing.**
- **Do not start the engine for at least 2 hours after the installation.**

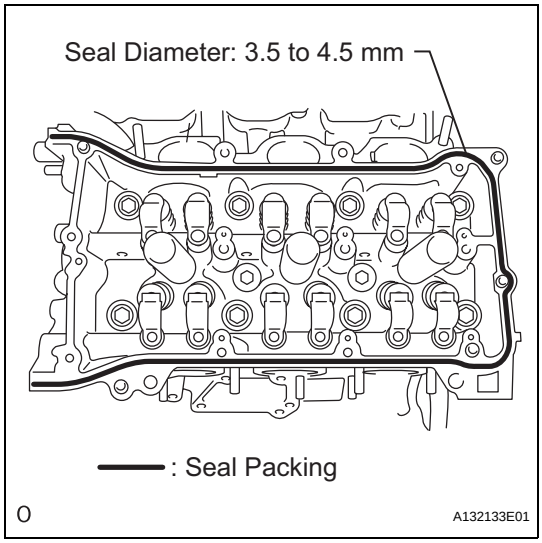

(b) Install the camshaft housing and tighten the 13 bolts in the order shown in the illustration.
Torque: 28 N*m (286 kgf*cm, 21 ft.*lbf)
NOTICE:
Make sure that the knock pin of the camshaft is positioned as shown in the illustration before installing the camshaft housing.

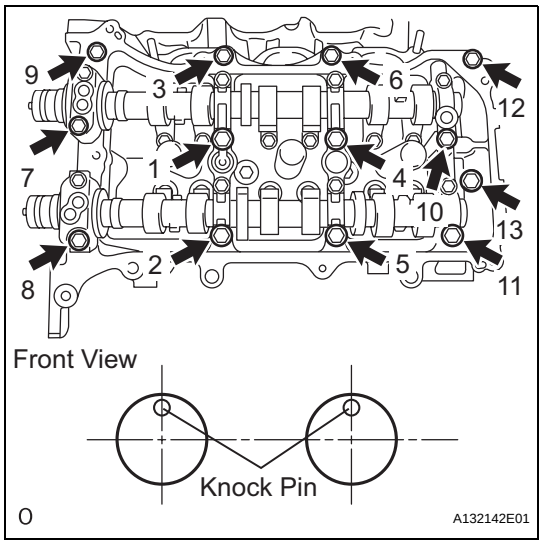

(c) Tighten the 8 bolts in the order shown in the illustration.
Torque: 16 N*m (163 kgf*cm, 12 ft.*lbf)
NOTICE:
Thoroughly wipe clean any seal packing.

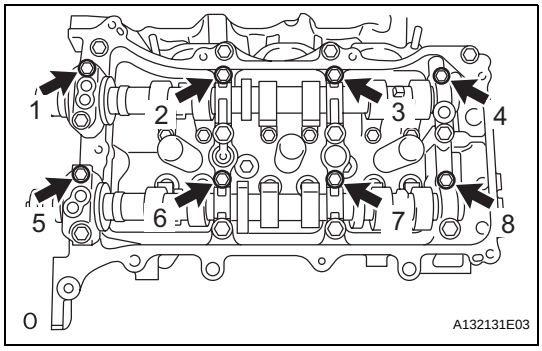

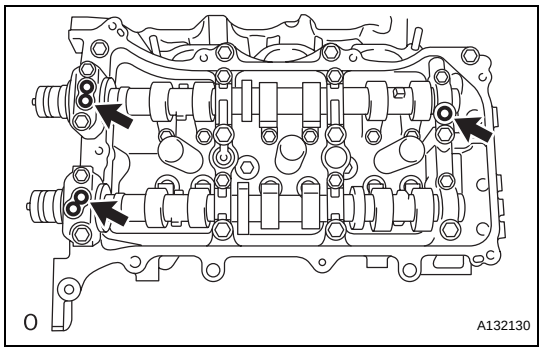

(d) Install 3 new gaskets.

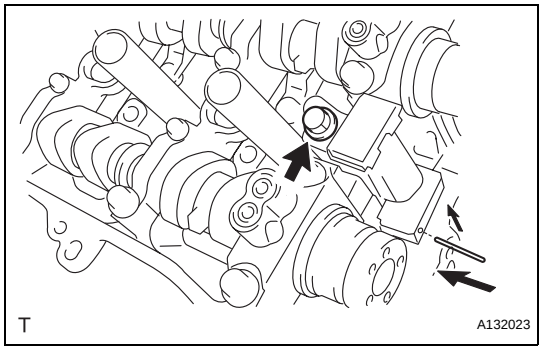

26. INSTALL NO. 2 CHAIN TENSIONER ASSEMBLY

(a) Install the chain tensioner with the bolt.
Torque: 21 N*m (214 kgf*cm, 15 ft.*lbf)

(b) While pushing in the tensioner, insert a pin of ϕ1.0 mm (0.039 in.) into the hole to fix it in place.

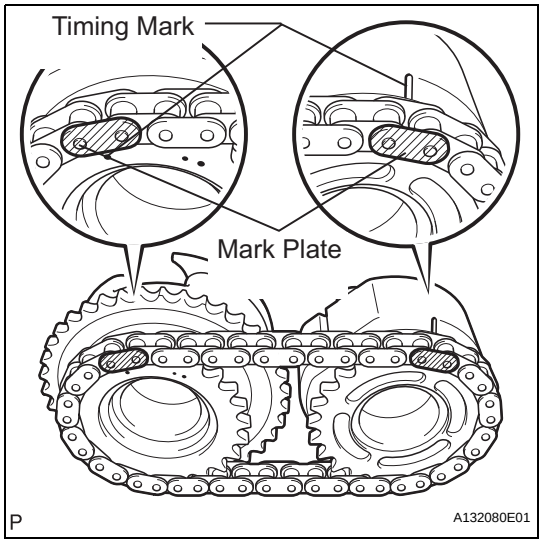

27. INSTALL CAMSHAFT TIMING GEARS AND NO. 2 CHAIN (for Bank 1)

(a) Align the mark plate (yellow) with the timing marks (1 dot mark) of the camshaft timing gears as shown in the illustration.

(b) Apply a small amount of engine oil to the bolt threads and bolt-seating surface.

(c) Align the knock pin of the camshaft with the pin hole of the camshaft timing gear. Install the camshaft timing gear and camshaft timing exhaust gear with the No. 2 chain installed.

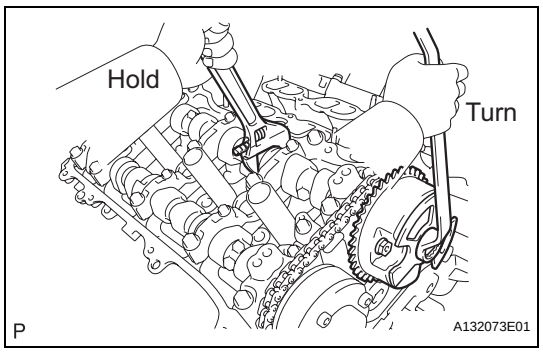

(d) Hold the hexagonal portion of the camshaft with a wrench, and tighten the 2 bolts.
Torque: 100 N*m (1,020 kgf*cm, 74 ft.*lbf)

(e) Remove the pin from the No. 2 chain tensioner.

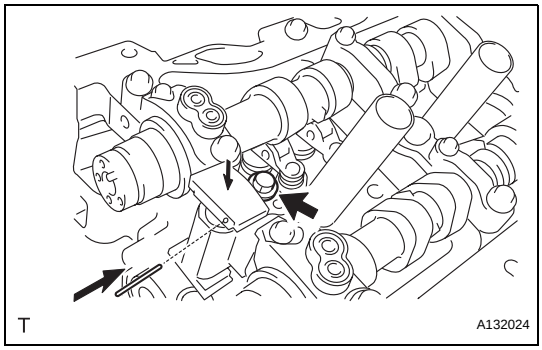

28. INSTALL NO. 3 CHAIN TENSIONER ASSEMBLY

(a) Install the chain tensioner with the bolt.
Torque: 21 N*m (214 kgf*cm, 15 ft.*lbf)

(b) While pushing in the tensioner, insert a pin of ϕ1.0 mm (0.039 in.) into the hole to fix it in place.

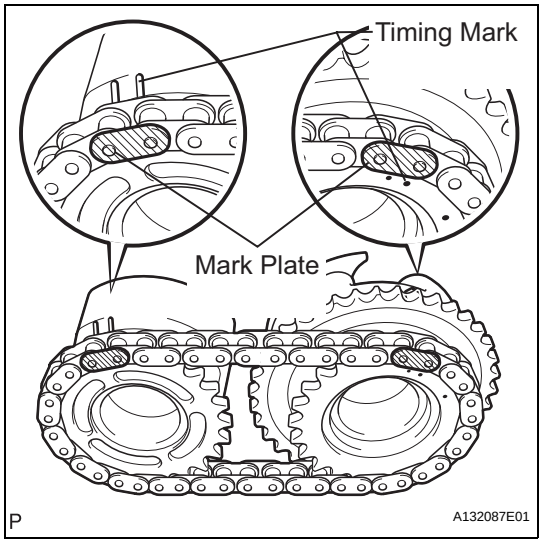

29. INSTALL CAMSHAFT TIMING GEARS AND NO. 2 CHAIN (for Bank 2)

(a) Align the mark plate (yellow) with the timing marks (2 dot mark) of the camshaft timing gears as shown in the illustration.

(b) Apply a small amount of engine oil to the bolt threads and bolt-seating surface.

(c) Align the knock pin of the camshaft with the pin hole of the camshaft timing gear. Install the camshaft timing gear and camshaft timing exhaust gear with the No. 2 chain installed.

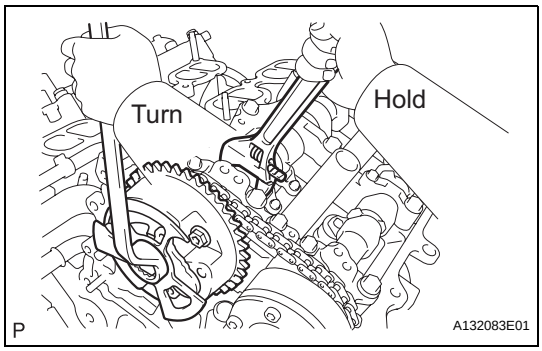

(d) Hold the hexagonal portion of the camshaft with a wrench, and tighten the 2 bolts.
Torque: 100 N*m (1,020 kgf*cm, 74 ft.*lbf)

(e) Remove the pin from the No. 2 chain tensioner.

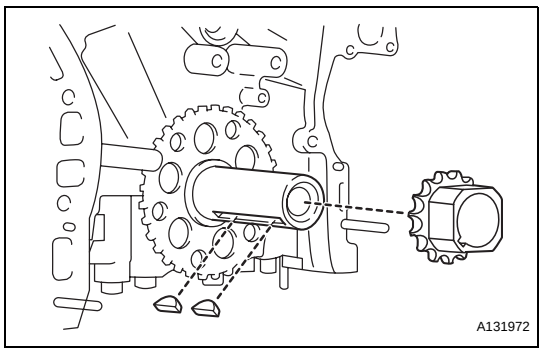

30. INSTALL CRANKSHAFT TIMING GEAR OR SPROCKET

(a) Install the timing gear set keys and timing gear as shown in the illustration.

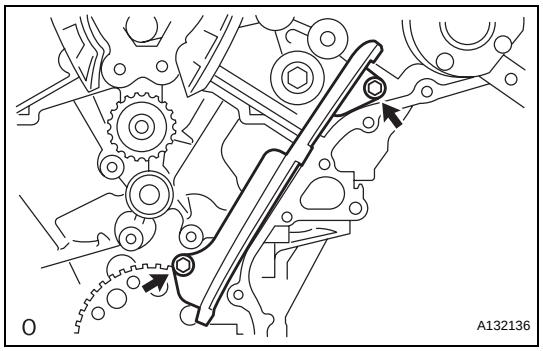

31. INSTALL NO. 1 CHAIN VIBRATION DAMPER

(a) Install the chain vibration damper with the 2 bolts.
Torque: 23 N*m (235 kgf*cm, 17 ft.*lbf)

32. INSTALL NO. 2 CHAIN VIBRATION DAMPER

(a) Install the 2 chain vibration damper.

33. INSTALL IDLE SPROCKET ASSEMBLY

(a) Apply a light coat of engine oil to the rotating surface of the No. 1 idle gear shaft.

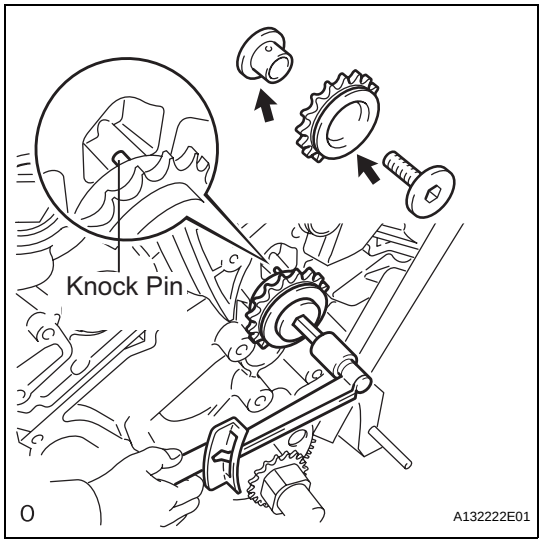

(b) Temporarily install the No. 1 idle gear shaft and idle sprocket with the No. 2 idle gear shaft while aligning the knock pin of the No. 1 idle gear shaft with the knock pin groove of the cylinder block.
NOTICE:
Be careful of the idle gear direction.

(c) Using a 10 mm hexagon wrench, tighten the No. 2 idle gear shaft.
Torque: 60 N*m (612 kgf*cm, 44 ft.*lbf)

EM

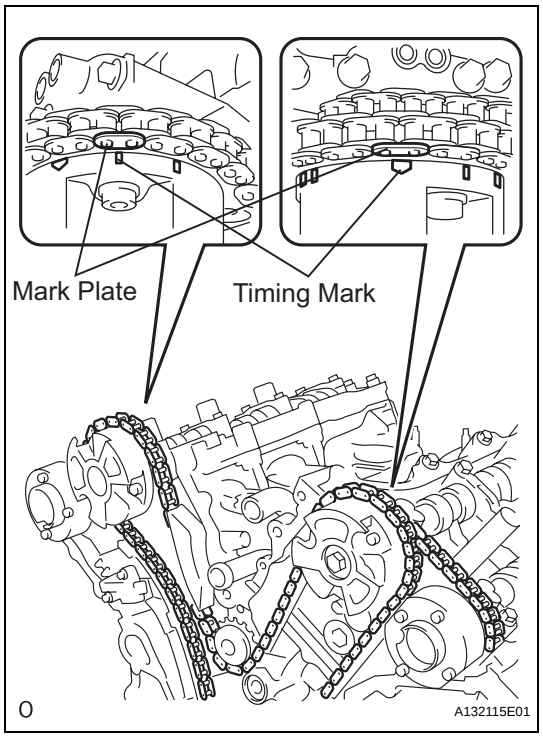

34. INSTALL CHAIN SUB-ASSEMBLY

(a) Align the mark plate and timing mark as shown in the illustration and install the chain.
NOTICE:
Do not pass the chain over the crankshaft, just put it on it.
HINT:
The chain mark plate is orange.

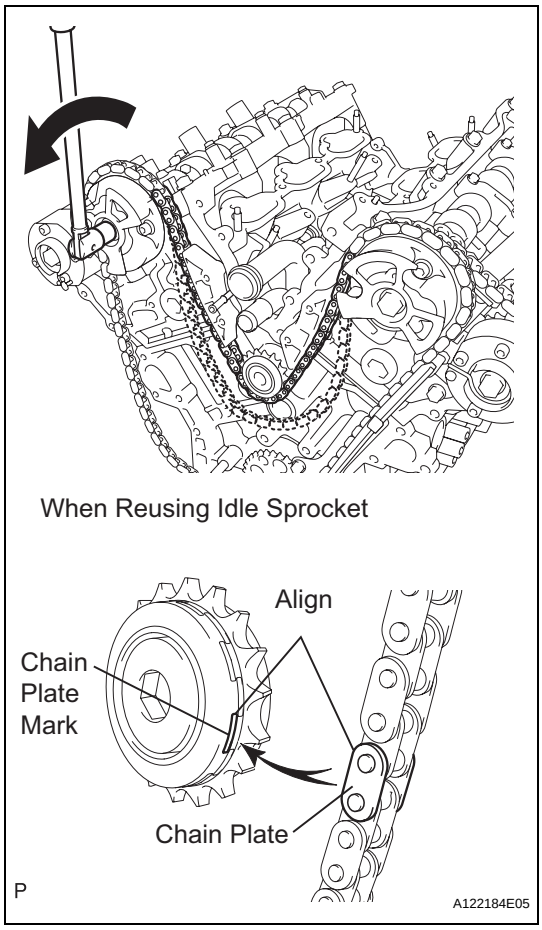

(b) Turn the camshaft timing gear on the bank 1 counterclockwise to tighten the chain between the banks.

NOTICE:

If reusing the idle sprocket, align one of the idle sprocket's chain plate marks with one of the chain's chain plates when installing the idle sprocket.

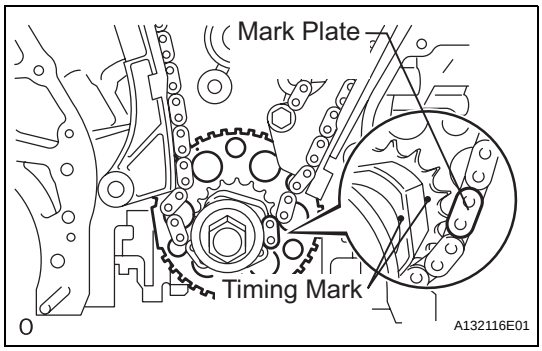

(c) Align the mark plate and timing mark as shown in the illustration and install the chain onto the crankshaft timing gear.

HINT:

The chain mark plate is yellow.

(d) Temporarily tighten the pulley set bolt.

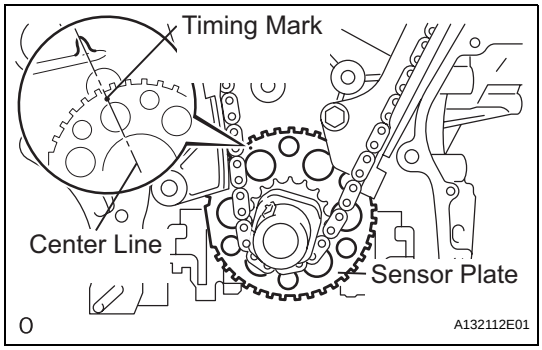

(e) Turn the crankshaft clockwise to set it to the bank 1 block bore center line (TDC / compression).

35. INSTALL CHAIN TENSIONER SLIPPER

(a) Install the chain tensioner slipper.

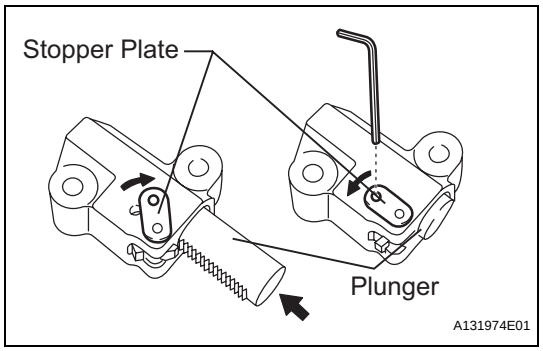

36. INSTALL NO. 1 CHAIN TENSIONER ASSEMBLY

(a) Move the stopper plate upward to release the lock, and push the plunger deep into the tensioner.

(b) Move the stopper plate downward to set the lock, and insert a hexagon wrench into the hole of the stopper plate.

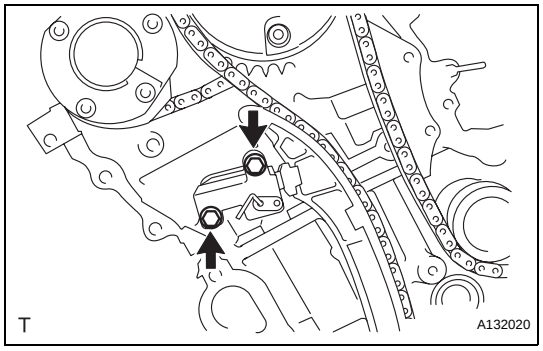

(c) Install the chain tensioner with the 2 bolts.
Torque: 10 N*m (102 kgf*cm, 7 ft.*lbf)

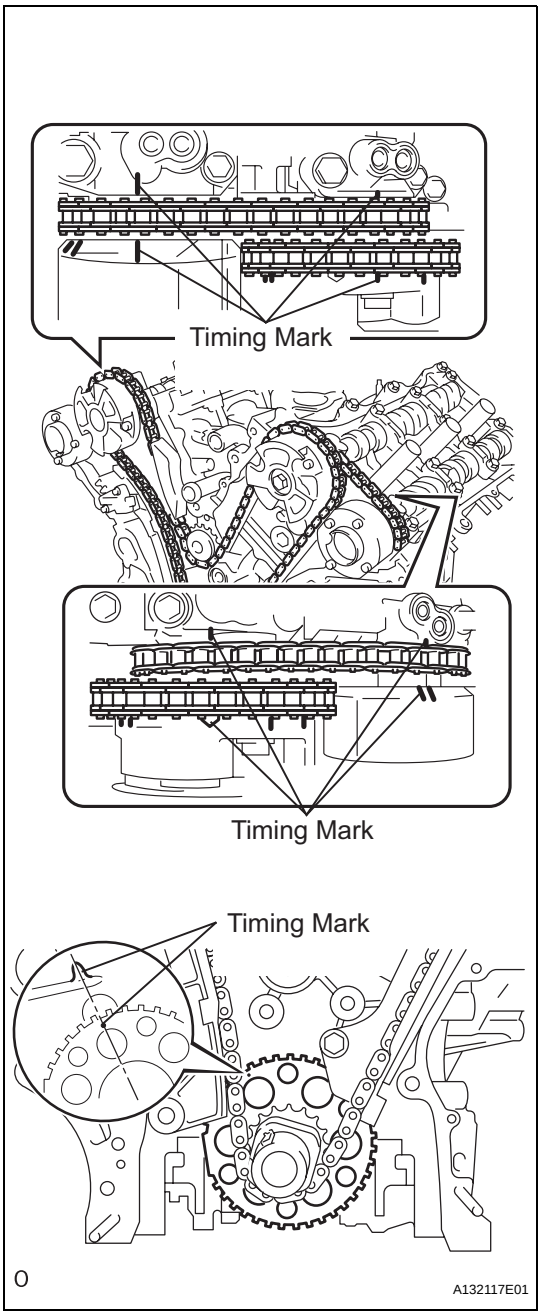

(d) Remove the lock pin of the chain tensioner. Check that each timing mark is aligned with the crankshaft at the TDC / compression.
(e) Remove the pulley set bolt.

37. INSTALL TIMING CHAIN COVER SUB-ASSEMBLY (w/ Oil Pump) (See page LU-17)

38. INSTALL WATER PUMP ASSEMBLY (See page CO-13)

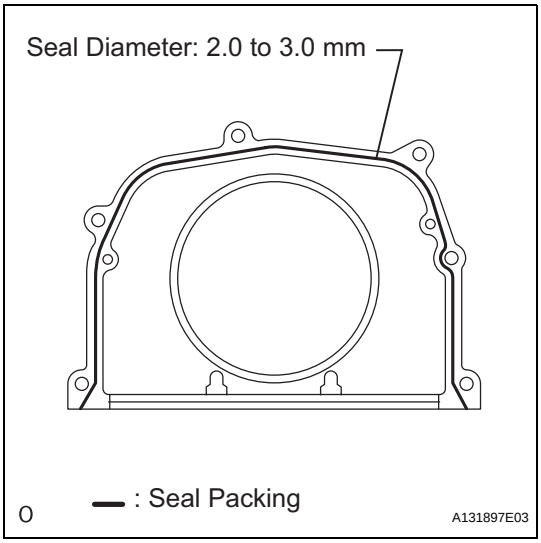

39. INSTALL ENGINE REAR OIL SEAL RETAINER

(a) Apply seal packing in a continuous line as shown in the illustration.

Seal packing:
Toyota Genuine Seal Packing Block, Three Bond 1207B or Equivalent
Standard seal diameter:
2.0 to 3.0 mm (0.079 to 0.118 in.)
NOTICE:
- **Remove any oil from the contact surface.**
- **Install the crankcase within 3 minutes after applying seal packing.**
- **Do not start the engine for at least 2 hours after the installation.**

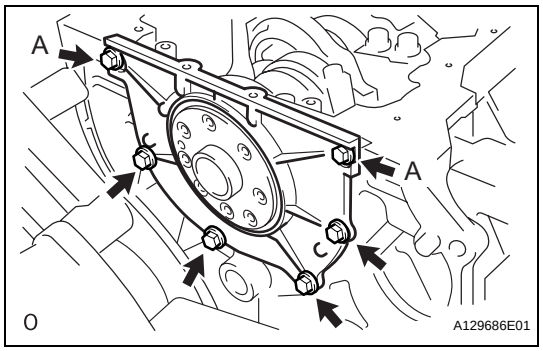

(b) Install the oil seal retainer with the 6 bolts.
Torque: 10 N*m (102 kgf*cm, 7 ft.*lbf)
NOTICE:
Apply adhesive 1324 to the 2 bolts labeled A.
Adhesive:
Toyota Genuine Adhesive 1324, Three Bond 1324 or Equivalent

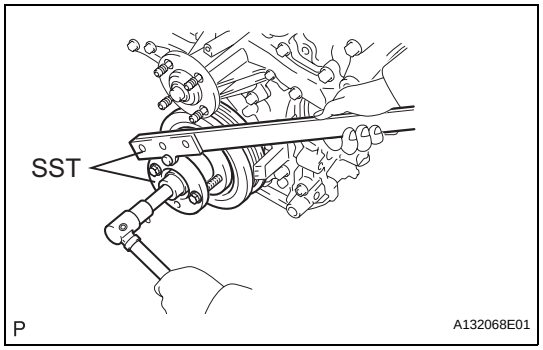

40. INSTALL CRANKSHAFT PULLEY
(a) Align the pulley set key with the key groove of the pulley, and slide on the pulley.
(b) Using SST, install the pulley bolt.
SST 09213-70011 (09213-70020), 09330-00021
Torque: 250 N*m (2,549 kgf*cm, 184 ft.*lbf)

EM

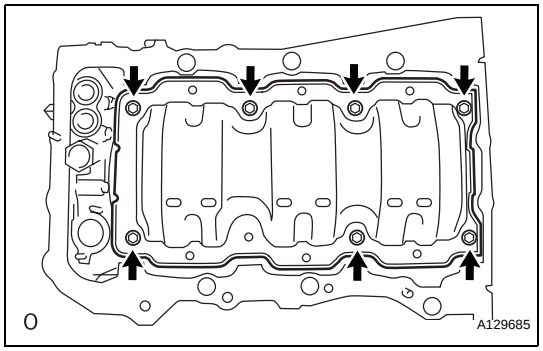

41. INSTALL OIL PAN BAFFLE PLATE
(a) Install the oil pan baffle plate with the 7 bolts.
Torque: 10 N*m (102 kgf*cm, 7 ft.*lbf)

42. INSTALL OIL PAN SUB-ASSEMBLY (See page LU-21)

43. INSTALL OIL STRAINER SUB-ASSEMBLY (See page LU-22)

44. INSTALL NO. 2 OIL PAN SUB-ASSEMBLY (See page LU-22)

45. INSTALL OIL FILTER ELEMENT (See page LU-5)

46. INSTALL OIL FILTER CAP SUB-ASSEMBLY (See page LU-5)

47. INSTALL WATER INLET HOUSING (See page CO-14)

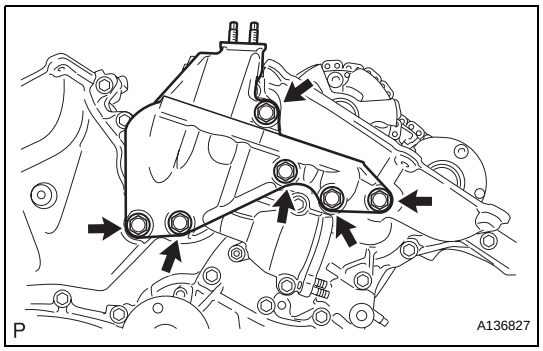

48. INSTALL FRONT NO. 1 ENGINE MOUNTING BRACKET
(a) Install the engine mounting bracket with the 6 bolts.
Torque: 54 N*m (551 kgf*cm, 40 ft.*lbf)
NOTICE:
- **Install the water inlet and mounting bracket within 15 minutes after installing the chain cover.**
- **Do not start the engine for at least 2 hours after the installation.**

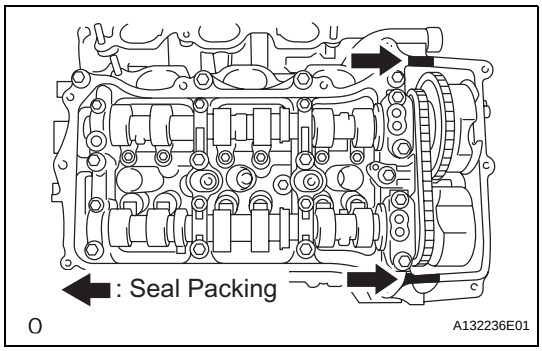

49. INSTALL CYLINDER HEAD COVER SUB-ASSEMBLY (for Bank 1)

(a) Apply seal packing as shown in the illustration.
Seal packing:
Toyota Genuine Seal Packing Block, Three Bond 1207B or Equivalent
NOTICE:
- **Remove any oil from the contact surface.**
- **Install the crankcase within 3 minutes after applying seal packing.**
- **Do not start the engine for at least 2 hours after the installation.**

(b) Install the gasket to the head cover.

(c) Install the head cover with the 12 bolts in the order shown in the illustration.
Torque: 21 N*m (214 kgf*cm, 15 ft.*lbf) for bolt A
10 N*m (102 kgf*cm, 7 ft.*lbf) for except bolt A
HINT:
Make sure the tightening torque of bolt 1and 11 in correct.

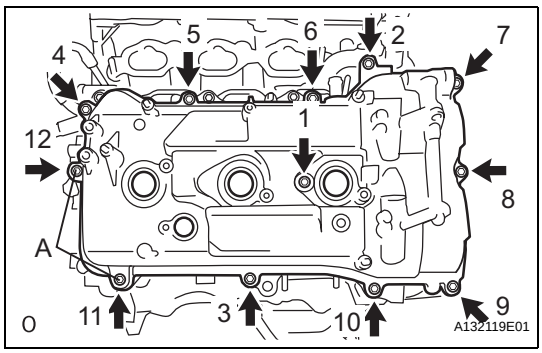

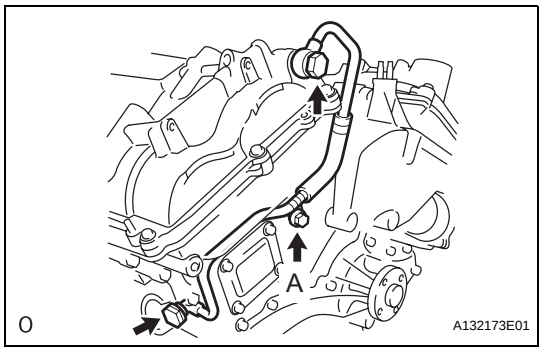

50. INSTALL OIL PIPE

(a) Make sure that there is no foreign matter on the mesh of the oil control valve filter.

(b) Install the oil control valve filter to the oil pipe union. Install 2 new gaskets and temporarily install the oil pipe (on the head cover side) with the oil pipe union.
NOTICE:
Remove any oil from the contact surface.

(c) Install a new gasket and temporarily install the oil pipe (on the cylinder head side) with the oil pipe union.
NOTICE:
Remove any oil from the contact surface.

(d) Install bolt A to the cylinder head.
Torque: 10 N*m (102 kgf*cm, 7 ft.*lbf)

(e) Tighten the 2 oil pipe union bolts.
Torque: 65 N*m (663 kgf*cm, 48 ft.*lbf)

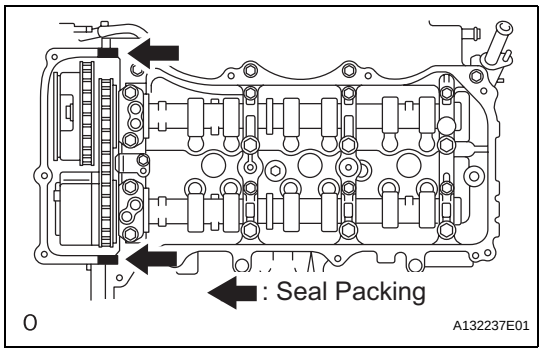

51. INSTALL CYLINDER HEAD COVER SUB-ASSEMBLY (for Bank 2)

(a) Apply seal packing as shown in the illustration.
Seal packing:
Toyota Genuine Seal Packing Block, Three Bond 1207B or Equivalent
NOTICE:
- **Remove any oil from the contact surface.**
- **Install the crankcase within 3 minutes after applying seal packing.**
- **Do not start the engine for at least 2 hours after the installation.**

(b) Install the gasket to the head cover.

EM

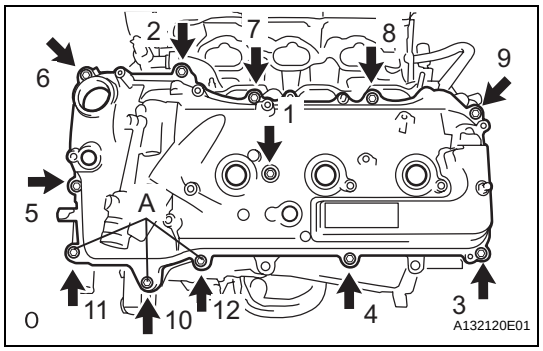

(c) Install the head cover with the 12 bolts in the order in the illastration.
Torque: 21 N*m (214 kgf*cm, 15 ft.*lbf) for bolt A
10 N*m (102 kgf*cm, 7 ft.*lbf) for except bolt A
HINT:
Make sure the tightening torque of bolts 1 and 10 is correct.

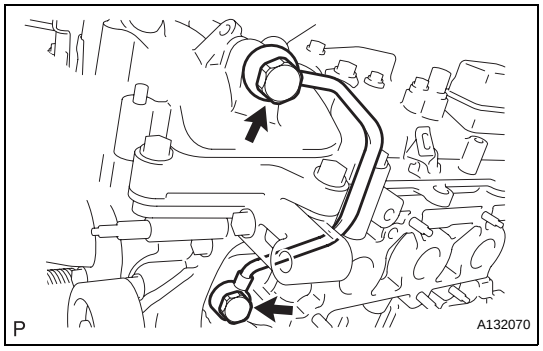

52. INSTALL NO. 1 OIL PIPE
(a) Make sure that there is no foreign matter on the mesh of the oil control valve filter.
(b) Install the oil control valve filter to the oil pipe union. Install 2 new gaskets and temporarily install the oil pipe (on the head cover side) with the oil pipe union.
(c) Install a new gasket and temporarily install the oil pipe (on the cylinder head side) with the oil pipe union.
NOTICE:
Remove any oil from the contract surface.
(d) Tighten the 2 oil pipe union bolts.
Torque: 65 N*m (663 kgf*cm, 48 ft.*lbf)

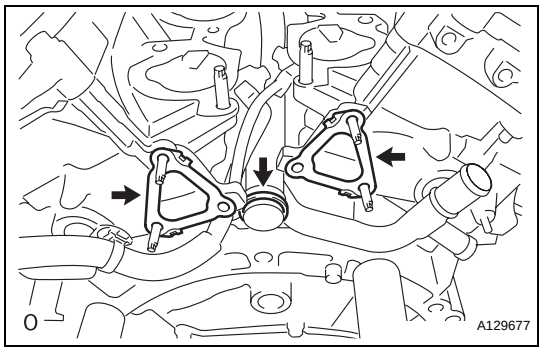

53. INSTALL WATER OUTLET
(a) Install 2 new gaskets and a new O-ring.
(b) Apply soapy water to the O-ring.

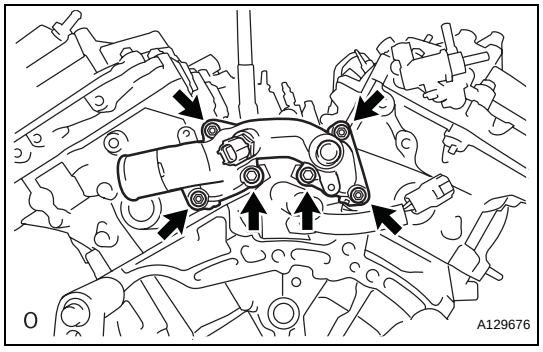

(c) Install the water outlet with the 2 bolts and 4 nuts.
Torque: 10 N*m (102 kgf*cm, 7 ft.*lbf)

EM

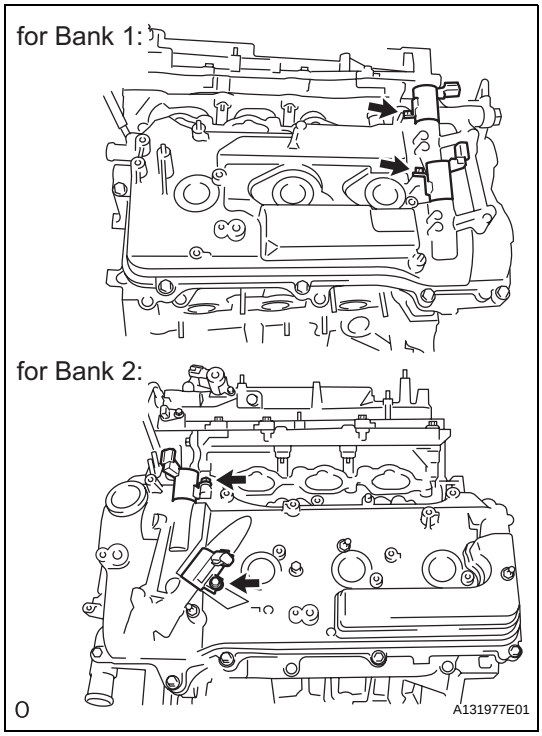

54. INSTALL CAMSHAFT TIMING OIL CONTROL VALVE ASSEMBLY

(a) Install the 4 camshaft timing oil control valves with the 4 bolts.
Torque: 10 N*m (102 kgf*cm, 7 ft.*lbf)

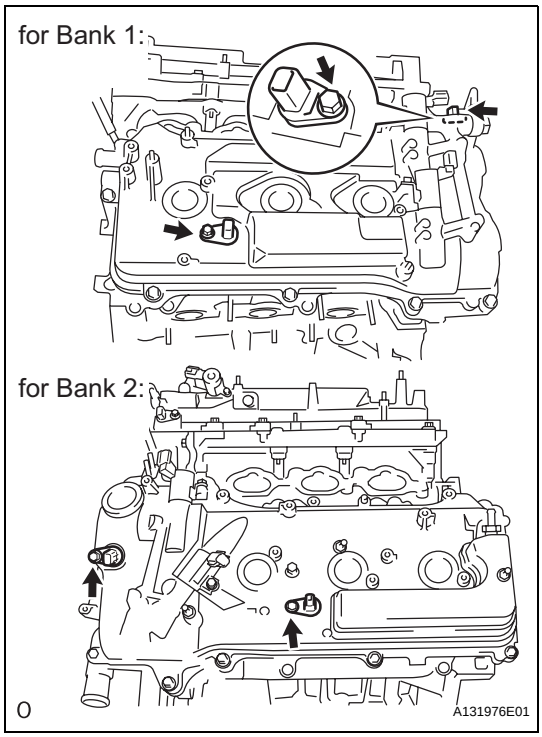

55. INSTALL VVT SENSOR

(a) Install the 4 VVT sensors with the 4 bolts.
Torque: 10 N*m (102 kgf*cm, 7 ft.*lbf)

56. INSTALL SPARK PLUG

(a) Install the 6 spark plugs.
Torque: 18 N*m (184 kgf*cm, 13 ft.*lbf)

REPAIR

1. REPAIR INTAKE VALVE SEAT

NOTICE:

Keep the lip free from foreign matter.

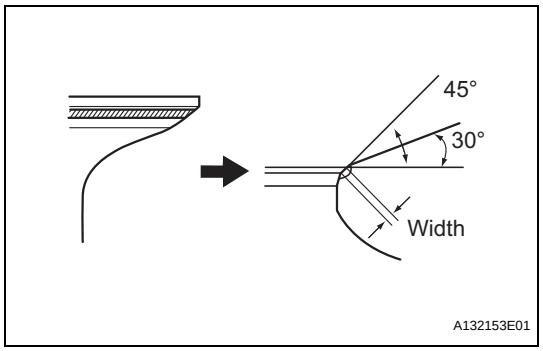

(a) If the seating is too high on the valve face, use 30° and 45° cutters to correct the seat.

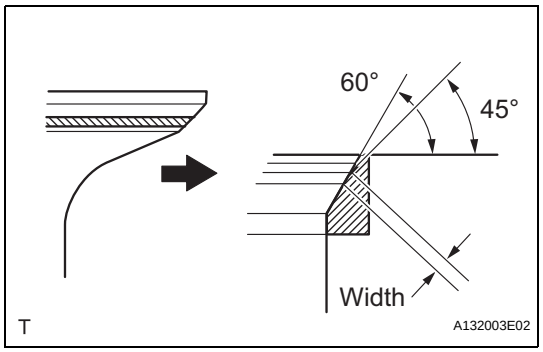

(b) If the seating is too low on the valve face, use 60° and 45° cutters to correct the seat.

(c) Hand-lap the valve and valve seat with an abrasive compound.

(d) Check the valve seating position.

2. REPAIR EXHAUST VALVE SEAT

NOTICE:

Keep the lip free from foreign matter.

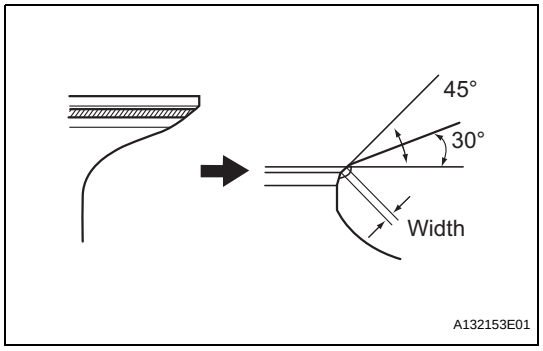

(a) If the seating is too high on the valve face, use 30° and 45° cutters to correct the seat.

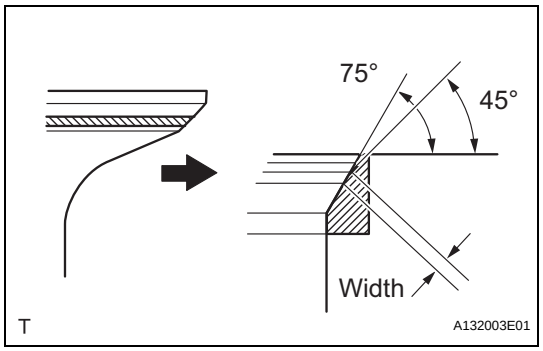

(b) If the seating is too low on the valve face, use 45° and 75° cutters to correct the seat.

(c) Hand-lap the valve and valve seat with an abrasive compound.

(d) Check the valve seating position.

EM

ENGINE

ON-VEHICLE INSPECTION

1. INSPECT VALVE LASH ADJUSTER NOISE

(a) Rev up the engine several times. Check that the engine does not emit unusual noises.
If unusual noises occur, warm up the engine and idle it for over 30 minutes. Then perform the inspection above again.
If any defects or problems are found during the inspection above, perform a lash adjuster inspection.

2. INSPECT IGNITION TIMING

(a) Warm up the engine and stop the engine.
NOTICE:
A warmed up engine should have an engine coolant temperature of over 80°C (176°F), have an engine oil temperature of 60°C (140°F), and the engine rpm should be stabilized.

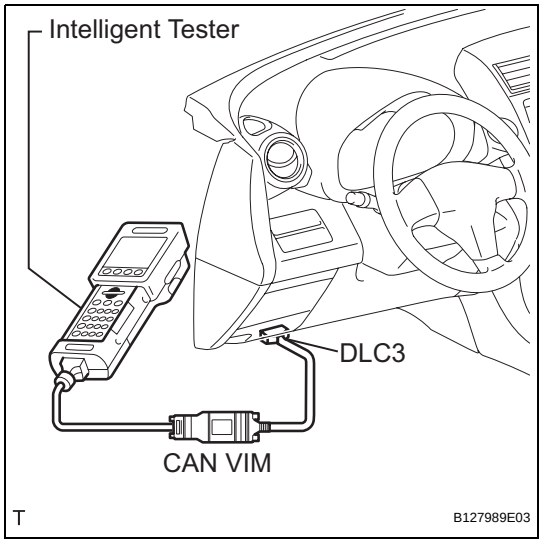

(b) When using the intelligent tester:
(1) Connect the intelligent tester to the DLC3.
(2) Start the engine and idle it.
(3) Push the intelligent tester main switch ON.
(4) Select the following menu items: DIAGNOSIS / ENHANCED OBD II / DATA LIST / PRIMARY / IGN ADVANCE.
Standard ignition timing:
8 to 12° BTDC @ idle
HINT:
Please refer to the intelligent tester operator's manual for further details.

(c) When not using the intelligent tester:
(1) Remove the V-bank cover (see page EM-21).

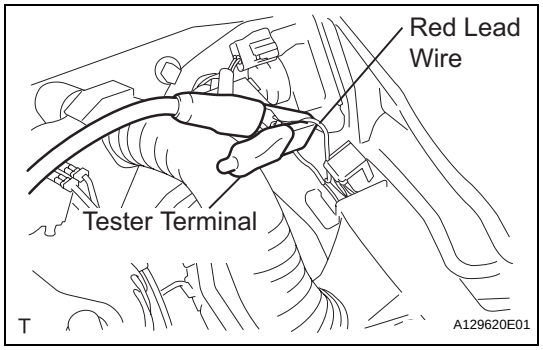

(2) Connect the tester terminal of a timing light to the red lead wire as shown in the illustration.
HINT:
Use a timing light that detects primary signals.

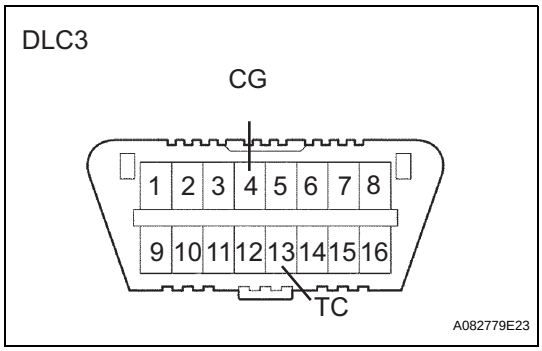

(3) Using SST, connect terminals 13 (TC) and 4 (CG) of the DLC3.
SST 09843-18040
NOTICE:
- **Confirm the terminal numbers before connecting them. Connecting the wrong terminals can damage the engine.**
- **When checking the ignition timing, the transmission should be in the neutral position.**

(4) Using a timing light, check the ignition timing.
Standard ignition timing:
8 to 12° BTDC @ idle
NOTICE:
When checking the ignition timing, the transmission should be in the neutral position.
HINT:
Run the engine at 1,000 to 1,300 rpm for 5 seconds, and then check that the engine rpm returns to idle speed.

(5) Remove the SST from the DLC3.

(6) Check the ignition timing.
Standard ignition timing:
5 to 15° BTDC @ idle

(7) Check that the ignition timing advances immediately when the engine speed is increased.

(8) Disconnect the timing light from the engine.

(9) Install the V-bank cover (see page EM-42).

3. INSPECT ENGINE IDLE SPEED

(a) Warm up and stop the engine.
NOTICE:
A warmed up engine should have an engine coolant temperature of over 80°C (176°F) and an engine oil temperature of 60°C (140°F), and the engine rpm should be stabilized.

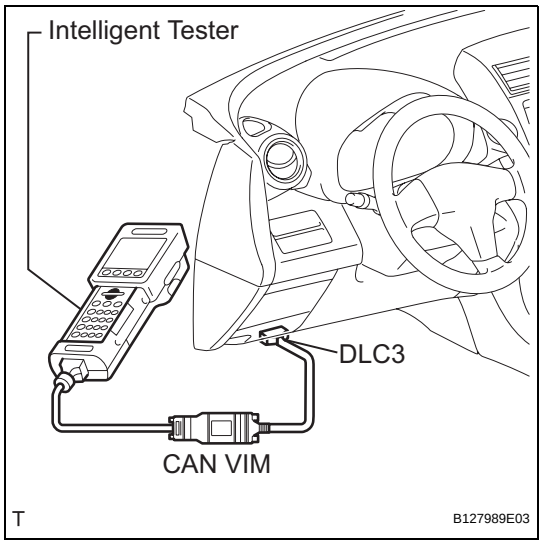

(b) When using the intelligent tester:

(1) Connect the intelligent tester to the DLC3.
NOTICE:
Switch off all accessories and A/C before connecting the intelligent tester.

(2) Race the engine at 2,500 rpm for approximately 90 seconds.

(3) Push the intelligent tester main switch ON.

(4) Select the tester menus: DIAGNOSIS / ENHANCED OBD II / DATA LIST / PRIMARY / ENGINE SPD.
Standard idle speed:
600 to 700 rpm
NOTICE:
When checking the idle speed, the transmission should be in the neutral position.

HINT:
Please refer to the intelligent tester operator's manual for further details.
If the idle speed is not as specified, check the air intake system.

(5) Disconnect the intelligent tester from the DLC3.

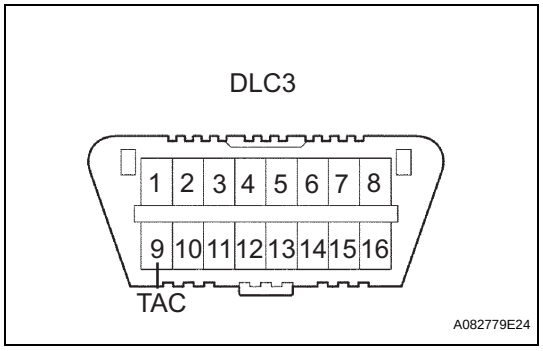

(c) When not using the intelligent tester:

(1) Using SST, connect the tachometer probe to terminal 9 (TAC) of the DLC3.
SST 09843-18040
NOTICE:
Confirm the terminal numbers before connecting them. Connecting the wrong terminals can damage the engine.

(2) Race the engine at 2,500 rpm for approximately 90 seconds.

(3) Check the idle speed.
Standard idle speed:
600 to 700 rpm (Transmission neutral position)
If the speed is not as specified, check the air intake system.

(4) Disconnect the tachometer from the DLC3.

4. INSPECT COMPRESSION

(a) Warm up and stop the engine.
NOTICE:
A warmed up engine should have an engine coolant temperature of over 80°C (176°F) and an engine oil temperature of 60°C (140°F), and the engine rpm should be stabilized.

(b) Disconnect the injector connectors.

(c) Remove the intake air surge tank (see page EM-27).

(d) Remove the 6 ignition coils (see page EM-28).

(e) Remove the 6 spark plugs.

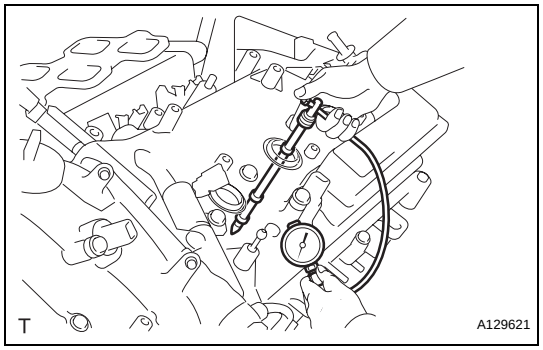

(f) Inspect the cylinder compression pressure.

(1) Insert a compression gauge into the spark plug hole.

(2) While cranking the engine, measure the compression pressure.
HINT:
Always use a fully charged battery to obtain an engine speed of 250 rpm or more.
NOTICE:
The measurement must be done as quickly as possible.
Compression pressure:
1,400 kPa (14 kgf/cm^2, 199 psi) or more
Minimum pressure:
980 kPa (10.0 kgf/cm^2, 142 psi)
Difference between each cylinder:
100 kPa (1.0 kgf/cm^2, 15 psi) or less

(3) Perform the inspection above for each cylinder.

(4) If the cylinder compression in one or more cylinders is low, pour a small amount of engine oil into the cylinder through the spark plug hole. Then perform the first 3 steps under "Inspect the cylinder compression pressure" for the cylinders with low compression.
HINT:
- If adding oil helps the compression, it is likely that the piston rings and / or cylinder bore are worn or damaged.
- If pressure stays low, a valve may be stuck or seated improperly, or there may be leakage in the gasket.

(g) Install the 6 spark plugs.
(h) Install the 6 ignition coils (see page EM-34).
(i) Install the intake air surge tank (see page EM-34).
(j) Connect the injector connectors.

5. INSPECT CO/HC

HINT:
This check is for determining whether or not the idle CO / HC complies with regulations.
(a) Start the engine.
(b) Keep the engine speed at 2,500 rpm for approximately 180 seconds.
(c) Insert a CO / HC meter testing probe at least 40 cm (1.3 ft.) into the tailpipe during idling.
(d) Immediately check the CO / HC concentration at idle and / or 2,500 rpm.
HINT:
- When performing the 2 mode (2,500 rpm and idle) test, follow the measurement order prescribed by the applicable local regulations.
- If the CO / HC concentration does not comply with regulations, troubleshoot in the order given below.

(1) Check the air fuel ratio sensor and heated oxygen sensor operation.
(2) See the table below for the possible cause, then inspect and correct the applicable causes if necessary.

CO	HC	Symptom	Causes
Normal	High	Rough idle	1. Faulty ignitions – Incorrect timing – Fouled, shorted or improperly gapped plugs 2. Leaky intake and exhaust valves 3. Leaky cylinder
Low	High	Rough idle (Fluctuating HC reading)	1. Vacuum leaks – PCV hose – Intake manifold – Throttle body 2. Lean mixture causing misfire

CO	HC	Symptom	Causes
High	High	Rough idle (Black smoke from exhaust)	1. Restricted air filter 2. Faulty fuel SFI system – Faulty pressure – Defective ECT sensor – Faulty ECM – Faulty injector – Faulty throttle position sensor – Faulty MAF sensor

ENGINE ASSEMBLY

COMPONENTS

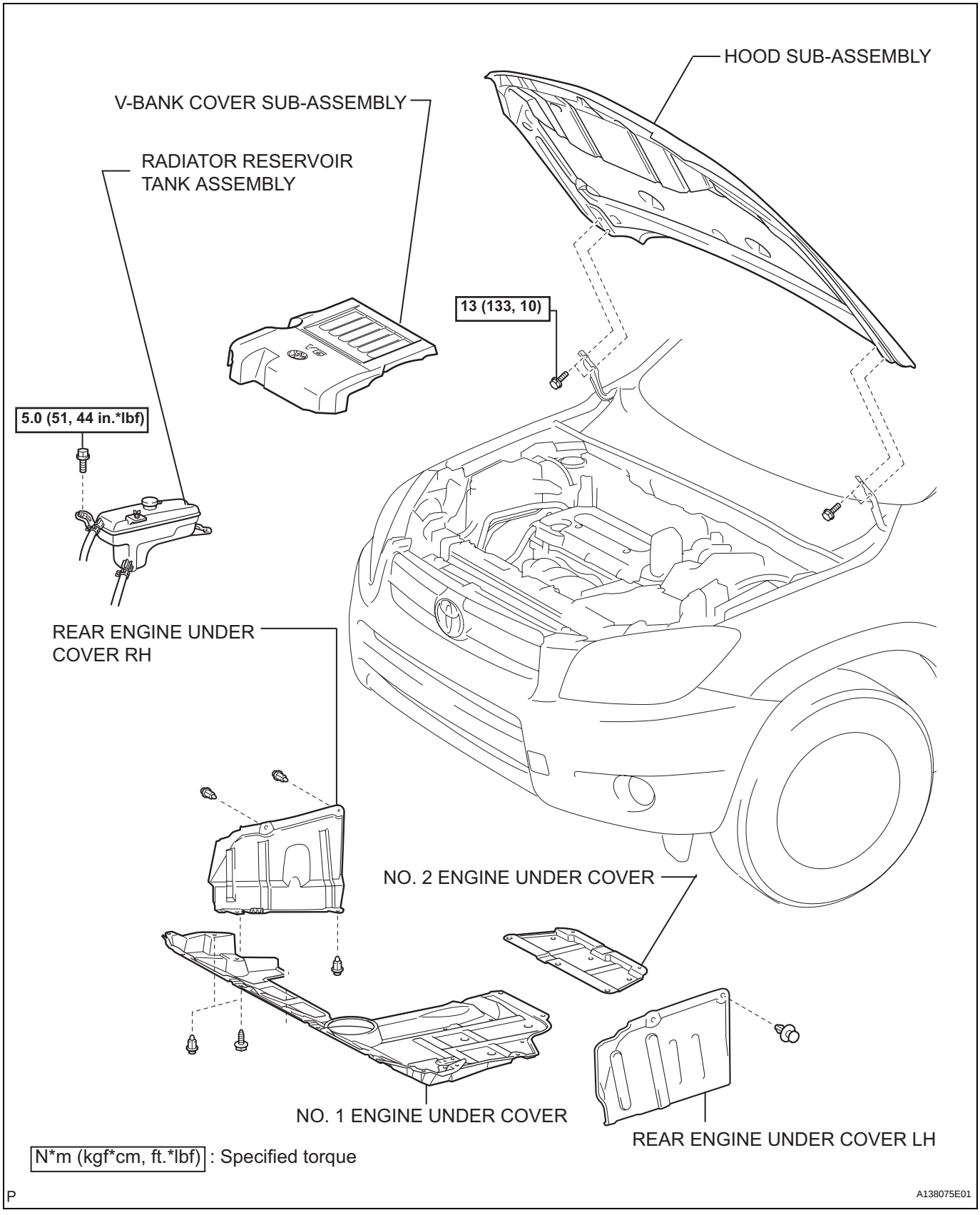

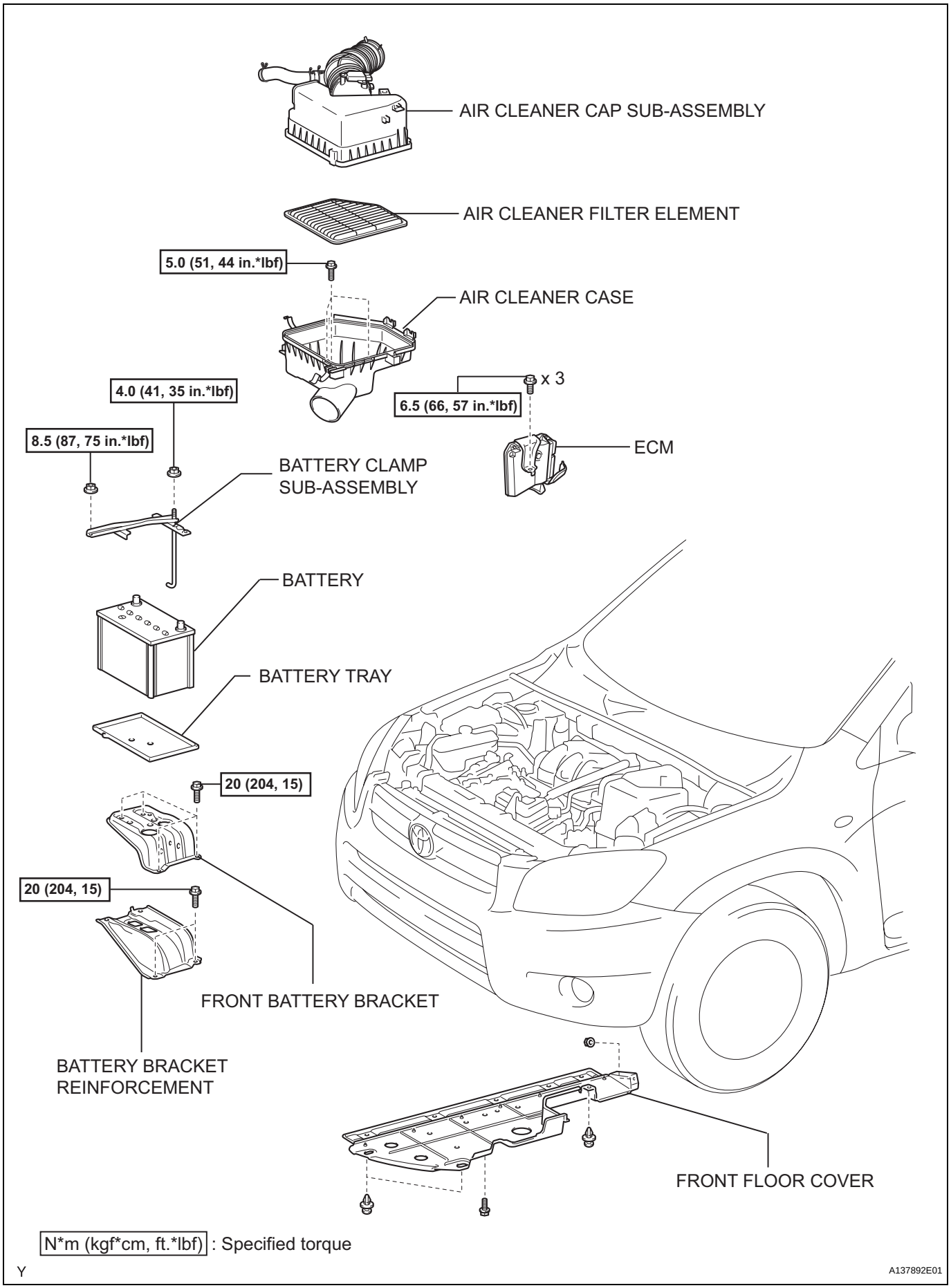

N*m (kgf*cm, ft.*lbf) : Specified torque

Y

A137892E01

EM

EM

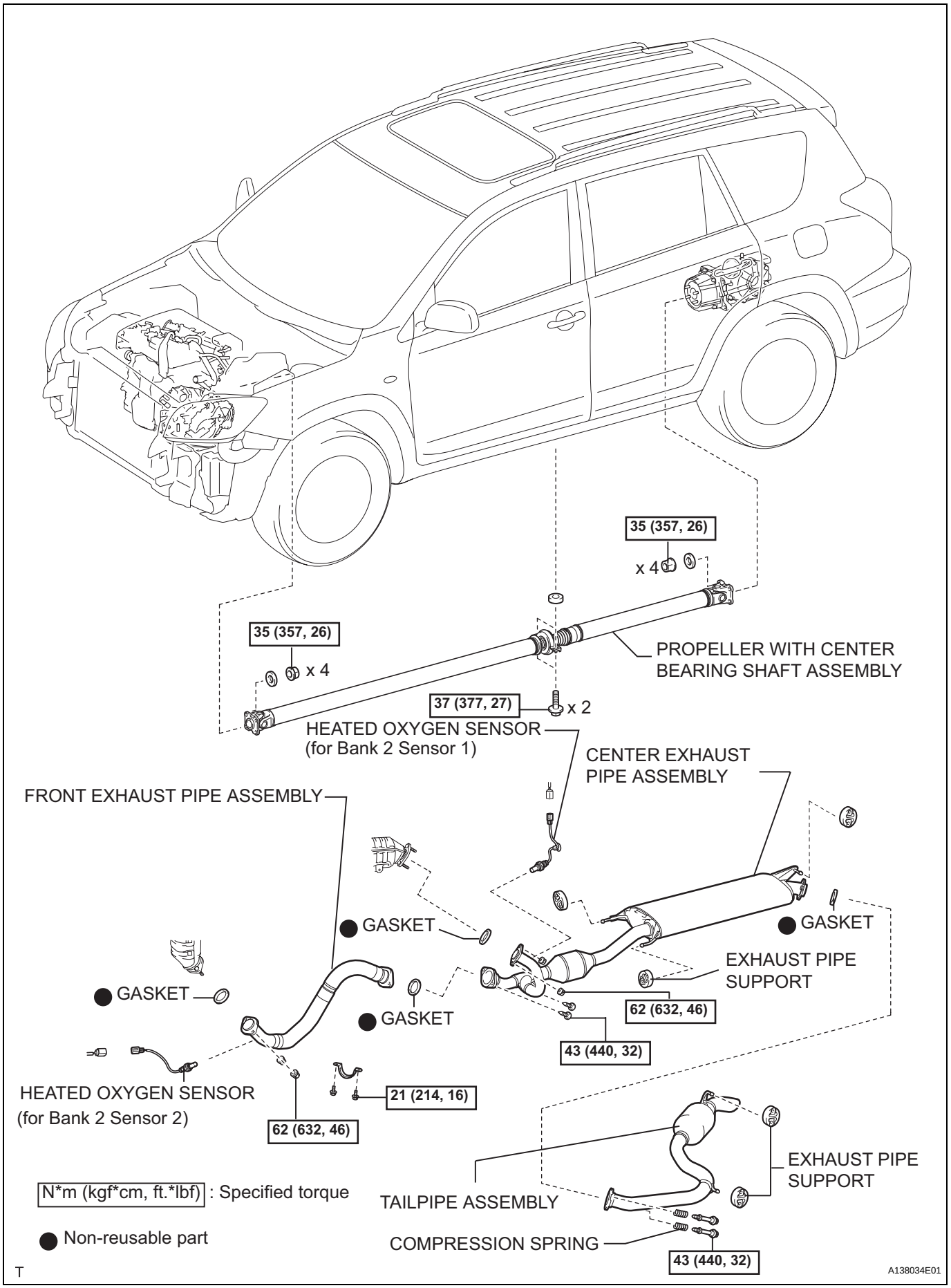
35 (357, 26)
x 4
35 (357, 26)
x 4
PROPELLER WITH CENTER BEARING SHAFT ASSEMBLY
37 (377, 27)
x 2
HEATED OXYGEN SENSOR (for Bank 2 Sensor 1)
CENTER EXHAUST PIPE ASSEMBLY
FRONT EXHAUST PIPE ASSEMBLY
GASKET
GASKET
EXHAUST PIPE SUPPORT
GASKET
62 (632, 46)
GASKET
43 (440, 32)
HEATED OXYGEN SENSOR (for Bank 2 Sensor 2)
21 (214, 16)
62 (632, 46)
EXHAUST PIPE SUPPORT
TAILPIPE ASSEMBLY
COMPRESSION SPRING
43 (440, 32)
N*m (kgf*cm, ft.*lbf) : Specified torque
Non-reusable part
T
A138034E01

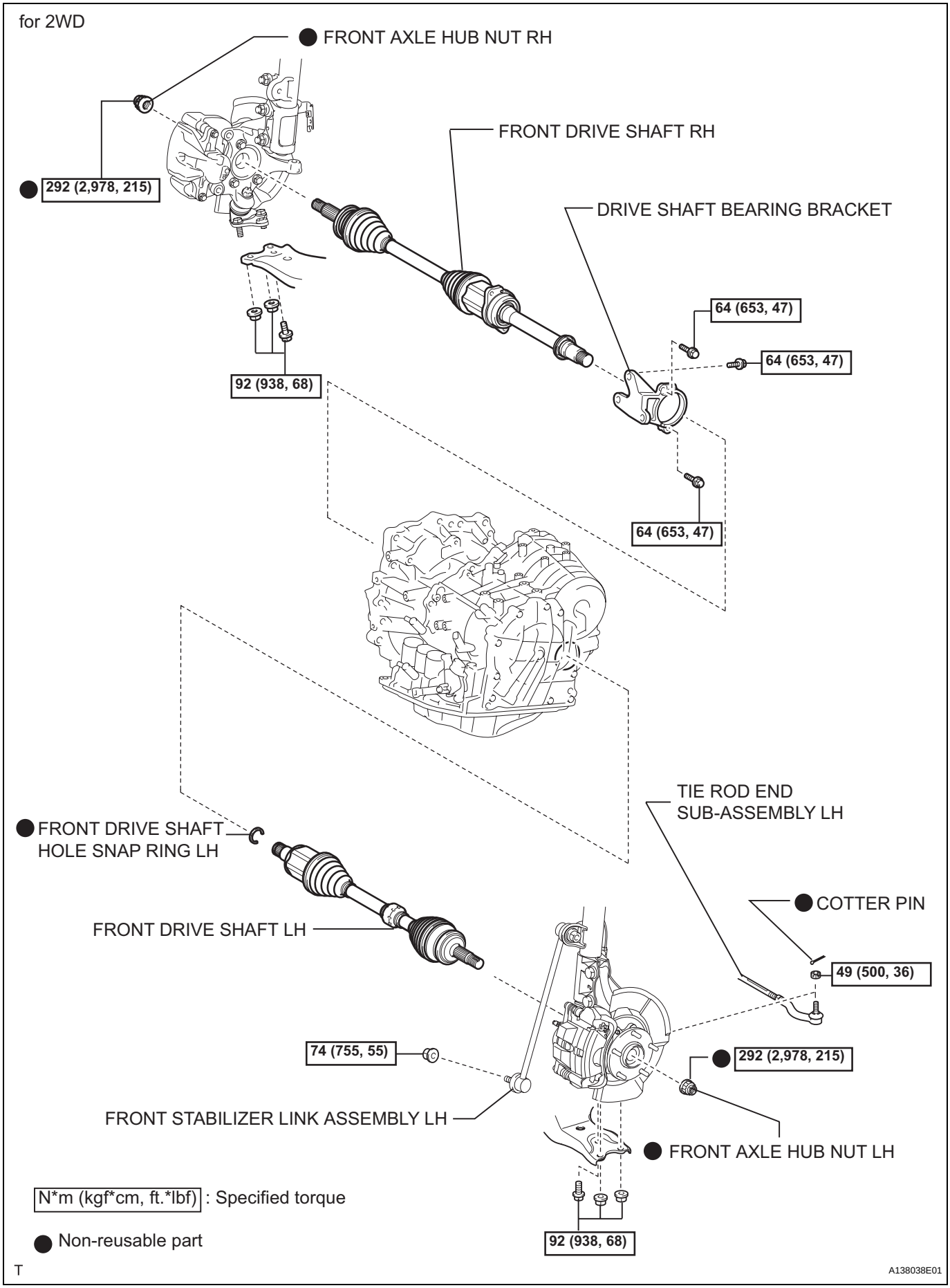
for 2WD
FRONT AXLE HUB NUT RH
292 (2,978, 215)
FRONT DRIVE SHAFT RH
DRIVE SHAFT BEARING BRACKET
64 (653, 47)
64 (653, 47)
92 (938, 68)
64 (653, 47)
TIE ROD END SUB-ASSEMBLY LH
FRONT DRIVE SHAFT HOLE SNAP RING LH
COTTER PIN
FRONT DRIVE SHAFT LH
49 (500, 36)
74 (755, 55)
292 (2,978, 215)
FRONT STABILIZER LINK ASSEMBLY LH
FRONT AXLE HUB NUT LH
92 (938, 68)
N*m (kgf*cm, ft.*lbf) : Specified torque
Non-reusable part
T
A138038E01

EM

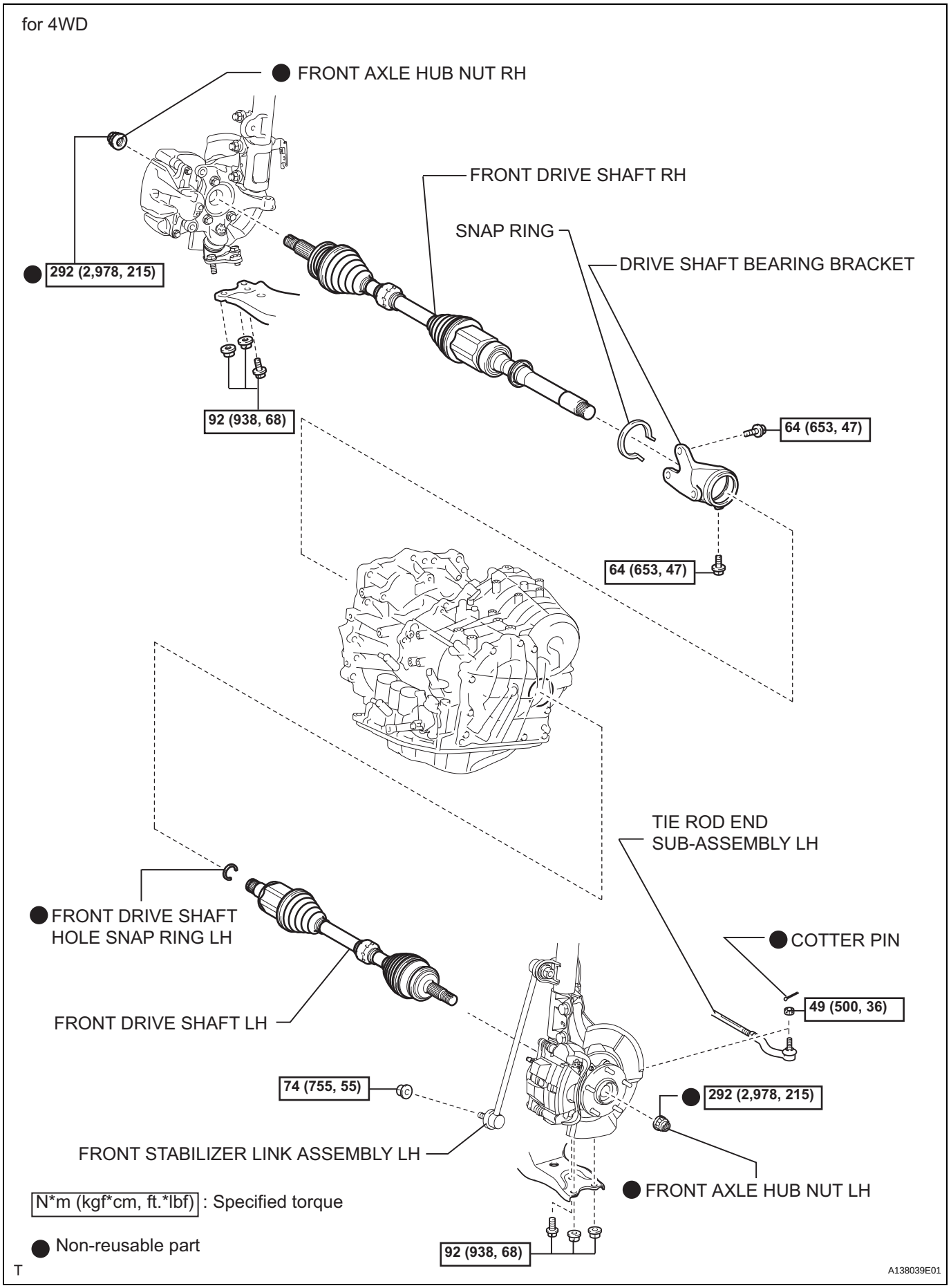
for 4WD
FRONT AXLE HUB NUT RH
292 (2,978, 215)
FRONT DRIVE SHAFT RH
SNAP RING
DRIVE SHAFT BEARING BRACKET
92 (938, 68)
64 (653, 47)
64 (653, 47)
TIE ROD END
SUB-ASSEMBLY LH
FRONT DRIVE SHAFT
HOLE SNAP RING LH
COTTER PIN
49 (500, 36)
FRONT DRIVE SHAFT LH
74 (755, 55)
292 (2,978, 215)
FRONT STABILIZER LINK ASSEMBLY LH
FRONT AXLE HUB NUT LH
N*m (kgf*cm, ft.*lbf) : Specified torque
Non-reusable part
92 (938, 68)
T
A138039E01

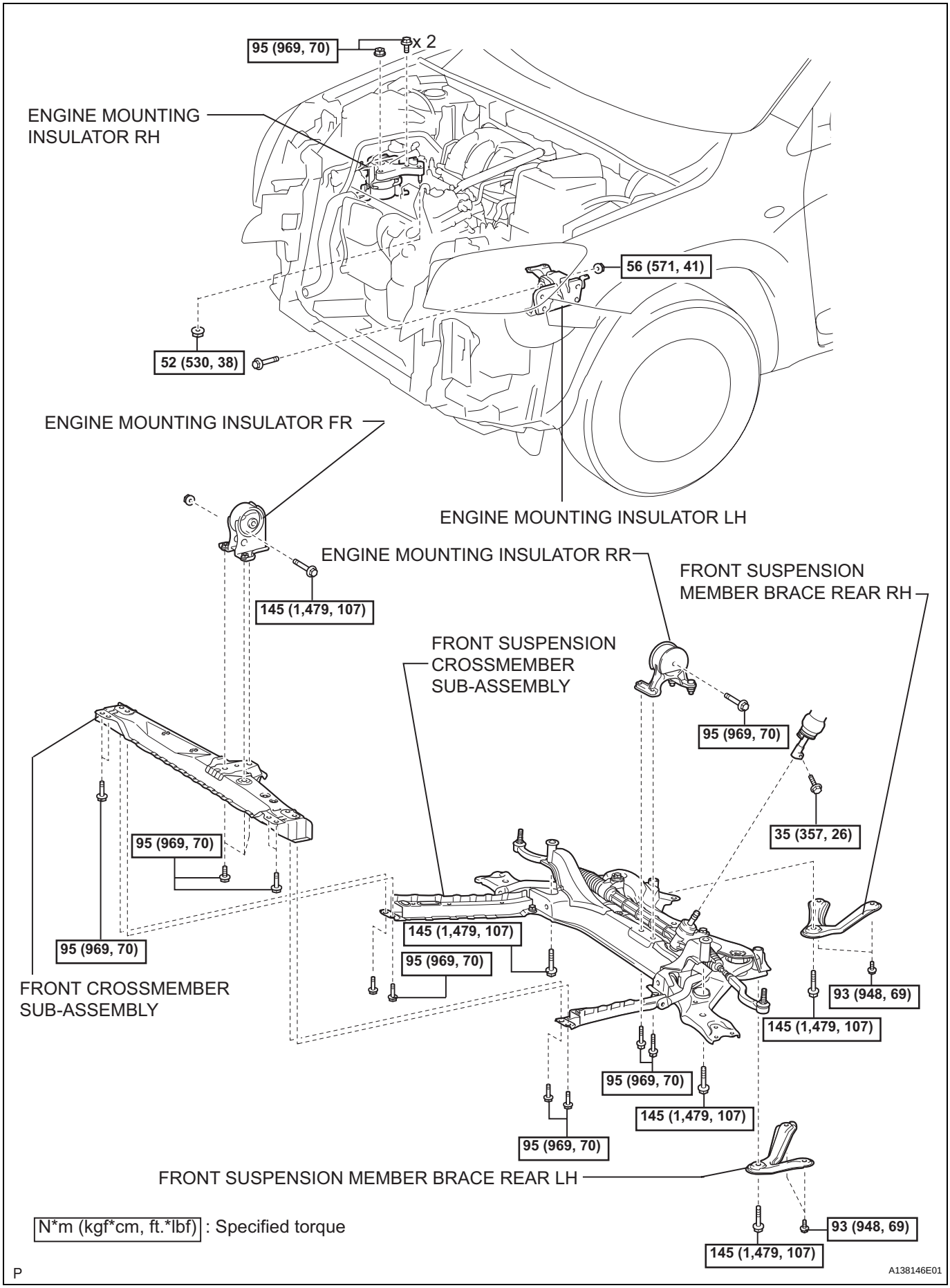
95 (969, 70)
x 2
ENGINE MOUNTING INSULATOR RH
56 (571, 41)
52 (530, 38)
ENGINE MOUNTING INSULATOR FR
ENGINE MOUNTING INSULATOR LH
ENGINE MOUNTING INSULATOR RR
145 (1,479, 107)
FRONT SUSPENSION MEMBER BRACE REAR RH
FRONT SUSPENSION CROSSMEMBER SUB-ASSEMBLY
95 (969, 70)
35 (357, 26)
95 (969, 70)
95 (969, 70)
145 (1,479, 107)
95 (969, 70)
FRONT CROSSMEMBER SUB-ASSEMBLY
93 (948, 69)
145 (1,479, 107)
95 (969, 70)
145 (1,479, 107)
95 (969, 70)
FRONT SUSPENSION MEMBER BRACE REAR LH
93 (948, 69)
145 (1,479, 107)
N*m (kgf*cm, ft.*lbf) : Specified torque
P
A138146E01

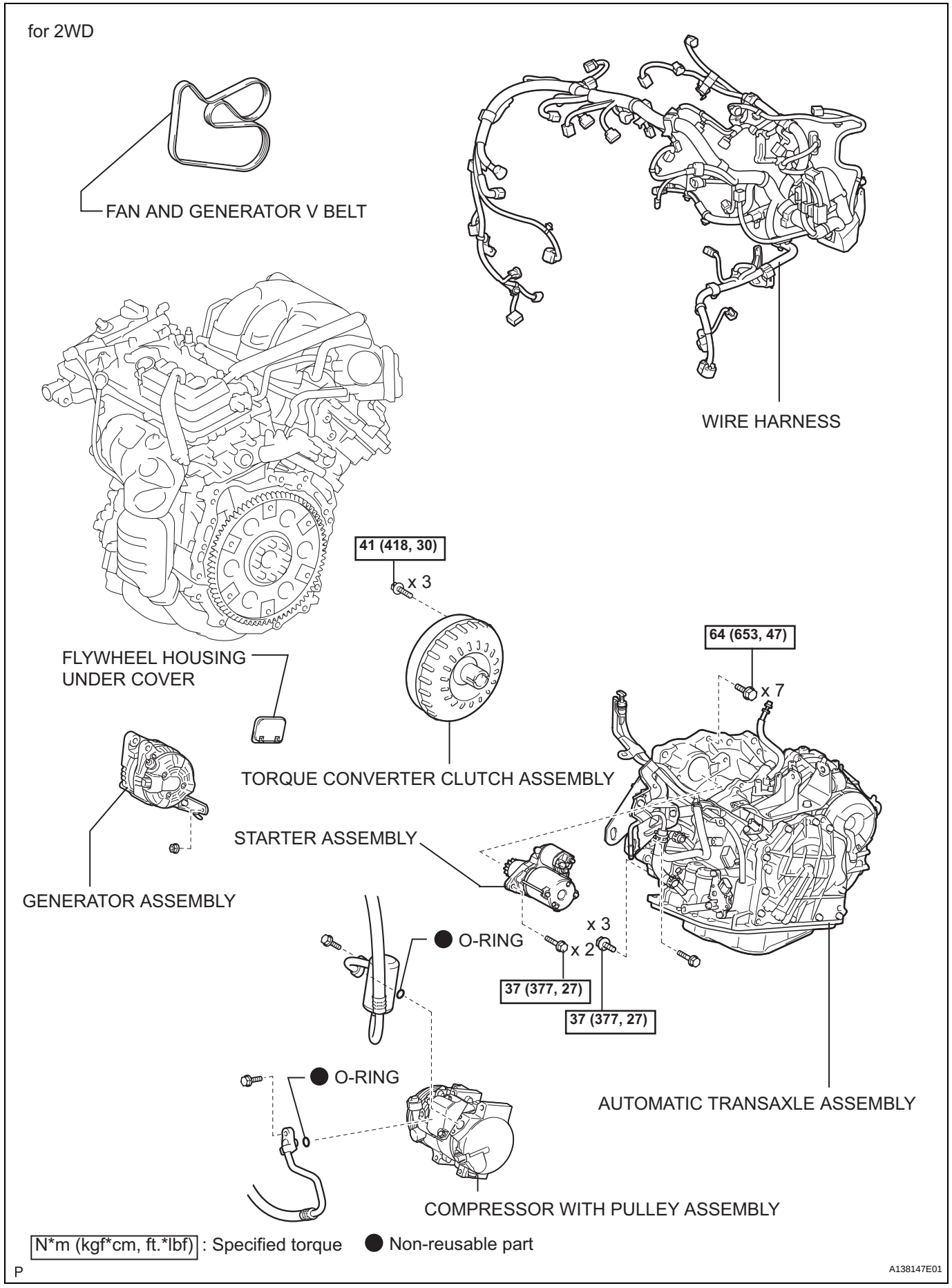
for 2WD
FAN AND GENERATOR V BELT
WIRE HARNESS
EM
41 (418, 30)
x 3
FLYWHEEL HOUSING UNDER COVER
TORQUE CONVERTER CLUTCH ASSEMBLY
64 (653, 47)
x 7
STARTER ASSEMBLY
GENERATOR ASSEMBLY
O-RING
x 3
x 2
37 (377, 27)
37 (377, 27)
O-RING
AUTOMATIC TRANSAXLE ASSEMBLY
COMPRESSOR WITH PULLEY ASSEMBLY
N*m (kgf*cm, ft.*lbf) : Specified torque
Non-reusable part
P
A138147E01

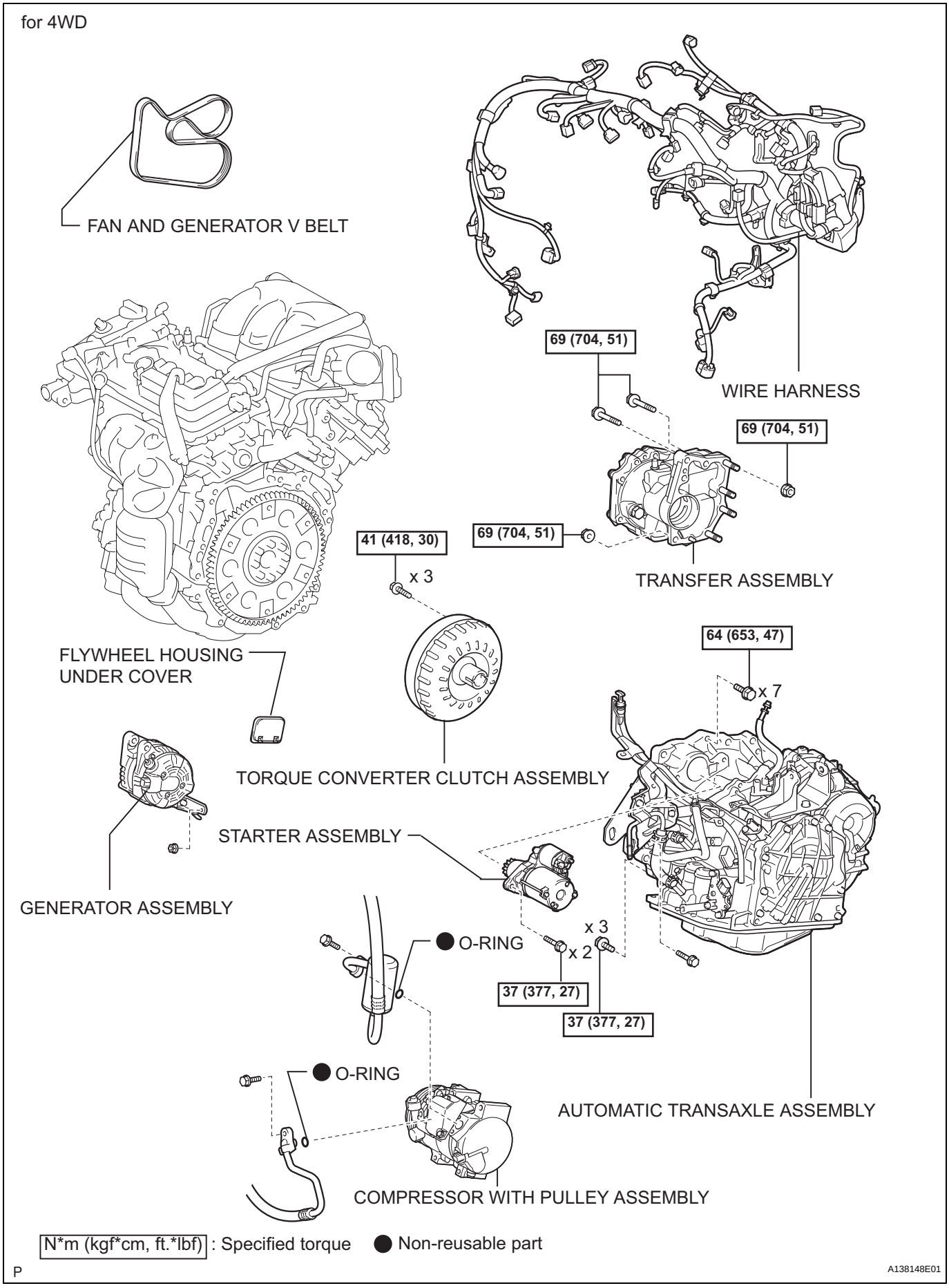
for 4WD
FAN AND GENERATOR V BELT
WIRE HARNESS
69 (704, 51)
69 (704, 51)
69 (704, 51)
TRANSFER ASSEMBLY
41 (418, 30)
x 3
FLYWHEEL HOUSING UNDER COVER
TORQUE CONVERTER CLUTCH ASSEMBLY
64 (653, 47)
x 7
STARTER ASSEMBLY
GENERATOR ASSEMBLY
O-RING
x 3
x 2
37 (377, 27)
37 (377, 27)
O-RING
AUTOMATIC TRANSAXLE ASSEMBLY
COMPRESSOR WITH PULLEY ASSEMBLY
N*m (kgf*cm, ft.*lbf) : Specified torque
Non-reusable part
P
A138148E01

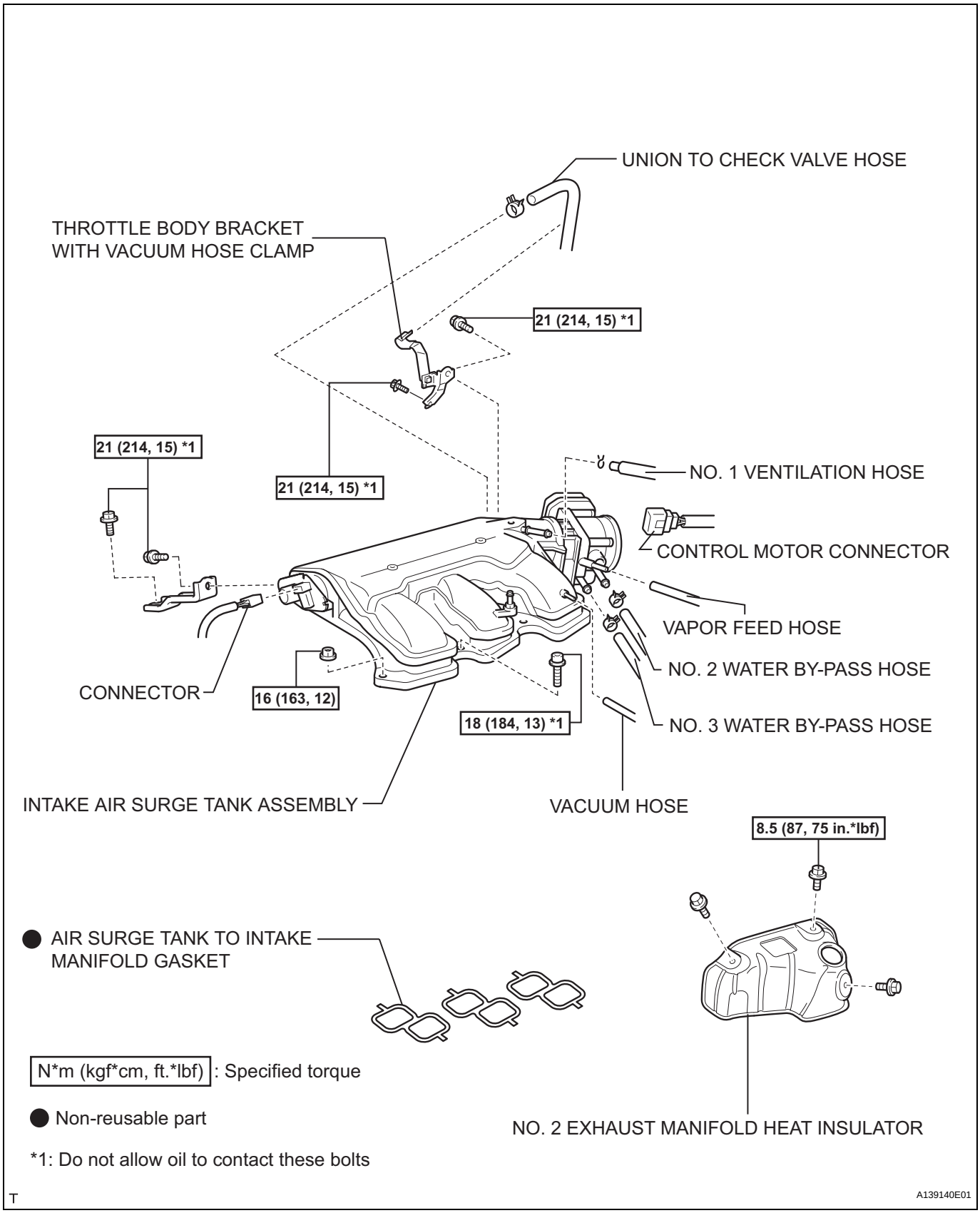
UNION TO CHECK VALVE HOSE
THROTTLE BODY BRACKET WITH VACUUM HOSE CLAMP
21 (214, 15) *1
21 (214, 15) *1
21 (214, 15) *1
NO. 1 VENTILATION HOSE
CONTROL MOTOR CONNECTOR
VAPOR FEED HOSE
NO. 2 WATER BY-PASS HOSE
NO. 3 WATER BY-PASS HOSE
CONNECTOR
16 (163, 12)
18 (184, 13) *1
INTAKE AIR SURGE TANK ASSEMBLY
VACUUM HOSE
8.5 (87, 75 in.*lbf)
● AIR SURGE TANK TO INTAKE MANIFOLD GASKET
N*m (kgf*cm, ft.*lbf) : Specified torque
● Non-reusable part
*1: Do not allow oil to contact these bolts
NO. 2 EXHAUST MANIFOLD HEAT INSULATOR
T
A139140E01

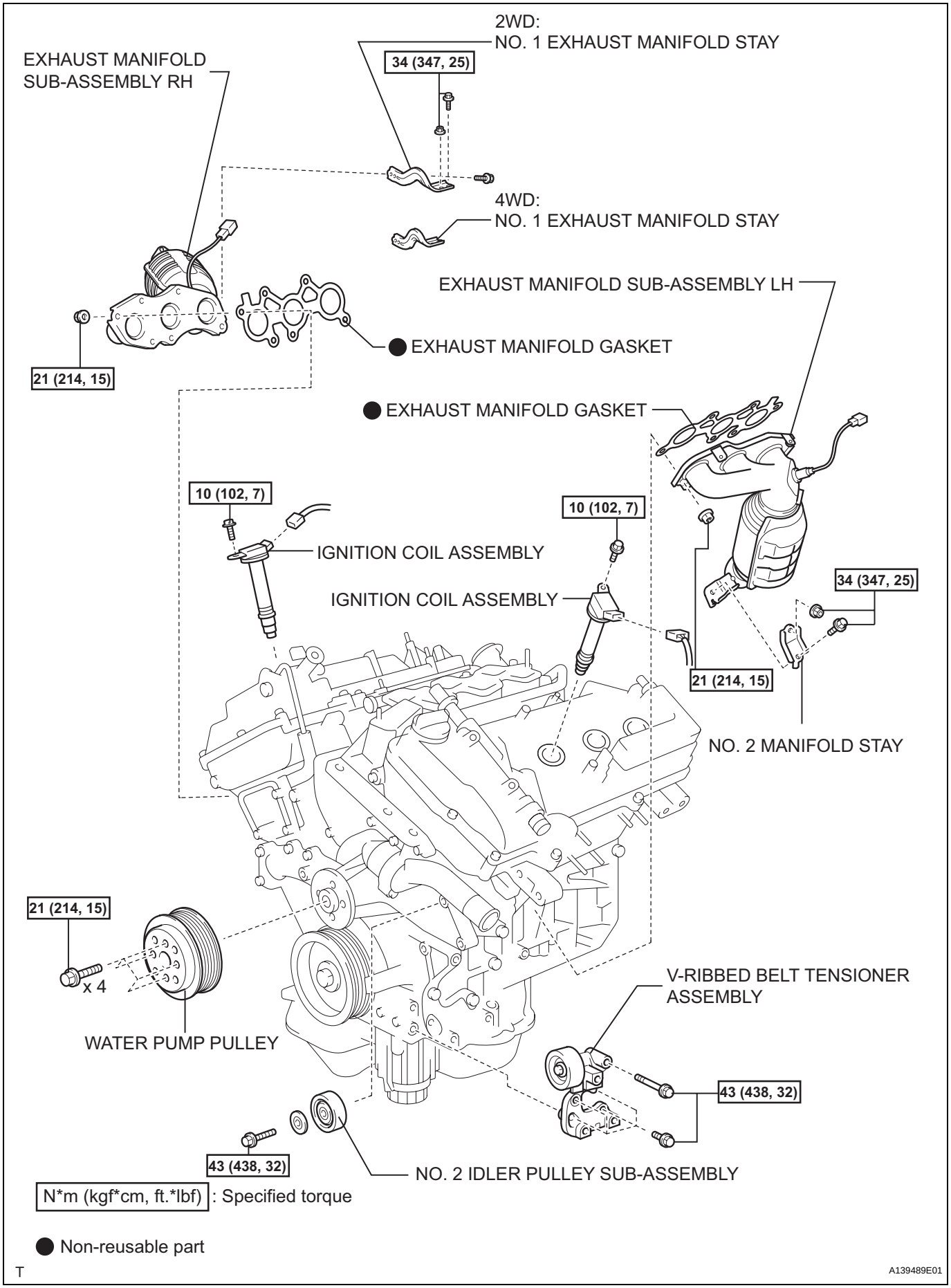
2WD:
NO. 1 EXHAUST MANIFOLD STAY
34 (347, 25)
EXHAUST MANIFOLD SUB-ASSEMBLY RH
4WD:
NO. 1 EXHAUST MANIFOLD STAY
EXHAUST MANIFOLD SUB-ASSEMBLY LH
EXHAUST MANIFOLD GASKET
21 (214, 15)
EXHAUST MANIFOLD GASKET
10 (102, 7)
10 (102, 7)
IGNITION COIL ASSEMBLY
IGNITION COIL ASSEMBLY
34 (347, 25)
21 (214, 15)
NO. 2 MANIFOLD STAY
21 (214, 15)
x 4
WATER PUMP PULLEY
V-RIBBED BELT TENSIONER ASSEMBLY
43 (438, 32)
43 (438, 32)
NO. 2 IDLER PULLEY SUB-ASSEMBLY
N*m (kgf*cm, ft.*lbf) : Specified torque
Non-reusable part
T
A139489E01

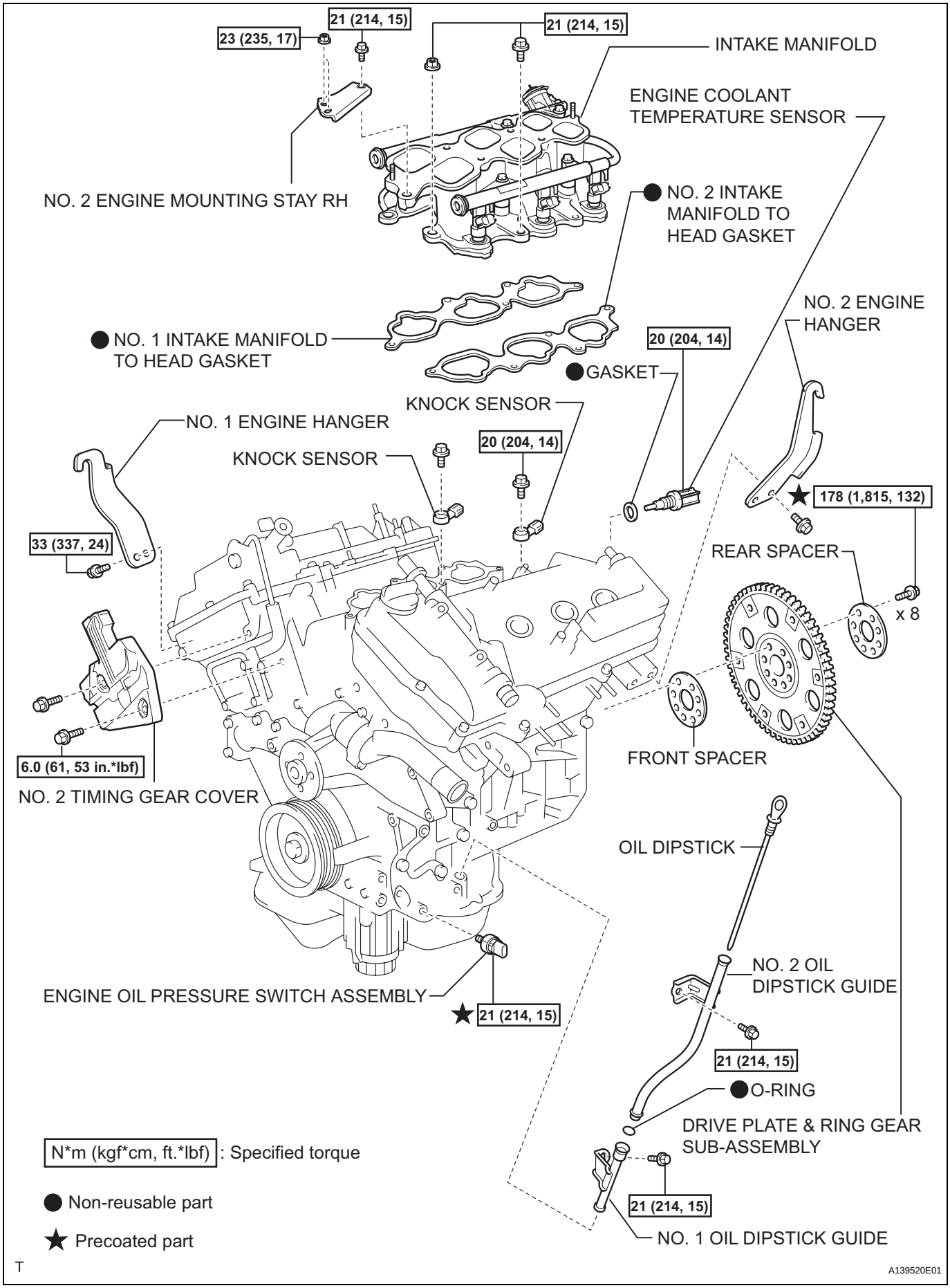
21 (214, 15)
23 (235, 17)
21 (214, 15)
INTAKE MANIFOLD
ENGINE COOLANT TEMPERATURE SENSOR
NO. 2 ENGINE MOUNTING STAY RH
NO. 2 INTAKE MANIFOLD TO HEAD GASKET
NO. 2 ENGINE HANGER
NO. 1 INTAKE MANIFOLD TO HEAD GASKET
20 (204, 14)
GASKET
KNOCK SENSOR
NO. 1 ENGINE HANGER
20 (204, 14)
KNOCK SENSOR
178 (1,815, 132)
33 (337, 24)
REAR SPACER
x 8
6.0 (61, 53 in.*lbf)
FRONT SPACER
NO. 2 TIMING GEAR COVER
OIL DIPSTICK
NO. 2 OIL DIPSTICK GUIDE
ENGINE OIL PRESSURE SWITCH ASSEMBLY
21 (214, 15)
21 (214, 15)
O-RING
DRIVE PLATE & RING GEAR SUB-ASSEMBLY
21 (214, 15)
NO. 1 OIL DIPSTICK GUIDE
N*m (kgf*cm, ft.*lbf) : Specified torque
Non-reusable part
Precoated part
T
A139520E01

ENGINE UNIT

COMPONENTS

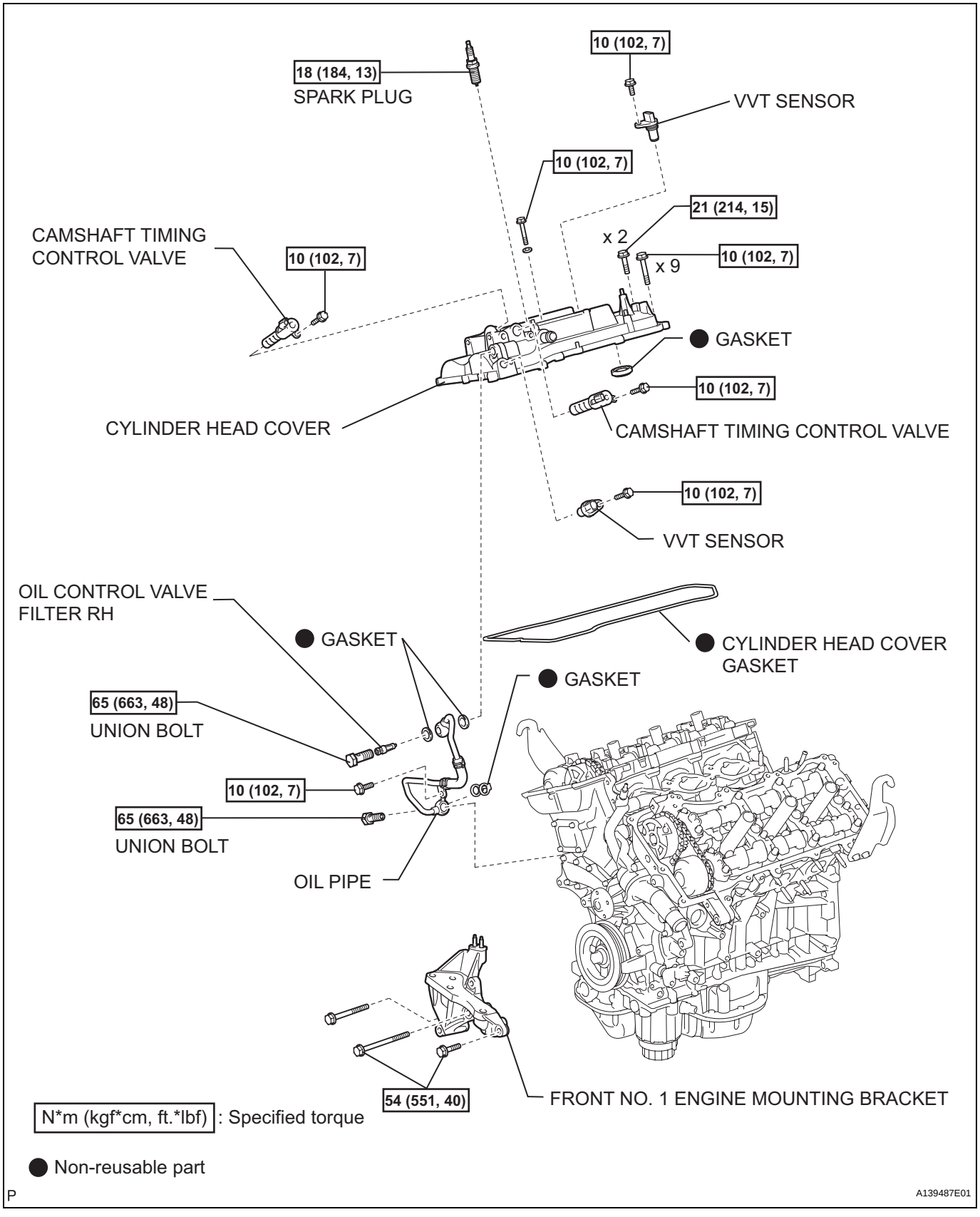

EM

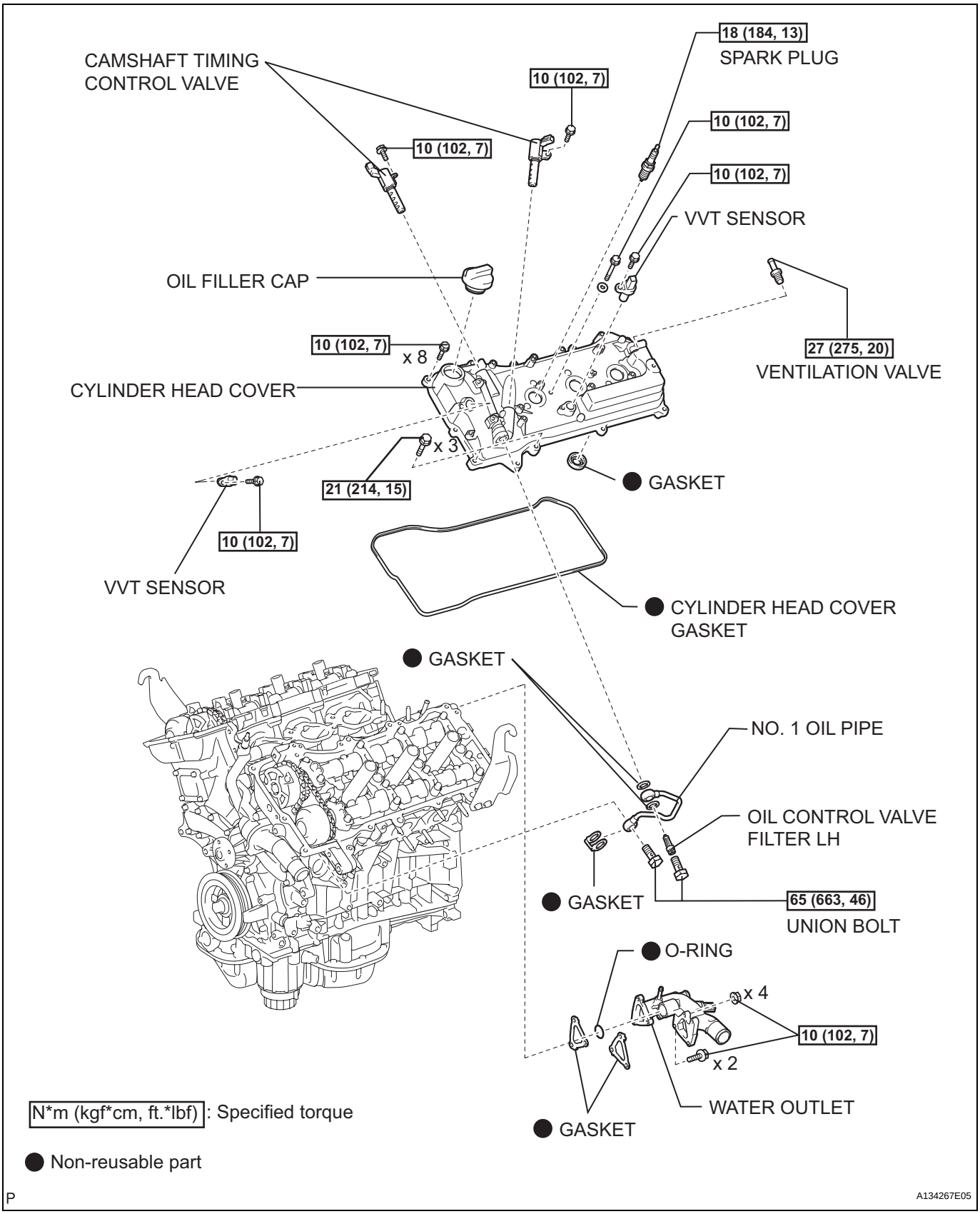
CAMSHAFT TIMING CONTROL VALVE
10 (102, 7)
10 (102, 7)
18 (184, 13)
SPARK PLUG
10 (102, 7)
10 (102, 7)
VVT SENSOR
OIL FILLER CAP
10 (102, 7)
x 8
CYLINDER HEAD COVER
27 (275, 20)
VENTILATION VALVE
x 3
21 (214, 15)
GASKET
10 (102, 7)
VVT SENSOR
CYLINDER HEAD COVER GASKET
GASKET
NO. 1 OIL PIPE
OIL CONTROL VALVE FILTER LH
GASKET
65 (663, 46)
UNION BOLT
O-RING
x 4
10 (102, 7)
x 2
WATER OUTLET
GASKET
N*m (kgf*cm, ft.*lbf): Specified torque
Non-reusable part
A134267E05

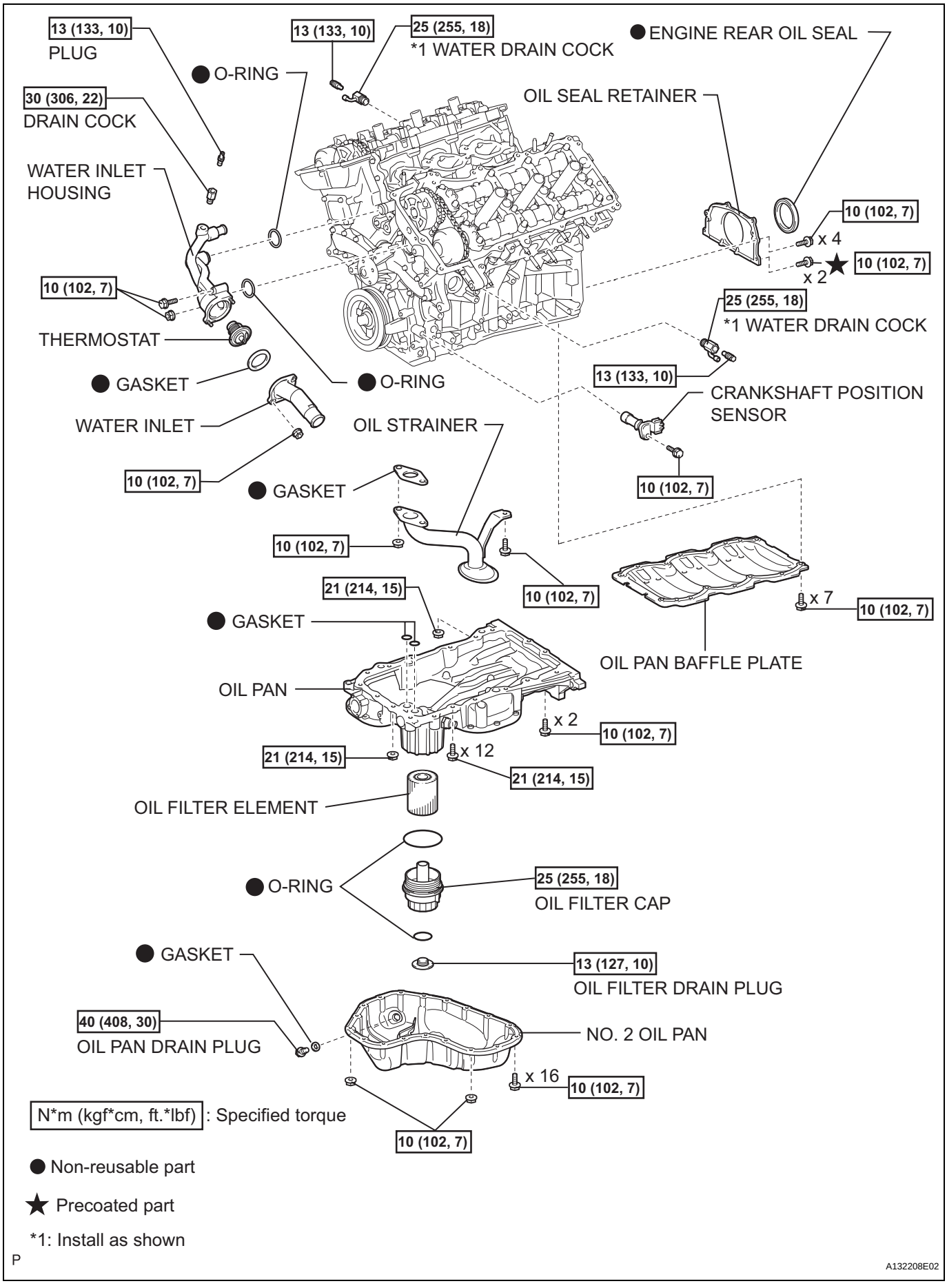
13 (133, 10)
PLUG
13 (133, 10)
25 (255, 18)
*1 WATER DRAIN COCK
ENGINE REAR OIL SEAL
O-RING
30 (306, 22)
DRAIN COCK
OIL SEAL RETAINER
WATER INLET HOUSING
10 (102, 7)
x 4
10 (102, 7)
x 2
10 (102, 7)
25 (255, 18)
*1 WATER DRAIN COCK
THERMOSTAT
GASKET
O-RING
13 (133, 10)
CRANKSHAFT POSITION SENSOR
WATER INLET
OIL STRAINER
10 (102, 7)
10 (102, 7)
GASKET
10 (102, 7)
10 (102, 7)
21 (214, 15)
x 7
10 (102, 7)
GASKET
OIL PAN BAFFLE PLATE
OIL PAN
x 2
10 (102, 7)
21 (214, 15)
x 12
21 (214, 15)
OIL FILTER ELEMENT
O-RING
25 (255, 18)
OIL FILTER CAP
GASKET
13 (127, 10)
OIL FILTER DRAIN PLUG
40 (408, 30)
OIL PAN DRAIN PLUG
NO. 2 OIL PAN
x 16
10 (102, 7)
10 (102, 7)
N*m (kgf*cm, ft.*lbf) : Specified torque
Non-reusable part
Precoated part
*1: Install as shown
P
A132208E02

EM

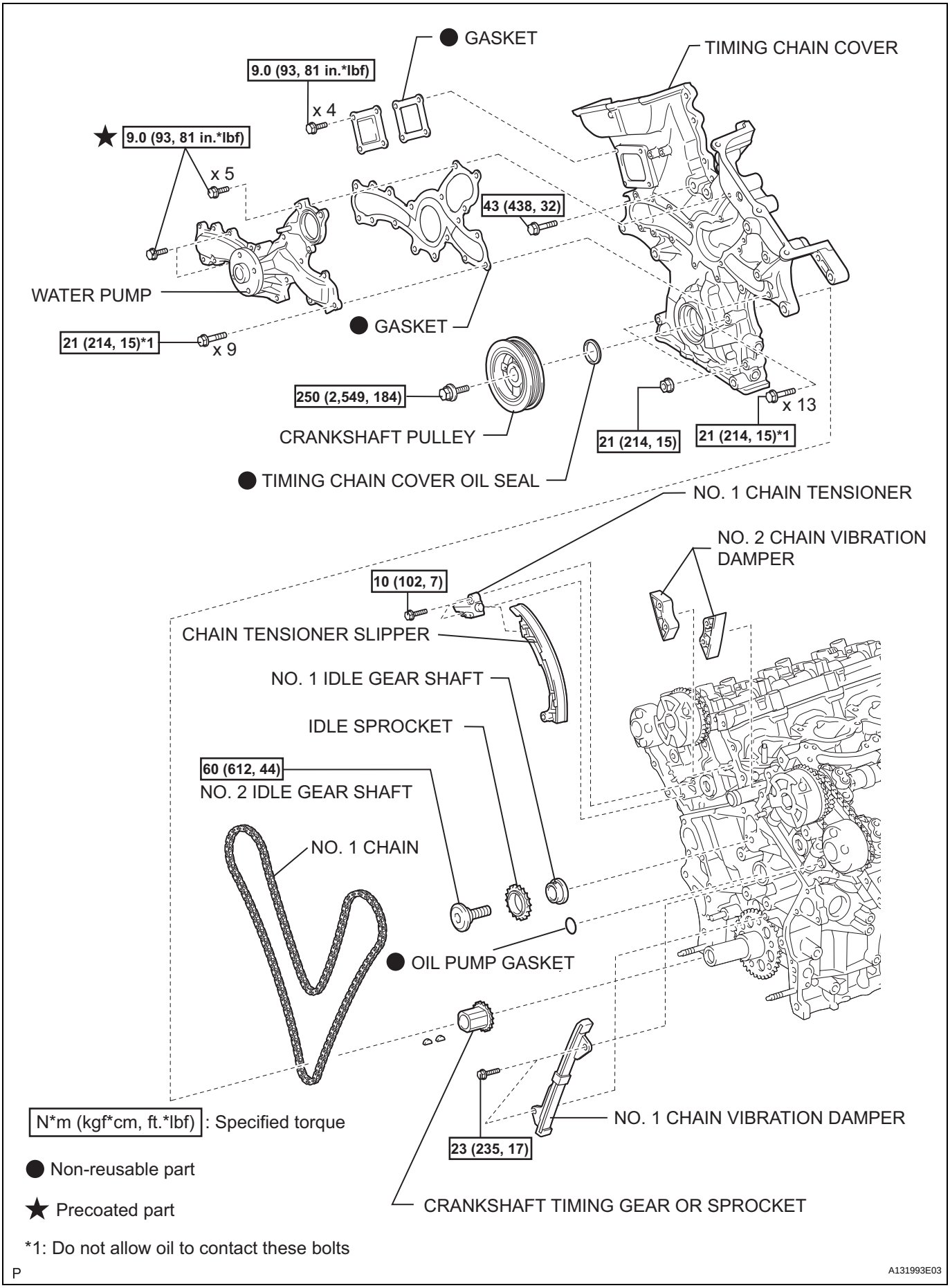
GASKET
TIMING CHAIN COVER
9.0 (93, 81 in.*lbf)
x 4
★ 9.0 (93, 81 in.*lbf)
x 5
43 (438, 32)
WATER PUMP
GASKET
21 (214, 15)*1
x 9
250 (2,549, 184)
CRANKSHAFT PULLEY
21 (214, 15)
21 (214, 15)*1
x 13
TIMING CHAIN COVER OIL SEAL
NO. 1 CHAIN TENSIONER
NO. 2 CHAIN VIBRATION DAMPER
10 (102, 7)
CHAIN TENSIONER SLIPPER
NO. 1 IDLE GEAR SHAFT
IDLE SPROCKET
60 (612, 44)
NO. 2 IDLE GEAR SHAFT
NO. 1 CHAIN
OIL PUMP GASKET
NO. 1 CHAIN VIBRATION DAMPER
23 (235, 17)
CRANKSHAFT TIMING GEAR OR SPROCKET
N*m (kgf*cm, ft.*lbf) : Specified torque
● Non-reusable part
★ Precoated part
*1: Do not allow oil to contact these bolts
A131993E03

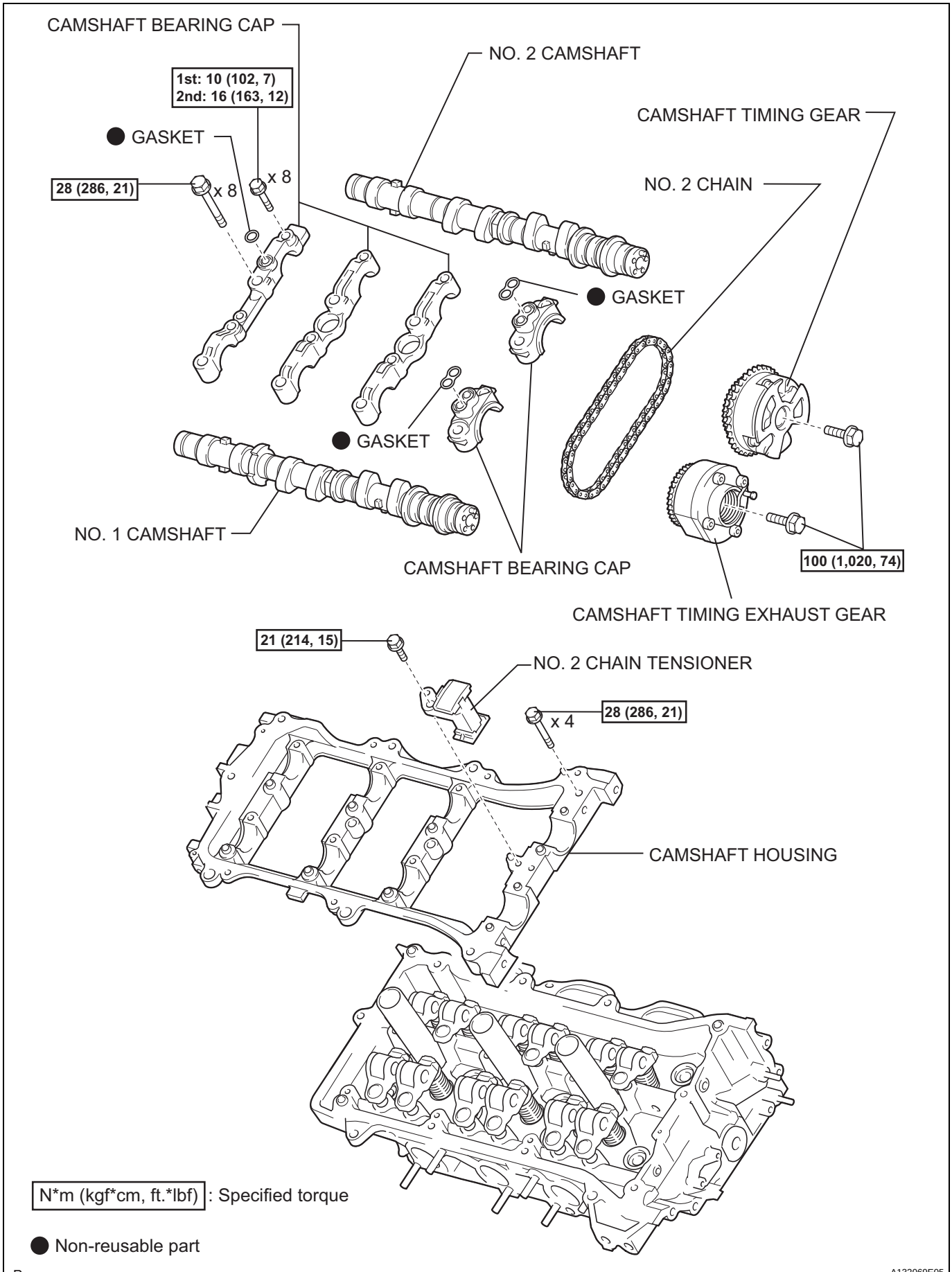
CAMSHAFT BEARING CAP
NO. 2 CAMSHAFT
1st: 10 (102, 7)
2nd: 16 (163, 12)
CAMSHAFT TIMING GEAR
GASKET
28 (286, 21)
x 8
x 8
NO. 2 CHAIN
GASKET
GASKET
NO. 1 CAMSHAFT
CAMSHAFT BEARING CAP
100 (1,020, 74)
CAMSHAFT TIMING EXHAUST GEAR
21 (214, 15)
NO. 2 CHAIN TENSIONER
28 (286, 21)
x 4
CAMSHAFT HOUSING
N*m (kgf*cm, ft.*lbf) : Specified torque
Non-reusable part
P
A132069E05

EM

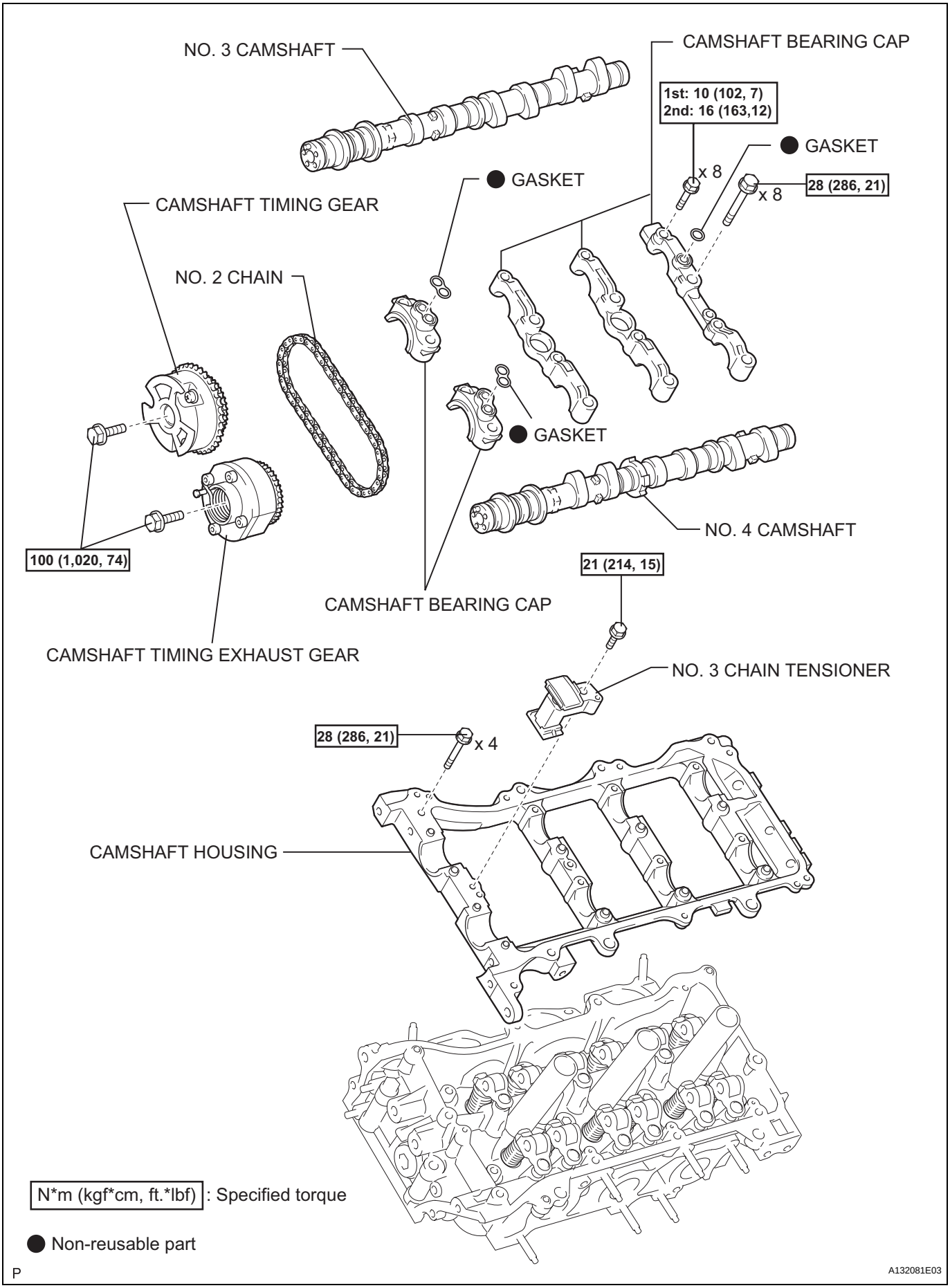
NO. 3 CAMSHAFT
CAMSHAFT BEARING CAP
1st: 10 (102, 7)
2nd: 16 (163,12)
GASKET
x 8
28 (286, 21)
x 8
GASKET
CAMSHAFT TIMING GEAR
NO. 2 CHAIN
GASKET
NO. 4 CAMSHAFT
100 (1,020, 74)
21 (214, 15)
CAMSHAFT BEARING CAP
CAMSHAFT TIMING EXHAUST GEAR
NO. 3 CHAIN TENSIONER
28 (286, 21)
x 4
CAMSHAFT HOUSING
N*m (kgf*cm, ft.*lbf) : Specified torque
Non-reusable part
P
A132081E03

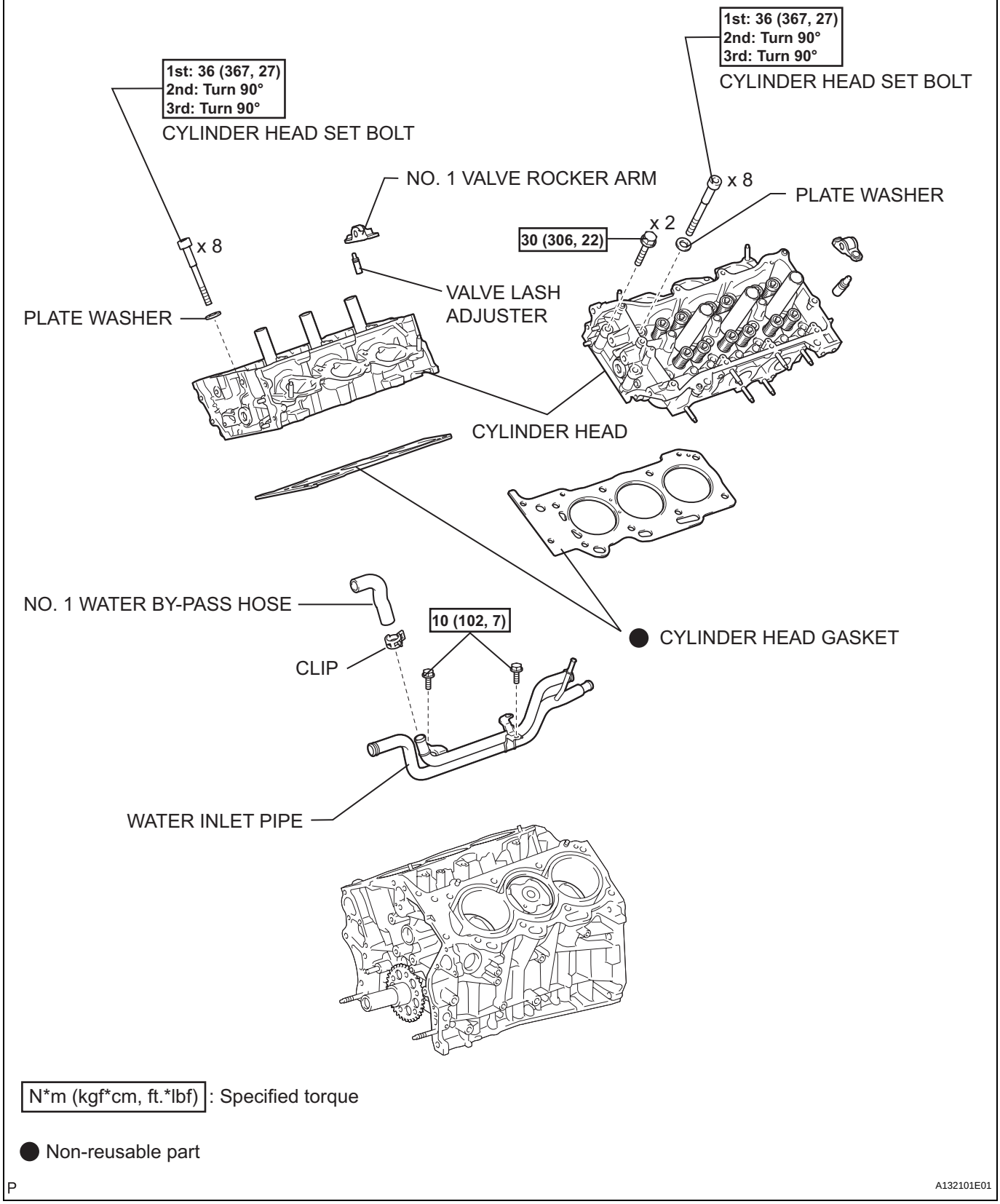

N*m (kgf*cm, ft.*lbf) : Specified torque

● Non-reusable part

P

A132101E01

EM

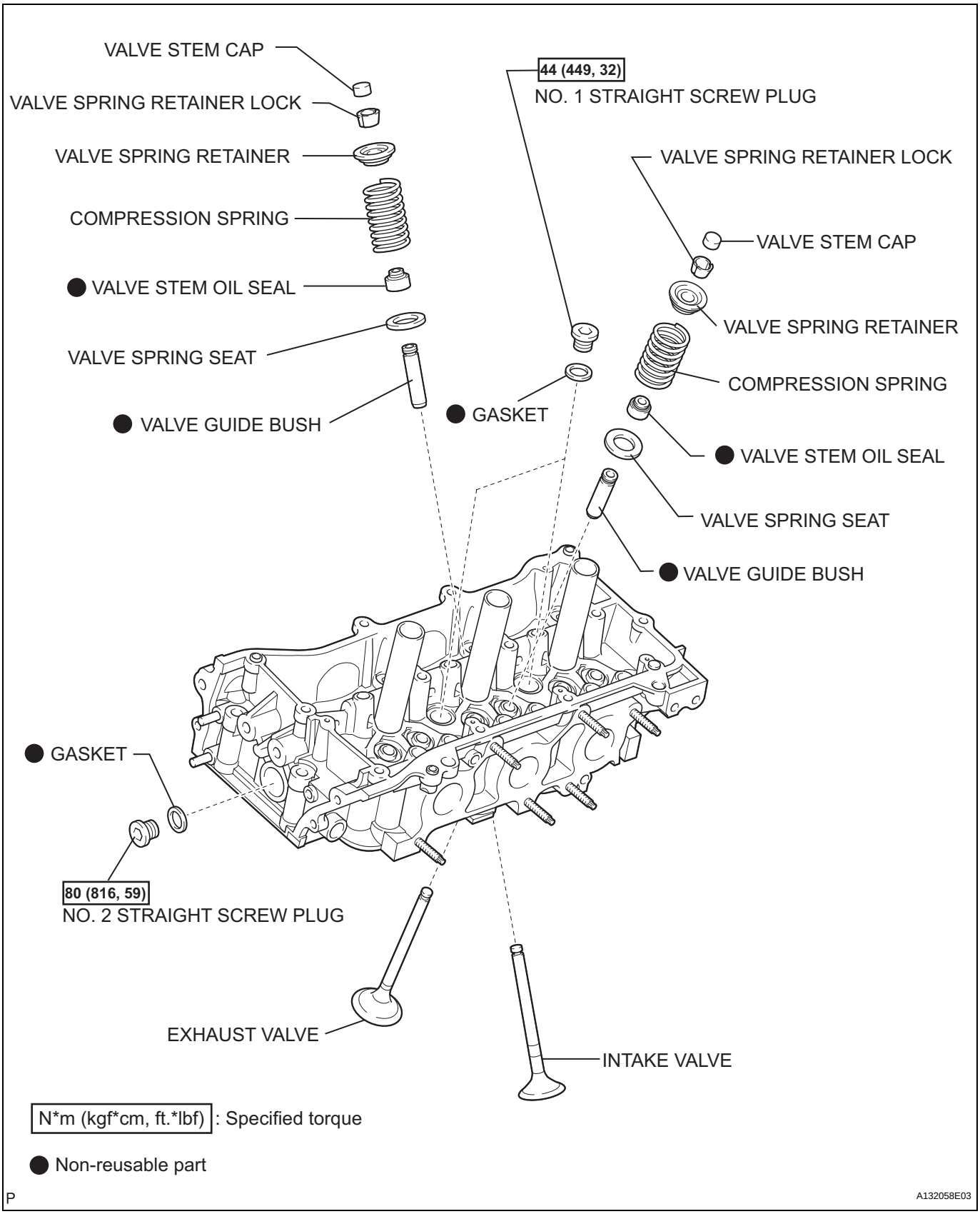
VALVE STEM CAP
VALVE SPRING RETAINER LOCK
VALVE SPRING RETAINER
COMPRESSION SPRING
● VALVE STEM OIL SEAL
VALVE SPRING SEAT
● VALVE GUIDE BUSH
44 (449, 32)
NO. 1 STRAIGHT SCREW PLUG
● GASKET
VALVE SPRING RETAINER LOCK
VALVE STEM CAP
VALVE SPRING RETAINER
COMPRESSION SPRING
● VALVE STEM OIL SEAL
VALVE SPRING SEAT
● VALVE GUIDE BUSH
● GASKET
80 (816, 59)
NO. 2 STRAIGHT SCREW PLUG
EXHAUST VALVE
INTAKE VALVE
N*m (kgf*cm, ft.*lbf) : Specified torque
● Non-reusable part
P
A132058E03

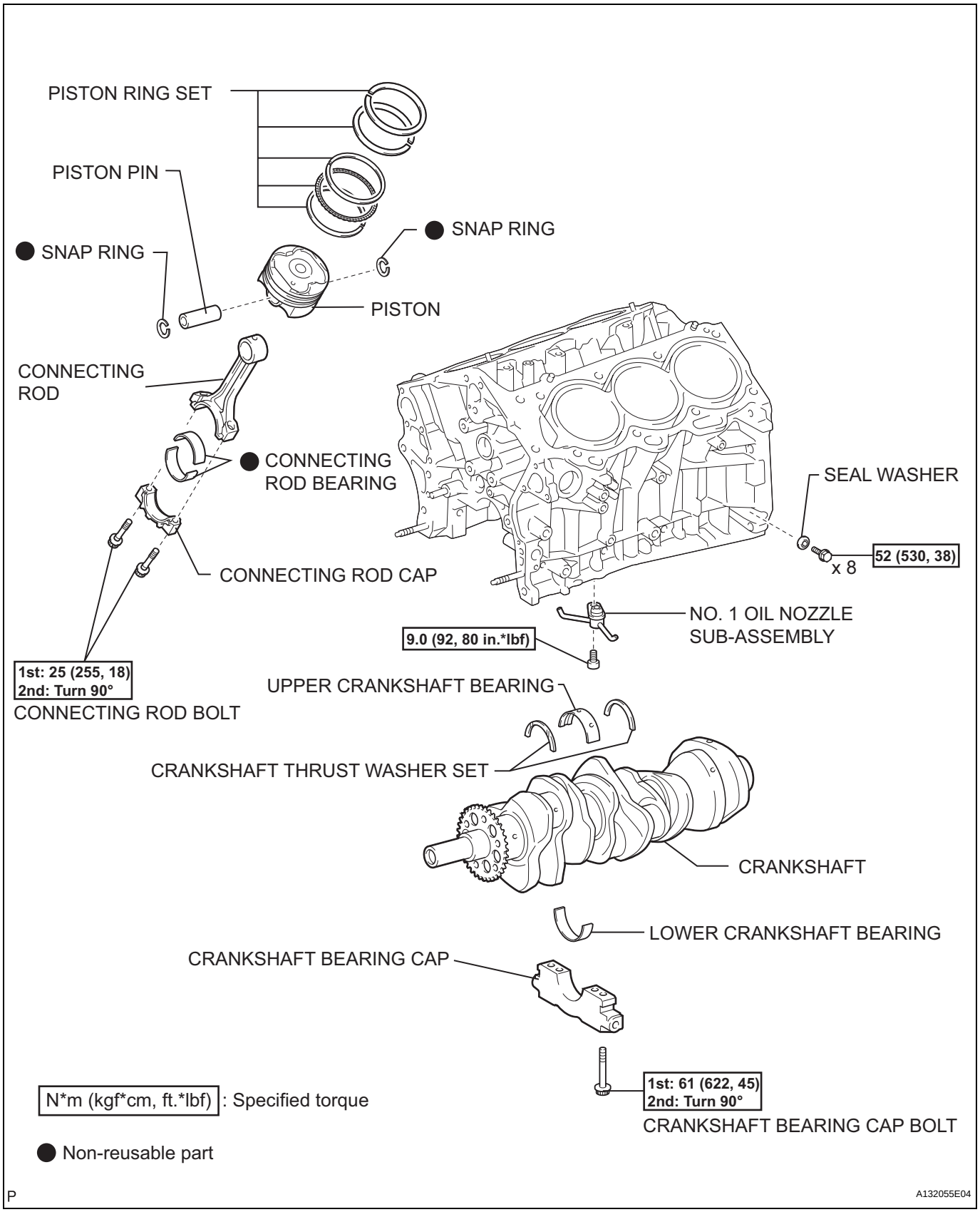
PISTON RING SET
PISTON PIN
SNAP RING
SNAP RING
PISTON
CONNECTING ROD
CONNECTING ROD BEARING
CONNECTING ROD CAP
1st: 25 (255, 18)
2nd: Turn 90°
CONNECTING ROD BOLT
SEAL WASHER
52 (530, 38)
x 8
NO. 1 OIL NOZZLE SUB-ASSEMBLY
9.0 (92, 80 in.*lbf)
UPPER CRANKSHAFT BEARING
CRANKSHAFT THRUST WASHER SET
CRANKSHAFT
LOWER CRANKSHAFT BEARING
CRANKSHAFT BEARING CAP
1st: 61 (622, 45)
2nd: Turn 90°
CRANKSHAFT BEARING CAP BOLT
N*m (kgf*cm, ft.*lbf) : Specified torque
Non-reusable part
P
A132055E04

REMOVAL

1. **DISCHARGE REFRIGERANT FROM REFRIGERATION SYSTEM (See page AC-172)**
2. **DISCHARGE FUEL SYSTEM PRESSURE (See page FU-13)**
3. **DISCONNECT CABLE FROM NEGATIVE BATTERY TERMINAL**
   CAUTION:
   Wait at least 90 seconds after disconnecting the cable from the negative (-) battery terminal to prevent airbag and seat belt pretensioner activation.
4. **REMOVE NO. 1 ENGINE UNDER COVER**
   (a) Remove the 4 bolts, 12 clips and under cover.
5. **REMOVE REAR ENGINE UNDER COVER RH**
   (a) Remove the 2 clips and under cover.
6. **REMOVE REAR ENGINE UNDER COVER LH**
   (a) Remove the 2 clips and under cover.
7. **REMOVE NO. 2 ENGINE UNDER COVER**
   (a) Remove the 2 clips and under cover.
8. **REMOVE FRONT FLOOR COVER (See page FU-34)**
9. **DRAIN ENGINE COOLANT (See page CO-8)**
10. **DRAIN ENGINE OIL (See page LU-4)**
11. **DRAIN AUTOMATIC TRANSAXLE FLUID**
    (a) 2WD:
    Drain automatic transaxle fluid (see page AX-172).
    (b) 4WD:
    Drain automatic transaxle fluid (see page AX-173)
12. **DRAIN TRANSFER OIL (for 4WD)**
13. **REMOVE HOOD SUB-ASSEMBLY (See page ED-4)**
14. **REMOVE V-BANK COVER SUB-ASSEMBLY**
    (a) Detach the 3 clips and remove the V-bank cover.

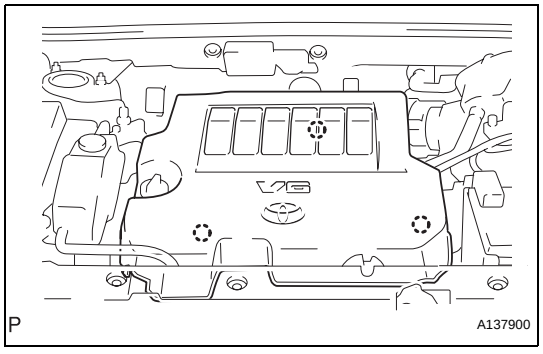

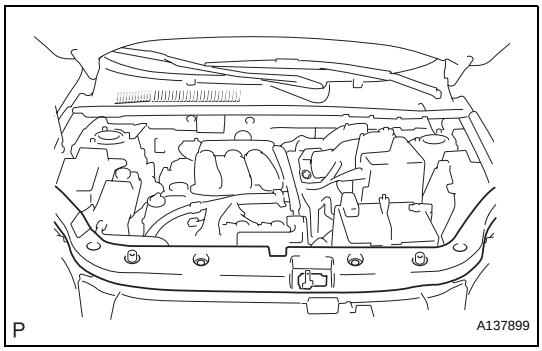

15. REMOVE RADIATOR SUPPORT OPENING COVER

(a) Remove the 9 clips and cover.

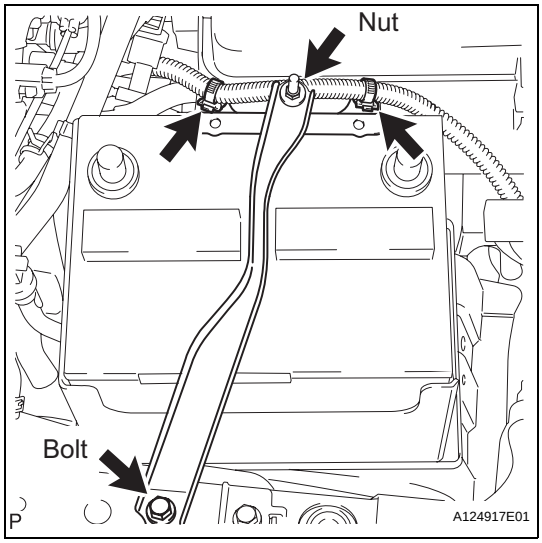

16. REMOVE BATTERY CLAMP SUB-ASSEMBLY

(a) Remove the bolt and loosen the nut.
(b) Detach the 2 wire harness clamps.
(c) Detach the hook of the battery clamp from the battery bracket front, and then remove the battery clamp.

17. REMOVE BATTERY

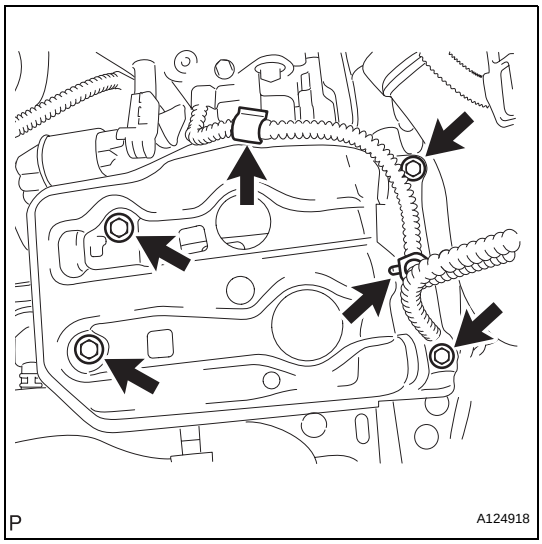

18. REMOVE FRONT BATTERY BRACKET

(a) Detach the 2 wire harness clamps.
(b) Remove the 4 bolts and front bracket.

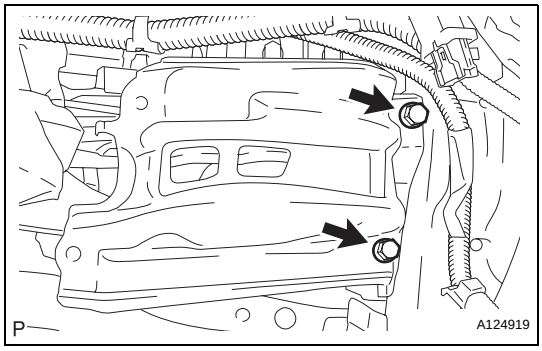

19. REMOVE BATTERY BRACKET REINFORCEMENT

(a) Remove the 2 bolts and bracket reinforcement.

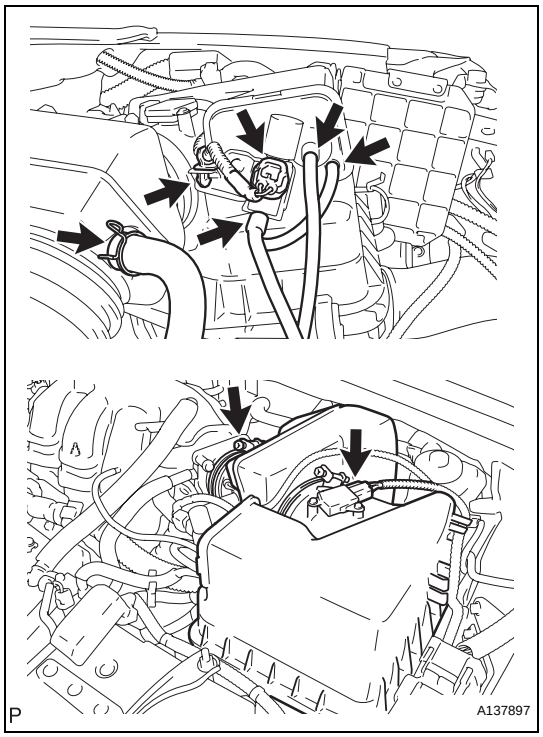

20. REMOVE AIR CLEANER CAP SUB-ASSEMBLY

(a) Disconnect the mass air flow meter connector.
(b) Disconnect the VSV (air intake control) connector.
(c) Disconnect the wire harness clamp and 3 vacuum hoses.
(d) Disconnect the No. 2 ventilation hose from the air cleaner hose.
(e) Loosen the No. 1 air cleaner hose clamp.
(f) Unfasten the 2 hook clamps, and then remove the air cleaner cap.
(g) Remove the air cleaner filter element from the air cleaner case.

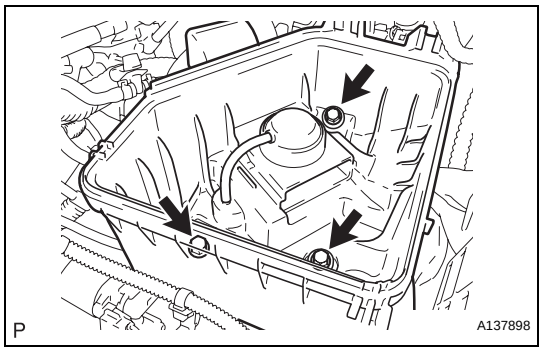

21. REMOVE AIR CLEANER CASE

(a) Disconnect the harness clamp.
(b) Remove the 3 bolts and air cleaner case.

22. DISCONNECT HOSES AND CONNECTORS

(a) Remove the engine room junction block cover (upper).
(b) Remove the nut and disconnect the engine room junction block cover (side) with 3 connectors and wire.
(c) Remove the nut and disconnect the starter wire.
(d) Disconnect the fuel hoses.
(e) Disconnect the 2 heater hoses.
(f) Disconnect the 2 ECM connectors.

23. REMOVE ECM (See page ES-470)

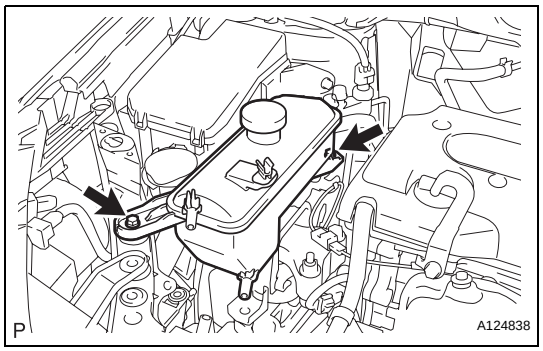

24. REMOVE RADIATOR RESERVOIR TANK ASSEMBLY

(a) Remove the 2 bolts, 2 hoses and reservoir tank.

25. REMOVE DISCHARGE HOSE SUB-ASSEMBLY (See page AC-220)

26. DISCONNECT SUCTION HOSE SUB-ASSEMBLY (See page AC-220)

27. DISCONNECT RADIATOR HOSE INLET

28. DISCONNECT RADIATOR HOSE OUTLET

29. DISCONNECT OIL COOLER HOSE

30. DISCONNECT TRANSMISSION CONTROL CABLE ASSEMBLY

(a) 2WD:
Disconnect the control cable (see page AX-154).

EM

(b) 4WD:
Disconnect the control cable (see page AX-154).

31. REMOVE FRONT EXHAUST PIPE ASSEMBLY (See page EX-3)

32. REMOVE CENTER EXHAUST PIPE ASSEMBLY (See page EX-2)

33. REMOVE PROPELLER WITH CENTER BEARING SHAFT ASSEMBLY (See page PR-3)

34. REMOVE FRONT WHEELS

35. REMOVE FRONT AXLE HUB NUT LH
(a) Remove the hub nut (see page AH-8).

36. REMOVE FRONT AXLE HUB NUT RH
(a) Remove the hub nut (see page AH-8).

37. DISCONNECT FRONT STABILIZER LINK ASSEMBLY LH (See page SP-30)

38. DISCONNECT FRONT STABILIZER LINK ASSEMBLY RH (See page SP-30)

39. DISCONNECT STEERING INTERMEDIATE SHAFT (See page PS-44)

40. DISCONNECT TIE ROD END SUB-ASSEMBLY RH (See page PS-42)

41. DISCONNECT TIE ROD END SUB-ASSEMBLY LH (See page PS-42)

42. REMOVE FRONT DRIVE SHAFT LH
(a) 2WD:
Remove the drive shaft (see page DS-10).
(b) 4WD:
Remove the drive shaft (see page DS-43).

43. REMOVE FRONT DRIVE SHAFT RH
(a) 2WD:
Remove the drive shaft (see page DS-10).
(b) 4WD:
Remove the drive shaft (see page DS-43).

44. REMOVE ENGINE WITH TRANSAXLE
(a) Install the No. 1 and No. 2 engine hangers with the 4 bolts as shown in the illustration.
Torque: 33 N*m (337 kgf*cm, 24 ft.*lbf)

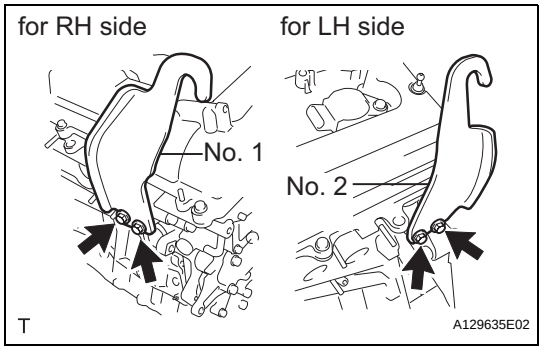

Part Name	Part No.
No. 1 engine hanger	12281-31120
No. 2 engine hanger	12282-31100
Bolt	91671-10825

HINT:
- Insert the claw of the hanger into hole of the cylinder head.
- Fit the fork part of the hanger onto the rib of the cylinder head.

(b) Install an engine sling device to the engine and hold the engine with a chain block.
CAUTION:
Do not raise the engine more than necessary. If the engine is raised excessively, the vehicle may also be lifted up.

(c) Set an engine lifter underneath the engine.

(d) Remove the column hole cover. Loosen the bolt holding the intermediate shaft, and slide the intermediate shaft.

(e) Put matchmarks on the intermediate shaft and pinion.

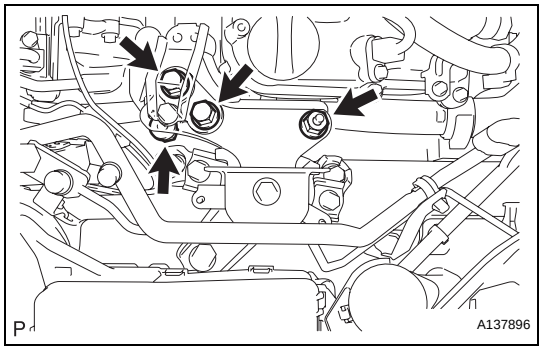

(f) Remove the 2 bolts and 2 nuts, and disconnect the engine mounting insulator RH.

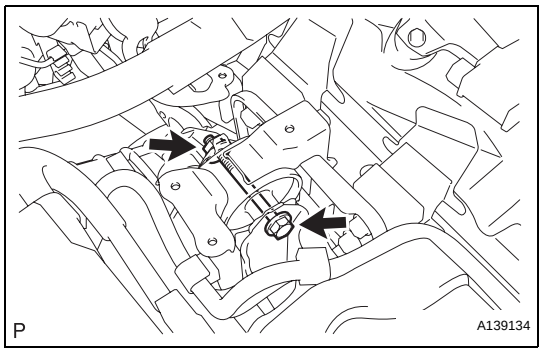

(g) Remove the bolt and nut, and disconnect the engine mounting insulator LH.

EM

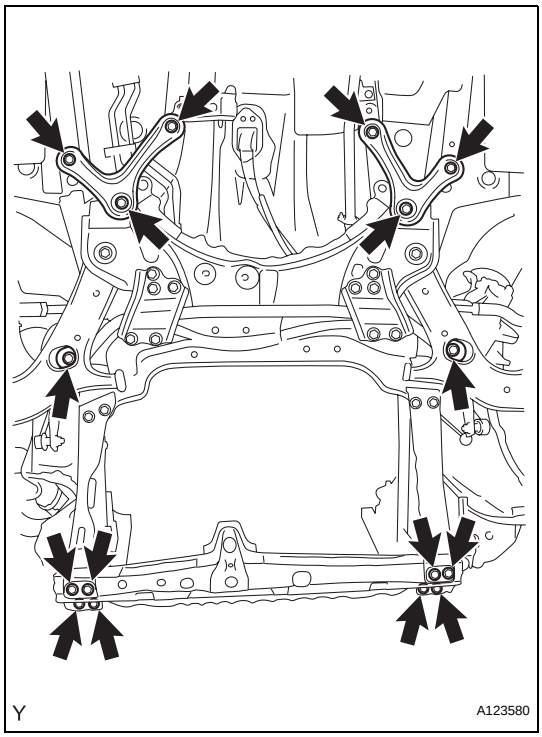

(h) Remove the 6 bolts and front suspension member brace rear RH and LH.
(i) Remove the 6 bolts, crossmember and suspension member.
(j) Using the chain block, slowly remove the engine from the vehicle and the intermediate shaft from the pinion. Then set the engine on the engine lifter.
NOTICE:
- **Make sure that the engine is clear of all wiring and hoses.**
- **While lowering the engine from the vehicle, do not allow it to contact the vehicle.**

HINT:
Place the engine on wooden blocks or an equivalent so that the engine is level.
(k) Remove the sling device from the engine.

45. REMOVE FRONT CROSSMEMBER SUB-ASSEMBLY
(a) Install a chain block.

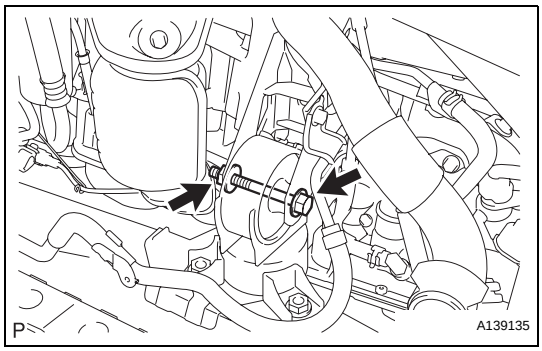

(b) Remove the bolt, nut and crossmember.

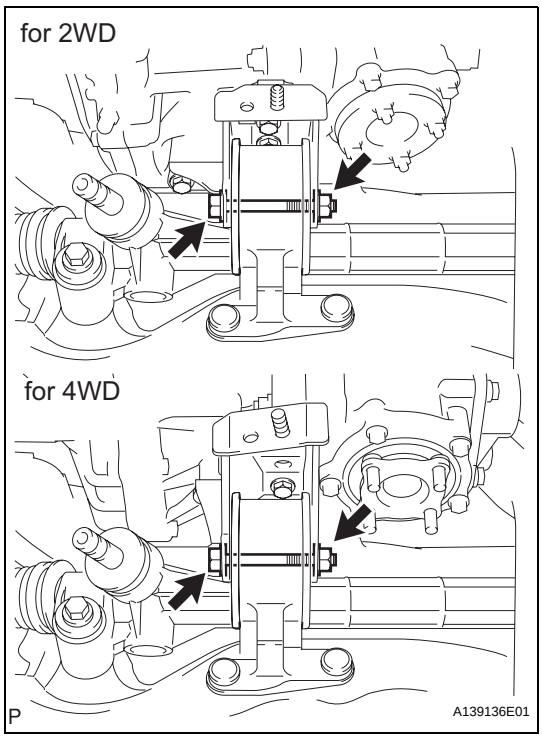

46. REMOVE FRONT SUSPENSION CROSSMEMBER SUB-ASSEMBLY
(a) Remove the bolt and suspension crossmember.

47. REMOVE ENGINE WIRE
(a) Remove the engine wire from the engine.

48. REMOVE STARTER ASSEMBLY (See page ST-6)

49. REMOVE TRANSFER ASSEMBLY (for 4WD) (See page TF-60)

50. REMOVE AUTOMATIC TRANSAXLE ASSEMBLY
(a) 2WD:
Remove the automatic transaxle (see page AX-172).
(b) 4WD:
Remove the automatic transaxle (see page AX-173).

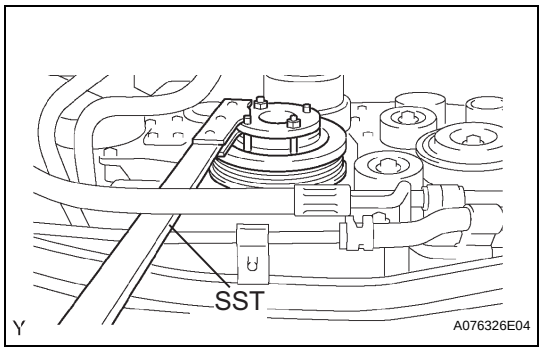

51. REMOVE DRIVE PLATE AND RING GEAR SUB-ASSEMBLY

(a) Using SST, hold the crankshaft.
SST 09213-70011, 09330-00021

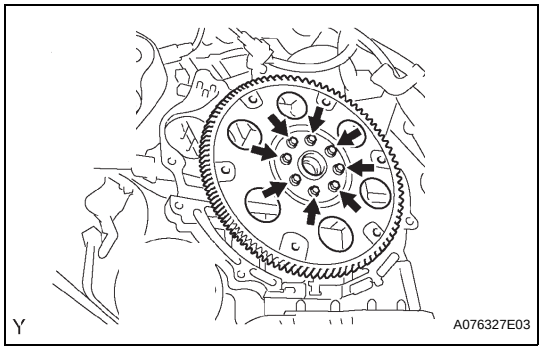

(b) Remove the 8 bolts, front spacer, drive plate and rear spacer.
NOTICE:
Do not reuse the bolts.

52. INSTALL ENGINE TO ENGINE STAND

(a) Install the engine to an engine stand. Remove the sling device and chain block from the engine.

EM

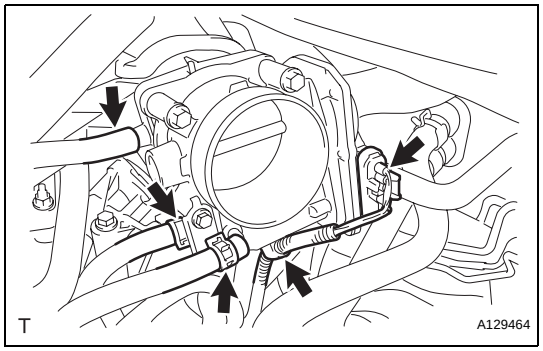

53. REMOVE INTAKE AIR SURGE TANK ASSEMBLY

(a) Disconnect the 2 water by-pass hoses from the throttle body.
(b) Disconnect the vapor feed hose.
(c) Disconnect the throttle body connector and clamp.

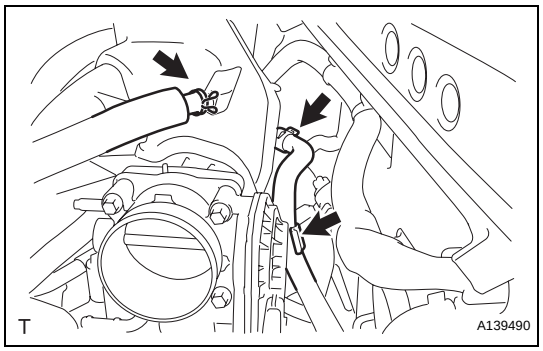

(d) Disconnect the No. 2 ventilation hose.
(e) Disconnect the union to check valve hose.

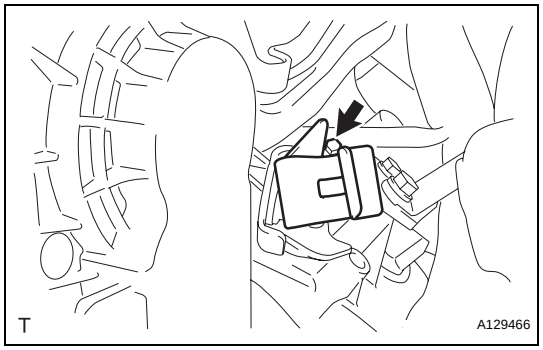

(f) Remove the bolt and vacuum hose clamp.

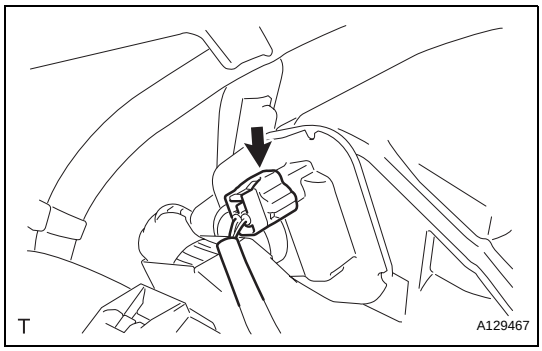

(g) Disconnect the connector.

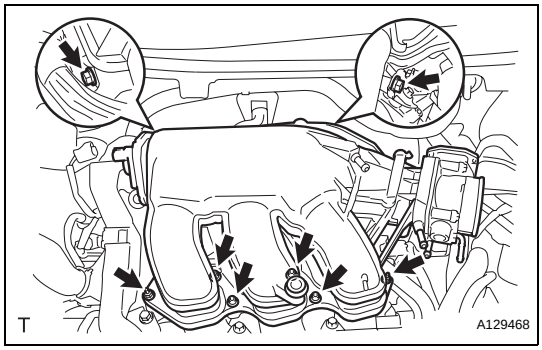

(h) Using a 5 mm socket hexagon wrench, remove the 4 bolts.
(i) Remove the 2 nuts, 2 bolts and surge tank.
(j) Remove the gasket from the surge tank.

54. REMOVE IGNITION COIL ASSEMBLY

(a) Remove the 6 bolts and 6 coils from the cylinder head.

55. REMOVE NO. 2 ENGINE MOUNTING STAY RH

(a) Remove the bolt and mounting stay.

56. REMOVE FUEL INJECTOR ASSEMBLY (See page FU-14)

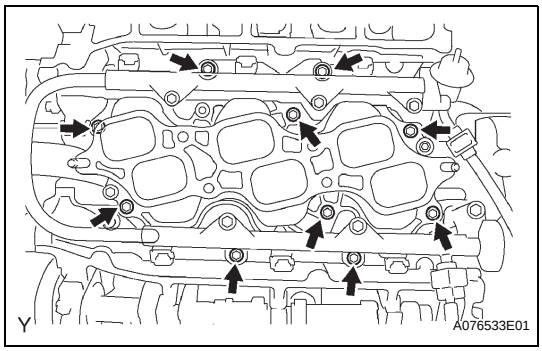

57. REMOVE INTAKE MANIFOLD

(a) Remove the 6 bolts, 4 nuts, intake manifold and 2 gaskets.

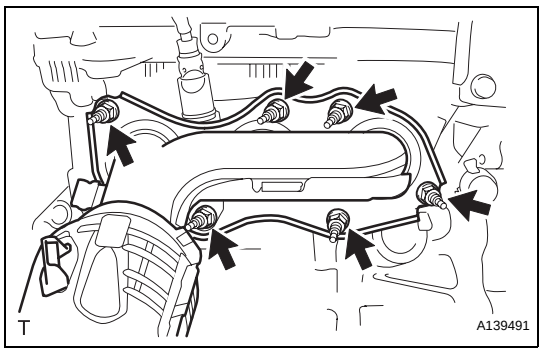

58. REMOVE EXHAUST MANIFOLD SUB-ASSEMBLY RH

(a) Disconnect the air fuel ratio sensor connector clamp.
(b) Uniformly loosen and remove the 6 nuts.
(c) Remove the manifold and gasket.

59. REMOVE FAN AND GENERATOR V BELT (See page EM-8)

60. REMOVE COMPRESSOR WITH PULLEY ASSEMBLY (See page AC-220)

61. REMOVE GENERATOR ASSEMBLY (See page CH-12)

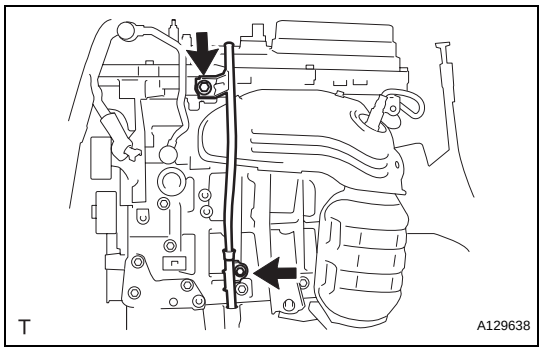

62. REMOVE OIL DIPSTICK GUIDE
(a) Remove the dipstick.
(b) Remove the 2 bolts, and the No. 1 and No. 2 guides.
(c) Remove the O-rings from the guide.

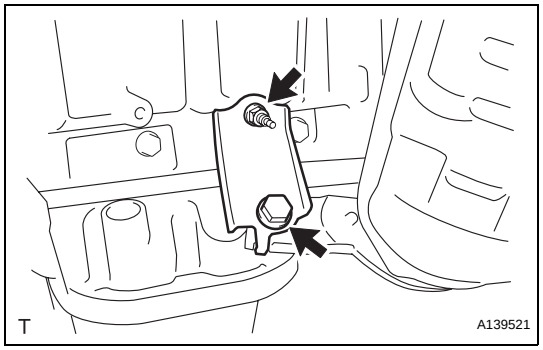

63. REMOVE NO. 2 MANIFOLD STAY
(a) Remove the bolt, nut and manifold stay.

64. REMOVE NO. 2 EXHAUST MANIFOLD HEAT INSULATOR
(a) Remove the 3 bolts and insulator.

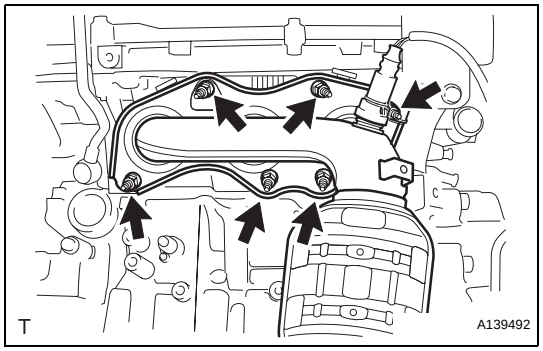

65. REMOVE EXHAUST MANIFOLD SUB-ASSEMBLY LH
(a) Uniformly loosen and remove the 6 nuts.
(b) Remove the manifold and gasket.

66. REMOVE ENGINE MOUNTING BRACKET RH
(a) Remove the 3 bolts and bracket.

67. REMOVE DRIVE SHAFT BEARING BRACKET
(a) Remove the 3 bolts and drive shaft bearing bracket.

68. REMOVE V-RIBBED BELT TENSIONER ASSEMBLY
(a) Remove the 5 bolts and V-ribbed belt tensioner assembly.

69. REMOVE NO. 2 TIMING GEAR COVER
(a) Remove the 2 bolts and gear cover.

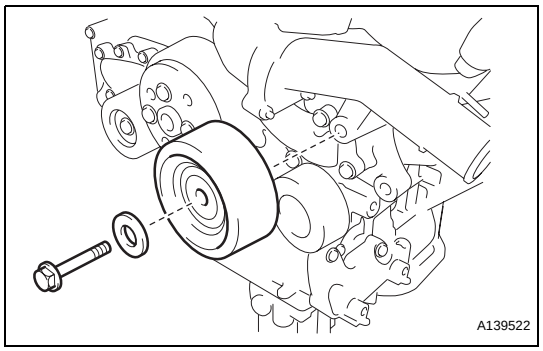

70. REMOVE NO. 2 IDLER PULLEY SUB-ASSEMBLY
(a) Remove the bolt, plate and idler pulley.

71. REMOVE WATER PUMP PULLEY (See page CO-12)

72. REMOVE NO. 1 FRONT ENGINE MOUNTING BRACKET LH
(a) Remove the 6 bolts and bracket.

EM

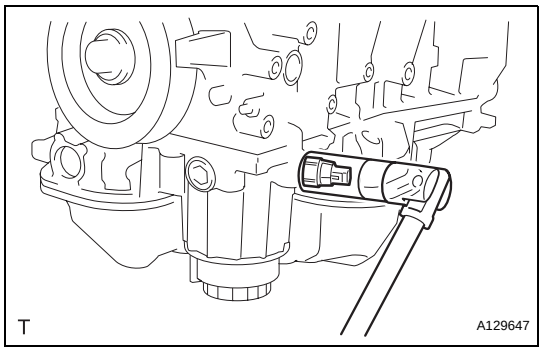

73. REMOVE ENGINE OIL PRESSURE SWITCH ASSEMBLY

(a) Using a 24 mm deep socket wrench, remove the pressure switch.

74. REMOVE KNOCK SENSOR (See page ES-459)

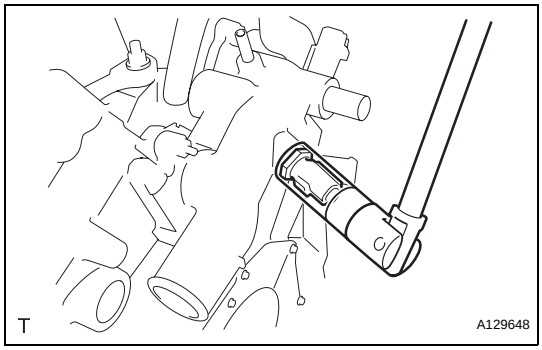

75. REMOVE ENGINE COOLANT TEMPERATURE SENSOR

(a) Using a 19 mm deep socket wrench, remove the sensor and gasket.

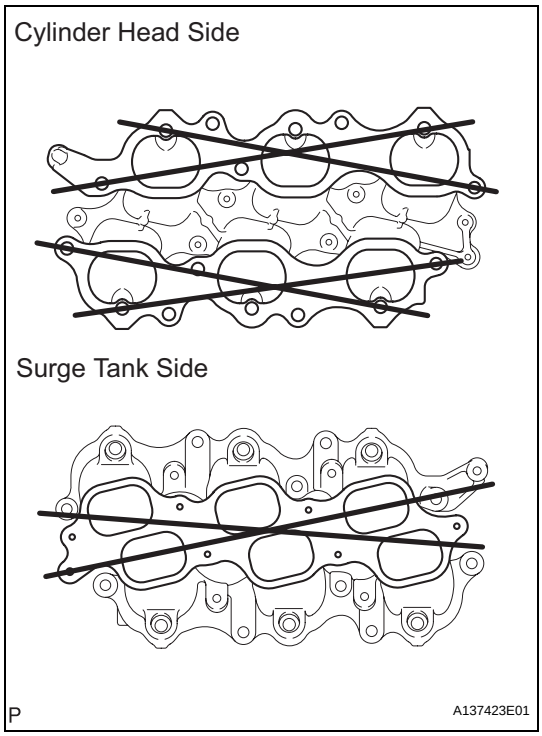

INSPECTION

1. INSPECT INTAKE MANIFOLD

(a) Using a precision straightedge and feeler gauge, measure the warpage of the contact surface of the cylinder head and intake air surge tank.

Maximum warpage

Item	Specified Condition
Intake manifold side	0.8 mm (0.031 in.)
Cylinder head side	0.2 mm (0.008 in.)

If the warpage is greater than the maximum, replace the manifold.

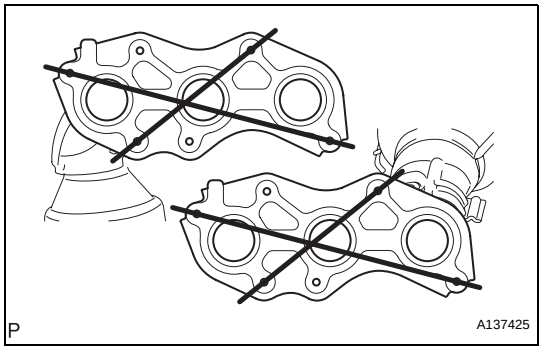

2. INSPECT EXHAUST MANIFOLD

(a) Using a precision straightedge and feeler gauge, measure the surface contacting the cylinder head for warpage.

Maximum warpage:

0.70 mm (0.0028 in.)

If the warpage is greater than the maximum, replace the manifold.

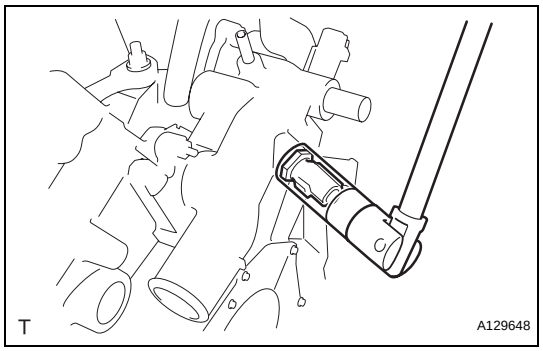

INSTALLATION

1. **INSTALL ENGINE COOLANT TEMPERATURE SENSOR**
   (a) Using a 19 mm deep socket wrench, install the sensor and a new gasket.
   Torque: 20 N*m (204 kgf*cm, 14 ft.*lbf)

2. **INSTALL KNOCK SENSOR (See page ES-459)**

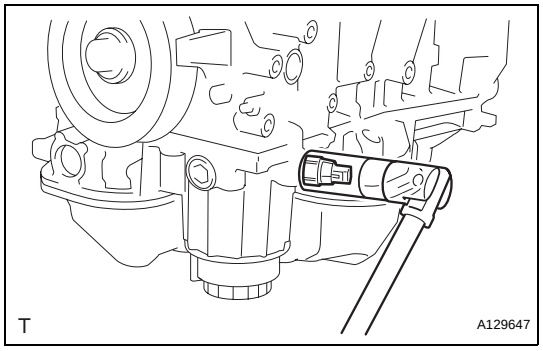

3. **INSTALL ENGINE OIL PRESSURE SWITCH ASSEMBLY**
   (a) Clean the threads of the oil pressure switch. Apply adhesive to 2 or 3 threads of the oil pressure switch.
   Adhesive:
   Toyota Genuine Adhesive 1344, Three Bond 1344 or Equivalent
   (b) Using a 24 mm deep socket wrench, install the oil pressure switch.
   Torque: 21 N*m (214 kgf*cm, 15 ft.*lbf)

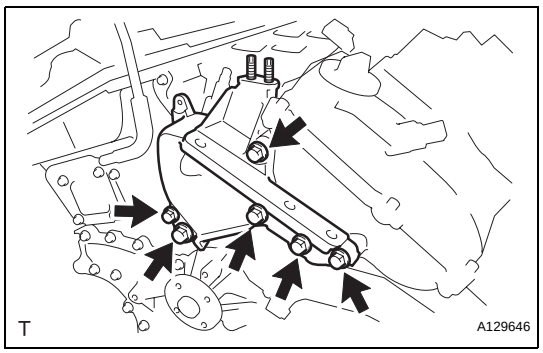

4. **INSTALL NO. 1 FRONT ENGINE MOUNTING BRACKET LH**
   (a) Install the mounting bracket with the 6 bolts.
   Torque: 54 N*m (551 kgf*cm, 40 ft.*lbf)

5. **INSTALL WATER PUMP PULLEY (See page CO-14)**

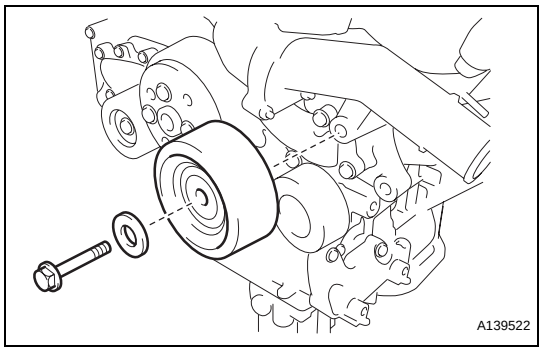

6. **INSTALL NO. 2 IDLER PULLEY SUB-ASSEMBLY**
   (a) Install the idler pulley and cover plate with the bolt.
   Torque: 43 N*m (438 kgf*cm, 32 ft.*lbf)

7. **INSTALL NO. 2 TIMING GEAR COVER**
   (a) Install the gear cover with the 2 bolts.
   Torque: 6.0 N*m (61 kgf*cm, 53 in.*lbf)

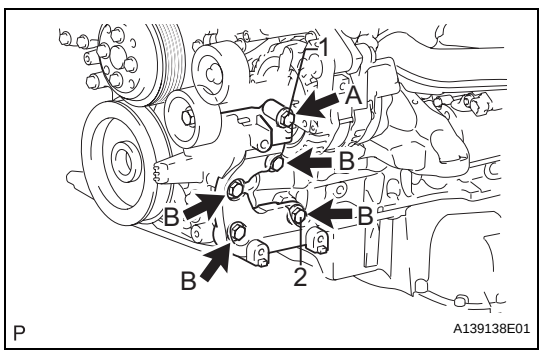

8. **INSTALL V-RIBBED BELT TENSIONER ASSEMBLY**
   (a) Temporarily install the V-ribbed belt tensioner with the 5 bolts.
   (b) Install the V-ribbed belt tensioner by tightening the bolt 1 and bolt 2 in the order shown in the illustration.
   Torque: 43 N*m (438 kgf*cm, 32 ft.*lbf)
   (c) Tighten the other bolts.
   Torque: 43 N*m (438 kgf*cm, 32 ft.*lbf)
   Each bolt length is as follows:

A	70 mm (2.76 in.)

EM

B	35 mm (1.37 in.)

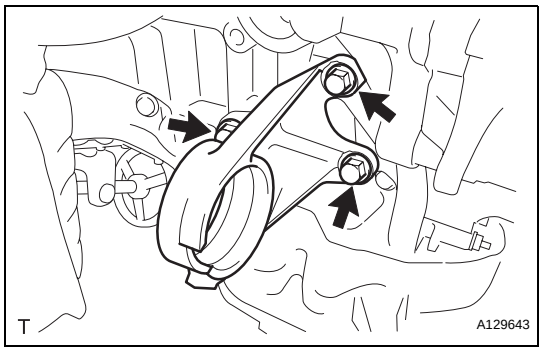

9. INSTALL DRIVE SHAFT BEARING BRACKET

(a) Install the drive shaft bearing bracket with the 3 bolts.
Torque: 64 N*m (653 kgf*cm, 47 ft.*lbf)

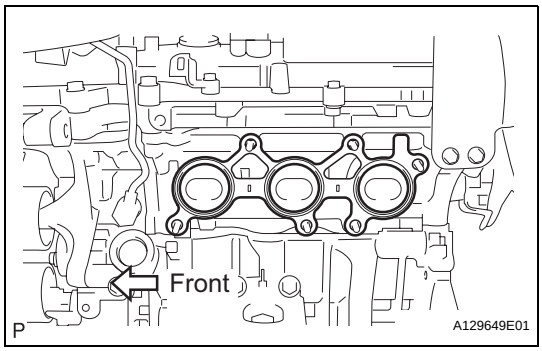

10. INSTALL EXHAUST MANIFOLD SUB-ASSEMBLY LH

(a) Install a new gasket as shown in the illustration.

(b) Install the manifold with the 6 nuts.
Torque: 21 N*m (214 kgf*cm, 15 ft.*lbf)

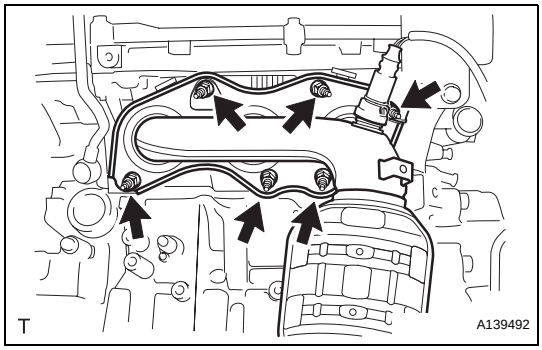

11. INSTALL NO. 2 EXHAUST MANIFOLD HEAT INSULATOR

(a) Install the No. 2 heat insulator with the 3 bolts.
Torque: 8.5 N*m (87 kgf*cm, 75 in.*lbf)

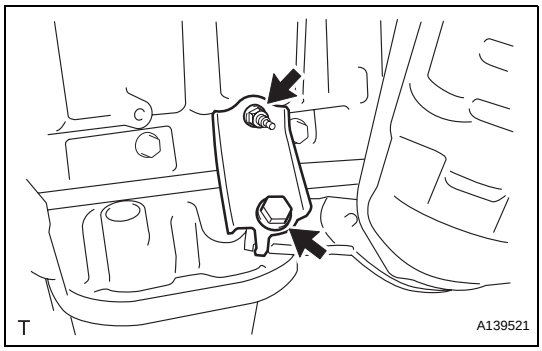

12. INSTALL NO. 2 MANIFOLD STAY

(a) Install the No. 2 manifold stay with the bolt and nut.
Torque: 34 N*m (347 kgf*cm, 25 ft.*lbf)

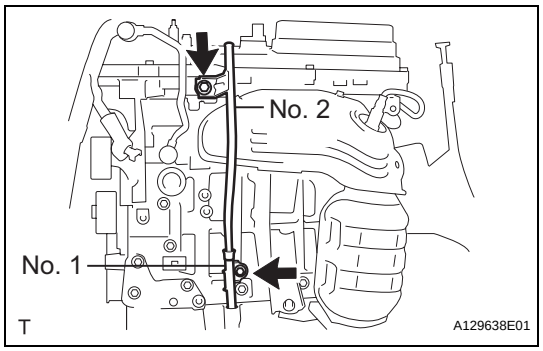

13. INSTALL OIL DIPSTICK GUIDE

(a) Install 2 new O-rings to the guide.
(b) Apply a light coat of engine oil to the O-rings.
(c) Push in the guide end into the guide hole.
(d) Install the No. 1 guide with the bolt.
Torque: 21 N*m (214 kgf*cm, 15 ft.*lbf)
(e) Install the No. 2 guide with the bolt.
Torque: 21 N*m (214 kgf*cm, 15 ft.*lbf)
(f) Install the dipstick.

14. INSTALL GENERATOR ASSEMBLY (See page CH-19)

15. INSTALL COMPRESSOR WITH PULLEY ASSEMBLY (See page AC-221)

16. INSTALL FAN AND GENERATOR V BELT (See page EM-8)

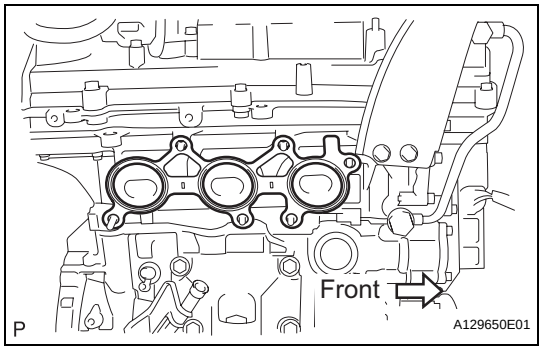

17. INSTALL EXHAUST MANIFOLD SUB-ASSEMBLY RH

(a) Install a new gasket as shown in the illustration.

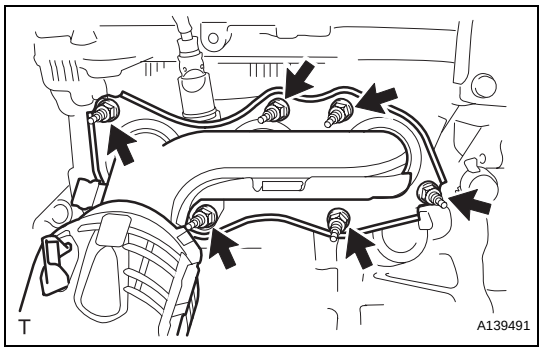

(b) Install the manifold with the 6 nuts.
Torque: 21 N*m (214 kgf*cm, 15 ft.*lbf)

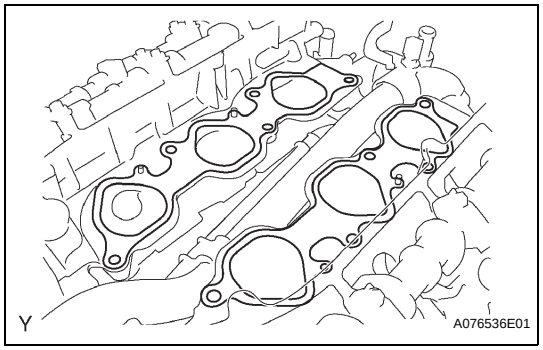

18. INSTALL INTAKE MANIFOLD

(a) Set a new gasket on each cylinder head.
NOTICE:
- **Align the port holes of the gasket and cylinder head.**
- **Be careful of the installation direction.**

(b) Set the intake manifold on the cylinder heads.

EM

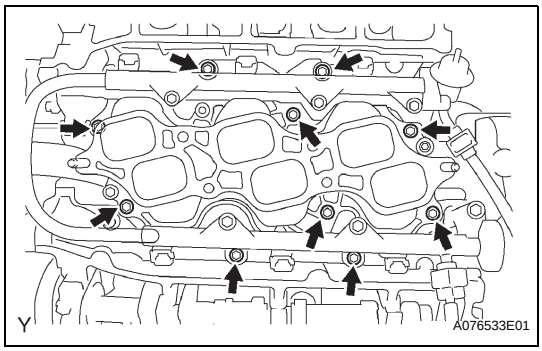

(c) Install and uniformly tighten the 6 bolts and 4 nuts in several passes.
Torque: 21 N*m (214 kgf*cm, 15 ft.*lbf)
(d) Connect the 6 fuel injector connectors.

19. INSTALL FUEL INJECTOR ASSEMBLY (See page FU-16)

20. INSTALL NO. 2 ENGINE MOUNTING STAY RH
(a) Install the mounting stay with the bolt.
Torque: 21 N*m (214 kgf*cm, 15 ft.*lbf)

21. INSTALL IGNITION COIL ASSEMBLY
(a) Install the 6 ignition coils with the 6 bolts to the cylinder head.
Torque: 10 N*m (102 kgf*cm, 7 ft.*lbf)

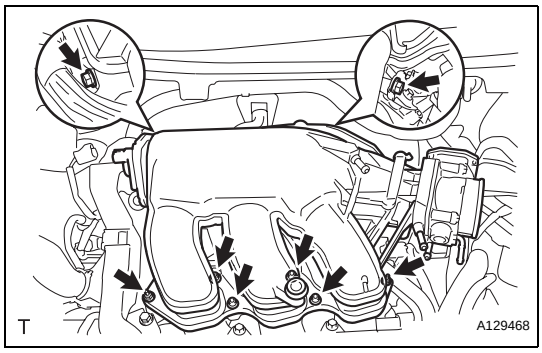

22. INSTALL INTAKE AIR SURGE TANK ASSEMBLY
NOTICE:
Make sure there is no oil on the bolts. If there is oil on the bolts, clean them before installing them.
(a) Install a new gasket to the surge tank.
(b) Using a 5 mm hexagon socket wrench, install the 4 bolts.
Torque: 18 N*m (184 kgf*cm, 13 ft.*lbf)
(c) Install the surge tank with the 2 nuts and 2 bolts.
Torque: 21 N*m (214 kgf*cm, 15 ft.*lbf) for bolt
16 N*m (163 kgf*cm, 12 ft.*lbf) for nut

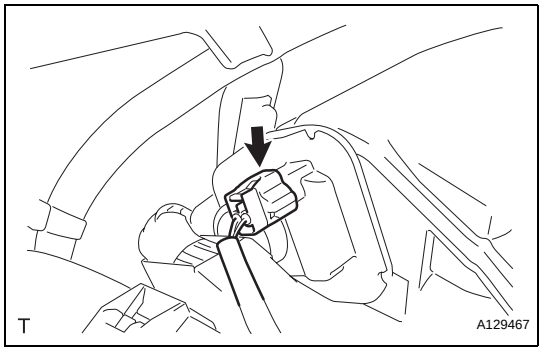

(d) Connect the connector.

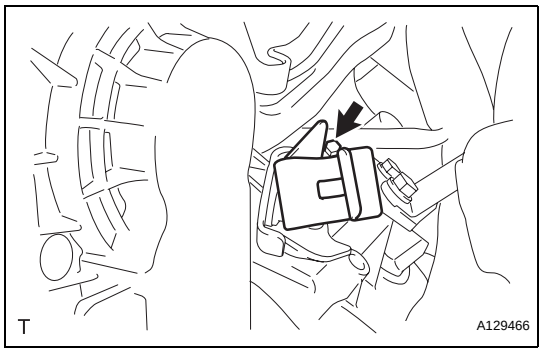

(e) Install the vacuum hose clamp with the bolt.
Torque: 5.4 N*m (55 kgf*cm, 48 in.*lbf)

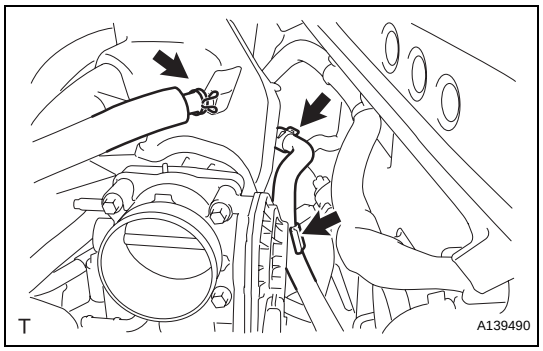

(f) Connect the union to check valve hose.
(g) Connect the No. 2 ventilation hose.

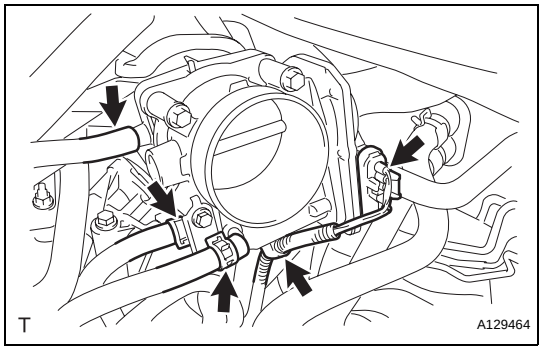

(h) Install the clamp and connect the throttle body connector.
(i) Connect the vapor feed hose.
(j) Connect the 2 water by-pass hoses to the throttle body.

23. REMOVE ENGINE FROM ENGINE STAND

(a) Install a sling device and chain block to the engine.
(b) Remove the engine from the engine stand.

EM

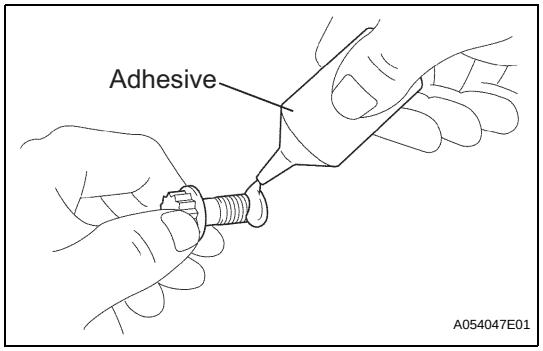

24. INSTALL DRIVE PLATE AND RING GEAR SUB-ASSEMBLY

(a) Clean the bolt and its hole.
(b) Apply adhesive to 2 or 3 threads of the bolt end.
Adhesive:
Toyota Genuine Adhesive 1324, Three Bond 1324 or Equivalent

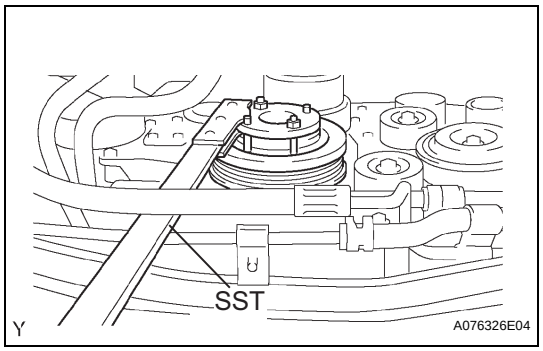

(c) Using SST, hold the crankshaft.
SST 09213-70011, 09330-00021
(d) Install the flywheel, drive plate and drive plate spacer on the crankshaft.

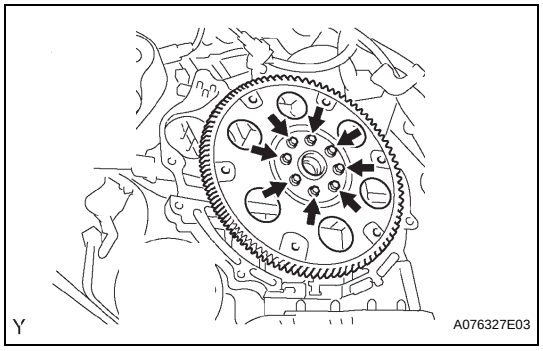

(e) Uniformly install and tighten the 8 bolts in the sequence shown in the illustration.
Torque: 178 N*m (1,815 kgf*cm, 132 ft.*lbf)
NOTICE:
Do not start the engine for at least 1 hour after the installation.

25. INSTALL AUTOMATIC TRANSAXLE ASSEMBLY

(a) 2WD:
Install the automatic transaxle (see page AX-174).

(b) 4WD:
Install the automatic transaxle (see page AX-175).

26. INSTALL TRANSFER ASSEMBLY (for 4WD) (See page TF-75)

27. INSTALL STARTER ASSEMBLY (See page ST-14)

28. INSTALL ENGINE WIRE

(a) Install the engine wire to the engine.

29. INSTALL FRONT SUSPENSION CROSSMEMBER SUB-ASSEMBLY

(a) Attach the engine together with the transaxle to the suspension crossmember and mounting.

(b) Install the bolt which secures the engine mounting bracket to the mounting insulator.
Torque: 95 N*m (969 kgf*cm, 70 ft.*lbf)

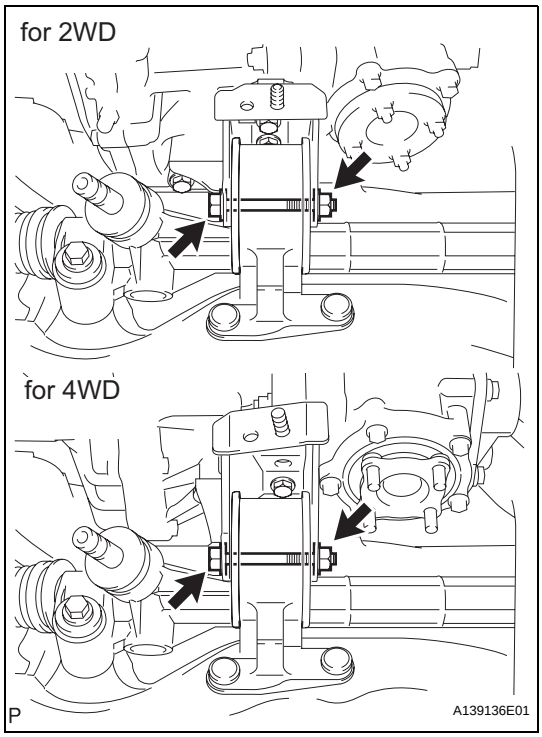

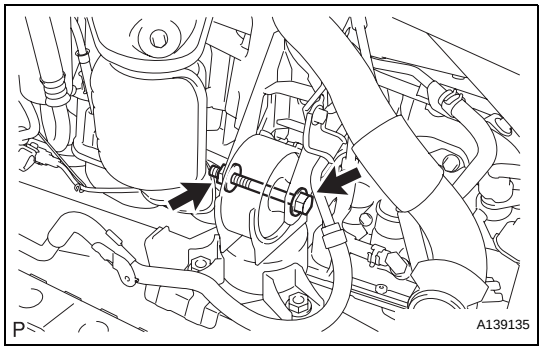

30. INSTALL FRONT CROSSMEMBER SUB-ASSEMBLY

(a) Install the bolt and nut which secures the engine mounting bracket to the mounting insulator.
Torque: 145 N*m (1,479 kgf*cm, 107 ft.*lbf)

31. INSTALL ENGINE WITH TRANSAXLE

(a) Place the engine on an engine lifter.
HINT:
Place the engine on wooden blocks or an equivalent so that the engine is level.

(b) Using the chain block, slowly install the engine to the vehicle and the intermediate shaft to the pinion.
CAUTION:
Do not raise the engine more than necessary. If the engine is raised excessively, the vehicle may also be lifted up.
NOTICE:
- **Make sure that the engine is clear of all wiring and hoses.**

- **While raising the engine into the vehicle, do not allow it to contact the vehicle.**
- **Align the matchmarks on the intermediate shaft and pinion.**

(c) Temporarily install the suspension member and crossmember with the 10 bolts.

(d) Temporarily install the member brace rear RH and LH with the 6 bolts.

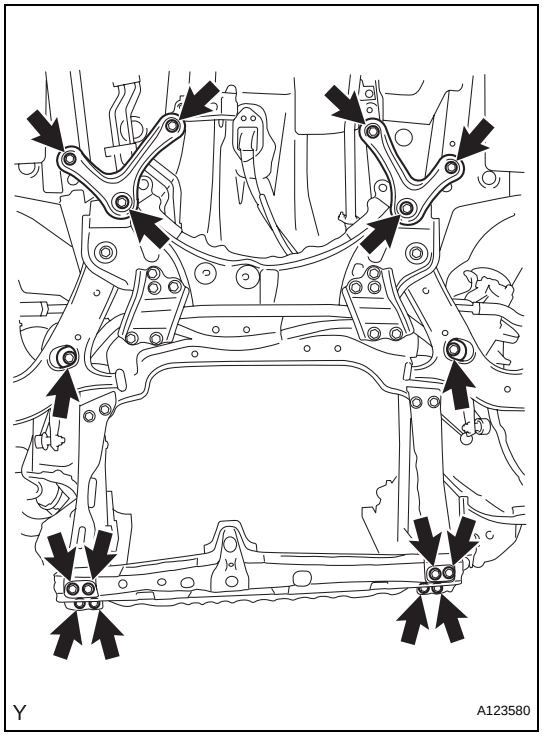

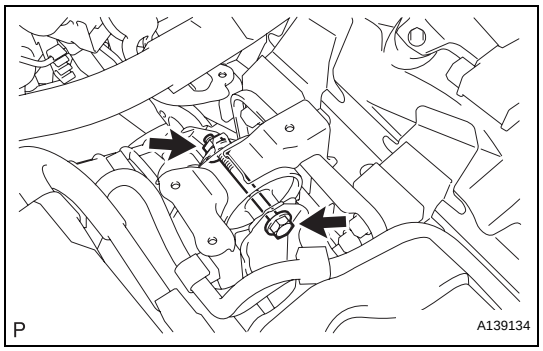

(e) Install the engine mounting insulator LH with the bolt and nut.
Torque: 56 N*m (571 kgf*cm, 41 ft.*lbf)
NOTICE:
While holding the bolt in place, tighten the nut.

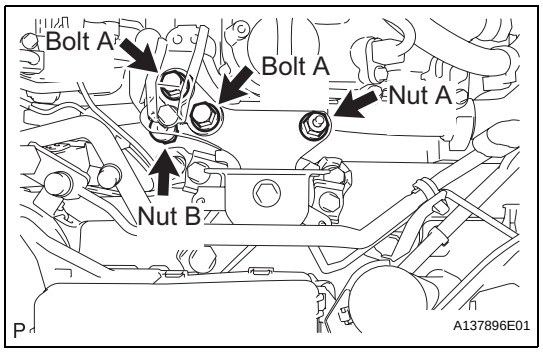

(f) Install the engine mounting insulator RH with the 2 bolts and 2 nuts.
Torque: 95 N*m (969 kgf*cm, 70 ft.*lbf) for bolt and nut A
52 N*m (530 kgf*cm, 38 ft.*lbf) for nut B

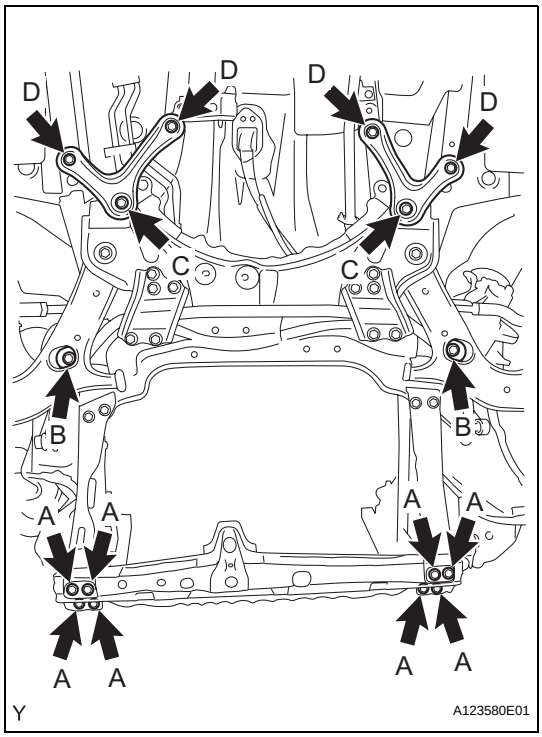

(g) Tighten the suspension member and crossmember's bolts.
Torque: 96 N*m (979 kgf*cm, 71 ft.*lbf) for bolt A
145 N*m (1,478 kgf*cm, 107 ft.*lbf) for bolt B

(h) Tighten the member brace rear's bolts.
Torque: 145 N*m (1,478 kgf*cm, 107 ft.*lbf) for bolt C
93 N*m (948 kgf*cm, 69 ft.*lbf) for bolt D

(i) Remove the sling device and chain block.

(j) Remove the 2 bolts and No. 1 and No. 2 engine hangers.

32. INSTALL FRONT DRIVE SHAFT LH

(a) 2WD:
Install the drive shaft (see page DS-33).

(b) 4WD:
Install the drive shaft (see page DS-66).

33. INSTALL FRONT DRIVE SHAFT RH

(a) 2WD:
Install the drive shaft (see page DS-33).

(b) 4WD:
Install the drive shaft (see page DS-66).

34. CONNECT TIE ROD END SUB-ASSEMBLY LH (See page PS-45)

35. CONNECT TIE ROD END SUB-ASSEMBLY RH (See page PS-45)

36. CONNECT STEERING INTERMEDIATE SHAFT (See page PS-44)

37. CONNECT FRONT STABILIZER LINK ASSEMBLY LH (See page SP-31)

38. CONNECT FRONT STABILIZER LINK ASSEMBLY RH (See page SP-31)

39. INSTALL FRONT AXLE HUB NUT LH

(a) Install the hub nut (see page AH-11).

40. INSTALL FRONT AXLE HUB NUT RH

(a) Install the hub nut (see page AH-11).

41. INSTALL FRONT WHEELS

42. INSTALL PROPELLER WITH CENTER BEARING SHAFT ASSEMBLY (See page PR-5)

43. INSTALL CENTER EXHAUST PIPE ASSEMBLY (See page EX-4)

44. INSTALL FRONT EXHAUST PIPE ASSEMBLY (See page EX-4)

45. CONNECT TRANSMISSION CONTROL CABLE ASSEMBLY

(a) 2WD:
Connect the control cable (see page AX-154).

EM

(b) 4WD:
Connect the control cable (see page AX-154).

46. CONNECT RADIATOR HOSE INLET

47. CONNECT RADIATOR HOSE OUTLET

48. CONNECT OIL COOLER HOSE

49. CONNECT SUCTION HOSE SUB-ASSEMBLY (See page AC-221)

50. INSTALL DISCHARGE HOSE SUB-ASSEMBLY (See page AC-221)

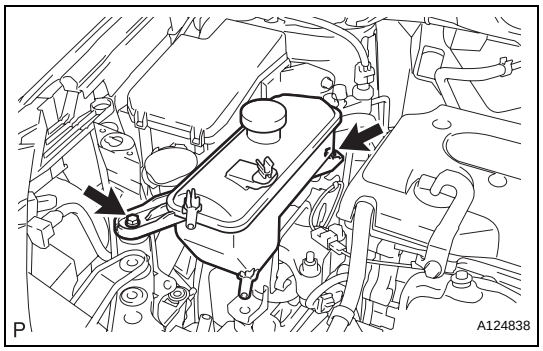

51. INSTALL RADIATOR RESERVOIR TANK ASSEMBLY
(a) Install the reservoir tank with the 2 bolts.
Torque: 5.0 N*m (51 kgf*cm, 44 in.*lbf)
(b) Connect the 2 hoses

52. INSTALL ECM (See page ES-471)

53. CONNECT HOSES AND CONNECTORS
(a) Connect the 2 ECM connectors.
(b) Connect the 2 heater hoses.
(c) Connect the fuel hoses.
(d) Connect the starter wire with the nut.
Torque: 9.8 N*m (100 kgf*cm, 7 ft.*lbf)
(e) Connect the 3 connectors and wire with the nut.
Torque: 12 N*m (122 kgf*cm, 9 ft.*lbf)
(f) Install the engine room junction block cover (upper).

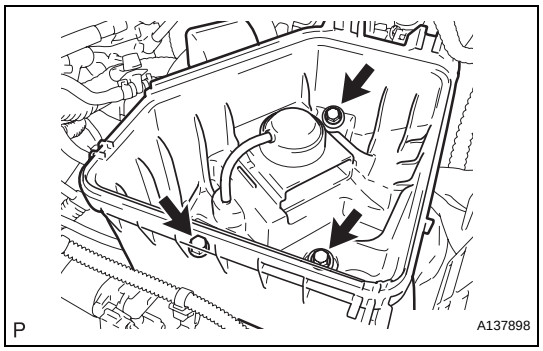

54. INSTALL AIR CLEANER CASE
(a) Install the air cleaner case with the 3 bolts.
Torque: 5.0 N*m (51 kgf*cm, 44 in.*lbf)
(b) Connect the harness clamp.

55. INSTALL AIR CLEANER CAP SUB-ASSEMBLY
(a) Install the air cleaner filter element onto the air cleaner case.

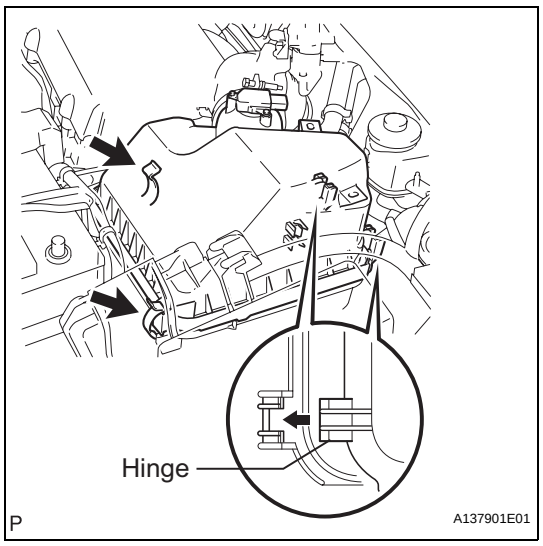

(b) Insert the hinge part of the air cleaner cap into the air cleaner case, then hang the 2 hook clamps.

EM

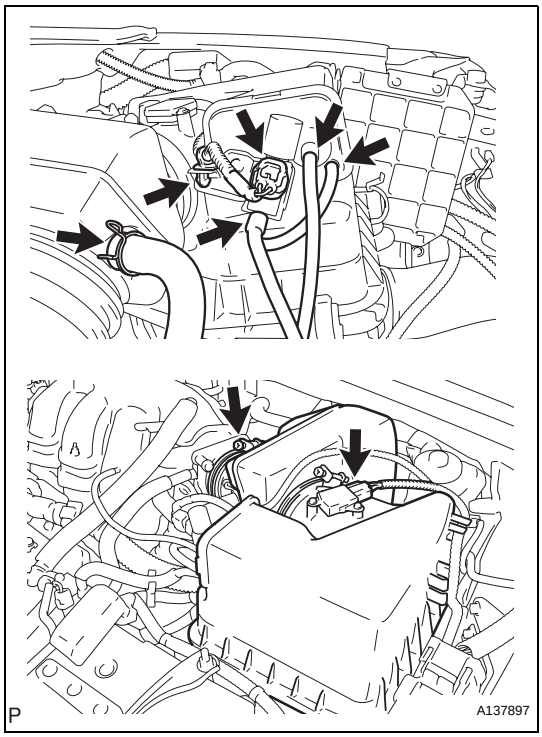

(c) Tighten the No. 1 air cleaner hose clamp.
(d) Connect the No. 2 ventilation hose to the air cleaner hose.
(e) Connect the wire harness clamp and 3 vacuum hoses.
(f) Connect the VSV (intake air control) connector.
(g) Connect the mass air flow meter connector.

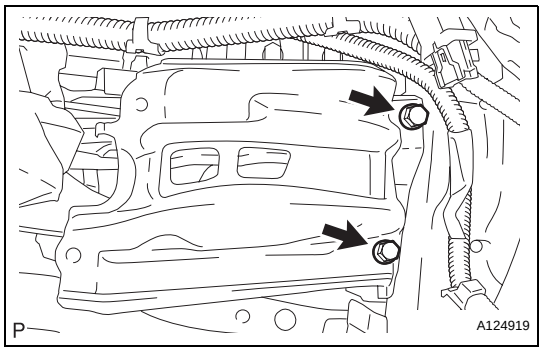

56. INSTALL BATTERY BRACKET REINFORCEMENT
(a) Install the bracket reinforcement with the 2 bolts.
Torque: 19 N*m (194 kgf*cm, 14 ft.*lbf)

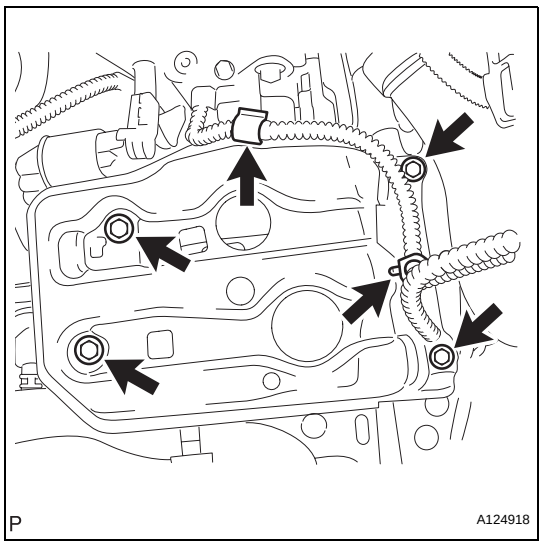

57. INSTALL FRONT BATTERY BRACKET
(a) Install the bracket front with the 4 bolts.
Torque: 19 N*m (194 kgf*cm, 14 ft.*lbf)
(b) Attach the 2 wire harness clamps.

58. INSTALL BATTERY

59. REMOVE BATTERY CLAMP SUB-ASSEMBLY
(a) Attach the hook of the battery clamp to the battery bracket front.
(b) Temporarily tighten the nut and install the bolt.
(c) Adjust the battery clamp's position.
(d) Fully tighten the nut and bolt.
Torque: 5.0 N*m (51 kgf*cm, 44 in.*lbf)
(e) Attach the 2 wire harness clamps.

60. CONNECT CABLE TO NEGATIVE BATTERY TERMINAL

61. INSTALL HOOD SUB-ASSEMBLY
(a) Install the hood (see page ED-7).
(b) Adjust the hood (see page ED-5).

62. **ADD AUTOMATIC TRANSAXLE FLUID**
    (a) 2WD:
    Add automatic transmission fluid (see page AX-177).
    (b) 4WD:
    Add automatic transmission fluid (see page AX-178).
63. **ADD TRANSFER OIL (for 4WD) (See page TF-45)**
64. **ADD ENGINE OIL (See page LU-6)**
65. **ADD ENGINE COOLANT (See page CO-8)**
66. **CHARGE REFRIGERANT (See page AC-172)**
67. **CHECK FOR LEAKAGE OF REFRIGERANT (See page AC-173)**
68. **CHECK FOR ENGINE OIL LEAKS (See page LU-6)**
69. **CHECK FOR ENGINE COOLANT LEAKS (See page CO-1)**
70. **CHECK FOR FUEL LEAKS**
71. **INSPECT EXHAUST GAS LEAKS**
72. **INSPECT SHIFT LEVER POSITION**
    (a) 2WD:
    Inspect the shift lever position (see page AX-159).
    (b) 4WD:
    Inspect the shift lever position (see page AX-158).
73. **ADJUST TRANSMISSION CONTROL CABLE**
    (a) 2WD:
    Adjust the shift lever position (see page AX-159).
    (b) 4WD:
    Adjust the shift lever position (see page AX-159).
74. **INSTALL FRONT FLOOR COVER (See page FU-39)**
75. **INSTALL NO. 2 ENGINE UNDER COVER**
    (a) Install the under cover with the 2 clips.
76. **INSTALL REAR ENGINE UNDER COVER LH**
    (a) Install the under cover with the 2 clips.
77. **INSTALL REAR ENGINE UNDER COVER RH**
    (a) Install the under cover with the 2 clips.
78. **INSTALL NO. 1 ENGINE UNDER COVER**
    (a) Install the under cover with the 4 bolts and 12 clips.

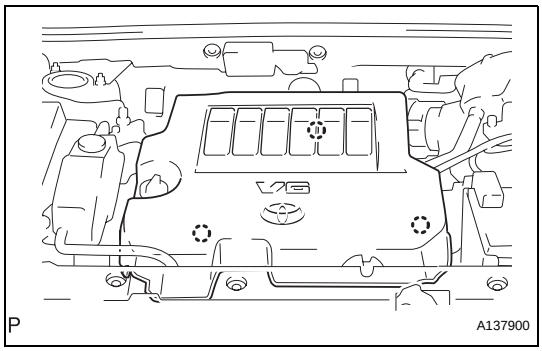

79. INSTALL V-BANK COVER SUB-ASSEMBLY

(a) Attach the 3 clips to install the engine cover.

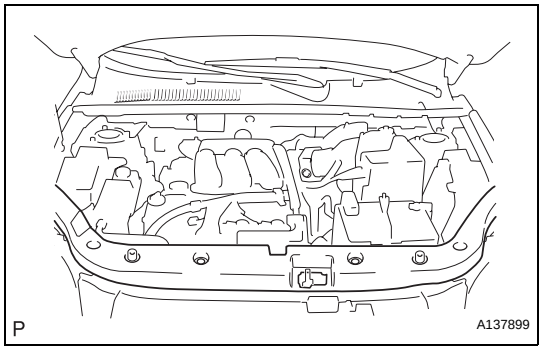

80. INSTALL RADIATOR SUPPORT OPENING COVER

(a) Install the cover with the 9 clips.

81. ADJUST FRONT WHEEL ALIGNMENT

(a) Adjust the front wheel alignment (see page SP-3).

82. INSPECT IDLE SPEED (See page EM-2)

EM

ENGINE ASSEMBLY

COMPONENTS

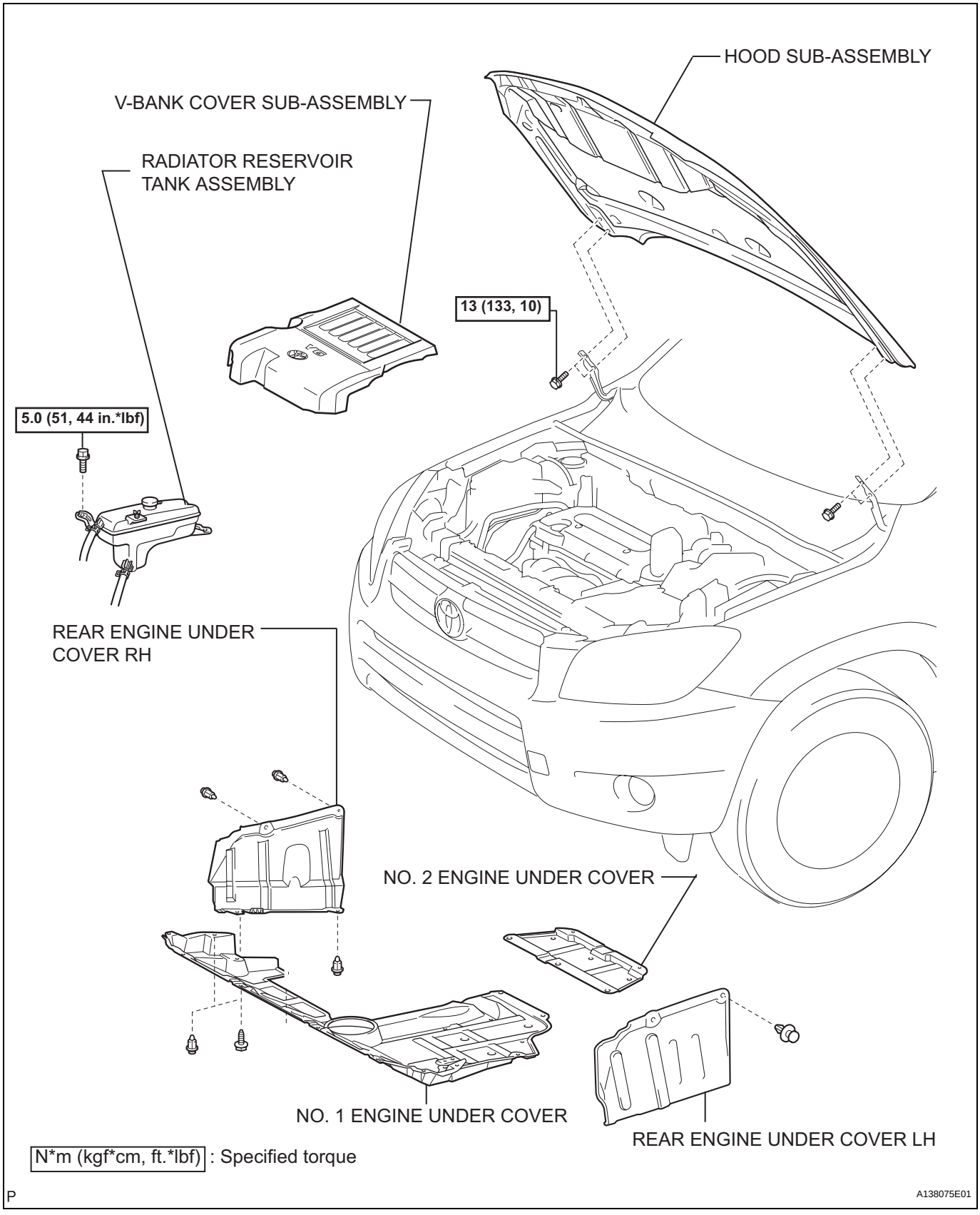

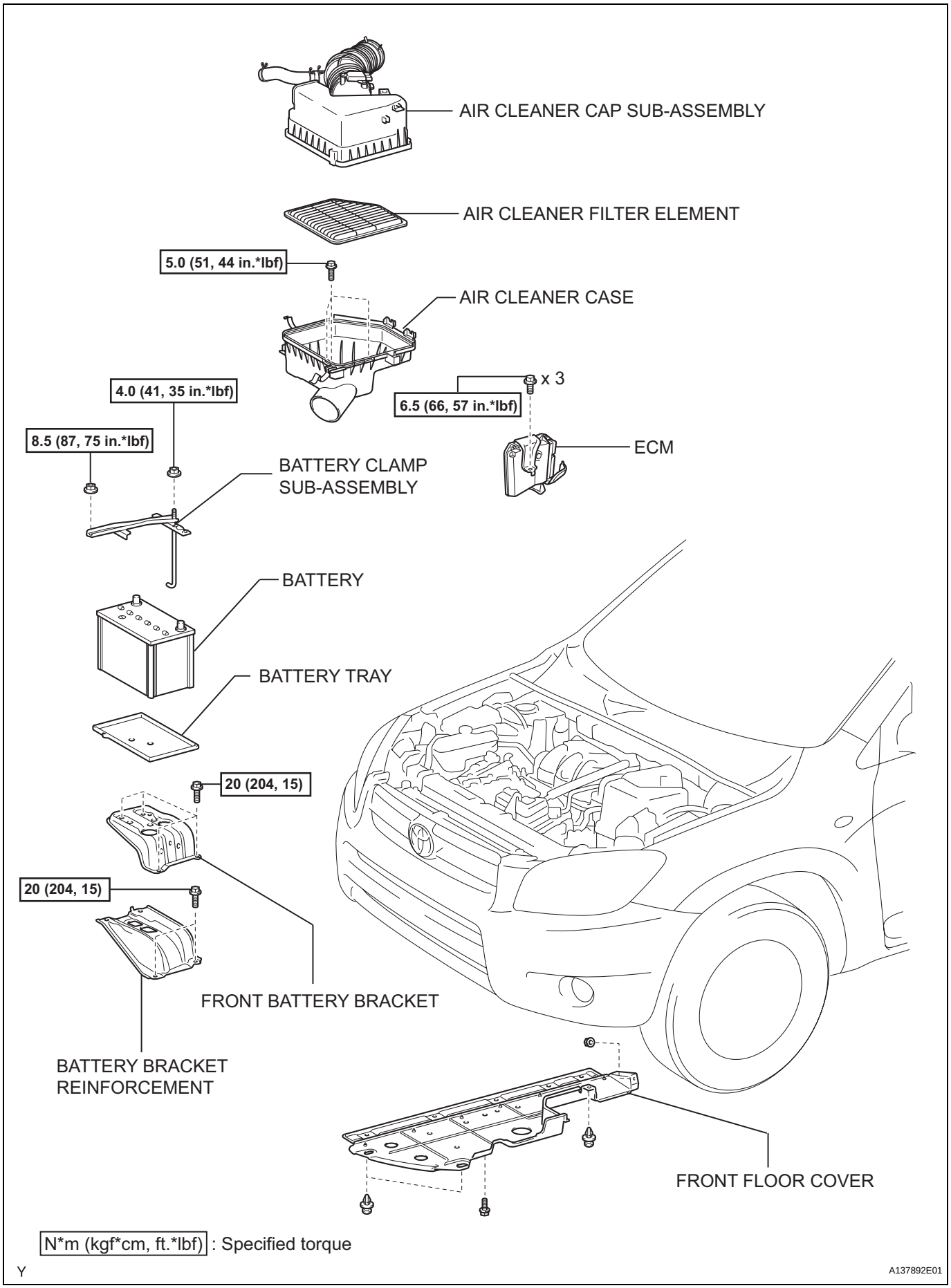

N*m (kgf*cm, ft.*lbf) : Specified torque

Y

A137892E01

EM

EM

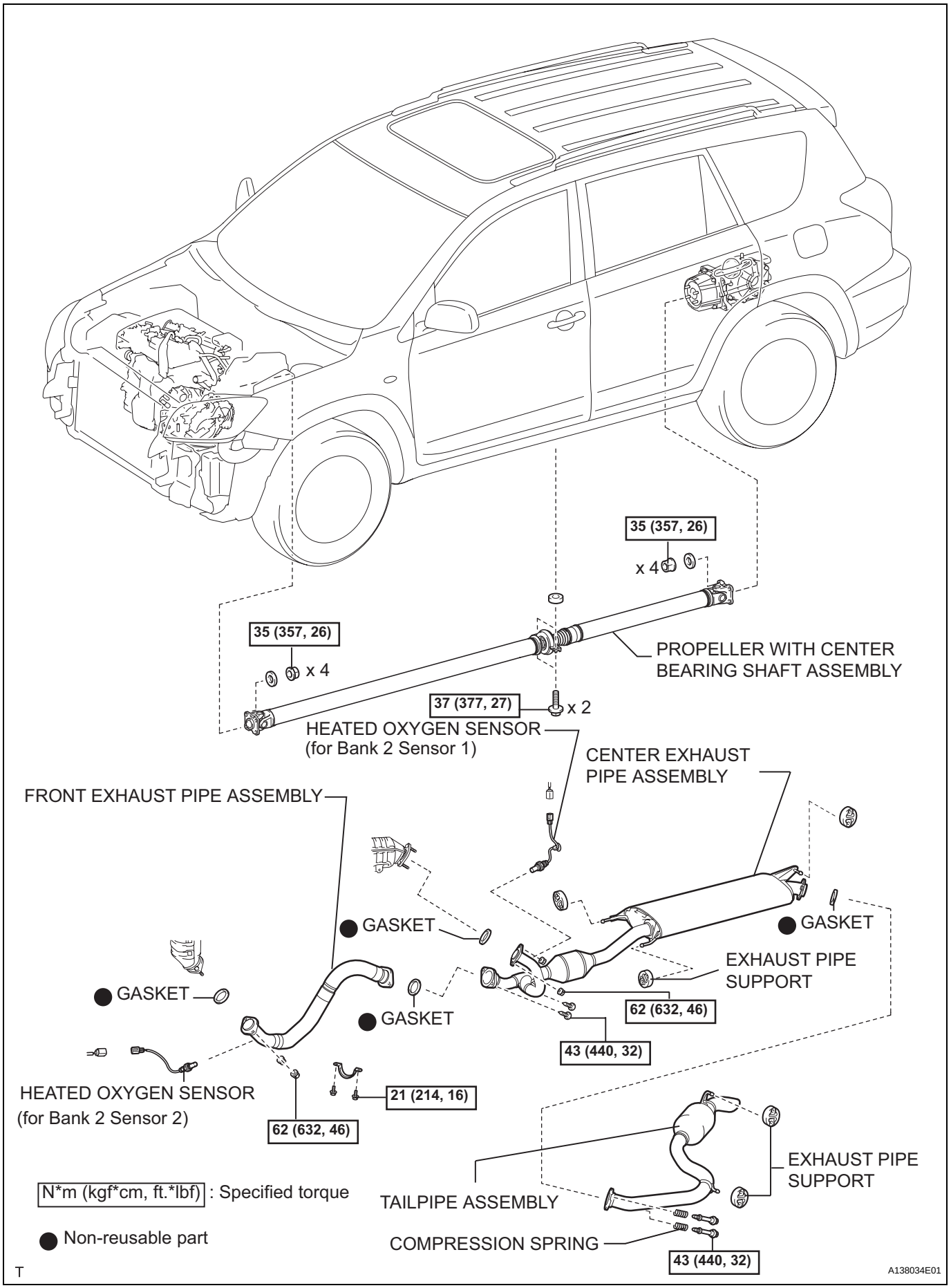
35 (357, 26)
x 4
35 (357, 26)
x 4
PROPELLER WITH CENTER BEARING SHAFT ASSEMBLY
37 (377, 27)
x 2
HEATED OXYGEN SENSOR (for Bank 2 Sensor 1)
CENTER EXHAUST PIPE ASSEMBLY
FRONT EXHAUST PIPE ASSEMBLY
GASKET
GASKET
EXHAUST PIPE SUPPORT
GASKET
62 (632, 46)
GASKET
43 (440, 32)
HEATED OXYGEN SENSOR (for Bank 2 Sensor 2)
21 (214, 16)
62 (632, 46)
EXHAUST PIPE SUPPORT
TAILPIPE ASSEMBLY
COMPRESSION SPRING
43 (440, 32)
N*m (kgf*cm, ft.*lbf) : Specified torque
Non-reusable part
T
A138034E01

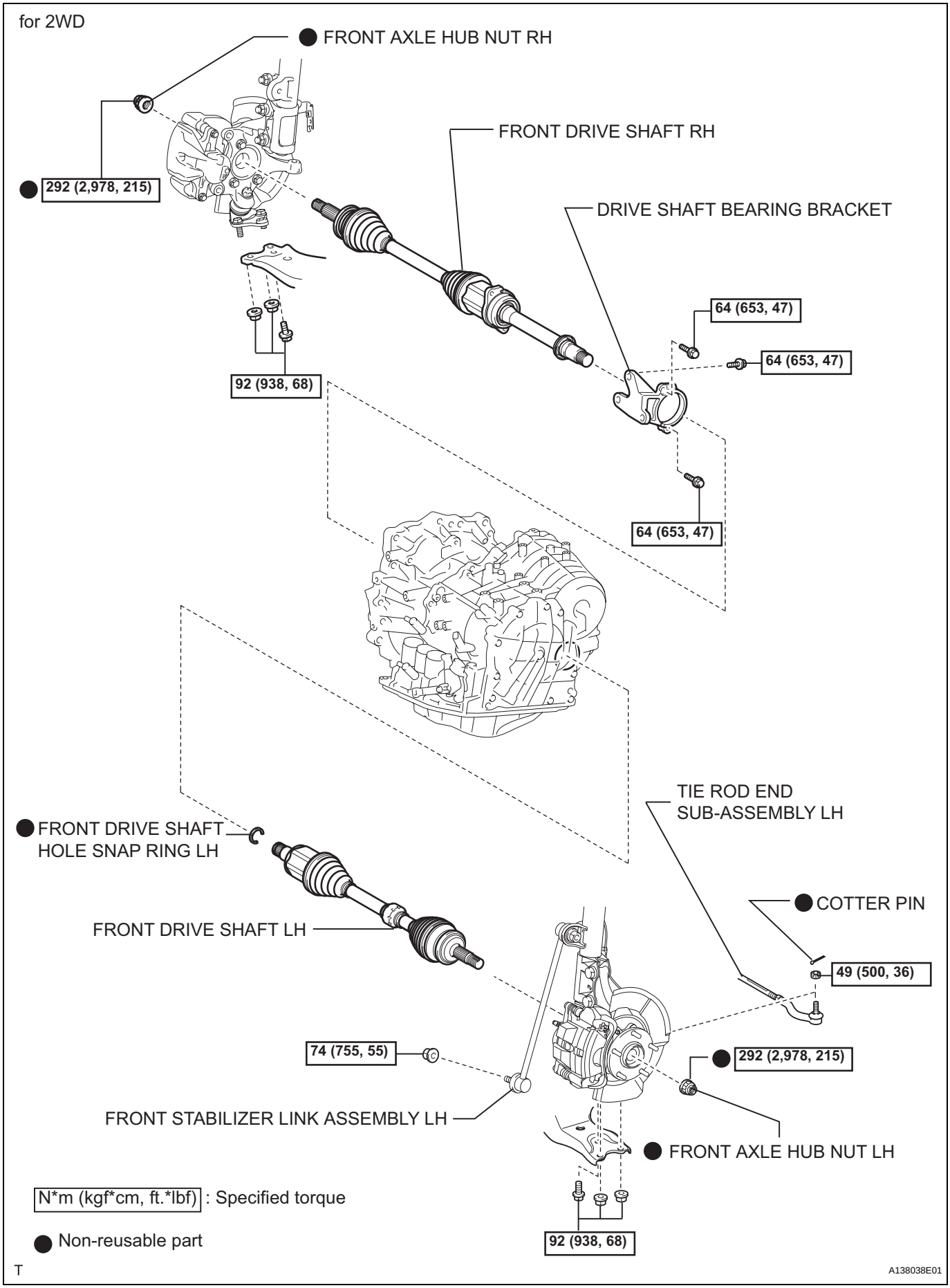
for 2WD
FRONT AXLE HUB NUT RH
292 (2,978, 215)
FRONT DRIVE SHAFT RH
DRIVE SHAFT BEARING BRACKET
64 (653, 47)
64 (653, 47)
92 (938, 68)
64 (653, 47)
TIE ROD END SUB-ASSEMBLY LH
FRONT DRIVE SHAFT HOLE SNAP RING LH
COTTER PIN
FRONT DRIVE SHAFT LH
49 (500, 36)
74 (755, 55)
292 (2,978, 215)
FRONT STABILIZER LINK ASSEMBLY LH
FRONT AXLE HUB NUT LH
92 (938, 68)
N*m (kgf*cm, ft.*lbf) : Specified torque
Non-reusable part
T
A138038E01

EM

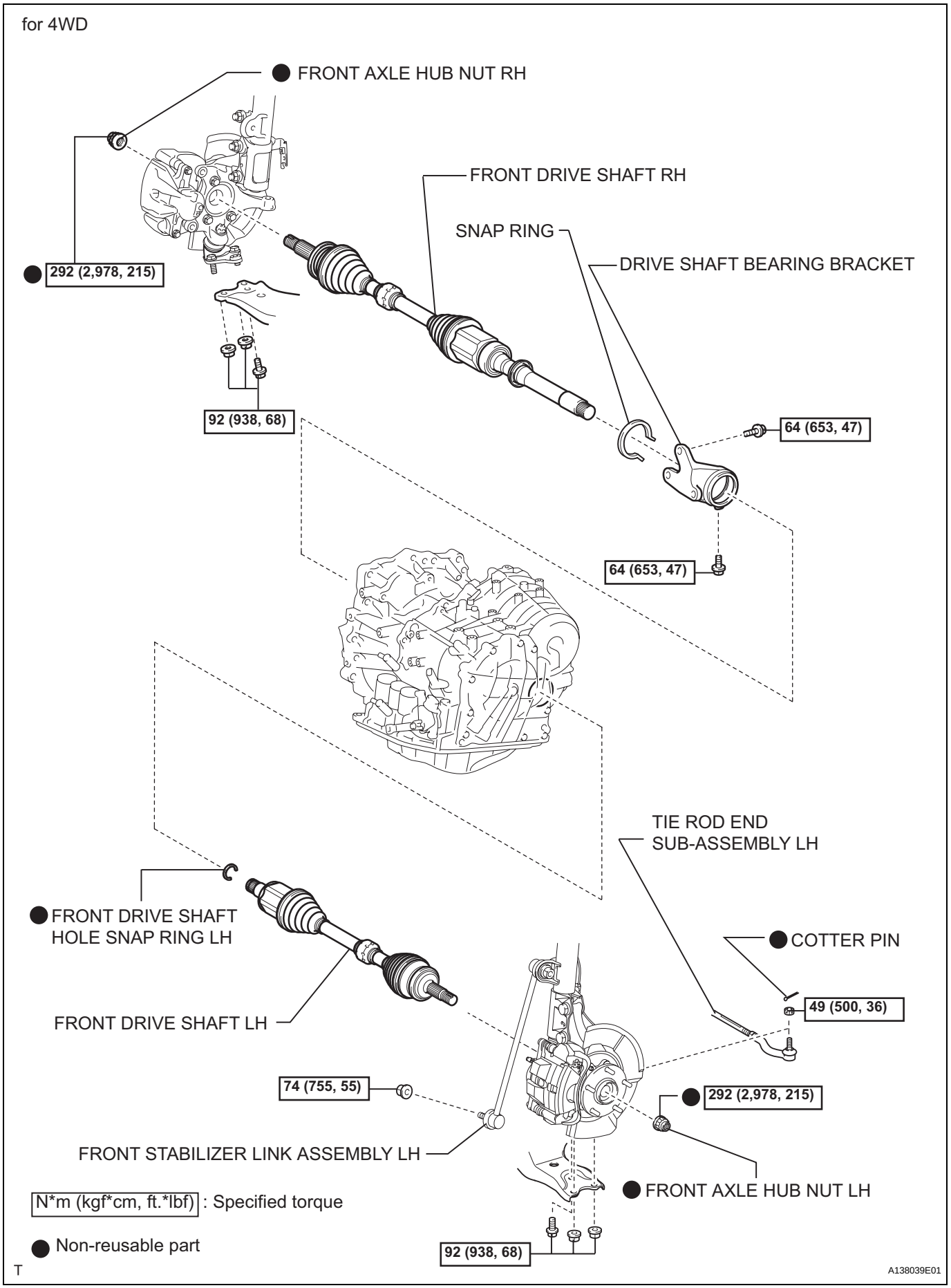
for 4WD
FRONT AXLE HUB NUT RH
292 (2,978, 215)
FRONT DRIVE SHAFT RH
SNAP RING
DRIVE SHAFT BEARING BRACKET
92 (938, 68)
64 (653, 47)
64 (653, 47)
TIE ROD END
SUB-ASSEMBLY LH
FRONT DRIVE SHAFT
HOLE SNAP RING LH
COTTER PIN
49 (500, 36)
FRONT DRIVE SHAFT LH
74 (755, 55)
292 (2,978, 215)
FRONT STABILIZER LINK ASSEMBLY LH
FRONT AXLE HUB NUT LH
N*m (kgf*cm, ft.*lbf) : Specified torque
Non-reusable part
92 (938, 68)
T
A138039E01

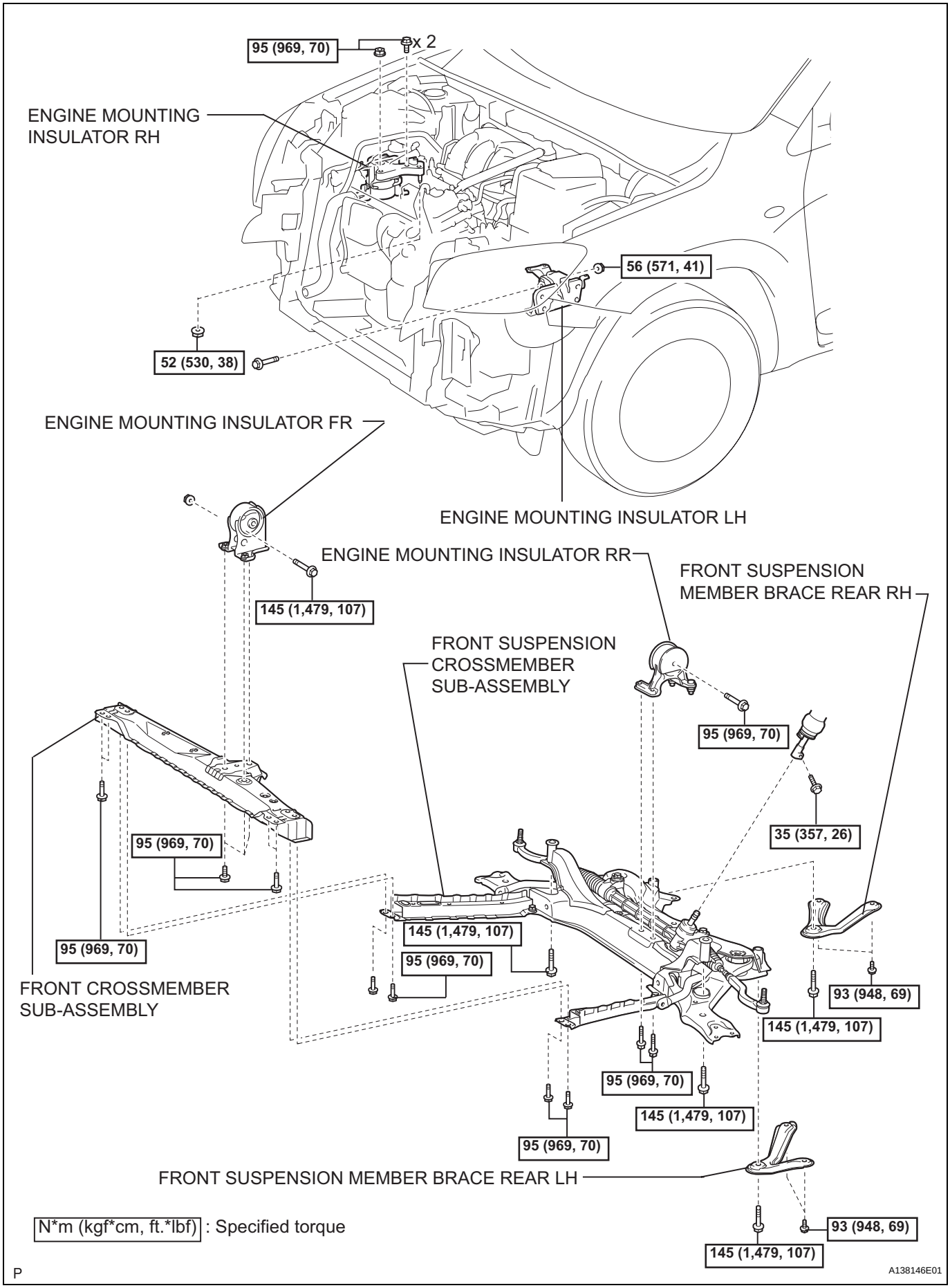
95 (969, 70)
x 2
ENGINE MOUNTING INSULATOR RH
56 (571, 41)
52 (530, 38)
ENGINE MOUNTING INSULATOR FR
ENGINE MOUNTING INSULATOR LH
ENGINE MOUNTING INSULATOR RR
145 (1,479, 107)
FRONT SUSPENSION MEMBER BRACE REAR RH
FRONT SUSPENSION CROSSMEMBER SUB-ASSEMBLY
95 (969, 70)
35 (357, 26)
95 (969, 70)
95 (969, 70)
145 (1,479, 107)
95 (969, 70)
FRONT CROSSMEMBER SUB-ASSEMBLY
93 (948, 69)
145 (1,479, 107)
95 (969, 70)
145 (1,479, 107)
95 (969, 70)
FRONT SUSPENSION MEMBER BRACE REAR LH
93 (948, 69)
145 (1,479, 107)
N*m (kgf*cm, ft.*lbf) : Specified torque
P
A138146E01

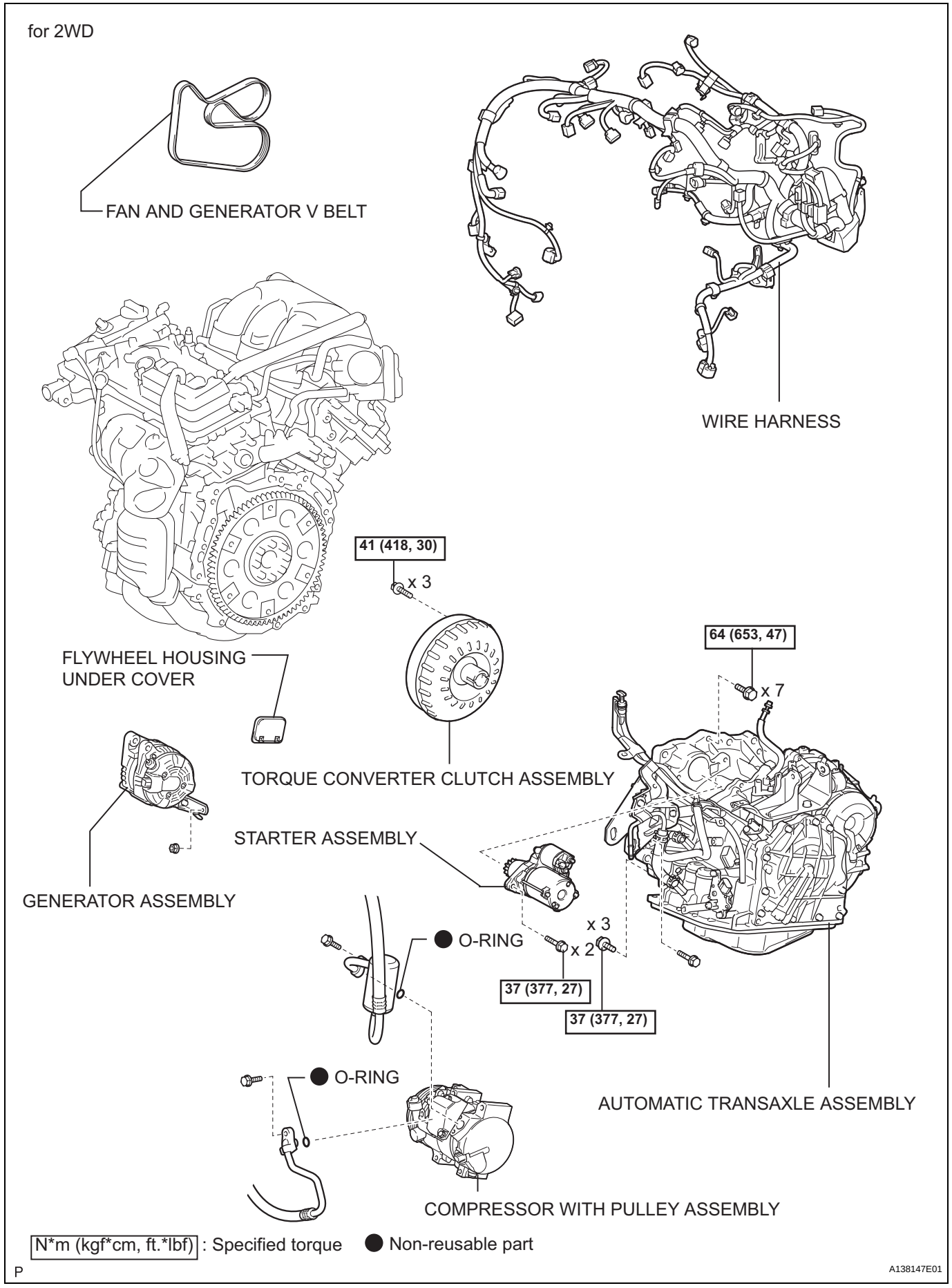
for 2WD
FAN AND GENERATOR V BELT
WIRE HARNESS
EM
41 (418, 30)
x 3
FLYWHEEL HOUSING UNDER COVER
TORQUE CONVERTER CLUTCH ASSEMBLY
64 (653, 47)
x 7
STARTER ASSEMBLY
GENERATOR ASSEMBLY
O-RING
x 3
x 2
37 (377, 27)
37 (377, 27)
O-RING
AUTOMATIC TRANSAXLE ASSEMBLY
COMPRESSOR WITH PULLEY ASSEMBLY
N*m (kgf*cm, ft.*lbf) : Specified torque
Non-reusable part
P
A138147E01

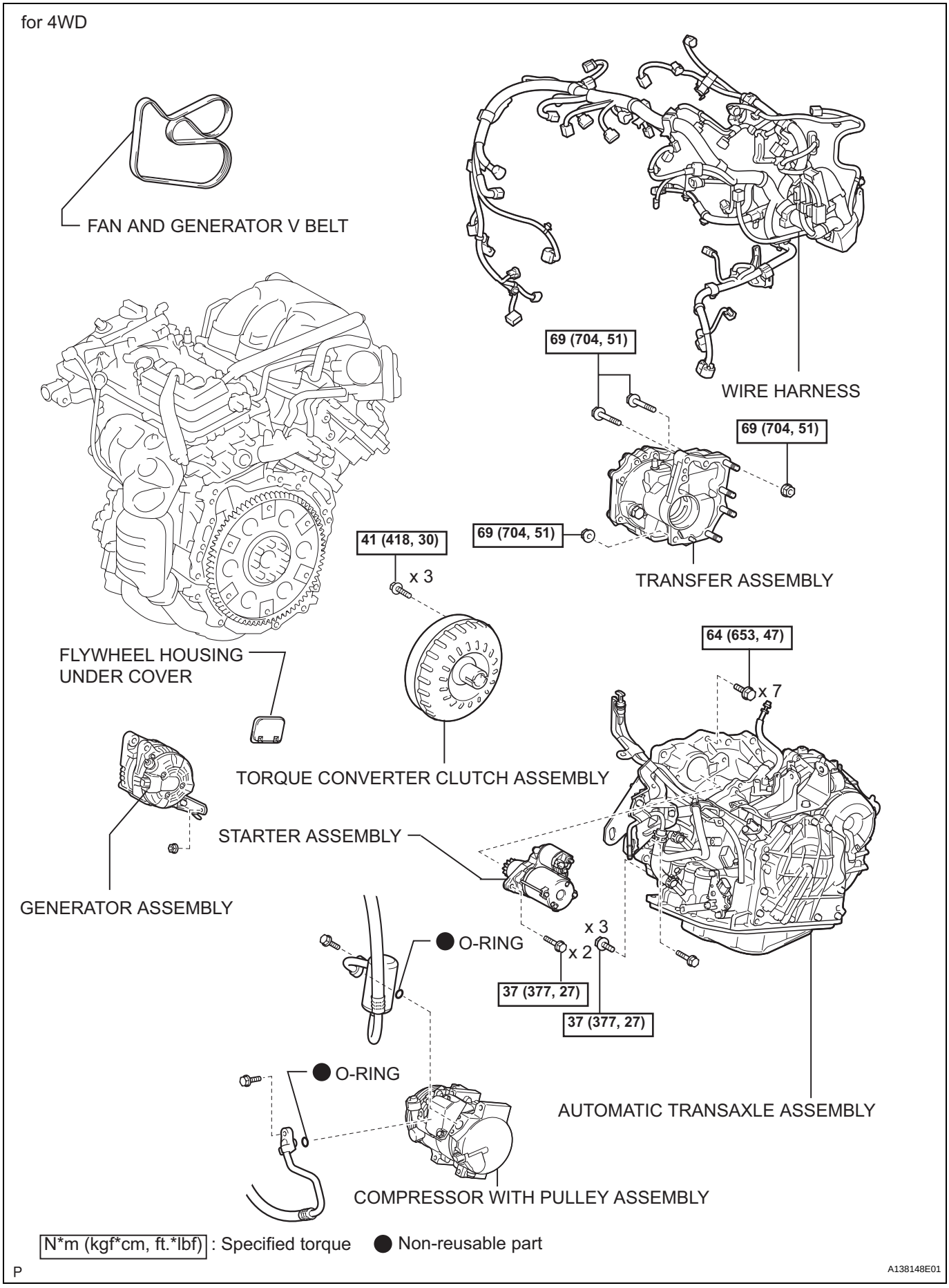
for 4WD
FAN AND GENERATOR V BELT
WIRE HARNESS
69 (704, 51)
69 (704, 51)
69 (704, 51)
TRANSFER ASSEMBLY
41 (418, 30)
x 3
FLYWHEEL HOUSING UNDER COVER
TORQUE CONVERTER CLUTCH ASSEMBLY
64 (653, 47)
x 7
STARTER ASSEMBLY
GENERATOR ASSEMBLY
O-RING
x 3
x 2
37 (377, 27)
37 (377, 27)
O-RING
AUTOMATIC TRANSAXLE ASSEMBLY
COMPRESSOR WITH PULLEY ASSEMBLY
N*m (kgf*cm, ft.*lbf) : Specified torque
Non-reusable part
P
A138148E01

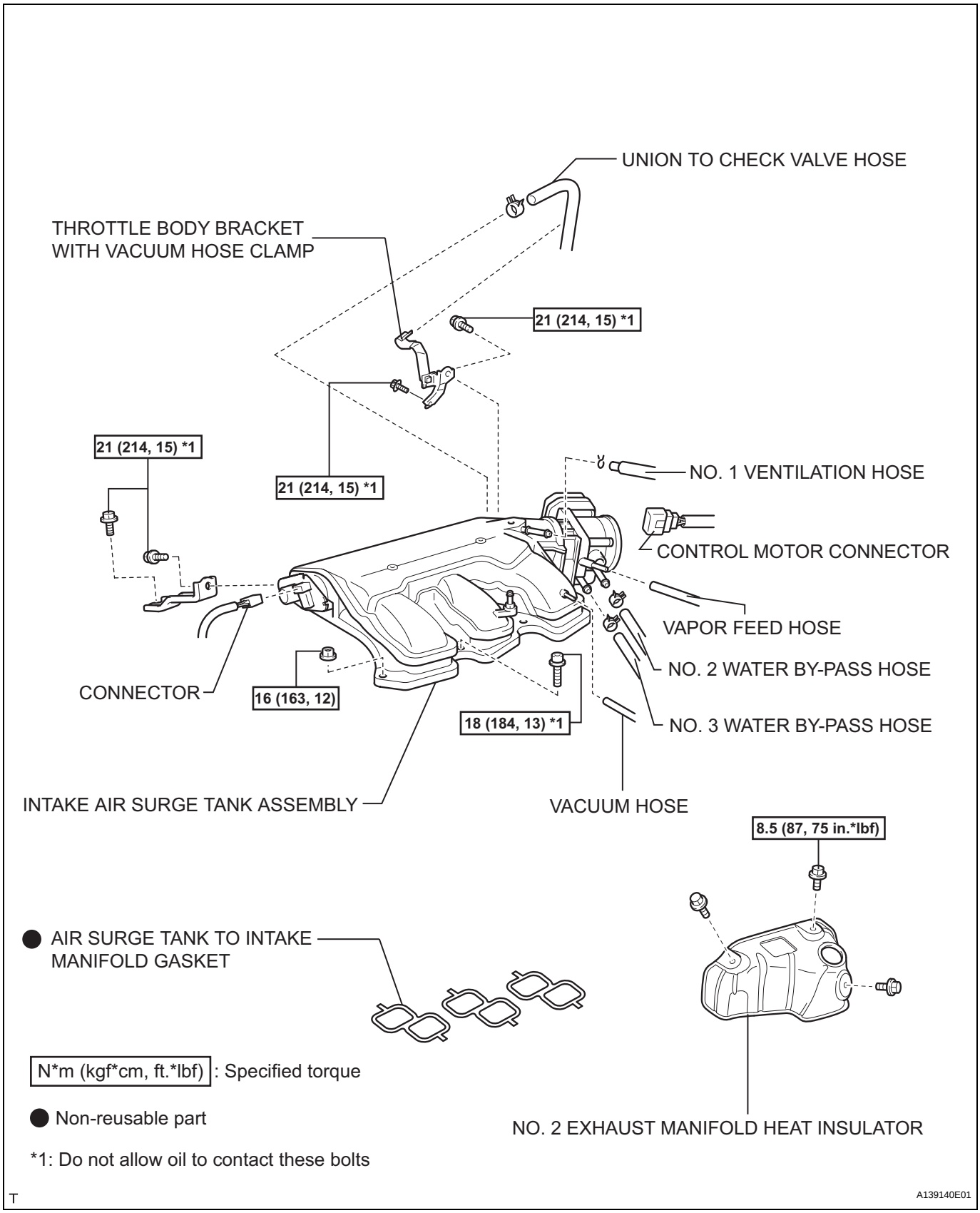
UNION TO CHECK VALVE HOSE
THROTTLE BODY BRACKET WITH VACUUM HOSE CLAMP
21 (214, 15) *1
21 (214, 15) *1
21 (214, 15) *1
NO. 1 VENTILATION HOSE
CONTROL MOTOR CONNECTOR
VAPOR FEED HOSE
NO. 2 WATER BY-PASS HOSE
NO. 3 WATER BY-PASS HOSE
CONNECTOR
16 (163, 12)
18 (184, 13) *1
INTAKE AIR SURGE TANK ASSEMBLY
VACUUM HOSE
8.5 (87, 75 in.*lbf)
● AIR SURGE TANK TO INTAKE MANIFOLD GASKET
N*m (kgf*cm, ft.*lbf) : Specified torque
● Non-reusable part
*1: Do not allow oil to contact these bolts
NO. 2 EXHAUST MANIFOLD HEAT INSULATOR
T
A139140E01

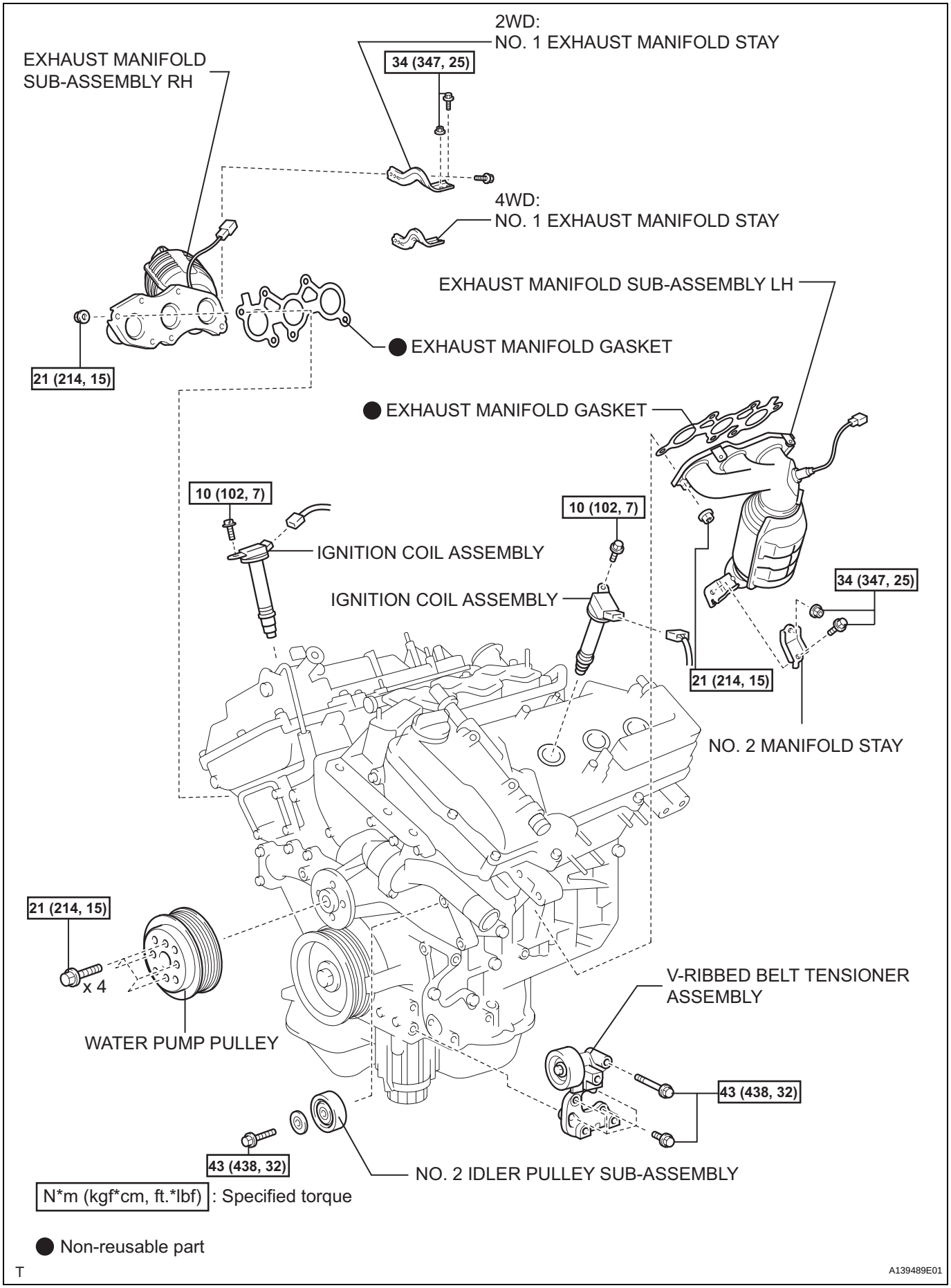
2WD:
NO. 1 EXHAUST MANIFOLD STAY
34 (347, 25)
EXHAUST MANIFOLD SUB-ASSEMBLY RH
4WD:
NO. 1 EXHAUST MANIFOLD STAY
EXHAUST MANIFOLD SUB-ASSEMBLY LH
EXHAUST MANIFOLD GASKET
21 (214, 15)
EXHAUST MANIFOLD GASKET
10 (102, 7)
10 (102, 7)
IGNITION COIL ASSEMBLY
IGNITION COIL ASSEMBLY
34 (347, 25)
21 (214, 15)
NO. 2 MANIFOLD STAY
21 (214, 15)
x 4
WATER PUMP PULLEY
V-RIBBED BELT TENSIONER ASSEMBLY
43 (438, 32)
43 (438, 32)
NO. 2 IDLER PULLEY SUB-ASSEMBLY
N*m (kgf*cm, ft.*lbf) : Specified torque
Non-reusable part
T
A139489E01

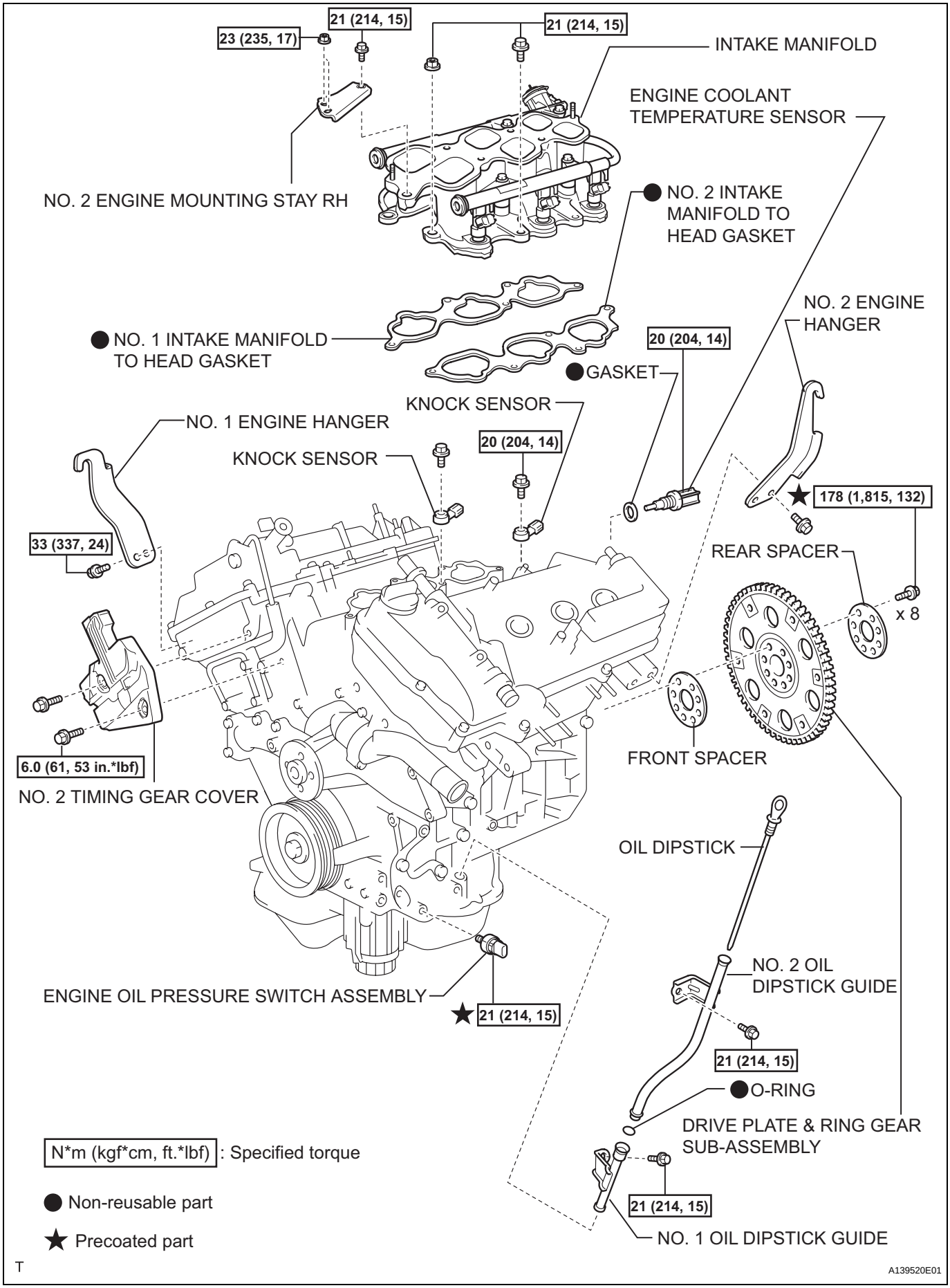
21 (214, 15)
23 (235, 17)
21 (214, 15)
INTAKE MANIFOLD
ENGINE COOLANT TEMPERATURE SENSOR
NO. 2 ENGINE MOUNTING STAY RH
NO. 2 INTAKE MANIFOLD TO HEAD GASKET
NO. 2 ENGINE HANGER
NO. 1 INTAKE MANIFOLD TO HEAD GASKET
20 (204, 14)
GASKET
KNOCK SENSOR
NO. 1 ENGINE HANGER
20 (204, 14)
KNOCK SENSOR
178 (1,815, 132)
33 (337, 24)
REAR SPACER
x 8
6.0 (61, 53 in.*lbf)
FRONT SPACER
NO. 2 TIMING GEAR COVER
OIL DIPSTICK
NO. 2 OIL DIPSTICK GUIDE
ENGINE OIL PRESSURE SWITCH ASSEMBLY
21 (214, 15)
21 (214, 15)
O-RING
DRIVE PLATE & RING GEAR SUB-ASSEMBLY
21 (214, 15)
NO. 1 OIL DIPSTICK GUIDE
N*m (kgf*cm, ft.*lbf) : Specified torque
Non-reusable part
Precoated part
T
A139520E01

DISASSEMBLY

1. **REMOVE OIL FILLER CAP SUB-ASSEMBLY**
2. **REMOVE SPARK PLUG**
3. **REMOVE CAMSHAFT TIMING CONTROL VALVE ASSEMBLY (See page ES-440)**
4. **REMOVE VVT SENSOR (See page ES-443)**
5. **REMOVE WATER OUTLET**
   (a) Remove the 2 bolts, 4 nuts and water outlet.

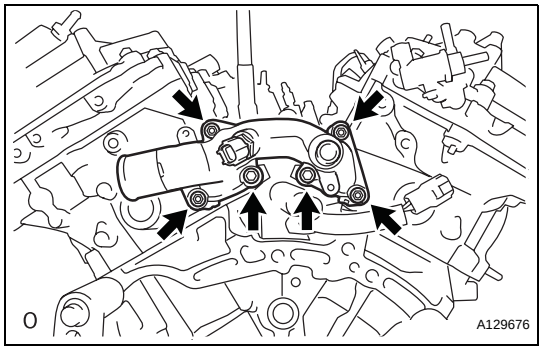

   (b) Remove the 2 gaskets and O-ring.

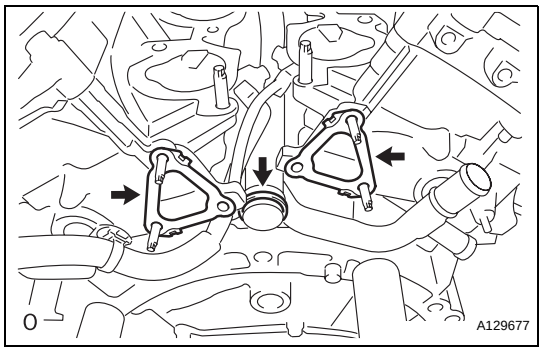

6. **REMOVE OIL PIPE**
   (a) Remove the bolt, 2 union bolts and oil pipe.
   (b) Remove the oil control valve filter RH and gaskets.

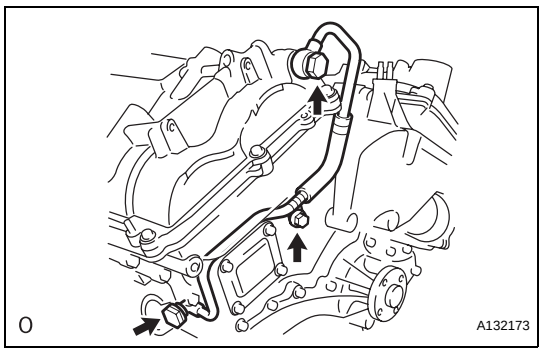

7. **REMOVE CYLINDER HEAD COVER SUB-ASSEMBLY (for Bank 1)**
   (a) Remove the 12 bolts, cylinder head cover and gasket.
   HINT:
   Make sure the removed parts are returned to the same places they were remove a from.

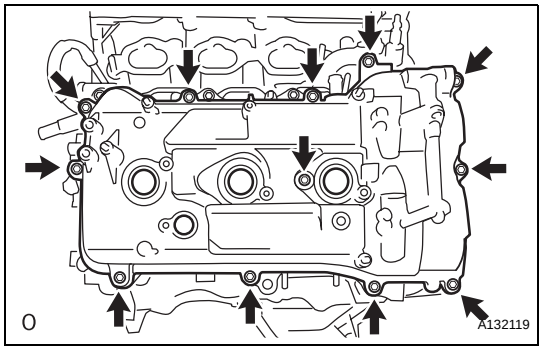

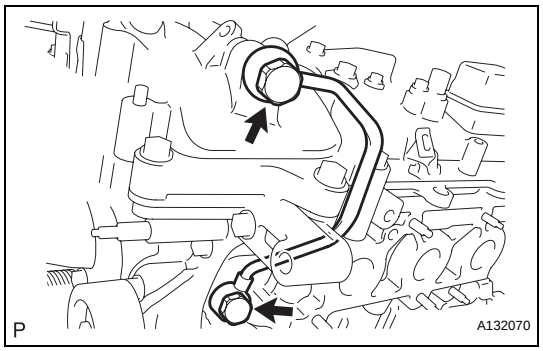

8. **REMOVE NO. 1 OIL PIPE**
   (a) Remove the 2 union bolts and oil pipe.
   (b) Remove the oil control valve filter LH and gaskets.

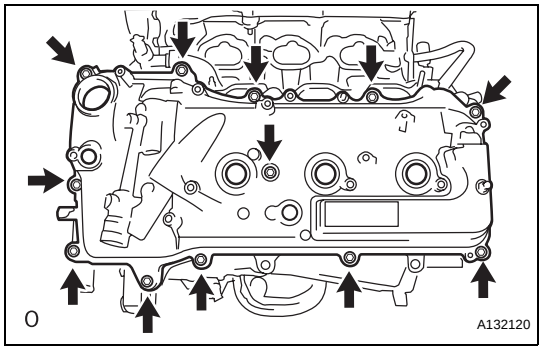

9. **REMOVE CYLINDER HEAD COVER SUB-ASSEMBLY (for Bank 2)**
   (a) Remove the 12 bolts, cylinder head cover and gasket.
   HINT:
   Make sure the removed parts are returned to the same places they were remove a from.

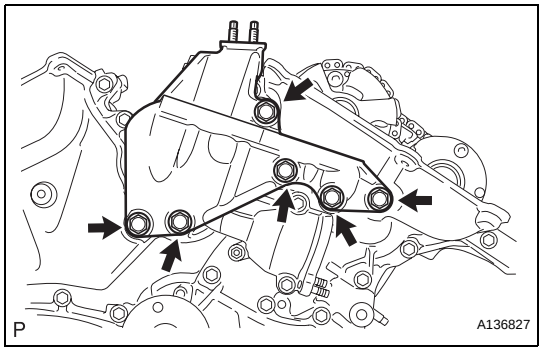

10. **REMOVE FRONT NO. 1 ENGINE MOUNTING BRACKET**
    (a) Remove the 6 bolts and mounting bracket.
11. **REMOVE WATER INLET HOUSING (See page CO-12)**
12. **REMOVE OIL FILTER CAP ASSEMBLY (See page LU-4)**
13. **REMOVE OIL FILTER ELEMENT (See page LU-5)**
14. **REMOVE NO. 2 OIL PAN SUB-ASSEMBLY (See page LU-12)**
15. **REMOVE OIL STRAINER SUB-ASSEMBLY (See page LU-13)**
16. **REMOVE OIL PAN SUB-ASSEMBLY (See page LU-13)**

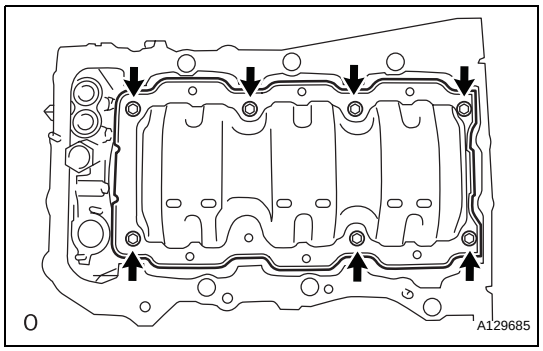

17. **REMOVE OIL PAN BAFFLE PLATE**
    (a) Remove the 7 bolts and baffle plate.

EM

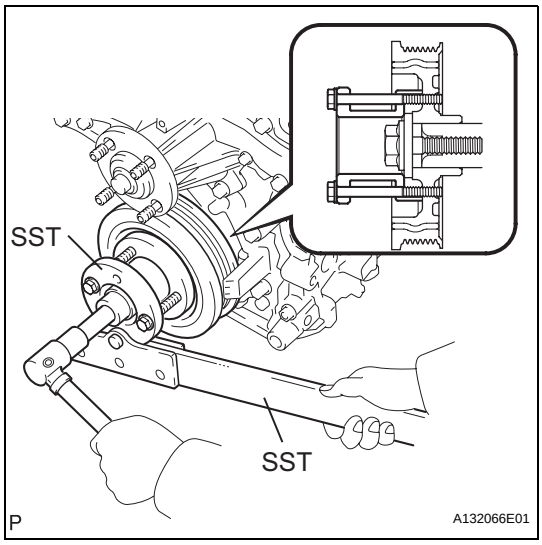

18. REMOVE CRANKSHAFT PULLEY

(a) Using SST, loosen the crankshaft pulley set bolt.
SST 09213-70011 (09213-70020), 09330-00021

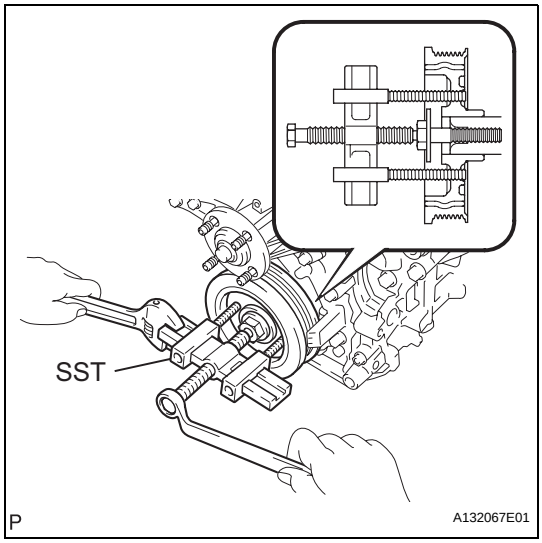

(b) Using the pulley set bolt and SST, remove the crankshaft pulley.
SST 09950-50013 (09951-05010, 09952-05010, 09953-05020, 09954-05021)

19. REMOVE WATER PUMP ASSEMBLY (See page CO-13)

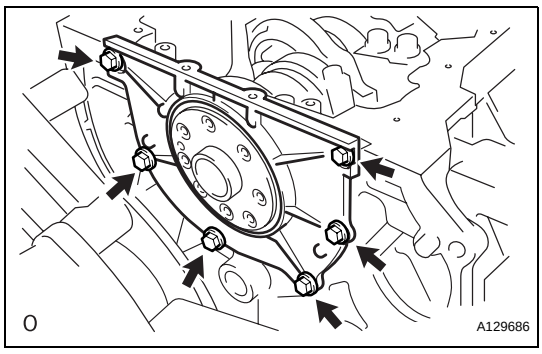

20. REMOVE ENGINE REAR OIL SEAL RETAINER

(a) Remove the 6 bolts.

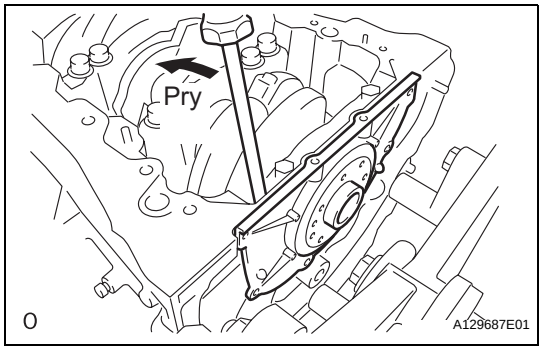

(b) Using a screwdriver, pry out the oil seal retainer.
HINT:
Tape the screwdriver tip before use.

21. REMOVE TIMING CHAIN COVER SUB-ASSEMBLY (w/ Oil Pump) (See page LU-14)

22. SET NO. 1 CYLINDER TO TDC / COMPRESSION

(a) Temporarily tighten the pulley set bolt.

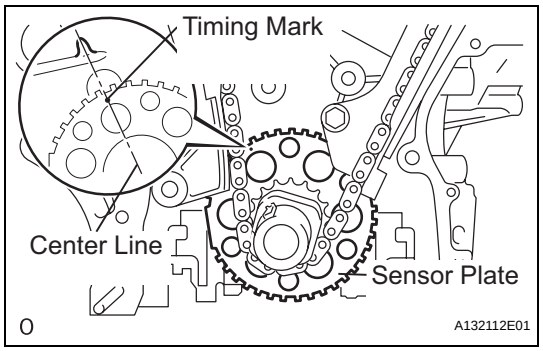

(b) Set the timing mark on the crank angle sensor plate to the RH block bore center line (TDC / compression).

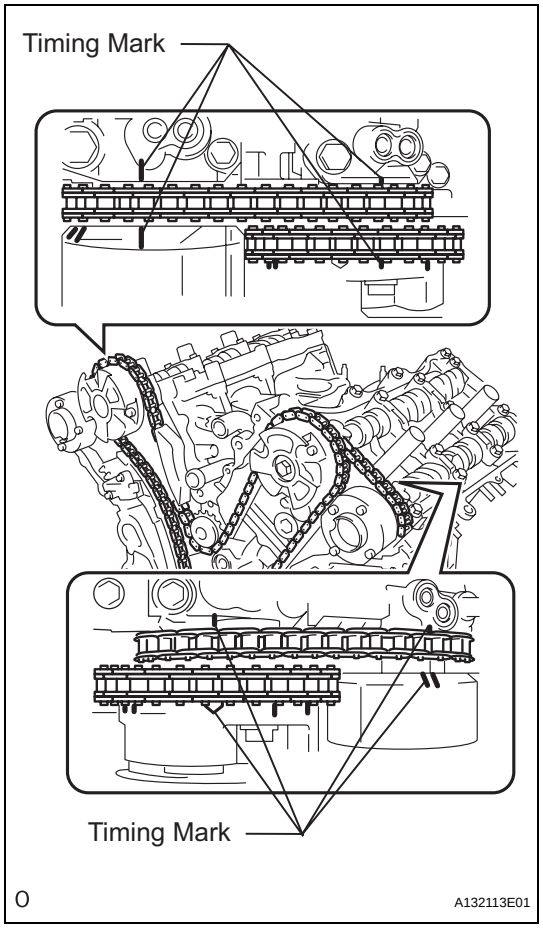

(c) Check that the timing marks of the camshaft timing gears are aligned with the timing marks of the bearing cap as shown in the illustration. If not, turn the crankshaft 1 revolution (360°) and align the timing marks as above.

EM

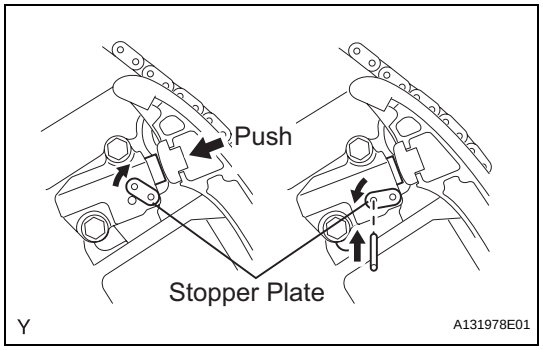

23. REMOVE NO. 1 CHAIN TENSIONER ASSEMBLY

(a) Move the stopper plate upward to release the lock, and push the plunger deep into the tensioner.
(b) Move the stopper plate downward to set the lock, and insert a hexagon wrench into the stopper plate hole.
(c) Remove the 2 bolts and chain tensioner.

24. REMOVE CHAIN TENSIONER SLIPPER

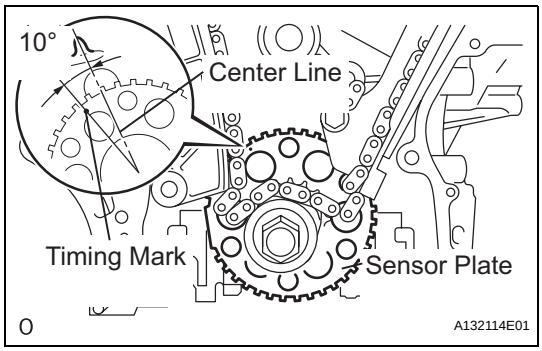

25. REMOVE NO. 1 CHAIN SUB-ASSEMBLY

(a) Turn the crankshaft counterclockwise 10° to loosen the chain of the crankshaft timing gear.

(b) Remove the chain from the crankshaft timing gear and place it on the crankshaft.

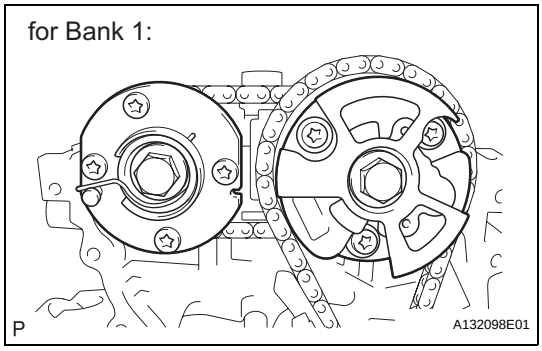

(c) Turn the camshaft timing gear on the RH bank clockwise (approximately 60°) and set it as shown in the illustration. Be sure to loosen the chain between the center banks.

(d) Remove the chain.

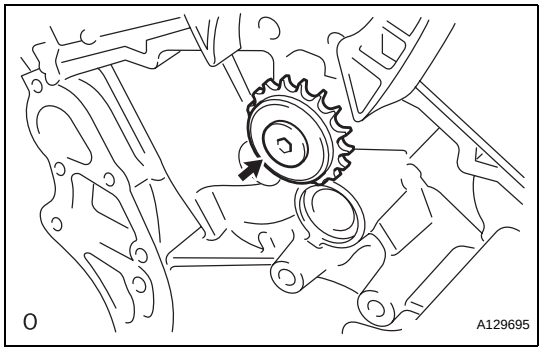

26. REMOVE IDLE SPROCKET ASSEMBLY

(a) Using a 10 mm hexagon wrench, remove the No. 2 idle gear shaft, idle sprocket and No. 1 idle gear shaft.

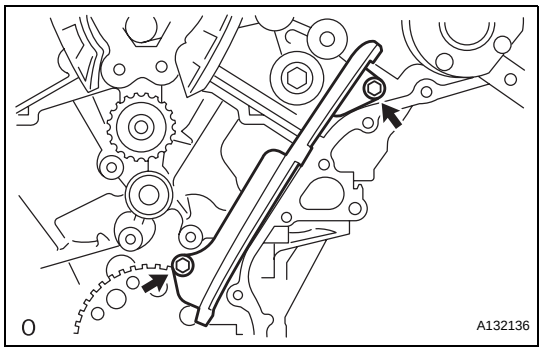

27. REMOVE NO. 1 CHAIN VIBRATION DAMPER

(a) Remove the 2 bolts and vibration damper.

28. REMOVE NO. 2 CHAIN VIBRATION DAMPERS

(a) Remove the 2 chain vibration dampers.

29. REMOVE CRANKSHAFT TIMING GEAR OR SPROCKET

(a) Remove the pulley set bolt.

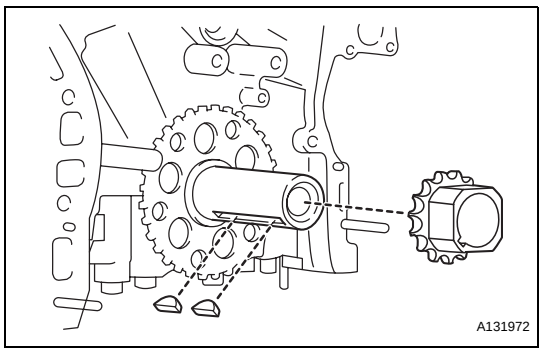

(b) Remove the crankshaft timing gear from the crankshaft.

(c) Remove the 2 pulley set keys from the crankshaft.

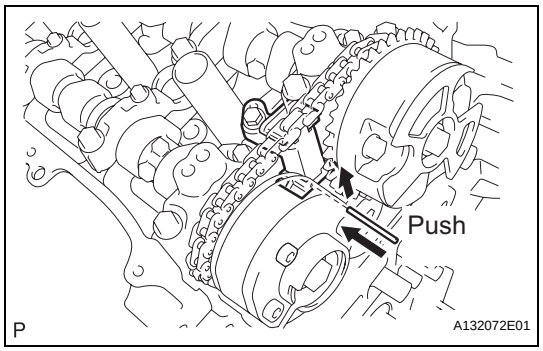

30. REMOVE CAMSHAFT TIMING GEAR ASSEMBLY (for Bank 1)

(a) While raising up the No. 2 chain tensioner, insert a pin of ϕ1.0 mm (0.039 in.) into the hole to fix it in place.

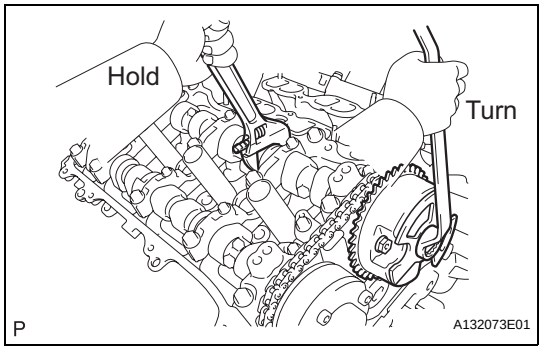

(b) Hold the hexagonal portion of the camshaft with a wrench, and remove the 2 bolts and 2 camshaft timing gears.

NOTICE:

- **Be careful not to damage the cylinder head with the wrench.**
- **Do not disassemble the camshaft timing gear.**

(c) Remove the No. 2 chain.

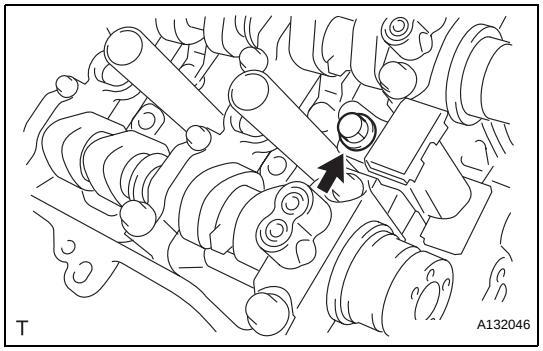

31. REMOVE NO. 2 CHAIN TENSIONER ASSEMBLY

(a) Remove the bolt and chain tensioner.

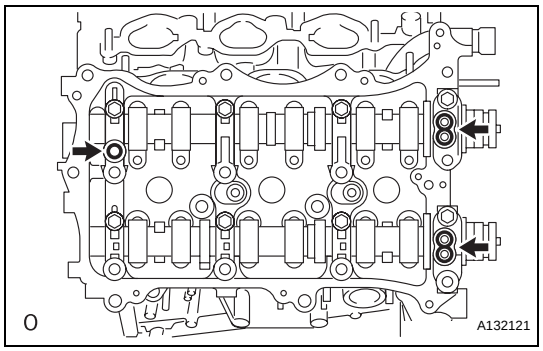

32. REMOVE CAMSHAFT (for Bank 1)

(a) Remove the 3 gaskets.

EM

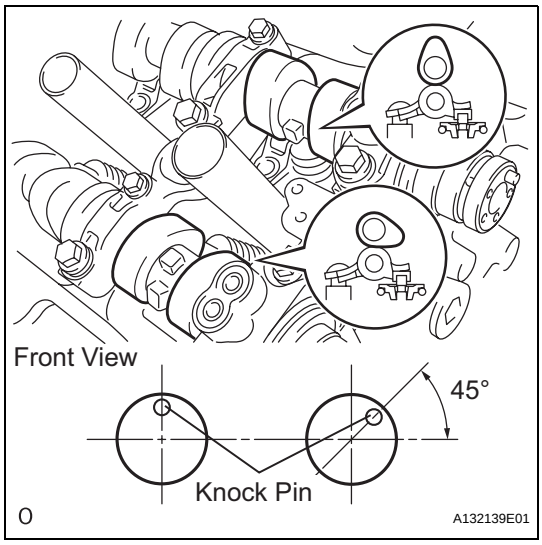

(b) Make sure that the knock pin of the camshaft is positioned as shown in the illustration.

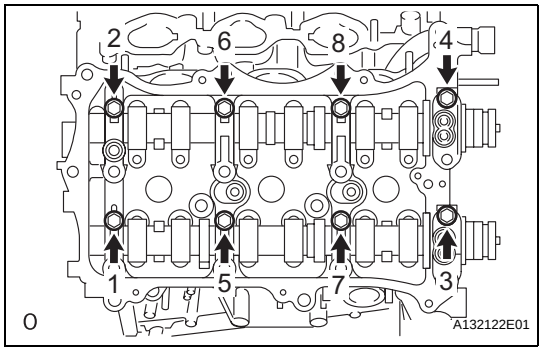

(c) Uniformly loosen and remove the 8 bearing cap bolts in the sequence shown in the illustration.

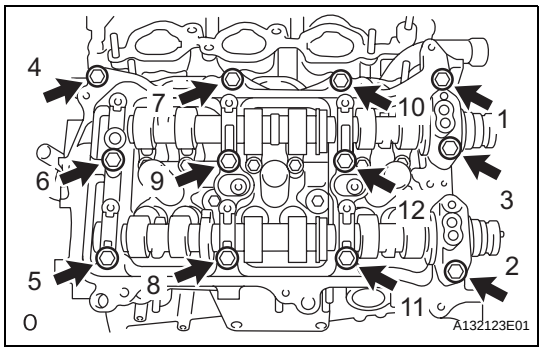

(d) Uniformly loosen and remove the 12 bearing cap bolts in the sequence shown in the illustration.
NOTICE:
Uniformly loosen the bolts while keeping the camshaft level.

(e) Remove the 5 bearing caps.

(f) Remove the No. 1 and No. 2 camshafts.

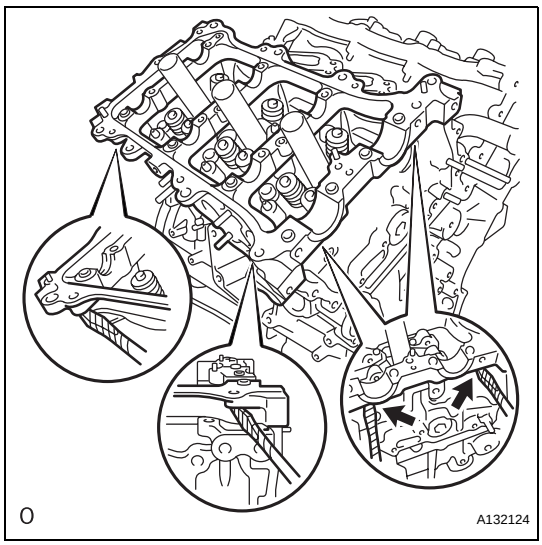

33. REMOVE CAMSHAFT HOUSING SUB-ASSEMBLY (for Bank 1)

(a) Remove the camshaft housing by prying between the cylinder head and camshaft housing with a screwdriver.
NOTICE:
Be careful not to damage the contact surfaces of the cylinder head and camshaft housing.
HINT:
Tape the screwdriver tip before use.

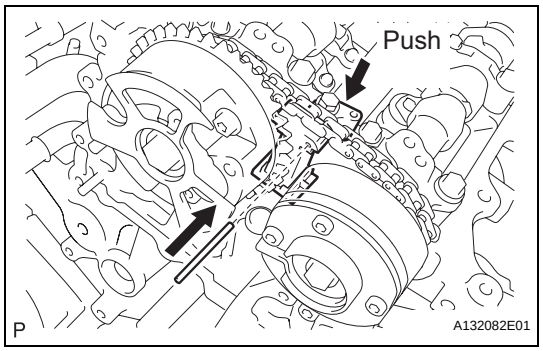

34. REMOVE CAMSHAFT TIMING GEAR ASSEMBLY (for Bank 2)

(a) While pushing down the chain tensioner, insert a pin of ϕ1.0 mm (0.039 in.) into the hole to fix it in place.

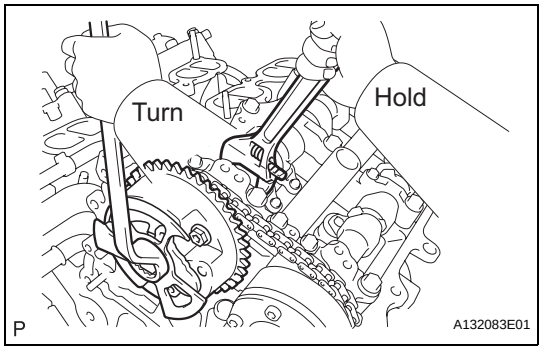

(b) Hold the hexagonal portion of the camshaft with a wrench and remove the 2 bolts and 2 camshaft timing gears.

NOTICE:

- **Be careful not to damage the cylinder head with the wrench.**
- **Do not disassemble the camshaft timing gear.**

(c) Remove the No. 2 chain.

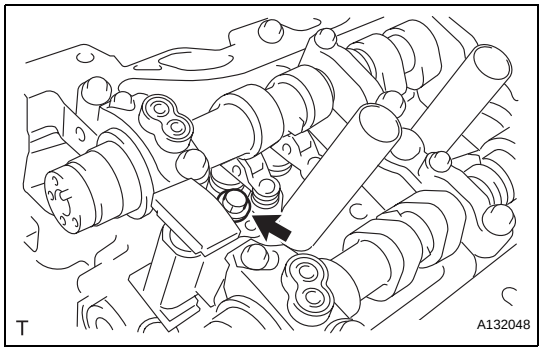

35. REMOVE NO. 3 CHAIN TENSIONER ASSEMBLY

(a) Remove the bolt and chain tensioner.

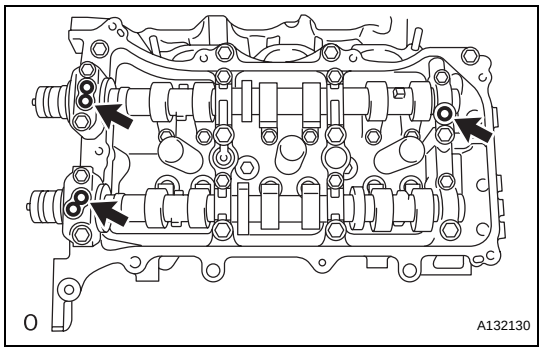

36. REMOVE CAMSHAFT SUB-ASSEMBLY (for Bank 2)

(a) Remove the 3 gaskets.

EM

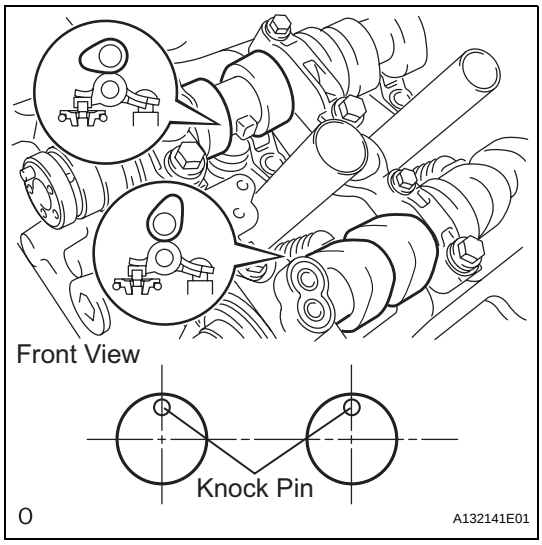

(b) Make sure that the knock pin of the camshaft is positioned as shown in the illustration.

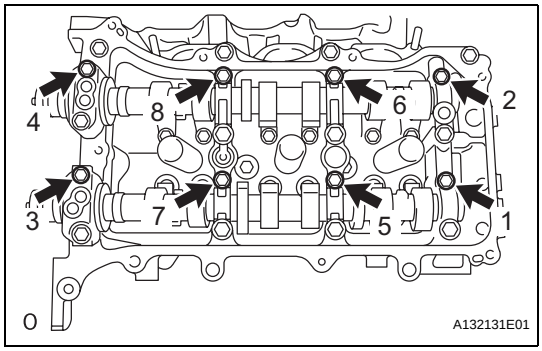

(c) Uniformly loosen and remove the 8 bearing cap bolts in the sequence shown in the illustration.

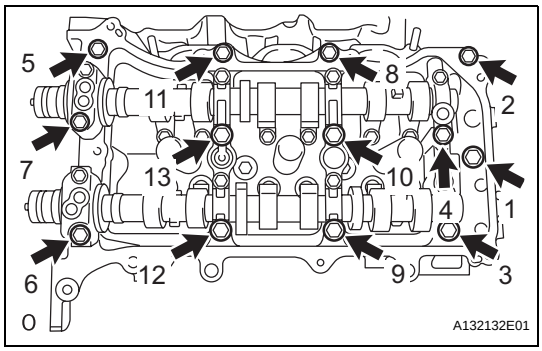

(d) Uniformly loosen and remove the 13 bearing cap bolts in the sequence shown in the illustration.
NOTICE:
Uniformly loosen the bolts while keeping the camshaft level.

(e) Remove the 5 bearing caps.

(f) Remove the No. 3 and No. 4 camshafts.

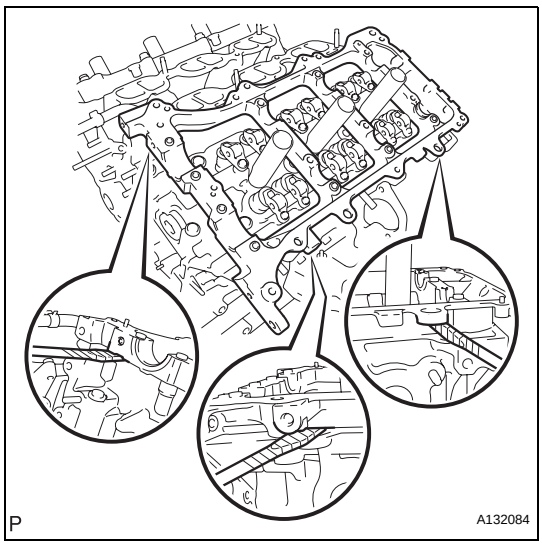

37. REMOVE CAMSHAFT HOUSING SUB-ASSEMBLY (for Bank 2)

(a) Remove the camshaft housing by prying between the cylinder head and camshaft housing with a screwdriver.
NOTICE:
Be careful not to damage the contact surfaces of the cylinder head and camshaft housing.
HINT:
Tape the screwdriver tip before use.

38. REMOVE NO. 1 VALVE ROCKER ARM SUB-ASSEMBLY

(a) Remove the 24 valve rocker arms.
HINT:
Arrange the removed parts in the correct order.

39. REMOVE VALVE LASH ADJUSTER ASSEMBLY

(a) Remove the 24 valve lash adjusters from the cylinder head.
HINT:
Arrange the removed parts in the correct order.

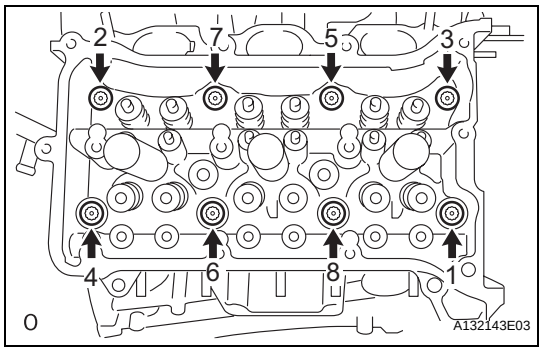

40. REMOVE CYLINDER HEAD SUB-ASSEMBLY (for Bank 1)

(a) Using a 10 mm bi-hexagon wrench, uniformly loosen the 8 bolts in the sequence shown in the illustration. Remove the 8 cylinder head bolts and plate washers.
NOTICE:
- **Be careful not to drop washers into the cylinder head.**
- **Head warpage or cracking could result from removing bolts in an incorrect order.**

HINT:
Be sure to keep the removed parts separate for each installation position.

(b) Remove the cylinder head and gasket.

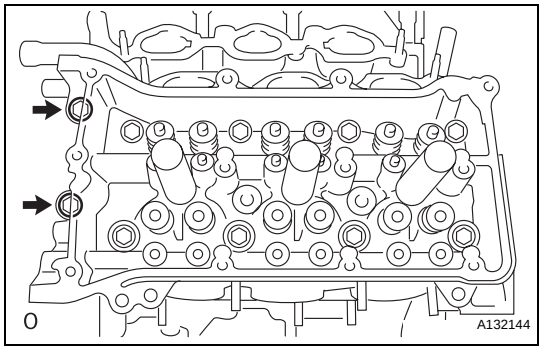

41. REMOVE CYLINDER HEAD SUB-ASSEMBLY (for Bank 2)

(a) Uniformly loosen and remove the 2 bolts in the sequence shown in the illustration.

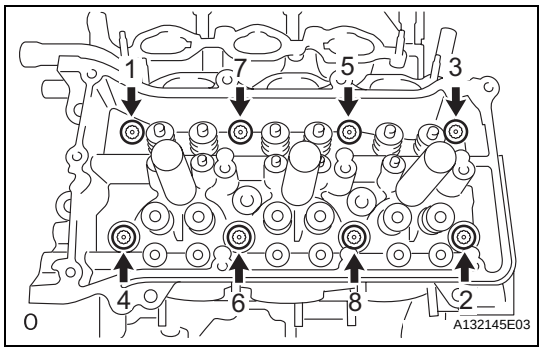

(b) Using a 10 mm bi-hexagon wrench, uniformly loosen the 8 bolts in the sequence shown in the illustration. Remove the 8 cylinder head bolts and plate washers.
NOTICE:
- **Be careful not to drop washers into the cylinder head.**
- **Head warpage or cracking could result from removing bolts in an incorrect order.**

HINT:
Be sure to keep the removed parts separate for each installation position.

(c) Remove the cylinder head and gasket.

42. REMOVE WATER INLET PIPE

(a) Disconnect the knock sensor wire.

EM

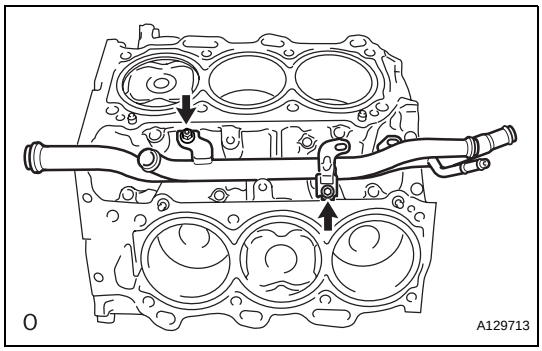

(b) Remove the 2 bolts and water outlet pipe.
(c) Disconnect the water by-pass hose.

43. REMOVE VALVE STEM CAP

(a) Remove the valve stem caps from the cylinder head.
HINT:
Arrange the removed parts in the correct order.

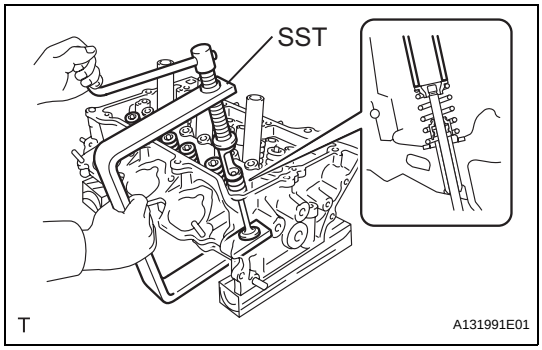

44. REMOVE INTAKE VALVE

(a) Using SST and wooden blocks, compress the compression spring and remove the valve retainer lock.
SST 09202-70020 (09202-00010)
(b) Remove the retainer, compression spring and valve.
HINT:
Arrange the removed parts in the correct order.

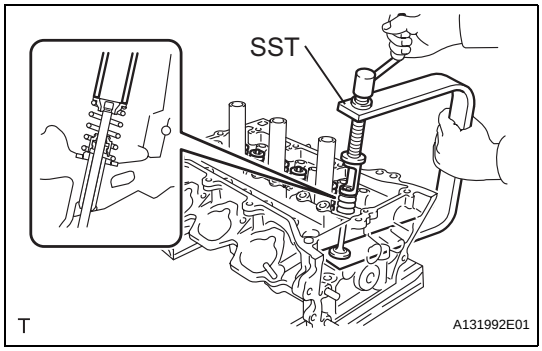

45. REMOVE EXHAUST VALVE

(a) Using SST and wooden blocks, compress the compression spring and remove the valve retainer lock.
SST 09202-70020 (09202-00010)
(b) Remove the retainer, compression spring and valve.
HINT:
Arrange the removed parts in the correct order.

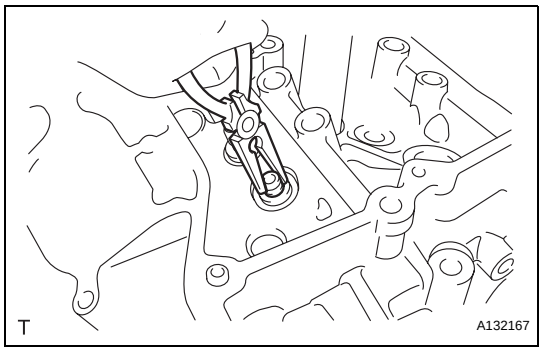

46. REMOVE VALVE STEM OIL SEAL

(a) Using needle-nose pliers, remove the oil seals.

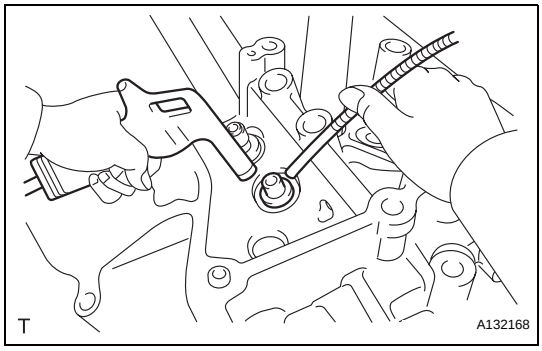

47. REMOVE VALVE SPRING SEAT

(a) Using compressed air and a magnetic finger, remove the valve spring seat by blowing air onto it.

48. REMOVE NO. 1 STRAIGHT SCREW PLUG
NOTICE:
If water leaks from the No. 1 screw plug or the plug is corroded, replace it.

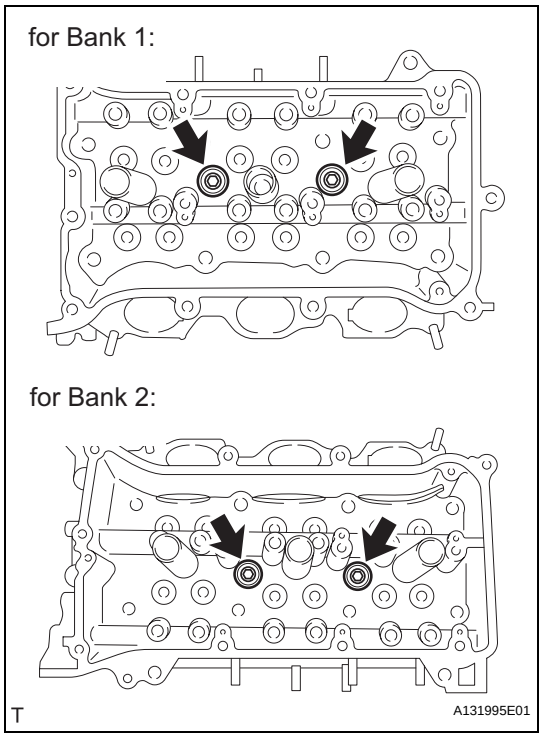

(a) Using a 10 mm hexagon wrench, remove the 4 screw plugs and 4 gaskets.

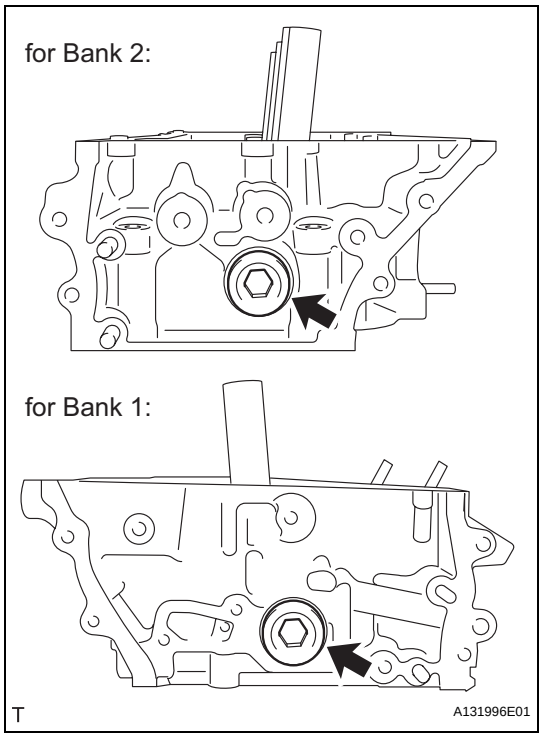

49. REMOVE NO. 2 STRAIGHT SCREW PLUG

(a) Using a 14 mm hexagon wrench, remove the 2 screw plugs and 2 gaskets.

NOTICE:

If water leaks from the No. 2 screw plug or the plug is corroded, replace it.

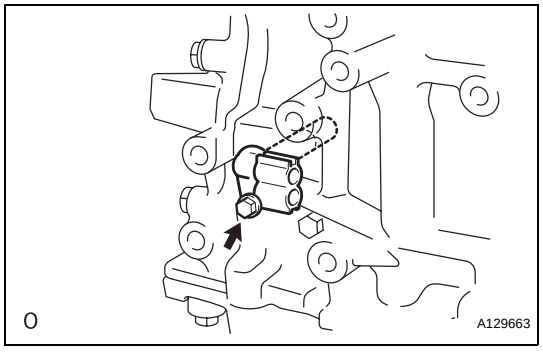

50. REMOVE CRANKSHAFT POSITION SENSOR

(a) Remove the bolt and crankshaft position sensor.

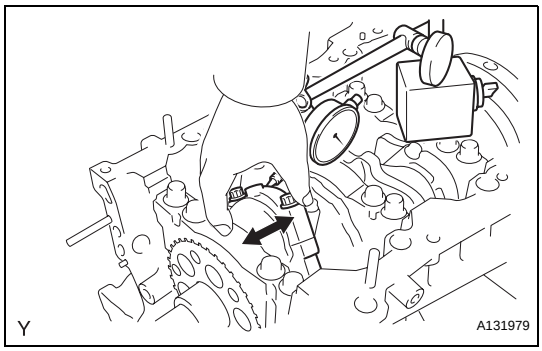

51. INSPECT CONNECTING ROD THRUST CLEARANCE

(a) Using a dial indicator, measure the thrust clearance while moving the connecting rod back and forth.
Standard thrust clearance:
0.15 to 0.40 mm (0.0059 to 0.0157 in.)
Maximum thrust clearance:
0.50 mm (0.0197 in.)
If the thrust clearance is greater than the maximum, replace one or more connecting rods as necessary.
If necessary, replace the crankshaft.

52. INSPECT CONNECTING ROD OIL CLEARANCE

(a) Check that the front mark on the connecting rod and cap are aligned to ensure the correct reassembly.
NOTICE:
The front mark on the connecting rods and caps are for ensuring the correct reassembly.

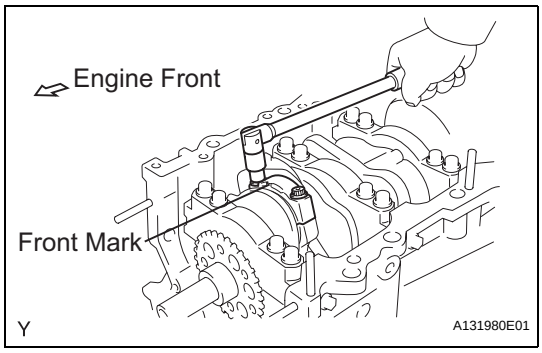

(b) Remove the 2 connecting rod cap bolts.

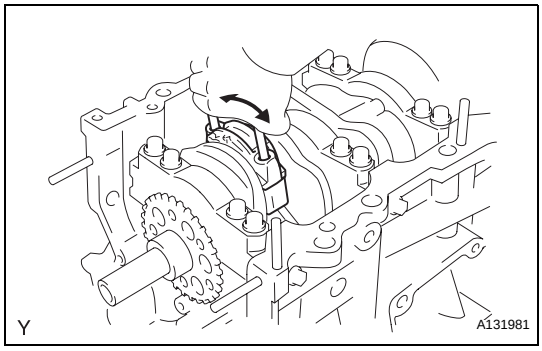

(c) Using the 2 removed connecting rod cap bolts, remove the connecting rod cap and lower bearing by wiggling the connecting rod cap right and left.
HINT:
Keep the lower bearing inserted to the connecting rod cap.
(d) Clean the crank pin and bearing.
(e) Check the crank pin and bearing for pitting and scratches.

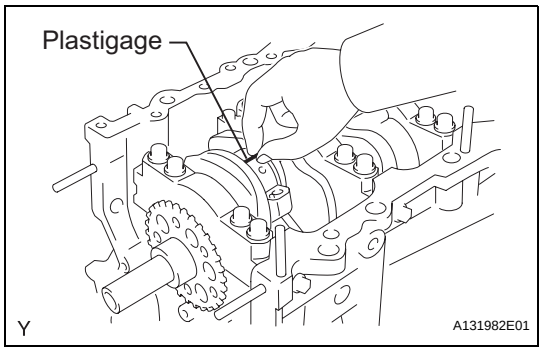

(f) Lay a strip of Plastigage on the crank pin.

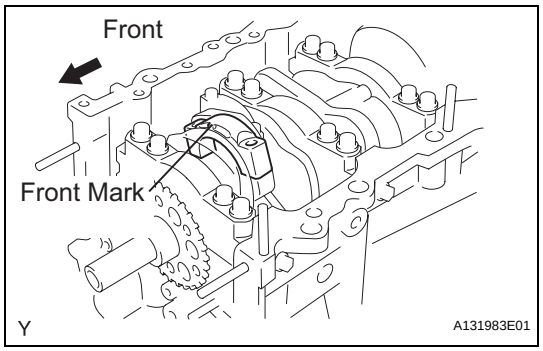

(g) Check that the front mark of the connecting rod cap is facing forward.

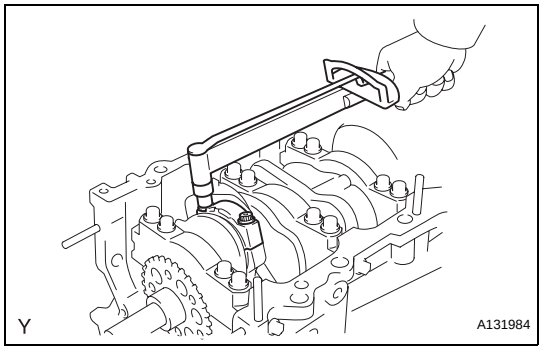

(h) Install and alternately tighten the bolts of the connecting rod cap in several steps.
NOTICE:
Do not turn the crankshaft.
Torque: 25 N*m (255 kgf*cm, 18 ft.*lbf)

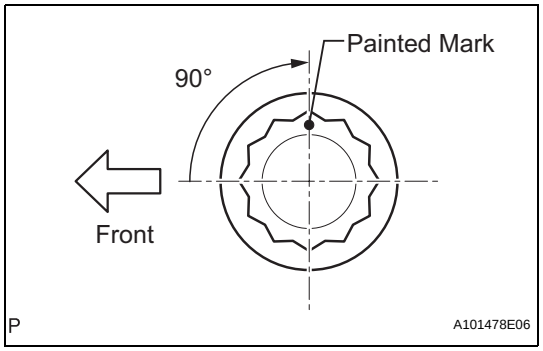

(i) Mark the front side of each connecting cap bolt with paint.
(j) Retighten the cap bolts by 90° as shown.
(k) Check that the painted mark is now at a 90° angle to the front.
NOTICE:
Do not turn the crankshaft.
(l) Remove the 2 connecting rod cap bolts.
(m) Using the 2 removed connecting rod cap bolts, remove the connecting rod cap and lower bearing by wiggling the connecting rod cap right and left.
HINT:
Keep the lower bearing inserted to the connecting rod cap.

EM

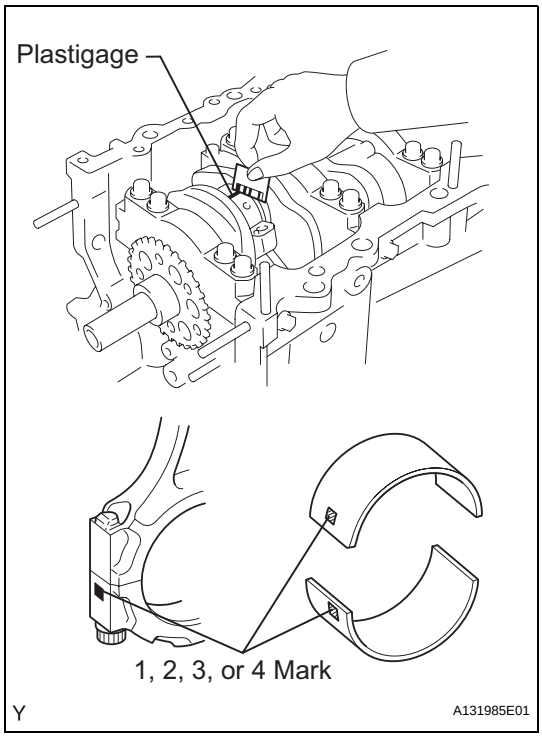

(n) Measure the Plastigage at its widest point.
Standard oil clearance:
0.045 to 0.067 mm (0.0018 to 0.0026 in.)
Maximum oil clearance:
0.070 mm (0.0028 in.)
If the oil clearance is greater than the maximum, replace the bearings. If necessary, replace the crankshaft.
HINT:
If replacing a bearing, replace it with one that has the same number as its respective connecting rod cap. Each bearing's standard thickness is indicated by a 1, 2, 3 and 4 mark on its surface.
Reference:
Connecting rod big end inside diameter

Mark	Thickness
1	56.000 to 56.006 mm (2.2047 to 2.2050 in.)
2	56.007 to 56.012 mm (2.2050 to 2.2052 in.)
3	56.013 to 56.018 mm (2.2052 to 2.2054 in.)
4	56.019 to 56.024 mm (2.2055 to 2.2057 in.)

Standard sized bearing center wall thickness

Mark	Thickness
1	1.481 to 1.484 mm (0.0583 to 0.0584 in.)
2	1.484 to 1.497 mm (0.0584 to 0.0585 in.)
3	1.487 to 1.490 mm (0.0585 to 0.0587 in.)
4	1.490 to 1.493 mm (0.0587 to 0.0588 in.)

Crankshaft pin diameter:
52.992 to 53.000 mm (2.0863 to 2.0866 in.)

(o) Completely remove the Plastigage.

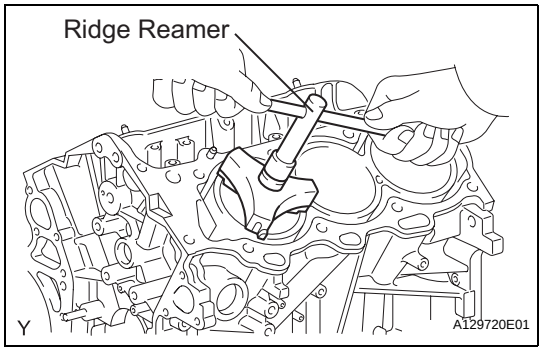

53. REMOVE PISTON SUB-ASSEMBLY WITH CONNECTING ROD

(a) Using a ridge reamer, remove all the carbon from the top of the cylinder.

(b) Push the piston, connecting rod and upper bearing through the top of the cylinder block.
HINT:
- Keep the bearing, connecting rod and cap together.
- Arrange the piston and connecting rod in the correct order.

54. REMOVE CONNECTING ROD BEARING
HINT:
Arrange the removed parts in the correct order.

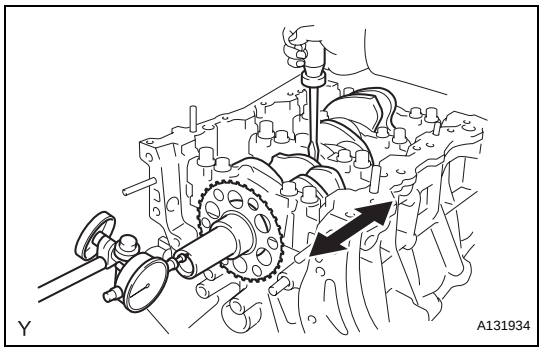

55. INSPECT CRANKSHAFT THRUST CLEARANCE

(a) Using a dial indicator, measure the thrust clearance while prying the crankshaft back and forth with a screwdriver.

Standard thrust clearance:
0.04 to 0.24 mm (0.0016 to 0.0094 in.)
Maximum thrust clearance:
0.30 mm (0.0118 in.)

If the thrust clearance is greater than the maximum, replace the thrust washers as a set. If necessary, replace the crankshaft.

Standard thrust washer thickness:
2.43 to 2.48 mm (0.0957 to 0.0976 in.)

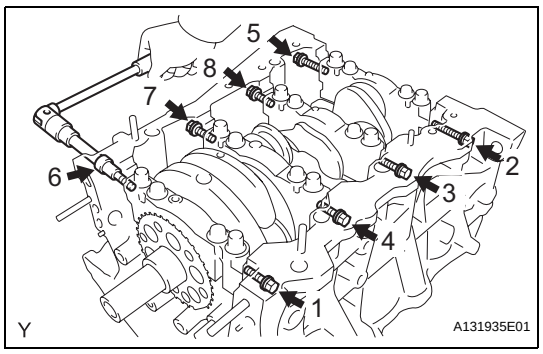

56. REMOVE CRANKSHAFT AND CRANKSHAFT OIL CLEARANCE

(a) Uniformly loosen and remove the 8 main bearing cap bolts and seal washers in several steps, in the sequence shown in the illustration.

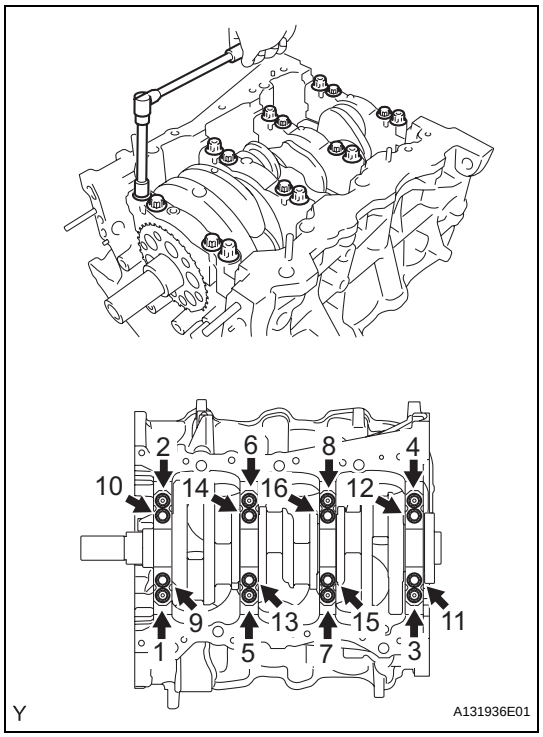

(b) Uniformly loosen the 16 bearing cap bolts in several steps, in the sequence shown in the illustration.

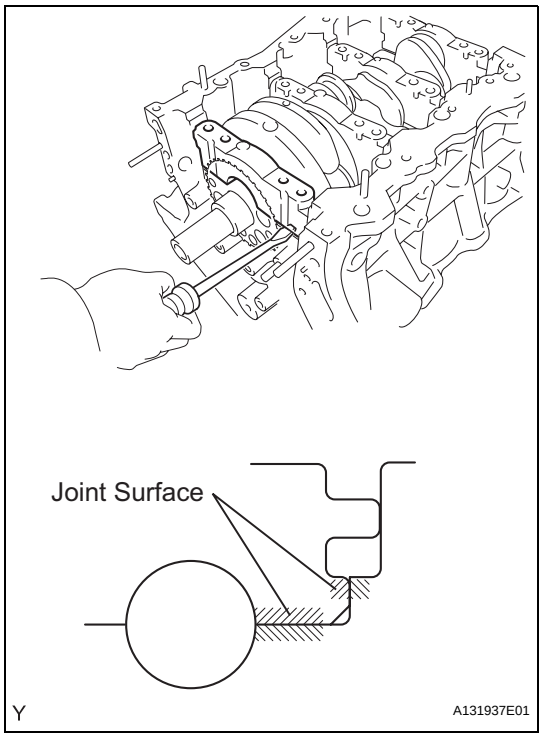

(c) Using a screwdriver, pry out the main bearing caps. Remove the 4 main bearing caps and lower bearings.
NOTICE:
- **Pry up the main cap little by little to the right and left in turns.**
- **Be careful not to damage the joint surface of the cylinder block and main bearing caps.**

(d) Clean each main journal and bearing.
(e) Check each main journal and bearing for pitting and scratches.
HINT:
If the journal or bearing is damaged, replace the bearing.
(f) Place the crankshaft on the cylinder block.

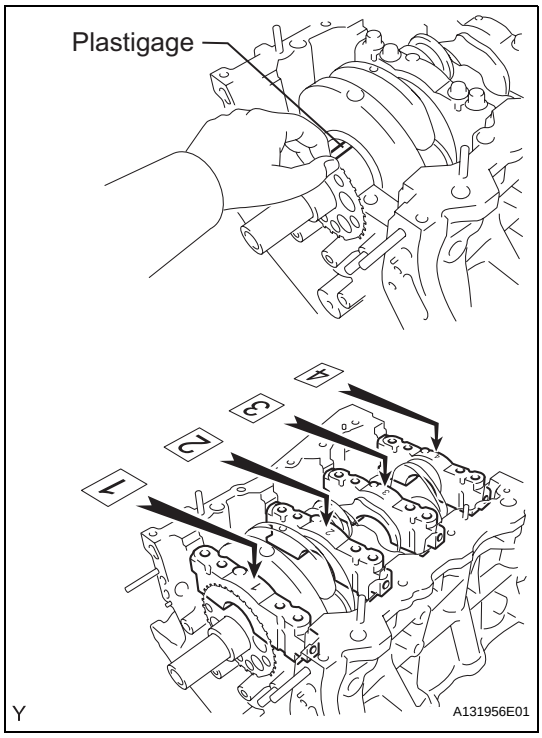

(g) Lay a strip of Plastigage across each journal.
(h) Examine the front marks and numbers and install the bearing caps on the cylinder block.
HINT:
A number is marked on each main bearing cap to indicate the installation position.
(i) Apply a light coat of engine oil on the threads and under the heads of the bearing cap bolts.
(j) Place the crankshaft bearing cap on the cylinder block.

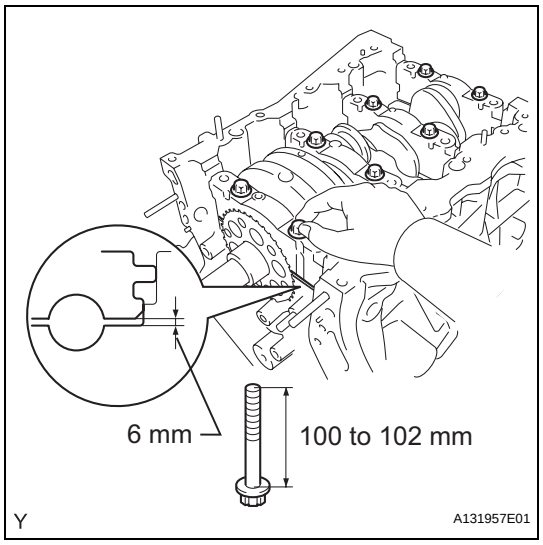

(k) Install the main bearing cap with your hand until the clearance between the main bearing cap and the cylinder block is less than 6 mm (0.23 in.) by marking the 2 internal bearing cap bolts as a guide.
Bolt length:
100 to 102 mm (3.94 to 4.02 in.)

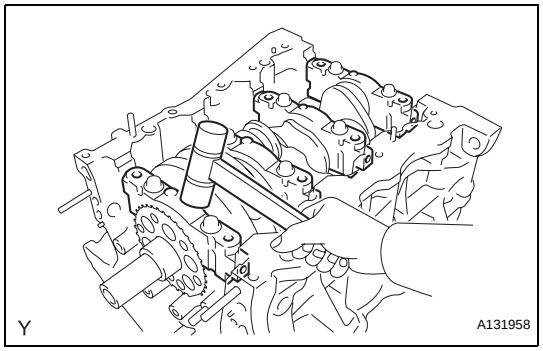

(l) Using a plastic-faced hammer, lightly tap the bearing cap to ensure a proper fit.
(m) Apply a light coat of engine oil on the threads and under the heads of the 8 main bearing cap bolts.

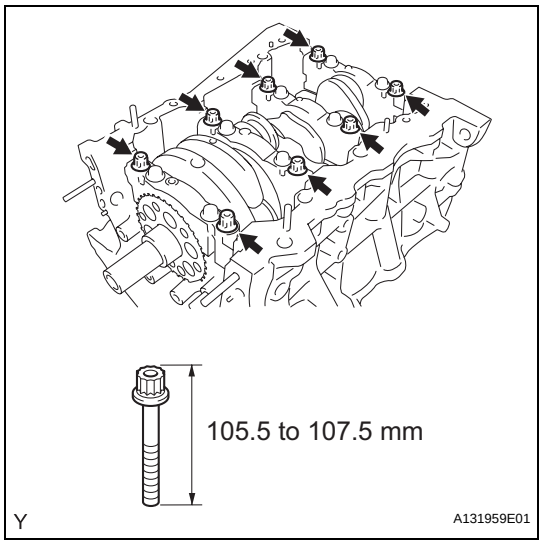

(n) Install the 8 main bearing cap bolts to the outside positions.
Bolt length:
105.5 to 107.5 mm (4.15 to 4.23 in.)
HINT:
The main bearing cap bolts are tightened in 2 progressive steps.

EM

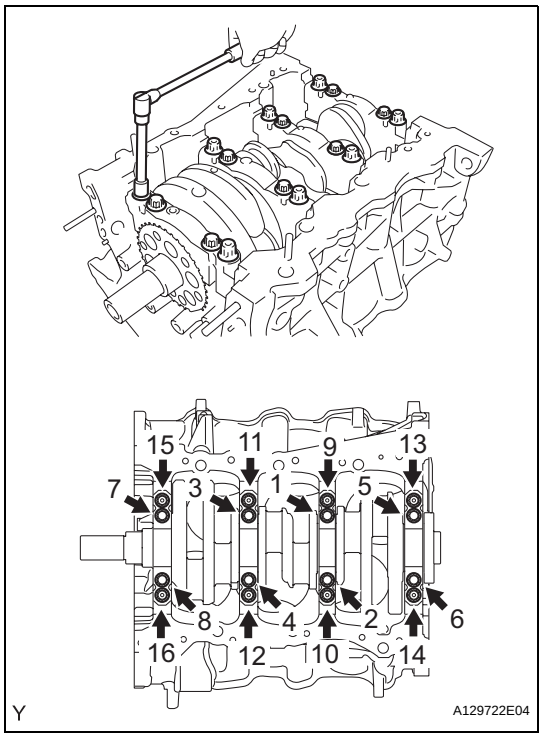

(o) Step 1
(1) Install and uniformly tighten the 16 main bearing cap bolts in the sequence shown in the illustration.
Torque: 61 N*m (622 kgf*cm, 45 ft.*lbf)
HINT:
If any of the main bearing cap bolts does not meet the torque specification, replace the main bearing cap bolt.
NOTICE:
Do not turn the crankshaft.

(p) Step 2
(1) Mark the front of the bearing cap bolts with paint.

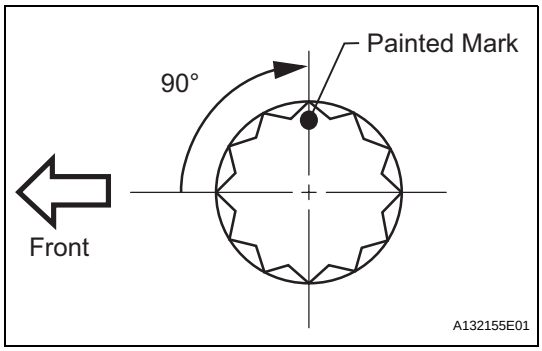

(2) Retighten the bearing cap bolts by 90° as shown in the order shown in step 1.
(3) Check that the painted mark is now at a 90° angle to the front.

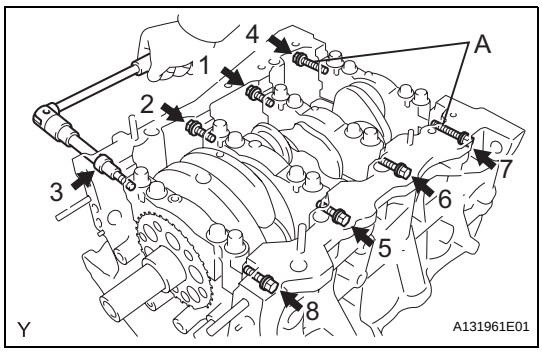

(q) Install and uniformly tighten the 8 main bearing cap bolts in several steps and in the sequence shown in the illustration.
Torque: 52 N*m (530 kgf*cm, 38 ft.*lbf)
Bolt length:
45 mm (1.77 in.) for bolt A
30 mm (1.18 in.) for except bolt A

(r) Remove the 24 bolts and bearing cap bolts.

(s) Completely remove the Plastigage.

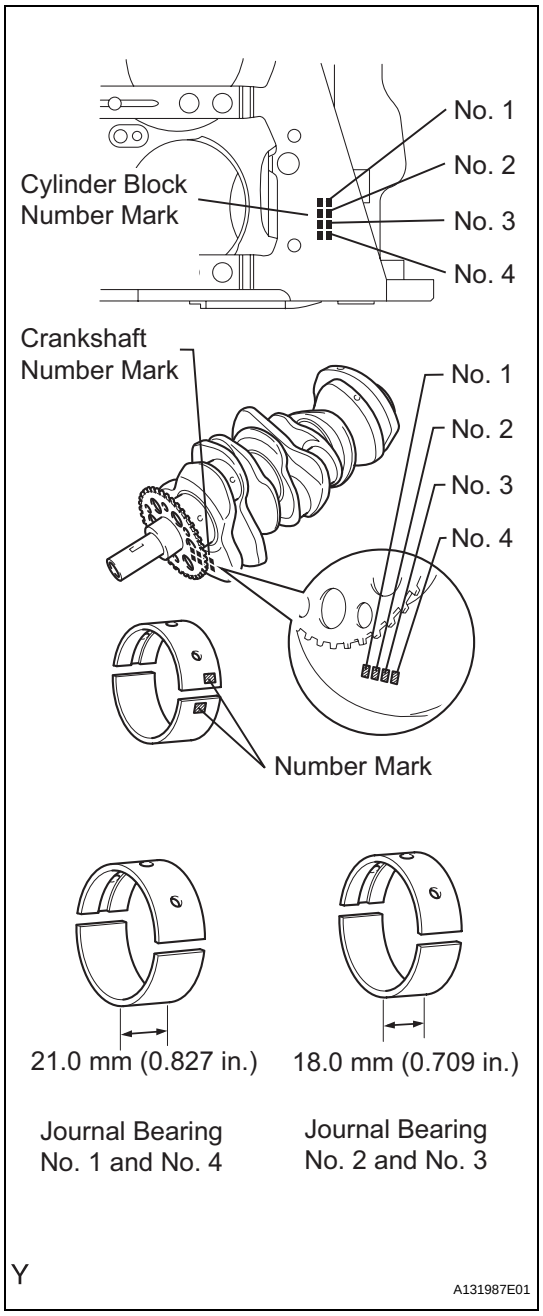

(t) If replacing a bearing, replace it with one having the same number. If the number of the bearing cannot be determined, select the correct bearing by adding together the numbers imprinted on the cylinder block and crankshaft, then refer to the table below for the appropriate bearing number. There are 5 sizes of standard bearings, marked "1", "2", "3", "4" and "5" accordingly.

Journal bearing

Use Bearing	Cylinder Block Number Mark + Crankshaft Number Mark
1	0 - 5
2	6 - 11
3	12 - 17
4	18 - 23
5	24 - 28

EXAMPLE:
Cylinder block "11" + Crankshaft "06" = Total number 17 (Use bearing "3")

EM

Standard crankshaft main journal diameter

Mark	Specified Condition
00	60.999 to 61.000 mm (2.4015 to 2.4016 in.)
01	60.998 to 60.999 mm (2.4015 to 2.4015 in.)
02	60.997 to 60.998 mm (2.4015 to 2.4015 in.)
03	60.996 to 60.997 mm (2.4014 to 2.4015 in.)
04	60.995 to 60.996 mm (2.4014 to 2.4014 in.)
05	60.994 to 60.995 mm (2.4013 to 2.4014 in.)
06	60.93 to 60.994 mm (2.4013 to 2.4013 in.)
07	60.992 to 60.993 mm (2.4013 to 2.4013 in.)
08	60.991 to 60.992 mm (2.4012 to 2.4013 in.)
09	60.990 to 60.991 mm (2.4012 to 2.4012 in.)
10	60.989 to 60.990 mm (2.4011 to 2.4012 in.)
11	60.988 to 60.989 mm (2.4.11 to 2.4011 in.)

Standard upper bearing center wall thickness No. 1 and No. 4 journal

Mark	Specified Condition
1	2.500 to 2.503 mm (0.0984 to 0.0985 in.)
2	2.503 to 2.506 mm (0.0985 to 0.0987 in.)
3	2.506 to 2.509 mm (0.0987 to 0.0988 in.)

Mark	Specified Condition
4	2.509 to 2.512 mm (0.0988 to 0.0989 in.)
5	2.512 to 2.515 mm (0.0989 to 0.0990 in.)

No. 2 and No. 3 journal

Mark	Specified Condition
1	2.478 to 2.481 mm (0.0976 to 0.0977 in.)
2	2.481 to 2.484 mm (0.0977 to 0.0978 in.)
3	2.484 to 2.487 mm (0.0978 to 0.0979 in.)
4	2.487to 2.490 mm (0.0979 to 0.0980 in.)
5	2.490 to 2.493 mm (0.0980 to 0.0981 in.)

Standard lower bearing center wall thickness
No. 1 and No. 4 journal

Mark	Specified Condition
1	2.478 to 2.481 mm (0.0976 to 0.0977 in.)
2	2.481 to 2.484 mm (0.0977 to 0.0780 in.)
3	2.484 to 2.487 mm (0.0978 to 0.0979 in.)
4	2.487 to 2.490 mm (0.0979 to 0.0980 in.)
5	2.490 to 2.493 mm (0.0980 to 0.0981 in.)

No. 2 and No. 3 journal

Mark	Specified Condition
1	2.500 to 2.503 mm (0.0984 to 0.0985 in.)
2	2.503 to 2.506 mm (0.0985 to 0.0987 in.)
3	2.506 to 2.509 mm (0.0987 to 0.0988 in.)
4	2.509 to 2.512 mm (0.0988 to 0.0989 in.)
5	2.512 to 2.515 mm (0.0989 to 0.0990 in.)

(u) Lift out the crankshaft.

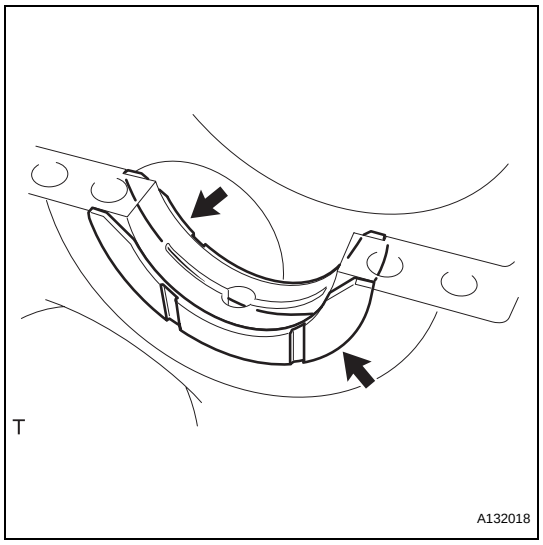

(v) Remove the upper bearings and upper thrust washers from the cylinder block.
HINT:
Arrange the bearings and thrust washers in the correct order.

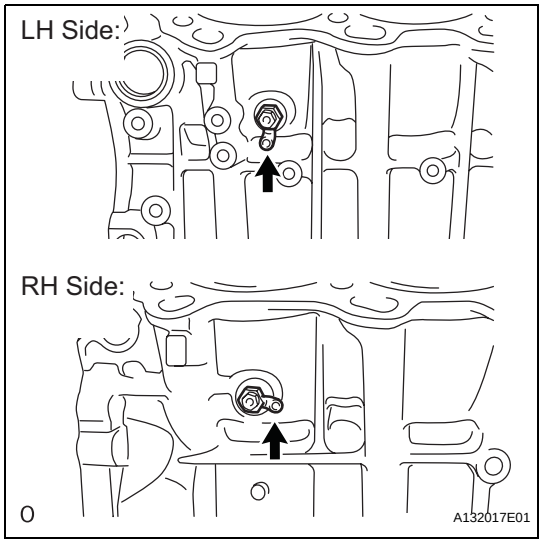

57. REMOVE CYLINDER BLOCK WATER DRAIN COCK SUB-ASSEMBLY

(a) Remove the 2 water drain cocks from the cylinder block.
(b) Remove the water drain cock plugs from the water drain cocks.

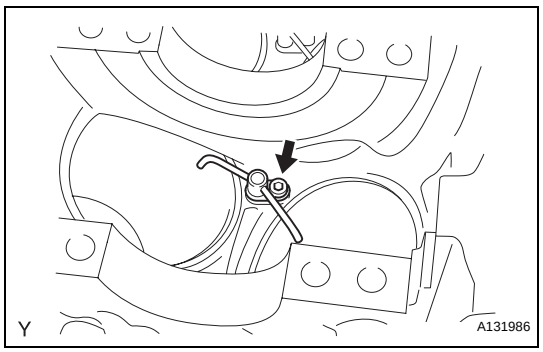

58. REMOVE NO. 1 OIL NOZZLE SUB-ASSEMBLY

(a) Using a 5 mm hexagon wrench, remove the 3 oil nozzles.
(b) Check the oil nozzles for damage or clogging.
If necessary, replace the oil nozzle.

59. REMOVE PISTON RING SET

HINT:
Arrange the piston rings in the correct order.

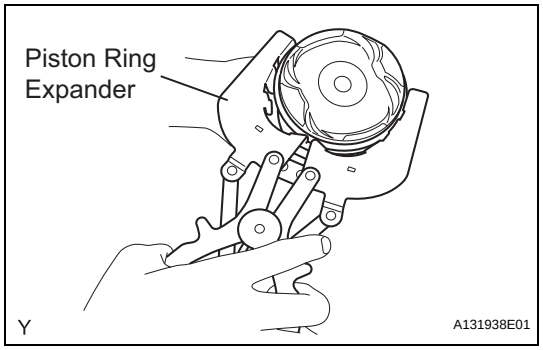

(a) Using a piston ring expander, remove the 2 compression rings.
(b) Using a piston ring expander, remove the 2 side rails.
(c) Remove the oil ring expander by hand.

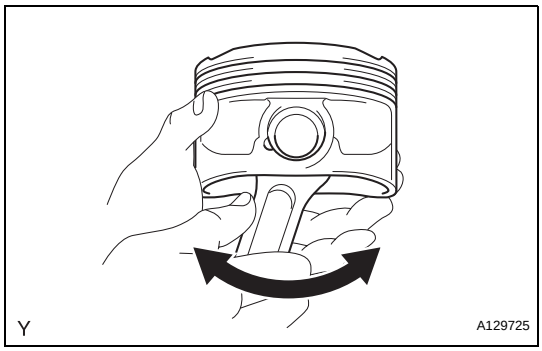

60. REMOVE PISTON WITH PIN SUB-ASSEMBLY

(a) Check the fitting condition between the piston and piston pin.

(1) Try to move the piston back and forth on the piston pin.

HINT:

If any movement is felt, replace the piston and pin as a set.

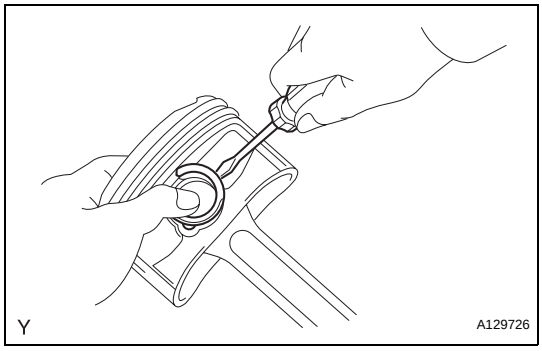

(b) Disconnect the connecting rod from the piston.

(1) Using a screwdriver, pry off the snap rings from the piston.

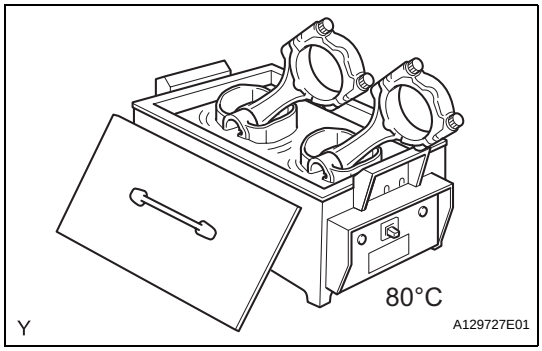

(2) Gradually heat the piston to approximately 80°C (176°F).

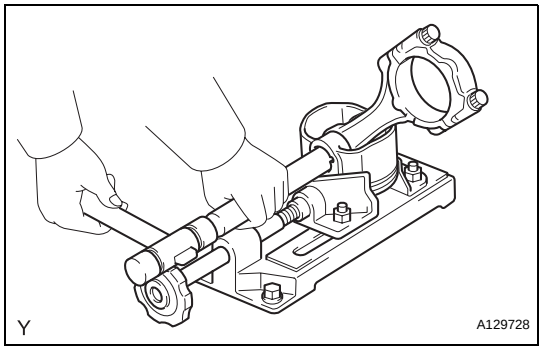

(3) Using a brass bar and plastic-faced hammer, lightly tap out the piston pin and remove the connecting rod.

HINT:

- The piston and pin are a matched set.
- Arrange the pistons, pins, rings, connecting rods and bearings in the correct order.

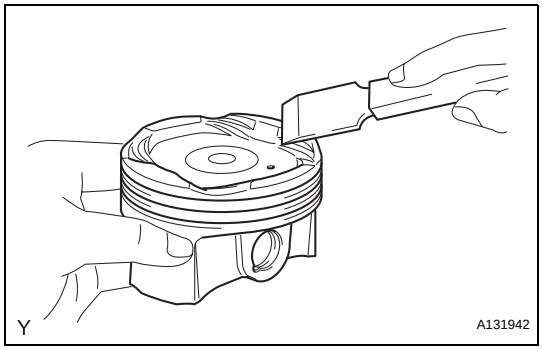

(c) Clean piston.

(1) Using a gasket scraper, remove the carbon from the piston top.

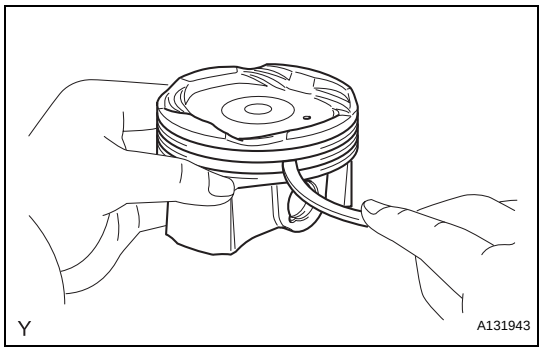

(2) Using a groove cleaning tool or broken ring, clean the piston ring grooves.

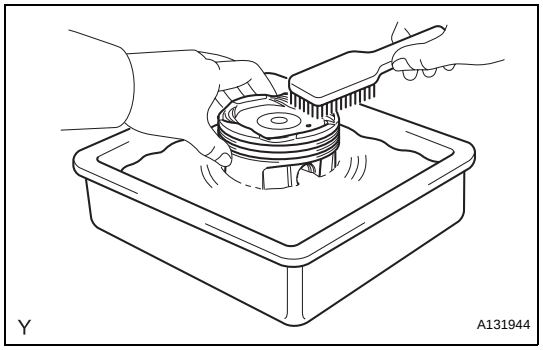

(3) Using solvent and a brush, thoroughly clean the piston.
NOTICE:
Do not use a wire brush.

INSPECTION

1. INSPECT VALVE LASH ADJUSTER ASSEMBLY

NOTICE:

- **Keep the lash adjuster free from dirt and foreign objects.**
- **Only use clean engine oil.**

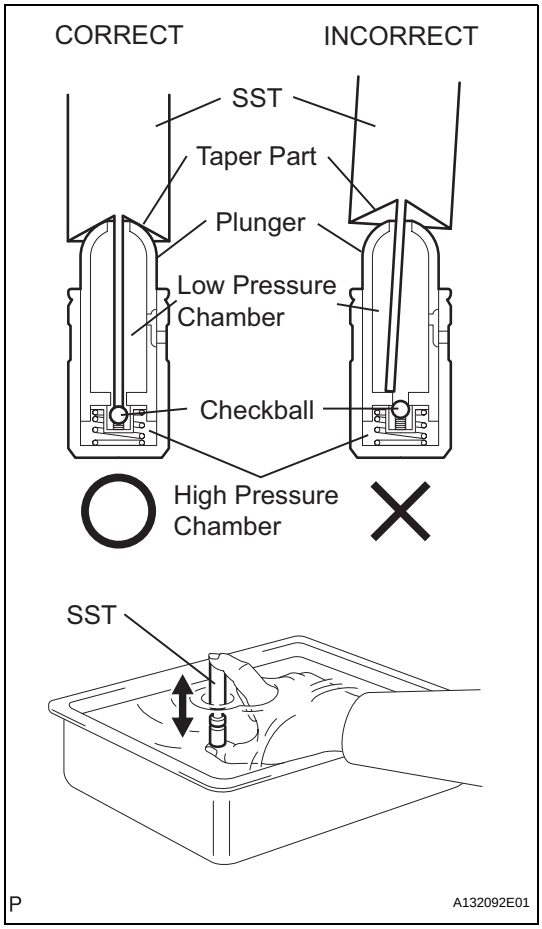

(a) Place the lash adjuster into a container full of engine oil.

(b) Insert the SST's tip into the lash adjuster's plunger and use the tip to press down on the checkball inside the plunger.
SST 09276-75010

(c) Squeeze the SST and lash adjuster together to move the plunger up and down 5 to 6 times.

(d) Check the movement of the plunger and bleed the air.
OK:
Plunger moves up and down.
NOTICE:
When bleeding high-pressure air from the compression chamber, make sure that the tip of the SST is actually pressing the checkball as shown in the illustration. If the checkball is not pressed, air will not bleed.

(e) After bleeding the air, remove SST. Then try to quickly and firmly press the plunger with a finger.
OK:
Plunger is very difficult to move.
If the result is not as specified, replace the lash adjuster.

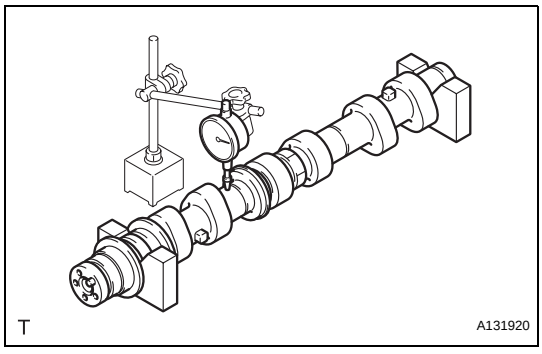

2. INSPECT CAMSHAFT

(a) Inspect the camshaft for runout.
(1) Place the camshaft on V-blocks.
(2) Using a dial indicator, measure the circle runout at the center journal.
Maximum circle runout:
0.04 mm (0.0016 in.)
If the circle runout is greater than the maximum, replace the camshaft.
HINT:
Check the oil clearance after replacing the camshaft.

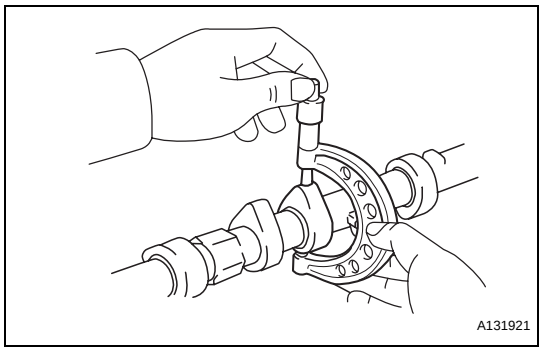

(b) Using a micrometer, measure the cam lobe height.
Standard cam lobe height

Item	Specified Condition
Intake	44.316 to 44.416 mm (1.7447 to 1.7487 in.)
Exhaust	44.262 to 44.362 mm (1.7426 to 1.7465 in.)

Maximum cam lobe height

Item	Specified Condition
Intake	44.166 mm (1.7388 in.)
Exhaust	44.112 mm (1.7367 in.)

If the cam lobe height is less than the minimum, replace the camshaft.

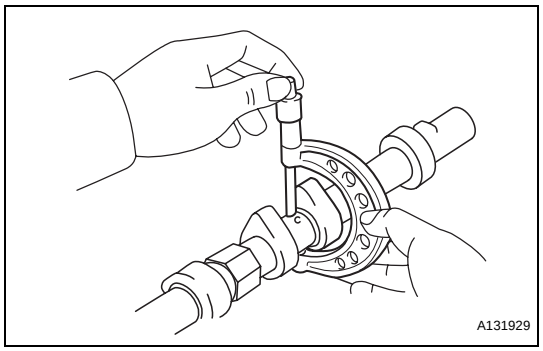

(c) Using a micrometer, measure the journal diameter.
Standard journal diameter

Item	Specified Condition
No. 1 journal	35.946 to 35.960 mm (1.4152 to 1.4157 in.)
Other journal	25.959 to 25.975 mm (1.0220 to 1.0226 in.)

If the journal diameter is not as specified, check the oil clearance.

3. INSPECT CAMSHAFT TIMING GEAR ASSEMBLY

(a) Clamp the camshaft in a vise.
NOTICE:
Be careful not to damage the camshaft in the vise.

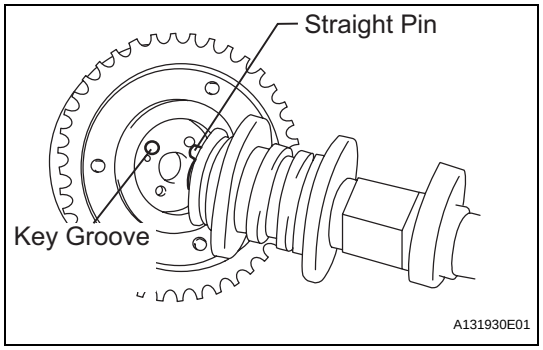

(b) Put the camshaft timing gear and camshaft together by aligning the key groove and straight pin.

(c) Lightly press the gear against the camshaft, and turn the gear. Push further at the position where the pin enters the groove.
NOTICE:
Be sure not to turn the camshaft timing gear in the retard direction (the right angle).

(d) Check that there is no clearance between the gear's fringe and the camshaft.

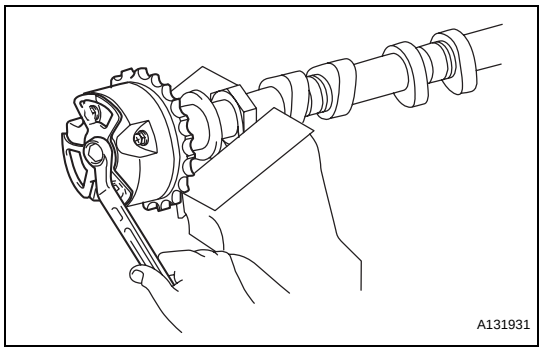

(e) Tighten the flange bolt with the camshaft timing gear fixed in place.
Torque: 100 N*m (1,020 kgf*cm, 74 ft.*lbf)

(f) Check the lock of the camshaft timing gear.
(1) Clamp the camshaft in a vise, and confirm that the camshaft timing gear is locked.
NOTICE:
Be careful not to damage the camshaft.

EM

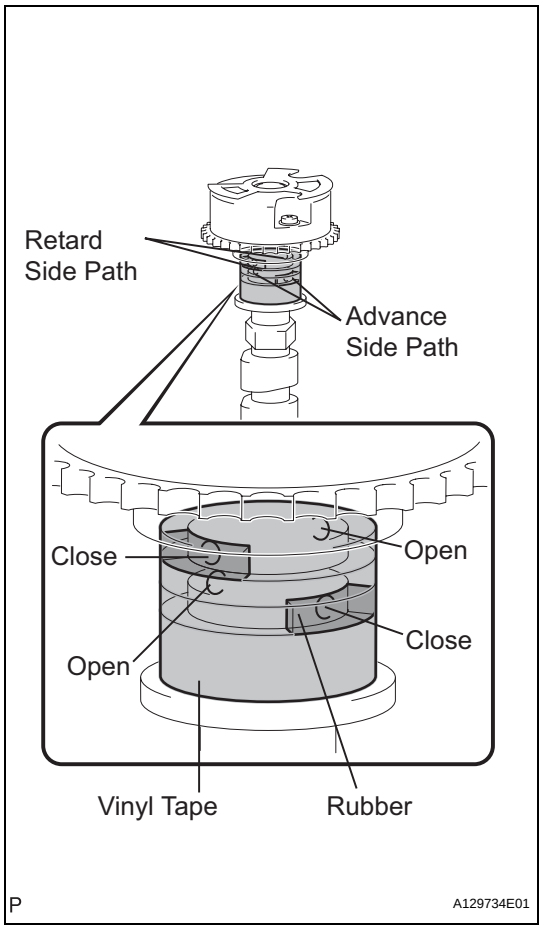

(g) Release the lock pin.
(1) Cover the 4 oil paths of the cam journal with vinyl tape as shown in the illustration.
HINT:
2 advance side paths are provided in the groove of the camshaft. Plug one of the paths with a rubber piece.
(2) Break through the tape of the advance side path and the retard side path on the opposite side to the hole of the advance side path, as shown in the illustration.

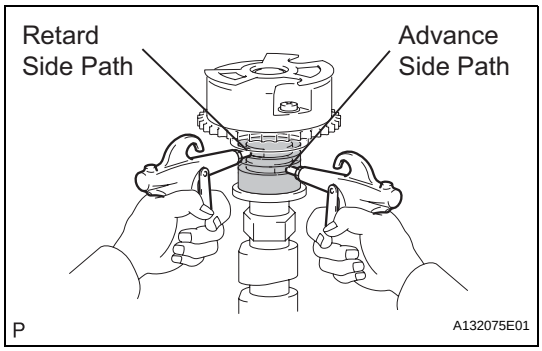

(3) Apply approximately 200 kPa (2.0 kgf/cm^2, 28 psi) of air pressure to the two broken paths.
CAUTION:
Cover the paths with a piece of cloth when applying pressure to keep oil from splashing.

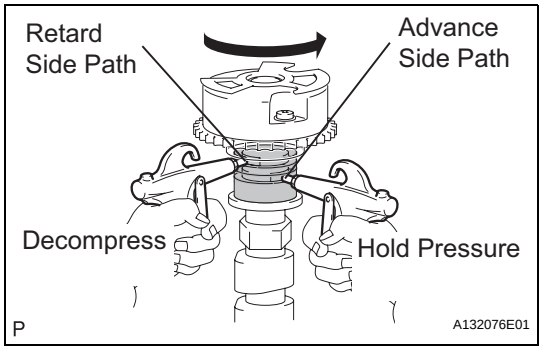

(4) Check that the camshaft timing gear revolves in the advance direction when reducing the air pressure applied to the retard side path.
HINT:
This operation releases the lock pin for the most retarded position.
(5) When the camshaft timing gear reaches the most advanced position, release the air pressure from the retard side path and advance side path, in that order.
NOTICE:
Do not release the air pressure from the advance side path first. The gear may abruptly shift in the retard direction and break the lock pin.

EM

(h) Check for smooth rotation.
(1) Turn the camshaft timing gear within its movable range (21°) 2 or 3 times, but do not turn it to the most retarded position. Make sure that the gear turns smoothly.
NOTICE:
Do not use air pressure to perform the smooth rotation check.

(i) Check the lock in the most retarded position.
(1) Confirm that the camshaft timing gear is locked at the most retarded position.

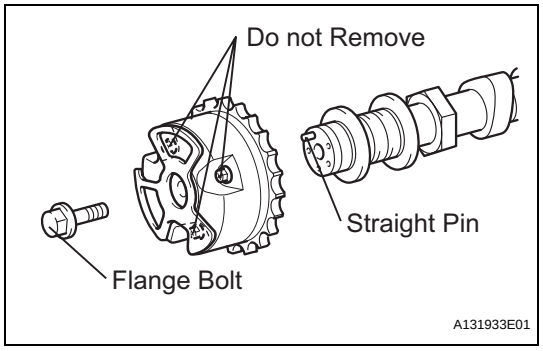

(j) Remove the flange bolt and camshaft timing gear.
NOTICE:
- **Be sure not to remove the other 3 bolts.**
- **If planning to reuse the gear, be sure to release the straight pin lock before installing the gear.**

4. INSPECT CAMSHAFT TIMING EXHAUST GEAR ASSEMBLY

(a) Clamp the camshaft in a vise.
NOTICE:
Be careful not to damage the camshaft in the vise.

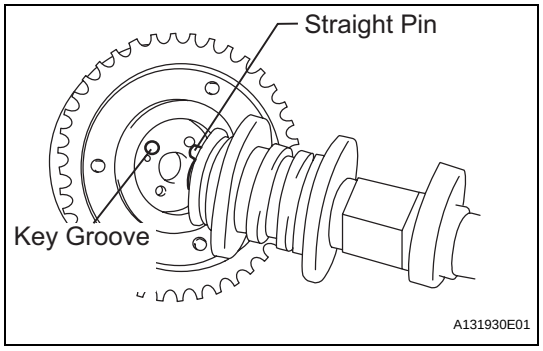

(b) Put the camshaft timing exhaust gear and camshaft together by aligning the key groove and straight pin.

(c) Lightly press the gear against the camshaft, and turn the gear. Push further at the position where the pin enters the groove.
CAUTION:
Be sure not to turn the camshaft timing exhaust gear in the retard direction (the right angle).

(d) Check that there is no clearance between the gear's fringe and the camshaft.

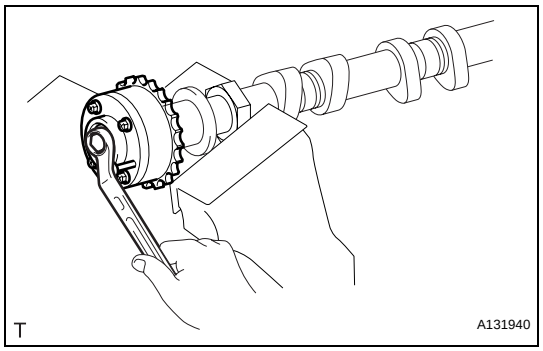

(e) Tighten the flange bolt with the camshaft timing exhaust gear fixed in place.
Torque: 100 N*m (1,020 kgf*cm, 74 ft.*lbf)

(f) Check the camshaft timing exhaust gear lock.
(1) Make sure that the camshaft timing exhaust gear is locked.

EM

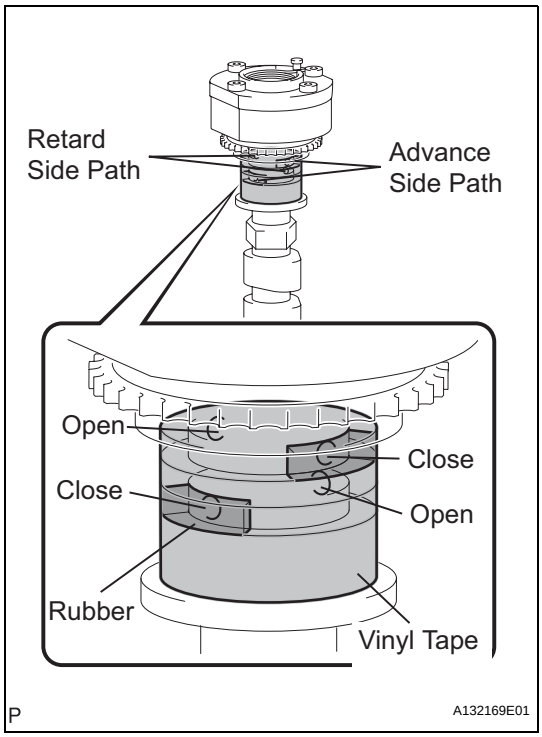

(g) Release the lock pin.
(1) Cover the 4 oil paths of the cam journal with vinyl tape as shown in the illustration.
HINT:
4 oil paths are provided in the groove. Plug 2 paths with rubber pieces.
(2) Prick a hole in the tape placed on the advance side path. Prick a hole in the tape placed on the retard side path on the opposite side to that of the advance side path, as shown in the illustration.

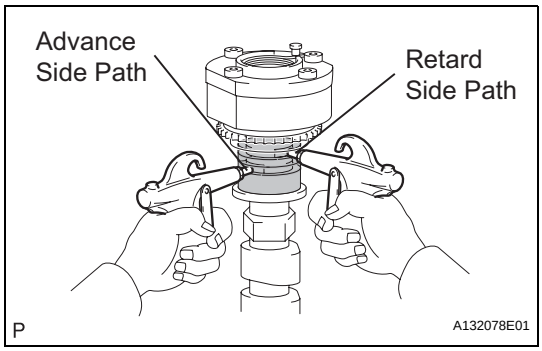

(3) Apply approximately 200 kPa (2.0 kgf/cm^2, 28 psi) of air pressure to the two broken paths (the advance side path and the retard side path).
CAUTION:
Cover the paths with a piece of cloth when applying pressure to keep oil from splashing.

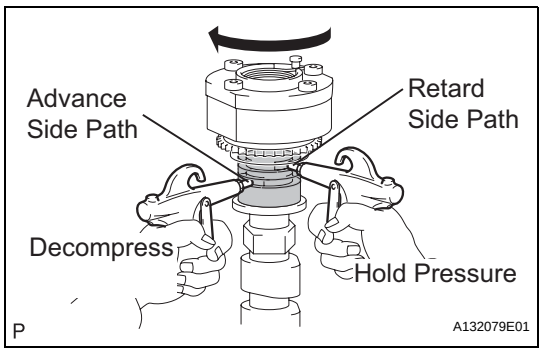

(4) Make sure that the camshaft timing exhaust gear turns in the retard direction when reducing the air pressure applied to the advance side path.
HINT:
The lock pin is released and the camshaft timing exhaust gear turns in the retard direction.
(5) When the camshaft timing exhaust gear moves to the most retarded position, release the air pressure from the advance side path, and then release the air pressure from the retard side path.
NOTICE:
Be sure to release the air pressure from the advance side path first. If the air pressure of the retard side path is released first, the camshaft timing exhaust gear may abruptly shift in the advance direction and break the lock pin or other parts.

EM

(h) Check for smooth rotation.
(1) Turn the camshaft timing exhaust gear within its movable range (18.5°) 2 or 3 times, but do not turn it to the most advanced position. Make sure that the gear turns smoothly.
NOTICE:
When the air pressure is released from the advance side path and then from the retard side path, the gear automatically returns to the most advanced position due to the advance assist spring operation and locks. Gradually release the air pressure from the retard side path before performing the smooth rotation check.

(i) Check the lock at the most advanced position.
(1) Make sure that the camshaft timing exhaust gear is locked at the most advanced position.

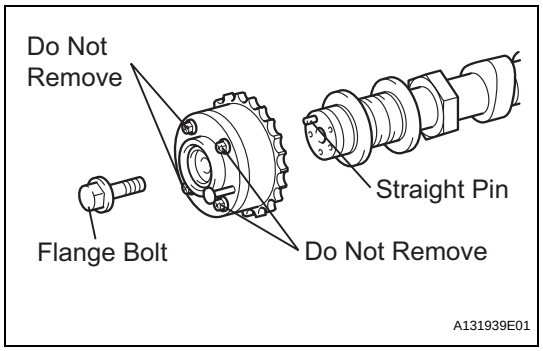

(j) Remove the flange bolt and camshaft timing exhaust gear.
NOTICE:
- **Be sure not to remove the other 3 bolts.**
- **If planning to reuse the gear, be sure to release the straight pin lock before installing the gear.**

EM

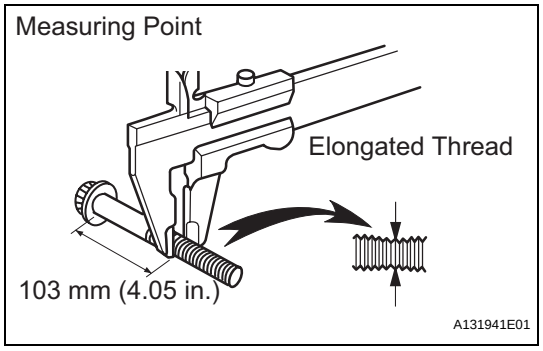

5. INSPECT CYLINDER HEAD SET BOLT

(a) Using a vernier caliper, measure the minimum diameter of the elongated thread at the measuring point.
Minimum outside diameter:
10.70 mm (0.4213 in.)
HINT:
- If a visual check reveals no excessively thin areas, check the center of the bolt (see illustration) and find the area that has the lowest diameter.
- If the diameter is less than the minimum, replace the cylinder head bolt.

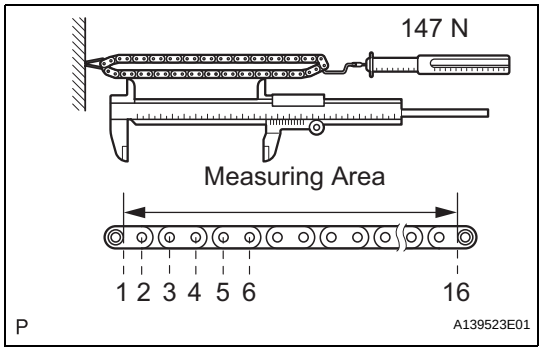

6. INSPECT CHAIN SUB-ASSEMBLY

(a) Using a spring scale, pull the chain with a force of 147 N (15 kgf, 33 lbf) as shown in the illustration.

(b) Using a vernier caliper, measure the length of 16 links.
Maximum chain elongation:
136.9 mm (5.389 in.)
If the elongation is greater than the maximum, replace the chain.
NOTICE:
Perform the measurement at 3 random places. Inspect using the average of the measurements.

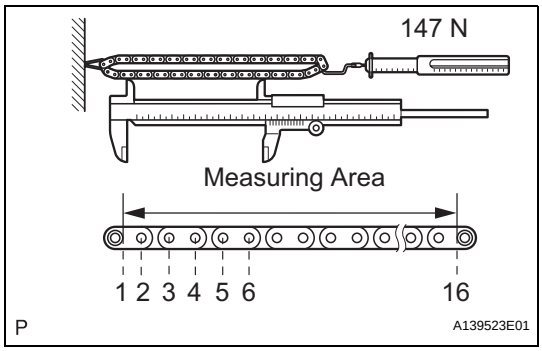

7. INSPECT NO. 2 CHAIN SUB-ASSEMBLY

(a) Pull the chain with a force of 147 N (15 kgf, 33 lbf) as shown in the illustration.

(b) Using a vernier caliper, measure the length of 16 links.

Maximum chain elongation:
137.6 mm (5.417 in.)

If the elongation is greater than the maximum, replace the chain.

NOTICE:
Perform the measurement at 3 random places.
Inspect using the average of the measurements.

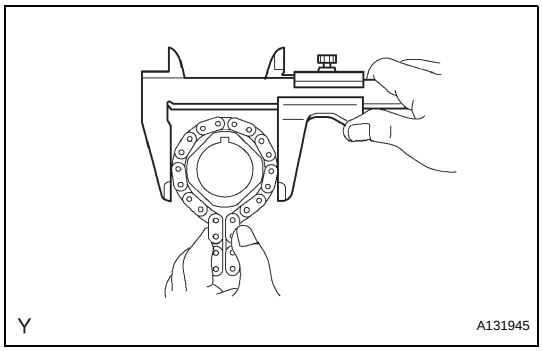

8. INSPECT CRANKSHAFT TIMING GEAR OR SPROCKET

(a) Wrap the chain around the sprocket.

(b) Using a vernier caliper, measure the sprocket diameter with the chain.

Minimum sprocket diameter (w/ chain):
61.4 mm (2.417 in.)

HINT:

- The vernier caliper must contact the chain rollers for the measurement.
- If the diameter is less than the minimum, replace the chain and sprocket.

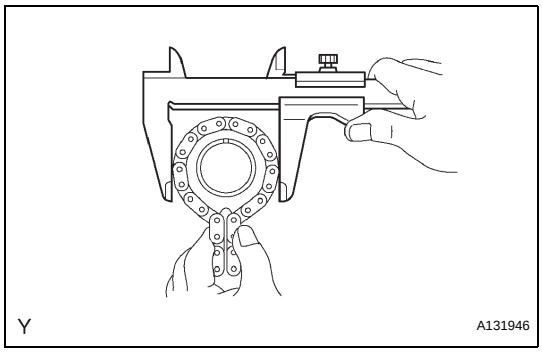

9. INSPECT IDLE SPROCKET ASSEMBLY

(a) Wrap the chain around the sprocket.

(b) Using a vernier caliper, measure the sprocket diameter with the chain.

Minimum sprocket diameter (w/ chain):
61.4 mm (2.417 in.)

HINT:

- The vernier caliper must contact the chain rollers for the measurement.
- If the diameter is less than the minimum, replace the chain and sprocket.

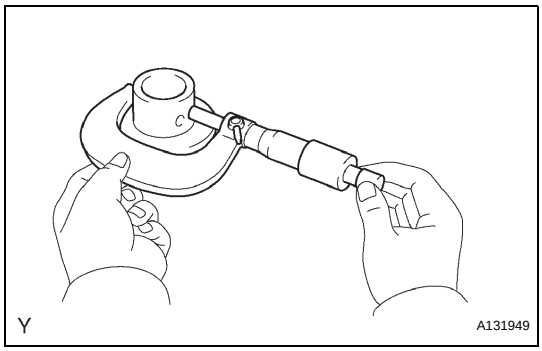

10. INSPECT IDLE GEAR SHAFT OIL CLEARANCE

(a) Using a micrometer, measure the idle gear shaft diameter.

Standard idle gear shaft diameter:
22.987 to 23.000 mm (0.9050 to 0.9055 in.)

EM

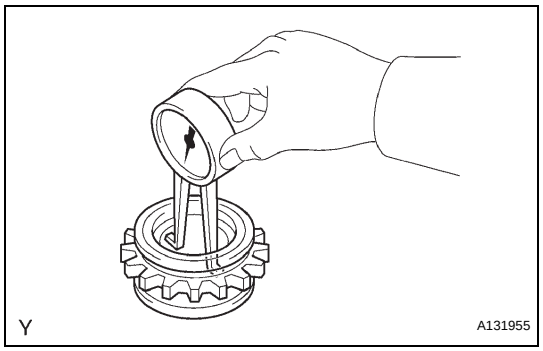

(b) Using a caliper gauge, measure the inside diameter of the idle gear.
Standard idle gear inside diameter:
23.02 to 23.03 mm (0.9062 to 0.9067 in.)

(c) Subtract the idle gear shaft diameter measurement from the idle gear inside diameter measurement.
Standard oil clearance:
0.02 to 0.043 mm (0.0001 to 0.0017 in.)
Maximum oil clearance:
0.043 mm (0.0017 in.)
If the thrust oil clearance is greater than the maximum, replace the idle gear shaft and idle gear.

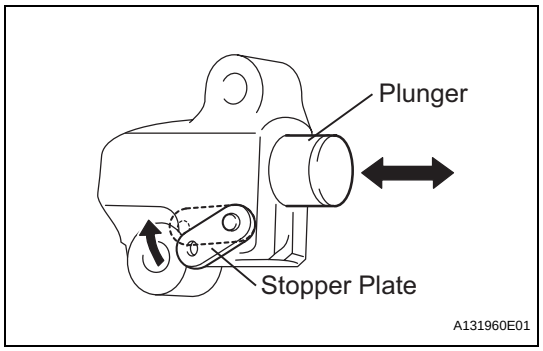

11. INSPECT NO. 1 CHAIN TENSIONER ASSEMBLY

(a) Move the stopper plate upward to release the lock. Push the plunger and check that it moves smoothly. If necessary, replace the chain tensioner.

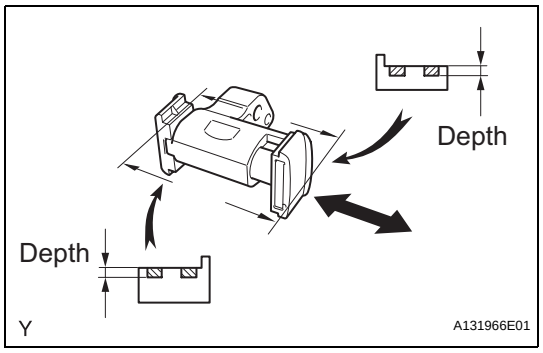

12. INSPECT NO. 2 CHAIN TENSIONER ASSEMBLY

(a) Check that the plunger moves smoothly.

(b) Measure the worn depth of the chain tensioner.
Maximum depth:
0.9 mm (0.035 in.)
If the depth is greater than the maximum, replace the chain tensioner.

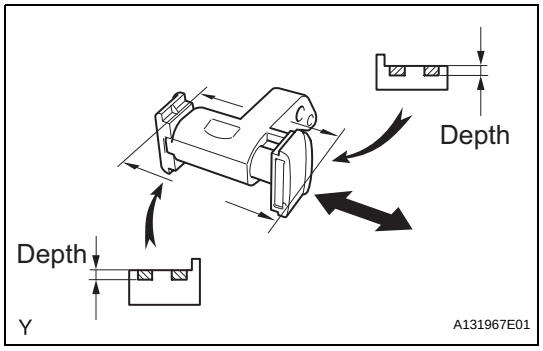

13. INSPECT NO. 3 CHAIN TENSIONER ASSEMBLY

(a) Check that the plunger moves smoothly.

(b) Measure the worn depth of the chain tensioner.
Maximum depth:
0.9 mm (0.035 in.)
If the depth is greater than the maximum, replace the chain tensioner.

EM

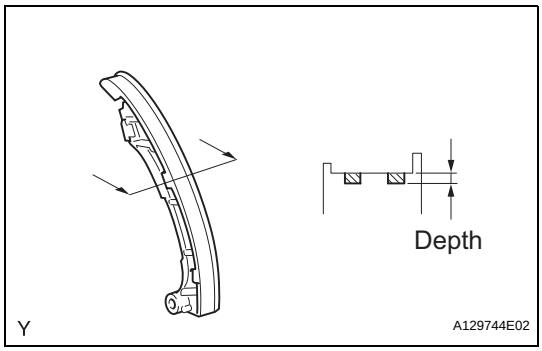

14. INSPECT CHAIN TENSIONER SLIPPER

(a) Measure the worn depth of the chain tensioner slipper.

Maximum depth:

1.0 mm (0.039 in.)

If the depth is greater than the maximum, replace the chain tensioner slipper.

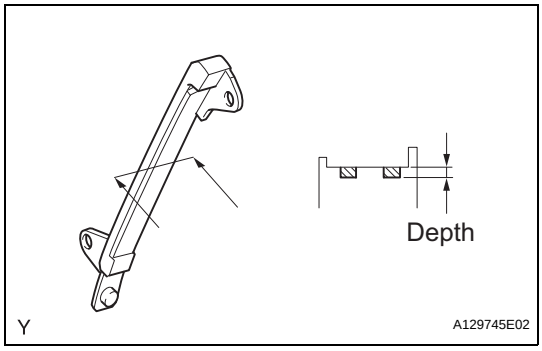

15. INSPECT NO. 1 CHAIN VIBRATION DAMPER

(a) Measure the worn depth of the chain vibration damper.

Maximum depth:

1.0 mm (0.039 in.)

If the depth is greater than the maximum, replace the chain vibration damper.

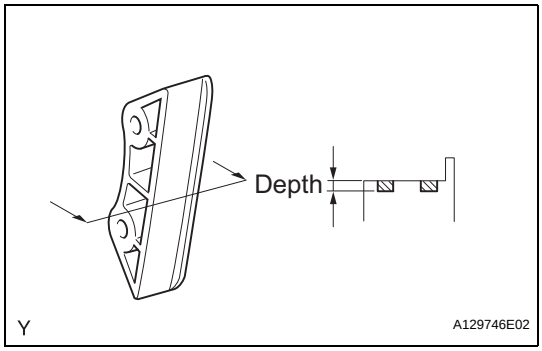

16. INSPECT NO. 2 CHAIN VIBRATION DAMPER

(a) Measure the worn depth of the chain vibration damper.

Maximum depth:

1.0 mm (0.039 in.)

If the depth is greater than the maximum, replace the chain vibration damper.

EM

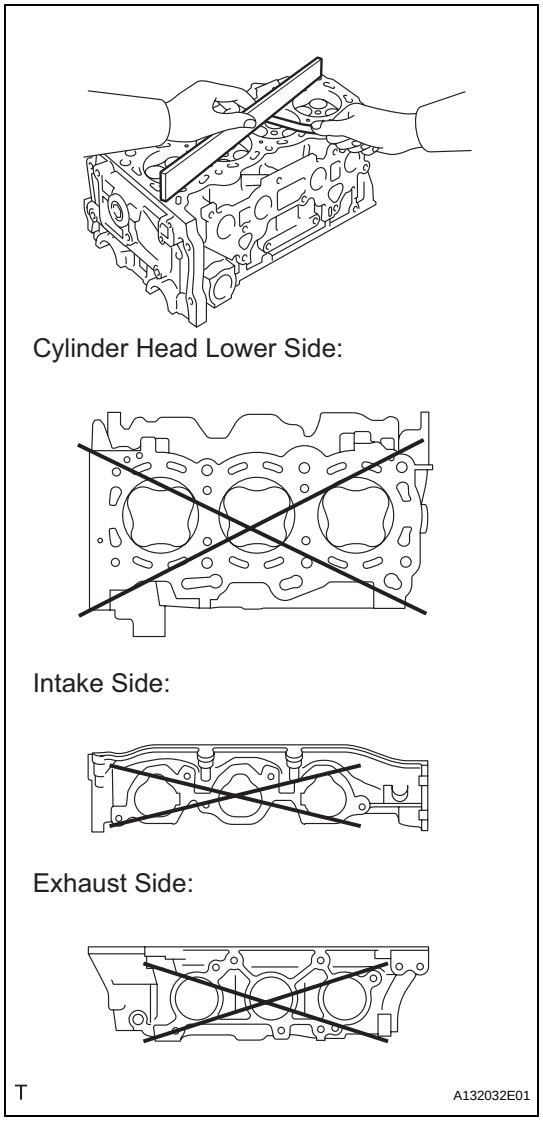

17. INSPECT CYLINDER HEAD SUB-ASSEMBLY

(a) Using a precision straightedge and feeler gauge, measure the warpage of the contact surface of the cylinder block and manifolds.

Standard warpage

Item	Specified Condition
Cylinder head lower side	0.05 mm (0.0020 in.)
Intake side	0.08 mm (0.0031 in.)
Exhaust side	0.08 mm (0.0031 in.)

Maximum warpage:
0.10 mm (0.0039 in.)

If the warpage is greater than the maximum, replace the cylinder head.

EM

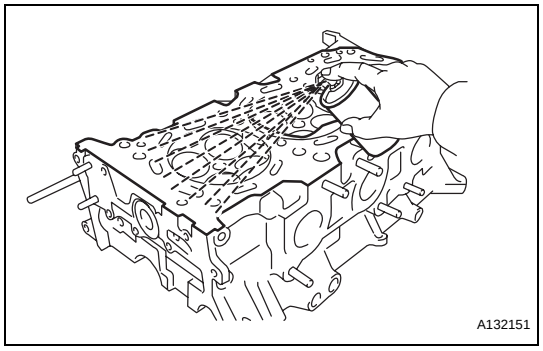

(b) Using a dye penetrate, check the intake ports, exhaust ports and cylinder surface for cracks.
If cracked, replace the cylinder head.

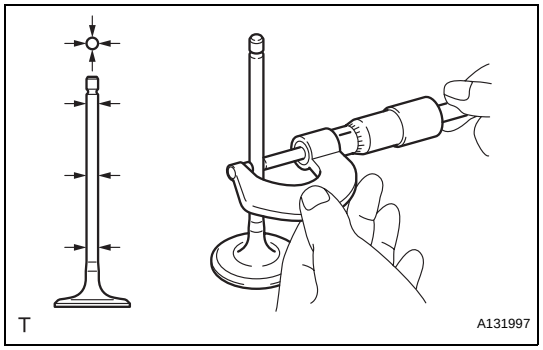

18. INSPECT INTAKE VALVE

(a) Using a micrometer, measure the diameter of the valve stem.

Standard valve stem diameter:
5.470 to 5.485 mm (0.2154 to 0.2159 in.)

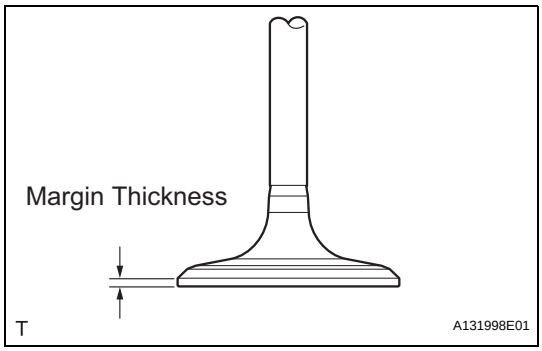

(b) Using a vernier caliper, measure the valve head margin thickness.
Standard margin thickness:
1.0 mm (0.0394 in.)
Minimum margin thickness:
0.50 mm (0.0197 in.)
If the margin thickness is less than the minimum, replace the intake valve.

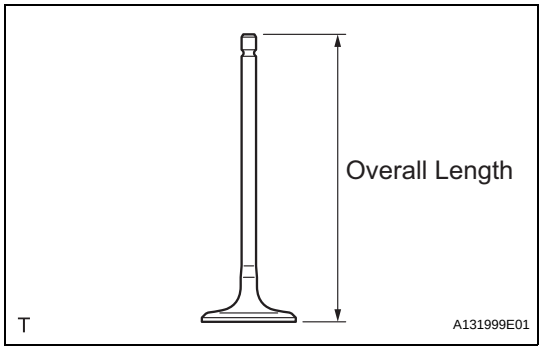

(c) Using a vernier caliper, measure the valve's overall length.
Standard overall length:
105.85 mm (4.1673 in.)
Minimum overall length:
105.35 mm (4.1476 in.)
If the overall length is less than the minimum, replace the intake valve.

EM

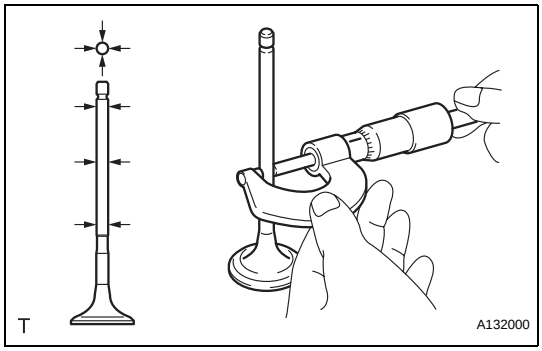

19. INSPECT EXHAUST VALVE

(a) Using a micrometer, measure the diameter of the valve stem.
Standard valve stem diameter:
5.465 to 5.480 mm (0.2151 to 0.2157 in.)

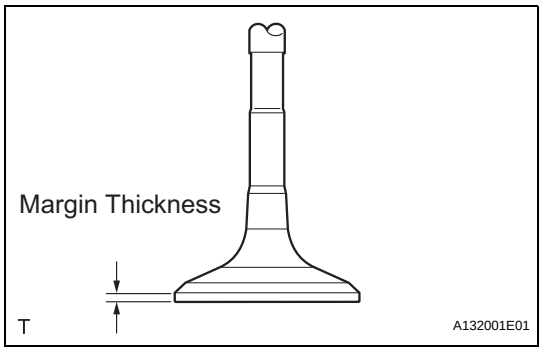

(b) Using a vernier caliper, measure the valve head margin thickness.
Standard margin thickness:
1.0 mm (0.0394 in.)
Minimum margin thickness:
0.50 mm (0.0197 in.)
If the margin thickness is less than the minimum, replace the exhaust valve.

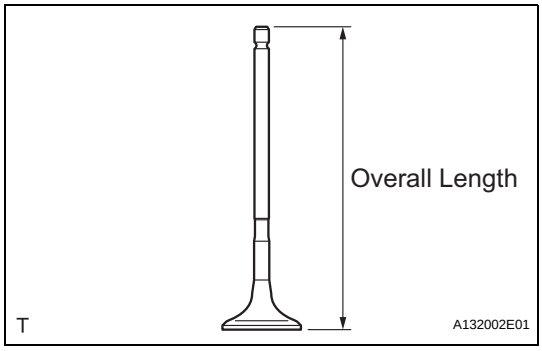

(c) Using a vernier caliper, measure the valve's overall length.
Standard overall length:
110.40 mm (4.3464 in.)
Minimum overall length:
109.90 mm (4.3268 in.)
If the overall length is less than the minimum, replace the exhaust valve.

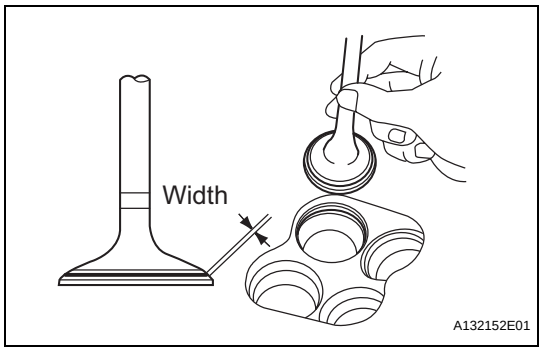

20. INSPECT INTAKE VALVE SEAT

(a) Apply a light coat of Prussian blue to the valve face.
(b) Lightly press the valve face against the valve seat.
(c) Check the valve face and valve seat by using the following procedure.
  (1) If Prussian blue appears around the entire valve face, the valve face is concentric. If not, replace the valve.
  (2) If Prussian blue appears around the entire valve seat, the guide and valve face are concentric. If not, resurface the valve seat.
  (3) Check that the valve seat contacts in the middle of the valve face with the width between 1.1 and 1.5 mm (0.043 and 0.059 in.).

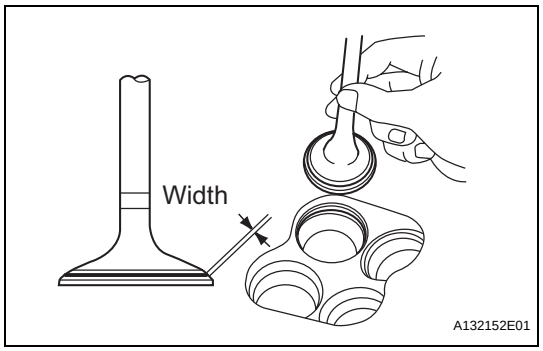

21. INSPECT EXHAUST VALVE SEAT

(a) Apply a light coat of Prussian blue to the valve face.
(b) Lightly press the valve face against the valve seat.
(c) Check the valve face and valve seat by using the following procedure.
  (1) If Prussian blue appears around the entire valve face, the valve face is concentric. If not, replace the valve.
  (2) If Prussian blue appears around the entire valve seat, the guide and valve face are concentric. If not, resurface the valve seat.
  (3) Check that the valve seat contacts in the middle of the valve face with the width between 1.2 and 1.6 mm (0.047 and 0.063 in.).

EM

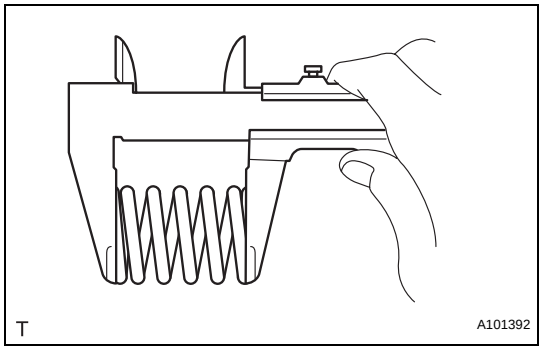

22. INSPECT INNER COMPRESSION SPRING

(a) Using a vernier caliper, measure the free length of the inner compression spring.
Standard free length:
45.46 mm (1.7898 in.)
If the free length is not as specified, replace the spring.

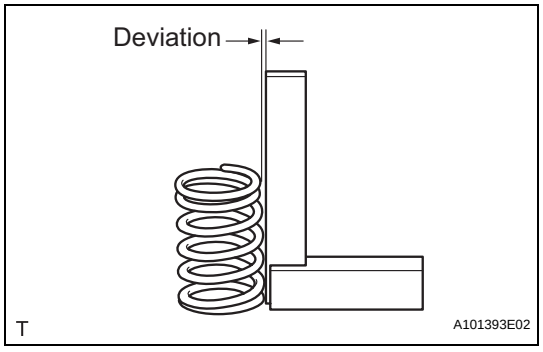

(b) Using a steel square, measure the deviation of the inner compression spring.
Maximum deviation:
1.0 mm (0.039 in.)
Maximum angle (reference):
2°
If the deviation is greater than the maximum, replace the spring.

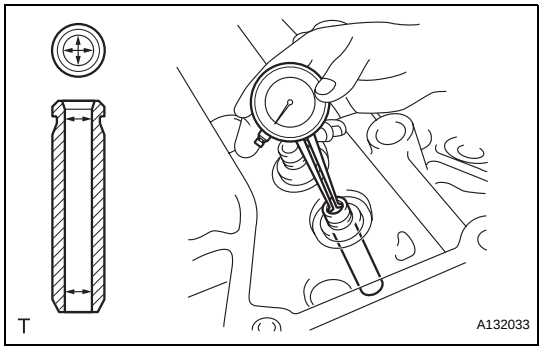

23. INSPECT VALVE GUIDE BUSH OIL CLEARANCE

(a) Using a caliper gauge, measure the inside diameter of the guide bush.

Standard bush inside diameter:
5.51 to 5.53 mm (0.2169 to 0.2177 in.)

(b) Subtract the valve stem diameter measurement from the guide bush inside diameter measurement.

Standard clearance

Item	Specified Condition
Intake	0.025 to 0.060 m (0.0010 to 0.0024 in.)
Exhaust	0.030 to 0.065 mm (0.0012 to 0.0026 in.)

Maximum oil clearance

Item	Specified Condition
Intake	0.08 mm (0.0031 in.)
Exhaust	0.10 mm (0.0039 in.)

HINT:

- If the clearance is greater than the maximum, replace the intake valve and intake guide bush.
- If the clearance is greater than the maximum, replace the exhaust valve and exhaust guide bush.

EM

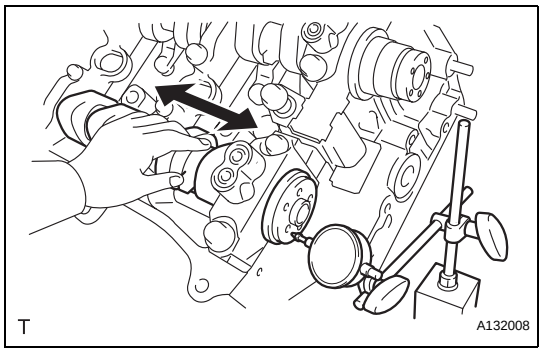

24. INSPECT CAMSHAFT THRUST CLEARANCE

(a) Inspect the bank 1 camshafts.

(1) Install the bank 1 camshafts.

(2) Using a dial indicator, measure the thrust clearance while moving the camshaft back and forth.

Standard thrust clearance:
0.08 to 0.13 mm (0.0031 to 0.0051 in.)
Maximum thrust clearance:
0.15 mm (0.006 in.)

If the thrust clearance is greater than the maximum, replace the cylinder head. If the thrust surface is damaged, replace the camshaft.

(b) Inspect the bank 2 camshafts.

(1) Install the bank 2 camshafts.

(2) Using a dial indicator, measure the thrust clearance while moving the camshaft back and forth.

Standard thrust clearance:
0.08 to 0.13 mm (0.0031 to 0.0051 in.)
Maximum thrust clearance:
0.15 mm (0.006 in.)

If the thrust clearance is greater than the maximum, replace the cylinder head. If the thrust surface is damaged, replace the camshaft.

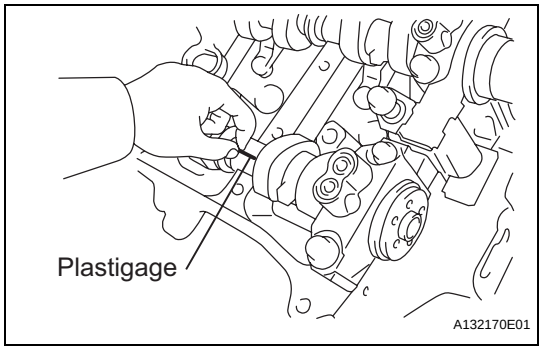

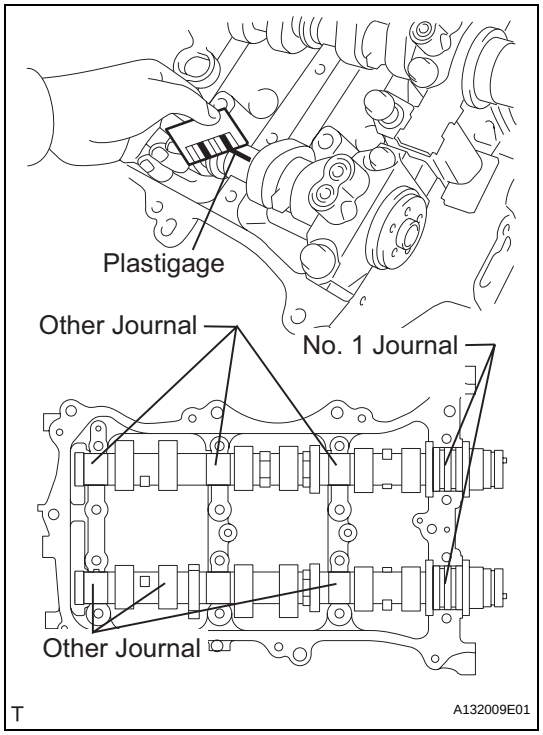

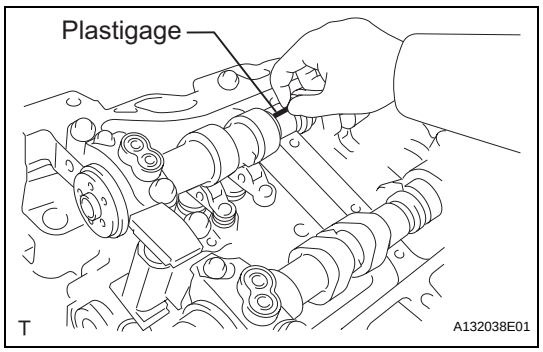

25. INSPECT CAMSHAFT OIL CLEARANCE

(a) Clean the bearing caps, camshaft housing and camshaft journals.
(b) Place the camshafts on the camshaft housing.
(c) Lay a strip of Plastigage across each of the camshaft journals.
(d) Install the bearing caps.
NOTICE:
Do not turn the camshaft.
(e) Remove the bearing caps.

(f) Measure the Plastigage at its widest point.
Standard oil clearance

Item	Specified Condition
No. 1 journal	0.040 to 0.079 mm (0.0016 to 0.0031 in.)
Other journal	0.025 to 0.062 mm (0.0010 to 0.0024 in.)

Maximum oil clearance

Item	Specified Condition
No. 1 journal	0.10 mm (0.0039 in.)
Other journal	0.09 mm (0.0035 in.)

If the oil clearance is greater than the maximum, replace the camshaft. If necessary, replace the camshaft housing.
(g) Clean the bearing caps, camshaft housing and camshaft journals.
(h) Place the camshafts on the camshaft housing.

(i) Lay a strip of Plastigage across each of the camshaft journals.
(j) Install the bearing caps.
NOTICE:
Do not turn the camshaft.
(k) Remove the bearing caps.

EM

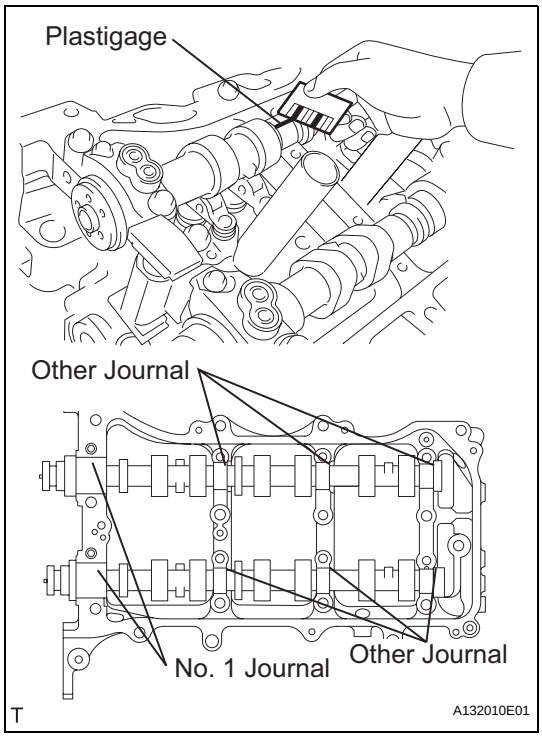

(l) Measure the Plastigage at its widest point.
Standard oil clearance

Item	Specified Condition
No. 1 journal	0.040 to 0.079 mm (0.0016 to 0.0031 in.)
Other journal	0.025 to 0.062 mm (0.0010 to 0.0024 in.)

Maximum oil clearance

Item	Specified Condition
No. 1 journal	0.10 mm (0.0039 in.)
Other journal	0.09 mm (0.0035 in.)

If the oil clearance is greater than the maximum, replace the camshaft. If necessary, replace the camshaft housing.

EM

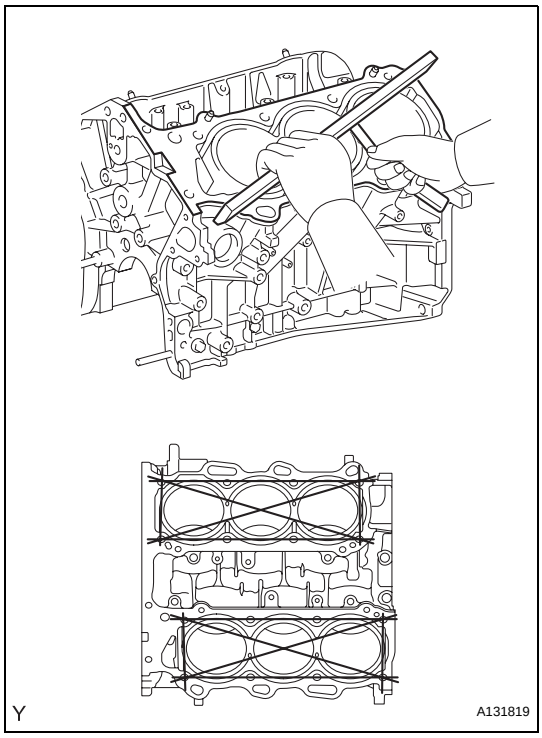

26. INSPECT CYLINDER BLOCK FOR WARPAGE

(a) Using a precision straightedge and feeler gauge, measure the warpage of the contact surface of the cylinder head gasket.
Maximum warpage:
0.07 mm (0.0028 in.)
If the warpage is greater than the maximum, replace the cylinder block.

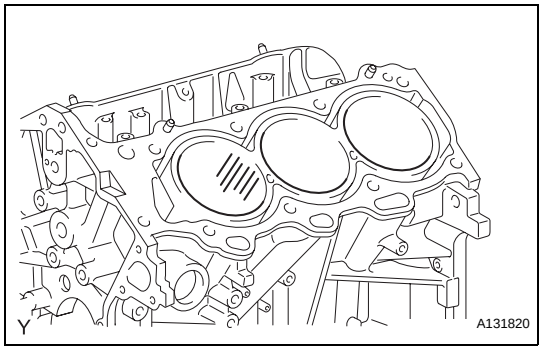

(b) Visually check the cylinder for vertical scratches.
If deep scratches are present, rebore all 6 cylinders.
If necessary, replace the cylinder block.

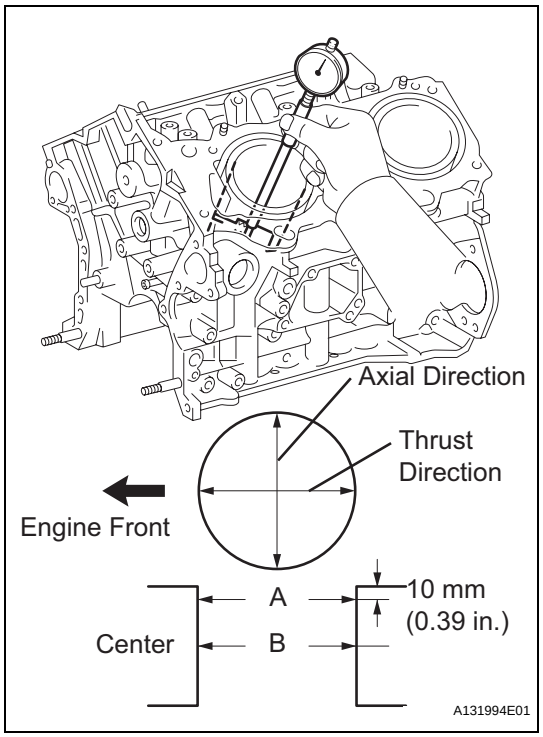

27. INSPECT CYLINDER BORE

(a) Using a cylinder gauge, measure the cylinder bore diameter at positions A and B in the thrust and axial directions.

Standard diameter:
94.000 to 94.012 mm (3.7008 to 3.7013 in.)
Maximum diameter:
94.200 mm (3.7087 in.)

If the diameter is greater than the maximum, replace the cylinder block.

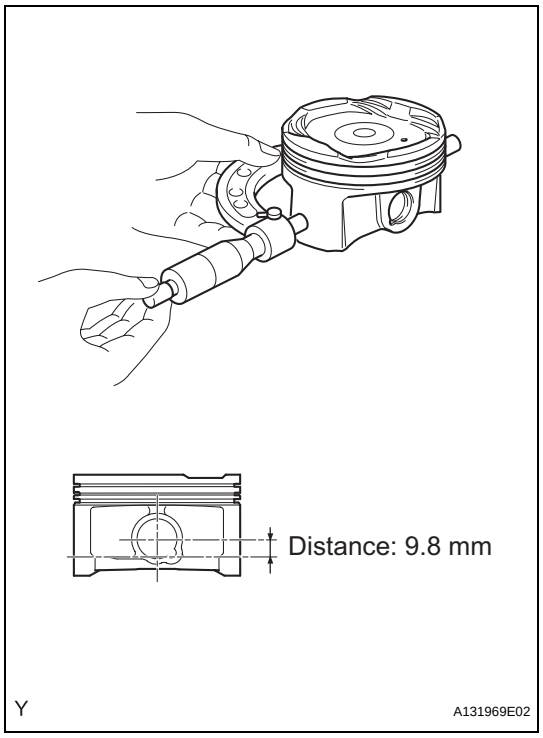

28. INSPECT PISTON SUB-ASSEMBLY WITH PIN

(a) Using a micrometer, measure the piston diameter at right angles to the piston center line where the distance from the bottom edge of the piston is as specified.

Distance:
9.8 mm (0.3858 in.)
Standard diameter:
93.960 to 93.980 mm (3.6992 to 3.6999 in.)
Maximum diameter:
93.830 mm (3.6941 in.)

29. INSPECT PISTON OIL CLEARANCE

(a) Measure the cylinder bore diameter in the thrust direction.

(b) Subtract the piston diameter measurement from the cylinder bore diameter measurement.

Standard oil clearance:
0.020 to 0.052 mm (0.0007 to 0.0020 in.)
Maximum oil clearance:
0.06 mm (0.0024 in.)

If the oil clearance is greater than the maximum, replace all the pistons. If necessary, replace the cylinder block.

EM

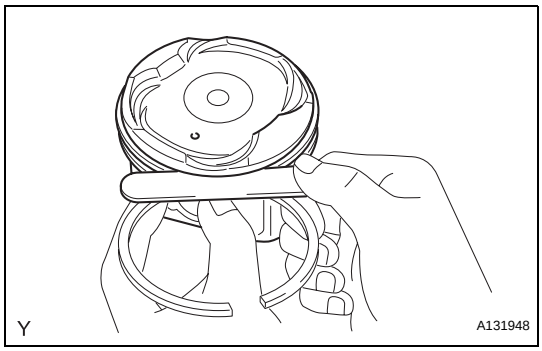

30. INSPECT RING GROOVE CLEARANCE

(a) Using a feeler gauge, measure the clearance between a new piston ring and the wall of the ring groove.

Standard ring groove clearance

Item	Specified Condition
No. 1	0.020 to 0.070 mm (0.0008 to 0.0028 in.)
No. 2	0.020 to 0.060 mm (0.0008 to 0.0024 in.)
Oil	0.070 to 0.150 mm (0.0028 to 0.0059 in.)

If the clearance is not as specified, replace the piston.

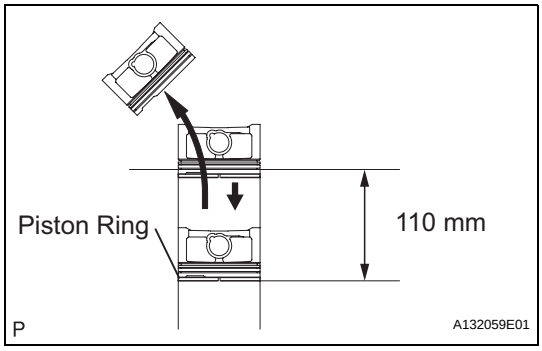

31. INSPECT PISTON RING END GAP

(a) Insert the piston ring into the cylinder bore.

(b) Using a piston, push the piston ring a little beyond the bottom of the ring travel, 110 mm (4.33 in.) from the top of the cylinder block.

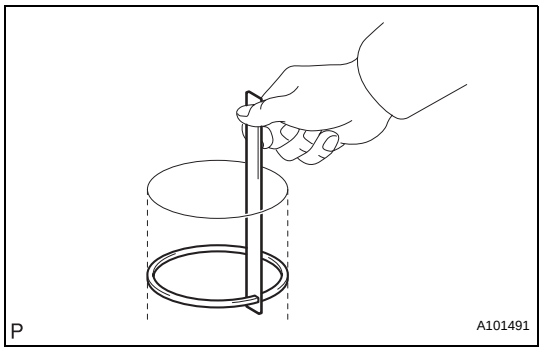

(c) Using a feeler gauge, measure the end gap.

Standard end gap

Item	Specified Condition
No. 1	0.25 to 0.35 mm (0.0098 to 0.0138 in.)
No. 2	0.50 to 0.60 mm (0.0197 to 0.0236 in.)
Oil	0.10 to 0.40 mm (0.0039 to 0.0157 in.)

Maximum end gap

Item	Specified Condition
No. 1	0.50 mm (0.0197 in.)
No. 2	0.85 mm (0.0335 in.)
Oil	0.60 mm (0.0236 in.)

If the end gap is greater than the maximum, replace the piston ring. If the end gap is greater than the maximum even with a new piston ring, replace the cylinder block.

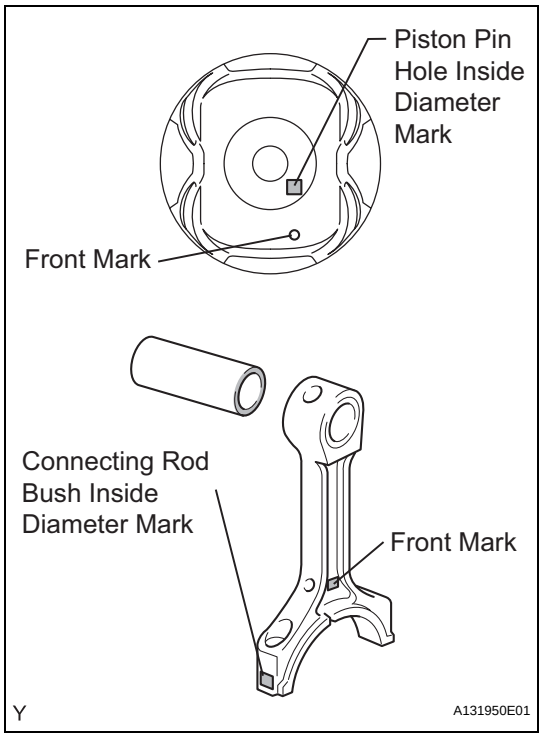

32. INSPECT PISTON PIN OIL CLEARANCE

(a) Check each mark on the piston, piston pin and connecting rod.

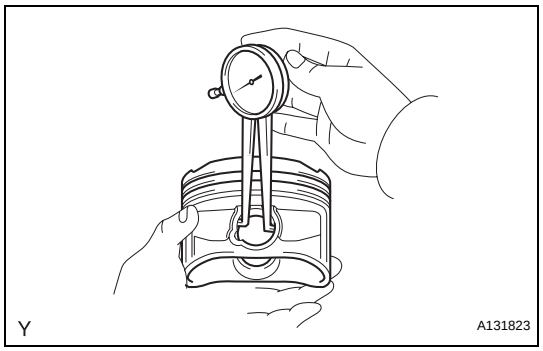

(b) Using a caliper gauge, measure the inside diameter of the piston pin hole.

Standard piston pin hole inside diameter

Mark	Specified Condition
A	22.001 to 22.004 mm (0.8662 to 0.8663 in.)
B	22.005 to 22.007 mm (0.8663 to 0.8664 in.)
C	22.008 to 22.010 mm (0.8665 to 0.8665 in.)

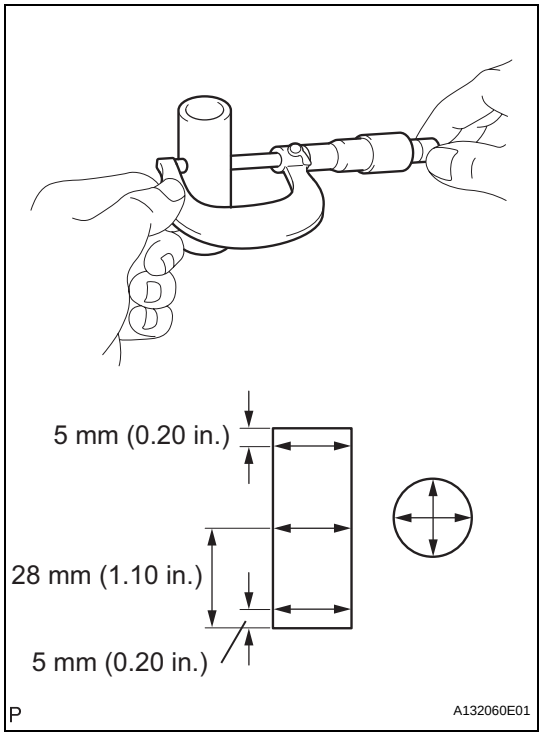

(c) Using a micrometer, measure the piston pin diameter.

Standard piston pin diameter

Mark	Specified Condition
A	21.997 to 22.000 mm (0.8660 to 0.8661 in.)
B	22.001 to 22.003 mm (0.8662 to 0.8663 in.)
C	22.004 to 22.006 mm (0.8663 to 0.8664 in.)

(d) Subtract the piston pin diameter measurement from the piston pin hole diameter measurement.

Standard oil clearance:
0.001 to 0.007 mm (0.00004 to 0.0003 in.)
Maximum oil clearance:
0.015 mm (0.0006 in.)

HINT:
If the oil clearance is greater than the maximum, replace the piston and piston pin as a set.

EM

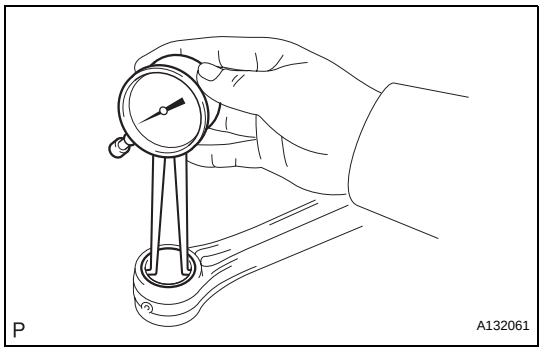

(e) Using a caliper gauge, measure the inside diameter of the connecting rod bush.

Standard bush inside diameter

Mark	Specified Condition
A	22.005 to 22.008 mm (0.8663 to 0.8665 in.)
B	22.009 to 22.011 mm (0.8665 to 0.8666 in.)
C	22.012 to 22.014 mm (0.8666 to 0.8667 in.)

(f) Subtract the piston pin diameter measurement from the bush inside diameter measurement.

Standard oil clearance:
0.005 to 0.011 mm (0.0002 to 0.0004 in.)
Maximum oil clearance:
0.03 mm (0.0012 in.)

HINT:
If the oil clearance is greater than the maximum, replace the bush. If necessary, replace the connecting rod and piston pin as a set.

EM

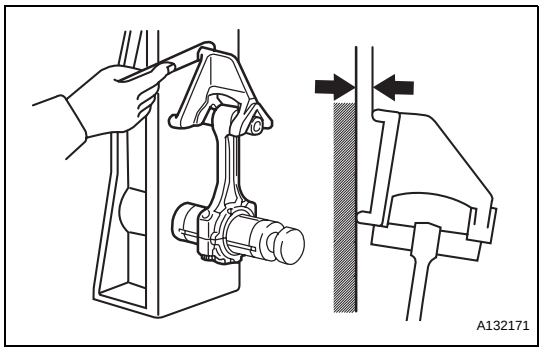

33. INSPECT CONNECTING ROD SUB-ASSEMBLY

(a) Using a rod aligner and feeler gauge, check the connecting rod alignment.

(1) Check for bend.

Maximum bend:
0.05 mm (0.0020 in.) per 100 mm (3.94 in.)
If the bend is greater than the maximum, replace the connecting rod.

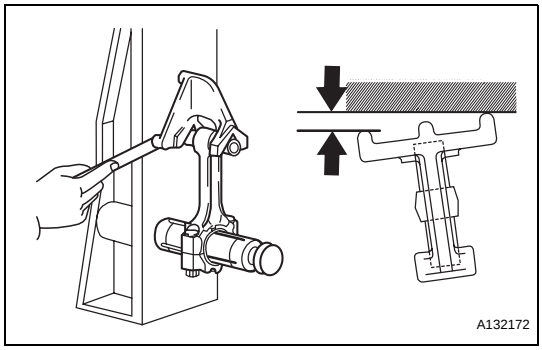

(2) Check for twist.

Maximum twist:
0.15 mm (0.0059 in.) per 100 mm (3.94 in.)
If the twist is greater than the maximum, replace the connecting rod.

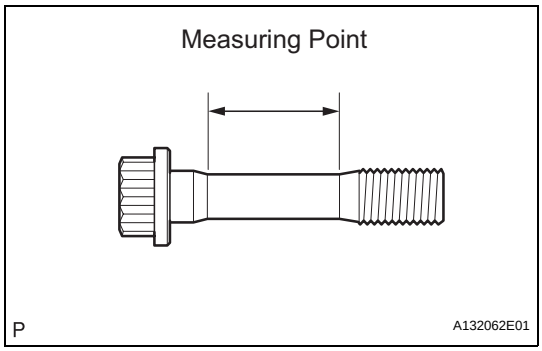

34. INSPECT CONNECTING ROD BOLT

(a) Using a vernier caliper, measure the tension portion diameter of the bolt.

Standard diameter:
7.2 to 7.3 mm (0.283 to 0.287 in.)
Minimum diameter:
7.0 mm (0.276 in.)
If the diameter is less than the minimum, replace the bolt.

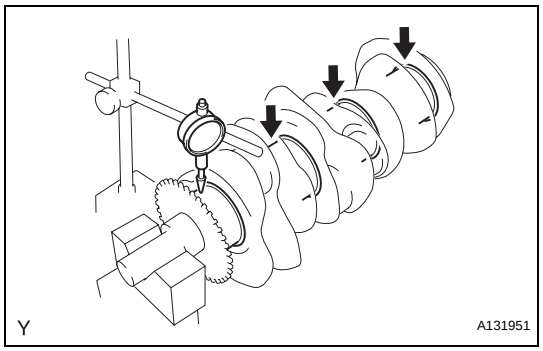

35. INSPECT CRANKSHAFT

(a) Inspect for circle runout.
  (1) Place the crankshaft on the V-blocks.
  (2) Using a dial indicator, measure the circle runout at the center journal.
  Maximum circle runout:
  0.06 mm (0.0024 in.)
  If the circle runout is greater than the maximum, replace the crankshaft.

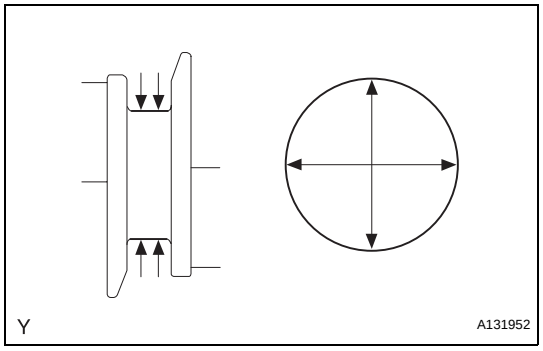

(b) Inspect the main journals.
  (1) Using a micrometer, measure the diameter of each main journal.
  Standard journal diameter:
  60.988 to 61.00 mm (2.4011 to 2.4016 in.)
  If the diameter is not as specified, check the oil clearance. If necessary, replace the crankshaft.
  (2) Check each main journal for taper and out-of-round as shown in the illustration.
  Maximum taper and out-of-round:
  0.02 mm (0.0008 in.)
  If the taper and out-of-round is greater than the maximum, replace the crankshaft.

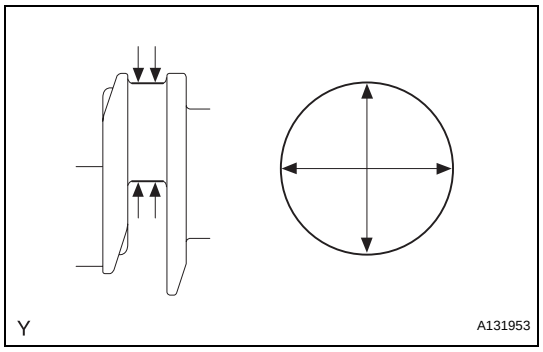

(c) Inspect the crank pin.
  (1) Using a micrometer, measure the diameter of each crank pin.
  Standard crank pin diameter:
  52.992 to 53.000 mm (2.0863 to 2.0866 in.)
  If the diameter is not as specified, check the oil clearance. If necessary, replace the crankshaft.
  (2) Check each crank pin for taper and out-of-round as shown in the illustration.
  Maximum taper and out-of-round:
  0.02 mm (0.0008 in.)
  If the taper and out-of-round is greater than the maximum, replace the crankshaft.

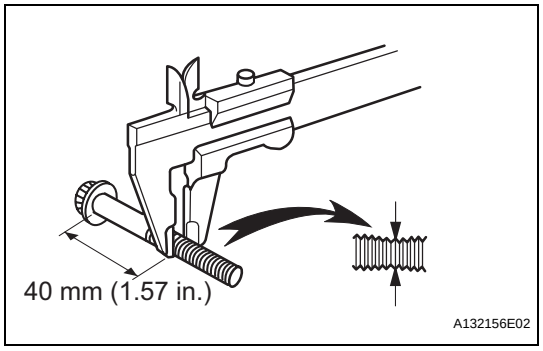

36. INSPECT CRANKSHAFT BEARING CAP SET BOLT

(a) Using a vernier caliper, measure the minimum diameter of the compressed thread at the measuring point.
  Standard diameter:
  10.8 to 11.0 mm (0.4252 to 0.4331 in.)
  Minimum diameter:
  10.70 mm (0.4213 in.)
  If the diameter is less than the minimum, replace the bolt.

EM

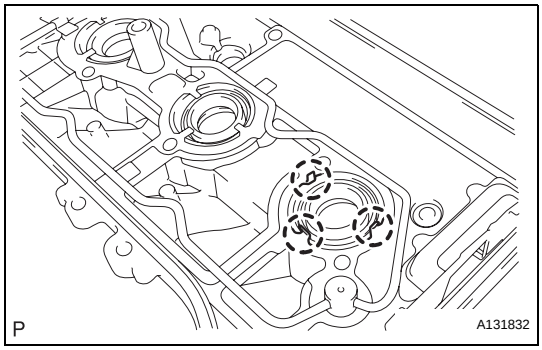

REPLACEMENT

1. REPLACE SPARK PLUG TUBE GASKET

(a) Pry up the claws of the ventilation baffle plate.

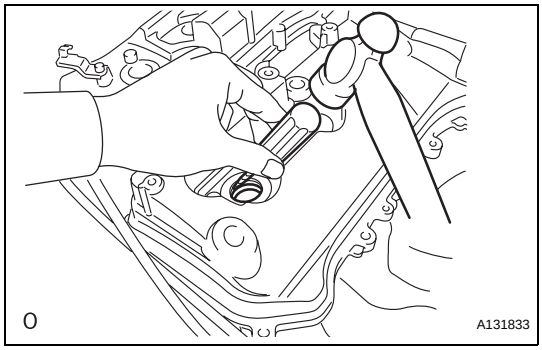

(b) Using a screwdriver with its tip taped and a hammer, tap out the 6 spark plug tube gaskets.

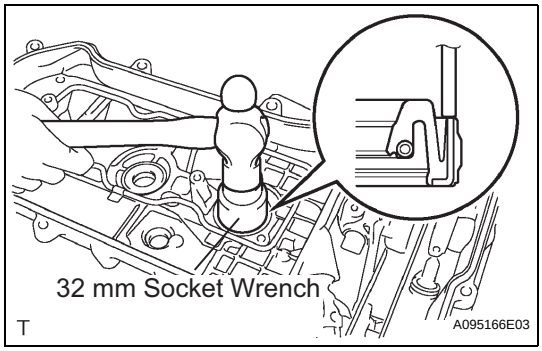

(c) Using a 32 mm socket wrench, tap in 6 new spark plug tube gaskets to the head covers.
NOTICE:
- **Keep the lip free from foreign matter.**
- **Do not tap on the oil seal at an angle.**

(d) Return the claw of the ventilation baffle plate to its original position.

2. REPLACE ENGINE REAR OIL SEAL

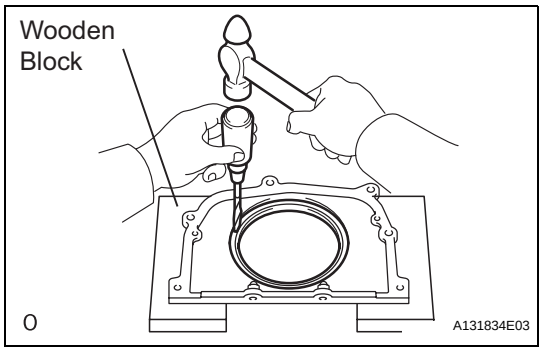

(a) Place the oil seal retainer on wooden blocks.

(b) Using a screwdriver and a hammer, tap out the oil seal.

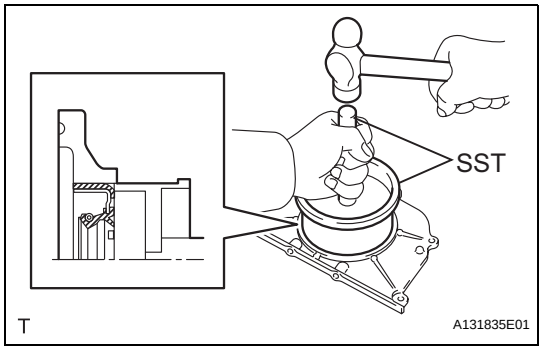

(c) Using SST, tap in a new oil seal until its surface is flush with the oil seal retainer edge.
SST 09223-15030
NOTICE:
- **Keep the lip free from foreign matter.**
- **Do not tap on the oil seal at an angle.**

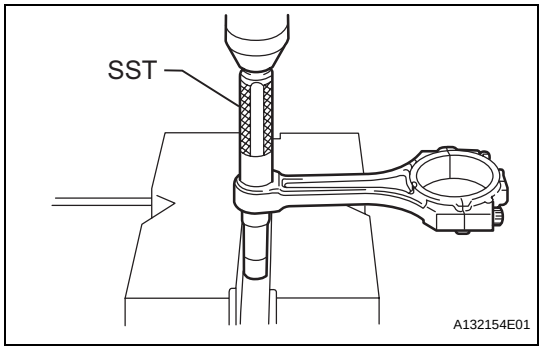

3. REPLACE CONNECTING ROD SMALL END BUSH

(a) Using SST and a press, push out the bush.
SST 09222-30010

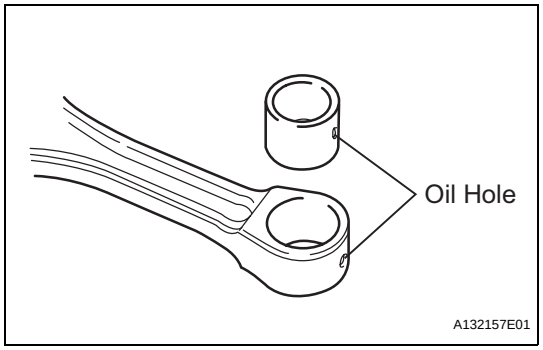

(b) Align the oil holes of the new bush and connecting rod.

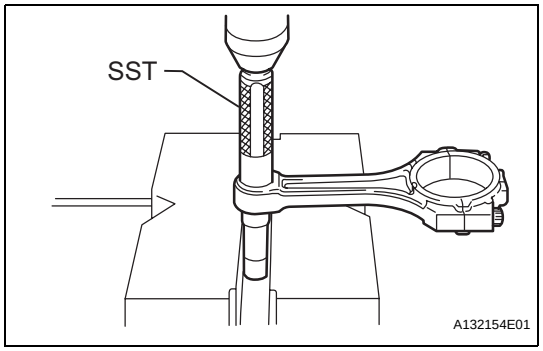

(c) Using SST and a press, push in the bush.
SST 09222-30010

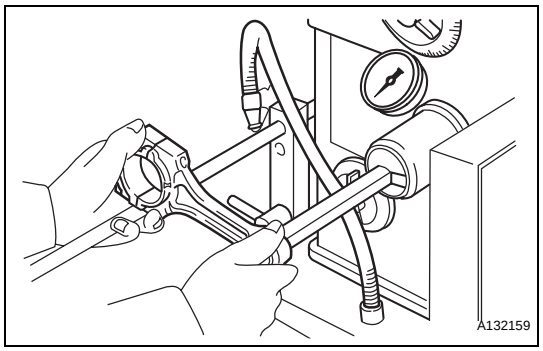

(d) Using a pin hole grinder, hone the bush to obtain the standard specified clearance between the bush and piston pin.

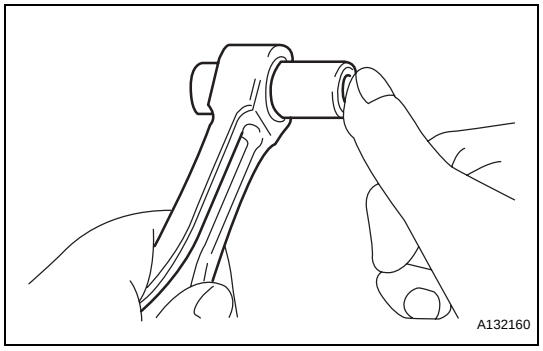

(e) Coat the piston pin with engine oil. Push the piston pin into the connecting rod with your thumb to check that the piston pin fits at normal room temperature.

4. REPLACE INTAKE VALVE GUIDE BUSH

(a) Heat the cylinder head to approximately 80 to 100°C (176 to 212°F).
(b) Place the cylinder head on wooden blocks.

EM

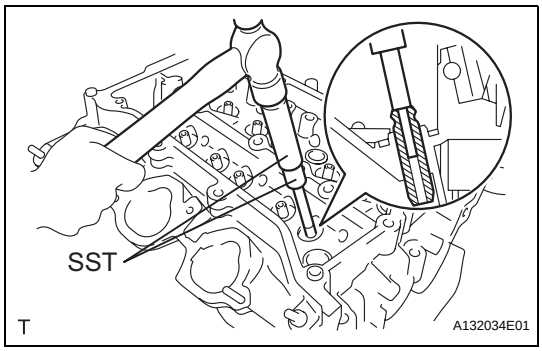

(c) Using SST and a hammer, tap out the valve guide bush.
SST 09201-10000 (09201-01050), 09950-70010 (09951-07100)

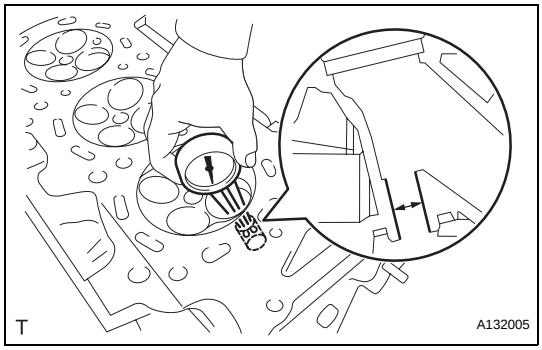

(d) Using a caliper gauge, measure the bush bore diameter of the cylinder head.
Standard cylinder bore diameter:
10.285 to 10.306 mm (0.4049 to0.4057 in.)

(e) Select a new guide bush (STD or O/S 0.05).
Standard bush bore diameter

Bush Size	Specified Condition
Use STD	10.335 to 10.356 mm (0.4069 to 0.4077 in.)
Use O/S 0.05	10.285 to 10.306 mm (0.4049 to 0.4057 in.)

HINT:
- If the bush bore diameter of the cylinder head is greater than 10.344 mm (0.4072 in.), machine the bush bore diameter to between 10.383 to 10.394 mm (0.4088 to 0.4092 in.).
- If the bush bore diameter of the cylinder head is greater than 10.344 mm (0.4072 in.), replace the cylinder head.

(f) Heat the cylinder head to approximately 80 to 100°C (176 to 212°F).

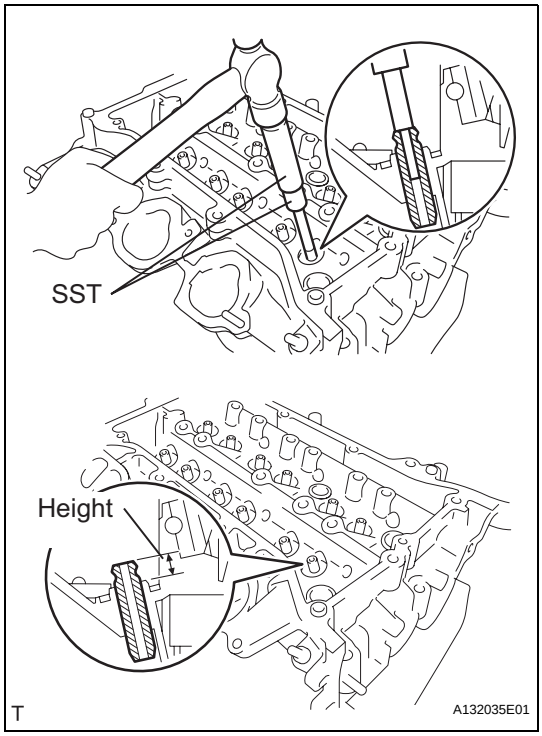

(g) Using SST and a hammer, tap in a new guide bush to the specified protrusion height.
Standard protrusion height:
9.1 to 9.9 mm (0.3582 to 0.3900 in.)
SST 09201-10000 (09201-01050), 09950-70010 (09951-07100)

EM

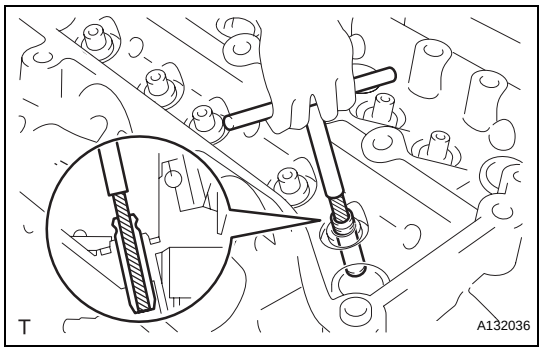

(h) Using a sharp 5.5 mm reamer, ream the guide bush to obtain the standard specified clearance between the guide bush and valve stem.

5. REPLACE EXHAUST VALVE GUIDE BUSH

(a) Heat the cylinder head to approximately 80 to 100°C (176 to 212°F).

(b) Place the cylinder head on wooden blocks.

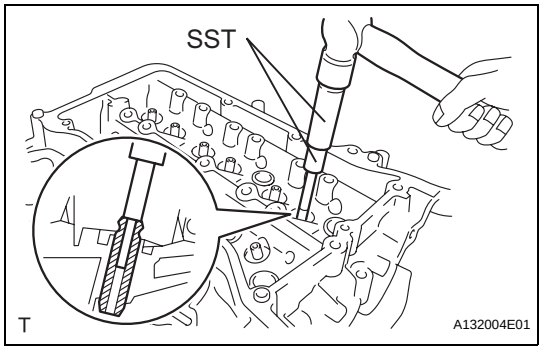

(c) Using SST and a hammer, tap out the valve guide bush.

SST 09201-10000 (09201-01050), 09950-70010 (09951-07100)

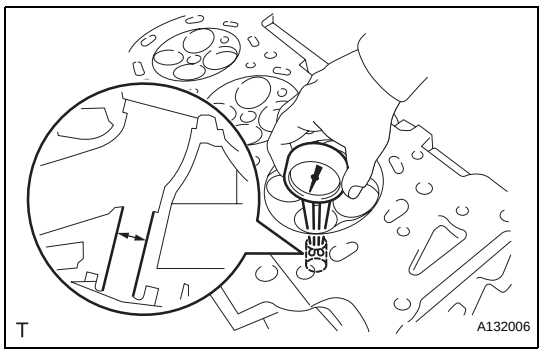

(d) Using a caliper gauge, measure the bush bore diameter of the cylinder head.

Standard cylinder bore diameter:
10.285 to 10.306 mm (0.4049 to 0.4057 in.)

(e) Select a new guide bush (STD or O/S 0.05).

Standard bush bore diameter

Bush Size	Specified Condition
Use STD	10.335 to 10.356 mm (0.4069 to 0.4077 in.)
Use O/S 0.05	10.285 to 10.306 mm (0.4049 to 0.4057 in.)

HINT:

- If the bush bore diameter of the cylinder head is greater than 10.344 mm (0.4072 in.), machine the bush bore diameter to between 10.383 to 10.394 mm (0.4088 to 0.4092 in.).
- If the bush bore diameter of the cylinder head is greater than 10.344 mm (0.4072 in.), replace the cylinder head.

(f) Heat the cylinder head to approximately 80 to 100°C (176 to 212°F).

EM

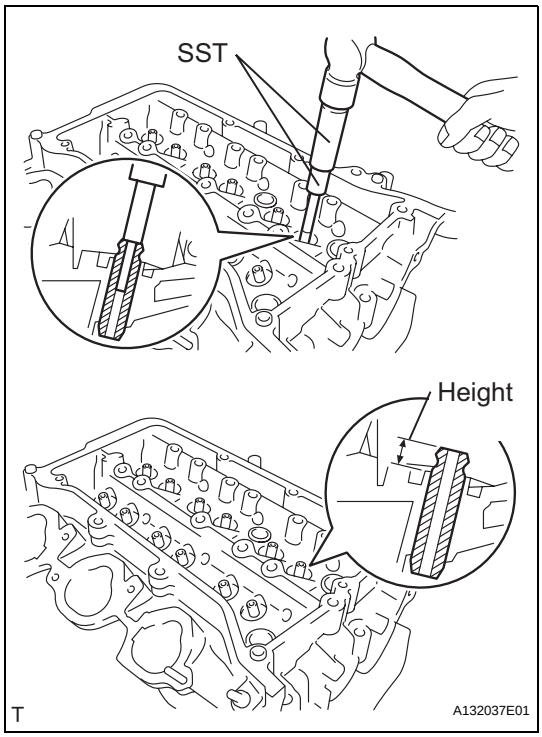

(g) Using SST and a hammer, tap in a new guide bush to the specified protrusion height.
SST 09201-10000 (09201-01050), 09950-70010 (09951-07100)
Standard protrusion height:
9.30 to 9.70 mm (0.3661 to 0.3819 in.)

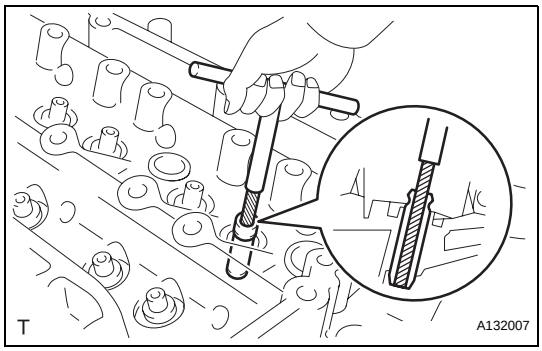

(h) Using a sharp 5.5 mm reamer, ream the guide bush to obtain the standard specified clearance between the guide bush and valve stem.

6. REPLACE CYLINDER BLOCK TIGHT PLUG
NOTICE:
If water leaks from the tight plug or the plug corrodes, replace it.
(a) Remove the tight plugs.

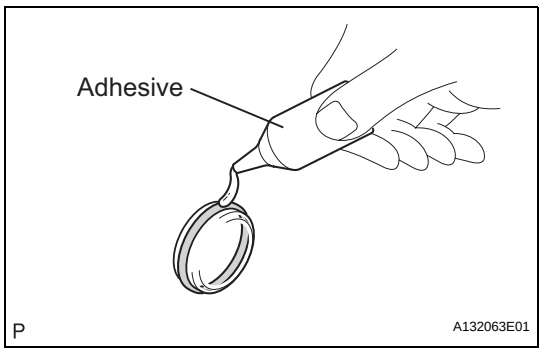

(b) Apply adhesive around the tight plug.
Adhesive:
Toyota Genuine Adhesive 1324, Three Bond 1324 or Equivalent
(c) Using SST and a hammer, tap in 2 new tight plugs as shown in the illustration.
SST 09950-60010 (09951-00340), 09950-70010 (09951-07100)

EM

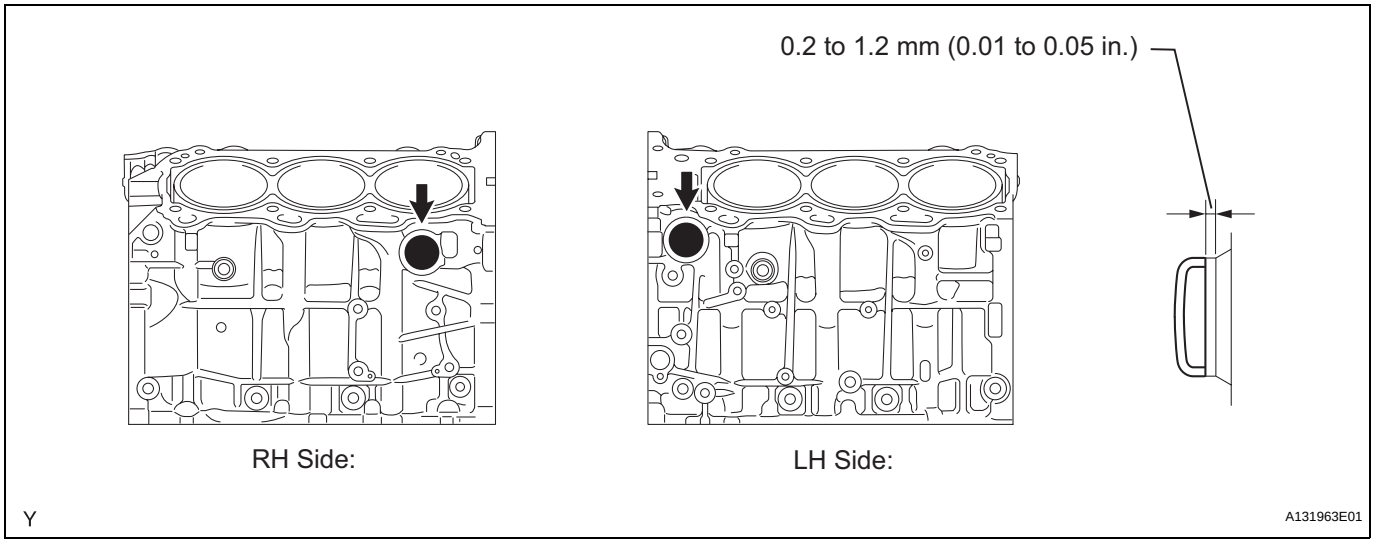

7. REPLACE CYLINDER BLOCK STUD BOLT

NOTICE:

If a stud bolt is deformed or the threads are damaged, replace it.

(a) Remove the stud bolts.

(b) Using an E8 "torx" socket wrench, install the stud bolts.

Torque: 10 N*m (102 kgf*cm, 7 ft.*lbf)

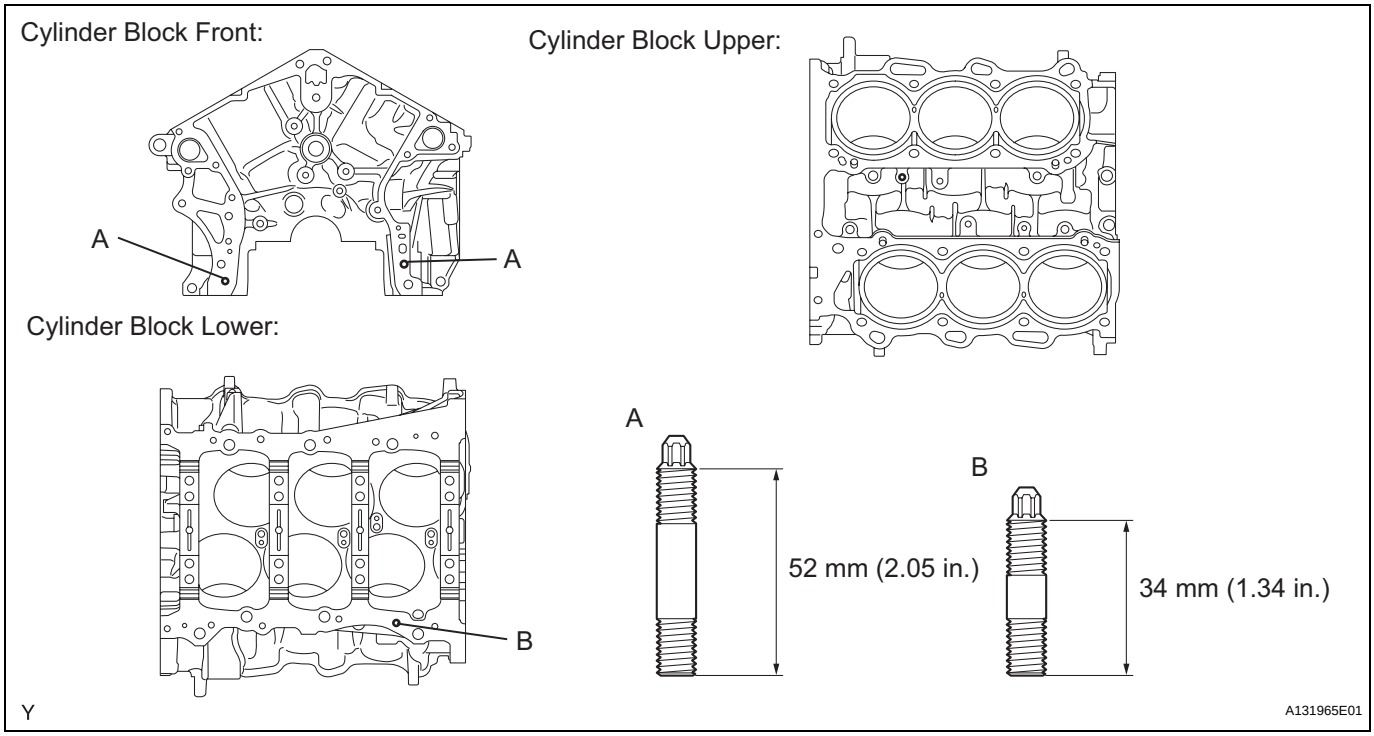

8. REPLACE CYLINDER BLOCK STRAIGHT PIN

NOTICE:

It is not necessary to remove the straight pin unless it is being replaced.

(a) Remove the straight pin.

(b) Using a plastic-faced hammer, tap in new straight pins to the cylinder block.

Standard protrusion

Item	Specified Condition
Pin A	23 mm (0.91 in.)
Pin B	6 mm (0.24 in.)
Pin C	11 mm (0.43 in.)
Pin D	9 mm (0.35 in.)

Cylinder Block Front:

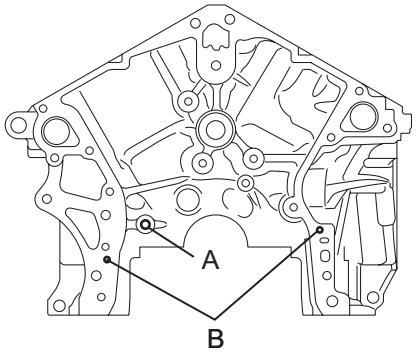

Cylinder Block Rear:

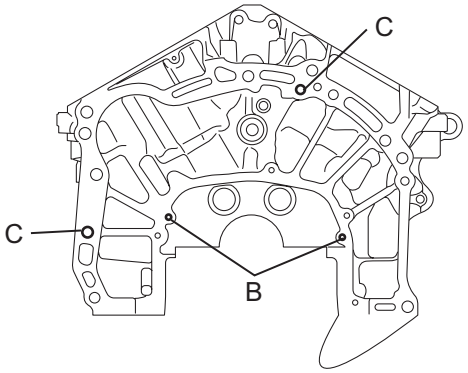

Cylinder Block Upper:

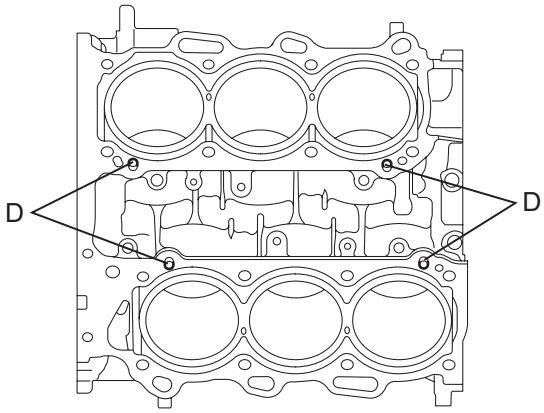

Cylinder Block Lower:

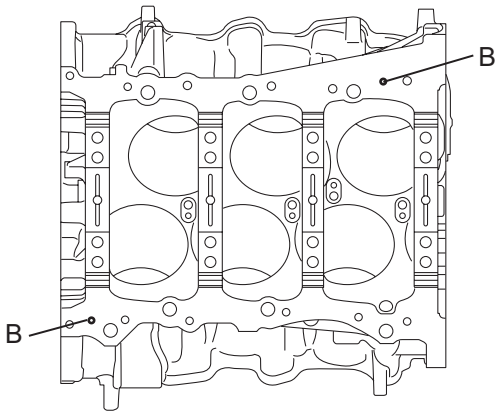

Cylinder Block RH Side:

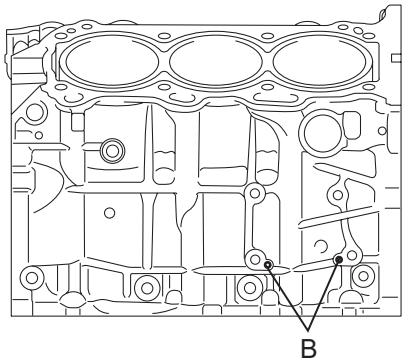

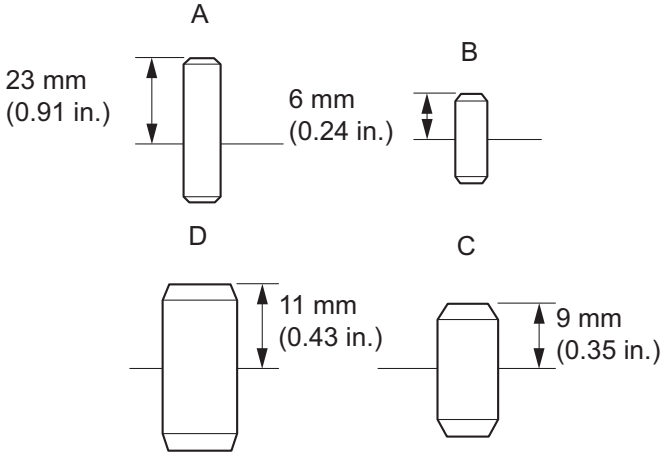

Y

A131964E01

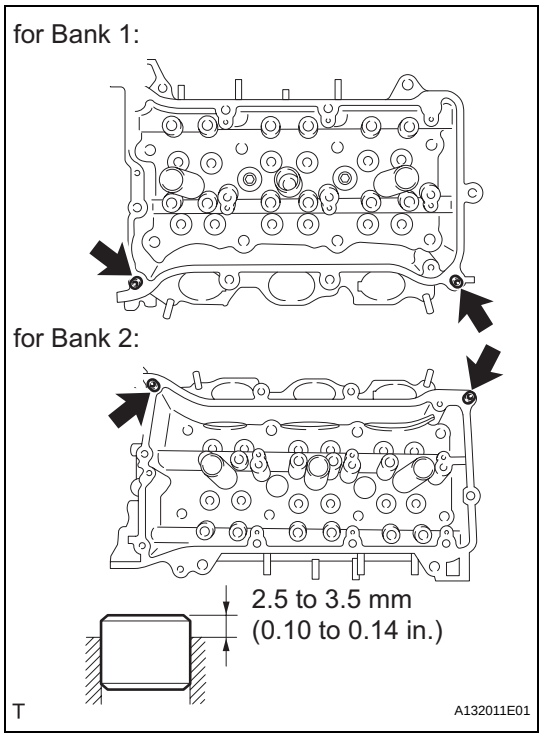

9. REPLACE CYLINDER HEAD RING PIN

NOTICE:

It is not necessary to remove the ring pin unless it is being replaced.

(a) Remove the ring pins.

(b) Using a plastic-faced hammer, tap in a new ring pin until the pin stops.

10. REPLACE CYLINDER HEAD STUD BOLT

NOTICE:

If a stud bolt is deformed or the threads are damaged, replace it.

(a) Remove the stud bolts.

(b) Using E6 and E8 "torx" socket wrenches, install the stud bolts.

Torque: 10 N*m (102 kgf*cm, 7 ft.*lbf) for stud bolts A and B
4.0 N*m (41 kgf*cm, 35 in.*lbf) for stud bolt C

EM

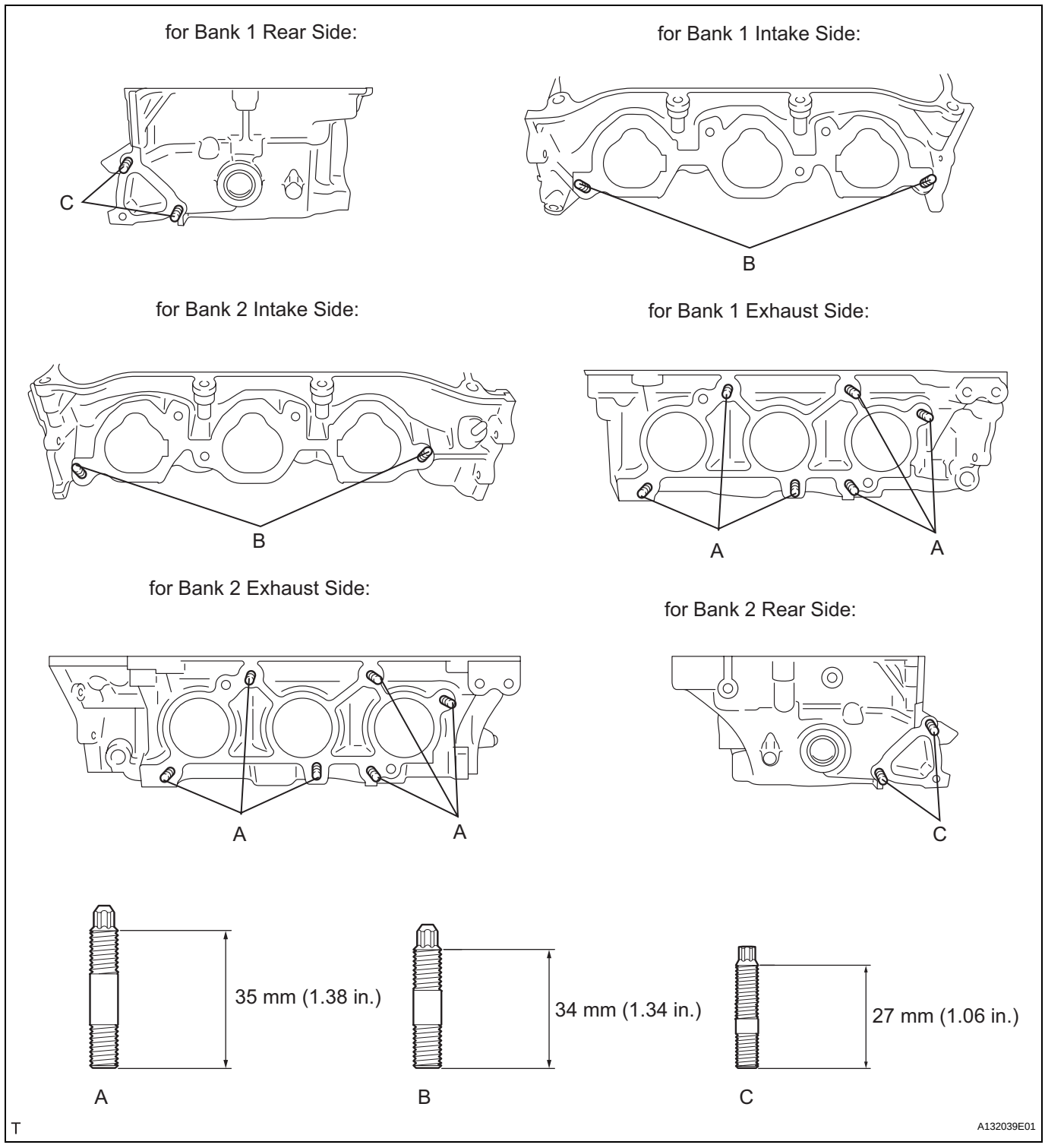

11. REPLACE CYLINDER HEAD SET STRAIGHT PIN

NOTICE:

It is not necessary to remove the straight pin unless it is being replaced.

(a) Using a plastic-faced hammer, tap in a new straight pin as shown in the illustration.

Standard protrusion height:

18.0 to 19.0 mm (0.71 to 0.75 in.)

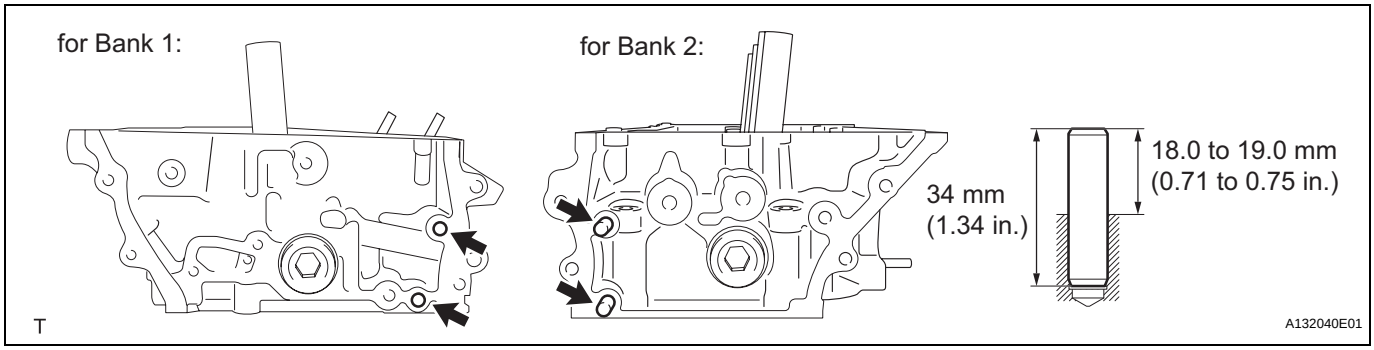

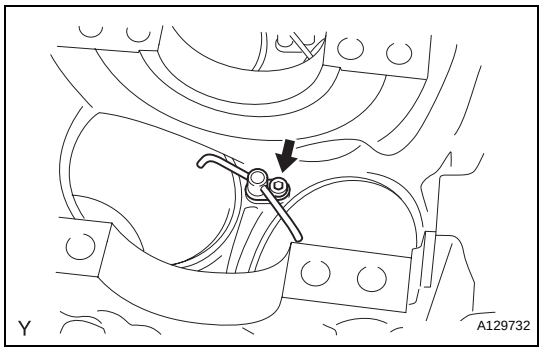

REASSEMBLY

1. INSTALL NO. 1 OIL NOZZLE SUB-ASSEMBLY

(a) Using a 5 mm hexagon wrench, install the 3 oil nozzles with the bolts.
Torque: 9.0 N*m (92 kgf*cm, 80 in.*lbf)

EM

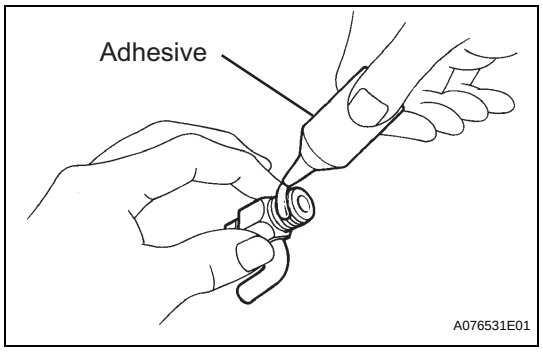

2. INSTALL CYLINDER BLOCK WATER DRAIN COCK SUB-ASSEMBLY

(a) Apply adhesive around the drain cocks.
Adhesive:
Toyota Genuine Adhesive 1324, Three Bond 1324 or Equivalent

(b) Install the cylinder block water drain cocks.
(1) Temporarily install the drain cocks.
Torque: 25 N*m (255 kgf*cm, 18 ft.*lbf)

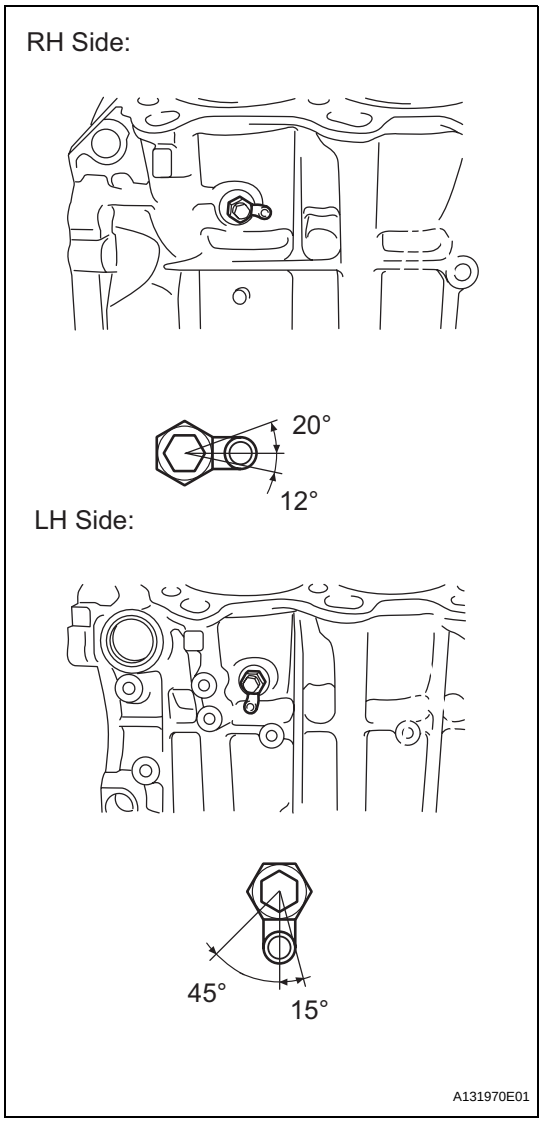

(2) Within one full rotation, tighten the drain cock to the angle shown in the illustration.
Torque: 45 N*m (459 kgf*cm, 33 ft.*lbf)
NOTICE:
Do not loosen the drain cock to adjust it. If an adjustment is necessary, remove the drain cock and reinstall it.

(c) Install the water drain cock plug to the water drain cocks.
Torque: 13 N*m (130 kgf*cm, 9 ft.*lbf)

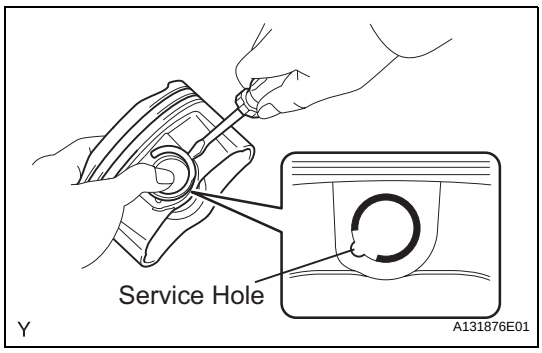

3. INSTALL PISTON WITH PIN SUB-ASSEMBLY

(a) Using a screwdriver, install a new snap ring at one end of the piston pin hole.
HINT:
Be sure that the end gap of the snap ring is not aligned with the pin hole cutout portion of the piston.

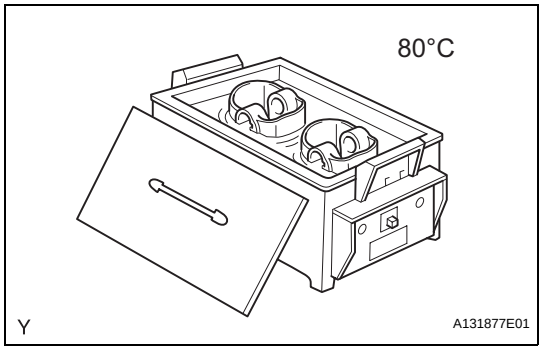

(b) Gradually heat the piston to approximately 80°C (176°F).

(c) Coat the piston pin with engine oil.

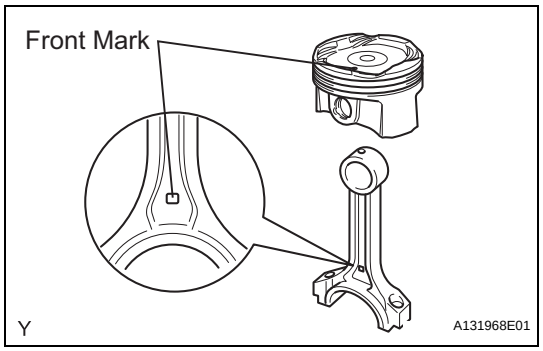

(d) Align the front marks of the piston and connecting rod, and push in the piston pin with your thumb.
HINT:
The piston and pin are a matched set.

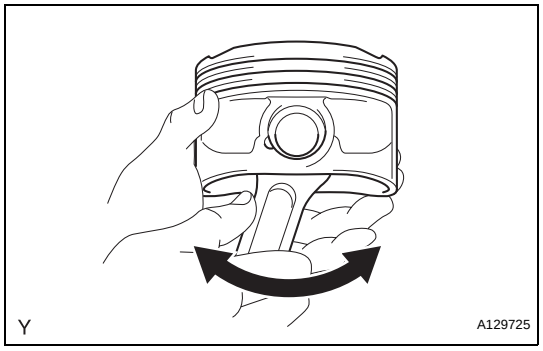

(e) Check the fitting condition between the piston and piston pin by trying to move the piston back and forth on the piston pin.

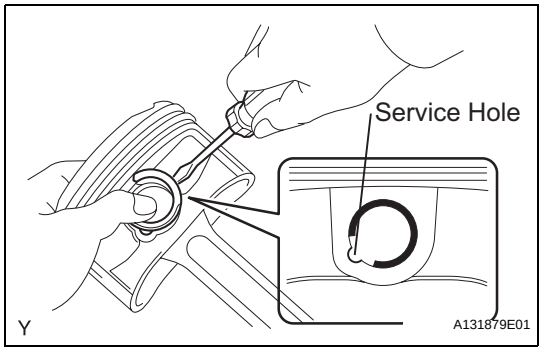

(f) Using a screwdriver, install a new snap ring at the other end of the piston pin hole.
HINT:
Be sure that the end gap of the snap ring is not aligned with the pin hole cutout portion of the piston.

4. INSTALL PISTON RING SET

(a) Install the oil ring expander and 2 side rails by hand.

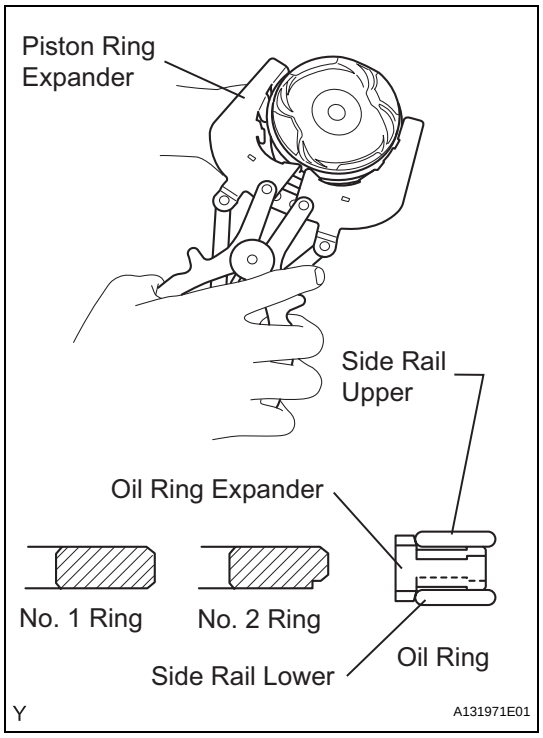

(b) Using a piston ring expander, install the 2 compression rings so that the painted marks are positioned as shown in the illustration.

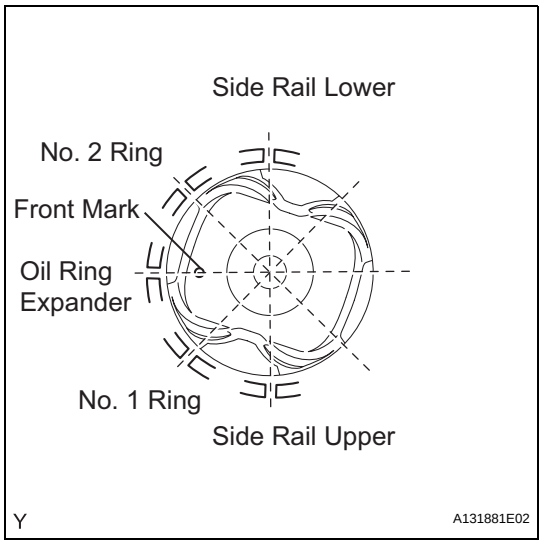

(c) Position the piston rings so that the ring ends are as shown in the illustration.
NOTICE:
Do not align the ring ends.

5. INSTALL CRANKSHAFT BEARING
NOTICE:
Main bearings come in widths between 18.0 mm (0.709 in.) and 21.0 mm (0.827 in.). Install the 21.0 mm (0.827 in.) bearings in the No. 1 and No. 4 cylinder block journal positions with the main bearing cap. Install the 18.0 mm (0.709 in.) bearings in the No. 2 and No. 3 positions.

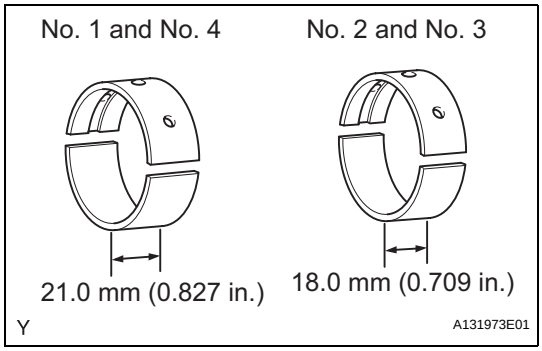

(a) Clean the main journal and both surfaces of the bearing.

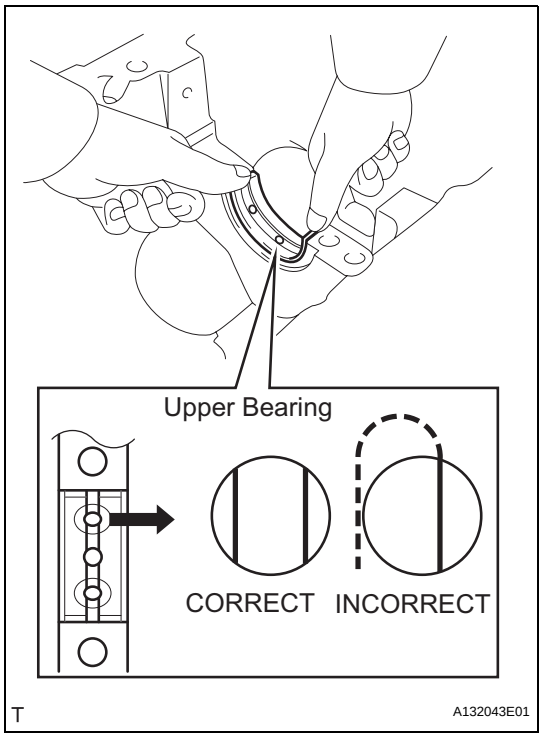

(b) Install the upper bearing.
(1) Install the upper bearing to the cylinder block as shown in the illustration.
NOTICE:
Do not apply engine oil to the bearing and its contact surface.

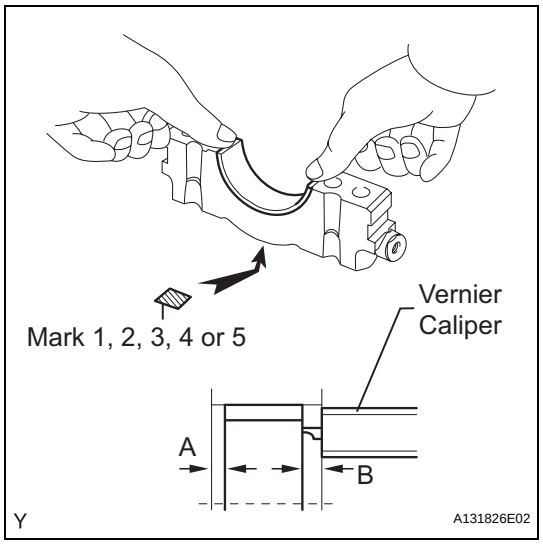

(c) Install the lower bearing.
(1) Install the lower bearing to the bearing cap.
(2) Using a vernier caliper, measure the distance between the bearing cap's edge and the lower bearing's edge.
Dimension (A - B):
0.7 mm (0.028 in.) or less.
NOTICE:
Do not apply engine oil to the bearing's contact area and underside.

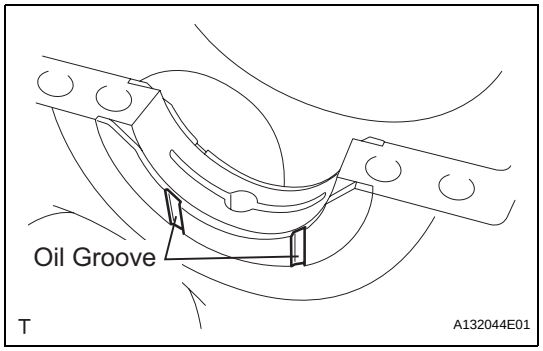

6. INSTALL CRANKSHAFT

(a) Install the 2 thrust washers under the No. 2 journal position of the cylinder block with the oil grooves facing outward.

(b) Apply engine oil to the upper bearing, then place the crankshaft on the cylinder block.

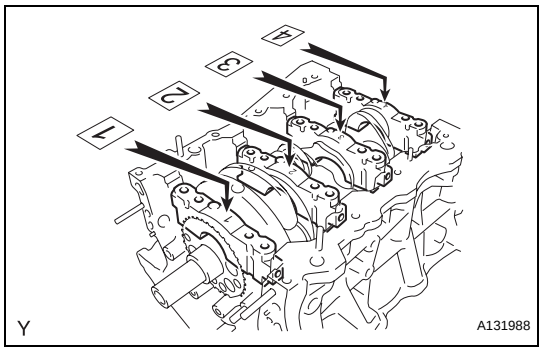

(c) Confirm the front marks and numbers of the main bearing caps and install the bearing caps on the cylinder block.
HINT:
A number is marked on each main bearing cap to indicate the installation position.

(d) Apply a light coat of engine oil on the threads and under the heads of the bearing cap bolts.

(e) Temporarily install the 8 main bearing cap bolts to the inside positions.

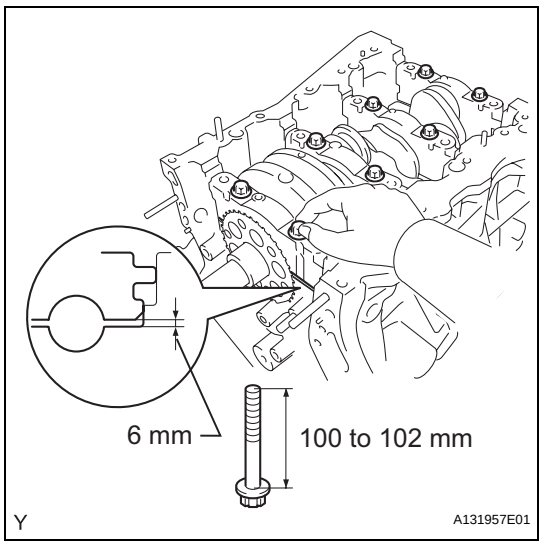

(f) Insert the main bearing cap by hand until the clearance between the main bearing cap and the cylinder block is less than 6 mm (0.23 in.) by marking the 2 internal bearing cap bolts as a guide.
Bolt length:
100.0 to 102.0 mm (3.937 to 4.016 in.)

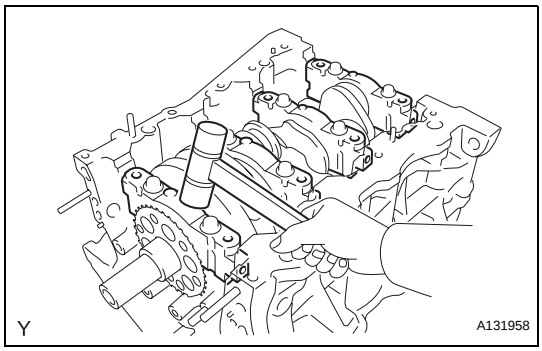

(g) Using a plastic-faced hammer, lightly tap the bearing cap to ensure a proper fit.
(h) Apply a light coat of engine oil to the threads and under the heads of the 8 main bearing cap bolts.

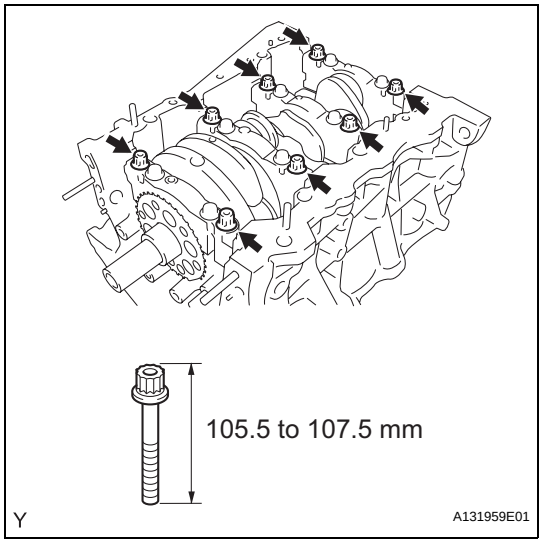

(i) Install the 8 main bearing cap bolts to the outside positions.
Bolt length:
105.5 to 107.5 mm (4.154 to 4.232 in.)
(j) Install the crankshaft bearing cap bolts.
HINT:
The main bearing cap bolts are tightened in 2 progressive steps.

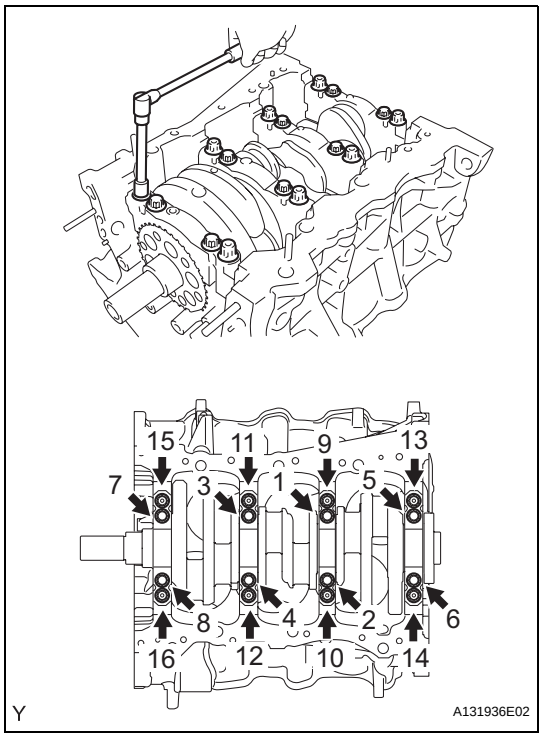

(k) Step 1
(1) Install and uniformly tighten the 16 main bearing cap bolts in the sequence shown in the illustration.
Torque: 61 N*m (622 kgf*cm, 45 ft.*lbf)
If any of the main bearing cap bolts does not meet the specified torque, replace it.

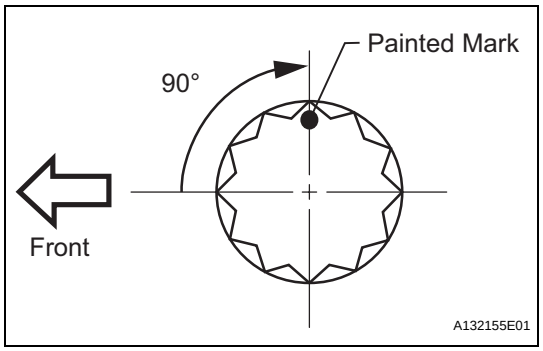

(l) Step 2
  (1) Mark the front of the bearing cap bolts with paint.
  (2) Tighten the bearing cap bolts another 90° in the order shown in step 1.
  (3) Check that the painted mark is now at a 90° angle to the front.

(m) Check that the crankshaft turns smoothly.

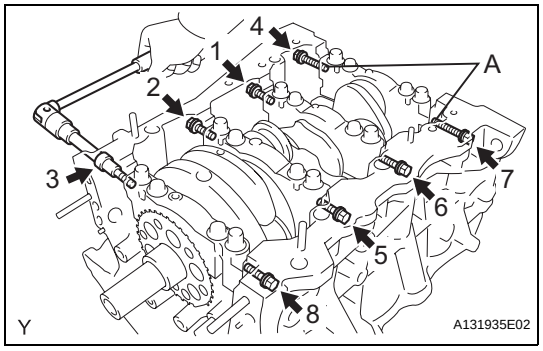

(n) Install and uniformly tighten the 8 main bearing cap bolts in several steps, in the sequence shown in the illustration.
Torque: 52 N*m (530 kgf*cm, 38 ft.*lbf)
Bolt length:
45 mm (1.77 in.) for bolt A
30 mm (1.18 in.) for except bolt A

(o) Check that the crankshaft turns smoothly.

7. INSTALL CONNECTING ROD BEARING

(a) Install the connecting rod bearing to the connecting rod and bearing cap.

(b) Using a vernier caliper, measure the distance between the connecting rod's and bearing cap's edges, and each connecting rod bearing's edge.
Dimension (A - B):
0.7 mm (0.028 in.) or less
NOTICE:
Do not apply engine oil to the bearing's contact area and underside.

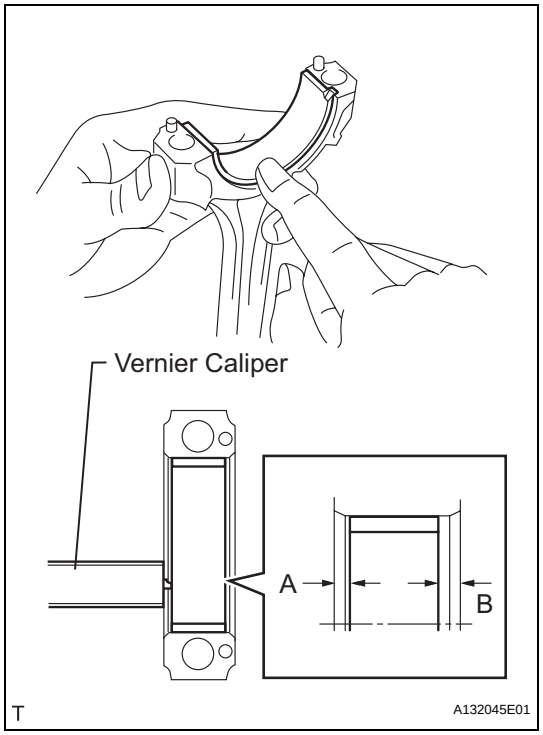

8. INSTALL PISTON SUB-ASSEMBLY WITH CONNECTING ROD

(a) Apply engine oil to the cylinder walls, the pistons, and the surfaces of the connecting rod bearings.

EM

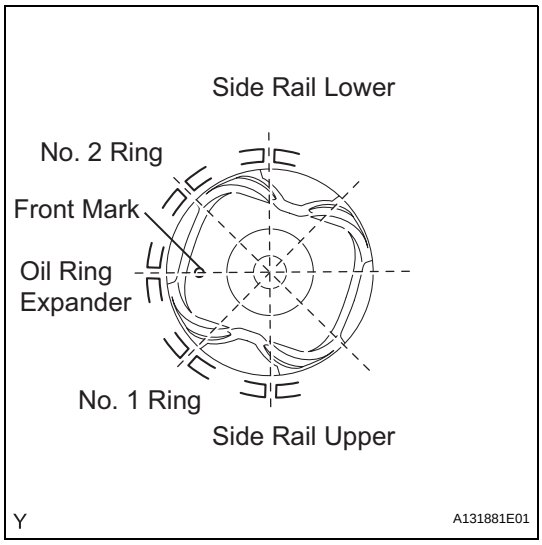

(b) Position the piston rings so that the ring ends are as shown in the illustration.
NOTICE:
Do not align the ring ends.

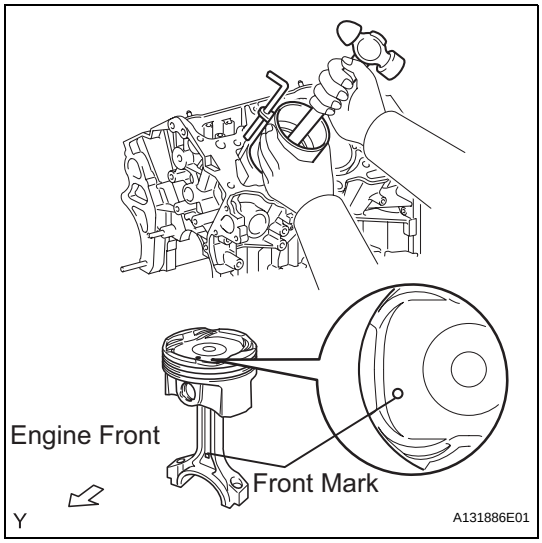

(c) Using a piston ring compressor, push the correctly numbered piston and connecting rod into the cylinder with the front mark of the piston facing forward.
NOTICE:
Match the numbered connecting rod cap with the connecting rod.

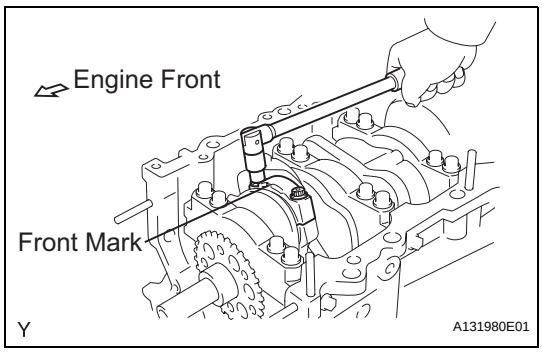

(d) Check that the front mark of the connecting rod cap is facing forward.
(e) Apply a light coat of engine oil to the threads and under the heads of the connecting rod cap bolts.
(f) Install the connecting cap bolts.
HINT:
The connecting cap bolts are tightened in 2 progressive steps.

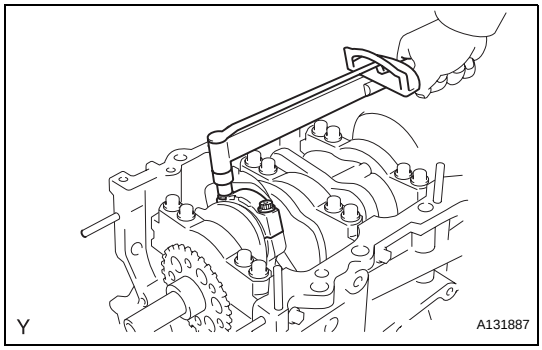

(g) Step 1
(1) Install and alternately tighten the bolts of the connecting rod cap in several steps.
Torque: 25 N*m (255 kgf*cm, 18 ft.*lbf)

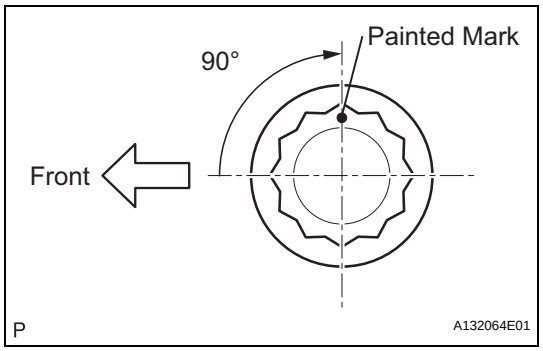

(h) Step 2
  (1) Mark the front side of each connecting cap bolt with paint.
  (2) Tighten the cap bolts another 90° as shown in the illustration in the order in step 1.
  (3) Check that the painted mark is now at a 90° angle to the front.

(i) Check that the crankshaft turns smoothly.

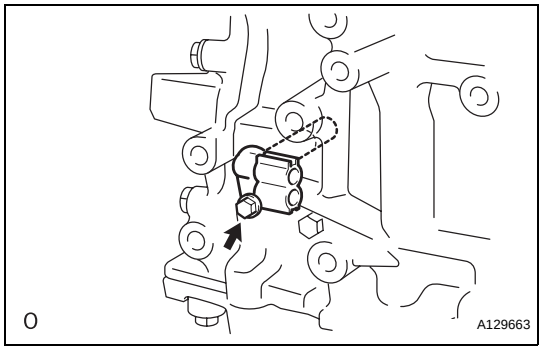

9. INSTALL CRANKSHAFT POSITION SENSOR

(a) Install the crankshaft position sensor with the bolt.
Torque: 10 N*m (102 kgf*cm, 7 ft.*lbf)

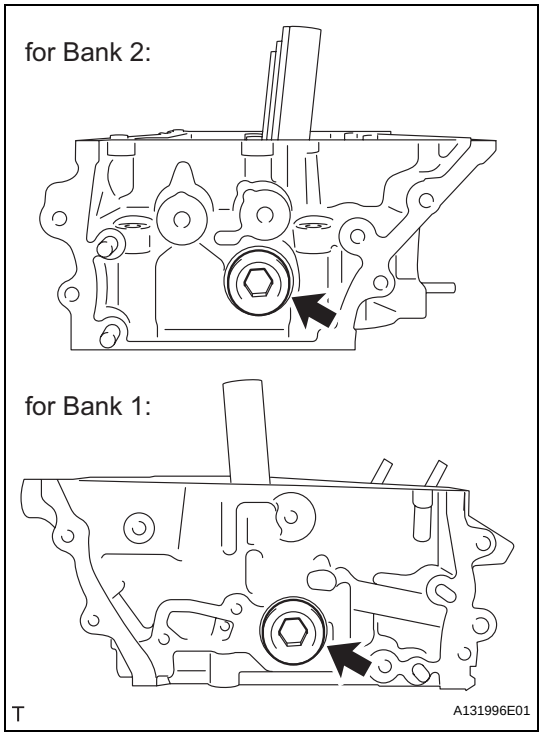

10. INSTALL NO. 2 STRAIGHT SCREW PLUG

(a) Using a 14 mm hexagon wrench, install 2 new gaskets and the 2 straight screw plugs.
Torque: 80 N*m (816 kgf*cm, 59 ft.*lbf)

EM

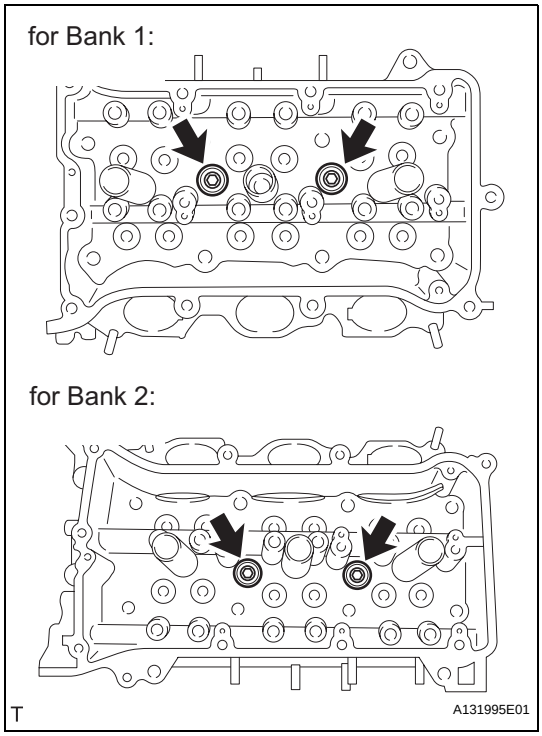

11. INSTALL NO. 1 STRAIGHT SCREW PLUG

(a) Using a 10 mm hexagon wrench, install 4 new gaskets and the straight screw plugs.
Torque: 44 N*m (449 kgf*cm, 32 ft.*lbf)

12. INSTALL VALVE SPRING SEAT

(a) Install the valve spring seats to the cylinder head.

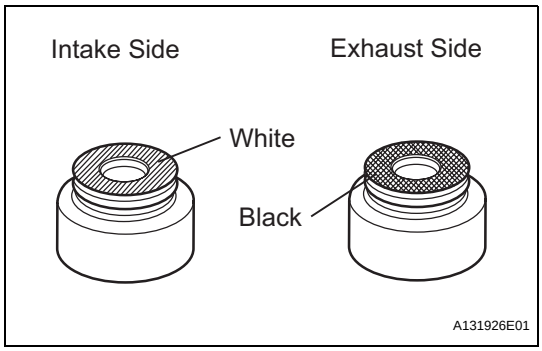

13. INSTALL INTAKE VALVE STEM OIL SEAL

(a) Apply a light coat of engine oil to new oil seals.
NOTICE:
Pay attention when installing the intake and exhaust oil seals. For example, installing the intake oil seal into the exhaust side or installing the exhaust oil seal to the intake side can cause installation problems later.
HINT:
The intake valve oil seals are white and the exhaust valve oil seals are black.

(b) Using SST, push in the oil seals.
SST 09201-41020
NOTICE:
Failure to use SST will cause the seal to be damaged or improperly seated.

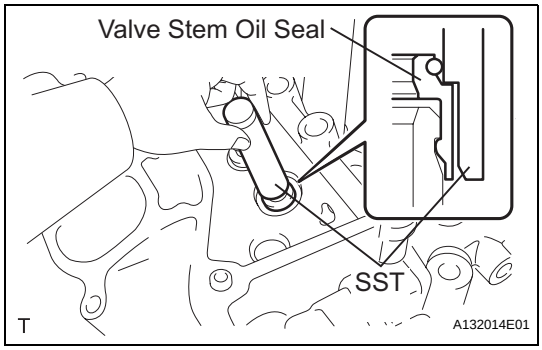

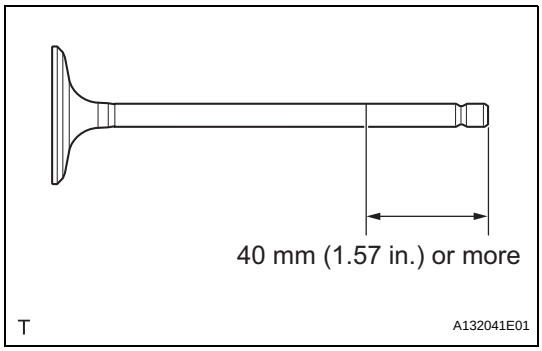

14. INSTALL INTAKE VALVE

(a) Apply plenty of engine oil to the tip area of the intake valve shown in the illustration.

(b) Install the valve, compression spring and spring retainer to the cylinder head.
NOTICE:
Install the same parts in the same combination to original locations.

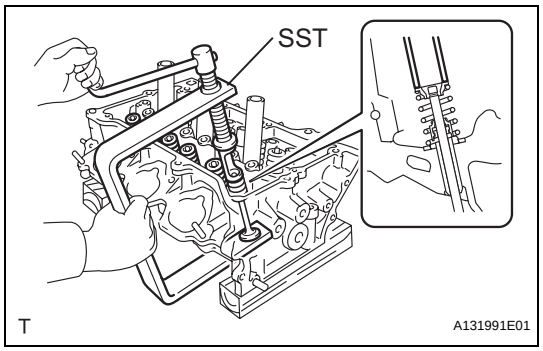

(c) Using SST and wooden blocks, compress the spring and install the retainer lock.
SST 09202-70020 (09202-00010)

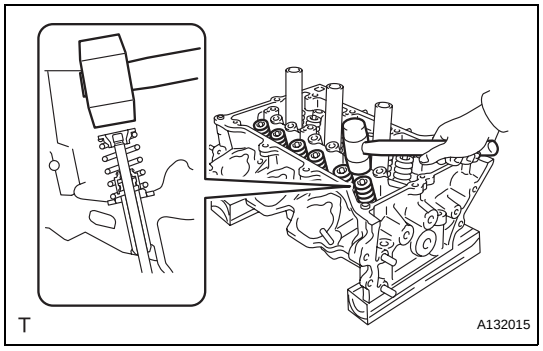

(d) Using a plastic-faced hammer, lightly tap the valve stem tip to ensure a proper fit.
NOTICE:
Be careful not to damage the retainer.

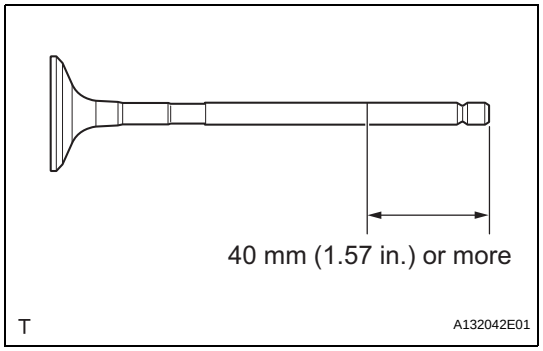

15. INSTALL EXHAUST VALVE

(a) Apply plenty of engine oil to the tip area of the exhaust valve shown in the illustration.
(b) Install the valve, compression spring and spring retainer to the cylinder head.
NOTICE:
Install the same parts in the same combination to their original locations.

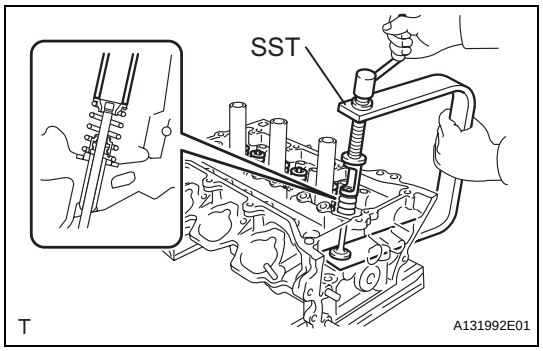

(c) Using SST and wooden blocks, compress the spring and install the retainer lock.
SST 09202-70020 (09202-00010)

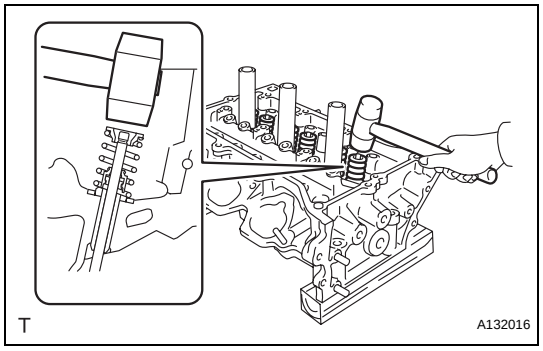

(d) Using a plastic-faced hammer, lightly tap the valve stem tip to ensure a proper fit.
NOTICE:
Be careful not to damage the retainer.

16. INSTALL VALVE STEM CAP

(a) Apply a light coat of engine oil to the valve stem caps.
(b) Install the valve stem caps to the cylinder head.

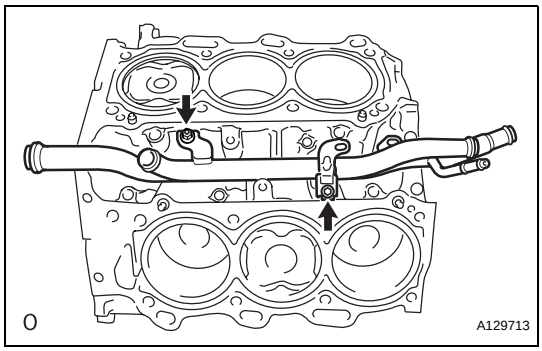

17. INSTALL WATER INLET PIPE

(a) Install the water inlet pipe with the 2 bolts.
Torque: 10 N*m (102 kgf*cm, 7 ft.*lbf)

(b) Install the water by-pass hose.

18. INSTALL CYLINDER HEAD SUB-ASSEMBLY (for Bank 1)

(a) Check the piston protrusions for each cylinder.
(1) Clean the cylinder block with solvent.
(2) Set the piston of the cylinder to be measured to slightly before TDC.

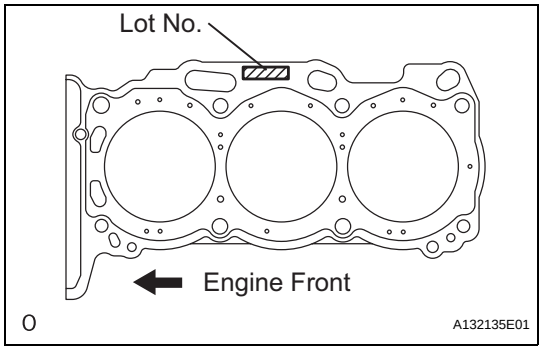

(b) Place the cylinder head gasket on the cylinder block surface with the front face of the Lot No. stamp upward.
NOTICE:
- **Be careful of the installation direction.**
- **Gently place the cylinder head in order not to damage the gasket with the bottom part of the head.**

(c) Place the cylinder head on the cylinder block.
NOTICE:
Ensure that no oil is on the mounting surface of the cylinder head.
HINT:
The cylinder head bolts are tightened in 3 progressive steps.

(d) Apply a light coat of engine oil to the threads and under the heads of the cylinder head bolts.

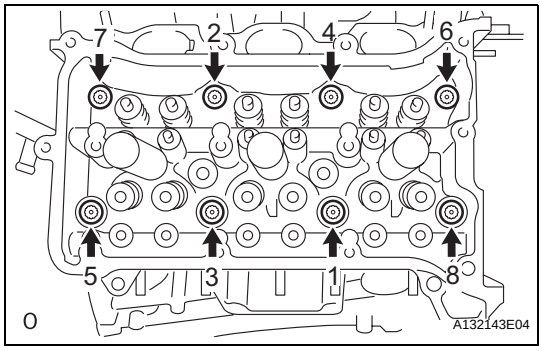

(e) Step 1
(1) Using a 10 mm bi-hexagon wrench, install and uniformly tighten the 8 cylinder head bolts with the plate washers in several steps, in the sequence shown in the illustration.
Torque: 36 N*m (367 kgf*cm, 27 ft.*lbf)

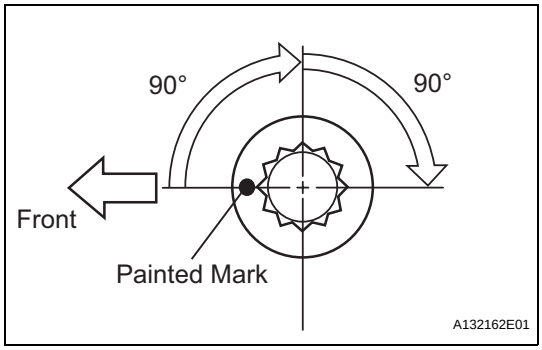

(f) Step 2
(1) Mark the cylinder head bolt head with paint as shown in the illustration.
(2) Tighten the cylinder heads bolts another 90° in the sequence shown in step 1.

(g) Step 3
(1) Tighten the cylinder head bolts by an additional 90° in the sequence shown in step 1.
(2) Check that the painted mark is now facing rearward.

19. INSTALL CYLINDER HEAD SUB-ASSEMBLY (for Bank 2)

(a) Check the piston protrusions for each cylinder.
(1) Clean the cylinder block with solvent.

(2) Set the piston of the cylinder to be measured to slightly before TDC.

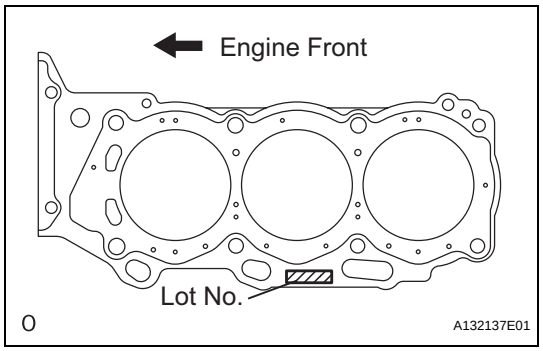

(b) Place the cylinder head gasket on the cylinder block surface with the front face of the Lot No. stamp upward.

NOTICE:

- **Be careful of the installation direction.**
- **Gently place the cylinder head in order not to damage the gasket with the bottom part of the head.**

(c) Place the cylinder head on the cylinder block.

NOTICE:

Ensure that no oil is on the mounting surface of the cylinder head.

HINT:

The cylinder head bolts are tightened in 3 progressive steps.

(d) Apply a light coat of engine oil to the threads and under the heads of the cylinder head bolts.

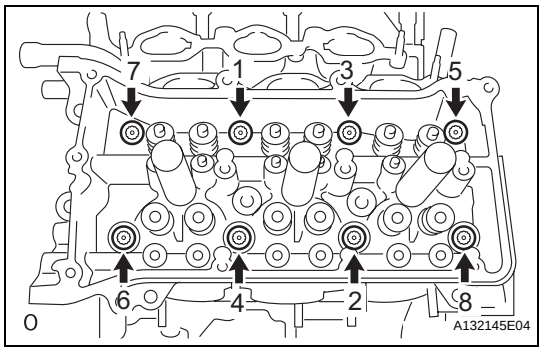

(e) Step 1

(1) Using a 10 mm bi-hexagon wrench, install and uniformly tighten the 8 cylinder head bolts with the plate washers in several steps, in the sequence shown in the illustration.

Torque: 36 N*m (367 kgf*cm, 27 ft.*lbf)

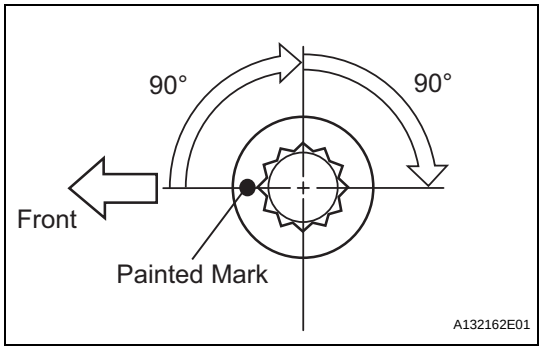

(f) Step 2

(1) Mark the cylinder head bolt heads with paint as shown in the illustration.

(2) Tighten the cylinder head bolts another 90° in the sequence shown in step 1.

(g) Step 3

(1) Tighten the cylinder head bolts by an additional 90° in the sequence shown in step 1.

(2) Check that the painted mark is now facing rearward.

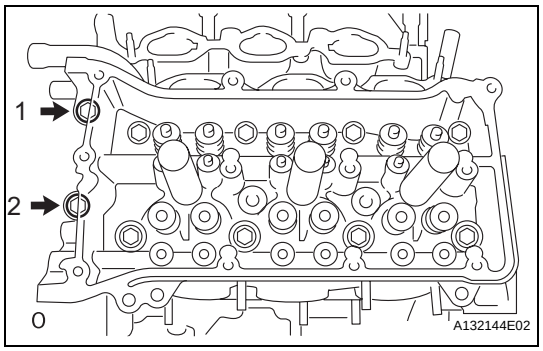

(h) Install the 2 bolts in the order shown in the illustration.

Torque: 30 N*m (306 kgf*cm, 22 ft.*lbf)

20. INSTALL VALVE LASH ADJUSTER ASSEMBLY

(a) Be sure to inspect the valve lash adjuster before installing it (see page EM-75).

(b) Install the lash adjusters.

NOTICE:

Install the lash adjuster at the same place it was removed from.

21. INSTALL NO. 1 VALVE ROCKER ARM SUB-ASSEMBLY

(a) Apply engine oil to the lash adjuster tips and valve stem cap ends.

(b) Make sure that the valve rocker arms are installed as shown in the illustration.

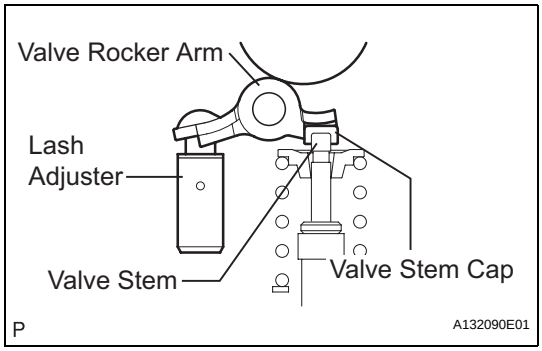

22. INSTALL CAMSHAFT BEARING CAP (for Bank 1)

(a) Apply engine oil to the camshaft journals, camshaft housings and bearing caps.

(b) Install the No. 1 camshaft and No. 2 camshaft to the camshaft housing.

(c) Confirm the marks and numbers on the camshaft bearing caps and place them each in their proper position and direction.

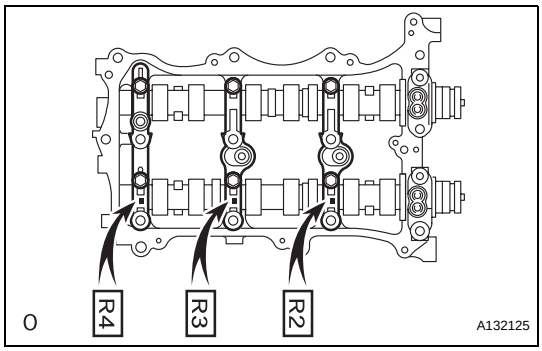

(d) Temporarily install the 8 bolts in the order shown in the illustration.

Torque: 10 N*m (102 kgf*cm, 7 ft.*lbf)

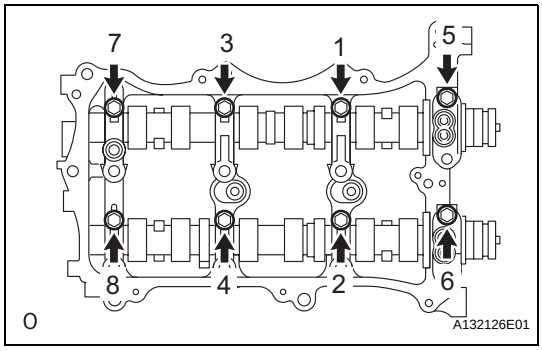

23. INSTALL CAMSHAFT HOUSING SUB-ASSEMBLY (for Bank 1)

(a) Apply seal packing in a continuous line as shown in the illustration.

Seal packing:
Toyota Genuine Seal Packing Block, Three Bond 1207B or Equivalent
Standard seal diameter:
3.5 to 4.5 mm (0.138 to 0.177 in.)
NOTICE:
- **Remove any oil from the contact surface.**
- **Install the camshaft housing within 3 minutes and tighten the bolts within 15 minutes after applying seal packing.**
- **Do not start the engine for at least 2 hours after the installation.**

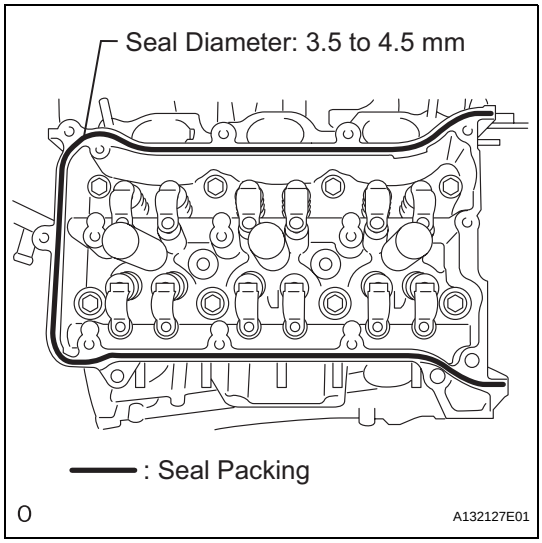

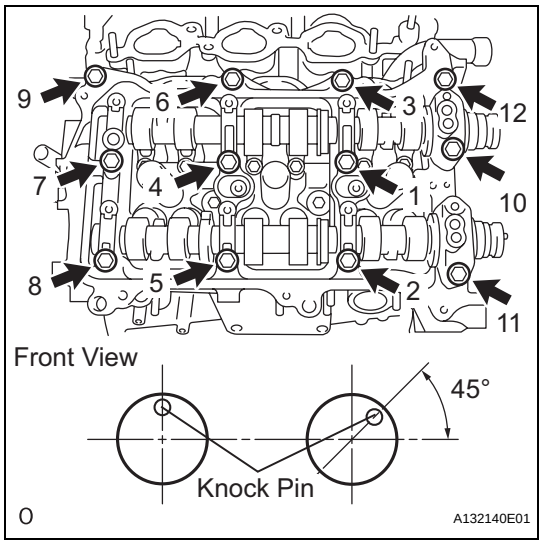

(b) Install the camshaft housing, and install the 12 bolts in the order shown in the illustration.
Torque: 28 N*m (286 kgf*cm, 21 ft.*lbf)
NOTICE:
Make sure that the knock pin of the camshaft is positioned as shown in the illustration before installing the camshaft housing.

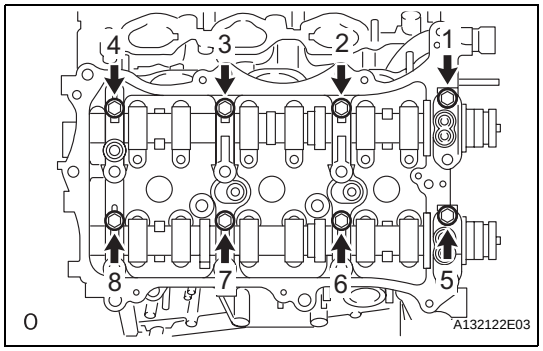

(c) Tighten the 8 bolts in the order shown in the illustration.
Torque: 16 N*m (163 kgf*cm, 12 ft.*lbf)
NOTICE:
Thoroughly wipe clean any seal packing.

EM

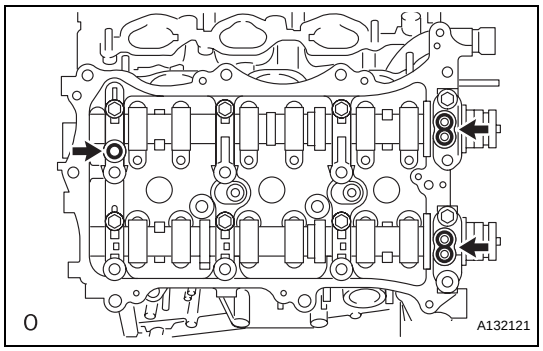

(d) Install 3 new gaskets.

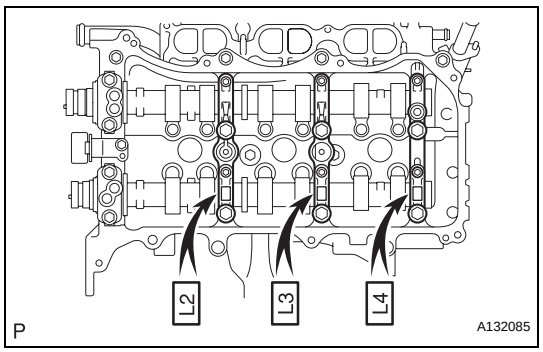

24. INSTALL CAMSHAFT BEARING CAP (for Bank 2)

(a) Apply engine oil to the camshaft journals, camshaft housings and bearing caps.
(b) Install the camshaft No. 3 and camshaft No. 4 to the camshaft housing.
(c) Confirm the marks and numbers on the camshaft bearing caps and place them each in their proper position and direction.

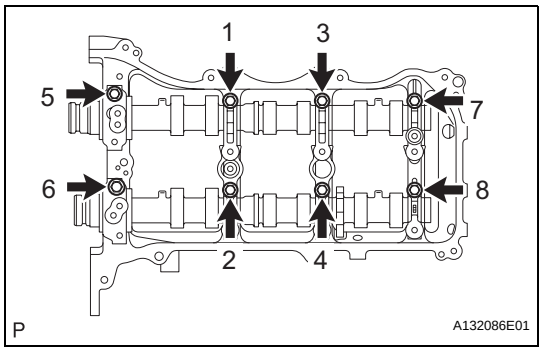

(d) Temporarily install the 8 bolts in the order shown in the illustration.
Torque: 10 N*m (102 kgf*cm, 7 ft.*lbf)

25. INSTALL CAMSHAFT HOUSING SUB-ASSEMBLY (for Bank 2)

(a) Apply seal packing in a continuous line as shown in the illustration.
Seal packing:
Toyota Genuine Seal Packing Block, Three Bond 1207B or Equivalent
Standard seal diameter:
3.5 to 4.5 mm (0.138 to 0.177 in.)
NOTICE:
- **Remove any oil from the contact surface.**
- **Install the camshaft housing within 3 minutes and tighten the bolts within 15 minutes after applying seal packing.**
- **Do not start the engine for at least 2 hours after the installation.**

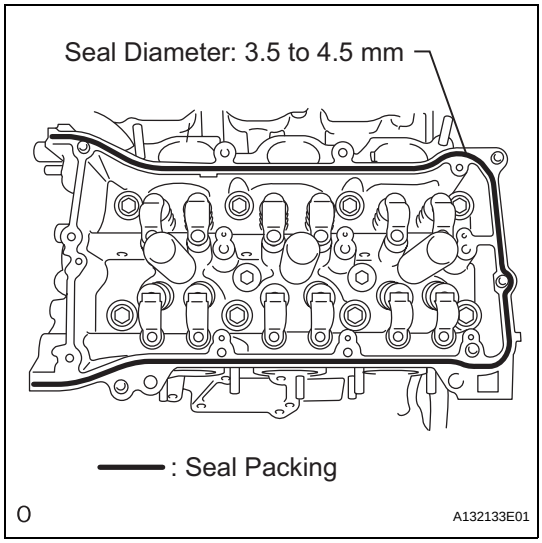

(b) Install the camshaft housing and tighten the 13 bolts in the order shown in the illustration.
Torque: 28 N*m (286 kgf*cm, 21 ft.*lbf)
NOTICE:
Make sure that the knock pin of the camshaft is positioned as shown in the illustration before installing the camshaft housing.

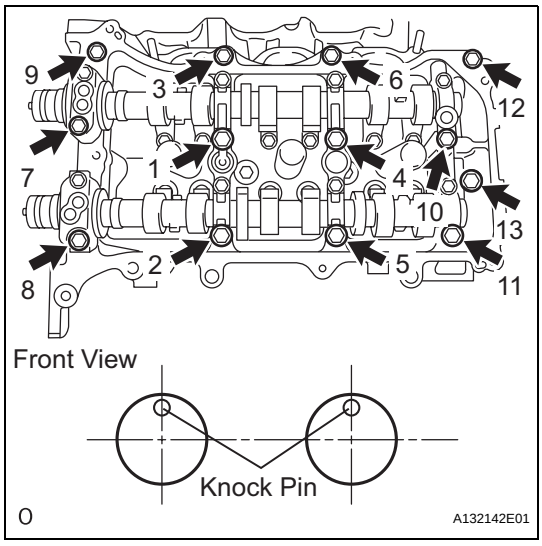

(c) Tighten the 8 bolts in the order shown in the illustration.
Torque: 16 N*m (163 kgf*cm, 12 ft.*lbf)
NOTICE:
Thoroughly wipe clean any seal packing.

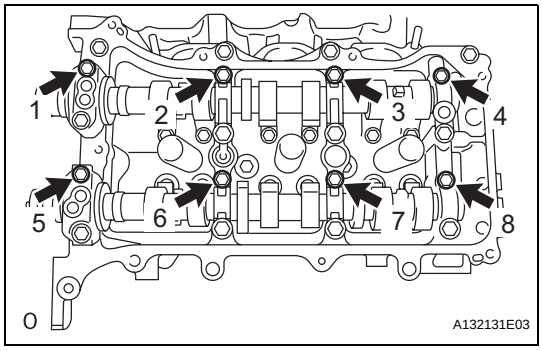

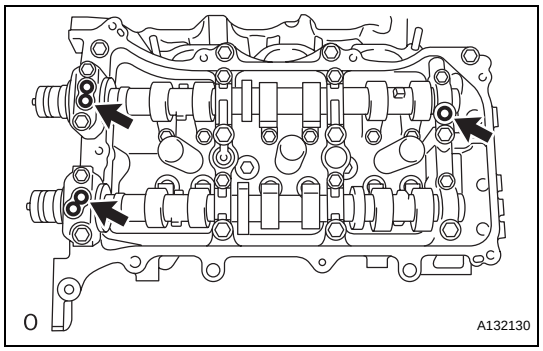

(d) Install 3 new gaskets.

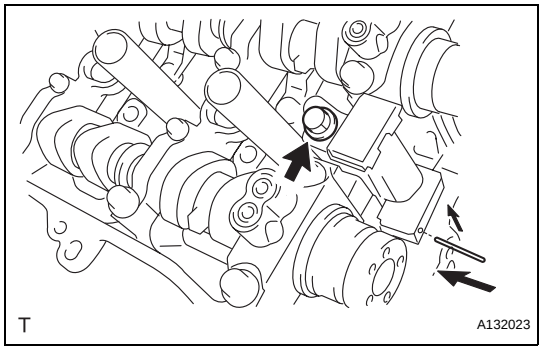

26. INSTALL NO. 2 CHAIN TENSIONER ASSEMBLY

(a) Install the chain tensioner with the bolt.
Torque: 21 N*m (214 kgf*cm, 15 ft.*lbf)

(b) While pushing in the tensioner, insert a pin of ϕ1.0 mm (0.039 in.) into the hole to fix it in place.

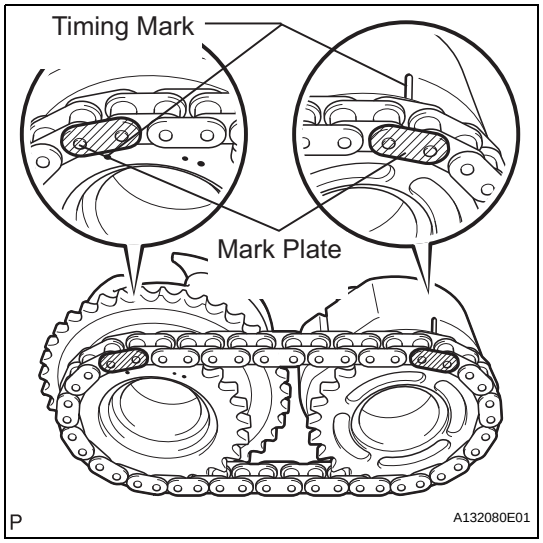

27. INSTALL CAMSHAFT TIMING GEARS AND NO. 2 CHAIN (for Bank 1)

(a) Align the mark plate (yellow) with the timing marks (1 dot mark) of the camshaft timing gears as shown in the illustration.

(b) Apply a small amount of engine oil to the bolt threads and bolt-seating surface.

(c) Align the knock pin of the camshaft with the pin hole of the camshaft timing gear. Install the camshaft timing gear and camshaft timing exhaust gear with the No. 2 chain installed.

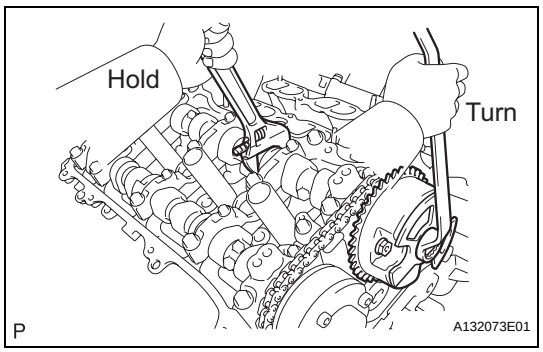

(d) Hold the hexagonal portion of the camshaft with a wrench, and tighten the 2 bolts.
Torque: 100 N*m (1,020 kgf*cm, 74 ft.*lbf)

(e) Remove the pin from the No. 2 chain tensioner.

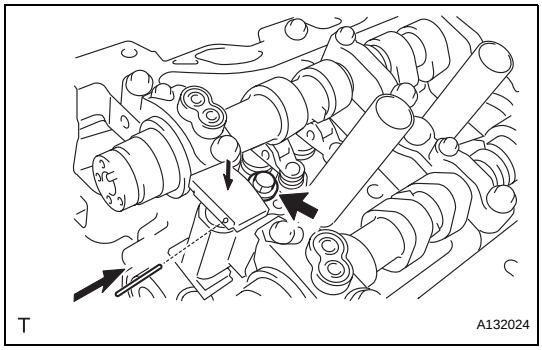

28. INSTALL NO. 3 CHAIN TENSIONER ASSEMBLY

(a) Install the chain tensioner with the bolt.
Torque: 21 N*m (214 kgf*cm, 15 ft.*lbf)

(b) While pushing in the tensioner, insert a pin of ϕ1.0 mm (0.039 in.) into the hole to fix it in place.

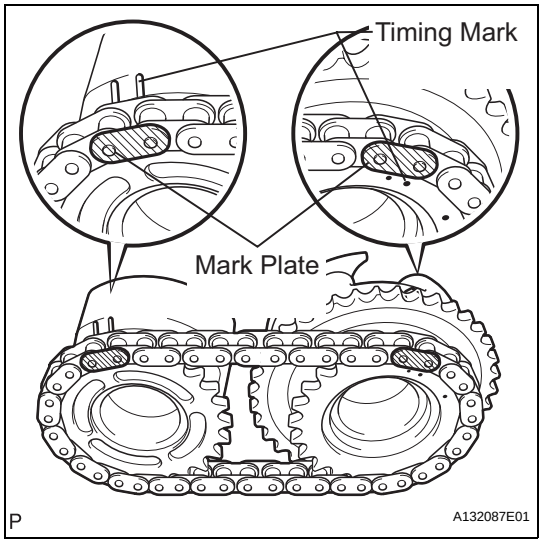

29. INSTALL CAMSHAFT TIMING GEARS AND NO. 2 CHAIN (for Bank 2)

(a) Align the mark plate (yellow) with the timing marks (2 dot mark) of the camshaft timing gears as shown in the illustration.

(b) Apply a small amount of engine oil to the bolt threads and bolt-seating surface.

(c) Align the knock pin of the camshaft with the pin hole of the camshaft timing gear. Install the camshaft timing gear and camshaft timing exhaust gear with the No. 2 chain installed.

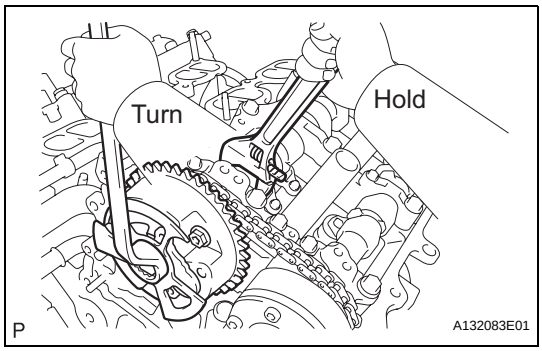

(d) Hold the hexagonal portion of the camshaft with a wrench, and tighten the 2 bolts.
Torque: 100 N*m (1,020 kgf*cm, 74 ft.*lbf)

(e) Remove the pin from the No. 2 chain tensioner.

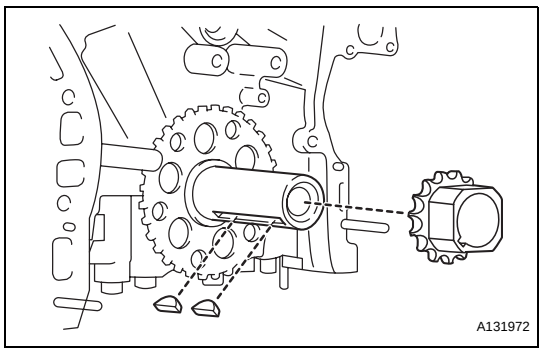

30. INSTALL CRANKSHAFT TIMING GEAR OR SPROCKET

(a) Install the timing gear set keys and timing gear as shown in the illustration.

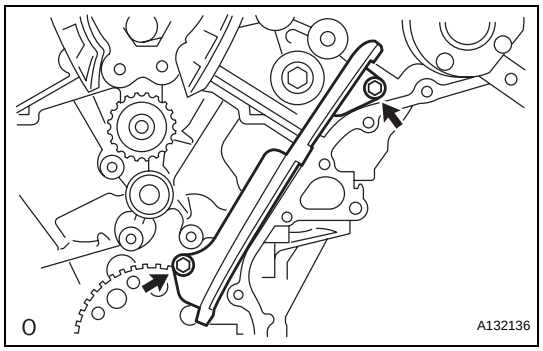

31. INSTALL NO. 1 CHAIN VIBRATION DAMPER

(a) Install the chain vibration damper with the 2 bolts.
Torque: 23 N*m (235 kgf*cm, 17 ft.*lbf)

32. INSTALL NO. 2 CHAIN VIBRATION DAMPER

(a) Install the 2 chain vibration damper.

33. INSTALL IDLE SPROCKET ASSEMBLY

(a) Apply a light coat of engine oil to the rotating surface of the No. 1 idle gear shaft.

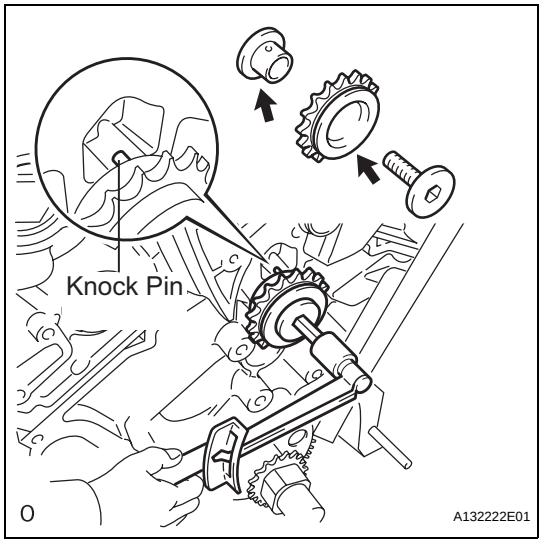

(b) Temporarily install the No. 1 idle gear shaft and idle sprocket with the No. 2 idle gear shaft while aligning the knock pin of the No. 1 idle gear shaft with the knock pin groove of the cylinder block.
NOTICE:
Be careful of the idle gear direction.

(c) Using a 10 mm hexagon wrench, tighten the No. 2 idle gear shaft.
Torque: 60 N*m (612 kgf*cm, 44 ft.*lbf)

EM

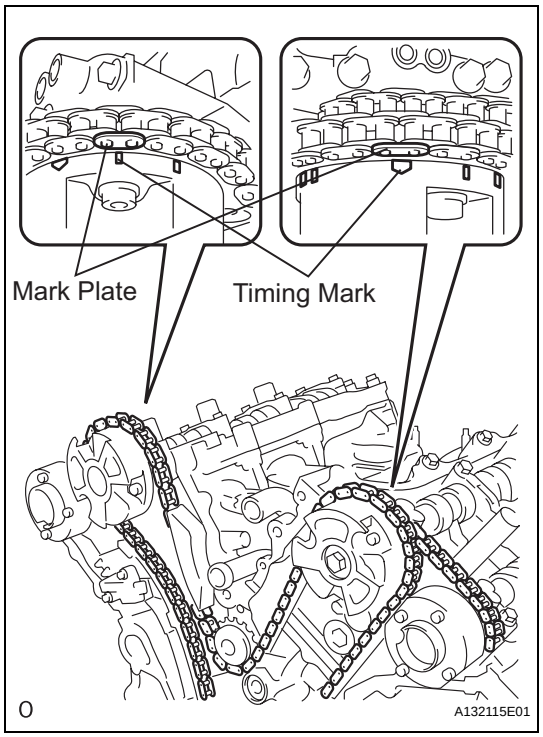

34. INSTALL CHAIN SUB-ASSEMBLY

(a) Align the mark plate and timing mark as shown in the illustration and install the chain.
NOTICE:
Do not pass the chain over the crankshaft, just put it on it.
HINT:
The chain mark plate is orange.

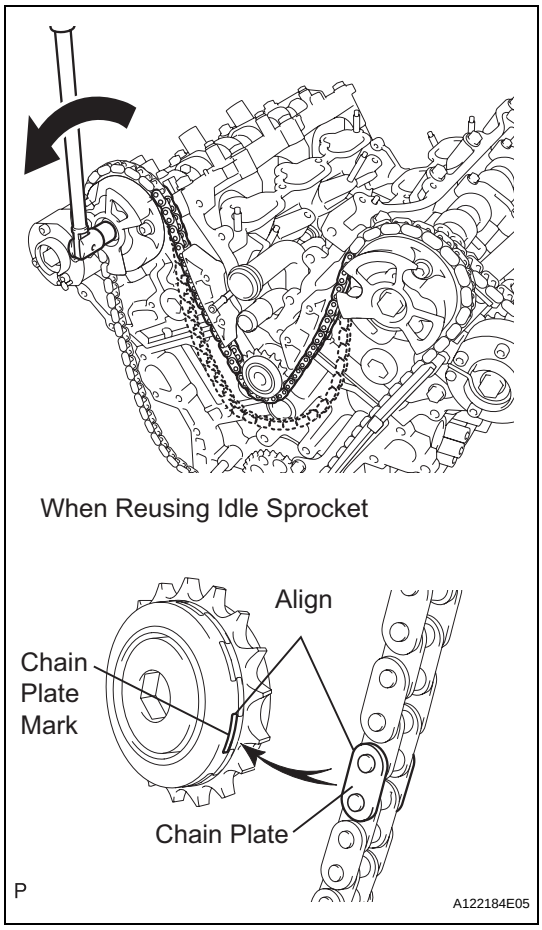

(b) Turn the camshaft timing gear on the bank 1 counterclockwise to tighten the chain between the banks.

NOTICE:

If reusing the idle sprocket, align one of the idle sprocket's chain plate marks with one of the chain's chain plates when installing the idle sprocket.

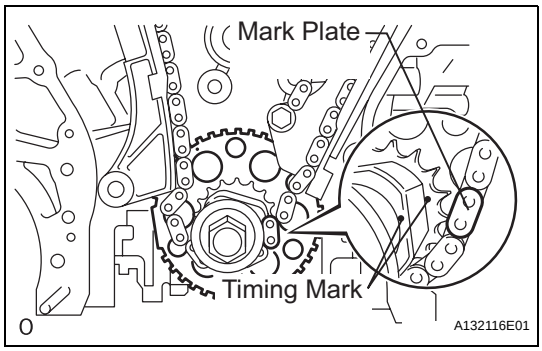

(c) Align the mark plate and timing mark as shown in the illustration and install the chain onto the crankshaft timing gear.

HINT:

The chain mark plate is yellow.

(d) Temporarily tighten the pulley set bolt.

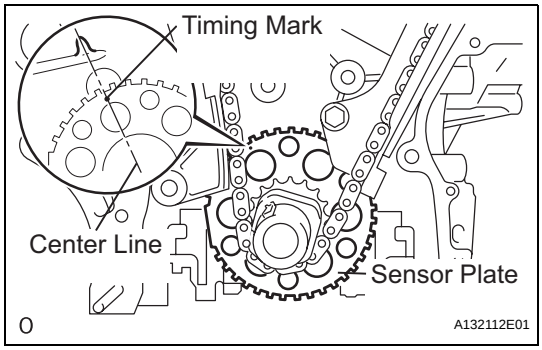

(e) Turn the crankshaft clockwise to set it to the bank 1 block bore center line (TDC / compression).

35. INSTALL CHAIN TENSIONER SLIPPER

(a) Install the chain tensioner slipper.

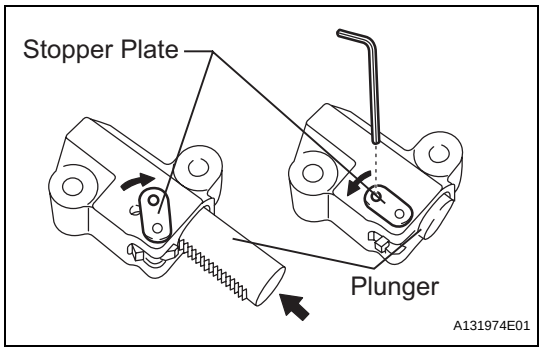

36. INSTALL NO. 1 CHAIN TENSIONER ASSEMBLY

(a) Move the stopper plate upward to release the lock, and push the plunger deep into the tensioner.

(b) Move the stopper plate downward to set the lock, and insert a hexagon wrench into the hole of the stopper plate.

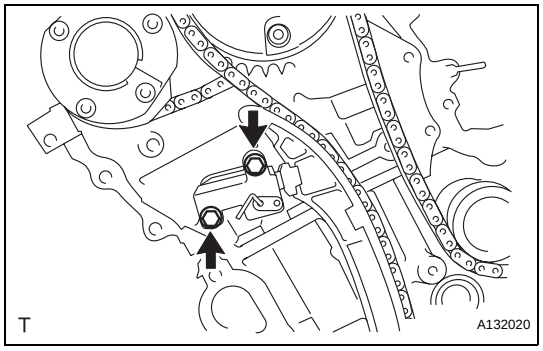

(c) Install the chain tensioner with the 2 bolts.
Torque: 10 N*m (102 kgf*cm, 7 ft.*lbf)

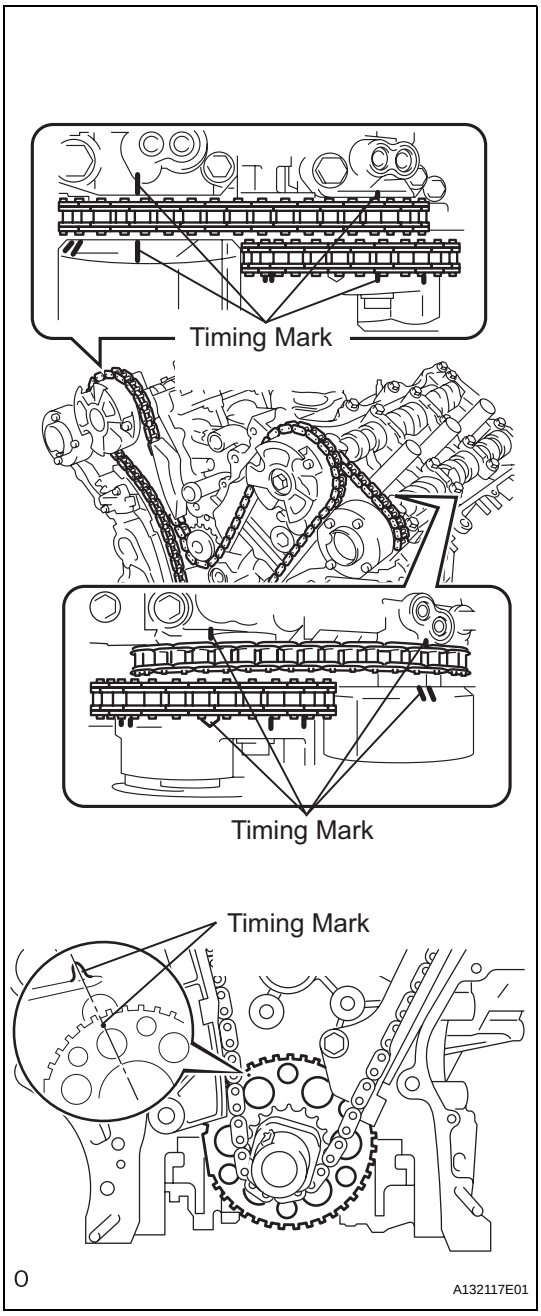

(d) Remove the lock pin of the chain tensioner. Check that each timing mark is aligned with the crankshaft at the TDC / compression.
(e) Remove the pulley set bolt.

37. INSTALL TIMING CHAIN COVER SUB-ASSEMBLY (w/ Oil Pump) (See page LU-17)

38. INSTALL WATER PUMP ASSEMBLY (See page CO-13)

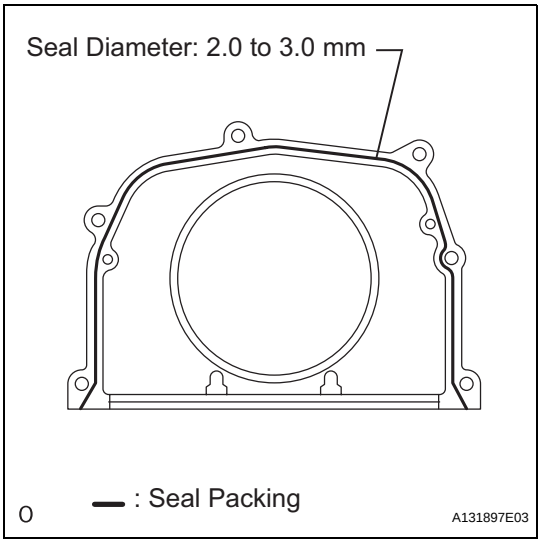

39. INSTALL ENGINE REAR OIL SEAL RETAINER

(a) Apply seal packing in a continuous line as shown in the illustration.

Seal packing:
Toyota Genuine Seal Packing Block, Three Bond 1207B or Equivalent
Standard seal diameter:
2.0 to 3.0 mm (0.079 to 0.118 in.)
NOTICE:
- **Remove any oil from the contact surface.**
- **Install the crankcase within 3 minutes after applying seal packing.**
- **Do not start the engine for at least 2 hours after the installation.**

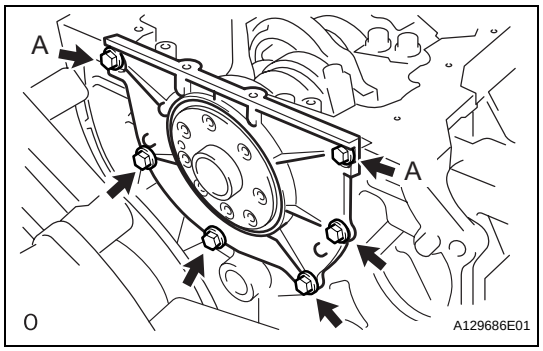

(b) Install the oil seal retainer with the 6 bolts.
Torque: 10 N*m (102 kgf*cm, 7 ft.*lbf)
NOTICE:
Apply adhesive 1324 to the 2 bolts labeled A.
Adhesive:
Toyota Genuine Adhesive 1324, Three Bond 1324 or Equivalent

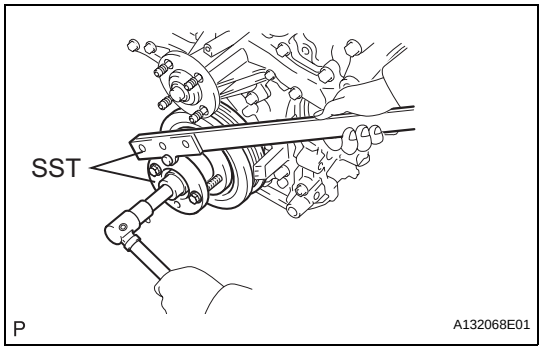

40. INSTALL CRANKSHAFT PULLEY
(a) Align the pulley set key with the key groove of the pulley, and slide on the pulley.
(b) Using SST, install the pulley bolt.
SST 09213-70011 (09213-70020), 09330-00021
Torque: 250 N*m (2,549 kgf*cm, 184 ft.*lbf)

EM

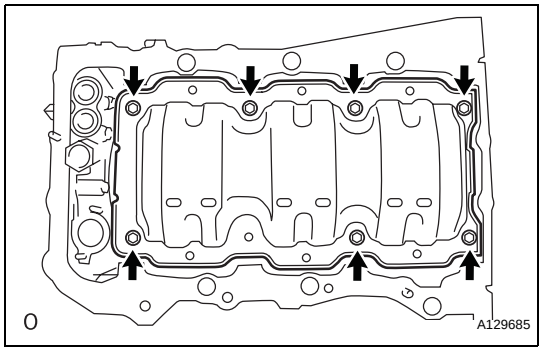

41. INSTALL OIL PAN BAFFLE PLATE
(a) Install the oil pan baffle plate with the 7 bolts.
Torque: 10 N*m (102 kgf*cm, 7 ft.*lbf)

42. INSTALL OIL PAN SUB-ASSEMBLY (See page LU-21)

43. INSTALL OIL STRAINER SUB-ASSEMBLY (See page LU-22)

44. INSTALL NO. 2 OIL PAN SUB-ASSEMBLY (See page LU-22)

45. INSTALL OIL FILTER ELEMENT (See page LU-5)

46. INSTALL OIL FILTER CAP SUB-ASSEMBLY (See page LU-5)

47. INSTALL WATER INLET HOUSING (See page CO-14)

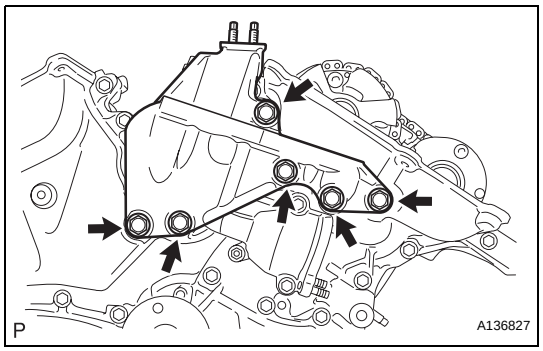

48. INSTALL FRONT NO. 1 ENGINE MOUNTING BRACKET
(a) Install the engine mounting bracket with the 6 bolts.
Torque: 54 N*m (551 kgf*cm, 40 ft.*lbf)
NOTICE:
- **Install the water inlet and mounting bracket within 15 minutes after installing the chain cover.**
- **Do not start the engine for at least 2 hours after the installation.**

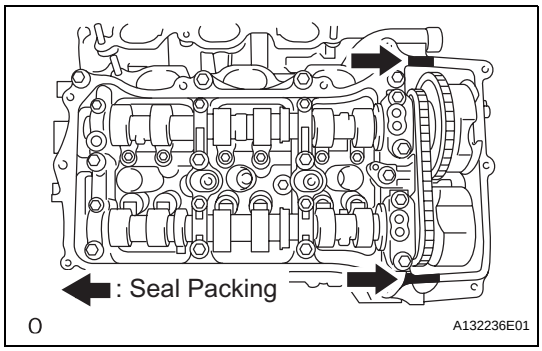

49. INSTALL CYLINDER HEAD COVER SUB-ASSEMBLY (for Bank 1)

(a) Apply seal packing as shown in the illustration.
Seal packing:
Toyota Genuine Seal Packing Block, Three Bond 1207B or Equivalent
NOTICE:
- **Remove any oil from the contact surface.**
- **Install the crankcase within 3 minutes after applying seal packing.**
- **Do not start the engine for at least 2 hours after the installation.**

(b) Install the gasket to the head cover.

(c) Install the head cover with the 12 bolts in the order shown in the illustration.
Torque: 21 N*m (214 kgf*cm, 15 ft.*lbf) for bolt A
10 N*m (102 kgf*cm, 7 ft.*lbf) for except bolt A
HINT:
Make sure the tightening torque of bolt 1and 11 in correct.

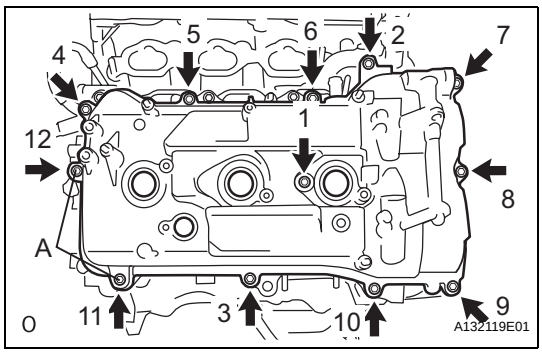

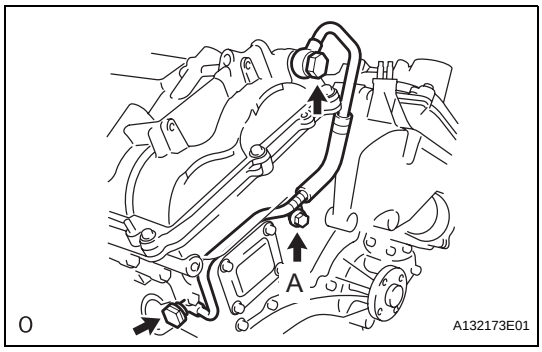

50. INSTALL OIL PIPE

(a) Make sure that there is no foreign matter on the mesh of the oil control valve filter.

(b) Install the oil control valve filter to the oil pipe union. Install 2 new gaskets and temporarily install the oil pipe (on the head cover side) with the oil pipe union.
NOTICE:
Remove any oil from the contact surface.

(c) Install a new gasket and temporarily install the oil pipe (on the cylinder head side) with the oil pipe union.
NOTICE:
Remove any oil from the contact surface.

(d) Install bolt A to the cylinder head.
Torque: 10 N*m (102 kgf*cm, 7 ft.*lbf)

(e) Tighten the 2 oil pipe union bolts.
Torque: 65 N*m (663 kgf*cm, 48 ft.*lbf)

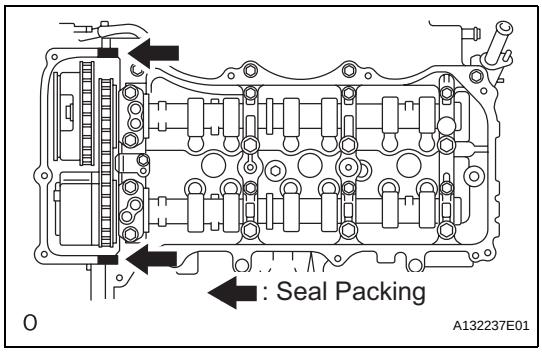

51. INSTALL CYLINDER HEAD COVER SUB-ASSEMBLY (for Bank 2)

(a) Apply seal packing as shown in the illustration.
Seal packing:
Toyota Genuine Seal Packing Block, Three Bond 1207B or Equivalent
NOTICE:
- **Remove any oil from the contact surface.**
- **Install the crankcase within 3 minutes after applying seal packing.**
- **Do not start the engine for at least 2 hours after the installation.**

(b) Install the gasket to the head cover.

EM

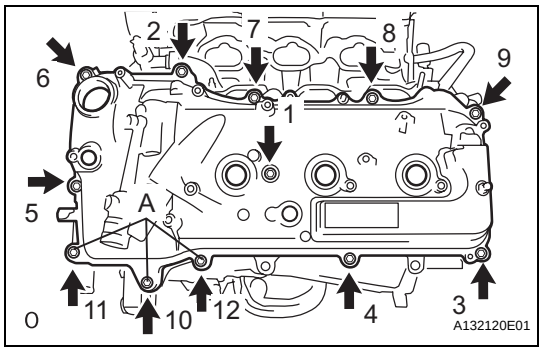

(c) Install the head cover with the 12 bolts in the order in the illastration.
Torque: 21 N*m (214 kgf*cm, 15 ft.*lbf) for bolt A
10 N*m (102 kgf*cm, 7 ft.*lbf) for except bolt A
HINT:
Make sure the tightening torque of bolts 1 and 10 is correct.

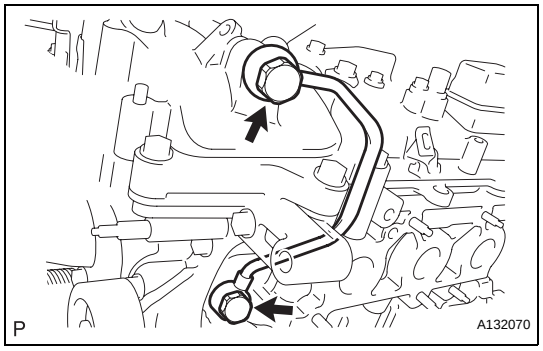

52. INSTALL NO. 1 OIL PIPE
(a) Make sure that there is no foreign matter on the mesh of the oil control valve filter.
(b) Install the oil control valve filter to the oil pipe union. Install 2 new gaskets and temporarily install the oil pipe (on the head cover side) with the oil pipe union.
(c) Install a new gasket and temporarily install the oil pipe (on the cylinder head side) with the oil pipe union.
NOTICE:
Remove any oil from the contract surface.
(d) Tighten the 2 oil pipe union bolts.
Torque: 65 N*m (663 kgf*cm, 48 ft.*lbf)

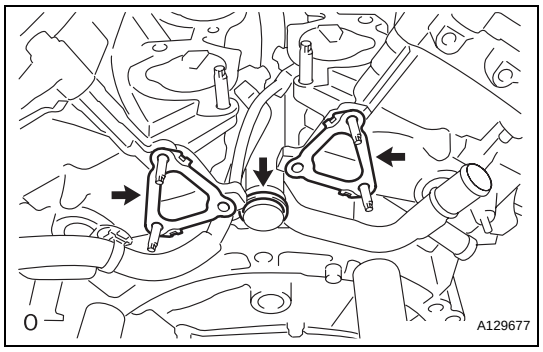

53. INSTALL WATER OUTLET
(a) Install 2 new gaskets and a new O-ring.
(b) Apply soapy water to the O-ring.

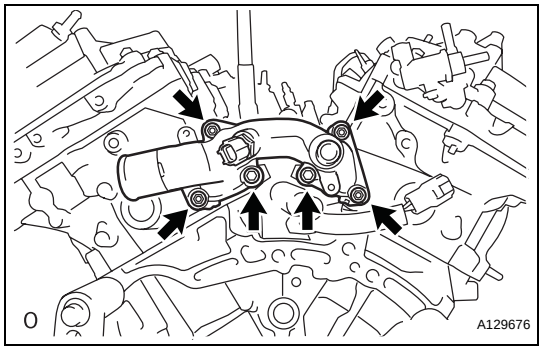

(c) Install the water outlet with the 2 bolts and 4 nuts.
Torque: 10 N*m (102 kgf*cm, 7 ft.*lbf)

EM

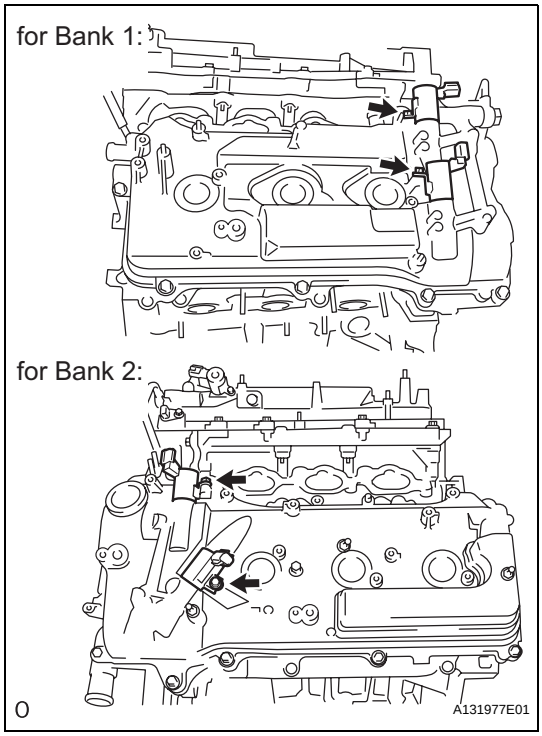

54. INSTALL CAMSHAFT TIMING OIL CONTROL VALVE ASSEMBLY

(a) Install the 4 camshaft timing oil control valves with the 4 bolts.
Torque: 10 N*m (102 kgf*cm, 7 ft.*lbf)

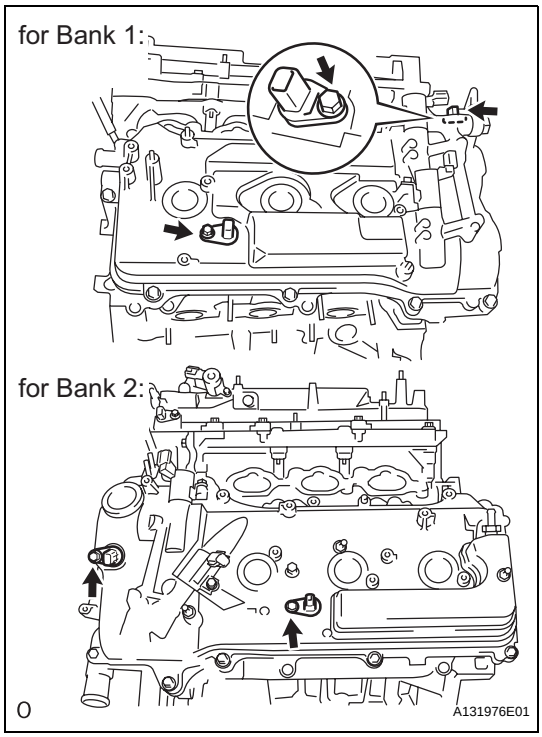

55. INSTALL VVT SENSOR

(a) Install the 4 VVT sensors with the 4 bolts.
Torque: 10 N*m (102 kgf*cm, 7 ft.*lbf)

56. INSTALL SPARK PLUG

(a) Install the 6 spark plugs.
Torque: 18 N*m (184 kgf*cm, 13 ft.*lbf)

REPAIR

1. REPAIR INTAKE VALVE SEAT

NOTICE:

Keep the lip free from foreign matter.

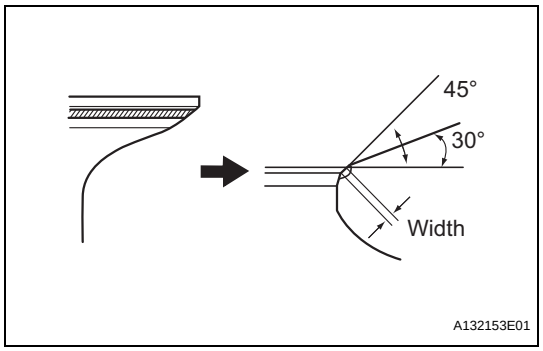

(a) If the seating is too high on the valve face, use 30° and 45° cutters to correct the seat.

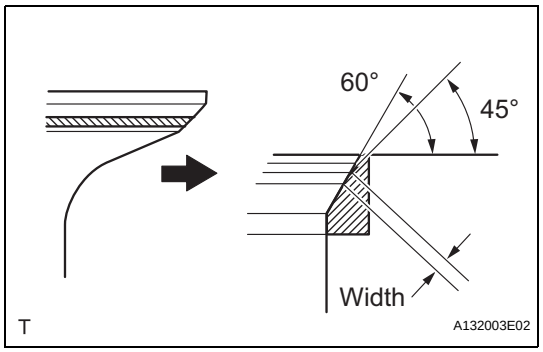

(b) If the seating is too low on the valve face, use 60° and 45° cutters to correct the seat.

(c) Hand-lap the valve and valve seat with an abrasive compound.

(d) Check the valve seating position.

2. REPAIR EXHAUST VALVE SEAT

NOTICE:

Keep the lip free from foreign matter.

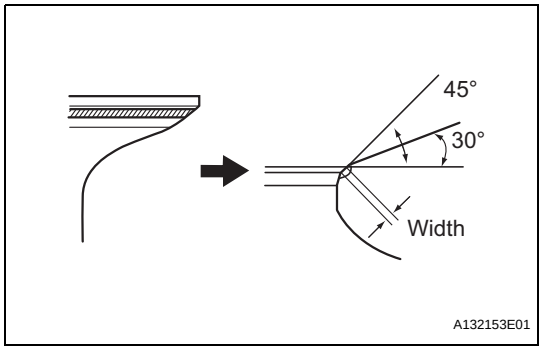

(a) If the seating is too high on the valve face, use 30° and 45° cutters to correct the seat.

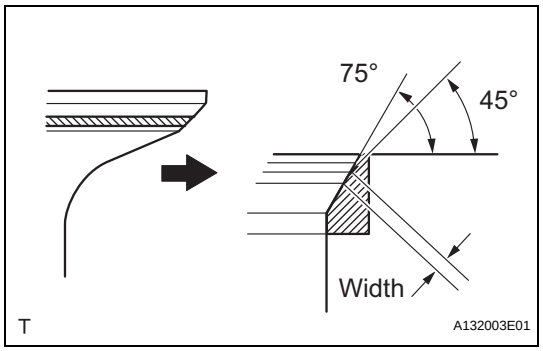

(b) If the seating is too low on the valve face, use 45° and 75° cutters to correct the seat.

(c) Hand-lap the valve and valve seat with an abrasive compound.

(d) Check the valve seating position.

EM

ENGINE UNIT

COMPONENTS

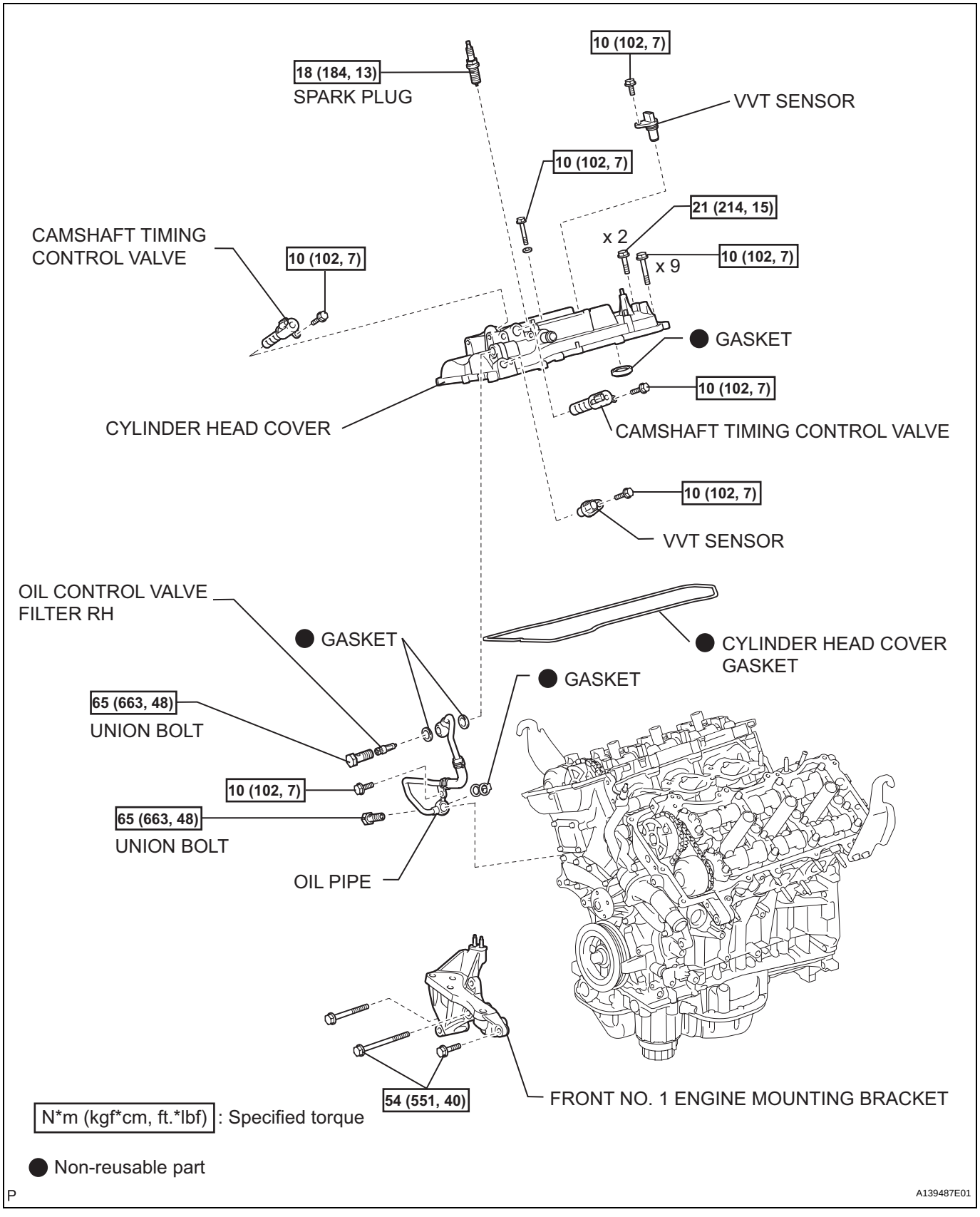

EM

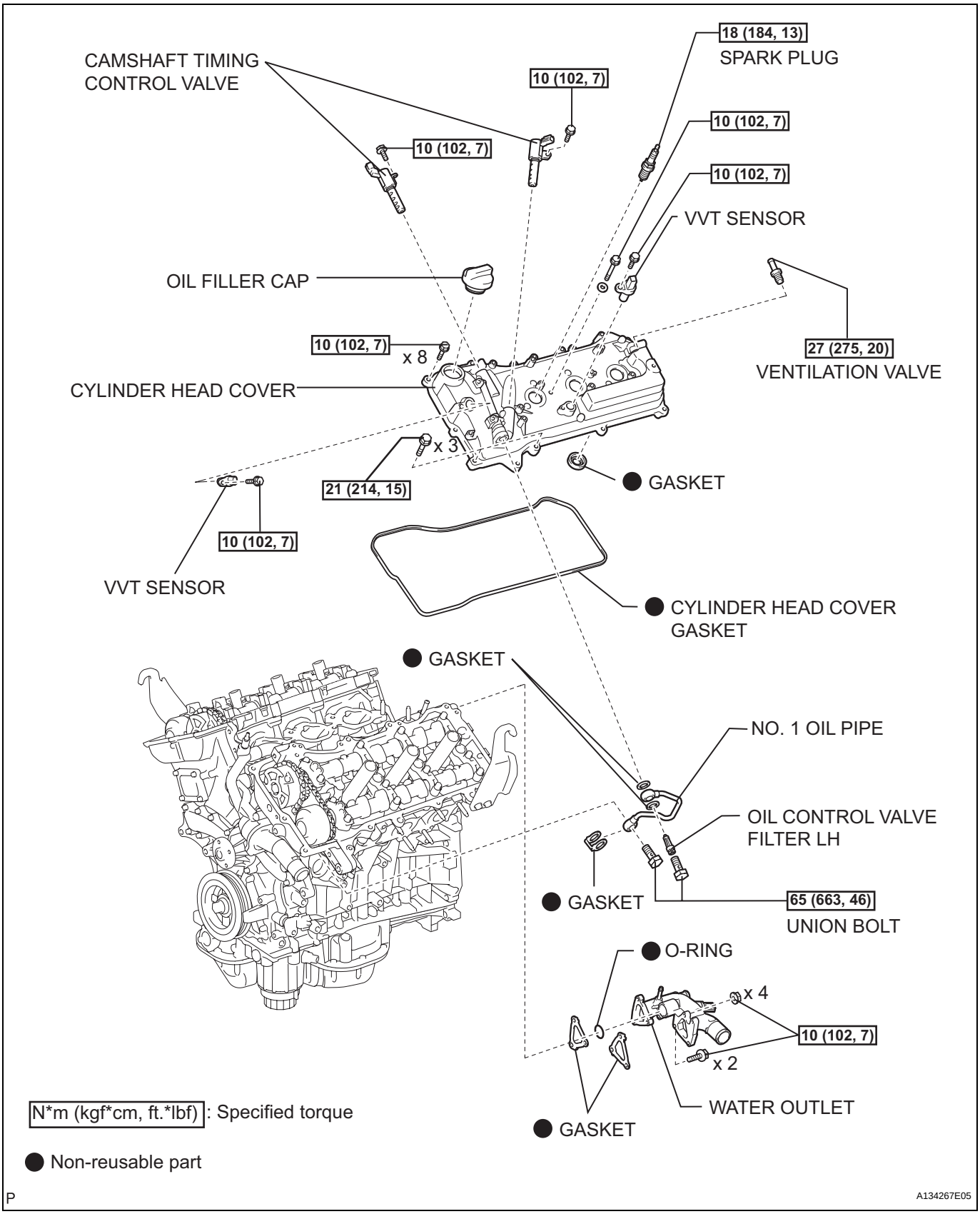
CAMSHAFT TIMING CONTROL VALVE
10 (102, 7)
10 (102, 7)
18 (184, 13)
SPARK PLUG
10 (102, 7)
10 (102, 7)
VVT SENSOR
OIL FILLER CAP
10 (102, 7)
x 8
CYLINDER HEAD COVER
27 (275, 20)
VENTILATION VALVE
x 3
21 (214, 15)
GASKET
10 (102, 7)
VVT SENSOR
CYLINDER HEAD COVER GASKET
GASKET
NO. 1 OIL PIPE
OIL CONTROL VALVE FILTER LH
GASKET
65 (663, 46)
UNION BOLT
O-RING
x 4
10 (102, 7)
x 2
WATER OUTLET
GASKET
N*m (kgf*cm, ft.*lbf): Specified torque
Non-reusable part
A134267E05

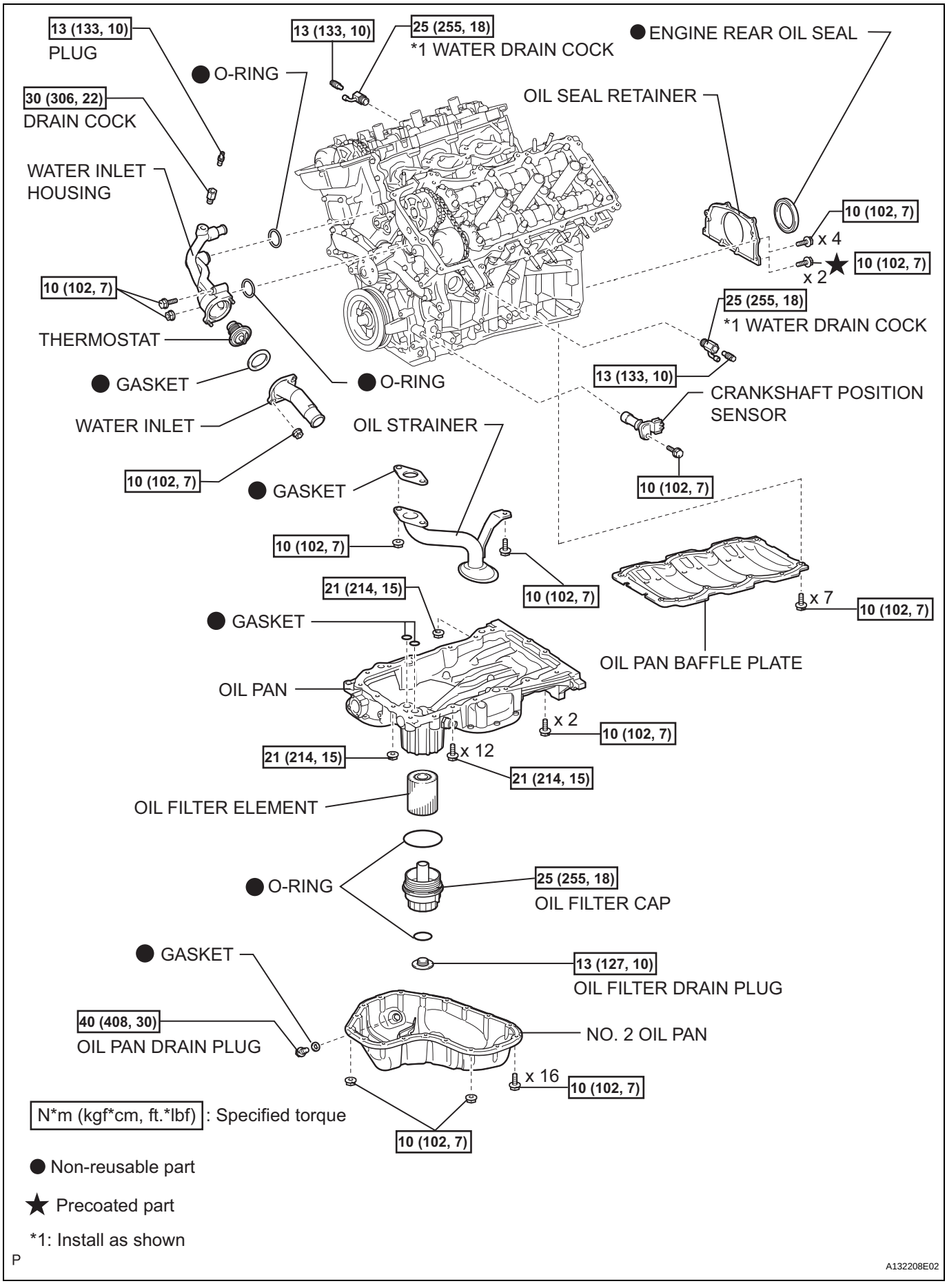
13 (133, 10)
PLUG
13 (133, 10)
25 (255, 18)
*1 WATER DRAIN COCK
ENGINE REAR OIL SEAL
O-RING
30 (306, 22)
DRAIN COCK
OIL SEAL RETAINER
WATER INLET HOUSING
10 (102, 7)
x 4
10 (102, 7)
x 2
10 (102, 7)
25 (255, 18)
*1 WATER DRAIN COCK
THERMOSTAT
GASKET
O-RING
13 (133, 10)
CRANKSHAFT POSITION SENSOR
WATER INLET
OIL STRAINER
10 (102, 7)
10 (102, 7)
GASKET
10 (102, 7)
10 (102, 7)
21 (214, 15)
x 7
10 (102, 7)
GASKET
OIL PAN BAFFLE PLATE
OIL PAN
x 2
10 (102, 7)
21 (214, 15)
x 12
21 (214, 15)
OIL FILTER ELEMENT
O-RING
25 (255, 18)
OIL FILTER CAP
GASKET
13 (127, 10)
OIL FILTER DRAIN PLUG
40 (408, 30)
OIL PAN DRAIN PLUG
NO. 2 OIL PAN
x 16
10 (102, 7)
10 (102, 7)
N*m (kgf*cm, ft.*lbf) : Specified torque
Non-reusable part
Precoated part
*1: Install as shown
P
A132208E02

EM

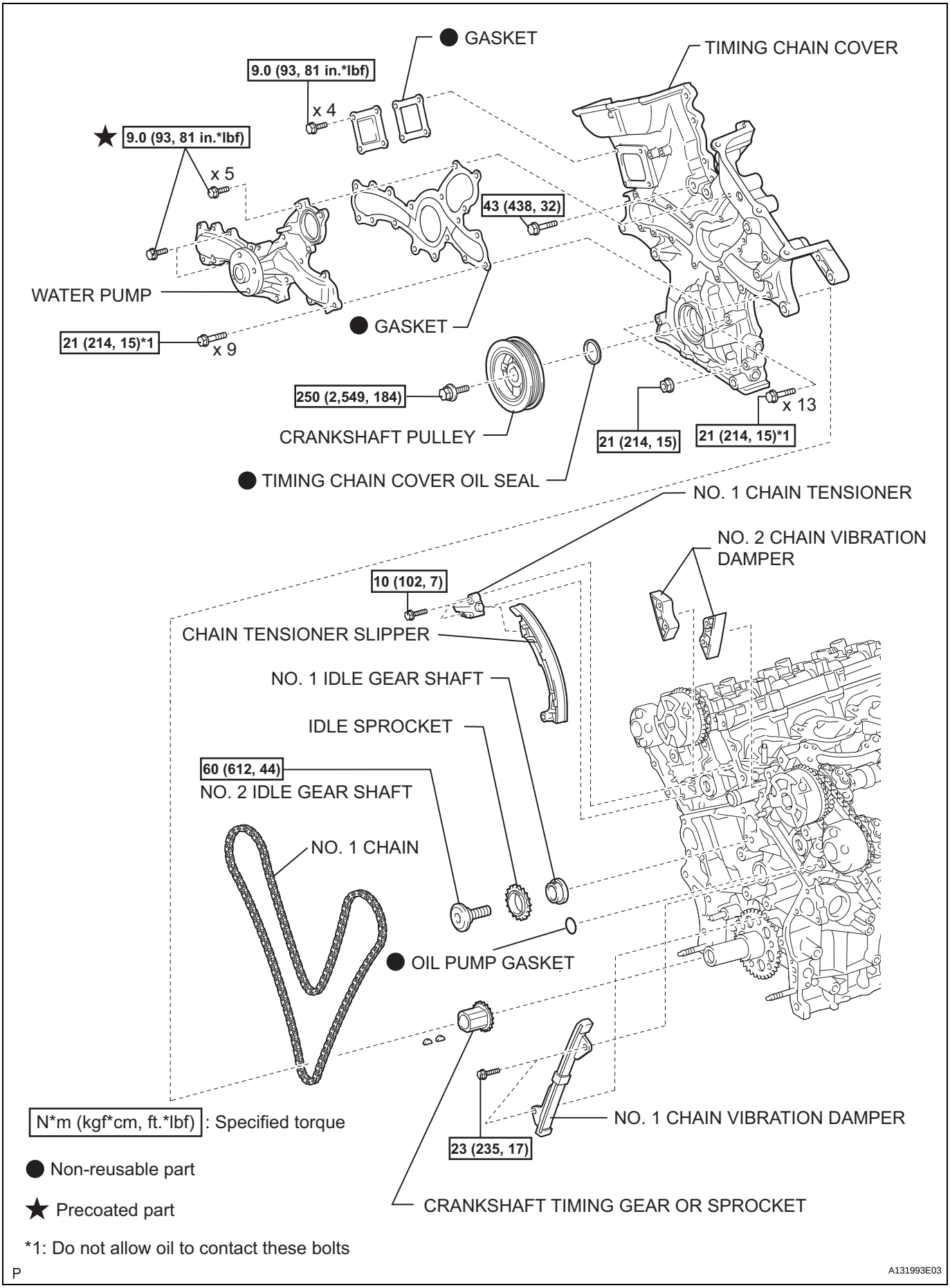
GASKET
TIMING CHAIN COVER
9.0 (93, 81 in.*lbf)
x 4
★ 9.0 (93, 81 in.*lbf)
x 5
43 (438, 32)
WATER PUMP
GASKET
21 (214, 15)*1
x 9
250 (2,549, 184)
CRANKSHAFT PULLEY
21 (214, 15)
21 (214, 15)*1
x 13
TIMING CHAIN COVER OIL SEAL
NO. 1 CHAIN TENSIONER
NO. 2 CHAIN VIBRATION DAMPER
10 (102, 7)
CHAIN TENSIONER SLIPPER
NO. 1 IDLE GEAR SHAFT
IDLE SPROCKET
60 (612, 44)
NO. 2 IDLE GEAR SHAFT
NO. 1 CHAIN
OIL PUMP GASKET
NO. 1 CHAIN VIBRATION DAMPER
23 (235, 17)
CRANKSHAFT TIMING GEAR OR SPROCKET
N*m (kgf*cm, ft.*lbf) : Specified torque
● Non-reusable part
★ Precoated part
*1: Do not allow oil to contact these bolts
A131993E03

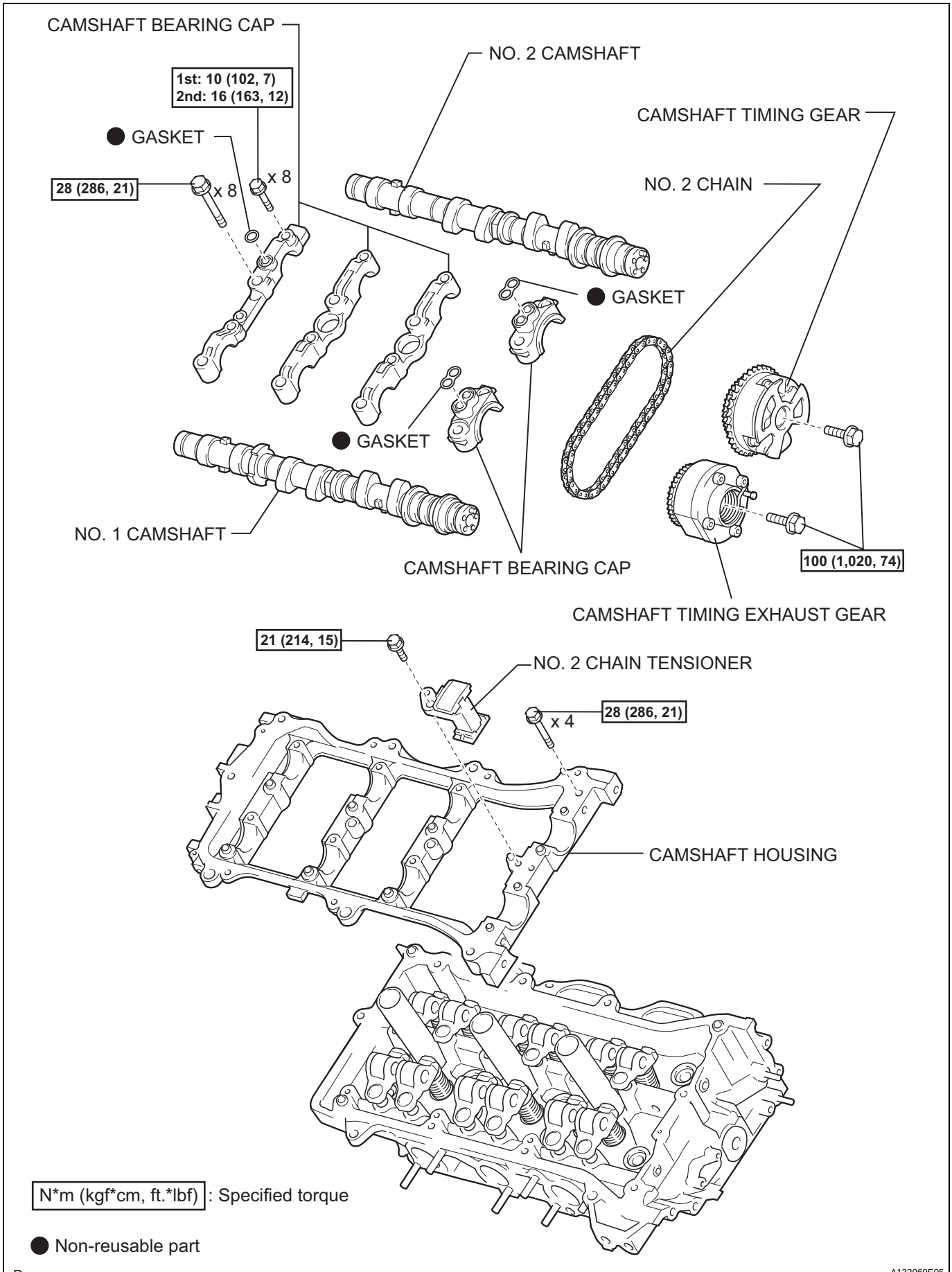
CAMSHAFT BEARING CAP
NO. 2 CAMSHAFT
1st: 10 (102, 7)
2nd: 16 (163, 12)
CAMSHAFT TIMING GEAR
GASKET
28 (286, 21)
x 8
x 8
NO. 2 CHAIN
GASKET
GASKET
NO. 1 CAMSHAFT
CAMSHAFT BEARING CAP
100 (1,020, 74)
CAMSHAFT TIMING EXHAUST GEAR
21 (214, 15)
NO. 2 CHAIN TENSIONER
28 (286, 21)
x 4
CAMSHAFT HOUSING
N*m (kgf*cm, ft.*lbf) : Specified torque
Non-reusable part
P
A132069E05

EM

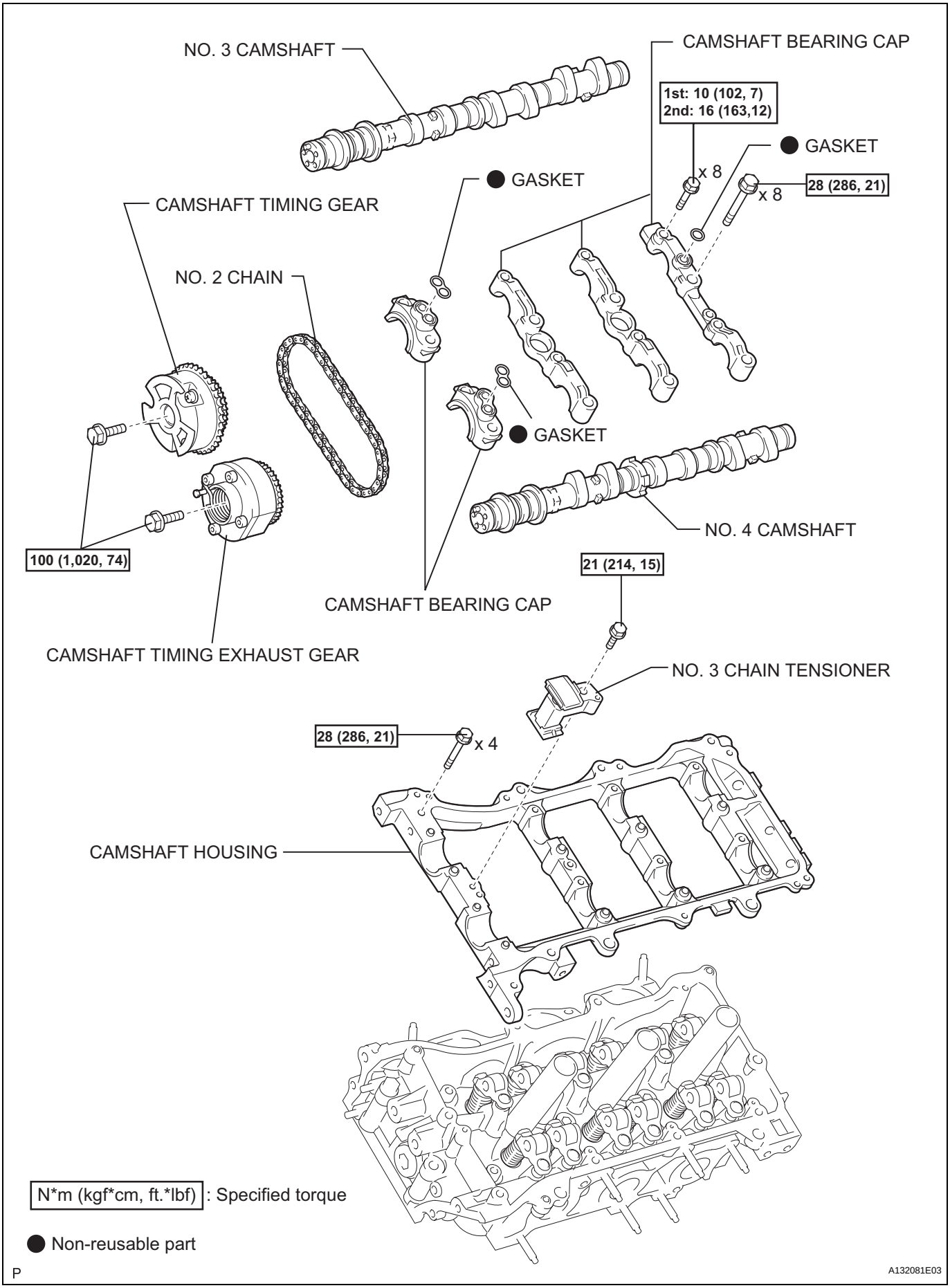
NO. 3 CAMSHAFT
CAMSHAFT BEARING CAP
1st: 10 (102, 7)
2nd: 16 (163,12)
GASKET
x 8
28 (286, 21)
x 8
GASKET
CAMSHAFT TIMING GEAR
NO. 2 CHAIN
GASKET
NO. 4 CAMSHAFT
100 (1,020, 74)
21 (214, 15)
CAMSHAFT BEARING CAP
CAMSHAFT TIMING EXHAUST GEAR
NO. 3 CHAIN TENSIONER
28 (286, 21)
x 4
CAMSHAFT HOUSING
N*m (kgf*cm, ft.*lbf) : Specified torque
Non-reusable part
P
A132081E03

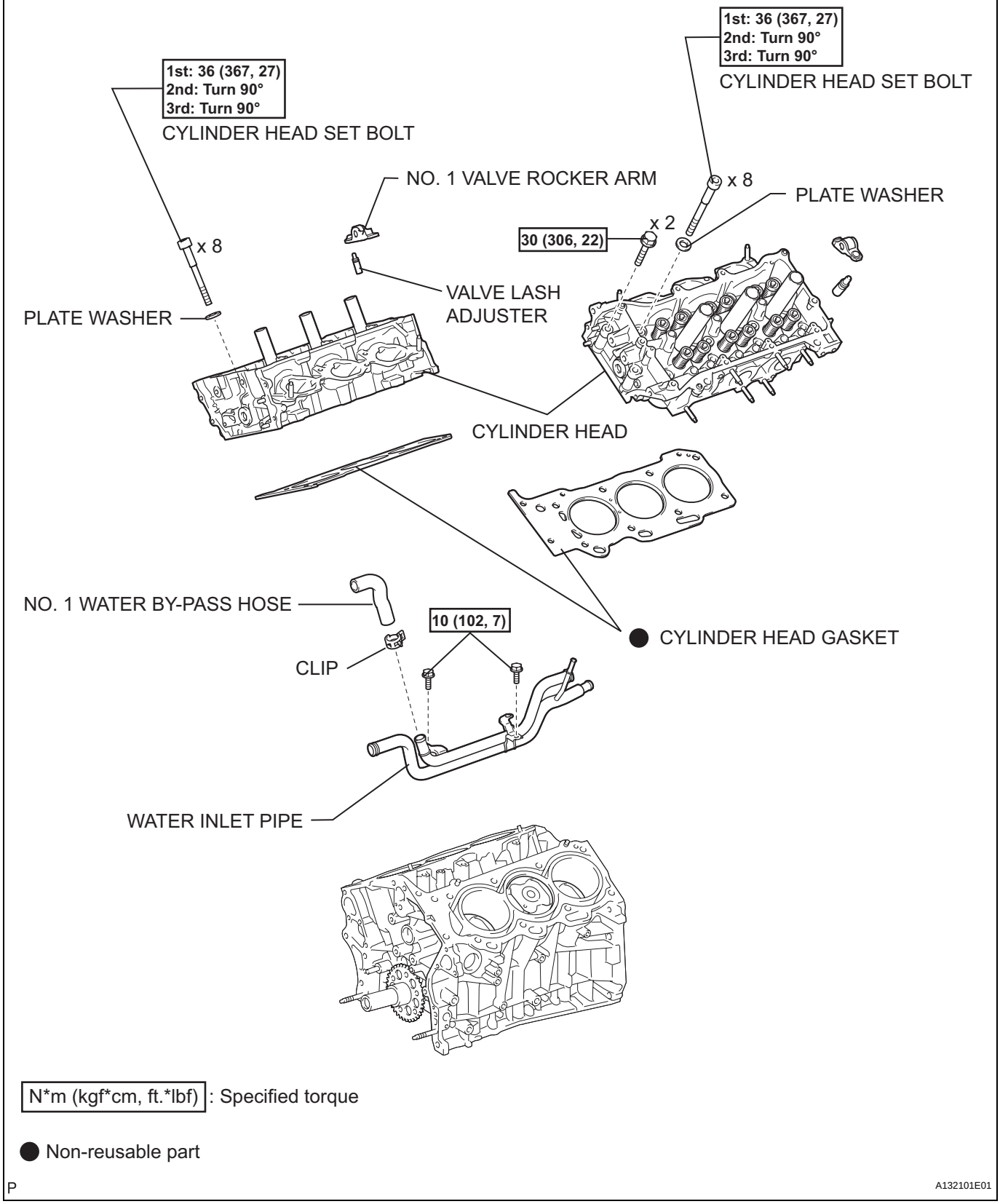

N*m (kgf*cm, ft.*lbf) : Specified torque

● Non-reusable part

P

A132101E01

EM

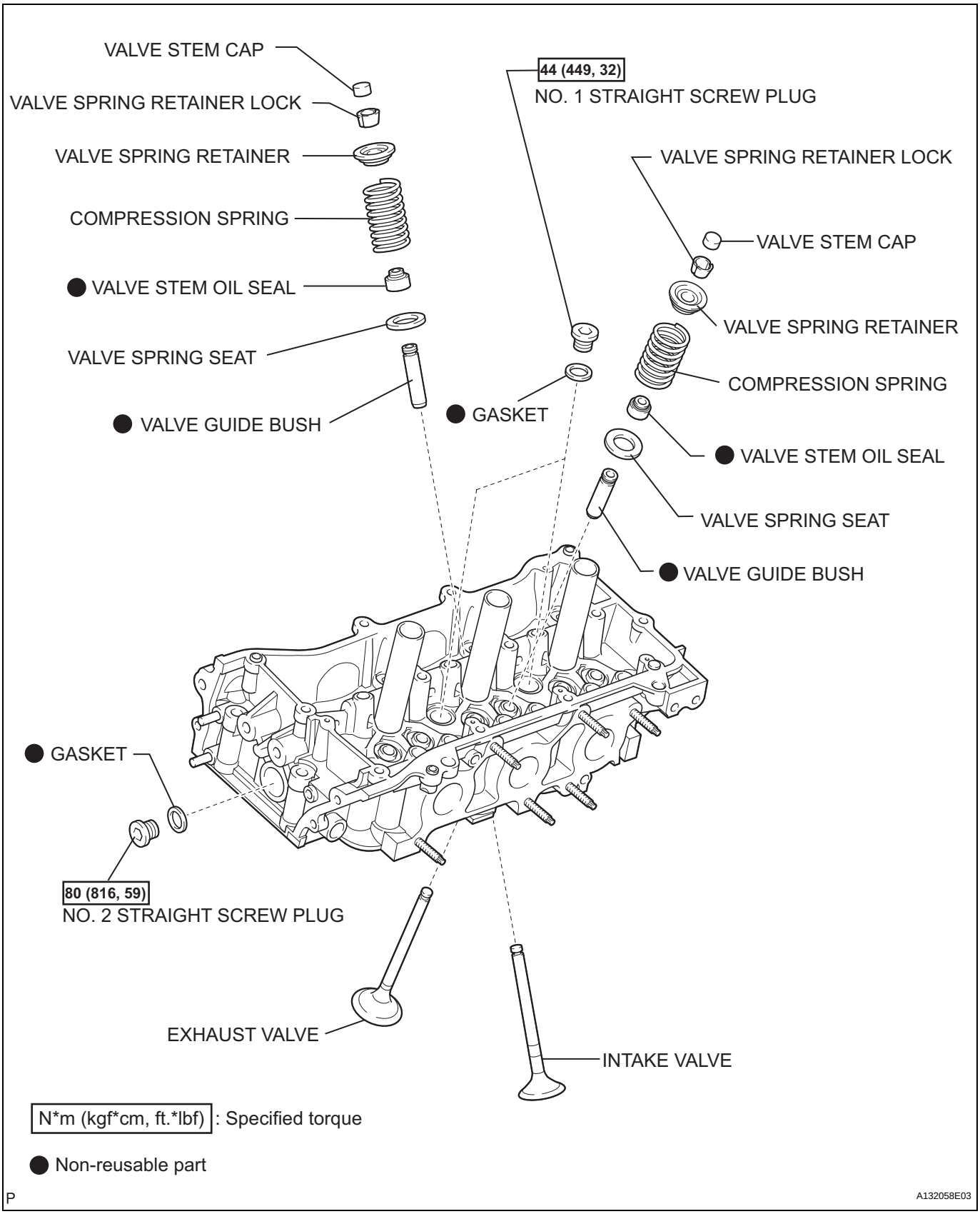
VALVE STEM CAP
VALVE SPRING RETAINER LOCK
VALVE SPRING RETAINER
COMPRESSION SPRING
● VALVE STEM OIL SEAL
VALVE SPRING SEAT
● VALVE GUIDE BUSH
44 (449, 32)
NO. 1 STRAIGHT SCREW PLUG
● GASKET
VALVE SPRING RETAINER LOCK
VALVE STEM CAP
VALVE SPRING RETAINER
COMPRESSION SPRING
● VALVE STEM OIL SEAL
VALVE SPRING SEAT
● VALVE GUIDE BUSH
● GASKET
80 (816, 59)
NO. 2 STRAIGHT SCREW PLUG
EXHAUST VALVE
INTAKE VALVE
N*m (kgf*cm, ft.*lbf) : Specified torque
● Non-reusable part
P
A132058E03

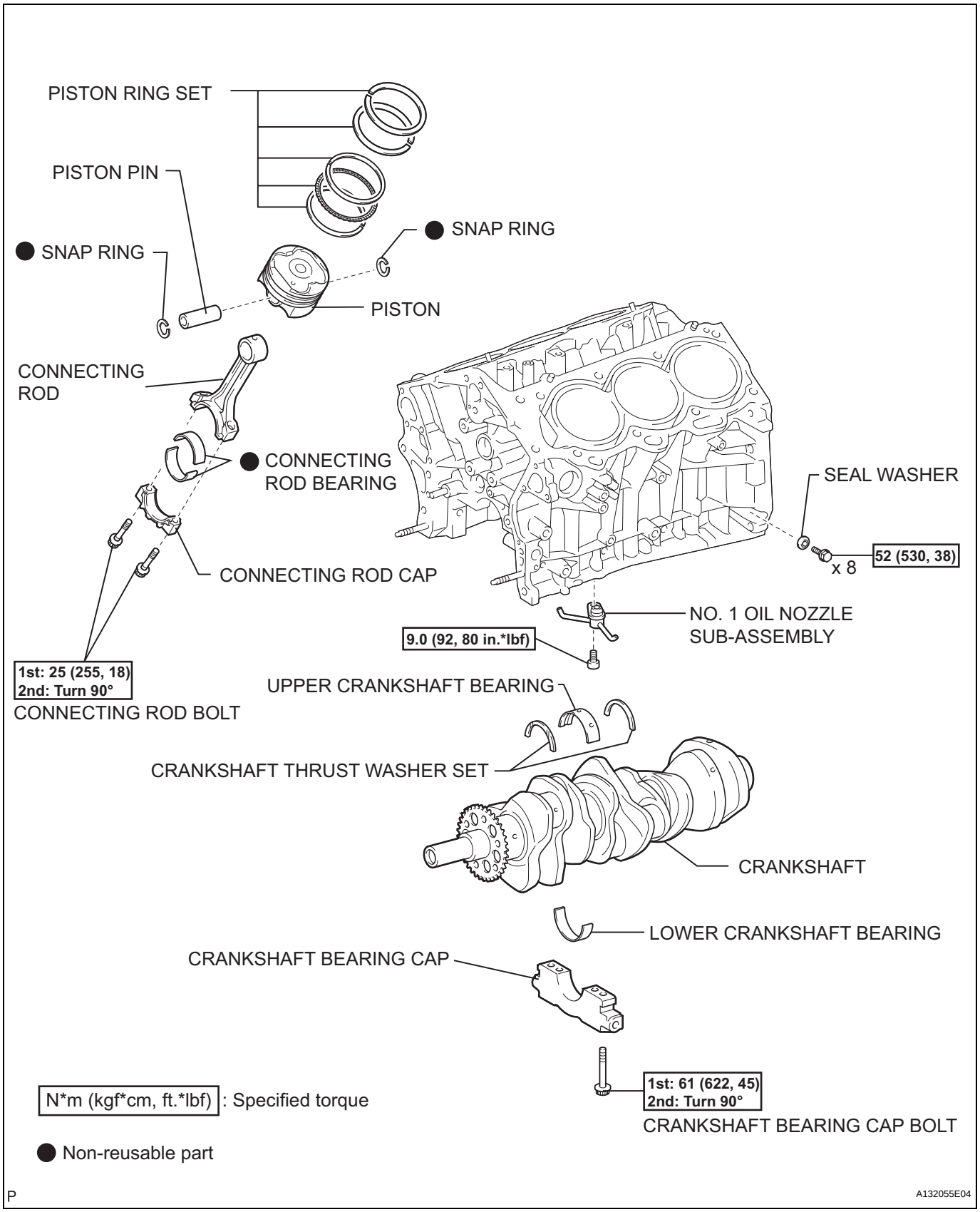
PISTON RING SET
PISTON PIN
SNAP RING
SNAP RING
PISTON
CONNECTING ROD
CONNECTING ROD BEARING
CONNECTING ROD CAP
1st: 25 (255, 18)
2nd: Turn 90°
CONNECTING ROD BOLT
SEAL WASHER
52 (530, 38)
x 8
NO. 1 OIL NOZZLE SUB-ASSEMBLY
9.0 (92, 80 in.*lbf)
UPPER CRANKSHAFT BEARING
CRANKSHAFT THRUST WASHER SET
CRANKSHAFT
LOWER CRANKSHAFT BEARING
CRANKSHAFT BEARING CAP
1st: 61 (622, 45)
2nd: Turn 90°
CRANKSHAFT BEARING CAP BOLT
N*m (kgf*cm, ft.*lbf) : Specified torque
Non-reusable part
P
A132055E04

INSTALLATION

1. INSTALL FRONT EXHAUST PIPE ASSEMBLY

(a) Install a new gasket.

(b) Install the front exhaust pipe with the 2 nuts.
Torque: 62 N*m (632 kgf*cm, 46 ft.*lbf)

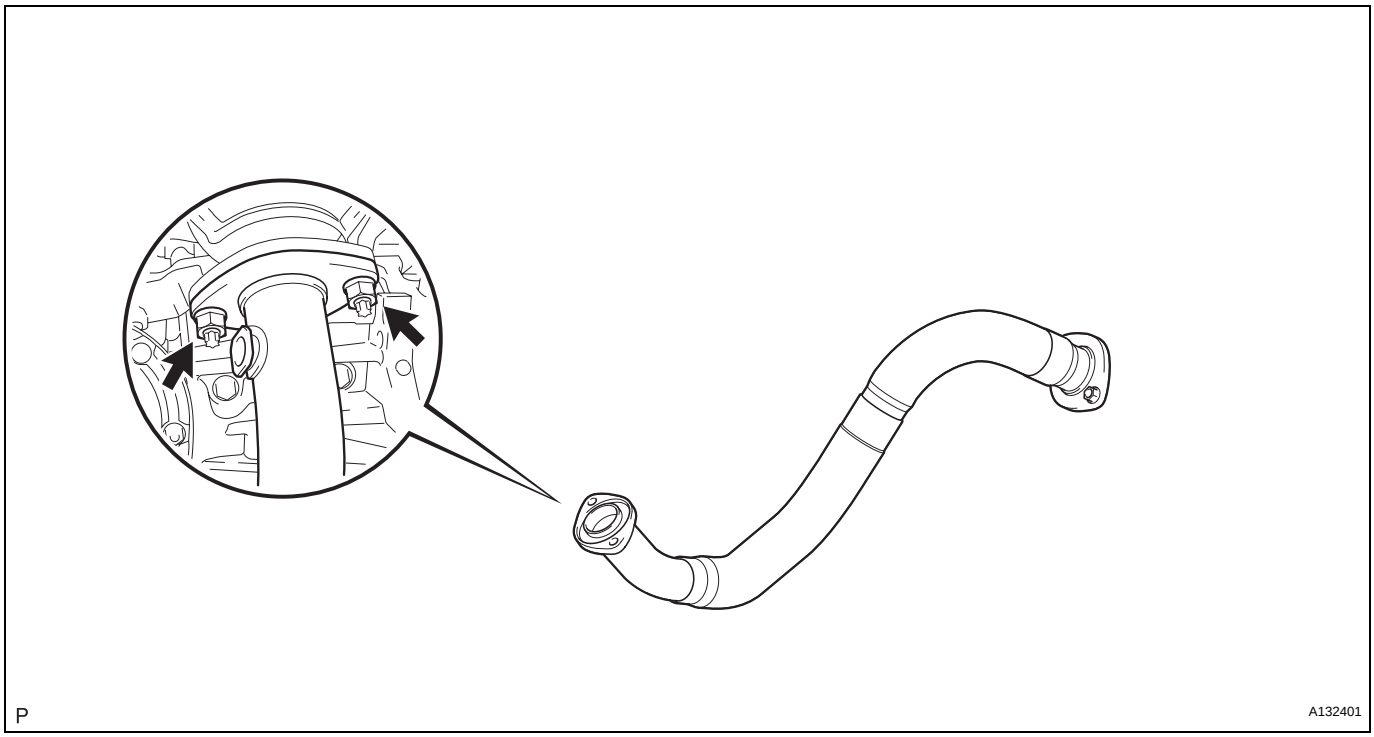

2. INSTALL NO. 1 FRONT EXHAUST PIPE SUPPORT BRACKET

(a) Install the No. 1 front exhaust pipe support bracket with the 2 bolts.
Torque: 21 N*m (214 kgf*cm, 16 ft.*lbf)

3. INSTALL CENTER EXHAUST PIPE ASSEMBLY

(a) Install 2 new gaskets.

(b) Connect the 3 exhaust pipe supports, and install the center exhaust pipe.

(c) Install the 2 bolts and 2 nuts.
Torque: 43 N*m (440 kgf*cm, 32 ft.*lbf)

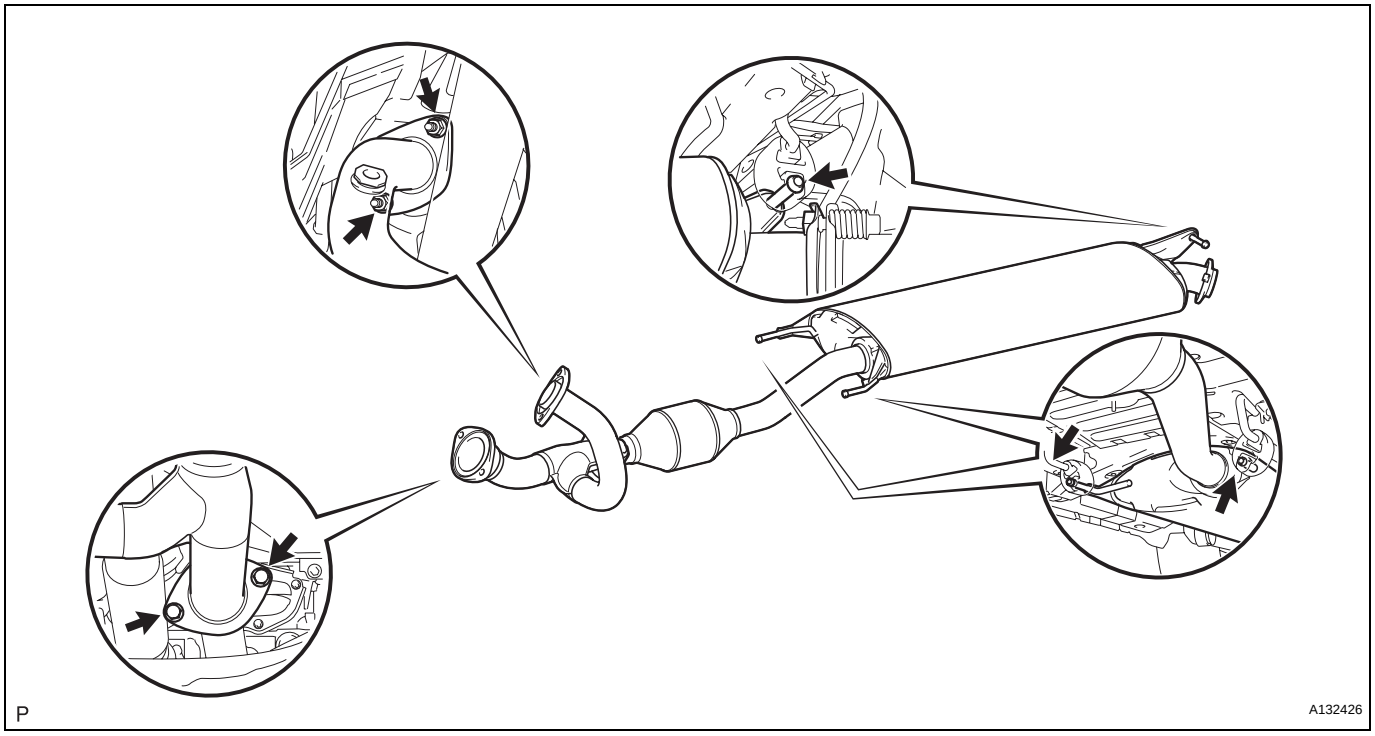

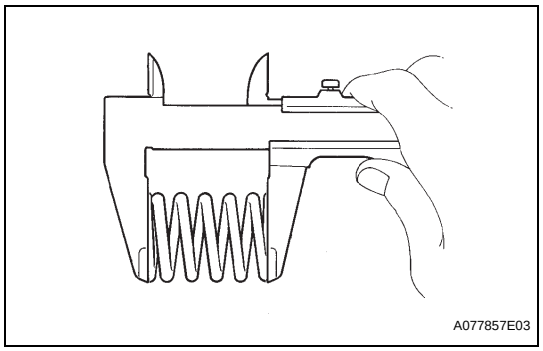

4. INSTALL TAILPIPE ASSEMBLY

(a) Using a vernier caliper, measure the free length of the compression spring.
Minimum length:
38.5 mm (1.516 in.)
If the length is less than the minimum, replace the compression spring.

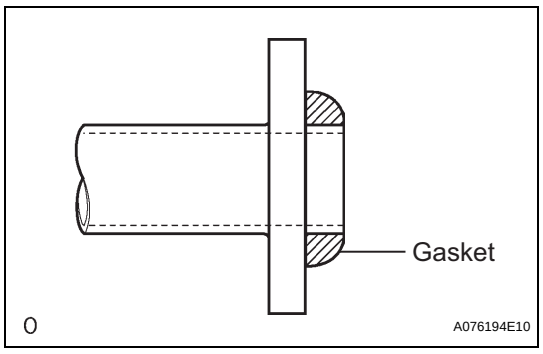

(b) Install a new gasket by hand so that its surface is flush with the center exhaust pipe.
NOTICE:
- **Tap in the gasket in the correct direction.**
- **Do not reuse the removed gasket.**
- **Do not push in the gasket while installing the tailpipe.**

(c) Connect the 2 exhaust pipe supports, and install the tailpipe.

(d) Install the 2 compression springs and 2 bolts.
Torque: 43 N*m (440 kgf*cm, 32 ft.*lbf)

EX

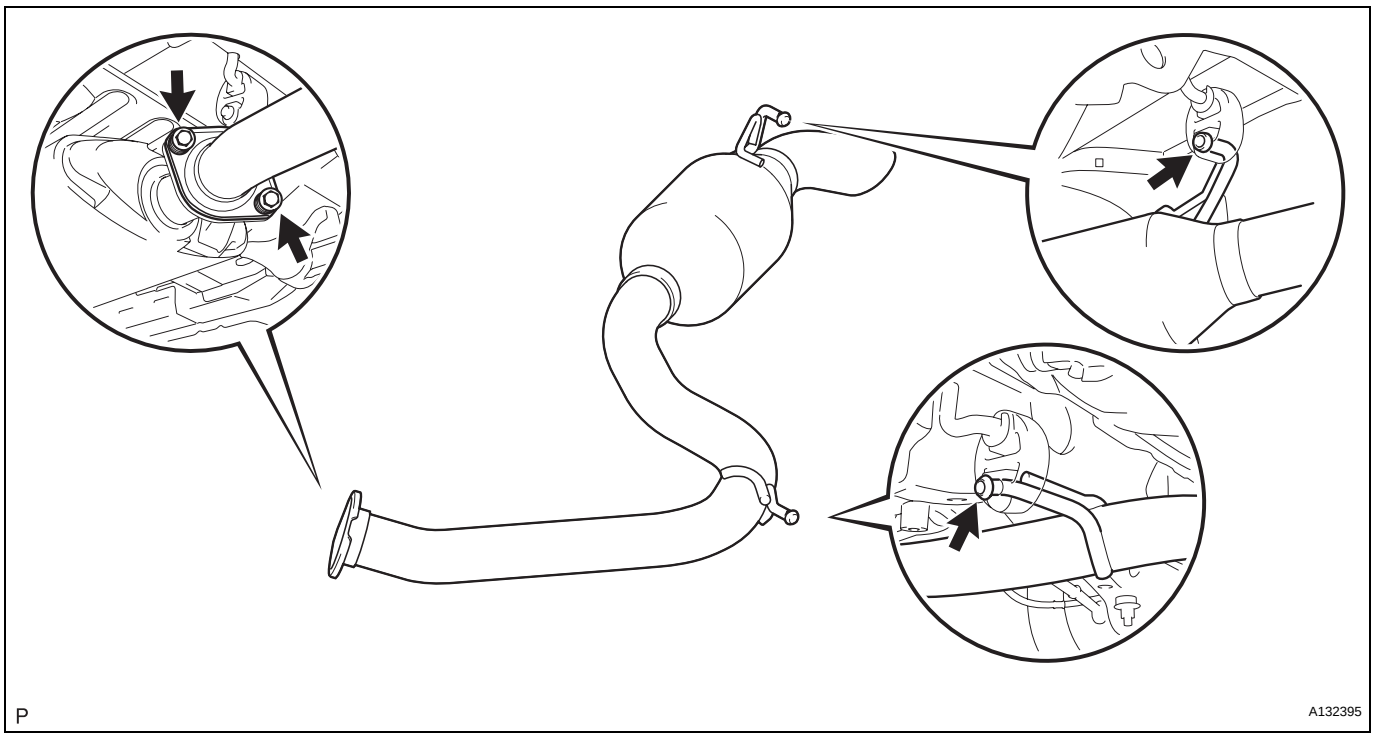

5. **INSTALL HEATED OXYGEN SENSOR (for Sensor 2) (See page EC-27)**

6. **CONNECT CABLE TO NEGATIVE BATTERY TERMINAL**

7. **CHECK FOR EXHAUST GAS LEAKS**
   If gas is leaking, tighten the problem areas to stop the leak. Replace damaged parts as necessary.

EXHAUST PIPE

COMPONENTS

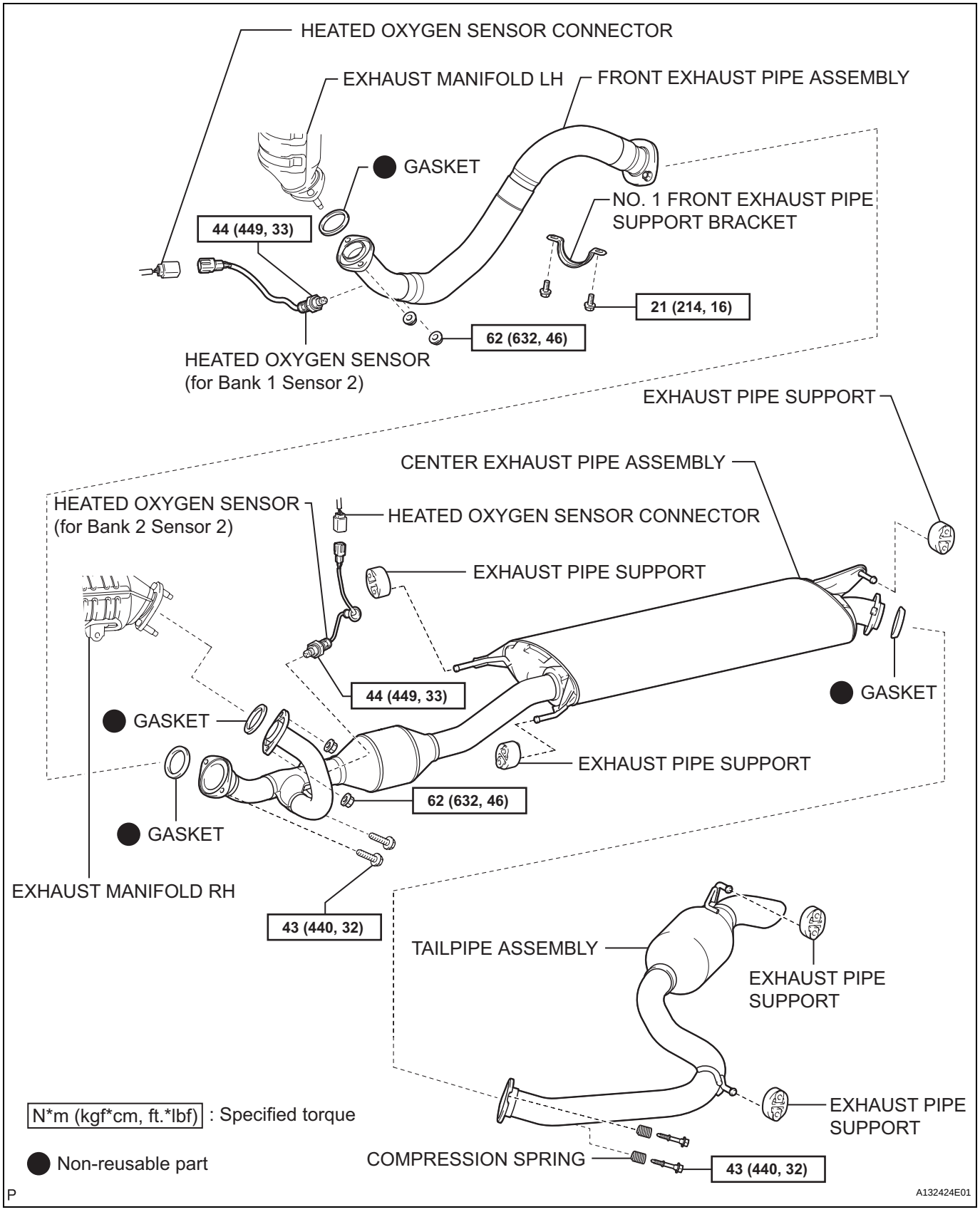

REMOVAL

1. **DISCONNECT CABLE FROM NEGATIVE BATTERY TERMINAL**
   CAUTION:
   Wait at least 90 seconds after disconnecting the cable from the negative (-) battery terminal to prevent airbag and seat belt pretensioner activation.
2. **REMOVE HEATED OXYGEN SENSOR (for Sensor 2) (See page EC-26)**
3. **REMOVE TAILPIPE ASSEMBLY**
   (a) Remove the 2 bolts and 2 compression springs.
   (b) Disconnect the 2 exhaust pipe supports and remove the tailpipe.
   (c) Remove the gasket from the center exhaust pipe.

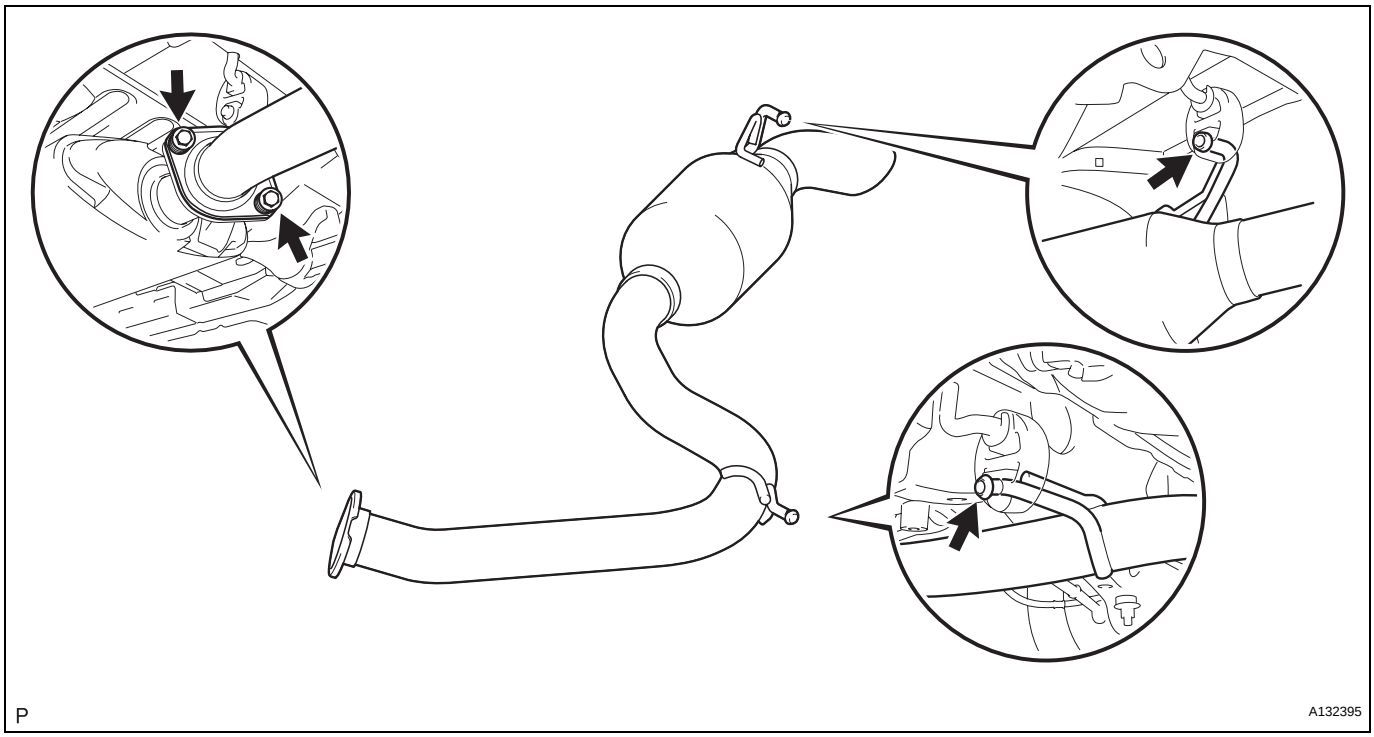

4. **REMOVE CENTER EXHAUST PIPE ASSEMBLY**
   (a) Remove the 2 bolts and 2 nuts.
   (b) Disconnect the 3 exhaust pipe supports and remove the center exhaust pipe.

(c) Remove the 2 gaskets.

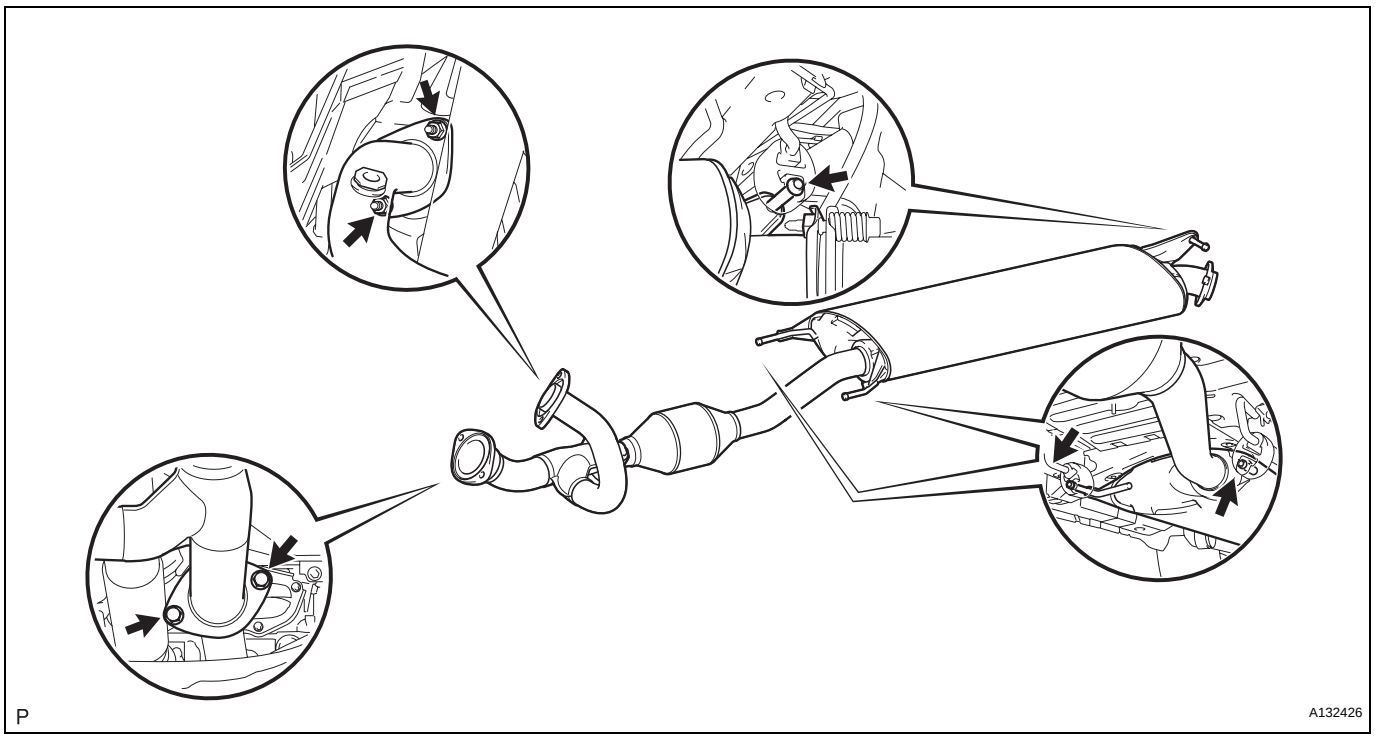

5. REMOVE NO. 1 FRONT EXHAUST PIPE SUPPORT BRACKET

(a) Remove the 2 bolts and No. 1 front exhaust pipe support bracket.

6. REMOVE FRONT EXHAUST PIPE ASSEMBLY

(a) Remove the 2 nuts and front exhaust pipe.

(b) Remove the gasket from the exhaust manifold.

EX

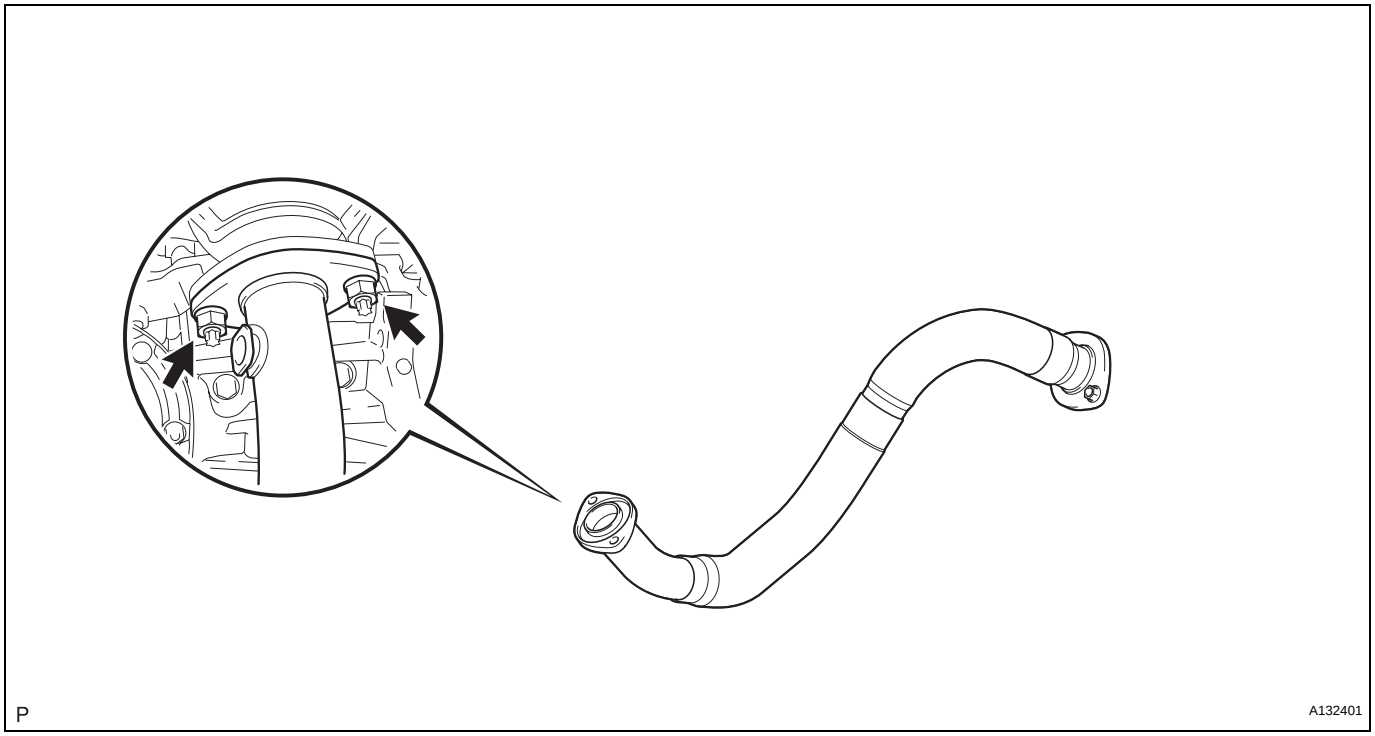

REMOVAL

CAUTION:
Do not allow fuel to spray when removing the pipe between the high pressure side fuel pump and the fuel injector. The fuel in the pipe is highly pressurized.

1. DISCHARGE FUEL SYSTEM PRESSURE

CAUTION:

- **The "DISCHARGE FUEL SYSTEM PRESSURE" procedures must be performed before disconnecting any part of the fuel system.**
- **After performing the "DISCHARGE FUEL SYSTEM PRESSURE" procedures, pressure will remain in the fuel line. When disconnecting the fuel line, place a cloth or equivalent over fittings to reduce the risk of fuel spray.**

(a) Remove the console box (see page IP-16).
(b) Start the engine. After the engine has stopped, turn the ignition switch OFF.
HINT:
DTC P0171/P0172 (system too lean) may be set.
(c) Check that the engine does not start.
(d) Remove the fuel tank cap, and let the air out of the fuel tank.

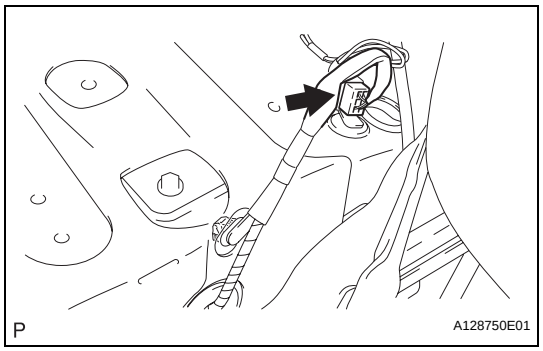

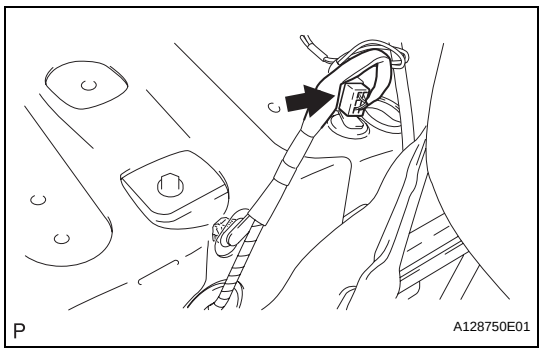

(e) Connect the connector.
(f) Install the console box (see page IP-23).

2. DISCONNECT CABLE FROM NEGATIVE BATTERY TERMINAL

CAUTION:
Wait at least 90 seconds after disconnecting the cable from the negative (-) battery terminal to prevent airbag and seat belt pretensioner activation.

3. REMOVE ENGINE ASSEMBLY

(a) Remove the engine (see page EM-21).

4. REMOVE INTAKE AIR SURGE TANK ASSEMBLY (See page EM-27)

5. DISCONNECT FUEL MAIN TUBE

(a) Remove the No. 2 fuel pipe clamp.

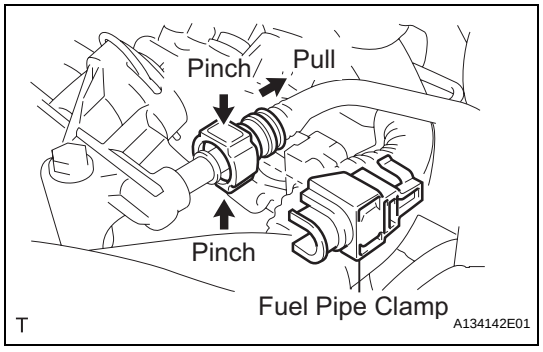

FU

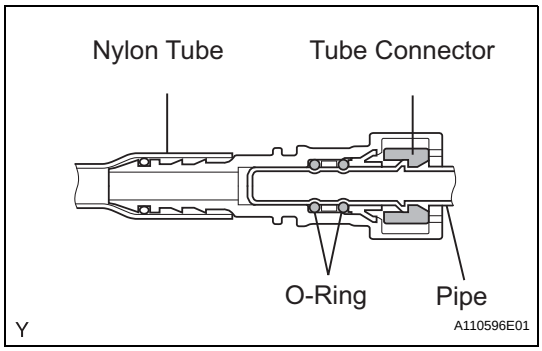

(b) Pinch the tube connector and then pull out the fuel pipe.

NOTICE:

- **Check for foreign matter in the fuel tube around the fuel tube's connector. Clean it if necessary. Foreign matter can affect the O-ring's ability to seal the connector and fuel main pipe.**
- **Do not use any tools to separate the connector and pipe.**
- **Do not forcefully bend or twist the hose.**
- **Keep the connector and pipe free from foreign matter.**
- **If the connector and pipe are stuck together, pinch the connector and turn it carefully to disconnect it.**
- **Put the connector in a plastic bag to prevent damage and contamination.**

6. REMOVE FUEL INJECTOR ASSEMBLY

(a) Disconnect the 6 injector connectors.

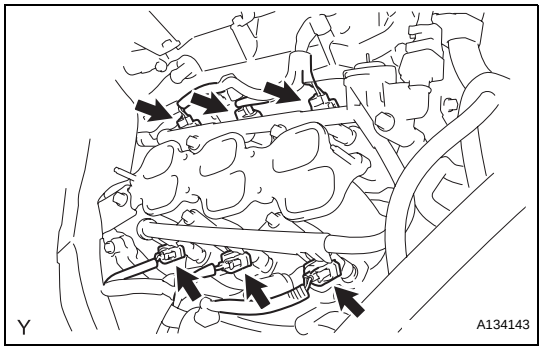

(b) Remove the 5 bolts and fuel delivery pipe together with the 6 injectors.

NOTICE:

Be careful not to drop the fuel injectors when removing the fuel delivery pipe.

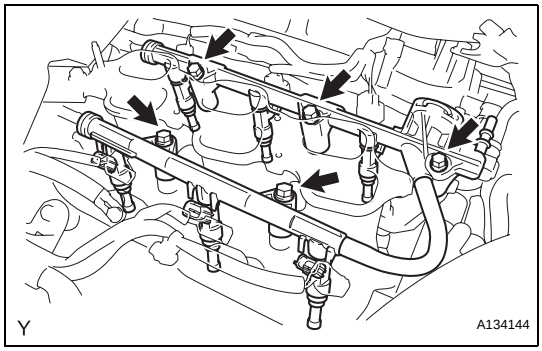

(c) Remove the 6 insulators from the intake manifold.

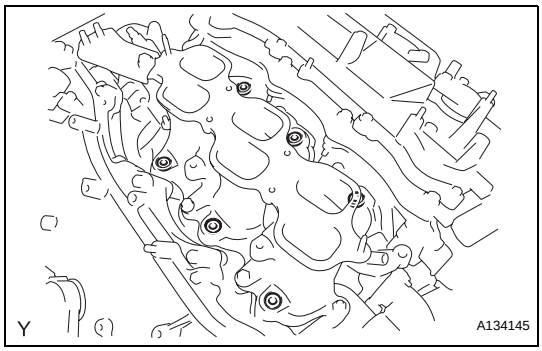

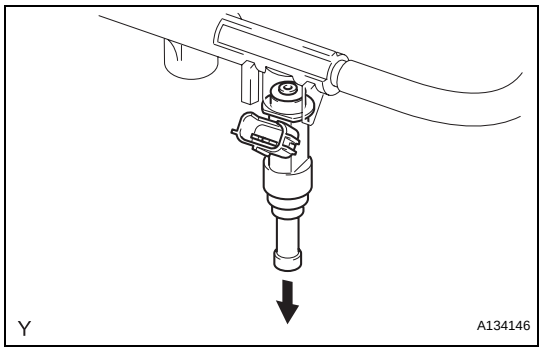

(d) Pull out the 6 fuel injectors from the fuel delivery pipe.
(e) Remove the O-ring from each fuel injector.

INSPECTION

1. INSPECT FUEL INJECTOR ASSEMBLY

(a) Inspect injector resistance.

(1) Measure the resistance between the terminals.

Standard resistance:

11.6 to 12.4 Ω at 20°C (68°F)

If the result is not as specified, replace the injector.

(b) Inspect the injection volume.

CAUTION:

This test involves high-pressure fuel and electricity. Take every precaution regarding safe handling of both the fuel and the electricity. Perform this test in a safe area, and avoid any sparks or flames. Do not smoke.

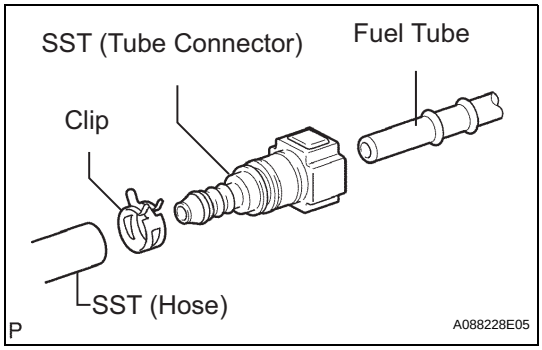

(1) Install the fuel tube connector to SST (hose), then connect the tube connector to the fuel pipe (vehicle side).

SST 09268-41048 (95336-08070, 09268-41500)

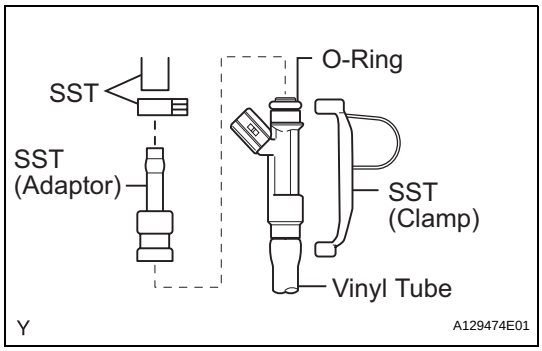

(2) Install the O-ring to the fuel injector.

(3) Connect SST (adaptor and hose) to the injector, and hold the injector and union with SST (clamp).

SST 09268-41048 (09268-41130, 90467-13001), 09268-41400

(4) Put the injector into the graduated cylinder.

CAUTION:

Install a suitable vinyl tube onto the injector to contain gasoline spray.

(5) Operate the fuel pump.

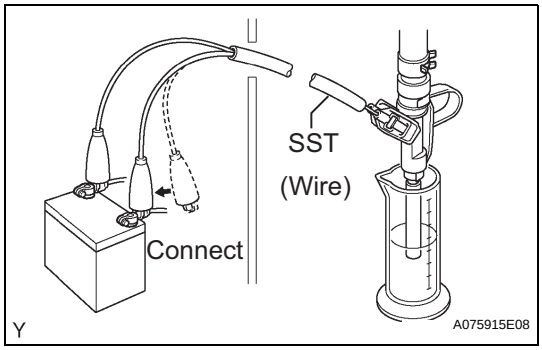

(6) Connect SST (wire) to the injector and the battery for 15 seconds, and measure the injection volume with the graduated cylinder. Test each injector 2 or 3 times.

SST 09842-30080

Standard volume:

84 to 100 cm^3 (5.1 to 6.0 cu in.) in 15 seconds

Difference between each injector:

16 cm^3 (0.96 cu in.) or less

If the injection volume is not as specified, replace the injector.

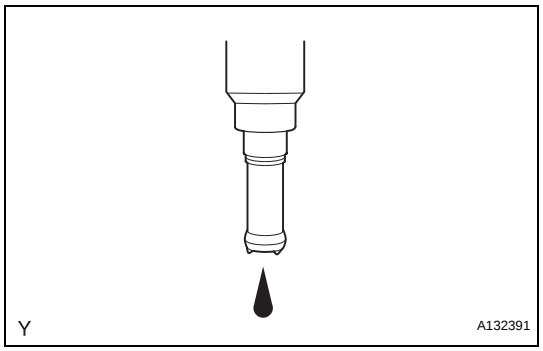

(c) Check for leakage.
(1) In the condition above, disconnect the tester probes of SST (wire) from the battery and check for fuel leakage from the injector.
Fuel drop:
1 drop or less in 16 minutes

INSTALLATION

1. INSTALL FUEL INJECTOR ASSEMBLY

(a) Apply a light coat of spindle oil or gasoline to 6 new O-rings, and install an O-ring to each injector.

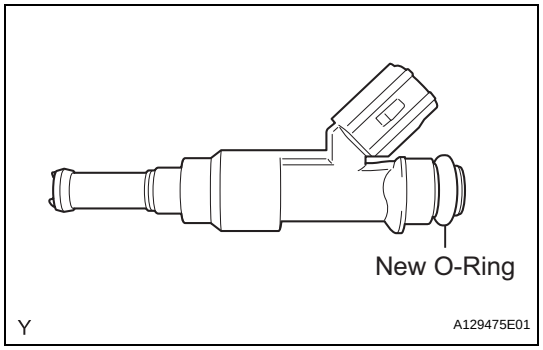

(b) Apply a light coat of spindle oil or gasoline where the fuel delivery pipe contacts the O-ring.
(c) Push the fuel injector while twisting it back and forth to install it in the fuel delivery pipe.
(d) Position the fuel injector connector outward.
NOTICE:
- **Be careful not to twist the O-ring.**
- **After installing the fuel injector, check that it turns smoothly. If it does not, reinstall it with a new O-ring.**

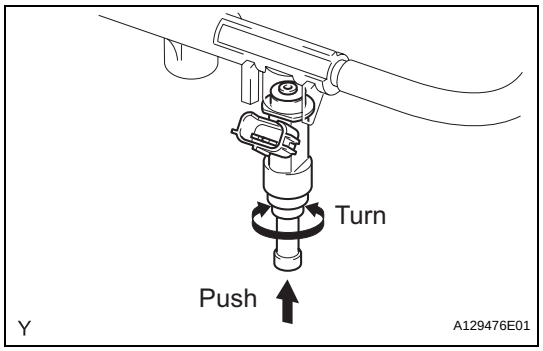

(e) Install 6 new insulators to the intake manifold.

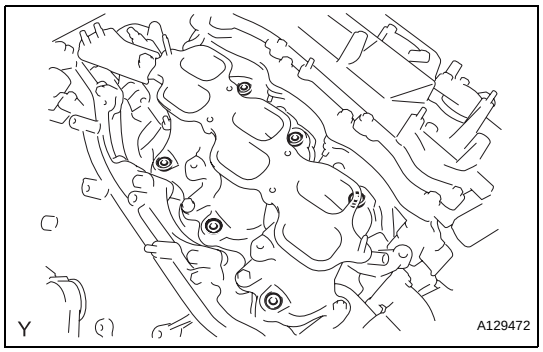

(f) Place the fuel delivery pipe together with the 6 fuel injectors into the intake manifold.
NOTICE:
Be careful not to drop the fuel injectors when installing the fuel delivery pipe.

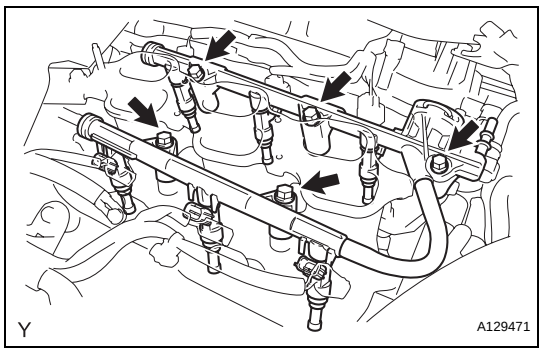

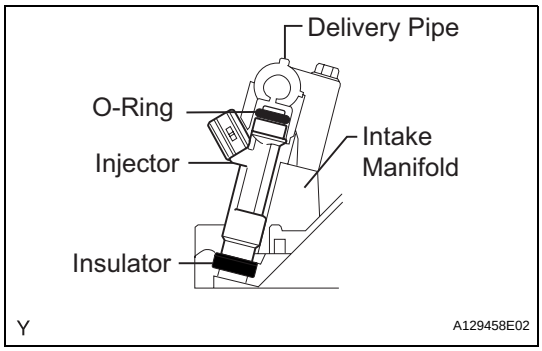

(g) Temporarily install the 5 bolts which are used to hold the fuel delivery pipe to the intake manifold.
NOTICE:
After installing the fuel injector, check that it turns smoothly. If it does not, reinstall it with a new O-ring.

(h) Tighten the 5 bolts which are used to hold the fuel delivery pipe to the intake manifold.
Torque: 21 N*m (214 kgf*cm, 15 ft.*lbf)

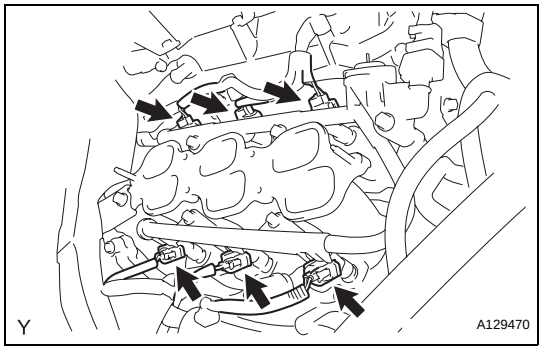

(i) Connect the 6 fuel injector connectors.

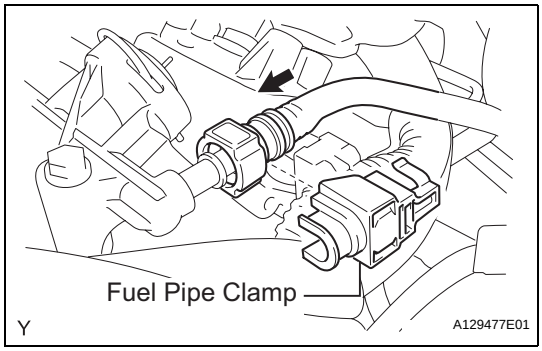

2. CONNECT FUEL MAIN TUBE

(a) Push in the tube connector to the pipe until the tube connector makes a "click" sound.
NOTICE:
- **Check that there is no damage or foreign objects on the connected part of the fuel pipe.**
- **After connecting, check if the fuel tube connector and the pipe are securely connected by pulling on them.**

(b) Install the No. 2 fuel pipe clamp.

3. INSTALL INTAKE AIR SURGE TANK ASSEMBLY (See page EM-34)

4. INSTALL ENGINE ASSEMBLY

(a) Install the engine (see page EM-31).

5. ADD ENGINE COOLANT (See page CO-8)

6. CONNECT CABLE TO NEGATIVE BATTERY TERMINAL

7. CHECK FOR ENGINE COOLANT LEAKS (See page CO-1)

8. CHECK FOR FUEL LEAKS

FUEL INJECTOR

COMPONENTS

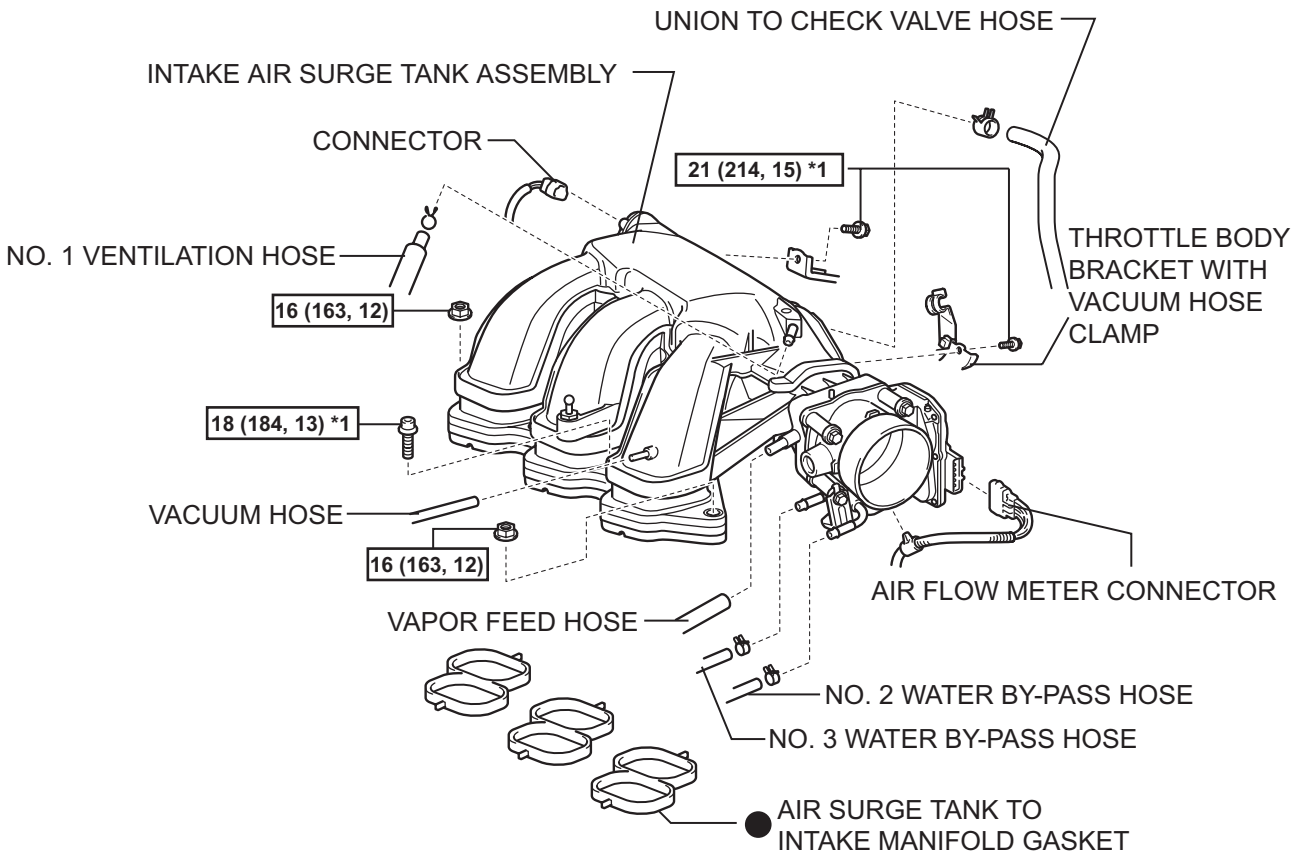

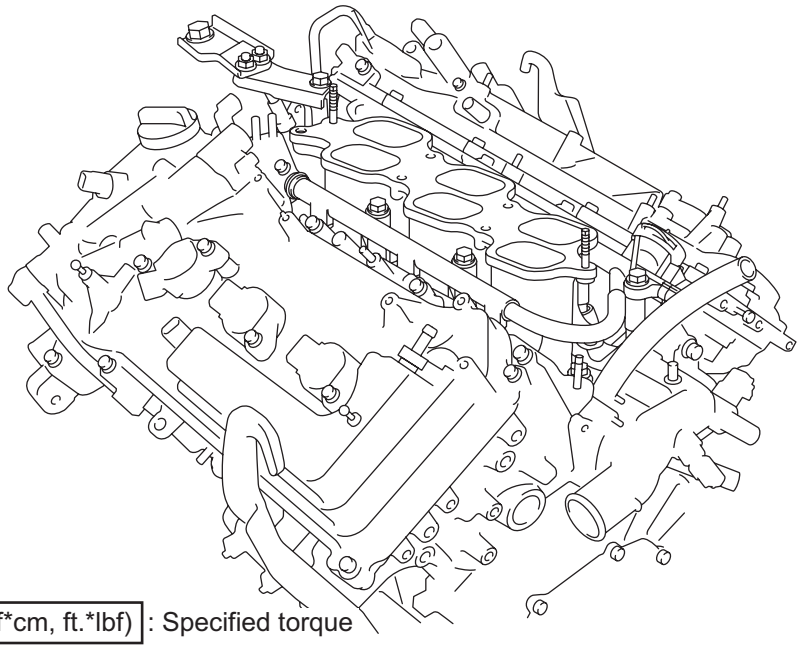

N*m (kgf*cm, ft.*lbf) : Specified torque

● Non-reusable part

*1: Do not allow oil to contact these bolts

Y

A134137E01

FU

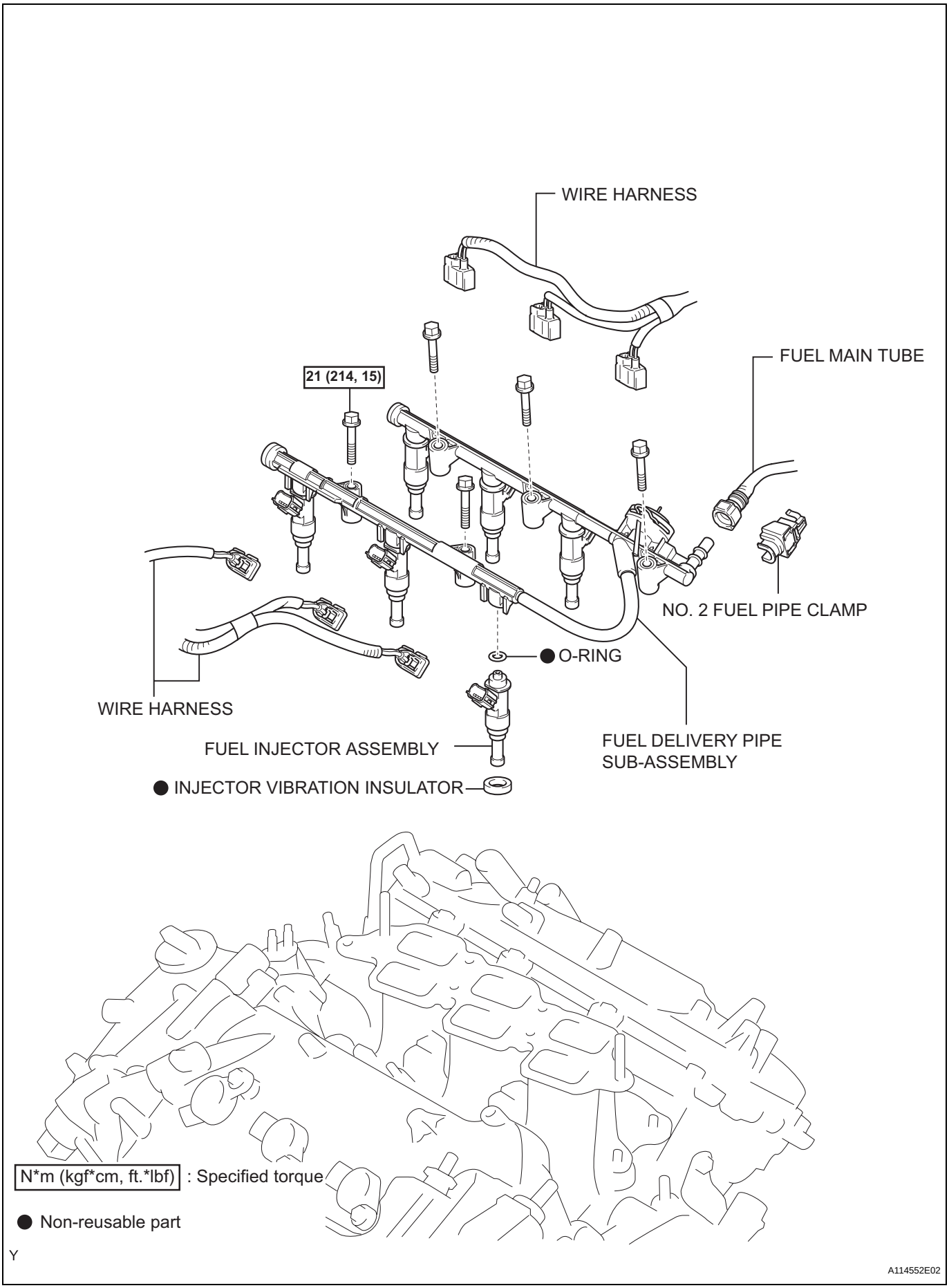
WIRE HARNESS
FUEL MAIN TUBE
21 (214, 15)
NO. 2 FUEL PIPE CLAMP
● O-RING
WIRE HARNESS
FUEL INJECTOR ASSEMBLY
FUEL DELIVERY PIPE
SUB-ASSEMBLY
● INJECTOR VIBRATION INSULATOR
N*m (kgf*cm, ft.*lbf) : Specified torque
● Non-reusable part
Y
A114552E02

INSTALLATION

1. **INSTALL FUEL PRESSURE PULSATION DAMPER**
   (a) Apply a light coat of spindle oil or gasoline to a new O-ring, and install it to the pulsation damper.
   (b) Install the pulsation damper to the fuel delivery pipe.
   (c) Install the clip.
2. **INSTALL INTAKE AIR SURGE TANK ASSEMBLY (See page EM-34)**
3. **INSTALL ENGINE ASSEMBLY**
   (a) Install the engine (see page EM-31).
4. **CONNECT CABLE TO NEGATIVE BATTERY TERMINAL**

FUEL PRESSURE PULSATION DAMPER

COMPONENTS

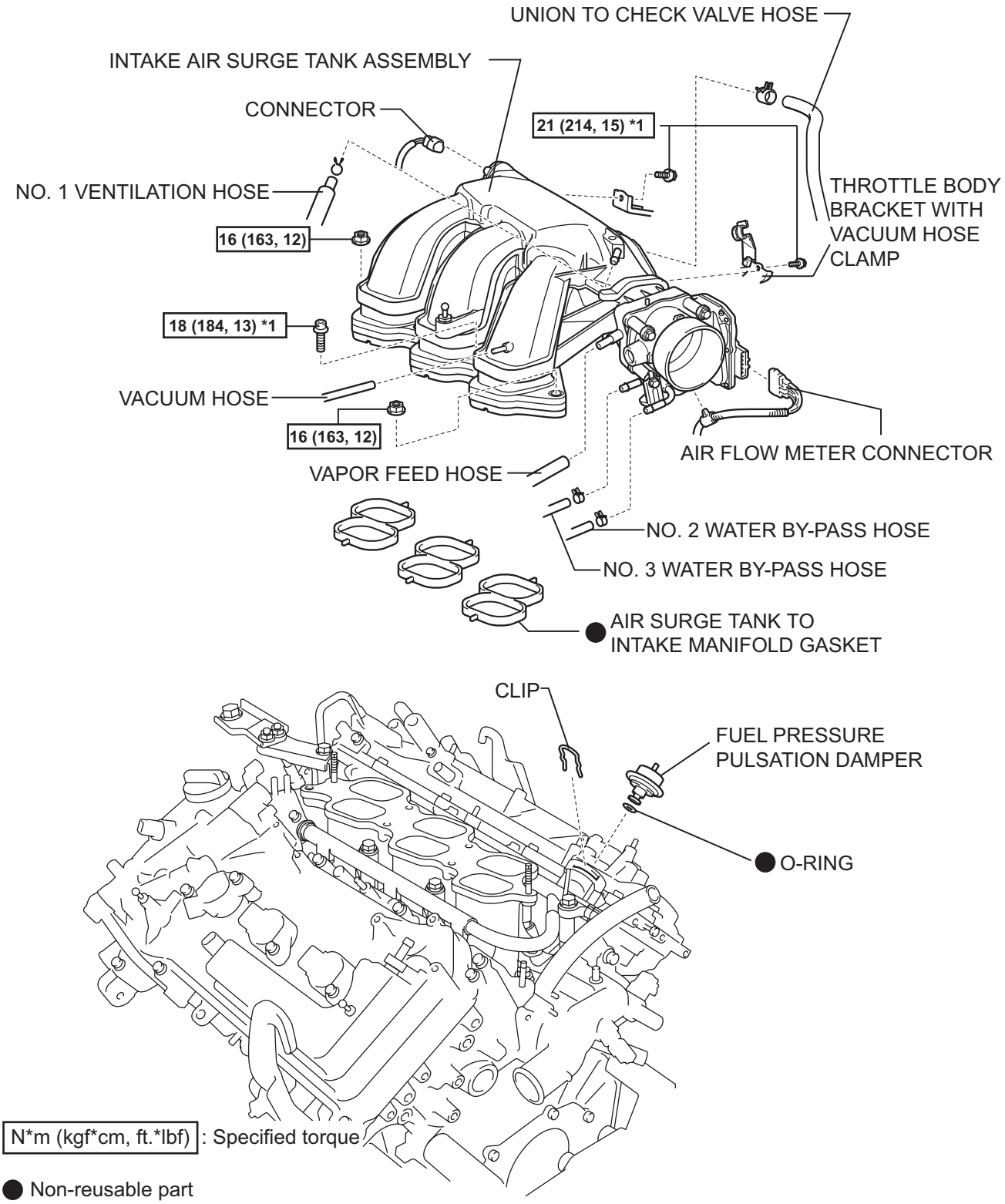

N*m (kgf*cm, ft.*lbf) : Specified torque

● Non-reusable part

*1: Do not allow oil to contact these bolts

Y

A134139E01

REMOVAL

1. **DISCHARGE FUEL SYSTEM PRESSURE (See page FU-13)**
2. **DISCONNECT CABLE FROM NEGATIVE BATTERY TERMINAL**
   CAUTION:
   Wait at least 90 seconds after disconnecting the cable from the negative (-) battery terminal to prevent airbag and seat belt pretensioner activation.
3. **REMOVE ENGINE ASSEMBLY**
   (a) Remove the engine (see page EM-21).
4. **REMOVE INTAKE AIR SURGE TANK ASSEMBLY (See page EM-27)**
5. **REMOVE FUEL PRESSURE PULSATION DAMPER**
   (a) Remove the clip.
   (b) Pull out the fuel pressure pulsation damper from the fuel delivery pipe.

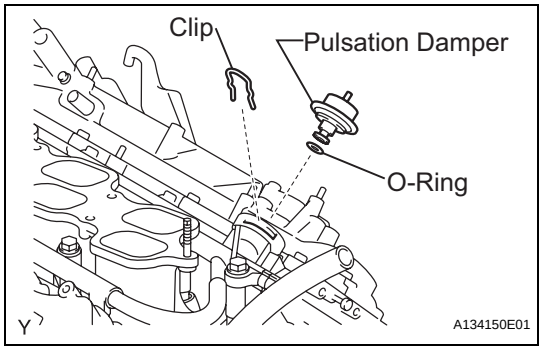

FU

REMOVAL

1. REMOVE FUEL TANK ASSEMBLY

(a) Remove the fuel tank (see page FU-33).

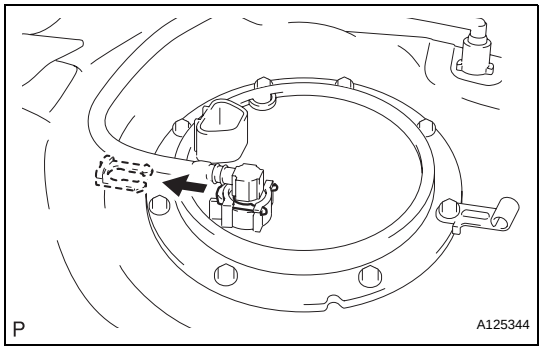

2. REMOVE FUEL TANK MAIN TUBE SUB-ASSEMBLY

(a) Remove the joint clip and fuel tank main tube.

CAUTION:

- **Before removing the tube joint clip, check for foreign matter around the clip. Clean if necessary.**
- **Keep the O-ring free of foreign matter, as it becomes contaminated easily.**
- **Do not use any tools in this procedure.**
- **Do not forcefully bend or twist the tube.**
- **Put the tube in a plastic bag to prevent damage and contamination.**
- **If the fuel suction plate and tube are stuck together, pinch the tube and turn it carefully to disconnect it.**
- **Be careful not to damage the clip. If the clip is damaged, replace it.**

FU

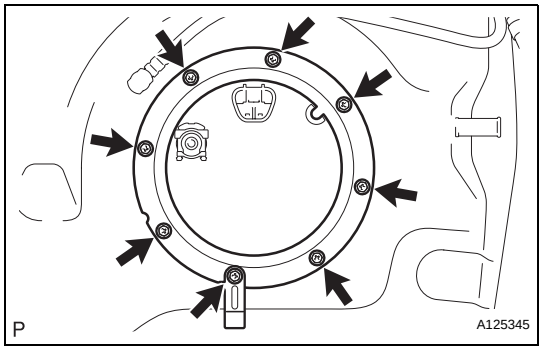

3. REMOVE FUEL TANK VENT TUBE SET PLATE

(a) Remove the 8 bolts and set plate.

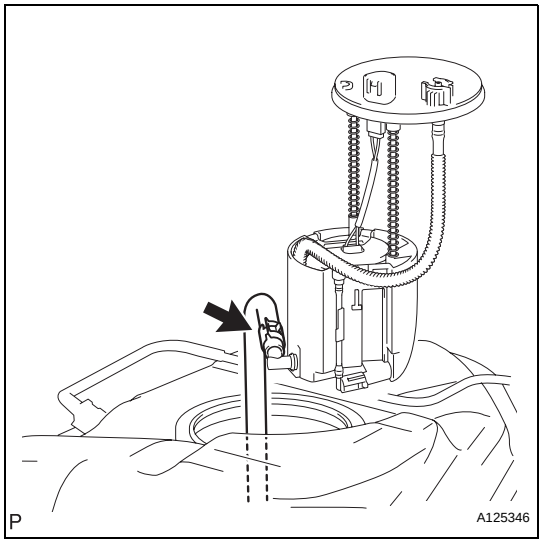

4. REMOVE FUEL SUCTION WITH PUMP ASSEMBLY

(a) Disconnect the fuel hose and remove the fuel pump from the fuel tank.

NOTICE:

Do not damage the fuel pump.

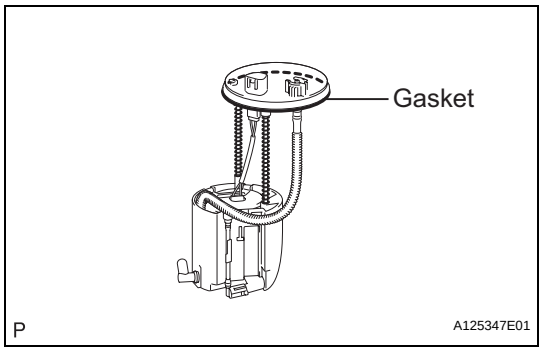

(b) Remove the gasket from the fuel pump.

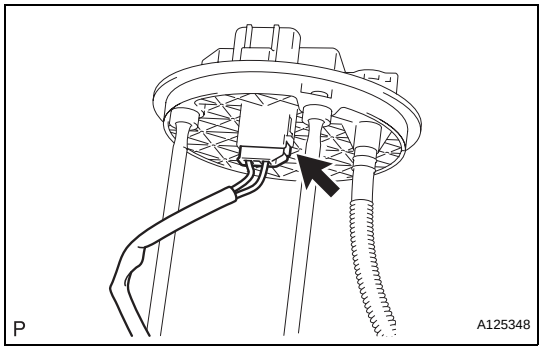

5. REMOVE FUEL SUB-TANK ASSEMBLY

(a) Disconnect the wire harness.

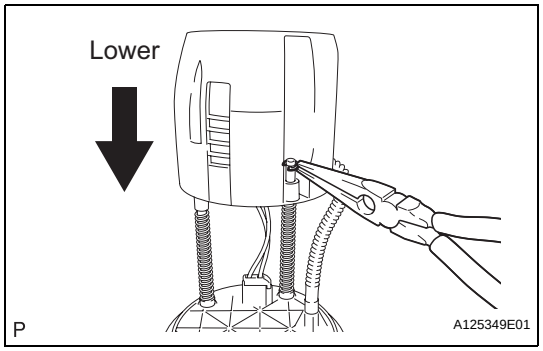

(b) Using needle nose pliers, remove the E-ring.
HINT:
Slightly lower the sub-tank to remove the E-ring.

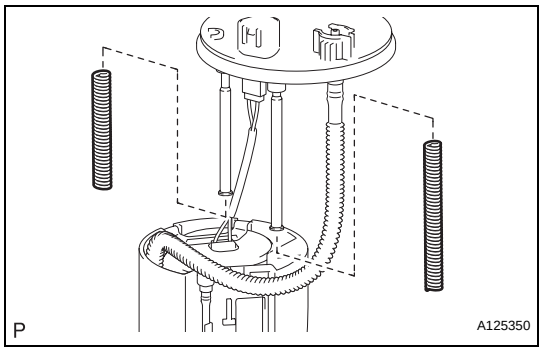

(c) Remove the 2 springs from the 2 shafts.

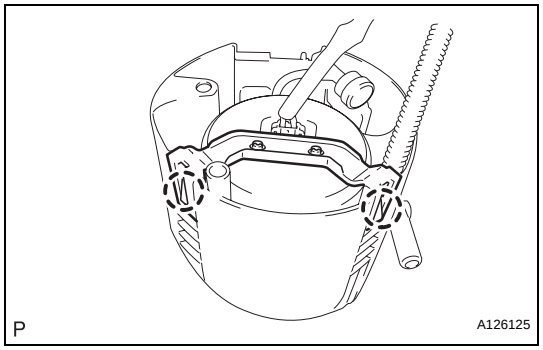

(d) Detach the 2 claws and remove the sub-tank.

FU

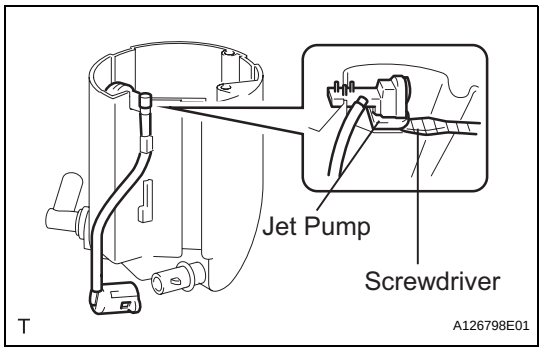

(e) Detach the claw of the jet pump nozzle and remove the jet pump nozzle.
(f) Using a screwdriver, remove the jet pump.
HINT:
Tape the screwdriver tip before use.

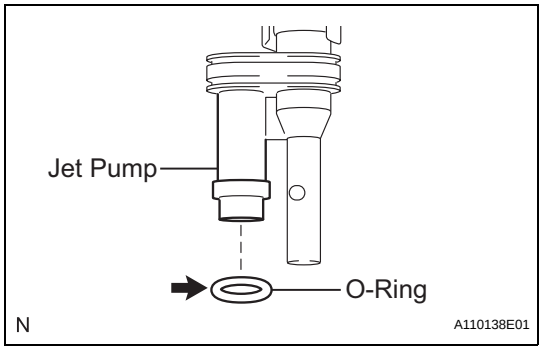

(g) Remove the O-ring from the jet pump.

FU

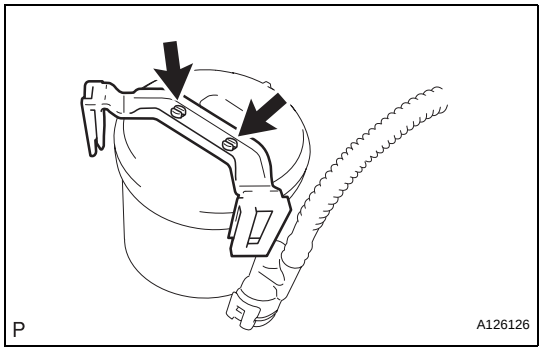

6. REMOVE BRACKET

(a) Using a screwdriver, detach the 2 claws and remove the bracket.
HINT:
Tape the screwdriver tip before use.

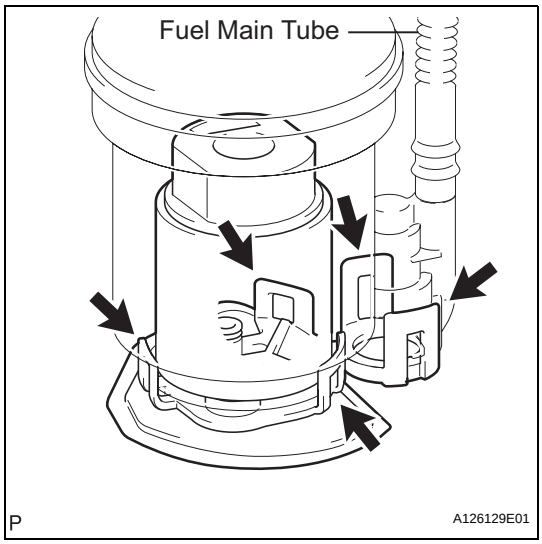

7. REMOVE FUEL PUMP ASSEMBLY

(a) Detach the 5 claws on the filter and remove the fuel pump from the fuel filter.
HINT:
When removing the claw, do not disconnect the fuel main tube.

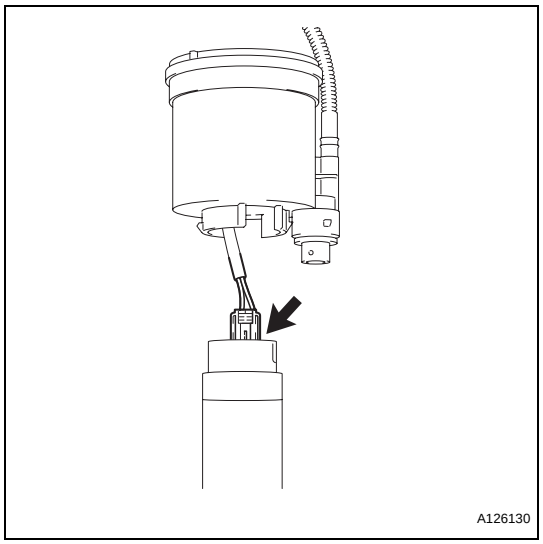

(b) Disconnect the fuel pump connector.

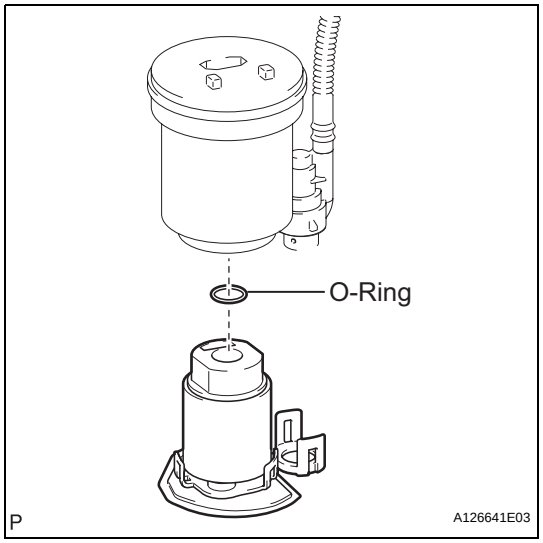

(c) Remove the O-ring from the fuel filter.

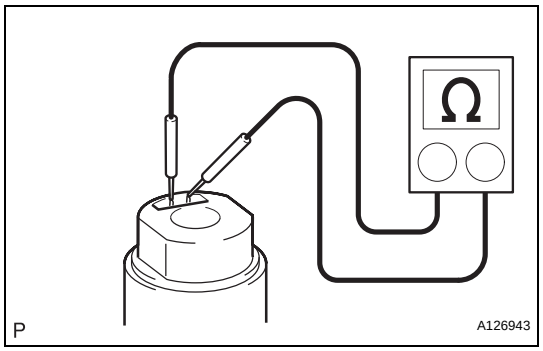

INSPECTION

1. INSPECT FUEL PUMP

(a) Check the fuel pump resistance.

(1) Measure the resistance between terminals 1 and 2.

Standard resistance:

0.2 to 3.0 Ω at 20°C (68°F)

If the result is not as specified, replace the fuel pump.

(b) Check fuel pump operation.

(1) Apply battery voltage to terminals 1 and 2. Check that the pump operates.

NOTICE:

- **These tests must be completed within 10 seconds to prevent the coil from burning out.**
- **Keep the fuel pump as far away from the battery as possible.**
- **Always turn the voltage on and off on the battery side, not the fuel pump side.**

If the pump does not operate, replace the fuel pump.

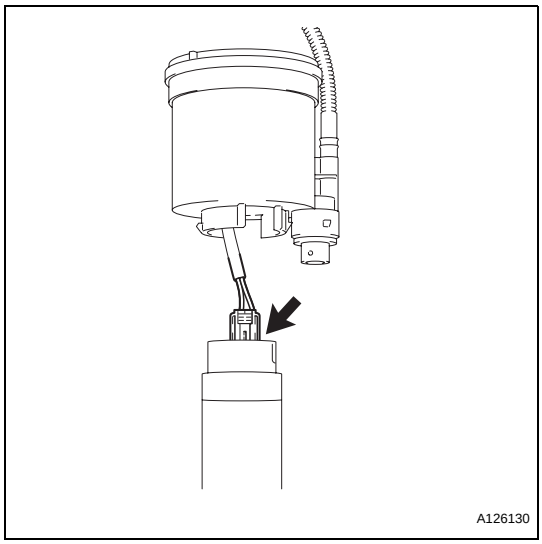

INSTALLATION

1. INSTALL FUEL PUMP ASSEMBLY

(a) Connect the pump harness connector.

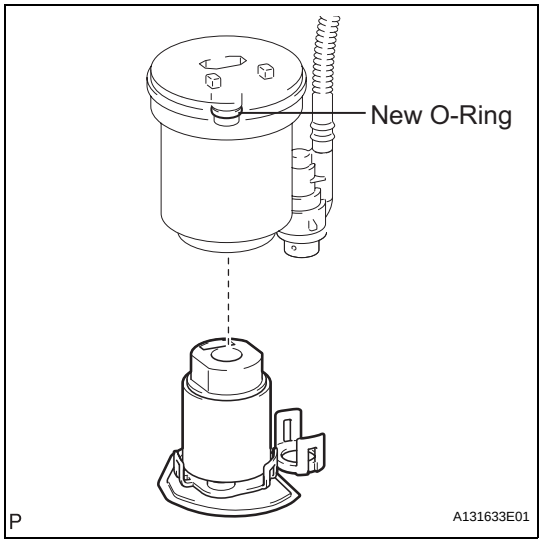

(b) Apply gasoline to a new O-ring and install the O-ring to the fuel filter.

(c) Attach the 5 claws to the claw holes and install the fuel pump.

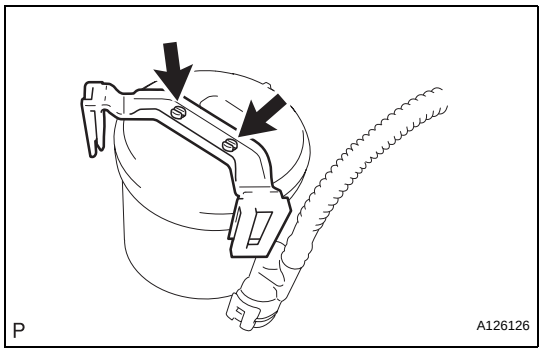

2. INSTALL BRACKET

(a) Attach the 2 claws to the claw holes and install the bracket.

FU

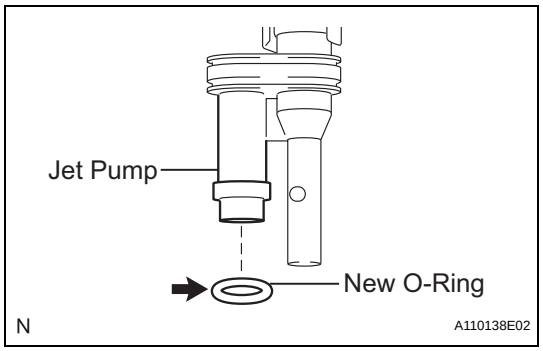

3. INSTALL FUEL SUB-TANK ASSEMBLY

(a) Apply gasoline to a new O-ring and install it to the jet pump.

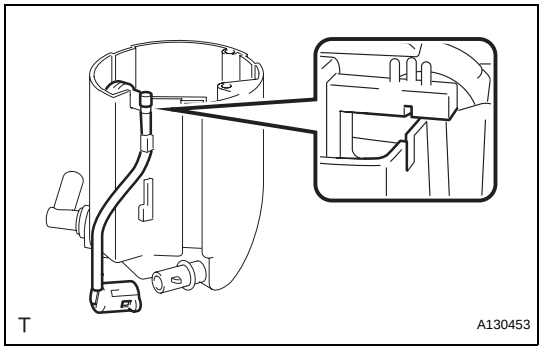

(b) Install the jet pump while aligning it with the installation position of the sub-tank.

(c) Install the jet pump nozzle.

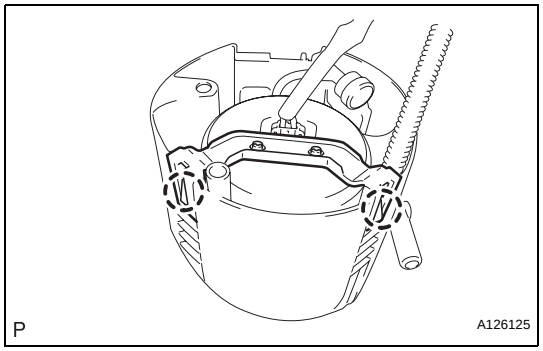

(d) Attach the 2 claws to the claw holes and install the fuel sub-tank.

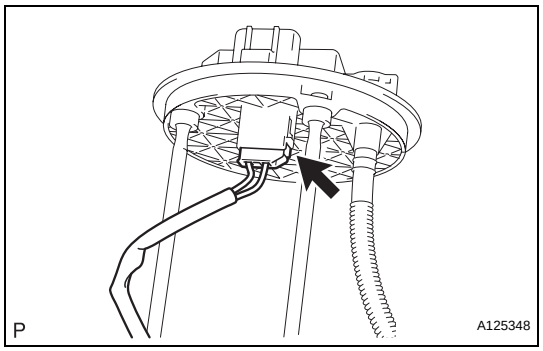

(e) Connect the wire harness.

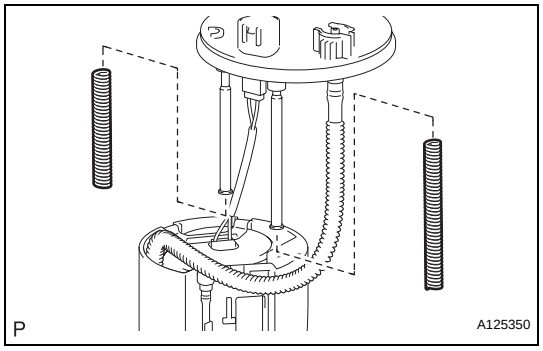

(f) Install the springs to the fuel suction plate shafts and install them to the sub-tank.

FU

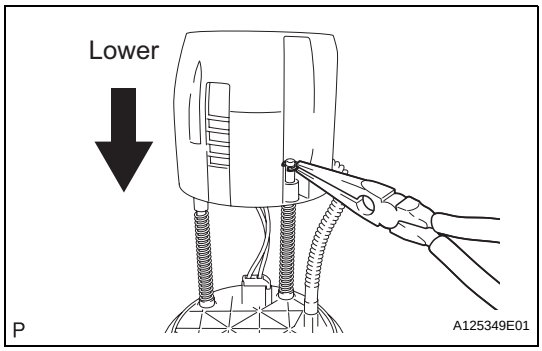

(g) Using needle-nose pliers, install a new E-ring.
HINT:
Slightly lower the sub-tank to install the E-ring.

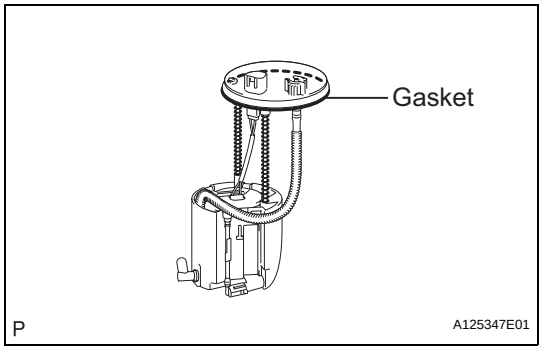

4. INSTALL FUEL SUCTION WITH PUMP ASSEMBLY

(a) Install a new gasket onto the fuel pump.

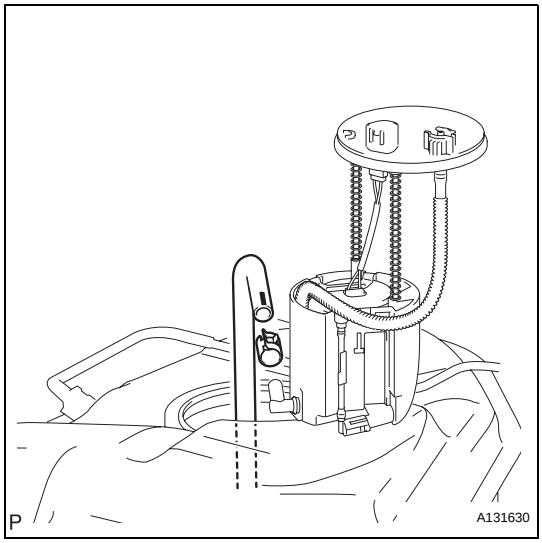

(b) Connect the fuel hose and install the fuel pump into the fuel tank.
NOTICE:
Do not damage the fuel pump filter.

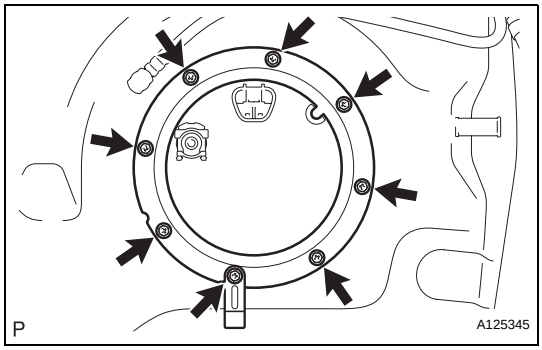

5. INSTALL FUEL TANK VENT TUBE SET PLATE

(a) Install the set plate with the 8 bolts.
Torque: 4.0 N*m (41 kgf*cm, 35 in.*lbf)

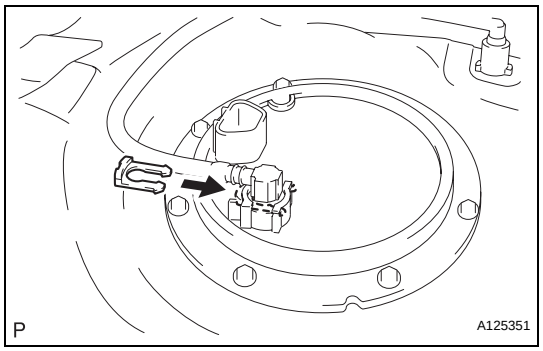

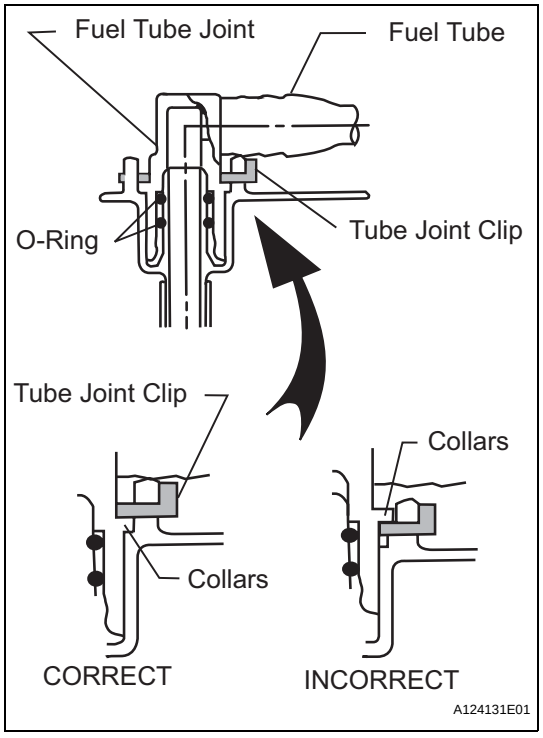

6. INSTALL FUEL TANK MAIN TUBE SUB-ASSEMBLY

(a) Install the fuel tank main tube with the joint clip.

CAUTION:

- **Check that there are no scratches or foreign objects on the connecting parts.**
- **Check that the fuel tube joint is inserted securely.**
- **Check that the fuel tube joint clip is on the collars of the fuel tube joint.**
- **After installing the tube joint clip, check that the fuel tube joint has not been pulled off.**
- **Be careful not to damage the clip. If the clip is damaged, replace it.**

7. INSTALL FUEL TANK ASSEMBLY

(a) Install the fuel tank (see page FU-38).

FU

FUEL PUMP

COMPONENTS

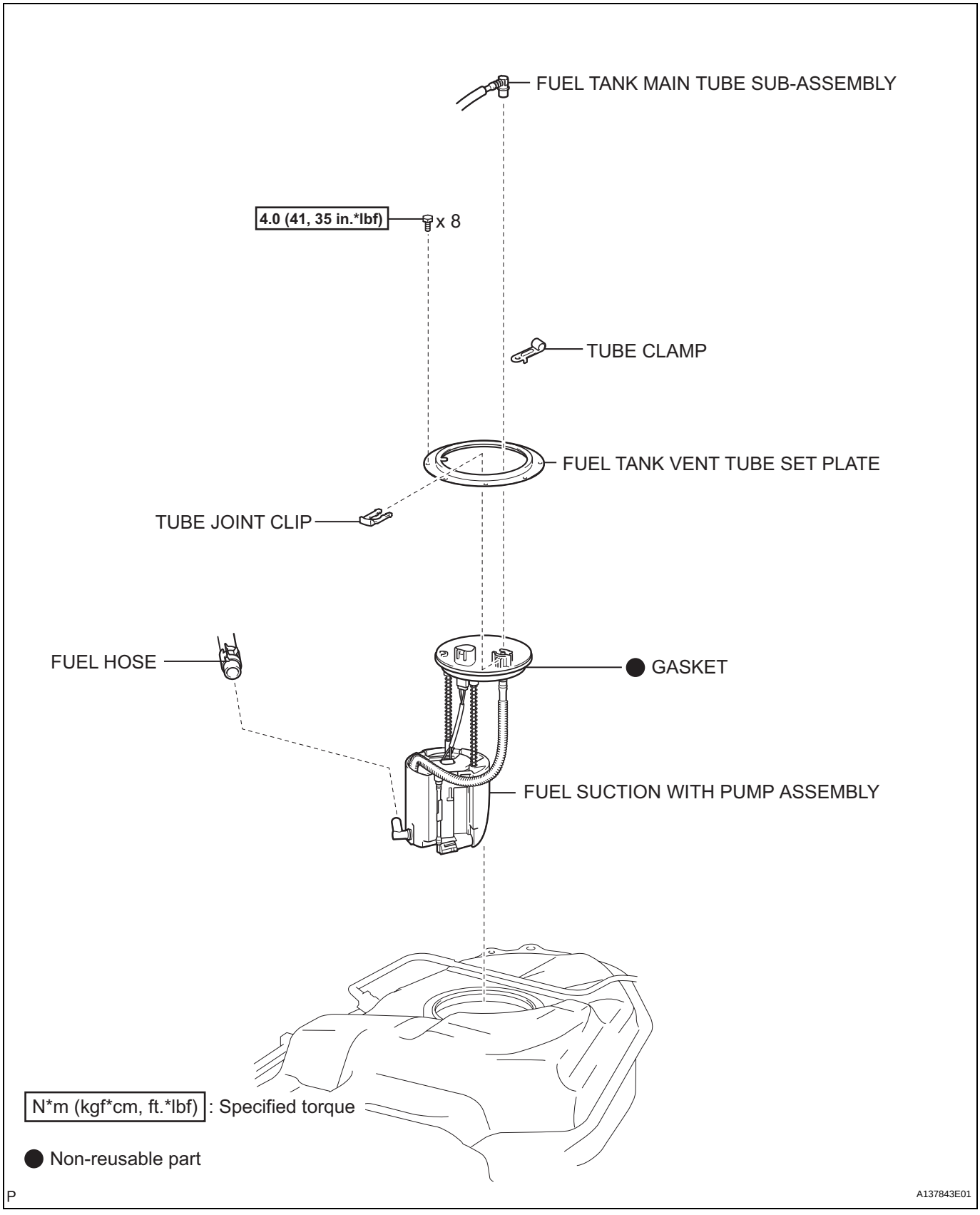

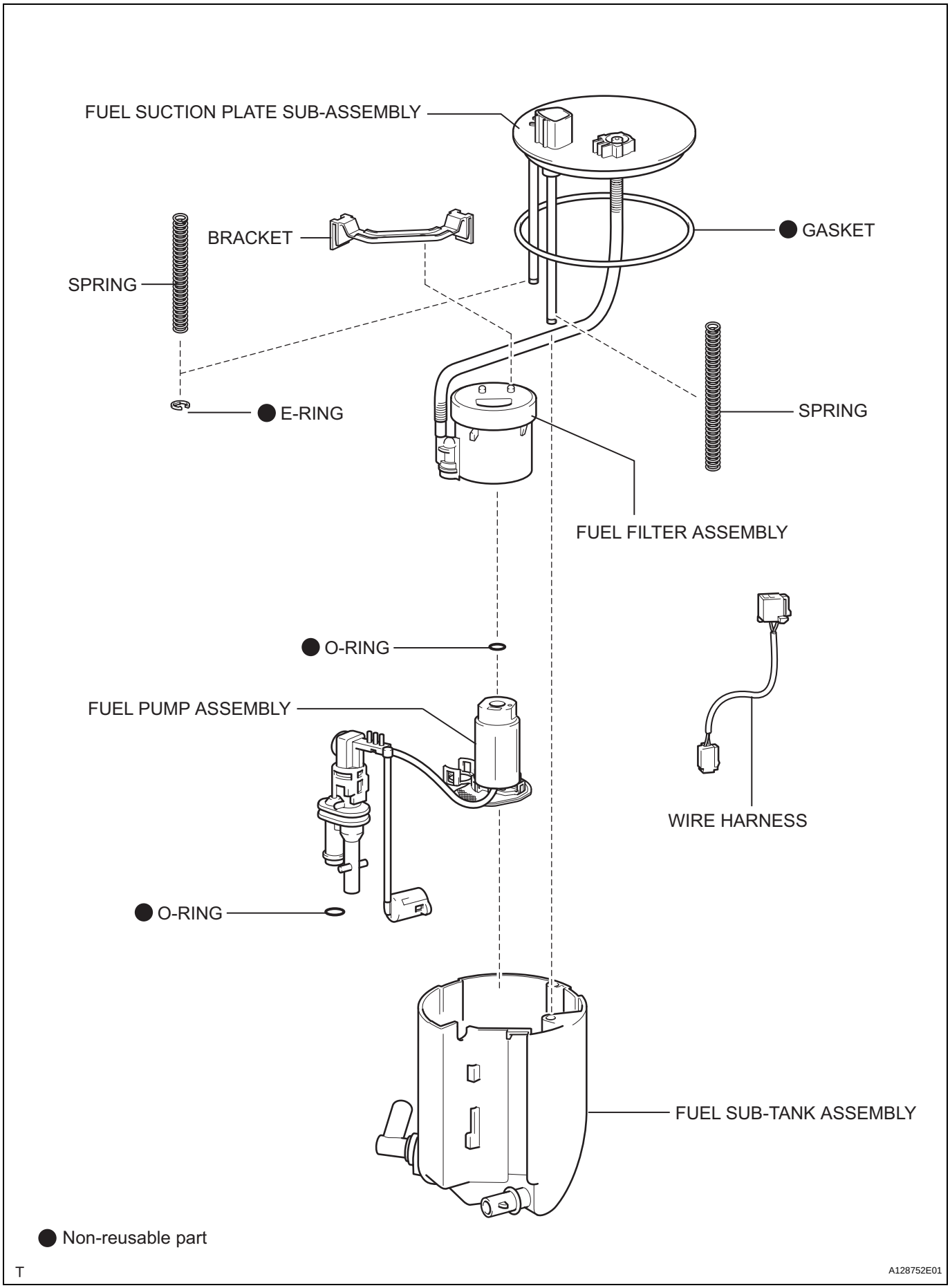
FUEL SUCTION PLATE SUB-ASSEMBLY
BRACKET
GASKET
SPRING
E-RING
SPRING
FUEL FILTER ASSEMBLY
O-RING
FUEL PUMP ASSEMBLY
WIRE HARNESS
O-RING
FUEL SUB-TANK ASSEMBLY
Non-reusable part
T
A128752E01

FUEL PUMP RESISTOR

COMPONENTS

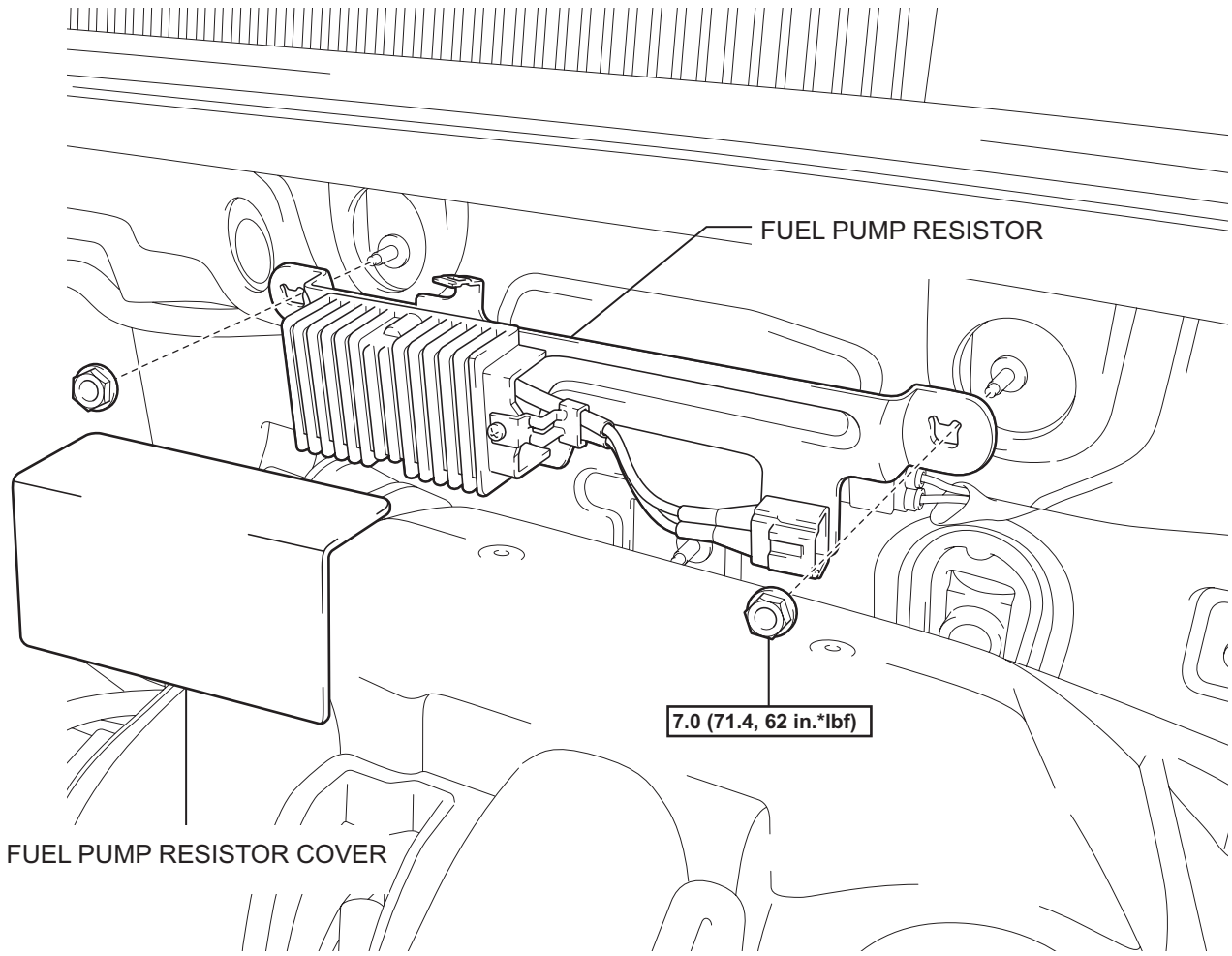

N*m (kgf*cm, ft.*lbf) : Specified torque

P

A137893E01

REMOVAL

1. **DISCONNECT CABLE FROM NEGATIVE BATTERY TERMINAL**
   CAUTION:
   Wait at least 90 seconds after disconnecting the cable from the negative (-) battery terminal to prevent airbag and seat belt pretensioner activation.
2. **REMOVE FUEL PUMP RESISTOR COVER**
   (a) Remove the cover from the resistor.
3. **REMOVE FUEL PUMP RESISTOR**
   (a) Disconnect the connector.
   (b) Remove the 2 bolts and resistor.

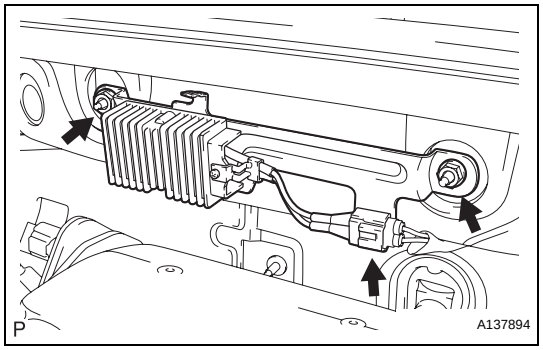

INSPECTION

1. **INSPECT FUEL PUMP RESISTOR**
   (a) Inspect the fuel pump resistor resistance.
      (1) Measure the resistance between the terminals.
      Standard resistance:
      0.53 to 0.57 Ω at 20°C (68°F)

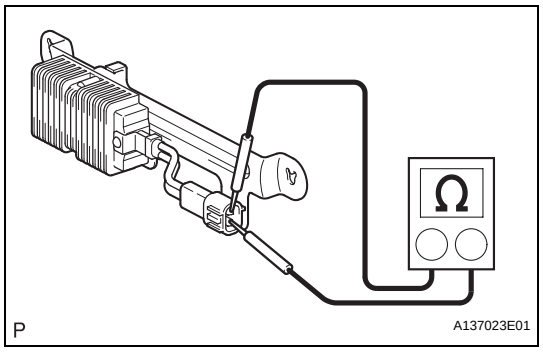

INSTALLATION

1. **INSTALL FUEL PUMP RESISTOR**
   (a) Install the resistor with the 2 bolts.
   Torque: 7.0 N*m (71.4 kgf*cm, 62 in.*lbf)
   (b) Connect the connector.
2. **INSTALL FUEL PUMP RESISTOR COVER**
   (a) Install the cover to the resistor.
3. **CONNECT CABLE TO NEGATIVE BATTERY TERMINAL**

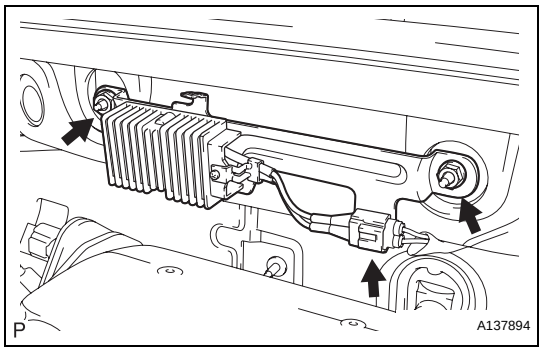

FU

FUEL PUMP RESISTOR

COMPONENTS

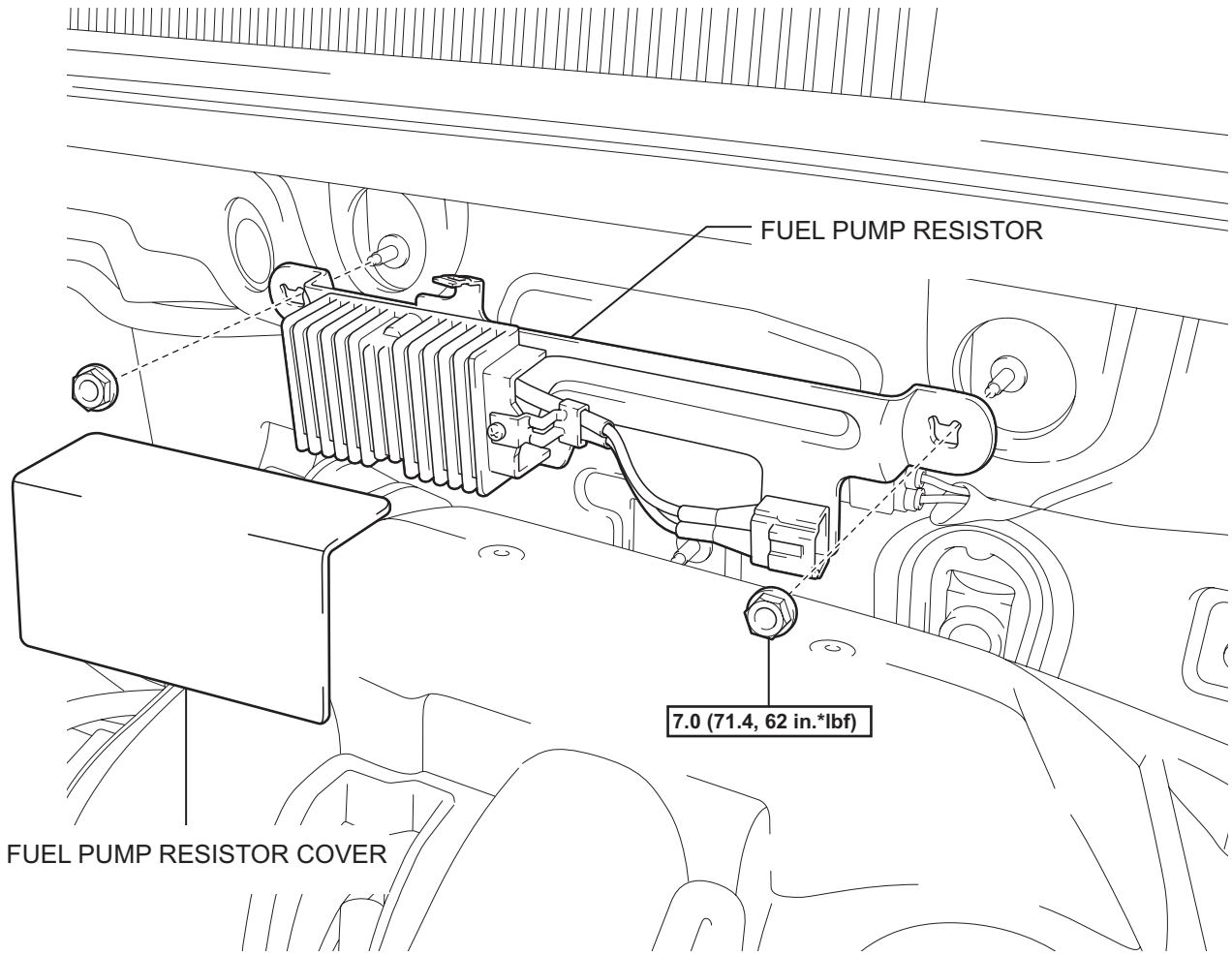

N*m (kgf*cm, ft.*lbf) : Specified torque

P

A137893E01

REMOVAL

1. **DISCONNECT CABLE FROM NEGATIVE BATTERY TERMINAL**
   CAUTION:
   Wait at least 90 seconds after disconnecting the cable from the negative (-) battery terminal to prevent airbag and seat belt pretensioner activation.
2. **REMOVE FUEL PUMP RESISTOR COVER**
   (a) Remove the cover from the resistor.
3. **REMOVE FUEL PUMP RESISTOR**
   (a) Disconnect the connector.
   (b) Remove the 2 bolts and resistor.

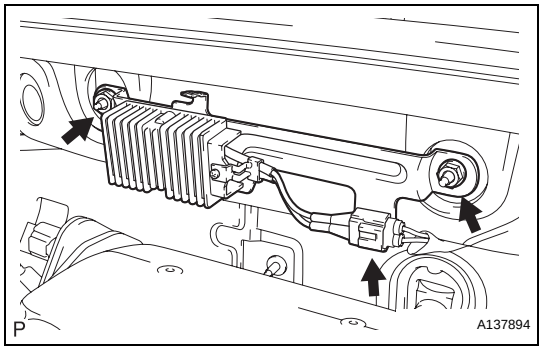

INSPECTION

1. **INSPECT FUEL PUMP RESISTOR**
   (a) Inspect the fuel pump resistor resistance.
      (1) Measure the resistance between the terminals.
      Standard resistance:
      0.53 to 0.57 Ω at 20°C (68°F)

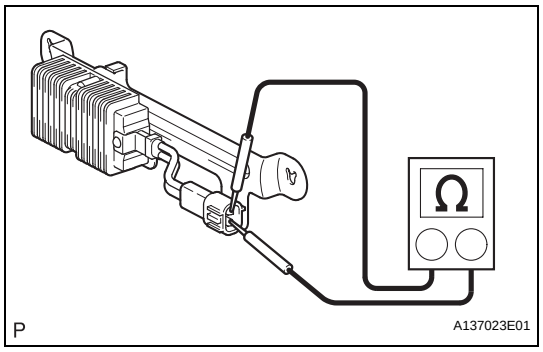

INSTALLATION

1. **INSTALL FUEL PUMP RESISTOR**
   (a) Install the resistor with the 2 bolts.
   Torque: 7.0 N*m (71.4 kgf*cm, 62 in.*lbf)
   (b) Connect the connector.
2. **INSTALL FUEL PUMP RESISTOR COVER**
   (a) Install the cover to the resistor.
3. **CONNECT CABLE TO NEGATIVE BATTERY TERMINAL**

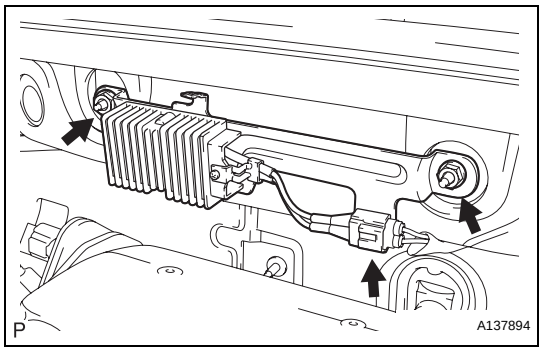

FU

PARTS LOCATION

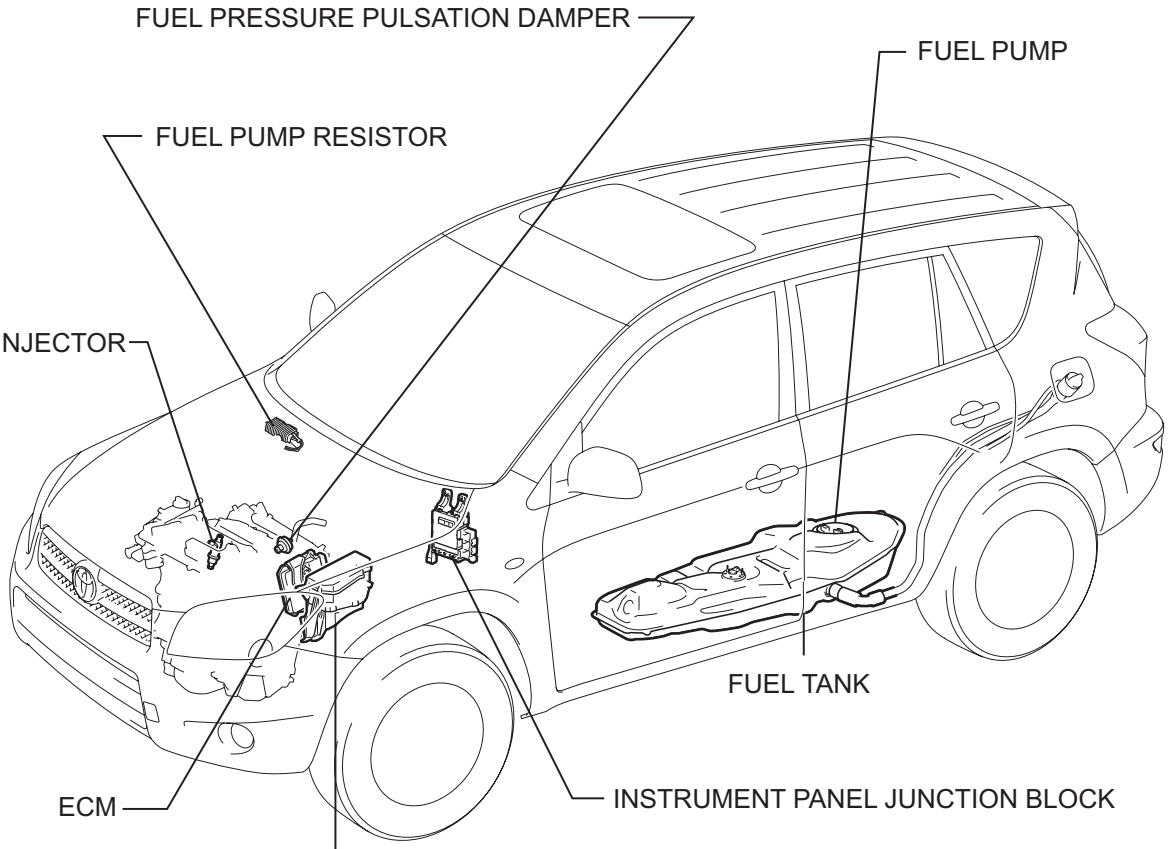

P

A136128E01

FU

SYSTEM DIAGRAM

1. FUEL FLOW DIAGRAM

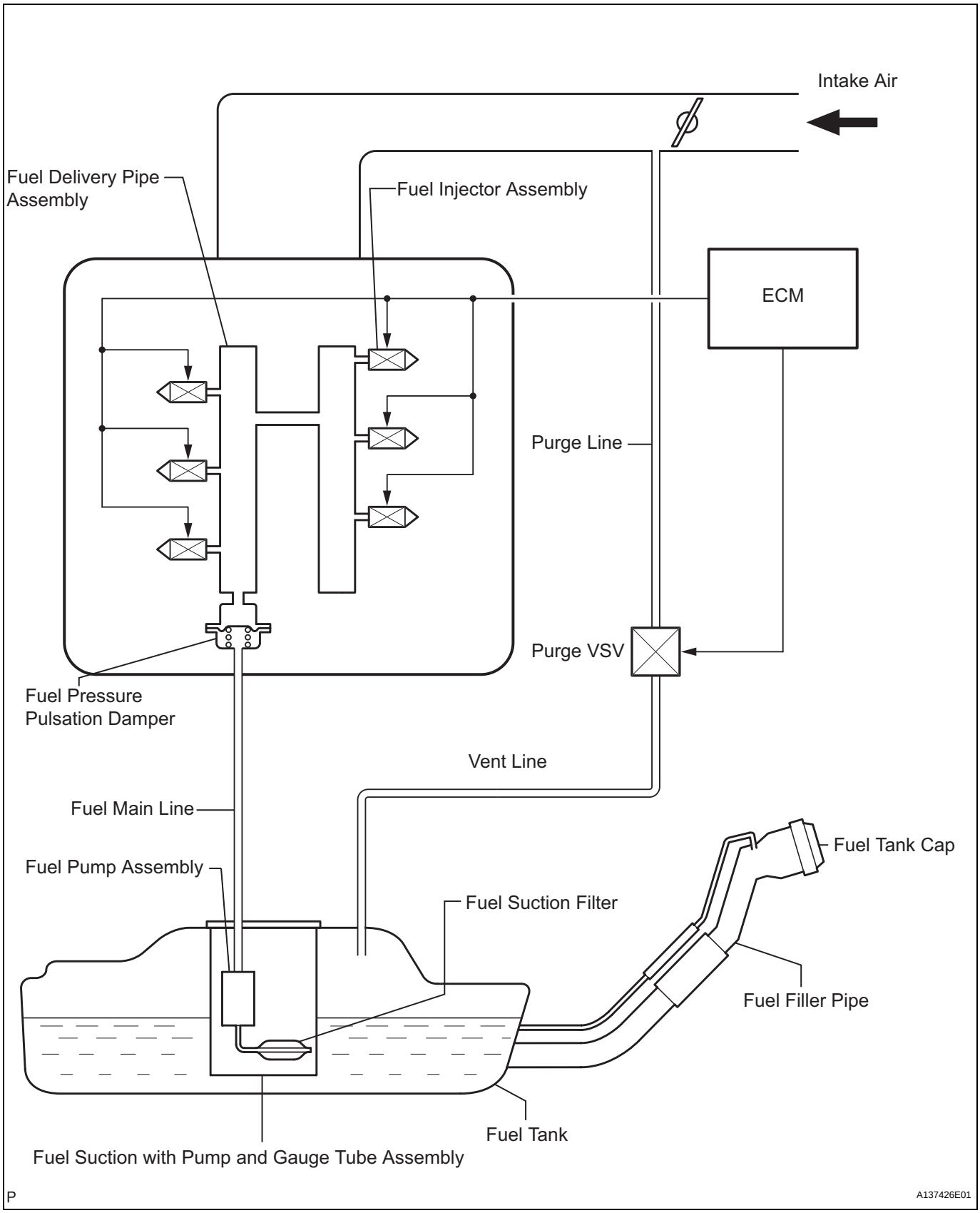

2. FUEL SYSTEM WIRING DIAGRAM

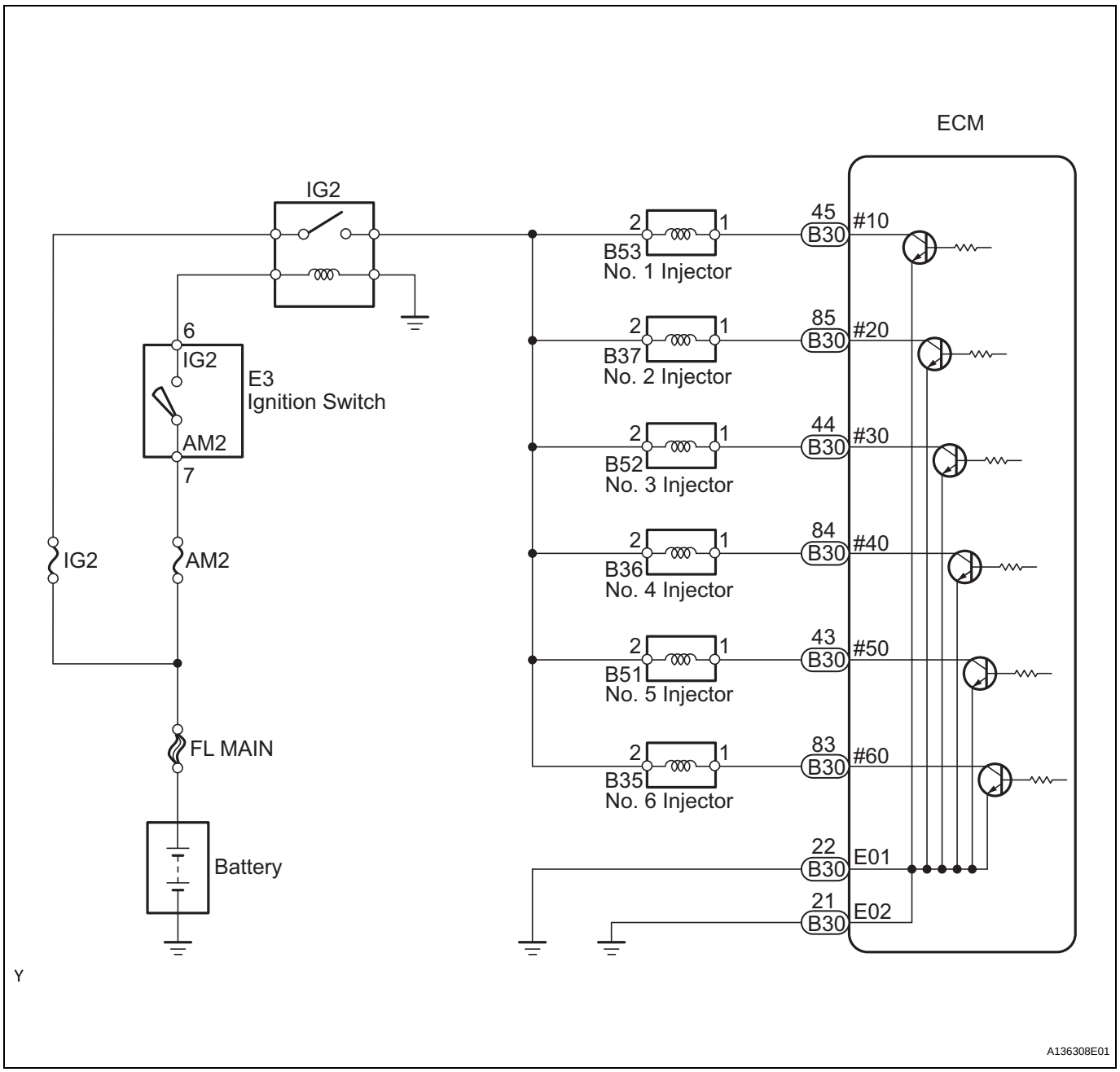

FU

3. FUEL SYSTEM WIRING DIAGRAM

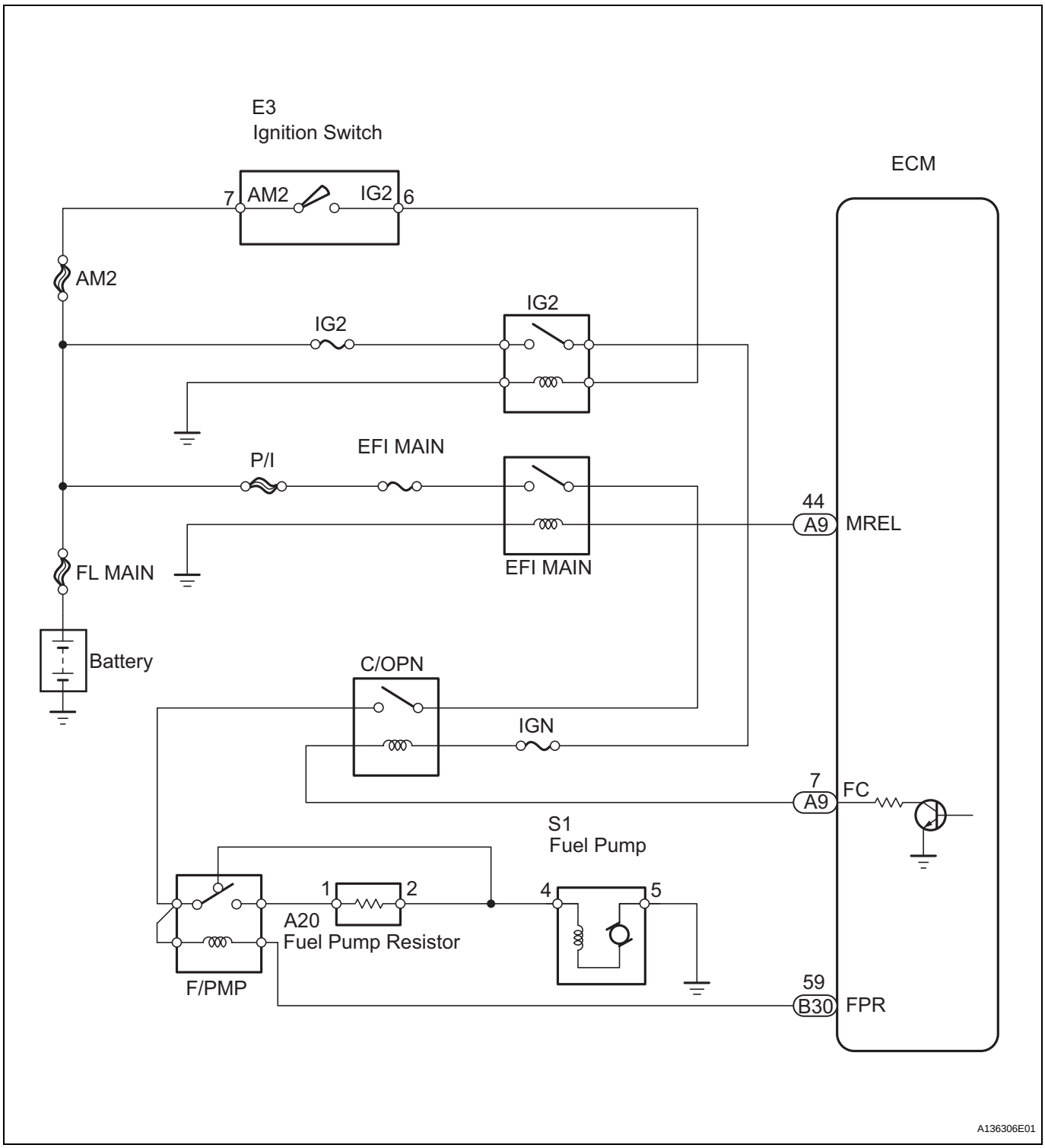

FU

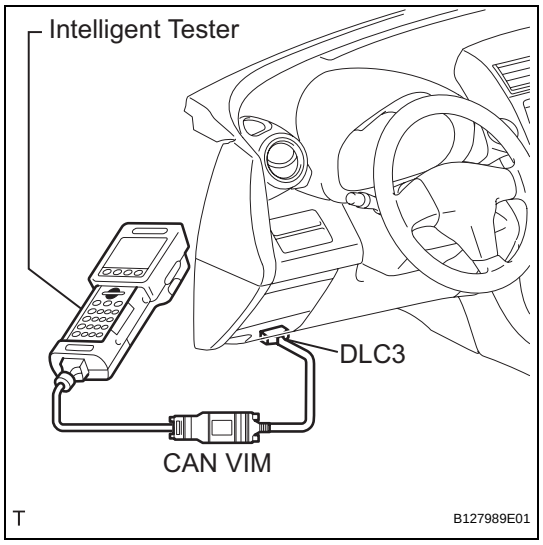

ON-VEHICLE INSPECTION

1. CHECK FUEL PUMP OPERATION

(a) Connect the intelligent tester to the DLC3.

(b) Turn the ignition switch ON.

NOTICE:

Do not start the engine.

(c) Select the following tester menus: DIAGNOSIS, ENHANCED OBD II, ACTIVE TEST and FUEL PUMP/SPD. Operate the fuel pump.

(d) Touch the fuel hose in the engine compartment to check the fuel flow, and you will be able to hear the sound of the fuel pump.

(e) Stop the fuel pump. If there is no fuel flow, the fuel pump may not be operating. Check the fuel pump circuit.

2. CHECK FUEL PRESSURE

(a) Check that the battery positive voltage is above 12 V.

(b) Perform the "DISCHARGE FUEL SYSTEM PRESSURE" procedures (see page FU-1).

(c) Disconnect the cable from the negative (-) battery terminal.

(d) Disconnect the fuel main tube (see page FU-22).

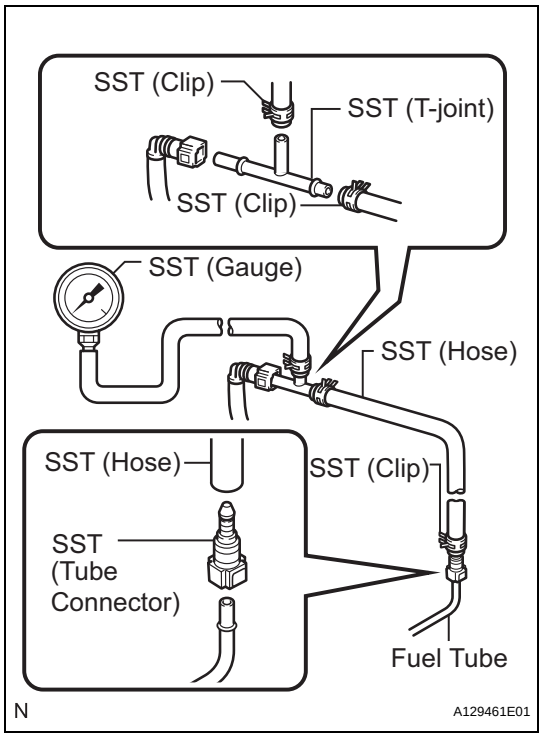

(e) Install SST (pressure gauge) using SST and a fuel tube connector as shown in the illustration.

SST 09268-41048 (90467-13001, 95336-08070, 09268-41500), 09268-45014 (09268-41200, 09268-41220, 09268-41250)

(f) Wipe up any gasoline.

(g) Reconnect the cable to the negative (-) battery terminal.

(h) Start the engine.

(i) Measure the fuel pressure at idle.

Standard fuel pressure:

304 to 343 kPa (3.1 to 3.5 kgf/cm^2,44.1 to 49.7 psi)

- If the fuel pressure is greater than the standard value, replace the fuel pump.
- If the fuel pressure is less than the standard value, check the connection of the fuel hose and the fuel pump.

(j) Stop the engine.

(k) Check that the fuel pressure remains as specified for 5 minutes after the engine stops.

Standard fuel pressure:

147 kPa (1.5 kgf/cm^2, 21 psi) or more

If the fuel pressure is not as specified, check the fuel pump or fuel injector.

(l) After checking the fuel pressure, carefully disconnect the negative (-) battery cable, and remove SST and fuel tube connector to prevent gasoline from splashing.

(m) Reconnect the fuel main tube (see page FU-29).

FU

(n) Check for fuel leaks.

FUEL SYSTEM

PRECAUTION

1. BEFORE WORKING ON FUEL SYSTEM

(a) Do not work near an open flame.
(b) Keep gasoline away from rubber and leather parts.
(c) Perform the "DISCHARGE FUEL SYSTEM PRESSURE" procedures below before disconnecting the fuel line to prevent gasoline from spilling out.

2. DISCHARGE FUEL SYSTEM PRESSURE

CAUTION:

- **The "DISCHARGE FUEL SYSTEM PRESSURE" procedures must be performed before disconnecting any part of the fuel system.**
- **After performing the "DISCHARGE FUEL SYSTEM PRESSURE" procedures, pressure will remain in the fuel line. When disconnecting the fuel line, place a cloth or equivalent over fittings to reduce the risk of fuel spray.**

(a) Remove the console box (see page IP-16).

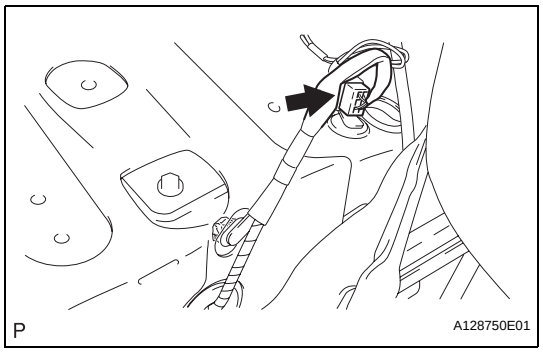

(b) Disconnect the connector.
(c) Start the engine. After the engine has stopped, turn the ignition switch OFF.
HINT:
DTC P0171/P0172 (system too lean) may be set.
(d) Check that the engine does not start.
(e) Remove the fuel tank cap, and let the air out of the fuel tank.

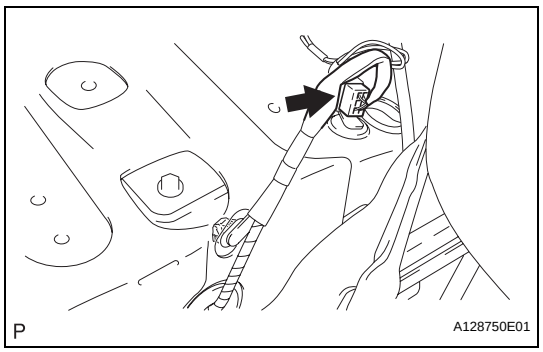

(f) Connect the connector.
(g) Install the console box (see page IP-23).

3. FUEL SYSTEM

(a) When disconnecting the high fuel pressure line, a large amount of gasoline will spill out, so observe the following procedures:
(1) Discharge the fuel system pressure.
(2) Disconnect the fuel pump main tube (see page FU-22).
(3) Drain the fuel that remains inside the fuel pump main tube.

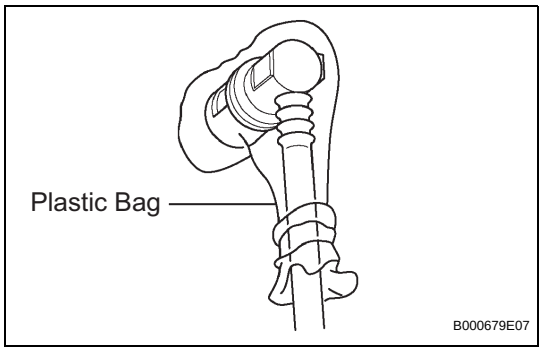

(4) To protect the disconnected fuel pump main tube from damage and contamination, cover it with a plastic bag.
(5) Put a container under the connection part.

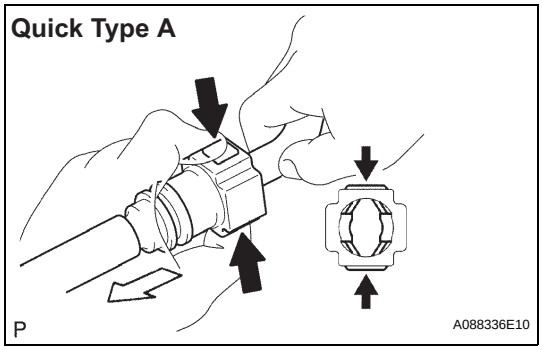

(b) Observe the following precautions when disconnecting the fuel tube connectors (quick type A):
(1) Remove the No. 1 fuel pipe clamp.

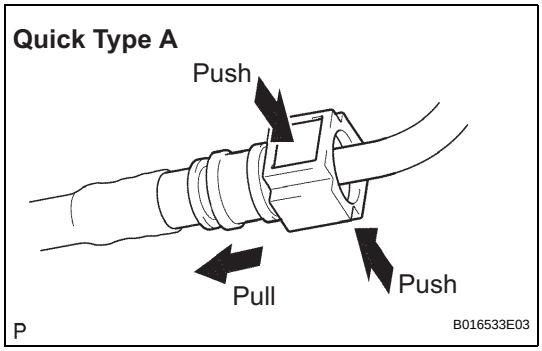

(2) Check that there is no dirt or other foreign objects on the pipe and around the connector before disconnecting them. Clean them if necessary.
(3) Disconnect the connector from the pipe by hand.
(4) When the connector and the pipe are stuck, push in and pull on the connector to release it and pull the connector out of the pipe carefully.
(5) Check that there is no dirt or other foreign objects on the sealing surface of the disconnected pipe. Clean it away if necessary.

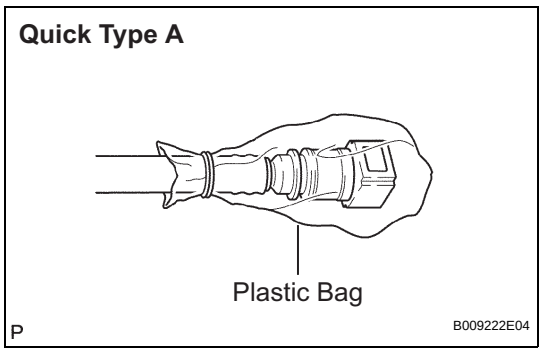

(6) Do not damage the disconnected pipe and connector, and prevent intrusion of foreign objects by covering them with a plastic bag.

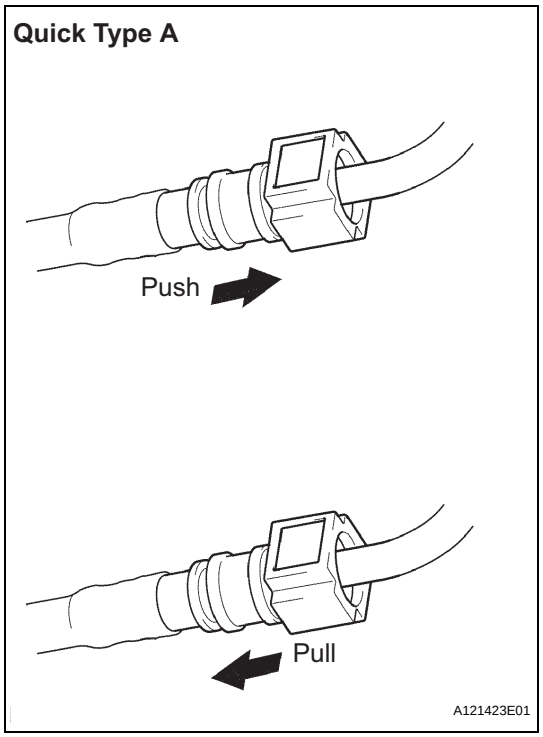

(c) Observe the following precautions when connecting the fuel tube connectors (quick type A):
(1) Check that there is no damage or foreign objects in the connected part of the pipe.
(2) Match the axis of the connector with the axis of the pipe, and push the pipe into the connector until the connector makes a "click" sound. If the connection is tight, apply a small amount of fresh engine oil to the tip of the pipe.
(3) After finishing the connection, check if the pipe and the connector are securely connected by pulling on them.
(4) Check for fuel leaks.

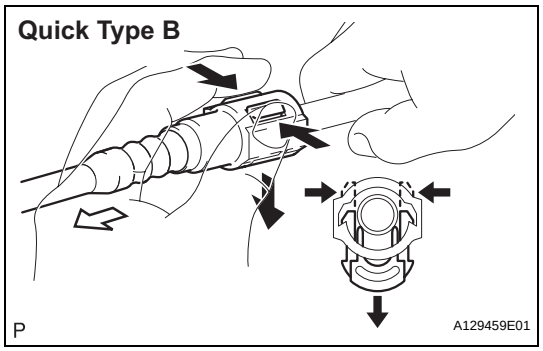

(d) Observe the following precautions when disconnecting the fuel tube connector (quick type B):
(1) Check that there is no dirt or other foreign objects around the connector before disconnecting the fuel pump tube.
(2) Detach the 2 claws of the connector retainer. Push down on the connector and disconnect it from the pipe.
HINT:
Be sure to disconnect the connector by hand.

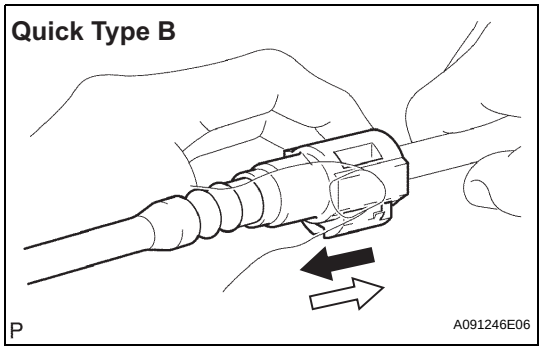

(3) If the connector and pipe are stuck, pinch the fuel pipe by hand and push or pull on the connector to disconnect it.
(4) Check that there is no dirt or other foreign objects on the sealing surface of the disconnected pipe.

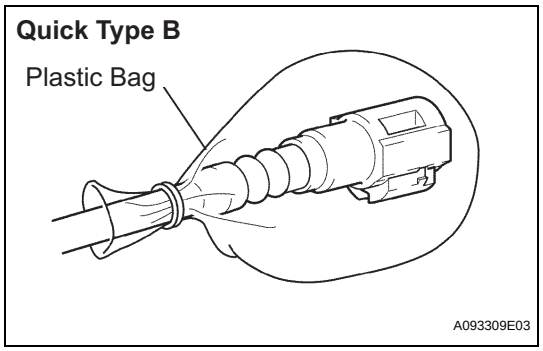

(5) Do not damage the connector and pipe, and prevent intrusion of foreign objects by covering them with a plastic bag.

FU

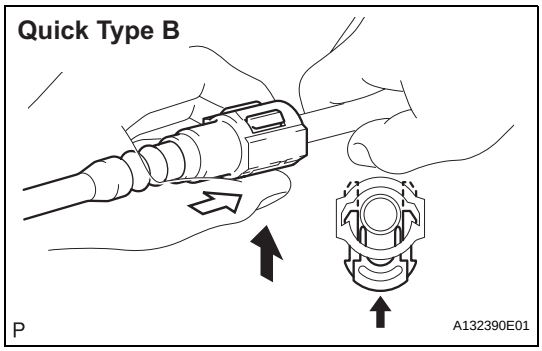

(e) Observe the following precautions when disconnecting the fuel tube connector (quick type B):
(1) Match the axis of the connector with the axis of the pipe. Push the pipe into the connector and push up on the retainer.
HINT:
If it is hard to make the connection, apply a small amount of engine oil to the tip of the pipe.
(2) After finishing the connection, pull on the connector and pipe and make sure that they are securely connected.
(3) Check for fuel leaks.

(f) Observe the following precautions when handling a nylon tube:
CAUTION:
- **Do not twist the connection part of the nylon tube and the quick connector when connecting them.**
- **Do not bend or twist the nylon tube.**
- **Do not remove the EPDM protector on the outside of the nylon tube.**
- **Do not close the piping by bending the nylon tube.**

FU

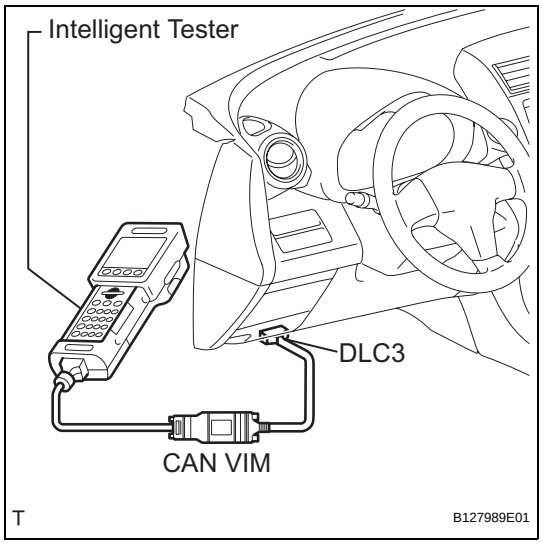

4. CHECK FOR FUEL LEAKS

(a) Make sure that there are no fuel leaks after performing maintenance on the fuel system.
(1) Connect the intelligent tester to the DLC3.
(2) Turn the ignition switch ON, and push the intelligent tester main switch ON.
NOTICE:
Do not start the engine.
(3) Select the Active Test mode on the intelligent tester.
(4) Check that there are no leaks from the fuel system.
(5) Turn the ignition switch OFF.
(6) Disconnect the intelligent tester from the DLC3.

REMOVAL

1. **DISCHARGE FUEL SYSTEM PRESSURE (See page FU-13)**

2. **DISCONNECT CABLE FROM NEGATIVE BATTERY TERMINAL**
   CAUTION:
   Wait at least 90 seconds after disconnecting the cable from the negative (-) battery terminal to prevent airbag and seat belt pretensioner activation.

3. **REMOVE FUEL TANK CAP**

4. **REMOVE FRONT FLOOR COVER**
   (a) Remove the nut, bolt, 3 clips and floor cover.

5. **REMOVE NO. 1 FLOOR UNDER COVER**
   (a) Remove the 2 nuts, clip and floor under cover.

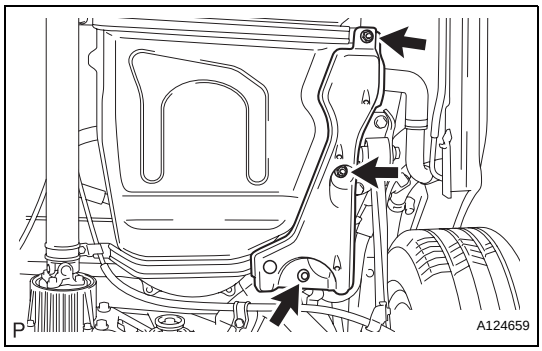

6. **DISCONNECT NO. 2 PARKING BRAKE CABLE ASSEMBLY**
   (a) Remove the 2 bolts and disconnect the parking brake cable.

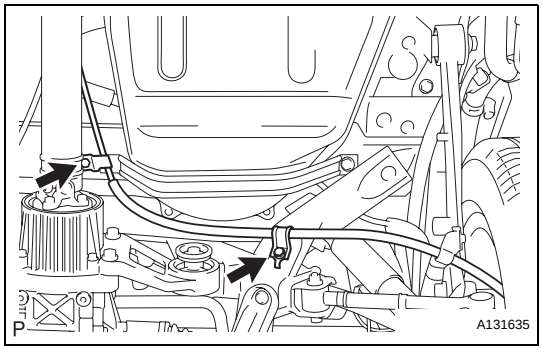

FU

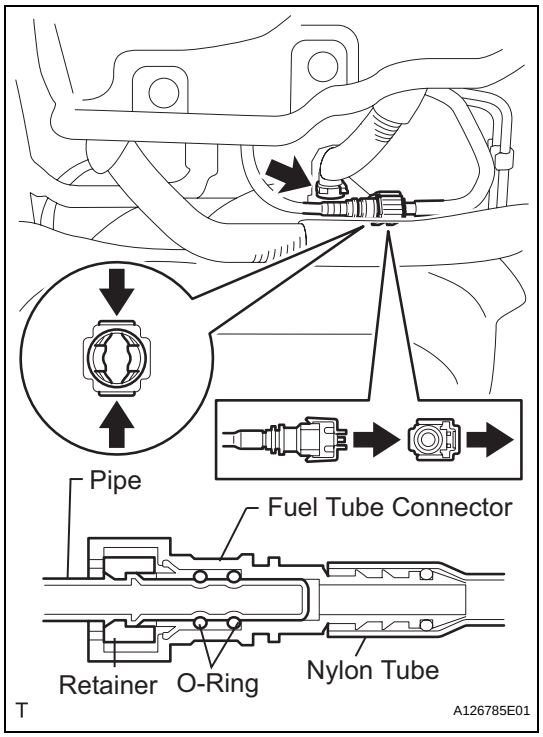

7. DISCONNECT FUEL TANK MAIN TUBE SUB-ASSEMBLY

(a) Pinch and pull the main tube connector to disconnect the connector from the pipe.

NOTICE:

- **Check for foreign matter in the pipe and around the connector. Clean if necessary. Foreign matter may damage the O-ring or cause leaks in the seal between the pipe and connector.**
- **Do not use any tools to separate the pipe and connector.**
- **Do not forcefully bend or twist the nylon tube.**
- **Check for foreign matter on the pipe seal surface. Clean if necessary.**
- **Put the pipe and connector ends in plastic bags to prevent damage and foreign matter contamination.**
- **If the pipe and connector are stuck together, pinch the connector between your fingers and turn it carefully to disconnect it.**

(b) Disconnect the EVAP hose from the tank.

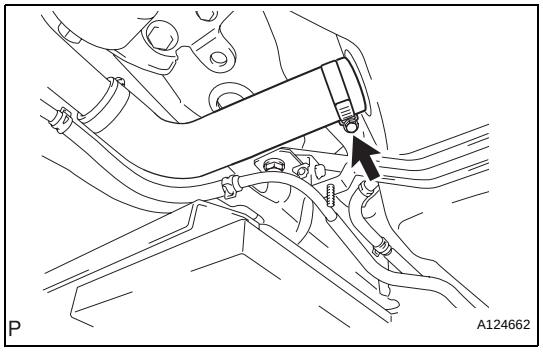

8. DISCONNECT FUEL TANK TO FILLER PIPE HOSE

(a) Disconnect the filler pipe hose from the fuel tank.

FU

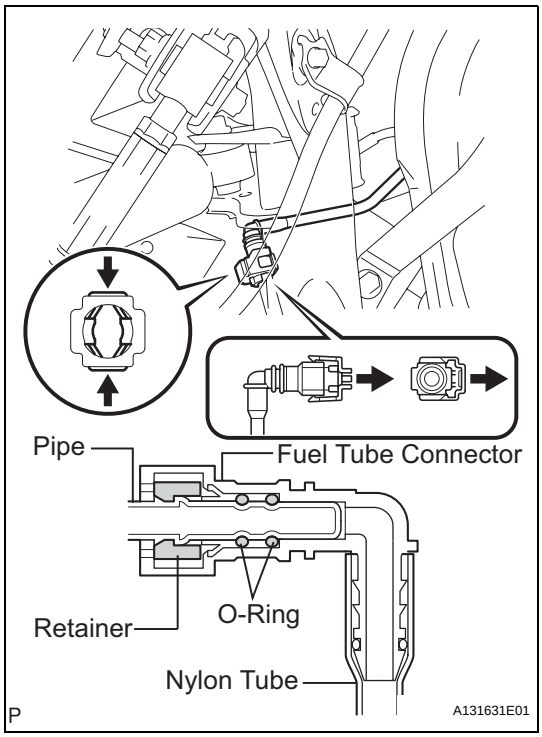

9. DISCONNECT FUEL TANK BREATHER HOSE

(a) Disconnect the breather hose from the fuel tank.

NOTICE:

- **Check for foreign matter in the pipe and around the connector. Clean if necessary. Foreign matter may damage the O-ring or cause leaks in the seal between the pipe and connector.**
- **Do not use any tools to separate the pipe and connector.**
- **Do not forcefully bend or twist the nylon tube.**
- **Check for foreign matter on the pipe seal surface. Clean if necessary.**
- **Put the pipe and connector ends in plastic bags to prevent damage and foreign matter contamination.**
- **If the pipe and connector are stuck together, pinch the connector between your fingers and turn it carefully to disconnect it.**

10. REMOVE FUEL TANK FILLER PIPE

(a) Remove the 3 bolts and filler pipe protector.

(b) Remove the 2 bolts and filler pipe.

11. REMOVE FUEL TANK ASSEMBLY

(a) Set a mission jack underneath the fuel tank.

(b) Remove the 6 bolts and 3 fuel tank bands.

(c) Slightly lower the mission jack.

NOTICE:

Be careful not to cut the wirings.

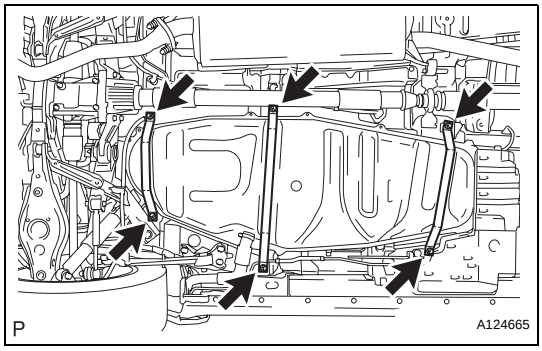

FU

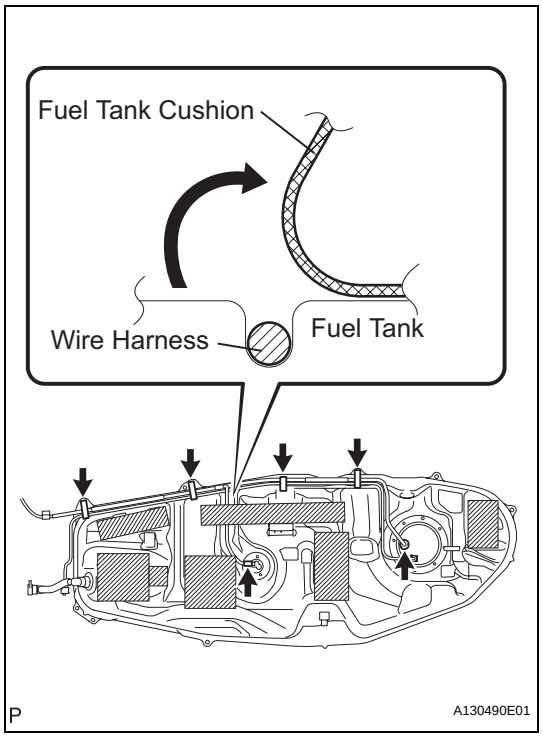

(d) Fold back approximately half of each cushion rubber so that the wire harness can be detached from the fuel tank in the step below.

(e) Disconnect the fuel pump connector and sender gauge connector.

NOTICE:

- **Before this procedure, check the connector for dirt, mud or other contamination.**
- **Do not use any tools in this procedure.**

(f) Detach the wire harness from the 4 clamps and remove the fuel tank.

DISASSEMBLY

1. **DISCONNECT FUEL TANK MAIN TUBE SUB-ASSEMBLY (See page FU-22)**
2. **REMOVE FUEL TANK VENT TUBE SET PLATE (See page FU-22)**
3. **REMOVE FUEL SUCTION WITH PUMP ASSEMBLY (See page FU-22)**
4. **REMOVE FUEL TANK MAIN TUBE SUB-ASSEMBLY**
   (a) Remove the tube from the 4 fuel tube clamps.
5. **REMOVE NO. 1 FUEL TUBE CLAMP**
   (a) Remove the 4 tube clamps from the fuel tank.

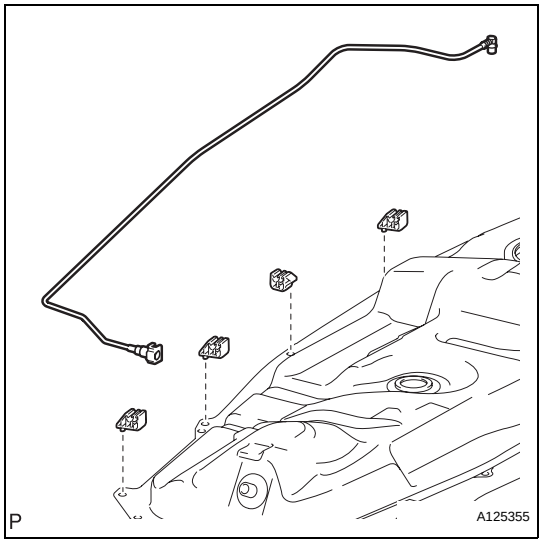

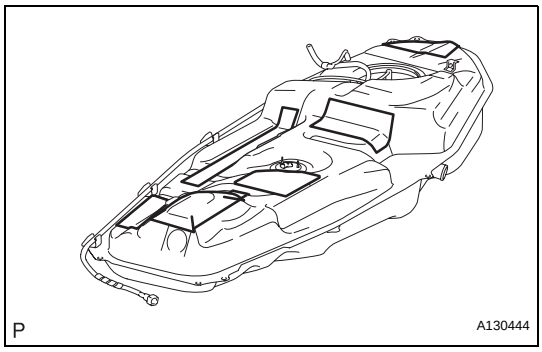

6. **REMOVE NO. 1 FUEL TANK CUSHION**
   (a) Remove the 7 fuel tank cushions from the fuel tank.

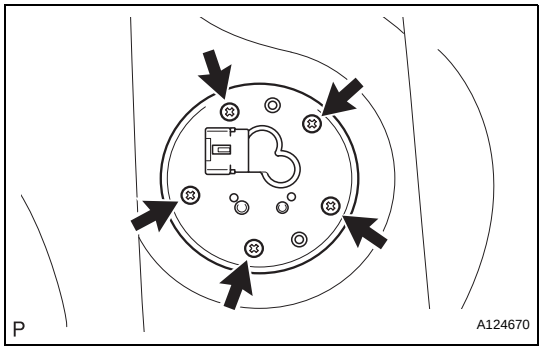

7. **REMOVE FUEL SENDER GAUGE ASSEMBLY**
   (a) Remove the 5 screws and sender gauge.

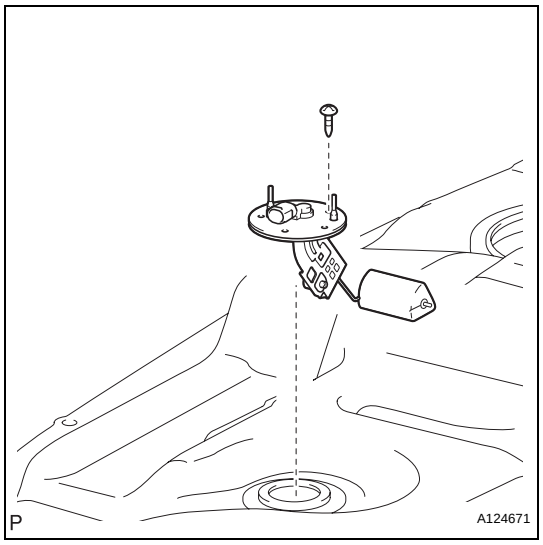

REASSEMBLY

1. **INSTALL FUEL SENDER GAUGE ASSEMBLY**
   (a) Install the sender gauge with the 5 screws.
   Torque: 1.5 N*m (15 kgf*cm, 13 in.*lbf)

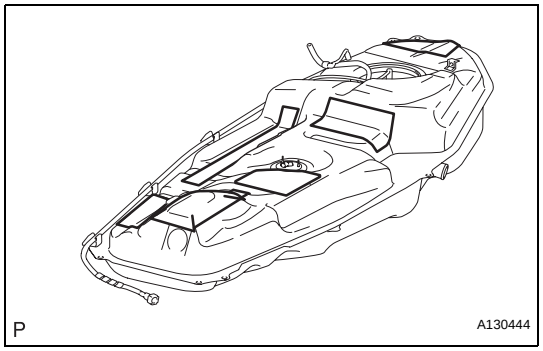

2. **INSTALL NO. 1 FUEL TANK CUSHION**
   (a) Install 7 new fuel tank cushions onto the fuel tank as shown in the illustration.

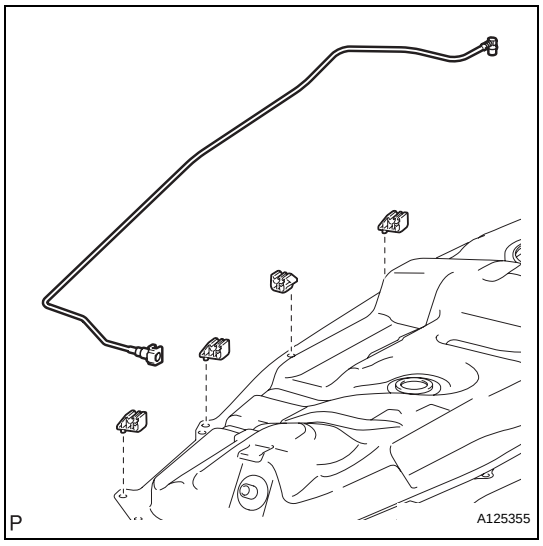

3. **INSTALL NO. 1 FUEL TUBE CLAMP**
   (a) Install the 4 tube clamps to the fuel tank.
4. **INSTALL FUEL TANK MAIN TUBE SUB-ASSEMBLY**
   (a) Install the tube to the 4 fuel tube clamps.
5. **INSTALL FUEL SUCTION WITH PUMP ASSEMBLY (See page FU-26)**
6. **INSTALL FUEL TANK VENT TUBE SET PLATE (See page FU-28)**
7. **CONNECT FUEL TANK MAIN TUBE SUB-ASSEMBLY (See page FU-39)**

FU

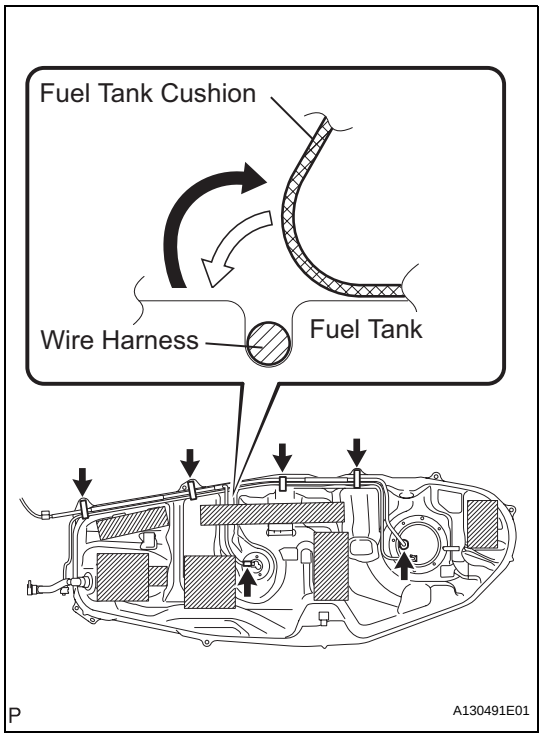

INSTALLATION

1. INSTALL FUEL TANK ASSEMBLY

(a) Set the fuel tank on a mission jack.
(b) Raise the mission jack.
(c) Fold back the 2 cushion rubbers.
(d) Connect the fuel pump connector and sender gauge connector to the fuel tank.
NOTICE:
Be careful not to cut the wirings.
(e) Attach the wire harness to the 4 clamps.

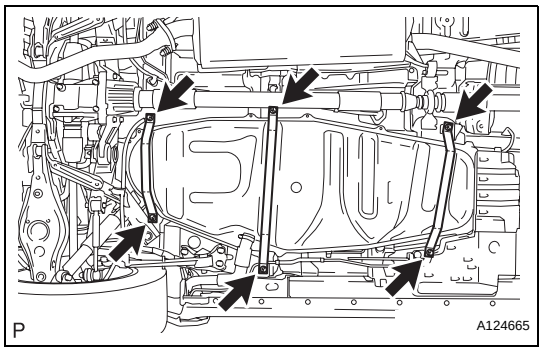

(f) Install the 3 fuel tank bands with the 6 bolts.
Torque: 40 N*m (408 kgf*cm, 30 ft.*lbf)

2. INSTALL FUEL TANK FILLER PIPE

(a) Install the filler pipe with the 2 bolts.
Torque: 23.5 N*m (240 kgf*cm, 17 ft.*lbf)
(b) Install the filler pipe protector with the 3 bolts.

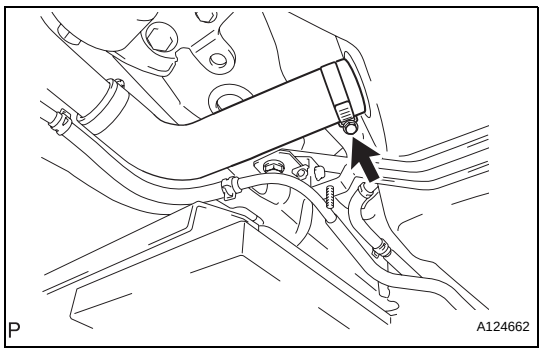

3. CONNECT FUEL TANK TO FILLER PIPE HOSE

(a) Connect the filler pipe hose to the fuel tank.

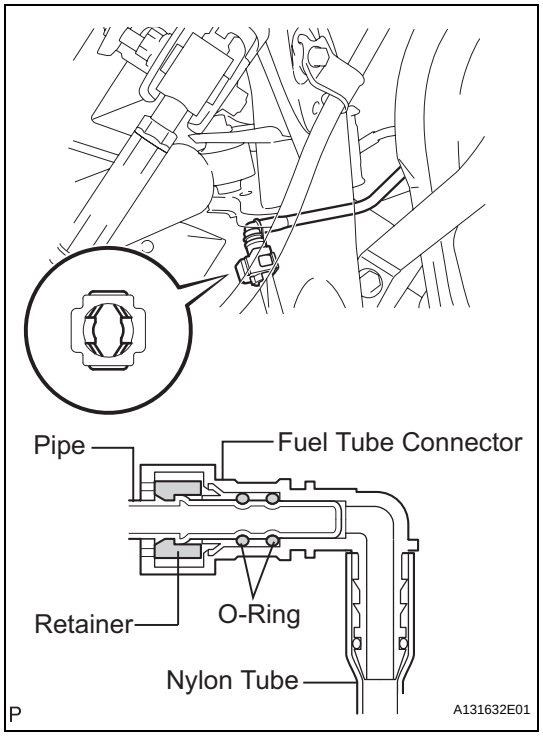

4. CONNECT FUEL TANK BREATHER HOSE

(a) Connect the fuel tank breather hose to the fuel tank.

NOTICE:

- **Before installing the tube connector to the pipe, check the connector for damage and foreign matter.**
- **Check that the connector and pipe are securely connected by trying to pull them apart.**

5. CONNECT FUEL TANK MAIN TUBE SUB-ASSEMBLY

NOTICE:

Before installing the tube connector to the pipe, check the connector for damage and foreign matter.

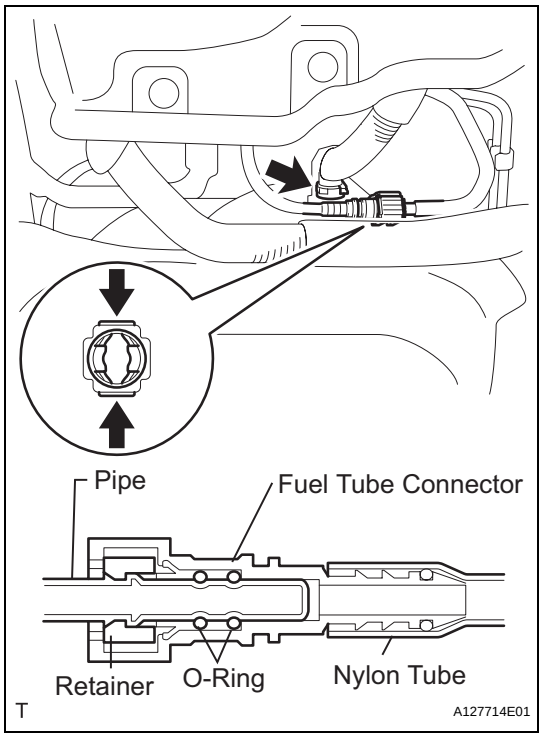

(a) Connect the main tube connector to the pipe. Push the 2 parts together firmly until a "click" sound is heard.

NOTICE:

Check that the connector and pipe are securely connected by trying to pull them apart.

(b) Connect the EVAP hose to the fuel tank.

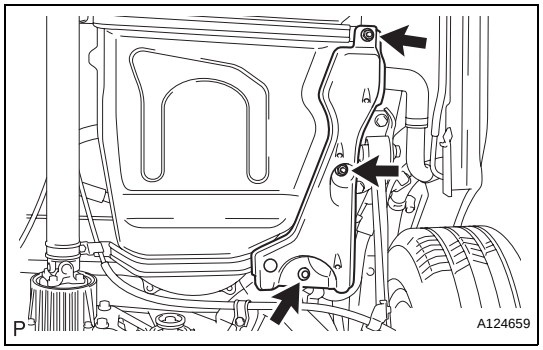

6. INSTALL NO. 1 FLOOR UNDER COVER

(a) Install the floor cover with the clip and 2 nuts.

7. INSTALL FRONT FLOOR COVER

(a) Install the floor under cover with the 3 clips, bolt and nut.

FU

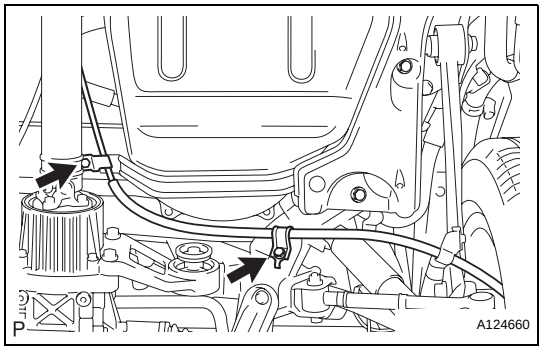

8. **INSTALL NO. 2 PARKING BRAKE CABLE ASSEMBLY**
   (a) Install the parking brake cable with the 2 bolts.
9. **INSTALL FUEL TANK CAP**
10. **CONNECT CABLE TO NEGATIVE BATTERY TERMINAL**
11. **CHECK FOR FUEL LEAKS**

FUEL TANK

COMPONENTS

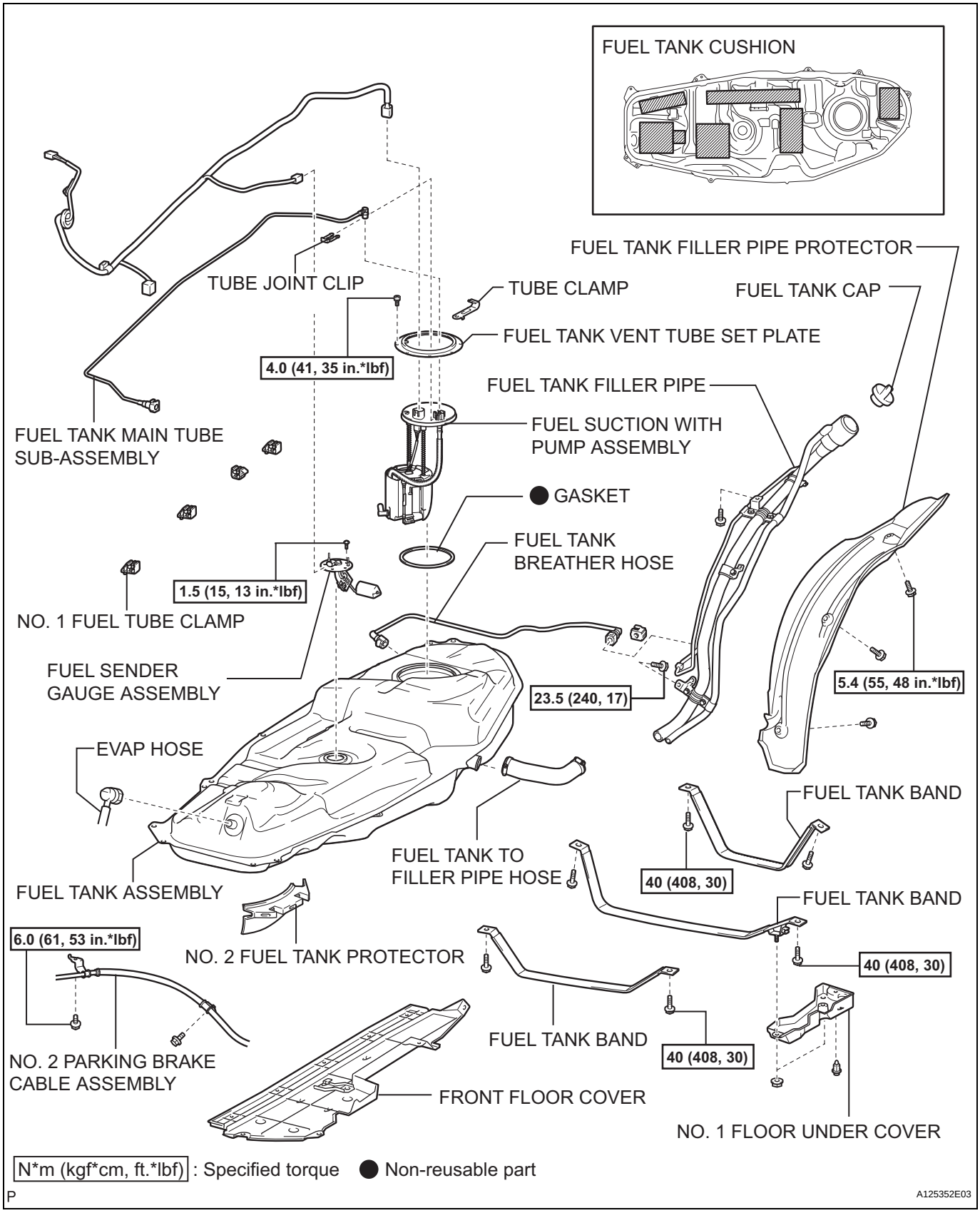

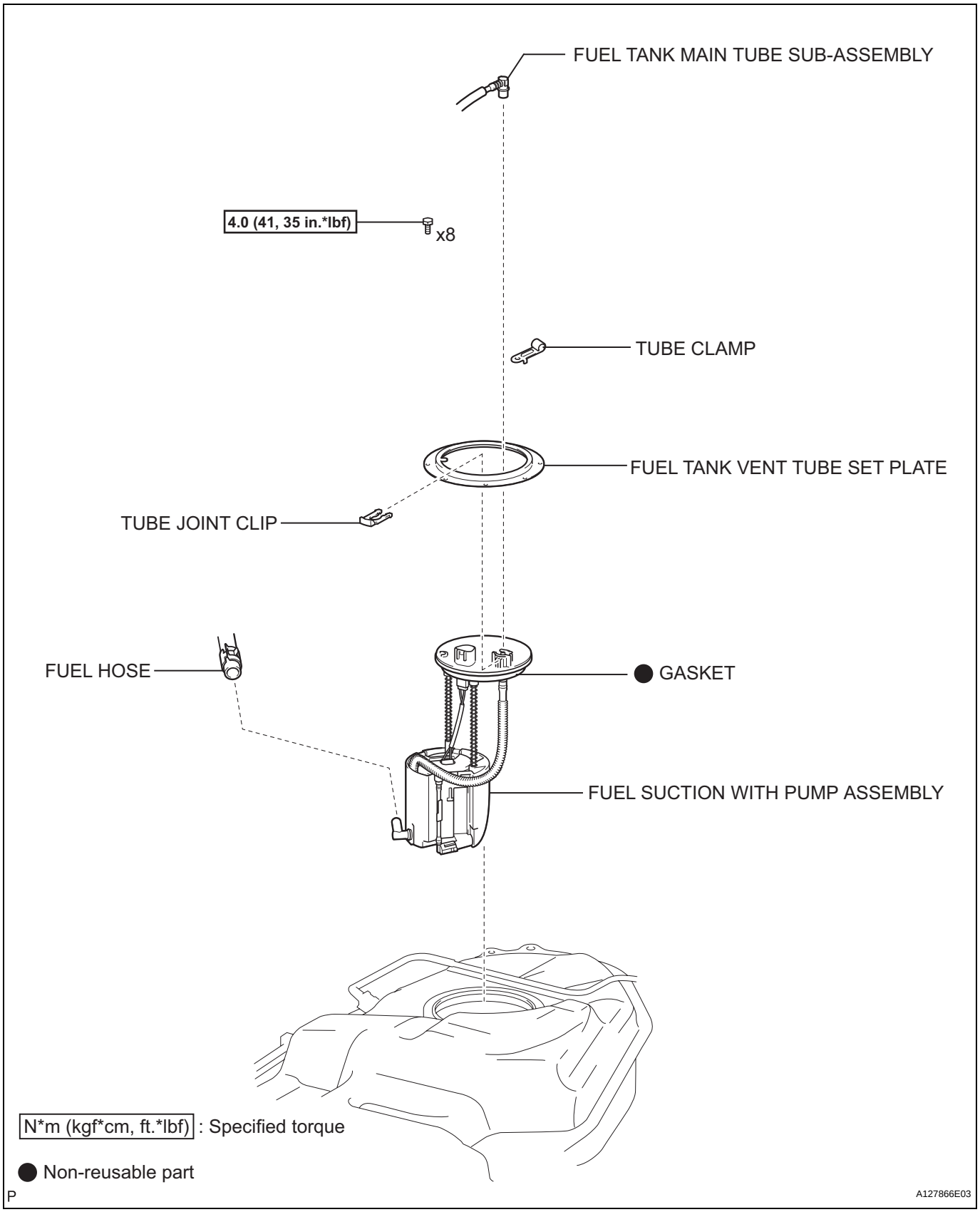
FUEL TANK MAIN TUBE SUB-ASSEMBLY
4.0 (41, 35 in.*lbf)
x8
TUBE CLAMP
FUEL TANK VENT TUBE SET PLATE
TUBE JOINT CLIP
FUEL HOSE
GASKET
FUEL SUCTION WITH PUMP ASSEMBLY
N*m (kgf*cm, ft.*lbf) : Specified torque
Non-reusable part
P
A127866E03

FU

IGNITION COIL

COMPONENTS

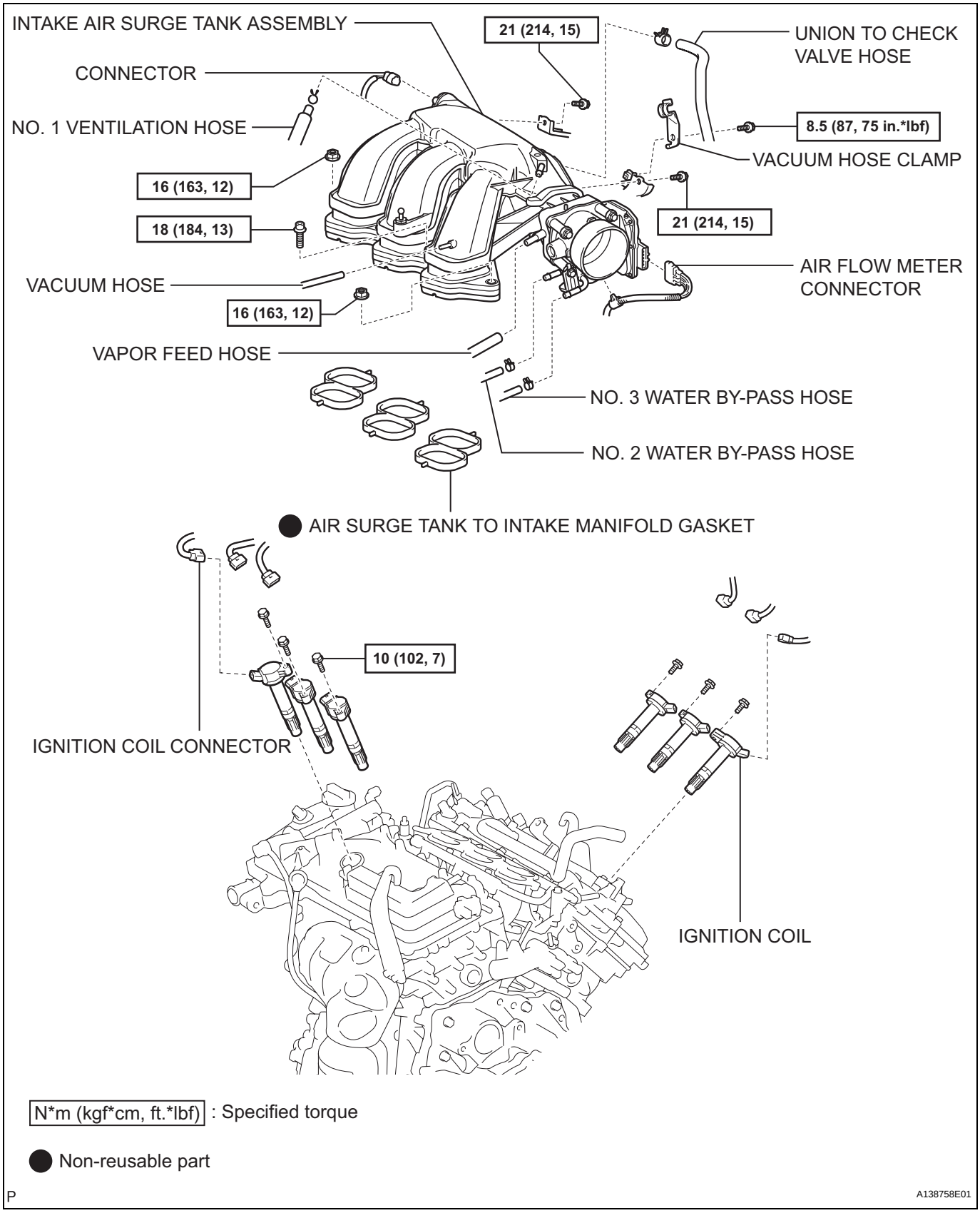

REMOVAL

1. **REMOVE ENGINE ASSEMBLY**
   (a) Remove the engine (see page EM-21).
2. **REMOVE INTAKE AIR SURGE TANK ASSEMBLY (See page EM-27)**
3. **REMOVE IGNITION COIL**
   (a) Disconnect the 6 ignition coil connectors.
   (b) Remove the 6 bolts and 6 ignition coils.

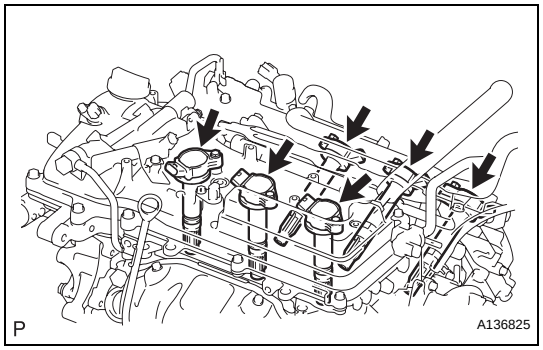

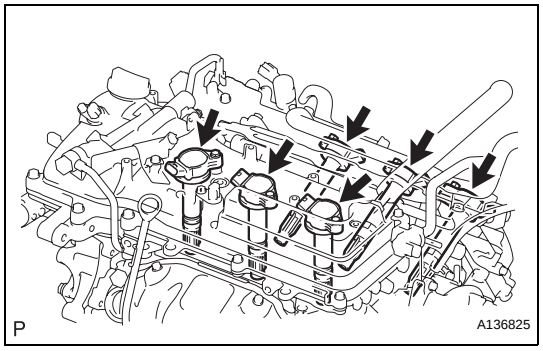

INSTALLATION

1. **INSTALL IGNITION COIL**
   (a) Install the 6 ignition coils with the 6 bolts.
   Torque: 10 N*m (102 kgf*cm, 7 ft.*lbf)
   (b) Connect the 6 ignition coil connectors.
2. **INSTALL INTAKE AIR SURGE TANK ASSEMBLY (See page EM-34)**
3. **INSTALL ENGINE ASSEMBLY**
   (a) Install the engine (see page EM-31).

SYSTEM DIAGRAM

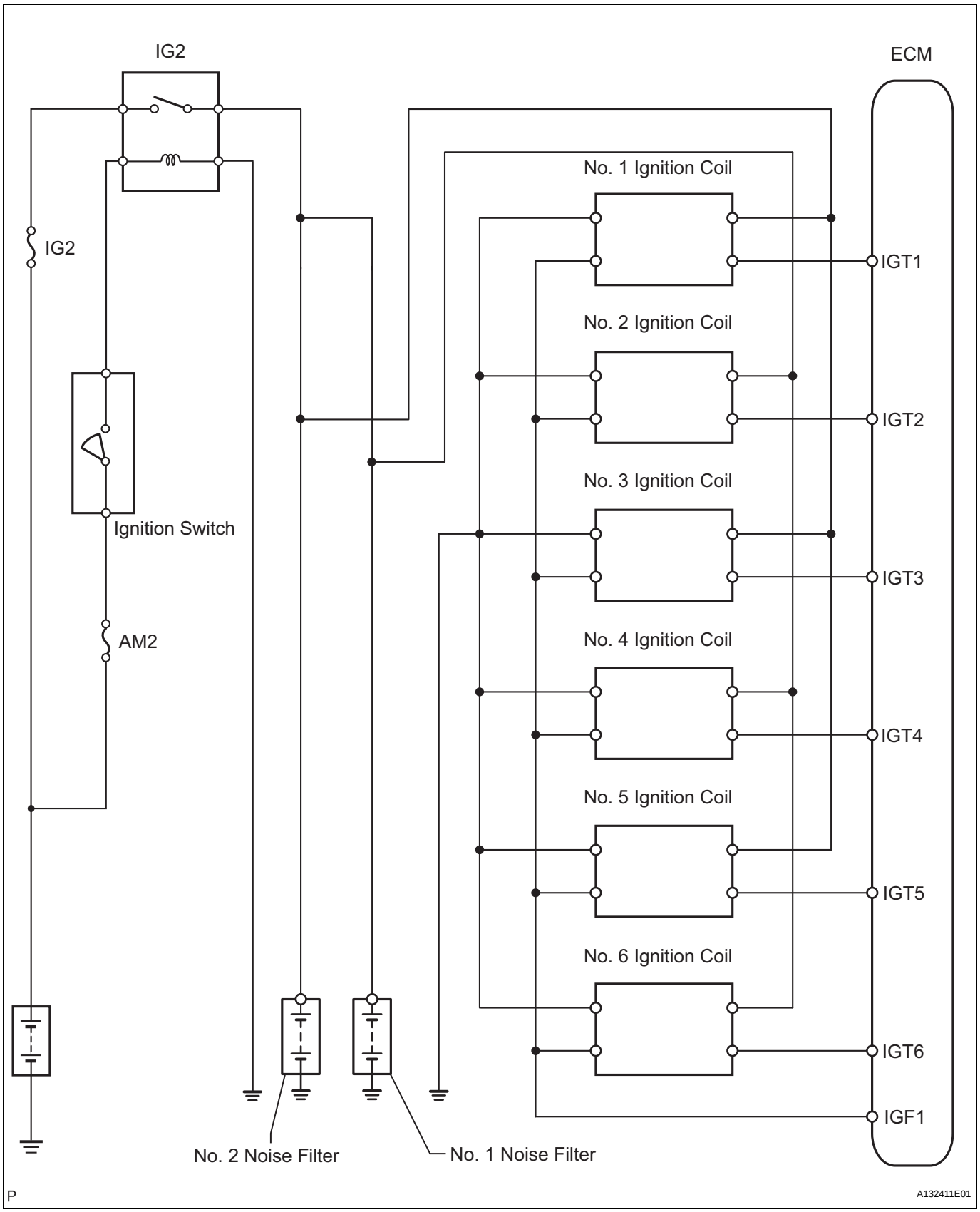

IG

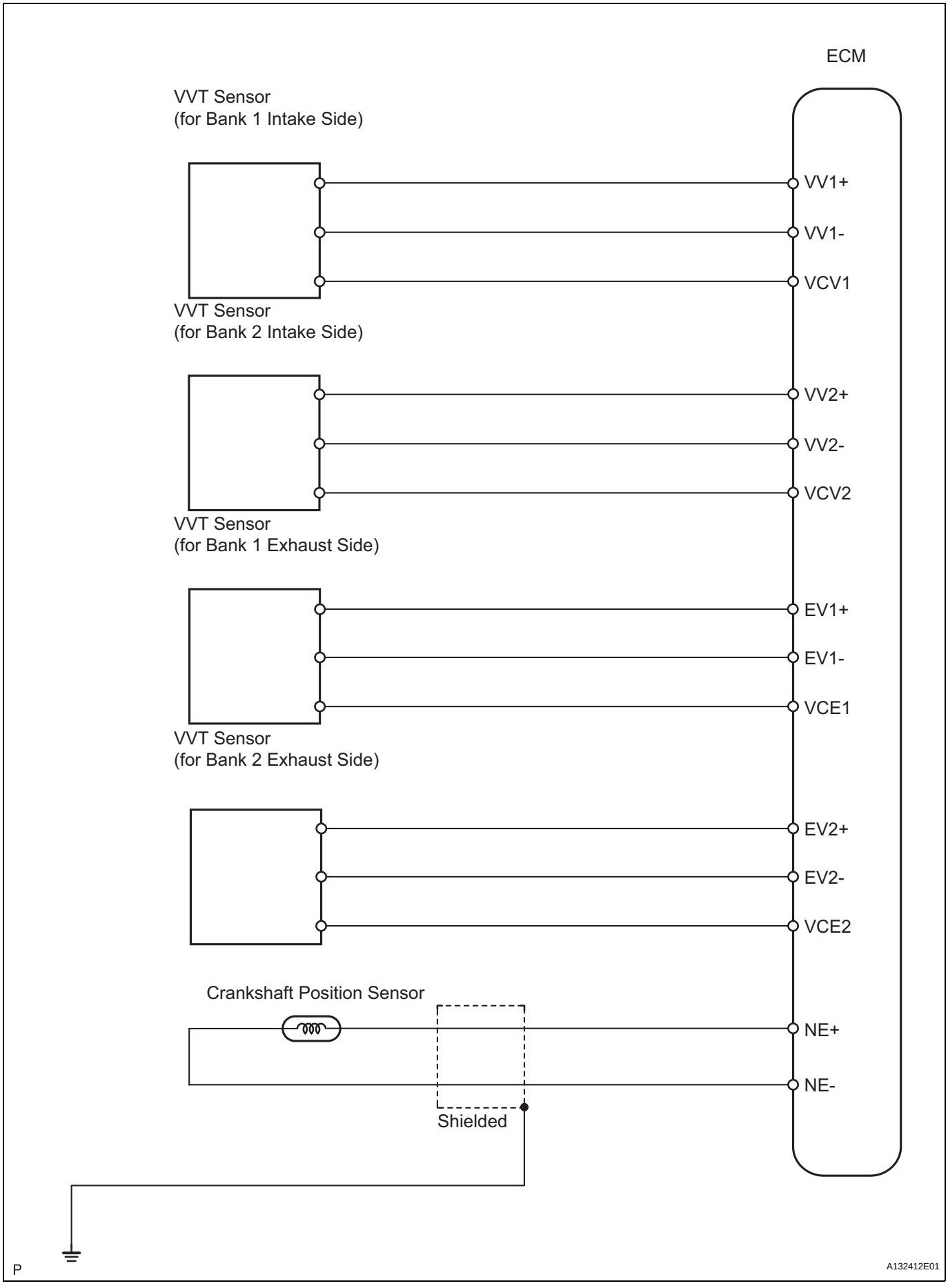
ECM
VVT Sensor
(for Bank 1 Intake Side)
VV1+
VV1-
VCV1
VVT Sensor
(for Bank 2 Intake Side)
VV2+
VV2-
VCV2
VVT Sensor
(for Bank 1 Exhaust Side)
EV1+
EV1-
VCE1
VVT Sensor
(for Bank 2 Exhaust Side)
EV2+
EV2-
VCE2
Crankshaft Position Sensor
NE+
NE-
Shielded
P
A132412E01

ON-VEHICLE INSPECTION

1. **CHECK IGNITION COIL ASSEMBLY AND PERFORM SPARK TEST**

NOTICE:

In this section, the terms "Cold" and "Hot" refer to the temperature of the sensor. "Cold" means approximately -10 to 50°C (14 to 122°F). "Hot" means approximately 50 to 100°C (122 to 212°F).

(a) Check the DTCs.

NOTICE:

If a DTC is present, perform troubleshooting in accordance with the procedure for that DTC.

(b) Check that sparks occur.

(1) Remove the V-bank cover.

(2) Remove the intake air surge tank (see page EM-27).

(3) Remove the bolt and ignition coil.

(4) Using a 16 mm spark plug wrench, remove the spark plug.

(5) Disconnect the 6 fuel injector connectors.

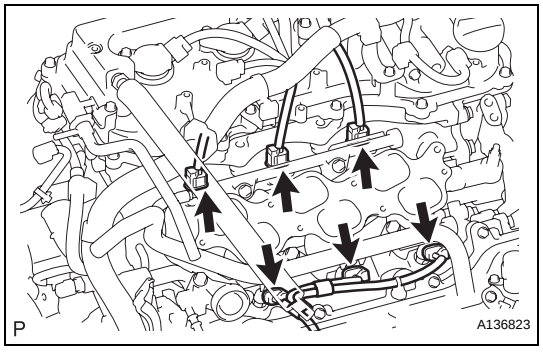

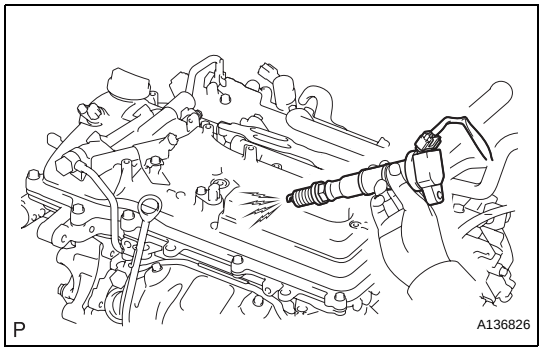

(6) Install the spark plug into the ignition coil, and then connect the ignition coil connectors.

(7) Ground the spark plug.

(8) Check that sparks occur at the spark plug while the engine is being cranked.

NOTICE:

- **Be sure to ground the spark plugs when checking them.**
- **If the ignition coil has been struck or dropped, replace it.**
- **Do not crank the engine for more than 2 seconds.**

If sparks do not occur, perform troubleshooting using the spark test flowchart.

(9) Using a 16 mm plug wrench, install the spark plug.

Torque: 25 N*m (254 kgf*cm, 18 ft.*lbf)

(10) Install the ignition coil with the bolt.

Torque: 10 N*m (102 kgf*cm, 7 ft.*lbf)

(11) Connect the 6 fuel injector connectors.

(12) Install the intake air surge tank (see page EM-34).

(13) Install the V-bank cover.

(c) Perform troubleshooting using the spark test flowchart.

(1) Check that the ignition coil connector is securely connected.

Result

Result	Proceed to
NG	Connect securely
OK	Go to next step

(2) Perform the spark test on each ignition coil.

1. Replace the ignition coil with a normal one.
2. Perform the spark test again.

Result

Result	Proceed to
OK	Replace ignition coil
NG	Go to next step

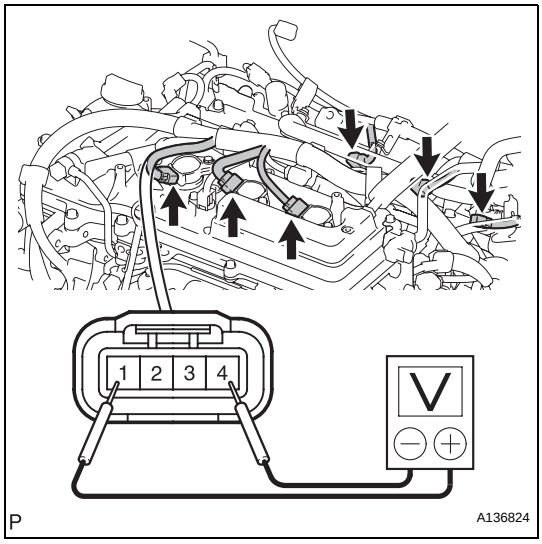

(3) Check the power supply to the ignition coil.

1. Disconnect the ignition coil connector.
2. Turn the ignition switch ON.
3. Measure the voltage of the wire harness side connector.

Standard voltage

Tester Connection	Specified Condition
1 (+B) - 4 (GND)	9 to 14 V

Result

Result	Proceed to
NG	Check wire harness and connector
OK	Go to next step

(4) Check the resistance of the crankshaft position sensor.

Standard resistance

Temperature Condition	Specified Condition
Cold	1,630 to 2,740 Ω
Hot	2,065 to 3,225 Ω

Result

Result	Proceed to
NG	Replace crankshaft position sensor
OK	Go to next step

(5) Check the IGT signal from the ECM.

Result

Result	Proceed to
NG	Check ECM (see page ES-220)
OK	Repair wiring between ignition coil and ECM

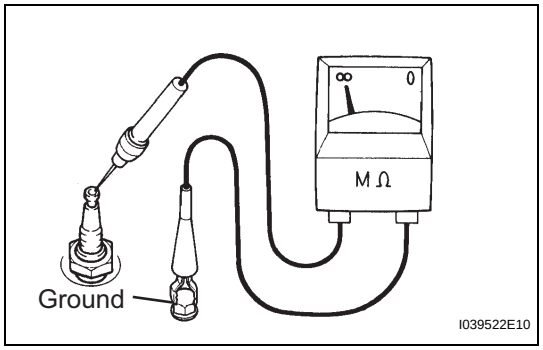

2. CHECK SPARK PLUG

(a) Check the electrode with megohmmeter:

(1) Using a megohmmeter, measure the insulation resistance.

Standard insulation resistance:

10 MΩ or more

If the result is 10 MΩ or less, clean the plug and measure the resistance again.

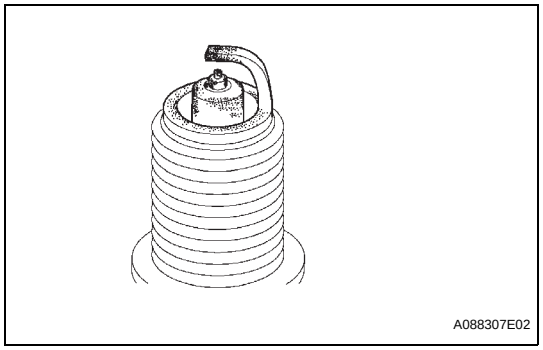

(b) Check the electrode without megohmmeter:

(1) Quickly accelerate the engine to 4,000 rpm 5 times.

(2) Remove the spark plug.

(3) Visually check the spark plug.

If the electrode is dry, the spark plug is functioning properly. If the electrode is damp, proceed to the next step.

(c) Check the spark plug for any damage on its thread and insulator.

If there is damage, replace the spark plug.

Recommended spark plug

Manufacturer	Spark plug type
DENSO	FK20HR11

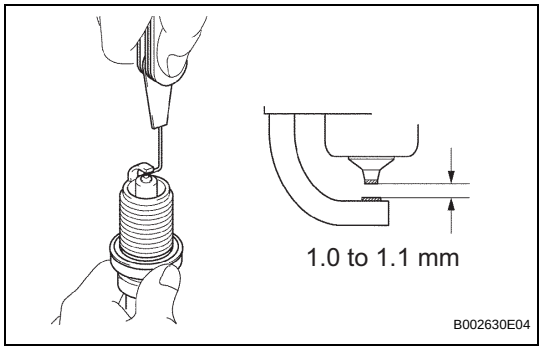

(d) Check the spark plug electrode gap.

Maximum electrode gap for used spark plug:

1.4 mm (0.055 in.)

If the gap is greater than the maximum, replace the spark plug.

Electrode gap for new spark plug:

1.0 to 1.1 mm (0.039 to 0.043 in.)

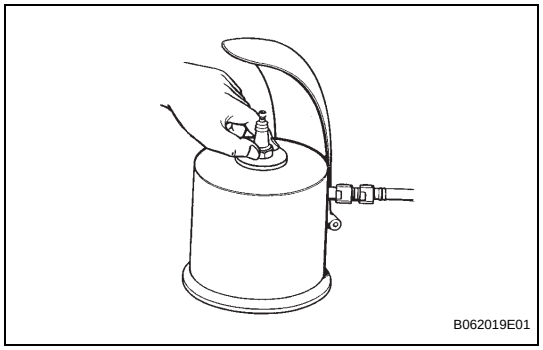

If the electrode has traces of wet carbon, clean the electrode with a spark plug cleaner and then dry it.

Standard air pressure:

588 kPa (6 kgf/cm^2, 85 psi)

Standard duration:

20 seconds or less

HINT:

Only use the spark plug cleaner when the electrode is free of oil. If the electrode has traces of oil, use gasoline to clean off the oil before using the spark plug cleaner.

IGNITION SYSTEM

PARTS LOCATION

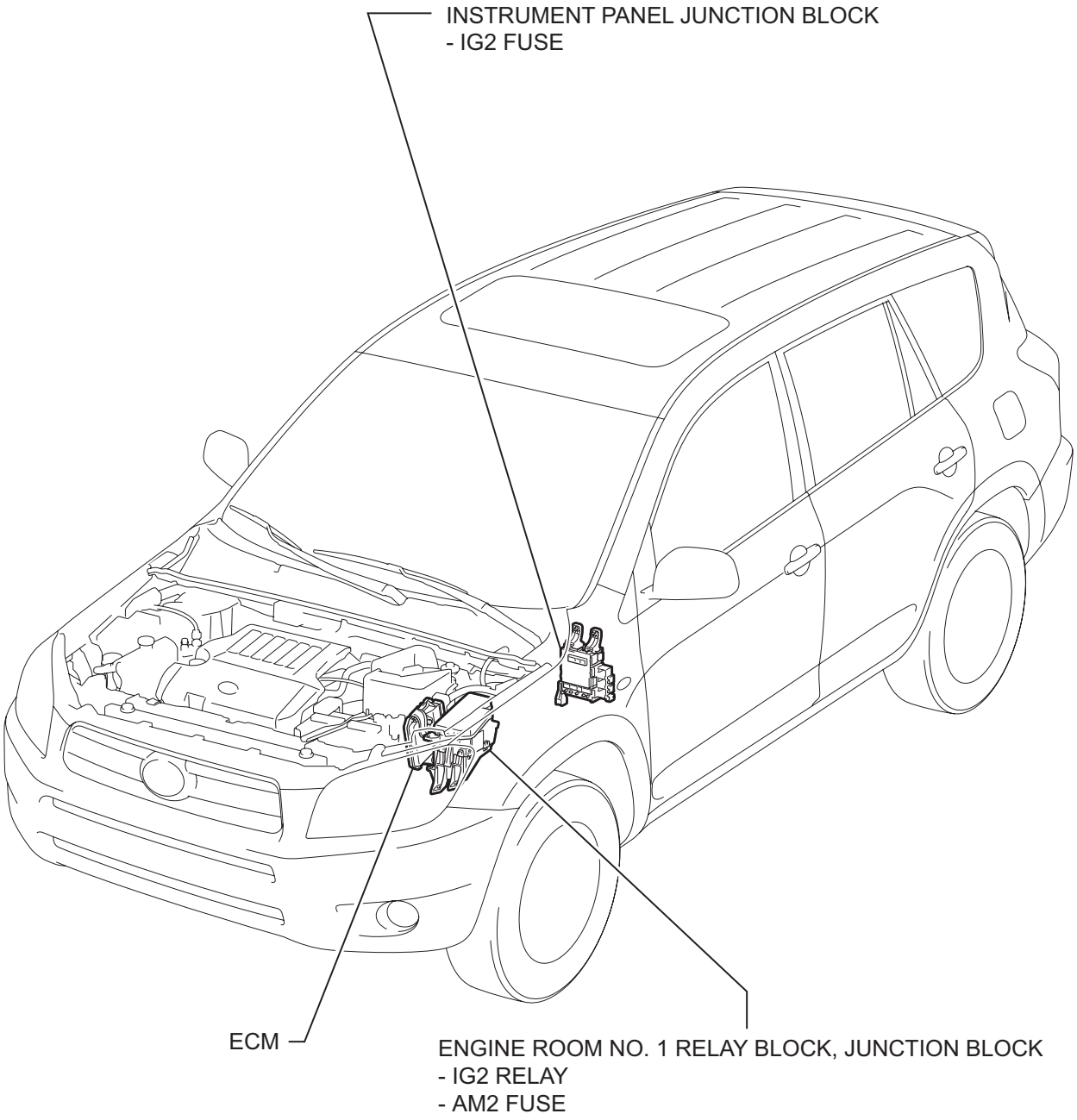

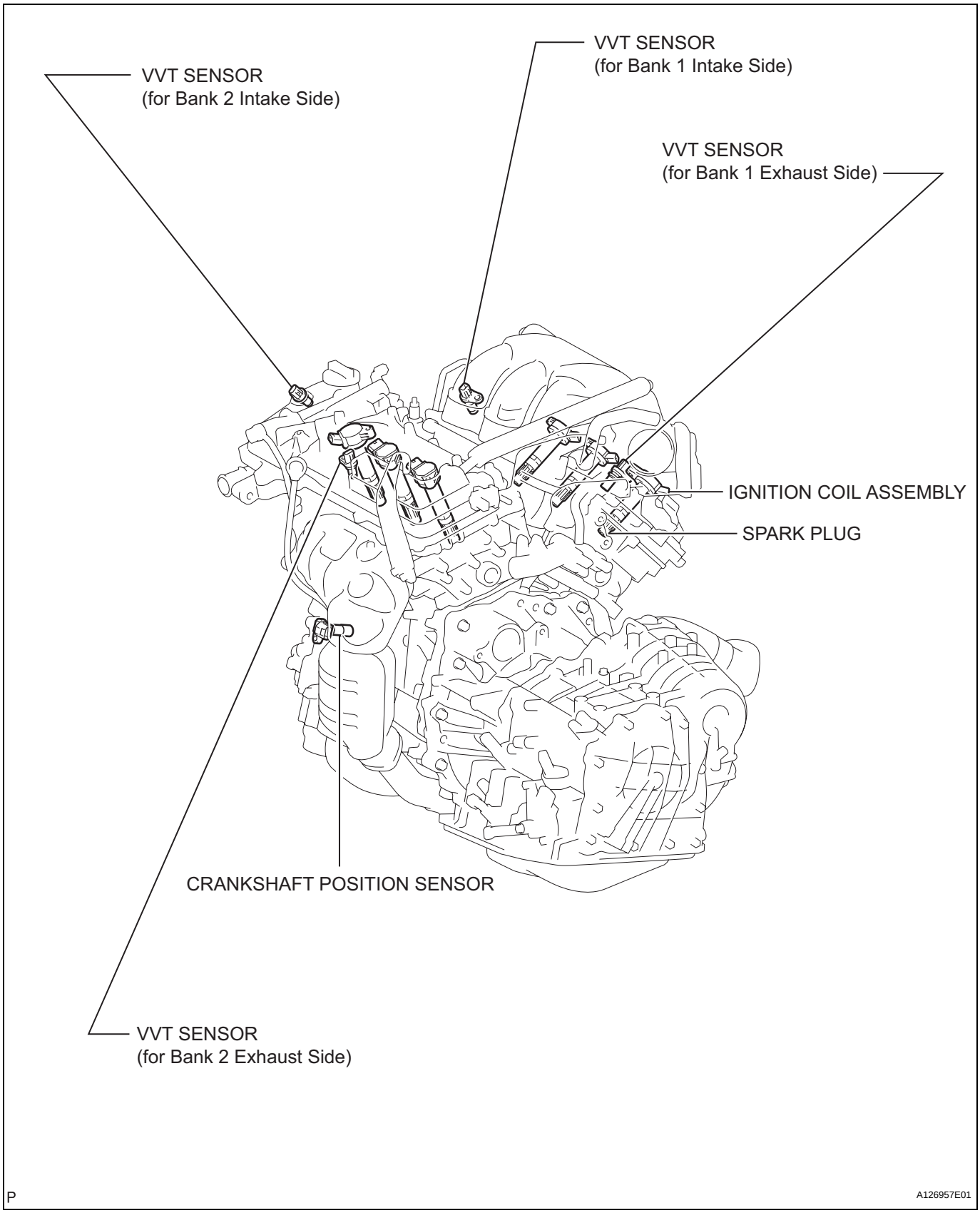
VVT SENSOR
(for Bank 2 Intake Side)
VVT SENSOR
(for Bank 1 Intake Side)
VVT SENSOR
(for Bank 1 Exhaust Side)
IGNITION COIL ASSEMBLY
SPARK PLUG
CRANKSHAFT POSITION SENSOR
VVT SENSOR
(for Bank 2 Exhaust Side)
P
A126957E01

INTAKE SYSTEM

PARTS LOCATION

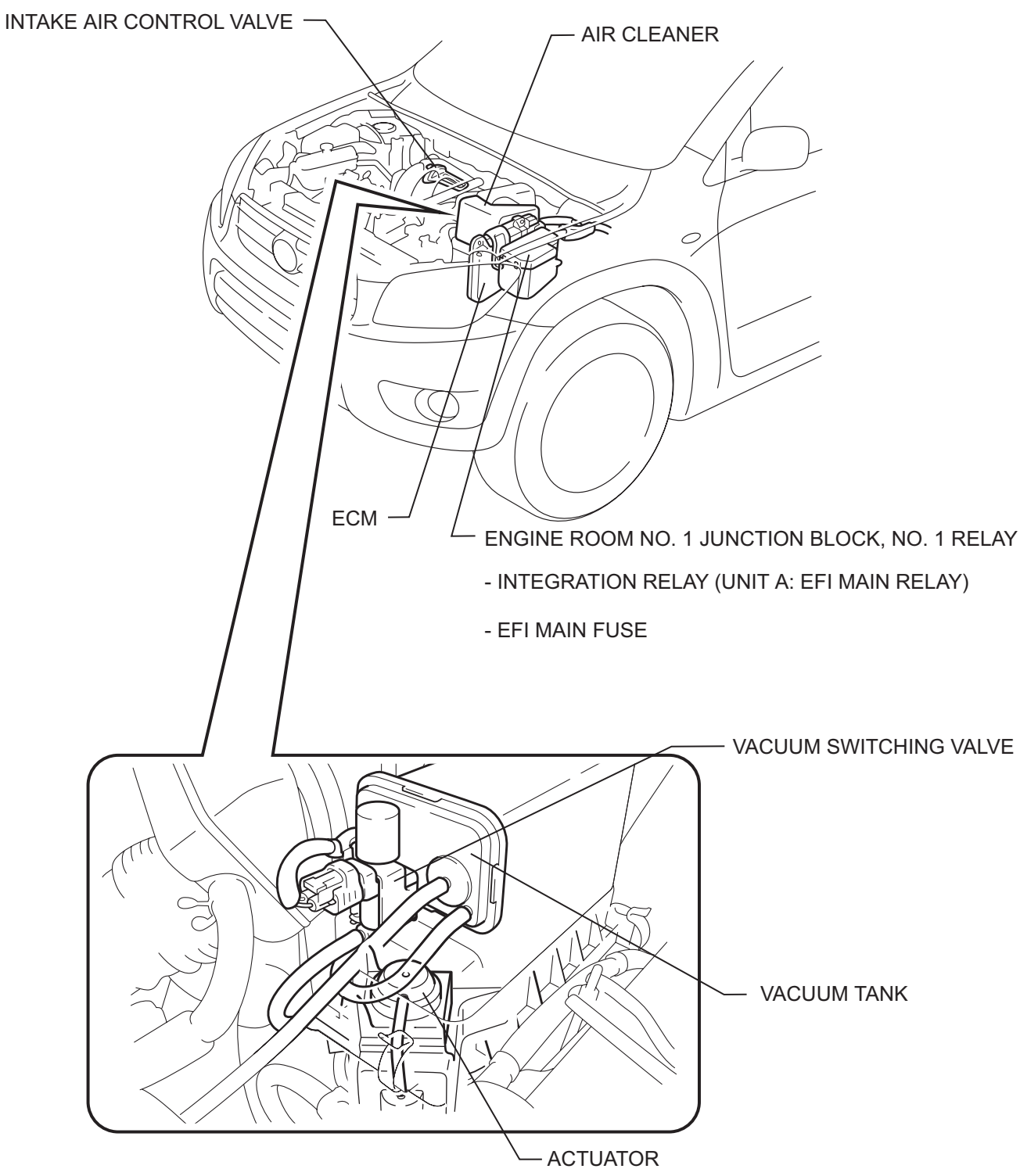

SYSTEM DIAGRAM

1. AIR INTAKE CONTROL SYSTEM DIAGRAM

- The system has a dual path design for air intake. An air intake control valve and actuator control the air flow path.
- When the engine is operating in the low to medium speed range, this control operates the air intake control valve to close one side of the air cleaner inlet.
- When the engine is operating in the high speed range, this control operates the air intake control valve to open both sides of the air cleaner inlet.

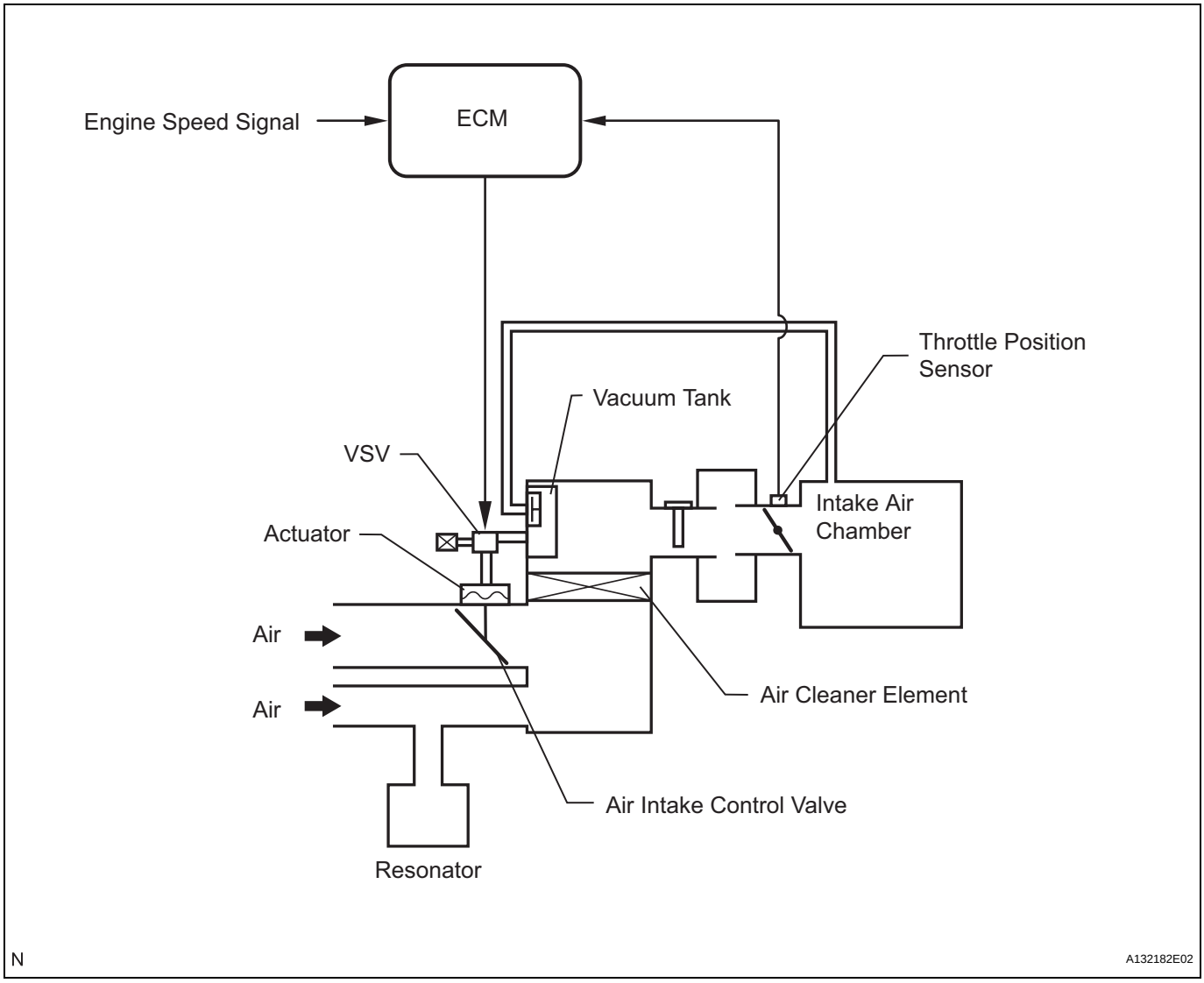

2. ACOUSTIC CONTROL INDUCTION SYSTEM DIAGRAM

- The ACIS is realized by using a bulkhead to divide the intake manifold into 2 stages, with an intake air control valve in the bulkhead being opened and closed to vary the effective length of the intake manifold in accordance with the engine speed and throttle valve opening angle. This increases the power output in all ranges from low to high speed.

- When the intake control valve closes:
  While the engine is running at medium speed under high load, the ECM controls the actuator to close the control valve. As a result, the effective length of the intake manifold is lengthened and the intake efficiency, in the medium speed range, is improved due to the dynamic effect of the intake air, thereby increasing power output.
- When the intake control valve opens:
  Under any condition except when the engine is running at medium speed under high load, the ECM controls the actuator to open the control valve. When the control valve is open, the effective length of the intake air chamber is shortened and peak intake efficiency is shifted to the low to high engine speed range, thus providing greater output at low to high engine speeds.

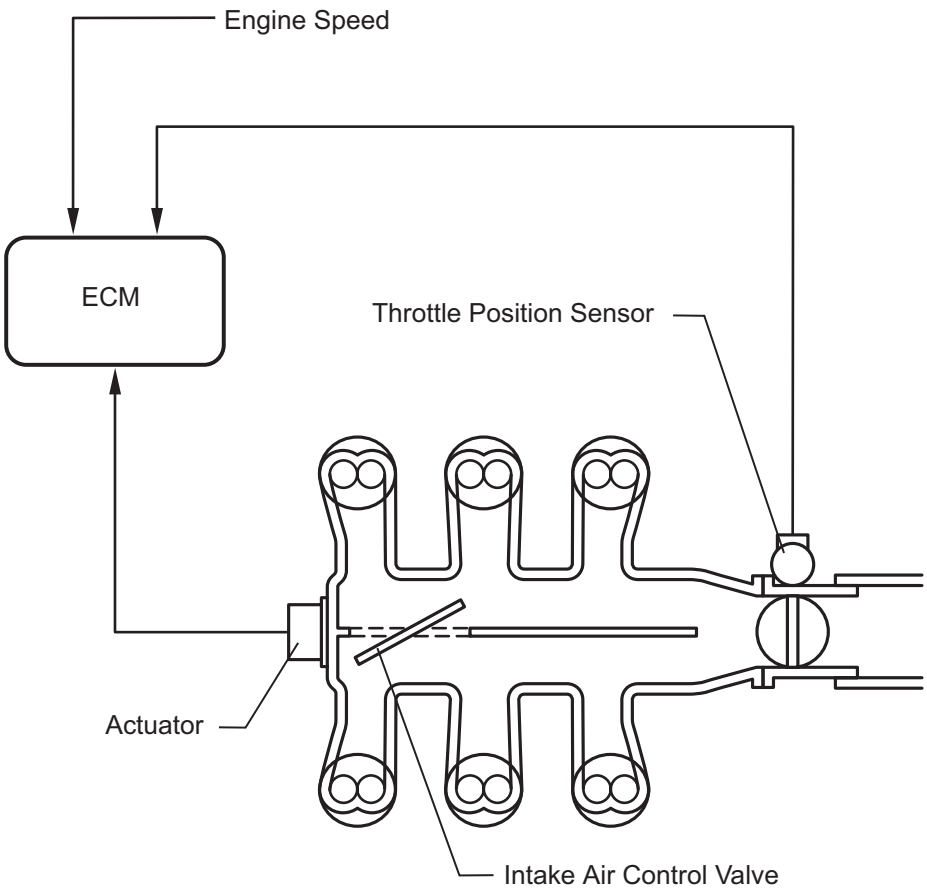

N

A132183E02

3. INTAKE SYSTEM WIRING DIAGRAM

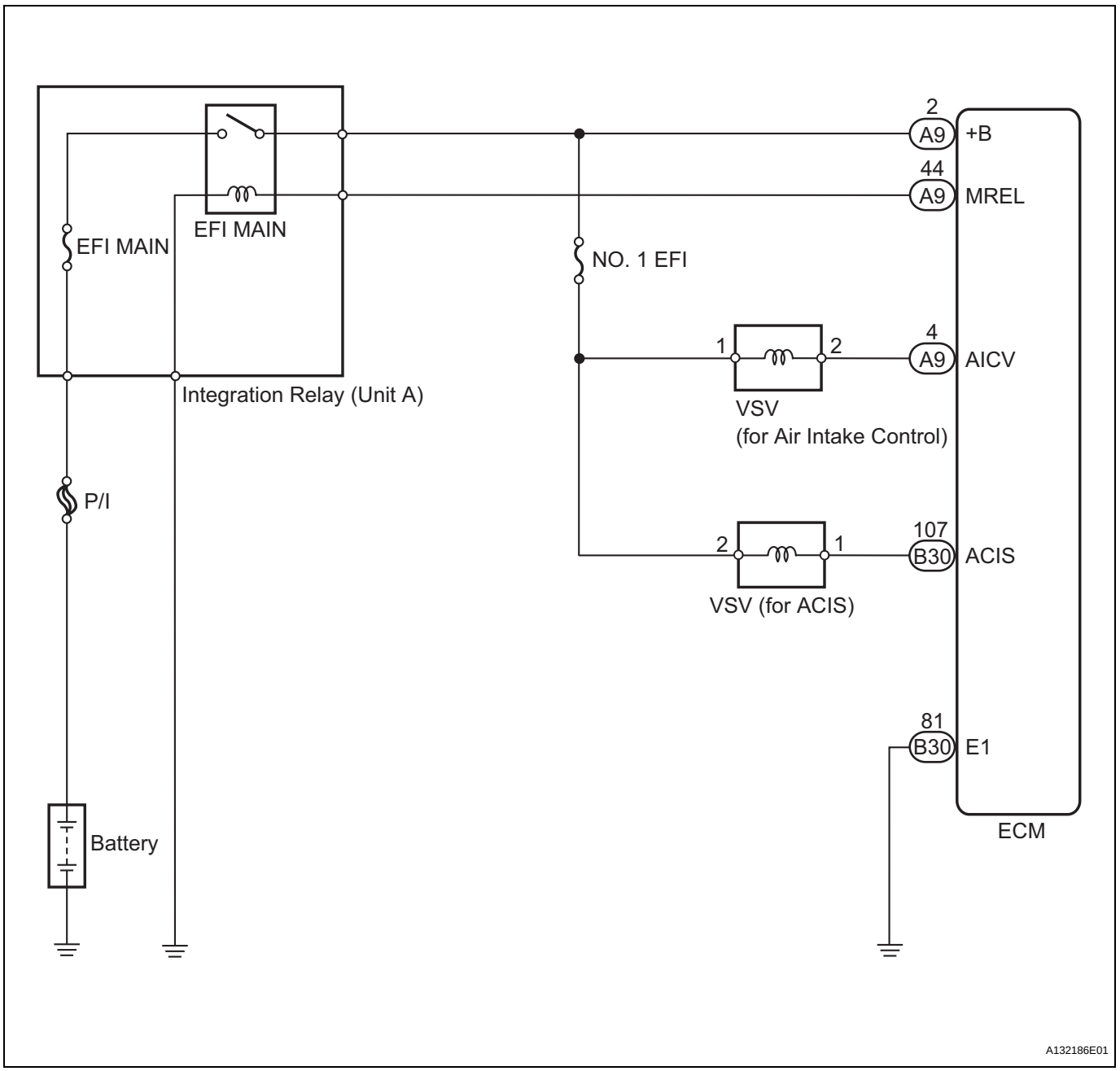

ON-VEHICLE INSPECTION

1. INSPECT INTAKE AIR CONTROL VALVE ASSEMBLY

(a) Inspection procedure when using the intelligent tester.

(1) Warm up the engine.
(2) Stop the engine.
(3) Connect the intelligent tester to the DLC3.
(4) Turn the ignition switch ON.
(5) Turn the tester ON.
(6) Select the following menu items: DIAGNOSIS / ENHANCED OBD II / ACTIVE TEST / INTAKE CONTROL VSV1. Press the right or left button.

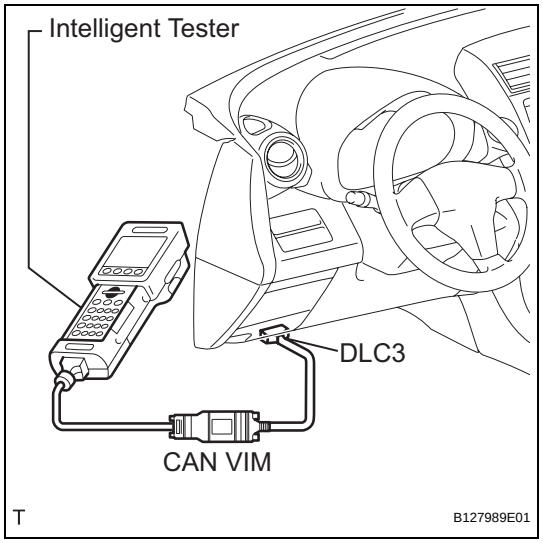

(7) Make sure that a clicking sound is heard from the intake air control valve when current flows. If the result is not as specified, replace the intake air surge tank.

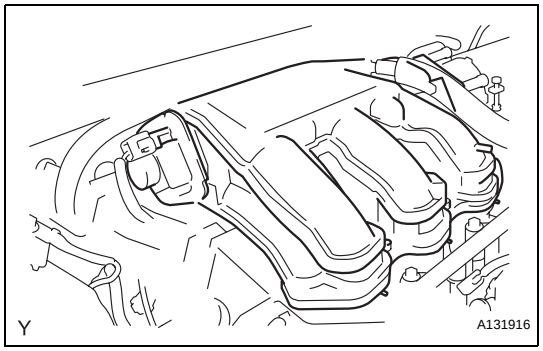

(b) Inspection procedure when applying voltage between the terminals.

(1) Disconnect the connector from the intake air control valve.
(2) Apply battery voltage between terminals 1 (-) and 2 (+) of the intake air control valve. Check that a clicking sound is heard from the intake air control valve.
If the result is not as specified, replace the intake air surge tank.

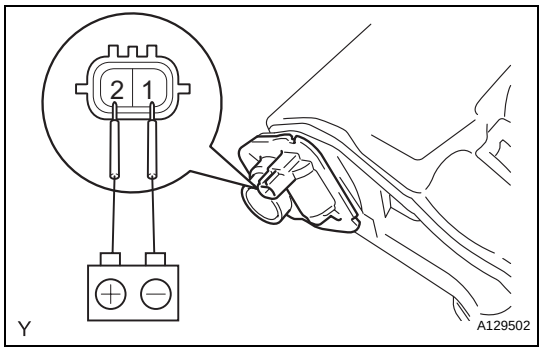

2. INSPECT VACUUM SWITCHING VALVE

(a) Perform the Active Test to operate the VSV (see page ES-426).

IT

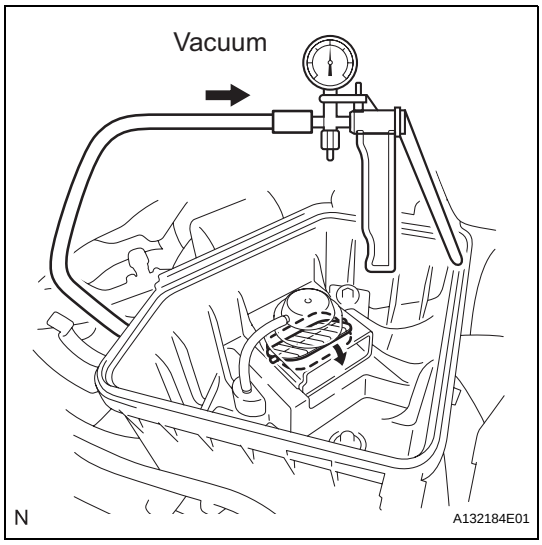

3. INSPECT AIR CLEANER ASSEMBLY

(a) Inspect the actuator.
  (1) Apply 80 kPa (600 mmHg, 23.6 in. Hg) of vacuum to the actuator. Check if the valve rotates open, as shown in the illustration.
  (2) Apply the vacuum for 1 minute. The actuator should continue to keep the valve open.
  If the result is not as specified, replace the air cleaner case assembly.

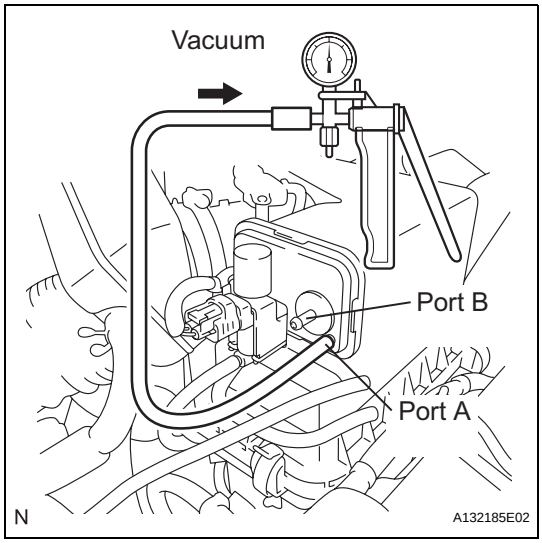

(b) Inspect the vacuum tank.
  (1) Connect the vacuum pump to port A.
  (2) Apply a vacuum of 66.7 kPa (500 mmHg, 20 in. Hg) to the vacuum tank.
  (3) 1 minute after applying the vacuum, check that the pressure does not change.

(c) Check that there is no ventilation when pressure is applied to port B, and that there is ventilation when a vacuum is applied to port B.
  If the result is not as specified, replace the air cleaner cap assembly.

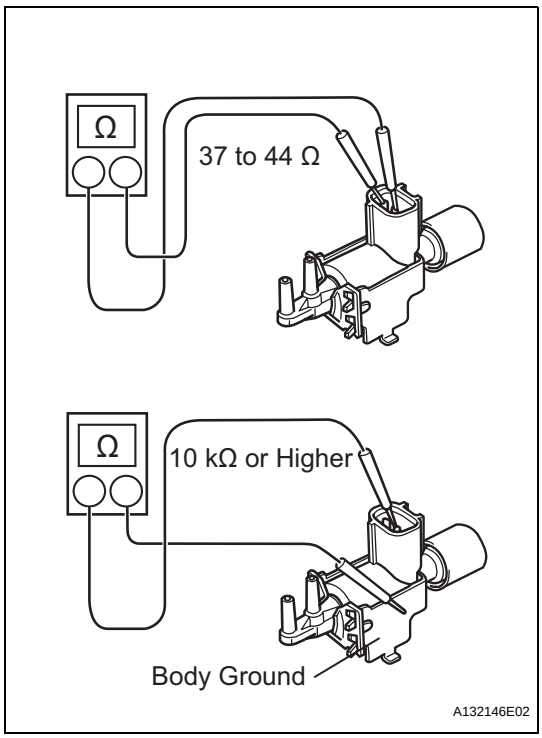

4. INSPECT VACUUM SWITCHING VALVE

(a) Check the resistance of the VSV.
  Standard resistance

Tester Connection	Specified Condition
1 - 2	37 to 44 Ω at 20°C (68°F)
1 - Body ground 2 - Body ground	10 kΩ or higher

If the result is not as specified, replace the VSV.

IT

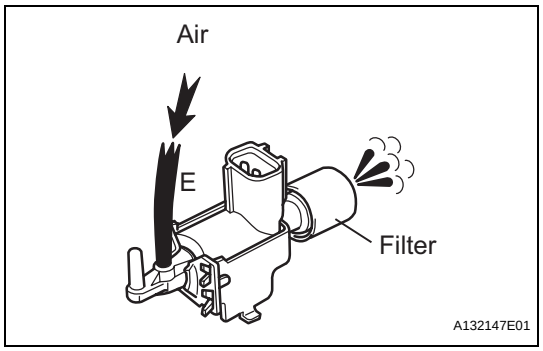

(b) Check VSV operation.
(1) Check that air flows from port E to the filter.

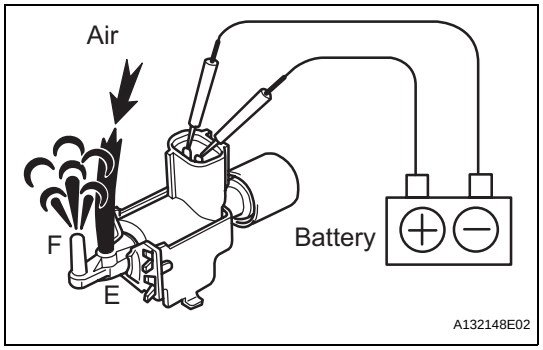

(2) Apply battery voltage across the terminals.
Check that air flows from port E to port F.
If the result is not as specified, replace the VSV.

LUBRICATION SYSTEM

ON-VEHICLE INSPECTION

1. CHECK ENGINE OIL LEVEL

(a) Warm up the engine, stop the engine and wait for 5 minutes. The oil level should be between the dipstick's low and full level marks.
If the oil level is low, check for leakage and add oil up to the full level mark.
NOTICE:
Do not fill engine oil above the full level mark.

2. CHECK ENGINE OIL QUALITY

(a) Check the oil for deterioration, water contamination, discoloring or thinning.
If the quality is visibly poor, replace the oil.
HINT:
- TOYOTA Genuine Motor Oil is in this vehicle when it is shipped.
- Use TOYOTA approved TOYOTA Genuine Motor Oil or equivalent to satisfy the following grade and viscosity.

Oil grade:
ILSAC multigrade engine oil is recommended. SAE 5W-30 is the best choice for good fuel economy and good starting in cold weather.
If SAE 5W-30 in not available, SAE 10W-30 may be used. However, it should be replaced with SAE 5W-30 at the next oil change.

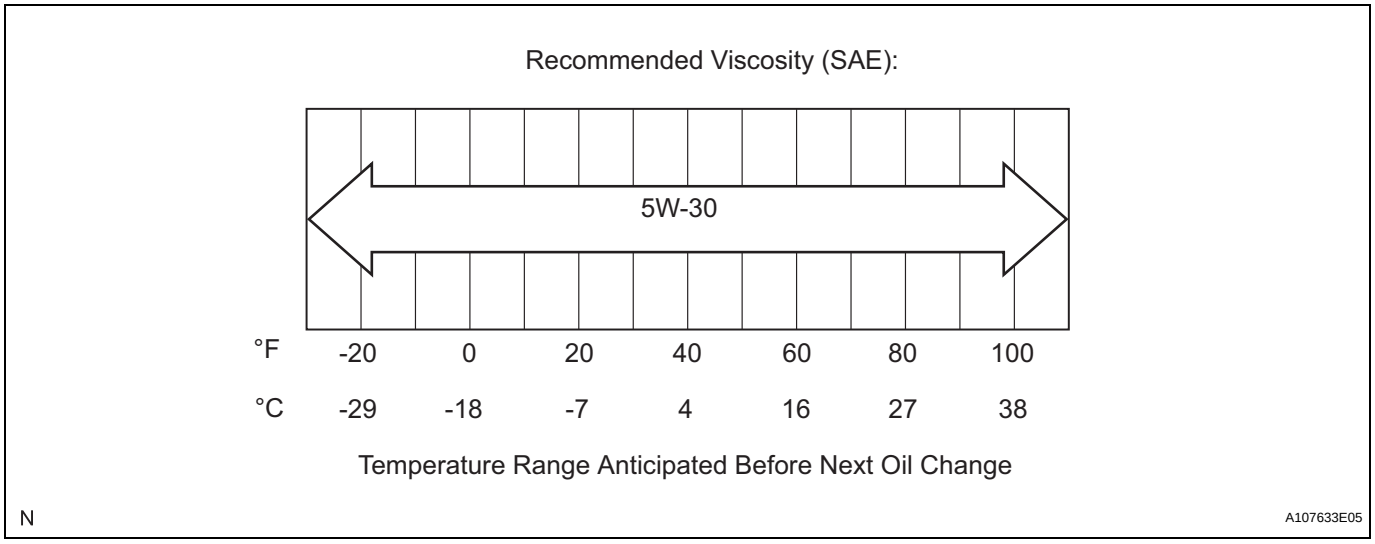

3. CHECK ENGINE OIL PRESSURE

(a) Disconnect the oil pressure switch connector.

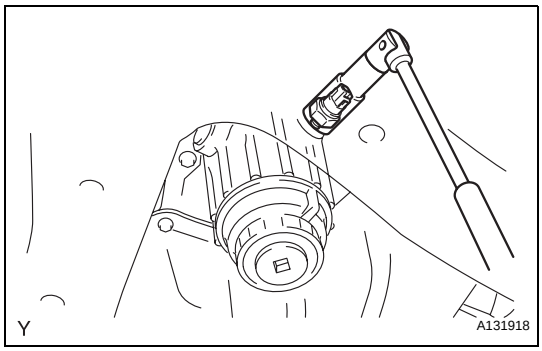

(b) Using a 24 mm deep socket wrench, remove the oil pressure switch.

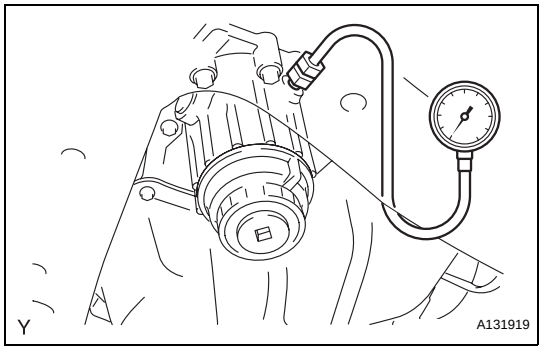

(c) Install the oil pressure gauge.
(d) Warm up the engine.
(e) Measure the oil pressure.
Standard oil pressure

Condition	Specified Condition
Idle	80 kPa (0.8 kgf/cm^2, 11.6 psi) or more
6,000 rpm	380 kPa (3.9 kgf/cm^2, 55.5 psi) or more

If the oil pressure is not as specified, check the oil pump.

(f) Remove the oil pressure gauge.

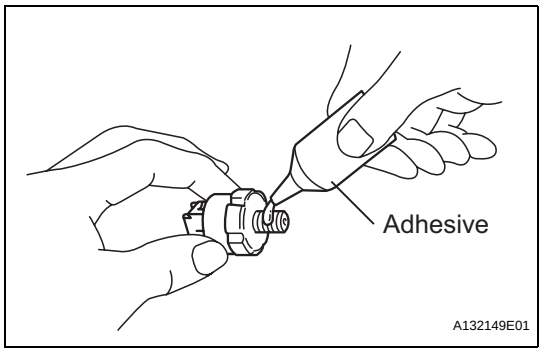

(g) Apply adhesive to 2 or 3 threads of the oil pressure switch.
Adhesive:
Toyota Genuine Adhesive 1344, Three Bond 1344 or Equivalent

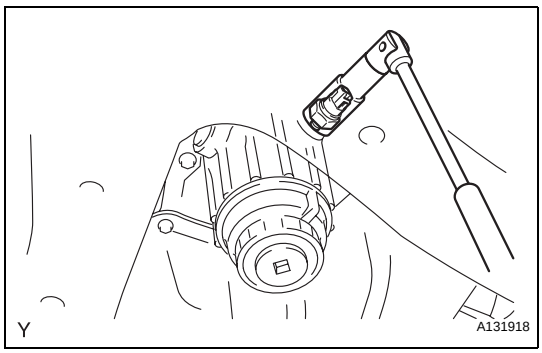

(h) Install the oil pressure switch.
Torque: 15 N*m (153 kgf*cm, 11 ft.*lbf)
NOTICE:
Do not start the engine for at least 1 hour after installation of the switch.
(i) Connect the oil pressure switch connector.
(j) Start the engine and check for engine oil leaks.

LU

OIL FILTER

COMPONENTS

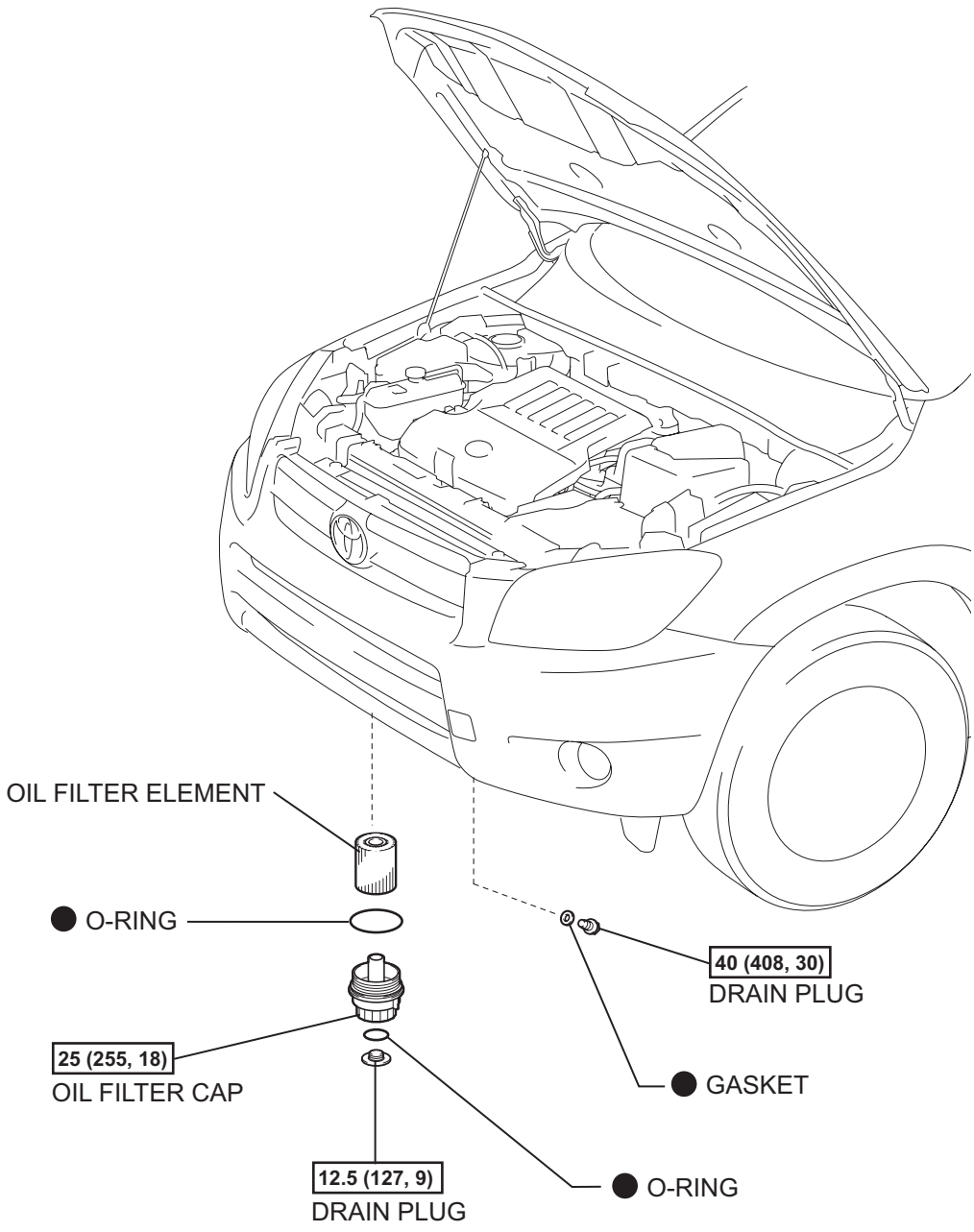

N*m (kgf*cm, ft.*lbf) : Specified torque

● Non-reusable part

P

A132177E01

REPLACEMENT

CAUTION:

- **Prolonged and repeated contact with mineral oil will result in the loss of the skin's natural oils, leading to dryness, irritation and dermatitis. In addition, used engine oil contains potentially harmful contaminants which may cause skin cancer.**
- **Wear protective clothing and gloves. Avoid contact with used oil. If contact occurs, wash the area thoroughly with soap and waterless hand cleaner. Never use gasoline, thinners, or solvents to wash the skin.**
- **In order to protect the environment, dispose of used oil and used oil filters at designated disposal sites only.**

1. DRAIN ENGINE OIL

(a) Remove the oil filler cap.

(b) Remove the oil drain plug and gasket, and drain the engine oil into a container.

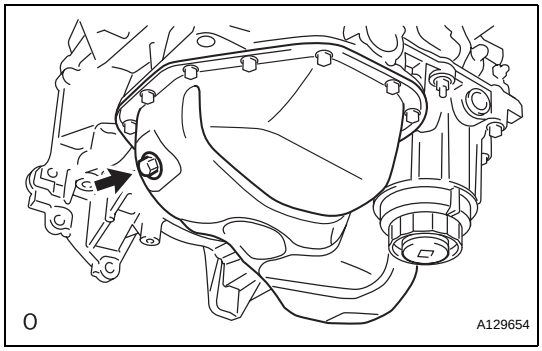

2. REMOVE OIL FILTER CAP ASSEMBLY

(a) Connect the hose to a pipe.
HINT:
The drain pipe is supplied with the oil filter element.

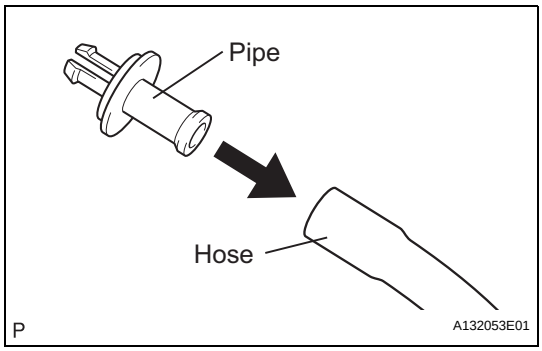

(b) Remove the oil filter drain plug and O-ring, and then insert the drain pipe into the oil filter cap and drain the engine oil into a container.

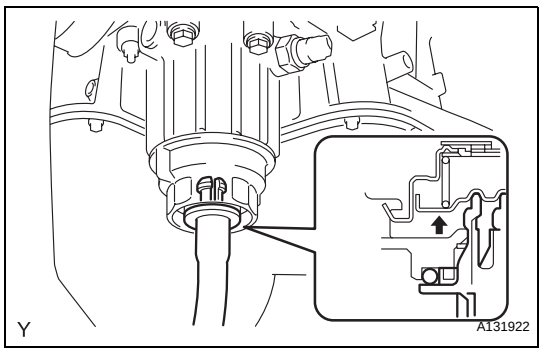

LU

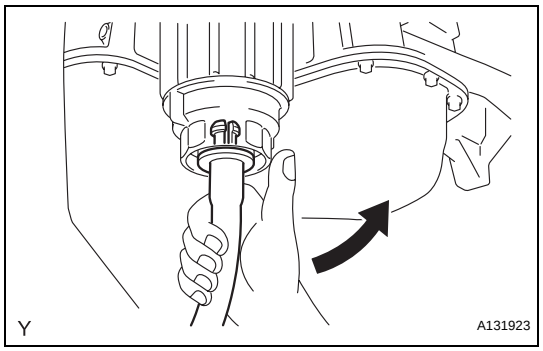

(c) Make sure that oil is completely drained, and remove the pipe and O-ring.
HINT:
Be sure to turn the pipe in the direction of the arrow to remove it.

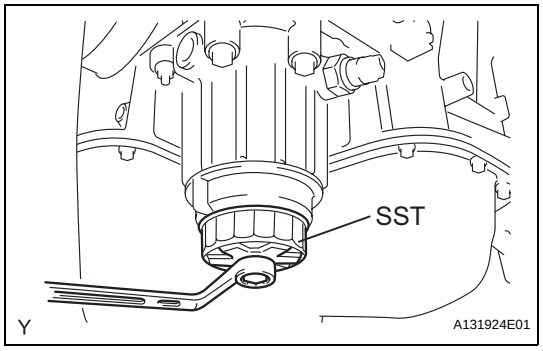

(d) Using SST, remove the oil filter cap together with the oil filter element.
SST 09228-06501

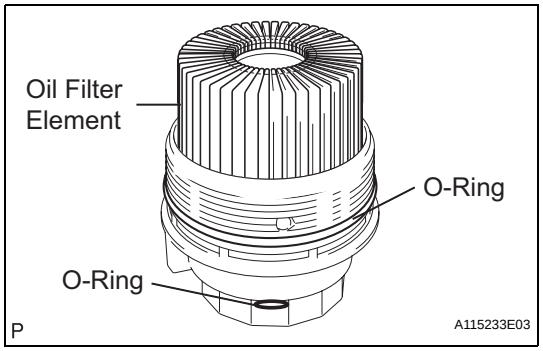

3. REMOVE OIL FILTER ELEMENT

(a) Remove the oil filter element and 2 O-rings from the oil filter cap.
NOTICE:
Be sure to remove the O-ring (for the cap) by hand, without using any tools, to prevent damage to the groove for the O-ring on the cap.

4. INSTALL OIL FILTER ELEMENT

(a) Clean the oil filter cap threads and O-ring groove.

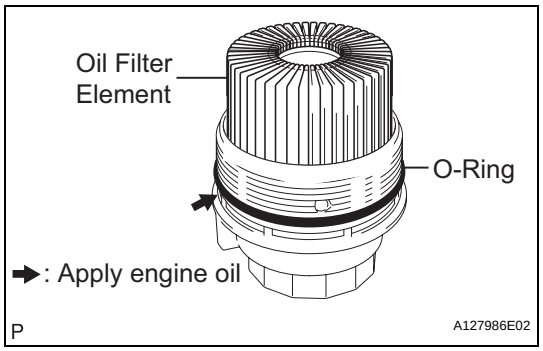

(b) Apply a small amount of engine oil to a new O-ring and install it to the oil filter cap.
(c) Set a new oil filter element in the oil filter cap.

5. INSTALL OIL FILTER CAP ASSEMBLY

(a) Remove any dirt or foreign matter from the installation surface and inside of the engine.
(b) Apply a small amount of engine oil to the O-ring again and install the oil filter cap.
NOTICE:
Be careful that the O-ring does not get caught between the parts.

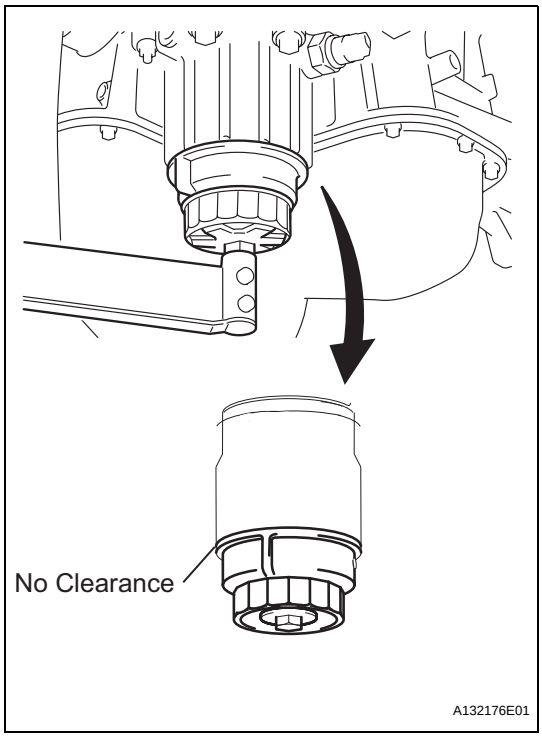

(c) Using SST, tighten the oil filter cap.
SST 09228-06501
Torque: 25 N*m (255 kgf*cm, 18 ft.*lbf)
NOTICE:
- **Make sure that the oil filter is installed securely as shown in the illustration.**
- **Be careful that the O-ring does not get caught between the parts.**

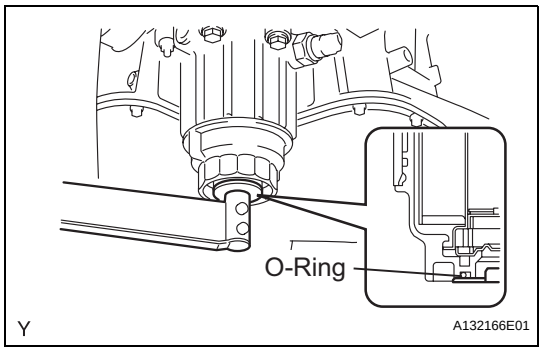

(d) Apply a small amount of engine oil to a new drain plug O-ring, and install it to the oil filter cap.
NOTICE:
Before installing the O-ring, remove any dirt or foreign matter from the installation surface of the oil filter cap.

(e) Install the oil filter drain plug to the filter cap.
Torque: 12.5 N*m (127 kgf*cm, 9 ft.*lbf)
NOTICE:
Be careful that the O-ring does not get caught between the parts.

6. ADD ENGINE OIL

(a) Wipe the oil pan and drain plug before installing the plug.

(b) Install a new gasket and the oil pan drain plug.
Torque: 40 N*m (408 kgf*cm, 30 ft.*lbf)

(c) Add new oil.
Standard oil capacity

Item	Specified Condition
Drain and refill with oil filter change	6.1 liters (6.4 US qts, 5.4 Imp. qts)
Drain and refill without oil filter change	5.7 liters (6.0 US qts, 5.0 Imp. qts)
Dry fill	6.5 liters (6.9 US qts, 5.7 Imp. qts)

(d) Install the oil filler cap.

7. CHECK FOR ENGINE OIL LEAKS

(a) Start the engine. Make sure that no oil leaks from the connection point of the oil filter cap.

8. PERFORM OIL CHANGE REMINDER LIGHT RESET PROCEDURE

NOTICE:

To prevent the oil change reminder light from coming on after changing the engine oil, perform the oil change reminder light reset procedure (see page ME-15).

REMOVAL

1. **DISCHARGE FUEL SYSTEM PRESSURE (See page FU-9)**
2. **DISCONNECT CABLE FROM NEGATIVE BATTERY TERMINAL**
   CAUTION:
   Wait at least 90 seconds after disconnecting the cable from the negative (-) battery terminal to prevent airbag and seat belt pretensioner activation.
3. **REMOVE ENGINE ASSEMBLY**
   (a) Remove the engine from the vehicle (see page EM-21).
4. **INSTALL ENGINE TO STAND**
5. **REMOVE NO. 2 OIL DIPSTICK GUIDE**
   (a) Remove the oil dipstick.
   (b) Remove the bolt and dipstick guide.

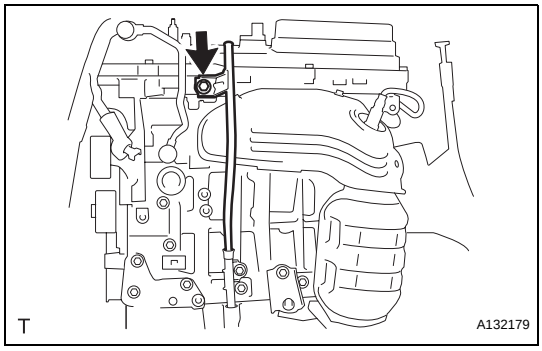

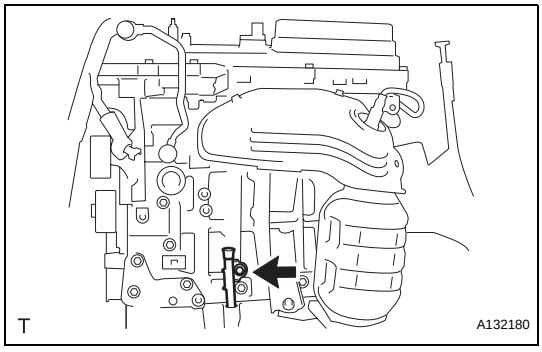

6. **REMOVE OIL DIPSTICK GUIDE**
   (a) Remove the bolt and dipstick guide.
7. **REMOVE OIL FILTER CAP ASSEMBLY (See page LU-4)**
8. **REMOVE OIL FILTER ELEMENT KIT (See page LU-5)**

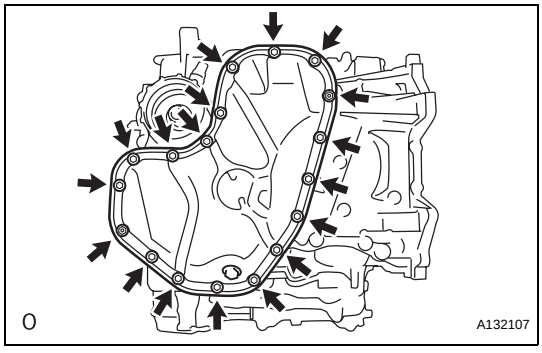

9. **REMOVE NO. 2 OIL PAN SUB-ASSEMBLY**
   (a) Remove the 16 bolts and 2 nuts.

LU

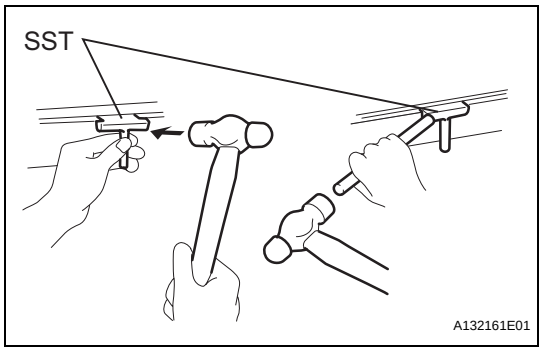

(b) Insert the blade of SST between the oil pan, cut through the applied sealer and remove the oil pan.
SST 09032-00100
NOTICE:
Be careful not to damage the contact surfaces of the oil pan.

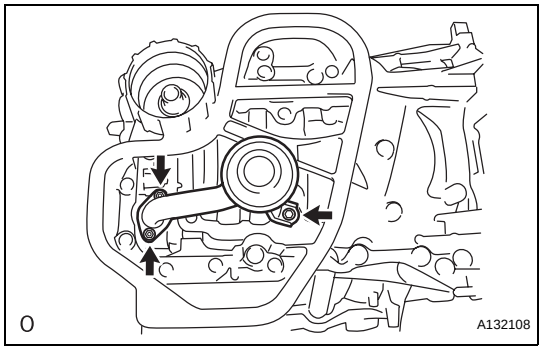

10. REMOVE OIL STRAINER SUB-ASSEMBLY
(a) Remove the bolt, 2 nuts, oil strainer and gasket.

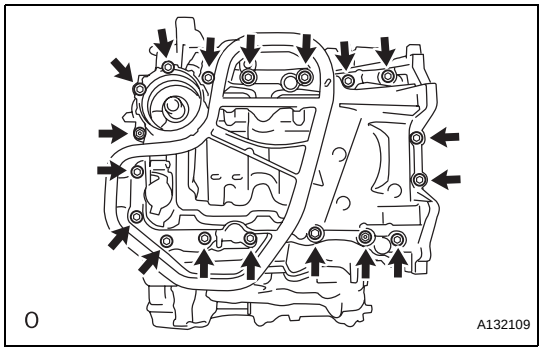

11. REMOVE OIL PAN SUB-ASSEMBLY
(a) Remove the 16 bolts and 2 nuts.
HINT:
Be sure to clean the bolts and stud bolts and check the threads for cracks or other damage.

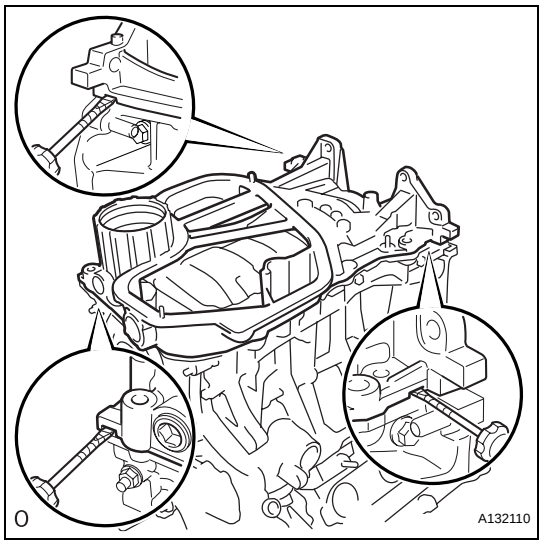

(b) Remove the oil pan by prying between the oil pan and cylinder block with a screwdriver.
NOTICE:
Be careful not to damage the contact surfaces of the cylinder block and oil pan.
HINT:
Tape the screwdriver tip before use.

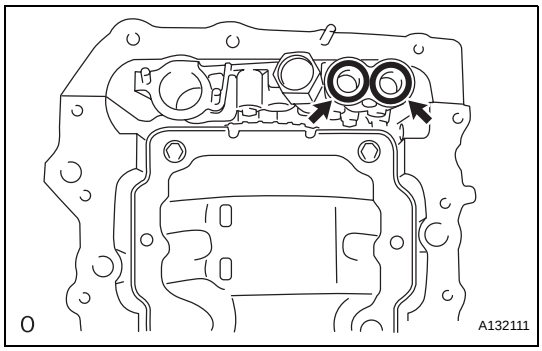

(c) Remove the 2 O-rings from the oil pump.

12. **REMOVE WATER INLET HOUSING (See page CO-12)**
13. **REMOVE OIL PIPE (See page EM-52)**
14. **REMOVE CYLINDER HEAD COVER SUB-ASSEMBLY (for Bank 1) (See page EM-52)**
15. **REMOVE NO. 1 OIL PIPE (See page EM-53)**
16. **REMOVE CYLINDER HEAD COVER SUB-ASSEMBLY (for Bank 2) (See page EM-53)**
17. **REMOVE CRANKSHAFT PULLEY (See page EM-54)**
18. **REMOVE TIMING CHAIN COVER SUB-ASSEMBLY (w/ Oil Pump)**

(a) Remove the 23 bolts and 2 nuts as shown in the illustration.

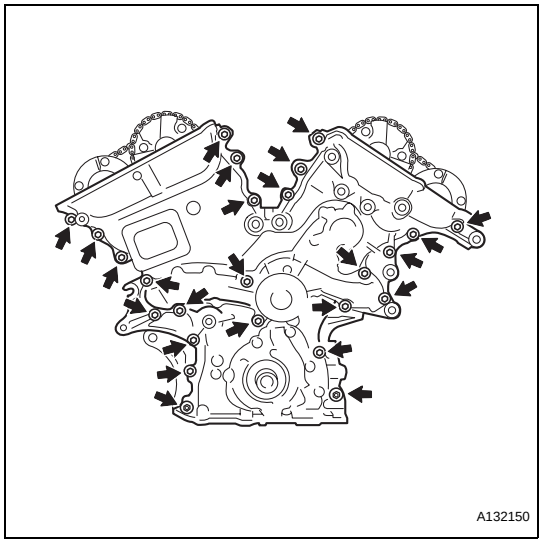

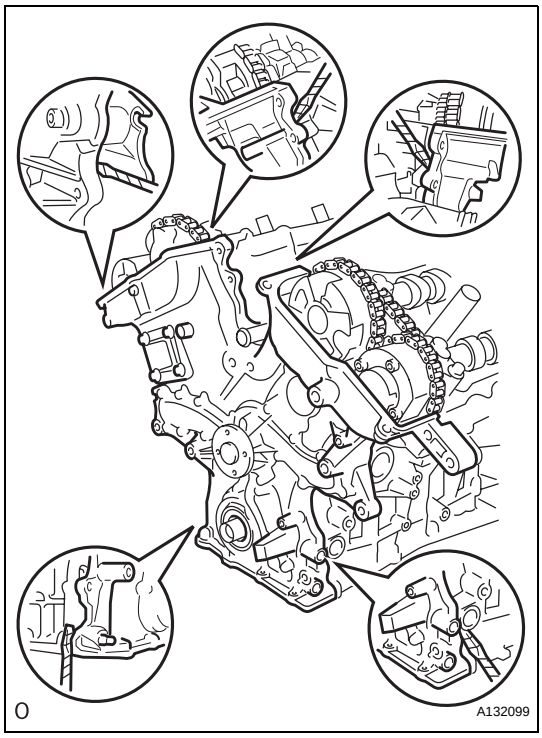

(b) Remove the timing chain cover by prying between the timing chain cover and cylinder head or cylinder block with a screwdriver.
HINT:
Tape the screwdriver tip before use.
NOTICE:
Do not damage the contact surfaces of the cylinder head, cylinder block and timing chain cover.

LU

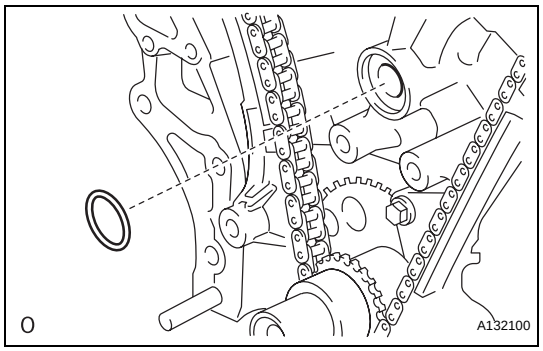

(c) Remove the gasket.

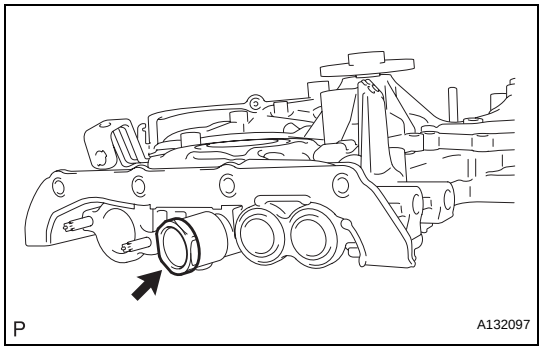

DISASSEMBLY

1. REMOVE OIL PUMP RELIEF VALVE

(a) Using a 27 mm socket wrench, remove the plug.

(b) Remove the valve spring and oil pump relief valve.

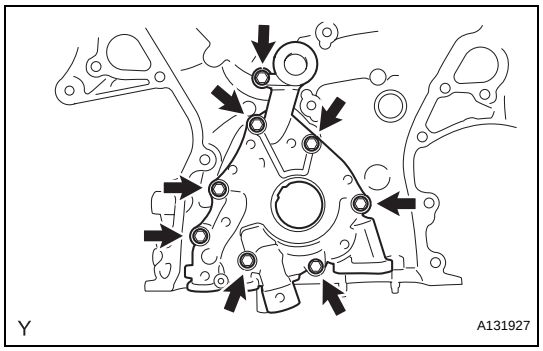

2. REMOVE OIL PUMP COVER

(a) Remove the 8 bolts, oil pump cover, drive rotor and driven rotor.

NOTICE:

Be careful not to damage the drive and driven rotors.

INSPECTION

1. INSPECT OIL PUMP RELIEF VALVE

(a) Coat the relief valve with engine oil and drop it into the relief valve hole.

(b) Check that the relief valve falls in smoothly by its own weight.
If it does not, replace the relief valve. If necessary, replace the timing chain cover.

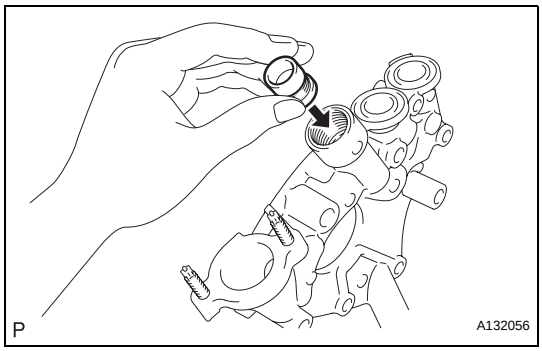

2. INSPECT OIL PUMP ROTOR SET

(a) Install the drive and driven rotors into the timing chain cover with the rotors' marks facing the cylinder block side. Check that the rotors revolve smoothly.

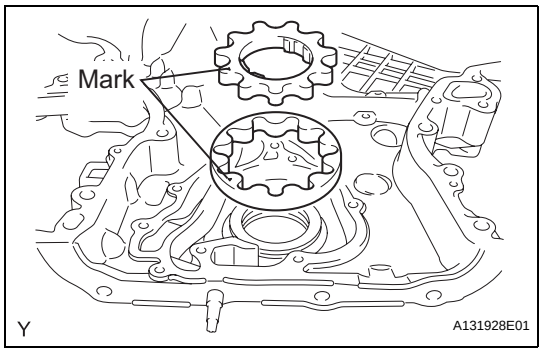

(b) Check the tip clearance.

(1) Using a feeler gauge, measure the clearance between the drive rotor and driven rotor tips.
Standard tip clearance:
0.060 to 0.160 mm (0.0024 to 0.0063 in.)
Maximum tip clearance:
0.16 mm (0.0063 in.)
If the tip clearance is greater than the maximum, replace the timing chain cover.

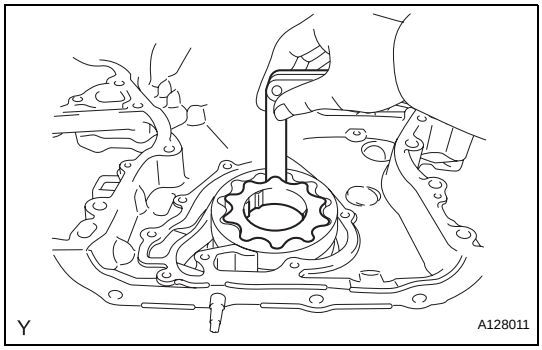

(c) Check the body clearance.

(1) Using a feeler gauge, measure the clearance between the timing chain cover and driven rotor.
Standard body clearance:
0.250 to 0.325 mm (0.0098 to 0.0128 in.)
Maximum body clearance:
0.325 mm (0.0128 in.)
If the body clearance is greater than the maximum, replace the timing chain cover.

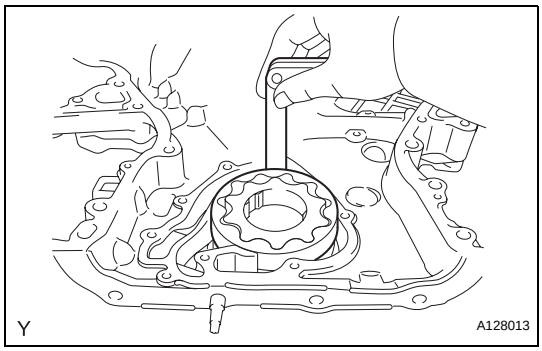

LU

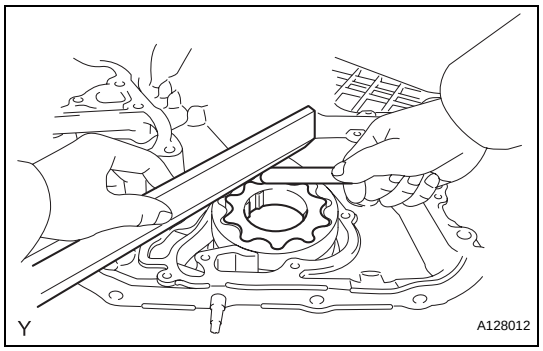

(d) Check the side clearance.
(1) Using a feeler gauge and precision straightedge, measure the clearance between the rotors and precision straightedge.
Standard side clearance:
0.030 to 0.090 mm (0.0012 to 0.0035 in.)
Maximum side clearance:
0.090 mm (0.0035 in.)
If the side clearance is greater than the maximum, replace the timing chain cover.

REPLACEMENT

1. REPLACE TIMING CHAIN COVER OIL SEAL

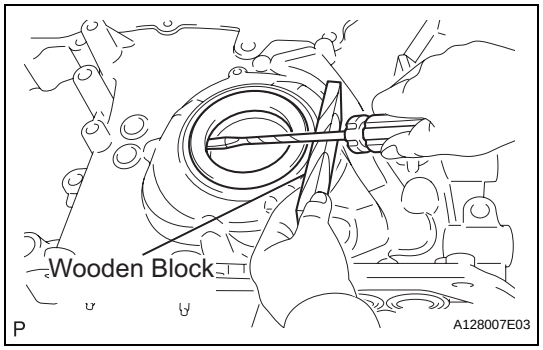

(a) Using a screwdriver, pry out the oil seal.
HINT:
Tape the screwdriver tip before use.
NOTICE:
Do not damage the surface of the oil seal press fit hole.

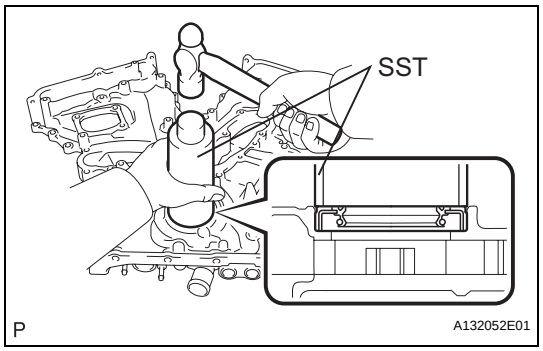

(b) Using SST and a hammer, tap in a new oil seal until its surface is flush with the timing chain cover edge.
SST 09316-60011 (09316-00011)
NOTICE:
- **Keep the lip free from foreign matter.**
- **Do not tap the oil seal at an angle.**
- **Make sure that the oil seal edge does not stick out of the timing chain case.**

(c) Apply MP grease to the lip of the oil seal.

REASSEMBLY

1. INSTALL OIL PUMP COVER

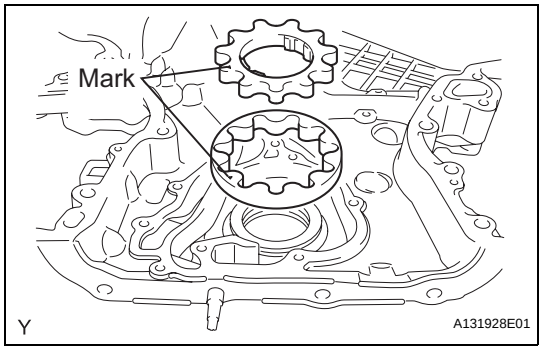

(a) Install the drive and driven rotors into the timing chain cover with the rotors' marks facing the cylinder block side. Check that the rotors revolve smoothly.

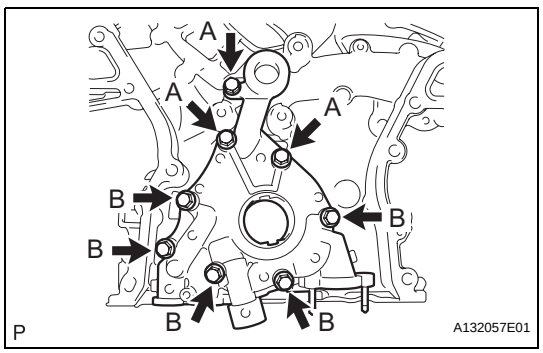

(b) Install the oil pump cover with the 8 bolts.
Torque: 9.0 N*m (92 kgf*cm, 80 in.*lbf)
HINT:
Bolt length:
22 mm (0.87 in.) for bolt A
40 mm (1.58 in.) for bolt B

2. INSTALL OIL PUMP RELIEF VALVE

(a) Coat the oil pump relief valve with engine oil.
(b) Install the relief valve and relief valve spring into the timing chain cover hole.

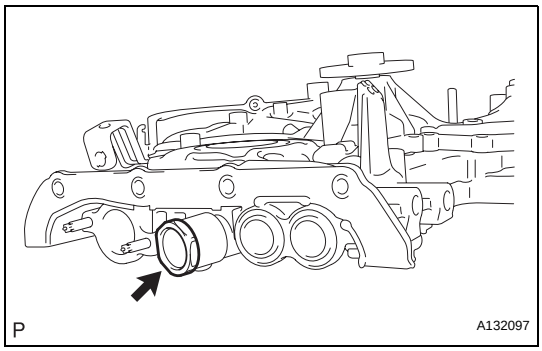

(c) Using a 27 mm socket wrench, install the plug.
Torque: 49 N*m (500 kgf*cm, 36 ft.*lbf)

INSTALLATION

1. INSTALL TIMING CHAIN COVER SUB-ASSEMBLY (w/ Oil Pump)

(a) Install a new gasket.

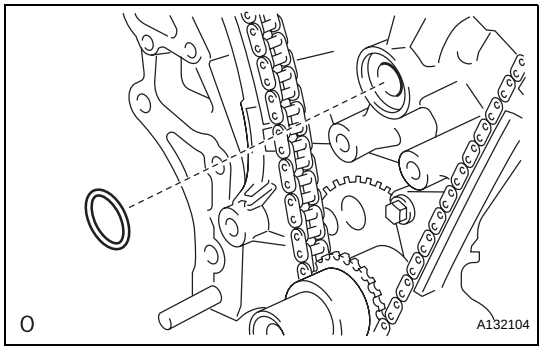

(b) Align the oil pump's drive rotor spline and the crankshaft as shown in the illustration.

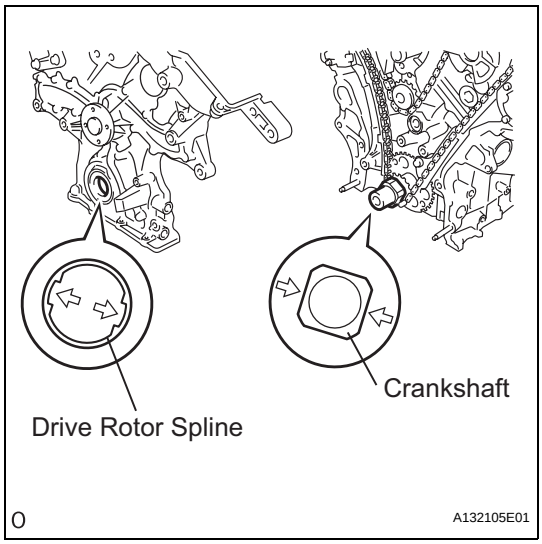

(c) Apply seal packing in a continuous bead to the engine unit as shown in the illustration.

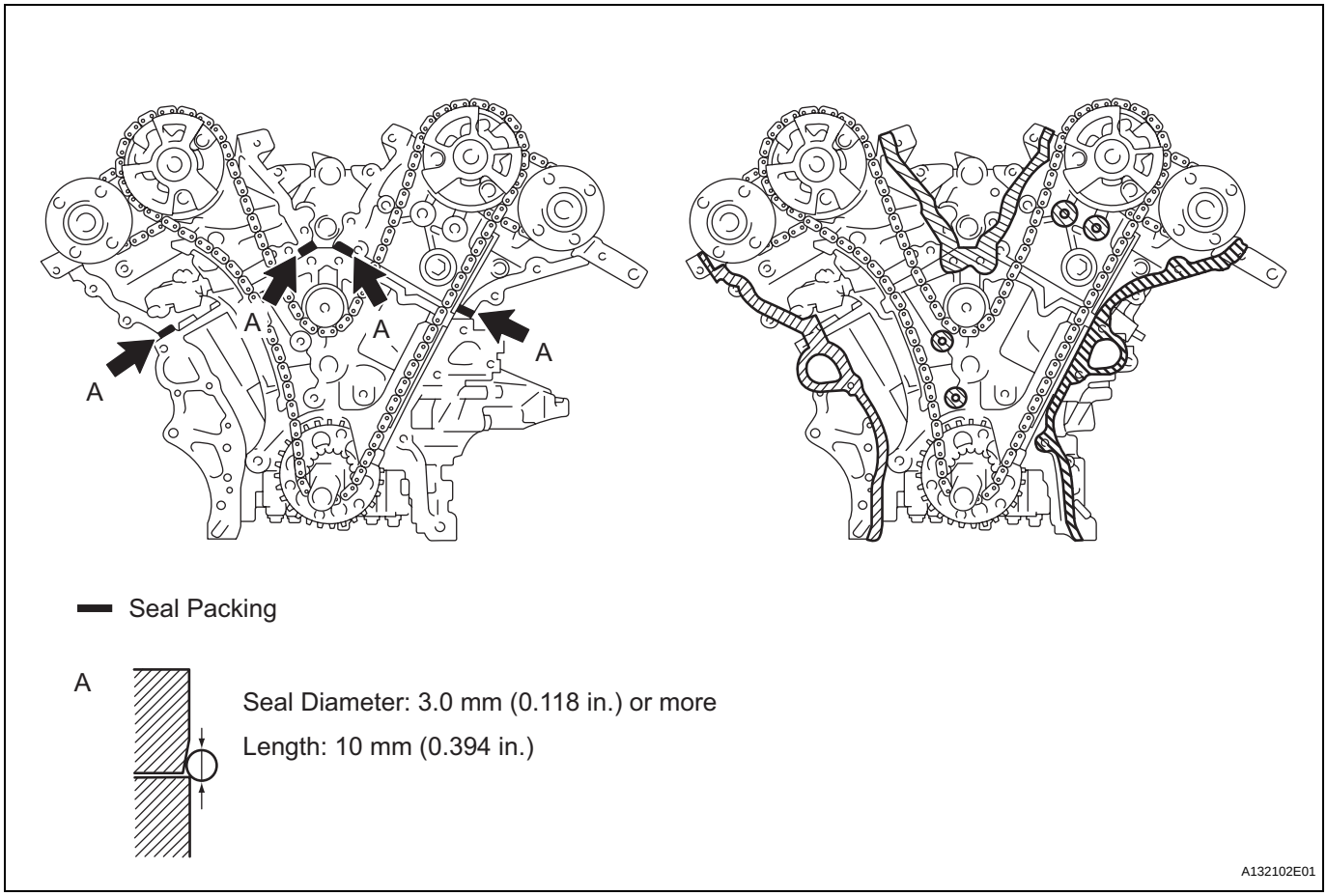

Seal packing:
Toyota Genuine Seal Packing Block, Three Bond 1207B or Equivalent.
Standard seal diameter:
3.0 mm (0.118 in.) or more
Standard length:
10 mm (0.394 in.)
NOTICE:

- **Be sure to clean and degrease the contact surfaces, especially the hatched areas in the illustration.**
- **When the contact surfaces are wet, wipe them off with an oil-free cloth before applying seal packing.**
- **Install the timing chin cover within 3 minutes and tighten the bolts within 15 minutes after applying seal packing.**
- **Do not start the engine for at least 2 hours after the installation.**

(d) Apply seal packing in a continuous line to the timing chain cover as shown in the illustration.

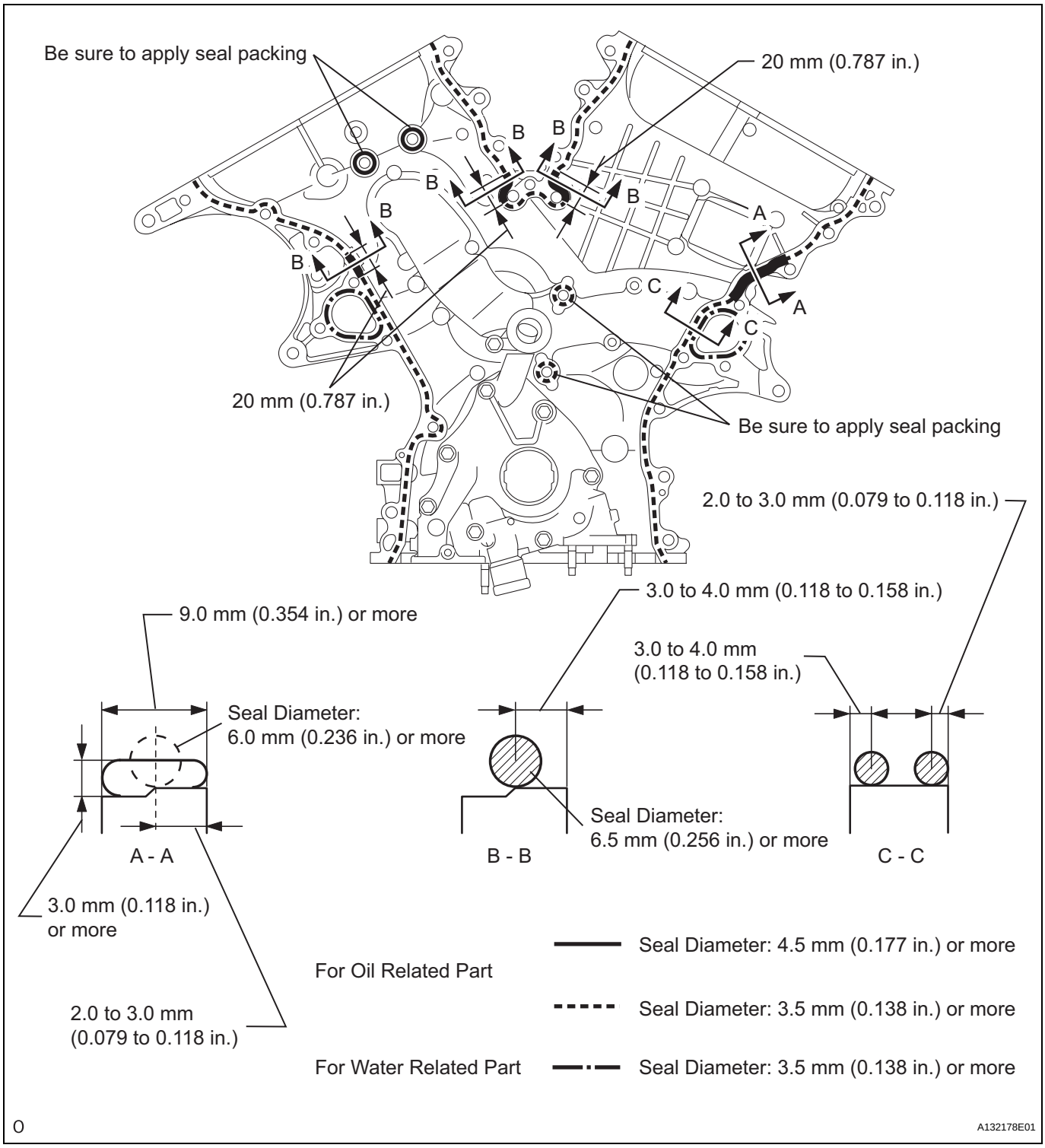

Seal packing:
For oil related part:
Toyota Genuine Seal Packing Black, Three Bond 1207B or Equivalent
For water related part:
Toyota Genuine Seal Packing 1282B, Three Bond 1282B or Equivalent

LU

Standard seal diameter

Position	Specified Condition
A - A	6.0 mm (0.236 in.)
B - B	6.5 mm (0.256 in.)
Continuous line area	4.5 mm (0.138 in.) or more
Dashed line area	3.5 mm (0.138 in.) or more
Alternate long and short dashed line area	3.5 mm (0.138 in.) or more

NOTICE:

- **When the contact surfaces are wet, wipe them off with an oil-free cloth before applying seal packing.**
- **Install the timing chain cover within 3 minutes and tighten the bolts within 15 minutes after applying seal packing.**
- **Do not start the engine for at least 2 hours after the installation.**

(e) Temporarily install the timing chain cover with the 23 bolts and 2 nuts.

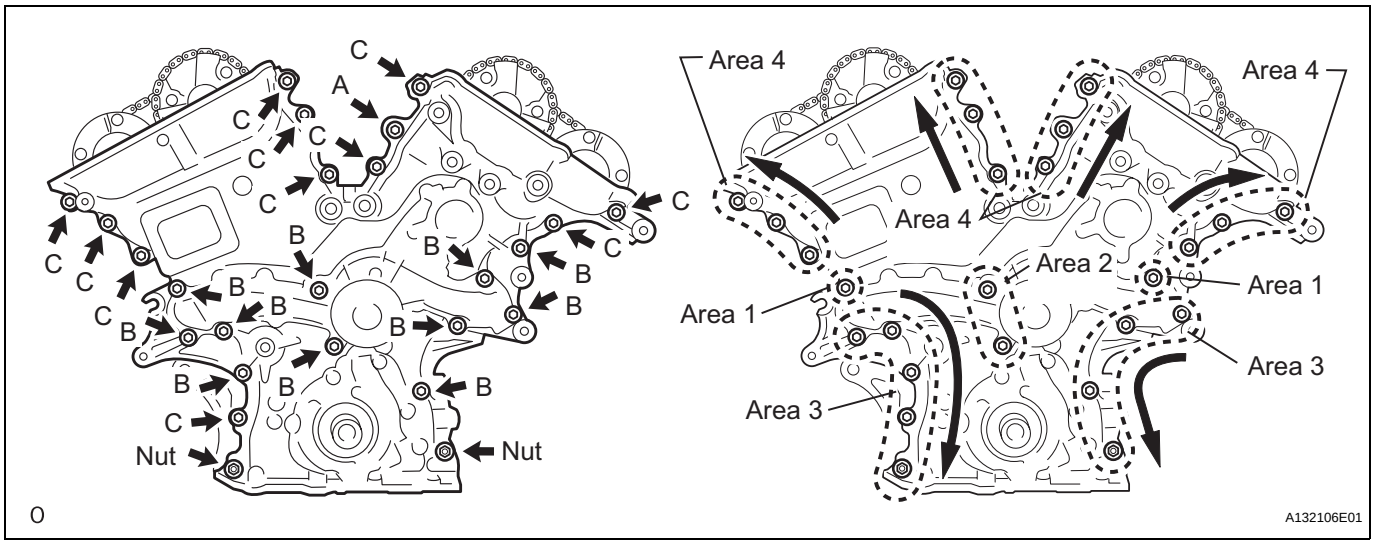

NOTICE:

Make sure there is no oil on the bolts. If there is oil on the bolts, clean them before installing them.

HINT:

Bolt length:

40 mm (1.57 in.) for bolt A

55 mm (2.17 in.) for bolt B

25 mm (0.98 in.) for bolt C

LU

(f) Tighten the bolts in this order: Area 1, Area 2, Area 3, Area 4.
Torque: 21 N*m (214 kgf*cm, 15 ft.*lbf) for Area 1, 2 bolt
21 N*m (214 kgf*cm, 15 ft.*lbf) for Area 3 bolt, nut
43 N*m (438 kgf*cm, 32 ft.*lbf) for Area 4 bolt A
21 N*m (214 kgf*cm, 15 ft.*lbf) for Area 4 except bolt A

2. **INSTALL CRANKSHAFT PULLEY (See page EM-126)**
3. **INSTALL CYLINDER HEAD COVER SUB-ASSEMBLY (for Bank 2) (See page EM-127)**
4. **INSTALL NO. 1 OIL PIPE (See page EM-128)**
5. **INSTALL CYLINDER HEAD COVER SUB-ASSEMBLY (for Bank 1) (See page EM-127)**
6. **INSTALL OIL PIPE (See page EM-127)**
7. **INSTALL WATER INLET HOUSING (See page CO-14)**
8. **INSTALL OIL PAN SUB-ASSEMBLY**

(a) Install 2 new O-rings to the timing chain cover.

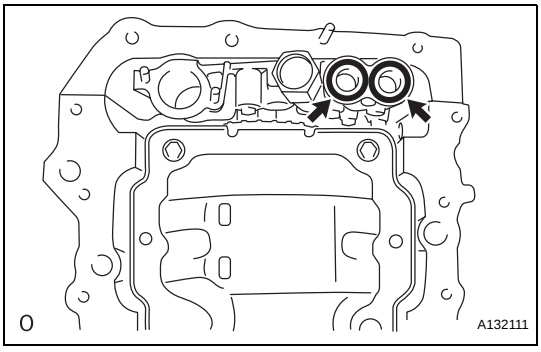

(b) Apply seal packing in a continuous line as shown in the illustration.
Seal packing:
Toyota Genuine Seal Packing Black, Three Bond 1207B or Equivalent
Standard seal diameter:
3.0 to 4.0 mm (0.118 to 0.156 in.)
NOTICE:
- **Remove any oil from the contact surface.**
- **Install the oil pan within 3 minutes and tighten the bolts within 15 minutes after applying seal packing.**
- **Do not start the engine for at least 2 hours after the installation.**

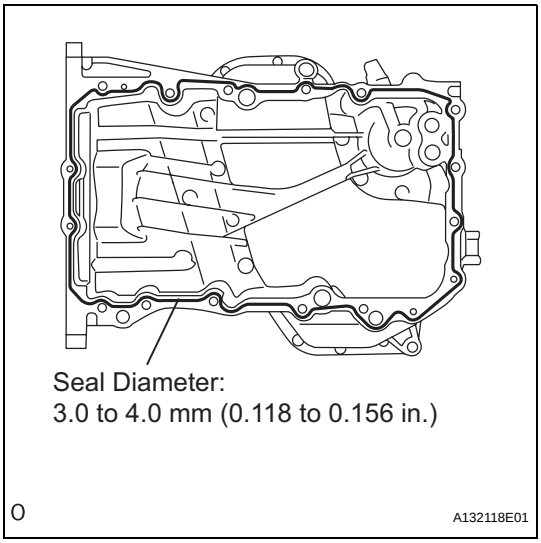

LU

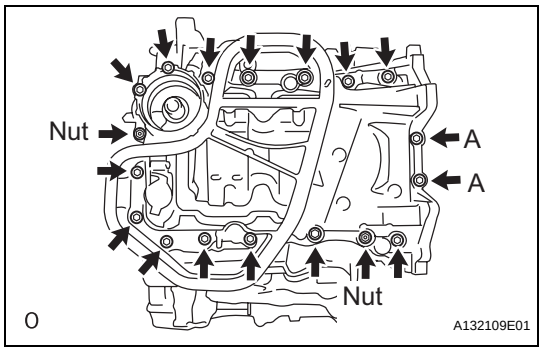

(c) Install the oil pan with the 16 bolts and 2 nuts.
Torque: 10 N*m (102 kgf*cm, 7 ft.*lbf) for bolt A
21 N*m (214 kgf*cm, 15 ft.*lbf) for except bolt A, nut

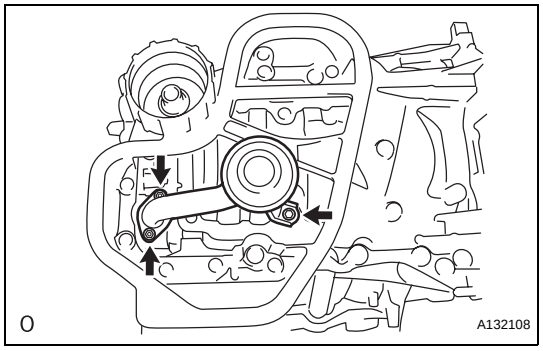

9. INSTALL OIL STRAINER SUB-ASSEMBLY

(a) Install a new gasket and the oil strainer with the bolt and 2 nuts.
Torque: 10 N*m (102 kgf*cm, 7 ft.*lbf)

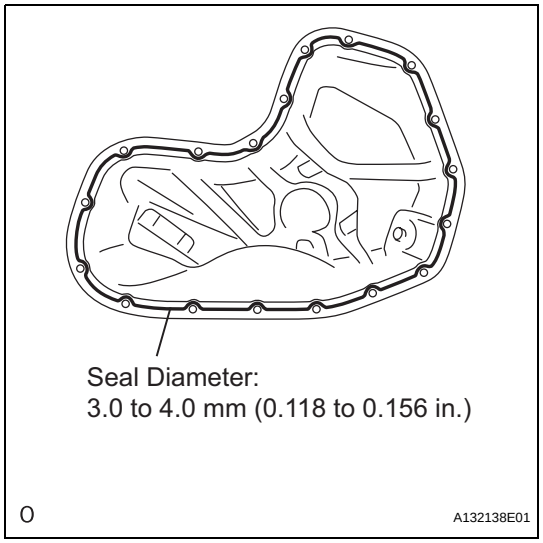

10. INSTALL NO. 2 OIL PAN SUB-ASSEMBLY

(a) Apply seal packing in a continuous line as shown in the illustration.
Seal packing:
Toyota Genuine Seal Packing Black, Three Bond 1207B or Equivalent
Standard seal diameter:
3.0 to 4.0 mm (0.118 to 0.156 in.)
NOTICE:
- **Remove any oil from the contact surface.**
- **Install the oil pan within 3 minutes and tighten the bolts within 10 minutes after applying seal packing.**
- **Do not start the engine for at least 2 hours after the installation.**

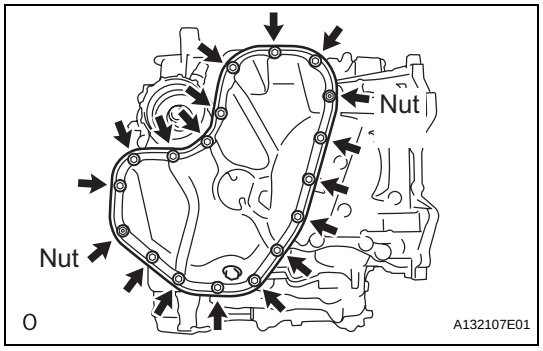

(b) Install the oil pan with the 16 bolts and 2 nuts.
Torque: 10 N*m (102 kgf*cm, 7 ft.*lbf)

(c) Install a new gasket and the drain plug.
Torque: 40 N*m (408 kgf*cm, 30 ft.*lbf)

11. INSTALL OIL FILTER ELEMENT KIT (See page LU-5)

12. INSTALL OIL FILTER CAP ASSEMBLY (See page LU-5)

13. INSTALL OIL DIPSTICK GUIDE

(a) Install a new O-ring to the dipstick guide.

LU

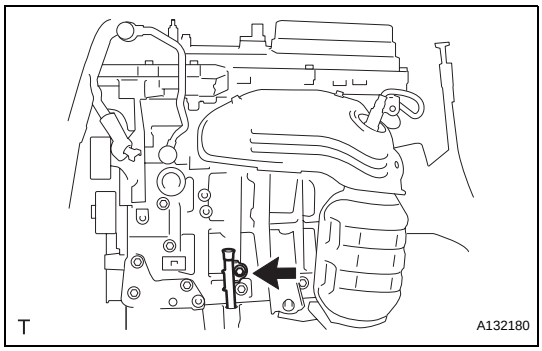

(b) Install the dipstick guide with the bolt.
Torque: 21 N*m (214 kgf*cm, 15 ft.*lbf)

14. INSTALL NO. 2 OIL DIPSTICK GUIDE

(a) Install a new O-ring to the dipstick guide.

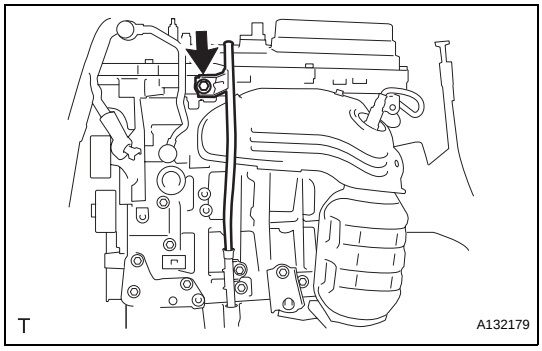

(b) Install the dipstick guide with the bolt.
Torque: 21 N*m (214 kgf*cm, 15 ft.*lbf)

(c) Install the oil dipstick.

15. REMOVE ENGINE FROM STAND

16. INSTALL ENGINE ASSEMBLY

(a) Install the engine to the vehicle (see page EM-31).

17. CONNECT CABLE TO NEGATIVE BATTERY TERMINAL

OIL PUMP

COMPONENTS

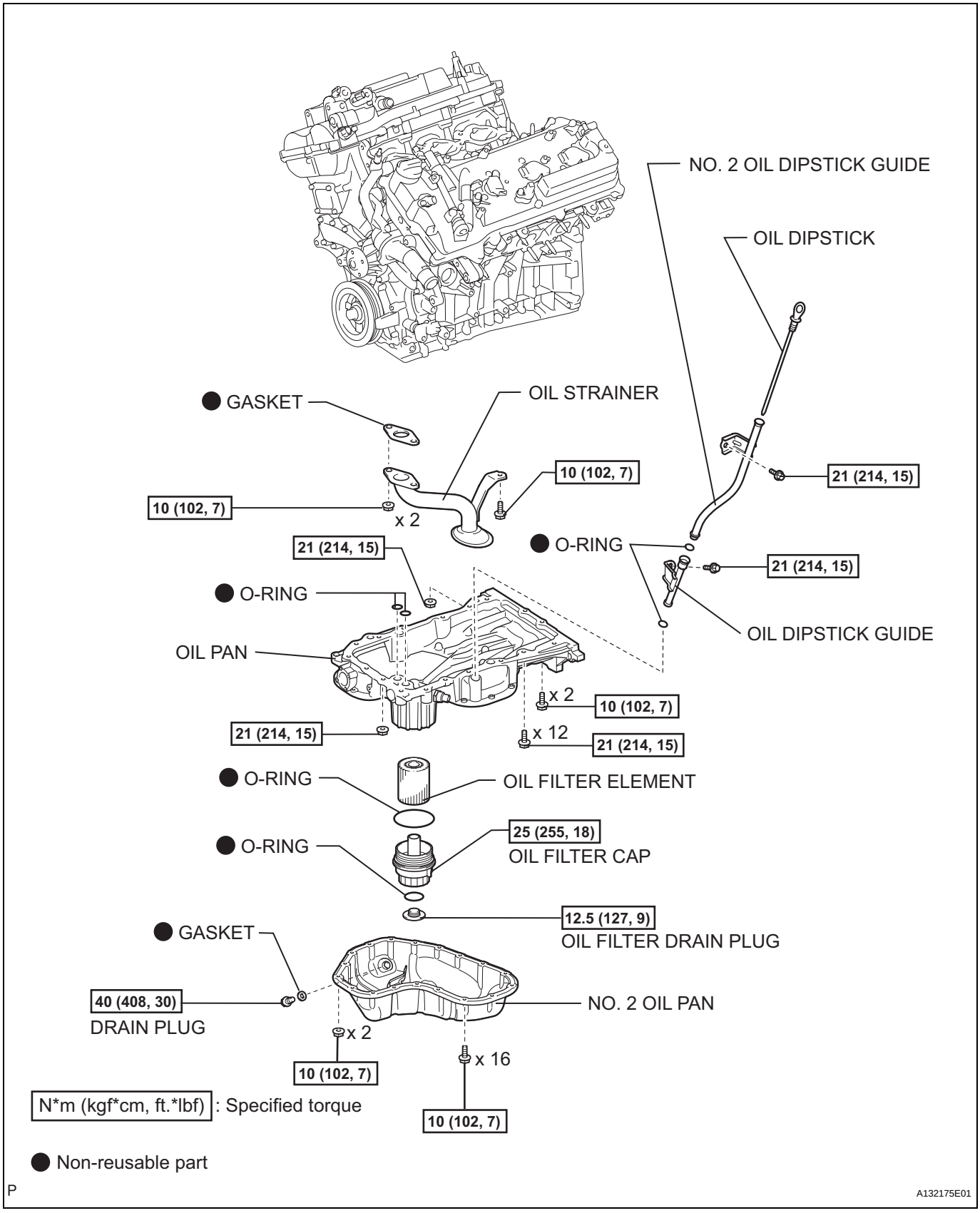

LU

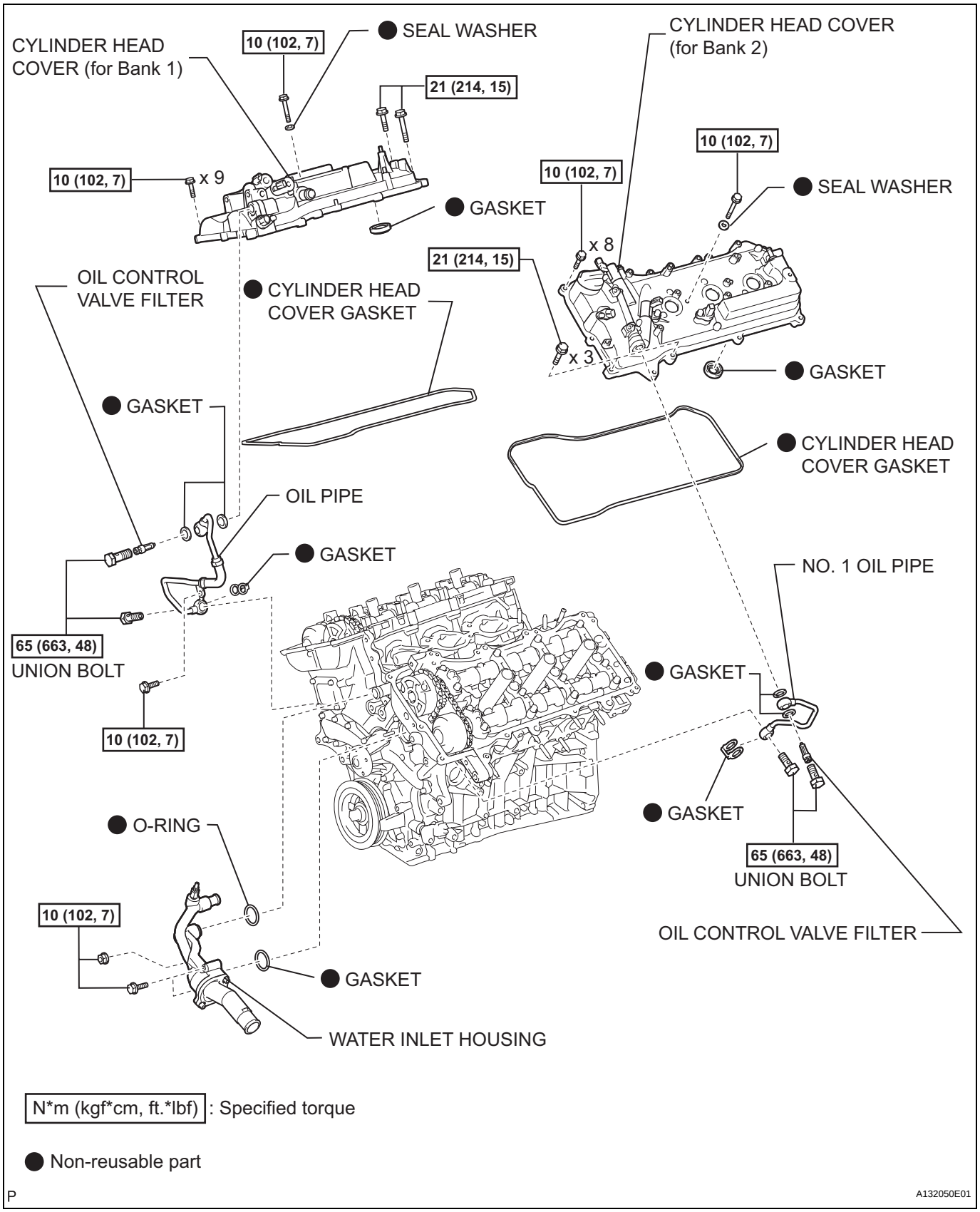
CYLINDER HEAD COVER (for Bank 1)
10 (102, 7)
SEAL WASHER
21 (214, 15)
10 (102, 7)
x 9
GASKET
CYLINDER HEAD COVER (for Bank 2)
10 (102, 7)
10 (102, 7)
SEAL WASHER
x 8
21 (214, 15)
x 3
GASKET
OIL CONTROL VALVE FILTER
CYLINDER HEAD COVER GASKET
GASKET
CYLINDER HEAD COVER GASKET
OIL PIPE
GASKET
NO. 1 OIL PIPE
65 (663, 48)
UNION BOLT
10 (102, 7)
GASKET
GASKET
65 (663, 48)
UNION BOLT
O-RING
10 (102, 7)
OIL CONTROL VALVE FILTER
GASKET
WATER INLET HOUSING
N*m (kgf*cm, ft.*lbf) : Specified torque
Non-reusable part
P
A132050E01

LU

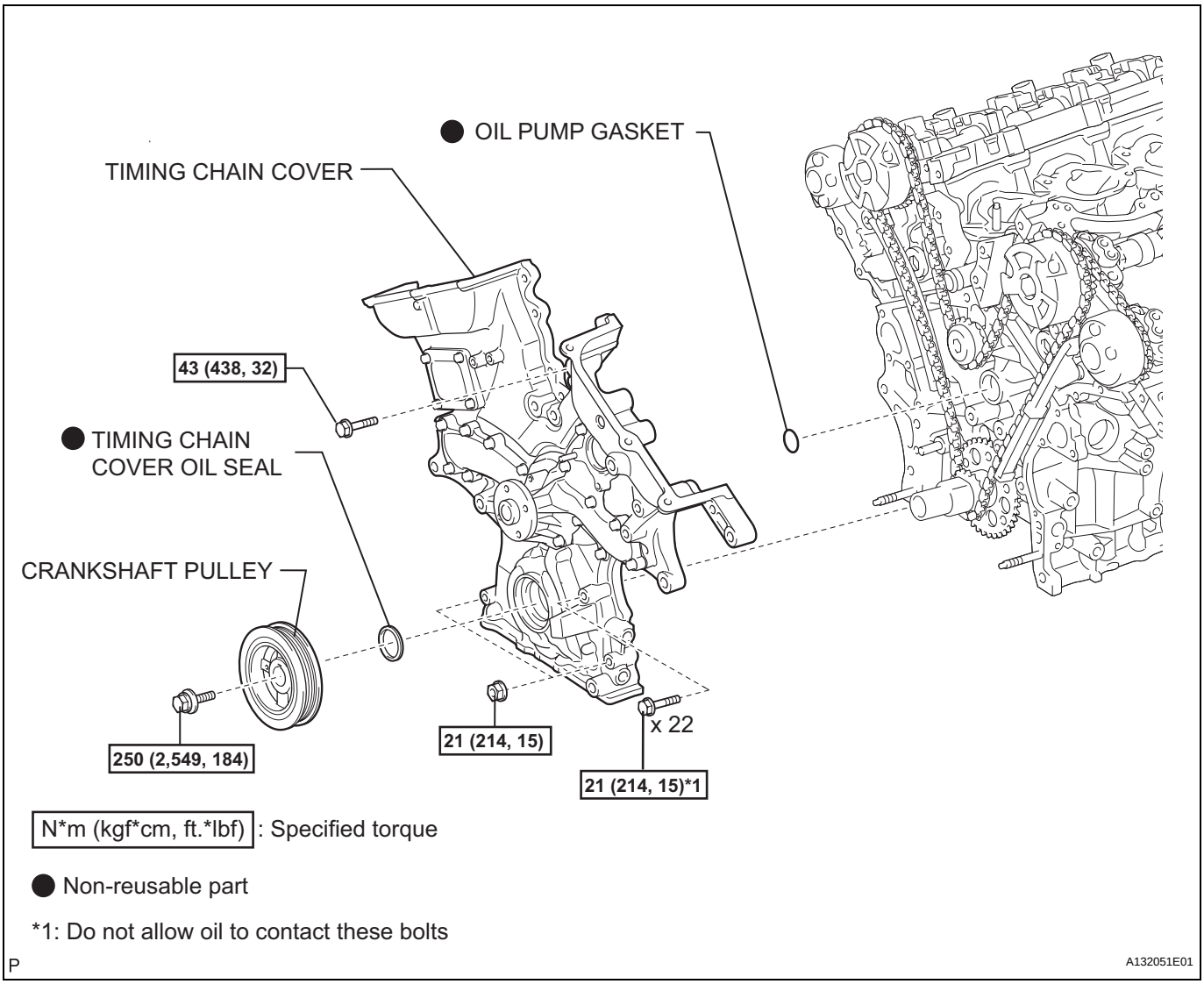
OIL PUMP GASKET
TIMING CHAIN COVER
43 (438, 32)
TIMING CHAIN COVER OIL SEAL
CRANKSHAFT PULLEY
250 (2,549, 184)
21 (214, 15)
x 22
21 (214, 15)*1
N*m (kgf*cm, ft.*lbf) : Specified torque
Non-reusable part
*1: Do not allow oil to contact these bolts
P
A132051E01

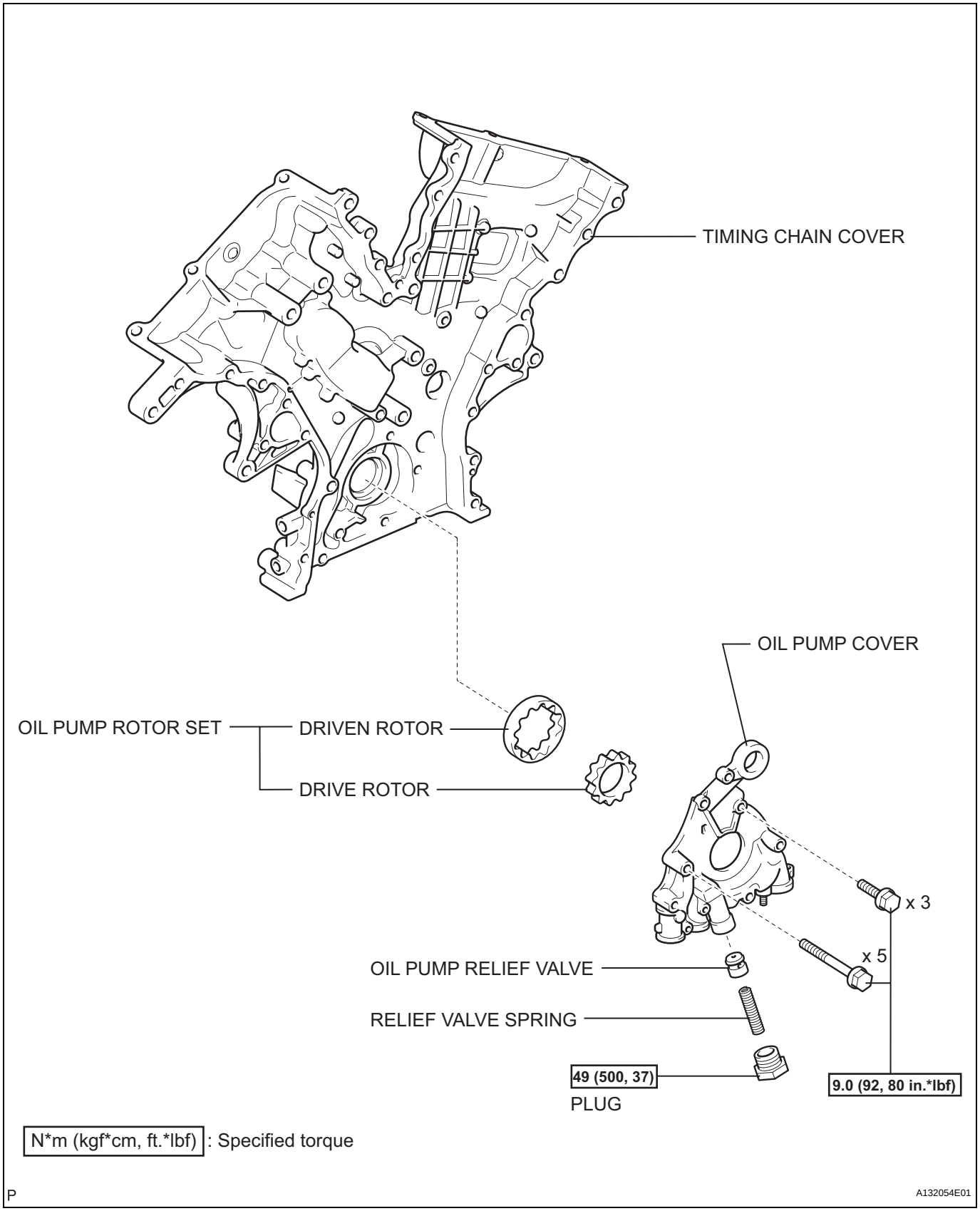
TIMING CHAIN COVER
OIL PUMP COVER
OIL PUMP ROTOR SET
DRIVEN ROTOR
DRIVE ROTOR
x 3
x 5
OIL PUMP RELIEF VALVE
RELIEF VALVE SPRING
49 (500, 37)
PLUG
9.0 (92, 80 in.*lbf)
N*m (kgf*cm, ft.*lbf) : Specified torque
P
A132054E01

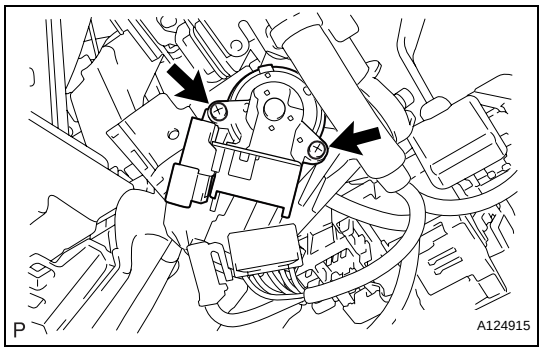

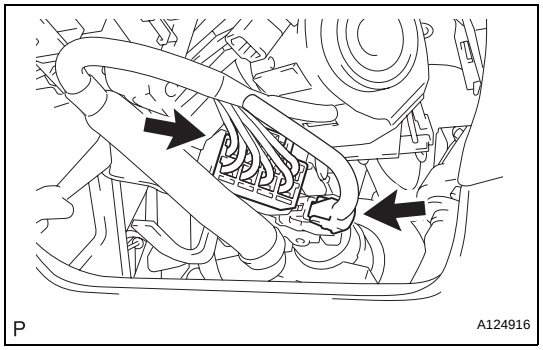

INSTALLATION

1. INSTALL IGNITION SWITCH ASSEMBLY

(a) Install the ignition switch with the 2 screws.

(b) Connect the ignition key cylinder light connector.

(c) Connect the ignition switch connector.

2. INSTALL STEERING COLUMN COVER LOWER

(a) Install the steering column cover lower (see page SR-20).

3. CONNECT CABLE TO NEGATIVE BATTERY TERMINAL

IGNITION SWITCH

COMPONENTS

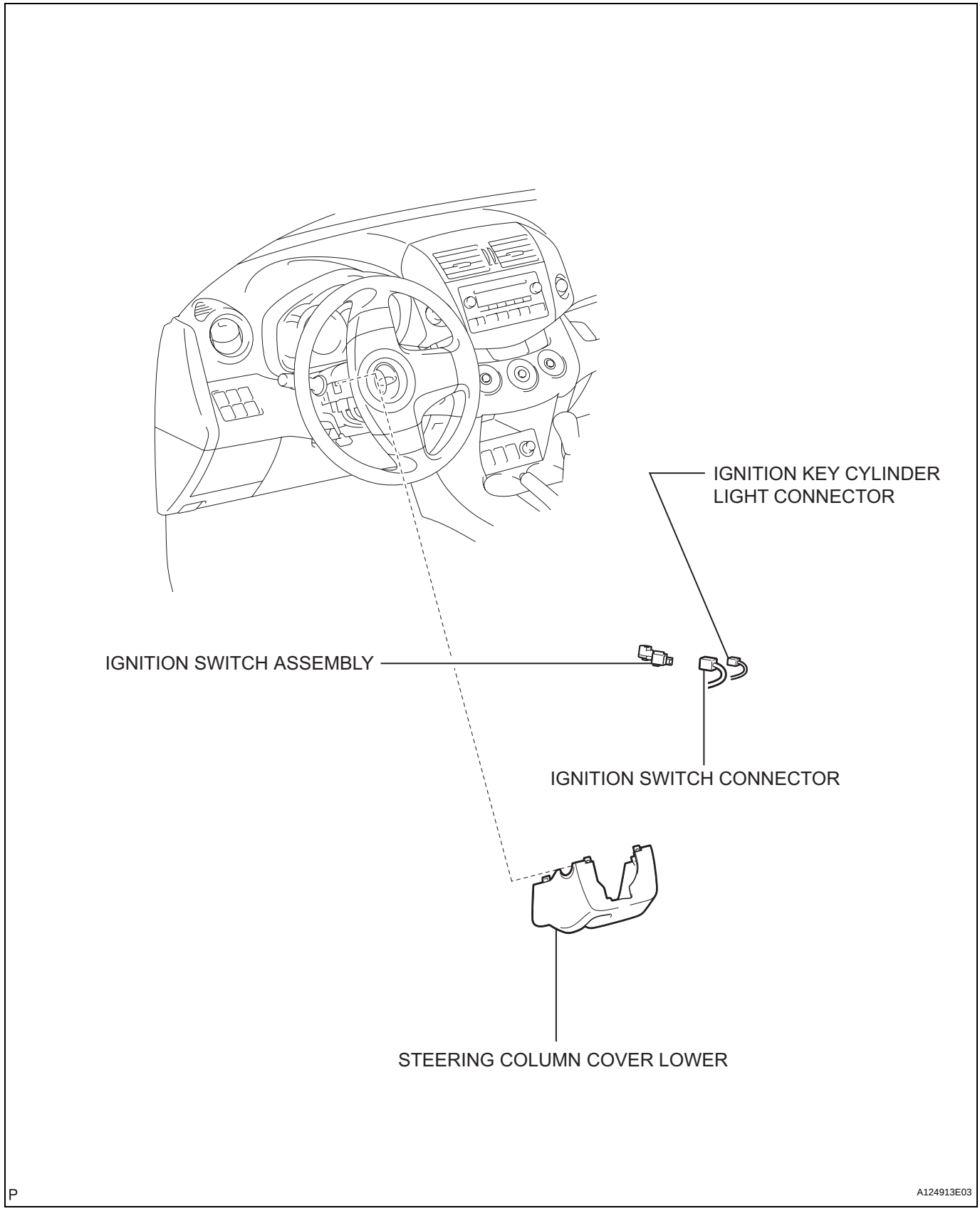

REMOVAL

1. **DISCONNECT CABLE FROM NEGATIVE BATTERY TERMINAL**
   CAUTION:
   Wait at least 90 seconds after disconnecting the cable from the negative (-) battery terminal to prevent airbag and seat belt pretensioner activation.
2. **REMOVE STEERING COLUMN COVER LOWER**
   (a) Remove the steering column cover lower (see page SR-12).
3. **REMOVE IGNITION SWITCH ASSEMBLY**
   (a) Disconnect the ignition switch connector.

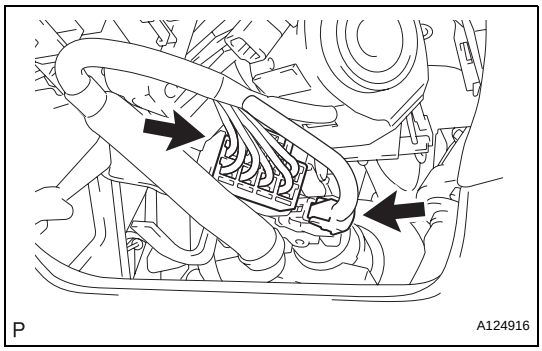

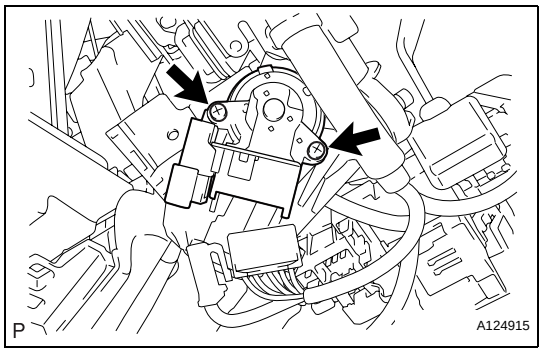

   (b) Disconnect the ignition key cylinder light connector.
   (c) Remove the 2 screws and ignition switch.

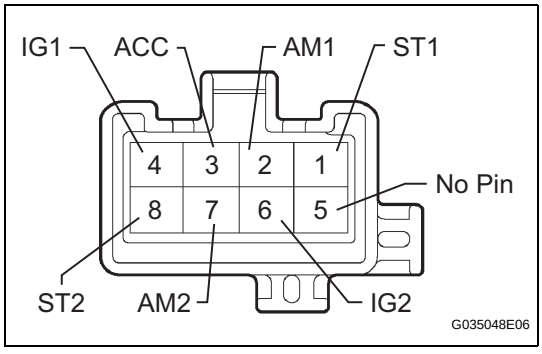

INSPECTION

1. **INSPECT IGNITION SWITCH ASSEMBLY**
   (a) Measure the resistance of the switch.
   Standard resistance

Tester Connection	Switch Condition	Specified Condition
-	LOCK	10 kΩ or higher
2 (AM1) - 3 (ACC)	ACC	Below 1 Ω
2 (AM1) - 3 (ACC) 2 (AM1) - 4 (IG1) 6 (IG2) - 7 (AM2)	ON	Below 1 Ω
1 (ST1) - 2 (AM1) 1 (ST1) - 4 (IG1) 6 (IG2) - 7 (AM2) 6 (IG2) - 8 (ST2)	START	Below 1 Ω

If the result is not as specified, replace the switch assembly.

REMOVAL

1. **DISCONNECT CABLE FROM NEGATIVE BATTERY TERMINAL**
   CAUTION:
   Wait at least 90 seconds after disconnecting the cable from the negative (-) battery terminal to prevent airbag and seat belt pretensioner activation.
2. **REMOVE BATTERY CLAMP SUB-ASSEMBLY**
   (a) Loosen the bolt and nut, and remove the battery clamp.
3. **REMOVE BATTERY INSULATOR**
4. **REMOVE BATTERY**
5. **REMOVE BATTERY TRAY**
6. **REMOVE FRONT BATTERY CARRIER**
   (a) Disconnect the 2 clamps of the engine wire.
   (b) Remove the 4 bolts and front battery carrier.

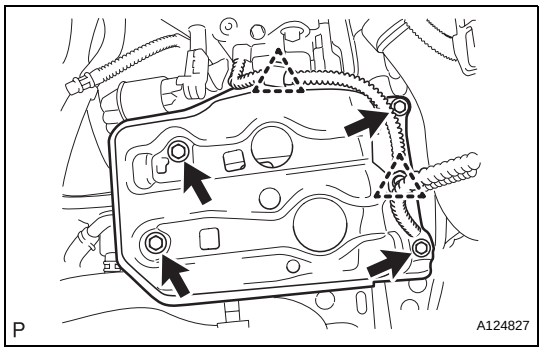

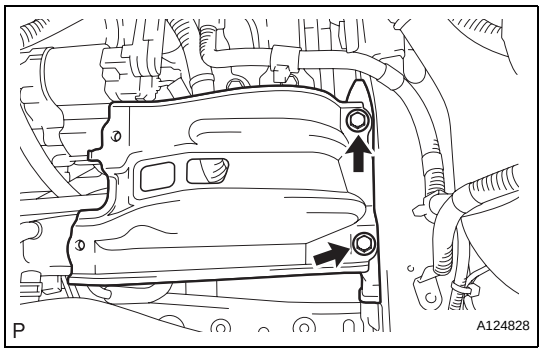

7. **REMOVE BATTERY BRACKET REINFORCEMENT**
   (a) Remove the 2 bolts and battery bracket reinforcement.
8. **REMOVE STARTER ASSEMBLY**
   (a) Disconnect the starter connector.
   (b) Open the terminal cap, remove the nut and disconnect the starter wire.

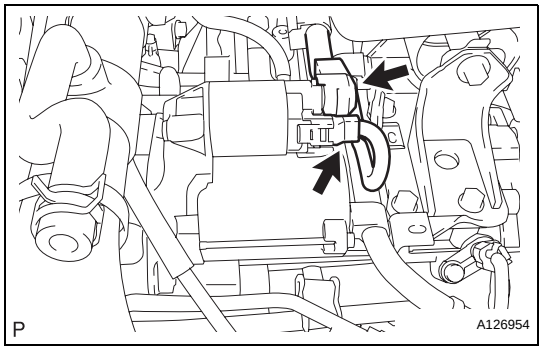

ST

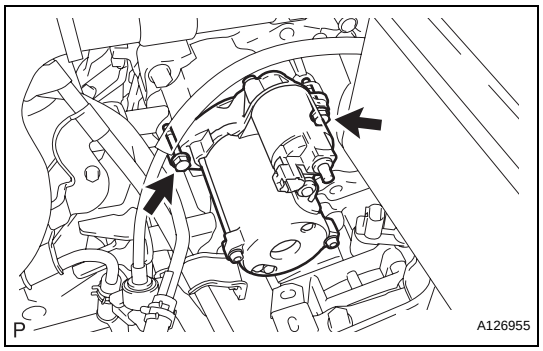

(c) Remove the 2 bolts and starter.

DISASSEMBLY

1. REMOVE MAGNETIC SWITCH ASSEMBLY

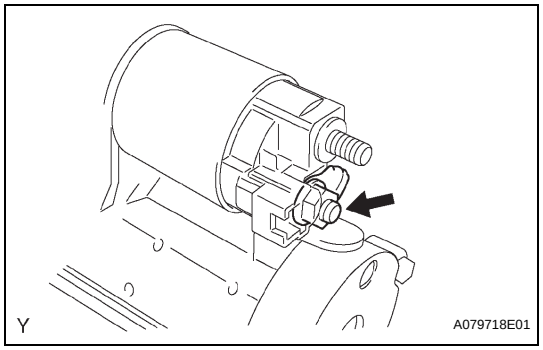

(a) Remove the nut and disconnect the lead wire from the magnetic switch assembly.

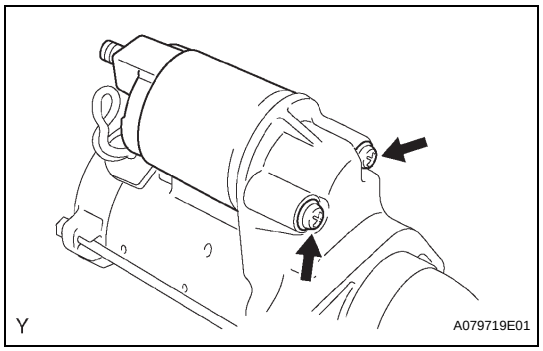

(b) Remove the 2 screws holding the magnetic switch assembly to the starter drive housing assembly.
(c) Remove the magnetic switch assembly.
(d) Remove the return spring and plunger from the starter drive housing assembly.

2. REMOVE STARTER YOKE ASSEMBLY

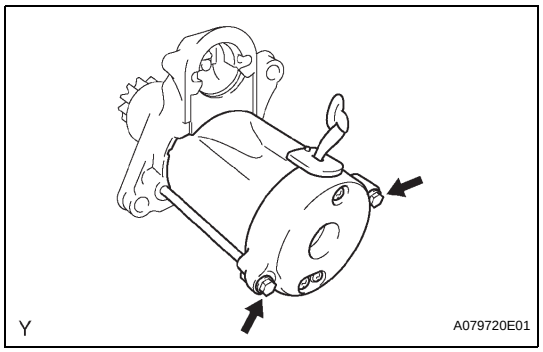

(a) Remove the 2 through-bolts, and pull out the starter yoke assembly together with the starter commutator end frame assembly.

3. REMOVE STARTER COMMUTATOR END FRAME ASSEMBLY

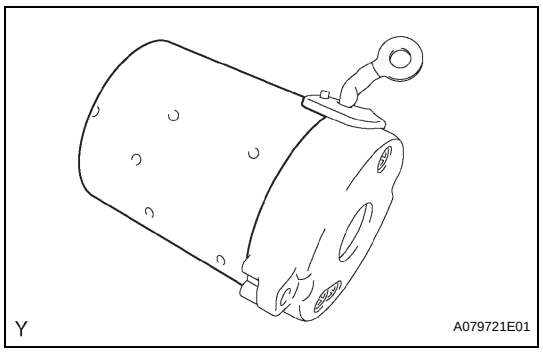

(a) Remove the starter commutator end frame assembly from the starter yoke assembly.

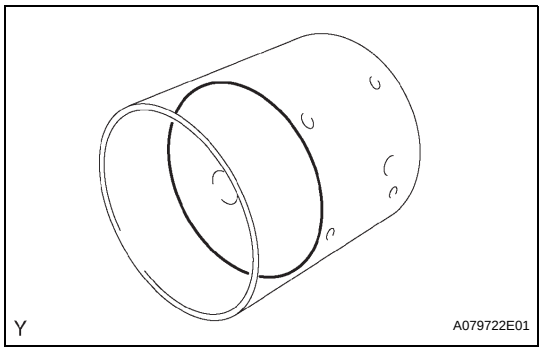

4. REMOVE STARTER ARMATURE PLATE

(a) Remove the starter armature plate from the starter yoke assembly.

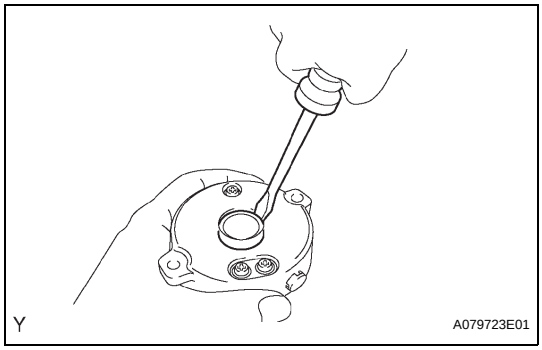

5. REMOVE STARTER COMMUTATOR END FRAME COVER

(a) Using a screwdriver, pry out the starter commutator end frame cover.

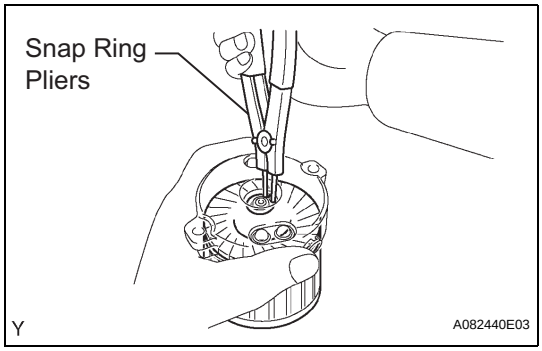

6. REMOVE STARTER ARMATURE ASSEMBLY

(a) Using snap ring pliers, remove the snap ring and plate washer.

(b) Remove the starter armature assembly from the starter commutator end frame assembly.

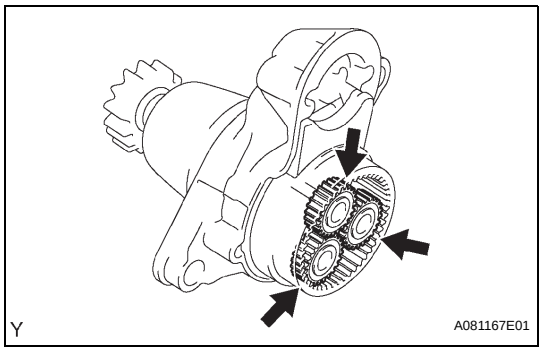

7. REMOVE PLANETARY GEAR

(a) Remove the 3 planetary gears from the starter drive housing assembly.

INSPECTION

1. INSPECT STARTER ASSEMBLY

CAUTION:

These tests must be performed within 3 to 5 seconds to avoid burning out the coil.

(a) Perform the pull-in test.

(1) Disconnect the lead wire from terminal C.

(2) Connect the battery to the magnetic switch assembly as shown in the illustration. Check that the clutch pinion gear extends.
If the clutch pinion gear does not move, replace the magnetic switch assembly.

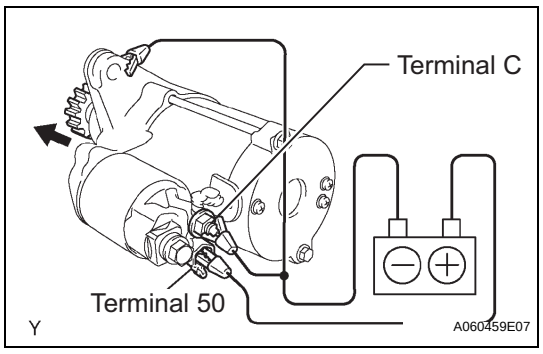

(b) Perform the hold-in test.

(1) Maintain the battery connections of the pull-in test above, but disconnect the negative (-) lead from terminal C. Check that the pinion gear remains extended.
If the clutch pinion gear returns inward, replace the magnetic switch assembly.

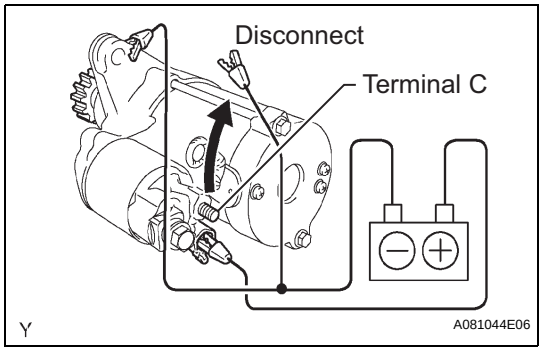

(c) Check the clutch pinion gear return.

(1) Disconnect the negative (-) lead from the switch body. Check that the clutch pinion gear returns.
If the clutch pinion gear does not return, replace the magnetic switch assembly.

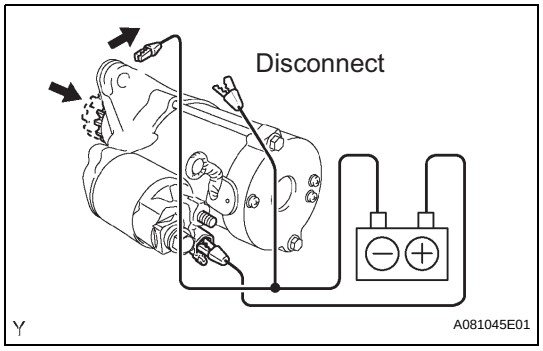

(d) Perform the no-load performance test.

(1) Connect the lead wire to terminal C. Make sure that the lead is not grounded.
Torque: 10 N*m (102 kgf*cm, 7 ft.*lbf)

(2) Clamp the starter in a vise.

(3) Connect the battery and an ammeter to the starter as shown in the illustration.

(4) Check that the starter rotates smoothly and steadily while the pinion gear is moving out. Then measure the current.
Standard current:
90 A or less at 11.5 V
If the test result is not as specified, overhaul the starter assembly.

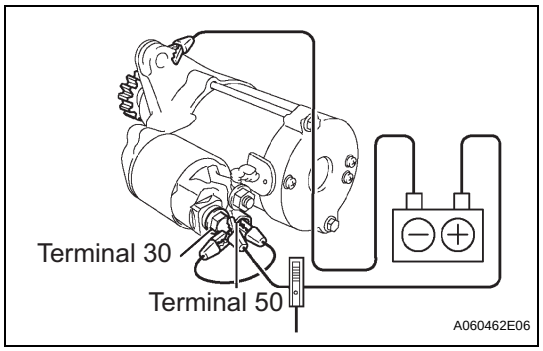

ST

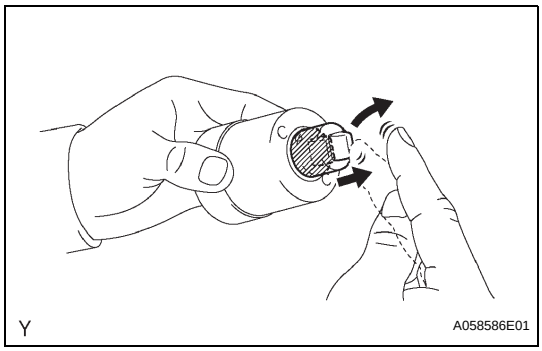

2. INSPECT MAGNETIC SWITCH ASSEMBLY

(a) Check the plunger.

(1) Push in the plunger and check that it returns quickly to its original position.
If necessary, replace the magnetic switch assembly.

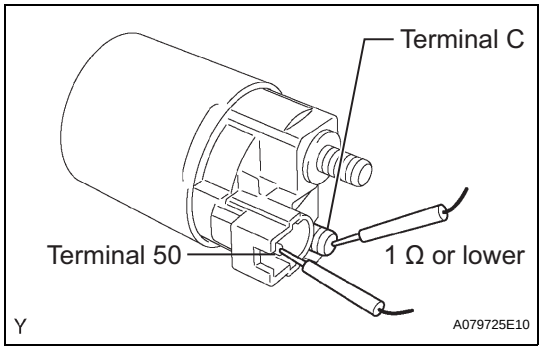

(b) Check if the pull-in coil has an open circuit.

(1) Measure the resistance between terminals 50 and C.
Standard resistance:
1 Ω or lower
If the result is not as specified, replace the magnetic switch assembly.

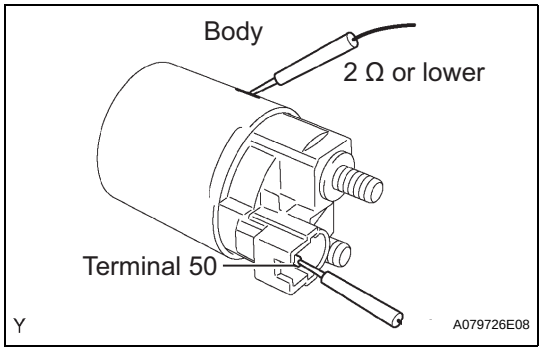

(c) Check if the hold-in coil has an open circuit.

(1) Measure the resistance between terminal 50 and the switch body.
Standard resistance:
2 Ω or lower
If the result is not as specified, replace the magnetic switch assembly.

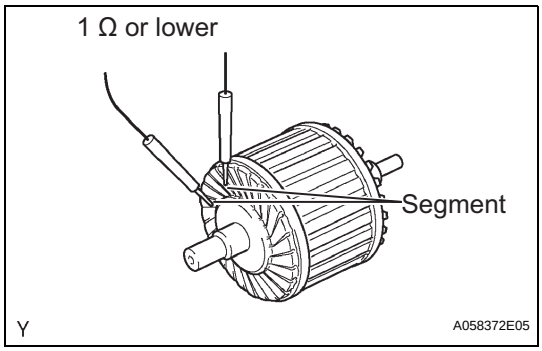

3. INSPECT STARTER ARMATURE ASSEMBLY

(a) Check if the commutator has an open circuit.

(1) Measure the resistance between the segments of the commutator.
Standard resistance:
1 Ω or lower
If the result is not as specified, replace the starter armature assembly.

ST

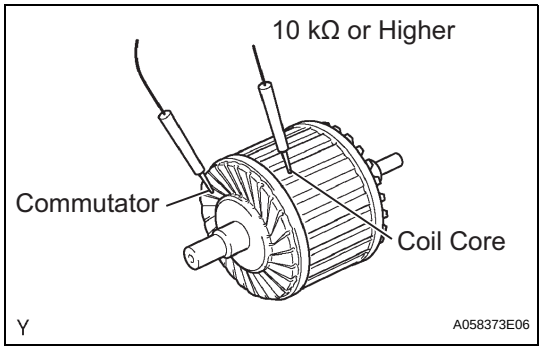

(b) Check if the commutator is grounded.

(1) Measure the resistance between the commutator and armature coil core.
Standard resistance:
10 kΩ or higher
If the result is not as specified, replace the starter armature assembly.

(c) Check the commutator for contamination and burns on its surface.
If the surface is dirty or burnt, correct it with sandpaper (No. 400) or a lathe.

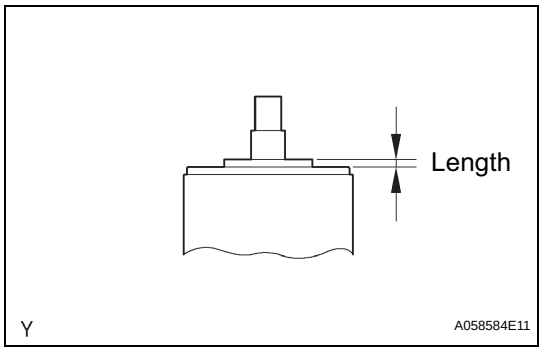

(d) Using a vernier caliper, measure the commutator's length.
Standard length:
3.1 mm (0.122 in.)
Maximum length:
3.8 mm (0.150 in.)
If the length is greater than the maximum, replace the starter armature assembly.

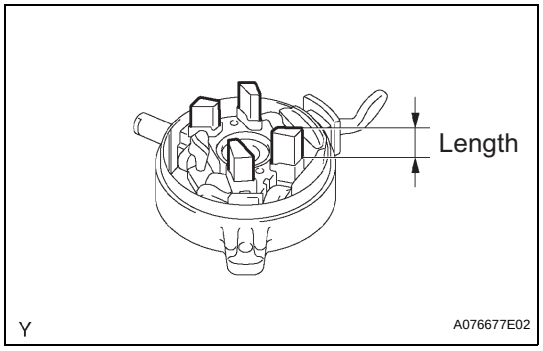

4. INSPECT STARTER COMMUTATOR END FRAME ASSEMBLY

(a) Using a vernier caliper, measure the brush length.
Standard length:
9.0 mm (0.354 in.)
Minimum length:
4.0 mm (0.158 in.)
If the length is less than the minimum, replace the starter commutator end frame assembly.

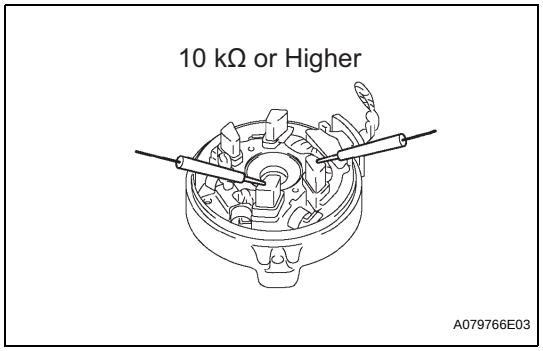

(b) Check the brush insulation.
(1) Measure the resistance between the positive (+) and negative (-) brush.
Standard resistance:
10 kΩ or higher
If the result is not as specified, repair or replace the starter commutator end frame assembly.

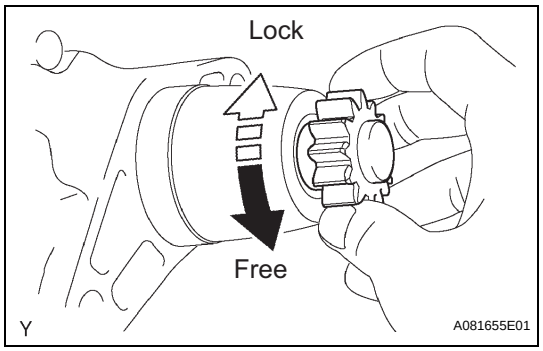

5. INSPECT STARTER CLUTCH

(a) Check the starter clutch.
(1) Rotate the clutch pinion gear counterclockwise and check that it turns freely. Try to rotate the clutch pinion gear clockwise and check that it locks.
If necessary, replace the starter drive housing assembly.

REASSEMBLY

HINT:
Use high-temperature grease to lubricate the bearings, gears, return spring and steel ball when assembling the starter.

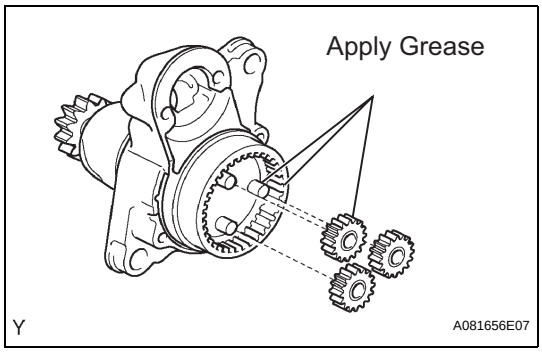

1. INSTALL PLANETARY GEAR

(a) Apply grease to the planetary gears and pin parts of the planetary shaft.
(b) Install the 3 planetary gears.

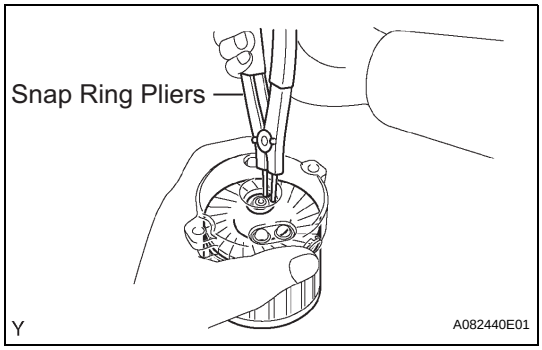

2. INSTALL STARTER ARMATURE ASSEMBLY

(a) Apply grease to the plate washers and the armature shaft.
(b) Install the starter armature assembly to the starter commutator end frame assembly.
(c) Using snap ring pliers, install the plate washer and a new snap ring.

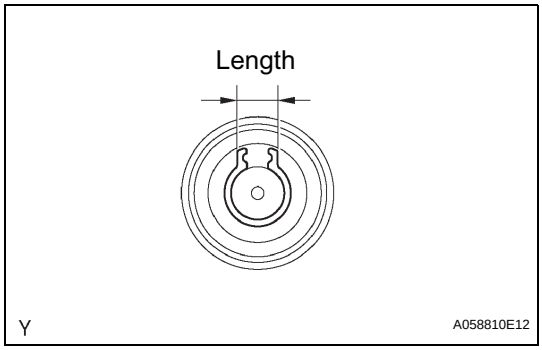

(d) Using a vernier caliper, measure the length of the snap ring.
Maximum length:
5.0 mm (0.197 in.)
If the length is greater than the maximum, replace it with a new snap ring.

3. INSTALL STARTER COMMUTATOR END FRAME COVER

(a) Install the starter commutator end frame cover to the starter commutator end frame assembly.

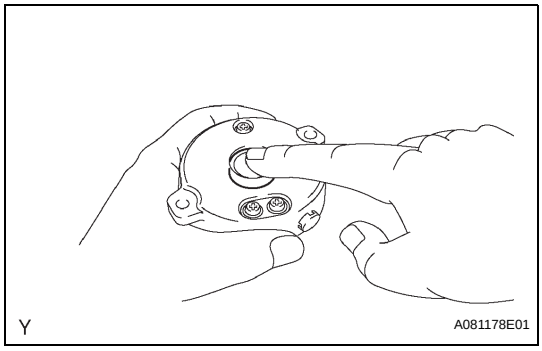

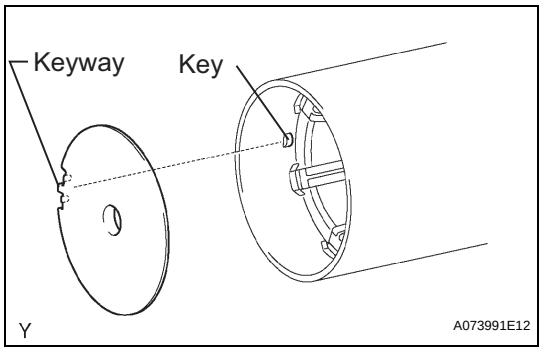

4. INSTALL STARTER ARMATURE PLATE

(a) Insert the starter armature plate to the starter yoke assembly.

(1) Align the keyway of the starter armature plate with the key inside the starter yoke assembly, and install the starter armature plate.

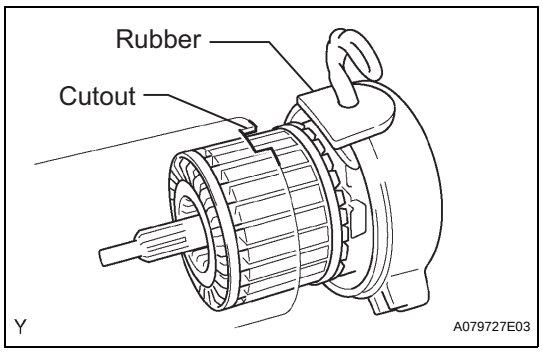

5. INSTALL STARTER COMMUTATOR END FRAME ASSEMBLY

(a) Align the rubber of the starter end frame assembly with the cutout of the starter yoke assembly.

(b) Install the starter commutator end frame assembly to the starter yoke assembly.

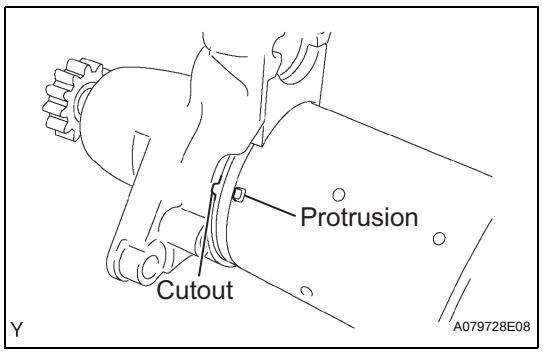

6. INSTALL STARTER YOKE ASSEMBLY

(a) Align the protrusion of the starter yoke assembly with the cutout of the starter drive housing assembly.

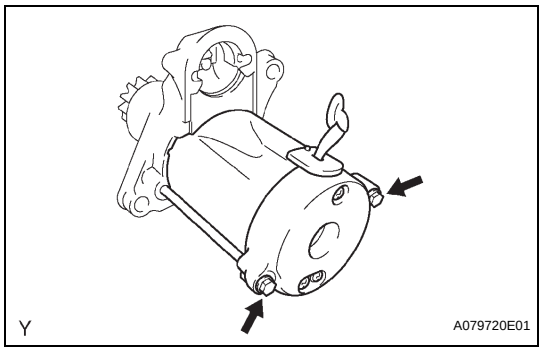

(b) Install the starter yoke assembly with the 2 through-bolts.

Torque: 6.0 N*m (61 kgf*cm, 53 in.*lbf)

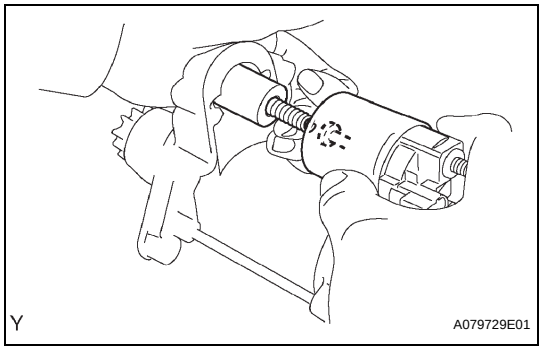

7. INSTALL MAGNETIC SWITCH ASSEMBLY

(a) Apply grease to the plunger and the hook.

(b) Hang the plunger hook of the magnetic switch assembly on the drive lever.

(c) Install the plunger and return spring.

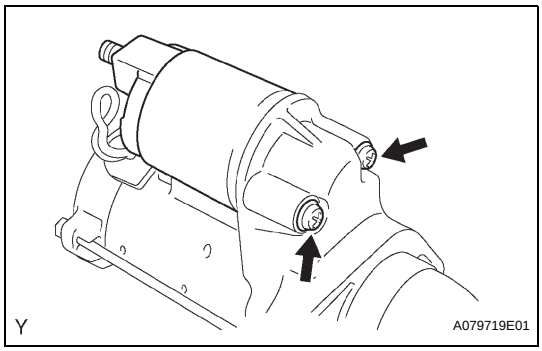

(d) Install the magnetic switch with the 2 screws.
Torque: 7.5 N*m (76 kgf*cm, 66 in.*lbf)

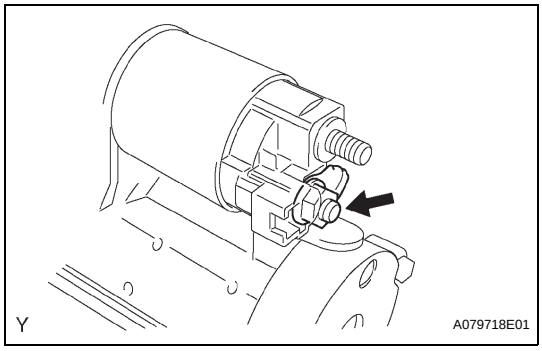

(e) Connect the lead wire to the magnetic switch with the nut.
Torque: 10 N*m (102 kgf*cm, 7 ft.*lbf)

INSTALLATION

1. INSTALL STARTER ASSEMBLY

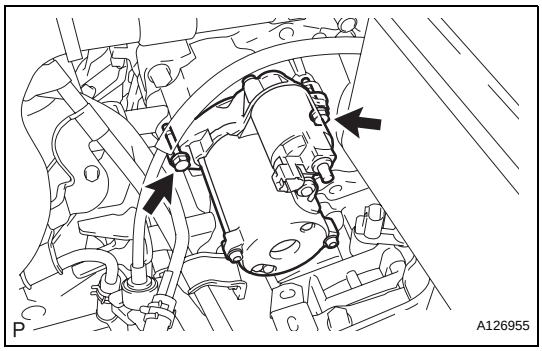

(a) Install the starter with the 2 bolts.
Torque: 37 N*m (377 kgf*cm, 27 ft.*lbf)

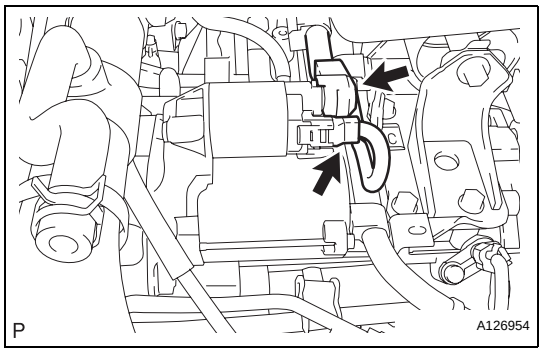

(b) Connect the starter connector.
(c) Install the terminal nut and cover the nut with the cap.
Torque: 9.8 N*m (100 kgf*cm, 88 in.*lbf)

2. INSTALL BATTERY BRACKET REINFORCEMENT

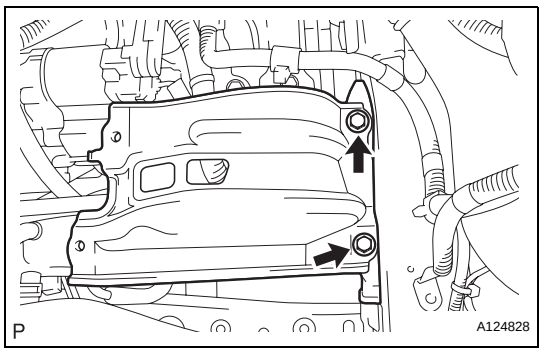

(a) Install the battery bracket reinforcement with the 2 bolts.
Torque: 20 N*m (204 kgf*cm, 15 ft.*lbf)

ST

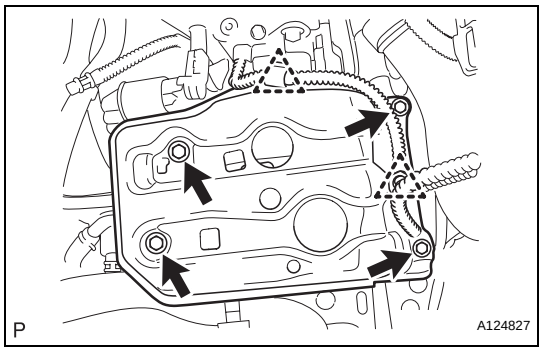

3. **INSTALL FRONT BATTERY CARRIER**
   (a) Install the front battery carrier with the 4 bolts.
   Torque: 20 N*m (204 kgf*cm, 15 ft.*lbf)
   (b) Connect the 2 clamps of the engine wire.
4. **INSTALL BATTERY TRAY**
5. **INSTALL BATTERY**
6. **INSTALL BATTERY INSULATOR**
7. **INSTALL BATTERY CLAMP SUB-ASSEMBLY**
   (a) Install the battery clamp by tightening the bolt and nut.
   Torque: 5.0 N*m (51 kgf*cm, 44 in.*lbf) for nut
   8.5 N*m (87 kgf*cm, 75 in.*lbf) for bolt
8. **CONNECT CABLE TO NEGATIVE BATTERY TERMINAL**

STARTER

COMPONENTS

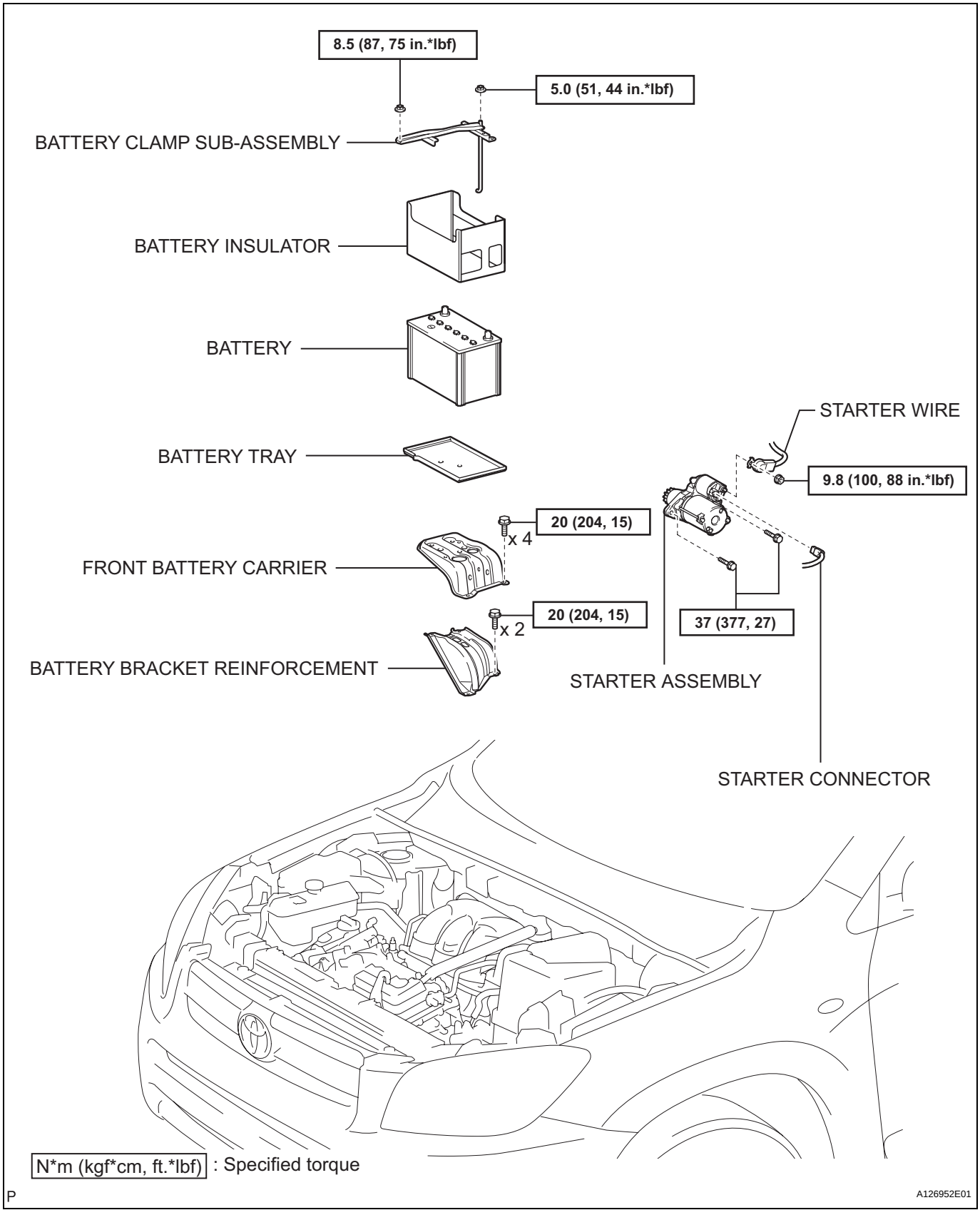

ST

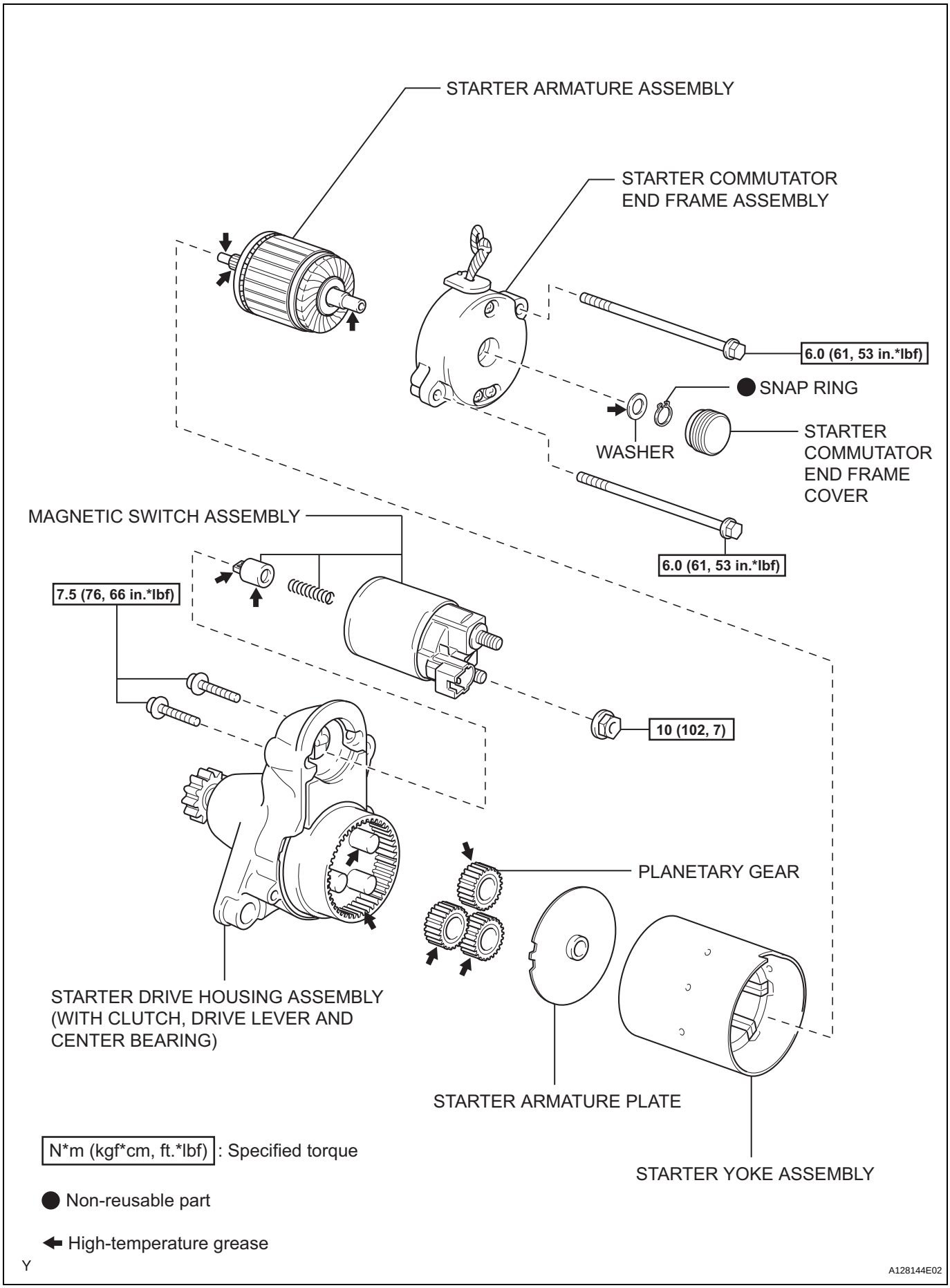
STARTER ARMATURE ASSEMBLY
STARTER COMMUTATOR END FRAME ASSEMBLY
6.0 (61, 53 in.*lbf)
SNAP RING
WASHER
STARTER COMMUTATOR END FRAME COVER
MAGNETIC SWITCH ASSEMBLY
6.0 (61, 53 in.*lbf)
7.5 (76, 66 in.*lbf)
10 (102, 7)
PLANETARY GEAR
STARTER DRIVE HOUSING ASSEMBLY (WITH CLUTCH, DRIVE LEVER AND CENTER BEARING)
STARTER ARMATURE PLATE
STARTER YOKE ASSEMBLY
N*m (kgf*cm, ft.*lbf) : Specified torque
Non-reusable part
High-temperature grease
Y
A128144E02

ST

STARTER RELAY

ON-VEHICLE INSPECTION

1. DISCONNECT CABLE FROM NEGATIVE BATTERY TERMINAL

CAUTION:
Wait at least 90 seconds after disconnecting the cable from the negative (-) battery terminal to prevent airbag and seat belt pretensioner activation.

2. REMOVE STARTER RELAY (Marking: ST)

(a) Remove the starter relay from the No. 7 relay block.

3. INSPECT STARTER RELAY (Marking: ST)

(a) Measure the resistance of the relay.

Standard resistance

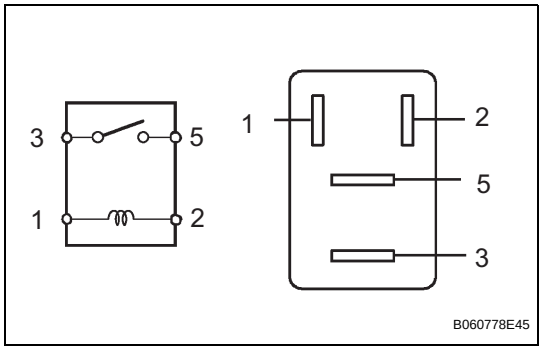

Tester Connection	Specified Condition
3 - 5	10 kΩ or higher
3 - 5	Below 1 Ω (when battery voltage is applied to terminals 1 and 2)

If the resistance is not as specified, replace the relay.

4. INSTALL STARTER RELAY (Marking: ST)

5. CONNECT CABLE TO NEGATIVE BATTERY TERMINAL

STARTER RELAY

ON-VEHICLE INSPECTION

1. DISCONNECT CABLE FROM NEGATIVE BATTERY TERMINAL

CAUTION:
Wait at least 90 seconds after disconnecting the cable from the negative (-) battery terminal to prevent airbag and seat belt pretensioner activation.

2. REMOVE STARTER RELAY (Marking: ST)

(a) Remove the starter relay from the No. 7 relay block.

3. INSPECT STARTER RELAY (Marking: ST)

(a) Measure the resistance of the relay.

Standard resistance

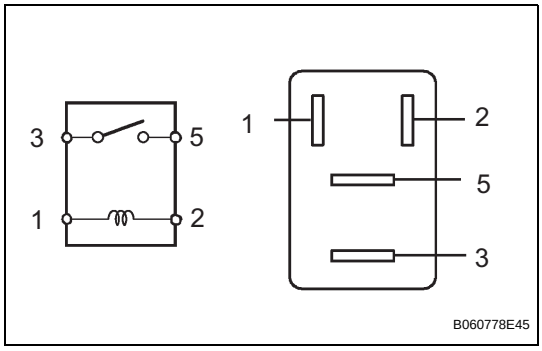

Tester Connection	Specified Condition
3 - 5	10 kΩ or higher
3 - 5	Below 1 Ω (when battery voltage is applied to terminals 1 and 2)

If the resistance is not as specified, replace the relay.

4. INSTALL STARTER RELAY (Marking: ST)

5. CONNECT CABLE TO NEGATIVE BATTERY TERMINAL

SYSTEM DIAGRAM

The starting system rotates the starter motor according to the signals from the ignition switch and PNP switch.

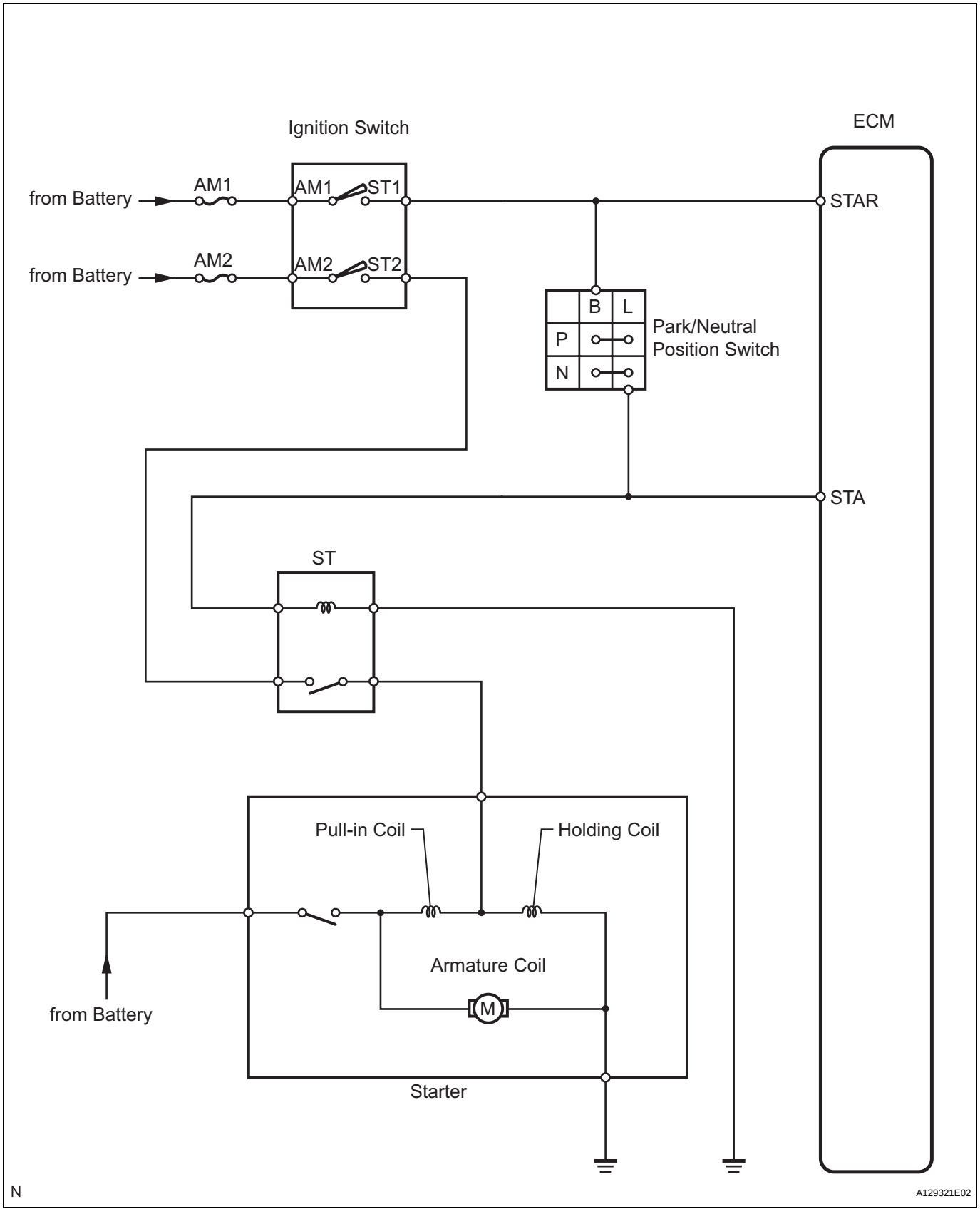

ST

STARTING SYSTEM

PARTS LOCATION

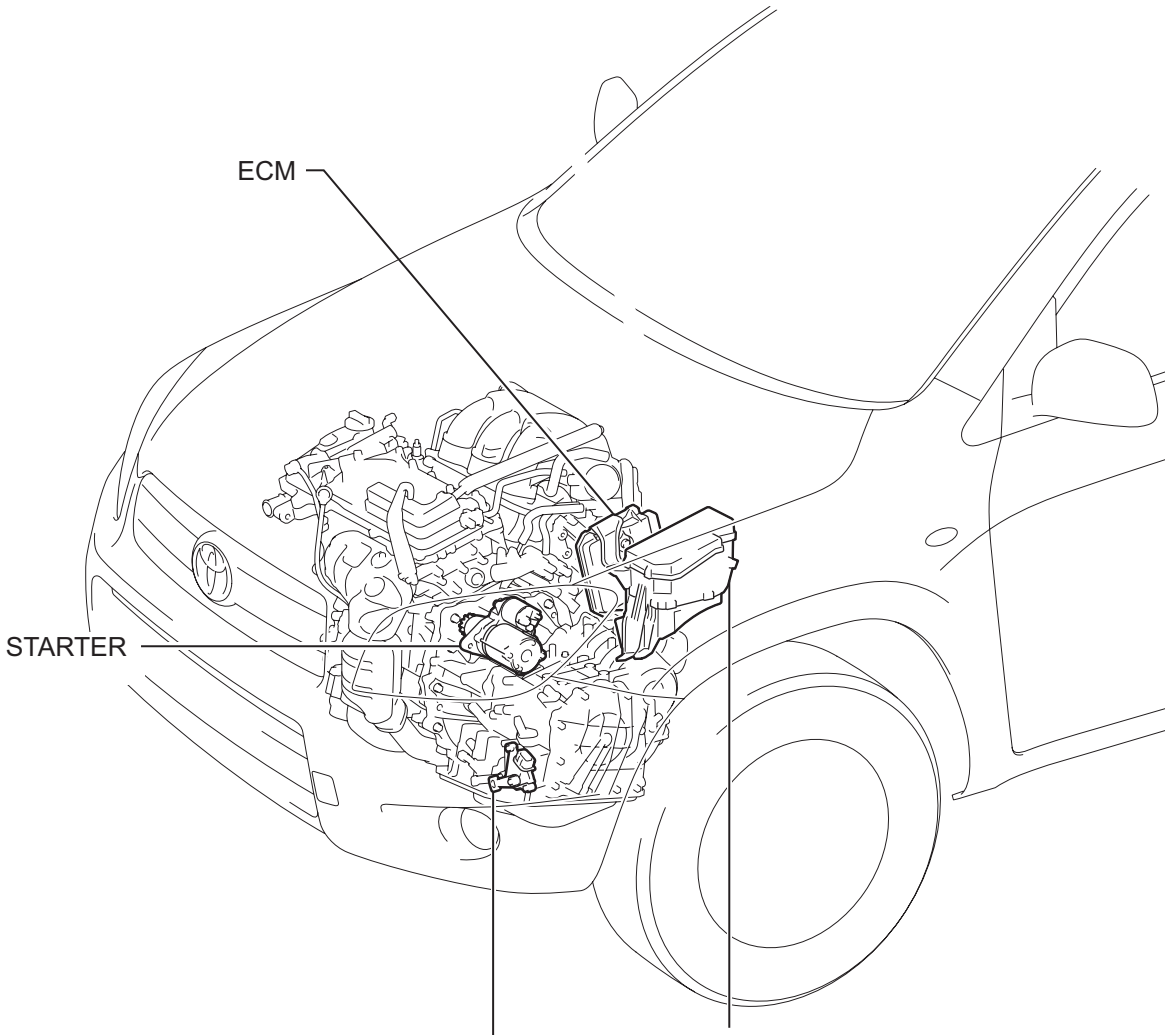

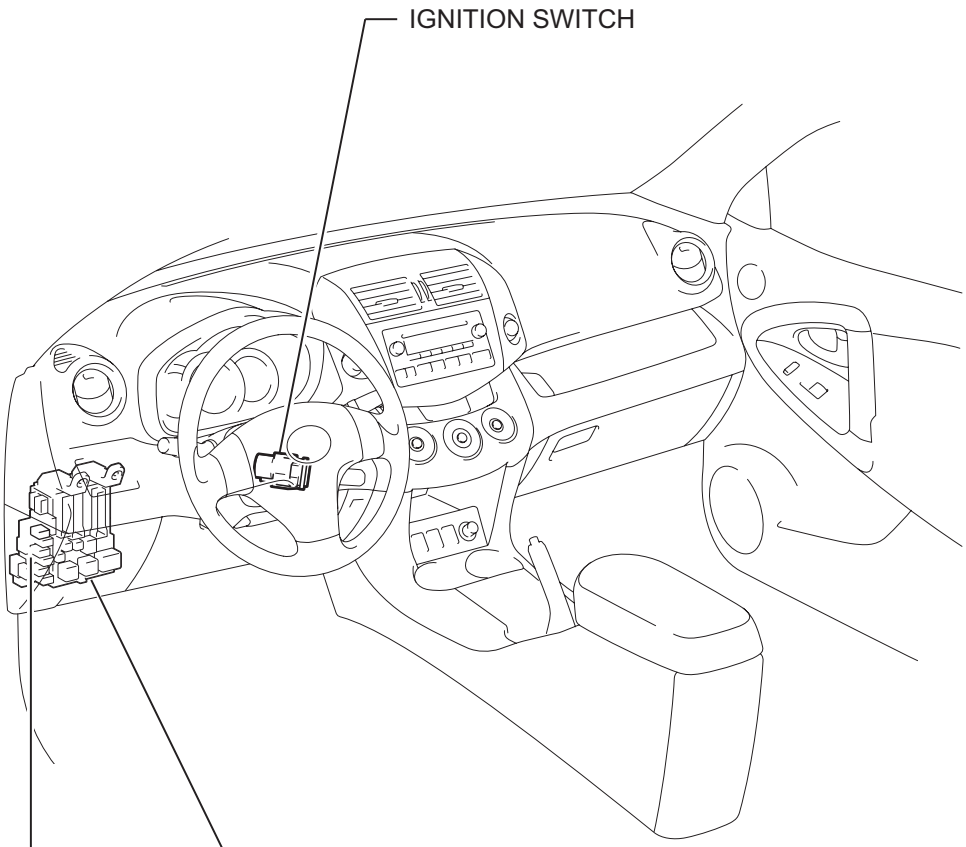

P

A124952E02

AIR CONDITIONING AMPLIFIER

COMPONENTS

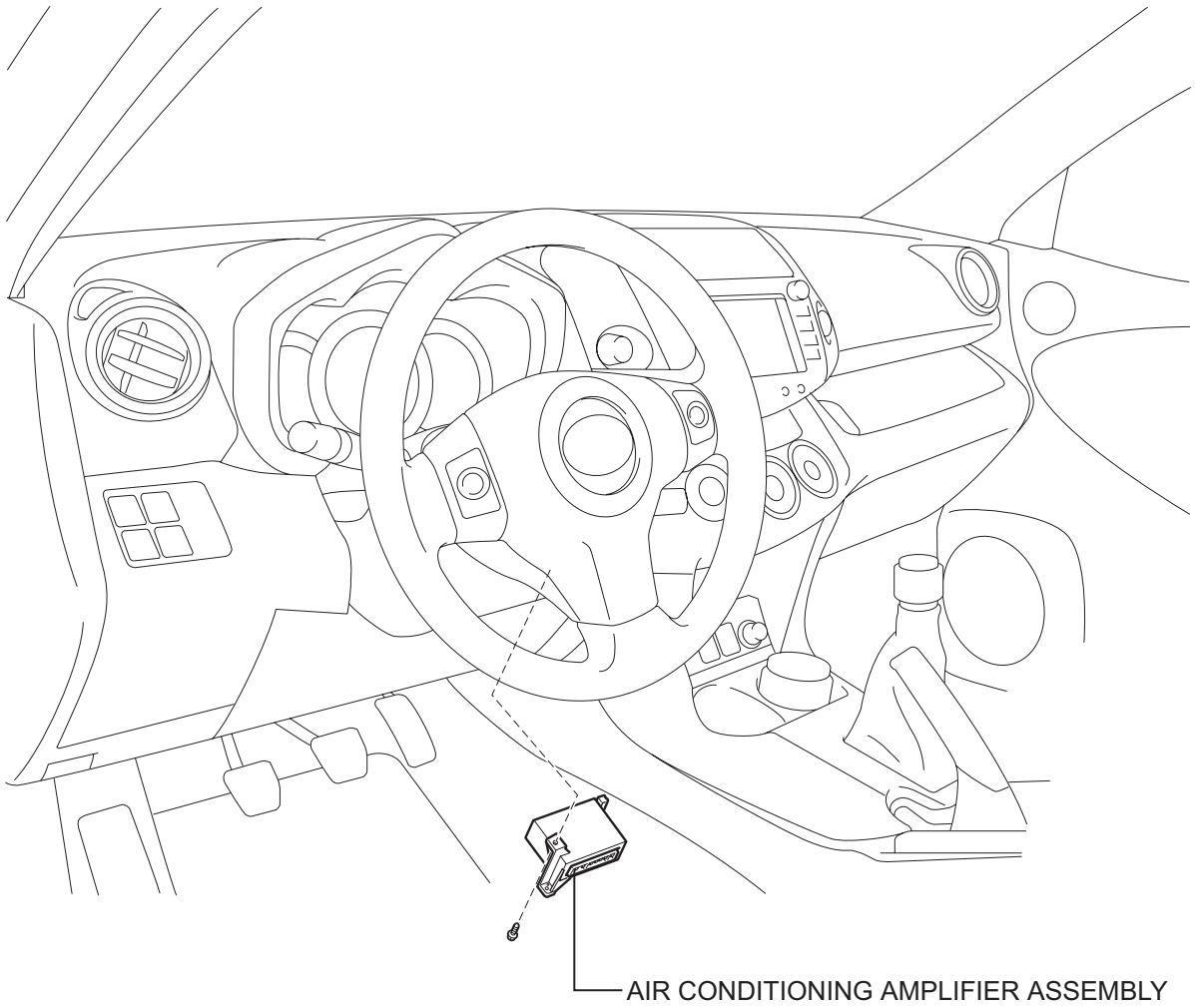

G

E124260E01

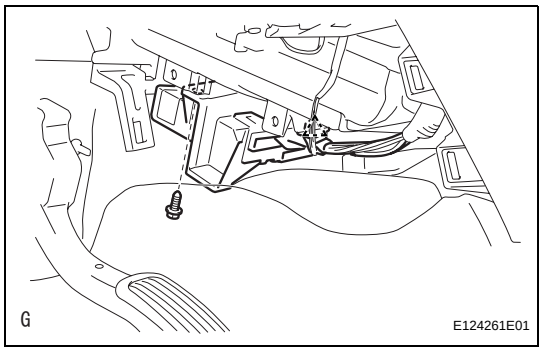

REMOVAL

1. REMOVE AIR CONDITIONING AMPLIFIER ASSEMBLY

(a) Detach the clamp.
(b) Disconnect the connector.
(c) Remove the screw and A/C amplifier.

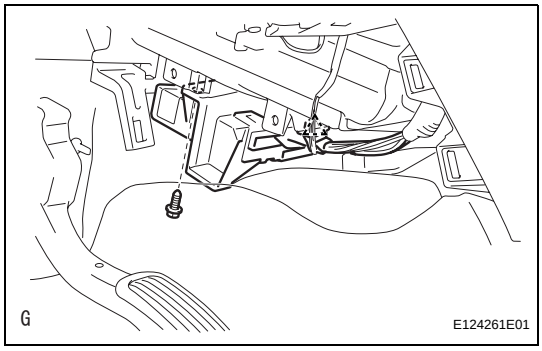

INSTALLATION

1. INSTALL AIR CONDITIONING AMPLIFIER ASSEMBLY

(a) Install the A/C amplifier with the screw.
(b) Connect the connector.
(c) Attach the clamp.

AIR CONDITIONING CONTROL ASSEMBLY (for Automatic Air Conditioning System)

COMPONENTS

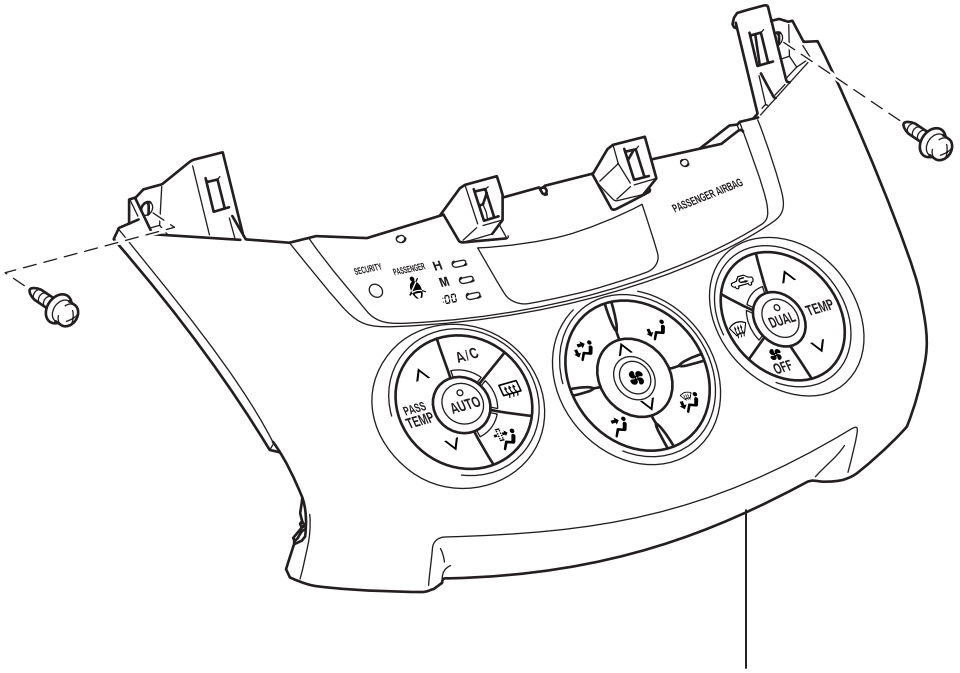

AIR CONDITIONING CONTROL ASSEMBLY

H

E118689E01

REMOVAL

1. **DISCONNECT CABLE FROM NEGATIVE BATTERY TERMINAL**
   NOTICE:
   Wait at least 90 seconds after disconnecting the cable from the negative (-) battery terminal to prevent airbag and seat belt pretensioner activation.
2. **REMOVE NO. 2 INSTRUMENT CLUSTER FINISH PANEL CENTER (See page IP-5)**
3. **REMOVE NO. 1 INSTRUMENT CLUSTER FINISH PANEL CENTER (See page IP-5)**
4. **REMOVE RADIO RECEIVER (See page IP-5)**
5. **REMOVE AIR CONDITIONING CONTROL ASSEMBLY**
   (a) Remove the 2 screws.
   (b) Using a screwdriver, detach the 3 clips.
   HINT:
   Tape the screwdriver tip before use.
   (c) Connect the connectors and remove the air conditioning control.

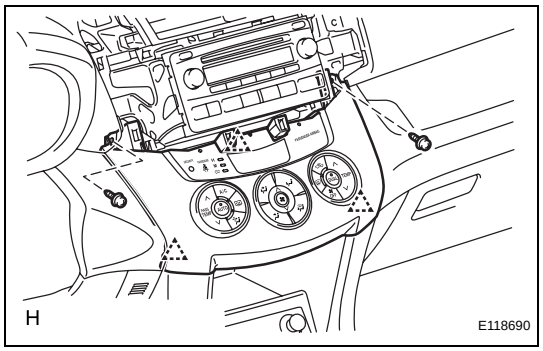

INSTALLATION

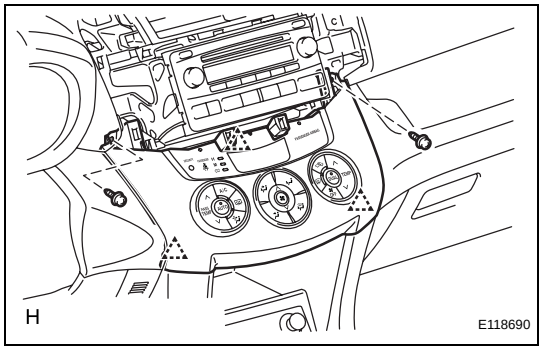

1. **INSTALL AIR CONDITIONING CONTROL ASSEMBLY**
   (a) Connect the connectors.
   (b) Attach the 3 clips to install the air conditioning control.
   (c) Install the 2 screws.
2. **INSTALL RADIO RECEIVER (See page IP-10)**
3. **INSTALL NO. 1 INSTRUMENT CLUSTER FINISH PANEL CENTER (See page IP-10)**
4. **INSTALL NO. 2 INSTRUMENT CLUSTER FINISH PANEL CENTER (See page IP-10)**
5. **CONNECT CABLE TO NEGATIVE BATTERY TERMINAL**
6. **CHECK SRS WARNING LIGHT**
   (a) Check the SRS warning light (see page RS-37).

AC

INSTALLATION

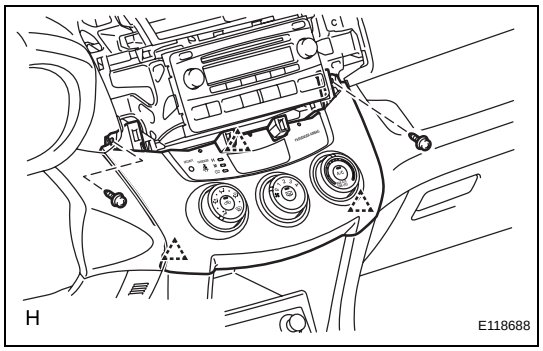

1. **INSTALL AIR VENT MODE CONTROL SWITCH**
   (a) Attach the 2 claws to install the mode control switch.
2. **INSTALL BLOWER CONTROL SWITCH**
   (a) Attach the 2 claws to install the blower control switch.
3. **INSTALL AIR MIX CONTROL SWITCH**
   (a) Attach the 2 claws to install the air mix control switch.
4. **INSTALL AIR CONDITIONING CONTROL ASSEMBLY**
   (a) Connect the connectors.
   (b) Attach the 3 clips to install the air conditioning control.
   (c) Install the 2 screws.
5. **INSTALL RADIO RECEIVER ASSEMBLY (w/ Radio Receiver) (See page IP-10)**
6. **INSTALL NO. 1 INSTRUMENT CLUSTER FINISH PANEL CENTER (See page IP-10)**
7. **INSTALL NO. 2 INSTRUMENT CLUSTER FINISH PANEL CENTER (See page IP-10)**
8. **CONNECT CABLE TO NEGATIVE BATTERY TERMINAL**
9. **CHECK SRS WARNING LIGHT**
   (a) Check the SRS warning light (see page RS-37).

AIR CONDITIONING CONTROL ASSEMBLY (for Manual Air Conditioning System)

COMPONENTS

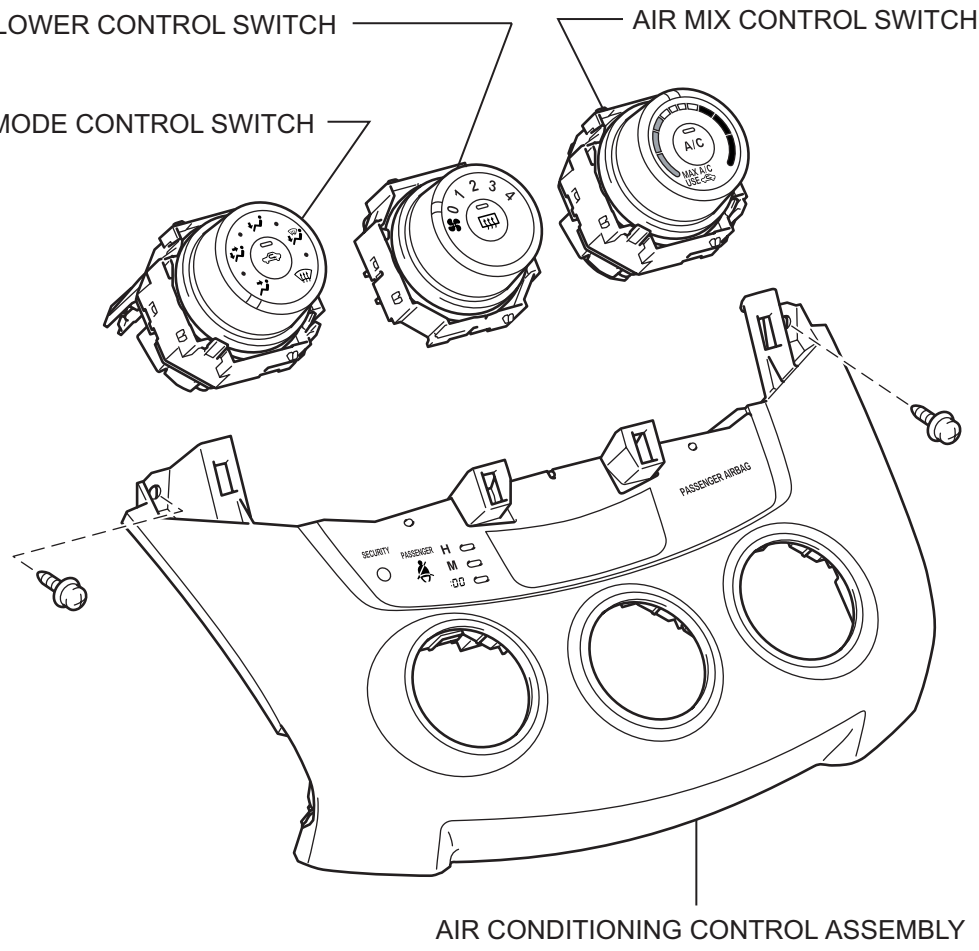

H

E118684E01

AC

REMOVAL

1. **DISCONNECT CABLE FROM NEGATIVE BATTERY TERMINAL**
   NOTICE:
   Wait at least 90 seconds after disconnecting the cable from the negative (-) battery terminal to prevent airbag and seat belt pretensioner activation.
2. **REMOVE NO. 2 INSTRUMENT CLUSTER FINISH PANEL CENTER (See page IP-5)**
3. **REMOVE NO. 1 INSTRUMENT CLUSTER FINISH PANEL CENTER (See page IP-5)**
4. **REMOVE RADIO RECEIVER ASSEMBLY (See page IP-5)**
5. **REMOVE AIR CONDITIONING CONTROL ASSEMBLY**
   (a) Remove the 2 screws.
   (b) Using a screwdriver, detach the 3 clips.
   HINT:
   Tape the screwdriver tip before use.
   (c) Disconnect the connectors and remove the air conditioning control.

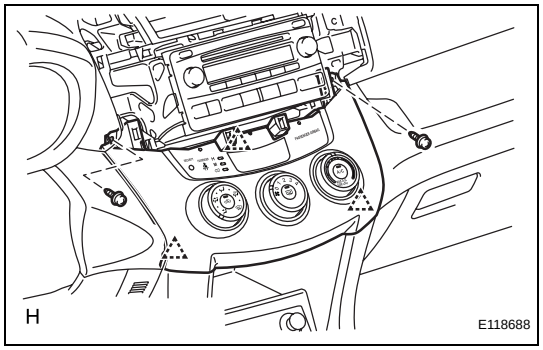

6. **REMOVE AIR MIX CONTROL SWITCH**
   (a) Detach the 2 claws and remove the air mix control switch.

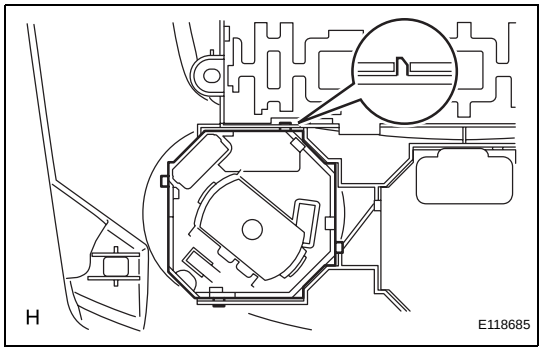

7. **REMOVE BLOWER CONTROL SWITCH**
   (a) Detach the 2 claws and remove the blower control switch.

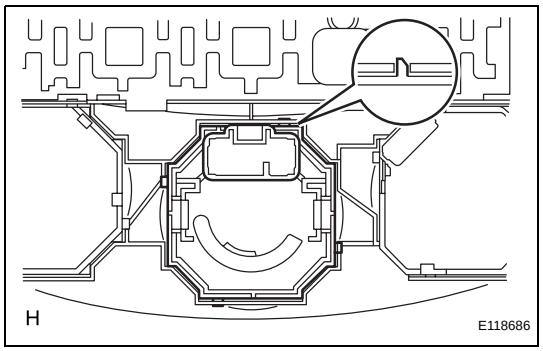

AC

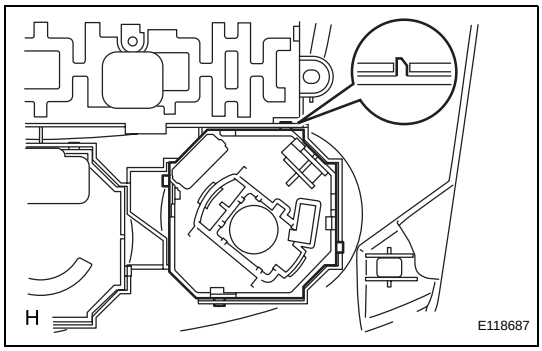

8. REMOVE AIR VENT MODE CONTROL SWITCH

(a) Detach the 2 claws and remove the mode control switch.

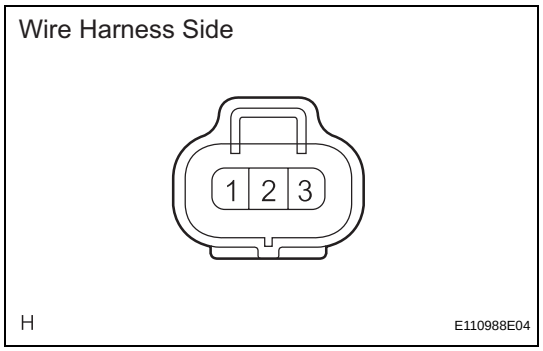

AIR CONDITIONING PRESSURE SENSOR

ON-VEHICLE INSPECTION

1. CHECK PRESSURE SENSOR

(a) Check the wire harness.

(1) Disconnect the connector of the pressure sensor.

(2) Measure the resistance of the wire harness side connector.

Standard resistance

Tester Connection	Specified Condition
1 - Body ground	Below 1 Ω

(3) Turn the ignition switch ON.

(4) Measure the voltage of the wire harness side connector.

Standard voltage

Tester Connection	Specified Condition
1 - 3	4.7 to 5.3 V

If the result is not as specified, replace the pressure sensor.

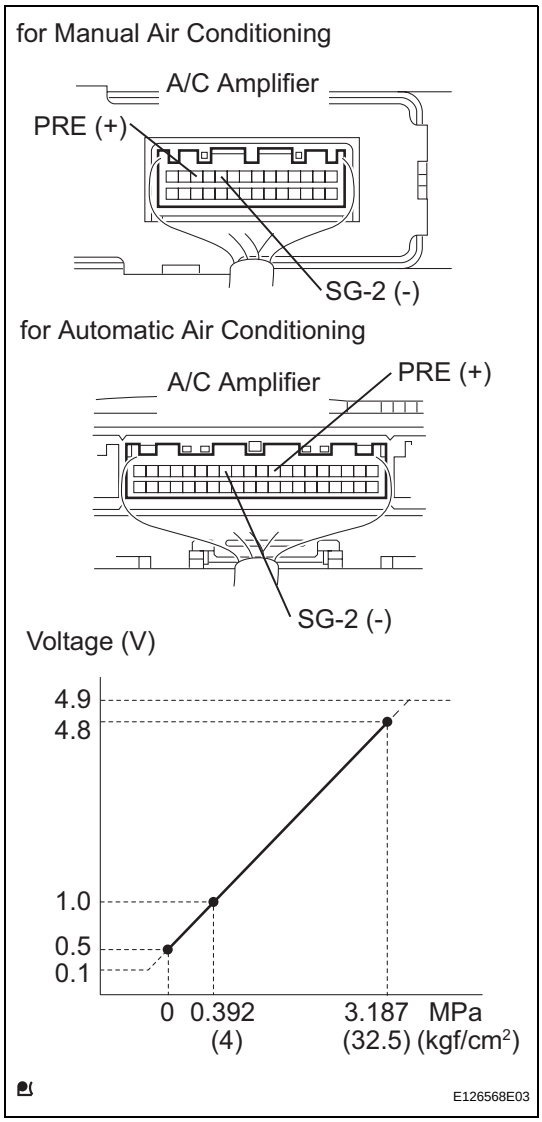

(b) Check the pressure sensor.
(1) Set the manifold gauge.
(2) Connect the connector to the pressure sensor.
(3) Warm up the engine.
(4) Switch the A/C ON.
(5) Measure the voltage.

Standard voltage

Tester Connection	Refrigerant Pressure	Specified Condition
for Automatic Air Conditioner: E37-9 (PRE) - E37-13 (SG-2)	**0.176 to 3.025 MPa (1.8 to 30.9 kgf/cm^2)**	**0.76 to 4.74 V**
for Manual Air Conditioner: E36-12 (PRE) - E36-10 (SG-2)	**0.176 to 3.025 MPa (1.8 to 30.9 kgf/cm^2)**	**0.76 to 4.74 V**

If the result is not as specified, replace the pressure sensor.

AC

PARTS LOCATION

(2005/11-2006/01)

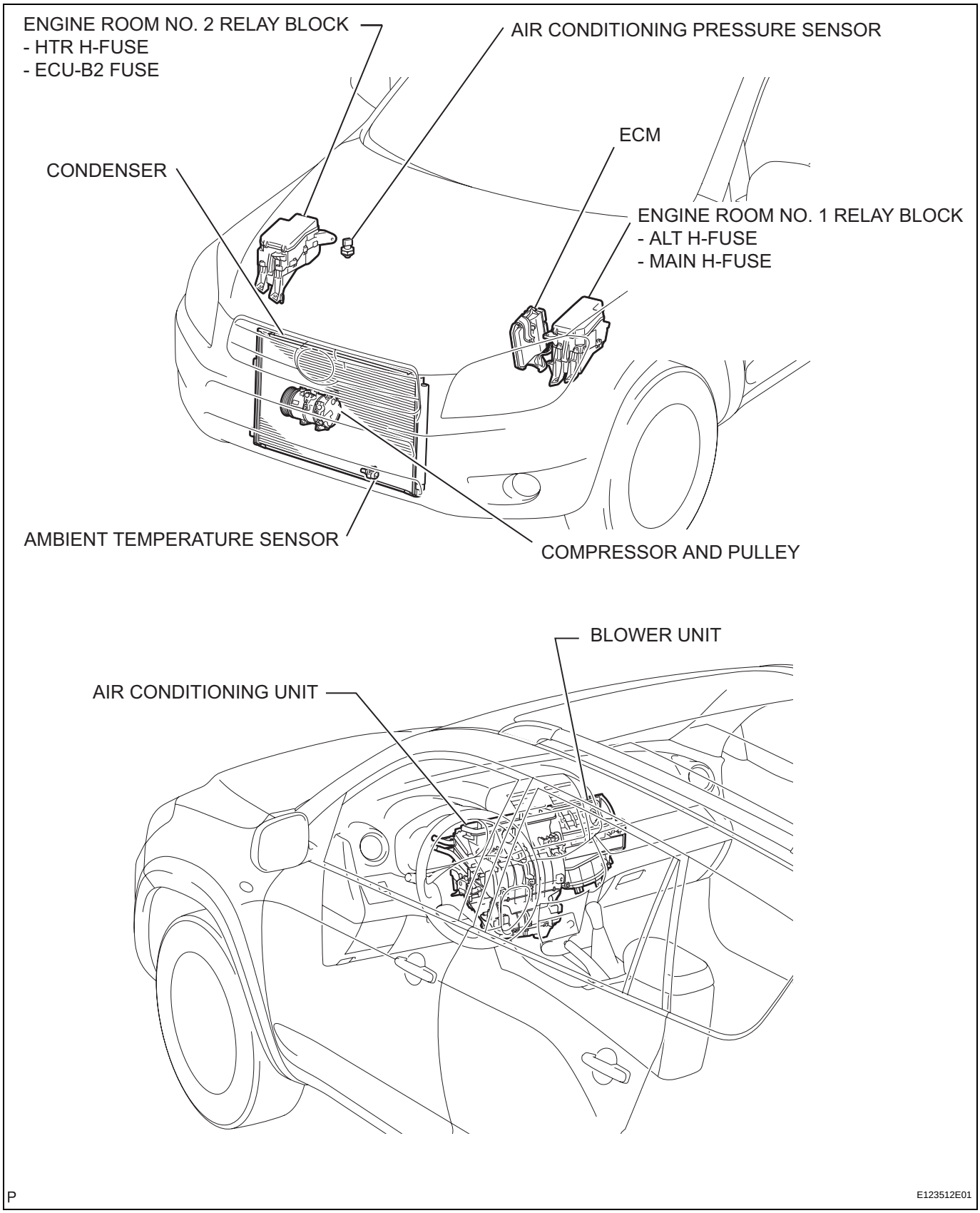

AC

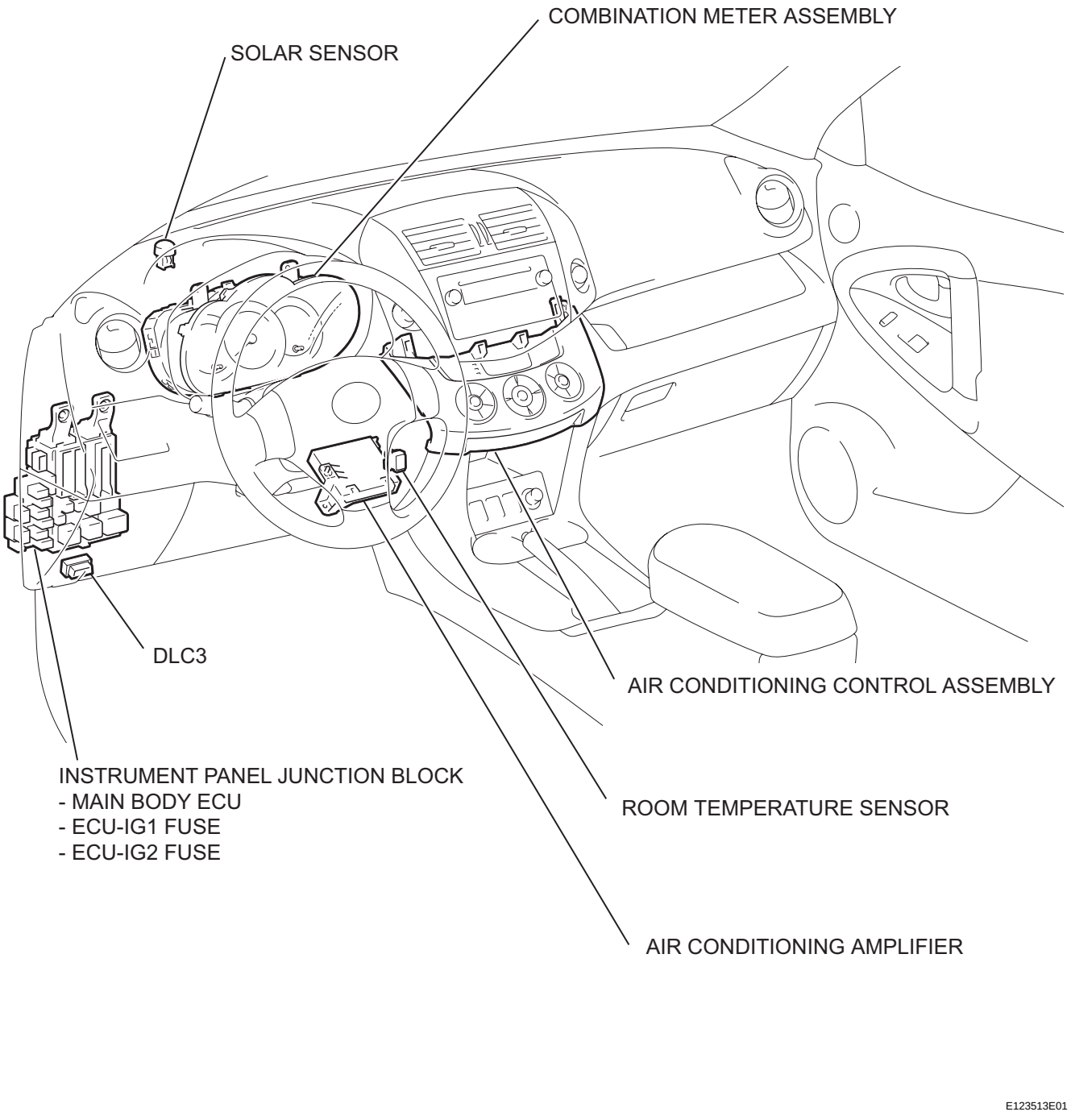
COMBINATION METER ASSEMBLY
SOLAR SENSOR
DLC3
AIR CONDITIONING CONTROL ASSEMBLY
INSTRUMENT PANEL JUNCTION BLOCK
- MAIN BODY ECU
- ECU-IG1 FUSE
- ECU-IG2 FUSE
ROOM TEMPERATURE SENSOR
AIR CONDITIONING AMPLIFIER
P
E123513E01

AC

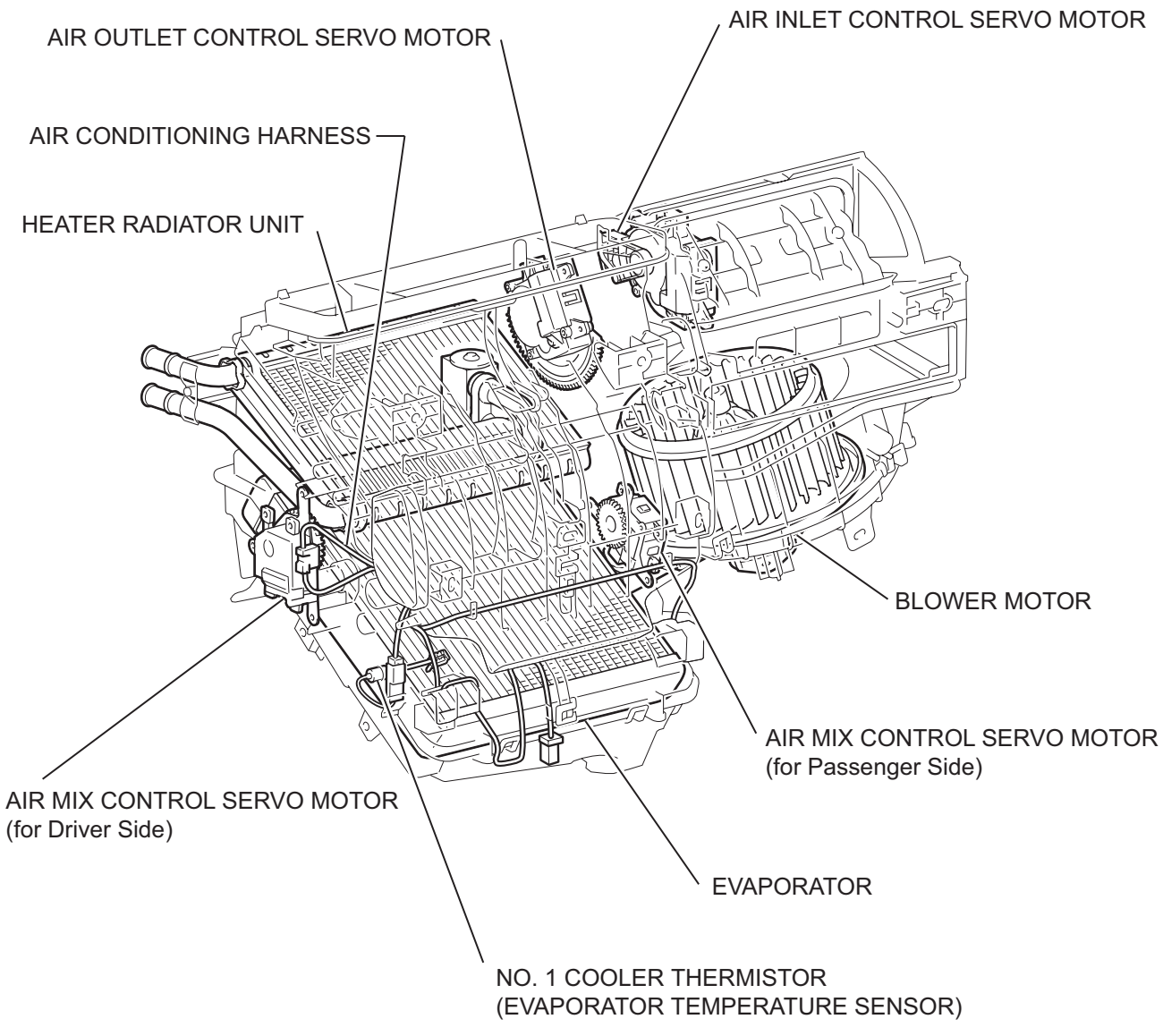

P

E123514E01

AC

PARTS LOCATION

(2006/01-)

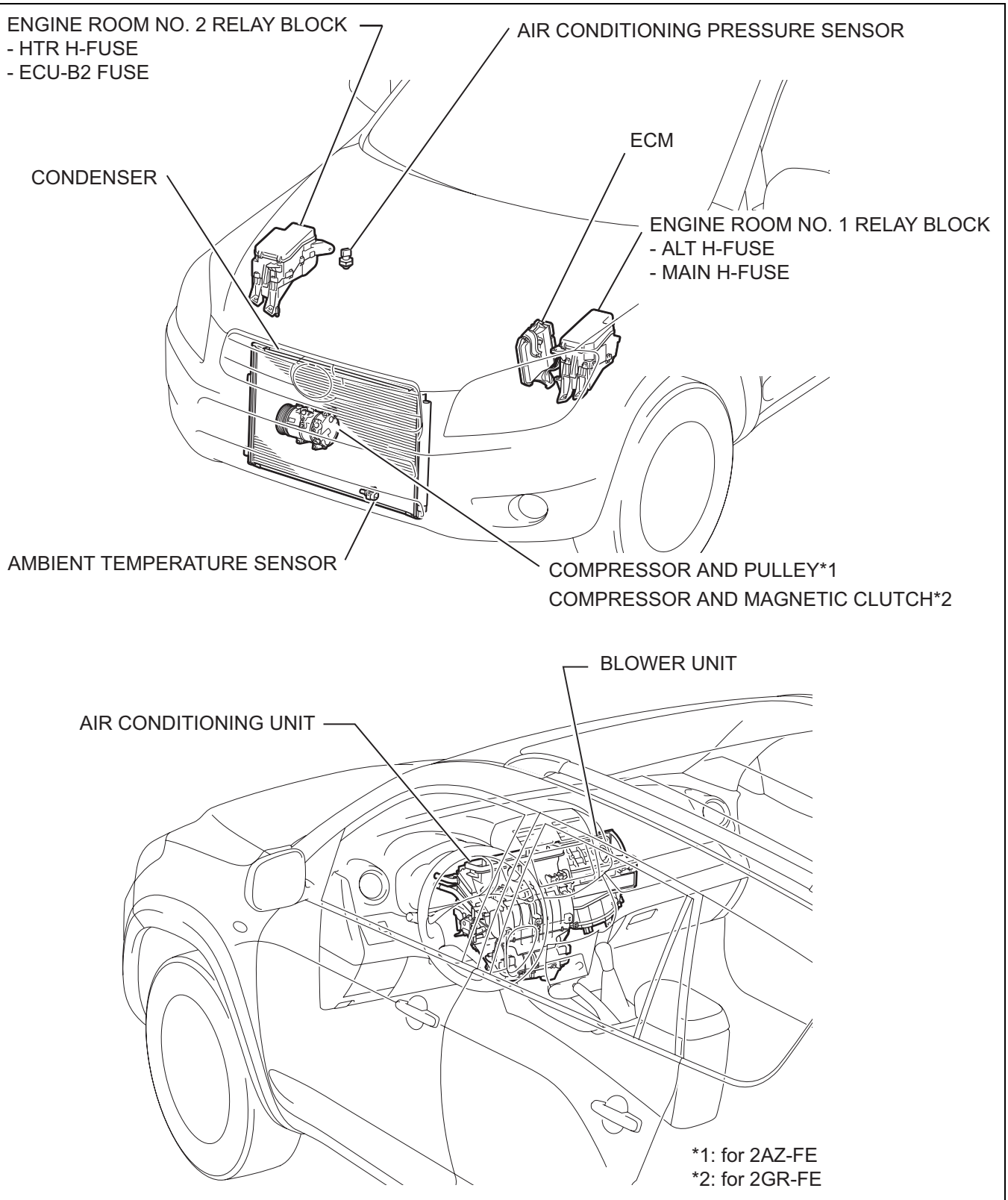

AC

P

E123512E03

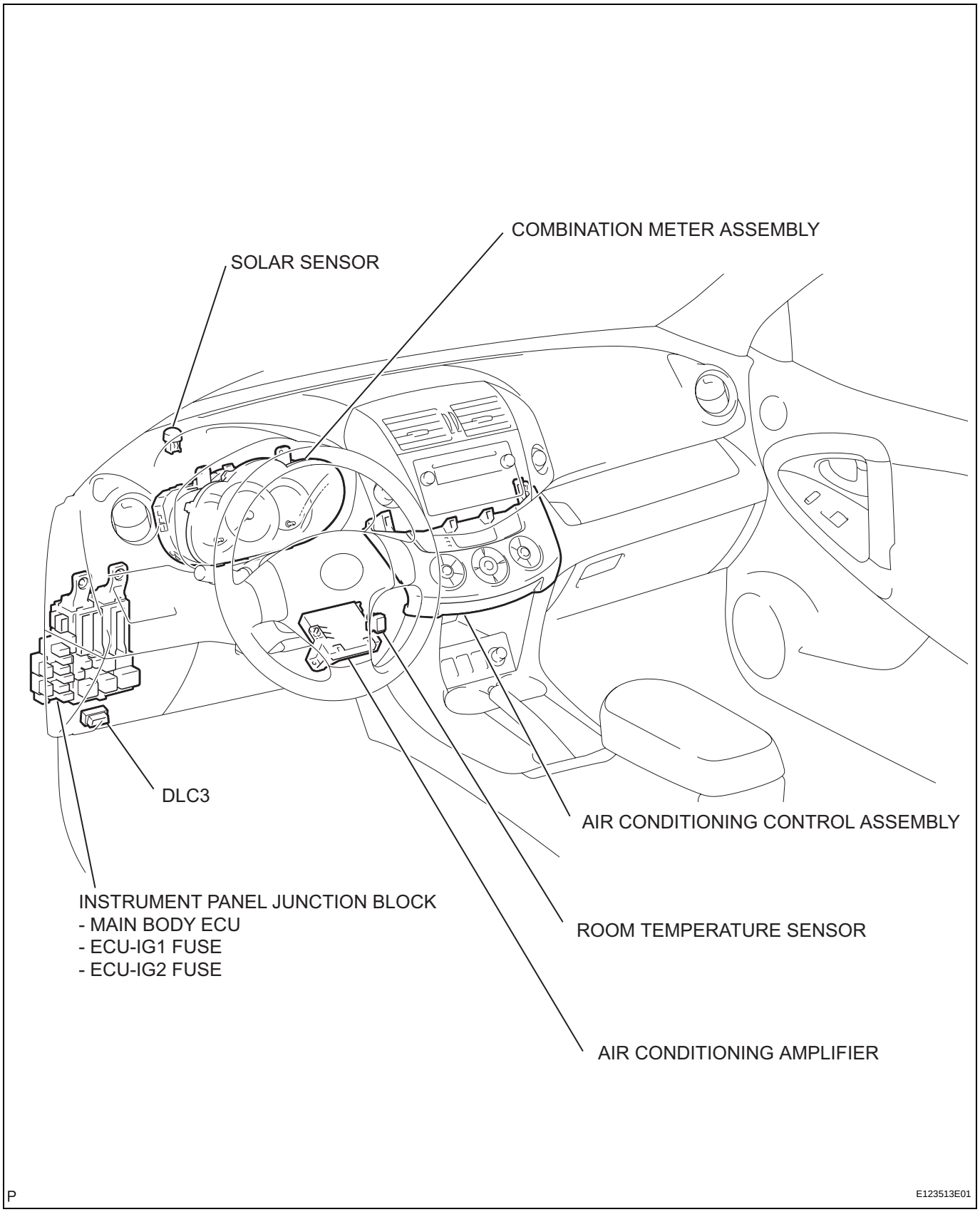
COMBINATION METER ASSEMBLY
SOLAR SENSOR
DLC3
AIR CONDITIONING CONTROL ASSEMBLY
INSTRUMENT PANEL JUNCTION BLOCK
- MAIN BODY ECU
- ECU-IG1 FUSE
- ECU-IG2 FUSE
ROOM TEMPERATURE SENSOR
AIR CONDITIONING AMPLIFIER
P
E123513E01

AC

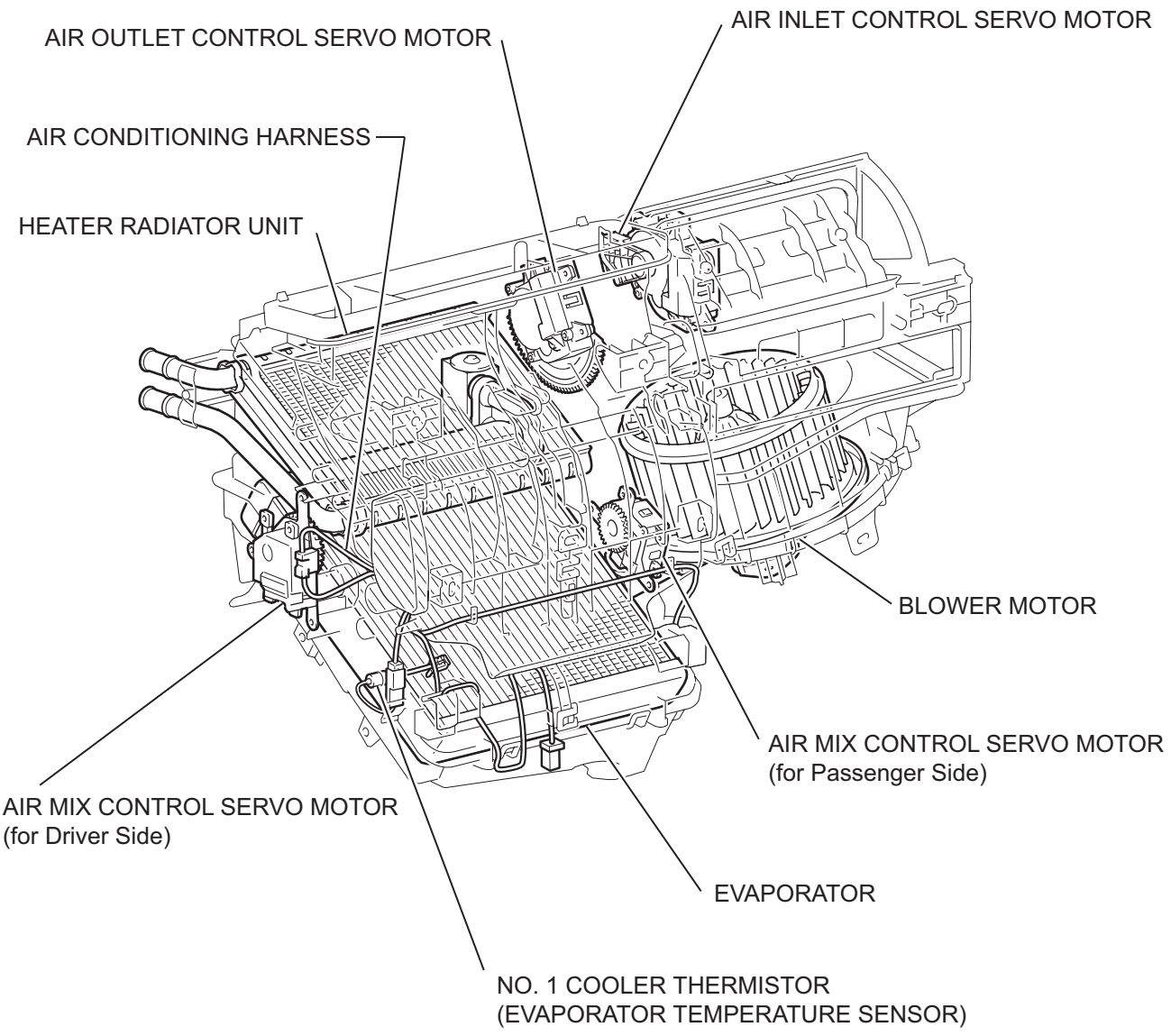

AC

P

E123514E01

SYSTEM DIAGRAM

(2005/11-2006/01)

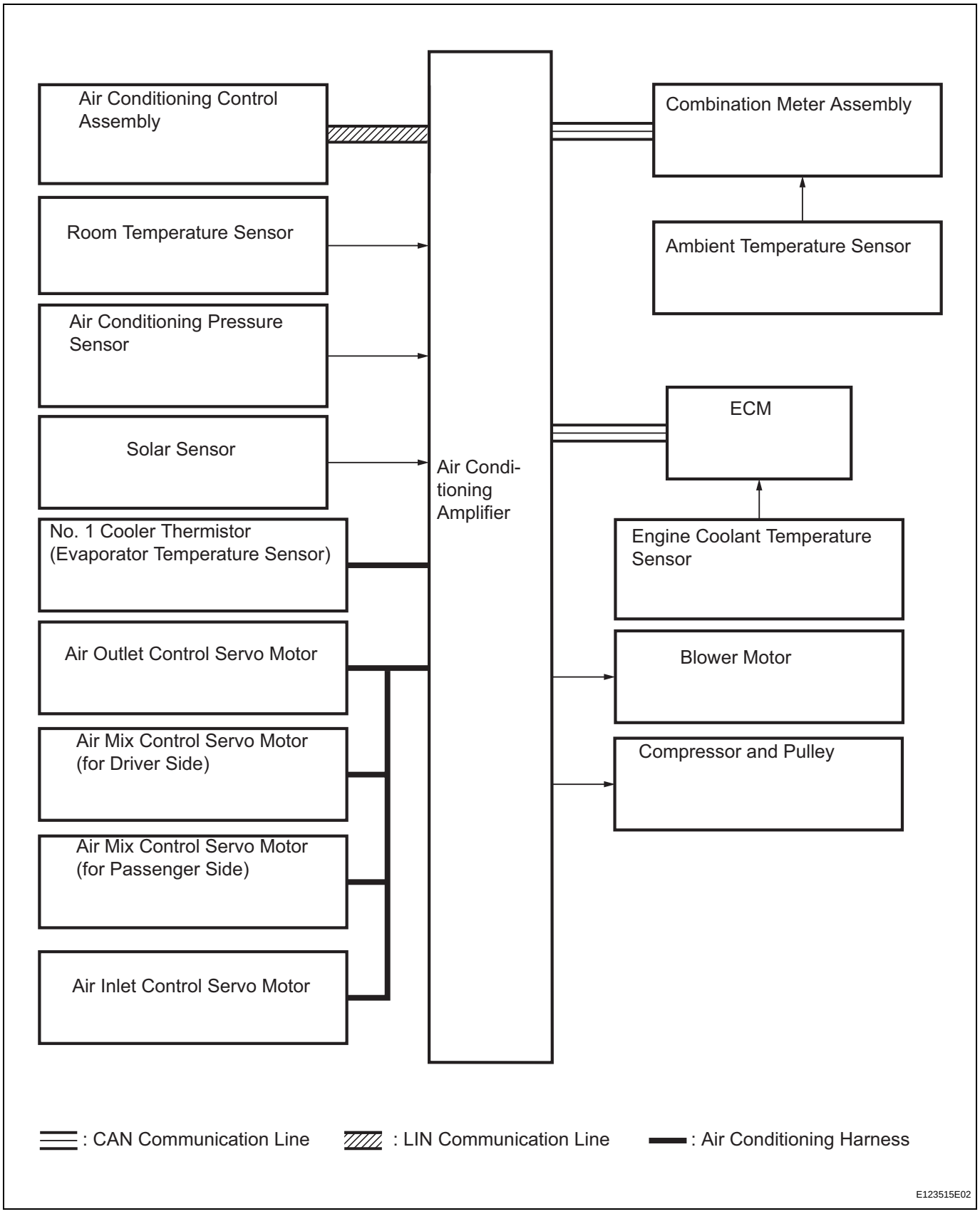

AC

Communication table

Sender	Receiver	Signal	Communication Line
Air conditioning amplifier	ECM	A/C compressor control signal	CAN
		Idle up request signal	
		External variable control solenoid current signal	
		Cooling fan motor driving request signal	
		Ambient temperature signal	
Air conditioning amplifier	Air conditioning control assembly	Front panel indication signal	LIN
		AUTO indication signal	
		A/C indication signal	
		MODE indication signal	
		REC indication signal	
		FRS indication signal	
		RDEF indication signal	
		Blower level indication signal	
		Set temperature indication signal	
Combination meter assembly	Air conditioning amplifier	Vehicle speed signal	CAN
		Ambient temperature signal	
ECM	Air conditioning amplifier	Engine revolution speed signal	CAN
		Engine coolant temperature signal	
		A/C control cut signal	
		Variable control prohibition signal	
Air conditioning control assembly	Air conditioning amplifier	AUTO switch signal	LIN
		OFF switch signal	
		A/C switch signal	
		DEF switch signal	
		MODE switch signal	
		RDEF switch signal	
		Blower switch signal (FAN+, FAN-)	
		Set temperature switch signal (UP, DOWN)	

SYSTEM DIAGRAM

(2006/01-)

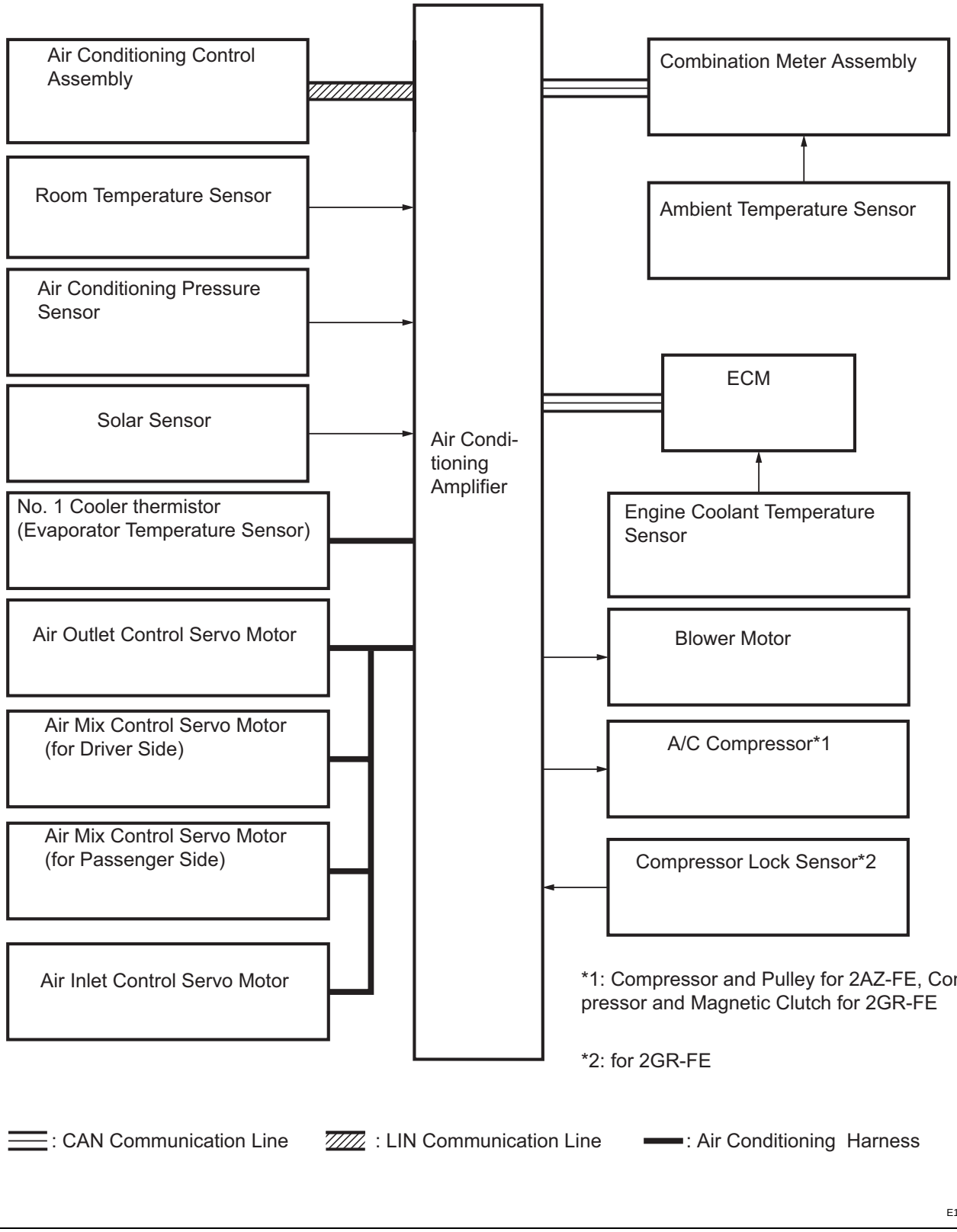

AC

Communication table

Sender	Receiver	Signal	Communication Line
Air conditioning amplifier	ECM	A/C compressor control signal	CAN
		Idle up request signal	
		External variable control solenoid current signal	
		Cooling fan motor driving request signal	
		Ambient temperature signal	
Air conditioning amplifier	Air conditioning control assembly	Front panel indication signal	LIN
		AUTO indication signal	
		A/C indication signal	
		MODE indication signal	
		REC indication signal	
		FRS indication signal	
		RDEF indication signal	
		Blower level indication signal	
		Set temperature indication signal	
Combination meter assembly	Air conditioning amplifier	Vehicle speed signal	CAN
		Ambient temperature signal	
ECM	Air conditioning amplifier	Engine revolution speed signal	CAN
		Engine coolant temperature signal	
		A/C control cut signal	
		Variable control prohibition signal	
Air conditioning control assembly	Air conditioning amplifier	AUTO switch signal	LIN
		OFF switch signal	
		A/C switch signal	
		DEF switch signal	
		MODE switch signal	
		RDEF switch signal	
		Blower switch signal (FAN+, FAN-)	
		Set temperature switch signal (UP, DOWN)	

SYSTEM DESCRIPTION

1. GENERAL

(a) The air conditioning system has the following features:

- In accordance with the temperature set using the temperature control switch, the air conditioning amplifier determines the outlet temperature based on the input signals from various sensors. In addition, corrections are made in accordance with the signals from the water temperature sensor to control the outlet air temperature.
- Controls the blower motor in accordance with the airflow volume determined by the air conditioning amplifier based on the input signals from various sensors.
- Automatically changes the outlets in accordance with the outlet mode ratio that is determined by the air conditioning amplifier based on the input signals from various sensors.
- Based on the signals from the ambient temperature sensor, this system calculates the outside temperature and indicates it in the multi-information display in the combination meter assembly.
- The left/right independent temperature control and neural network control make air conditioner control available to suit the persons in the driver seat and in the passenger seat.
- Turns the rear defogger and outside rear mirror heaters on for 15 minutes when the rear defogger switch is pressed. Turns them off if the switch is pressed while they are operating.
- Checks the sensors in accordance with the operation of the air conditioner switches.
- The air conditioning amplifier has the function of controlling the indicator lighting.

2. MODE POSITION AND DAMPER OPERATION

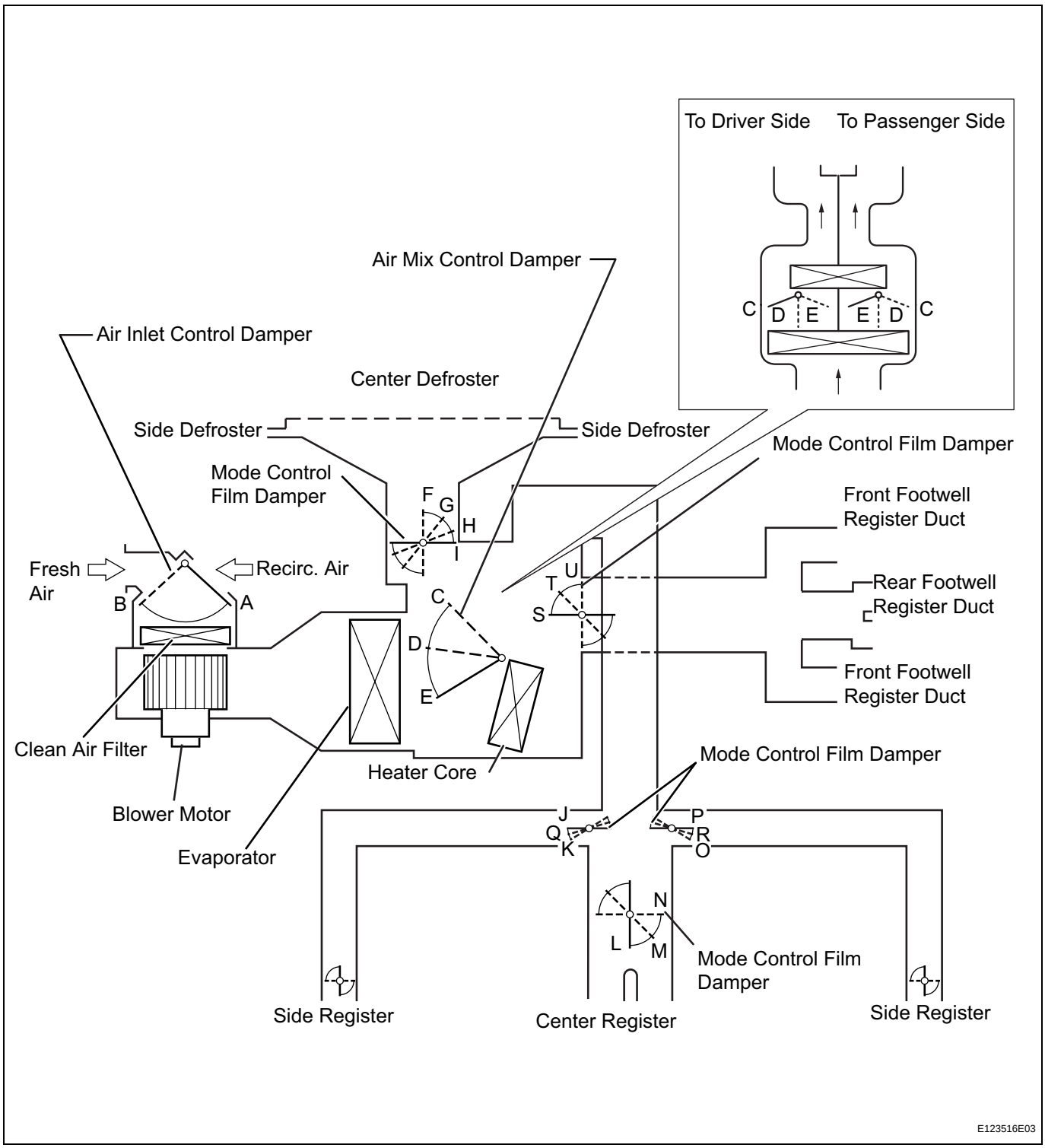

Control Damper		Control Position	Damper Position	Operation
Air Inlet Control Damper		FRESH	A	Brings in fresh air.
		RECIRC	B	Recirculates internal air.
Air Mix Control Damper (Left/ Right Independent Control)	Driver and Front Passenger Side	MAX COOL to MAX HOT (TEMP. SETTING 18 to 32°C (65 to 85°F))	C, D, E	Varies mixture ratio of fresh air and recirculation air in order to regulate temperature continuously from HOT to COOL.

AC

Control Damper		Control Position	Damper Position	Operation
Mode Control Film Damper	Driver and Front Passenger Side	FACE	I, J, L, P, U	Air blows out of center registers and side registers.
		BI-LEVEL	I, Q, M, R, T	Air mainly blows out of center registers, side registers, and footwell register ducts.
		FOOT	H, K, N, O, S	Air mainly blows out of front and rear footwell register ducts. In addition, air blows out slightly from front and side defrosters, and side registers.
		FOOT/DEF	G, K, N, O, T	Air mainly blows out of front and side defrosters to defrost windshield. Air also blows out from front and rear footwell register ducts, and side registers.
		DEF	F, K, N, O, U	Air blows out of front and side defrosters and side registers to defrost windshield.

3. AIR OUTLET AND AIRFLOW VOLUME

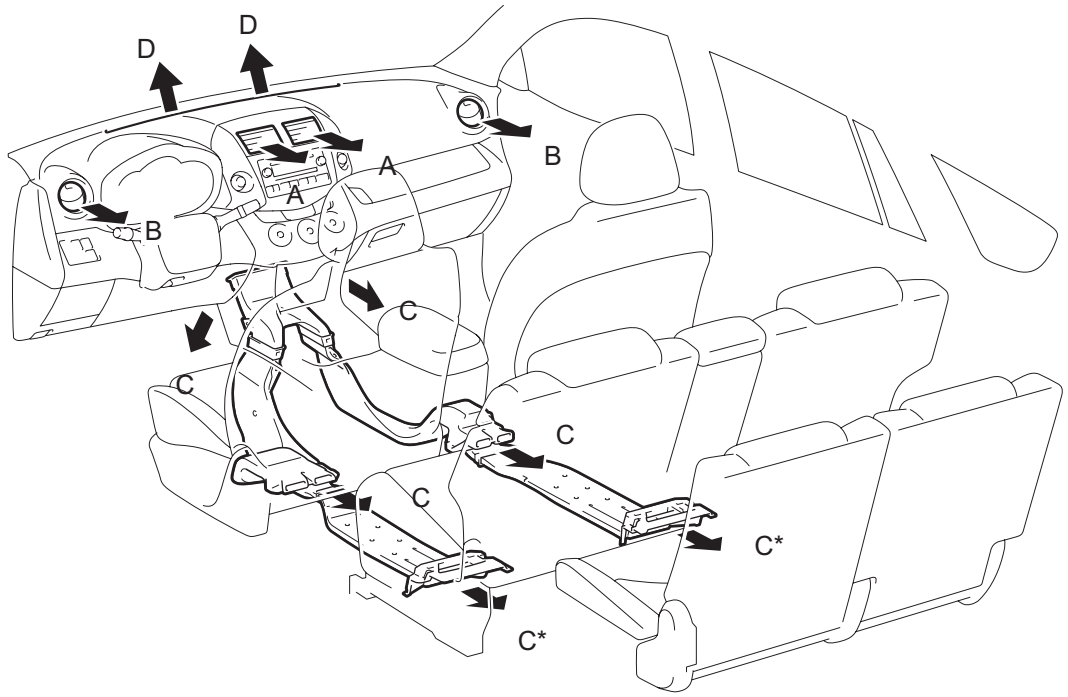

*: w/ Rear No. 2 Seat

P

E123517E02

AC

The circle size (○) indicates the proportion of the flow volume.

Air Outlet Mode		Air Outlet Position Symbol			
		A	B	C	D
		Center Face	Side Face	Foot	Defroster
	FACE	◯	◯	X	X
	BI-LEVEL	○	○	◯	X
	FOOT	X	○	◯	○
	FOOT/DEF	X	○	○	○
	DEF	X	○	X	◯

AC

HOW TO PROCEED WITH TROUBLESHOOTING

(2005/11-2006/01)

HINT:

- Use these procedures to troubleshoot the air conditioning system.
- *: Use the intelligent tester.

1	**VEHICLE BROUGHT TO WORKSHOP**

NEXT

2	**CUSTOMER PROBLEM ANALYSIS AND SYMPTOM CHECK**

NEXT

3	**INSPECT BATTERY VOLTAGE**

Standard voltage:
11 to 14 V

If the voltage is below 11 V, recharge or replace the battery before proceeding.

NEXT

4	**CHECK CAN COMMUNICATION SYSTEM***

AC

(a) Use the intelligent tester to check if the CAN communication system is functioning.
Result

Result	Proceed to
CAN DTC is not output	A
CAN DTC is output	B

B → **Go to CAN COMMUNICATION SYSTEM**

A

5	**CHECK DTC OR CHECK SENSOR CHECK CODE THROUGH PANEL DIAGNOSIS***

(a) Check DTCs or sensor check codes.
  (1) Write down the DTCs or sensor check codes.
(b) Clear the DTCs or sensor check codes.
(c) Check whether the DTCs or sensor check codes recur.
  (1) Reproduce the problem symptoms in accordance with the DTCs or sensor check codes that were written down, and check whether the DTCs or sensor check codes recur.

HINT:
Refer to the DTC chart when any DTCs or sensor check codes are output.

Result

Result	Proceed to
DTC or sensor check code is not output	A
DTC or sensor check code is output	B

B → **Go to step 8**

A

6	REFER TO PROBLEM SYMPTOMS TABLE

Result

Result	Proceed to
Fault not listed in problem symptoms table	A
Fault listed in problem symptoms table	B

B → **Go to step 8**

A

7	OVERALL ANALYSIS AND TROUBLESHOOTING*

(a) DATA LIST / ACTIVE TEST (see page AC-34)
(b) Panel diagnosis (indicator check) (see page AC-31)
(c) Panel diagnosis (actuator check) (see page AC-31)
(d) Panel diagnosis (sensor check) (see page AC-31)
(e) Terminals of ECU (see page AC-24)

NEXT

8	ADJUST, REPAIR OR REPLACE

NEXT

9	CONFIRMATION TEST

NEXT

END

HOW TO PROCEED WITH TROUBLESHOOTING

(2006/01-)

HINT:

- Use these procedures to troubleshoot the air conditioning system.
- *: Use the intelligent tester.

1	**VEHICLE BROUGHT TO WORKSHOP**

NEXT

2	**CUSTOMER PROBLEM ANALYSIS AND SYMPTOM CHECK**

NEXT

3	**INSPECT BATTERY VOLTAGE**

Standard voltage:
11 to 14 V

If the voltage is below 11 V, recharge or replace the battery before proceeding.

NEXT

4	**CHECK CAN COMMUNICATION SYSTEM***

AC

(a) Use the intelligent tester to check if the CAN communication system is functioning.
Result

Result	Proceed to
CAN DTC is not output	A
CAN DTC is output	B

B → **Go to CAN COMMUNICATION SYSTEM**

A

5	**CHECK DTC OR CHECK SENSOR CHECK CODE THROUGH PANEL DIAGNOSIS***

(a) Check DTCs or sensor check codes.
  (1) Write down the DTCs or sensor check codes.
(b) Clear the DTCs or sensor check codes.
(c) Check whether the DTCs or sensor check codes recur.
  (1) Reproduce the problem symptoms in accordance with the DTCs or sensor check codes that were written down, and check whether the DTCs or sensor check codes recur.

HINT:
Refer to the DTC chart when any DTCs or sensor check codes are output.

Result

Result	Proceed to
DTC or sensor check code is not output	A
DTC or sensor check code is output	B

B → **Go to step 8**

A

6 REFER TO PROBLEM SYMPTOMS TABLE

Result

Result	Proceed to
Fault is not listed in problem symptoms table	A
Fault is listed in problem symptoms table	B

B → **Go to step 8**

A

7 OVERALL ANALYSIS AND TROUBLESHOOTING*

AC

(a) DATA LIST / ACTIVE TEST (see page AC-37)
(b) Panel diagnosis (indicator check) (see page AC-31)
(c) Panel diagnosis (sensor check) (see page AC-31)
(d) Panel diagnosis (actuator check) (see page AC-31)
(e) Terminals of ECU (see page AC-27)

NEXT

8 ADJUST, REPAIR OR REPLACE

NEXT

9 CONFIRMATION TEST

NEXT

END

CUSTOMIZE PARAMETERS

HINT:
The following items can be customized.
NOTICE:

- **When the customer requests a change in a function, first make sure that the function can be customized.**
- **Be sure to make a note of the current settings before customizing.**
- **When troubleshooting a function, first make sure that the function is set to the default setting.**

Air conditioning system

Display (Item)	Default	Contents	Setting
SET TEMP SHIFT (Set Temperature Shift)	NORMAL	To control with shifted temperature against display temperature	+2 C / +1 C / NORMAL / -1 C / -2 C
AIR INLET MODE (Air Inlet Mode)	AUTO	In case of turning A/C ON when you desire to make compartment cool down quickly, this is function to change mode automatically to RECIRCULATION mode	MANUAL / AUTO
COMPRESSOR MODE (Compressor Mode)	AUTO	Function to turn A/C ON automatically by pressing AUTO button when blower is ON and A/C is OFF	MANUAL / AUTO
COMPRS / DEF OPER (Compressor / Air Inlet DEF Operation)	LINK	Function to turn A/C ON automatically linked with FRONT DEF button when A/C is OFF	NORMAL / LINK
EVAP CTRL (Evaporator Control)	AUTO	Function to set evaporator control to AUTOMATIC position (AUTO) to save power, or to coldest position (MANUAL) to dehumidify air and to prevent windows from fogging up	MANUAL / AUTO
FOOT / DEF MODE (Foot / DEF auto mode)	ON	Function to turn airflow from FOOT / DEF ON automatically when AUTO MODE is ON	OFF / ON
AUTO BLOW UP (Foot / DEF automatic blower up function)	ON	Function to change blower level automatically when defroster is ON	OFF / ON

PROBLEM SYMPTOMS TABLE

(2005/11-2006/01)

HINT:

- Use the table below to help determine the cause of the problem symptom. The potential causes of the symptoms are listed in order of probability in the "Suspected area" column of the table. Check each symptom by checking the suspected areas in the order they are listed. Replace parts as necessary.
- Inspect the fuses and relays related to this system before inspecting the suspected areas below.

Air conditioning system

Symptom	Suspected area	See page
No functions of A/C panel operate	1. LIN communication line	-
	2. Air conditioning control assembly	AC-240
	3. Air conditioning amplifier	AC-24
No functions of A/C system operate	1. ECU-IG2 fuse	-
	2. Air conditioning control assembly	AC-240
	3. Air conditioning amplifier	AC-24
	4. Wire harness or connector	-
Airflow Control: No blower control (Blower motor does not operate)	1. HTR fuse	-
	2. Blower motor circuit	AC-90
	3. Air conditioning amplifier	AC-24
	4. Air conditioning control assembly	AC-240
	5. Wire harness or connector	-
Airflow Control: No blower control (Blower motor does not change speed)	1. Blower motor circuit	AC-90
	2. Air conditioning amplifier	AC-24
	3. Air conditioning control assembly	AC-240
Temperature Control: No cool air comes out	1. Refrigerant volume	-
	2. Refrigerant pressure	-
	3. Air conditioning pressure sensor	AC-59
	4. Compressor and pulley	AC-215
	5. Driver side air mix damper control servo motor circuit	AC-73
	6. Passenger side air mix damper control servo motor circuit	AC-67
	7. Evaporator temperature sensor circuit	AC-50
	8. Room temperature sensor circuit	AC-43
	9. Ambient temperature sensor circuit	AC-46
	10. Expansion valve	-
	11. Air conditioning amplifier	AC-24
	12. Air conditioning control assembly	AC-240
	13. ECM	ES-427
	14. LIN communication line	-
	15. CAN communication system	CA-75

Symptom	Suspected area	See page
Temperature Control: No warm air comes out	1. Driver side air mix damper control servo motor circuit	AC-73
	2. Passenger side air mix damper control servo motor circuit	AC-67
	3. Air conditioning harness	-
	4. Room temperature sensor circuit	AC-43
	5. Air conditioning amplifier	AC-24
	6. Air conditioning control assembly	AC-240
	7. ECM	ES-427
	8. LIN communication line	-
	9. CAN communication system	CA-75
Temperature Control: Output air is warmer or cooler than set temperature or response is slow	1. Driver side solar sensor circuit	AC-73
	2. Passenger side solar sensor circuit	AC-67
	3. Room temperature sensor circuit	AC-43
	4. Air inlet damper control servo motor circuit	AC-69
	5. Heater radiator	-
	6. Expansion valve	-
	7. Air conditioning amplifier	AC-24
	8. Air conditioning control assembly	AC-240
	9. ECM	ES-427
	10. LIN communication line	-
	11. CAN communication system	CA-75
Temperature Control: No temperature control (Only Max. cool or Max. warm)	1. Driver side solar sensor circuit	AC-64
	2. Passenger side solar sensor circuit	AC-53
	3. Air conditioning amplifier	AC-24
	4. Air conditioning control assembly	AC-240
	5. LIN communication line	-
No air inlet control	1. Air conditioning control assembly	AC-240
	2. Air inlet damper control servo motor circuit	AC-69
	3. Evaporator temperature sensor circuit	AC-50
	4. Air conditioning amplifier	AC-24
Diagnostic trouble codes are not recorded. Set mode is cleared when ignition switch turned to LOCK	1. Air conditioning amplifier	AC-24
	2. Back-up power source circuit	AC-100

PROBLEM SYMPTOMS TABLE

(2006/01-)

HINT:

- Use the table below to help determine the cause of the problem symptom. The potential causes of the symptoms are listed in order of probability in the "Suspected area" column of the table. Check each symptom by checking the suspected areas in the order they are listed. Replace parts as necessary.
- Inspect the fuses and relays related to this system before inspecting the suspected areas below.

Air conditioning system

Symptom	Suspected area	See page
No functions of A/C panel operate	1. LIN communication line	-
	2. Air conditioning control assembly	AC-87
	3. Air conditioning amplifier	AC-27
No functions of A/C system operate	1. ECU-IG2 fuse	-
	2. Air conditioning control assembly	AC-87
	3. Air conditioning amplifier	AC-27
	4. Wire harness or connector	-
Airflow Control: No blower control (Blower motor does not operate)	1. HTR fuse	-
	2. Blower motor circuit	AC-90
	3. Air conditioning amplifier	AC-27
	4. Air conditioning control assembly	AC-87
	5. Wire harness or connector	-
Airflow Control: No blower control (Blower motor does not change speed)	1. Blower motor circuit	AC-90
	2. Air conditioning amplifier	AC-27
	3. Air conditioning control assembly	AC-87
Temperature Control: No cool air comes out	1. Refrigerant volume	-
	2. Refrigerant pressure	-
	3. Air conditioning pressure sensor	AC-59
	4. Compressor and pulley (for 2AZ-FE)	AC-79
	5. Compressor and magnetic clutch (for 2GR-FE)	AC-79
	6. Compressor circuit (for 2GR-FE)	AC-95
	7. Driver side air mix damper control servo motor circuit	AC-73
	8. Passenger side air mix damper control servo motor circuit	AC-67
	9. Evaporator temperature sensor circuit	AC-50
	10. Room temperature sensor circuit	AC-43
	11. Ambient temperature sensor circuit	AC-46
	12. Expansion valve	-
	13. Air conditioning amplifier	AC-27
	14. Air conditioning control assembly	AC-87
	15. ECM (for 2AZ-FE)	ES-1
	16. ECM (for 2GR-FE)	ES-1
	17. LIN communication line	-
	18. CAN communication system	CA-1

Symptom	Suspected area	See page
Temperature Control: No warm air comes out	1. Driver side air mix damper control servo motor circuit	AC-73
	2. Passenger side air mix damper control servo motor circuit	AC-67
	3. Air conditioning harness	-
	4. Room temperature sensor circuit	AC-43
	5. Air conditioning amplifier	AC-27
	6. Air conditioning control assembly	AC-87
	7. ECM (for 2AZ-FE)	ES-1
	8. ECM (for 2GR-FE)	ES-1
	9. LIN communication line	-
	10. CAN communication system	CA-1
Temperature Control: Output air is warmer or cooler than set temperature or response is slow	1. Driver side solar sensor circuit	AC-64
	2. Passenger side solar sensor circuit	AC-53
	3. Room temperature sensor circuit	AC-43
	4. Air inlet damper control servo motor circuit	AC-69
	5. Heater radiator	-
	6. Expansion valve	-
	7. Air conditioning amplifier	AC-27
	8. Air conditioning control assembly	AC-87
	9. ECM (for 2AZ-FE)	ES-1
	10. ECM (for 2GR-FE)	ES-1
	11. LIN communication line	-
	12. CAN communication system	CA-1
Temperature Control: No temperature control (Only Max. cool or Max. warm)	1. Driver side solar sensor circuit	AC-64
	2. Passenger side solar sensor circuit	AC-53
	3. Air conditioning amplifier	AC-27
	4. Air conditioning control assembly	AC-87
	5. LIN communication line	-
No air inlet control	1. Air conditioning control assembly	AC-87
	2. Air inlet damper control servo motor circuit	AC-69
	3. Evaporator temperature sensor circuit	AC-50
	4. Air conditioning amplifier	AC-27
Engine idle up does not occur, or is continuos.	1. Compressor circuit (for 2GR-FE)	AC-95
	2. ECM (for 2AZ-FE)	ES-1
	3. ECM (for 2GR-FE)	ES-1
Diagnostic trouble codes are not recorded. Set mode is cleared when ignition switch turned to LOCK	1. Air conditioning amplifier	AC-27
	2. Back-up power source circuit	AC-100

TERMINALS OF ECU

(2005/11-2006/01)

1. CHECK AIR CONDITIONING AMPLIFIER

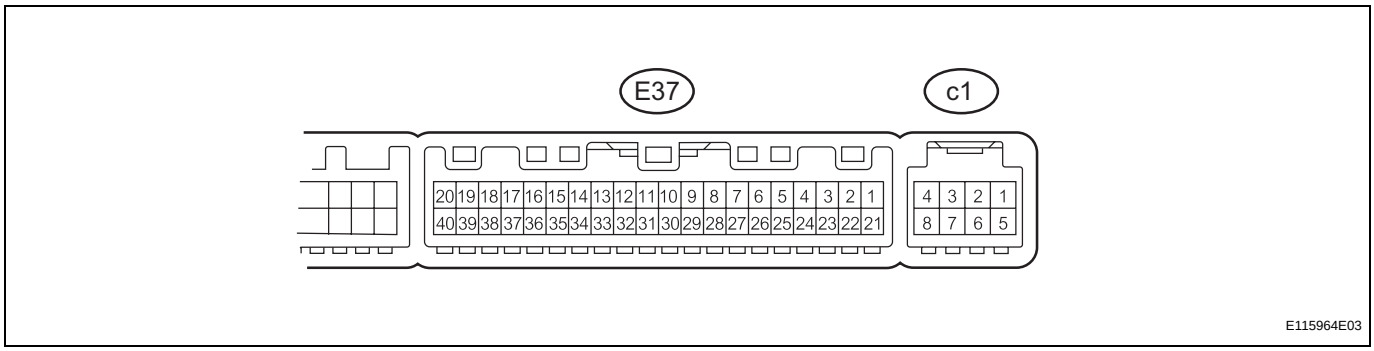

(a) Measure the voltage and resistance of the connectors.
HINT:
Check from the rear of the connector while it is connected to the air conditioning amplifier.

Symbols (Terminal No.)	Wiring Color	Terminal Description	Condition	Specified Condition
B (E37-21) - GND (E37-14)	R - W-B	Power source (Back-up)	Always	10 to 14 V
SOL+ (E37-2) - GND (E37-14)	GR - W-B	A/C compressor operation signal	Engine idling	Pulse generation (see waveform 1)
			Blower switch LO	
			A/C switch ON	
BLW (E37-23) - GND (E37-14)	R - W-B	Blower motor control signal	Ignition switch ON	Pulse generation (see waveform 2)
			Blower switch LO	
PRE (E37-9) - SG-2 (E37-13)	L - G	Air conditioning pressure sensor signal	Refrigerant pressure: Normal	0.76 to 4.74 V
PRE (E37-9) - SG-2 (E37-13)	L - G	Air conditioning pressure sensor signal	Refrigerant pressure: Abnormal (less than 0.196 MPa [2.0 kgf/cm^2, 28 psi])	Below 0.76 V
PRE (E37-9) - SG-2 (E37-13)	L - G	Air conditioning pressure sensor signal	Refrigerant pressure: Abnormal (more than 3.14 MPa [32 kgf/cm^2, 455 psi])	4.74 V or higher
TSD (E37-33) - S5-4 (E37-31)	L - LG	Driver side solar sensor signal	Ignition switch ON	0.8 to 4.3 V
			Solar sensor subject to electric light	
TSP (E37-32) - S5-4 (E37-31)	P - LG	Passenger side solar sensor signal	Ignition switch ON	0.8 to 4.3 V
			Solar sensor subject to electric light	
TR (E37-29) - SG-1 (E37-34)	CR - V	Room temperature sensor signal	Ignition switch ON	1.8 to 2.2 V
			Vehicle interior temperature: 25°C (77°F)	
SG-1 (E37-34) - Body ground	V - Body ground	Ground for room temperature sensor	Always	Below 1 Ω
GND (E37-14) - Body ground	W-B - Body ground	Ground for main power supply	Always	Below 1 Ω
IG+ (E37-1) - GND (E37-14)	Y - W-B	Power source (IG)	Ignition switch ON	10 to 14 V
S5-3 (E37-10) - GND (E37-14)	B - W-B	Power supply for pressure sensor	Ignition switch ON	4.5 to 5.5 V
CANH (E37-11) - GND (E37-14)	V - W-B	Hi-level CAN bus line	Ignition switch ON	Pulse generation (see waveform 3)

AC

Symbols (Terminal No.)	Wiring Color	Terminal Description	Condition	Specified Condition
CANL (E37-12) - GND (E37-14)	W - W-B	Lo-level CAN bus line	Ignition switch ON	Pulse generation (see waveform 4)
SG-2 (E37-13) - Body ground	G - Body ground	Ground for pressure sensor	Always	Below 1 Ω
RDFG (E37-38) - GND (E37-14)	B - W-B	Rear defogger switch signal	Ignition switch ON Rear defogger switch OFF	10 to 14 V
RDFG (E37-38) - GND (E37-14)	B - W-B	Rear defogger switch signal	Ignition switch ON Rear defogger switch ON	Below 1 Ω
LIN1 (E37-37) - GND (E37-14)	B - W-B	LIN communication signal	Ignition switch ON	Pulse generation
BUS G (c1-2) - Body ground	-	Ground for BUS IC	Always	Below 1 Ω
BUS (c1-3) - BUS G (c1-2)	-	BUS IC control signal	Ignition switch ON	Pulse generation
B BUS (c1-4) - BUS G (c1-2)	-	Power supply for BUS IC	Ignition switch ON	11 to 13 V
SGA (c1-5) - Body ground	-	Ground for evaporator temperature sensor	Always	Below 1 Ω
TEA (c1-6) - SGA (c1-5)	-	Evaporator temperature sensor signal	Ignition switch ON	1.4 to 1.8 V
			Evaporator temperature: 15°C (59°F)	

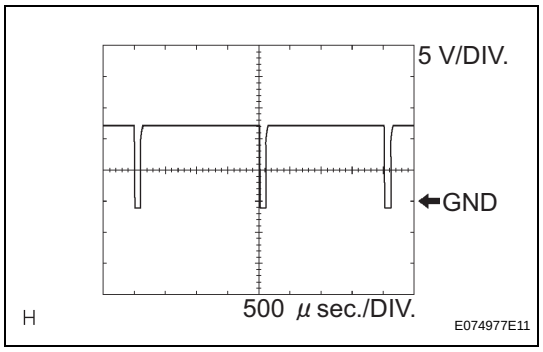

(b) Using an oscilloscope, check waveform 1.
Compressor and pulley operation signal

Item	Content
Symbols (Terminal No.)	SOL+ (E37-2) - GND (E37-14)
Tool Setting	5 V/DIV., 500 μsec./DIV.
Condition	Engine idling, Blower switch LO, A/C switch ON

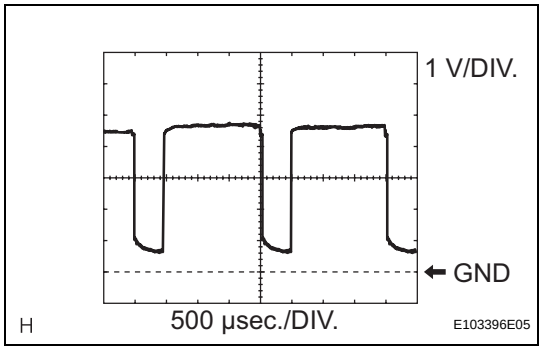

(c) Using an oscilloscope, check waveform 2.
Blower motor control signal

Item	Content
Symbols (Terminal No.)	BLW (E37-23) - GND (E37-14)
Tool Setting	1 V/DIV., 500 μsec./DIV.
Condition	Ignition switch ON, Blower switch LO

HINT:
When the blower level is increased, the duty ratio changes accordingly.

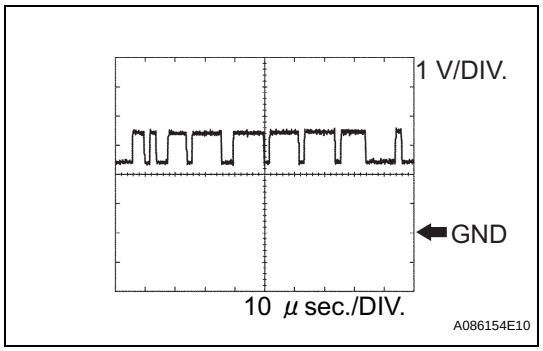

(d) Using an oscilloscope, check waveform 3.
CAN communication signal

Item	Content
Symbols (Terminal No.)	CANH (E37-11) - GND (E37-14)
Tool Setting	1 V/DIV., 10 μsec./DIV.
Condition	Ignition switch ON

HINT:
The waveform varies depending on the CAN communication signal.

AC

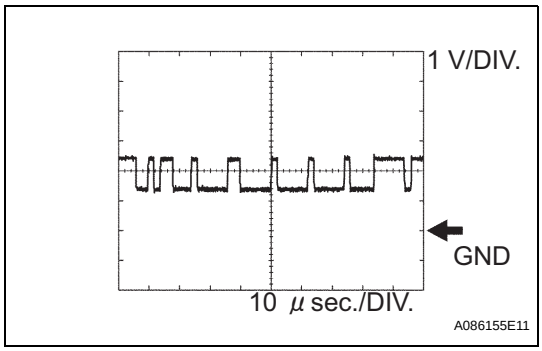

(e) Using an oscilloscope, check waveform 4.
CAN communication signal

Item	Content
Symbols (Terminal No.)	CANL (E37-12) - GND (E37-14)
Tool Setting	1 V/DIV., 10 μsec./DIV.
Condition	Ignition switch ON

HINT:
The waveform varies depending on the CAN communication signal.

2. CHECK AIR CONDITIONING CONTROL

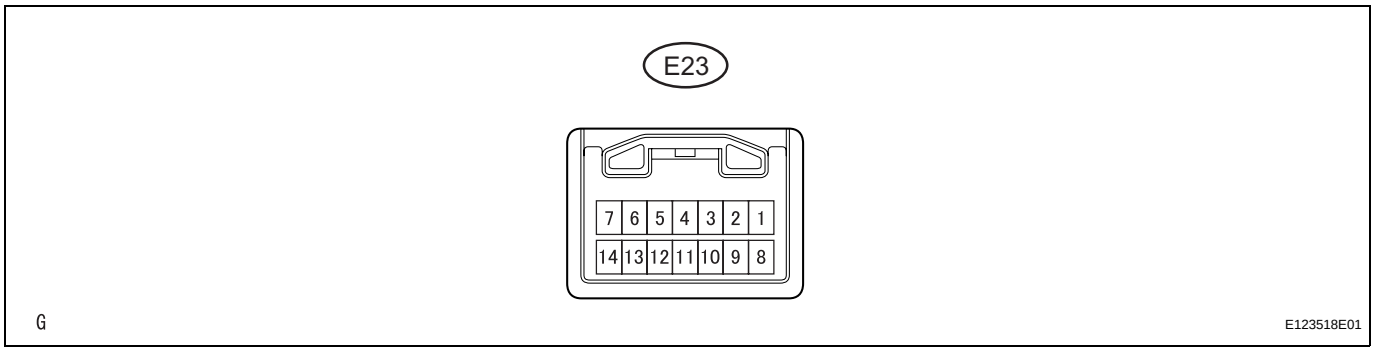

(a) Measure the voltage and resistance of the connectors.

Symbols (Terminal No.)	Wiring Color	Terminal Description	Condition	Specified Condition
IG+ (E23-2) - GND (E23-7)	L - W-B	Power source (IG)	Ignition switch ON	10 to 14 V
GND (E23-7) - Body ground	W-B - Body ground	Ground for air conditioning control assembly	Always	Below 1 Ω
LIN1 (E23-11) - GND (E23-7)	B - W-B	LIN communication signal	Ignition switch ON	Pulse generation
+B (E23-1) - GND (E23-7)	R - W-B	Power source (Back-up)	Always	10 to 14 V
ACC (E23-8) - GND (E23-7)	GR - W-B	ACC power supply	Always	Below 1 Ω

AC

TERMINALS OF ECU

(2006/01-)

1. CHECK AIR CONDITIONING AMPLIFIER

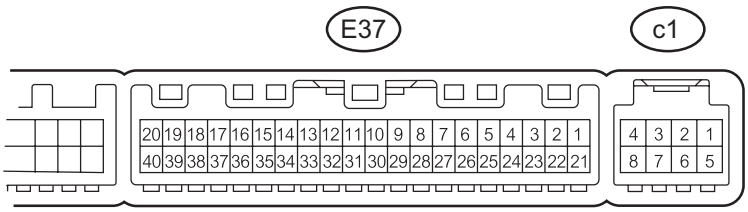

E115964E03

(a) Measure the voltage and resistance of the connectors.
HINT:
Check from the rear of the connector while it is connected to the air conditioning amplifier.

Symbols (Terminal No.)	Wiring Color	Terminal Description	Condition	Specified Condition
B (E37-21) - GND (E37-14)	R - W-B	Power source (Back-up)	Always	10 to 14 V
SOL+ (E37-2) - GND (E37-14)	GR - W-B	A/C compressor operation signal	Engine idling	Pulse generation (see waveform 1)
			Blower switch LO	
			A/C switch ON	
BLW (E37-23) - GND (E37-14)	R - W-B	Blower motor control signal	Ignition switch ON	Pulse generation (see waveform 2)
			Blower switch LO	
PRE (E37-9) - SG-2 (E37-13)	L - G	Air conditioning pressure sensor signal	Refrigerant pressure: Normal	0.76 to 4.74 V
PRE (E37-9) - SG-2 (E37-13)	L - G	Air conditioning pressure sensor signal	Refrigerant pressure: Abnormal (less than 0.196 MPa [2.0 kgf/cm^2, 28 psi])	Below 0.76 V
PRE (E37-9) - SG-2 (E37-13)	L - G	Air conditioning pressure sensor signal	Refrigerant pressure: Abnormal (more than 3.14 MPa [32 kgf/cm^2, 455 psi])	4.74 V or higher
TSD (E37-33) - S5-4 (E37-31)	L - LG	Driver side solar sensor signal	Ignition switch ON	0.8 to 4.3 V
			Solar sensor subject to electric light	
TSP (E37-32) - S5-4 (E37-31)	P - LG	Passenger side solar sensor signal	Ignition switch ON	0.8 to 4.3 V
			Solar sensor subject to electric light	
TR (E37-29) - SG-1 (E37-34)	CR - V	Room temperature sensor signal	Ignition switch ON	1.8 to 2.2 V
			Vehicle interior temperature: 25°C (77°F)	
SG-1 (E37-34) - Body ground	V - Body ground	Ground for room temperature sensor	Always	Below 1 Ω
GND (E37-14) - Body ground	W-B - Body ground	Ground for main power supply	Always	Below 1 Ω
IG+ (E37-1) - GND (E37-14)	Y - W-B	Power source (IG)	Ignition switch ON	10 to 14 V
S5-3 (E37-10) - GND (E37-14)	B - W-B	Power supply for pressure sensor	Ignition switch ON	4.5 to 5.5 V
CANH (E37-11) - GND (E37-14)	V - W-B	Hi-level CAN bus line	Ignition switch ON	Pulse generation (see waveform 3)

AC

Symbols (Terminal No.)	Wiring Color	Terminal Description	Condition	Specified Condition
CANL (E37-12) - GND (E37-14)	W - W-B	Lo-level CAN bus line	Ignition switch ON	Pulse generation (see waveform 4)
SG-2 (E37-13) - Body ground	G - Body ground	Ground for pressure sensor	Always	Below 1 Ω
RDFG (E37-38) - GND (E37-14)	B - W-B	Rear defogger switch signal	Ignition switch ON Rear defogger switch OFF	10 to 14 V
RDFG (E37-38) - GND (E37-14)	B - W-B	Rear defogger switch signal	Ignition switch ON Rear defogger switch ON	Below 1 V
LIN1 (E37-37) - GND (E37-14)	B - W-B	LIN communication signal	Ignition switch ON	Pulse generation
BUS G (c1-2) - Body ground	-	Ground for BUS IC	Always	Below 1 Ω
BUS (c1-3) - BUS G (c1-2)	-	BUS IC control signal	Ignition switch ON	Pulse generation
B BUS (c1-4) - BUS G (c1-2)	-	Power supply for BUS IC	Ignition switch ON	11 to 13 V
SGA (c1-5) - Body ground	-	Ground for evaporator temperature sensor	Always	Below 1 Ω
TEA (c1-6) - SGA (c1-5)	-	Evaporator temperature sensor signal	Ignition switch ON	1.4 to 1.8 V
			Evaporator temperature: 15°C (59°F)	
LOCK (E37-8)* - SG-2 (E37-13)	W - G	Compressor lock sensor signal	Ignition switch ON AUTO switch ON A/C switch ON Magnetic clutch ON	Pulse generation (see waveform 5)
MGC (E37-20)* - GND (E37-14)	V - W-B	Magnetic clutch relay signal	Ignition switch ON Magnetic clutch OFF	10 to 14 V
MGC (E37-20)* - GND (E37-14)	V - W-B	Magnetic clutch relay signal	Ignition switch ON Magnetic clutch ON	Below 1.5 V

HINT:
*: for 2GR-FE

AC

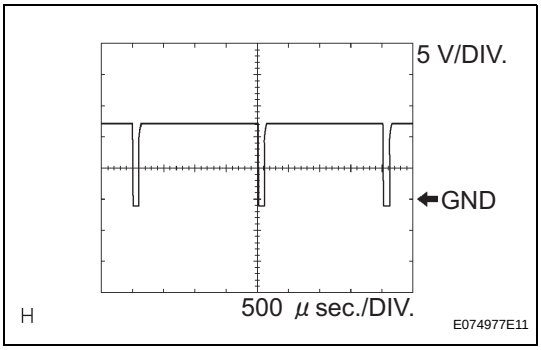

(b) Using an oscilloscope, check waveform 1.
A/C Compressor* operation signal

Item	Content
Symbols (Terminal No.)	SOL+ (E37-2) - GND (E37-14)
Tool Setting	5 V/DIV., 500 μsec./DIV.
Condition	Engine idling, Blower switch LO, A/C switch ON

HINT:
*: Compressor and pulley for 2AZ-FE, Compressor and magnetic clutch for 2GR-FE.

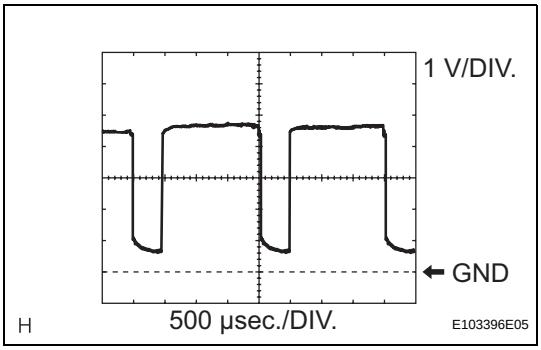

(c) Using an oscilloscope, check waveform 2.
Blower motor control signal

Item	Content
Symbols (Terminal No.)	BLW (E37-23) - GND (E37-14)
Tool Setting	1 V/DIV., 500 μsec./DIV.
Condition	Ignition switch ON, Blower switch LO

HINT:
When the blower level is increased, the duty ratio changes accordingly.

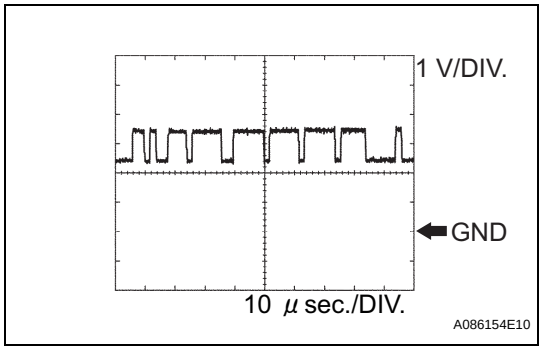

(d) Using an oscilloscope, check waveform 3.
CAN communication signal

Item	Content
Symbols (Terminal No.)	CANH (E37-11) - GND (E37-14)
Tool Setting	1 V/DIV., 10 μsec./DIV.
Condition	Ignition switch ON

HINT:
The waveform varies depending on the CAN communication signal.

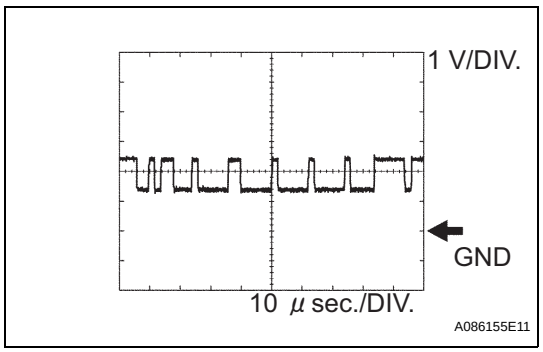

(e) Using an oscilloscope, check waveform 4.
CAN communication signal

Item	Content
Symbols (Terminal No.)	CANL (E37-12) - GND (E37-14)
Tool Setting	1 V/DIV., 10 μsec./DIV.
Condition	Ignition switch ON

HINT:
The waveform varies depending on the CAN communication signal.

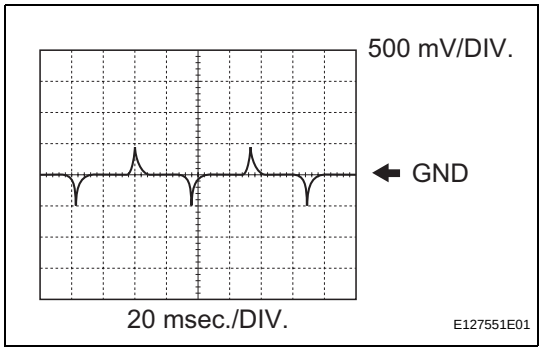

(f) Using an oscilloscope, check waveform 5.
Compressor lock sensor signal*

Item	Content
Symbols (Terminal No.)	LOCK (E37-8)* - SG-2 (E37-13)
Tool Setting	500 mV/DIV., 20 msec./DIV.
Condition	Ignition switch ON, AUTO switch ON, A/C switch ON, Magnetic clutch ON

HINT:
*: for 2GR-FE

AC

2. CHECK AIR CONDITIONING CONTROL

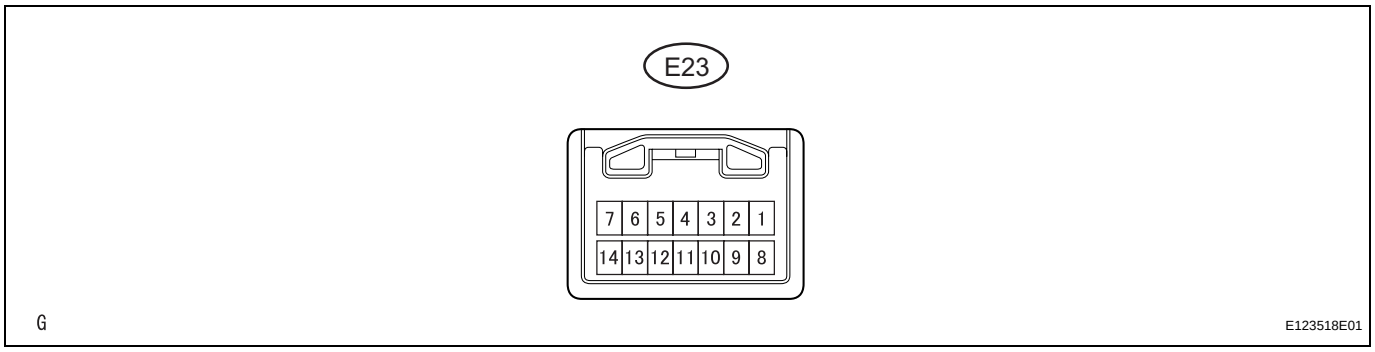

(a) Measure the voltage and resistance of the connectors.

Symbols (Terminal No.)	Wiring Color	Terminal Description	Condition	Specified Condition
IG+ (E23-2) - GND (E23-7)	L - W-B	Power source (IG)	Ignition switch ON	10 to 14 V
GND (E23-7) - Body ground	W-B - Body ground	Ground for air conditioning control assembly	Always	Below 1 Ω
LIN1 (E23-11) - GND (E23-7)	B - W-B	LIN communication signal	Ignition switch ON	Pulse generation
+B (E23-1) - GND (E23-7)	R - W-B	Power source (Back-up)	Always	10 to 14 V

Symbols (Terminal No.)	Wiring Color	Terminal Description	Condition	Specified Condition
ACC (E23-8) - GND (E23-7)	GR - W-B	ACC power supply	Always	Below 1 Ω

DIAGNOSIS SYSTEM

1. DESCRIPTION

(a) Air conditioning system data and the Diagnostic Trouble Codes (DTCs) can be read through the Data Link Connector 3 (DLC3) of the vehicle. When the system seems to be malfunctioning, use the intelligent tester to check for malfunctions and perform troubleshooting.

2. CHECK DLC3

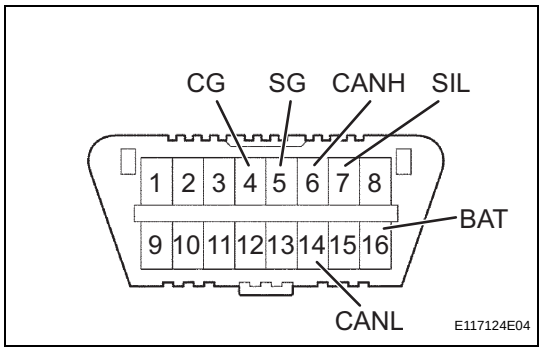

The vehicle's ECM uses the ISO 15765-4 for communication protocol. The terminal arrangement of the DLC3 complies with SAE J1962 and matches the ISO 15765-4 format.

Symbols (Terminal No.)	Terminal Description	Condition	Specified Condition
SIL (7) - SG (5)	Bus "+" line	During transmission	Pulse generation
CG (4) - Body ground	Chassis ground	Always	Below 1 Ω
SG (5) - Body ground	Signal ground	Always	Below 1 Ω
BAT (16) - Body ground	Battery positive	Always	10 to 14 V
CANH (6) - CANL (14)	CAN bus line	Ignition switch LOCK*	54 to 69 Ω
CANH (6) - CG (4)	HIGH-level CAN bus line	Ignition switch LOCK*	200 Ω or higher
CANH (6) - BAT (16)	HIGH-level CAN bus line	Ignition switch LOCK*	1 MΩ or higher
CANL (14) - CG (4)	LOW-level CAN bus line	Ignition switch LOCK*	200 Ω or higher
CANL (14) - BAT (16)	LOW-level CAN bus line	Ignition switch LOCK*	1 MΩ or higher

If the result is not as specified, the DLC3 may have a malfunction. Repair or replace the harness and connector.

NOTICE:

***: Before measuring the resistance, leave the vehicle as is for at least 1 minute and do not operate the ignition switch, other switches or doors.**

HINT:

Connect the cable of the intelligent tester (with CAN VIM) to the DLC3, turn the ignition switch ON and attempt to use the tester. If the display indicates that a communication error has occurred, there is a problem either with the vehicle or with the tester.

If communication is normal when the tester is connected to another vehicle, inspect the DLC3 of the original vehicle.

If communication is still not possible when the tester is connected to another vehicle, the problem may be in the tester itself. Consult the Service Department listed in the tester's instruction manual.

AC

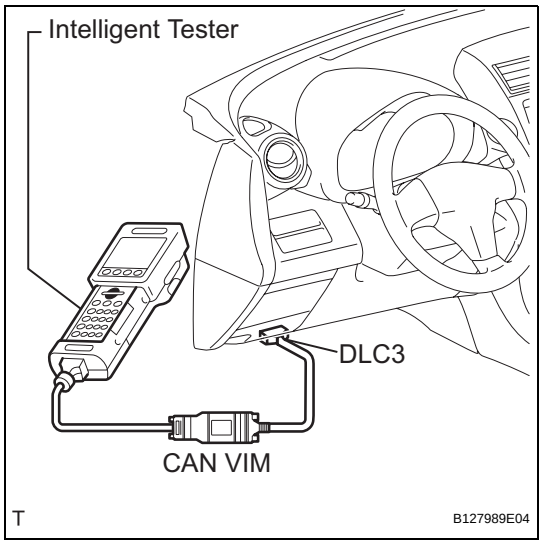

DTC CHECK / CLEAR

1. CHECK DTC

(a) Connect the intelligent tester (with CAN VIM) to the DLC3.

(b) Turn the ignition switch ON and turn the intelligent tester ON.

(c) Read the DTC by following the prompts on the tester screen.
HINT:
Refer to the intelligent tester operator's manual for further details.

2. CLEAR DTC

(a) Connect the intelligent tester (with CAN VIM) to the DLC3.

(b) Turn the ignition switch ON and turn the intelligent tester ON.

(c) Clear the DTC by following the prompts on the tester screen.
HINT:
Refer to the intelligent tester operator's manual for further details.

CHECK MODE PROCEDURE

1. PANEL DIAGNOSIS (INDICATOR CHECK)

(a) Turn the ignition switch to LOCK.

(b) Turn the ignition switch ON while simultaneously pressing the A/C control AUTO switch and the REC/FRS switch.

(c) Check that all indicators and the display area are turned on and off 4 times in succession at 1 second intervals.

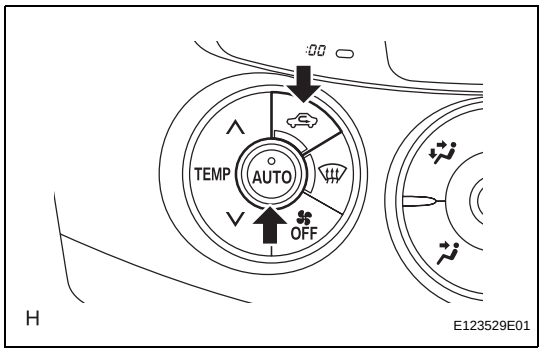

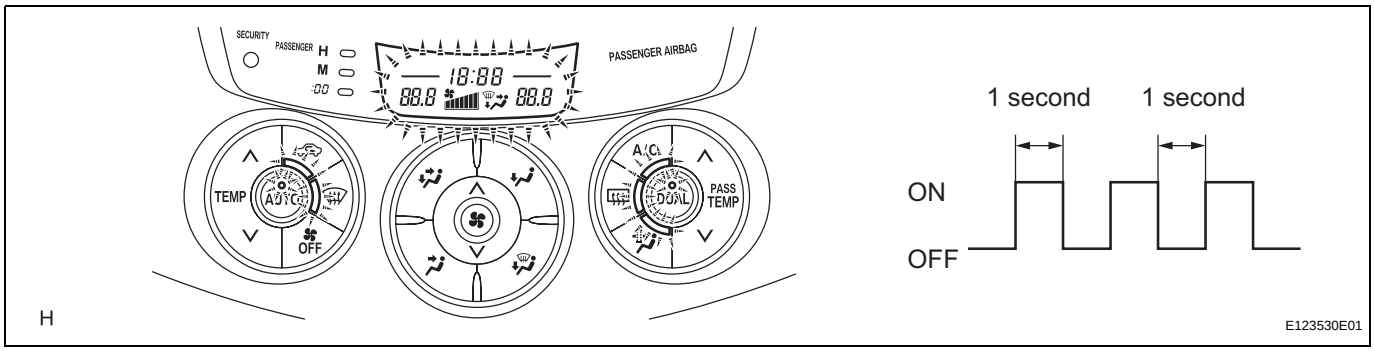

HINT:
After the indicator check is completed, the system automatically enters sensor check mode.

(d) Press the OFF switch to terminate the panel diagnosis.

2. PANEL DIAGNOSIS (SENSOR CHECK)

(a) Perform the indicator check.
HINT:
After the indicator check is completed, the system automatically enters sensor check mode.

(b) Press the REC/FRS switch to enter actuator check mode.

(c) After the actuator check is completed, press the AUTO switch to enter sensor check mode.
NOTICE:
The sensor check must be performed again after the actuator check is completed because sensor check mode, which starts automatically after the indicator check, cannot fully detect malfunctions.

AC

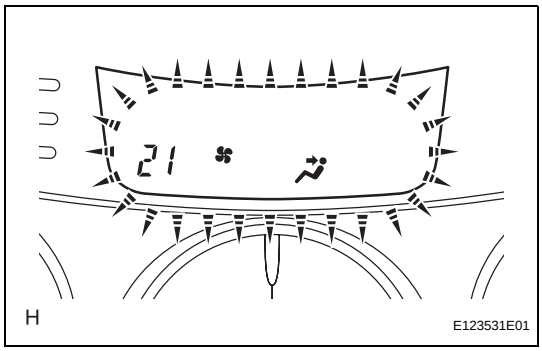

(d) Check the sensor check results displayed on the set temperature display.

Results	Code Display
Present malfunction	Blinks
Past malfunction	Blinks

HINT:

- The illustration shows the display when code 21 is output.
- When 2 or more sensor check codes are detected, the codes are displayed in ascending numerical order.
- In cases with 2 or more codes, if they are difficult to read, press the DEF switch to activate the step operation and display them one by one.
- The codes are displayed in ascending numerical order as the DEF switch is pressed.

(e) When any sensor check codes are displayed, refer to the DTC chart (see page AC-39).

(f) Press the OFF switch to terminate the panel diagnosis.
HINT:
Pressing the REC/FRS switch returns the system to actuator check mode.

3. PANEL DIAGNOSIS (CLEAR SENSOR CHECK CODE)

(a) Inspect, and repair or replace the malfunctioning parts.

(b) Clear the sensor check codes.

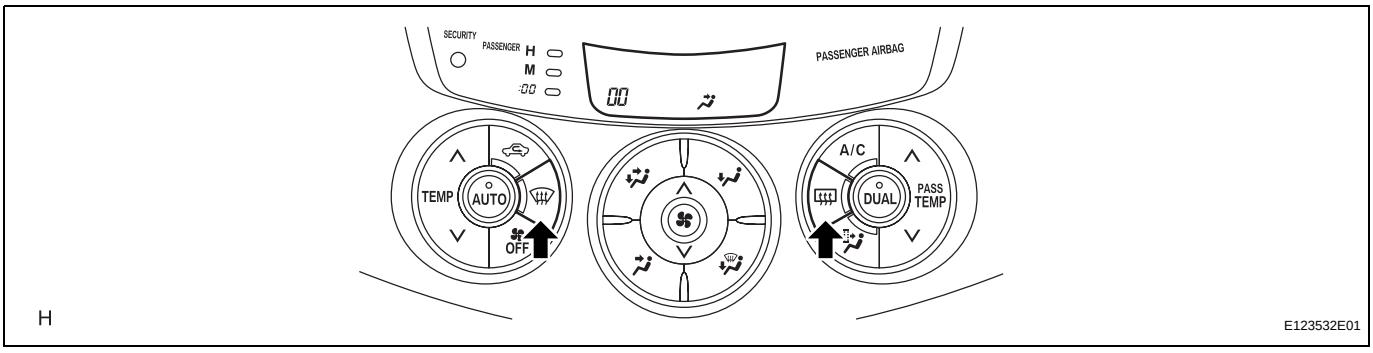

(1) While pressing the DEF switch during sensor check mode, press the Rr DEF switch.
HINT:
Sensor check codes can be cleared by removing the ECU-B2 fuse from the engine room No. 2 relay block for more than 60 seconds.

(c) Perform the sensor check and confirm that normal code 00 is displayed.

AC

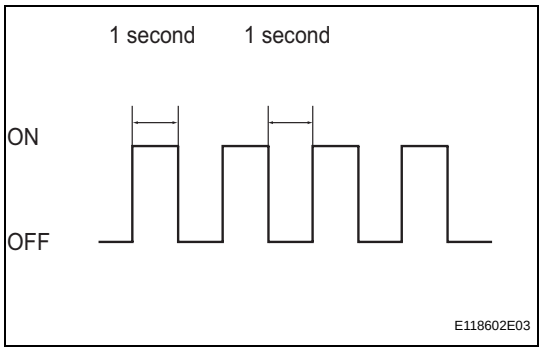

4. PANEL DIAGNOSIS (ACTUATOR CHECK)

(a) Start the engine and warm it up.

(b) Perform the indicator check.

(c) When the sensor check is started after the indicator check, press the REC/FRS switch to start the actuator check.

HINT:

Perform the actuator check with the engine running.

(d) Check the temperature and blower levels by hand at each step while the actuator check proceeds from step 0 to 9 at 1 second intervals (continuous operation).

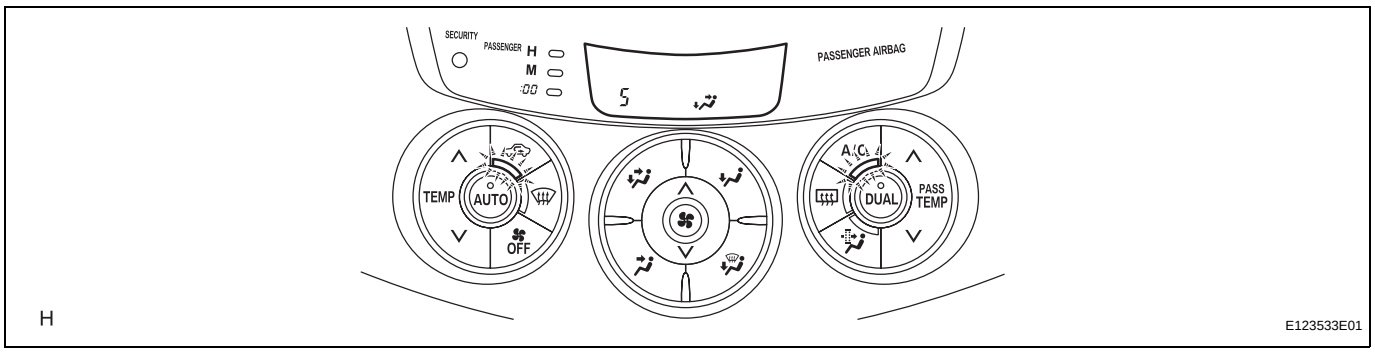

HINT:

Each step number is displayed on the set temperature display.

(e) To display step numbers one by one manually, press the DEF switch to activate the step operation. The step number changes each time the DEF switch is pressed.

HINT:

- Each step number blinks at 1 second intervals during the step operation.
- The illustration shows the display when step number 5 is displayed.

(f) Press the OFF switch to terminate the panel diagnosis.

HINT:

Pressing the AUTO switch returns to sensor check mode.

AC

Step No.	Blower Level	Air Mix Damper	Air Flow Vent	Air Inlet Damper	Cool Air By-pass	Compressor
0	0	0% (MAX COLD)	FACE	FRESH	-	OFF
1	1	0% (MAX COLD)	FACE	FRESH	-	OFF
2	17	0% (MAX COLD)	FACE	RECIRCULATION / FRESH	-	ON
3	17	0% (MAX COLD)	FACE	RECIRCULATION	-	ON
4	17	50%	BI-LEVEL	RECIRCULATION	-	ON
5	17	50%	BI-LEVEL	RECIRCULATION	-	ON
6	17	50%	FOOT	FRESH	-	ON
7	17	100% (MAX HOT)	FOOT	FRESH	-	ON

Step No.	Blower Level	Air Mix Damper	Air Flow Vent	Air Inlet Damper	Cool Air By-pass	Compressor
8	17	100% (MAX HOT)	FOOT/DEF	FRESH	-	ON
9	31	100% (MAX HOT)	DEF	FRESH	-	ON

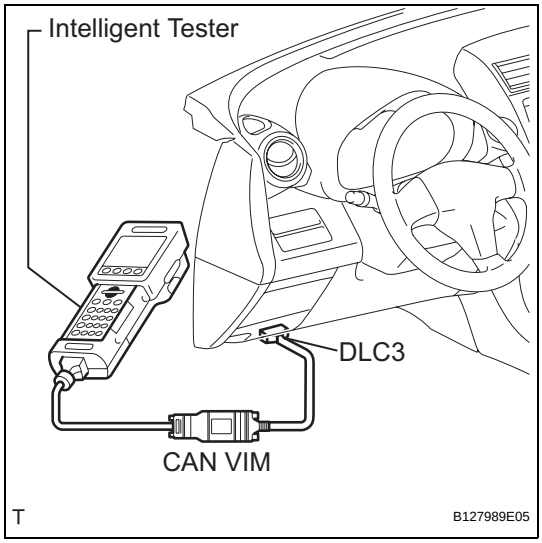

DATA LIST / ACTIVE TEST

(2005/11-2006/01)

1. READ DATA LIST

HINT:

Using the intelligent tester's DATA LIST allows switch, sensor, actuator and other item values to be read without removing any parts. Reading the DATA LIST early in troubleshooting is one way to save time.

(a) Connect the intelligent tester (with CAN VIM) to the DLC3.

(b) Turn the ignition switch ON and turn the intelligent tester ON.

(c) Read the DATA LIST by following the prompts on the tester.

Air conditioning amplifier

Item	Measurement Item / Display (Range)	Normal Condition	Diagnostic Note
ROOM TEMP	Room temperature sensor / Min.: -6.5°C (20.3°F) Max.: 57.25°C (135.05°F)	Actual room temperature is displayed	Open circuit: -6.5°C (20.3°F) Short circuit: 57.25°C (135.05°F)
AMBI TEMP SENS	Ambient temperature sensor / Min.: -23.3°C (-9.94°F) Max.: 65.95°C (150.71°F)	Actual ambient temperature is displayed	Open circuit: -23.3°C (-9.94°F) Short circuit: 65.95°C (150.71°F)
SOLAR SENS-D	Driver side solar sensor / Min.: 0, Max.: 255	Driver side temperature increases as brightness increases	-
SOLAR SENS-P	Passenger side solar sensor / Min.: 0, Max.: 255	Passenger side temperature increases as brightness increases	-
COOLANT TEMP	Engine coolant temperature / Min.: 1.3°C (34.34°F) Max.: 90.55°C (194.99°F)	Actual engine coolant temperature is displayed after engine warmed up	-
SET TEMP-D	Driver side set temperature / Min.: 0°C (32°F) Max.: 30°C (54°F)	Driver side actual set temperature is displayed	-
SET TEMP-P	Passenger side set temperature / Min.: 0°C (32°F) Max.: 30°C (54°F)	Passenger side actual set temperature is displayed	-
ESTIMATE TEMP-D	Driver side estimated temperature / Min.: -358.4°C (-613.12°F) Max.: 358.4°C (677.12°F)	Driver side estimated temperature is displayed	-
ESTIMATE TEMP-P	Passenger side estimated temperature / Min.: -358.4°C (-613.12°F) Max.: 358.4°C (677.12°F)	Passenger side estimated temperature is displayed	-
BLOWER LEVEL	Blower motor speed level / Min.: 0, Max.: 31	Increases in range between 0 and 31 as blower motor speed increases	-
AMBI TEMP	Adjusted ambient temperature / Min.: -30.8°C (-23.44°F) Max.: 50.8°C (123.44°F)	-	-

AC

Item	Measurement Item / Display (Range)	Normal Condition	Diagnostic Note
AIR MIX PULSE-D	Driver side air mix servo motor target pulse / Min.: 0, Max.: 255	Customized value displayed	-
AIR MIX PULSE-P	Passenger side air mix servo motor target pulse / Min.: 0, Max.: 255	Customized value displayed	-
AIR OUT PULSE	Air outlet servo motor target / Min.: 0, Max.: 255	Customized value displayed	-
A/I DAMP PLS	Air inlet damper target pulse / Min.: 0, Max.: 255	Customized value displayed	-
EVAP FIN TEMP	Evaporator temperature sensor / Min.: -29.7°C (-21.46°F) Max.: 59.6°C (139.28°F)	Actual evaporator temperature is displayed	Open circuit: -29.7°C (-21.46°F) Short circuit: 59.6°C (139.28°F)
REG PRESS SENS	Regulator pressure sensor / Min.: 0 MPaG Max.: 3.187 MPaG	Actual regulator pressure is displayed	-
REG CTRL CURRNT	Regulator control current / Min.: 0 A Max.: 0.997 A	Value changes between 0 A and 0.997 A in accordance with compressor and magnetic clutch operation	-
AIR INLET MODE	Air inlet mode / AUTO, MANUAL	Customized value displayed	-
COMPRESSOR MODE	Compressor mode / AUTO, MANUAL	Customized value displayed	-
COMPRS/DEF MODE	Compressor / DEF Mode / LINK, NORMAL	Customized value displayed	-
EVAP CTRL	Evaporator Control / AUTO, MANUAL	Customized value displayed	-
AUTO BLOW UP	Foot / DEF automatic blow up function / ON, OFF	Customized value displayed	-
FOOT/DEF MODE	Foot / DEF auto mode / ON, OFF	Customized value displayed	-
SET TEMP SHIFT	Shift set temperature / +2 C, +1 C, NORMAL, -1 C, -2 C	Customized value displayed	-
DESTINATION	Destination / DOMEST, USA, EUROPE, AUSTRAL, MIDEAST, NO INFO	Destinations displayed	-
#CODES	Number of trouble codes / Min.: 0, Max.: 255	Number of DTCs displayed	-

AC

2. PERFORM ACTIVE TEST

HINT:

Performing the intelligent tester's ACTIVE TEST allows relay, VSV, actuator and other items to be operated without removing any parts. Performing the ACTIVE TEST early in troubleshooting is one way to save time. The DATA LIST can be displayed in the ACTIVE TEST.

(a) Connect the intelligent tester (with CAN VIM) to the DLC3.

(b) Turn the ignition switch ON and turn the intelligent tester ON.

(c) Perform the ACTIVE TEST by following the prompts on the tester.

Air conditioning amplifier

Item	Test Details / Display (Range)	Diagnostic Note
BLOWER MOTOR	Blower motor / Min.: 0, Max.: 31	-
A/C COMPRESSOR	A/C compressor / OFF, ON	-
DEFOGGER RLY-R	Defogger relay (Rear) / OFF, ON	-
AIR MIX PULSE	Air mix servo motor pulse / Min.: 0, Max.: 255	-
AIR MIX PULSE-P	Air mix servo motor pulse (P side) / Min.: 0, Max.: 255	-
AIR OUT PULSE	Air outlet servo motor pulse / Min.: 0, Max.: 255	-
A/I DAMP PLS	Air inlet damper target pulse / Min.: 0, Max.: 255	-

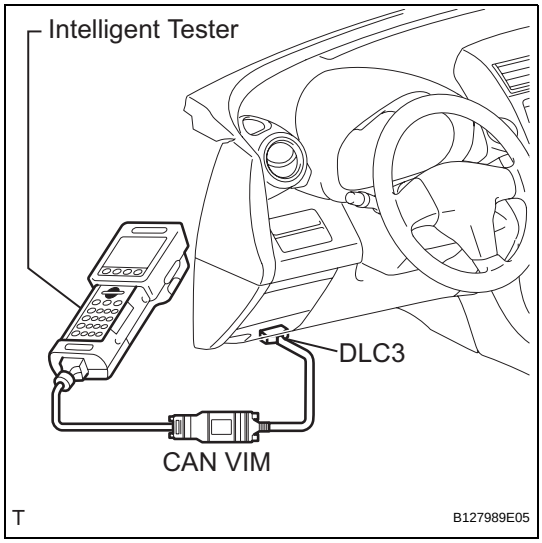

DATA LIST / ACTIVE TEST

(2006/01-)

1. READ DATA LIST

HINT:

Using the intelligent tester's DATA LIST allows switch, sensor, actuator and other item values to be read without removing any parts. Reading the DATA LIST early in troubleshooting is one way to save time.

(a) Connect the intelligent tester (with CAN VIM) to the DLC3.

(b) Turn the ignition switch ON and turn the intelligent tester ON.

(c) Read the DATA LIST by following the prompts on the tester.

AC

Air conditioning amplifier

Item	Measurement Item / Display (Range)	Normal Condition	Diagnostic Note
ROOM TEMP	Room temperature sensor / Min.: -6.5°C (20.3°F) Max.: 57.25°C (135.05°F)	Actual room temperature is displayed	Open circuit: -6.5°C (20.3°F) Short circuit: 57.25°C (135.05°F)
AMBI TEMP SENS	Ambient temperature sensor / Min.: -23.3°C (-9.94°F) Max.: 65.95°C (150.71°F)	Actual ambient temperature is displayed	Open circuit: -23.3°C (-9.94°F) Short circuit: 65.95°C (150.71°F)
SOLAR SENS-D	Driver side solar sensor / Min.: 0, Max.: 255	Driver side temperature increases as brightness increases	-
SOLAR SENS-P	Passenger side solar sensor / Min.: 0, Max.: 255	Passenger side temperature increases as brightness increases	-
COOLANT TEMP	Engine coolant temperature / Min.: 1.3°C (34.34°F) Max.: 90.55°C (194.99°F)	Actual engine coolant temperature is displayed after engine warmed up	-
SET TEMP-D	Driver side set temperature / Min.: 0°C (32°F) Max.: 30°C (54°F)	Driver side actual set temperature is displayed	-
SET TEMP-P	Passenger side set temperature / Min.: 0°C (32°F) Max.: 30°C (54°F)	Passenger side actual set temperature is displayed	-

Item	Measurement Item / Display (Range)	Normal Condition	Diagnostic Note
ESTIMATE TEMP-D	Driver side estimated temperature / Min.: -358.4°C (-613.12°F) Max.: 358.4°C (677.12°F)	Driver side estimated temperature is displayed	-
ESTIMATE TEMP-P	Passenger side estimated temperature / Min.: -358.4°C (-613.12°F) Max.: 358.4°C (677.12°F)	Passenger side estimated temperature is displayed	-
BLOWER LEVEL	Blower motor speed level / Min.: 0, Max.: 31	Increases in range between 0 and 31 as blower motor speed increases	-
AMBI TEMP	Adjusted ambient temperature / Min.: -30.8°C (-23.44°F) Max.: 50.8°C (123.44°F)	-	-
AIR MIX PULSE-D	Driver side air mix servo motor target pulse / Min.: 0, Max.: 255	Customized value displayed	-
AIR MIX PULSE-P	Passenger side air mix servo motor target pulse / Min.: 0, Max.: 255	Customized value displayed	-
AIR OUT PULSE	Air outlet servo motor target / Min.: 0, Max.: 255	Customized value displayed	-
A/I DAMP PLS	Air inlet damper target pulse / Min.: 0, Max.: 255	Customized value displayed	-
EVAP FIN TEMP	Evaporator temperature sensor / Min.: -29.7°C (-21.46°F) Max.: 59.6°C (139.28°F)	Actual evaporator temperature is displayed	Open circuit: -29.7°C (-21.46°F) Short circuit: 59.6°C (139.28°F)
REG PRESS SENS	Regulator pressure sensor / Min.: 0 MPaG Max.: 3.187 MPaG	Actual regulator pressure is displayed	-
REG CTRL CURRNT	Regulator control current / Min.: 0 A Max.: 0.997 A	Value changes between 0 A and 0.997 A in accordance with compressor and magnetic clutch operation	-
AIR INLET MODE	Air inlet mode / AUTO, MANUAL	Customized value displayed	-
COMPRESSOR MODE	Compressor mode / AUTO, MANUAL	Customized value displayed	-
COMPRS/DEF MODE	Compressor / DEF Mode / LINK, NORMAL	Customized value displayed	-
EVAP CTRL	Evaporator Control / AUTO, MANUAL	Customized value displayed	-
AUTO BLOW UP	Foot / DEF automatic blow up function / ON, OFF	Customized value displayed	-
FOOT/DEF MODE	Foot / DEF auto mode / ON, OFF	Customized value displayed	-
SET TEMP SHIFT	Shift set temperature / +2 C, +1 C, NORMAL, -1 C, -2 C	Customized value displayed	-
DESTINATION	Destination / DOMEST, USA, EUROPE, AUSTRAL, MIDEAST, NO INFO	Destinations displayed	-
#CODES	Number of trouble codes / Min.: 0, Max.: 255	Number of DTCs displayed	-

2. PERFORM ACTIVE TEST

HINT:

Performing the intelligent tester's ACTIVE TEST allows relay, VSV, actuator and other items to be operated without removing any parts. Performing the ACTIVE TEST early in troubleshooting is one way to save time. The DATA LIST can be displayed in the ACTIVE TEST.

(a) Connect the intelligent tester (with CAN VIM) to the DLC3.

(b) Turn the ignition switch ON and turn the intelligent tester ON.

(c) Perform the ACTIVE TEST by following the prompts on the tester.

Air conditioning amplifier

Item	Test Details / Display (Range)	Diagnostic Note
BLOWER MOTOR	Blower motor / Min.: 0, Max.: 31	-
A/C COMPRESSOR*1	A/C Compressor OFF, ON	-
A/C MAG CLUTCH*2	Magnetic clutch relay / OFF, ON	Operating sound can be heard
DEFOGGER RLY-R	Defogger relay (Rear) / OFF, ON	-
AIR MIX PULSE	Air mix servo motor pulse / Min.: 0, Max.: 255	-
AIR MIX PULSE-P	Air mix servo motor pulse (P side) / Min.: 0, Max.: 255	-
AIR OUT PULSE	Air outlet servo motor pulse / Min.: 0, Max.: 255	-
A/I DAMP PLS	Air inlet damper target pulse / Min.: 0, Max.: 255	-

AC

HINT:

*1: for 2AZ-FE

*2: for 2GR-FE

DIAGNOSTIC TROUBLE CODE CHART

(2005/11-2006/01)
HINT:
When the air conditioning system functions properly, DTC B1400/00 is output.

Air conditioning system

DTC No.	Detection Item	Trouble Area	Memory	See page
B1411/11	Room Temperature Sensor Circuit	- Room temperature sensor - Harness and connector between room temperature sensor and air conditioning amplifier - Air conditioning amplifier	Memorized (8.5 min. or more)	AC-43
B1412/12	Ambient Temperature Sensor Circuit	- Ambient temperature sensor - Harness and connector between ambient temperature sensor and combination meter assembly - Combination meter assembly - Air conditioning amplifier - CAN communication line	Memorized (8.5 min. or more)	AC-46
B1413/13	Evaporator Temperature Sensor Circuit	- No. 1 cooler thermistor (Evaporator temperature sensor) - Harness and connector between No. 1 cooler thermistor (evaporator temperature sensor) and air conditioning amplifier - Air conditioning amplifier	Memorized (8.5 min. or more)	AC-50
B1421/21	Solar Sensor Circuit (Passenger Side)	- Solar sensor - Harness and connector between solar sensor and air conditioning amplifier - Air conditioning amplifier	Memorized (8.5 min. or more)	AC-53
B1423/23	Pressure Sensor Circuit	- Air conditioning pressure sensor - Harness and connector between Air conditioning pressure sensor and air conditioning amplifier - Air conditioning amplifier	-	AC-59
B1424/24	Solar Sensor Circuit (Driver Side)	- Solar sensor - Harness and connector between solar sensor and air conditioning amplifier - Air conditioning amplifier	Memorized (8.5 min. or more)	AC-64
B1441/41	Air Mix Damper Control Servo Motor Circuit (Passenger Side)	- Air mix control servo motor - Air conditioning harness - Air conditioning amplifier	Memorized (30 sec.)	AC-67
B1442/42	Air Inlet Damper Control Servo Motor Circuit	- Air inlet control servo motor - Air conditioning harness - Air conditioning amplifier	Memorized (30 sec.)	AC-69
B1443/43	Air Outlet Damper Control Servo Motor Circuit	- Air outlet control servo motor - Air conditioning harness - Air conditioning amplifier	Memorized (30 sec.)	AC-71

DTC No.	Detection Item	Trouble Area	Memory	See page
B1446/46	Air Mix Damper Control Servo Motor Circuit (Driver Side)	- Air mix control servo motor - Air conditioning harness - Air conditioning amplifier	Memorized (30 sec.)	AC-73
B1451/51	Compressor Solenoid Circuit	- Compressor and pulley - Harness and connector between air conditioning amplifier and compressor and pulley - Air conditioning amplifier	-	AC-75
B1497/97	BUS IC Communication Malfunction	- Air conditioning harness - Air conditioning amplifier	-	AC-83
B1499/99	Multiplex Communication Circuit	- Air conditioning amplifier - Power source circuit - Air conditioning amplifier - ECM - Combination meter assembly - CAN communication line	-	AC-86

DIAGNOSTIC TROUBLE CODE CHART

(2006/01-)
HINT:
When the air conditioning system functions properly, DTC B1400/00 is output.

Air conditioning system

DTC No.	Detection Item	Trouble Area	Memory	See page
B1411/11	Room Temperature Sensor Circuit	- Room temperature sensor - Wire harness between room temperature sensor and air conditioning amplifier - Air conditioning amplifier	Memorized (8.5 min. or more)	AC-43
B1412/12	Ambient Temperature Sensor Circuit	- Ambient temperature sensor - Wire harness between ambient temperature sensor and combination meter assembly - Combination meter assembly - Air conditioning amplifier - CAN communication line	Memorized (8.5 min. or more)	AC-46
B1413/13	Evaporator Temperature Sensor Circuit	- No. 1 cooler thermistor (Evaporator temperature sensor) - Wire harness between No. 1 cooler thermistor (evaporator temperature sensor) and air conditioning amplifier - Air conditioning amplifier	Memorized (8.5 min. or more)	AC-50
B1421/21	Solar Sensor Circuit (Passenger Side)	- Solar sensor - Wire harness between solar sensor and air conditioning amplifier - Air conditioning amplifier	Memorized (8.5 min. or more)	AC-53
B1422/22*1	Compressor Lock Sensor Circuit	- Compressor and magnetic clutch - Compressor and magnetic clutch drive belt - Compressor lock sensor - Wire harness between compressor lock sensor and air conditioning amplifier - Air conditioning amplifier	-	AC-56
B1423/23	Pressure Sensor Circuit	- Air conditioning pressure sensor - Wire harness between air conditioning pressure sensor and air conditioning amplifier - Air conditioning amplifier	-	AC-59
B1424/24	Solar Sensor Circuit (Driver Side)	- Solar sensor - Wire harness between solar sensor and air conditioning amplifier - Air conditioning amplifier	Memorized (8.5 min. or more)	AC-64
B1441/41	Air Mix Damper Control Servo Motor Circuit (Passenger Side)	- Air mix control servo motor - Air conditioning harness - Air conditioning amplifier	Memorized (30 sec.)	AC-67

AC

DTC No.	Detection Item	Trouble Area	Memory	See page
B1442/42	Air Inlet Damper Control Servo Motor Circuit	- Air inlet control servo motor - Air conditioning harness - Air conditioning amplifier	Memorized (30 sec.)	AC-69
B1443/43	Air Outlet Damper Control Servo Motor Circuit	- Air outlet control servo motor - Air conditioning harness - Air conditioning amplifier	Memorized (30 sec.)	AC-71
B1446/46	Air Mix Damper Control Servo Motor Circuit (Driver Side)	- Air mix control servo motor - Air conditioning harness - Air conditioning amplifier	Memorized (30 sec.)	AC-73
B1451/51	Compressor Solenoid Circuit	- A/C Compressor*2 - Wire harness between air conditioning amplifier and A/C compressor*2 - Air conditioning amplifier	-	AC-79
B1497/97	BUS IC Communication Malfunction	- Air conditioning harness - Air conditioning amplifier	-	AC-83
B1499/99	Multiplex Communication Circuit	- Air conditioning amplifier - ECM - Combination meter assembly - CAN communication line	-	AC-86

HINT:

*1: DTC B1422/22 (Compressor Lock Sensor Circuit) is indicated only for a currently occurring malfunction for 2GR-FE.

To confirm DTC B1422/22, perform the following steps:

1. With the ignition switch ON, enter the DTC check mode.
2. Press the R/F (Recirculation/Fresh) switch to enter actuator check mode, and set the operation to Step No. 3.
3. Press the AUTO switch to return to DTC check mode.
4. The DTC is displayed after approximately 3 seconds.

*2: Compressor and pulley for 2AZ-FE, compressor and magnetic clutch for 2GR-FE

DTC B1411/11 Room Temperature Sensor Circuit

DESCRIPTION

The room temperature sensor is installed in the instrument panel to detect the room temperature and control the heater and air conditioner AUTO mode. The resistance of the room temperature sensor changes in accordance with the room temperature. As the temperature decreases, the resistance increases. As the temperature increases, the resistance decreases.
The air conditioning amplifier applies a voltage (5 V) to the room temperature sensor and reads voltage changes as changes in the resistance of the room temperature sensor.

DTC No.	DTC Detection Condition	Trouble Area
B1411/11	Open or short in room temperature sensor circuit	• Room temperature sensor • Harness and connector between room temperature sensor and air conditioning amplifier • Air conditioning amplifier

WIRING DIAGRAM

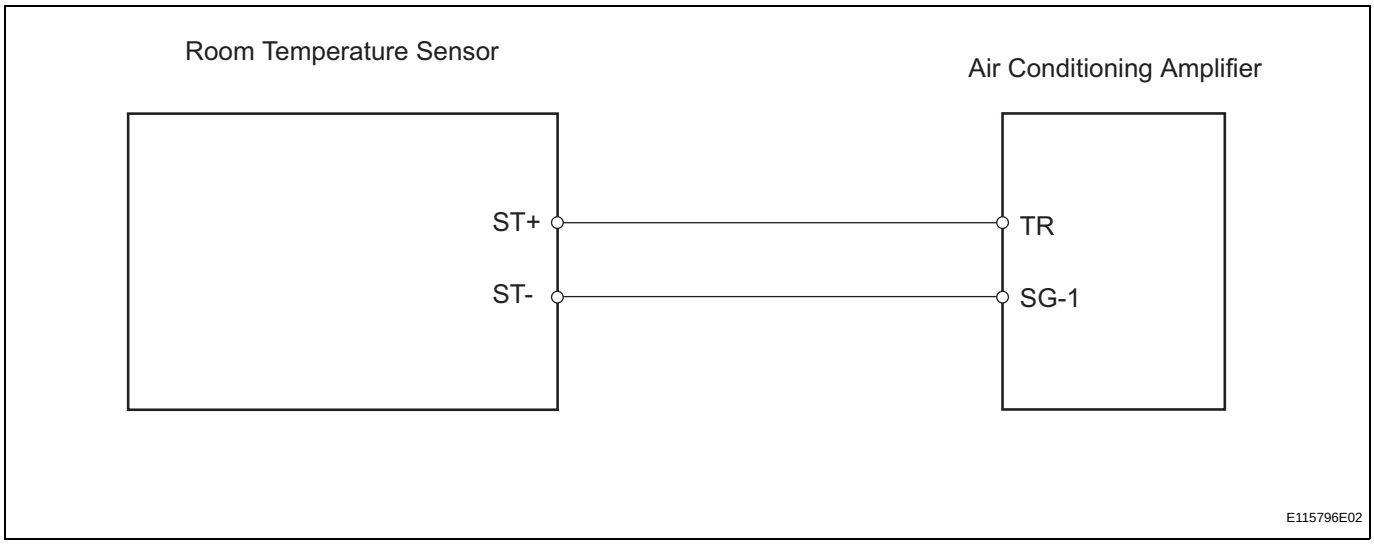

AC

INSPECTION PROCEDURE

1	READ VALUE OF INTELLIGENT TESTER (ROOM TEMP)

(a) Connect the intelligent tester (with CAN VIM) to the DLC3.
(b) Turn the ignition switch ON and turn the intelligent tester main switch ON.
(c) Select the item below in the DATA LIST, and read the value displayed on the intelligent tester.

Air conditioning amplifier

Item	Measurement Item / Display (Range)	Normal Condition	Diagnostic Note
ROOM TEMP	Room temperature sensor / Min.: -6.5°C (20.3°F) Max.: 57.25°C (135.05°F)	Actual room temperature is displayed	Open circuit: -6.5°C (20.3°F) Short circuit: 57.25°C (135.05°F)

OK:

The display is as specified in the normal condition column.

Result

Result	Proceed to
NG	A
OK (Checking from the PROBLEM SYMPTOMS TABLE)	B
OK (Checking from the DTC)	C

B → **PROCEED TO NEXT CIRCUIT INSPECTION SHOWN IN PROBLEM SYMPTOMS TABLE**

C → **REPLACE AIR CONDITIONING AMPLIFIER ASSEMBLY**

A

2 INSPECT COOLER THERMISTOR (ROOM TEMPERATURE SENSOR)

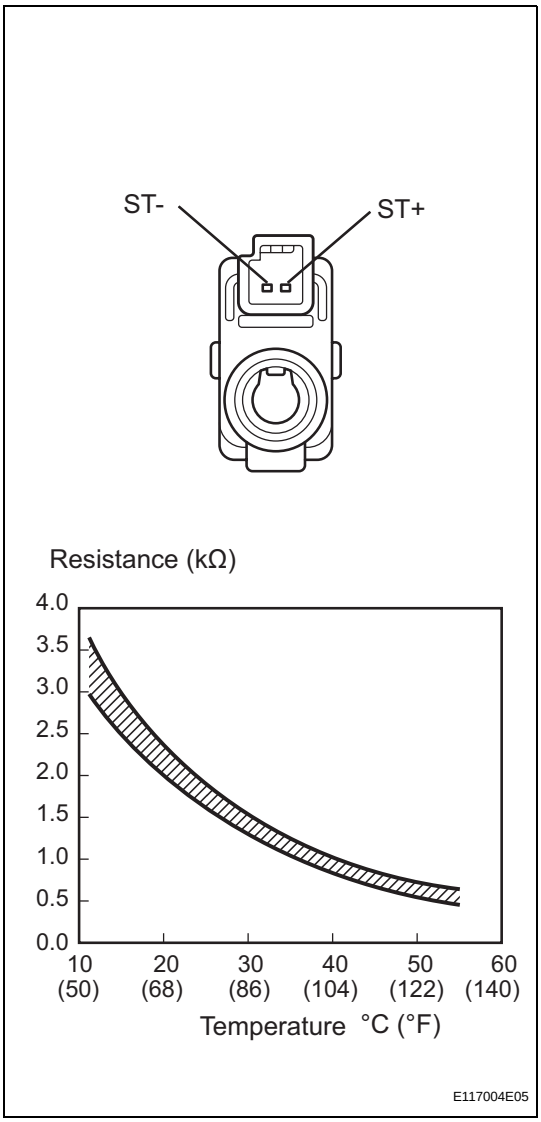

(a) Remove the room temperature sensor.

(b) Measure the resistance of the sensor.

Standard resistance

Tester Connection	Condition	Specified Condition
1 (ST+) - 2 (ST-)	10°C (50°F)	3.00 to 3.73 kΩ
1 (ST+) - 2 (ST-)	15°C (59°F)	2.45 to 2.88 kΩ
1 (ST+) - 2 (ST-)	20°C (68°F)	1.95 to 2.30 kΩ
1 (ST+) - 2 (ST-)	25°C (77°F)	1.60 to 1.80 kΩ
1 (ST+) - 2 (ST-)	30°C (86°F)	1.28 to 1.47 kΩ
1 (ST+) - 2 (ST-)	35°C (95°F)	1.00 to 1.22 kΩ
1 (ST+) - 2 (ST-)	40°C (104°F)	0.80 to 1.00 kΩ
1 (ST+) - 2 (ST-)	45°C (113°F)	0.65 to 0.85 kΩ
1 (ST+) - 2 (ST-)	50°C (122°F)	0.50 to 0.70 kΩ
1 (ST+) - 2 (ST-)	55°C (131°F)	0.44 to 0.60 kΩ
1 (ST+) - 2 (ST-)	60°C (140°F)	0.36 to 0.50 kΩ

NOTICE:

- **Touching the sensor even slightly may change the resistance value. Be sure to hold the connector of the sensor.**
- **When measuring, the sensor temperature must be the same as the ambient temperature.**

HINT:

As the temperature increases, the resistance decreases (see the graph).

NG → **REPLACE COOLER THERMISTOR (ROOM TEMPERATURE SENSOR)**

AC

OK

3	**CHECK WIRE HARNESS (ROOM TEMPERATURE SENSOR - AIR CONDITIONING AMPLIFIER)**

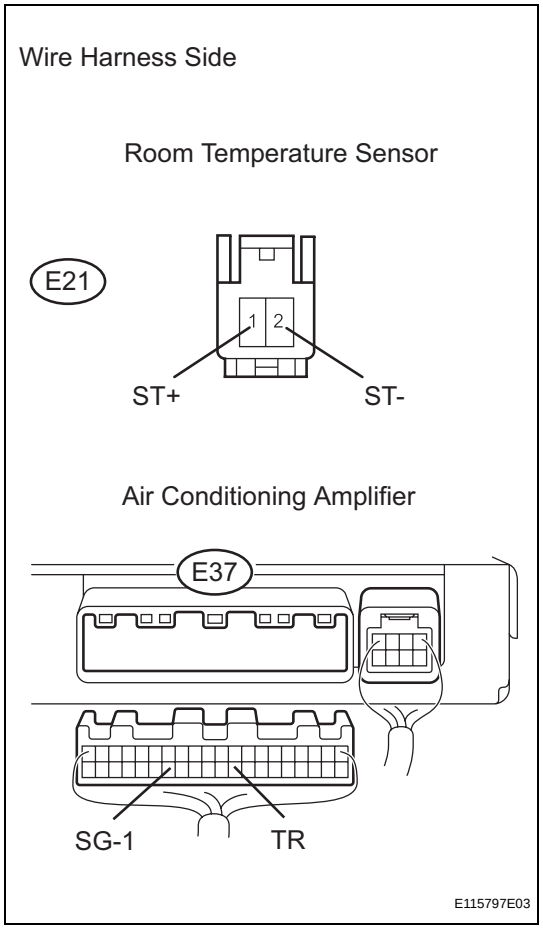

(a) Disconnect the E21 sensor connector.
(b) Disconnect the E37 amplifier connector.
(c) Measure the resistance of the wire harness side connectors.

Standard resistance

Tester Connection	Specified Condition
E21-1 (ST+) - E37-29 (TR)	Below 1 Ω
E21-2 (ST-) - E37-34 (SG-1)	Below 1 Ω
E21-1 (ST+) - Body ground	1 MΩ or higher
E21-2 (ST-) - Body ground	1 MΩ or higher

NG → **REPAIR OR REPLACE HARNESS AND CONNECTOR**

OK

REPLACE AIR CONDITIONING AMPLIFIER ASSEMBLY

AC

DTC	B1412/12	Ambient Temperature Sensor Circuit

DESCRIPTION

The ambient temperature sensor is installed in the front part of the condenser to detect the ambient temperature and control the air conditioner. The sensor is connected to the combination meter and detects fluctuations in the ambient temperature. This data is used for controlling the room temperature. The sensor sends a signal to the air conditioning amplifier via the combination meter. The resistance of the ambient temperature sensor changes in accordance with the ambient temperature. As the temperature decreases, the resistance increases. As the temperature increases, the resistance decreases.

The air conditioning amplifier applies a voltage (5 V) to the ambient temperature sensor and reads voltage changes as changes in the resistance of the ambient temperature sensor. The combination meter sends the read signal to the air conditioning amplifier via CAN communication.

DTC No.	DTC Detection Condition	Trouble Area
B1412/12	Open or short in ambient temperature sensor circuit	• Ambient temperature sensor • Harness and connector between ambient temperature sensor and combination meter assembly • Combination meter • Air conditioning amplifier • CAN communication line

WIRING DIAGRAM

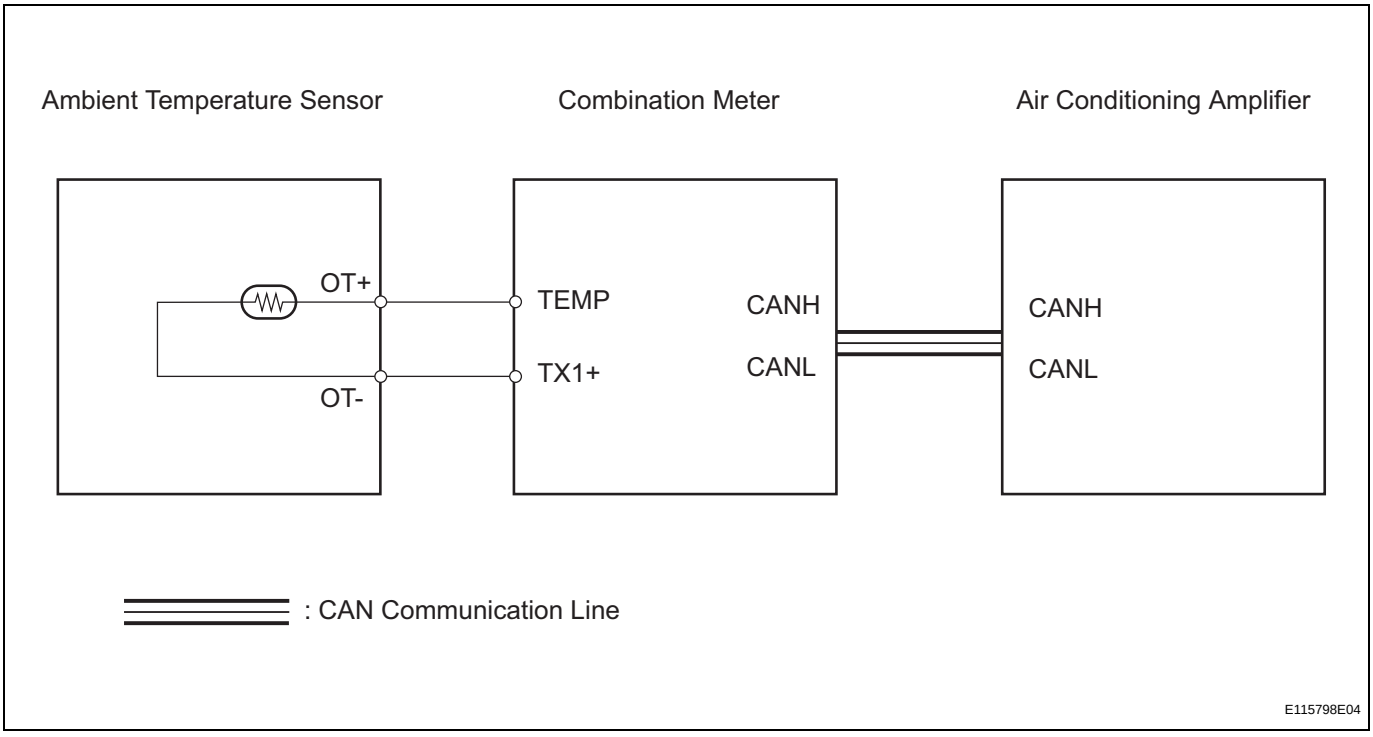

INSPECTION PROCEDURE

1	READ VALUE OF INTELLIGENT TESTER (AMBI TEMP SENS)

(a) Connect the intelligent tester (with CAN VIM) to the DLC3.

(b) Turn the ignition switch ON and turn the intelligent tester main switch ON.
(c) Select the item below in the DATA LIST, and read the value displayed on the intelligent tester.

Air conditioning amplifier

Item	Measurement Item / Display (Range)	Normal Condition	Diagnostic Note
AMBI TEMP SENS	Ambient temperature sensor / Min.: -23.3°C (-9.94°F) Max.: 65.95°C (150.71°F)	Actual ambient temperature is displayed	Open circuit: -23.3°C (-9.94°F) Short circuit: 65.95°C (150.71°F)

OK:

The display is as specified in the normal condition column.

Result

Result	Proceed to
NG	A
OK (Checking from the PROBLEM SYMPTOMS TABLE)	B
OK (Checking from the DTC)	C

B → PROCEED TO NEXT CIRCUIT INSPECTION SHOWN IN PROBLEM SYMPTOMS TABLE

C → REPLACE AIR CONDITIONING AMPLIFIER

A

AC

2 INSPECT AMBIENT TEMPERATURE SENSOR

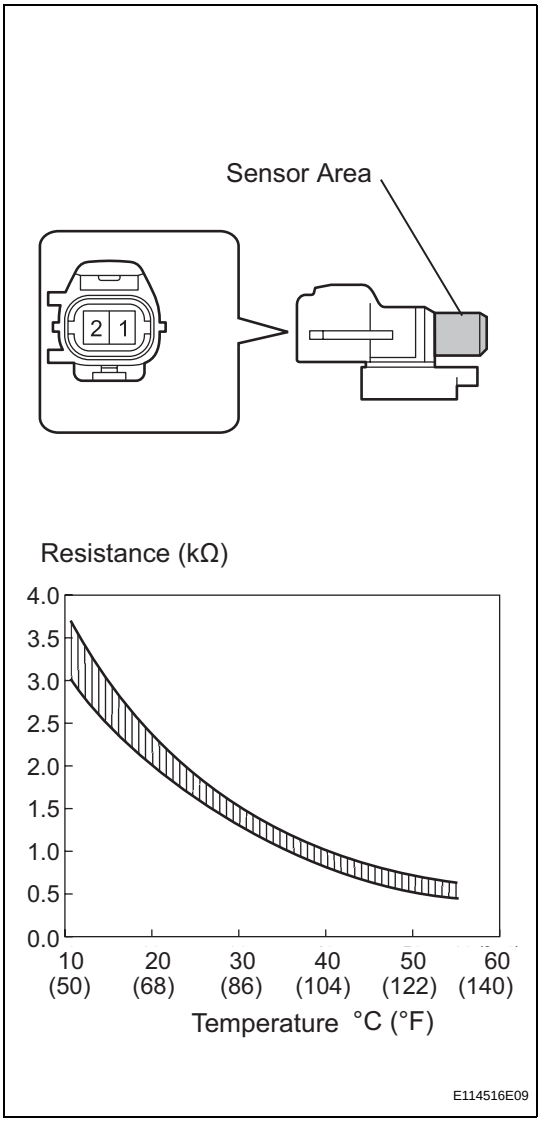

(a) Remove the ambient temperature sensor.
(b) Measure the resistance of the sensor.
Standard resistance

Tester Connection	Condition	Specified Condition
1 - 2	10°C (50°F)	3.00 to 3.73 kΩ
1 - 2	15°C (50°F)	2.45 to 2.88 kΩ
1 - 2	20°C (68°F)	1.95 to 2.30 kΩ
1 - 2	25°C (77°F)	1.60 to 1.80 kΩ
1 - 2	30°C (86°F)	1.28 to 1.47 kΩ
1 - 2	35°C (95°F)	1.00 to 1.22 kΩ
1 - 2	40°C (104°F)	0.80 to 1.00 kΩ
1 - 2	45°C (113°F)	0.65 to 0.85 kΩ
1 - 2	50°C (122°F)	0.50 to 0.70 kΩ
1 - 2	55°C (131°F)	0.44 to 0.60 kΩ
1 - 2	60°C (140°F)	0.36 to 0.50 kΩ

NOTICE:
- **Touching the sensor even slightly may change the resistance value. Be sure to hold the connector of the sensor.**
- **When measuring, the sensor temperature must be the same as the ambient temperature.**

HINT:
As the temperature increases, the resistance decreases (see the graph).

NG → **REPLACE AMBIENT TEMPERATURE SENSOR**

OK

AC

3	CHECK WIRE HARNESS (AMBIENT TEMPERATURE SENSOR - COMBINATION METER)

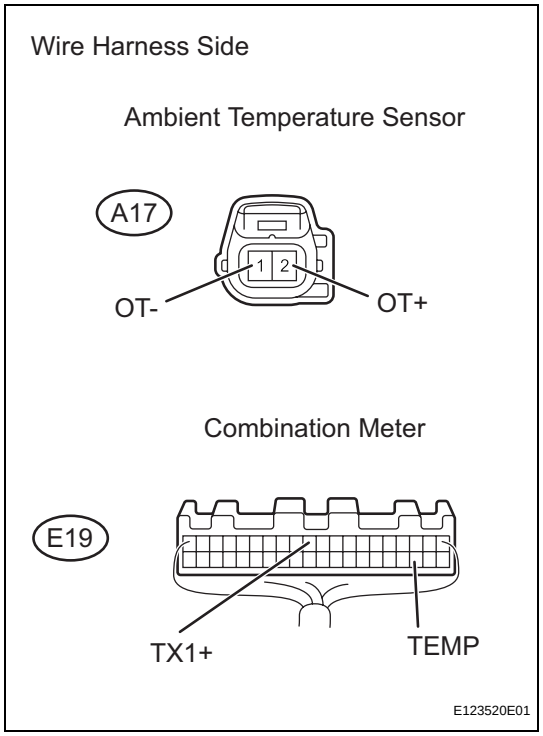

(a) Disconnect the A17 sensor connector.
(b) Disconnect the E19 meter connector.
(c) Measure the resistance of the wire harness side connectors.

Standard resistance

Tester Connection	Specified Condition
A17-2 (OT+) - E19-23 (TEMP)	Below 1 Ω
A17-1 (OT-) - E19-11 (TX1+)	Below 1 Ω
A17-2 (OT+) - Body ground	1 MΩ or higher
A17-1 (OT-) - Body ground	1 MΩ or higher

NG → **REPAIR OR REPLACE HARNESS AND CONNECTOR**

OK

REPLACE COMBINATION METER

AC

DTC	B1413/13	Evaporator Temperature Sensor Circuit

DESCRIPTION

The No. 1 cooler thermistor (evaporator temperature sensor) is installed on the evaporator in the air conditioning unit to detect the temperature of the cooled air that has passed through the evaporator and to control the air conditioner. It sends signals to the air conditioning amplifier. The signals change in accordance with the resistance of the No. 1 cooler thermistor (evaporator temperature sensor). As the temperature decreases, the resistance increases. As the temperature increases, the resistance decreases. The air conditioning amplifier applies a voltage (5 V) to the No. 1 cooler thermistor (evaporator temperature sensor) and reads voltage changes as changes in the resistance of the No. 1 cooler thermistor (evaporator temperature sensor). This sensor is used for frost prevention.

DTC No.	DTC Detection Condition	Trouble Area
B1413/13	Open or short in evaporator temperature sensor circuit	• No. 1 cooler thermistor (evaporator temperature sensor) • Harness and connector between No. 1 cooler thermistor (evaporator temperature sensor) and air conditioning amplifier • Air conditioning amplifier

WIRING DIAGRAM

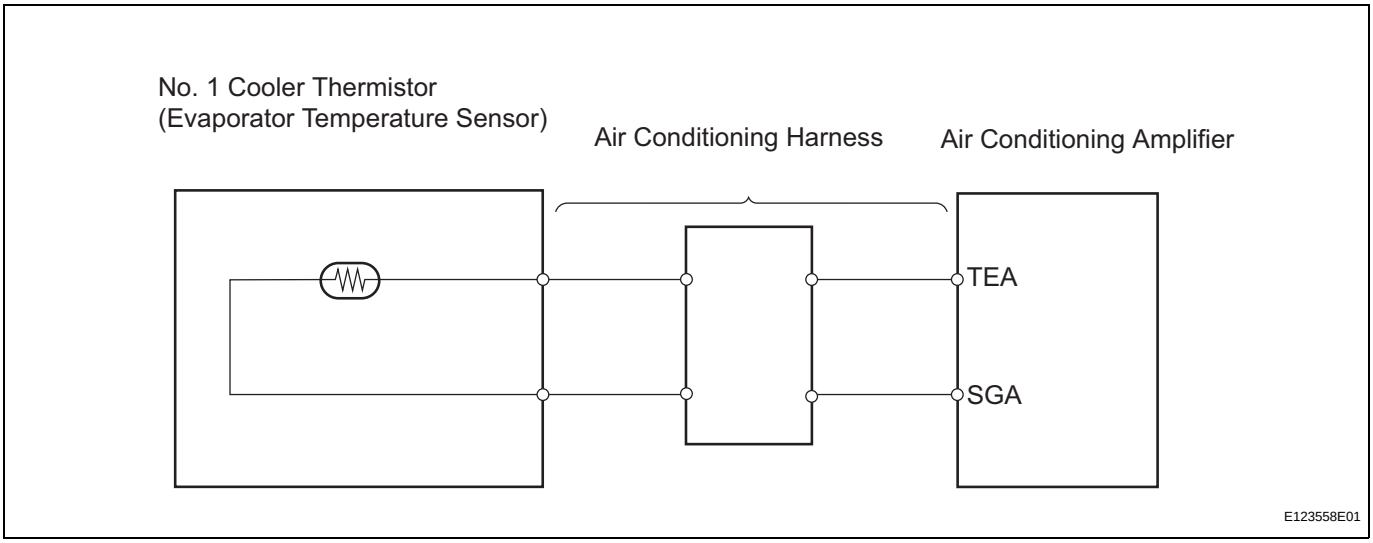

AC

INSPECTION PROCEDURE

1	READ VALUE OF INTELLIGENT TESTER (EVAP FIN TEMP)

(a) Connect the intelligent tester (with CAN VIM) to the DLC3.
(b) Turn the ignition switch ON and turn the intelligent tester main switch ON.
(c) Select the item below in the DATA LIST, and read the value displayed on the intelligent tester.

Air conditioning amplifier

Item	Measurement Item / Display (Range)	Normal Condition	Diagnostic Note
EVAP FIN TEMP	Evaporator temperature sensor / Min.: -29.7°C (-21.46°F) Max.: 59.6°C (139.28°F)	Actual evaporator temperature is displayed	Open circuit: -29.7°C (-21.46°F) Short circuit: 59.6°C (139.28°F)

OK:

The display is as specified in the normal condition column.

Result

Result	Proceed to
NG	A
OK (Checking from the PROBLEM SYMPTOMS TABLE)	B
OK (Checking from the DTC)	C

B → **PROCEED TO NEXT CIRCUIT INSPECTION SHOWN IN PROBLEM SYMPTOMS TABLE**

C → **REPLACE AIR CONDITIONING AMPLIFIER**

A

2	INSPECT NO. 1 COOLER THERMISTOR (EVAPORATOR TEMPERATURE SENSOR)

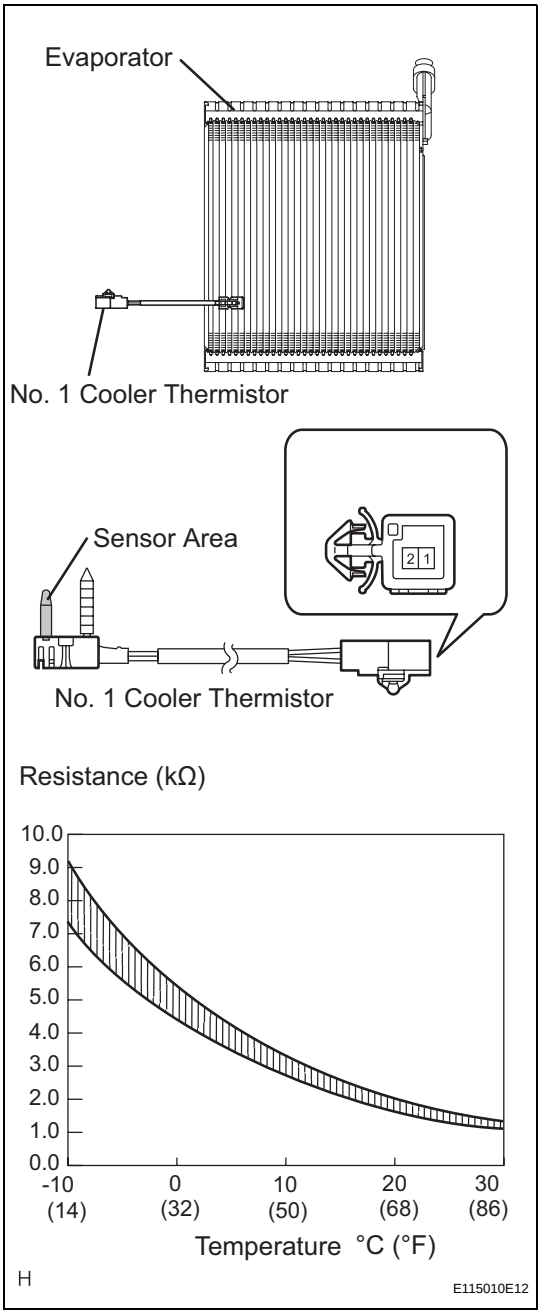

(a) Remove the No. 1 cooler thermistor.

(b) Measure the resistance of the thermistor.

Standard resistance

Tester Connection	Condition	Specified Condition
1 - 2	-10°C (14°F)	7.30 to 9.10 kΩ
1 - 2	-5°C (23°F)	5.65 to 6.95 kΩ
1 - 2	0°C (32°F)	4.40 to 5.35 kΩ
1 - 2	5°C (41°F)	3.40 to 4.15 kΩ
1 - 2	10°C (50°F)	2.70 to 3.25 kΩ
1 - 2	15°C (59°F)	2.14 to 2.58 kΩ
1 - 2	20°C (68°F)	1.71 to 2.05 kΩ
1 - 2	25°C (77°F)	1.38 to 1.64 kΩ
1 - 2	30°C (86°F)	1.11 to 1.32 kΩ

NOTICE:

- **Touching the thermistor even slightly may change the resistance value. Be sure to hold the connector of the thermistor.**
- **When measuring, the thermistor temperature must be the same as the ambient temperature.**

HINT:

As the temperature increases, the resistance decreases (see the graph).

NG → **REPLACE NO. 1 COOLER THERMISTOR**

OK

REPLACE AIR CONDITIONING HARNESS ASSEMBLY

AC

DTC	B1421/21	Solar Sensor Circuit (Passenger Side)

DESCRIPTION

The solar sensor, which is installed on the upper side of the instrument panel, detects sunlight and controls the air conditioning AUTO mode. The output voltage from the solar sensor varies in accordance with the amount of sunlight. When the sunlight increases, the output voltage increases. As the sunlight decreases, the output voltage decreases.
The air conditioning amplifier detects changes in the output voltage from the solar sensor.

DTC No.	DTC Detection Condition	Trouble Area
B1421/21	Open or short in passenger side solar sensor circuit	• Solar sensor • Harness and connector between solar sensor and air conditioning amplifier • Air conditioning amplifier

WIRING DIAGRAM

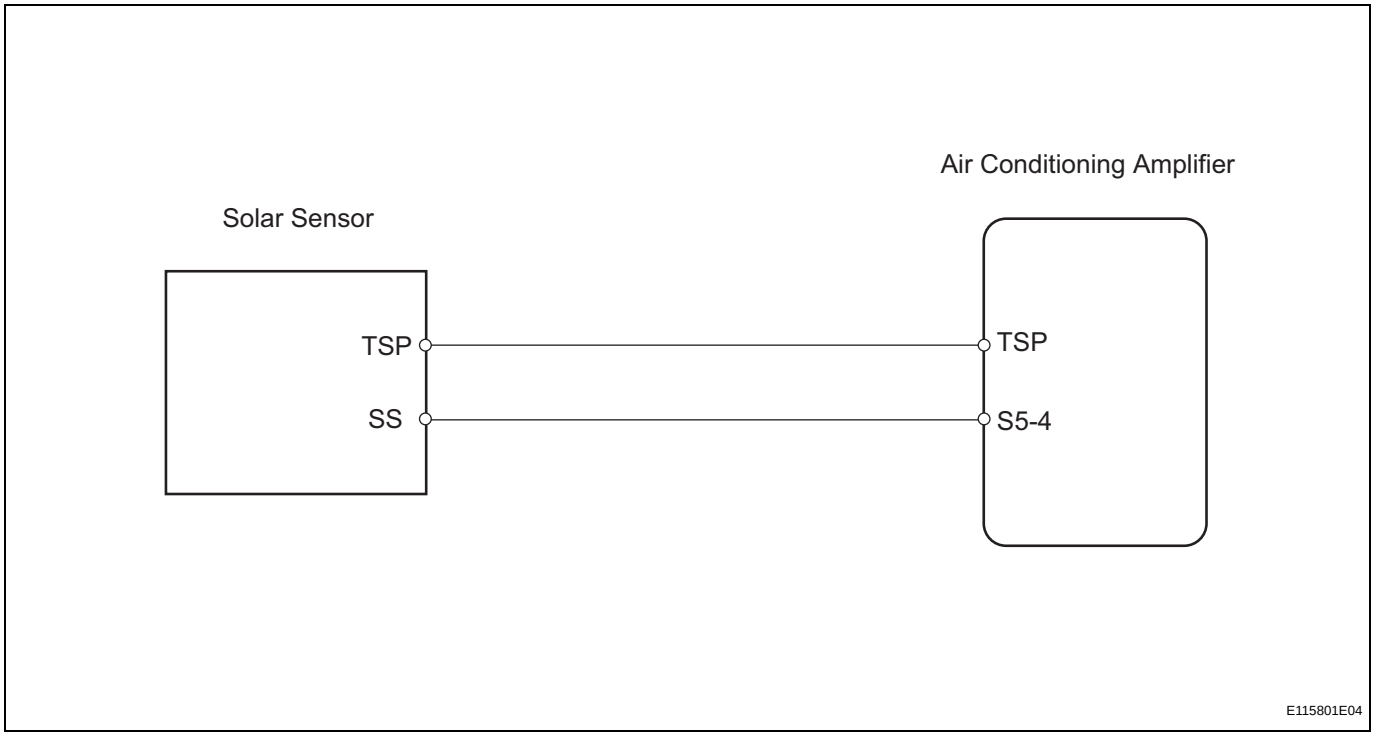

AC

INSPECTION PROCEDURE

1	READ VALUE OF INTELLIGENT TESTER (SOLAR SENS-P)

(a) Connect the intelligent tester (with CAN VIM) to the DLC3.
(b) Turn the ignition switch ON and turn the intelligent tester main switch ON.
(c) Select the item below in the DATA LIST, and read the value displayed on the intelligent tester.

Air conditioning amplifier

Item	Measurement Item / Display (Range)	Normal Condition	Diagnostic Note
SOLAR SENS-P	Passenger side solar sensor / Min.: 0, Max.: 255	Passenger side temperature increases as brightness increases	-

OK:
The display is as specified in the normal condition column.

Result

Result	Proceed to
NG	A
OK (Checking from the PROBLEM SYMPTOMS TABLE)	B
OK (Checking from the DTC)	C

B → **PROCEED TO NEXT CIRCUIT INSPECTION SHOWN IN PROBLEM SYMPTOMS TABLE**

C → **REPLACE AIR CONDITIONING AMPLIFIER**

A

2 INSPECT COOLER (SOLAR SENSOR) THERMISTOR

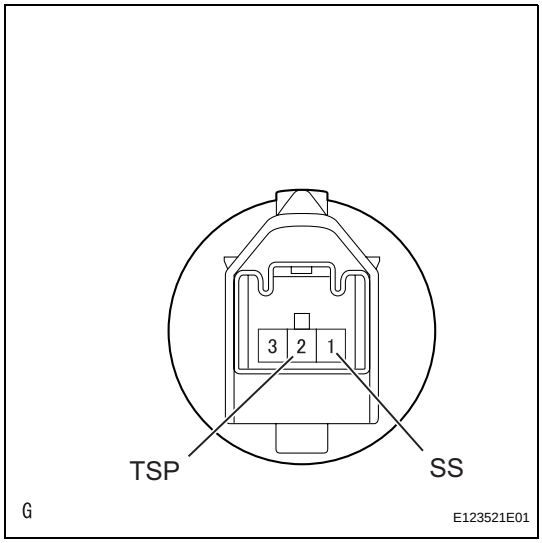

(a) Remove the solar sensor.
(b) Measure the resistance of the sensor.
(c) Connect the ohmmeter's positive (+) lead to terminal 1 and the negative (-) lead to terminal 2 of the solar sensor.

Standard resistance

Tester Connection	Condition	Specified Condition
1 (SS) - 2 (TSP)	Sensor exposed to electric light	Except ∞ Ω
1 (SS) - 2 (TSP)	Sensor covered with cloth	∞ Ω (No continuity)

NOTICE:
The connection procedure for using a digital tester such as an electrical tester is shown above. When using an analog tester, connect the positive (+) lead to terminal 2 and the negative (-) lead to terminal 1 of the solar sensor.

HINT:
- As the inspection light is moved away from the sensor, the voltage decreases.
- Use an incandescent light for the inspection. Position it about 30 cm (11.8 in.) from the solar sensor.

NG → **REPLACE COOLER (SOLAR SENSOR) THERMISTOR**

OK

AC

3	CHECK WIRE HARNESS (SOLAR SENSOR - AIR CONDITIONING AMPLIFIER)

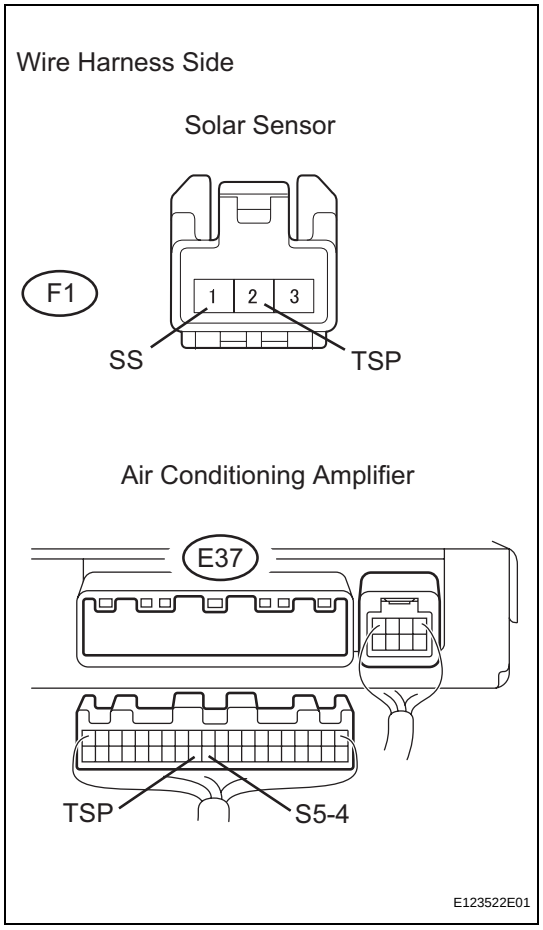

(a) Disconnect the F1 sensor connector.
(b) Disconnect the E37 amplifier connector.
(c) Measure the resistance of the wire harness side connectors.

Standard resistance

Tester Connection	Specified Condition
E37-32 (TSP) - F1-2 (TSP)	Below 1 Ω
E37-31 (S5-4) - F1-1 (SS)	Below 1 Ω
E37-32 (TSP) - Body ground	1 MΩ or higher
E37-31 (S5-4) - Body ground	1 MΩ or higher

NG → **REPAIR OR REPLACE HARNESS AND CONNECTOR**

OK

REPLACE AIR CONDITIONING AMPLIFIER

AC

DTC	B1422/22	Compressor Lock Sensor Circuit

DESCRIPTION

This sensor sends 1 pulse per engine revolution to the air conditioning amplifier. If the ratio of the compressor speed divided by the engine speed is smaller than a predetermined value, the air conditioning amplifier turns the compressor off, and the indicator blinks at approximately 1 second intervals.

DTC No.	DTC Detection Condition	Trouble Area
B1422/22	Open or short in compressor lock sensor circuit All conditions below are detected for 3 seconds or more: 1. Engine speed: 450 rpm or more 2. Ratio between engine and compressor speed deviates 20% or more in comparison to normal operation	• Compressor and magnetic clutch • Compressor and magnetic clutch drive belt • Compressor lock sensor • Wire harness between compressor lock sensor and air conditioning amplifier • Air conditioning amplifier

WIRING DIAGRAM

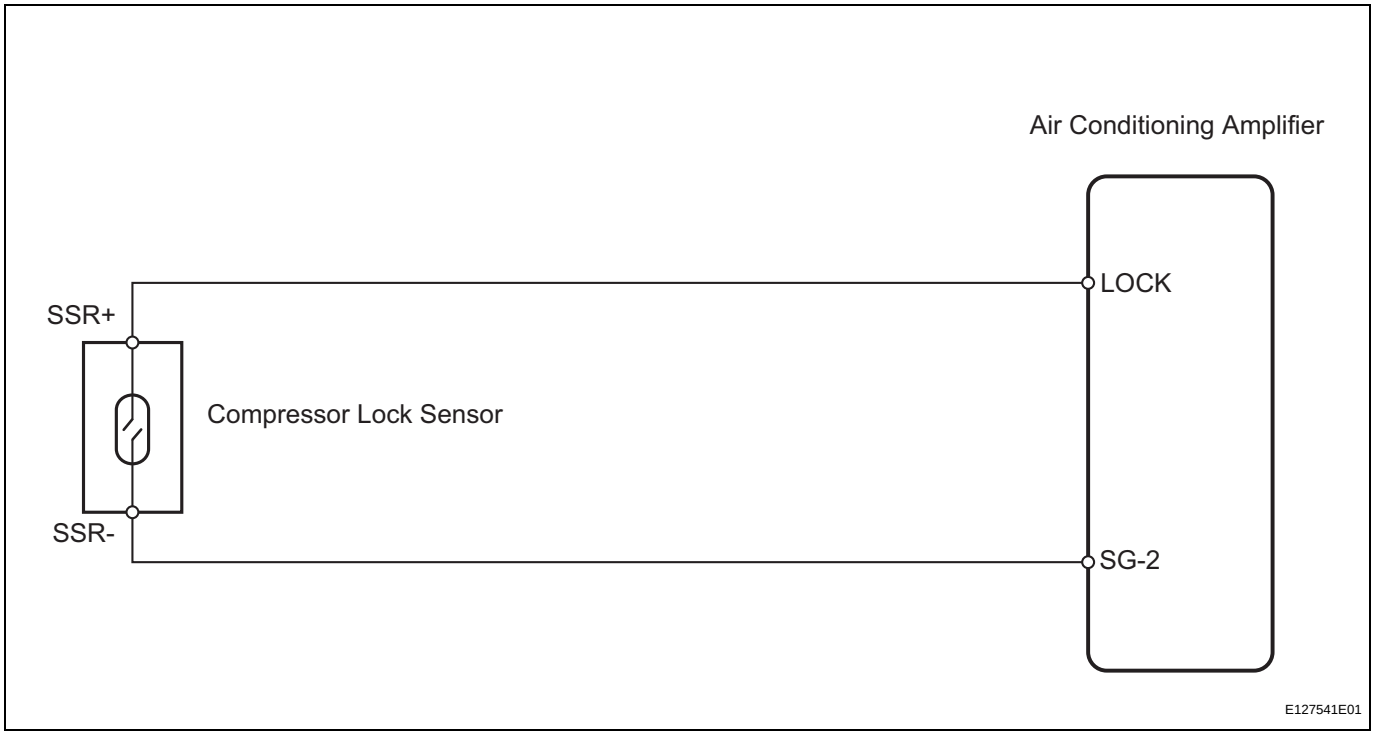

AC

INSPECTION PROCEDURE

1	CHECK AIR CONDITIONING AMPLIFIER (LOCK SIGNAL)

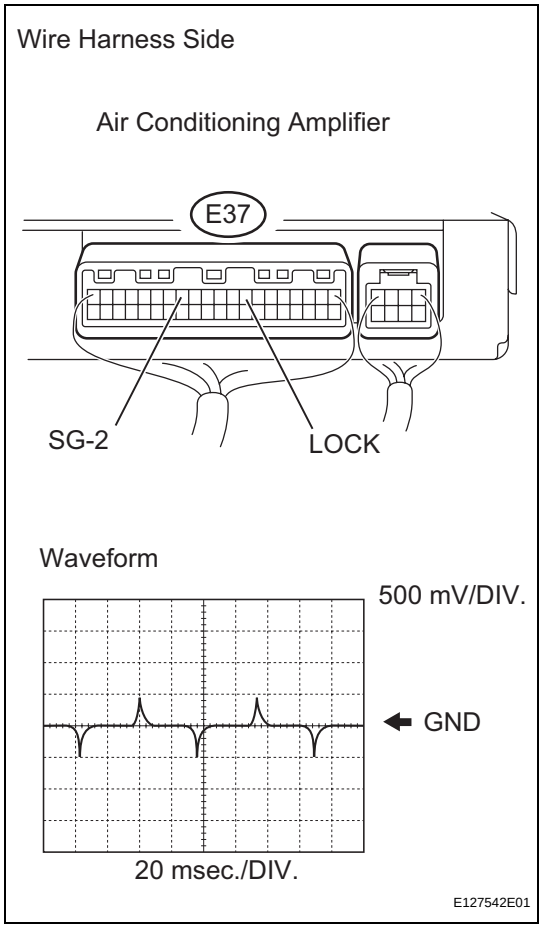

(a) Remove the air conditioning amplifier with its connectors still connected.
(b) Check the waveform of the amplifier connector.
OK:
Waveform is as shown in the illustration.

Item	Content
Tester Connection	LOCK (E37-8) - SG-2 (E37-13)
Tool Setting	500 mV/DIV., 20 msec./DIV.
Condition	Ignition switch ON AUTO switch ON A/C switch ON Magnetic clutch ON

AC

Result

Result	Proceed to
NG	A
OK (Checking from the PROBLEM SYMPTOMS TABLE)	B
OK (Checking from the DTC)	C

B → **PROCEED TO NEXT CIRCUIT INSPECTION SHOWN IN PROBLEM SYMPTOMS TABLE**

C → **REPLACE AIR CONDITIONING AMPLIFIER**

A

2 INSPECT COMPRESSOR LOCK SENSOR

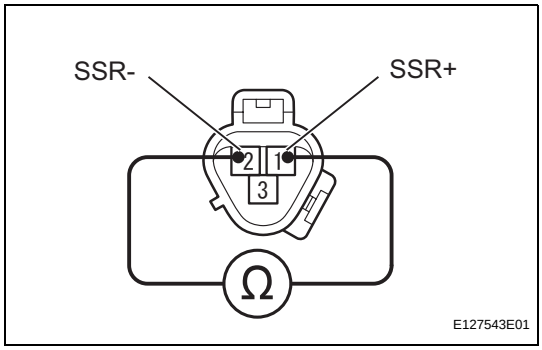

(a) Disconnect the B47 compressor lock sensor connector.
(b) Measure the resistance of the sensor.
Standard resistance

Tester Connection	Condition	Specified Condition
1 (SSR+) - 2 (SSR-)	20°C (68°F)	65 to 125 Ω

NG → **REPLACE COMPRESSOR LOCK SENSOR**

OK

3 CHECK WIRE HARNESS (COMPRESSOR LOCK SENSOR - AIR CONDITIONING AMPLIFIER)

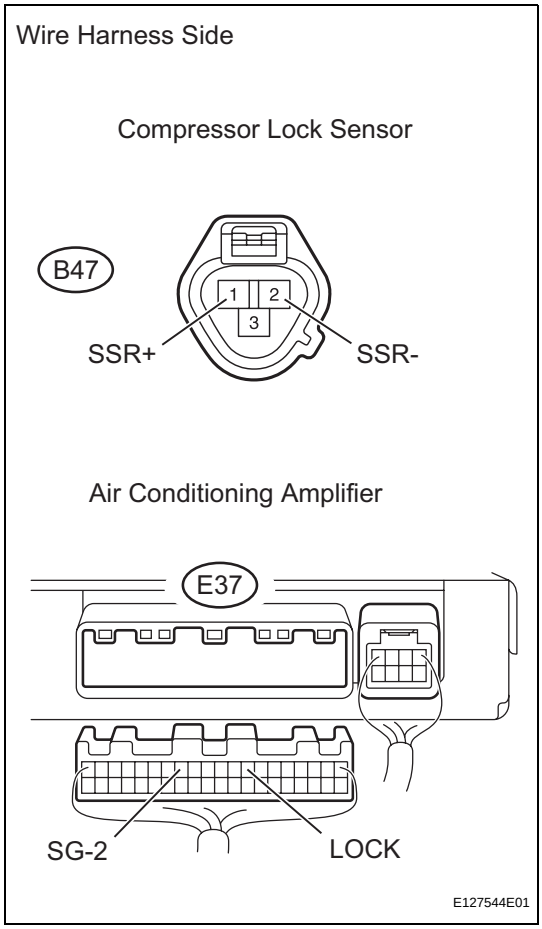

(a) Disconnect the B47 compressor lock sensor connector.
(b) Disconnect the E37 amplifier connector.
(c) Measure the resistance of the wire harness side connectors.
Standard resistance

Tester Connection	Specified Condition
B47-1 (SSR+) - E37-8 (LOCK)	Below 1 Ω
B47-2 (SSR-) - E37-13 (SG-2)	Below 1 Ω
B47-1 (SSR+) - E37-13 (SG-2)	10 kΩ or higher
E37-8 (LOCK) - Body ground	10 kΩ or higher

NG → **REPAIR OR REPLACE HARNESS AND CONNECTOR**

OK

REPLACE AIR CONDITIONING AMPLIFIER

AC

DTC	B1423/23	Pressure Sensor Circuit

DESCRIPTION

This DTC is output when the refrigerant pressure is either extremely low (0.19 MPa [2.0 kgf/cm^2, 28 psi] or less) or extremely high (3.14 MPa [32.0 kgf/cm^2, 455 psi] or more). The air conditioning pressure sensor, which is installed on the pipe of the high pressure side, detects the refrigerant pressure and sends refrigerant pressure signals to the air conditioning amplifier. The air conditioning amplifier determines the pressure from the signals in accordance with the sensor characteristics, and controls the compressor accordingly.

DTC No.	DTC Detection Condition	Trouble Area
B1423/23	Open or short in air conditioning pressure sensor circuit	• Air conditioning pressure sensor • Harness and connector between air conditioning pressure sensor and air conditioning amplifier • Air conditioning amplifier

WIRING DIAGRAM

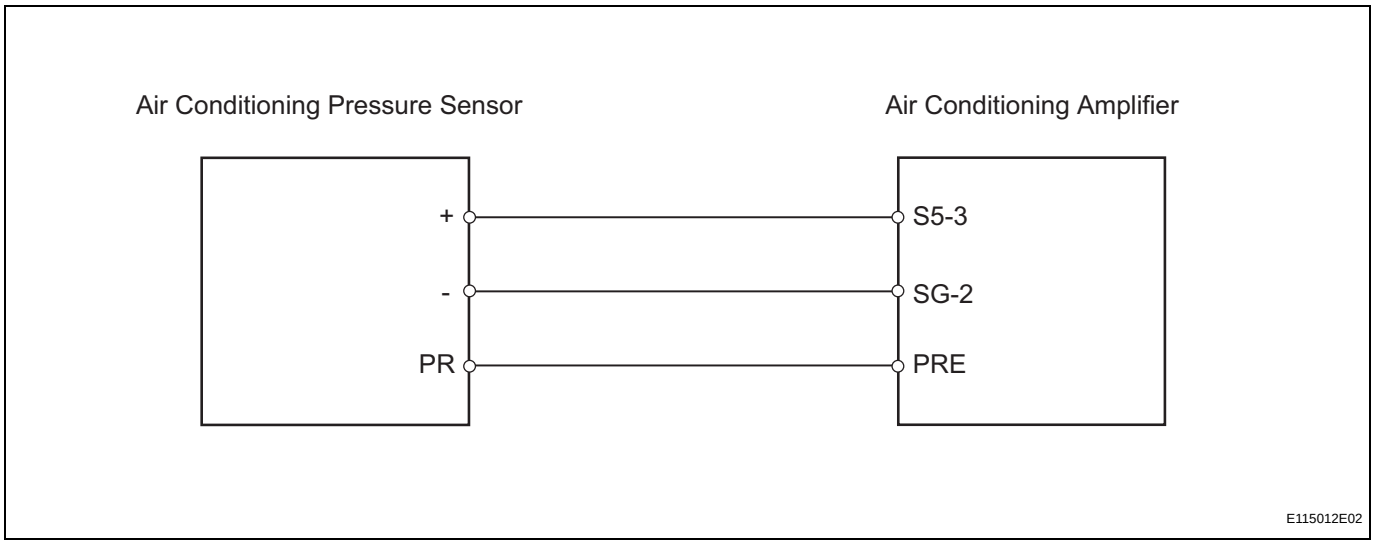

AC

INSPECTION PROCEDURE

1	CHECK REFRIGERANT

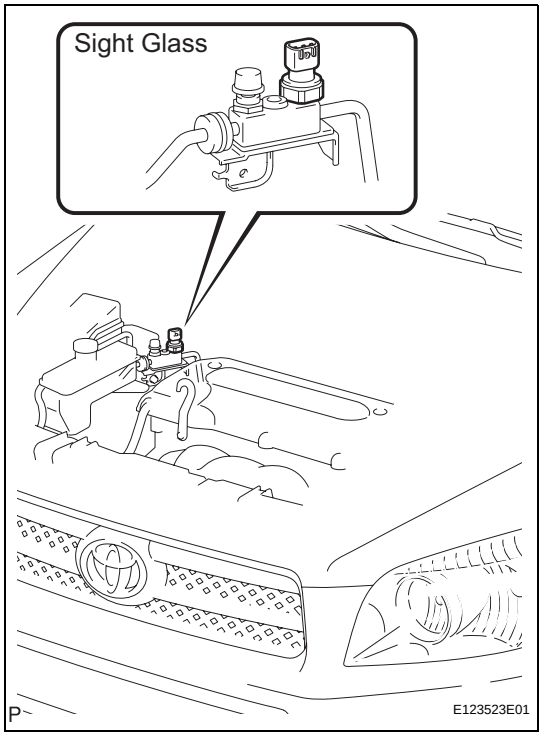

(a) Check the sight glass of the cooler unit refrigerant liquid pipe.

(1) Prepare the vehicle in accordance with the chart below.

Item	Condition
Engine Speed	1,500 rpm
Vehicle Doors	Fully open
Temperature Setting	MAX COLD
Blower Speed	HI
A/C Switch	ON

(2) Compare the sight glass to the following chart.

Item	Symptom	Amount of Refrigerant	Corrective Procedures
1	Bubbles visible	Insufficient*	1. Check for gas leakage and repair if necessary 2. Add refrigerant until bubbles disappear
2	No bubbles visible	Empty, insufficient or too much	Refer to items 3 and 4
3	No temperature difference between compressor inlet and outlet	Empty or nearly empty	1. Check for gas leakage with gas leak detector and repair if necessary 2. Add refrigerant until bubbles disappear
4	Considerable temperature difference between compressor inlet and outlet	Correct or too much	Refer to items 5 and 6
5	Refrigerant becomes clear immediately after A/C turned OFF	Too much	1. Drain or discharge refrigerant 2. Bleed air and supply proper amount of purified refrigerant
6	Refrigerant foams and then becomes clear immediately after A/C turned OFF	Correct	-

HINT:

*: If the ambient temperature is higher than usual but cooling is sufficient, bubbles in the sight glass are permissible.

NG → **CHARGE REFRIGERANT**

OK

2	READ VALUE OF INTELLIGENT TESTER (REG PRESS SENS)

(a) Connect the intelligent tester (with CAN VIM) to the DLC3.
(b) Turn the ignition switch ON and turn the intelligent tester main switch ON.
(c) Select the item below in the DATA LIST, and read the value displayed on the intelligent tester.

Air conditioning amplifier

Item	Measurement Item / Display (Range)	Normal Condition	Diagnostic Note
REG PRESS SENS	Regulator pressure sensor / Min.: 0 MPaG Max.: 3.187 MPaG	Actual regulator pressure is displayed	-

OK:

The display is as specified in the normal condition column.

Result

Result	Proceed to
NG	A
OK (Checking from the PROBLEM SYMPTOMS TABLE)	B
OK (Checking from the DTC)	C

B → PROCEED TO NEXT CIRCUIT INSPECTION SHOWN IN PROBLEM SYMPTOMS TABLE

C → REPLACE AIR CONDITIONING AMPLIFIER

A

AC

3 CHECK WIRE HARNESS (PRESSURE SENSOR - AIR CONDITIONING AMPLIFIER)

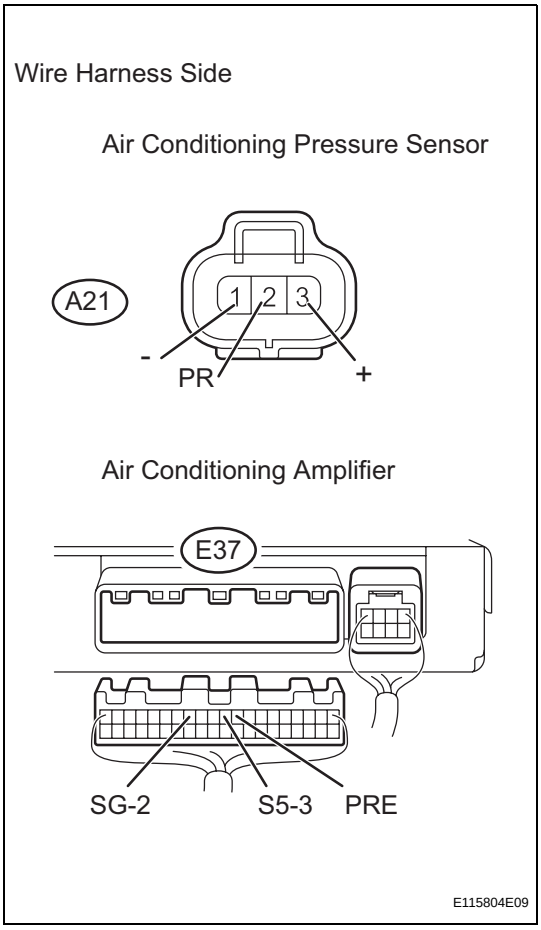

(a) Disconnect the A21 pressure sensor connector.
(b) Disconnect the E37 amplifier connector.
(c) Measure the resistance of the wire harness side connectors.

Standard resistance

Tester Connection	Specified Condition
A21-3 (+) - E37-10 (S5-3)	Below 1 Ω
A21-2 (PR) - E37-9 (PRE)	Below 1 Ω
A21-1 (-) - E37-13 (SG-2)	Below 1 Ω
A21-3 (+) - Body ground	1 MΩ or higher
A21-2 (PR) - Body ground	1 MΩ or higher
A21-1 (-) - Body ground	1 MΩ or higher

NG → **REPAIR OR REPLACE HARNESS AND CONNECTOR**

OK

4 CHECK AIR CONDITIONING AMPLIFIER

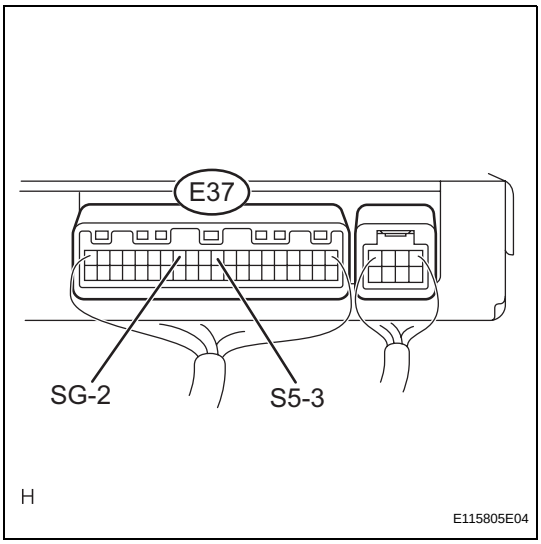

(a) Remove the air conditioning amplifier with its connectors still connected.
(b) Measure the resistance of the wire harness side connector.

Standard resistance

Tester Connection	Specified Condition
E37-13 (SG-2) - Body ground	Below 1 Ω

(c) Turn the ignition switch ON.
(d) Measure the voltage of the wire harness side connector.

Standard voltage

Tester Connection	Specified Condition
E37-10 (S5-3) - E37-13 (SG-2)	4.5 to 5.5 V

NG → **REPLACE AIR CONDITIONING AMPLIFIER**

OK

AC

5	**INSPECT AIR CONDITIONING PRESSURE SENSOR**

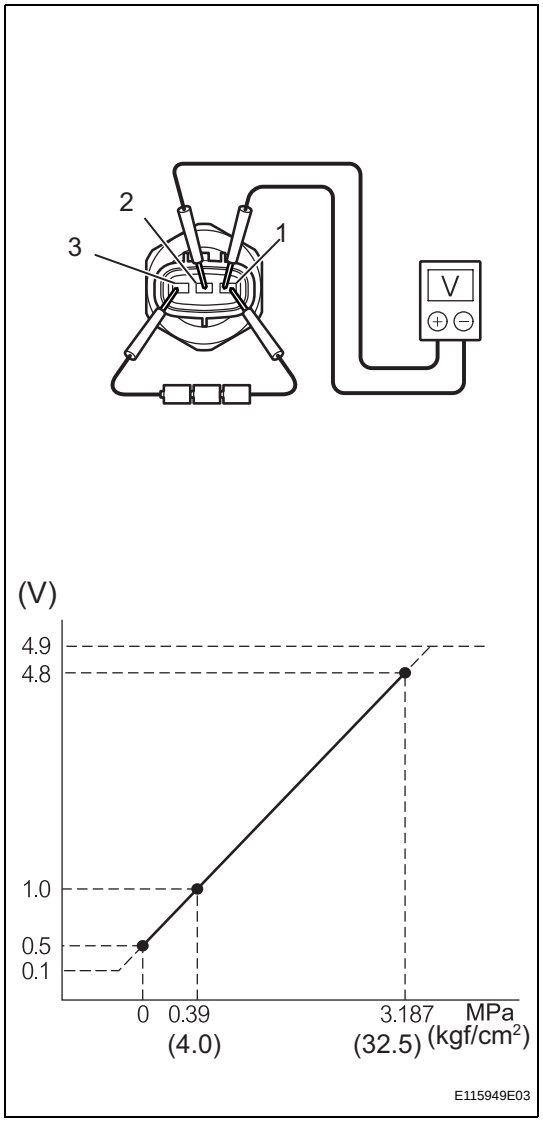

(a) Turn the A/C switch ON.
(b) Disconnect the A21 sensor connector.
(c) Connect the three 1.5 V dry cell batteries' positive (+) lead to terminal 3 and the negative (-) lead to terminal 1. Then connect the voltmeter's positive (+) lead to terminal 2 and the negative (-) lead to terminal 1. Measure the voltage.

OK:

The voltage changes in accordance with the refrigerant pressure as shown in the graph.

NG → **REPLACE AIR CONDITIONING PRESSURE SENSOR**

OK

REPLACE AIR CONDITIONING AMPLIFIER

AC

DTC	B1424/24	Solar Sensor Circuit (Driver Side)

DESCRIPTION

The solar sensor, which is installed on the upper side of the instrument panel, detects sunlight and controls the air conditioning AUTO mode. The output voltage from the solar sensor varies in accordance with the amount of sunlight. When the sunlight increases, the output voltage increases. As the sunlight decreases, the output voltage decreases.
The air conditioning amplifier detects changes in the output voltage from the solar sensor.

DTC No.	DTC Detection Condition	Trouble Area
B1424/24	Open or short in passenger side solar sensor circuit	• Solar sensor • Harness and connector between solar sensor and air conditioning amplifier • Air conditioning amplifier

WIRING DIAGRAM

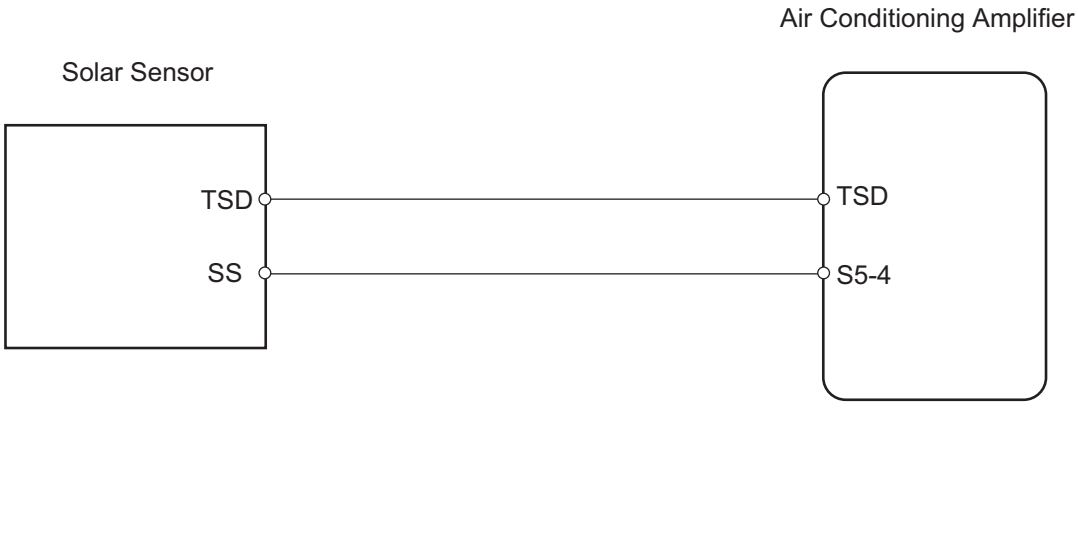

E115801E05

AC

INSPECTION PROCEDURE

1	READ VALUE OF INTELLIGENT TESTER (SOLAR SENSOR D SIDE)

(a) Connect the intelligent tester (with CAN VIM) to the DLC3.
(b) Turn the ignition switch ON and turn the intelligent tester main switch ON.
(c) Select the item below in the DATA LIST, and read the value displayed on the intelligent tester.

Air conditioning amplifier

Item	Measurement Item / Display (Range)	Normal Condition	Diagnostic Note
SOLAR SENS-D	Driver side solar sensor / Min.: 0, Max.: 255	Driver side temperature increases as brightness increases	-

OK:
The display is as specified in the normal condition column.

Result

Result	Proceed to
NG	A
OK (Checking from the PROBLEM SYMPTOMS TABLE)	B
OK (Checking from the DTC)	C

B → **PROCEED TO NEXT CIRCUIT INSPECTION SHOWN IN PROBLEM SYMPTOMS TABLE**

C → **REPLACE AIR CONDITIONING AMPLIFIER**

A

2 INSPECT SOLAR SENSOR

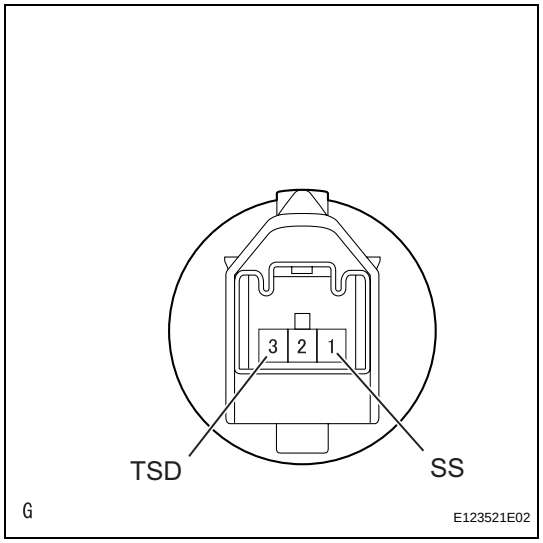

(a) Remove the solar sensor.
(b) Measure the resistance of the sensor.
(c) Connect the ohmmeter's positive (+) lead to terminal 1 and the negative (-) lead to terminal 3 of the solar sensor.

Standard resistance

Tester Connection	Condition	Specified Condition
1 (SS) - 3 (TSD)	Sensor exposed to electric light	Except ∞ Ω
1 (SS) - 3 (TSD)	Sensor covered with cloth	∞ Ω (No continuity)

NOTICE:
The connection procedure for using a digital tester such as an electrical tester is shown above. When using an analog tester, connect the positive (+) lead to terminal 3 and the negative (-) lead to terminal 1 of the solar sensor.
HINT:
- As the inspection light is moved away from the sensor, the voltage decreases.
- Use an incandescent light for the inspection. Position it about 30 cm (11.8 in.) from the solar sensor.

NG → **REPLACE SOLAR SENSOR**

OK

AC

3	CHECK WIRE HARNESS (SOLAR SENSOR - AIR CONDITIONING AMPLIFIER)

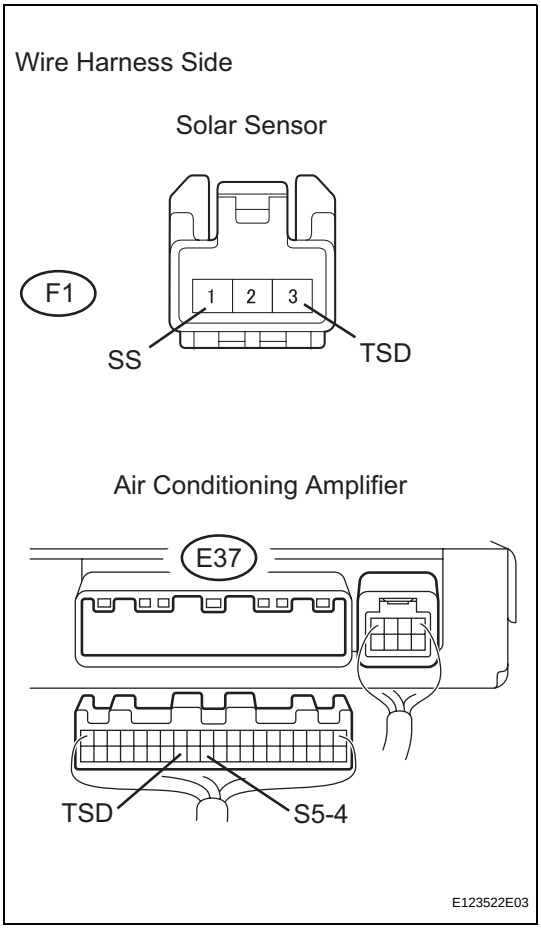

(a) Disconnect the F1 sensor connector.
(b) Disconnect the E37 amplifier connector.
(c) Measure the resistance of the wire harness side connectors.

Standard resistance

Tester Connection	Specified Condition
E37-33 (TSD) - F1-3 (TSD)	Below 1 Ω
E37-31 (S5-4) - F1-1 (SS)	Below 1 Ω
E37-33 (TSD) - Body ground	1 MΩ or higher
E37-31 (S5-4) - Body ground	1 MΩ or higher

NG → **REPAIR OR REPLACE HARNESS AND CONNECTOR**

AC

OK

REPLACE AIR CONDITIONING AMPLIFIER

DTC	B1441/41	Air Mix Damper Control Servo Motor Circuit (Passenger Side)

DESCRIPTION

The air mix damper servo sends pulse signals to indicate the damper position to the air conditioning amplifier. The air conditioning amplifier activates the motor (normal or reverse) based on these signals to move the air mix damper (passenger seat) to the appropriate position. This adjusts the amount of air passing through the heater core after passing the evaporator and controls the temperature of the blown air.

HINT:

Confirm that there are no mechanical problems because this DTC can be output when either a damper link or damper is mechanically locked.

DTC No.	DTC Detection Condition	Trouble Area
B1441/41	Air mix damper position does not change even if air conditioning amplifier operates air mix control servo motor	• Air mix control servo motor • Air conditioning harness • Air conditioning amplifier

WIRING DIAGRAM

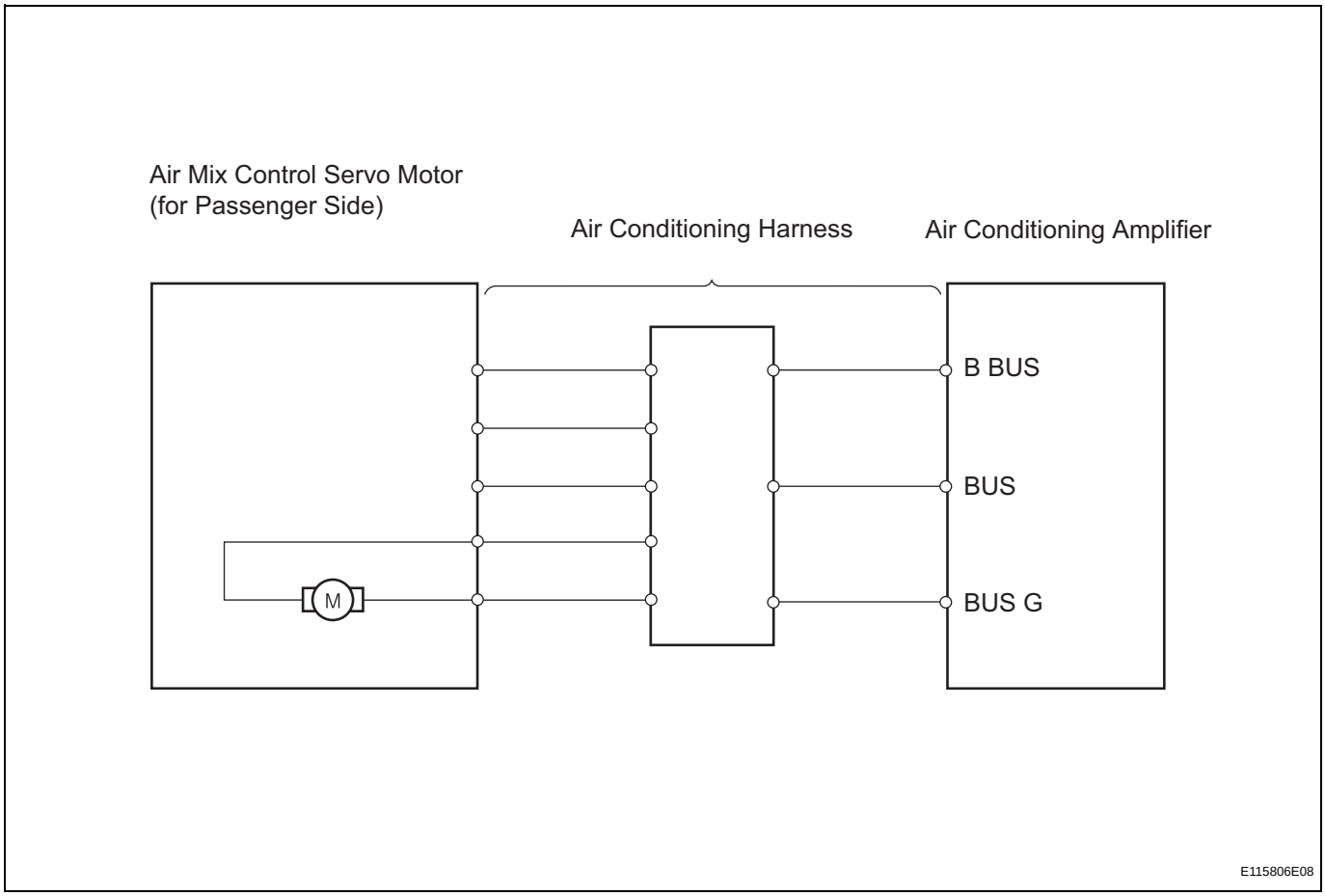

AC

INSPECTION PROCEDURE

1	READ VALUE OF INTELLIGENT TESTER (AIR MIX PULSE-P)

(a) Connect the intelligent tester (with CAN VIM) to the DLC3.
(b) Turn the ignition switch ON and turn the intelligent tester main switch ON.
(c) Select the items below in the DATA LIST, and read the value displayed on the intelligent tester.

Air conditioning amplifier

Item	Measurement Item / Display (Range)	Normal Condition	Diagnostic Note
AIR MIX PULSE-P	Passenger side air mix servo motor target pulse / Min.: 0, Max.: 255	Customized value displayed	-

OK:
The display is as specified in the normal condition column.

Result

Result	Proceed to
NG	A
OK (Checking from PROBLEM SYMPTOMS TABLE)	B
OK (Checking from DTC)	C

B → **PROCEED TO NEXT CIRCUIT INSPECTION SHOWN IN PROBLEM SYMPTOMS TABLE**

C → **REPLACE AIR CONDITIONING AMPLIFIER**

AC

A

2	REPLACE AIR MIX CONTROL SERVO MOTOR

HINT:
Since the servo motor cannot be tested when it is removed from the vehicle, replace the servo motor with a normal one and check that the condition returns to normal.
OK:
Same problem does not occur.

NG → **REPAIR OR REPLACE AIR CONDITIONING HARNESS ASSEMBLY**

OK

SYSTEM IS OK

DTC	B1442/42	Air Inlet Damper Control Servo Motor Circuit

DESCRIPTION

The damper servo (air inlet control) sends pulse signals to indicate the damper position to the air conditioning amplifier. The air conditioning amplifier activates the motor (normal or reverse) based on these signals to move the air inlet control damper to the appropriate position, which controls the intake air settings (FRESH, FRESH / RECIRCULATION and RECIRCULATION).
HINT:
Confirm that there are no mechanical problems because this DTC can be output when either a damper link or damper is mechanically locked.

DTC No.	DTC Detection Condition	Trouble Area
B1442/42	Air inlet damper position does not change even if air conditioning amplifier operates air inlet damper control servo motor	• Air inlet control servo motor • Air conditioning harness • Air conditioning amplifier

WIRING DIAGRAM

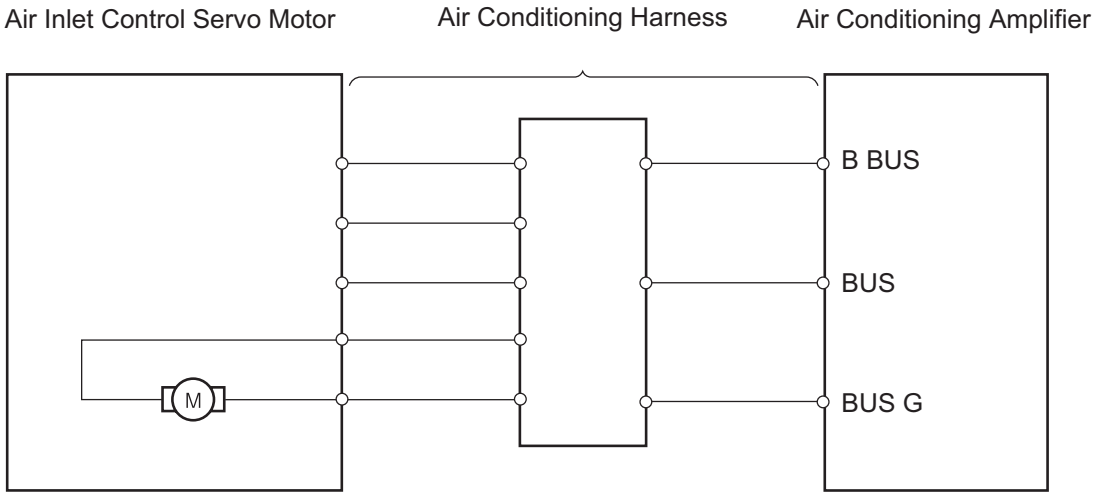

INSPECTION PROCEDURE

1	READ VALUE OF INTELLIGENT TESTER (A/I DAMP TARG PLS)

(a) Connect the intelligent tester (with CAN VIM) to the DLC3.
(b) Turn the ignition switch ON and turn the intelligent tester main switch ON.
(c) Select the items below in the DATA LIST, and read the value displayed on the intelligent tester.

AC

Air conditioning amplifier

Item	Measurement Item / Display (Range)	Normal Condition	Diagnostic Note
A/I DAMP PLS	Air inlet damper target pulse / Min.: 0, Max.: 255	Customized value displayed	-

OK:

The display is as specified in the normal condition column.

Result

Result	Proceed to
NG	A
OK (Checking from PROBLEM SYMPTOMS TABLE)	B
OK (Checking from DTC)	C

B → **PROCEED TO NEXT CIRCUIT INSPECTION SHOWN IN PROBLEM SYMPTOMS TABLE**

C → **REPLACE AIR CONDITIONING AMPLIFIER**

A

2 REPLACE DAMPER SERVO SUB-ASSEMBLY

HINT:
Since the servo motor cannot be tested when it is removed from the vehicle, replace the servo motor with a normal one and check that the condition returns to normal.

OK:

Same problem does not occur.

NG → **REPAIR OR REPLACE AIR CONDITIONING HARNESS ASSEMBLY**

OK

SYSTEM IS OK

AC

DTC	B1443/43	Air Outlet Damper Control Servo Motor Circuit

DESCRIPTION

The damper servo sends pulse signals to indicate the damper position to the air conditioning amplifier. The air conditioning amplifier activates the motor (normal or reverse) based on these signals to move the mode damper to the appropriate position, which controls the air outlet modes.
HINT:
Confirm that there are no mechanical problems because this DTC can be output when either a damper link or damper is mechanically locked.

DTC No.	DTC Detection Condition	Trouble Area
B1443/43	Air outlet damper position does not change even if air conditioning amplifier operates air outlet damper control servo motor	• Air outlet control servo motor • Air conditioning harness • Air conditioning amplifier

WIRING DIAGRAM

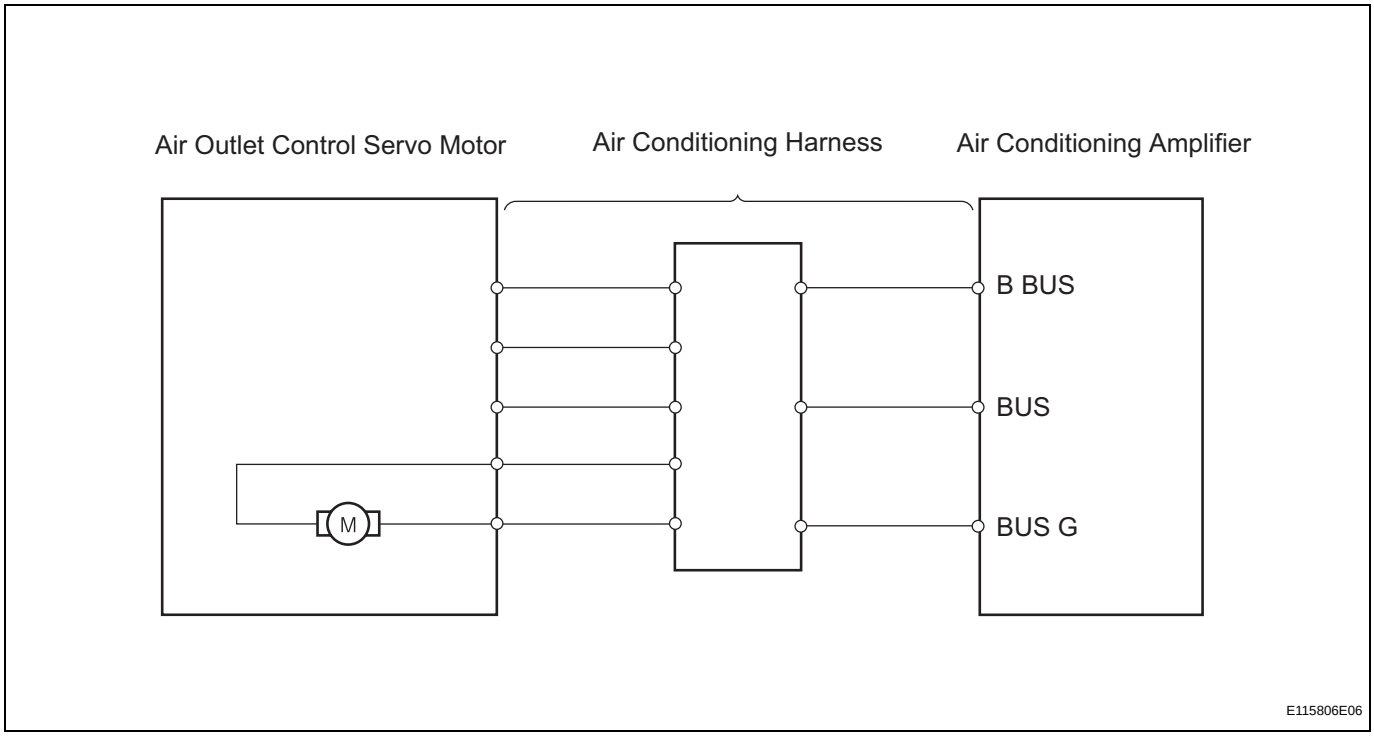

INSPECTION PROCEDURE

1	READ VALUE OF INTELLIGENT TESTER (AIR OUT PULSE)

(a) Connect the intelligent tester (with CAN VIM) to the DLC3.
(b) Turn the ignition switch ON and turn the intelligent tester main switch ON.
(c) Select the items below in the DATA LIST, and read the value displayed on the intelligent tester.

AC

Air conditioning amplifier

Item	Measurement Item / Display (Range)	Normal Condition	Diagnostic Note
AIR OUT PULSE	Air outlet servo motor target pulse / Min.: 0, Max.: 255	Customized value displayed	-

OK:
The display is as specified in the normal condition column.

Result

Result	Proceed to
NG	A
OK (Checking from PROBLEM SYMPTOMS TABLE)	B
OK (Checking from DTC)	C

B → **PROCEED TO NEXT CIRCUIT INSPECTION SHOWN IN PROBLEM SYMPTOMS TABLE**

C → **REPLACE AIR CONDITIONING AMPLIFIER**

A

2 REPLACE MODE DAMPER SERVO SUB-ASSEMBLY

HINT:
Since the servo motor cannot be tested when it is removed from the vehicle, replace the servo motor with a normal one and check that the condition returns to normal.

OK:
Same problem does not occur.

NG → **REPAIR OR REPLACE AIR CONDITIONING HARNESS ASSEMBLY**

OK

SYSTEM IS OK

DTC	B1446/46	Air Mix Damper Control Servo Motor Circuit (Driver Side)

DESCRIPTION

The air mix damper servo sends pulse signals to indicate the damper position to the air conditioning amplifier. The air conditioning amplifier activates the motor (normal or reverse) based on these signals to move the air mix damper (driver seat) to the appropriate position. This adjusts the amount of air passing through the heater core after passing the evaporator and controls the temperature of the blown air.
HINT:
Confirm that there are no mechanical problems because this DTC can be output when either a damper link or damper is mechanically locked.

DTC No.	DTC Detection Condition	Trouble Area
B1446/46	Air mix damper position does not change even if air conditioning amplifier operates air mix control servo motor	• Air mix control servo motor • Air conditioning harness • Air conditioning amplifier

WIRING DIAGRAM

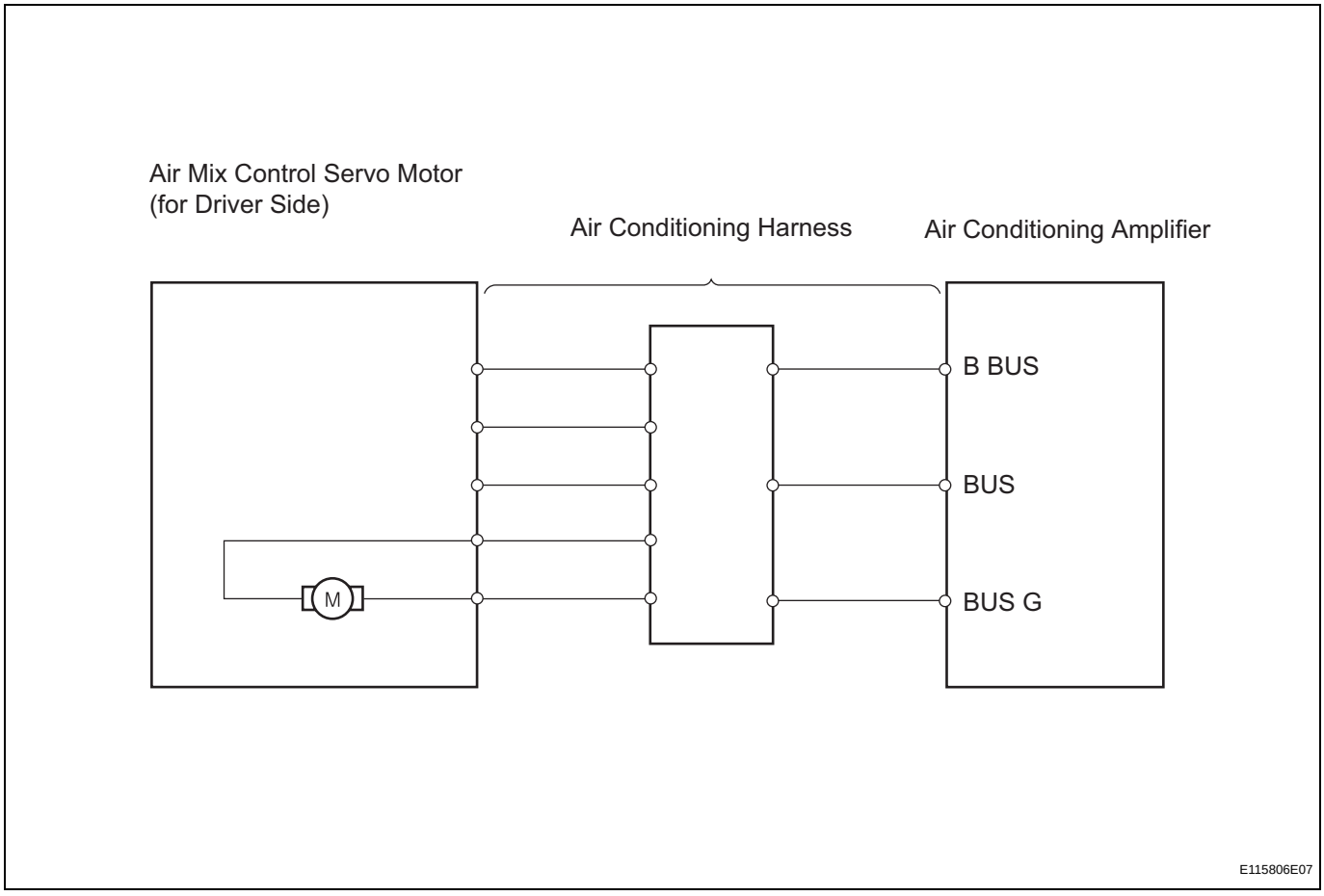

INSPECTION PROCEDURE

1	READ VALUE OF INTELLIGENT TESTER (AIR MIX SERVO TARG PULSE (D))

(a) Connect the intelligent tester (with CAN VIM) to the DLC3.

(b) Turn the ignition switch ON and turn the intelligent tester main switch ON.
(c) Select the items below in the DATA LIST, and read the value displayed on the intelligent tester.

Air conditioning amplifier

Item	Measurement Item / Display (Range)	Normal Condition	Diagnostic Note
AIR MIX PULSE-D	Driver side air mix servo motor target pulse / Min.: 0, Max.: 255	Customized value displayed	-

OK:
The display is as specified in the normal condition column.

Result

Result	Proceed to
NG	A
OK (Checking from PROBLEM SYMPTOMS TABLE)	B
OK (Checking from DTC)	C

B → **PROCEED TO NEXT CIRCUIT INSPECTION SHOWN IN PROBLEM SYMPTOMS TABLE**

C → **REPLACE AIR CONDITIONING AMPLIFIER**

A

2 REPLACE AIR MIX CONTROL SERVO MOTOR

AC

HINT:
Since the servo motor cannot be tested when it is removed from the vehicle, replace the servo motor with a normal one and check that the condition returns to normal.
OK:
Same problem does not occur.

NG → **REPAIR OR REPLACE AIR CONDITIONING HARNESS**

OK

SYSTEM IS OK

DTC	B1451/51	**Compressor Solenoid Circuit** (2005/11-2006/01)

DESCRIPTION

In this circuit, the compressor receives a refrigerant compression demand signal from the air conditioning amplifier. Based on this signal, the compressor changes the degree of refrigerant compression.

DTC No.	DTC Detection Condition	Trouble Area
B1451/51	Open or short in solenoid of externally changeable compressor circuit	• Compressor and pulley • Harness and connector between air conditioning amplifier and compressor and pulley • Air conditioning amplifier

WIRING DIAGRAM

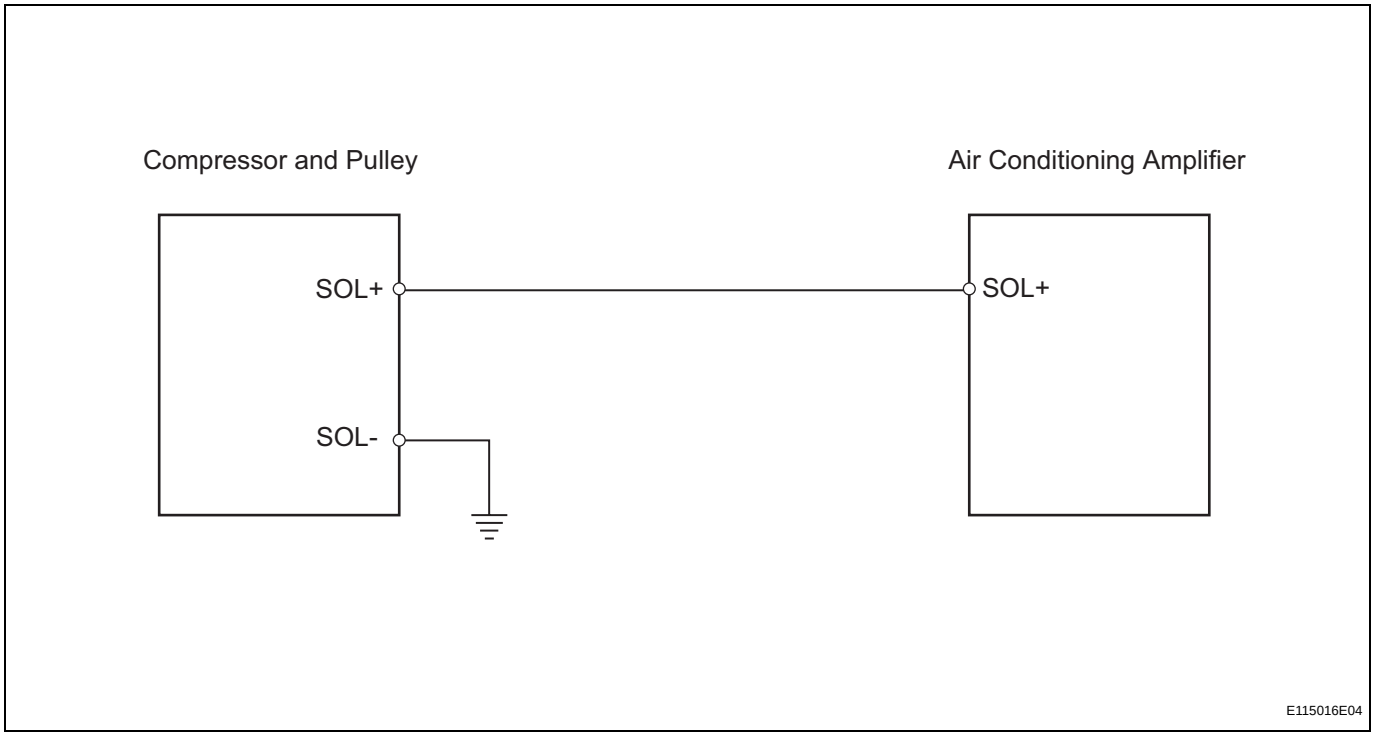

AC

INSPECTION PROCEDURE

1	READ VALUE OF INTELLIGENT TESTER (REG CTRL CURRNT)

(a) Connect the intelligent tester (with CAN VIM) to the DLC3.
(b) Turn the ignition switch ON and turn the intelligent tester main switch ON.
(c) Select the items below in the DATA LIST, and read the value displayed on the intelligent tester.

Air conditioning amplifier

Item	Measurement Item / Display (Range)	Normal Condition	Diagnostic Note
REG CTRL CURRNT	Regulator control current / Min.: 0 A Max.: 0.997 A	Value changes between 0 A and 0.997 A in accordance with compressor and pulley operation	-

OK:

The display is as specified in the normal condition column.

Result

Result	Proceed to
NG	A
OK (Checking from the PROBLEM SYMPTOMS TABLE)	B
OK (Checking from the DTC)	C

B → **PROCEED TO NEXT CIRCUIT INSPECTION SHOWN IN PROBLEM SYMPTOMS TABLE**

C → **REPLACE AIR CONDITIONING AMPLIFIER**

A

2 INSPECT COMPRESSOR AND PULLEY

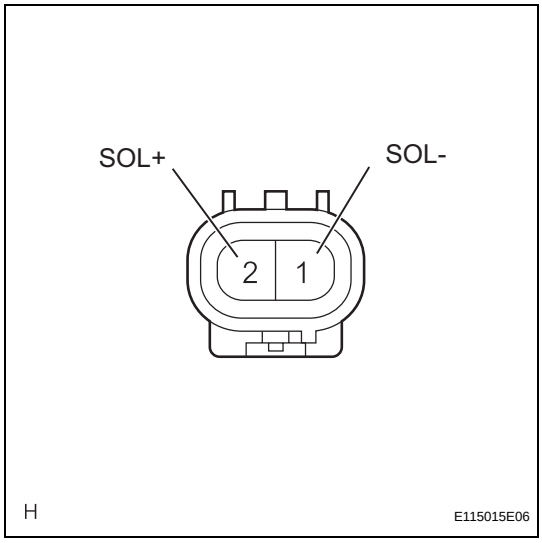

(a) Disconnect the compressor and pulley.
(b) Measure the resistance of the connector.

Standard resistance

Tester Connection	Condition	Specified Condition
1 (SOL-) - 2 (SOL+)	25°C (77°F)	10.1 to 11.1 Ω

NG → **REPLACE COMPRESSOR AND PULLEY**

OK

AC

3 CHECK WIRE HARNESS (COMPRESSOR AND PULLEY - AIR CONDITIONING AMPLIFIER)

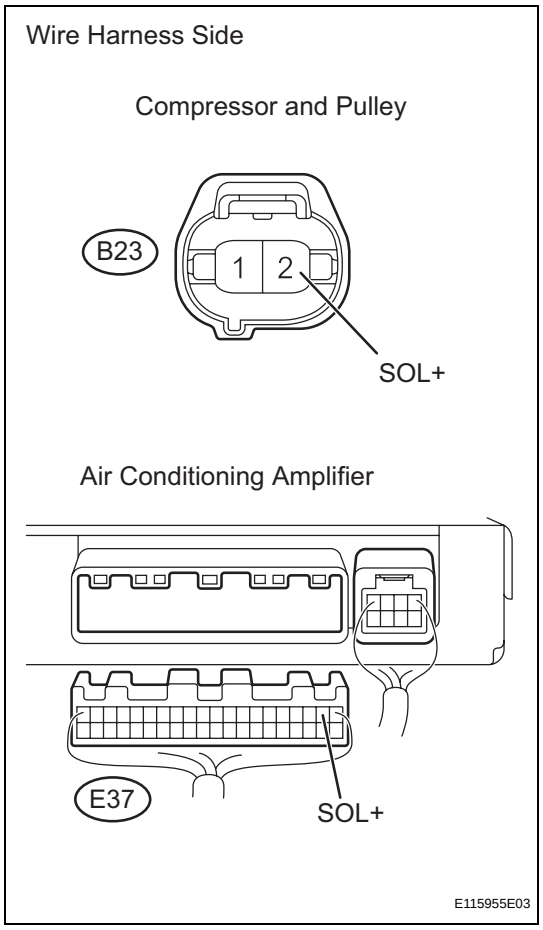

(a) Disconnect the B23 compressor and pulley connector.
(b) Disconnect the E37 amplifier connector.
(c) Measure the resistance of the wire harness side connectors.

Standard resistance

Tester Connection	Specified Condition
B23-2 (SOL+) - E37-2 (SOL+)	Below 1 Ω
B23-2 (SOL+) - Body Ground	1 MΩ or higher

NG → **REPAIR OR REPLACE HARNESS AND CONNECTOR**

OK

4 CHECK WIRE HARNESS (COMPRESSOR AND PULLEY - BODY GROUND)

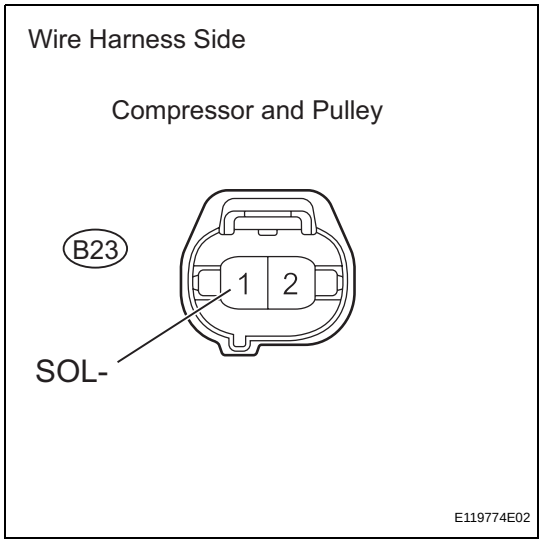

(a) Disconnect the B23 compressor and pulley connector.
(b) Measure the resistance of the wire harness side connector.

Standard resistance

Tester Connection	Specified Condition
B23-1 (SOL-) - Body ground	Below 1 Ω

NG → **REPAIR OR REPLACE HARNESS AND CONNECTOR**

AC

OK

REPLACE AIR CONDITIONING AMPLIFIER

DTC	B1451/51	**Compressor Solenoid Circuit** (2006/01-)

DESCRIPTION

In this circuit, the compressor receives a refrigerant compression demand signal from the air conditioning amplifier. Based on this signal, the compressor changes the degree of refrigerant compression.

DTC No.	DTC Detection Condition	Trouble Area
B1451/51	Open or short in solenoid of externally changeable compressor circuit	• A/C compressor* • Wire harness and connector between air conditioning amplifier and A/C compressor* • Air conditioning amplifier

HINT:
*: Compressor and pulley for 2AZ-FE, compressor and magnetic clutch for 2GR-FE

WIRING DIAGRAM

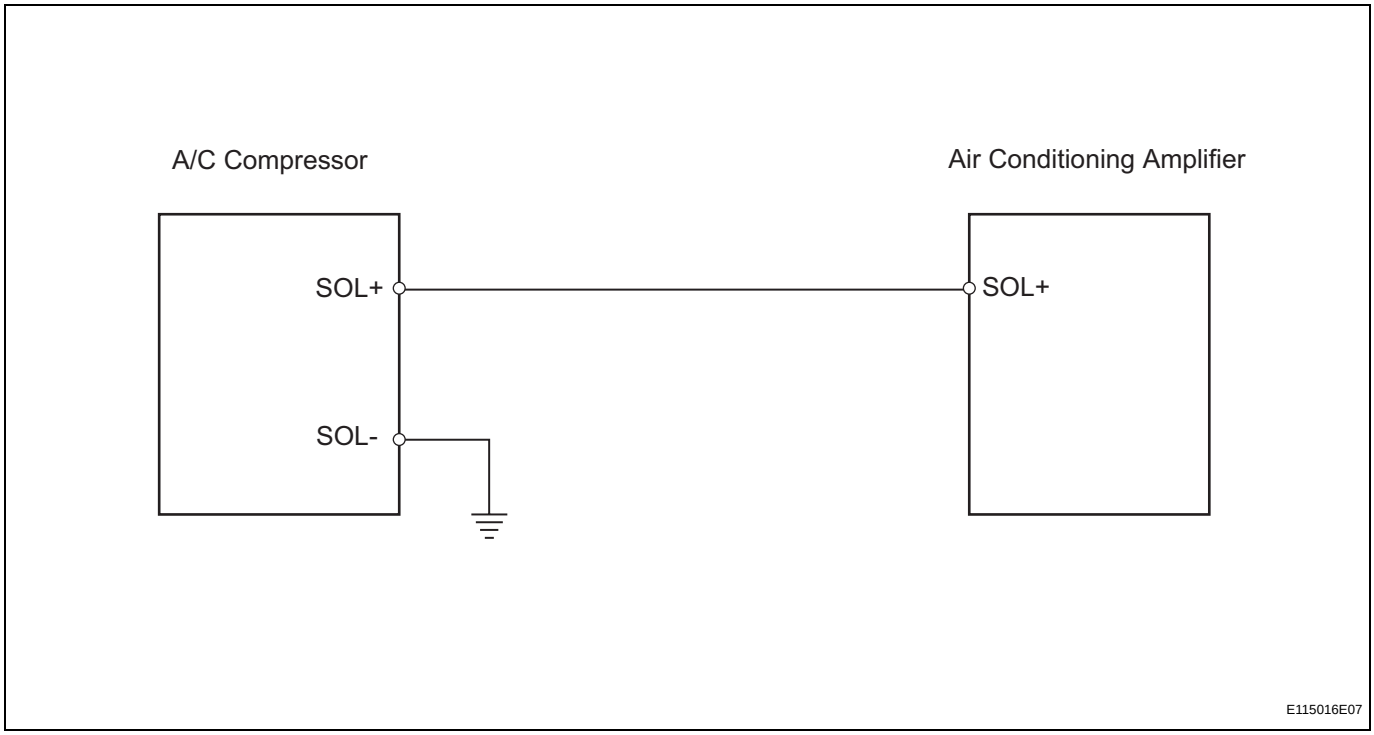

AC

INSPECTION PROCEDURE

1	READ VALUE OF INTELLIGENT TESTER (REG CTRL CURRNT)

(a) Connect the intelligent tester (with CAN VIM) to the DLC3.
(b) Turn the ignition switch ON and turn the intelligent tester main switch ON.
(c) Select the items below in the DATA LIST, and read the value displayed on the intelligent tester.

Air conditioning amplifier

Item	Measurement Item / Display (Range)	Normal Condition	Diagnostic Note
REG CTRL CURRNT	Regulator control current / Min.: 0 A Max.: 0.997 A	Value changes between 0 A and 0.997 A in accordance with A/C compressor operation	-

OK:
The display is as specified in the normal condition column.

Result

Result	Proceed to
NG	A
OK (Checking from the PROBLEM SYMPTOMS TABLE)	B
OK (Checking from the DTC)	C

B → **PROCEED TO NEXT CIRCUIT INSPECTION SHOWN IN PROBLEM SYMPTOMS TABLE**

C → **REPLACE AIR CONDITIONING AMPLIFIER**

A

2 INSPECT A/C COMPRESSOR

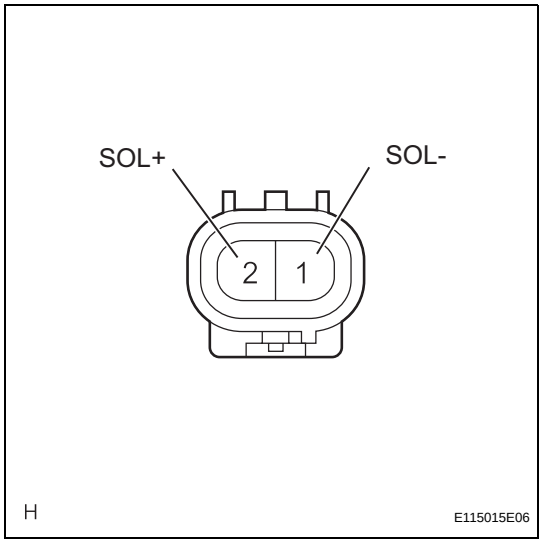

(a) Disconnect the A/C compressor clutch connector.
(b) Measure the resistance of the connector.
Standard resistance

Tester Connection	Condition	Specified Condition
1 (SOL-) - 2 (SOL+)	25°C (77°F)	10.1 to 11.1 Ω

NG → **REPLACE A/C COMPRESSOR**

OK

AC

3 CHECK WIRE HARNESS (A/C COMPRESSOR - AIR CONDITIONING AMPLIFIER)

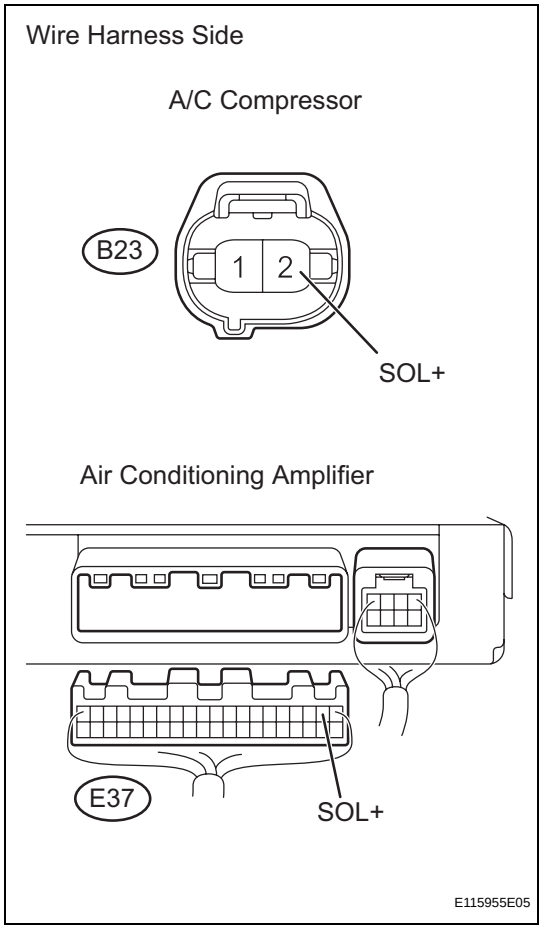

(a) Disconnect the B23 A/C compressor connector.
(b) Disconnect the E37 amplifier connector.
(c) Measure the resistance of the wire harness side connectors.

Standard resistance

Tester Connection	Specified Condition
B23-2 (SOL+) - E37-2 (SOL+)	Below 1 Ω
B23-2 (SOL+) - Body Ground	1 MΩ or higher

NG → **REPAIR OR REPLACE HARNESS AND CONNECTOR**

OK

4 CHECK WIRE HARNESS (A/C COMPRESSOR - BODY GROUND)

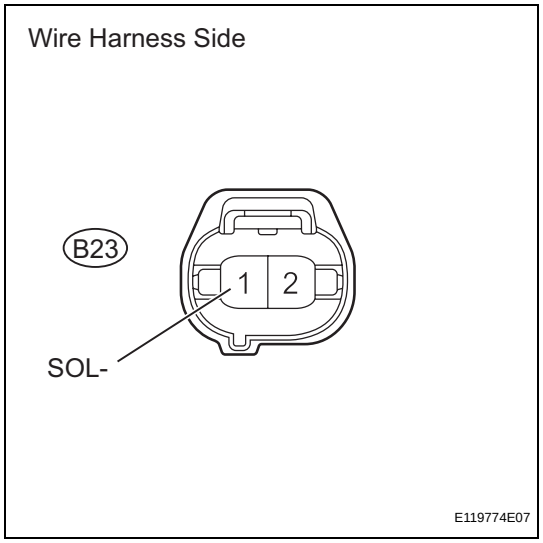

(a) Disconnect the B23 A/C compressor connector.
(b) Measure the resistance of the wire harness side connector.

Standard resistance

Tester Connection	Specified Condition
B23-1 (SOL-) - Body ground	Below 1 Ω

NG → **REPAIR OR REPLACE HARNESS AND CONNECTOR**

AC

OK

REPLACE AIR CONDITIONING AMPLIFIER

DTC	B1497/97	BUS IC Communication Malfunction

DESCRIPTION

The air conditioning harness connects the air conditioning amplifier and the servos. The air conditioning amplifier supplies power and sends operation instructions to each servo through the air conditioning harness. Each servo sends damper position information to the air conditioning amplifier.

DTC No.	DTC Detection Condition	Trouble Area
B1497/97	Communication line error or open	• Air conditioning harness • Air conditioning amplifier

WIRING DIAGRAM

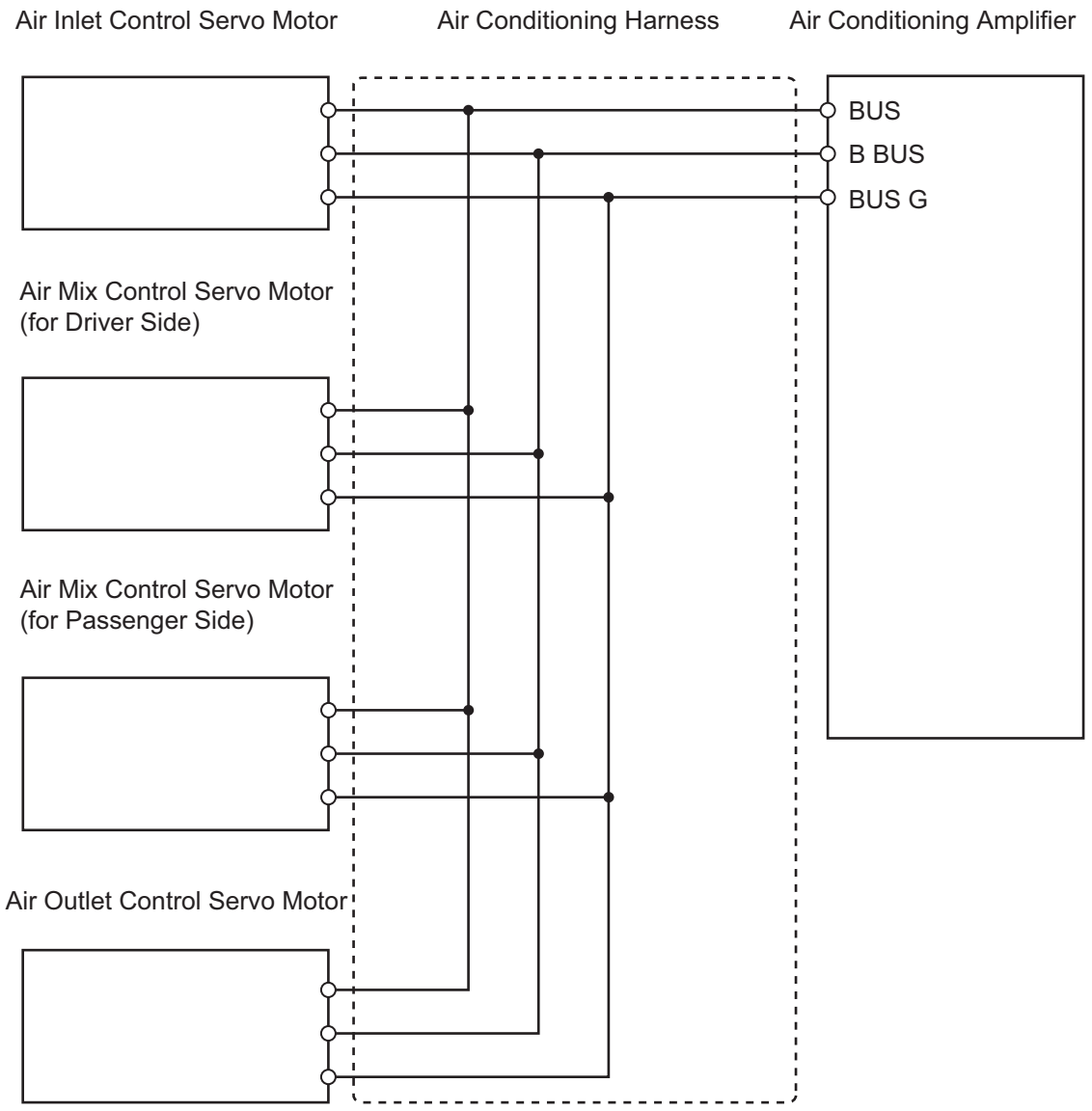

INSPECTION PROCEDURE

1 CHECK AIR CONDITIONING AMPLIFIER

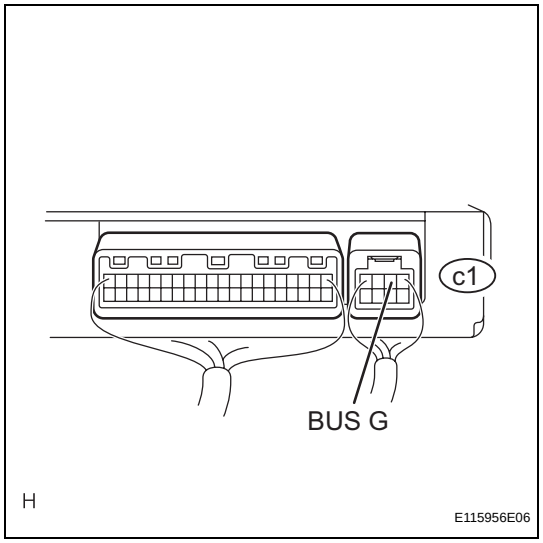

(a) Remove the air conditioning amplifier with its connectors still connected.
(b) Measure the resistance of the wire harness side connector.
Standard resistance

Tester Connection	Specified Condition
c1-2 (BUS G) - Body ground	Below 1 Ω

NG → **CHECK GROUND LINE AND AIR CONDITIONING AMPLIFIER**

OK

2 CHECK AIR CONDITIONING AMPLIFIER

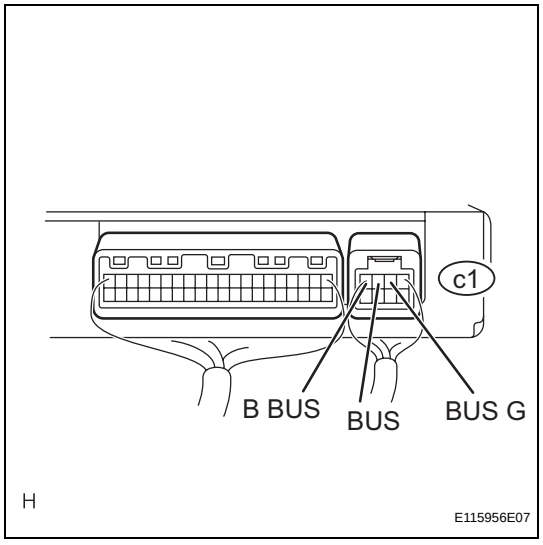

(a) Remove the air conditioning amplifier with its connectors still connected.
(b) Measure the voltage of the wire harness side connector.
Standard voltage

Tester Connection	Condition	Specified Condition
c1-2 (BUS G) - c1-4 (B BUS)	Ignition switch ON	11 to 13 V
c1-2 (BUS G) - c1-3 (BUS)	Ignition switch ON	Pulse generation

NG → **REPLACE AIR CONDITIONING AMPLIFIER**

OK

REPLACE AIR CONDITIONING HARNESS ASSEMBLY

AC

DTC	B1499/99	Multiplex Communication Circuit

DESCRIPTION

The air conditioning amplifier communicates data with the ECM and combination meter through the CAN communication system.

DTC No.	DTC Detection Condition	Trouble Area
B1499/99	Open in CAN communication line	• Air conditioning amplifier • ECM • Combination meter • CAN communication line

WIRING DIAGRAM

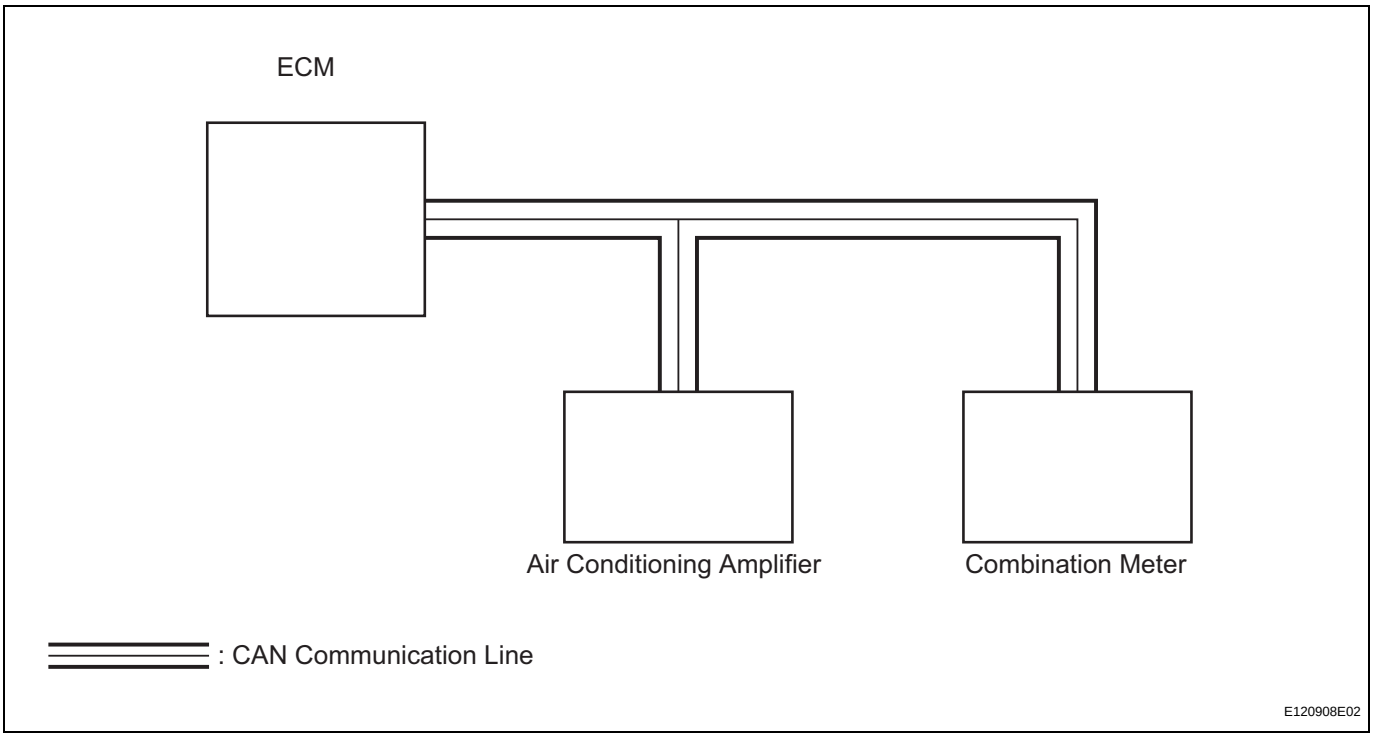

AC

INSPECTION PROCEDURE

1	CHECK DTC

(a) Clear the DTC (see page AC-31).
(b) Read the DTC (see page AC-31).

Result

Result	Proceed to
DTC (B1499/99) is output	A (see page CA-1)
DTC (B1499/99) is not output	B

B → SYSTEM IS OK

A → GO TO CAN COMMUNICATION SYSTEM

Air Conditioning Control Panel does not Operate

DESCRIPTION

This circuit consists of the air conditioning control and the air conditioning amplifier. When the air conditioning control is operated, signals are transmitted to the air conditioning amplifier through the LIN communication system.
If the LIN communication system malfunctions, the air conditioning amplifier does not operate even if the air conditioning control is operated.

WIRING DIAGRAM

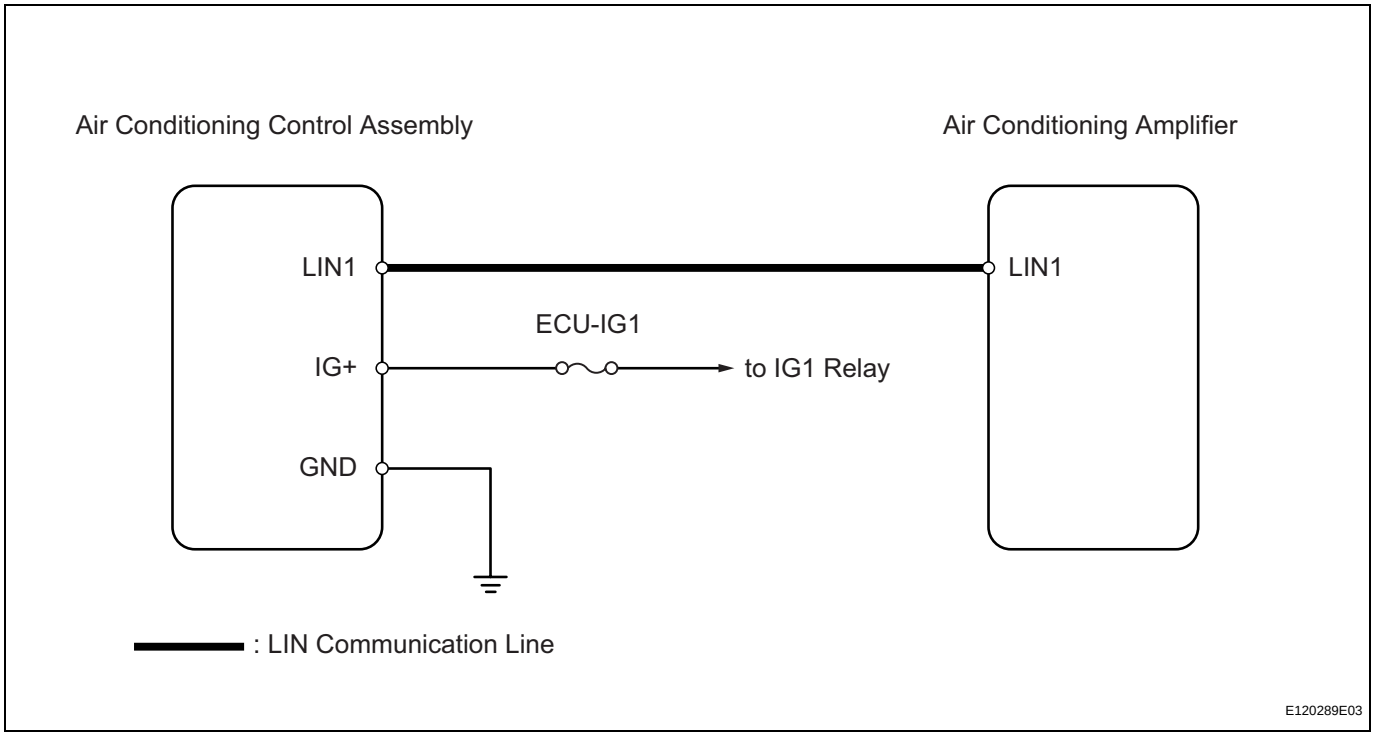

AC

INSPECTION PROCEDURE

1 CHECK WIRE HARNESS (AIR CONDITIONING CONTROL ASSEMBLY - BODY GROUND)

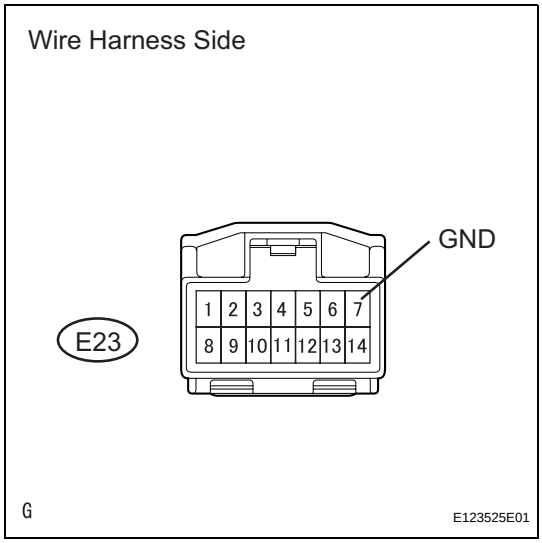

(a) Disconnect the air conditioning control assembly connector.
(b) Measure the resistance of the wire harness side connector.
Standard resistance

Tester Connection	Specified Condition
E23-7 (GND) - Body ground	Below 1 Ω

NG → **REPAIR OR REPLACE HARNESS AND CONNECTOR**

OK

2 CHECK WIRE HARNESS (AIR CONDITIONING CONTROL ASSEMBLY - BATTERY)

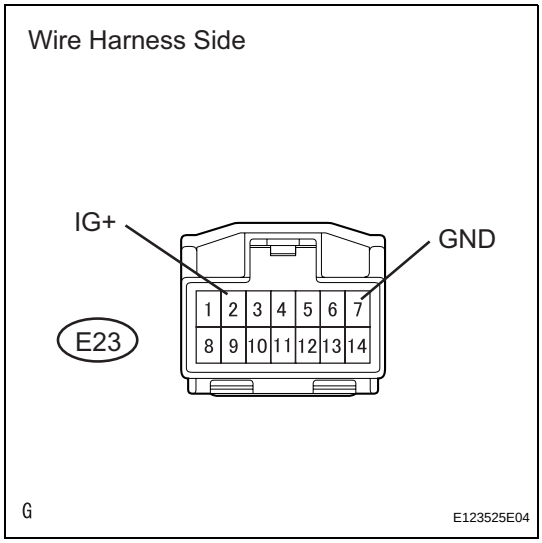

(a) Disconnect the E23 air conditioning control assembly connector.
(b) Measure the voltage of the wire harness side connector.
Standard voltage

Tester Connection	Condition	Specified Condition
E23-7 (GND) - E23-2 (IG+)	Ignition switch ON	10 to 14 V

NG → **REPAIR OR REPLACE HARNESS AND CONNECTOR**

OK

AC

3	CHECK WIRE HARNESS (AIR CONDITIONING AMPLIFIER - AIR CONDITIONING CONTROL)

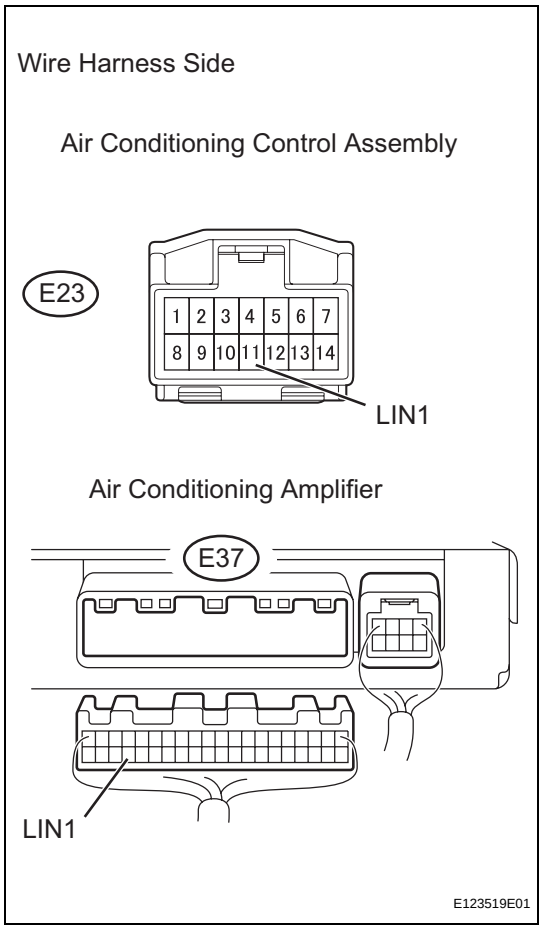

(a) Disconnect the E23 control connector.
(b) Disconnect the E37 amplifier connector.
(c) Measure the resistance of the wire harness side connectors.

Standard resistance

Tester Connection	Specified Condition
E37-37 (LIN1) - E23-11 (LIN1)	Below 1 Ω

NG → **REPAIR OR REPLACE HARNESS AND CONNECTOR**

OK

4	REPLACE AIR CONDITIONING AMPLIFIER

(a) Replace the air conditioning control with a new or properly functioning one.
(b) Operate the air conditioning control to check that it functions properly.

Result

Result	Proceed to
Air conditioning control malfunctions	A
Air conditioning control functions properly	B

B → **END (AIR CONDITIONING CONTROL ASSEMBLY IS FAULTY)**

A

REPLACE AIR CONDITIONING AMPLIFIER

AC

Blower Motor Circuit

DESCRIPTION

The blower motor is operated by signals from the air conditioning amplifier. Blower motor speed signals are transmitted in accordance with changes in the duty ratio.

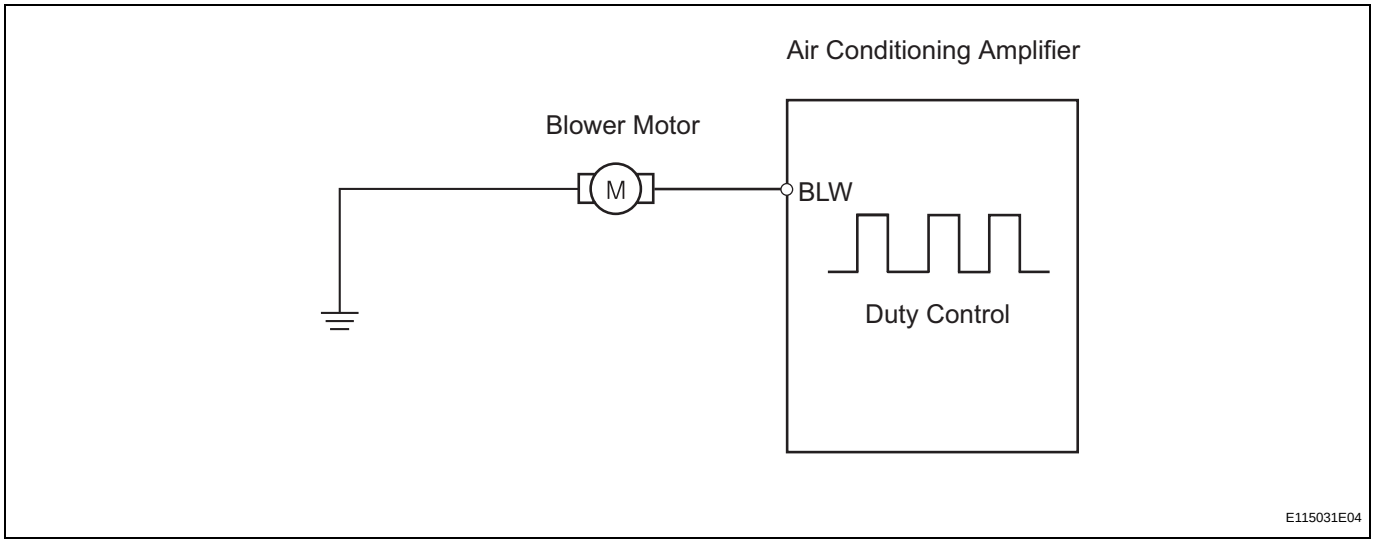

WIRING DIAGRAM

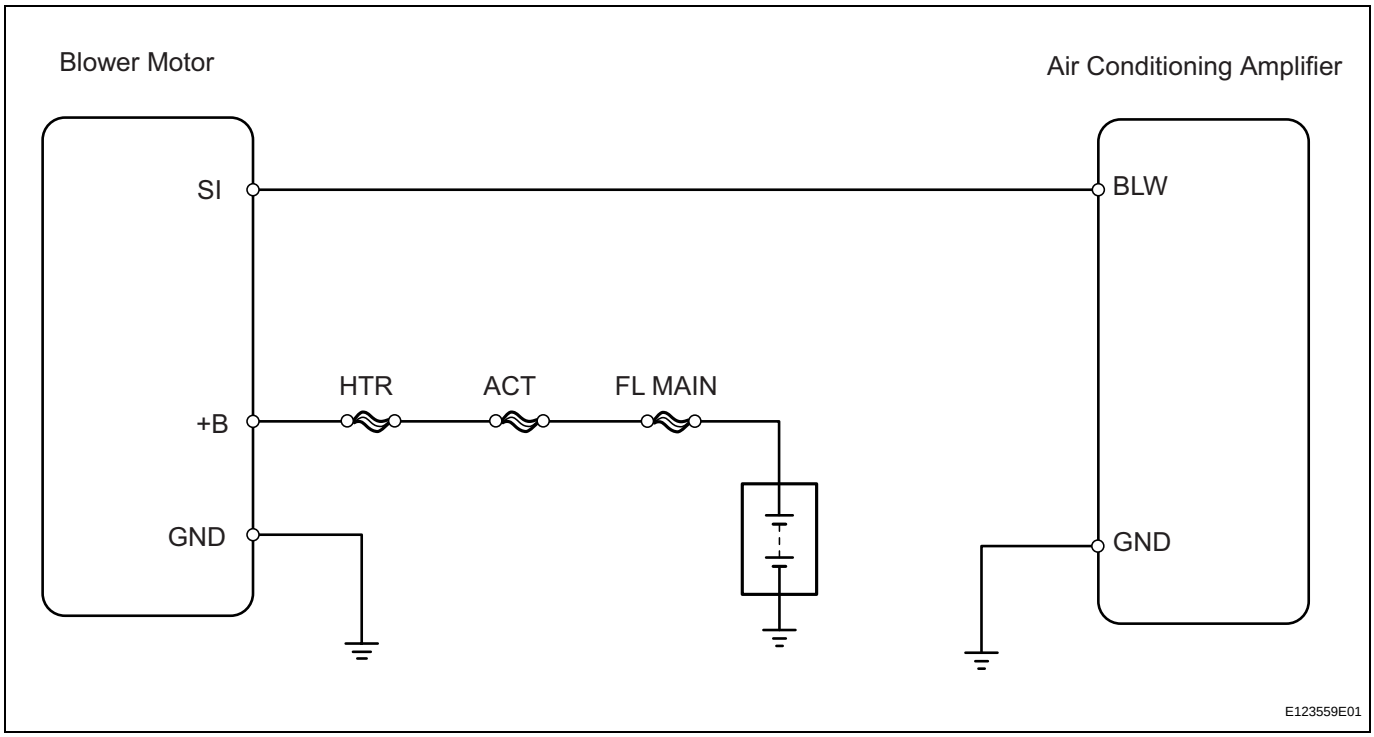

AC

INSPECTION PROCEDURE

1	**PERFORM ACTIVE TEST BY INTELLIGENT TESTER (BLOWER MOTOR)**

(a) Connect the intelligent tester to (with CAN VIM) the DLC3.

(b) Turn the ignition switch ON and turn the intelligent tester main switch ON.
(c) Select the item below in the ACTIVE TEST, and then check that the blower motor operates.

Air conditioning amplifier

Item	Test Details / Display	Diagnostic Note
BLOWER MOTOR	Blower motor / Min.: 0, Max.: 31	-

Result

Result	Proceed to
NG (blower motor does not operate)	A
NG (blower motor operates but does not change speed)	B
OK	C

B → Go to step 6

C → PROCEED TO NEXT CIRCUIT INSPECTION SHOWN IN PROBLEM SYMPTOMS TABLE

A

2 INSPECT FUSE (HTR)

(a) Remove the HTR H-fuse from the engine room No. 2 relay block.
(b) Measure the resistance of the H-fuse.
Standard resistance:
Below 1 Ω

NG → REPLACE FUSE

AC

OK

3 CHECK WIRE HARNESS (BLOWER MOTOR - BODY GROUND)

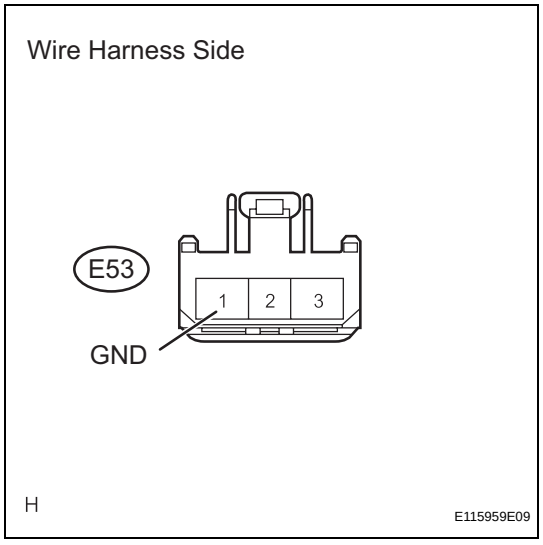

(a) Disconnect the E53 motor connector.
(b) Measure the resistance of the wire harness side connector.
Standard resistance

Tester Connection	Specified Condition
E53-1 (GND) - Body ground	Below 1 Ω

NG → REPAIR OR REPLACE HARNESS AND CONNECTOR

OK

4 CHECK WIRE HARNESS (BLOWER MOTOR - BATTERY)

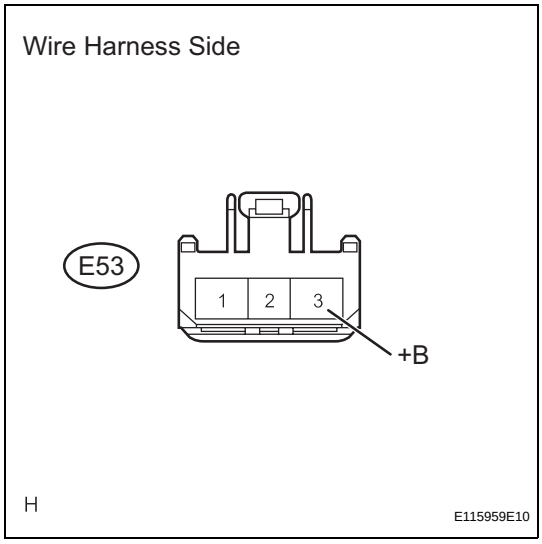

(a) Disconnect the E53 motor connector.
(b) Measure the voltage of the wire harness side connector.

Standard voltage

Tester Connection	Condition	Specified Condition
E53-3 (+B) - Body ground	Ignition switch ON	10 to 14 V

NG → **REPAIR OR REPLACE HARNESS AND CONNECTOR**

OK

5 CHECK BLOWER W/ FAN MOTOR SUB-ASSEMBLY

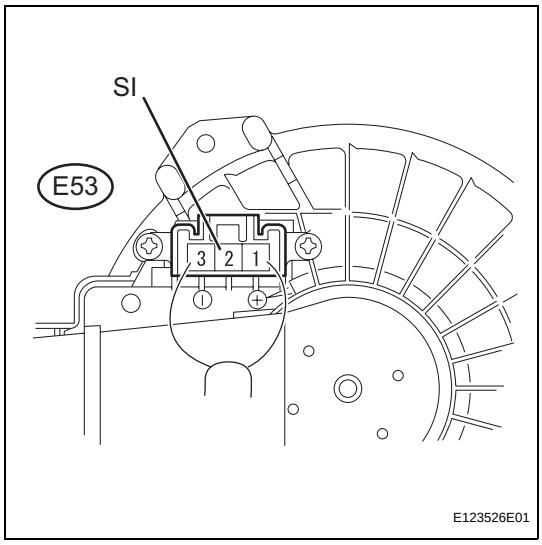

(a) Disconnect the E37 amplifier connector.
(b) Connect the E53 motor connector.
(c) Measure the voltage of the connector.

Standard voltage

Tester Connection	Condition	Specified Condition
E53-2 (SI) - Body ground	Ignition switch ON	4.5 to 5.5 V

NG → **REPLACE BLOWER W/ FAN MOTOR SUB-ASSEMBLY**

OK

AC

6 CHECK WIRE HARNESS (AIR CONDITIONING AMPLIFIER - BODY GROUND)

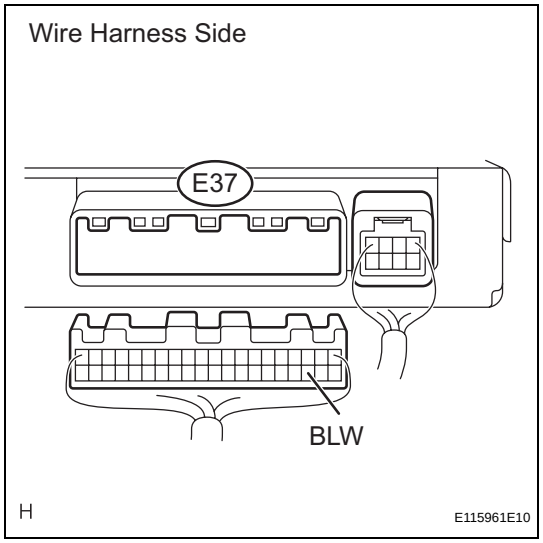

(a) Disconnect the E37 amplifier connector.
(b) Measure the voltage of the wire harness side connector.
Standard voltage

Tester Connection	Condition	Specified Condition
E37-23 (BLW) - Body ground	Ignition switch ON Blower switch OFF	4.5 to 5.5 V

NG → **REPAIR OR REPLACE HARNESS AND CONNECTOR**

OK

7 CHECK AIR CONDITIONING AMPLIFIER

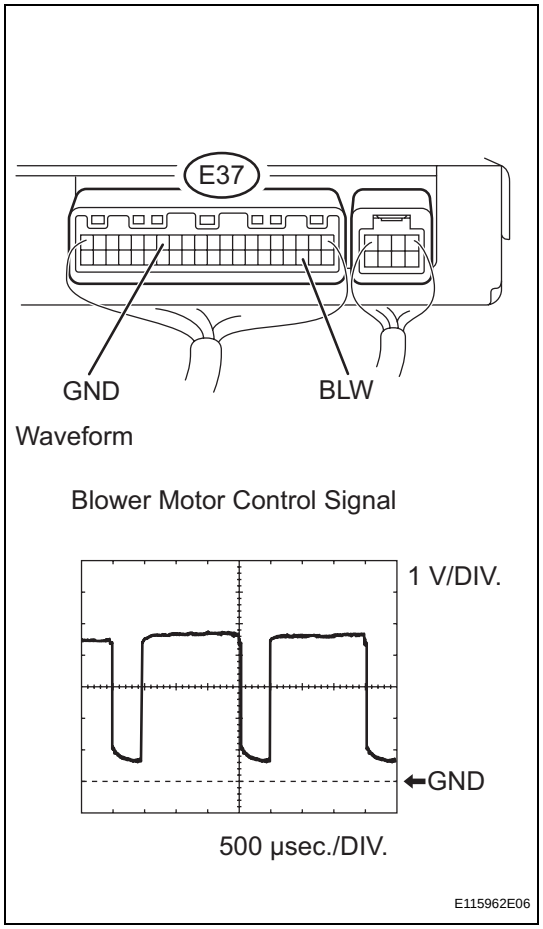

(a) Remove the air conditioning amplifier with its connectors still connected.
(b) Check the waveform of the amplifier connector.
OK:
Waveform is as shown in the illustration.
HINT:
The waveform varies with the blower level.

Item	Content
Tester Connection	BLW (E37-23) - GND (E37-14)
Tool Setting	1 V/DIV., 500 µsec./DIV.
Condition	Ignition switch ON Blower switch LO

NG → **REPLACE AIR CONDITIONING AMPLIFIER**

AC

OK

REPLACE BLOWER W/ FAN MOTOR SUB-ASSEMBLY

Compressor Circuit

DESCRIPTION

When the A/C switch is turned on, the magnetic clutch ON signal is sent from the air conditioning amplifier. Then the MG CLT relay turns on to operate the magnetic clutch.

WIRING DIAGRAM

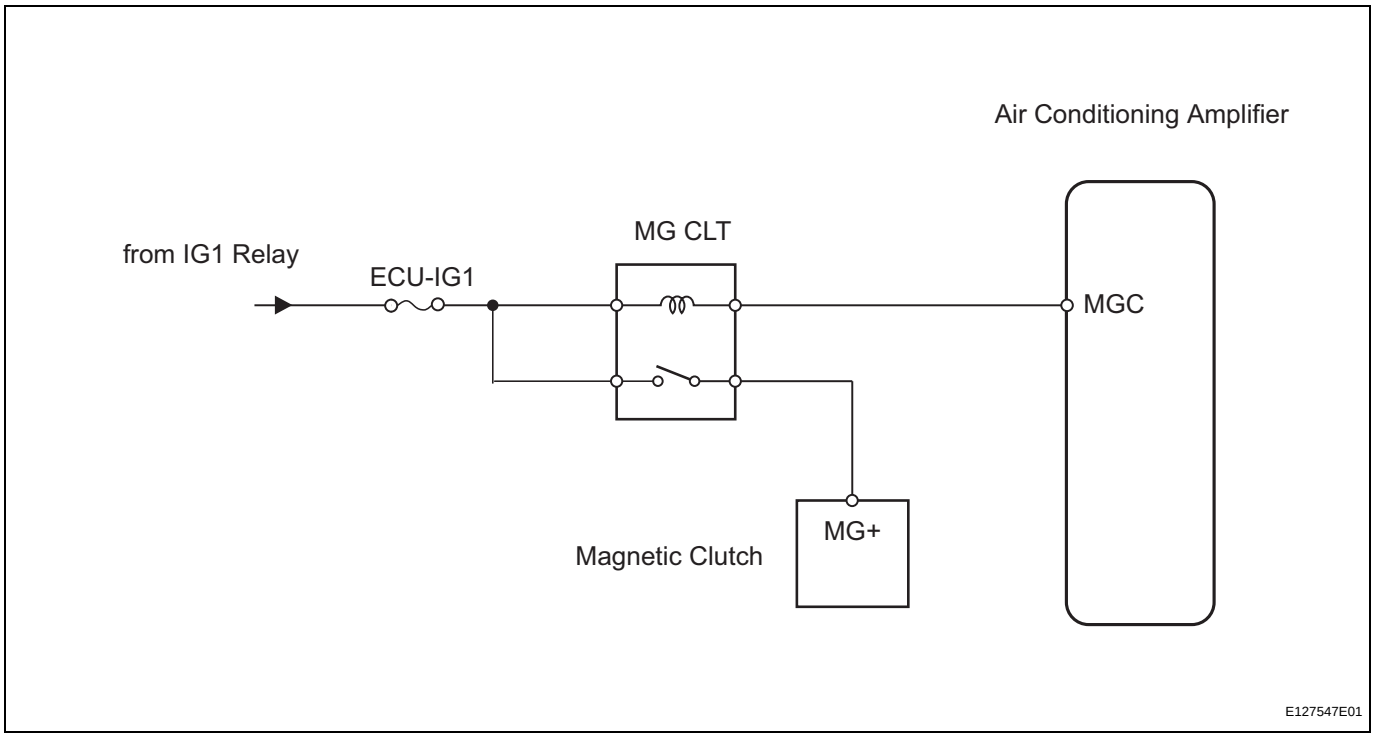

AC

INSPECTION PROCEDURE

1	PERFORM ACTIVE TEST BY INTELLIGENT TESTER (A/C MAG CLUTCH)

(a) Connect the intelligent tester (with CAN VIM) to the DLC3.
(b) Turn the ignition switch ON and turn the intelligent tester main switch ON.
(c) Select the item below in the ACTIVE TEST and then check that the compressor magnetic relay operates.

Air conditioning amplifier

Item	Test Details / Display (Range)	Diagnostic Note
A/C MAG CLUTCH	Magnetic clutch relay / OFF, ON	Operating sound can be heard

OK → **PROCEED TO NEXT CIRCUIT INSPECTION SHOWN IN PROBLEM SYMPTOMS TABLE**

NG

2	INSPECT FUSE (ECU-IG1)

(a) Remove the ECU-IG1 fuse from the instrument panel junction block.
(b) Measure the resistance of the fuse.
Standard resistance:
Below 1 Ω

NG → **REPLACE FUSE**

OK

3	INSPECT MAGNETIC CLUTCH RELAY (Marking: MG CLT)

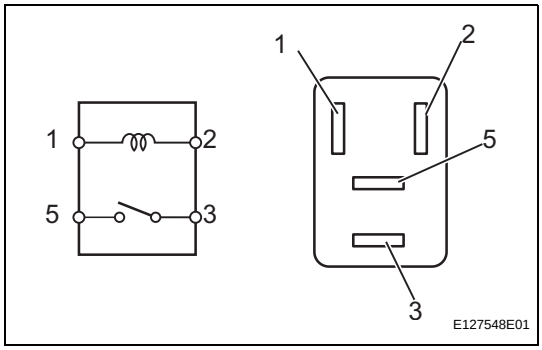

(a) Remove the magnetic clutch relay from the engine room No. 1 relay block.
(b) Measure the resistance of the relay.
Standard resistance

Tester Connection	Specified Condition
3 - 5	10 kΩ or higher
3 - 5	Below 1 Ω (when battery voltage is applied to terminals 1 and 2)

NG → **REPLACE MAGNETIC CLUTCH RELAY**

OK

AC

4	CHECK WIRE HARNESS (AIR CONDITIONING AMPLIFIER - BATTERY)

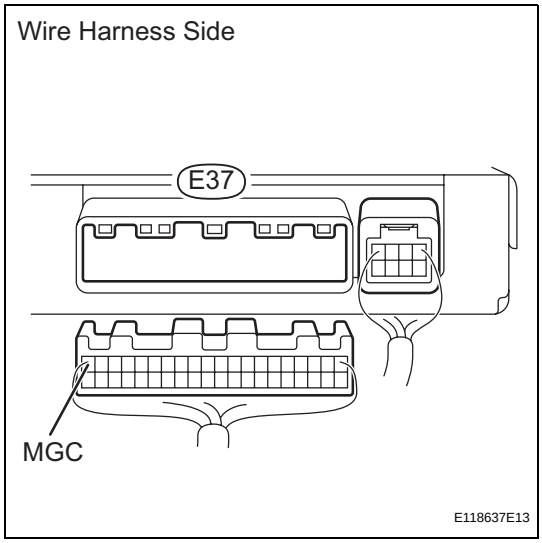

(a) Disconnect the E37 amplifier connector.
(b) Measure the voltage of the wire harness side connector.
Standard voltage

Tester Connection	Condition	Specified Condition
E37-20 (MGC) - Body ground	Ignition switch ON	10 to 14 V
E37-20 (MGC) - Body ground	Ignition switch OFF	Below 1 V

NG → **REPAIR OR REPLACE HARNESS AND CONNECTOR**

OK

5 CHECK AIR CONDITIONING AMPLIFIER (MGC VOLTAGE)

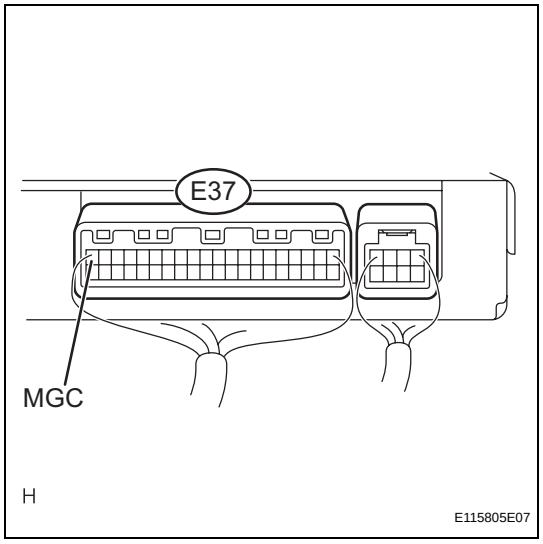

(a) Remove the air conditioning amplifier with its connectors still connected.
(b) Measure the voltage of the connector.
Standard voltage

Tester Connection	Condition	Specified Condition
E37-20 (MGC) - Body ground	Ignition switch ON A/C switch OFF	10 to 14 V
E37-20 (MGC) - Body ground	Ignition switch ON A/C switch ON	Below 1.5 V

NG → **REPLACE AIR CONDITIONING AMPLIFIER**

OK

6 CHECK MAGNETIC CLUTCH

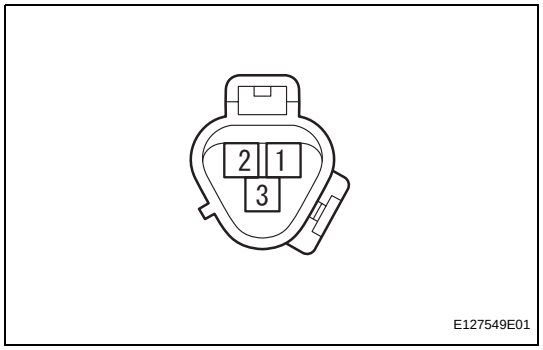

(a) Disconnect the B47 magnetic clutch connector.
(b) Connect the battery's positive (+) lead to terminal 3 of the magnetic clutch and the negative (-) lead to the body ground.
OK:
Magnetic clutch is engaged.

NG → **REPLACE MAGNETIC CLUTCH**

OK

REPAIR OR REPLACE WIRE HARNESS (MAGNETIC CLUTCH - ECU-IG1)

AC

IG Power Source Circuit

DESCRIPTION

This is the main power source supplied to the air conditioning amplifier when the ignition switch is ON (IG). This power source is used for operating components, such as the air conditioning amplifier and servo motors.

WIRING DIAGRAM

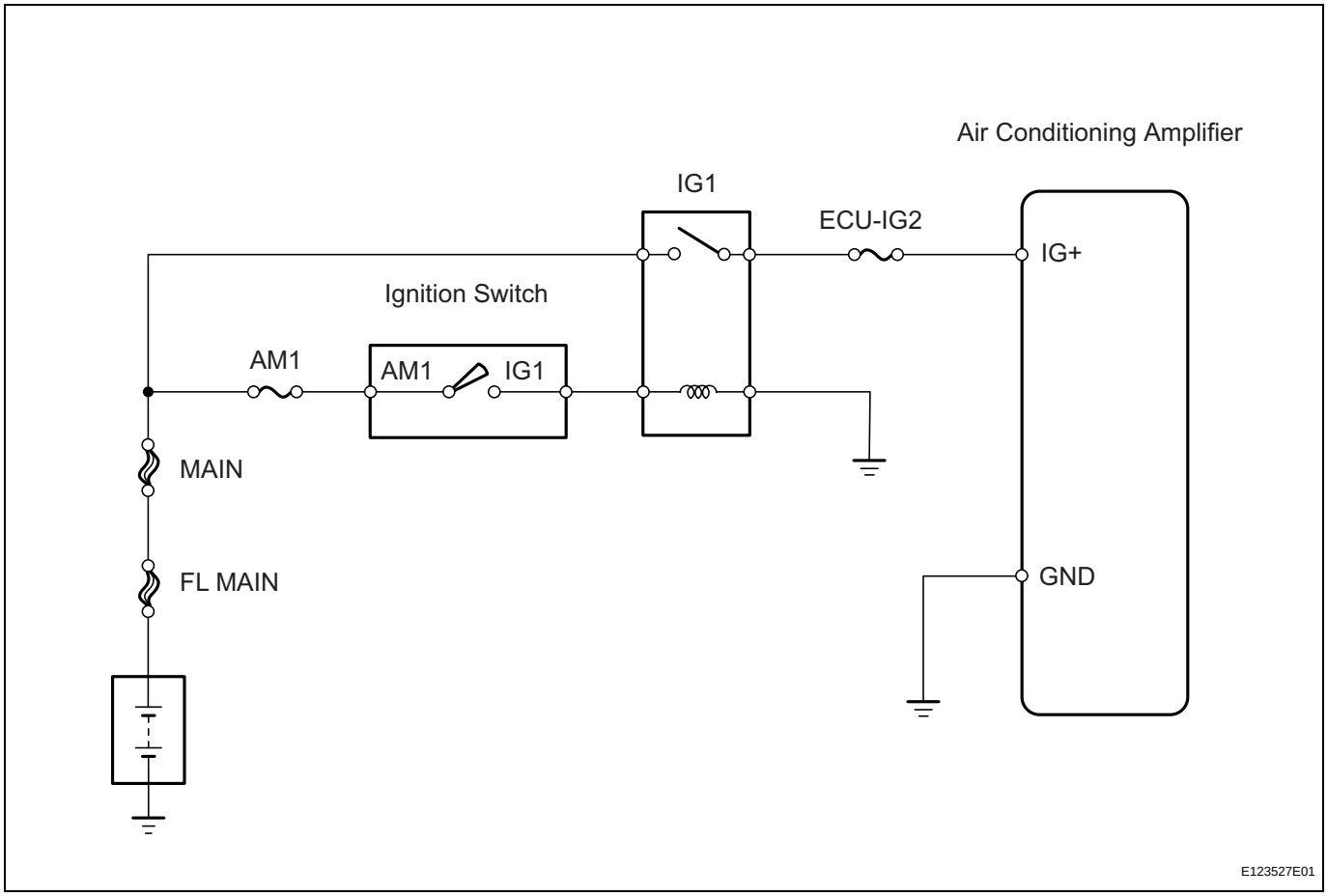

INSPECTION PROCEDURE

1	**INSPECT FUSE (ECU-IG2)**

(a) Remove the ECU-IG2 fuse from the instrument panel junction block.
(b) Measure the resistance of the fuse.
Standard resistance:
Below 1 Ω

NG → **REPLACE FUSE**

OK

2 CHECK WIRE HARNESS (AIR CONDITIONING AMPLIFIER - BATTERY)

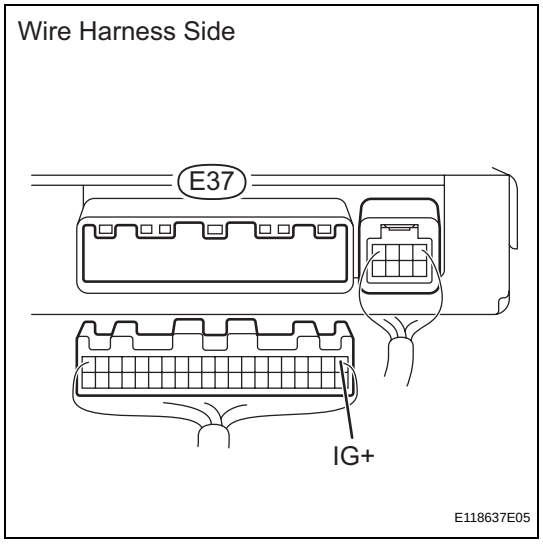

(a) Disconnect the E37 amplifier connector.
(b) Measure the voltage of the wire harness side connector.
Standard voltage

Tester Connection	Condition	Specified Condition
E37-1 (IG+) - Body ground	Ignition switch ON	10 to 14 V

NG → **REPAIR OR REPLACE HARNESS AND CONNECTOR**

OK

3 CHECK WIRE HARNESS (AIR CONDITIONING AMPLIFIER - BODY GROUND)

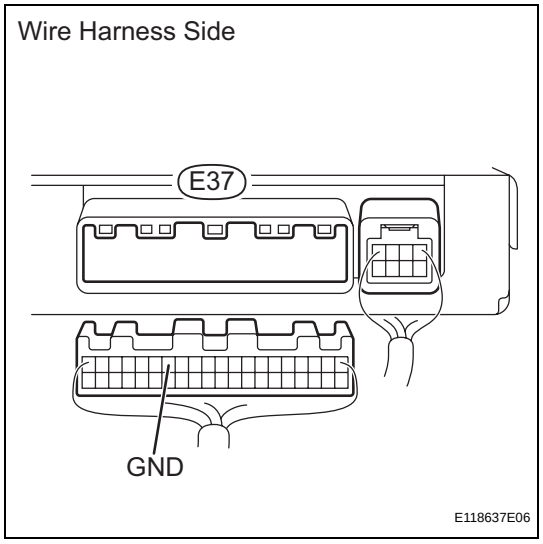

(a) Disconnect the E37 amplifier connector.
(b) Measure the resistance of the wire harness side connector.
Standard resistance

Tester Connection	Specified Condition
E37-14 (GND) - Body ground	Below 1 Ω

NG → **REPAIR OR REPLACE HARNESS AND CONNECTOR**

OK

PROCEED TO NEXT CIRCUIT INSPECTION SHOWN IN PROBLEM SYMPTOMS TABLE

AC

Back-up Power Source Circuit

DESCRIPTION

This is the back-up power source circuit for the air conditioning amplifier. Power is supplied even when the ignition switch is turned OFF and is used for functions such as the diagnostic trouble code memory.

WIRING DIAGRAM

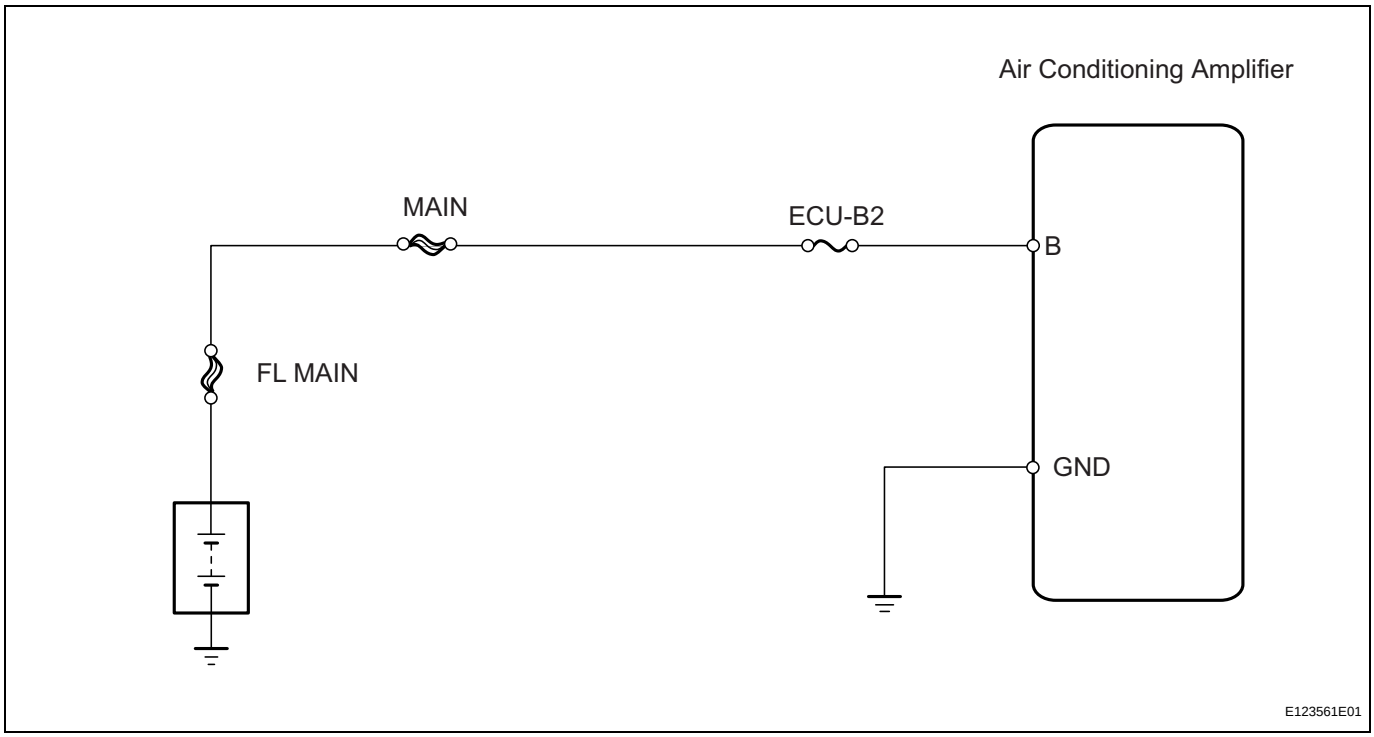

AC

INSPECTION PROCEDURE

1	INSPECT FUSE (ECU-B2)

(a) Remove the ECU-B2 fuse from the engine room No. 2 relay block.
(b) Measure the resistance of the fuse.
Standard resistance:
Below 1 Ω

NG → **REPLACE FUSE**

OK

2	CHECK WIRE HARNESS (AIR CONDITIONING AMPLIFIER - BATTERY)

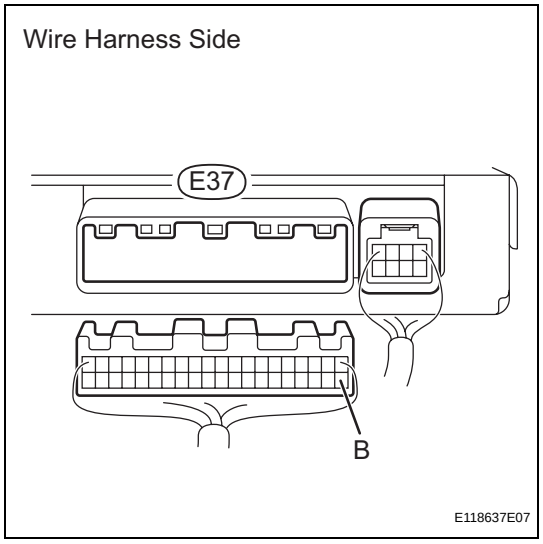

(a) Disconnect the E37 amplifier connector.
(b) Measure the voltage of the wire harness side connector.
Standard voltage

Tester Connection	Specified Condition
E37-21 (B) - Body ground	10 to 14 V

NG → **REPAIR OR REPLACE HARNESS AND CONNECTOR**

OK

3	CHECK WIRE HARNESS (AIR CONDITIONING AMPLIFIER - BODY GROUND)

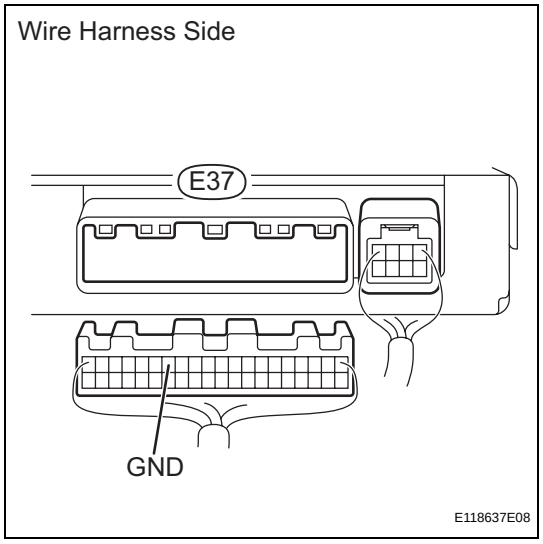

(a) Disconnect the E37 amplifier connector.
(b) Measure the resistance of the wire harness side connector.
Standard resistance

Tester Connection	Specified Condition
E37-14 (GND) - Body ground	Below 1 Ω

NG → **REPAIR OR REPLACE HARNESS AND CONNECTOR**

OK

PROCEED TO NEXT CIRCUIT INSPECTION SHOWN IN PROBLEM SYMPTOMS TABLE

AC

AIR CONDITIONING SYSTEM (for Automatic Air Conditioning System)

PRECAUTION

1. **IF ANY OF FOLLOWING CONDITIONS ARE MET, KEEP ENGINE IDLING WITH A/C ON (ENGINE SPEED AT LESS THAN 2000 RPM) FOR AT LEAST 1 MINUTE:**
   - Refrigerant gas has been refilled or A/C parts have been replaced.
   - A long time has elapsed since the engine was stopped.

   NOTICE:
   If the engine speed exceeds 2,000 rpm, the A/C compressor may be damaged.

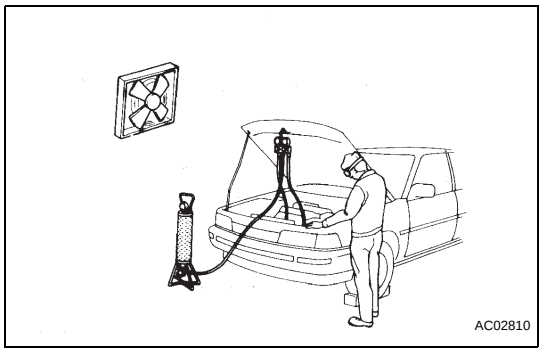
AC02810

2. **DO NOT HANDLE REFRIGERANT IN ENCLOSED AREAS OR NEAR OPEN FLAMES**
3. **ALWAYS WEAR EYE PROTECTION**

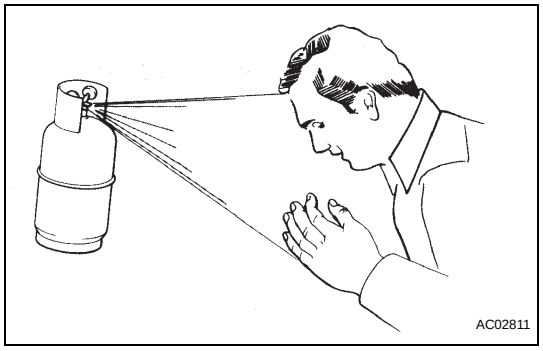
AC02811

4. **BE CAREFUL NOT TO GET LIQUID REFRIGERANT IN YOUR EYES OR ON YOUR SKIN**
   If liquid refrigerant gets in your eyes or on your skin:
   (a) Wash the area with lots of cold water.
   CAUTION:
   Do not rub your eyes or skin.
   (b) Apply clean petroleum jelly to the skin.
   (c) Go immediately to a physician or hospital for professional treatment.
5. **NEVER HEAT CONTAINER OR EXPOSE IT TO OPEN FLAME**
6. **BE CAREFUL NOT TO DROP CONTAINER OR SUBJECT IT TO PHYSICAL SHOCKS**

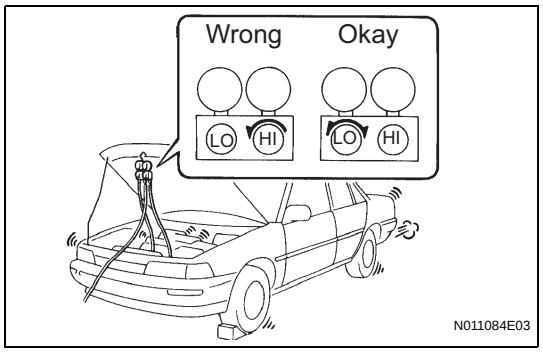

N011084E03

7. **DO NOT OPERATE COMPRESSOR WITH INSUFFICIENT REFRIGERANT IN REFRIGERANT SYSTEM**
   If there is not enough refrigerant in the refrigerant system, oil lubrication will be insufficient and compressor burnout may occur. Necessary care should be taken to avoid this.

AC

8. **DO NOT OPEN HIGH PRESSURE MANIFOLD VALVE WHILE COMPRESSOR IS OPERATING**
   Open and close only the low pressure valve. Opening and closing the high pressure valve could cause the charging cylinder to rupture.
9. **BE CAREFUL NOT TO OVERCHARGE SYSTEM WITH REFRIGERANT**
   If the refrigerant is overcharged, it causes problems such as insufficient cooling, poor fuel economy and engine overheating.
10. **DO NOT OPERATE ENGINE AND COMPRESSOR WITHOUT REFRIGERANT**
    NOTICE:
    This may damage the inside of the compressor.

PARTS LOCATION

(2005/11-2006/01)

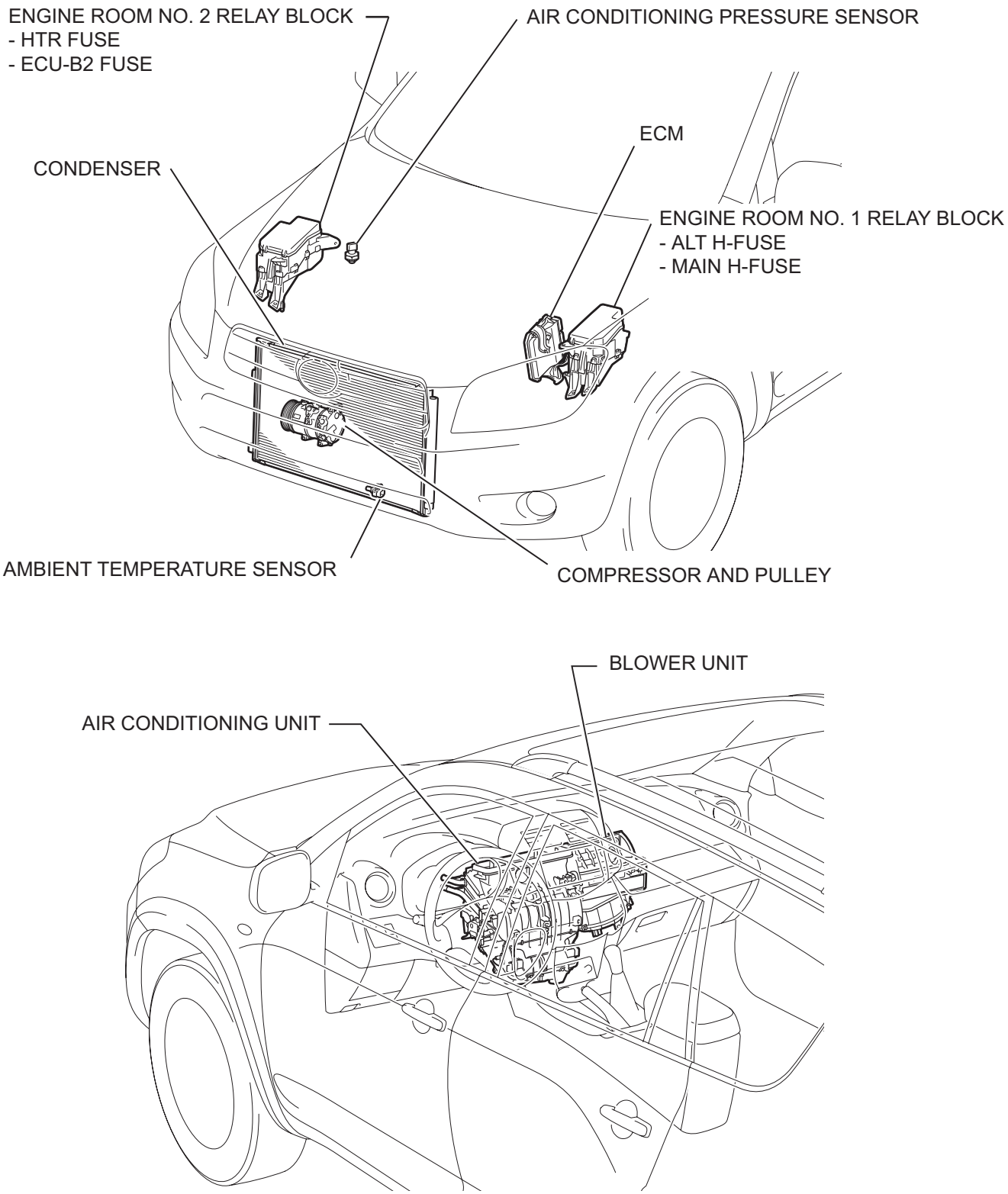

AC

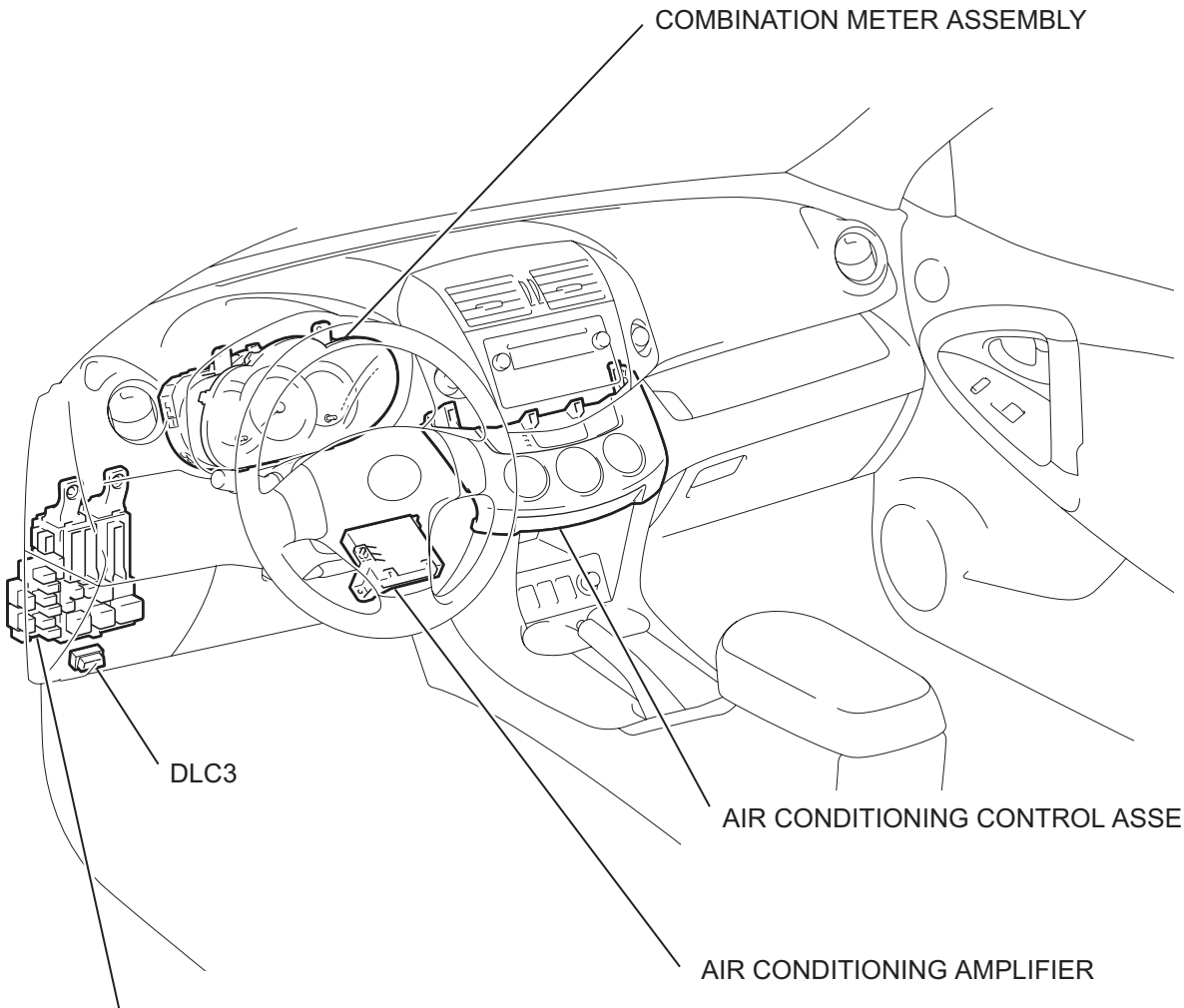

E125203E02

AC

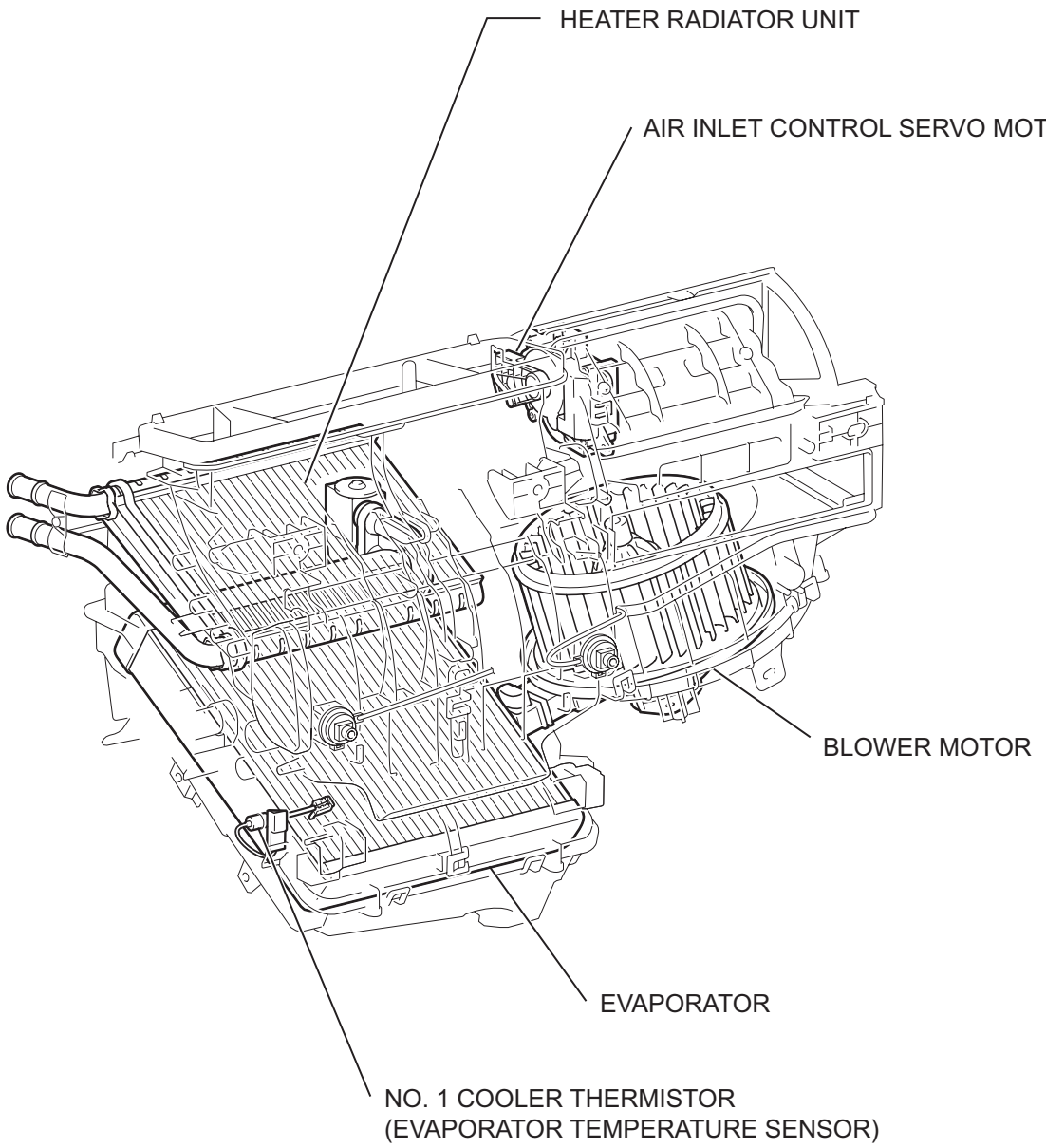

AC

P

E125195E01

PARTS LOCATION

(2006/01-)

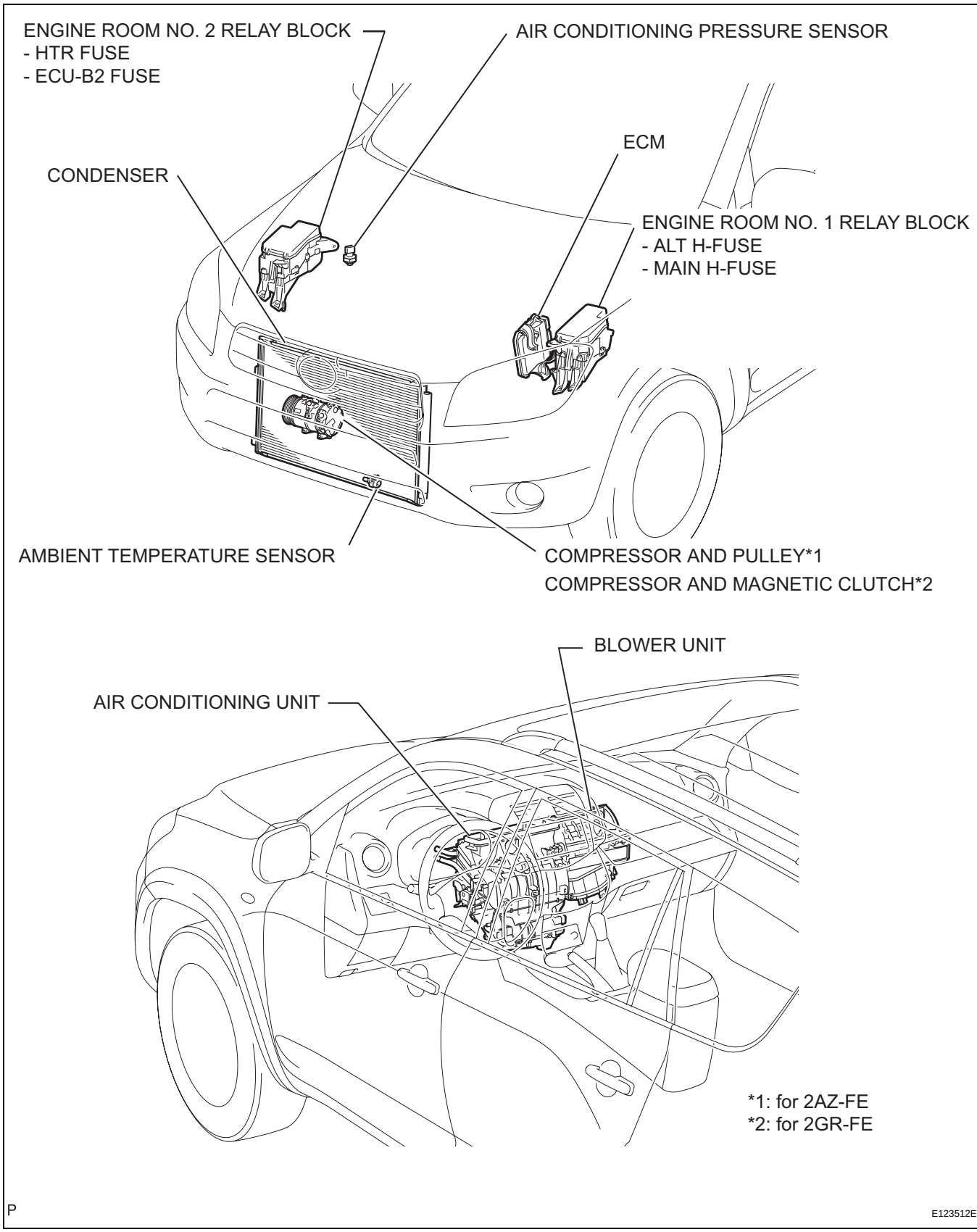

AC

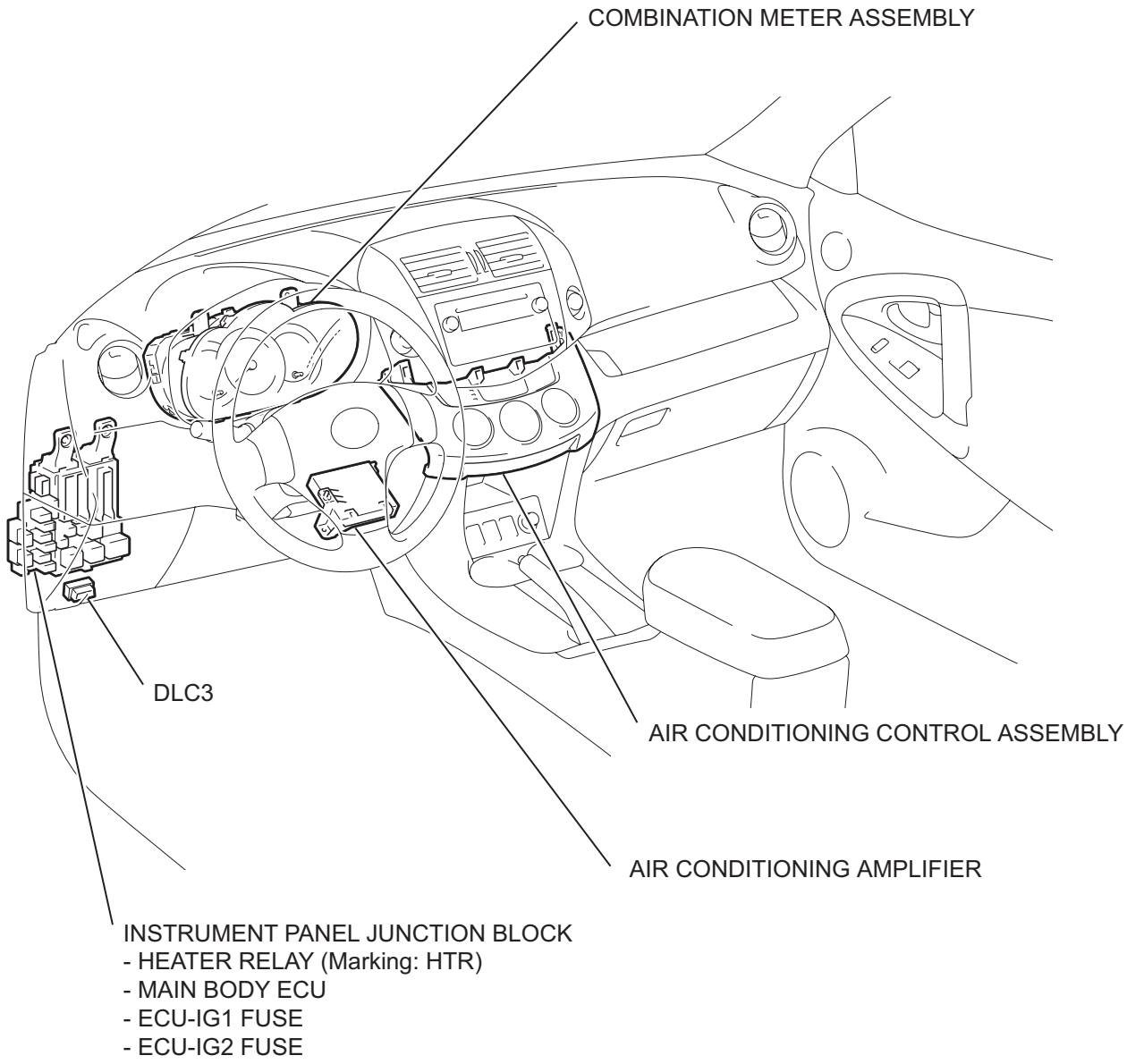

E125203E02

AC

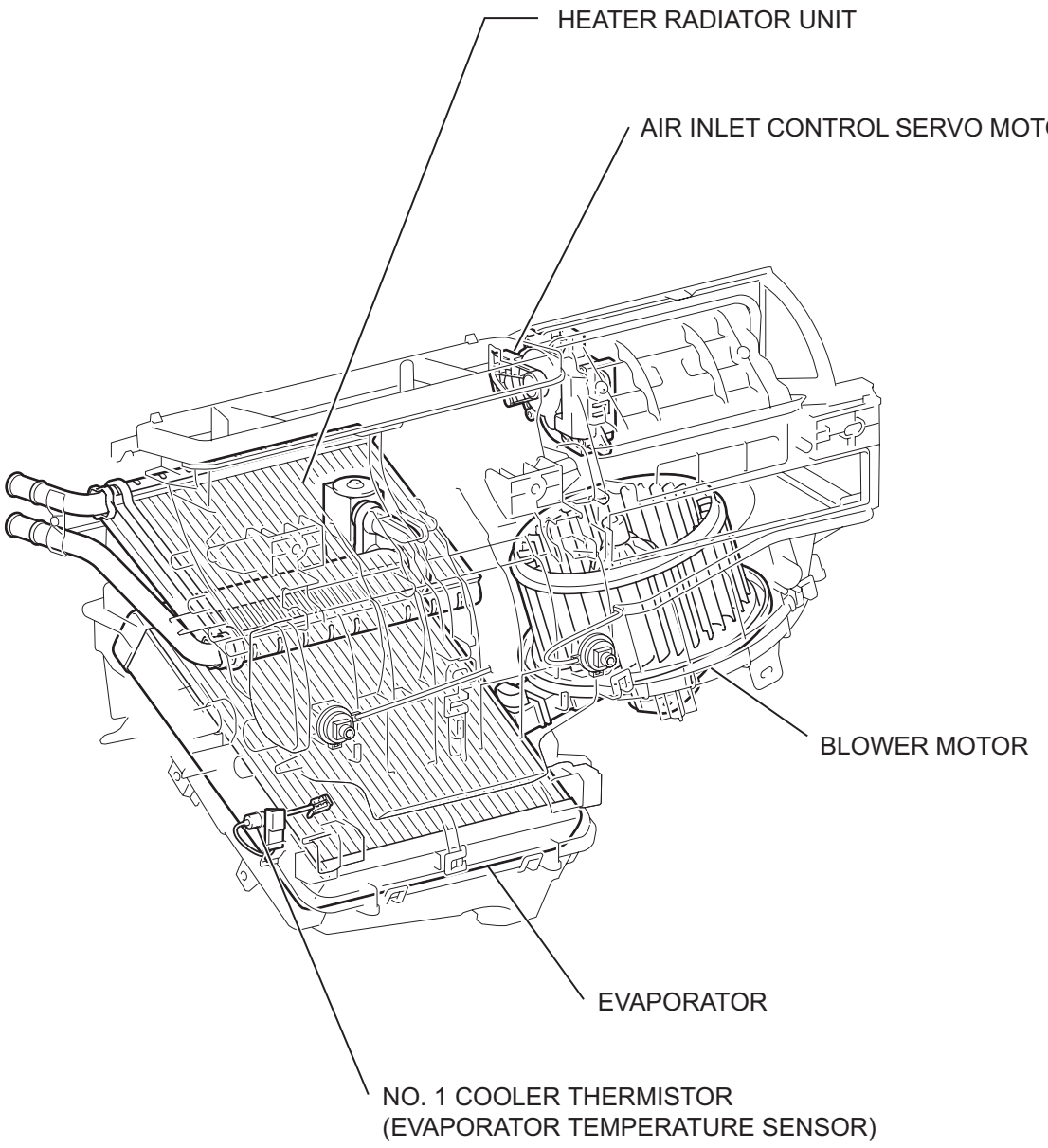

P

E125195E01

AC

SYSTEM DIAGRAM

(2005/11-2006/01)

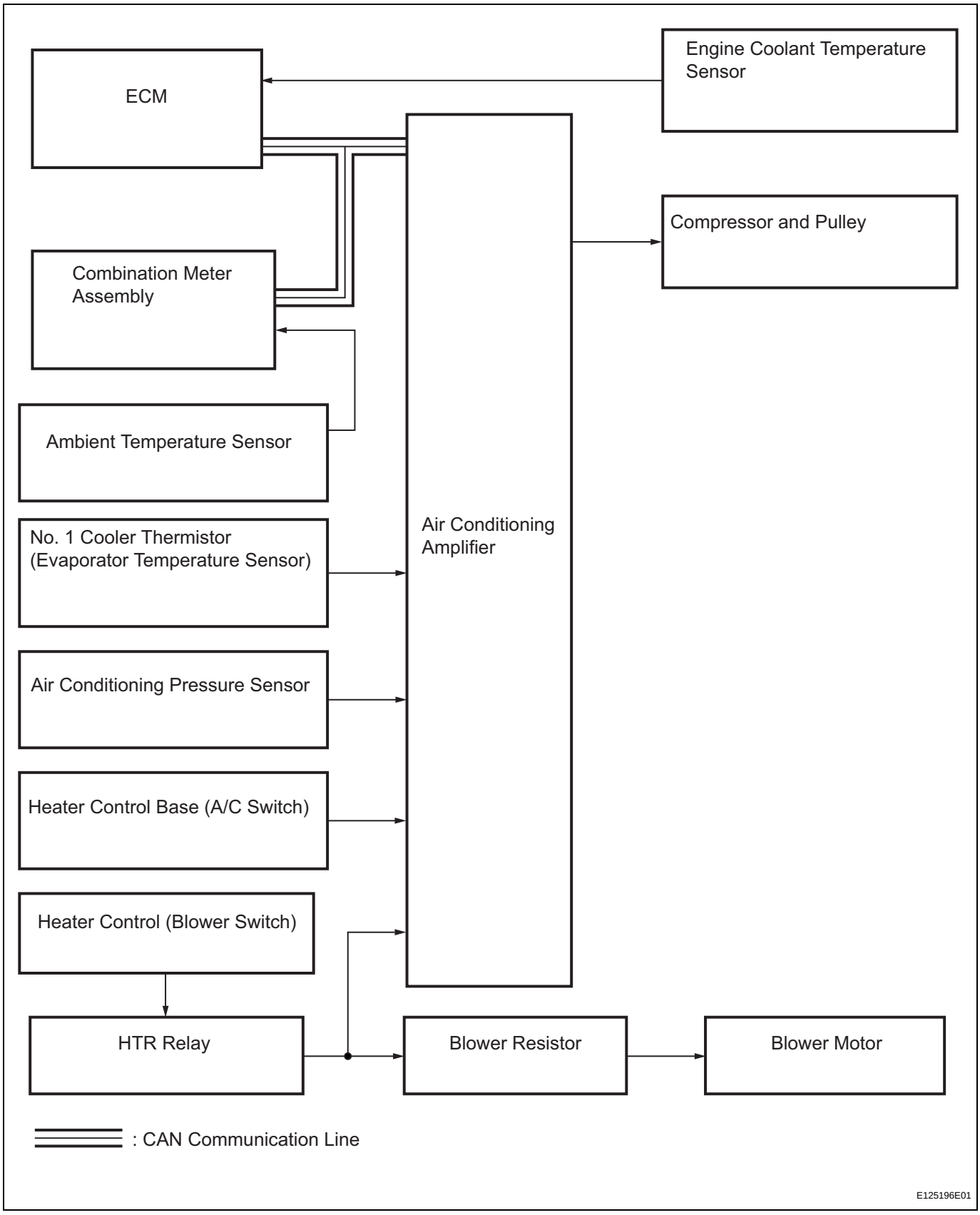

AC

Communication table

Sender	Receiver	Signal	Communication Line
Air conditioning amplifier	ECM	A/C compressor control signal	CAN
		Idle up request signal	
		External variable control solenoid current signal	
		Cooling fan motor driving request signal	
		Ambient temperature signal	
Combination meter assembly	Air conditioning amplifier	Vehicle speed signal	CAN
		Ambient temperature signal	
ECM	Air conditioning amplifier	Engine revolution speed signal	CAN
		Engine coolant temperature signal	
		A/C control cut signal	
		Variable control prohibition signal	

SYSTEM DIAGRAM

(2006/01-)

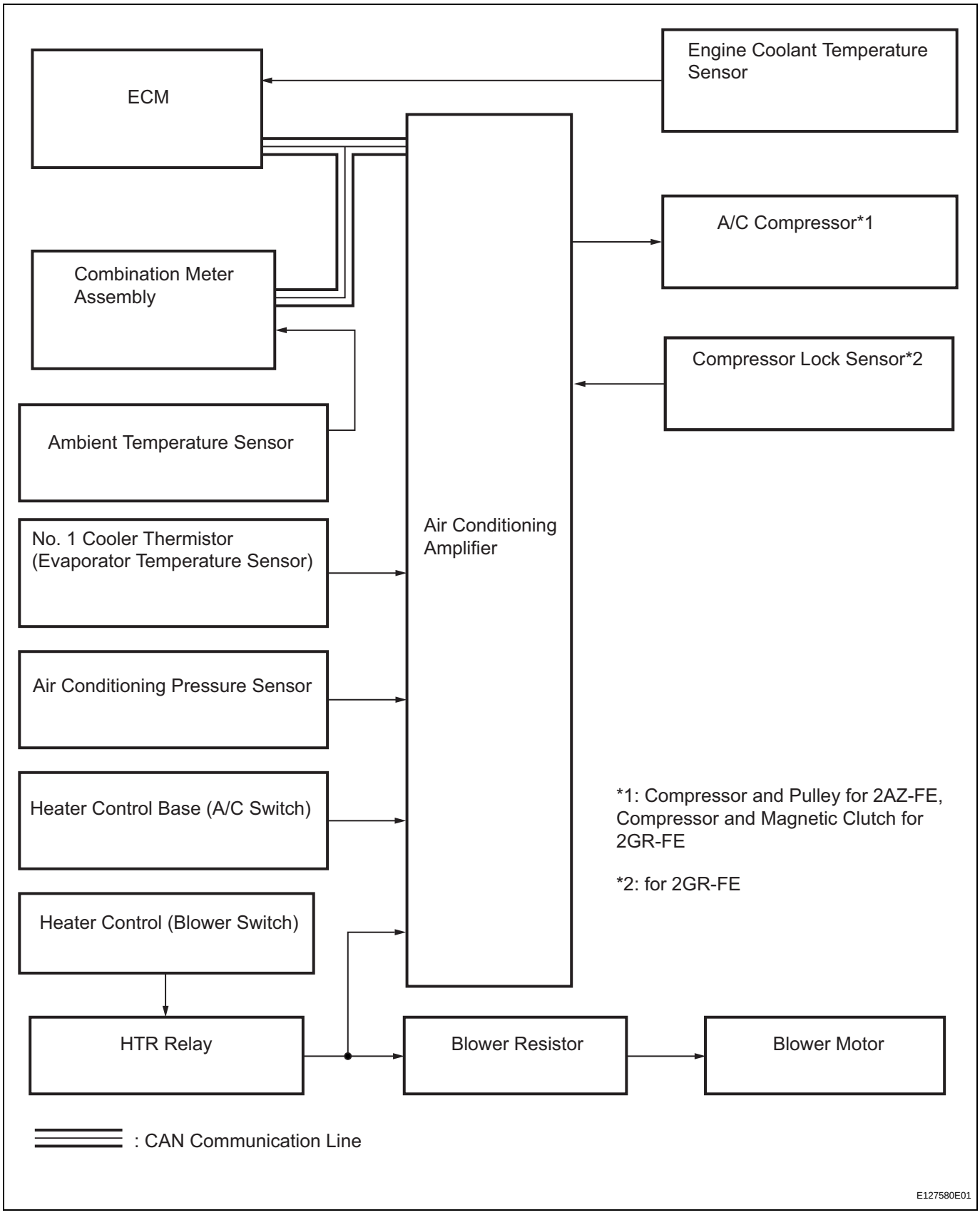

AC

Communication table

Sender	Receiver	Signal	Communication Line
Air conditioning amplifier	ECM	A/C compressor control signal	CAN
		Idle up request signal	
		External variable control solenoid current signal	
		Cooling fan motor driving request signal	
		Ambient temperature signal	
Combination meter assembly	Air conditioning amplifier	Vehicle speed signal	CAN
		Ambient temperature signal	
ECM	Air conditioning amplifier	Engine revolution speed signal	CAN
		Engine coolant temperature signal	
		A/C control cut signal	
		Variable control prohibition signal	

SYSTEM DESCRIPTION

1. GENERAL

(a) The air conditioning system has the following features:

- The air conditioning amplifier controls the operation of parts, such as the A/C compressor, automatically in accordance with the operating conditions of the air conditioning system.

2. MODE POSITION AND DAMPER OPERATION

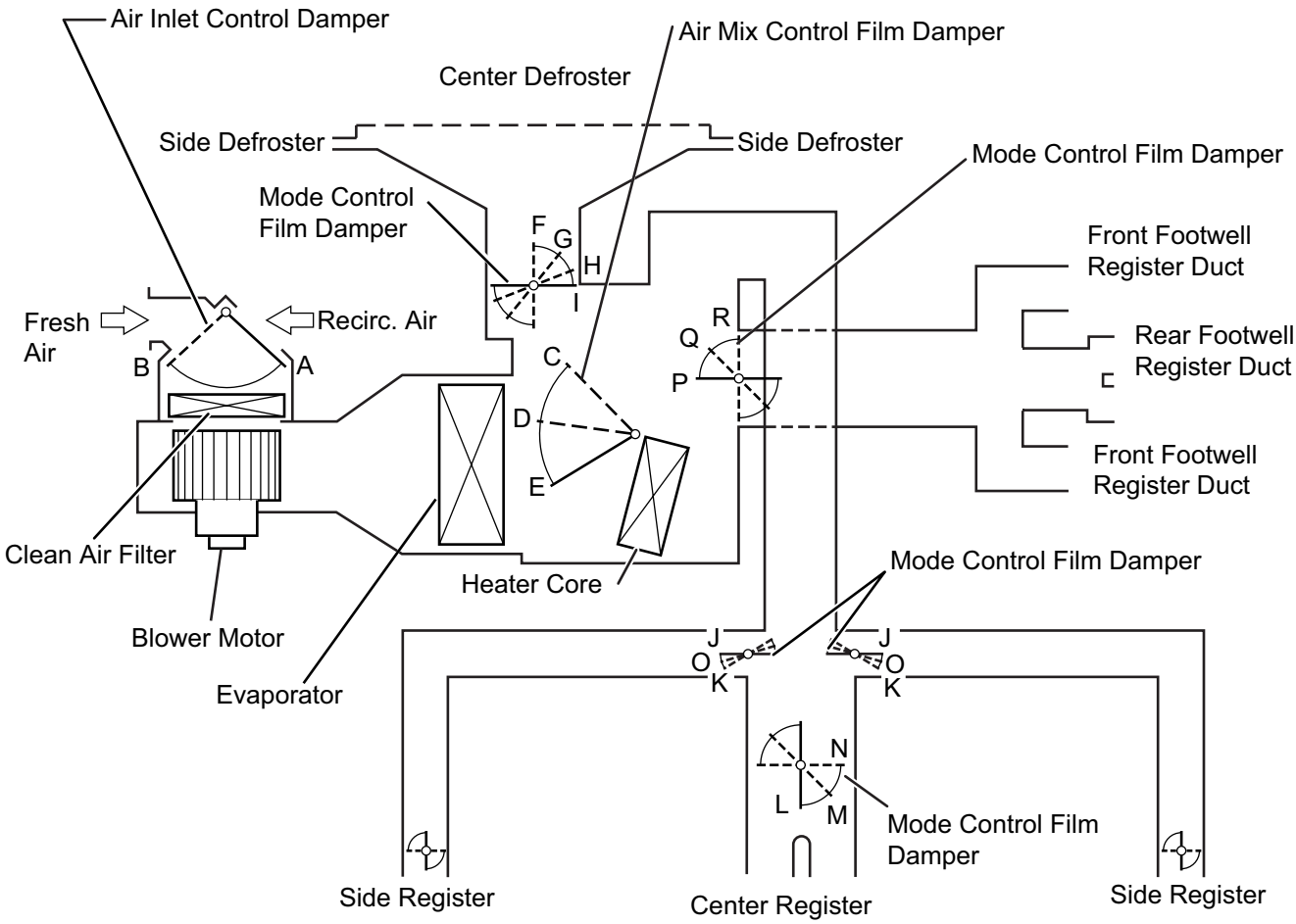

E125197E01

Control Damper	Control Position	Damper Position	Operation
Air Inlet Control Damper	FRESH	A	Brings in fresh air.
	RECIRC	B	Recirculates internal air.

Control Damper	Control Position	Damper Position	Operation
Air Mix Control Film Damper	COOL to HOT	C, D, E	Varies the mixture ratio of fresh air and the recirculation air in order to regulate the temperature continuously from HOT to COOL.
Mode Control Film Damper	FACE	I, J, L, R	Air blows out of center registers and side registers.
	BI-LEVEL	I, O, M, Q	Air mainly blows out of center registers, side registers, and footwell register ducts.
	FOOT	H, K, N, P	Air mainly blows out of front and rear footwell register ducts. In addition, air blows out slightly from front and side defrosters, and side registers.
	FOOT/DEF	G, K, N, Q	Air mainly blows out of front and side defrosters to defrost windshield. Air also blows out from front and rear footwell register ducts, and side registers.
	DEF	F, K, N, R	Air blows out of front and side defrosters and side registers to defrost windshield.

3. AIR OUTLET AND AIRFLOW VOLUME

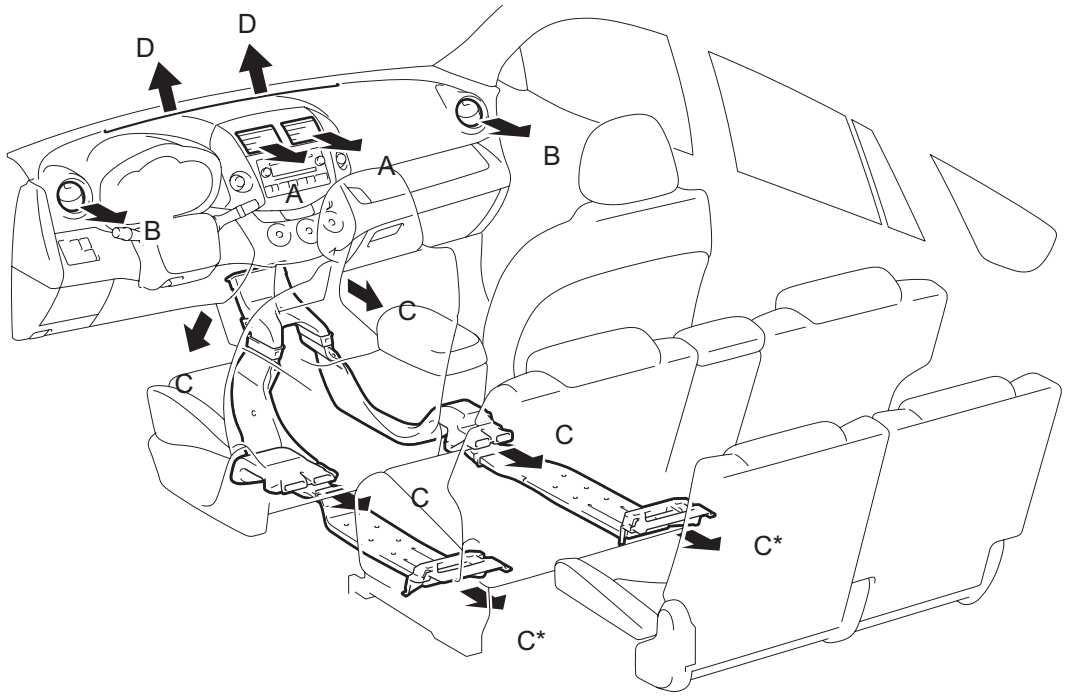

*: w/ Rear No. 2 Seat

P

E123517E02

AC

The circle size (○) indicates the proportion of the flow volume.

Air Outlet Mode		Air Outlet Position Symbol			
		A	B	C	D
		Center Face	Side Face	Foot	Defroster
	FACE	◯	◯	X	X
	Bi-LEVEL	○	○	◯	X
	FOOT	X	○	◯	○
	FOOT/DEF	X	○	○	○
	DEF	X	○	X	◯

AC

HOW TO PROCEED WITH TROUBLESHOOTING

(2005/11-2006/01)

HINT:

- Use these procedures to troubleshoot the air conditioning system.
- *: Use the intelligent tester.

1 **VEHICLE BROUGHT TO WORKSHOP**

NEXT

2 **CUSTOMER PROBLEM ANALYSIS AND SYMPTOM CHECK**

NEXT

3 **INSPECT BATTERY VOLTAGE**

Standard voltage:
11 to 14 V

If the voltage is below 11 V, recharge or replace the battery before proceeding.

NEXT

4 **CHECK CAN COMMUNICATION SYSTEM***

AC

(a) Use the intelligent tester to check if the CAN communication system is functioning.
Result

Result	Proceed to
CAN DTC is not output	A
CAN DTC is output	B

B → **Go to CAN COMMUNICATION SYSTEM**

A

5 **CHECK DTC***

(a) Check for DTCs and write down any DTCs that are output.
(b) Clear the DTCs.
(c) Recheck for DTCs. Based on the DTCs output above, try to cause output of the air conditioning system DTC by simulating the operation indicated by the DTC.

Result

Result	Proceed to
DTC is not output	A
DTC is output	B

B → **Go to step 8**

A

6	REFER TO PROBLEM SYMPTOMS TABLE

Result

Result	Proceed to
Fault is not listed in problem symptoms table	A
Fault is listed in problem symptoms table	B

B → **Go to step 8**

A

7	OVERALL ANALYSIS AND TROUBLESHOOTING*

(a) DATA LIST / ACTIVE TEST (see page AC-127)
(b) Terminals of ECU (see page AC-122)

NEXT

AC

8	ADJUST, REPAIR OR REPLACE

NEXT

9	CONFIRMATION TEST

NEXT

END

HOW TO PROCEED WITH TROUBLESHOOTING

(2006/01-)

HINT:

- Use these procedures to troubleshoot the air conditioning system.
- *: Use the intelligent tester.

1 **VEHICLE BROUGHT TO WORKSHOP**

NEXT

2 **CUSTOMER PROBLEM ANALYSIS AND SYMPTOM CHECK**

NEXT

3 **INSPECT BATTERY VOLTAGE**

Standard voltage:
11 to 14 V

If the voltage is below 11 V, recharge or replace the battery before proceeding.

NEXT

4 **CHECK CAN COMMUNICATION SYSTEM***

AC

(a) Use the intelligent tester to check if the CAN communication system is functioning.
Result

Result	Proceed to
CAN DTC is not output	A
CAN DTC is output	B

B → **Go to CAN COMMUNICATION SYSTEM**

A

5 **CHECK DTC***

(a) Check for DTCs and write down any DTCs that are output.
(b) Clear the DTCs.
(c) Recheck for DTCs. Based on the DTCs output above, try to cause output of the air conditioning system DTC by simulating the operation indicated by the DTC.

Result

Result	Proceed to
DTC is not output	A
DTC is output	B

B → **Go to step 8**

A

6	REFER TO PROBLEM SYMPTOMS TABLE

Result

Result	Proceed to
Fault is not listed in problem symptoms table	A
Fault is listed in problem symptoms table	B

B → **Go to step 8**

A

7	OVERALL ANALYSIS AND TROUBLESHOOTING*

(a) DATA LIST / ACTIVE TEST (see page AC-128)
(b) Terminals of ECU (see page AC-123)

NEXT

AC

8	ADJUST, REPAIR OR REPLACE

NEXT

9	CONFIRMATION TEST

NEXT

END

PROBLEM SYMPTOMS TABLE

(2005/11-2006/01)

HINT:

- Use the table below to help determine the cause of the problem symptom. The potential causes of the symptoms are listed in order of probability in the "Suspected area" column of the table. Check each symptom by checking the suspected areas in the order they are listed. Replace parts as necessary.
- Inspect the fuses and relays related to this system before inspecting the suspected areas below.

Air conditioning system

Symptom	Suspected area	See page
No functions of A/C system operate	1. ECU-IG2 fuse	-
	2. Wire harness or connector	-
	3. Air conditioning amplifier	AC-122
Airflow Control: Blower motor does not operate	1. HTR, ECU-IG1 fuse	-
	2. Blower motor circuit	AC-157
	3. Blower motor	AC-207
	4. Wire harness or connector	-
Airflow Control: Blower motor does not change speed	1. Blower resistor	AC-208
	2. Blower motor	AC-207
	3. Heater control (blower switch)	-
Temperature Control: No cool air comes out	1. Refrigerant volume	-
	2. Refrigerant pressure	-
	3. Air conditioning pressure sensor circuit	AC-143
	4. Heater control base (A/C switch)	-
	5. Compressor and pulley	AC-215
	6. Expansion valve	-
	7. Air conditioning amplifier	AC-122
	8. ECM	ES-427
	9. CAN communication	CA-45
Compressor and pulley does not operate	1. ECU-IG2 fuse	-
	2. Refrigerant pressure	-
	3. Compressor and pulley	AC-215
	4. Air conditioning pressure sensor circuit	AC-143
	5. Evaporator temperature sensor circuit	AC-136
	6. Air conditioning amplifier	AC-122
	7. ECM	ES-427
	8. CAN communication	CA-45

PROBLEM SYMPTOMS TABLE

(2006/01-)

HINT:

- Use the table below to help determine the cause of the problem symptom. The potential causes of the symptoms are listed in order of probability in the "Suspected area" column of the table. Check each symptom by checking the suspected areas in the order they are listed. Replace parts as necessary.
- Inspect the fuses and relays related to this system before inspecting the suspected areas below.

Air conditioning system

Symptom	Suspected area	See page
No functions of A/C system operate	1. ECU-IG2 fuse	-
	2. Wire harness or connector	-
	3. Air conditioning amplifier	AC-123
Airflow Control: Blower motor does not operate	1. HTR, ECU-IG1 fuse	-
	2. Blower motor circuit	AC-157
	3. Blower motor	AC-207
	4. Wire harness or connector	-
Airflow Control: Blower motor does not change speed	1. Blower resistor	AC-208
	2. Blower motor	AC-207
	3. Heater control (blower switch)	AC-239
Temperature Control: No cool air comes out	1. Refrigerant volume	-
	2. Refrigerant pressure	-
	3. Air conditioning pressure sensor circuit	AC-143
	4. Heater control base (A/C switch)	AC-242
	5. Compressor and pulley (for 2AZ-FE)	AC-215
	6. Compressor and magnetic clutch (for 2GR-FE)	AC-219
	7. Compressor circuit	AC-163
	8. Expansion valve	-
	9. Air conditioning amplifier	AC-123
	10. ECM (for 2AZ-FE)	ES-1
	11. ECM (for 2GR-FE)	ES-1
	12. CAN communication	CA-1
A/C compressor does not operate	1. ECU-IG2 fuse	-
	2. Refrigerant pressure	-
	3. Compressor and pulley (for 2AZ-FE)	AC-215
	4. Compressor and magnetic clutch (for 2GR-FE)	AC-219
	5. Air conditioning pressure sensor circuit	AC-143
	6. Evaporator temperature sensor circuit	AC-136
	7. Air conditioning amplifier	AC-123
	8. ECM (for 2AZ-FE)	ES-1
	9. ECM (for 2GR-FE)	ES-1
	10. CAN communication	CA-1
Engine idle up does not occur, or is continuos	1. Compressor circuit	AC-163
	2. ECM (for 2AZ-FE)	ES-1
	3. ECM (for 2GR-FE)	ES-1

TERMINALS OF ECU

(2005/11-2006/01)

1. CHECK AIR CONDITIONING AMPLIFIER

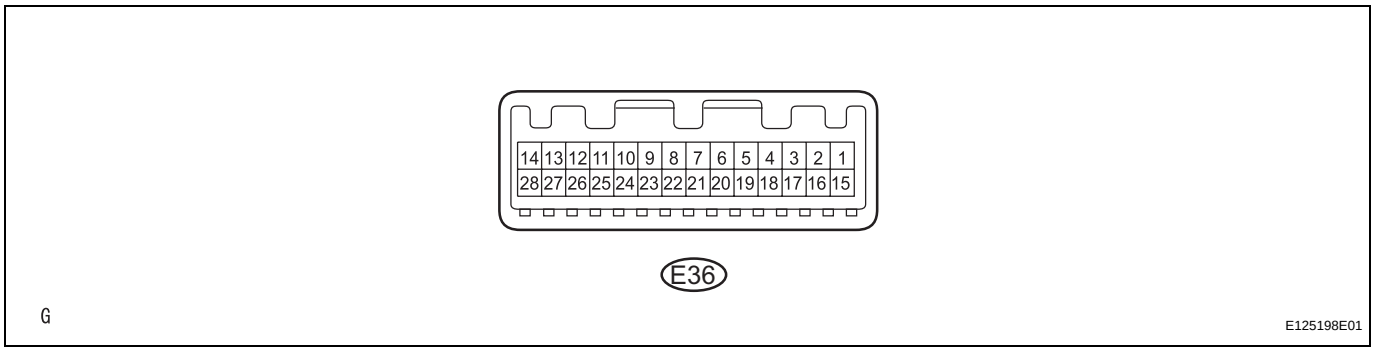

(a) Measure the voltage and resistance of the connectors.
HINT:
Check from the rear of the connector while it is connected to the air conditioning amplifier.

Symbols (Terminal No.)	Wiring Color	Terminal Description	Condition	Specified Condition
S5-3 (E36-7) - GND (E36-24)	B - W-B	Power supply for pressure sensor	Ignition switch ON	4.5 to 5.5 V
CANH (E36-8) - GND (E36-24)	V - W-B	Hi-level CAN bus line	Ignition switch ON	Pulse generation (see waveform 1)
CANL (E36-9) - GND (E36-24)	W - W-B	Lo-level CAN bus line	Ignition switch ON	Pulse generation (see waveform 2)
SG-3 (E36-23) - Body ground	B - Body ground	Ground for evaporator temperature sensor	Always	Below 1 Ω
PRE (E36-12) - SG-2 (E36-10)	L - G	Air conditioning pressure sensor signal	Refrigerant pressure: normal	0.76 to 4.74 V
PRE (E36-12) - SG-2 (E36-10)	L - G	Air conditioning pressure sensor signal	Refrigerant pressure: Abnormal (less than 0.196 MPa [2.0 kgf/cm^2, 28 psi]	Below 0.76 V
PRE (E36-12) - SG-2 (E36-10)	L - G	Air conditioning pressure sensor signal	Refrigerant pressure: Abnormal (more than 3.14 MPa [32 kgf/cm^2, 455 psi])	4.74 V or more
SG-2 (E36-10) - Body ground	B - Body ground	Ground for pressure sensor	Always	Below 1 Ω
SOL+ (E36-13) - GND (E36-24)	GR - W-B	A/C compressor operation signal	Engine idling	Pulse generation (see waveform 3)
			Heater control (blower switch): 1	
			A/C switch ON	
IG+ (E36-14) - GND (E36-24)	Y - W-B	Power source (IG)	Ignition switch ON	10 to 14 V
SBLW (E36-21) - GND (E36-24)	GR - W-B	Blower motor ON signal	Ignition switch ON	10 to 14 V → Below 1 V
			Heater control (blower switch): 0 → 1	
TE (E36-22) - SG-3 (E36-23)	W - B	Evaporator temperature sensor signal	Ignition switch ON	1 to 1.3 V
			Temperature near evaporator: 15°C (59°F)	
GND (E36-24) - Body ground	W-B - Body ground	Ground for main power supply	Always	Below 1 Ω
A/C (E36-27) - GND (E36-24)	P - W-B	A/C switch signal	Ignition switch ON	Below 1 V → 10 to 14 V
			A/C switch OFF → ON	

AC

Symbols (Terminal No.)	Wiring Color	Terminal Description	Condition	Specified Condition
LED (E36-28) - Body ground	GR - Body ground	A/C switch indicator signal	Engine idling	10 to 14 V → Below 4 V
			A/C switch ON	
			Heater control (blower switch): 0 → 1	

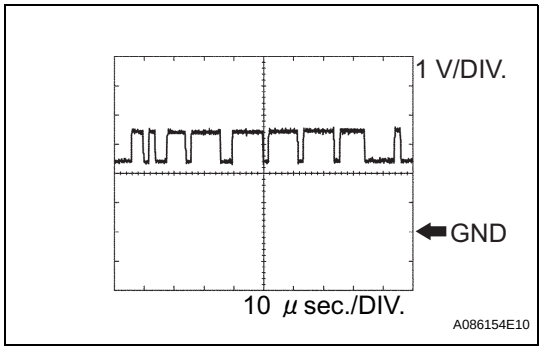

(b) Using an oscilloscope, check waveform 1.
CAN communication signal

Item	Content
Symbols (Terminal No.)	CANH (E36-8) - GND (E36-24)
Tool Setting	1 V/DIV., 10 μsec./DIV.
Condition	Ignition switch ON

HINT:
The waveform varies depending on the CAN communication signal.

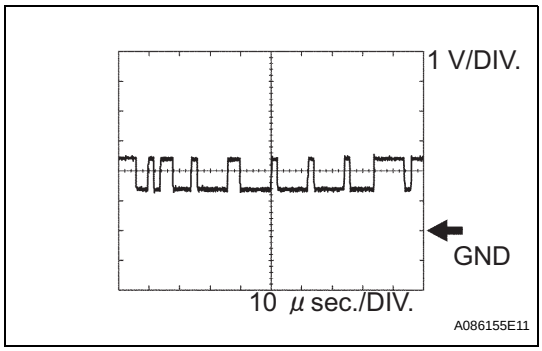

(c) Using an oscilloscope, check waveform 2.
CAN communication signal

Item	Content
Symbols (Terminal No.)	CANL (E36-9) - GND (E36-24)
Tool Setting	1 V/DIV., 10 μmsec./DIV.
Condition	Ignition switch ON

HINT:
The waveform varies depending on the CAN communication signal.

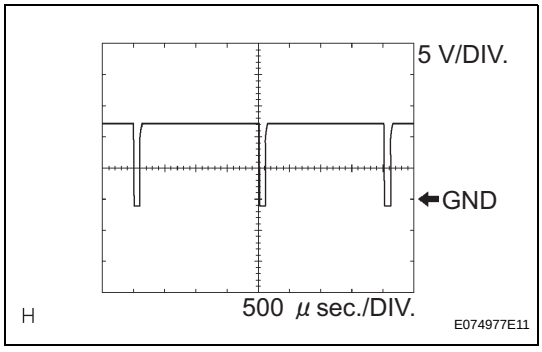

(d) Using an oscilloscope, check waveform 3.
Compressor and pulley operation signal

Item	Content
Symbols (Terminal No.)	SOL+ (E36-13) - GND (E36-24)
Tool Setting	5 V/DIV., 500 μsec./DIV.
Condition	Engine idling, Blower switch LO, A/C switch ON

AC

TERMINALS OF ECU

(2006/01-)

1. CHECK AIR CONDITIONING AMPLIFIER

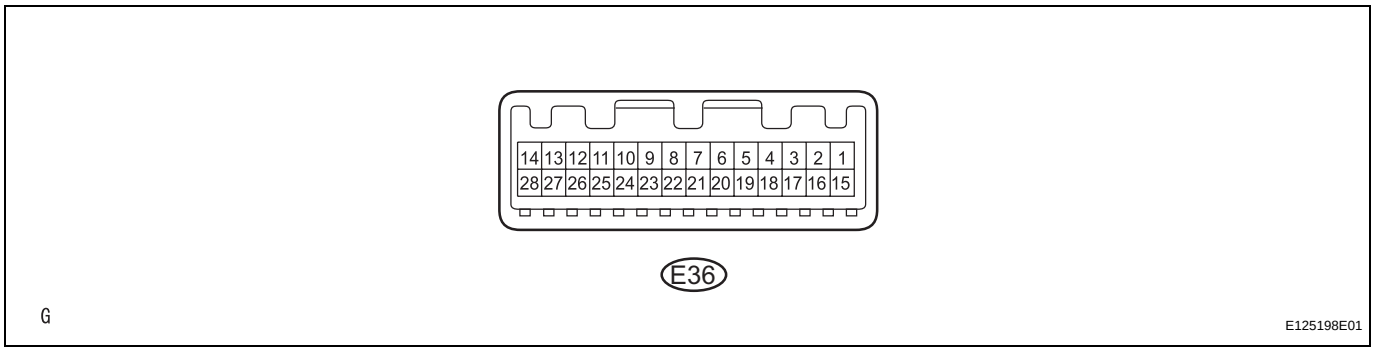

(a) Measure the voltage and resistance of the connectors.
HINT:
Check from the rear of the connector while it is connected to the air conditioning amplifier.

Symbols (Terminal No.)	Wiring Color	Terminal Description	Condition	Specified Condition
S5-3 (E36-7) - GND (E36-24)	B - W-B	Power supply for pressure sensor	Ignition switch ON	4.5 to 5.5 V
CANH (E36-8) - GND (E36-24)	V - W-B	Hi-level CAN bus line	Ignition switch ON	Pulse generation (see waveform 1)
CANL (E36-9) - GND (E36-24)	W - W-B	Lo-level CAN bus line	Ignition switch ON	Pulse generation (see waveform 2)
SG-3 (E36-23) - Body ground	B - Body ground	Ground for evaporator temperature sensor	Always	Below 1 Ω
PRE (E36-12) - SG-2 (E36-10)	L - G	Air conditioning pressure sensor signal	Refrigerant pressure: normal	0.76 to 4.74 V
PRE (E36-12) - SG-2 (E36-10)	L - G	Air conditioning pressure sensor signal	Refrigerant pressure: Abnormal (less than 0.196 MPa [2.0 kgf/cm^2, 28 psi]	Below 0.76 V
PRE (E36-12) - SG-2 (E36-10)	L - G	Air conditioning pressure sensor signal	Refrigerant pressure: Abnormal (more than 3.14 MPa [32 kgf/cm^2, 455 psi])	4.74 V or more
SG-2 (E36-10) - Body ground	B - Body ground	Ground for pressure sensor	Always	Below 1 Ω
SOL+ (E36-13) - GND (E36-24)	GR - W-B	A/C compressor operation signal	Engine idling	Pulse generation (see waveform 3)
			Heater control (blower switch): 1	
			A/C switch ON	
IG+ (E36-14) - GND (E36-24)	Y - W-B	Power source (IG)	Ignition switch ON	10 to 14 V
SBLW (E36-21) - GND (E36-24)	GR - W-B	Blower motor ON signal	Ignition switch ON	10 to 14 V → Below 1 V
			Heater control (blower switch): 0 → 1	
TE (E36-22) - SG-3 (E36-23)	W - B	Evaporator temperature sensor signal	Ignition switch ON	1 to 1.3 V
			Temperature near evaporator: 15°C (59°F)	
GND (E36-24) - Body ground	W-B - Body ground	Ground for main power supply	Always	Below 1 Ω
A/C (E36-27) - GND (E36-24)	P - W-B	A/C switch signal	Ignition switch ON	Below 1 V → 10 to 14 V
			A/C switch OFF → ON	

AC

Symbols (Terminal No.)	Wiring Color	Terminal Description	Condition	Specified Condition
LED (E36-28) - Body ground	GR - Body ground	A/C switch indicator signal	Engine idling	10 to 14 V → Below 4 V
			A/C switch ON	
			Heater control (blower switch): 0 → 1	
LOCK (E36-3)* - SG-2 (E36-10)	W - G	Compressor lock sensor signal	Ignition switch ON A/C switch ON Magnetic clutch ON	Pulse generation (see waveform 4)
MGC (E36-15)* - GND (E36-24)	V - W-B	Magnetic clutch relay signal	Ignition switch ON Magnetic clutch OFF	10 to 14 V
MGC (E36-15)* - GND (E36-24)	W - B	Magnetic clutch relay signal	Ignition switch ON Magnetic clutch ON	Below 1 V

HINT:
*: for 2GR-FE

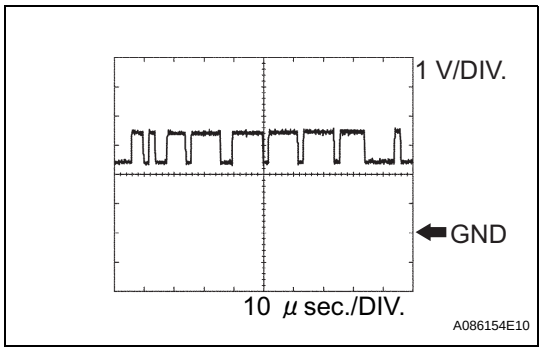

(b) Using an oscilloscope, check waveform 1.
CAN communication signal

Item	Content
Symbols (Terminal No.)	CANH (E36-8) - GND (E36-24)
Tool Setting	1 V/DIV., 10 μsec./DIV.
Condition	Ignition switch ON

HINT:
The waveform varies depending on the CAN communication signal.

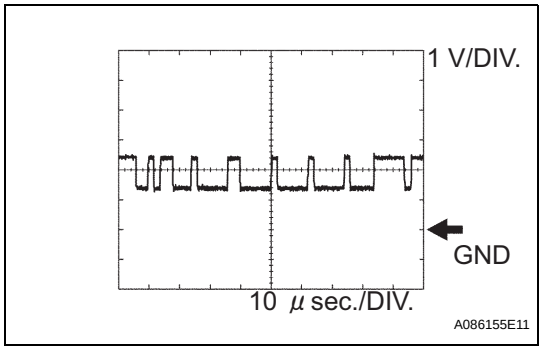

(c) Using an oscilloscope, check waveform 2.
CAN communication signal

Item	Content
Symbols (Terminal No.)	CANL (E36-9) - GND (E36-24)
Tool Setting	1 V/DIV., 10 μmsec./DIV.
Condition	Ignition switch ON

HINT:
The waveform varies depending on the CAN communication signal.

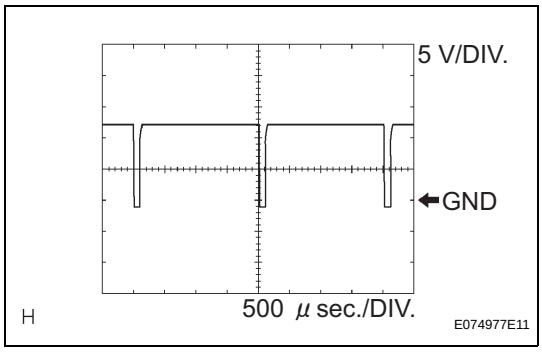

(d) Using an oscilloscope, check waveform 3.
A/C Compressor* operation signal

Item	Content
Symbols (Terminal No.)	SOL+ (E36-13) - GND (E36-24)
Tool Setting	5 V/DIV., 500 μsec./DIV.
Condition	Engine idling, Blower switch LO, A/C switch ON

HINT:
*: Compressor and pulley for 2AZ-FE, compressor and magnetic clutch for 2GR-FE

AC

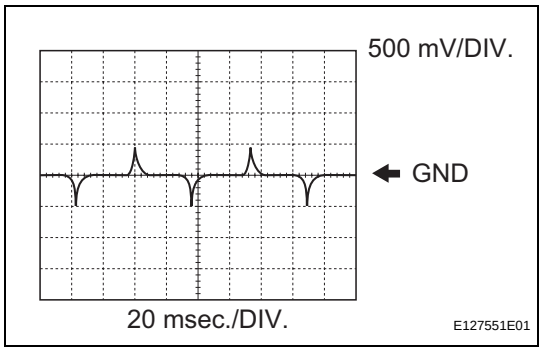

(e) Using an oscilloscope, check waveform 4.
Compressor lock sensor signal*

Item	Content
Symbols (Terminal No.)	LOCK (E36-3)* - SG-2 (E36-10)
Tool Setting	500 mV/DIV., 20 msec./DIV.
Condition	Ignition switch ON, A/C switch ON, Magnetic clutch ON

HINT:
*: for 2GR-FE

AC

DIAGNOSIS SYSTEM

1. DESCRIPTION

(a) Air conditioning system data and the Diagnostic Trouble Codes (DTCs) can be read through the Data Link Connector 3 (DLC3) of the vehicle. When the system seems to be malfunctioning, use the intelligent tester to check for malfunctions and perform troubleshooting.

2. CHECK DLC3

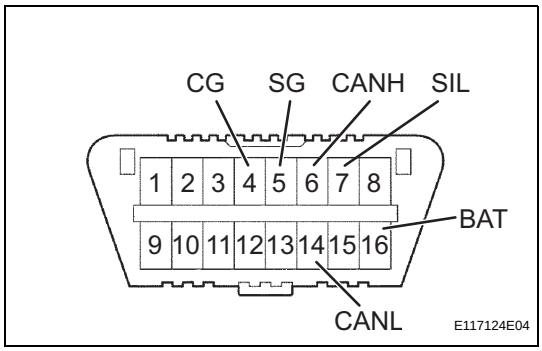

The vehicle's ECM uses the ISO 15765-4 for communication protocol. The terminal arrangement of the DLC3 complies with SAE J1962 and matches the ISO 15765-4 format.

Symbols (Terminal No.)	Terminal Description	Condition	Specified Condition
SIL (7) - SG(5)	Bus "+" line	During transmission	Pulse generation
CG (4) - Body ground	Chassis ground	Always	Below 1 Ω
SG (5) - Body ground	Signal ground	Always	Below 1 Ω
BAT (16) - Body ground	Battery positive	Always	10 to 14 V
CANH (6) - CANL (14)	HIGH-level CAN bus line	Ignition switch LOCK*	54 to 69 Ω
CANH (6) - CG (4)	HIGH-level CAN bus line	Ignition switch LOCK*	200 Ω or higher
CANH (6) - BAT (16)	HIGH-level CAN bus line	Ignition switch LOCK*	1 MΩ or higher
CANL (14) - CG (4)	LOW-level CAN bus line	Ignition switch LOCK*	200 Ω or higher
CANL (14) - BAT (16)	LOW-level CAN bus line	Ignition switch LOCK*	1 MΩ or higher

AC

If the result is not as specified, the DLC3 may have a malfunction. Repair or replace the harness and connector.

NOTICE:

***: Before measuring the resistance, leave the vehicle as is for at least 1 minute and do not operate the ignition switch, other switches or doors.**

HINT:

Connect the cable of the intelligent tester (with CAN VIM) to the DLC3, turn the ignition switch ON and attempt to use the tester. If the display indicates that a communication error has occurred, there is a problem either with the vehicle or with the tester.

If communication is normal when the tester is connected to another vehicle, inspect the DLC3 of the original vehicle.

If communication is still not possible when the tester is connected to another vehicle, the problem may be in the tester itself. Consult the Service Department listed in the tester's instruction manual.

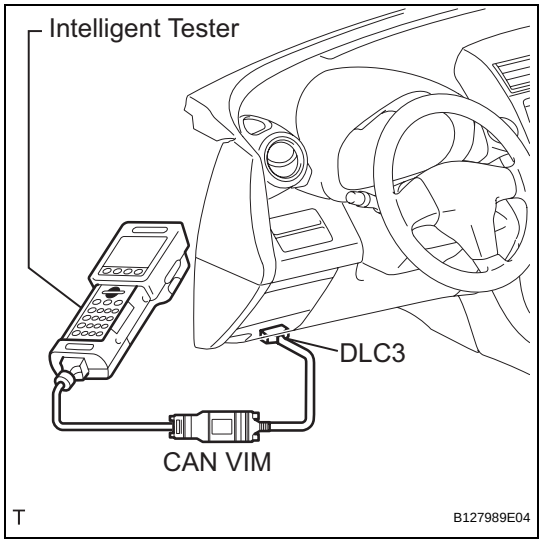

DTC CHECK / CLEAR

1. CHECK DTC

(a) Connect the intelligent tester (with CAN VIM) to the DLC3.

(b) Turn the ignition switch ON and turn the intelligent tester ON.

(c) Read the DTC by following the prompts on the tester screen.
HINT:
Refer to the intelligent tester operator's manual for further details.

2. CLEAR DTC

(a) Connect the intelligent tester (with CAN VIM) to the DLC3.

(b) Turn the ignition switch ON and turn the intelligent tester ON.

(c) Clear the DTC by following the prompts on the tester screen.
HINT:
Refer to the intelligent tester operator's manual for further details.

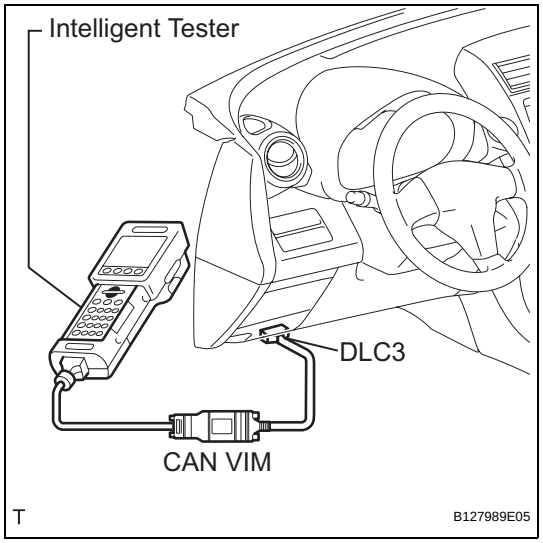

DATA LIST / ACTIVE TEST

(2005/11-2006/01)

1. READ DATA LIST

HINT:
Using the intelligent tester's DATA LIST allows switch, sensor, actuator and other item values to be read without removing any parts. Reading the DATA LIST early in troubleshooting is one way to save time.

(a) Connect the intelligent tester (with CAN VIM) to the DLC3.

(b) Turn the ignition switch ON and turn the intelligent tester ON.

(c) Read the DATA LIST by following the prompts on the tester.

AC

Air conditioning amplifier

Item	Measurement Item / Display (Range)	Normal Condition	Diagnostic Note
AMBI TEMP SENS	Ambient temperature sensor / Min.: -23.3°C (-9.94°F) Max.: 65.95°C (150.71°F)	Actual ambient temperature is displayed	Open circuit: -23.3°C (-9.94°F) Short circuit: 65.95°C (150.71°F)
COOLANT TEMP	Engine coolant temperature / Min.: 1.3°C (34.34°F) Max.: 90.55°C (194.99°F)	Actual engine coolant temperature is displayed after engine warmed up	-
AMBI TEMP	Adjusted ambient temperature / Min.: -30.8°C (-23.44°F) Max.: 50.8°C (123.44°F)	-	-
EVAP FIN TEMP	Evaporator temperature sensor / Min.: -29.7°C (-21.46°F) Max.: 59.6°C (139.28°F)	Actual evaporator temperature is displayed	Open circuit: -29.7°C (-21.46°F) Short circuit: 59.6°C (139.28°F)
REG PRESS SENS	Regulator pressure sensor / Min.: 0 MPaG Max.: 3.187 MPaG	Actual regulator pressure is displayed	-

Item	Measurement Item / Display (Range)	Normal Condition	Diagnostic Note
REG CTRL CURRNT	Regulator control current / Min.: 0 A Max.: 0.997 A	Value changes between 0 A and 0.997 A in accordance with compressor and magnetic clutch operation	-
DESTINATION	Destination / DOMEST, USA, EUROPE, AUSTRAL, MIDEAST, NO INFO	Destinations displayed	-
#CODES	Number of trouble codes / Min.: 0, Max.: 255	Number of DTCs displayed	-

2. PERFORM ACTIVE TEST

HINT:

Performing the intelligent tester's ACTIVE TEST allows relay, VSV, actuator and other items to be operated without removing any parts. Performing the ACTIVE TEST early in troubleshooting is one way to save time. The DATA LIST can be displayed in the ACTIVE TEST.

(a) Connect the intelligent tester (with CAN VIM) to the DLC3.

(b) Turn the ignition switch ON and turn the intelligent tester ON.

(c) Perform the ACTIVE TEST by following the prompts on the tester.

Air conditioning amplifier

Item	Test Details / Display (Range)	Diagnostic Note
A/C COMPRESSOR	A/C compressor / OFF, ON	-

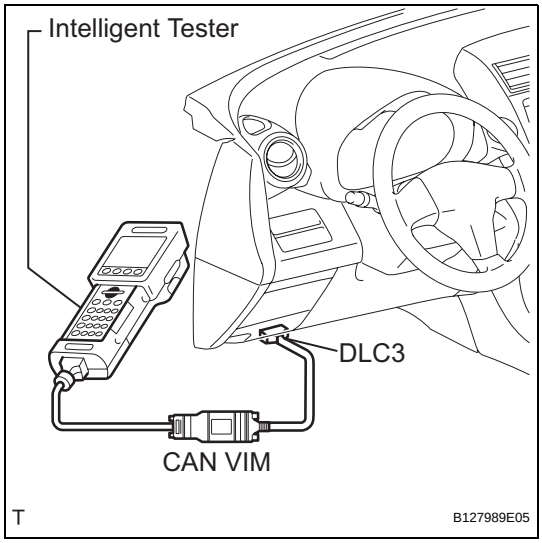

DATA LIST / ACTIVE TEST

(2006/01-)

1. READ DATA LIST

HINT:

Using the intelligent tester's DATA LIST allows switch, sensor, actuator and other item values to be read without removing any parts. Reading the DATA LIST early in troubleshooting is one way to save time.

(a) Connect the intelligent tester (with CAN VIM) to the DLC3.

(b) Turn the ignition switch ON and turn the intelligent tester ON.

(c) Read the DATA LIST by following the prompts on the tester.

Air conditioning amplifier

Item	Measurement Item / Display (Range)	Normal Condition	Diagnostic Note
AMBI TEMP SENS	Ambient temperature sensor / Min.: -23.3°C (-9.94°F) Max.: 65.95°C (150.71°F)	Actual ambient temperature is displayed	Open circuit: -23.3°C (-9.94°F) Short circuit: 65.95°C (150.71°F)
COOLANT TEMP	Engine coolant temperature / Min.: 1.3°C (34.34°F) Max.: 90.55°C (194.99°F)	Actual engine coolant temperature is displayed after engine warmed up	-
AMBI TEMP	Adjusted ambient temperature / Min.: -30.8°C (-23.44°F) Max.: 50.8°C (123.44°F)	-	-

Item	Measurement Item / Display (Range)	Normal Condition	Diagnostic Note
EVAP FIN TEMP	Evaporator temperature sensor / Min.: -29.7°C (-21.46°F) Max.: 59.6°C (139.28°F)	Actual evaporator temperature is displayed	Open circuit: -29.7°C (-21.46°F) Short circuit: 59.6°C (139.28°F)
REG PRESS SENS	Regulator pressure sensor / Min.: 0 MPaG Max.: 3.187 MPaG	Actual regulator pressure is displayed	-
REG CTRL CURRNT	Regulator control current / Min.: 0 A Max.: 0.997 A	Value changes between 0 A and 0.997 A in accordance with compressor and magnetic clutch operation	-
DESTINATION	Destination / DOMEST, USA, EUROPE, AUSTRAL, MIDEAST, NO INFO	Destinations displayed	-
#CODES	Number of trouble codes / Min.: 0, Max.: 255	Number of DTCs displayed	-

2. PERFORM ACTIVE TEST

HINT:

Performing the intelligent tester's ACTIVE TEST allows relay, VSV, actuator and other items to be operated without removing any parts. Performing the ACTIVE TEST early in troubleshooting is one way to save time. The DATA LIST can be displayed in the ACTIVE TEST.

(a) Connect the intelligent tester (with CAN VIM) to the DLC3.

(b) Turn the ignition switch ON and turn the intelligent tester ON.

(c) Perform the ACTIVE TEST by following the prompts on the tester.

Air conditioning amplifier

Item	Test Details / Display (Range)	Diagnostic Note
A/C COMPRESSOR*1	A/C Compressor OFF, ON	-
A/C MAG CLUTCH*2	Magnetic clutch relay / OFF, ON	Operating sound can be heard

HINT:

*1: for 2AZ-FE

*2: for 2GR-FE

DIAGNOSTIC TROUBLE CODE CHART

(2005/11-2006/01)
HINT:
When the air conditioning system functions properly, DTC B1400/00 is output.

Air conditioning system

DTC No.	Detection Item	Trouble Area	Memory	See page
B1412/12	Ambient Temperature Sensor Circuit	- Ambient temperature sensor - Harness and connector between ambient temperature sensor and combination meter assembly - Combination meter assembly - Air conditioning amplifier - CAN communication line	Memorized (8.5 min. or more)	AC-132
B1413/13	Evaporator Temperature Sensor Circuit	- No. 1 cooler thermistor (Evaporator temperature sensor) - Harness and connector between No. 1 cooler thermistor (evaporator temperature sensor) and air conditioning amplifier - Air conditioning amplifier	Memorized (8.5 min. or more)	AC-136
B1423/23	Pressure Sensor Circuit	- Air conditioning pressure sensor - Harness and connector between air conditioning pressure sensor and air conditioning amplifier - Air conditioning amplifier	-	AC-143
B1451/51	Compressor Solenoid Circuit	- Compressor and pulley - Harness and connector between air conditioning amplifier and compressor and pulley - Air conditioning amplifier	-	AC-148
B1499/99	Multiplex Communication Circuit	- Air conditioning amplifier - Power source circuit - Air conditioning amplifier - ECM - Combination meter assembly - CAN communication line	-	AC-156

DIAGNOSTIC TROUBLE CODE CHART

(2006/01-)

HINT:

When the air conditioning system functions properly, DTC B1400/00 is output.

Air Conditioning system

DTC No.	Detection Item	Trouble Area	Memory	See page
B1412/12	Ambient Temperature Sensor Circuit	- Ambient temperature sensor - Wire harness between ambient temperature sensor and combination meter assembly - Combination meter assembly - Air conditioning amplifier - CAN communication line	Memorized (8.5 min. or more)	AC-132
B1413/13	Evaporator Temperature Sensor Circuit	- No. 1 cooler thermistor (Evaporator temperature sensor) - Wire harness between No. 1 cooler thermistor (evaporator temperature sensor) and air conditioning amplifier - Air conditioning amplifier	Memorized (8.5 min. or more)	AC-136
B1422/22*1	Compressor Lock Sensor Circuit	- Compressor and magnetic clutch - Compressor and magnetic clutch drive belt - Compressor lock sensor - Wire harness between compressor lock sensor and air conditioning amplifier - Air conditioning amplifier	-	AC-140
B1423/23	Pressure Sensor Circuit	- Air conditioning pressure sensor - Harness and connector between air conditioning pressure sensor and air conditioning amplifier - Air conditioning amplifier	-	AC-143
B1451/51	Compressor Solenoid Circuit	- A/C Compressor*2 - Wire harness between air conditioning amplifier and A/C compressor*2 - Air conditioning amplifier	-	AC-152
B1499/99	Multiplex Communication Circuit	- Air conditioning amplifier - ECM - Combination meter assembly - CAN communication line	-	AC-156

HINT:

*1: DTC B1422/22 (Compressor Lock Sensor Circuit) is indicated only for a currently occurring malfunction for 2GR-FE.

*2: Compressor and Pulley for 2AZ-FE, Compressor and Magnetic Clutch for 2GR-FE

DTC	B1412/12	Ambient Temperature Sensor Circuit

DESCRIPTION

The ambient temperature sensor is installed in the front part of the condenser to detect the ambient temperature and control the air conditioner. The sensor is connected to the combination meter and detects fluctuations in the ambient temperature. This data is used for controlling the room temperature. The sensor sends a signal to the air conditioning amplifier via the combination meter. The resistance of the ambient temperature sensor changes in accordance with the ambient temperature. As the temperature decreases, the resistance increases. As the temperature increases, the resistance decreases.

The air conditioning amplifier applies a voltage (5 V) to the ambient temperature sensor and reads voltage changes as changes in the resistance of the ambient temperature sensor. The combination meter sends the read signal to the air conditioning amplifier via CAN communication.

DTC No.	DTC Detection Condition	Trouble Area
B1412/12	Open or short in ambient temperature sensor circuit	• Ambient temperature sensor • Harness and connector between ambient temperature sensor and combination meter • Combination meter • Air conditioning amplifier • CAN communication line

WIRING DIAGRAM

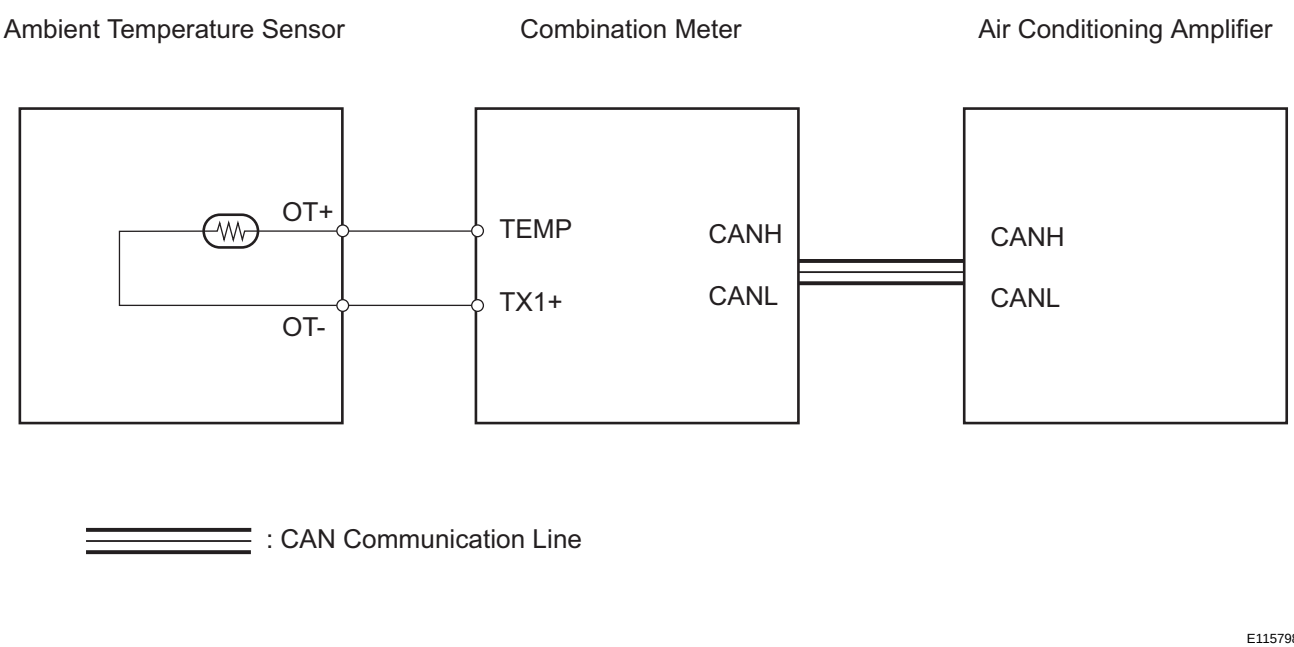

AC

INSPECTION PROCEDURE

1	READ VALUE OF INTELLIGENT TESTER (AMBI TEMP SENS)

(a) Connect the intelligent tester (with CAN VIM) to the DLC3.

(b) Turn the ignition switch ON and turn the intelligent tester main switch ON.
(c) Select the item below in the DATA LIST, and read the value displayed on the intelligent tester.

Air conditioning amplifier

Item	Measurement Item / Display (Range)	Normal Condition	Diagnostic Note
AMBI TEMP SENS	Ambient temperature sensor / Min.: -23.3°C (-9.94°F) Max.: 65.95°C (150.71°F)	Actual ambient temperature is displayed	Open circuit: -23.3°C (-9.94°F) Short circuit: 65.95°C (150.71°F)

OK:

The display is as specified in the normal condition column.

Result

Result	Proceed to
NG	A
OK (Checking from the PROBLEM SYMPTOMS TABLE)	B
OK (Checking from the DTC)	C

B → **PROCEED TO NEXT CIRCUIT INSPECTION SHOWN IN PROBLEM SYMPTOMS TABLE**

C → **REPLACE AIR CONDITIONING AMPLIFIER**

A

AC

2	INSPECT AMBIENT TEMPERATURE SENSOR

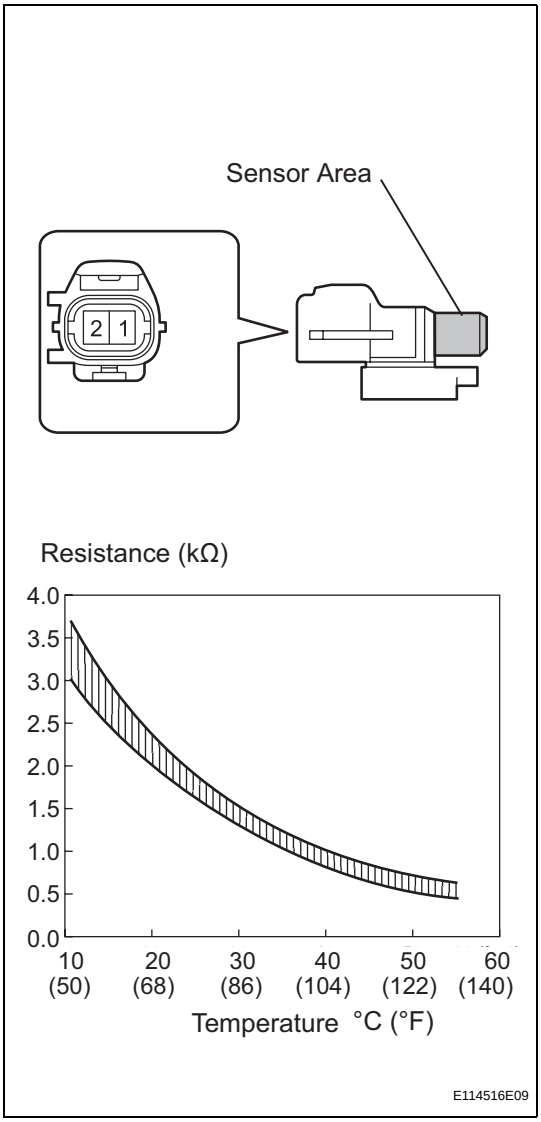

(a) Remove the ambient temperature sensor.
(b) Measure the resistance of the sensor.
Standard resistance

Tester Connection	Condition	Specified Condition
1 - 2	10°C (50°F)	3.00 to 3.73 kΩ
1 - 2	15°C (50°F)	2.45 to 2.88 kΩ
1 - 2	20°C (68°F)	1.95 to 2.30 kΩ
1 - 2	25°C (77°F)	1.60 to 1.80 kΩ
1 - 2	30°C (86°F)	1.28 to 1.47 kΩ
1 - 2	35°C (95°F)	1.00 to 1.22 kΩ
1 - 2	40°C (104°F)	0.80 to 1.00 kΩ
1 - 2	45°C (113°F)	0.65 to 0.85 kΩ
1 - 2	50°C (122°F)	0.50 to 0.70 kΩ
1 - 2	55°C (131°F)	0.44 to 0.60 kΩ
1 - 2	60°C (140°F)	0.36 to 0.50 kΩ

NOTICE:
- **Touching the sensor even slightly may change the resistance value. Be sure to hold the connector of the sensor.**
- **When measuring, the sensor temperature must be the same as the ambient temperature.**

HINT:
As the temperature increases, the resistance decreases (see the graph).

NG → **REPLACE AMBIENT TEMPERATURE SENSOR**

OK

AC

3	CHECK WIRE HARNESS (AMBIENT TEMPERATURE SENSOR - COMBINATION METER)

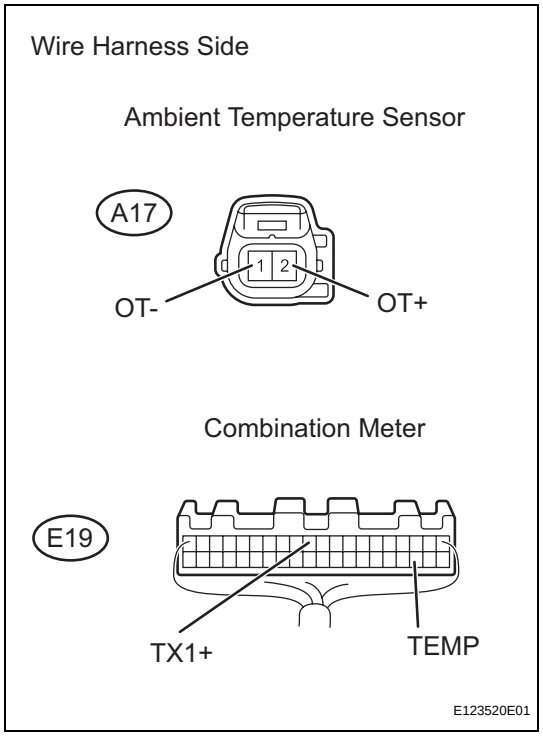

(a) Disconnect the A17 sensor connector.
(b) Disconnect the E19 meter connector.
(c) Measure the resistance of the wire harness side connectors.

Standard resistance

Tester Connection	Specified Condition
A17-2 (OT+) - E19-23 (TEMP)	Below 1 Ω
A17-1 (OT-) - E19-11 (TX1+)	Below 1 Ω
A17-2 (OT+) - Body ground	1 MΩ or higher
A17-1 (OT-) - Body ground	1 MΩ or higher

NG → **REPAIR OR REPLACE HARNESS AND CONNECTOR**

OK

REPLACE COMBINATION METER

AC

DTC	B1413/13	Evaporator Temperature Sensor Circuit

DESCRIPTION

The No. 1 cooler thermistor (evaporator temperature sensor) is installed on the evaporator in the air conditioning unit to detect the temperature of the cooled air that has passed through the evaporator and to control the air conditioner. It sends signals to the air conditioning amplifier. The signals change in accordance with the resistance of the No. 1 cooler thermistor (evaporator temperature sensor). As the temperature decreases, the resistance increases. As the temperature increases, the resistance decreases. The air conditioning amplifier applies a voltage (5 V) to the No. 1 cooler thermistor (evaporator temperature sensor) and reads voltage changes as changes in the resistance of the No. 1 cooler thermistor (evaporator temperature sensor). This sensor is used for frost prevention.

DTC No.	DTC Detection Condition	Trouble Area
B1413/13	Open or short in evaporator temperature sensor circuit	• No. 1 cooler thermistor (evaporator temperature sensor) • Harness and connector between No. 1 cooler thermistor (evaporator temperature sensor) and air conditioning amplifier • Air conditioning amplifier

WIRING DIAGRAM

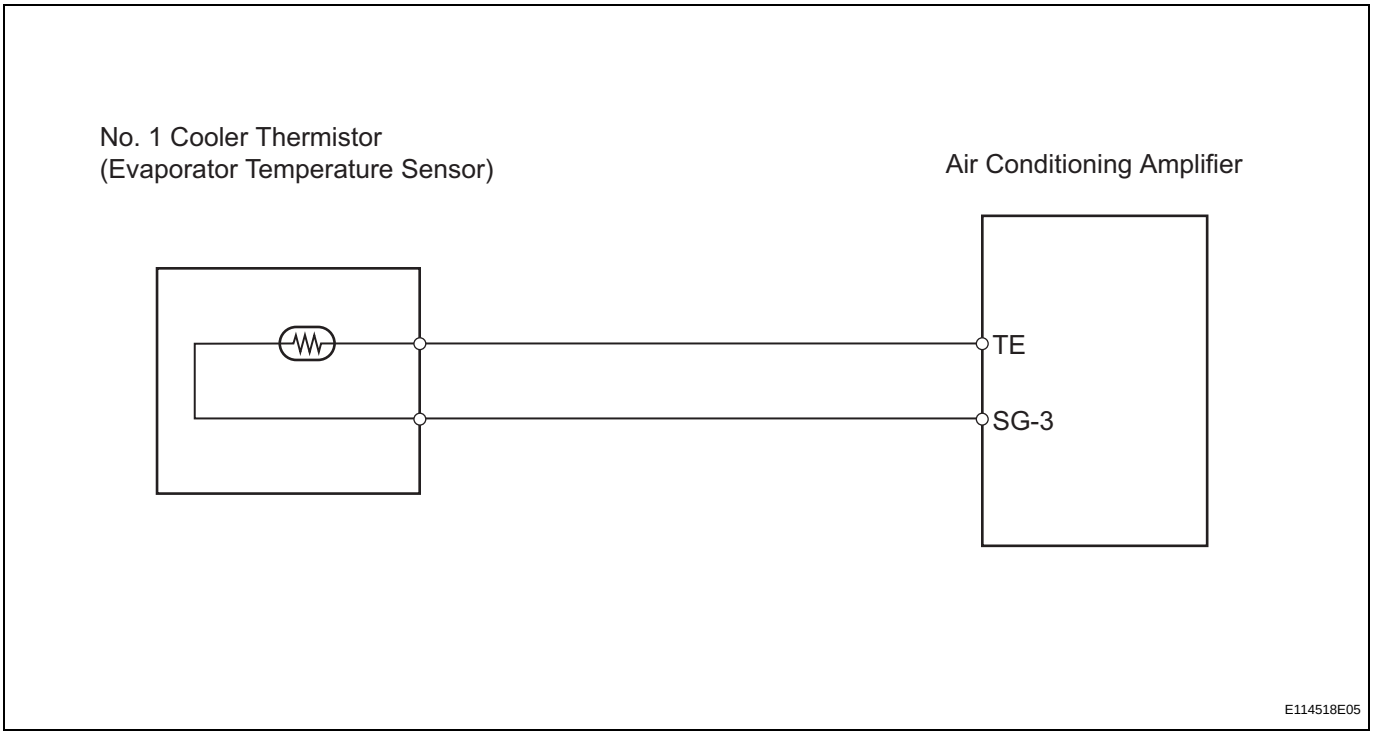

AC

INSPECTION PROCEDURE

1	READ VALUE OF INTELLIGENT TESTER (EVAP FIN TEMP)

(a) Connect the intelligent tester (with CAN VIM) to the DLC3.
(b) Turn the ignition switch ON and turn the intelligent tester main switch ON.
(c) Select the item below in the DATA LIST, and read the value displayed on the intelligent tester.

Air conditioning amplifier

Item	Measurement Item / Display (Range)	Normal Condition	Diagnostic Note
EVAP FIN TEMP	Evaporator temperature sensor / Min.: -29.7°C (-21.46°F) Max.: 59.6°C (139.28°F)	Actual evaporator temperature is displayed	Open circuit: -29.7°C (-21.46°F) Short circuit: 59.6°C (139.28°F)

OK:

The display is as specified in the normal condition column.

Result

Result	Proceed to
NG	A
OK (Checking from the PROBLEM SYMPTOMS TABLE)	B
OK (Checking from the DTC)	C

B → PROCEED TO NEXT CIRCUIT INSPECTION SHOWN IN PROBLEM SYMPTOMS TABLE

C → REPLACE AIR CONDITIONING AMPLIFIER

A

2 INSPECT NO. 1 COOLER THERMISTOR (EVAPORATOR TEMPERATURE SENSOR)

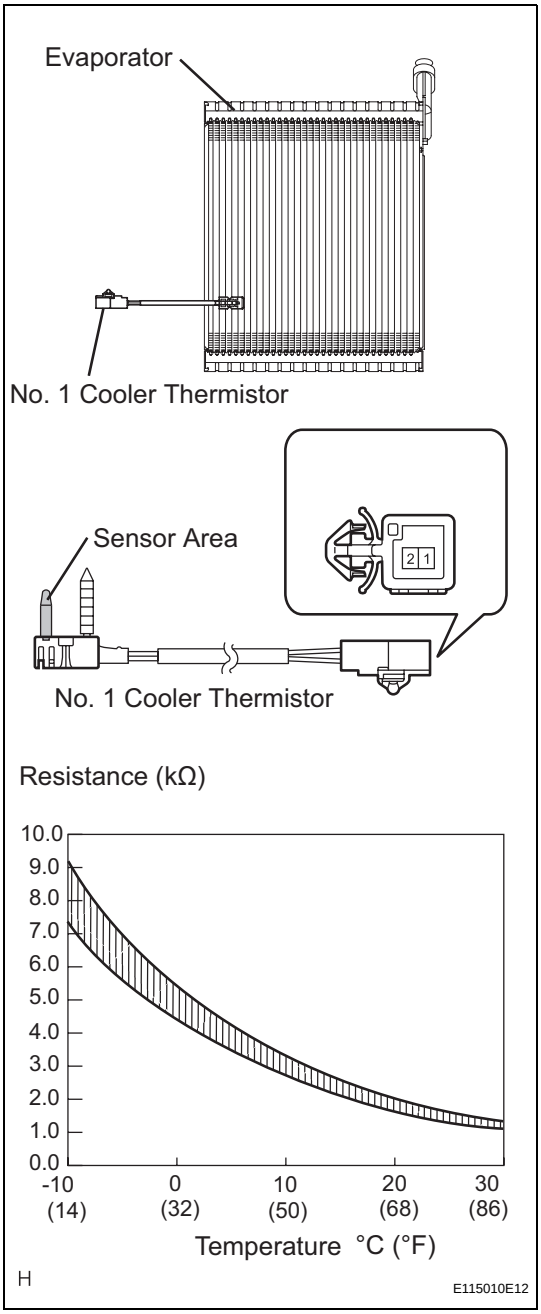

(a) Remove the No. 1 cooler thermistor.

(b) Measure the resistance of the thermistor.

Standard resistance

Tester Connection	Condition	Specified Condition
1 - 2	-10°C (14°F)	7.30 to 9.10 kΩ
1 - 2	-5°C (23°F)	5.65 to 6.95 kΩ
1 - 2	0°C (32°F)	4.40 to 5.35 kΩ
1 - 2	5°C (41°F)	3.40 to 4.15 kΩ
1 - 2	10°C (50°F)	2.70 to 3.25 kΩ
1 - 2	15°C (59°F)	2.14 to 2.58 kΩ
1 - 2	20°C (68°F)	1.71 to 2.05 kΩ
1 - 2	25°C (77°F)	1.38 to 1.64 kΩ
1 - 2	30°C (86°F)	1.11 to 1.32 kΩ

NOTICE:

- **Touching the thermistor even slightly may change the resistance value. Be sure to hold the connector of the thermistor.**
- **When measuring, the thermistor temperature must be the same as the ambient temperature.**

HINT:

As the temperature increases, the resistance decreases (see the graph).

NG → **REPLACE NO. 1 COOLER THERMISTOR**

OK

AC

3	**CHECK WIRE HARNESS (NO. 1 COOLER THERMISTOR - AIR CONDITIONING AMPLIFIER)**

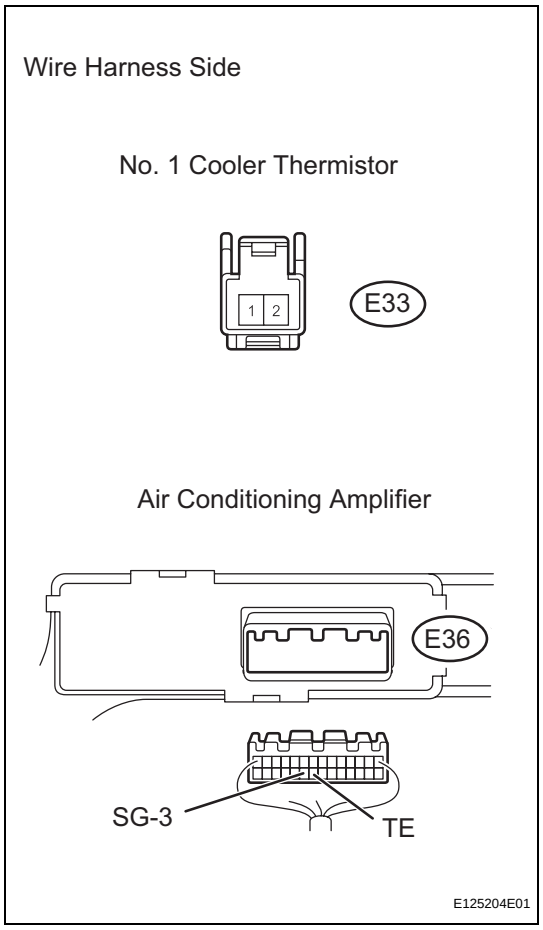

(a) Disconnect the E33 No. 1 cooler thermistor connector.
(b) Disconnect the E36 amplifier connector.
(c) Measure the resistance of the wire harness side connectors.

Standard resistance

Tester Connection	Specified Condition
E33-1 - E36-22 (TE)	Below 1 Ω
E33-2 - E36-23 (SG-3)	Below 1 Ω
E33-1 - Body ground	1 MΩ or higher
E33-2 - Body ground	1 MΩ or higher

NG → **REPAIR OR REPLACE HARNESS AND CONNECTOR**

OK

REPLACE AIR CONDITIONING AMPLIFIER

AC

DTC	B1422/22	Compressor Lock Sensor Circuit

DESCRIPTION

This sensor sends 1 pulse per engine revolution to the air conditioning amplifier. If the ratio of the compressor speed divided by the engine speed is smaller than a predetermined value, the air conditioning amplifier turns the compressor off, and the indicator blinks at approximately 1 second intervals.

DTC No.	DTC Detection Condition	Trouble Area
B1422/22	Open or short in compressor lock sensor circuit All conditions below are detected for 3 seconds or more: 1. Engine speed: 450 rpm or more 2. Ratio between engine and compressor speed deviates 20% or more in comparison to normal operation	• Compressor and magnetic clutch • Compressor and magnetic clutch drive belt • Compressor lock sensor • Wire harness between compressor lock sensor and air conditioning amplifier • Air conditioning amplifier

WIRING DIAGRAM

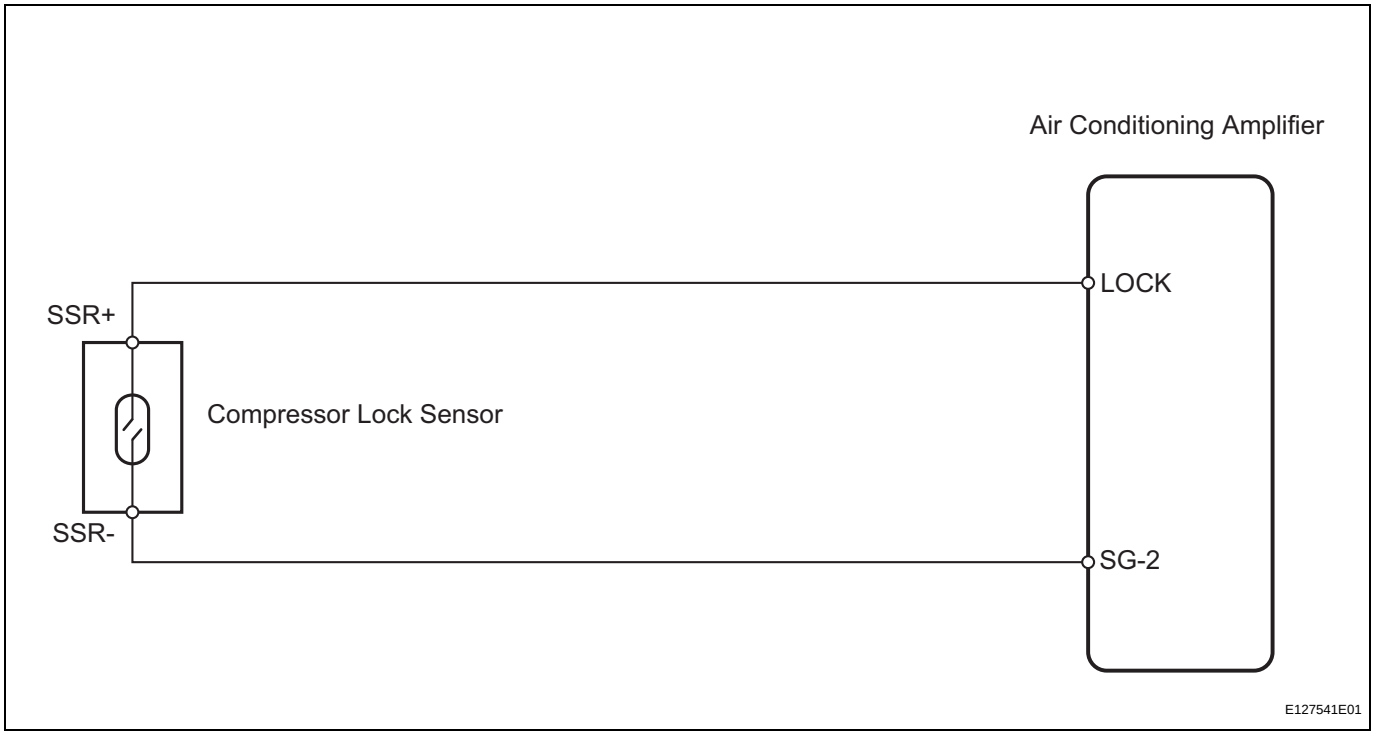

AC

INSPECTION PROCEDURE

1	CHECK AIR CONDITIONING AMPLIFIER (LOCK SIGNAL)

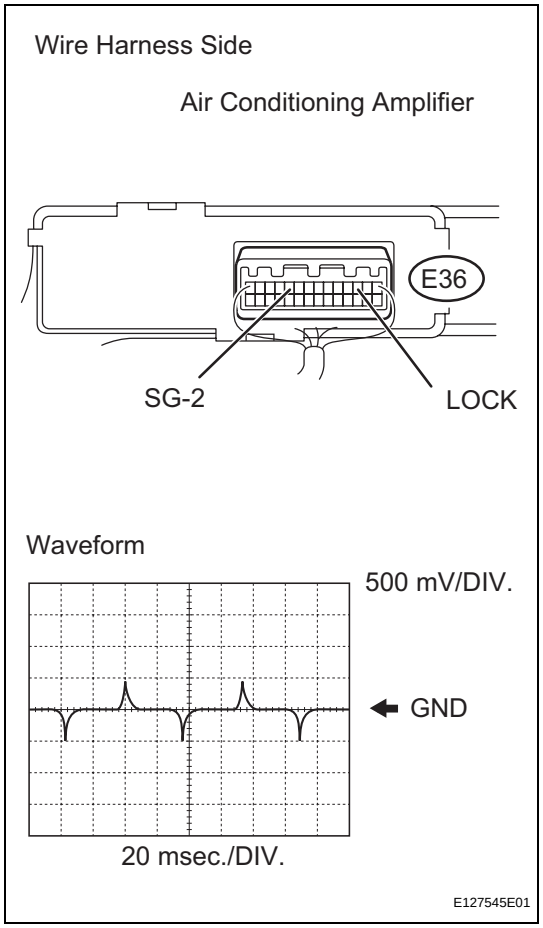

(a) Remove the air conditioning amplifier with its connectors still connected.

(b) Check the waveform of the amplifier connector.

OK:

Waveform is as shown in the illustration.

Item	Content
Tester Connection	LOCK (E36-3) - SG-2 (E36-10)
Tool Setting	500 mV/DIV., 20 msec./DIV.
Condition	Ignition switch ON A/C switch ON Magnetic clutch ON

AC

Result

Result	Proceed to
NG	A
OK (Checking from the PROBLEM SYMPTOMS TABLE)	B
OK (Checking from the DTC)	C

B → **PROCEED TO NEXT CIRCUIT INSPECTION SHOWN IN PROBLEM SYMPTOMS TABLE**

C → **REPLACE AIR CONDITIONING AMPLIFIER**

A

2 INSPECT COMPRESSOR LOCK SENSOR

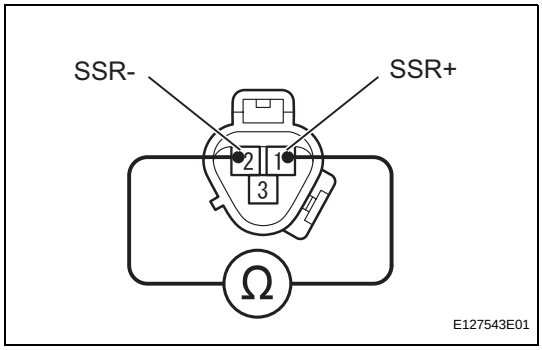

(a) Disconnect the B47 compressor lock sensor connector.
(b) Measure the resistance of the sensor.
Standard resistance

Tester Connection	Condition	Specified Condition
1 (SSR+) - 2 (SSR-)	20°C (68°F)	65 to 125 Ω

NG → **REPLACE COMPRESSOR LOCK SENSOR**

OK

3 CHECK WIRE HARNESS (COMPRESSOR LOCK SENSOR - AIR CONDITIONING AMPLIFIER)

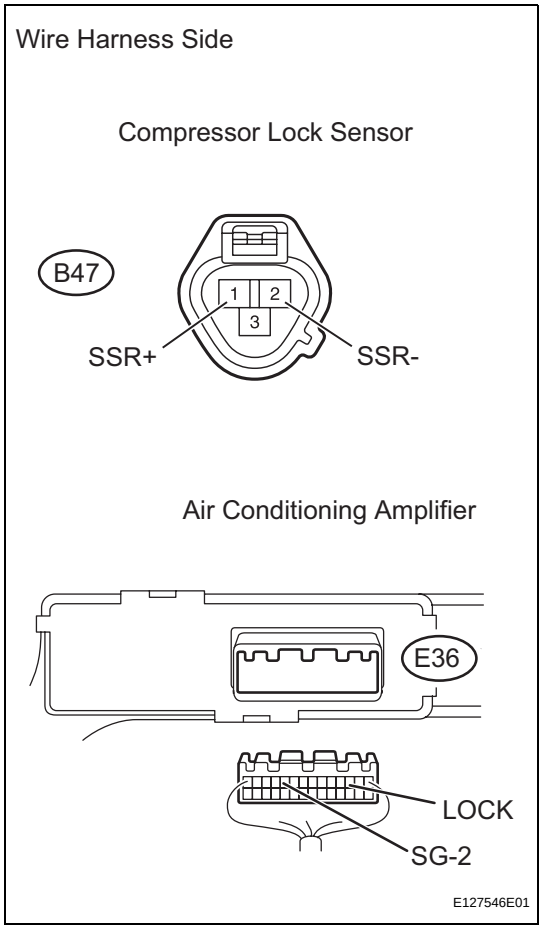

(a) Disconnect the B47 compressor lock sensor connector.
(b) Disconnect the E36 amplifier connector.
(c) Measure the resistance of the wire harness side connectors.
Standard resistance

Tester Connection	Specified Condition
B47-1 (SSR+) - E36-3 (LOCK)	Below 1 Ω
B47-2 (SSR-) - E36-10 (SG-2)	Below 1 Ω
B47-1 (SSR+) - E36-10 (SG-2)	10 kΩ or higher
E36-3 (LOCK) - Body ground	10 kΩ or higher

NG → **REPAIR OR REPLACE HARNESS AND CONNECTOR**

OK

REPLACE AIR CONDITIONING AMPLIFIER

AC

DTC	B1423/23	Pressure Sensor Circuit

DESCRIPTION

This DTC is output when the refrigerant pressure is either extremely low (0.19 MPa [2.0 kgf/cm^2, 28 psi] or less) or extremely high (3.14 MPa [32.0 kgf/cm^2, 455 psi] or more). The air conditioning pressure sensor, which is installed on the pipe of the high pressure side, detects the refrigerant pressure and sends refrigerant pressure signals to the air conditioning amplifier. The air conditioning amplifier determines the pressure from the signals in accordance with the sensor characteristics, and controls the compressor accordingly.

DTC No.	DTC Detection Condition	Trouble Area
B1423/23	Open or short in air conditioning pressure sensor circuit	• Air conditioning pressure sensor • Harness and connector between air conditioning pressure sensor and air conditioning amplifier • Air conditioning amplifier

WIRING DIAGRAM

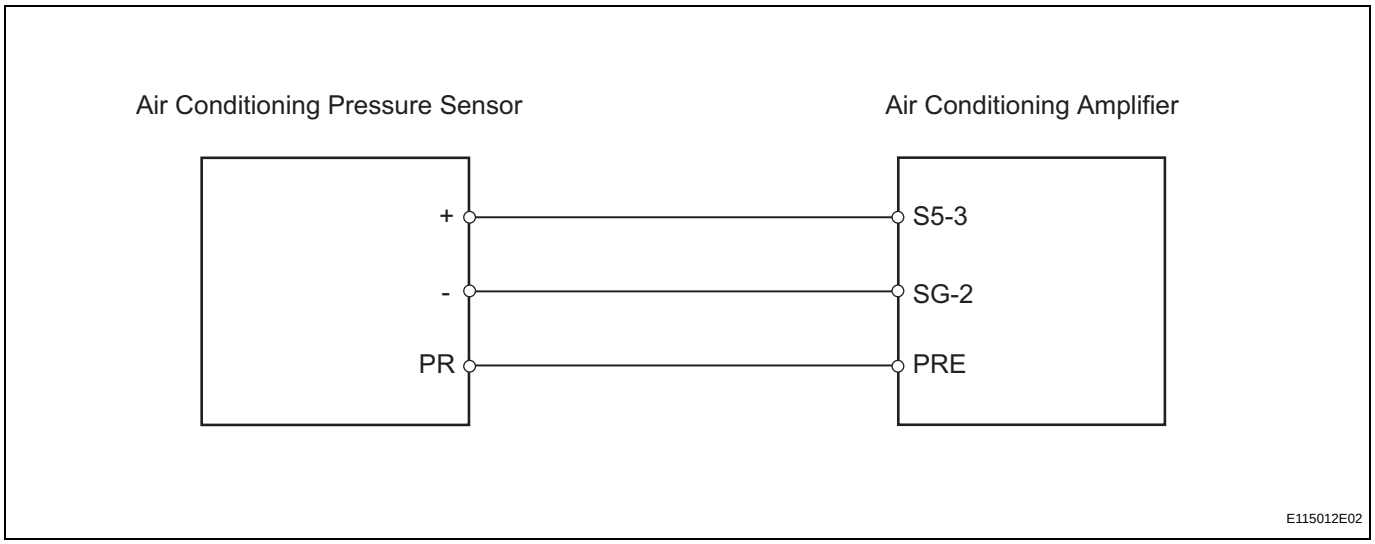

AC

INSPECTION PROCEDURE

1	CHECK REFRIGERANT

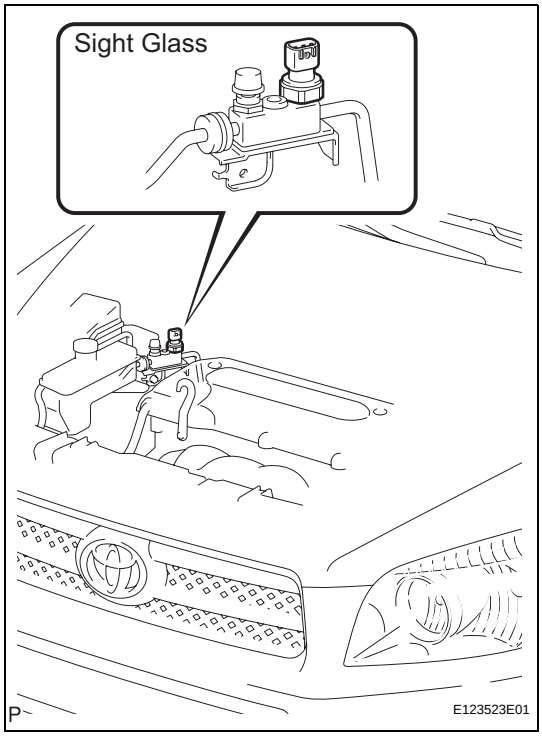

(a) Check the sight glass of the cooler unit refrigerant liquid pipe.

(1) Prepare the vehicle in accordance with the chart below.

Item	Condition
Engine Speed	1,500 rpm
Vehicle Doors	Fully open
Temperature Setting	MAX COLD
Blower Speed	HI
A/C Switch	ON

(2) Compare the sight glass to the following chart.

Item	Symptom	Amount of Refrigerant	Corrective Procedures
1	Bubbles visible	Insufficient*	1. Check for gas leakage and repair if necessary 2. Add refrigerant until bubbles disappear
2	No bubbles visible	Empty, insufficient or too much	Refer to items 3 and 4
3	No temperature difference between compressor inlet and outlet	Empty or nearly empty	1. Check for gas leakage with gas leak detector and repair if necessary 2. Add refrigerant until bubbles disappear
4	Considerable temperature difference between compressor inlet and outlet	Correct or too much	Refer to items 5 and 6
5	Refrigerant becomes clear immediately after A/C turned OFF	Too much	1. Drain or discharge refrigerant 2. Bleed air and supply proper amount of purified refrigerant
6	Refrigerant foams and then becomes clear immediately after A/C turned OFF	Correct	-

HINT:
*: If the ambient temperature is higher than usual but cooling is sufficient, bubbles in the sight glass are permissible.

NG → CHARGE REFRIGERANT

OK

AC

2	READ VALUE OF INTELLIGENT TESTER (REG PRESS SENS)

(a) Connect the intelligent tester (with CAN VIM) to the DLC3.
(b) Turn the ignition switch ON and turn the intelligent tester main switch ON.
(c) Select the item below in the DATA LIST, and read the value displayed on the intelligent tester.

Air conditioning amplifier

Item	Measurement Item / Display (Range)	Normal Condition	Diagnostic Note
REG PRESS SENS	Regulator pressure sensor / Min.: 0 MPaG Max.: 3.187 MPaG	Actual regulator pressure is displayed	-

OK:

The display is as specified in the normal condition column.

Result

Result	Proceed to
NG	A
OK (Checking from the PROBLEM SYMPTOMS TABLE)	B
OK (Checking from the DTC)	C

B → PROCEED TO NEXT CIRCUIT INSPECTION SHOWN IN PROBLEM SYMPTOMS TABLE

C → REPLACE AIR CONDITIONING AMPLIFIER

A

AC

3 CHECK WIRE HARNESS (PRESSURE SENSOR - AIR CONDITIONING AMPLIFIER)

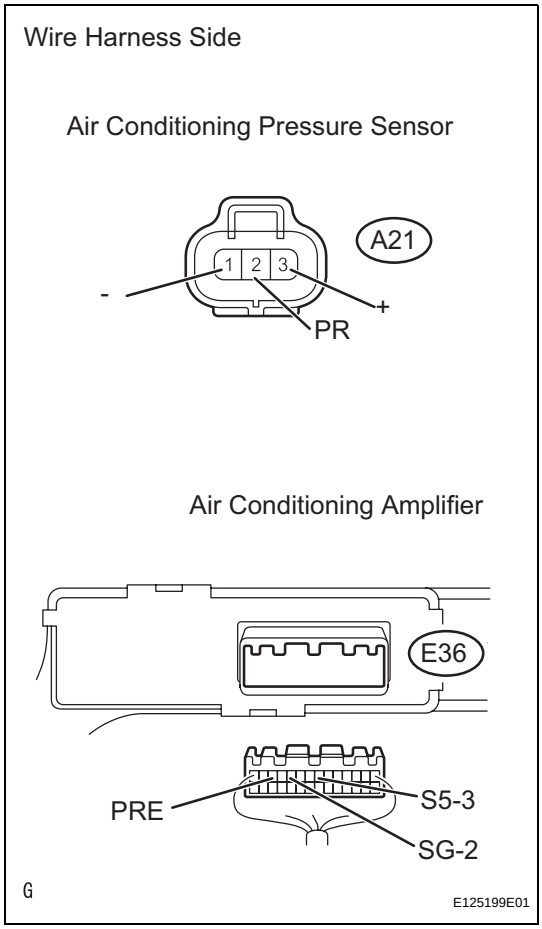

(a) Disconnect the A21 pressure sensor connector.
(b) Disconnect the E36 amplifier connector.
(c) Measure the resistance of the wire harness side connectors.
Standard resistance

Tester Connection	Specified Condition
A21-3 (+) - E36-7 (S5-3)	Below 1 Ω
A21-2 (PR) - E36-12 (PRE)	Below 1 Ω
A21-1 (-) - E36-10 (SG-2)	Below 1 Ω
A21-3 (+) - Body ground	1 MΩ or higher
A21-2 (PR) - Body ground	1 MΩ or higher
A21-1 (-) - Body ground	1 MΩ or higher

NG → **REPAIR OR REPLACE HARNESS AND CONNECTOR**

OK

4 CHECK AIR CONDITIONING AMPLIFIER

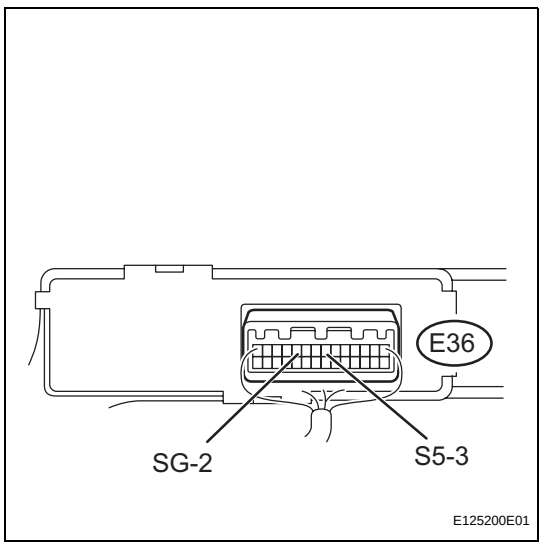

(a) Remove the air conditioning amplifier with its connectors still connected.
(b) Measure the resistance of the wire harness side connector.
Standard resistance

Tester Connection	Specified Condition
E36-10 (SG-2) - Body ground	Below 1 Ω

(c) Turn the ignition switch ON.
(d) Measure the voltage of the wire harness side connector.
Standard voltage

Tester Connection	Specified Condition
E36-7 (S5-3) - E36-10 (SG-2)	4.5 to 5.5 V

NG → **REPLACE AIR CONDITIONING AMPLIFIER**

OK

AC

5	**INSPECT AIR CONDITIONING PRESSURE SENSOR**

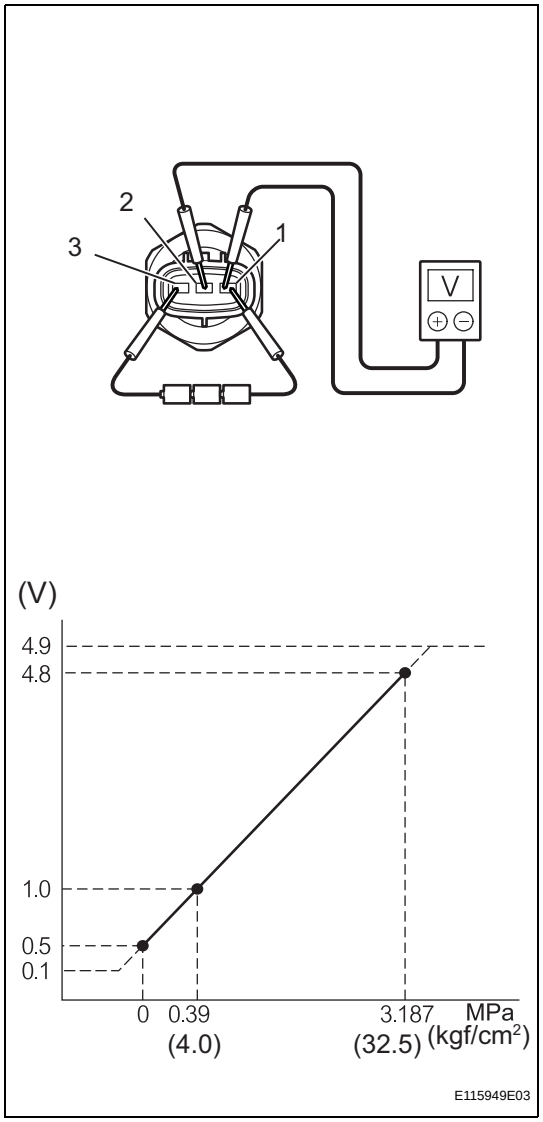

(a) Turn the A/C switch ON.
(b) Disconnect the A21 sensor connector.
(c) Connect the three 1.5 V dry cell batteries' positive (+) lead to terminal 3 and the negative (-) lead to terminal 1. Then connect the voltmeter's positive (+) lead to terminal 2 and the negative (-) lead to terminal 1. Measure the voltage.

OK:

The voltage changes in accordance with the refrigerant pressure as shown in the graph.

NG → **REPLACE AIR CONDITIONING PRESSURE SENSOR**

OK

REPLACE AIR CONDITIONING AMPLIFIER

AC

DTC	B1451/51	**Compressor Solenoid Circuit** (2005/11-2006/01)

DESCRIPTION

In this circuit, the compressor receives a refrigerant compression demand signal from the air conditioning amplifier. Based on this signal, the compressor changes the degree of refrigerant compression.

DTC No.	DTC Detection Condition	Trouble Area
B1451/51	Open or short in solenoid of externally changeable compressor circuit	• Compressor and pulley • Harness and connector between air conditioning amplifier and compressor and pulley • Air conditioning amplifier

WIRING DIAGRAM

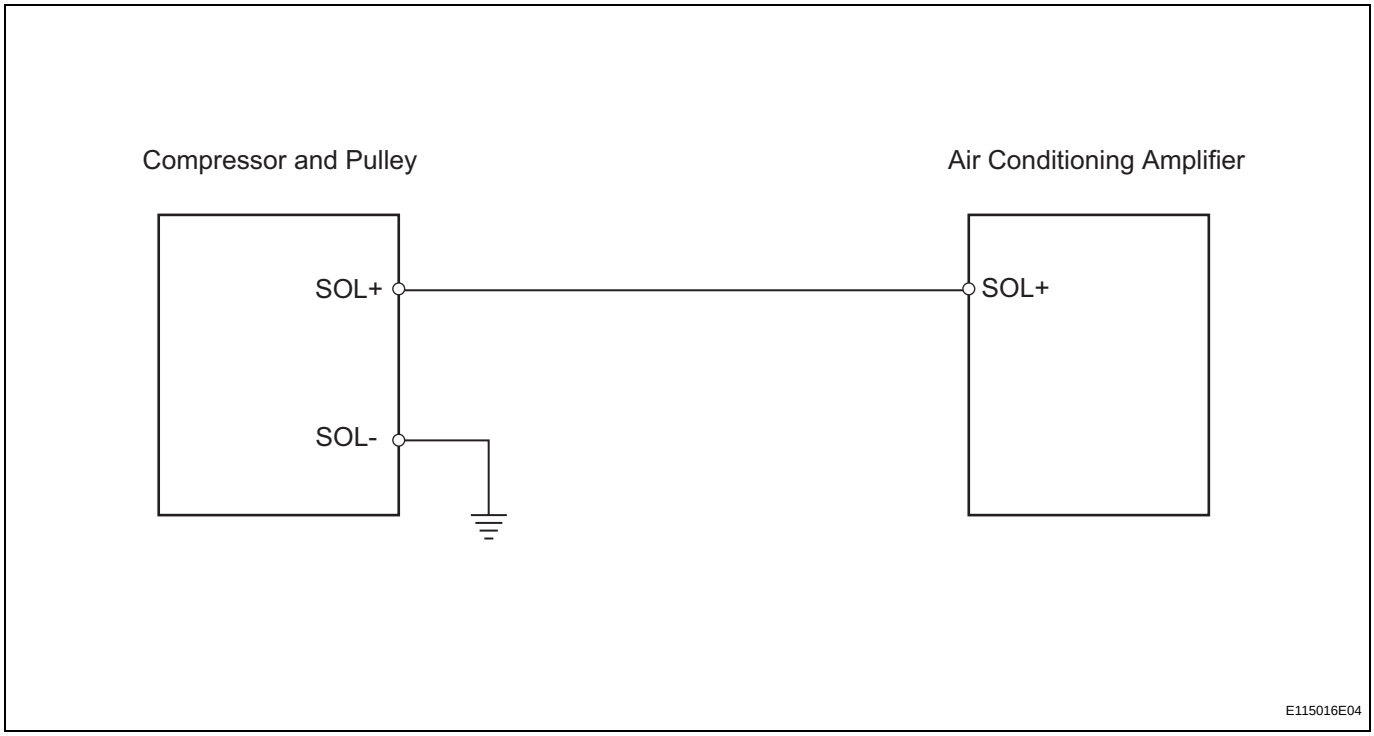

AC

INSPECTION PROCEDURE

1	READ VALUE OF INTELLIGENT TESTER (REG CTRL CURRNT)

(a) Connect the intelligent tester (with CAN VIM) to the DLC3.
(b) Turn the ignition switch ON and turn the intelligent tester main switch ON.
(c) Select the items below in the DATA LIST, and read the value displayed on the intelligent tester.

Air conditioning amplifier

Item	Measurement Item / Display (Range)	Normal Condition	Diagnostic Note
REG CTRL CURRNT	Regulator control current / Min.: 0 A Max.: 0.997 A	Value changes between 0 A and 0.997 A in accordance with compressor and magnetic clutch operation	-

OK:

The display is as specified in the normal condition column.

Result

Result	Proceed to
NG	A
OK (Checking from the PROBLEM SYMPTOMS TABLE)	B
OK (Checking from the DTC)	C

B → **PROCEED TO NEXT CIRCUIT INSPECTION SHOWN IN PROBLEM SYMPTOMS TABLE**

C → **REPLACE AIR CONDITIONING AMPLIFIER**

A

2 INSPECT COMPRESSOR AND PULLEY

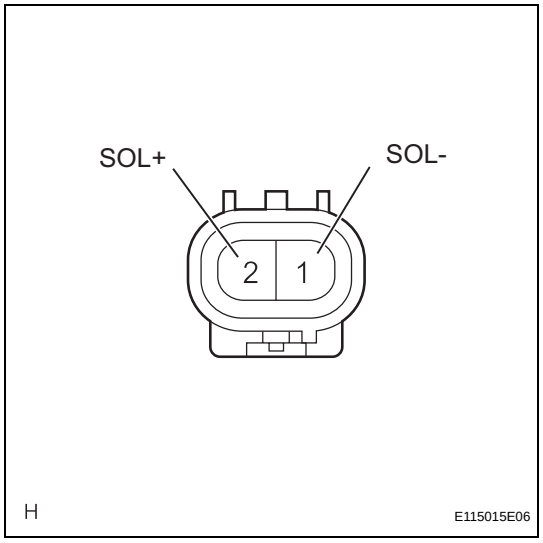

(a) Disconnect the compressor and pulley connector.

(b) Measure the resistance of the connector.

Standard resistance

Tester Connection	Condition	Specified Condition
1 (SOL-) - 2 (SOL+)	25°C (77°F)	10.1 to 11.1 Ω

NG → **REPLACE COMPRESSOR AND PULLEY**

OK

AC

3	CHECK WIRE HARNESS (COMPRESSOR AND PULLEY - AIR CONDITIONING AMPLIFIER)

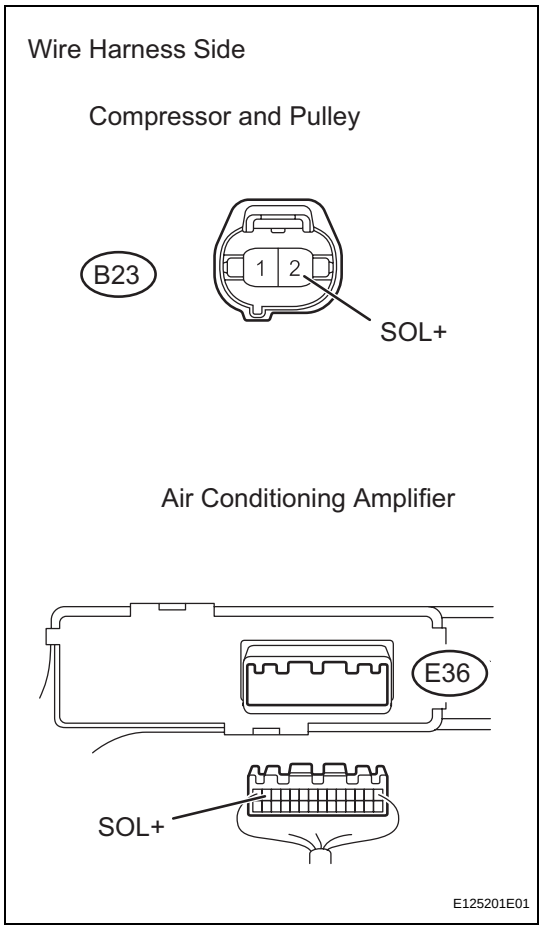

(a) Disconnect the B23 compressor and pulley connector.
(b) Disconnect the E36 amplifier connector.
(c) Measure the resistance of the wire harness side connectors.

Standard resistance

Tester Connection	Specified Condition
B23-2 (SOL+) - E36-13 (SOL+)	Below 1 Ω
B23-2 (SOL+) - Body Ground	1 MΩ or higher

NG → **REPAIR OR REPLACE HARNESS AND CONNECTOR**

OK

4	CHECK WIRE HARNESS (COMPRESSOR AND PULLEY - BODY GROUND)

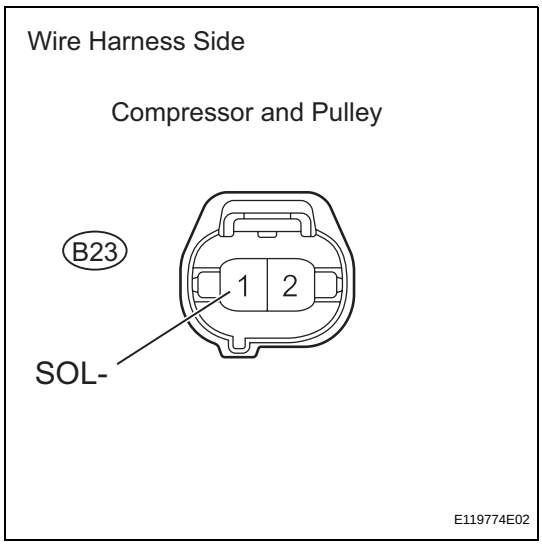

(a) Disconnect the B23 compressor and pulley connector.
(b) Measure the resistance of the wire harness side connector.

Standard resistance

Tester Connection	Specified Condition
B23-1 (SOL-) - Body ground	Below 1 Ω

NG → **REPAIR OR REPLACE HARNESS AND CONNECTOR**

AC

OK

REPLACE AIR CONDITIONING AMPLIFIER

DTC	B1451/51	**Compressor Solenoid Circuit** (2006/01-)

DESCRIPTION

In this circuit, the compressor receives a refrigerant compression demand signal from the air conditioning amplifier. Based on this signal, the compressor changes the degree of refrigerant compression.

DTC No.	DTC Detection Condition	Trouble Area
B1451/51	Open or short in solenoid of externally changeable compressor circuit	• A/C compressor* • Wire harness between air conditioning amplifier and A/C compressor* • Air conditioning amplifier

HINT:
*: Compressor and pulley for 2AZ-FE, compressor and magnetic clutch for 2GR-FE

WIRING DIAGRAM

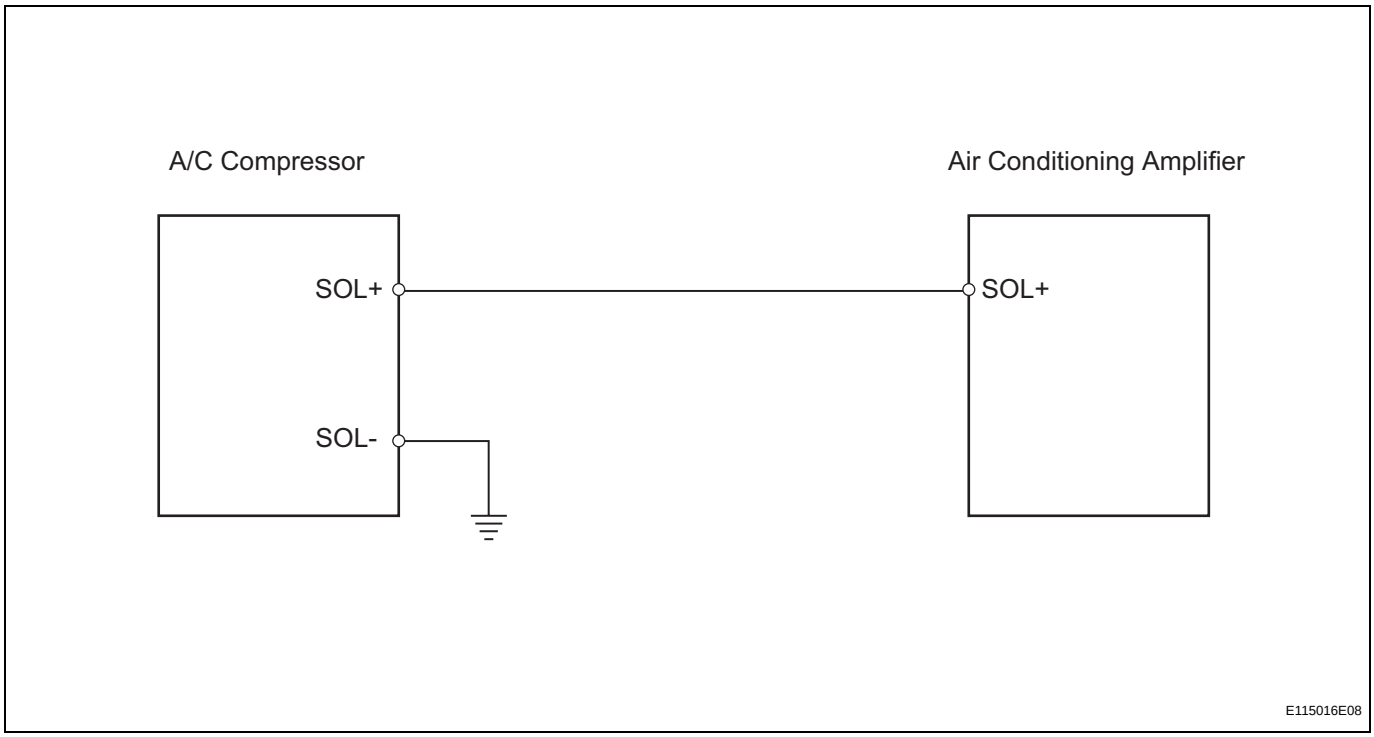

INSPECTION PROCEDURE

1	READ VALUE OF INTELLIGENT TESTER (REG CTRL CURRNT)

(a) Connect the intelligent tester (with CAN VIM) to the DLC3.
(b) Turn the ignition switch ON and turn the intelligent tester main switch ON.
(c) Select the items below in the DATA LIST, and read the value displayed on the intelligent tester.

AC

Air conditioning amplifier

Item	Measurement Item / Display (Range)	Normal Condition	Diagnostic Note
REG CTRL CURRNT	Regulator control current / Min.: 0 A Max.: 0.997 A	Value changes between 0 A and 0.997 A in accordance with A/C compressor operation	-

OK:

The display is as specified in the normal condition column.

Result

Result	Proceed to
NG	A
OK (Checking from the PROBLEM SYMPTOMS TABLE)	B
OK (Checking from the DTC)	C

B → **PROCEED TO NEXT CIRCUIT INSPECTION SHOWN IN PROBLEM SYMPTOMS TABLE**

C → **REPLACE AIR CONDITIONING AMPLIFIER**

A

2 INSPECT A/C COMPRESSOR

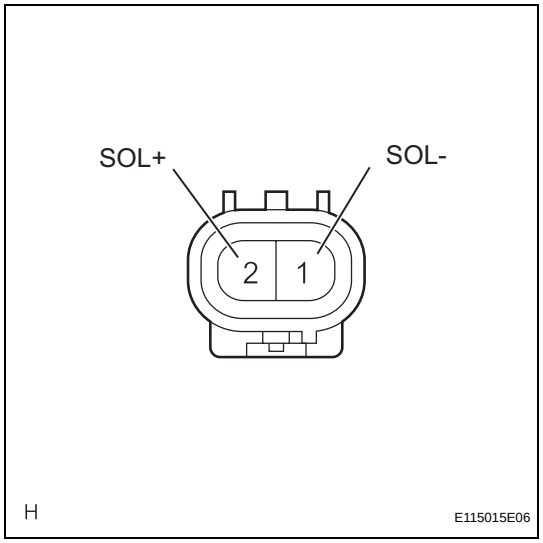

(a) Disconnect the A/C compressor connector.
(b) Measure the resistance of the connector.

Standard resistance

Tester Connection	Condition	Specified Condition
1 (SOL-) - 2 (SOL+)	25°C (77°F)	10.1 to 11.1 Ω

NG → **REPLACE A/C COMPRESSOR**

OK

AC

3 CHECK WIRE HARNESS (A/C COMPRESSOR - AIR CONDITIONING AMPLIFIER)

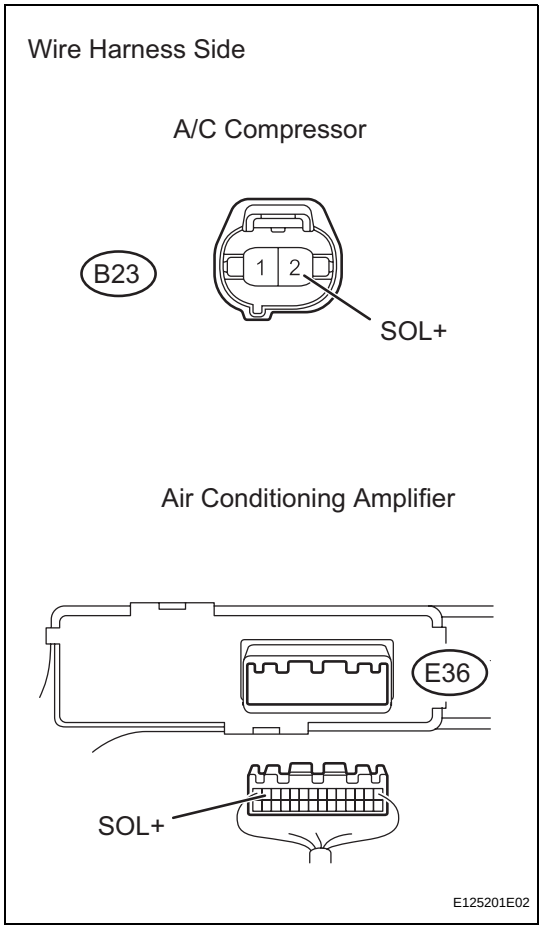

(a) Disconnect the B23 A/C compressor connector.
(b) Disconnect the E36 amplifier connector.
(c) Measure the resistance of the wire harness side connectors.

Standard resistance

Tester Connection	Specified Condition
B23-2 (SOL+) - E36-13 (SOL+)	Below 1 Ω
B23-2 (SOL+) - Body Ground	1 MΩ or higher

NG → **REPAIR OR REPLACE HARNESS AND CONNECTOR**

OK

4 CHECK WIRE HARNESS (A/C COMPRESSOR - BODY GROUND)

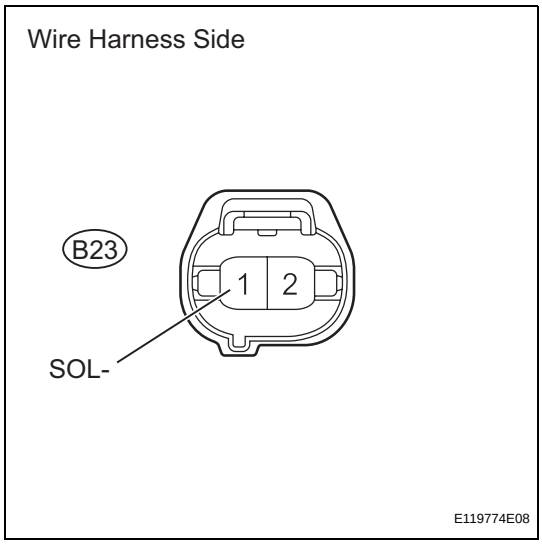

(a) Disconnect the B23 A/C compressor connector.
(b) Measure the resistance of the wire harness side connector.

Standard resistance

Tester Connection	Specified Condition
B23-1 (SOL-) - Body ground	Below 1 Ω

NG → **REPAIR OR REPLACE HARNESS AND CONNECTOR**

AC

OK

REPLACE AIR CONDITIONING AMPLIFIER

DTC	B1499/99	Multiplex Communication Circuit

DESCRIPTION

The air conditioning amplifier communicates data with the ECM and combination meter through the CAN communication system.

DTC No.	DTC Detection Condition	Trouble Area
B1499/99	Open in CAN communication line	• Air conditioning amplifier • ECM • Combination meter • CAN communication line

WIRING DIAGRAM

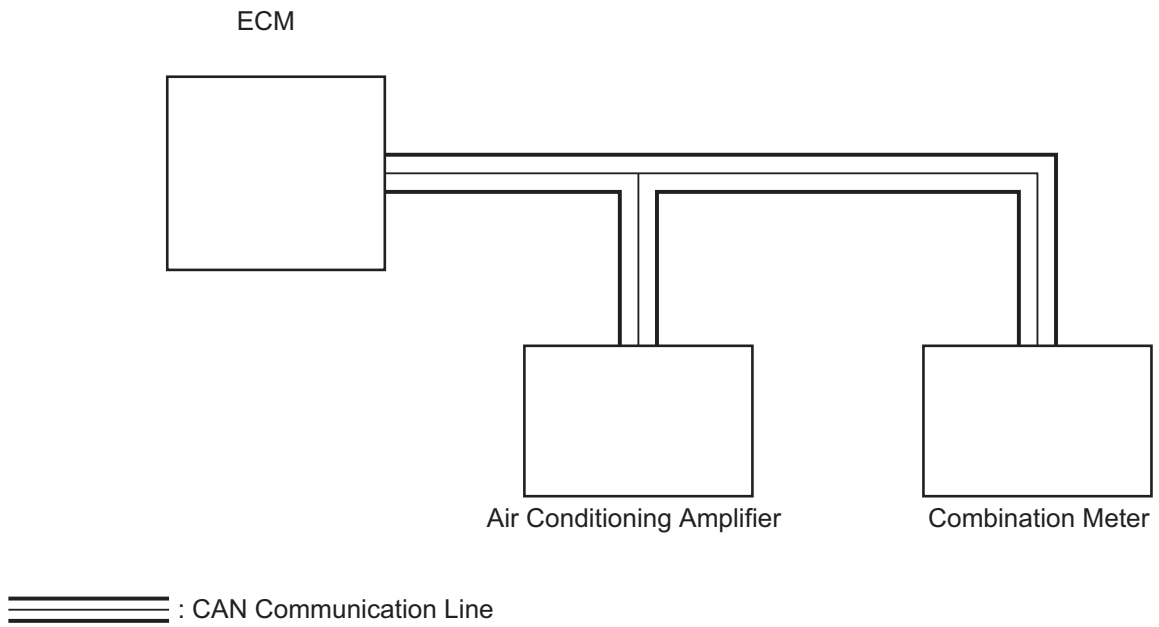

AC

INSPECTION PROCEDURE

1	CHECK DTC

(a) Clear the DTC (see page AC-127).
(b) Read the DTC (see page AC-127).

Result

Result	Proceed to
DTC (B1499/99) is output	A (see page CA-1)
DTC (B1499/99) is not output	B

B → **SYSTEM IS OK**

A → **GO TO CAN COMMUNICATION SYSTEM**

Blower Motor Circuit

DESCRIPTION

When the heater control (blower switch) is set to position 1 or higher, the contact of the HTR relay is closed, current flows to the blower motor, and the blower motor operates. The blower motor speed can be changed by exchanging the ground and the blower resistor circuit with the heater control (blower switch).

WIRING DIAGRAM

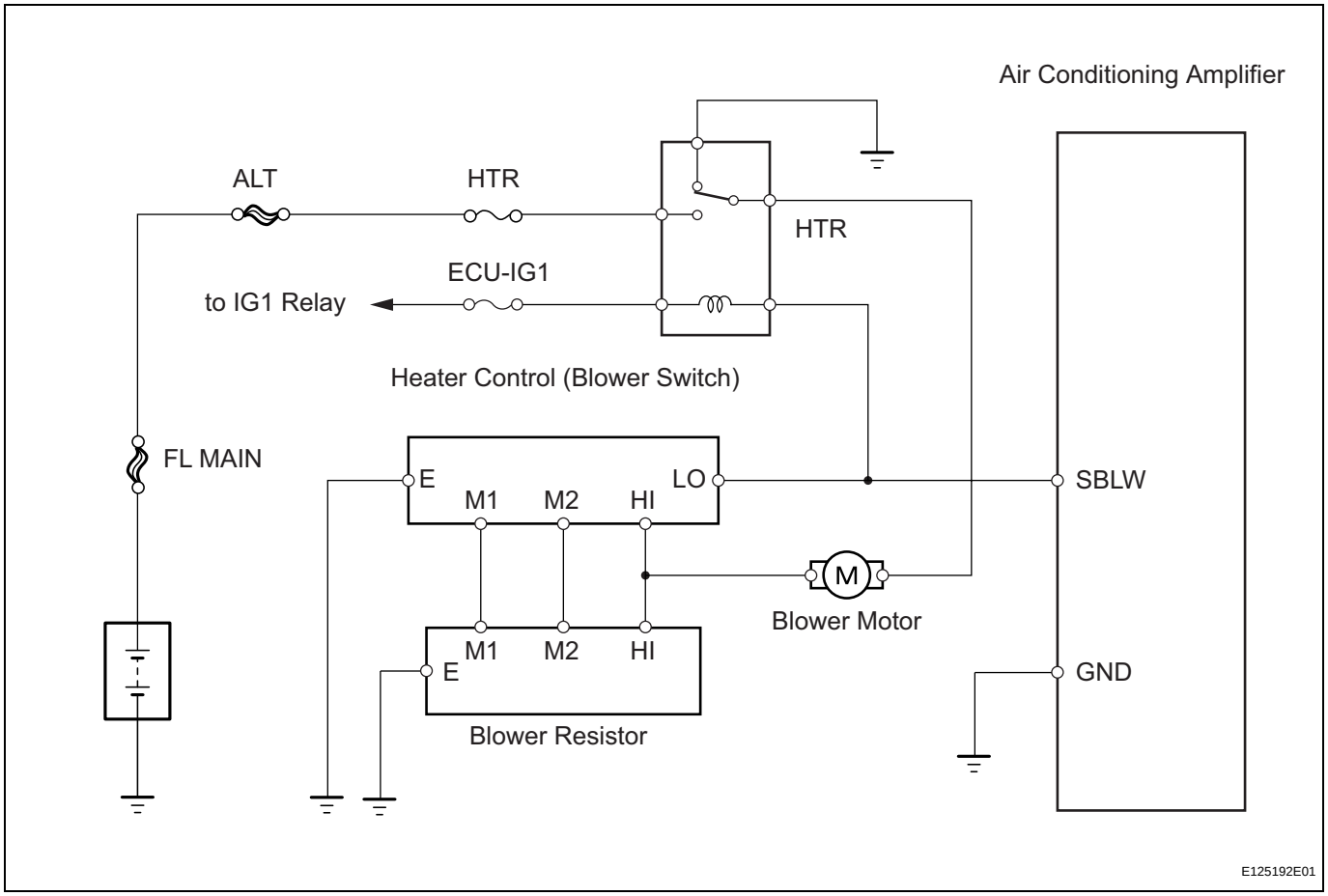

INSPECTION PROCEDURE

1	INSPECT FUSE (HTR)

(a) Remove the HTR fuse from the engine room No. 2 relay block.
(b) Measure the resistance of the fuse.
Standard resistance:
Below 1 Ω

NG → **REPLACE FUSE**

OK

AC

2 INSPECT HEATER RELAY (Marking: HTR)

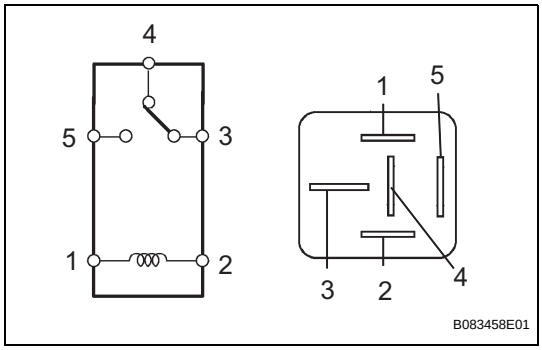

(a) Remove the heater relay from the instrument panel junction block.
(b) Measure the resistance of the relay.
Standard resistance

Tester Connection	Specified Condition
3 - 4	Below 1 Ω
3 - 5	10 kΩ or higher
3 - 4	10 kΩ or higher (when battery voltage is applied to terminals 1 and 2)
3 - 5	Below 1 Ω (when battery voltage is applied to terminals 1 and 2)

NG → **REPLACE HEATER RELAY**

OK

3 INSPECT BLOWER MOTOR

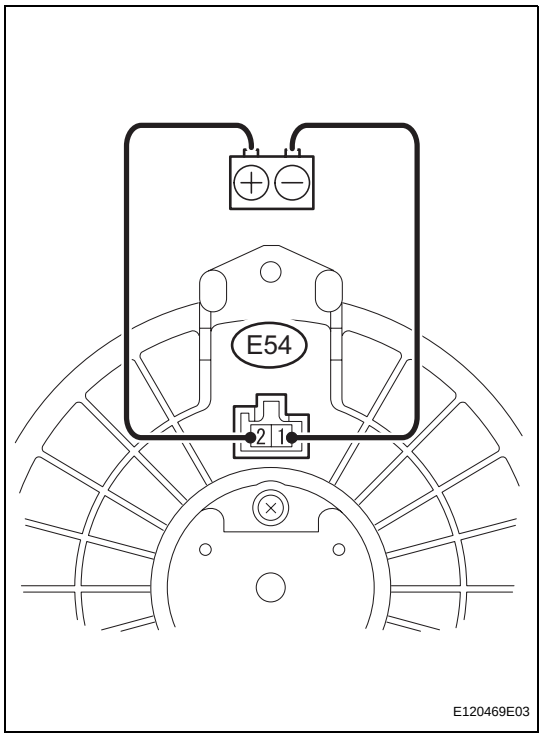

(a) Disconnect the E54 motor connector.
(b) Connect the positive (+) lead from the battery to terminal 2 and the negative (-) lead to terminal 1, then check that the blower motor operates smoothly.
OK:
The blower motor operates smoothly.
(c) Measure the current.
Standard current

Tester Connection	Condition	Specified Condition
E54-1 - E54-2	Blower motor operates	1 to 3 A

NG → **REPLACE BLOWER MOTOR**

OK

AC

4 CHECK WIRE HARNESS (HEATER CONTROL (BLOWER SWITCH) - BATTERY)

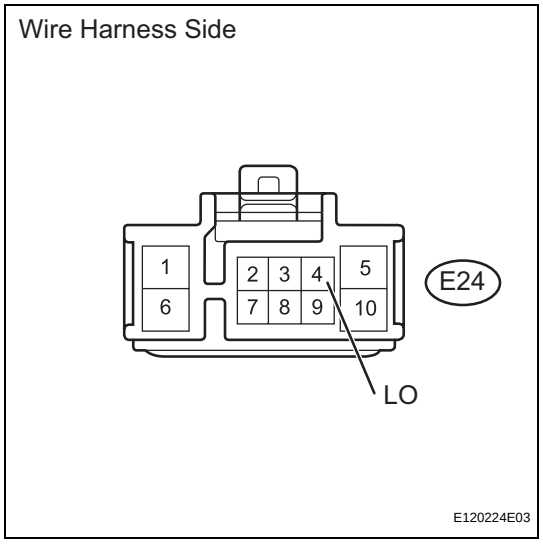

(a) Disconnect the E24 heater control connector.
(b) Measure the voltage of the wire harness side connector.
Standard voltage

Tester Connection	Condition	Specified Condition
E24-4 (LO) - Body ground	Ignition switch ON	10 to 14 V

NG → **REPAIR OR REPLACE HARNESS AND CONNECTOR**

OK

5 INSPECT HEATER CONTROL (BLOWER SWITCH)

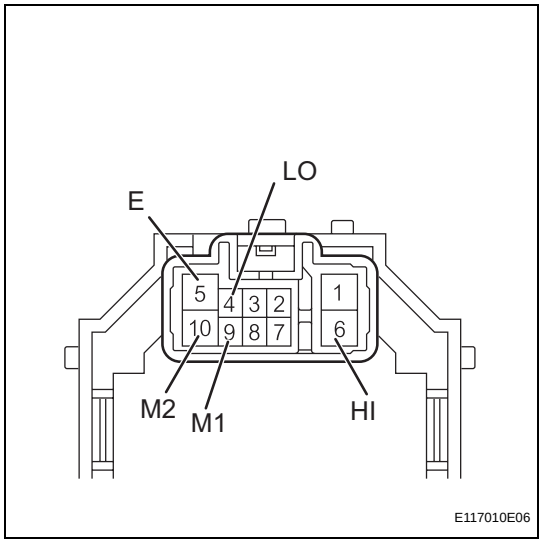

(a) Remove the heater control.
(b) Measure the resistance of the switch.
Standard resistance

Tester Connection	Switch Position	Specified Condition
ALL - 5 (E)	0	10 kΩ or higher
4 (LO) - 5 (E)	1	Below 1 Ω
4 (LO) - 5 (E) - 9 (M1)	1 to 2	Below 1 Ω
4 (LO) - 5 (E) - 9 (M1)	2	Below 1 Ω
(LO) - (E) - 9 (M1) - 10 (M2)	2 to 3	Below 1 Ω
4 (LO) - 5 (E) - 10 (M2)	3	Below 1 Ω
4 (LO) - 5 (E) - 10 (M2) - 6(HI)	3 to 4	Below 1 Ω
4 (LO) - 5 (E) - 6 (HI)	4	Below 1 Ω

NG → **REPLACE HEATER CONTROL**

OK

AC

6 INSPECT BLOWER RESISTOR

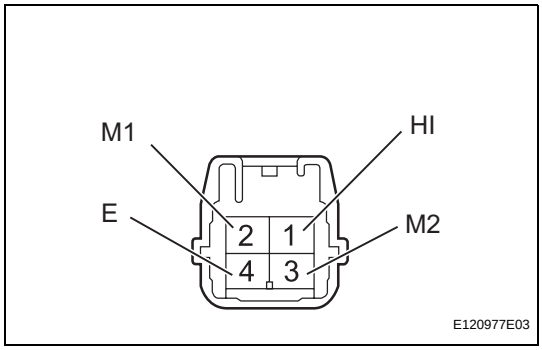

(a) Remove the blower resistor.
(b) Measure the resistance of the resistor.
Standard resistance

Tester Connection	Specified Condition
E55-4 (E) - E55-1 (HI)	3.12 to 3.60 Ω
E55-4 (E) - E55-3 (M2)	1.45 to 1.67 Ω
E55-4 (E) - E55-2 (M1)	0.52 to 0.60 Ω

NG → **REPLACE BLOWER RESISTOR**

OK

7 CHECK WIRE HARNESS (HEATER CONTROL (BLOWER SWITCH) - BLOWER RESISTOR)

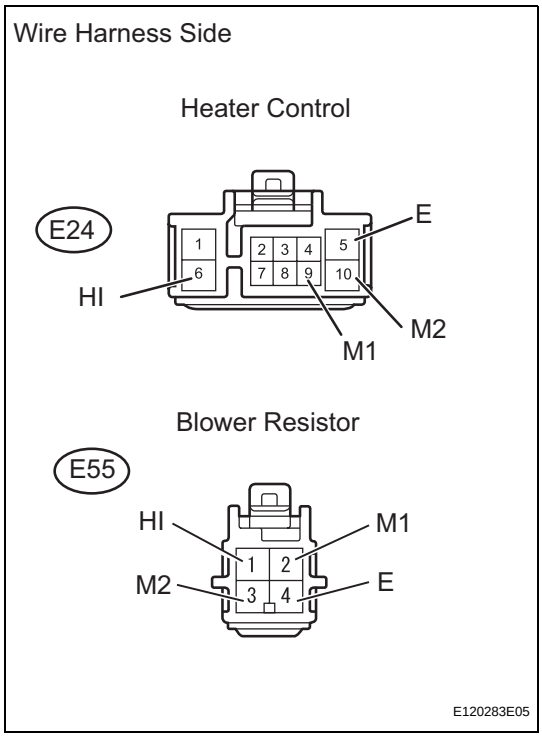

(a) Disconnect the E24 heater control connector.
(b) Disconnect the E55 blower resistor connector.
(c) Measure the resistance of the wire harness side connectors.
Standard resistance

Tester Connection	Specified Condition
E24-6 (HI) - E55-1 (HI)	Below 1 Ω
E24-9 (M1) - E55-2 (M1)	Below 1 Ω
E24-10 (M2) - E55-3 (M2)	Below 1 Ω
E24-5 (E) - Body ground	Below 1 Ω
E55-4 (E) - Body ground	Below 1 Ω

NG → **REPAIR OR REPLACE HARNESS AND CONNECTOR**

OK

AC

8 CHECK WIRE HARNESS (BLOWER RESISTOR - BLOWER MOTOR)

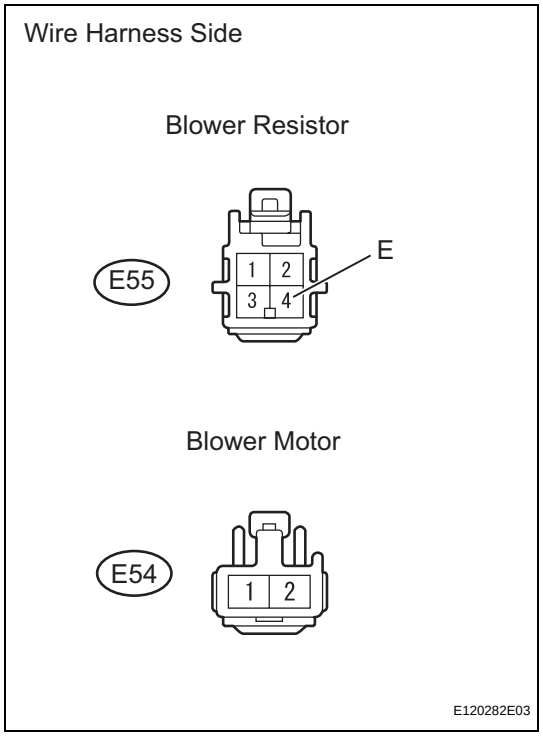

(a) Disconnect the E55 blower resistor connector.
(b) Disconnect the E54 motor connector.
(c) Measure the resistance of the wire harness side connectors.

Standard resistance

Tester Connection	Specified Condition
E55-4 (E) - E54-1	Below 1 Ω

NG → **REPAIR OR REPLACE HARNESS AND CONNECTOR**

OK

9 CHECK WIRE HARNESS (BLOWER MOTOR - BODY GROUND)

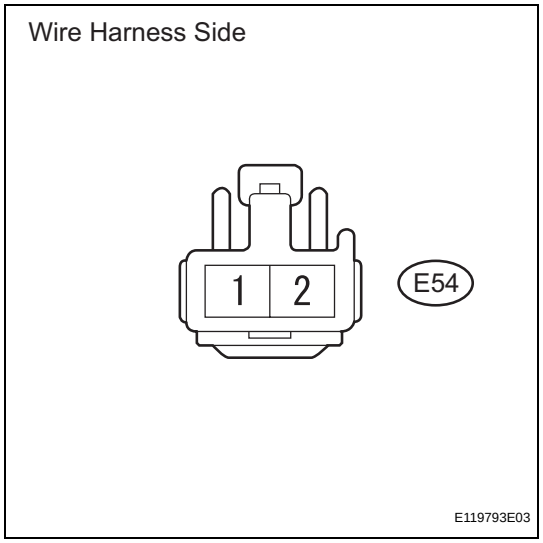

(a) Disconnect the E54 motor connector.
(b) Measure the resistance of the wire harness side connector.

Standard resistance

Tester Connection	Specified Condition
E54-2 - Body ground	Below 1 Ω

(c) Measure the voltage of the wire harness side connector.

Standard voltage

Tester Connection	Condition	Specified Condition
E54-2 - Body ground	Ignition switch ON Heater control (blower switch) 1	10 to 14 V

NG → **REPAIR OR REPLACE HARNESS AND CONNECTOR**

OK

AC

10 CHECK WIRE HARNESS (AIR CONDITIONING AMPLIFIER - BATTERY)

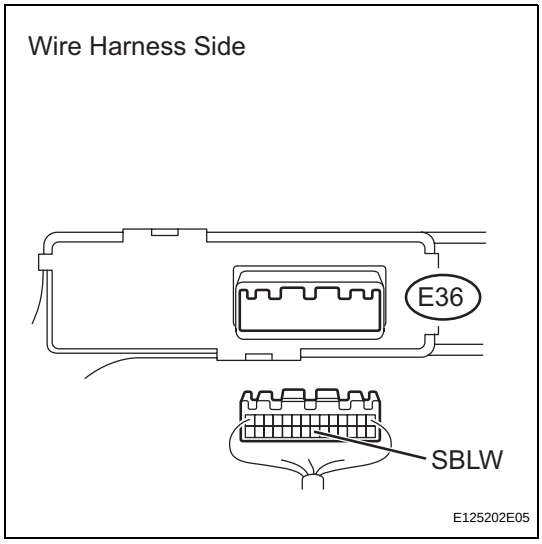

(a) Disconnect the E36 amplifier connector.
(b) Measure the voltage of the wire harness side connector.
Standard voltage

Tester Connection	Condition	Specified Condition
E36-21 (SBLW) - Body ground	Ignition switch ON Heater control (blower switch) 0	10 to 14 V

NG → **REPAIR OR REPLACE HARNESS AND CONNECTOR**

OK

11 CHECK WIRE HARNESS (AIR CONDITIONING AMPLIFIER - BODY GROUND)

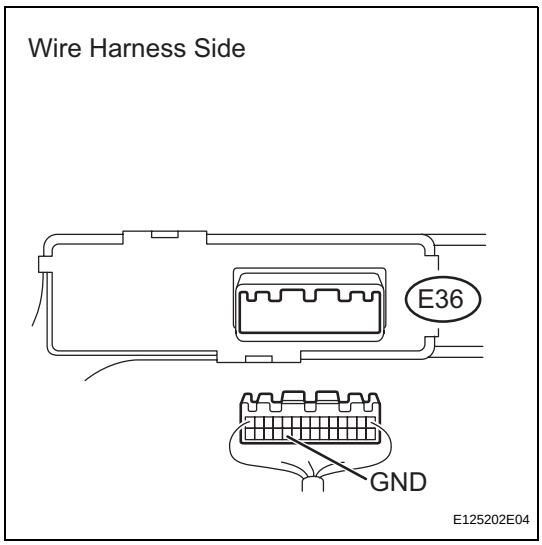

(a) Disconnect the E36 amplifier connector.
(b) Measure the resistance of the wire harness side connector.
Standard resistance

Tester Connection	Specified Condition
E36-24 (GND) - Body ground	Below 1 Ω

NG → **REPAIR OR REPLACE HARNESS AND CONNECTOR**

OK

PROCEED TO NEXT CIRCUIT INSPECTION SHOWN IN PROBLEM SYMPTOMS TABLE

AC

Compressor Circuit

DESCRIPTION

When the A/C switch is turned on, the magnetic clutch ON signal is sent from the air conditioning amplifier. Then the MG CLT relay turns on to operate the magnetic clutch.

WIRING DIAGRAM

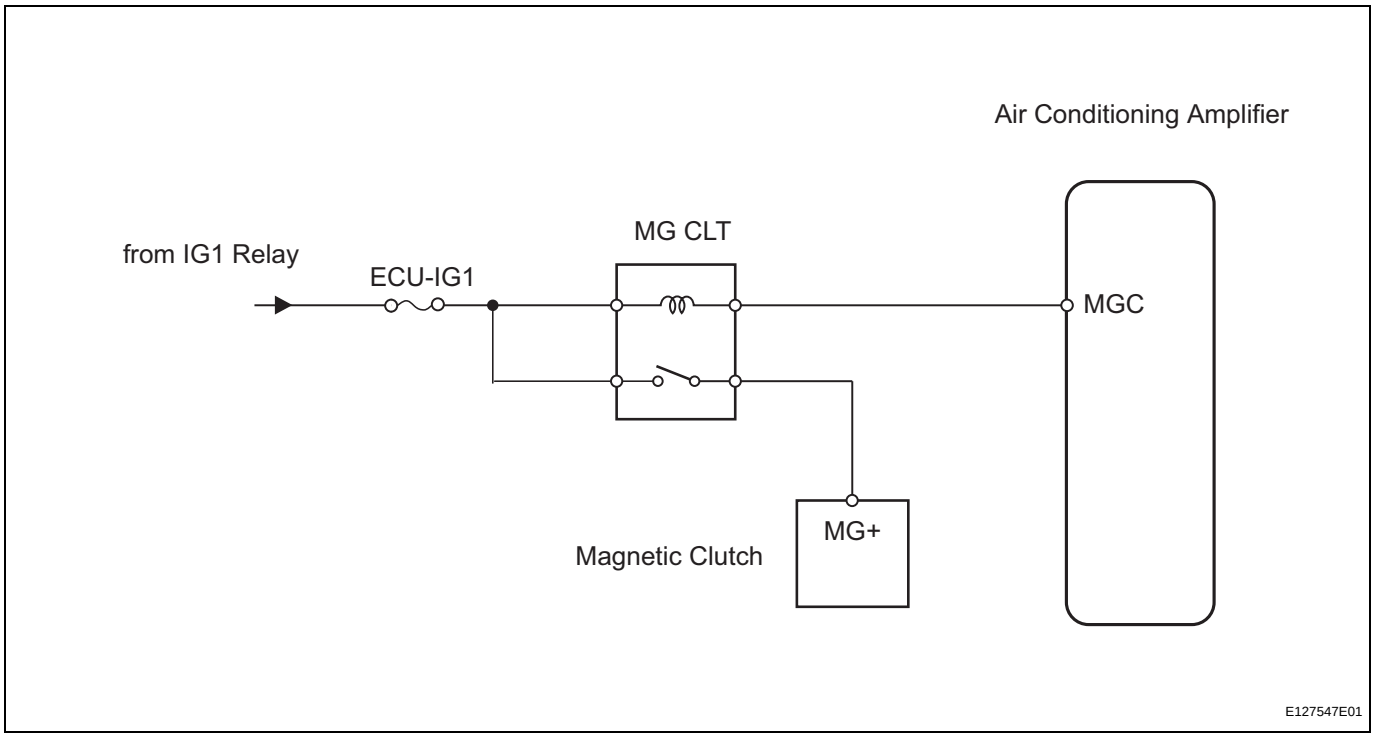

AC

INSPECTION PROCEDURE

1	PERFORM ACTIVE TEST BY INTELLIGENT TESTER (A/C MAG CLUTCH)

(a) Connect the intelligent tester (with CAN VIM) to the DLC3.
(b) Turn the ignition switch ON and turn the intelligent tester main switch ON.
(c) Select the item below in the ACTIVE TEST and then check that the compressor magnetic relay operates.

Air conditioning amplifier

Item	Test Details / Display (Range)	Diagnostic Note
A/C MAG CLUTCH	Magnetic clutch relay / OFF, ON	Operating sound can be heard

OK → **PROCEED TO NEXT CIRCUIT INSPECTION SHOWN IN PROBLEM SYMPTOMS TABLE**

NG

2	INSPECT FUSE (ECU-IG1)

(a) Remove the ECU-IG1 fuse from the instrument panel junction block.
(b) Measure the resistance of the fuse.
Standard resistance:
Below 1 Ω

NG → **REPLACE FUSE**

OK

3	INSPECT MAGNETIC CLUTCH RELAY (Marking: MG CLT)

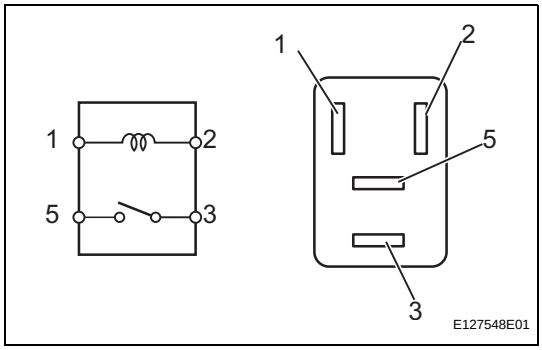

(a) Remove the magnetic clutch relay from the engine room No. 1 relay block.
(b) Measure the resistance of the relay.
Standard resistance

Tester Connection	Specified Condition
3 - 5	10 kΩ or higher
3 - 5	Below 1 Ω (when battery voltage is applied to terminals 1 and 2)

NG → **REPLACE MAGNETIC CLUTCH RELAY**

OK

AC

4	CHECK WIRE HARNESS (AIR CONDITIONING AMPLIFIER - BATTERY)

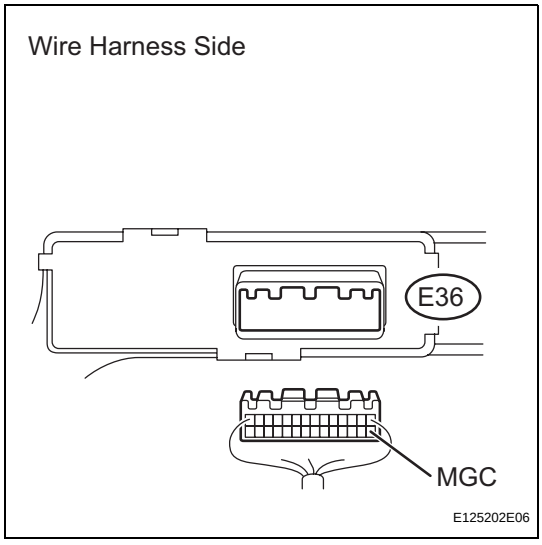

(a) Disconnect the E36 amplifier connector.
(b) Measure the voltage of the wire harness side connector.
Standard voltage

Tester Connection	Condition	Specified Condition
E36-15 (MGC) - Body ground	Ignition switch ON	10 to 14 V
E36-15 (MGC) - Body ground	Ignition switch OFF	Below 1 V

NG → **REPAIR OR REPLACE HARNESS AND CONNECTOR**

OK

5 CHECK AIR CONDITIONING AMPLIFIER (MGC VOLTAGE)

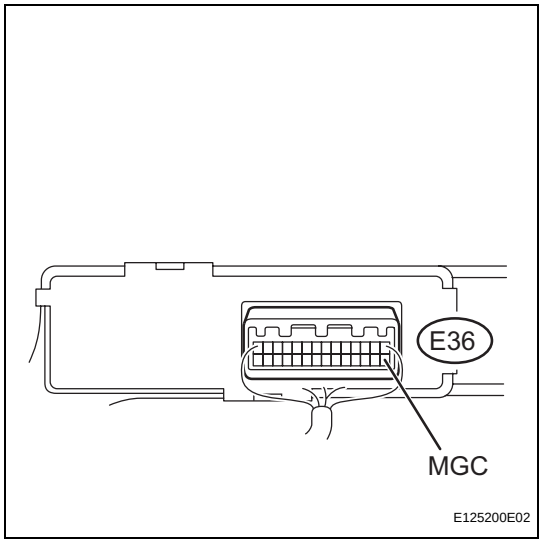

(a) Remove the air conditioning amplifier with its connectors still connected.
(b) Measure the voltage of the connector.
Standard voltage

Tester Connection	Condition	Specified Condition
E36-15 (MGC) - Body ground	Ignition switch ON A/C switch OFF	10 to 14 V
E36-15 (MGC) - Body ground	Ignition switch ON A/C switch ON	Below 1 V

NG → **REPLACE AIR CONDITIONING AMPLIFIER**

OK

6 CHECK MAGNETIC CLUTCH

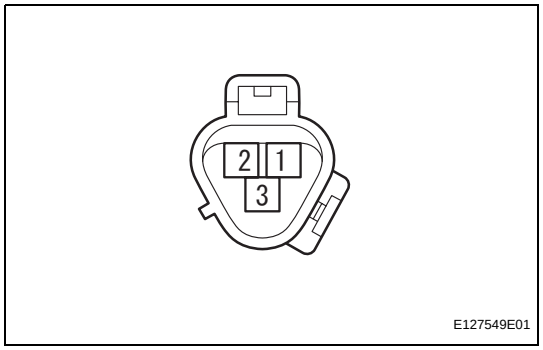

(a) Disconnect the B47 magnetic clutch connector.
(b) Connect the battery's positive (+) lead to terminal 3 of the magnetic clutch and the negative (-) lead to the body ground.
OK:
Magnetic clutch is engaged.

NG → **REPLACE MAGNETIC CLUTCH**

OK

REPAIR OR REPLACE WIRE HARNESS (MAGNETIC CLUTCH - ECU-IG1)

AC

IG Power Source Circuit

DESCRIPTION

This is the main power source supplied to the air conditioning amplifier when the ignition switch is ON. This power source is used for operating components, such as the air conditioning amplifier and servo motors.

WIRING DIAGRAM

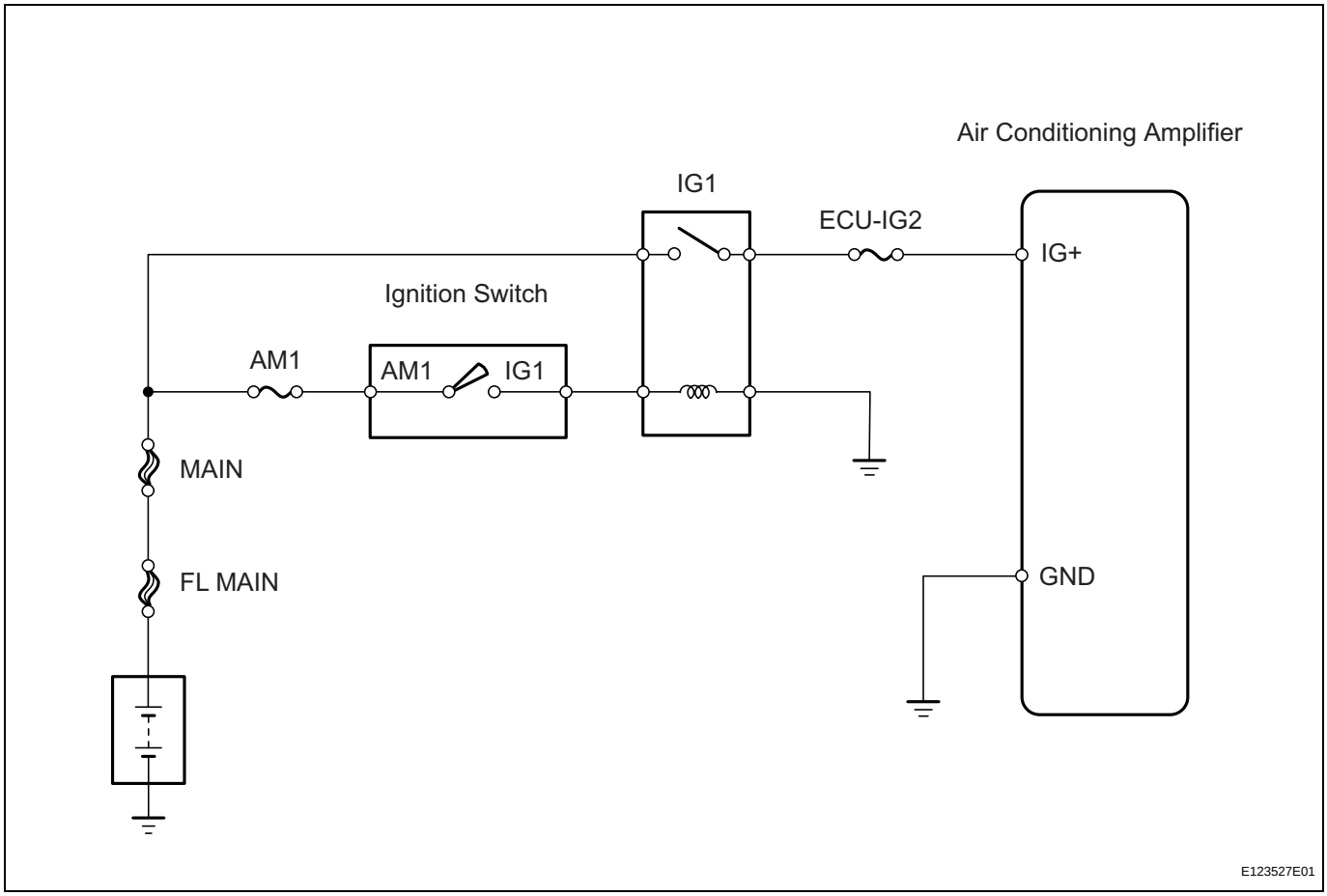

AC

INSPECTION PROCEDURE

1	**INSPECT FUSE (ECU-IG2)**

(a) Remove the ECU-IG2 fuse from the instrument panel junction block.
(b) Measure the resistance of the fuse.
Standard resistance:
Below 1 Ω

NG → **REPLACE FUSE**

OK

2 CHECK WIRE HARNESS (AIR CONDITIONING AMPLIFIER - BATTERY)

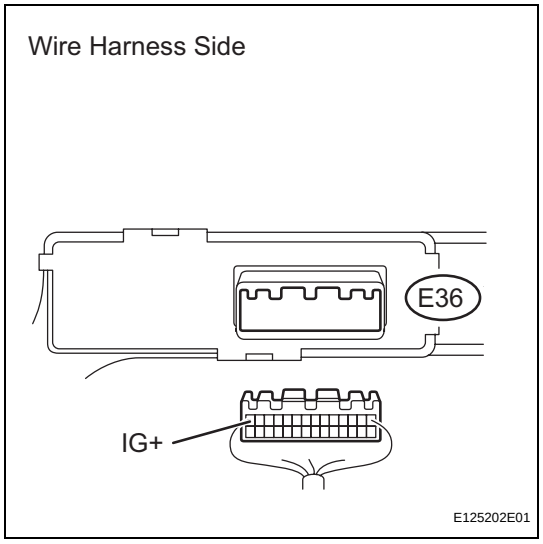

(a) Disconnect the E36 amplifier connector.
(b) Measure the voltage of the wire harness side connector.
Standard voltage

Tester Connection	Condition	Specified Condition
E36-14 (IG+) - Body ground	Ignition switch ON	10 to 14 V

NG → **REPAIR OR REPLACE HARNESS AND CONNECTOR**

OK

3 CHECK WIRE HARNESS (AIR CONDITIONING AMPLIFIER - BODY GROUND)

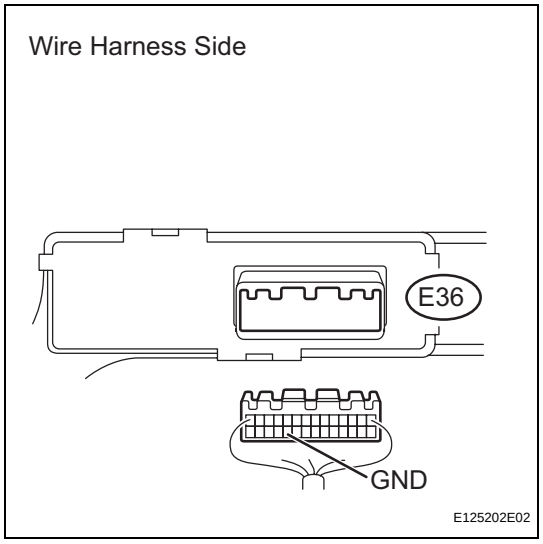

(a) Disconnect the E36 amplifier connector.
(b) Measure the resistance of the wire harness side connector.
Standard resistance

Tester Connection	Specified Condition
E36-24 (GND) - Body ground	Below 1 Ω

NG → **REPAIR OR REPLACE HARNESS AND CONNECTOR**

OK

PROCEED TO NEXT CIRCUIT INSPECTION SHOWN IN PROBLEM SYMPTOMS TABLE

AC

AIR CONDITIONING SYSTEM (for Manual Air Conditioning System)

PRECAUTION

1. **IF ANY OF FOLLOWING CONDITIONS ARE MET, KEEP ENGINE IDLING WITH A/C ON (ENGINE SPEED AT LESS THAN 2000 RPM) FOR AT LEAST 1 MINUTE:**
   - Refrigerant gas has been refilled or A/C parts have been replaced.
   - A long time has elapsed since the engine was stopped.

   NOTICE:
   If the engine speed exceeds 2,000 rpm, the A/C compressor may be damaged.

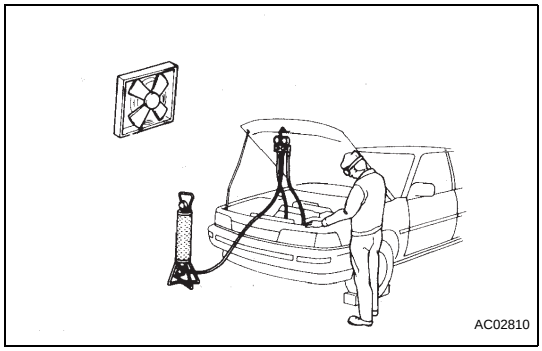

2. **DO NOT HANDLE REFRIGERANT IN ENCLOSED AREAS OR NEAR OPEN FLAMES**
3. **ALWAYS WEAR EYE PROTECTION**

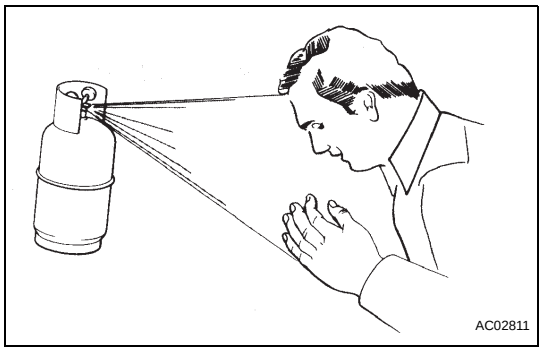

4. **BE CAREFUL NOT TO GET LIQUID REFRIGERANT IN YOUR EYES OR ON YOUR SKIN**
   If liquid refrigerant gets in your eyes or on your skin:
   (a) Wash the area with lots of cold water.
   CAUTION:
   Do not rub your eyes or skin.
   (b) Apply clean petroleum jelly to the skin.
   (c) Go immediately to a physician or hospital for professional treatment.
5. **NEVER HEAT CONTAINER OR EXPOSE IT TO OPEN FLAME**
6. **BE CAREFUL NOT TO DROP CONTAINER OR SUBJECT IT TO PHYSICAL SHOCKS**

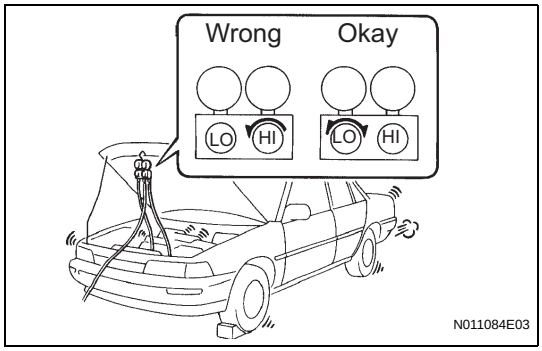

7. **DO NOT OPERATE COMPRESSOR WITH INSUFFICIENT REFRIGERANT IN REFRIGERANT SYSTEM**
   If there is not enough refrigerant in the refrigerant system, oil lubrication will be insufficient and compressor burnout may occur. Necessary care should be taken to avoid this.
8. **DO NOT OPEN HIGH PRESSURE MANIFOLD VALVE WHILE COMPRESSOR IS OPERATING**
   Open and close only the low pressure valve. Opening and closing the high pressure valve could cause the charging cylinder to rupture.

AC

9. **BE CAREFUL NOT TO OVERCHARGE SYSTEM WITH REFRIGERANT**
   If the refrigerant is overcharged, it causes problems such as insufficient cooling, poor fuel economy and engine overheating.
10. **DO NOT OPERATE ENGINE AND COMPRESSOR WITHOUT REFRIGERANT**
    NOTICE:
    This may damage the inside of the compressor.

REMOVAL

1. **DISCHARGE REFRIGERANT FROM REFRIGERATION SYSTEM (See page AC-172)**

2. **DISCONNECT CABLE FROM NEGATIVE BATTERY TERMINAL**
   CAUTION:
   Wait at least 90 seconds after disconnecting the cable from the negative (-) battery terminal to prevent airbag and seat belt pretensioner activation.

3. **REMOVE TUBE SUB-ASSEMBLY**
   (a) Remove the bolt.
   (b) Remove plate, as shown in the illustration.
   (c) Disconnect the suction tube and liquid tube.
   NOTICE:
   - **Do not use a screwdriver or similar tool to disconnect the tube.**

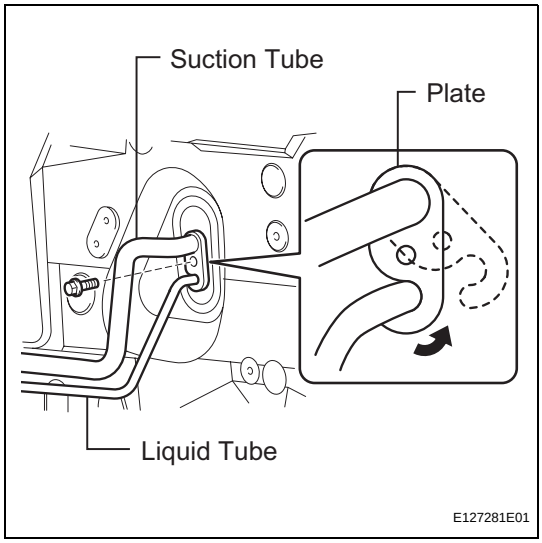

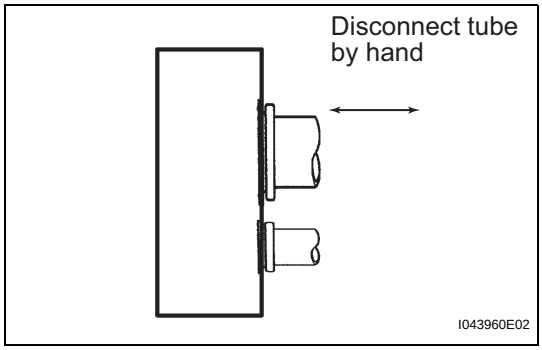

   - **Seal the opening of the disconnected parts using vinyl tape to prevent moisture and foreign matter from entering them.**
   (d) Remove the 2 O-rings from the suction tube and liquid tube.

4. **DISCONNECT INLET HEATER WATER HOSE**
   (a) Using pliers, grip the claws of the clip and slide the clip.
   (b) Disconnect the heater water inlet hose.

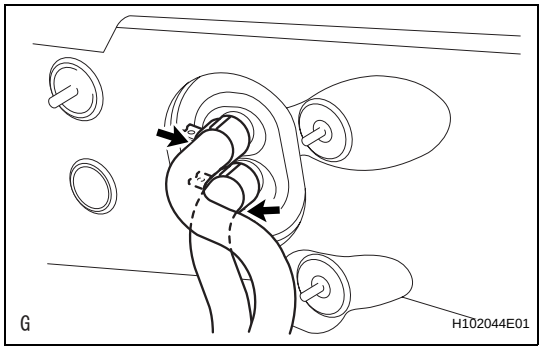

5. **DISCONNECT OUTLET HEATER WATER HOSE**
   HINT:
   Disconnection of the heater water outlet hose is the same as for the heater water inlet hose.

6. **REMOVE STEERING COLUMN ASSEMBLY**
   (a) Remove the steering column (see page SR-11).

7. **REMOVE UPPER INSTRUMENT PANEL**
   (a) Remove the upper instrument panel (see page IP-4).

AC

8. REMOVE LOWER INSTRUMENT PANEL

(a) Remove the lower instrument panel (see page IP-16).

9. REMOVE DEFROSTER NOZZLE ASSEMBLY

(a) Detach the 3 claws and remove the defroster nozzle assembly.

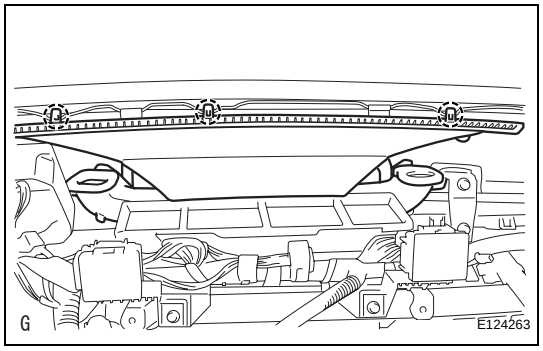

10. REMOVE NO. 1 INSTRUMENT PANEL BRACE SUB-ASSEMBLY

(a) Fold the floor carpet back.

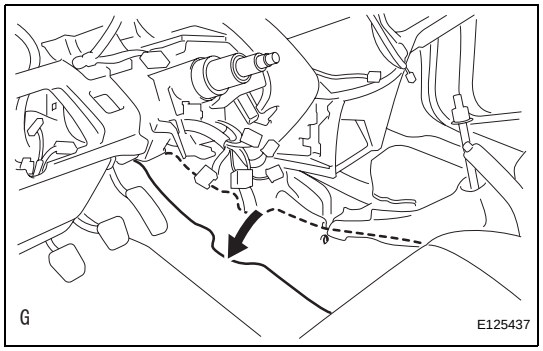

(b) Disconnect the clamp and disconnect the wire harness.

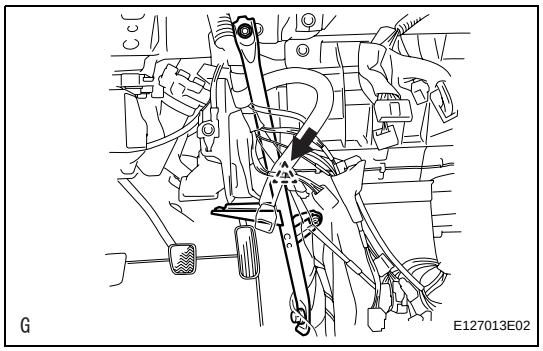

(c) Remove the bolt, nut, screw, and instrument panel brace.

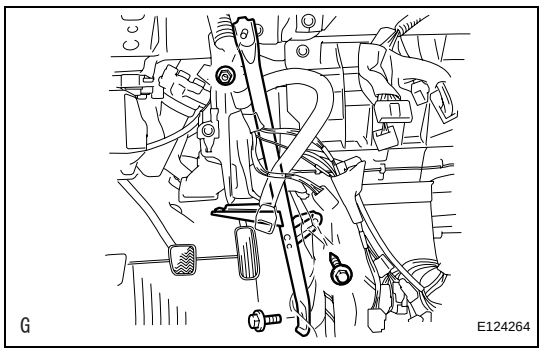

AC

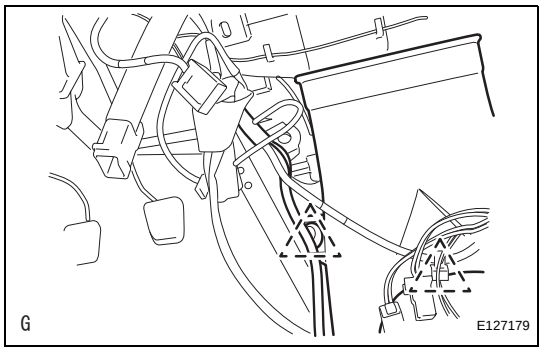

11. REMOVE AIR DUCT REAR

(a) Disconnect the 2 clamps and disconnect the wire harness.

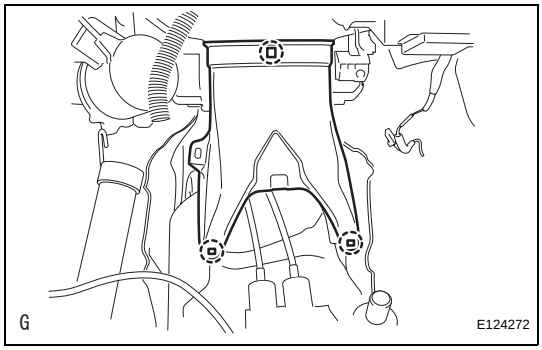

(b) Detach the 3 claws and remove the air duct rear.

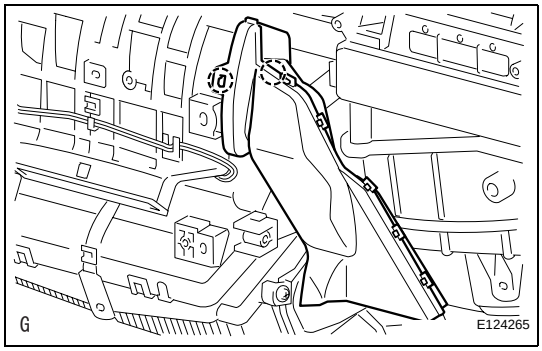

12. REMOVE AIR DUCT

(a) Detach the 2 claws and remove the air duct.

AC

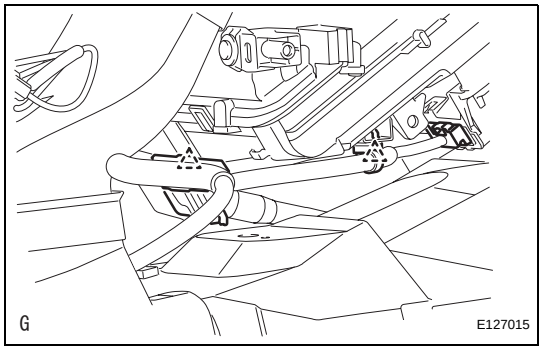

13. REMOVE AIR CONDITIONING AMPLIFIER ASSEMBLY

(a) Detach the 2 clamps.

(b) Disconnect the connector.

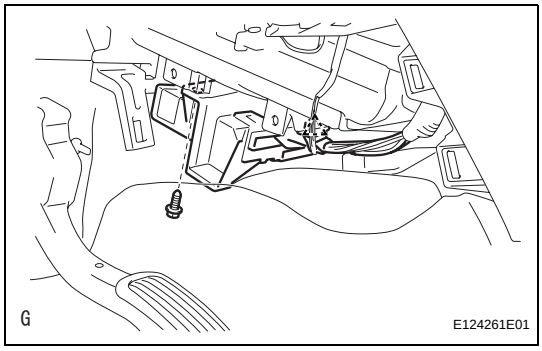

(c) Remove the screw and amplifier.

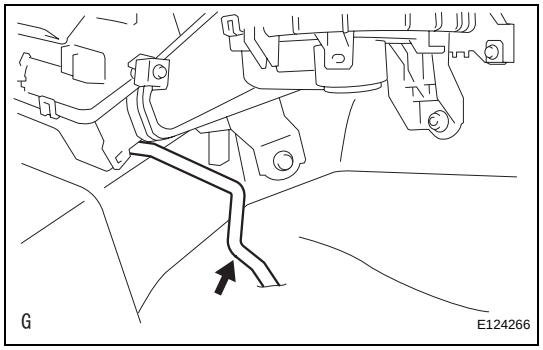

14. REMOVE DRAIN COOLER HOSE

(a) Remove the drain hose.

15. REMOVE INSTRUMENT PANEL REINFORCEMENT

(a) Disconnect the 12 clamps.

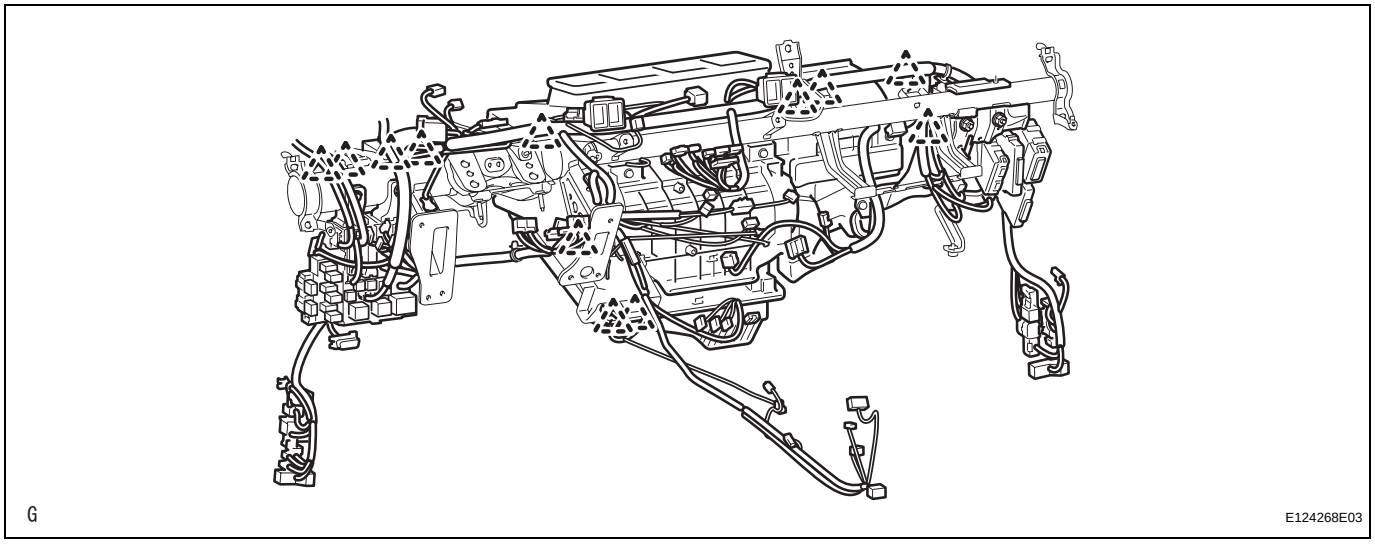

(b) Remove the 4 bolts and disconnect the ground wire.

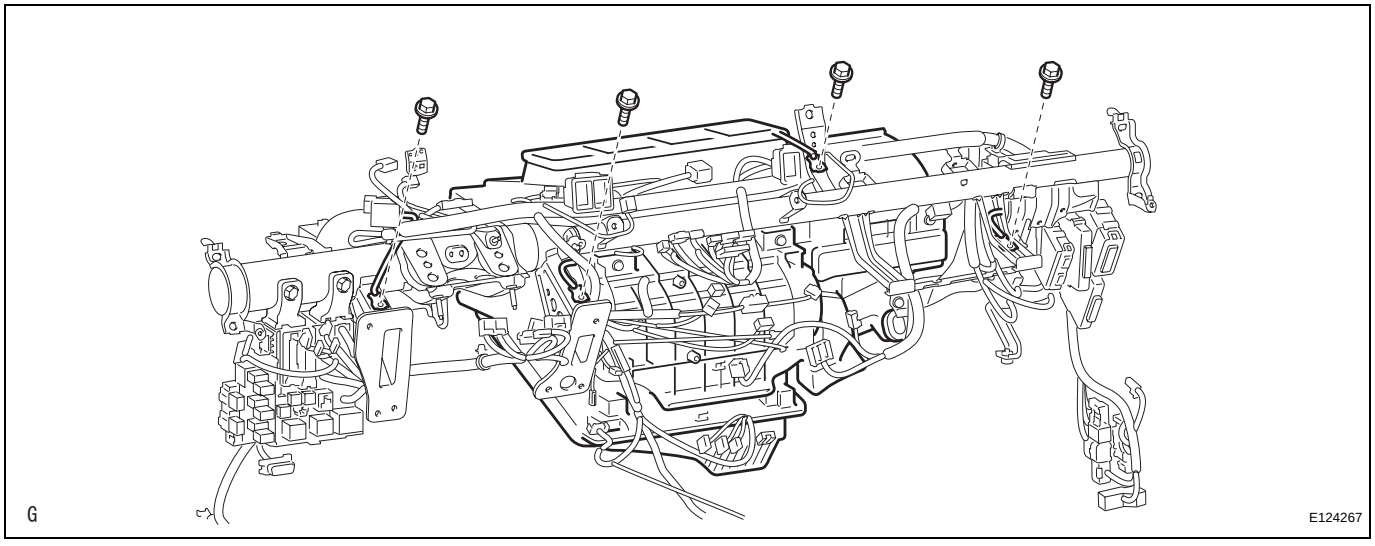

AC

(c) Remove the 3 bolts.

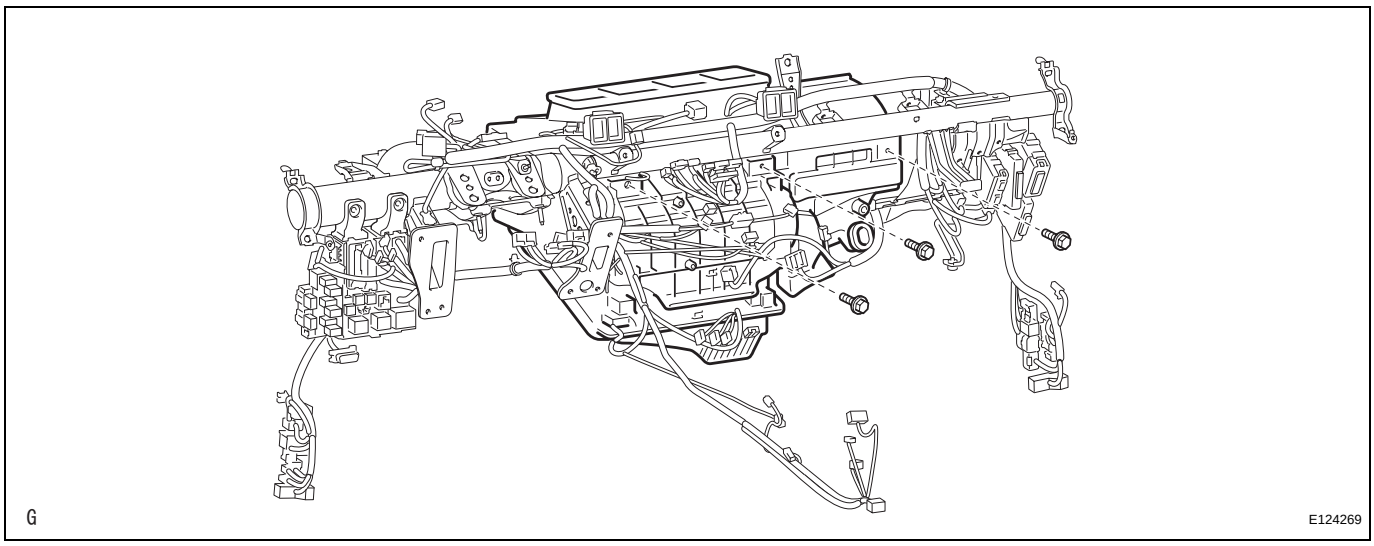

(d) Remove the 6 bolts and instrument panel reinforcement.

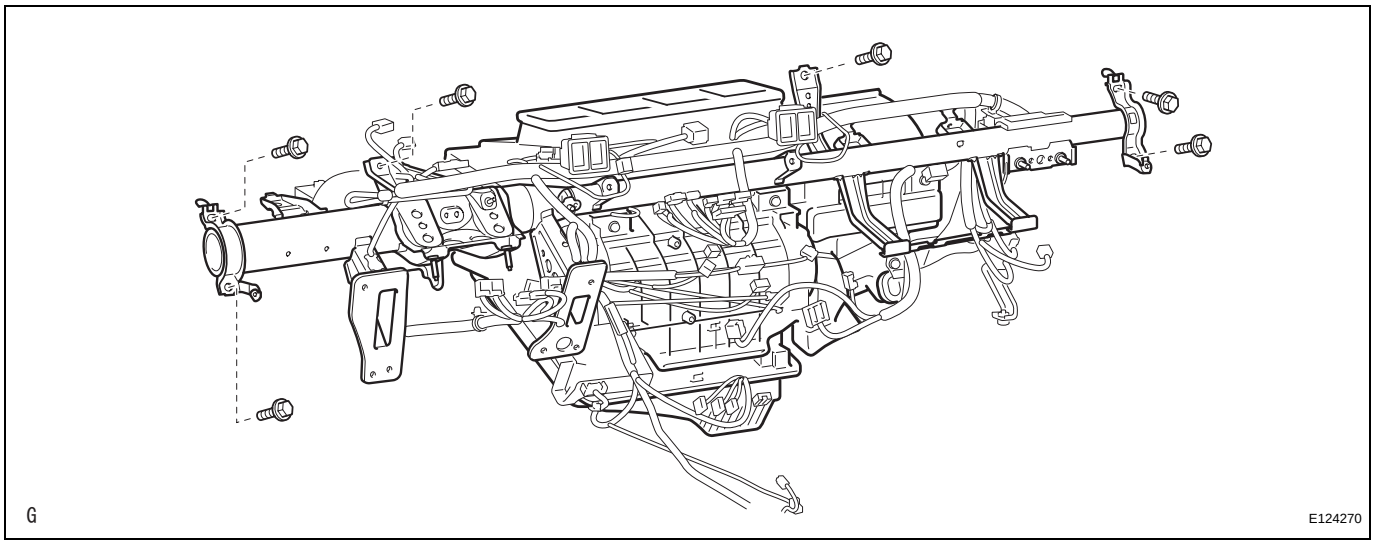

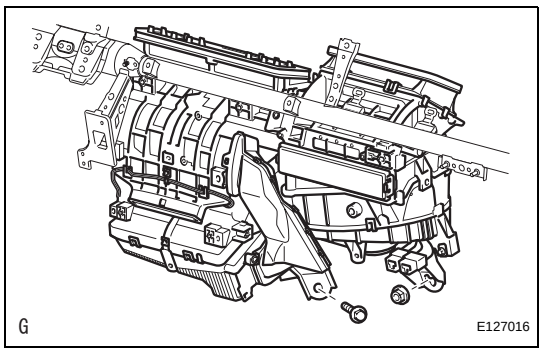

16. REMOVE AIR CONDITIONER UNIT ASSEMBLY

(a) Remove the bolt, nut and A/C unit.

DISASSEMBLY

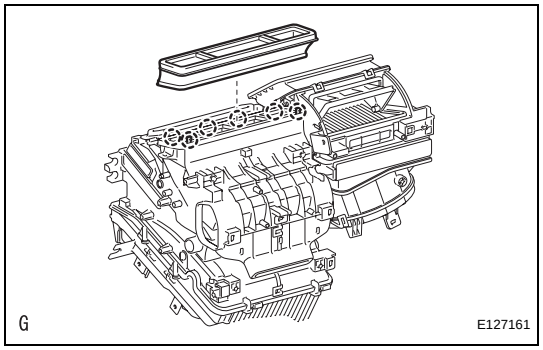

1. REMOVE NO. 3 HEATER TO REGISTER DUCT

(a) Detach the 6 claws and remove the heater to register duct.

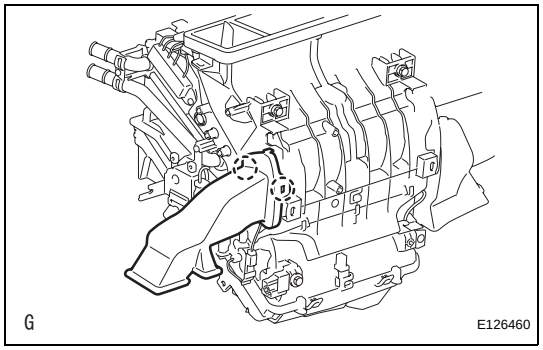

2. REMOVE AIR DUCT

(a) Detach the 2 claws and remove the air duct.

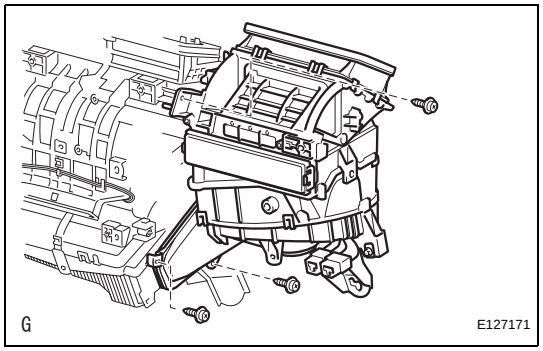

3. REMOVE AIR OUTLET CONTROL SERVO MOTOR

(a) Remove the 3 screws.

(b) Detach the evaporator case from the blower case.

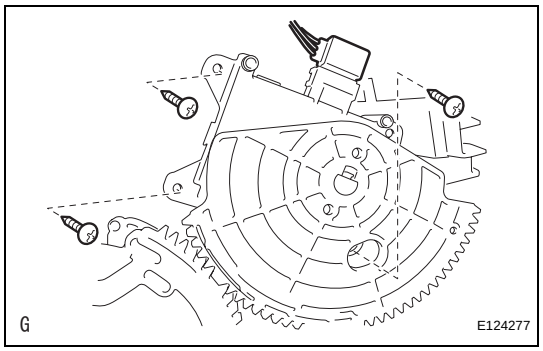

(c) Remove the 3 screws and disconnect the connector.

(d) Remove the air outlet control servo motor.

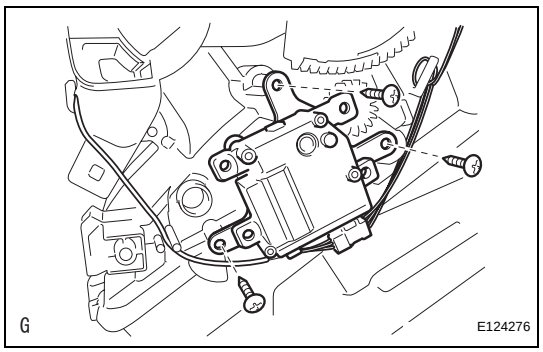

4. REMOVE AIR MIX CONTROL SERVO MOTOR

(a) Remove the 3 screws and disconnect the connector.

(b) Remove the air mix control servo motor.

AC

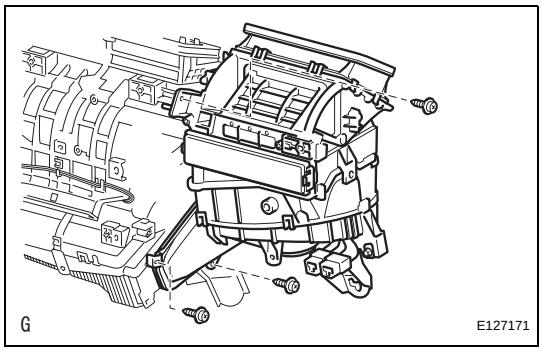

5. REMOVE MODE CONTROL CABLE ASSEMBLY (for Manual Air Conditioning System)

(a) Remove the 3 screws.

(b) Detach the evaporator case from the blower case.

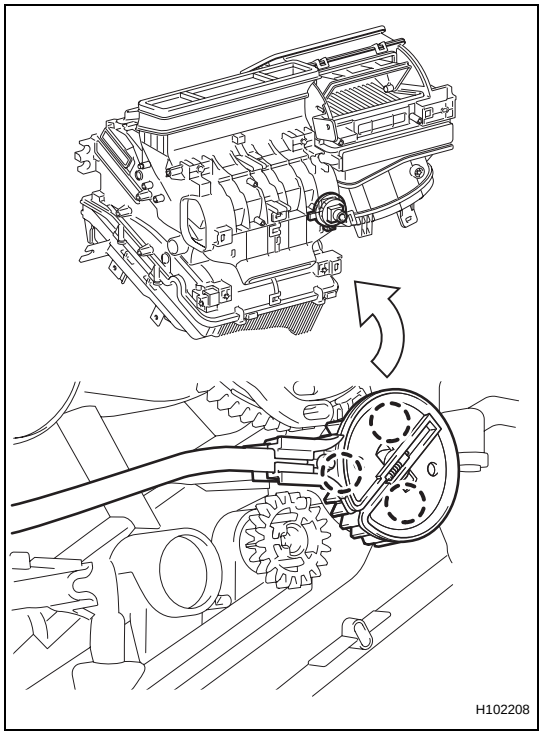

(c) Detach the 3 claws and remove the cable.

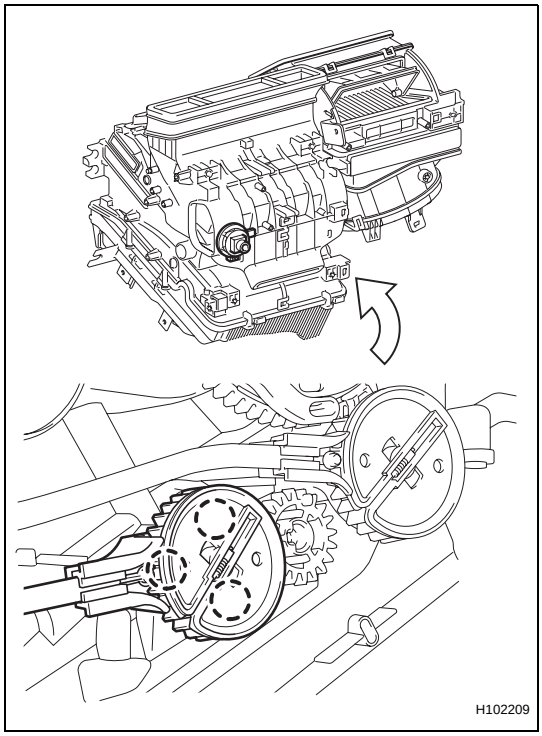

6. REPAIR AIRMIX DAMPER CONTROL CABLE SUB-ASSEMBLY (for Manual Air Conditioning System)

(a) Detach the 3 claws and remove the cable.

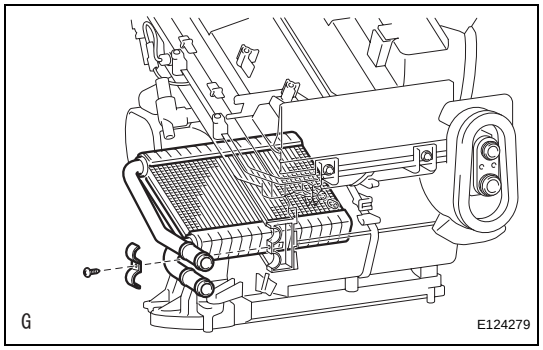

7. REMOVE HEATER RADIATOR UNIT SUB-ASSEMBLY

(a) Detach the screw and remove the clamp.
(b) Remove the heater radiator unit.

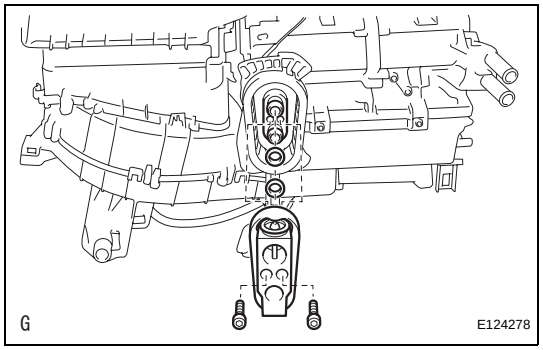

8. REMOVE COOLER EXPANSION VALVE

(a) Using a 4 mm hexagon wrench, remove the 2 hexagon bolts.
(b) Remove the cooler expansion valve and 2 O-rings from the cooler evaporator.

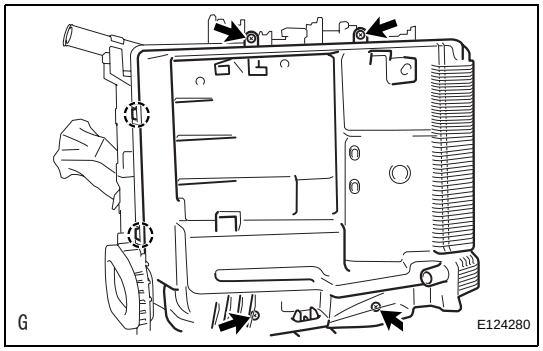

9. REMOVE NO. 1 COOLER EVAPORATOR SUB-ASSEMBLY

(a) Remove the 4 screws.
(b) Detach the 2 claws and remove the cover.

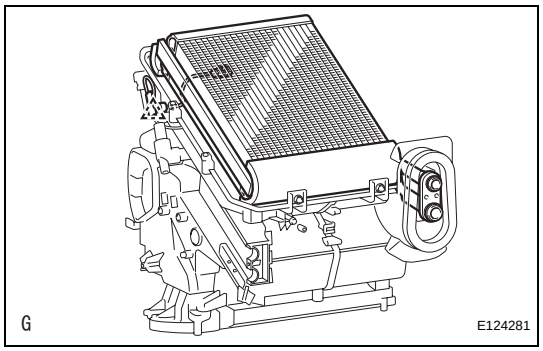

(c) Detach the cooler thermistor clamp.
(d) Remove the cooler thermistor and cooler evaporator from the case.

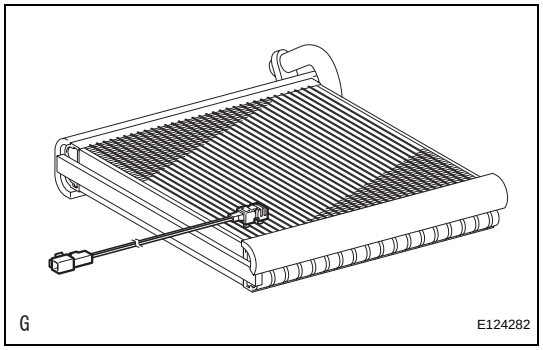

10. REMOVE EVAPORATOR TEMPERATURE SENSOR

(a) Disconnect the cooler thermistor clamp from the cooler evaporator.

AC

REASSEMBLY

1. INSTALL EVAPORATOR TEMPERATURE SENSOR

NOTICE:

If reusing the evaporator, do not insert the sensor to a location where the sensor was previously inserted. Insert the sensor within range C shown in the illustration.

(a) Install the evaporator temperature sensor as shown in the illustration.

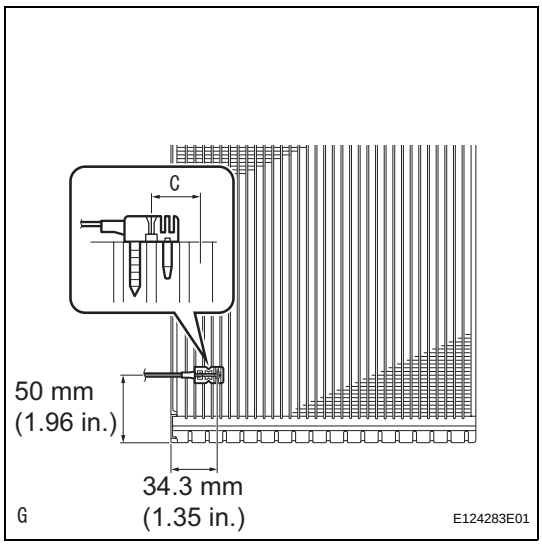

2. INSTALL NO. 1 COOLER EVAPORATOR SUB-ASSEMBLY

(a) Install the cooler thermistor and cooler evaporator on the case.

(b) Attach the temperature sensor clamp.

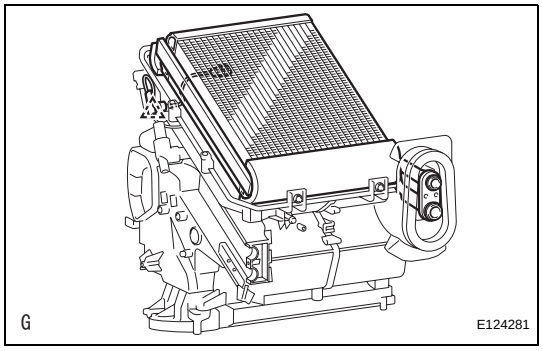

(c) Attach the 2 claws to install the cover.

(d) Install the 4 screws.

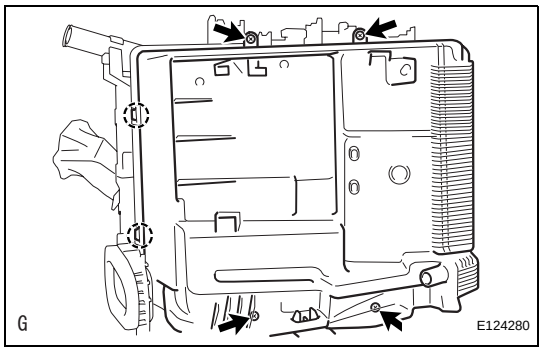

AC

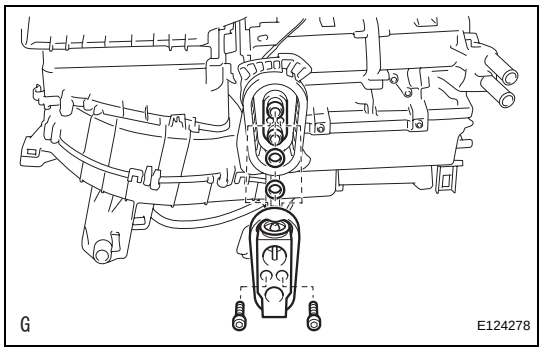

3. INSTALL COOLER EXPANSION VALVE

(a) Sufficiently apply compressor oil to 2 new O-rings and the fitting surface of the hose joint.
Compressor oil:
ND-OIL 8 or equivalent
(b) Install the 2 O-rings to the cooler evaporator.
(c) Install the cooler expansion valve.
(d) Using a 4 mm hexagon wrench, install the A/C tube with the 2 hexagon bolts.
Torque: 3.5 N*m (35 kgf*cm, 30 in.*lbf)

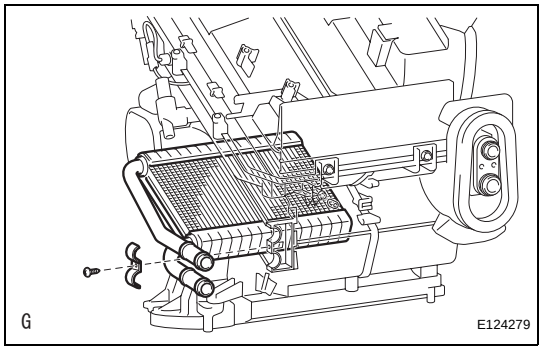

4. INSTALL HEATER RADIATOR UNIT SUB-ASSEMBLY

(a) Install the heater radiator with the clamp and screw.

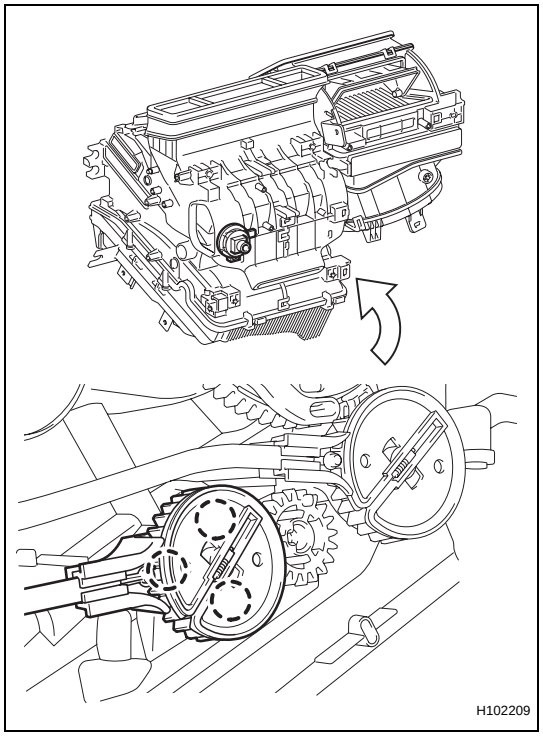

5. INSTALL AIRMIX DAMPER CONTROL CABLE SUB-ASSEMBLY (for Manual Air Conditioning System)

(a) Attach the 3 claws to install the cable.

AC

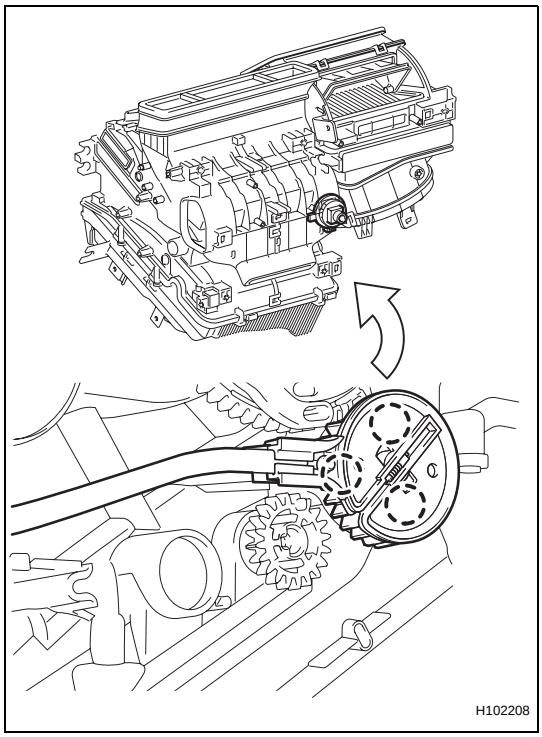

6. INSTALL MODE CONTROL CABLE ASSEMBLY (for Manual Air Conditioning System)

(a) Attach the 3 claws to install the cable.

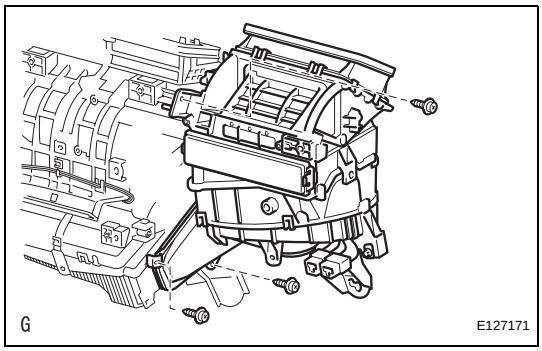

(b) Attach the evaporator case to the blower case.

(c) Install the cable with the 3 screws.

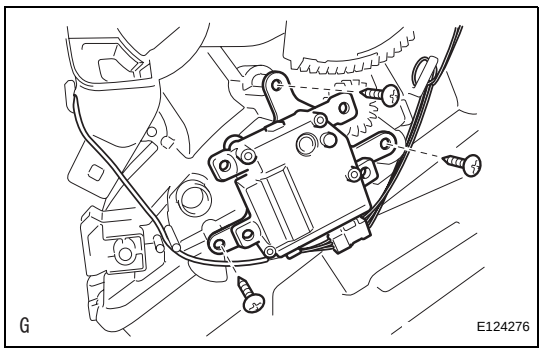

7. INSTALL AIR MIX CONTROL SERVO MOTOR

(a) Install the air mix control servo motor with the 3 screws and connect the connector.

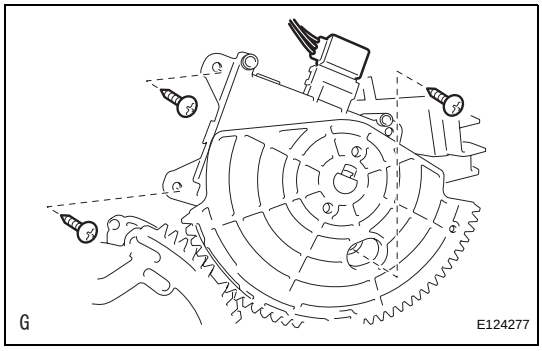

8. INSTALL AIR OUTLET CONTROL SERVO MOTOR

(a) Install the air outlet control servo motor with the 3 screws and connect the connector.

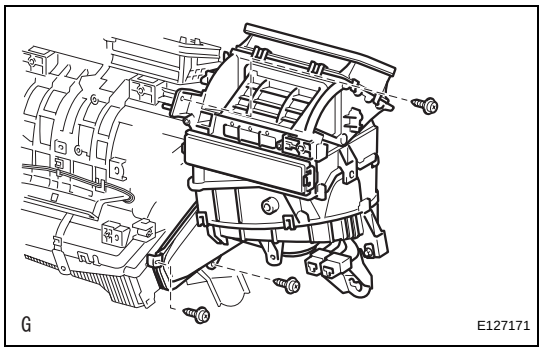

(b) Attach the evaporator case to the blower case.
(c) Install the 3 screws.

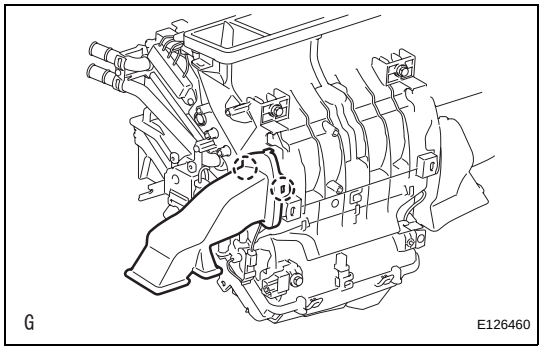

9. INSTALL AIR DUCT

(a) Attach the 2 claws and install the air duct.

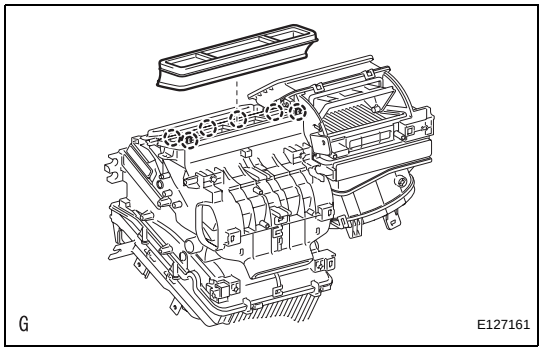

10. INSTALL NO. 3 HEATER TO REGISTER DUCT

(a) Attach the 6 claws and install the heater to register duct.

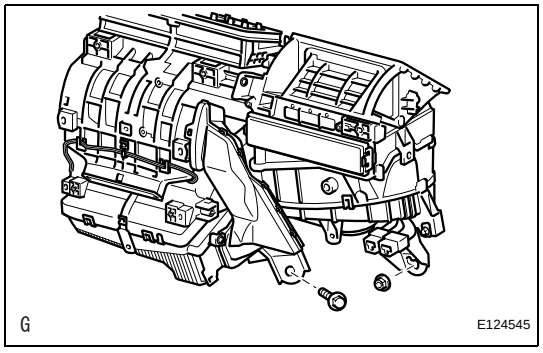

INSTALLATION

1. INSTALL AIR CONDITIONER UNIT ASSEMBLY

(a) Install the A/C unit with the bolt and nut.
Torque: 9.8 N*m (100 kgf*cm, 7 ft.*lbf)

2. INSTALL INSTRUMENT PANEL REINFORCEMENT

(a) Install the instrument panel reinforcement with the 6 bolts.
Torque: 20 N*m (204 kgf*cm, 15 ft.*lbf)

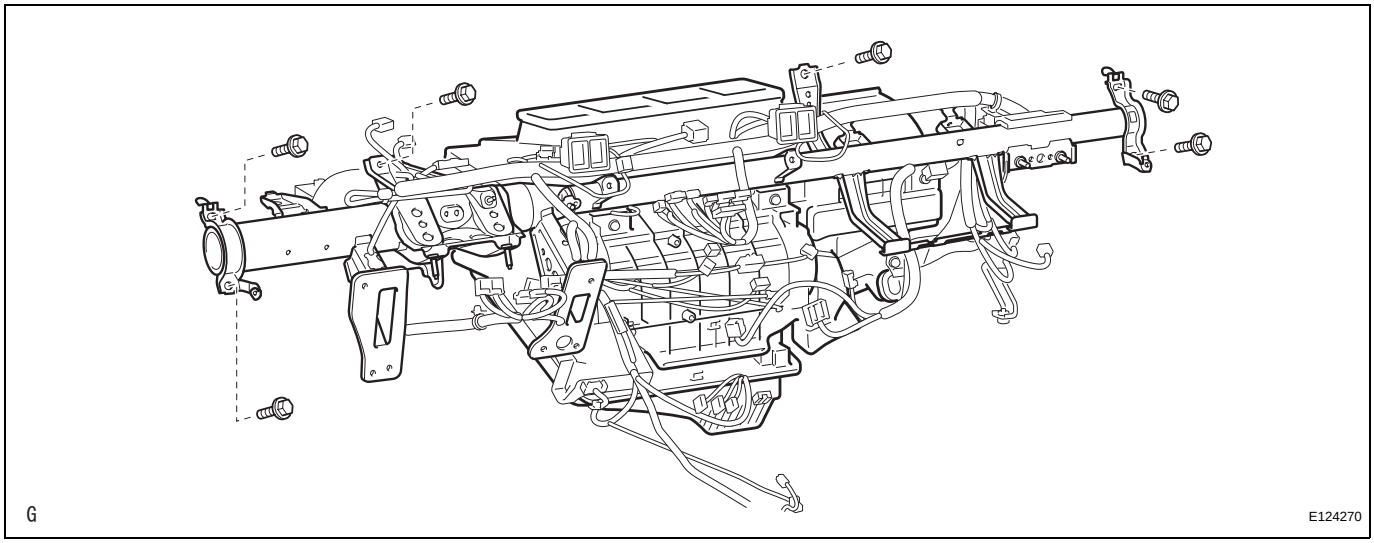

(b) Install the 3 bolts.
Torque: 9.8 N*m (100 kgf*cm, 7 ft.*lbf)

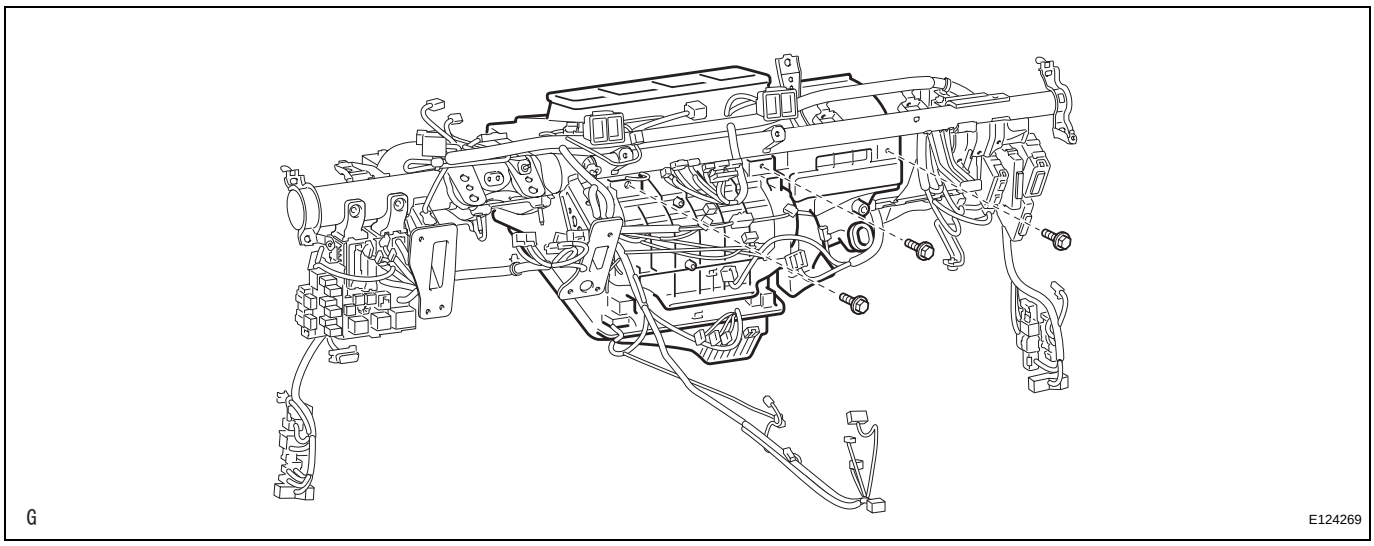

(c) Install the 4 bolts and connect the ground wire.

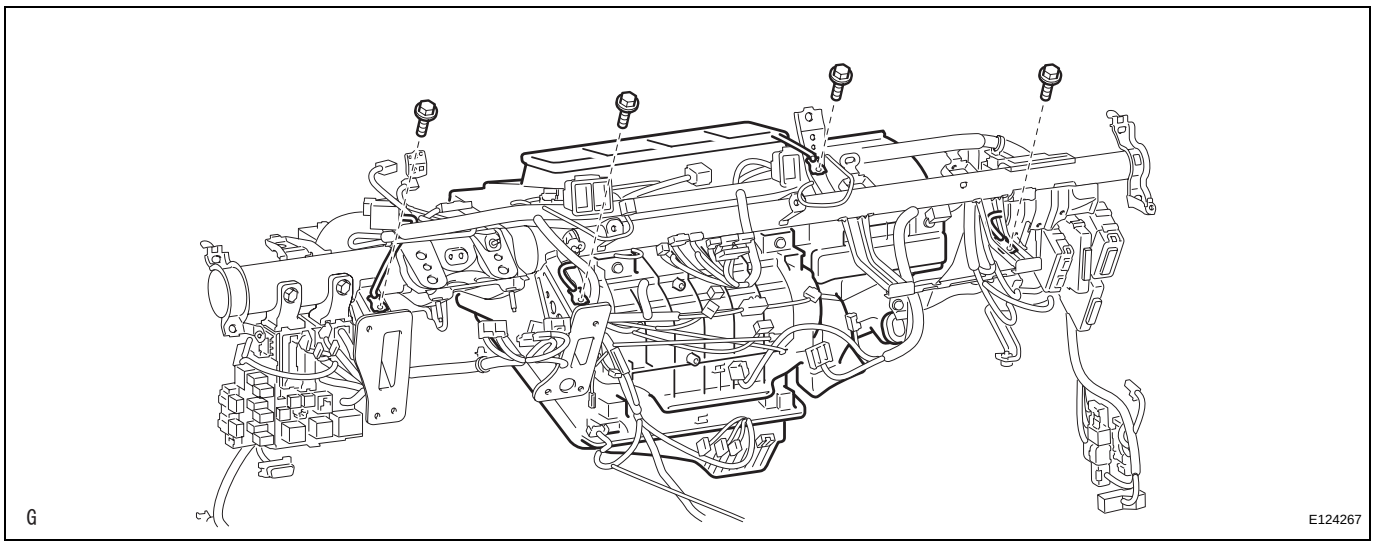

(d) Attach the 12 clamps.

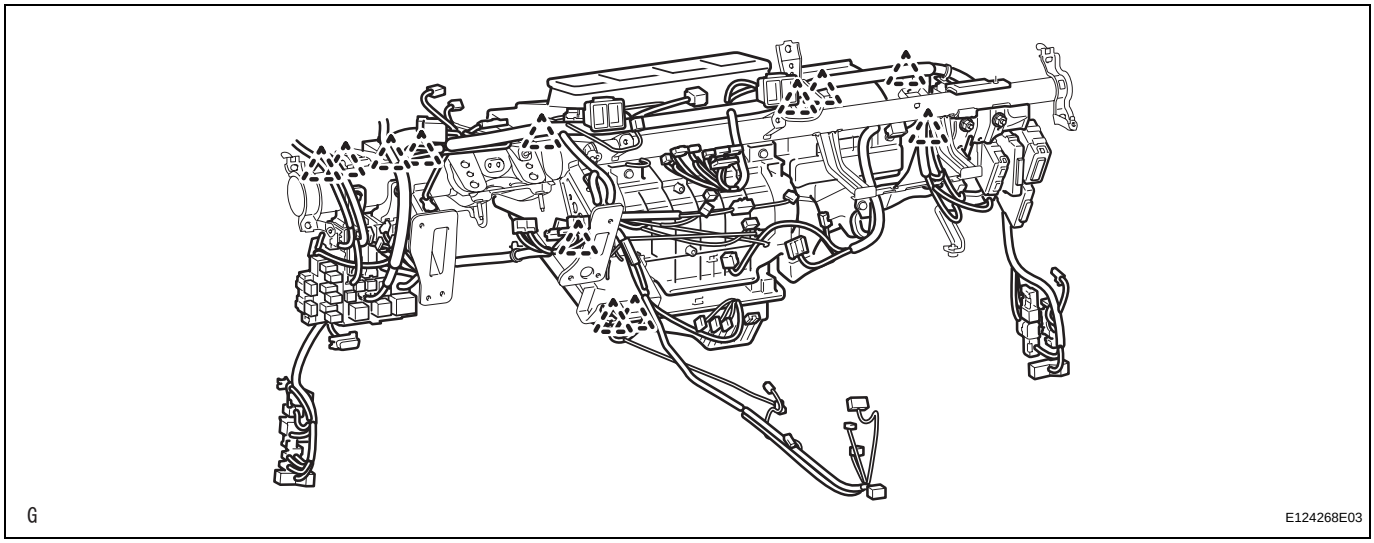

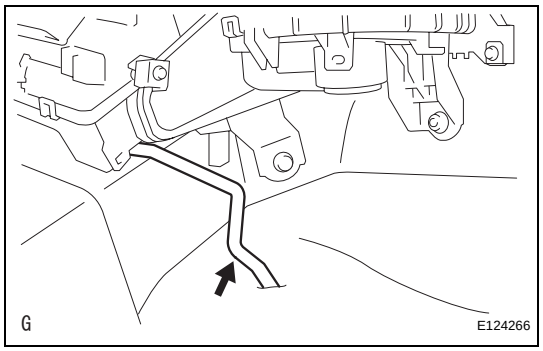

3. INSTALL DRAIN COOLER HOSE

(a) Install the drain hose.

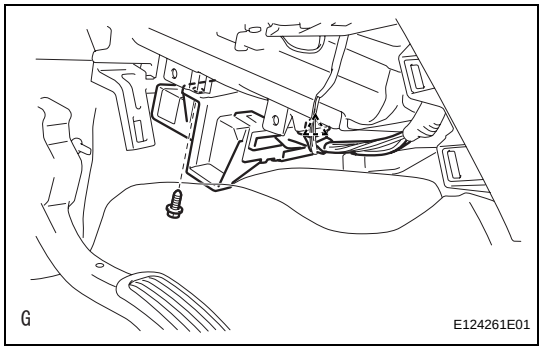

4. INSTALL AIR CONDITIONING AMPLIFIER ASSEMBLY

(a) Install the A/C amplifier with the screw.

(b) Connect the connector.

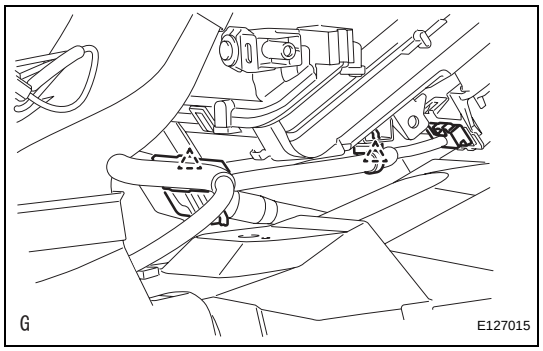

(c) Attach the 2 clamps to the amplifier.

AC

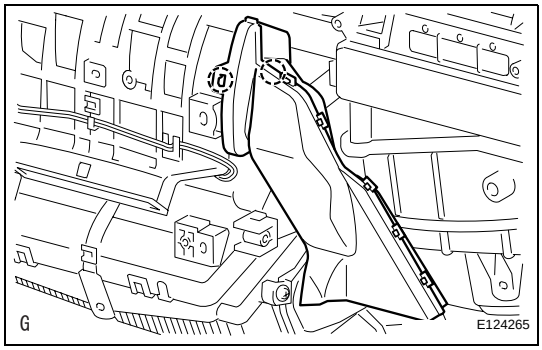

5. INSTALL AIR DUCT

(a) Attach the 2 claws and install the air duct.

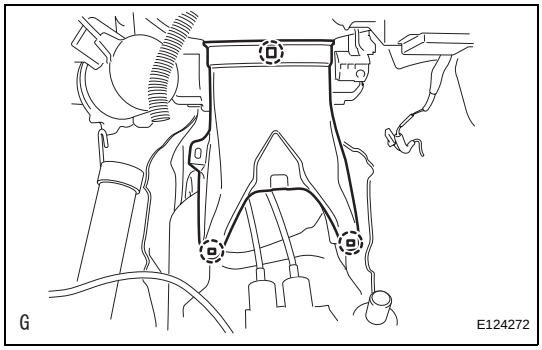

6. INSTALL REAR AIR DUCT

(a) Attach the 3 claws and install the air duct rear.

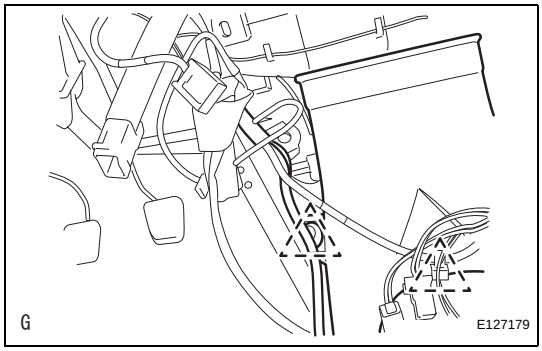

(b) Attach the 2 clamps and install the wire harness.

AC

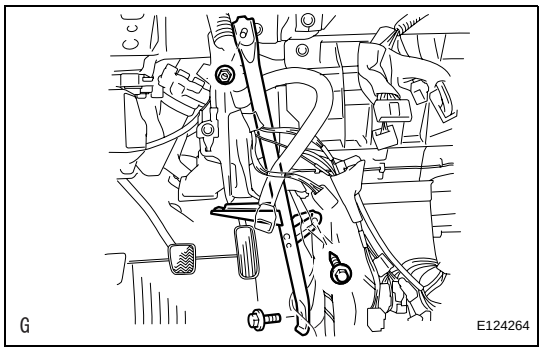

7. INSTALL NO. 1 INSTRUMENT PANEL BRACE SUB-ASSEMBLY

(a) Install the instrument panel brace with the bolt, nut and screw.

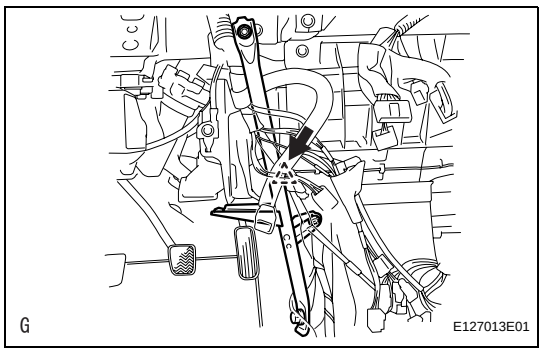

(b) Install the clamp and connect the wire harness.

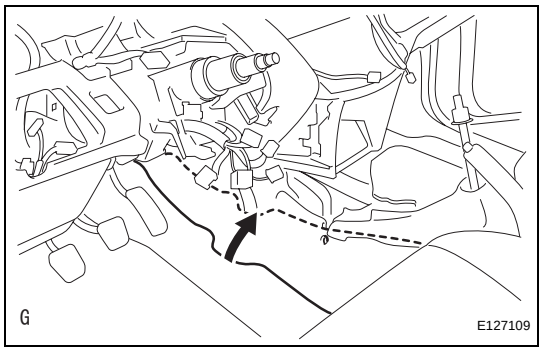

(c) Reposition the floor carpet.

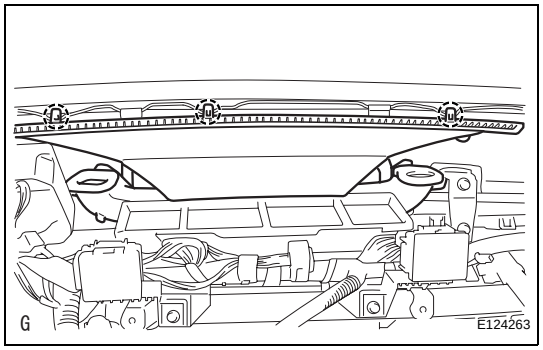

8. INSTALL DEFROSTER NOZZLE ASSEMBLY

(a) Attach the 3 claws and install the defroster nozzle assembly lower.

9. INSTALL LOWER INSTRUMENT PANEL

(a) Install the lower instrument panel (see page IP-23).

10. INSTALL UPPER INSTRUMENT PANEL

(a) Install the upper instrument panel (see page IP-9).

11. INSTALL STEERING COLUMN ASSEMBLY

(a) Install the steering column (see page SR-19).

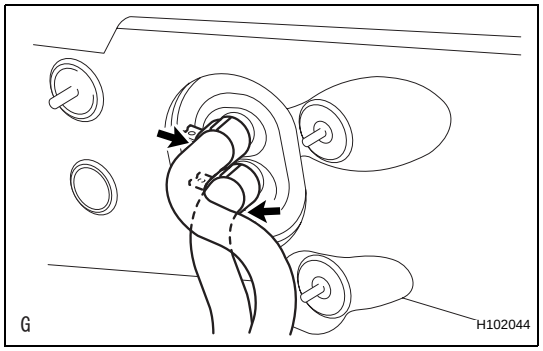

12. CONNECT HEATER WATER OUTLET HOSE

(a) Connect the water hose and attach the clip.

13. CONNECT HEATER WATER INLET HOSE

HINT:
Use the same procedures described for the water outlet hose.

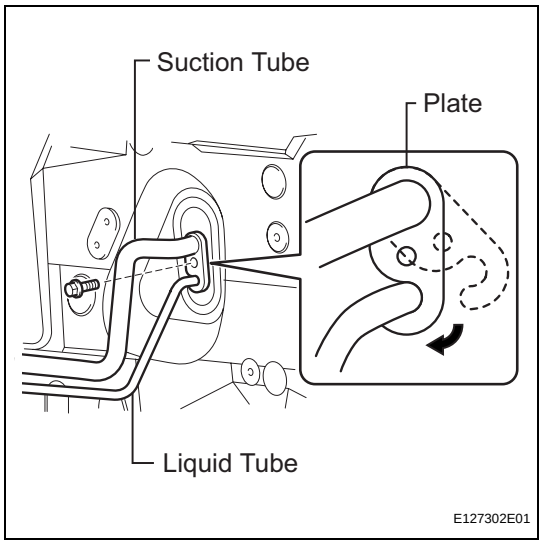

14. CONNECT TUBE SUB-ASSEMBLY

(a) Remove the attached vinyl tape from the pipe.

(b) Sufficiently apply compressor oil to new 2 O-rings and the fitting surface of the suction tube and liquid tube.
Compressor oil:
ND-OIL 8 or equivalent

(c) Install the 2 O-rings on the suction tube and liquid tube.

(d) Connect the suction tube and liquid tube.
HINT:
After the connection, check that the claw of the piping clamp is engaged.

(e) Install the plate with the bolt.
Torque: 9.8 N*m (100 kgf*cm, 7 ft.*lbf)

15. CONNECT CABLE TO NEGATIVE BATTERY TERMINAL

16. CHECK SRS WARNING LIGHT

(a) Check the SRS warning light (see page RS-37).

17. **REPLACE ENGINE COOLANT**
    Refer to the following procedures (see page CO-6).
18. **CHARGE REFRIGERANT (See page AC-172)**
19. **WARM UP ENGINE (See page AC-173)**
20. **CHECK FOR ENGINE COOLANT LEAKS**
21. **CHECK FOR LEAKAGE OF REFRIGERANT (See page AC-173)**

AIR CONDITIONING UNIT

COMPONENTS

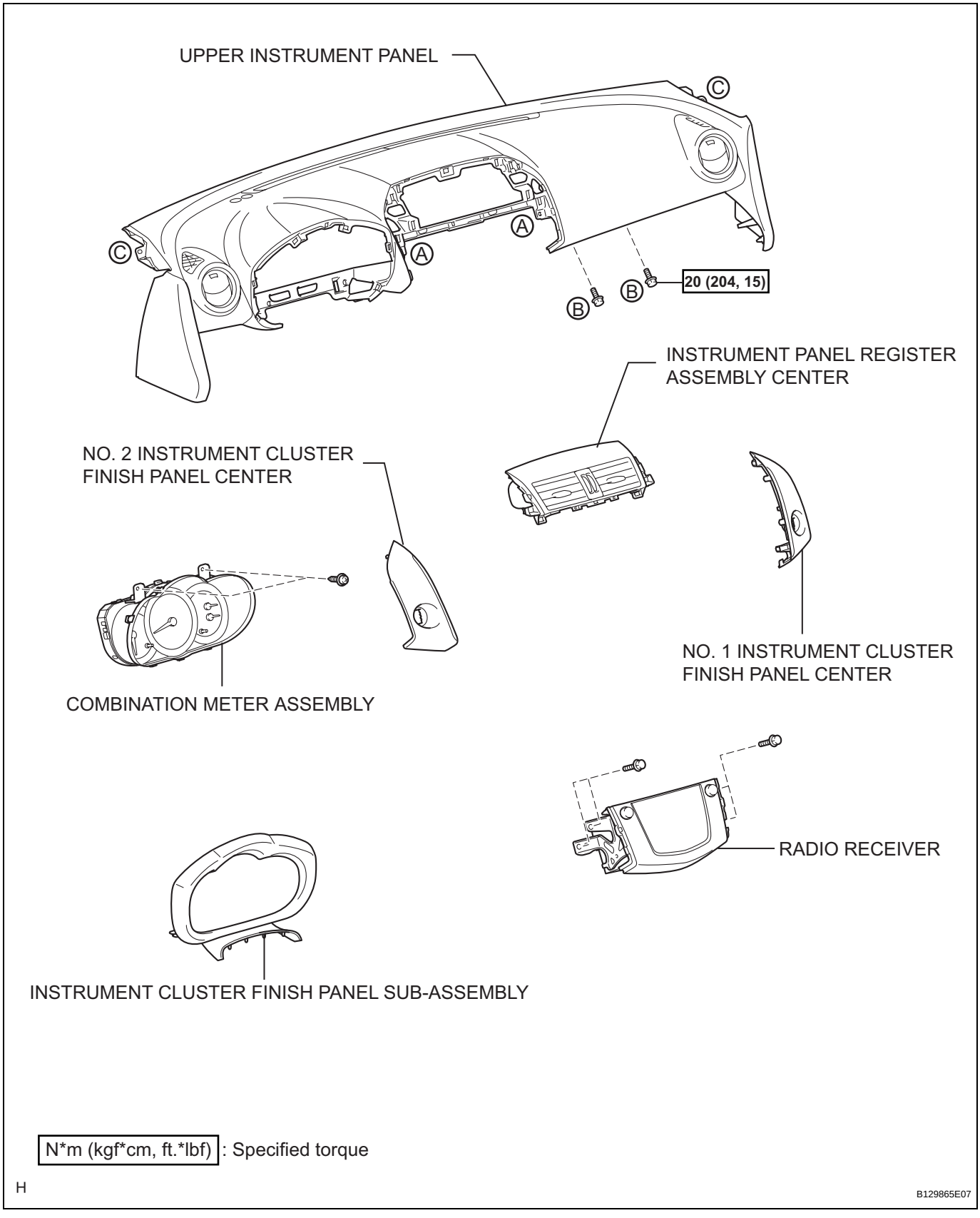

N*m (kgf*cm, ft.*lbf) : Specified torque

B129865E07

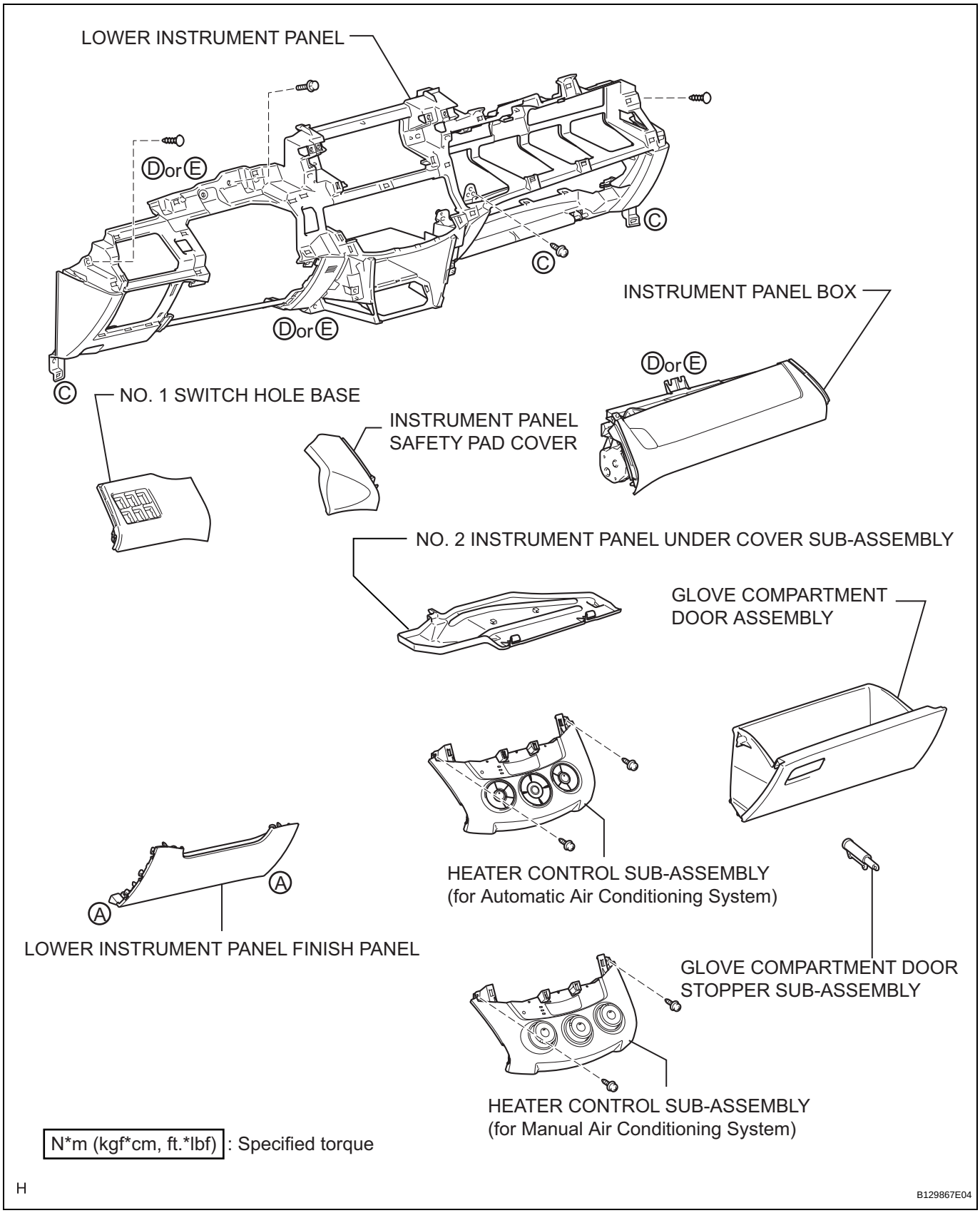
LOWER INSTRUMENT PANEL
Ⓓor Ⓔ
Ⓒ
Ⓓor Ⓔ
Ⓒ
Ⓒ
INSTRUMENT PANEL BOX
Ⓓor Ⓔ
NO. 1 SWITCH HOLE BASE
INSTRUMENT PANEL
SAFETY PAD COVER
NO. 2 INSTRUMENT PANEL UNDER COVER SUB-ASSEMBLY
GLOVE COMPARTMENT
DOOR ASSEMBLY
HEATER CONTROL SUB-ASSEMBLY
(for Automatic Air Conditioning System)
Ⓐ
Ⓐ
LOWER INSTRUMENT PANEL FINISH PANEL
GLOVE COMPARTMENT DOOR
STOPPER SUB-ASSEMBLY
HEATER CONTROL SUB-ASSEMBLY
(for Manual Air Conditioning System)
N*m (kgf*cm, ft.*lbf) : Specified torque
H
B129867E04

AC

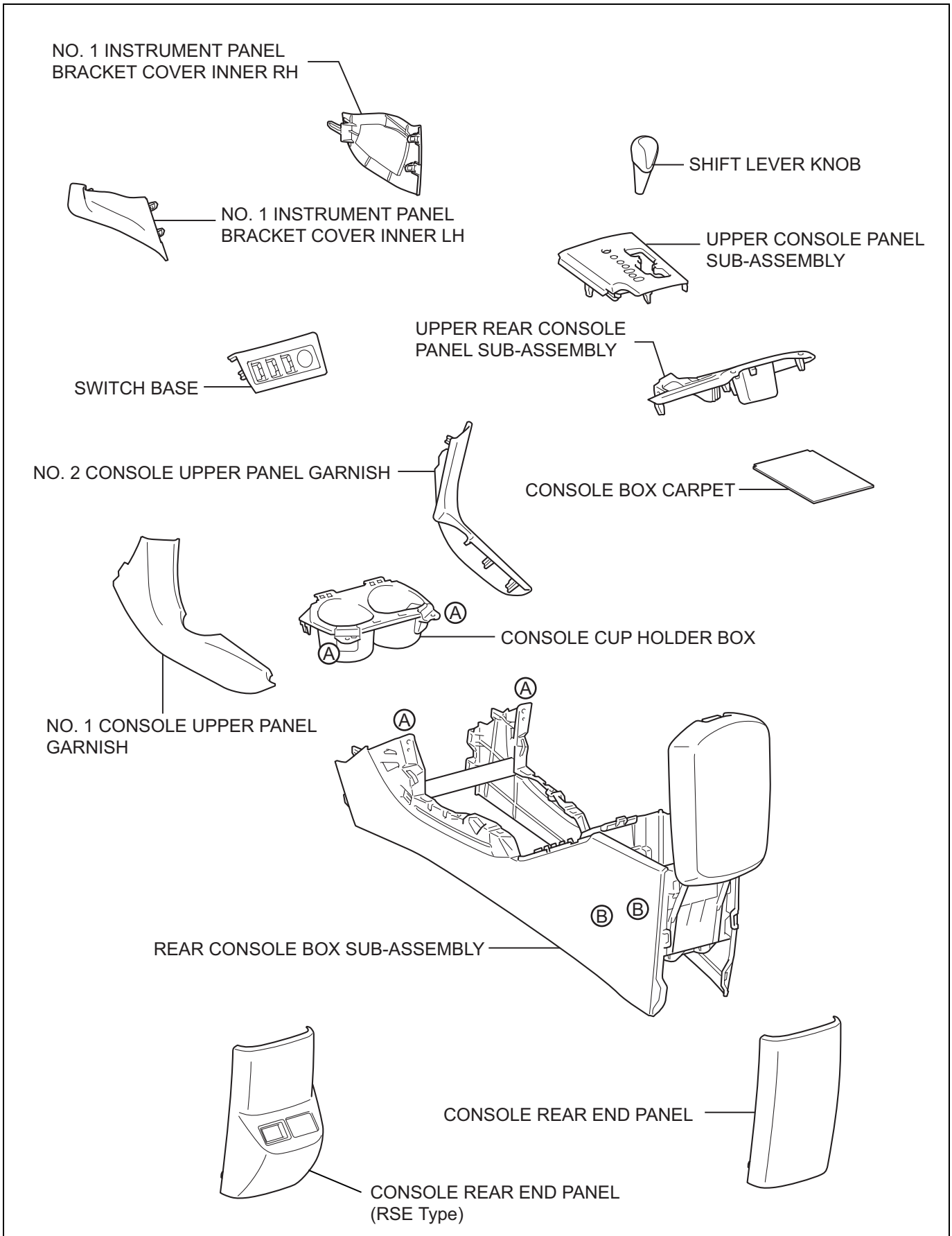

AC

H

B129868E05

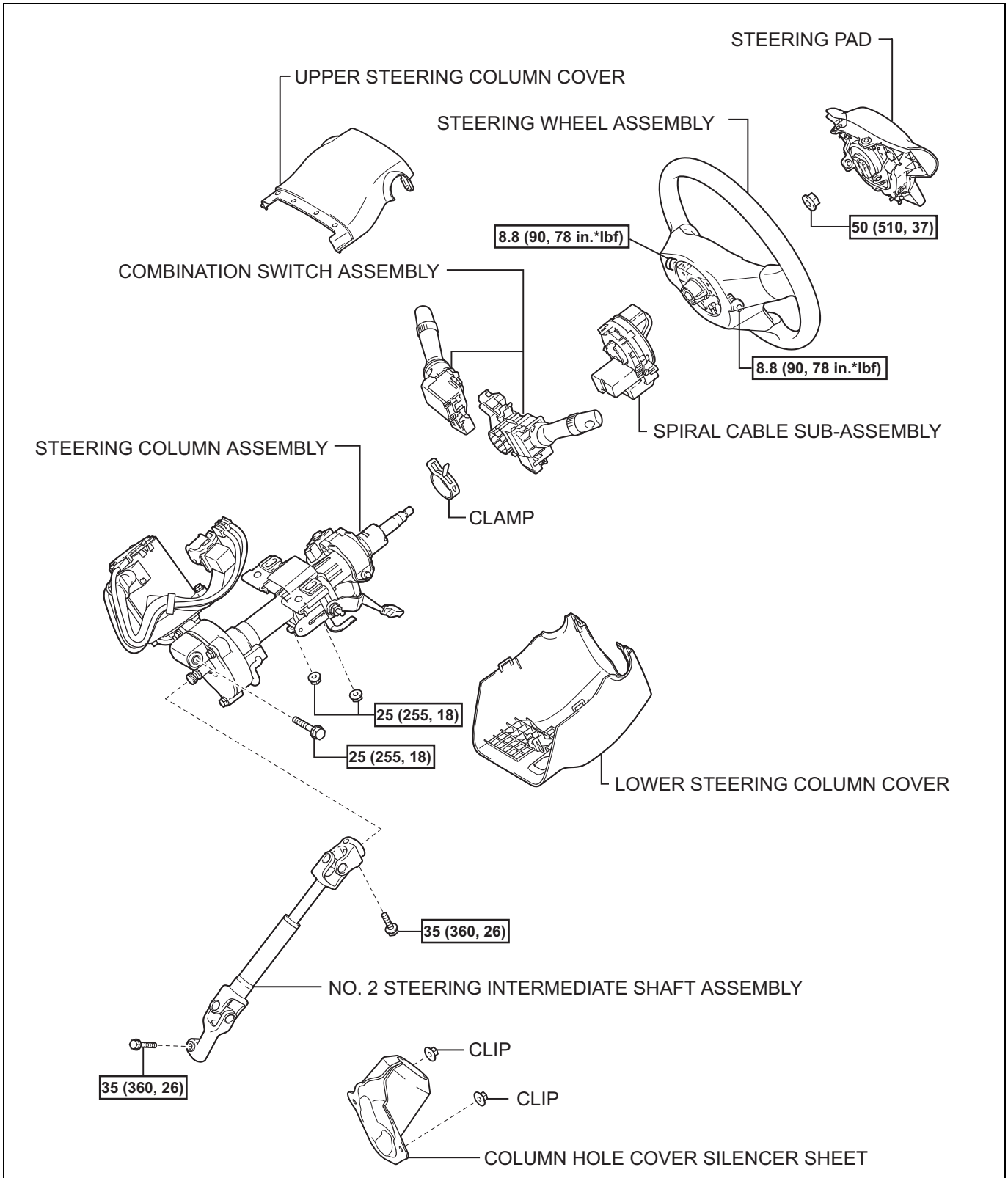

N*m (kgf*cm, ft.*lbf) : Specified torque

P

C128801E04

AC

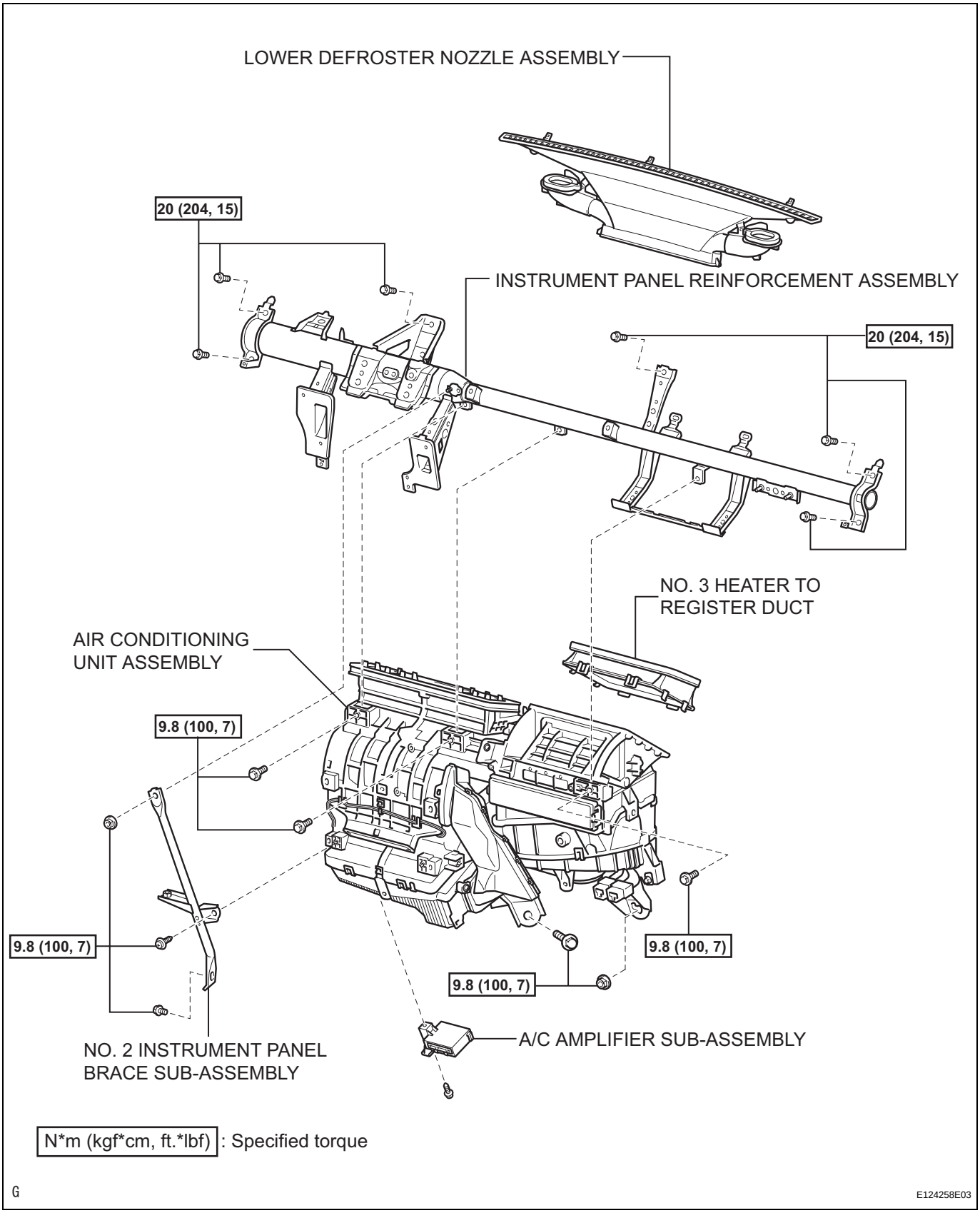
LOWER DEFROSTER NOZZLE ASSEMBLY
20 (204, 15)
INSTRUMENT PANEL REINFORCEMENT ASSEMBLY
20 (204, 15)
NO. 3 HEATER TO REGISTER DUCT
AIR CONDITIONING UNIT ASSEMBLY
9.8 (100, 7)
9.8 (100, 7)
9.8 (100, 7)
9.8 (100, 7)
A/C AMPLIFIER SUB-ASSEMBLY
NO. 2 INSTRUMENT PANEL BRACE SUB-ASSEMBLY
N*m (kgf*cm, ft.*lbf) : Specified torque
G
E124258E03

AC

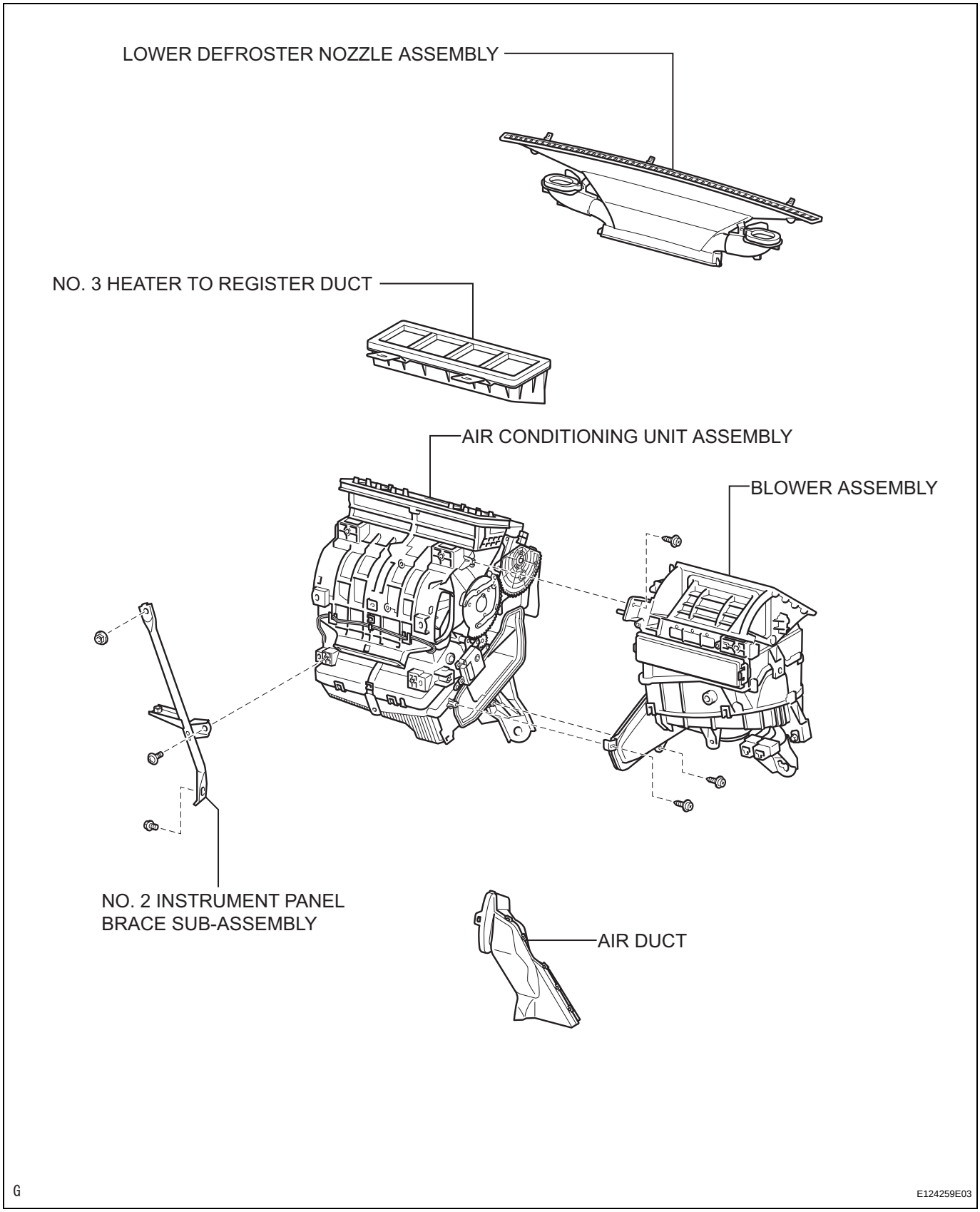
LOWER DEFROSTER NOZZLE ASSEMBLY
NO. 3 HEATER TO REGISTER DUCT
AIR CONDITIONING UNIT ASSEMBLY
BLOWER ASSEMBLY
NO. 2 INSTRUMENT PANEL
BRACE SUB-ASSEMBLY
AIR DUCT
G
E124259E03

AC

for Automatic Air Conditioning System

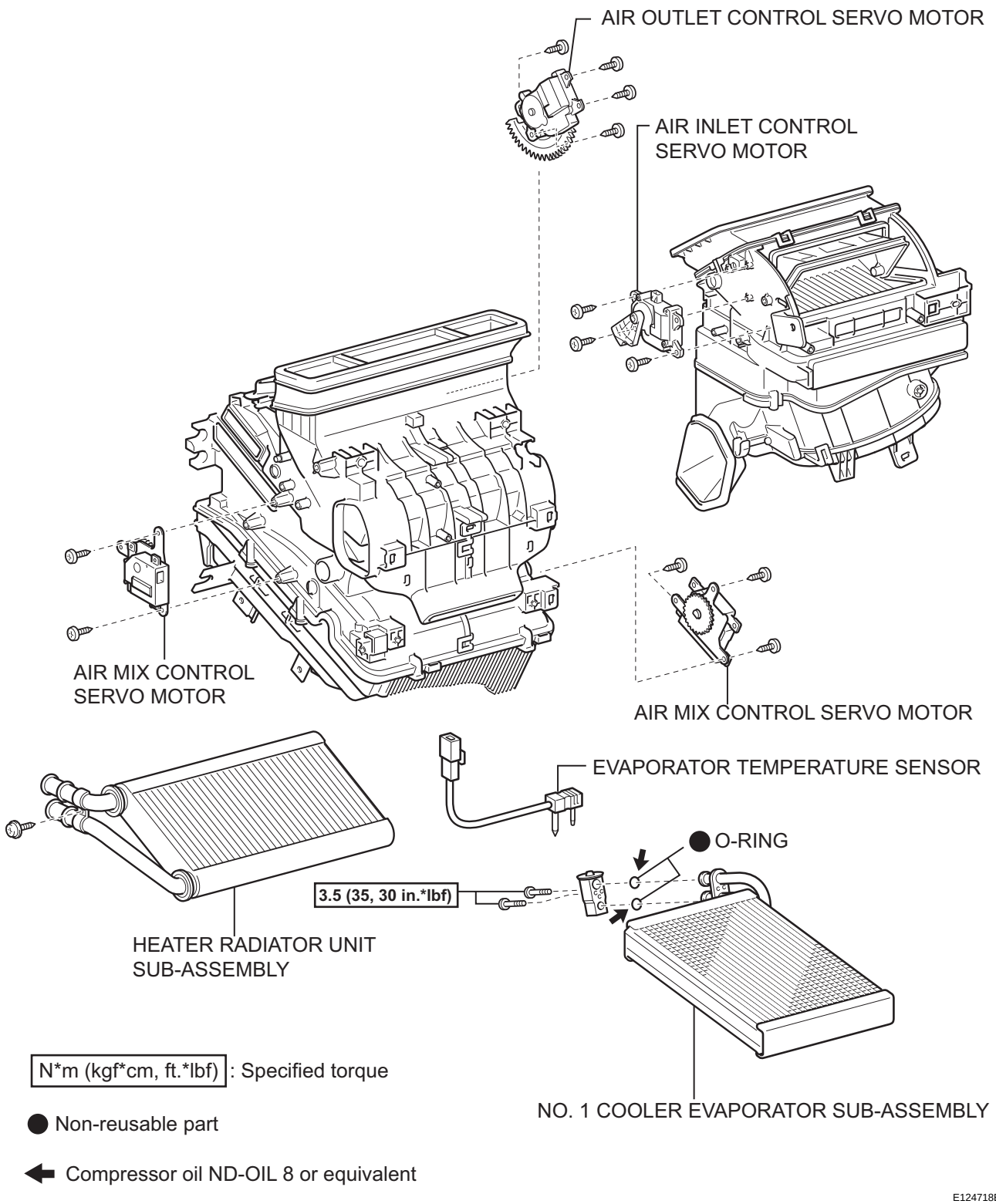

AC

for Manual Air Conditioning System

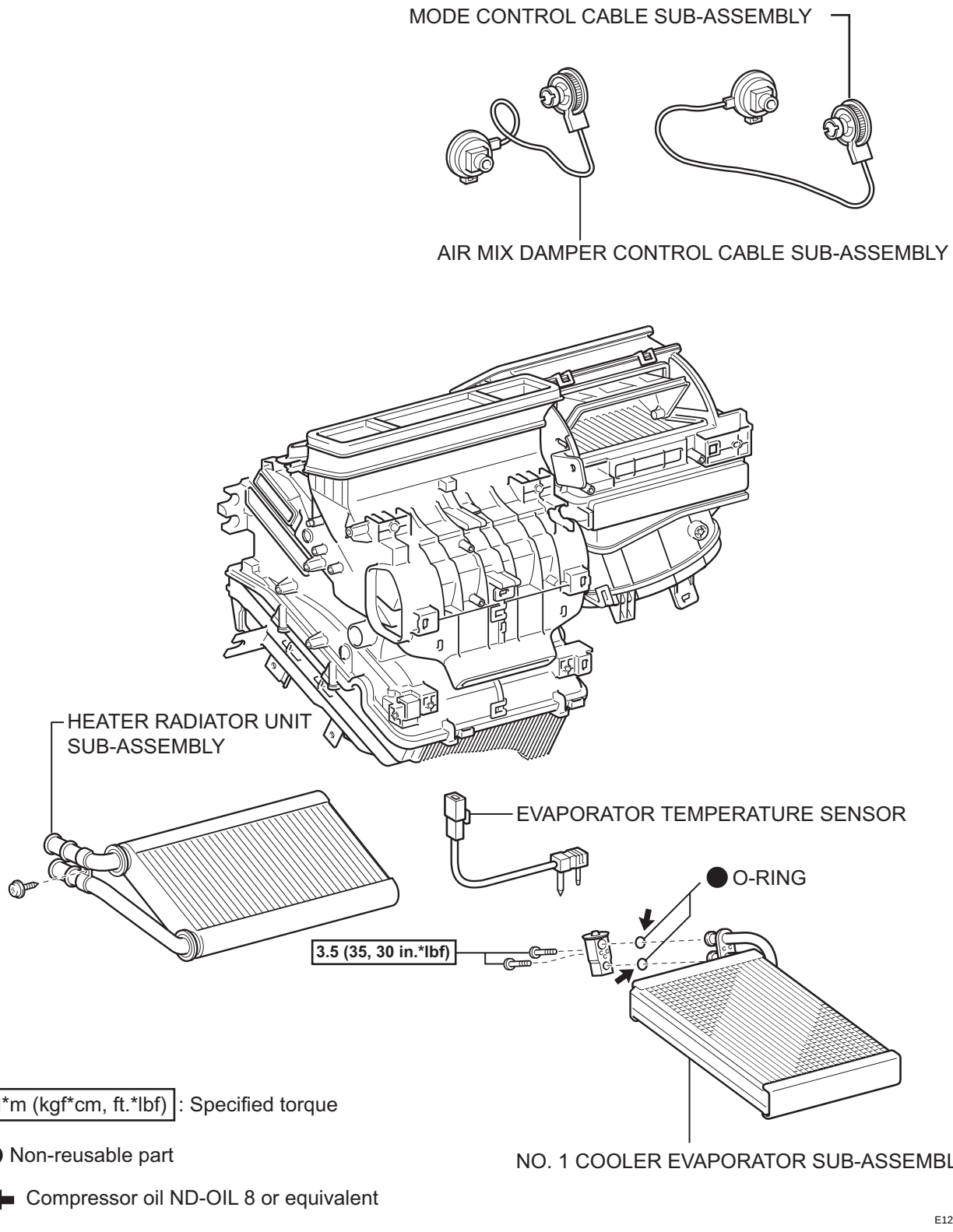

AC

INSTALLATION

1. **INSTALL AIR INLET CONTROL SERVO MOTOR (See page AC-206)**

2. **INSTALL BLOWER ASSEMBLY**
   (a) Install the blower (see page AC-206).

AIR INLET CONTROL SERVO MOTOR

COMPONENTS

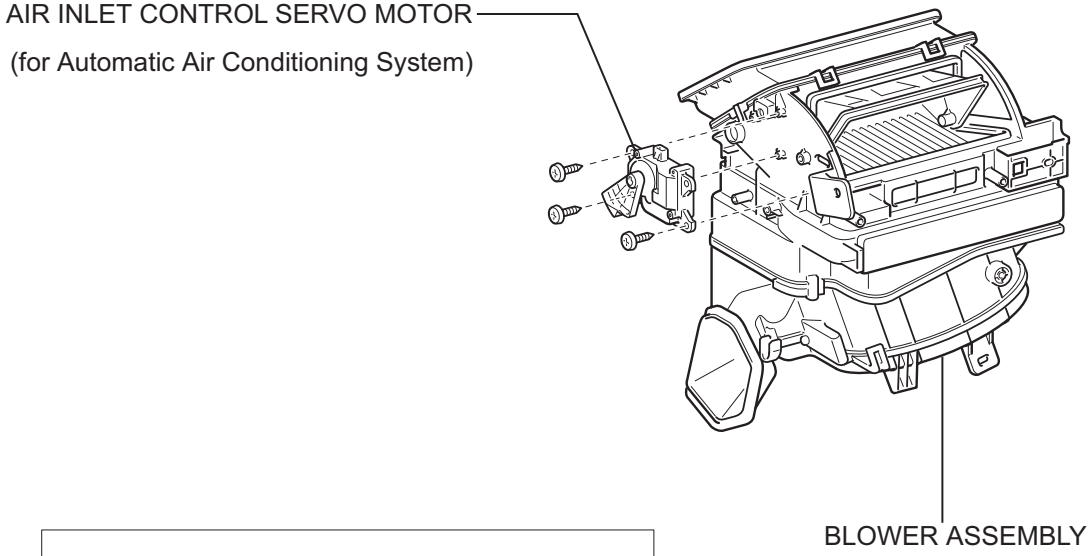



E126831E01

AC

REMOVAL

1. **REMOVE BLOWER ASSEMBLY**
   (a) Remove the blower (see page AC-203).
2. **REMOVE AIR INLET CONTROL SERVO MOTOR (See page AC-210)**

INSPECTION

1. **INSPECT AIR INLET CONTROL SERVO MOTOR (for Automatic Air Conditioning System)**
   (a) Inspect the servo motor operation.

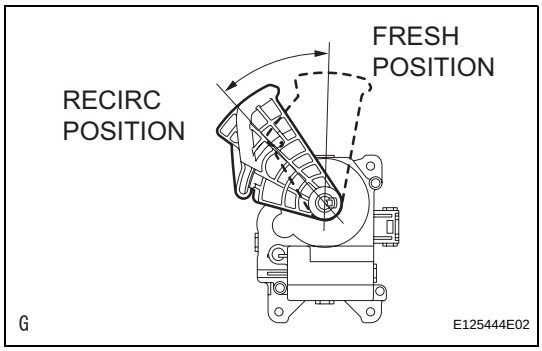

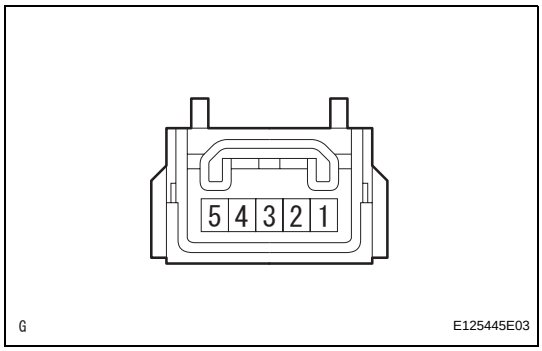

(1) Connect the positive (+) lead from the battery to terminal 4 and negative (-) lead to terminal 5, and then check that the arm turns to the "FRESH" side smoothly.
(2) Connect the positive (+) lead from the battery to terminal 5 and negative (-) lead to terminal 4, and then check that the arm turns to the "RECIRCULATION" side smoothly.
If the operation is not as specified, replace the air inlet control servo motor.

2. **INSPECT AIR INLET CONTROL SERVO MOTOR (for Manual Air Conditioning System)**
   (a) Inspect the servo motor operation.

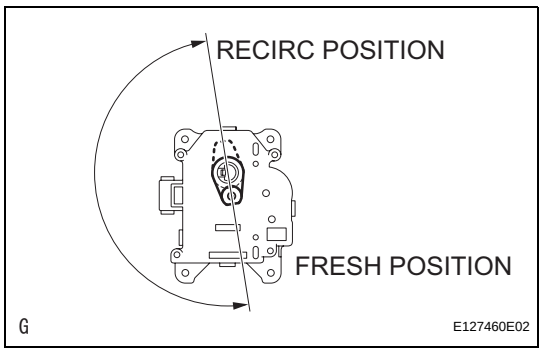

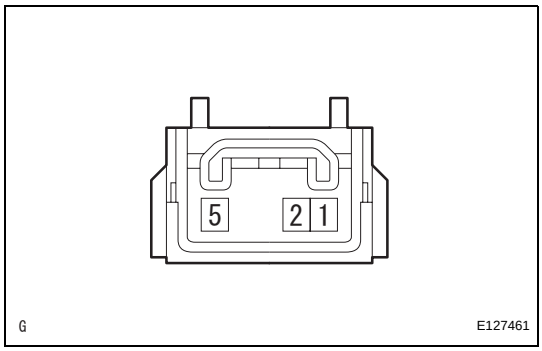

(1) Connect the positive (+) lead from the battery to terminal 5 and negative (-) lead to terminal 1, and then check that the arm turns to the "FRESH" side smoothly.
(2) Connect the positive (+) lead from the battery to terminal 1 and negative (-) lead to terminal 5, and then check that the arm turns to the "RECIRCULATION" side smoothly. if the operation is not as specified, replace the air inlet servo motor.

AC

INSTALLATION

1. **INSTALL AIR MIX CONTROL SERVO MOTOR (See page AC-196)**

2. **INSTALL AIR CONDITIONING UNIT**
   (a) Install the air conditioning radiator (see page AC-197).

AIR MIX CONTROL SERVO MOTOR (for Automatic Air Conditioning System)

COMPONENTS

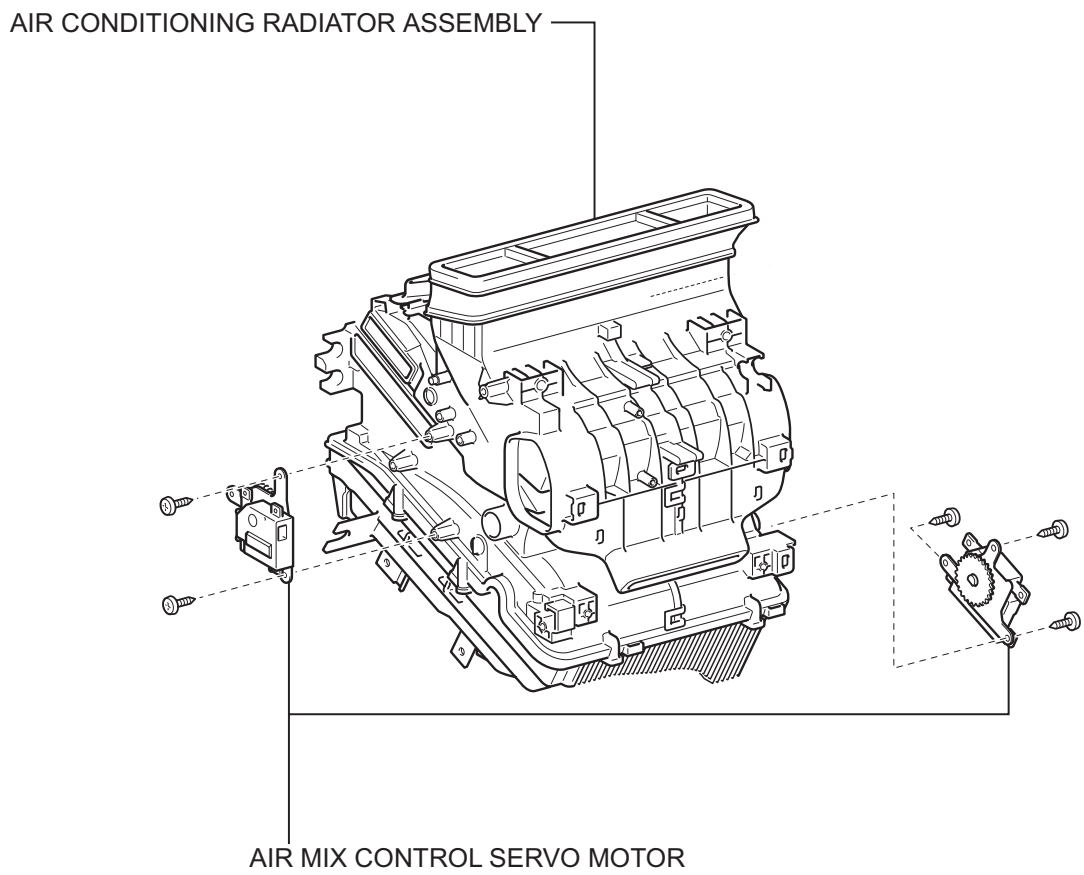

REMOVAL

1. REMOVE AIR CONDITIONING UNIT

(a) Remove the air conditioning radiator (see page AC-185).

2. REMOVE AIR MIX CONTROL SERVO MOTOR (See page AC-191)

INSPECTION

1. INSPECT AIR MIX CONTROL SERVO MOTOR

(a) Inspect the servo motor operation.

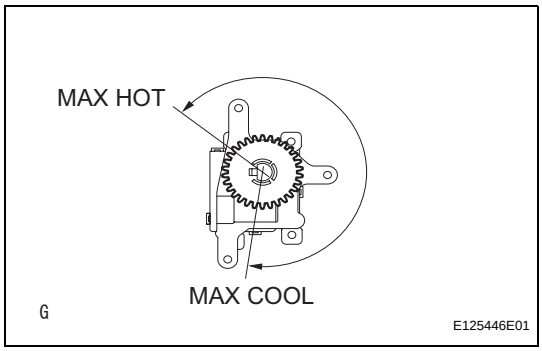

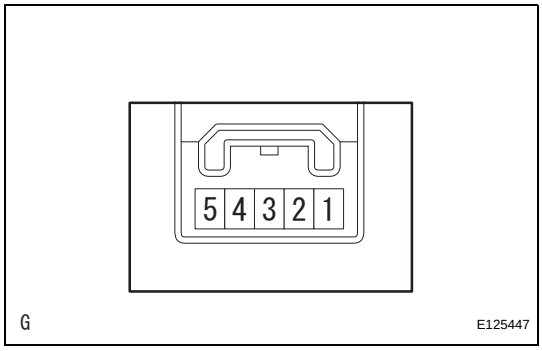

(1) Connect the positive (+) lead from the battery to terminal 4 and negative (-) lead to terminal 5, and then check that the lever turns to the "MAX HOT" position smoothly.

(2) Connect the positive (+) lead from the battery to terminal 5 and negative (-) lead to terminal 4, and then check that the lever turns to the "MAX COOL" position smoothly.

If the operation is not as specified, replace the air mix control servo motor.

INSTALLATION

1. **INSTALL AIR OUTLET CONTROL SERVO MOTOR (See page AC-196)**

2. **INSTALL AIR CONDITIONING UNIT**
   (a) Install the air conditioning radiator (see page AC-197).

AIR OUTLET CONTROL SERVO MOTOR (for Automatic Air Conditioning System)

COMPONENTS

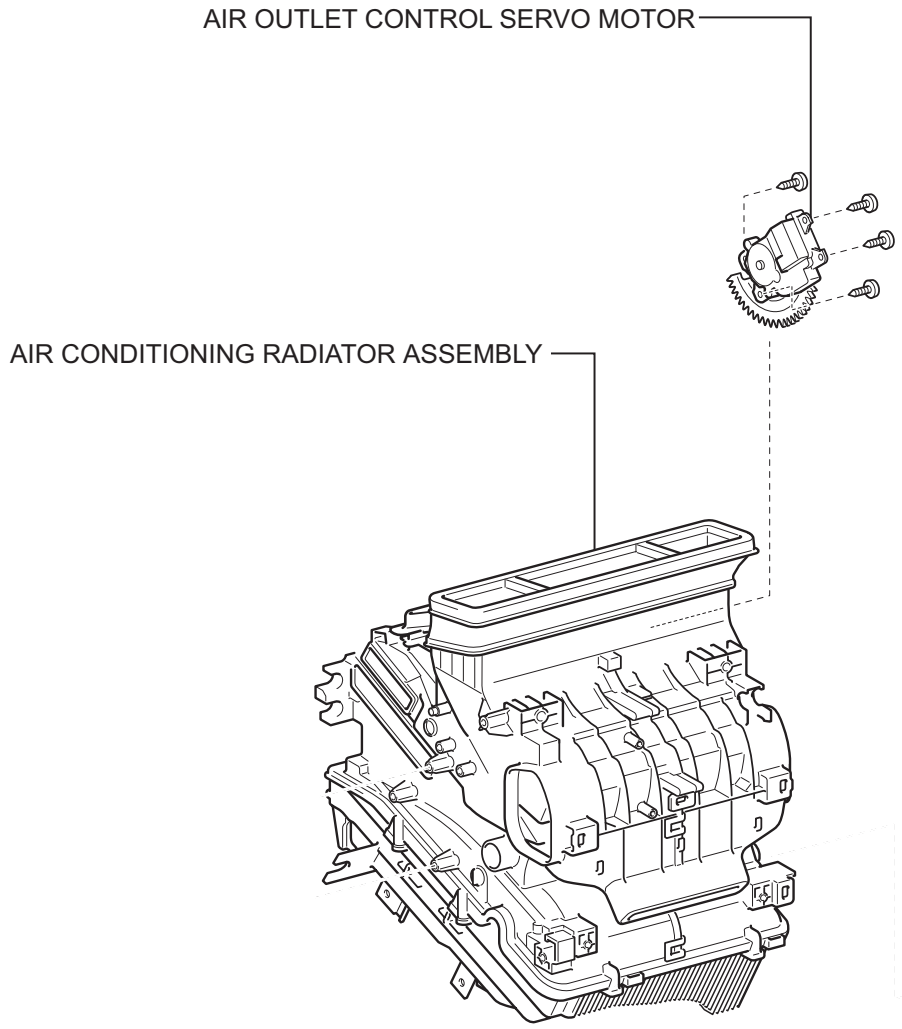

E126832E02

AC

REMOVAL

1. REMOVE AIR CONDITIONING UNIT

(a) Remove the air conditioning radiator (see page AC-185).

2. REMOVE AIR OUTLET CONTROL SERVO MOTOR (See page AC-191)

INSPECTION

1. INSPECT AIR OUTLET CONTROL SERVO MOTOR

(a) Inspect the servo motor operation.

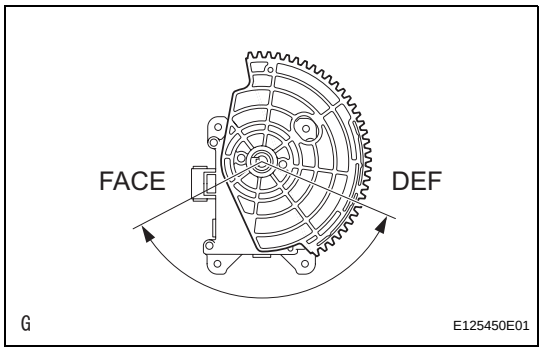

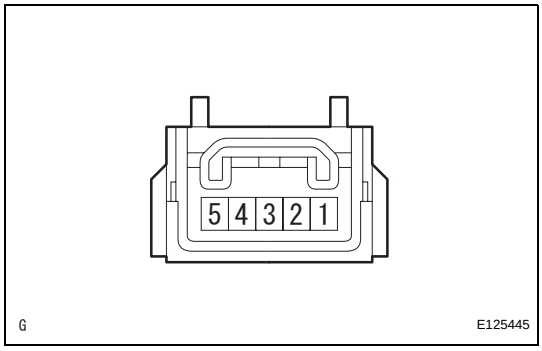

(1) Connect the positive (+) lead from the battery to terminal 4 and negative (-) lead to terminal 5, and then check that the lever turns to the "FACE" position smoothly.

(2) Connect the positive (+) lead from the battery to terminal 5 and negative (-) lead to terminal 4, and then check that the lever turns to the "DEF" position smoothly.

If the operation is not as specified, replace the air outlet control servo motor.

AC

INSTALLATION

1. **INSTALL AMBIENT TEMPERATURE SENSOR**
   (a) Connect the connector, and then push in the sensor.
2. **INSTALL FRONT BUMPER COVER**
   (a) Install the front bumper cover (see page ET-10).
3. **CONNECT CABLE TO NEGATIVE BATTERY TERMINAL**
4. **CHECK SRS WARNING LIGHT**
   (a) Check SRS warning light (see page RS-37).

AMBIENT TEMPERATURE SENSOR (for Automatic Air Conditioning System)

COMPONENTS

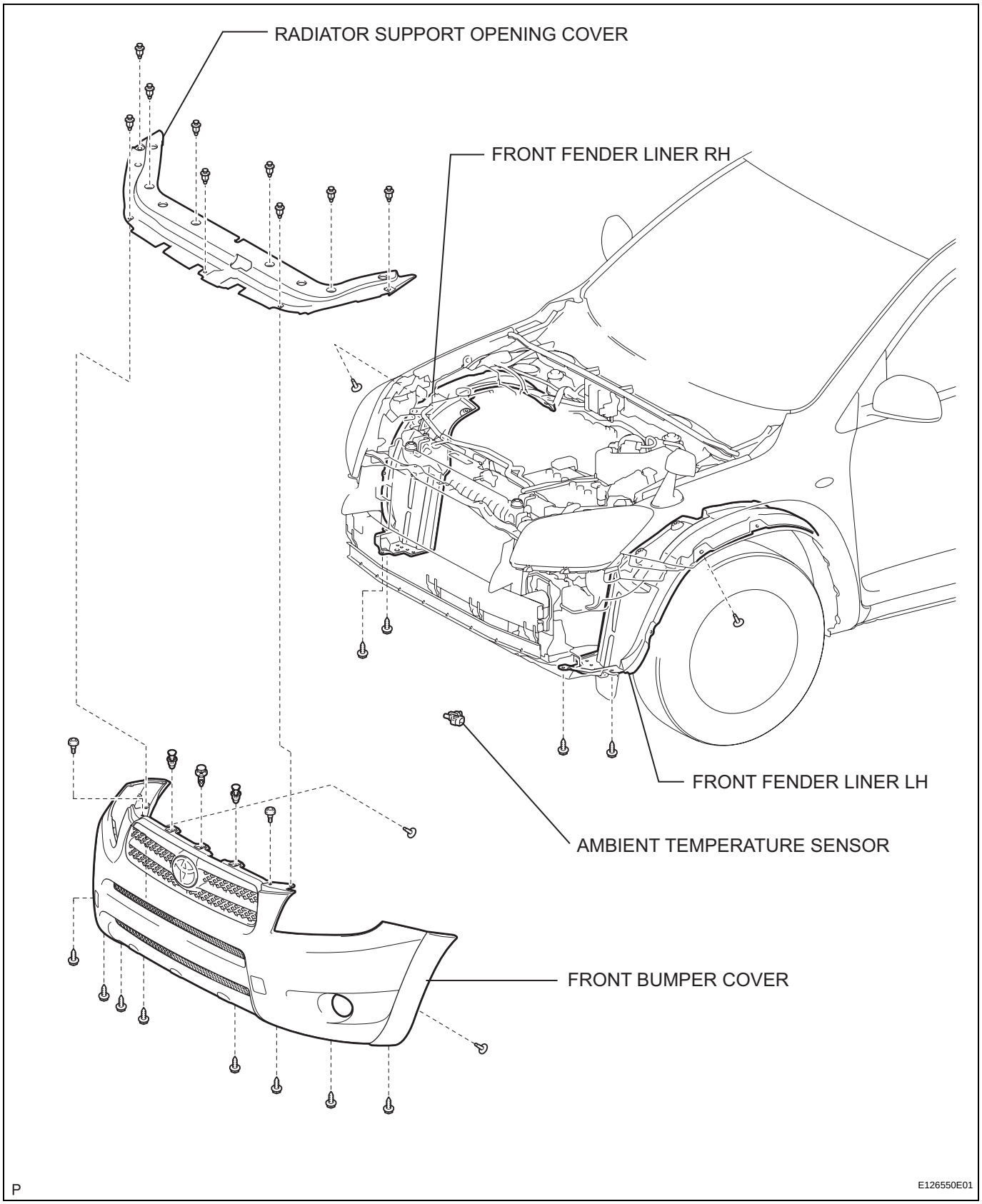

AC

REMOVAL

1. **DISCONNECT CABLE FROM NEGATIVE BATTERY TERMINAL**
   CAUTION:
   Wait at least 90 seconds after disconnecting the cable from the negative (-) battery terminal to prevent airbag and seat belt pretensioner activation.
2. **REMOVE FRONT BUMPER COVER**
   (a) Remove the front bumper cover (see page ET-4).
3. **REMOVE AMBIENT TEMPERATURE SENSOR**
   (a) Using a screwdriver, pull out the sensor, then disconnect the connector.
   HINT:
   Tape the screwdriver tip before use.

INSPECTION

1. **INSPECT AMBIENT TEMPERATURE SENSOR**
   (a) Measure the resistance of the sensor.
   Standard resistance

Tester Connection	Condition	Specified Condition
1 - 2	10°C (50°F)	3.00 to 3.73 kΩ
1 - 2	15°C (59°F)	2.45 to 2.88 kΩ
1 - 2	20°C (68°F)	1.95 to 2.30 kΩ
1 - 2	25°C (77°F)	1.60 to 1.80 kΩ
1 - 2	30°C (86°F)	1.28 to 1.47 kΩ
1 - 2	35°C (95°F)	1.00 to 1.22 kΩ
1 - 2	40°C (104°F)	0.80 to 1.00 kΩ
1 - 2	45°C (113°F)	0.65 to 0.85 kΩ
1 - 2	50°C (122°F)	0.50 to 0.70 kΩ
1 - 2	55°C (131°F)	0.44 to 0.60 kΩ
1 - 2	60°C (140°F)	0.36 to 0.50 kΩ

NOTICE:
- **Touching the sensor even slightly may change the resistance value. Hold the connector of the sensor.**
- **When measuring the resistance, the sensor temperature must be the same as the ambient temperature.**

HINT:
As the temperature increases, the resistance decreases (see the graph).
If the result is not as specified, replace the ambient temperature sensor.

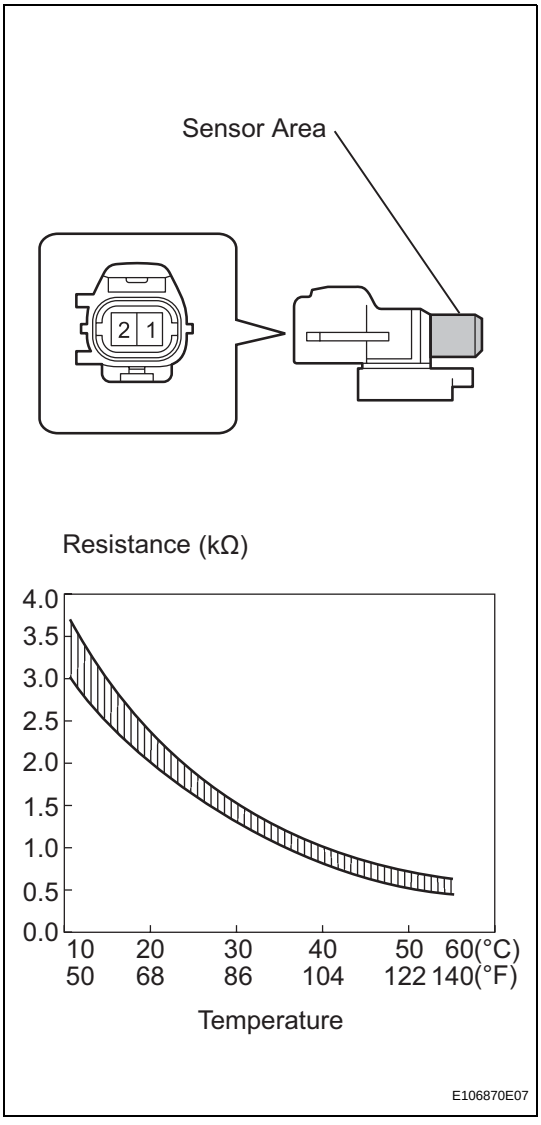

AC

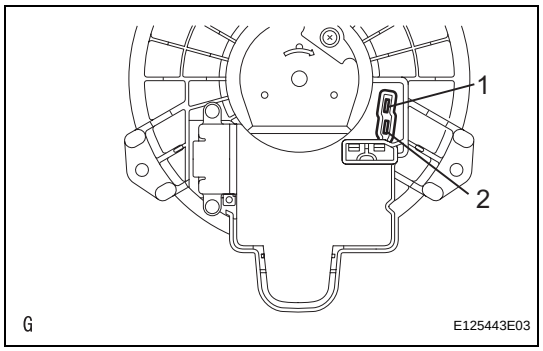

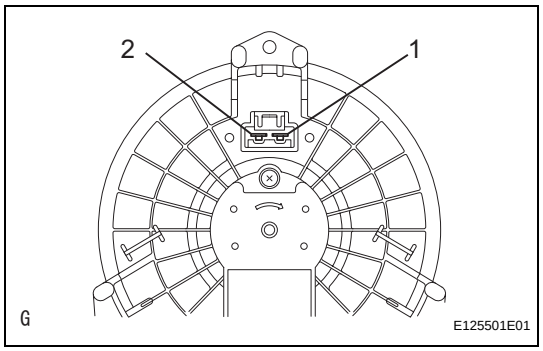

BLOWER MOTOR

ON-VEHICLE INSPECTION

1. INSPECT BLOWER MOTOR (for Automatic Air Conditioning System)

(a) Disconnect the blower motor connector.

(b) Connect the positive (+) lead from the battery to terminal 1 and negative (-) lead to terminal 2, and then check that the motor operates smoothly.
If the operation is not as specified, replace the blower motor.

2. INSPECT BLOWER MOTOR (for Manual Air Conditioning System)

(a) Disconnect the blower motor connector.

(b) Connect the positive (+) lead from the battery to terminal 2 and negative (-) lead to terminal 1, and then check that the motor operates smoothly.
If the operation is not as specified, replace the blower motor.

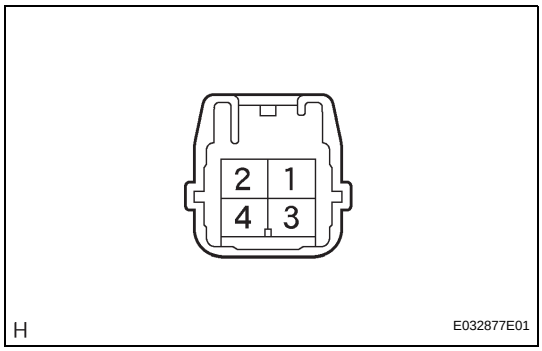

BLOWER RESISTOR

ON-VEHICLE INSPECTION

1. INSPECT BLOWER MOTOR CONTROL

(a) Measure the resistance of the blower resistor.

Standard resistance

Tester Connection	Specified Condition
1 - 2	1.45 to 1.67 Ω
1 - 3	0.52 to 0.60 Ω
1 - 4	3.12 to 3.60 Ω

If the resistance is not as specified, replace the blower motor control.

BLOWER UNIT

COMPONENTS

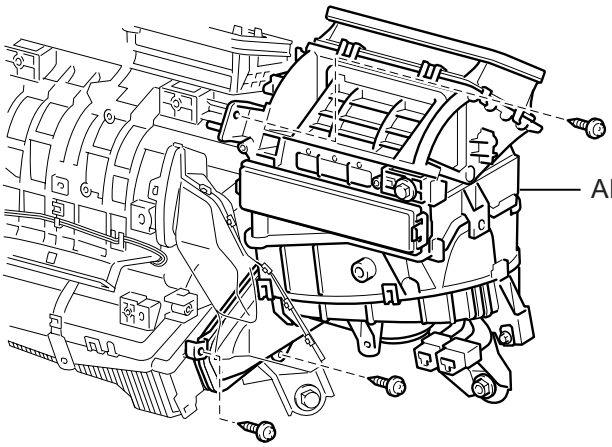

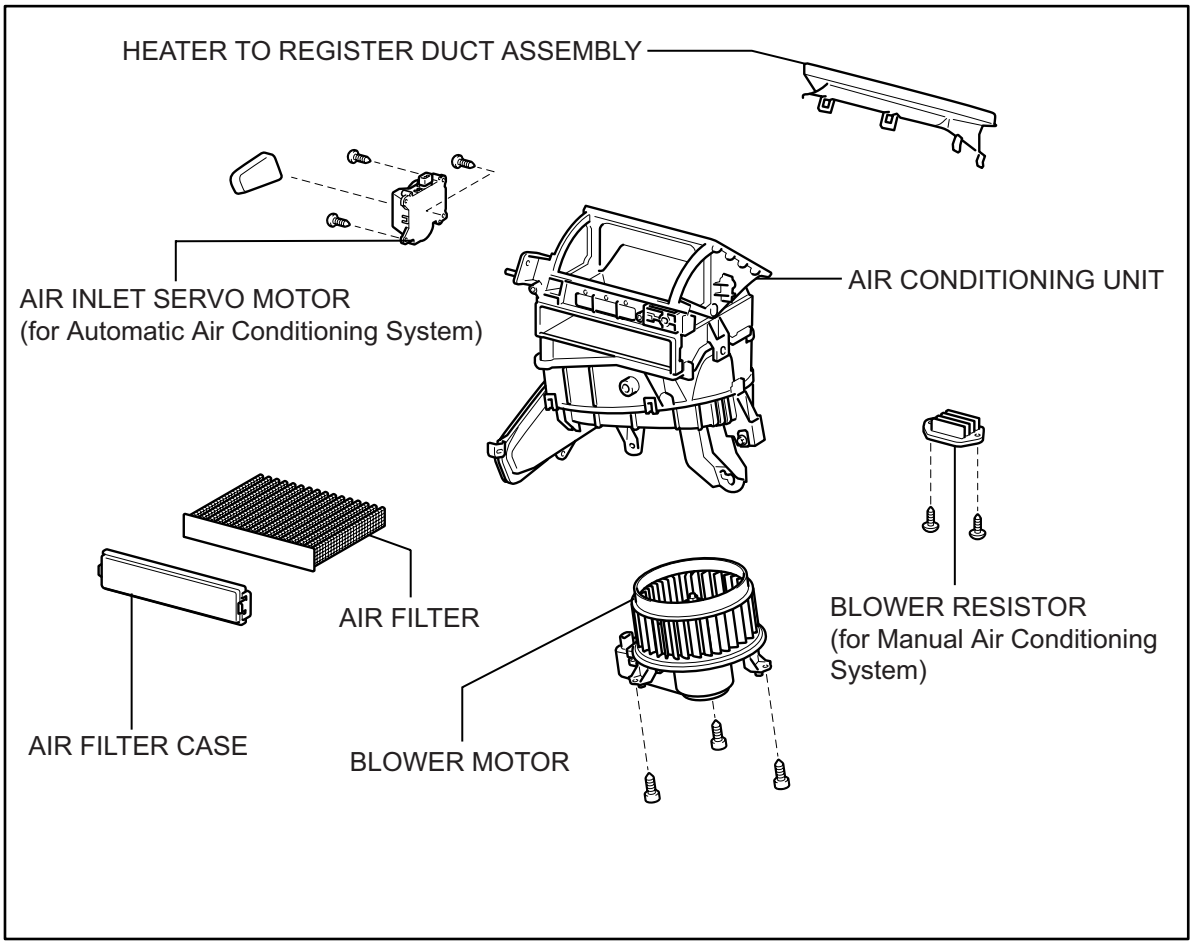

AC

G

E127175E03

REMOVAL

1. **DISCONNECT CABLE FROM NEGATIVE BATTERY TERMINAL**
   CAUTION:
   Wait at least 90 seconds after disconnecting the cable from the negative (-) battery terminal to prevent airbag and seat belt pretensioner activation.
2. **REMOVE UPPER INSTRUMENT PANEL**
   (a) Remove the upper instrument panel (see page IP-4).
3. **REMOVE LOWER INSTRUMENT PANEL**
   (a) Remove the lower instrument panel (see page IP-16).
4. **REMOVE AIR DUCT (See page AC-188)**
5. **REMOVE AIR CONDITIONING UNIT**
   (a) Remove the air conditioning unit (see page AC-185).
6. **REMOVE BLOWER ASSEMBLY**
   (a) Remove the 3 screws and blower.

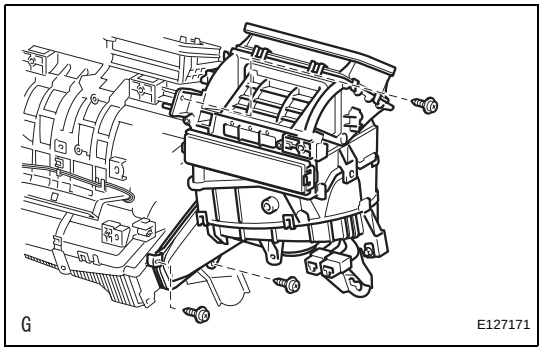

DISASSEMBLY

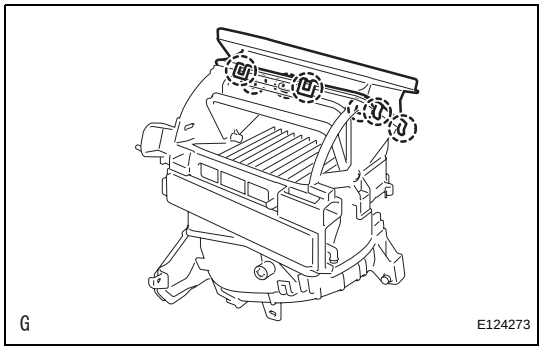

1. **REMOVE HEATER TO REGISTER DUCT ASSEMBLY**
   (a) Detach the 7 claws and register duct.

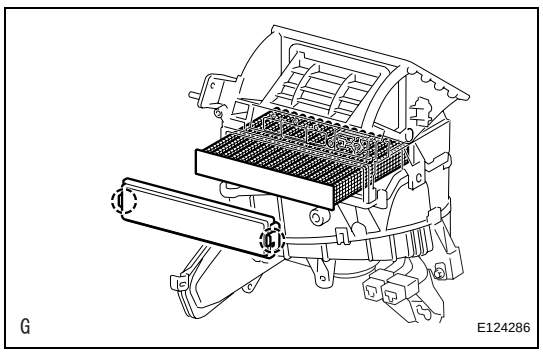

2. **REMOVE AIR FILTER CASE**
   (a) Detach the 2 claws and remove the air filter case.
   (b) Remove the air filter.

AC

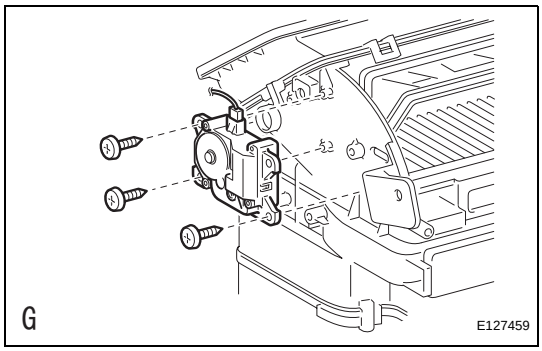

3. REMOVE AIR INLET CONTROL SERVO MOTOR (for Manual Air Conditioning System)

(a) Remove the 3 screws and air inlet servo motor.

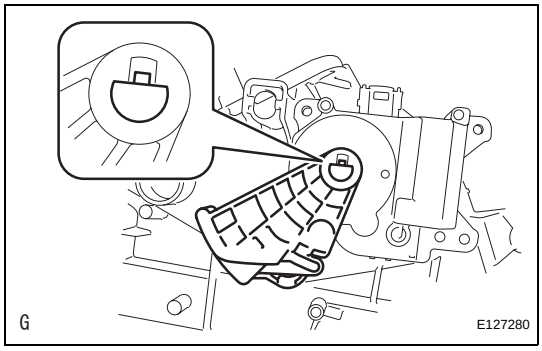

4. REMOVE AIR INLET CONTROL SERVO MOTOR (for Automatic Air Conditioning System)

(a) Detach the claws and lever.

(b) Remove the 3 screws and air inlet servo motor.

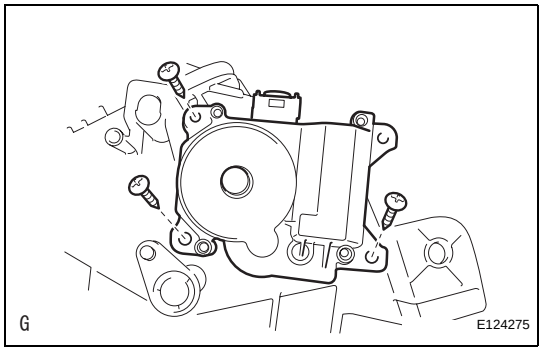

AC

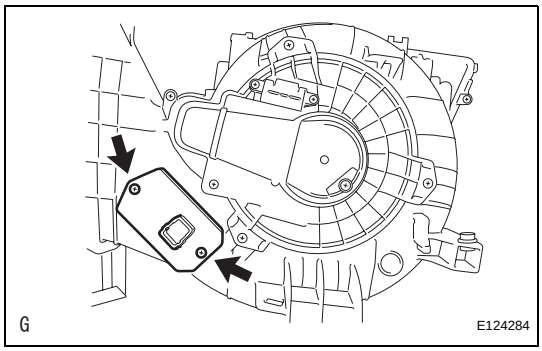

5. REMOVE BLOWER RESISTOR (for Manual Air Conditioning System)

(a) Remove the 2 screws and blower resistor.

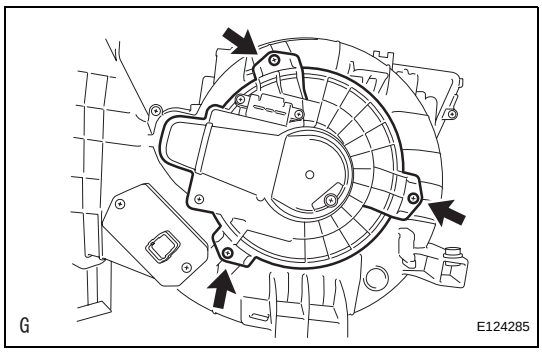

6. REMOVE BLOWER MOTOR

(a) Remove the 3 screws and blower motor.

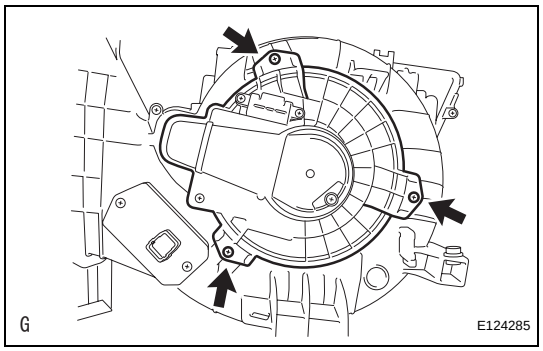

REASSEMBLY

1. INSTALL BLOWER MOTOR

(a) Install the blower motor with the 3 screws.

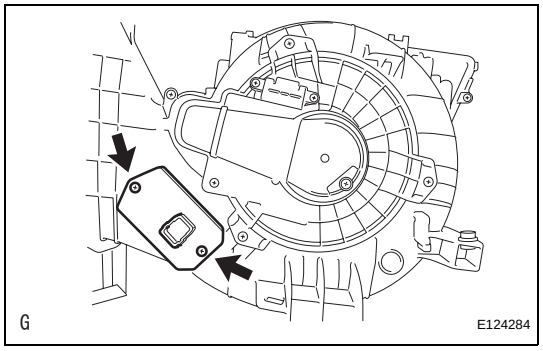

2. INSTALL BLOWER RESISTOR (for Manual Air Conditioning System)

(a) Install the blower resistor with the 2 screws.

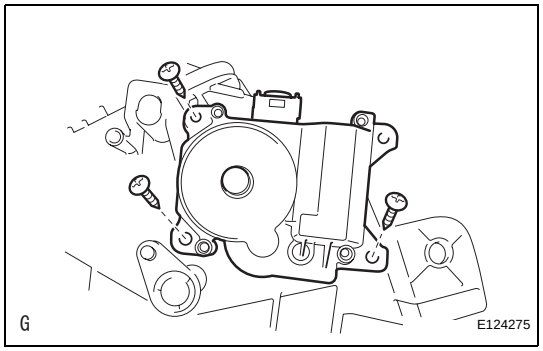

3. INSTALL AIR INLET CONTROL SERVO MOTOR (for Automatic Air Conditioning System)

(a) Install the air inlet servo motor with the 3 screws.

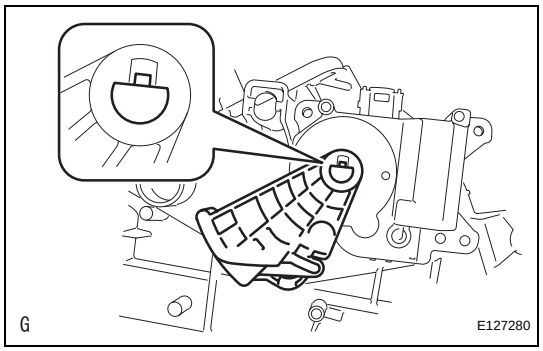

(b) Attach the claw to install the lever.

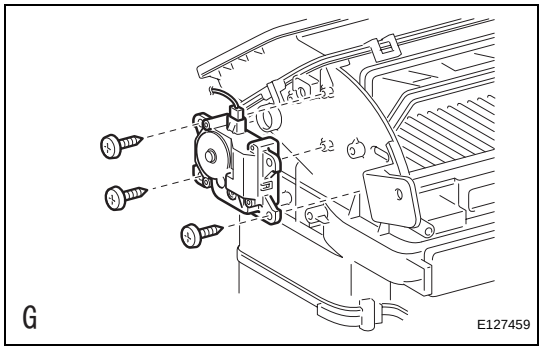

4. INSTALL AIR INLET CONTROL SERVO MOTOR (for Manual Air Conditioning System)

(a) Install the air inlet servo motor with the 3 screws.

AC

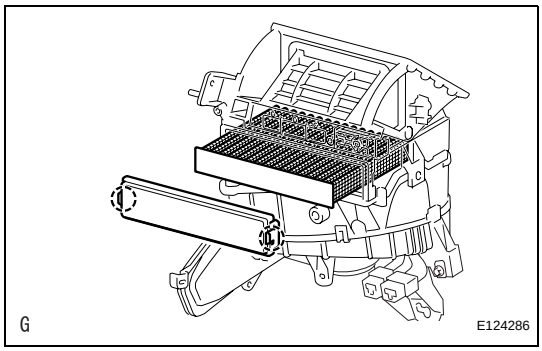

5. INSTALL AIR FILTER CASE

(a) Install the air filter.

(b) Attach the 2 claws to install the air filter case.

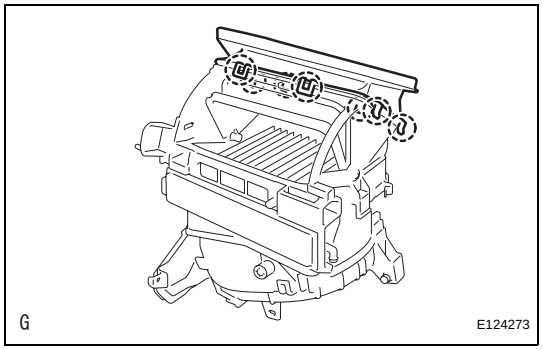

6. INSTALL HEATER TO REGISTER DUCT ASSEMBLY

(a) Attach the 7 claws to install the register duct.

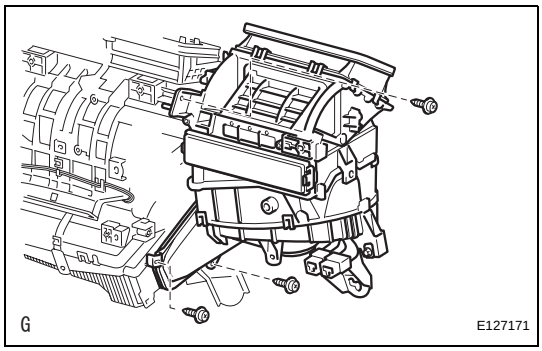

INSTALLATION

1. INSTALL BLOWER ASSEMBLY

(a) Install the blower assembly with the 3 screws.

2. INSTALL AIR CONDITIONING UNIT

(a) Install the air conditioning unit (see page AC-197).

3. INSTALL AIR DUCT (See page AC-199)

4. INSTALL LOWER INSTRUMENT PANEL

(a) Install the lower instrument panel (see page IP-23).

5. INSTALL UPPER INSTRUMENT PANEL

(a) Install the upper instrument panel (see page IP-9).

6. CONNECT CABLE TO NEGATIVE BATTERY TERMINAL

7. CHECK SRS WARNING LIGHT

(a) Check the SRS warning light (see page RS-37).

INSTALLATION

1. ADJUST ADJUST COMPRESSOR OIL

(a) When replacing the compressor and magnetic clutch with a new one, gradually discharge the refrigerant gas from the service valve, and drain the following amount of oil from the new compressor and magnetic clutch before installation.

Standard:

(Oil capacity inside the new compressor and magnetic clutch: 130 + 15 cc (4.6 + 0.51 fl.oz.)) -(Remaining oil amount in the removed compressor and magnetic clutch) = (Oil amount to be removed from the new compressor when replacing)

NOTICE:

- **When checking the compressor oil level, observe the precautions on the cooler removal/installation.**
- **If a new compressor and magnetic clutch is installed without removing some oil remaining in the pipes of the vehicle, the oil amount will be too large. This prevents heat exchange in the refrigerant cycle and causes refrigerant failure.**
- **If the volume of oil remaining in the removed compressor and magnetic clutch is too small, check for oil leakage.**
- **Be sure to use ND-OIL 8 or equivalent for compressor oil.**

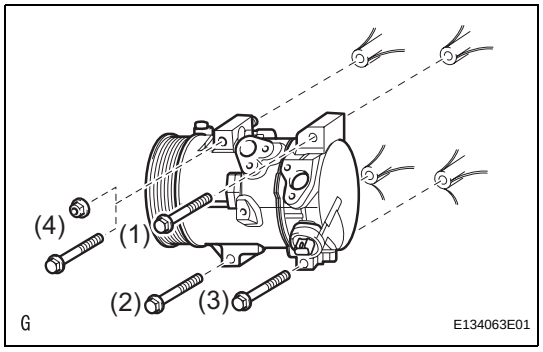

2. INSTALL COOLER COMPRESSOR ASSEMBLY

(a) w/o Stud Bolt:

Install the cooler compressor with the 4 bolts.

Torque: 24.5 N*m (250 kgf*cm, 18 ft.*lbf)

NOTICE:

Tighten the bolts in the order shown in the illustration to install the cooler compressor.

(b) w/ Stud Bolt:

Install the cooler compressor with the 3 bolts and nut.

Torque: 24.5 N*m (250 kgf*cm, 18 ft.*lbf)

NOTICE:

Tighten the bolts in the order shown in the illustration to install the cooler compressor.

(c) Connect the connector.

AC

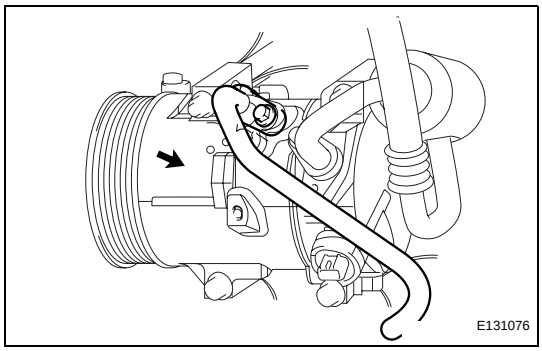

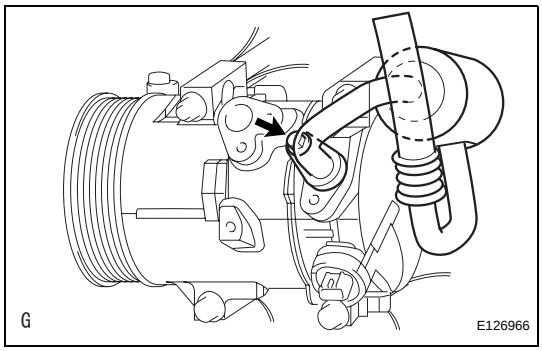

3. **INSTALL NO. 1 COOLER REFRIGERANT DISCHARGE HOSE**
   (a) Remove the attached vinyl tape from the hose.
   (b) Sufficiently apply compressor oil to a new O-ring and the fitting surface of the cooler compressor.
   Compressor oil:
   ND-OIL 8 or equivalent
   (c) Install the O-ring on the cooler refrigerant discharge hose.
   (d) Install the cooler refrigerant discharge hose on the cooler compressor with the bolt.
   Torque: 9.8 N*m (100 kgf*cm, 7 ft.*lbf)

4. **INSTALL NO. 1 COOLER REFRIGERANT SUCTION HOSE**
   (a) Remove the attached vinyl tape from the hose.
   (b) Sufficiently apply compressor oil to a new O-ring and the fitting surface of the cooler compressor.
   Compressor oil:
   ND-OIL 8 or equivalent
   (c) Install the O-ring on the cooler refrigerant suction hose.
   (d) Install the cooler refrigerant suction hose on the cooler compressor with the bolt.
   Torque: 9.8 N*m (100 kgf*cm, 7 ft.*lbf)

5. **INSTALL FAN AND GENERATOR V BELT (See page EM-7)**

6. **INSTALL NO. 1 ENGINE UNDER COVER**

7. **CONNECT CABLE TO NEGATIVE BATTERY TERMINAL**

8. **CHARGE REFRIGERANT (See page AC-172)**

9. **WARM UP ENGINE (See page AC-173)**

10. **CHECK FOR LEAKAGE OF REFRIGERANT (See page AC-173)**

AC

COMPRESSOR AND PULLEY (for 2AZ-FE)

COMPONENTS

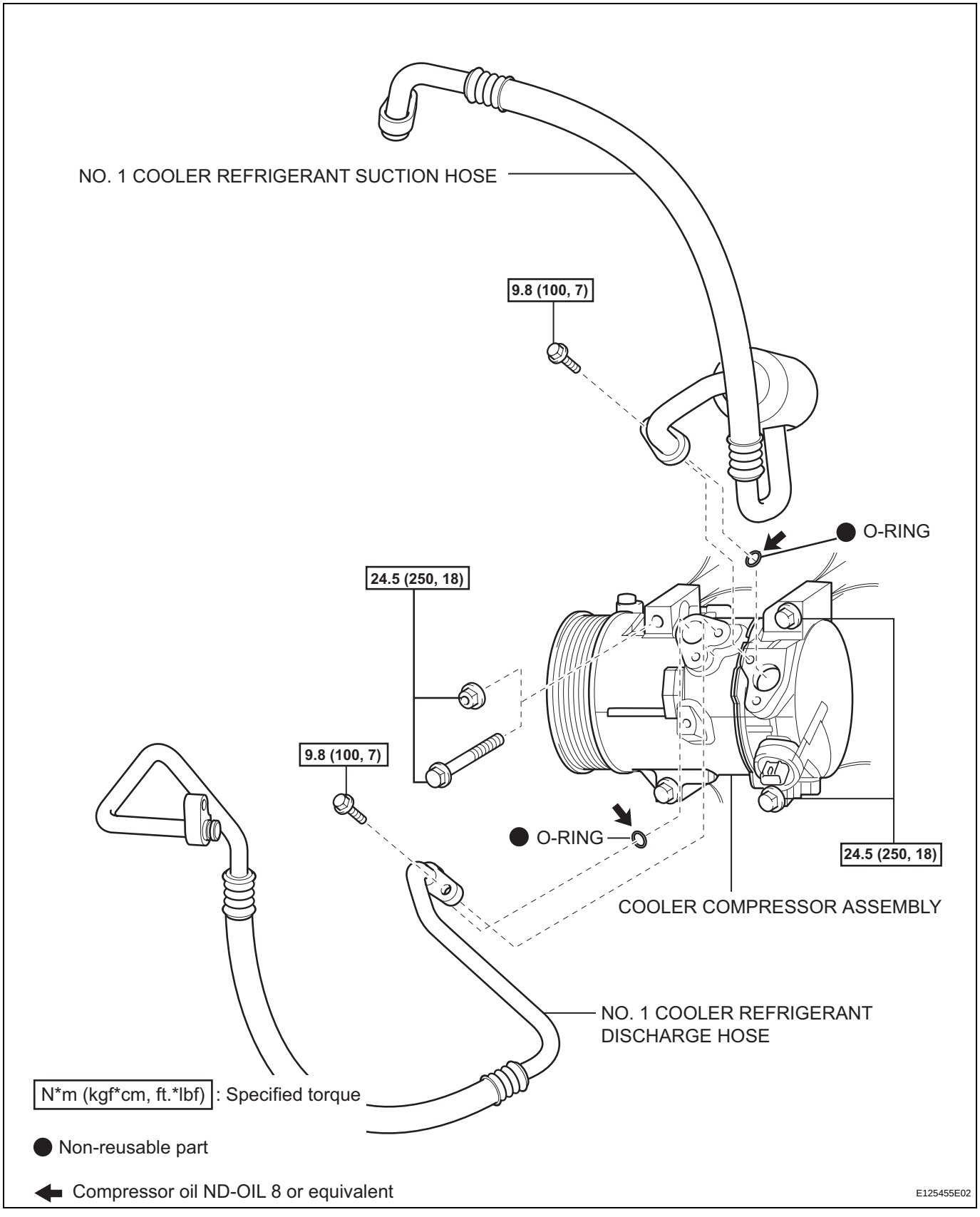

AC

REMOVAL

1. **DISCHARGE REFRIGERANT FROM REFRIGERATION SYSTEM (See page AC-172)**

2. **DISCONNECT CABLE FROM NEGATIVE BATTERY TERMINAL**
   CAUTION:
   Wait at least 90 seconds after disconnecting the cable from the negative (-) battery terminal to prevent airbag and seat belt pretensioner activation.

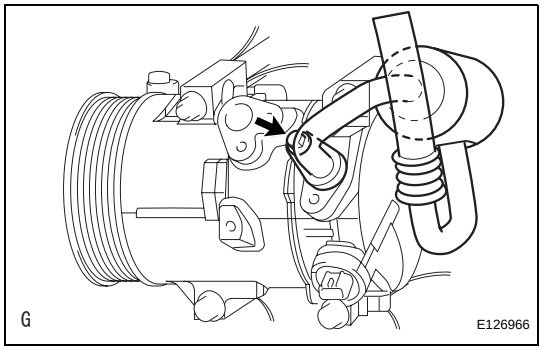

3. **DISCONNECT NO. 1 COOLER REFRIGERANT SUCTION HOSE**
   (a) Remove the bolt and disconnect the cooler refrigerant suction hose from the cooler compressor.
   (b) Remove the O-ring from the cooler refrigerant suction hose.
   NOTICE:
   Seal the openings of the disconnected parts using vinyl tape to prevent moisture and foreign matter from entering them.

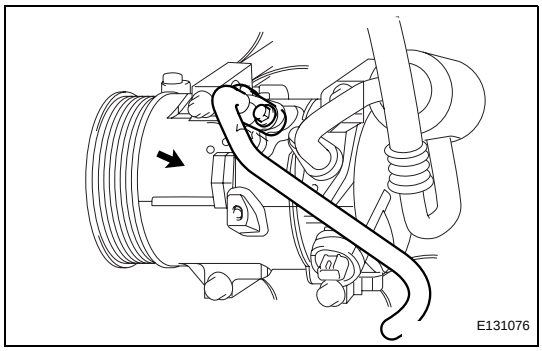

4. **DISCONNECT NO. 1 COOLER REFRIGERANT DISCHARGE HOSE**
   (a) Remove the bolt and disconnect the cooler refrigerant discharge hose from the cooler compressor.
   (b) Remove the O-ring from the cooler refrigerant discharge hose.
   NOTICE:
   Seal the openings of the disconnected parts using vinyl tape to prevent moisture and foreign matter from entering them.

5. **REMOVE NO. 1 ENGINE UNDER COVER**

6. **REMOVE FAN AND GENERATOR V BELT (See page EM-6)**

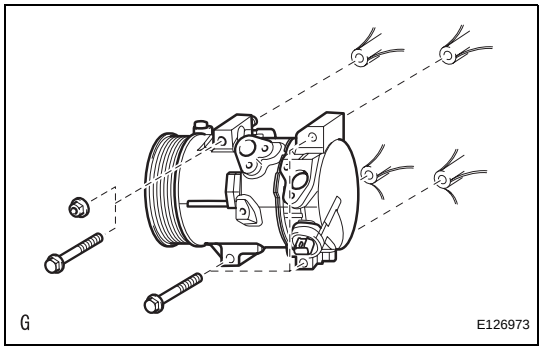

7. **REMOVE COOLER COMPRESSOR ASSEMBLY**
   (a) Disconnect the connector.
   (b) w/o Stud Bolt:
   Remove the 4 bolts and cooler compressor.
   (c) w/ Stud Bolt:
   Remove the 3 bolts, nut and cooler compressor.

AC

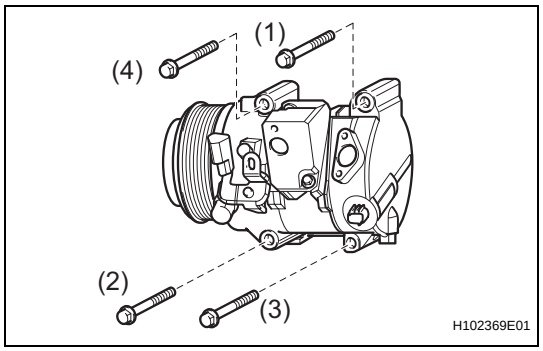

INSTALLATION

1. **INSTALL COOLER COMPRESSOR ASSEMBLY**
   (a) Install the cooler compressor with the 4 bolts.
   Torque: 24.5 N*m (250 kgf*cm, 18 ft.*lbf)
   NOTICE:
   Tighten the bolts in the order shown in the illustration to install the cooler compressor.
   (b) Connect the connector.

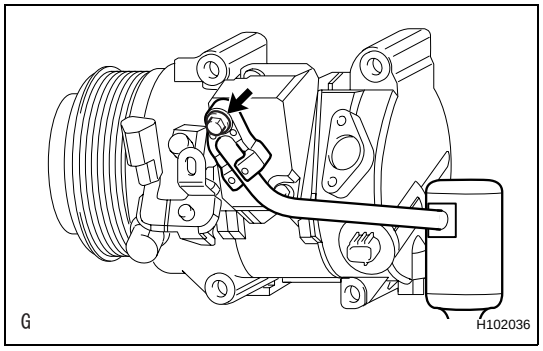

2. **CONNECT NO. 1 COOLER REFRIGERANT DISCHARGE HOSE**
   (a) Remove the attached vinyl tape from the hose.
   (b) Sufficiently apply compressor oil to a new O-ring and the fitting surface of the cooler compressor.
   Compressor oil:
   ND-OIL 8 or equivalent
   (c) Install the O-ring to the cooler refrigerant discharge hose.
   (d) Connect the cooler refrigerant discharge hose to the cooler compressor with the bolt.
   Torque: 9.8 N*m (100 kgf*cm, 7 ft.*lbf)

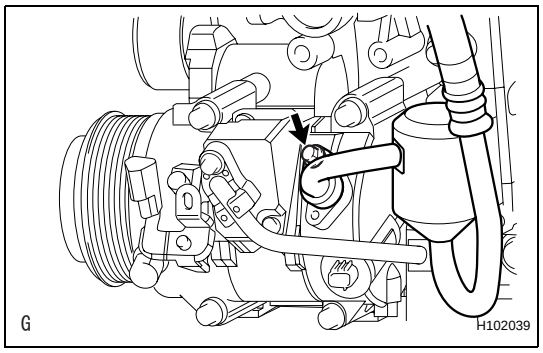

3. **CONNECT NO. 1 COOLER REFRIGERANT SUCTION HOSE**
   (a) Remove the attached vinyl tape from the hose.
   (b) Sufficiently apply compressor oil to a new O-ring and the fitting surface of the cooler compressor.
   Compressor oil:
   ND-OIL 8 or equivalent
   (c) Install the O-ring to the cooler refrigerant suction hose.
   (d) Connect the cooler refrigerant suction hose to the cooler compressor with the bolt.
   Torque: 9.8 N*m (100 kgf*cm, 7 ft.*lbf)

4. **INSTALL FAN AND GENERATOR V BELT (See page EM-8)**

5. **CONNECT CABLE TO NEGATIVE BATTERY TERMINAL**

6. **CHARGE REFRIGERANT (See page AC-172)**

7. **WARM UP ENGINE (See page AC-173)**

8. **CHECK FOR LEAKAGE OF REFRIGERANT (See page AC-173)**

COMPRESSOR AND PULLEY (for 2GR-FE)

COMPONENTS

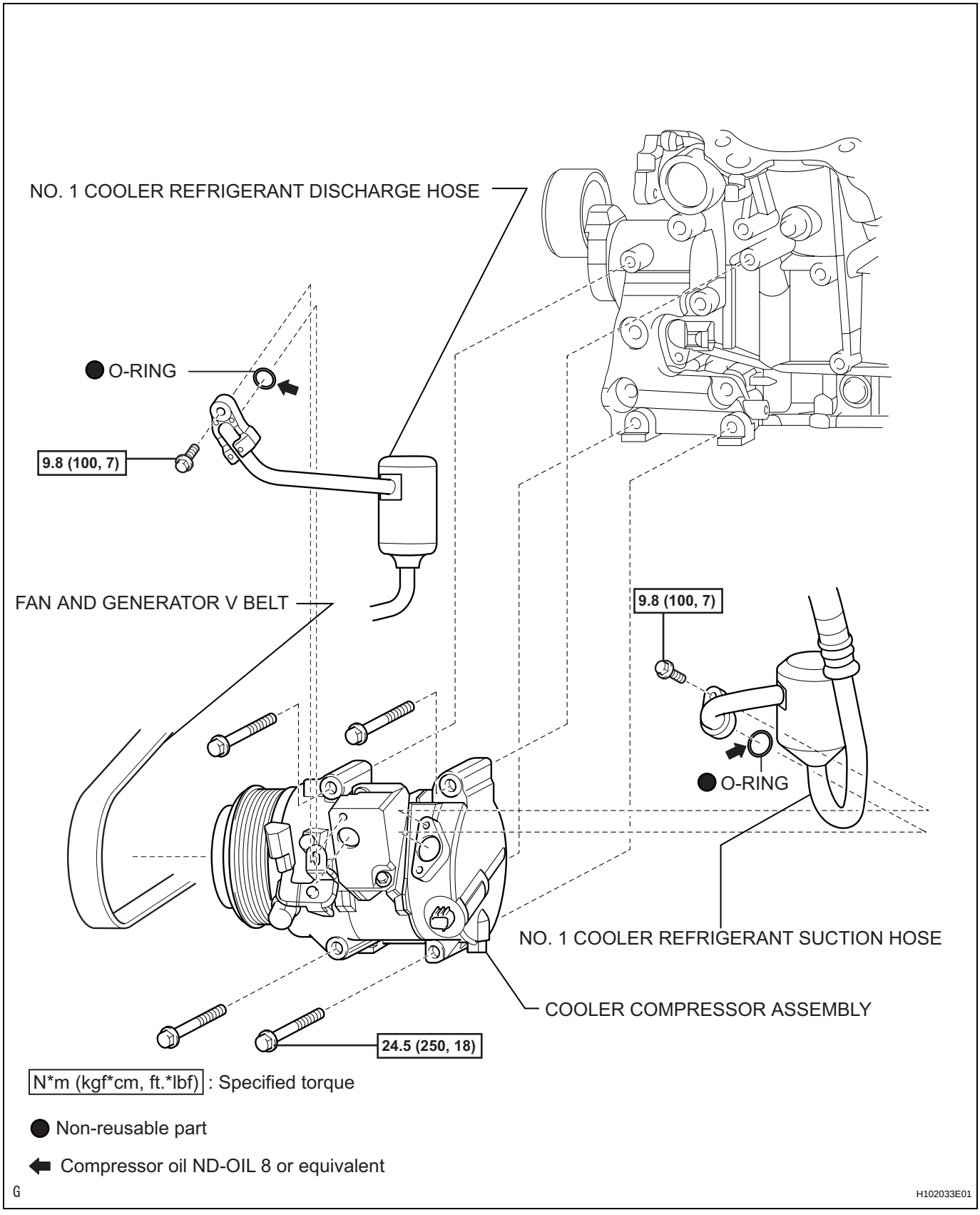

AC

REMOVAL

1. **DISCHARGE REFRIGERANT FROM REFRIGERATION SYSTEM (See page AC-172)**

2. **DISCONNECT CABLE FROM NEGATIVE BATTERY TERMINAL**
   CAUTION:
   Wait at least 90 seconds after disconnecting the cable from the negative (-) battery terminal to prevent airbag and seat belt pretensioner activation.

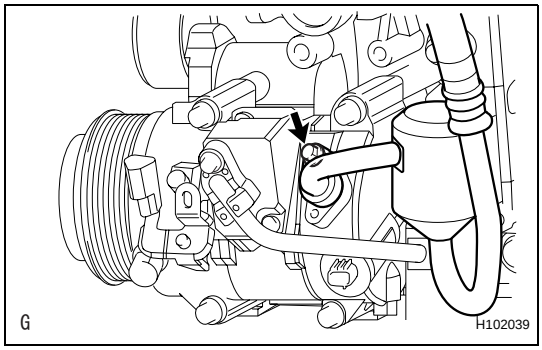

3. **DISCONNECT NO. 1 COOLER REFRIGERANT SUCTION HOSE**
   (a) Remove the bolt and disconnect the cooler refrigerant suction hose from the cooler compressor.
   (b) Remove the O-ring from the cooler refrigerant suction hose.
   NOTICE:
   Seal the openings of the disconnected parts using vinyl tape to prevent moisture and foreign matter from entering them.

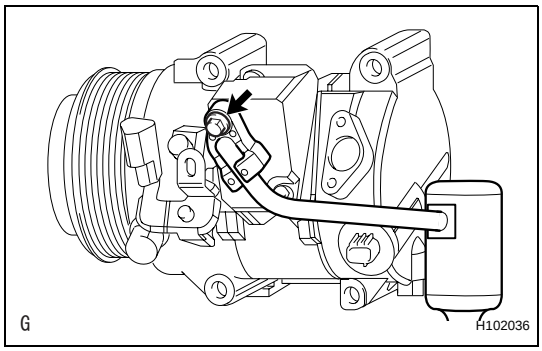

4. **DISCONNECT NO. 1 COOLER REFRIGERANT DISCHARGE HOSE**
   (a) Remove the bolt and disconnect the cooler refrigerant discharge hose from the cooler compressor.
   (b) Remove the O-ring from the cooler refrigerant discharge hose.
   NOTICE:
   Seal the openings of the disconnected parts using vinyl tape to prevent moisture and foreign matter from entering them.

5. **REMOVE FAN AND GENERATOR V BELT (See page EM-8)**

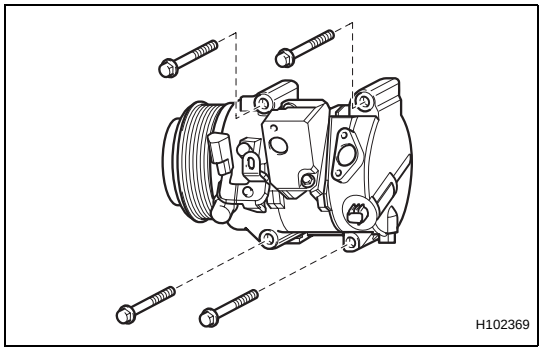

6. **REMOVE COOLER COMPRESSOR ASSEMBLY**
   (a) Disconnect the connector.
   (b) Remove the 4 bolts and cooler compressor.

AC

ON-VEHICLE INSPECTION

1. INSPECT COOLER CONDENSER ASSEMBLY

(a) If the fins of the cooler condenser are dirty, clean them with water. Dry the fins with compressed air.
NOTICE:
Do not damage the fins of the condenser.

(b) If a fin of the cooler condenser is bent, straighten it using a screwdriver or pliers.

2. CHECK CONDENSER FOR LEAKAGE OF REFRIGERANT

(a) Using a halogen leak detector, check the pipe joints for gas leakage.

(b) If gas leakage is detected in a joint, check the torque of the joint.

REMOVAL

1. **DISCHARGE REFRIGERANT FROM REFRIGERATION SYSTEM (See page AC-172)**

2. **DISCONNECT CABLE FROM NEGATIVE BATTERY TERMINAL**
   CAUTION:
   Wait at least 90 seconds after disconnecting the cable from the negative (-) battery terminal to prevent airbag and seat belt pretensioner activation.

3. **REMOVE FRONT BUMPER COVER**
   (a) Remove front bumper cover (see page ET-4).

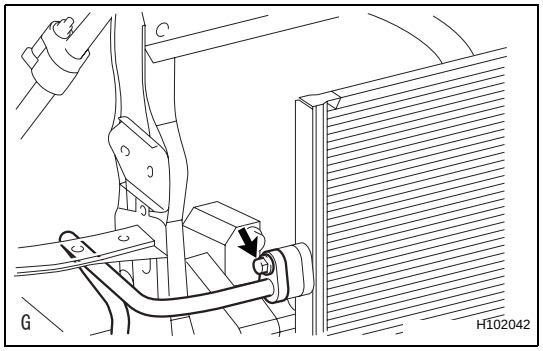

4. **DISCONNECT NO. 1 COOLER REFRIGERANT DISCHARGE HOSE**
   (a) Remove the bolt and disconnect the cooler refrigerant discharge hose from the cooler condenser.
   (b) Remove the O-ring from the cooler refrigerant discharge hose.
   NOTICE:
   Seal the openings of the disconnected parts using vinyl tape to prevent moisture and foreign matter from entering them.

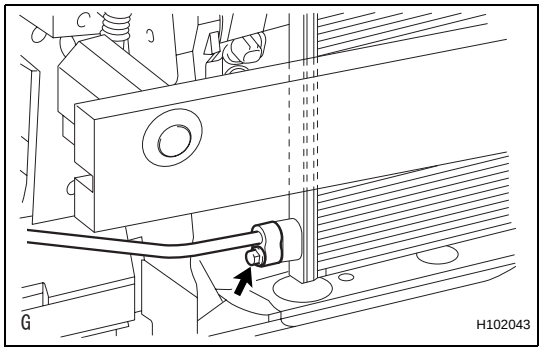

5. **DISCONNECT COOLER REFRIGERANT LIQUID PIPE**
   (a) Remove the bolt and disconnect the cooler refrigerant liquid pipe from the cooler condenser.
   (b) Remove the O-ring from the cooler refrigerant liquid pipe.
   NOTICE:
   Seal the openings of the disconnected parts using vinyl tape to prevent moisture and foreign matter from entering them.

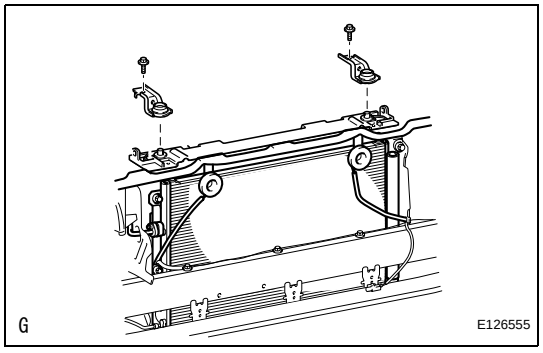

6. **REMOVE RADIATOR SUPPORT UPPER BRACKET**
   (a) Remove the 2 bolts and 2 brackets.

AC

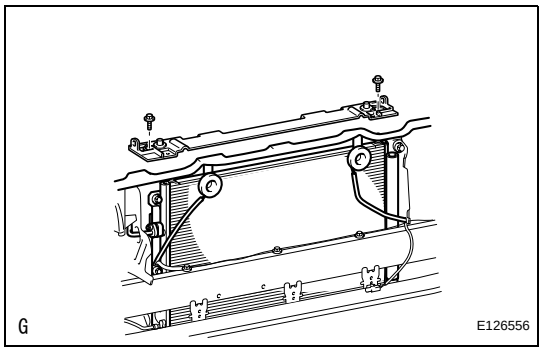

7. REMOVE NO. 2 FAN SHROUD

(a) Remove the 2 bolts and fan shroud.

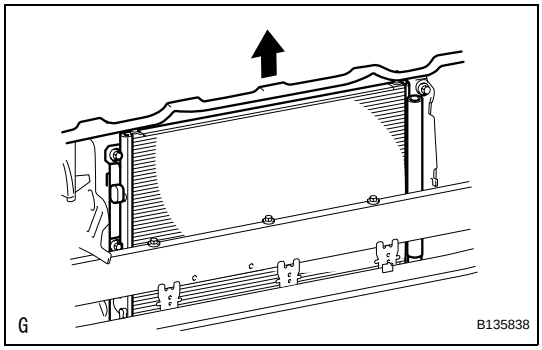

8. REMOVE COOLER CONDENSER ASSEMBLY

(a) Remove the cooler condenser.

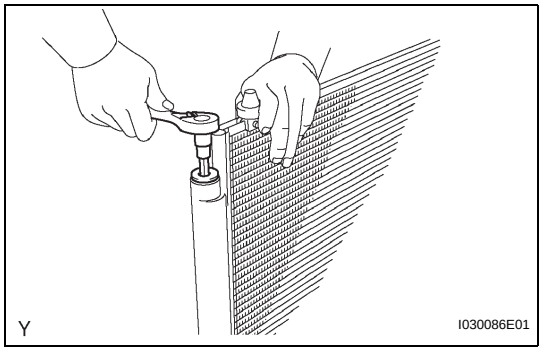

9. REMOVE COOLER DRYER

(a) Using a 14 mm socket hexagon wrench, remove the cap from the modulator.

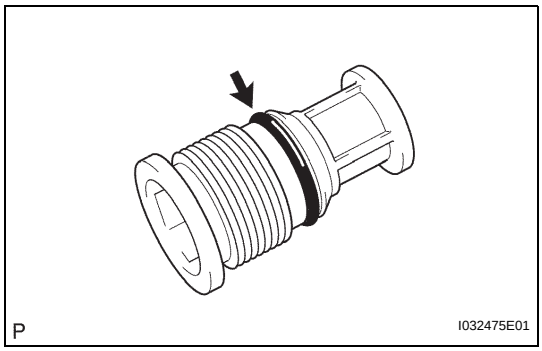

(b) Remove the O-ring from the cap.

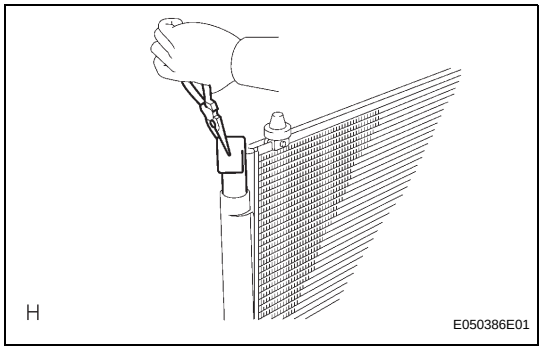

(c) Using pliers, remove the cooler dryer.

AC

INSTALLATION

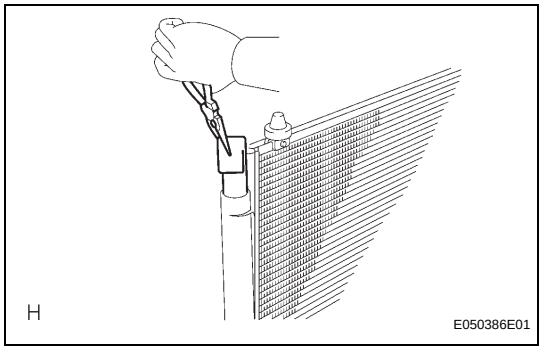

1. INSTALL COOLER DRYER

(a) Using pliers, install the cooler dryer.

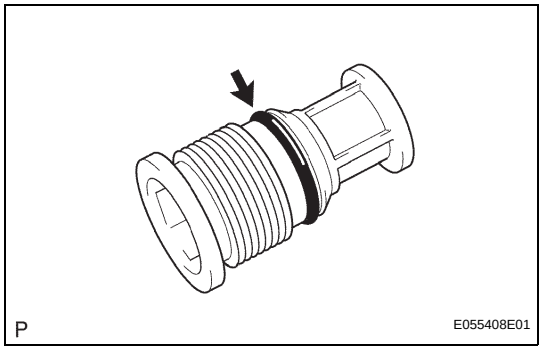

(b) Apply a sufficient amount of compressor oil to the contact surfaces of a new O-ring and the cap.
Compressor oil:
ND-OIL 8 or equivalent

(c) Install the O-ring to the cap.

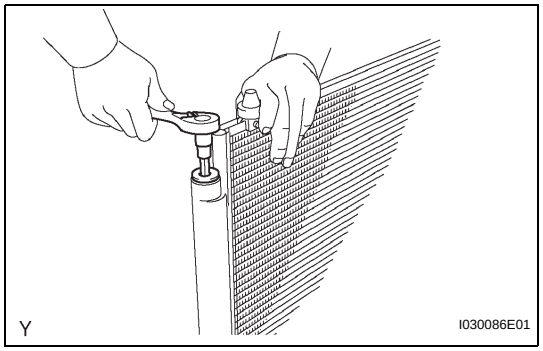

(d) Using a 14 mm socket hexagon wrench, install the cap to the modulator.
Torque: 2.9 N*m (29 kgf*cm, 25 in.*lbf)

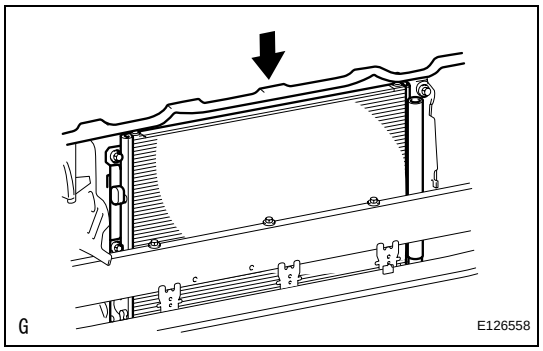

2. INSTALL COOLER CONDENSER ASSEMBLY

(a) Install the cooler condenser.

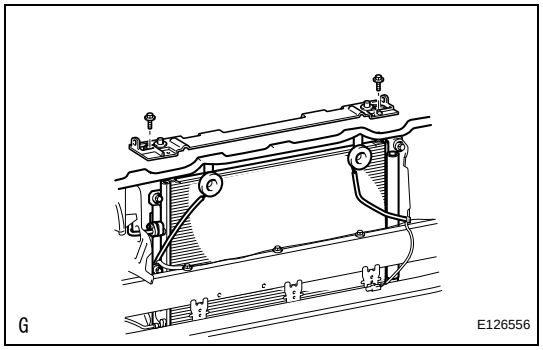

3. INSTALL NO. 2 FAN SHROUD

(a) Install the fan shroud with the 2 bolts.
Torque: 10.5 N*m (107 kgf*cm, 8 ft.*lbf)

AC

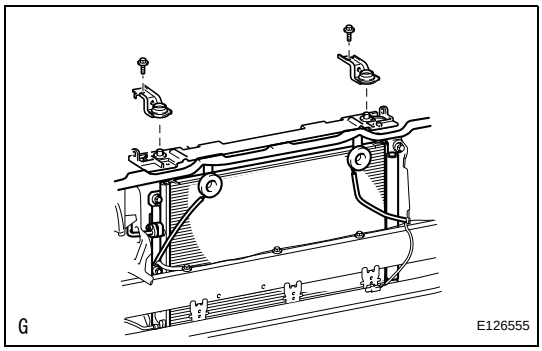

4. **INSTALL RADIATOR SUPPORT UPPER BRACKET**
   (a) Install the 2 brackets with the 2 bolts.
   Torque: 45 N*m (459 kgf*cm, 33 ft.*lbf)

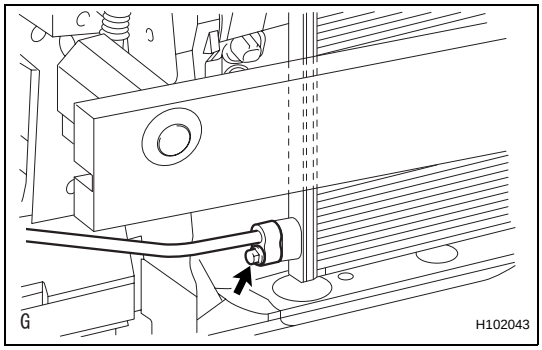

5. **INSTALL COOLER REFRIGERANT LIQUID PIPE**
   (a) Remove the attached vinyl tape from the pipe and the connecting part of the cooler condenser.
   (b) Sufficiently apply compressor oil to a new O-ring and the fitting surface of the pipe joint.
   Compressor oil:
   ND-OIL 8 or equivalent
   (c) Install the O-ring on the cooler refrigerant liquid pipe.
   (d) Install the cooler refrigerant liquid pipe on the cooler condenser with the bolt.
   Torque: 9.8 N*m (100 kgf*cm, 7 ft.*lbf)

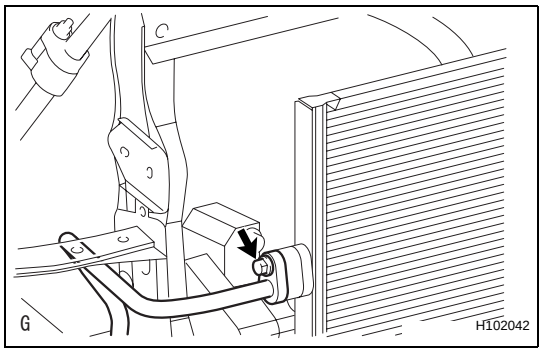

6. **INSTALL NO. 1 COOLER REFRIGERANT DISCHARGE HOSE**
   (a) Remove the attached vinyl tape from the hose and the connecting part of the cooler condenser.
   (b) Sufficiently apply compressor oil to a new O-ring and the fitting surface of the hose joint.
   Compressor oil:
   ND-OIL 8 or equivalent
   (c) Install the O-ring on the cooler refrigerant discharge hose.
   (d) Install the cooler refrigerant discharge hose on the cooler condenser with the bolt.
   Torque: 9.8 N*m (100 kgf*cm, 7 ft.*lbf)

7. **ADJUST HOOD SUB-ASSEMBLY (See page ED-5)**

8. **INSTALL FRONT BUMPER COVER**
   (a) Install the front bumper cover (see page ET-10).

9. **CONNECT CABLE TO NEGATIVE BATTERY TERMINAL**

10. **CHARGE REFRIGERANT (See page AC-172)**

11. **WARM UP ENGINE (See page AC-173)**

12. **CHECK FOR LEAKAGE OF REFRIGERANT (See page AC-173)**

CONDENSER

COMPONENTS

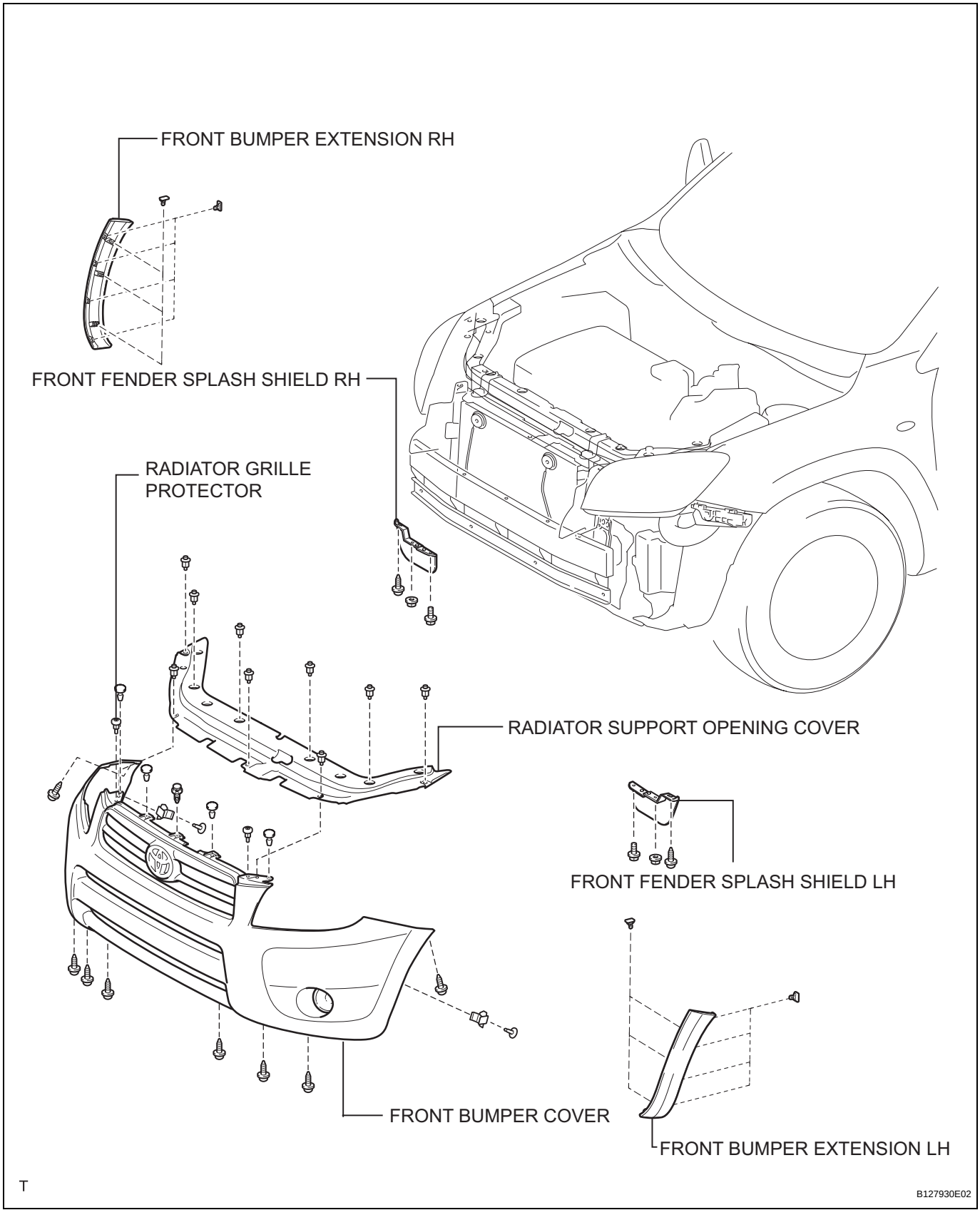

AC

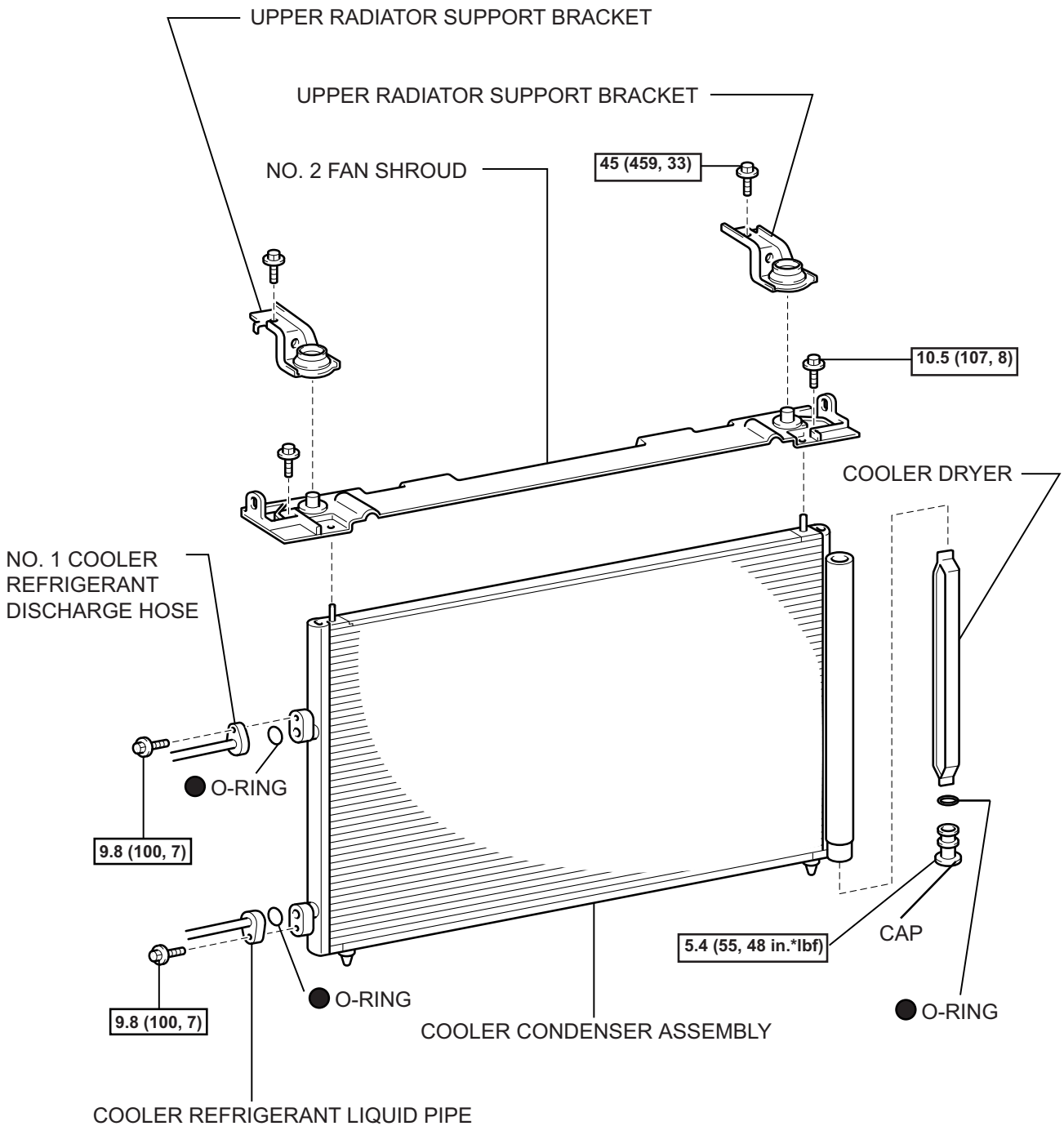

N*m (kgf*cm, ft.*lbf) : Specified torque

● Non-reusable part

⬅ Compressor oil ND-OIL 8 or equivalent

E123858E04

AC

EVAPORATOR TEMPERATURE SENSOR

REMOVAL

1. **REMOVE AIR CONDITIONING UNIT**
   (a) Remove the air conditioning radiator (see page AC-185).

2. **REMOVE EVAPORATOR TEMPERATURE SENSOR (See page AC-193)**

INSPECTION

1. **INSPECT EVAPORATOR TEMPERATURE SENSOR**
   (a) Measure the resistance of the sensor.
   Standard resistance

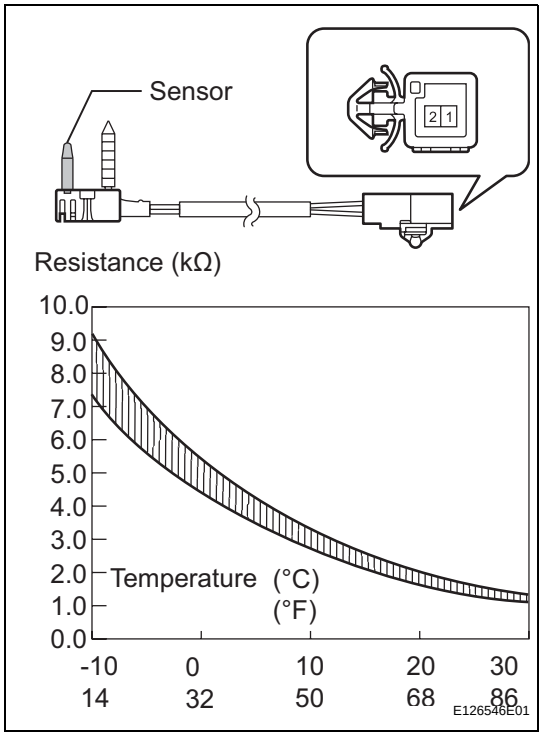

Tester Connection	Condition	Specified Condition
1 - 2	-10°C (14°F)	7.30 to 9.10 kΩ
1 - 2	-5°C (23°F)	5.65 to 6.95 kΩ
1 - 2	0°C (32°F)	4.40 to 5.35 kΩ
1 - 2	5°C (41°F)	3.40 to 4.15 kΩ
1 - 2	10°C (50°F)	2.70 to 3.25 kΩ
1 - 2	15°C (59°F)	2.14 to 2.58 kΩ
1 - 2	20°C (68°F)	1.71 to 2.05 kΩ
1 - 2	25°C (77°F)	1.38 to 1.64 kΩ
1 - 2	30°C (86°F)	1.11 to 1.32 kΩ

NOTICE:

- **Even slightly touching the sensor may change the resistance value. Be sure to hold the connector of the sensor.**
- **When measuring, the sensor temperature must be almost the same as the ambient temperature.**

HINT:

As the temperature increases, the resistance decreases (see the graph).

If the result is not as specified, replace the sensor.

AC

INSTALLATION

1. **INSTALL EVAPORATOR TEMPERATURE SENSOR (See page AC-193)**

2. **INSTALL AIR CONDITIONING UNIT**
   (a) Install the air conditioning unit (see page AC-197).

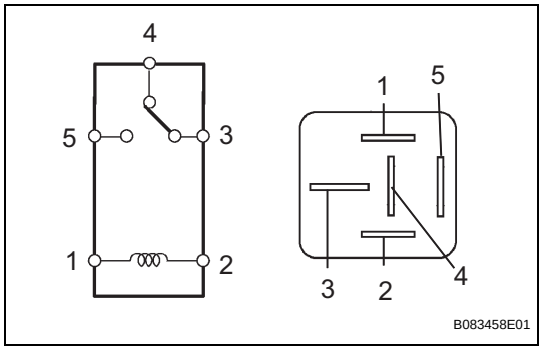

HEATER RELAY

ON-VEHICLE INSPECTION

1. INSPECT RELAY (Marking: HTR)

(a) Measure the resistance of the HTR relay.

Standard resistance

Tester Connection	Specified Condition
3 - 4	Below 1 Ω
3 - 5	10 kΩ or higher
3 - 5	Below 1 Ω (when battery voltage is applied to terminals 1 and 2)

If the result is not as specified, replace the relay.

AC

REPLACEMENT

1. DISCHARGE REFRIGERANT FROM REFRIGERATION SYSTEM

(a) Start up the engine.
(b) Turn the A/C switch ON.
(c) Operate the cooler compressor with an engine speed of approximately 1,000 rpm for 5 to 6 minutes to circulate the refrigerant and collect the compressor oil remaining in each component into the cooler compressor.
(d) Stop the engine.
(e) Using SST, discharge the refrigerant gas.
SST 07110-58060 (07117-58060, 07117-58070, 07117-58080, 07117-58090, 07117-78050, 07117-88060, 07117-88070, 07117-88080)

2. CHARGE REFRIGERANT

(a) Perform vacuum purging using a vacuum pump.
(b) Charge refrigerant HFC-134a (R134a).
Standard:
430 +-30 g (15.2 +-1.1 oz.)
SST 07110-58060 (07117-58060, 07117-58070, 07117-58080, 07117-58090, 07117-78050, 07117-88060, 07117-88070, 07117-88080)

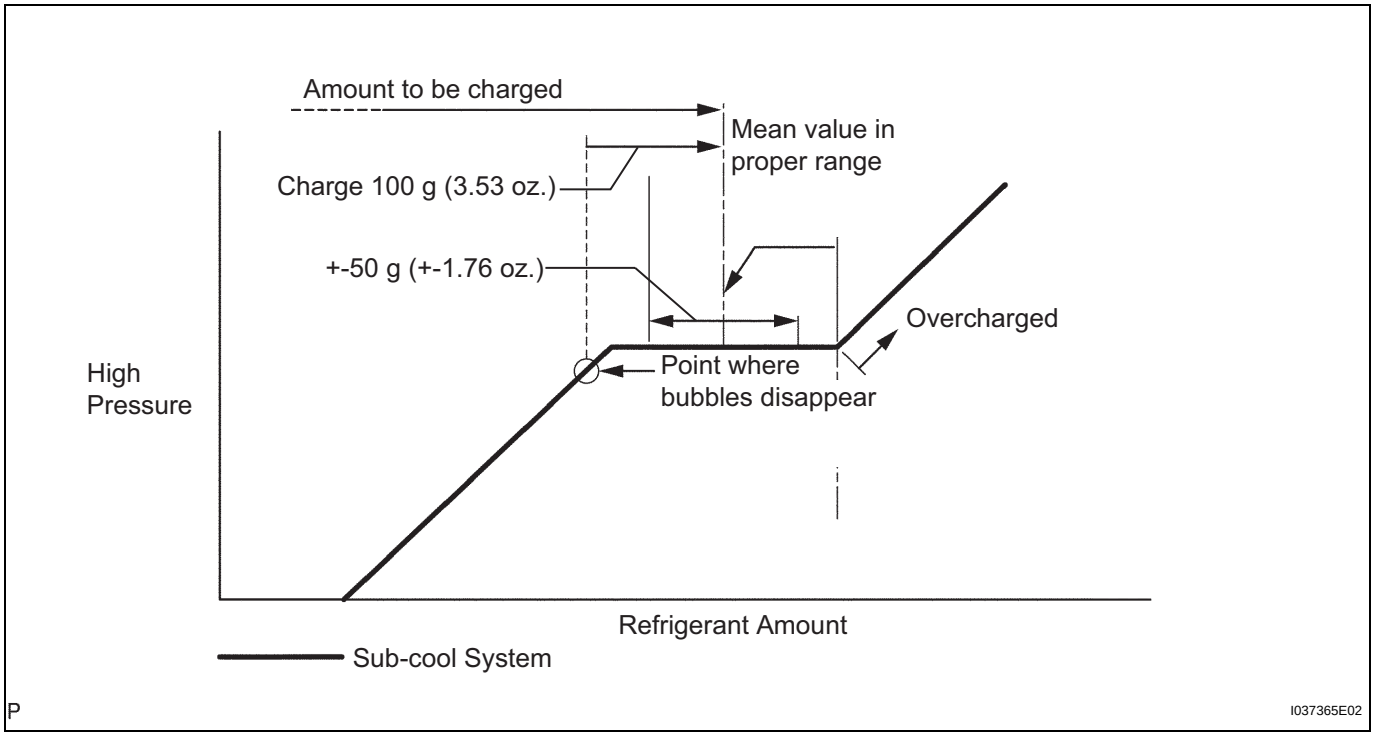

NOTICE:

- **Do not operate the cooler compressor before charging refrigerant as the cooler compressor will not work properly without any refrigerant, and will overheat.**

AC

- **Approximately 100 g (3.53 oz.) of refrigerant may need to be charged after bubbles disappear. The refrigerant amount should be checked by measuring its quantity, and not with the sight glass.**

3. WARM UP ENGINE

(a) Warm up the engine at less than 1,850 rpm for 2 minutes or more after charging the refrigerant.
NOTICE:
Be sure to warm up the compressor when turning the A/C switch ON after removing and installing the cooler refrigerant lines (including the compressor), to prevent damage to the compressor.

4. CHECK FOR LEAKAGE OF REFRIGERANT

(a) After recharging the refrigerant gas, check for refrigerant gas leakage using a halogen leak detector.

(b) Perform the operation under these conditions:
- Stop the engine.
- Secure good ventilation (the gas leak detector may react to volatile gases other than refrigerant, such as evaporated gasoline or exhaust gas).
- Repeat the test 2 or 3 times.
- Make sure that some refrigerant remains in the refrigeration system. When compressor is off:
  approximately 392 to 588 kPa (4 to 6 kgf/cm^2, 57 to 85 psi)

(c) Using a gas leak detector, check the refrigerant line for leakage.

(d) If a gas leak is not detected on the drain hose, remove the blower motor control (blower resistor) from the cooling unit. Insert the gas leak detector sensor into the unit and perform the test.

(e) Disconnect the connector and leave the pressure switch on for approximately 20 minutes. Bring the gas leak detector close to the pressure switch and perform the test.

AC

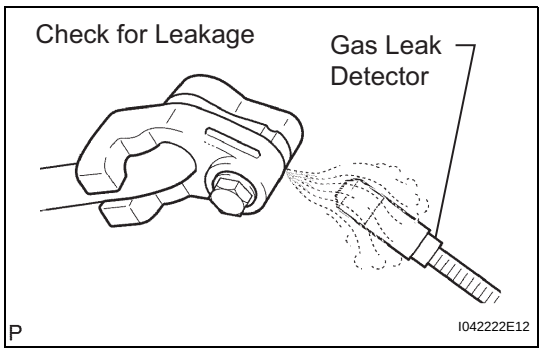

REFRIGERANT

ON-VEHICLE INSPECTION

1. INSPECT REFRIGERANT PRESSURE WITH MANIFOLD GAUGE SET

(a) This method uses a manifold gauge set to locate problem areas. Read the manifold gauge pressure when these conditions are established. Test conditions:

- Temperature at the air inlet is 30 to 35°C (86 to 95°F).
- Engine is running at 1,500 rpm.
- All doors are fully open.
- Blower speed control switch is at HI.
- A/C switch is ON.

Gauge readings (Reference).

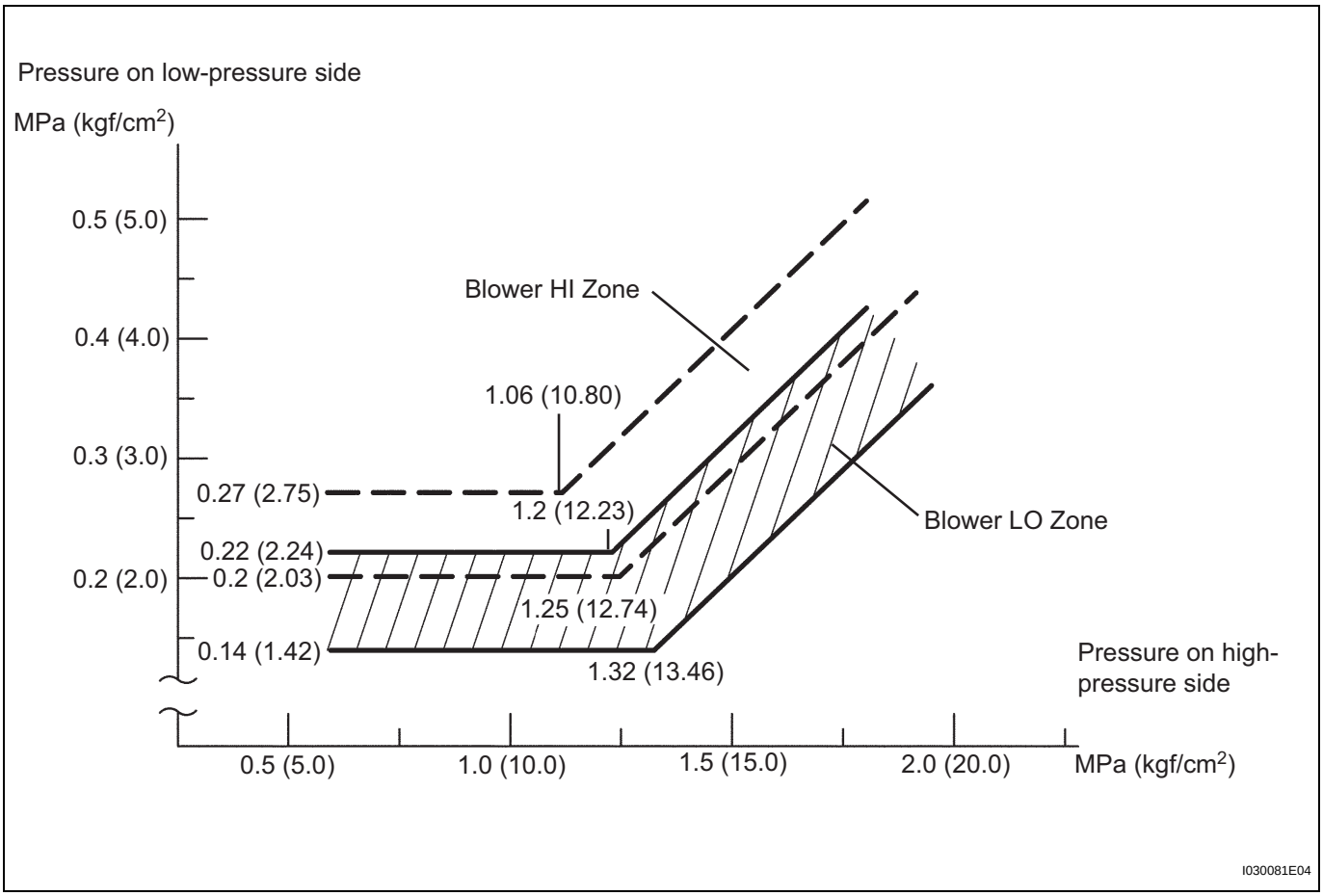

AC

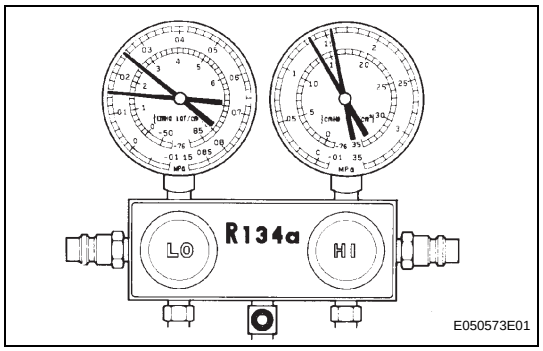

(1) Normally functioning refrigeration system
Gauge reading

Pressure side	Refrigerant volume
Low	0.15 to 0.25 MPa (1.5 to 2.5 kgf/cm2)
High	1.37 to 1.57 MPa (14 to 16 kgf/cm2)

(2) The A/C system periodically changes between normal and improper function due to moisture in the refrigerant system.

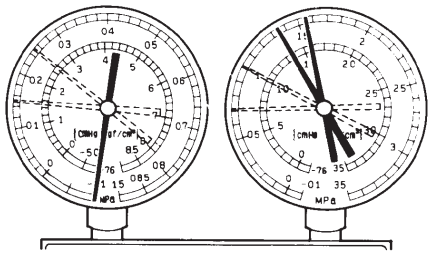

Symptoms	Probable Cause	Diagnosis	Corrective Actions
During operation, pressure on low pressure side cycles between normal and vacuum	Moisture in refrigeration system freezes at expansion valve orifice, causing temporary stop of cycle. However, when melted, normal state is restored.	- Drier is overly saturated - Moisture in refrigeration system freezes at expansion valve orifice and blocks refrigerant circulation	1. Replace cooler drier 2. Remove moisture from cycle by repeatedly evacuating air 3. Supply appropriate volume of new refrigerant

(3) The A/C system does not function effectively due to insufficient cooling.

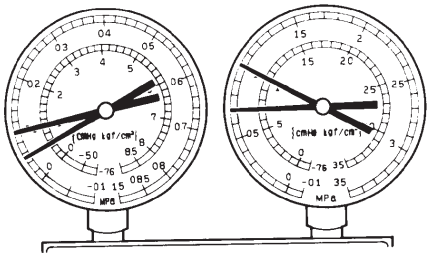

Symptoms	Probable Cause	Diagnosis	Corrective Actions
- Pressure low on both low and high pressure sides - Cooling performance insufficient	Gas leakage from refrigeration system	- Insufficient refrigerant - Refrigerant leakage	1. Check for gas leakage and repair if necessary 2. Supply appropriate volume of new refrigerant 3. If indicated pressure value close to 0 when connected to gauge, create vacuum after inspecting and repairing the location of leakage

AC

(4) The A/C system does not function effectively due to poor circulation of the refrigerant.

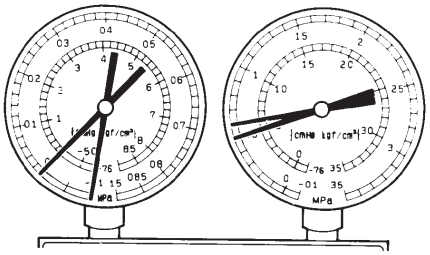

I022119E10

Symptoms	Probable Cause	Diagnosis	Corrective Actions
- Pressure low on both low and high pressure sides - Frost exists on piping from condenser to A/C unit	Refrigerant flow obstructed by dirt in condenser	Condenser clogged	Replace condenser

(5) The A/C system does not function intermittently because the refrigerant does not circulate.

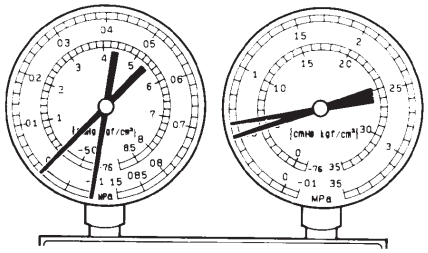

I022120E09

AC

Symptoms	Probable Cause	Diagnosis	Corrective Actions
- Vacuum indicated on low pressure side, and extremely low pressure indicated on high pressure side - Frost or condensation seen on piping on both sides of condenser or expansion valve	- Refrigerant flow obstructed by moisture or dirt in refrigeration system - Refrigerant flow obstructed by gas leakage from expansion valve	Refrigerant does not circulate	1. Check expansion valve refrigerant 2. Clean expansion valve by blowing air 3. Replace condenser 4. Evacuate air and charge appropriate volume of new refrigerant 5. For gas leakage from expansion valve, replace expansion valve

(6) The A/C system does not function effectively due to overcharged refrigerant or insufficient cooling of the condenser.

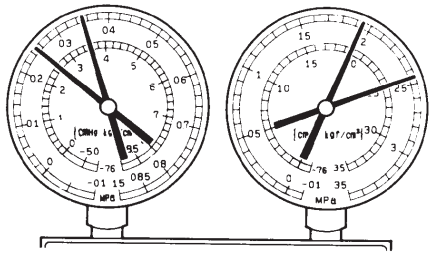

I022121E10

Symptoms	Probable Cause	Diagnosis	Corrective Actions
Pressure extremely high on both low and high-pressure sides	- Excessive refrigerant - Cooling performance of condenser insufficient	- Condenser is dirty - Condenser fan motor is malfunctioning - Excessive refrigerant	1. Clean condenser 2. Check condenser fan motor operation 3. If 1 and 2 normal, check the amount of refrigerant and supply appropriate volume of refrigerant

(7) The A/C system does not function due to air in the refrigeration system.
CAUTION:
The low-pressure piping may be very hot and cause serious burns.

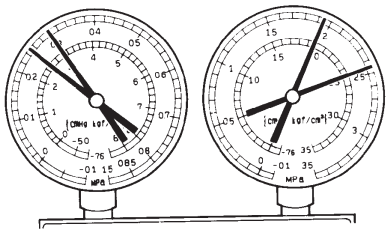

HINT: These gauge indications occur when the refrigeration system opens and the refrigerant is charged without vacuum purging

I022122E03

Symptoms	Probable Cause	Diagnosis	Corrective Actions
- Pressure extremely high on both low and high-pressure sides - Low-pressure piping is too hot to touch	Air in refrigeration system	- Air in refrigeration system - Vacuum purging insufficient	1. Check if compressor oil is dirty or insufficient 2. Evacuate air and charge new refrigerant

(8) The A/C system does not function effectively due to an expansion valve malfunction.

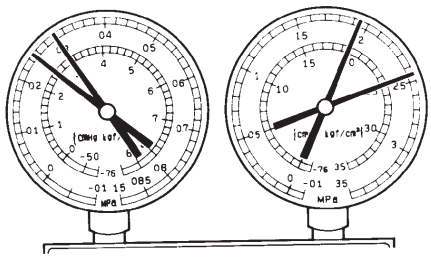

I022123E11

AC

Symptoms	Probable Cause	Diagnosis	Corrective Actions
- Pressure extremely high on both low and high-pressure sides - Frost or condensation on piping on low-pressure side	Problem with expansion valve	- Excessive refrigerant in low pressure piping - Expansion valve too wide open	Replace expansion valve

(9) The A/C system does not function due to a defective compressor.

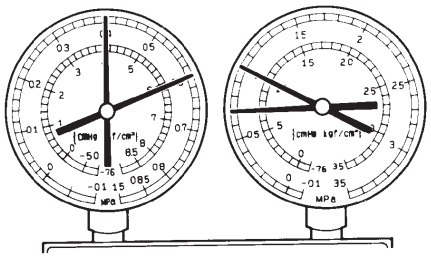

I022124E10

Symptoms	Probable Cause	Diagnosis	Corrective Actions
- Pressure extremely high on both low and high-pressure sides - Pressure extremely low on high pressure side	Internal leakage in compressor	- Compression failure - Leakage from damaged valve or broken sliding parts	Repair or replace compressor

REFRIGERANT LINE

COMPONENTS

(2005/11-2006/01)

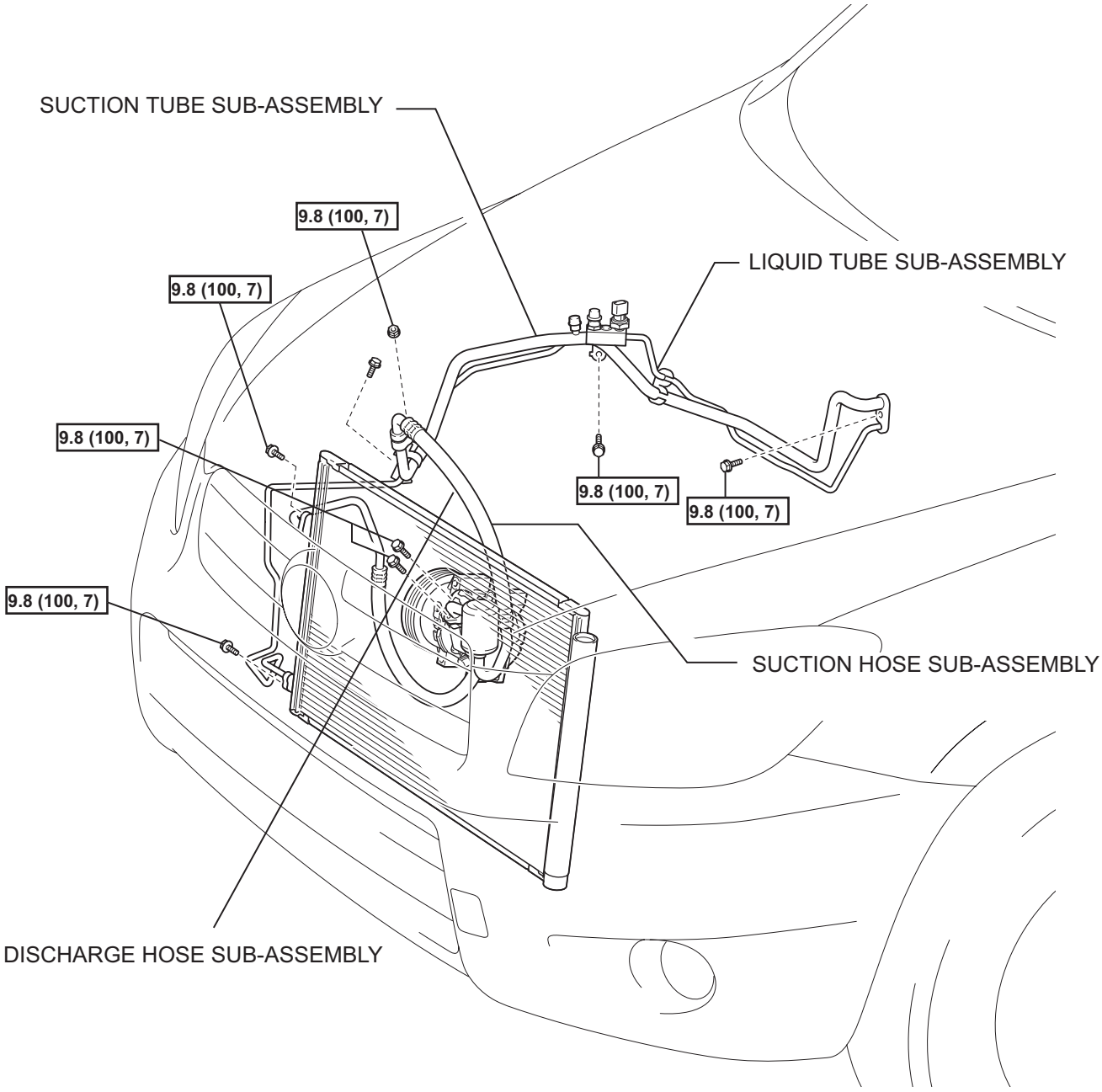

N*m (kgf*cm, ft.*lbf) : Specified torque

P

H102050E03

AC

COMPONENTS

(2006/01-)

for 2AZ-FE

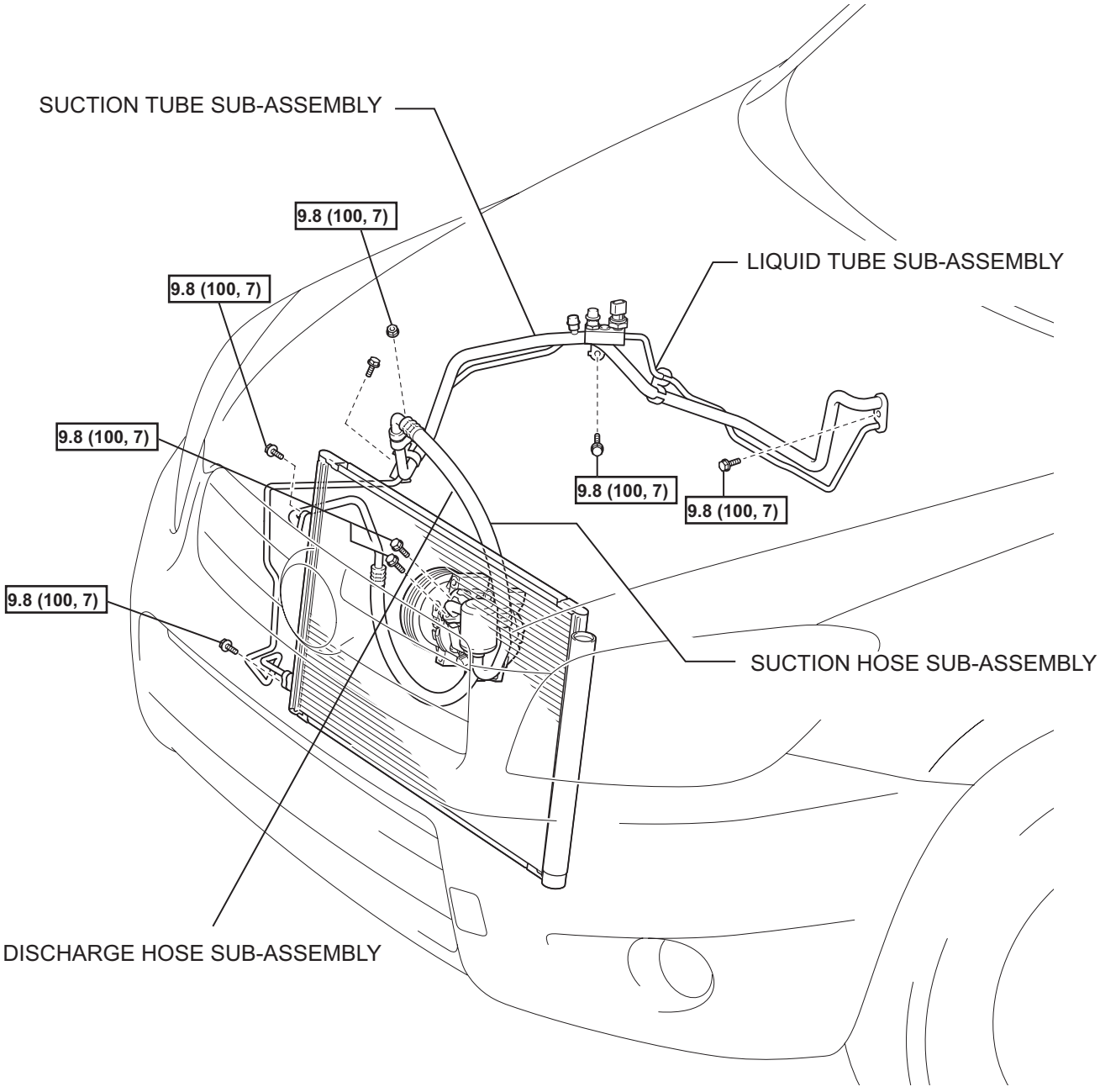

N*m (kgf*cm, ft.*lbf) : Specified torque

P

H102050E05

AC

for 2GR-FE

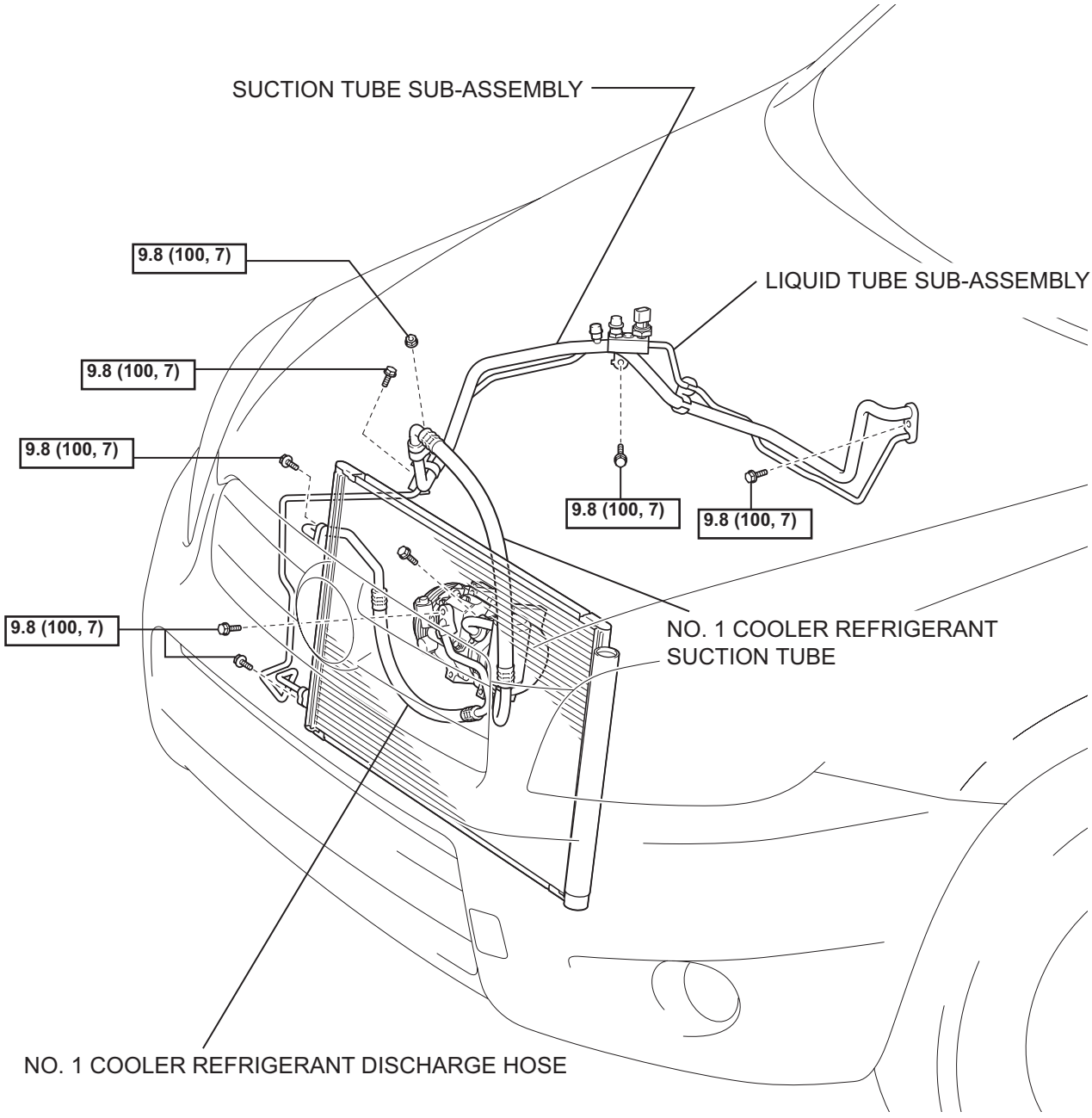

N*m (kgf*cm, ft.*lbf) : Specified torque

P

H102052E01

AC

REFRIGERANT LINE

COMPONENTS

(2005/11-2006/01)

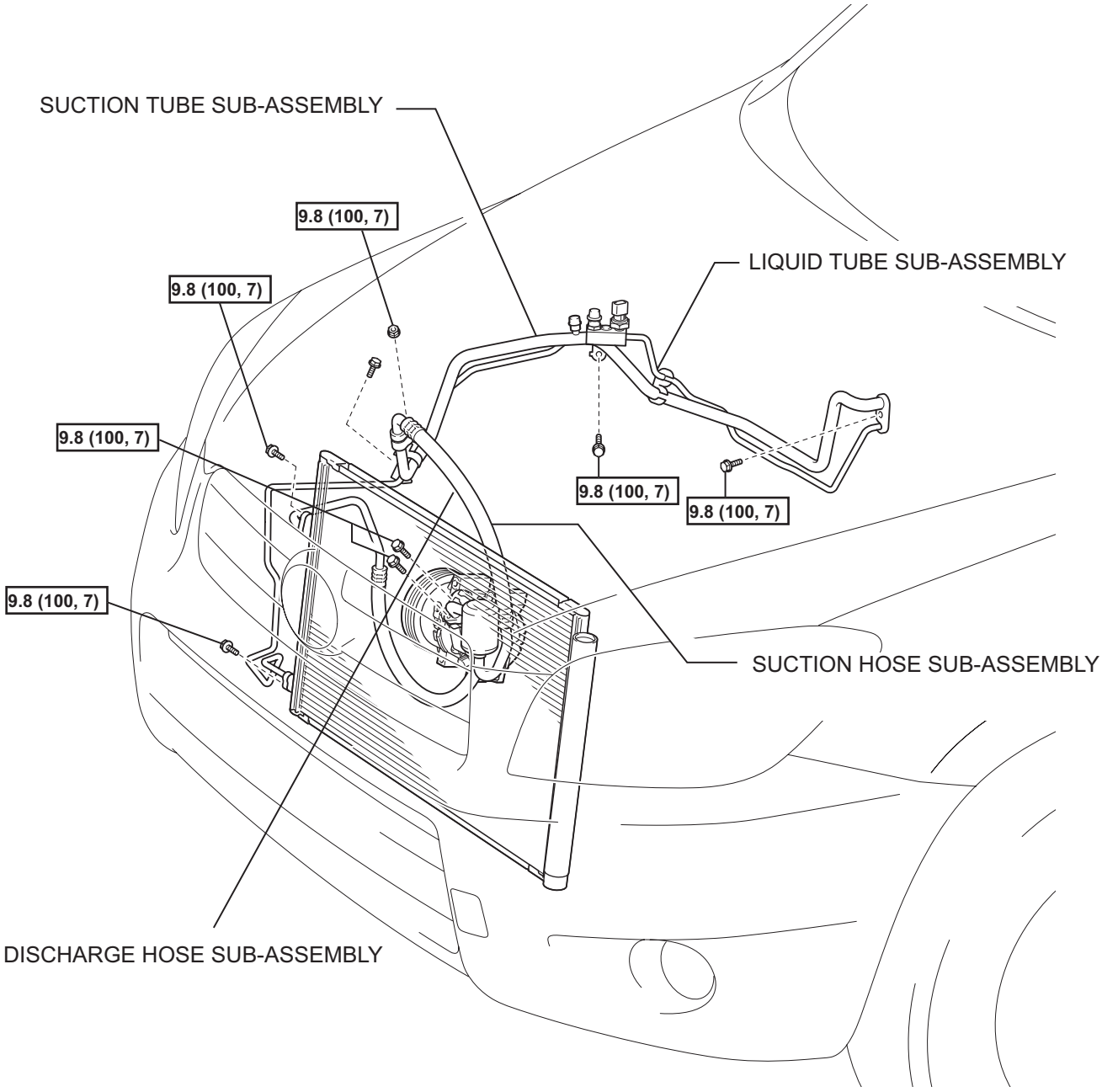

N*m (kgf*cm, ft.*lbf) : Specified torque

P

H102050E03

AC

COMPONENTS

(2006/01-)

for 2AZ-FE

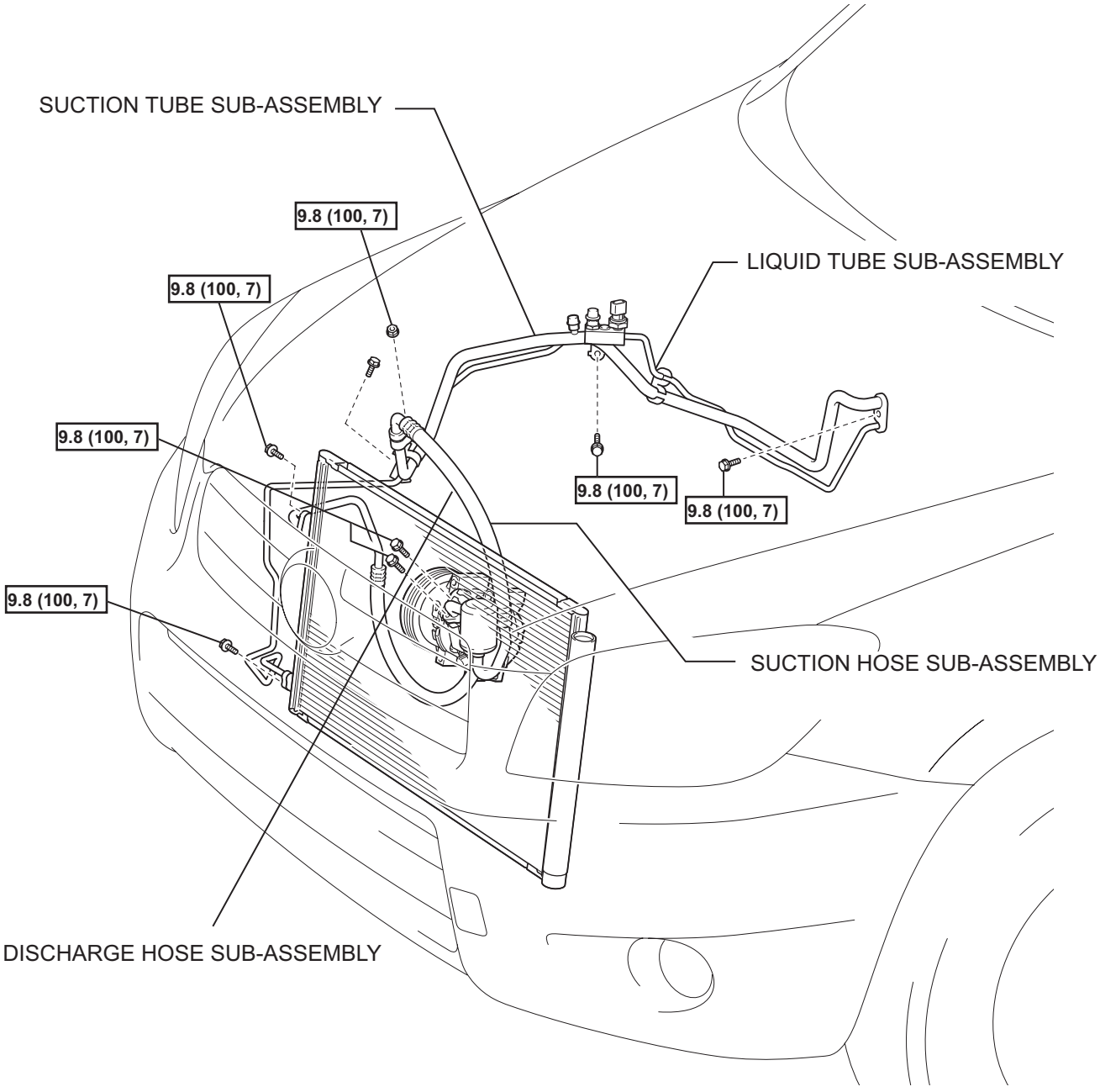

N*m (kgf*cm, ft.*lbf) : Specified torque

P

H102050E05

AC

for 2GR-FE

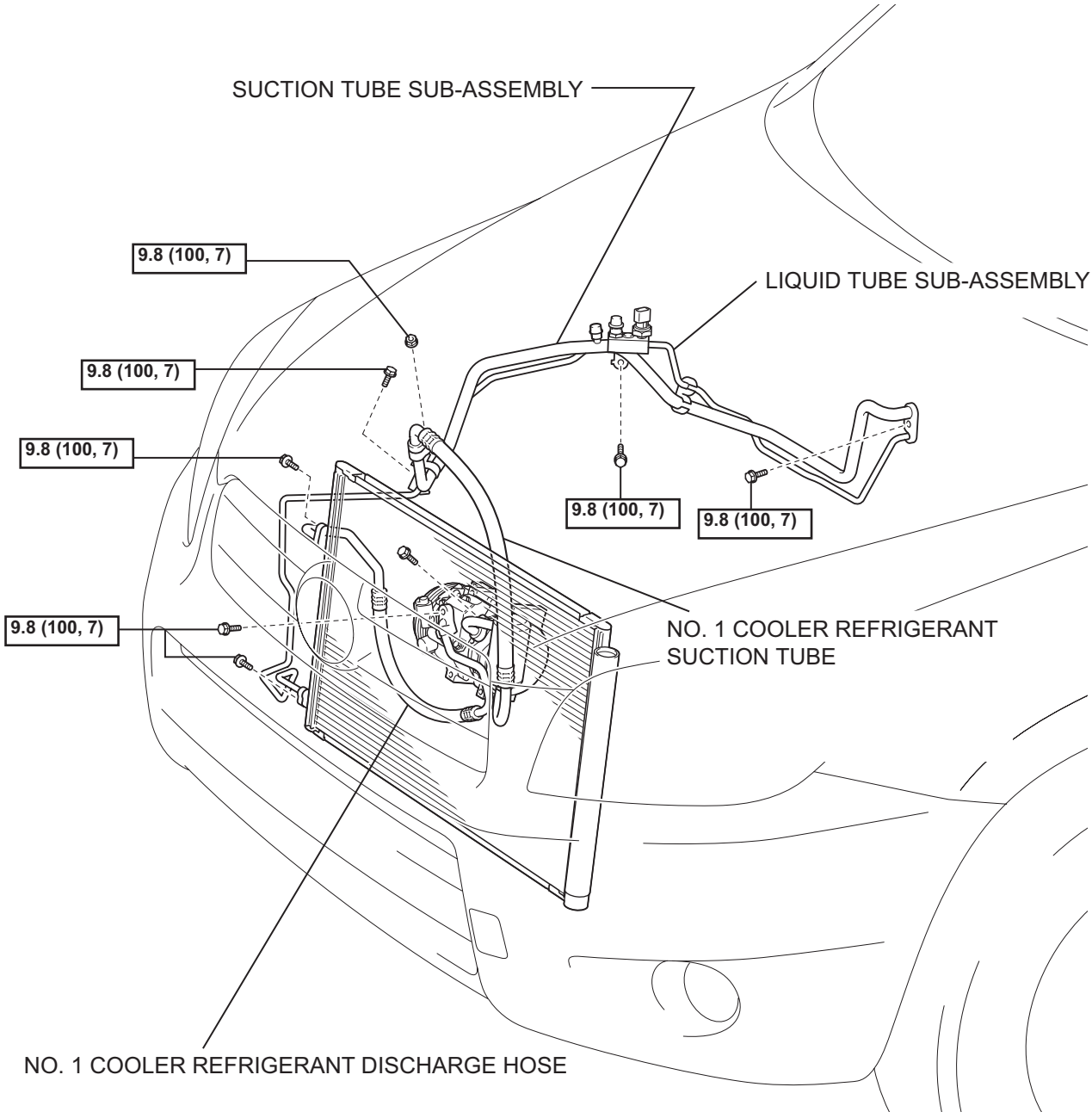

N*m (kgf*cm, ft.*lbf) : Specified torque

P

H102052E01

AC

INSTALLATION

1. INSTALL ROOM TEMPERATURE SENSOR

(a) Attach the claws to install the sensor.

(b) Connect the connector.

(c) Connect the duct.

2. INSTALL LOWER INSTRUMENT PANEL

(a) Install the lower instrument panel (see page IP-23).

ROOM TEMPERATURE SENSOR (for Automatic Air Conditioning System)

COMPONENTS

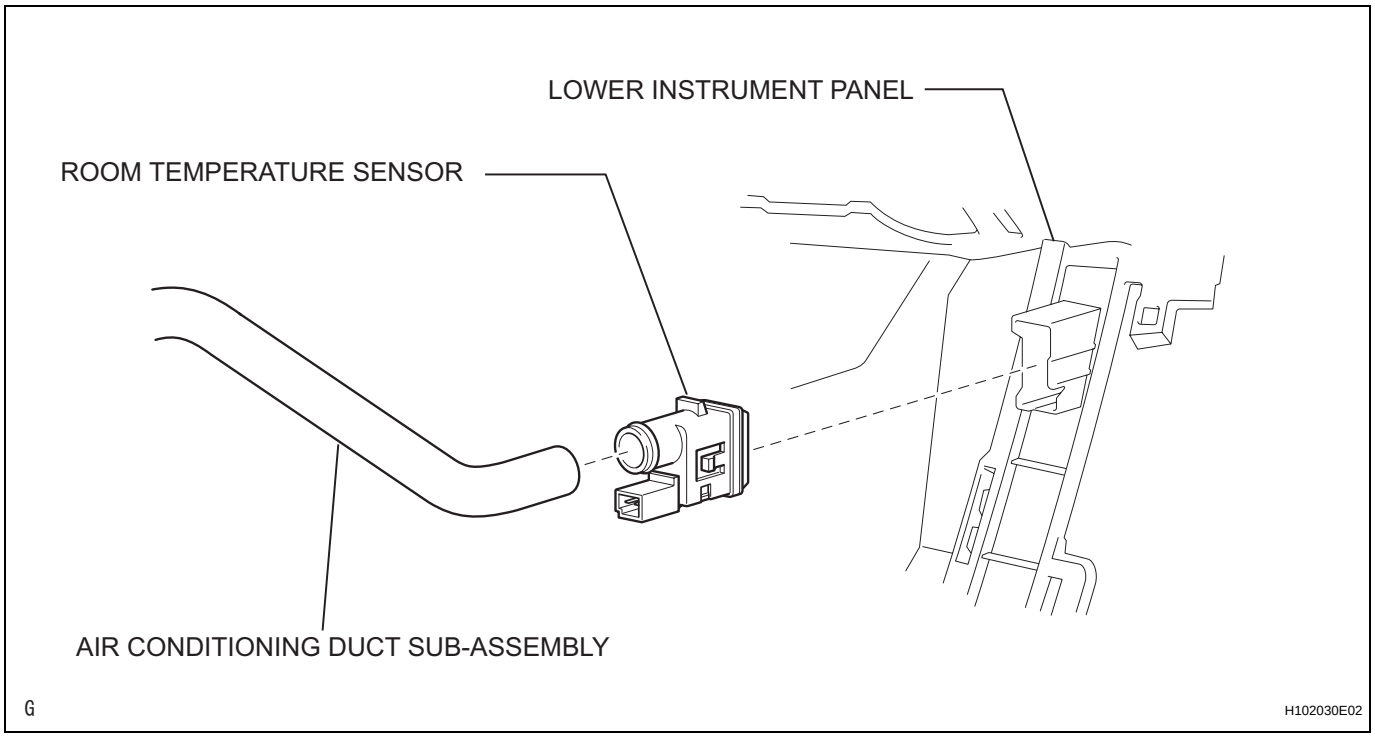

AC

REMOVAL

1. REMOVE LOWER INSTRUMENT PANEL

(a) Remove the lower instrument panel (see page IP-16).

2. REMOVE ROOM TEMPERATURE SENSOR

(a) Disconnect the duct.
(b) Disconnect the connector.
(c) Detach the claws and remove the sensor.

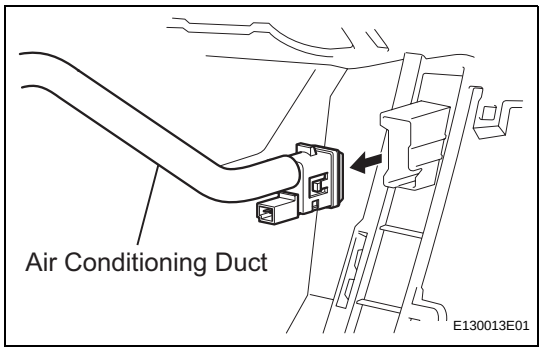

INSPECTION

1. INSPECT ROOM TEMPERATURE SENSOR

(a) Measure the resistance of the sensor.
Standard resistance

Tester Connection	Condition	Specified Condition
1 - 2	10°C (50°F)	3.00 to 3.73 kΩ
1 - 2	15°C (59°F)	2.45 to 2.88 kΩ
1 - 2	20°C (68°F)	1.95 to 2.30 kΩ
1 - 2	25°C (77°F)	1.60 to 1.80 kΩ
1 - 2	30°C (86°F)	1.28 to 1.47 kΩ
1 - 2	35°C (95°F)	1.00 to 1.22 kΩ
1 - 2	40°C (104°F)	0.80 to 1.00 kΩ
1 - 2	45°C (113°F)	0.65 to 0.85 kΩ
1 - 2	50°C (122°F)	0.50 to 0.70 kΩ
1 - 2	55°C (131°F)	0.44 to 0.60 kΩ
1 - 2	60°C (140°F)	0.36 to 0.50 kΩ

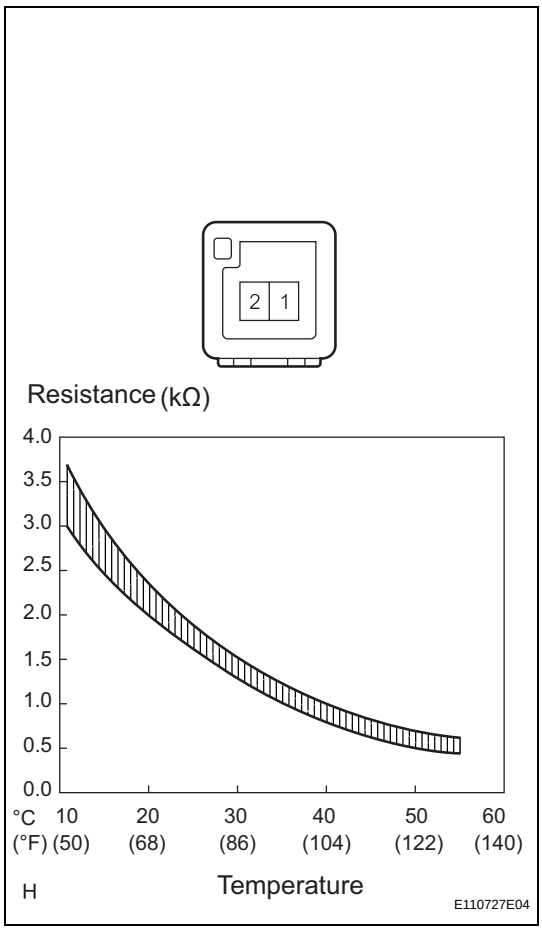

NOTICE:

- **Touching the sensor even slightly may change the resistance value. Hold the connector of the sensor.**
- **When measuring the resistance, the sensor temperature must be the same as the ambient temperature.**

HINT:

As the temperature increases, the resistance decreases (see the graph).

If the result is not as specified, replace the room temperature sensor.

AC

INSTALLATION

1. INSTALL SOLAR SENSOR

(a) Connect the connector, and then push in the solar sensor.

2. CONNECT CABLE TO NEGATIVE BATTERY TERMINAL

3. CHECK SRS WARNING LIGHT

(a) Check the SRS warning light (see page RS-37).

SOLAR SENSOR (for Automatic Air Conditioning System)

COMPONENTS

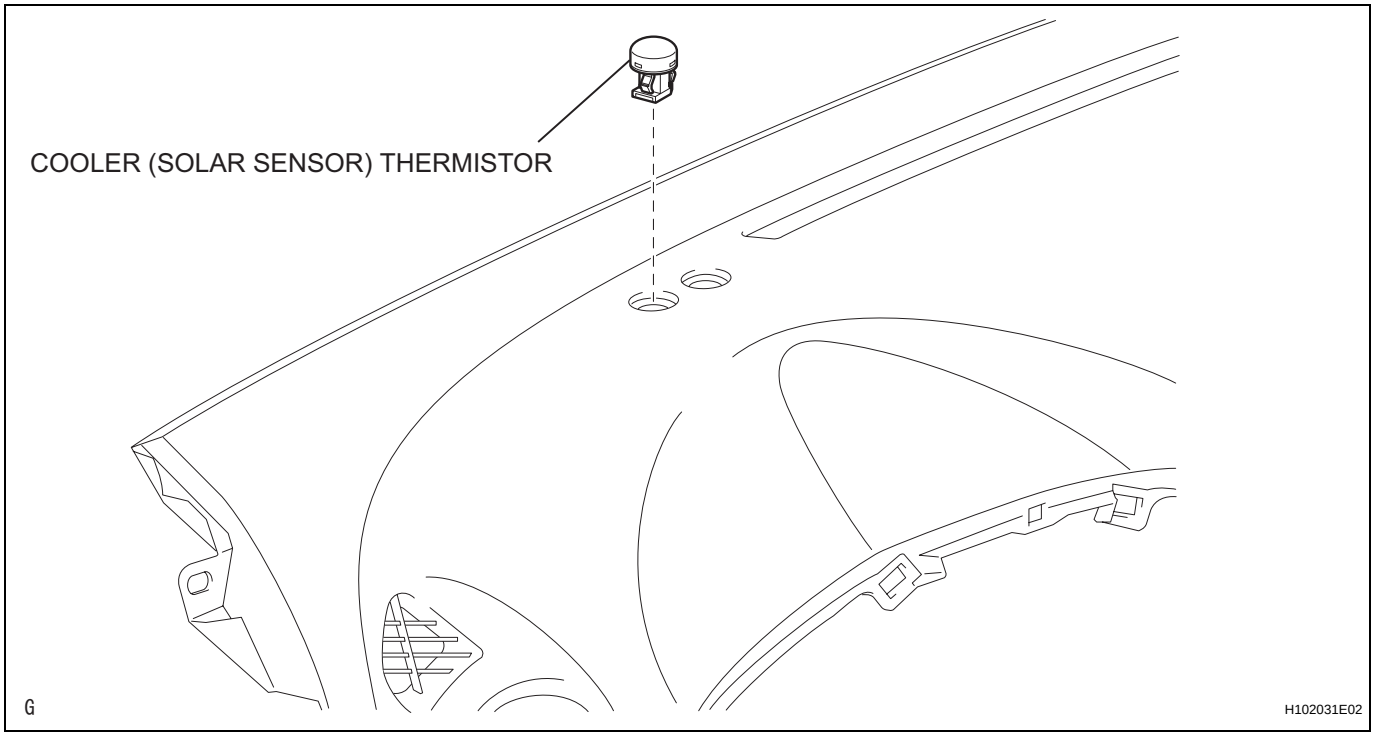

REMOVAL

1. DISCONNECT CABLE FROM NEGATIVE BATTERY TERMINAL

CAUTION:

Wait at least 90 seconds after disconnecting the cable from the negative (-) battery terminal to prevent airbag and seat belt pretensioner activation.

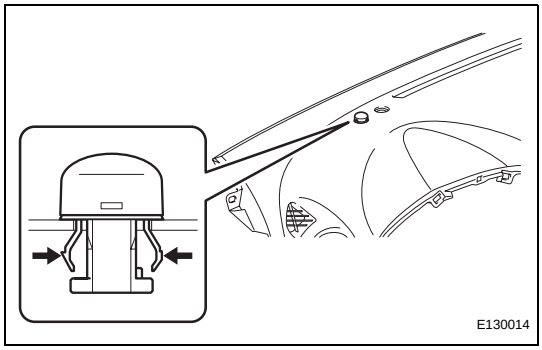

2. REMOVE SOLAR SENSOR

(a) Using a screwdriver, pull out the solar sensor, then disconnect the connector.

HINT:

Tape the screwdriver tip before use.

INSPECTION

1. INSPECT SOLAR SENSOR

(a) Using an ohmmeter, connect the positive lead to terminal 2 and the negative lead to terminal 1, then measure the resistance between the terminals.

Standard resistance

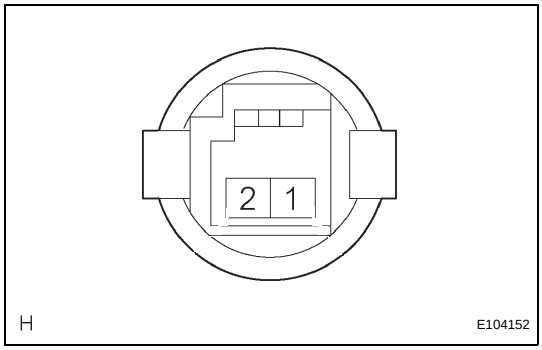

Tester Connection	Connection	Specified Condition
1 - 2	Sensor subject to electric light	Except ∞ Ω
1 - 2	Sensor covered with a cloth	∞ Ω

NOTICE:

The connection procedure for using a digital tester such as a TOYOTA electrical tester is shown above. When using an analog tester, connect the positive (+) lead to terminal 1 and the negative (-) lead to terminal 2 of the A/C solar sensor.

HINT:

- As the inspection light is moved away from the sensor, the voltage increases.
- Use an incandescent lamp for inspection. Bring it within 30 cm (11.8 in.) of the A/C solar sensor.

If the result is not as specified, replace the solar sensor.

AC

AXLE SYSTEM

PROBLEM SYMPTOMS TABLE

HINT:
Use the table below to help determine the cause of the problem symptom. The potential causes of the symptoms are listed in order of probability in the "Suspected area" column of the table. Check each symptom by checking the suspected areas in the order they are listed. Replace parts as necessary.

Axle system

Symptom	Suspected area	See page
Wander or pulls	1. Tires (worn or improperly inflated)	TW-1
	2. Front wheel alignment (incorrect)	SP-3
	3. Rear wheel alignment (incorrect)	SP-7
	4. Steering linkage (loose or worn)	-
	5. Front hub bearings (loose or worn)	AH-6
	6. Rear hub bearings (loose or worn)	AH-15
	7. Steering gear (adjustment required or broken)	PS-44
	8. Suspension parts (worn out)	-
Front wheel shimmy	1. Tires (worn or improperly inflated)	TW-1
	2. Wheels (out of balance)	TW-1
	3. Shock absorber (worn out)	SP-10
	3. Shock absorber for sports package (worn out)	-
	4. Front wheel alignment (incorrect)	SP-3
	5. Lower ball joint (worn)	SP-27
	6. Axle hub bearings (loose or worn)	AH-6
	7. Steering linkage (loose or worn)	-
	8. Steering gear (adjustment required or broken)	PS-44
Rear wheel shimmy	1. Tires (worn or improperly inflated)	TW-1
	2. Wheels (out of balance)	TW-1
	3. Shock absorber (worn out)	SP-36
	4. Axle hub bearings	AH-15
	6. Rear wheel alignment (incorrect)	SP-7

ON-VEHICLE INSPECTION

1. CHECK FRONT AXLE HUB BEARING

(a) Remove the front wheel.

(b) Disconnect the front disc brake cylinder (see page BR-40).

(c) Remove the front disc.

(d) Inspect the axle hub backlash.

(1) Using a dial indicator, check the backlash near the center of the axle hub.

Maximum backlash:

0.05 mm (0.0020 in.)

If the backlash is greater than the maximum, replace the bearing.

(e) Inspect the axle hub deviation.

(1) Using a dial indicator, check the deviation on the surface of the axle hub.

Maximum deviation:

0.05 mm (0.0020 in.)

If the deviation is greater than the maximum, replace the bearing.

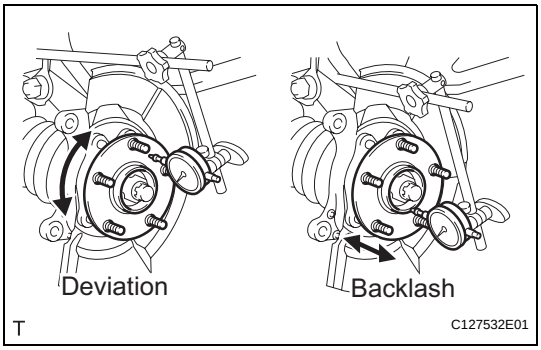

REMOVAL

(2005/11-2006/01)
HINT:

- Use the same procedures for the RH side and LH side.
- The procedures listed below are for the LH side.

1. **REMOVE FRONT WHEEL**
2. **DRAIN AUTOMATIC TRANSAXLE FLUID**
   (a) Drain the automatic transaxle fluid for U140F (see page AX-147).
   (b) Drain the automatic transaxle fluid for U241E (see page AX-146).
3. **DISCONNECT CABLE FROM NEGATIVE BATTERY TERMINAL**
   CAUTION:
   Wait at least 90 seconds after disconnecting the cable from the negative (-) battery terminal to prevent airbag and seat belt pretensioner activation.

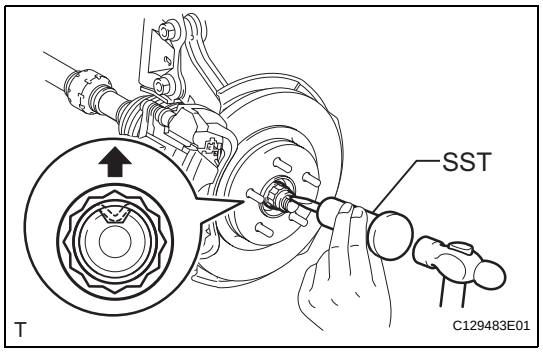

4. **REMOVE FRONT AXLE HUB NUT**
   (a) Using SST and a hammer, unstake the staked part of the nut.
   SST 09930-00010
   NOTICE:
   Loosen the staked part of the nut completely, otherwise the screw of the drive shaft may be damaged.
   (b) While applying the brakes, remove the lock axle hub nut.
5. **REMOVE FRONT SPEED SENSOR LH (See page BC-191)**
6. **REMOVE FRONT DISC BRAKE CYLINDER ASSEMBLY LH (See page BR-40)**
7. **REMOVE FRONT DISC (See page BR-42)**
8. **DISCONNECT TIE ROD END SUB-ASSEMBLY LH (See page PS-42)**

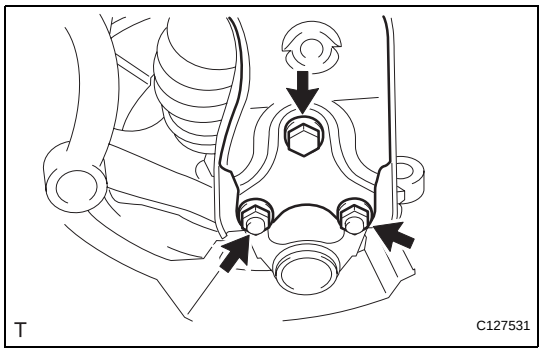

9. **DISCONNECT FRONT SUSPENSION NO. 1 LOWER ARM SUB-ASSEMBLY LH**
   (a) Remove the bolt and 2 nuts.
   (b) Disconnect the lower arm from the ball joint.

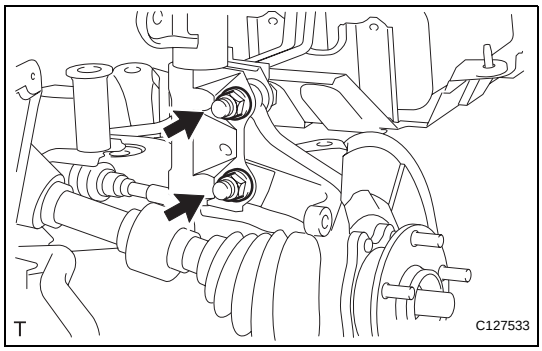

10. REMOVE STEERING KNUCKLE WITH AXLE HUB

(a) Remove the 2 bolts and 2 nuts, and disconnect the shock absorber from the steering knuckle.
HINT:
While fixing the nuts in place, loosen and remove the bolts.

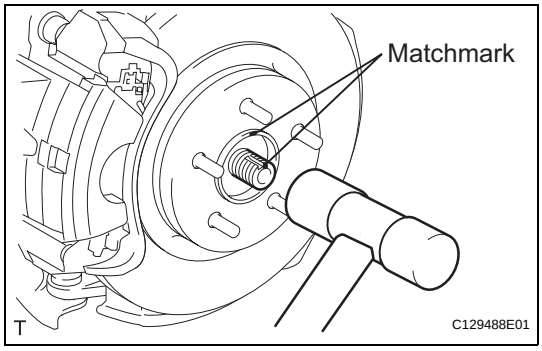

(b) Put matchmarks on the drive shaft and the axle hub.

(c) Using a plastic-faced hammer, remove the steering knuckle with axle hub.
NOTICE:
Be careful not to damage the boot and speed sensor rotor. Do not excessively push out the drive shaft from the axle assembly.

11. REMOVE FRONT LOWER BALL JOINT ASSEMBLY LH (See page SP-27)

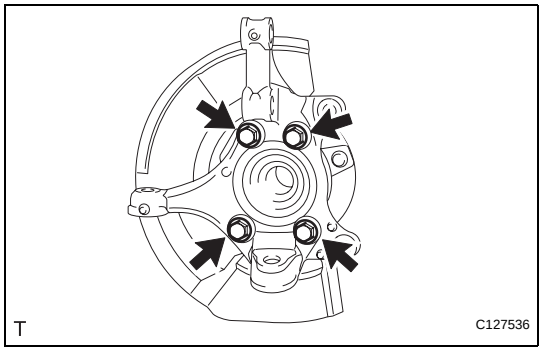

12. REMOVE FRONT AXLE HUB SUB-ASSEMBLY LH

(a) Remove the 4 bolts and axle hub from the steering knuckle.
NOTICE:
Do not place the hub and bearing's magnet rotor side so that it is facing downward, and do not allow the magnet rotor side to become damaged or contact foreign matter.

(b) Remove the dust cover from the steering knuckle.

AH

REMOVAL

(2006/01-)

HINT:

- Use the same procedures for the RH side and LH side.
- The procedures listed below are the LH side.

1. REMOVE FRONT WHEEL

2. DRAIN AUTOMATIC TRANSAXLE FLUID

(a) Drain the automatic transaxle fluid for U140F (see page AX-147).

(b) Drain the automatic transaxle fluid for U241E (see page AX-146).

(c) Drain the automatic transaxle fluid for U151E (see page AX-172).

(d) Drain the automatic transaxle fluid for U151F (see page AX-173).

3. DISCONNECT CABLE FROM NEGATIVE BATTERY TERMINAL

CAUTION:

Wait at least 90 seconds after disconnecting the cable from the negative (-) battery terminal to prevent airbag and seat belt pretensioner activation.

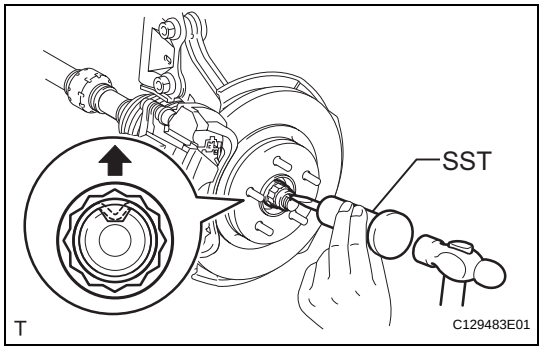

4. REMOVE FRONT AXLE HUB LH NUT

(a) Using SST and a hammer, unstake the staked part of the nut.

SST 09930-00010

NOTICE:

Loosen the staked part of the nut completely, otherwise the screw of the drive shaft may be damaged.

(b) While applying the brakes, remove the lock axle hub nut.

5. REMOVE FRONT SPEED SENSOR LH (See page BC-191)

6. REMOVE FRONT DISC BRAKE CYLINDER ASSEMBLY LH (See page BR-40)

7. REMOVE FRONT DISC (See page BR-42)

8. DISCONNECT TIE ROD END SUB-ASSEMBLY LH (See page PS-42)

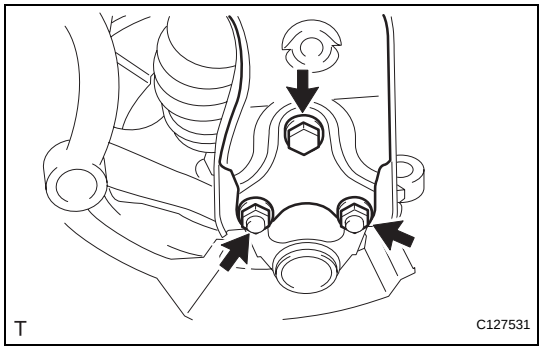

9. DISCONNECT FRONT SUSPENSION NO. 1 LOWER ARM SUB-ASSEMBLY LH

(a) Remove the bolt and 2 nuts.

(b) Disconnect the lower arm from the ball joint.

AH

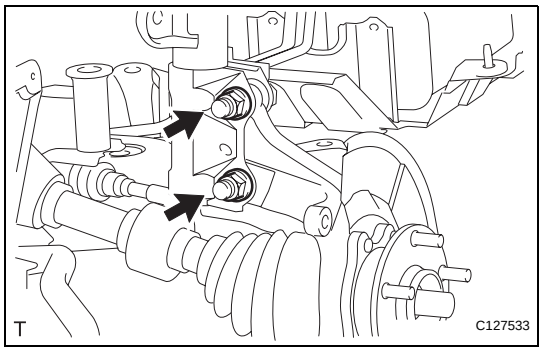

10. REMOVE STEERING KNUCKLE WITH AXLE HUB

(a) Remove the 2 bolts and 2 nuts, and disconnect the shock absorber from the steering knuckle.
HINT:
While fixing the nuts in place, loosen and remove the bolts.

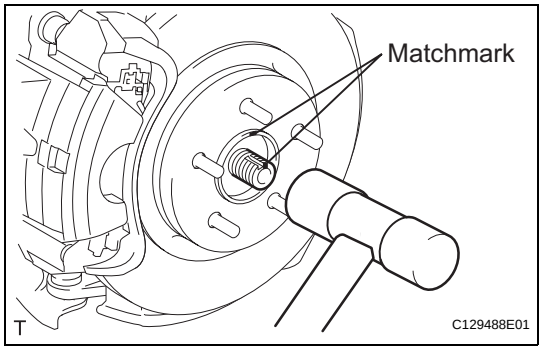

(b) Put matchmarks on the drive shaft and axle hub.

(c) Using a plastic-faced hammer, remove the steering knuckle with axle hub.
NOTICE:
Be careful not to damage the boot and speed sensor rotor. Do not excessively push out the drive shaft from the axle assembly.

11. REMOVE FRONT LOWER BALL JOINT ASSEMBLY LH (See page SP-27)

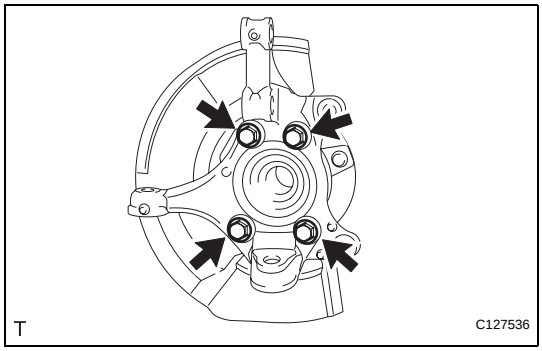

12. REMOVE FRONT AXLE HUB SUB-ASSEMBLY LH

(a) Remove the 4 bolts and axle hub from the steering knuckle.
NOTICE:
Do not place the hub and bearing's magnet rotor side so that it is facing downward, and do not allow the magnet rotor side to become damaged or contact foreign matter.

(b) Remove the dust cover from the steering knuckle.

AH

INSTALLATION

(2005/11-2006/01)
HINT:

- Use the same procedures for the RH side and LH side.
- The procedures listed below are for the LH side.

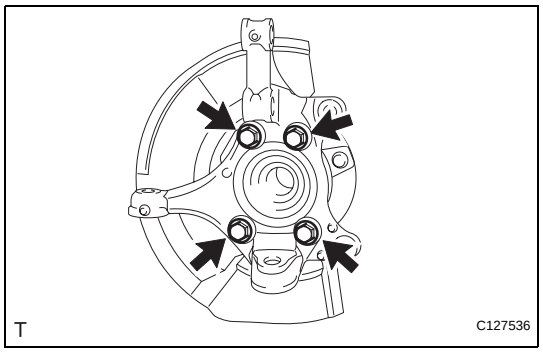

1. **INSTALL FRONT AXLE HUB SUB-ASSEMBLY LH**
   (a) Install the dust cover to the steering knuckle.
   (b) Install the axle hub with the 4 bolts.
   Torque: 96 N*m (979 kgf*cm, 1 ft.*lbf)
   NOTICE:
   Do not place the hub and bearing's magnet rotor side so that it is facing downward, and do not allow the magnet rotor side to become damaged or contact foreign matter.
2. **INSTALL FRONT LOWER BALL JOINT ASSEMBLY LH (See page SP-28)**
3. **INSTALL STEERING KNUCKLE WITH AXLE HUB**
   (a) Align the shaft splines and drive in the drive shaft.
   (b) Install the steering knuckle with axle hub with the 2 bolt and 2 nuts.
   Torque: 240 N*m (2,447 kgf*cm, 177 ft.*lbf)
   NOTICE:
   Do not tighten the nuts.
4. **CONNECT FRONT SUSPENSION NO. 1 LOWER ARM SUB-ASSEMBLY LH**
   (a) Connect the lower arm to the ball joint with the 2 bolts and nut.
   Torque: 92 N*m (938 kgf*cm, 68 ft.*lbf)
5. **CONNECT TIE ROD END SUB-ASSEMBLY LH (See page PS-45)**
6. **INSTALL FRONT SPEED SENSOR LH (See page BC-193)**
7. **CHECK FRONT AXLE HUB BEARING**
   (a) Check the axle hub bearing (see page AH-6).
8. **INSTALL FRONT DISC (See page BR-43)**
9. **INSTALL FRONT DISC BRAKE CYLINDER ASSEMBLY LH (See page BR-46)**
10. **INSTALL FRONT AXLE HUB NUT**
    (a) Install a new hub nut.
    Torque: 216 N*m (2,203 kgf*cm, 159 ft.*lbf)

AH

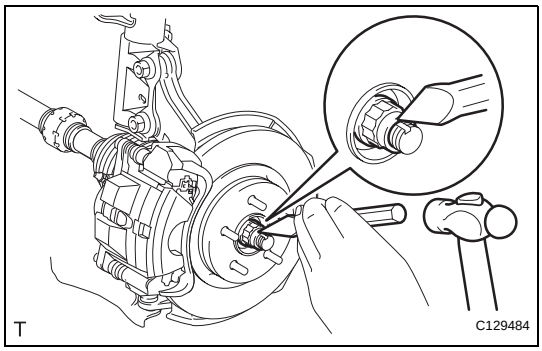

(b) Using a chisel and hammer, stake the hub nut.

11. INSTALL FRONT WHEEL
Torque: 103 N*m (1,050 kgf*cm, 6 ft.*lbf)

12. INSPECT AND ADJUST FRONT WHEEL ALIGNMENT
(a) Inspect and adjust the wheel alignment (see page SP-3).

13. CONNECT CABLE TO NEGATIVE BATTERY TERMINAL

14. CHECK SPEED SENSOR SIGNAL
(a) Check the speed sensor signal (see page BC-44).

INSTALLATION

(2006/01-)

HINT:

- Use the same procedures for the RH side and LH side.
- The procedures listed below are the LH side.

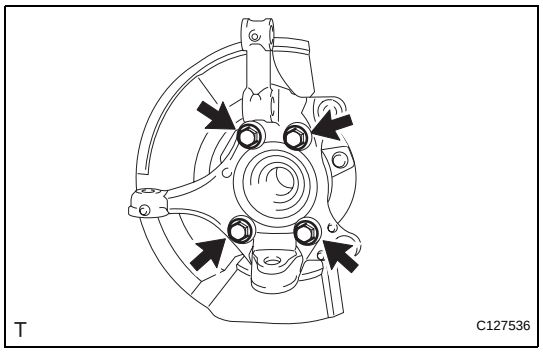

1. **INSTALL FRONT AXLE HUB SUB-ASSEMBLY LH**
   (a) Install the dust cover to the steering knuckle.
   (b) Install the axle hub with the 4 bolts.
   Torque: 96 N*m (979 kgf*cm, 71 ft.*lbf)
   NOTICE:
   Do not place the hub and bearing's magnet rotor side so that it is facing downward, and do not allow the magnet rotor side to become damaged or contact foreign matter.
2. **INSTALL FRONT LOWER BALL JOINT ASSEMBLY LH (See page SP-28)**
3. **INSTALL STEERING KNUCKLE WITH AXLE HUB**
   (a) Align the shaft splines and drive in the drive shaft.
   (b) Install the steering knuckle with axle hub with the 2 bolts and 2 nuts.
   Torque: 240 N*m (2,447 kgf*cm, 177 ft.*lbf)
   NOTICE:
   Do not tighten the bolts.
4. **CONNECT FRONT SUSPENSION NO. 1 LOWER ARM SUB-ASSEMBLY LH**
   (a) Connect the lower arm to the ball joint with the bolt and 2 nuts.
   Torque: 92 N*m (938 kgf*cm, 68 ft.*lbf)
5. **CONNECT TIE ROD END SUB-ASSEMBLY LH (See page PS-45)**
6. **INSTALL FRONT SPEED SENSOR LH (See page BC-193)**
7. **CHECK FRONT AXLE HUB BEARING**
   (a) Check the axle hub bearing (see page AH-6).
8. **INSTALL FRONT DISC (See page BR-43)**
9. **INSTALL FRONT DISC BRAKE CYLINDER ASSEMBLY LH (See page BR-46)**
10. **INSTALL FRONT AXLE HUB LH NUT**
    (a) Install a new hub nut.
    Torque: 216 N*m (2,203 kgf*cm, 159 ft.*lbf) for ϕ 26 for 2AZ-FE
    292 N*m (2,978 kgf*cm, 215 ft.*lbf) for ϕ 30 for 2GR-FE

AH

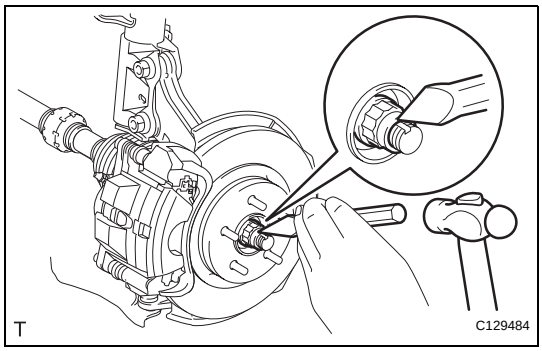

(b) Using a chisel and hammer, stake the hub nut.

11. ADD AUTOMATIC TRANSAXLE FLUID

(a) Add the automatic transaxle for U140F (see page AX-152).

(b) Add the automatic transaxle for U241E (see page AX-151).

(c) Add the automatic transaxle for U151E (see page AX-177).

(d) Add the automatic transaxle for U151F (see page AX-178).

12. CHECK FOR AUTOMATIC TRANSAXLE FLUID LEAKAGE

13. INSTALL FRONT WHEEL
Torque: 103 N*m (1,050 kgf*cm, 76 ft.*lbf)

14. INSPECT AND ADJUST FRONT WHEEL ALIGNMENT

(a) Inspect and adjust the front wheel alignment (see page SP-3).

15. CONNECT CABLE TO NEGATIVE BATTERY TERMINAL

16. CHECK SPEED SENSOR SIGNAL

(a) Check the speed sensor signal (see page BC-44).

FRONT AXLE HUB BOLT

COMPONENTS

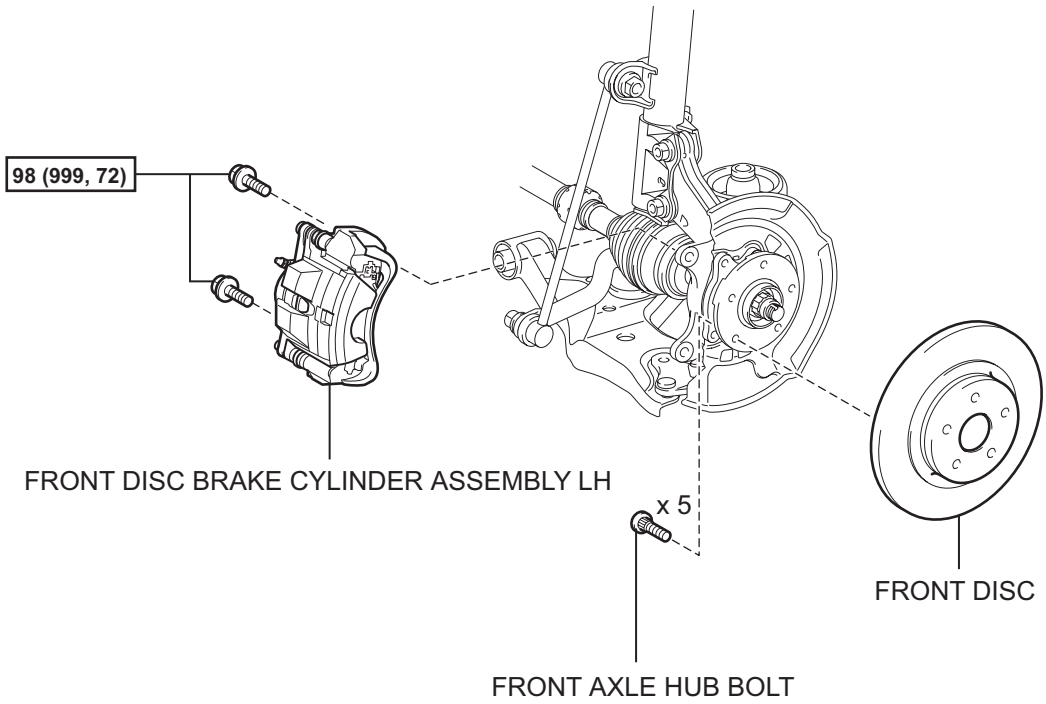

N*m (kgf*cm, ft.*lbf) : Specified torque

T

C129506E02

REPLACEMENT

HINT:
- Use the same procedures for the RH side and LH side.
- The procedures listed below are the LH side.

1. **REMOVE FRONT WHEEL**
2. **REMOVE FRONT DISC BRAKE CYLINDER ASSEMBLY LH (See page BR-40)**
3. **REMOVE FRONT DISC (See page BR-42)**
4. **REMOVE FRONT AXLE HUB BOLT**
   (a) Using SST, remove the hub bolt that needs to be replaced.
   SST 09650-17011

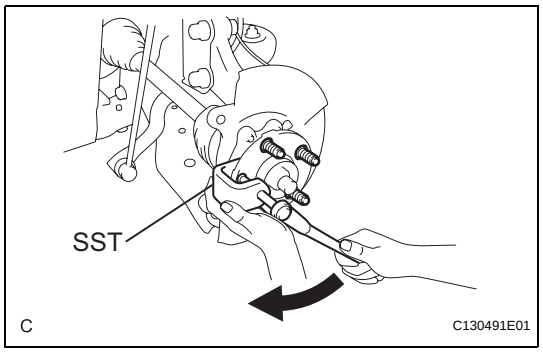

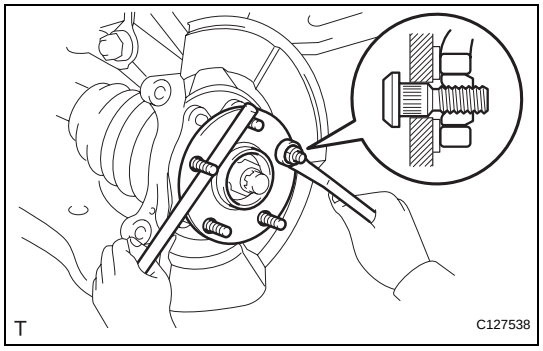

5. **INSTALL FRONT AXLE HUB BOLT**
   (a) Insert a new hub bolt into the bolt hole. Set a plate washer and nut on the hub bolt end.
   (b) Using a brass bar or equivalent to hold the front axle, install the hub bolt by tightening the nut. Then remove the nut and plate washer.
6. **INSTALL FRONT DISC (See page BR-43)**
7. **INSTALL FRONT DISC BRAKE CYLINDER ASSEMBLY LH (See page BR-46)**
8. **INSTALL FRONT WHEEL**
   Torque: 103 N*m (1,050 kgf*cm, 76 ft.*lbf)

AH

FRONT AXLE HUB

COMPONENTS

(2005/11-2006/01)

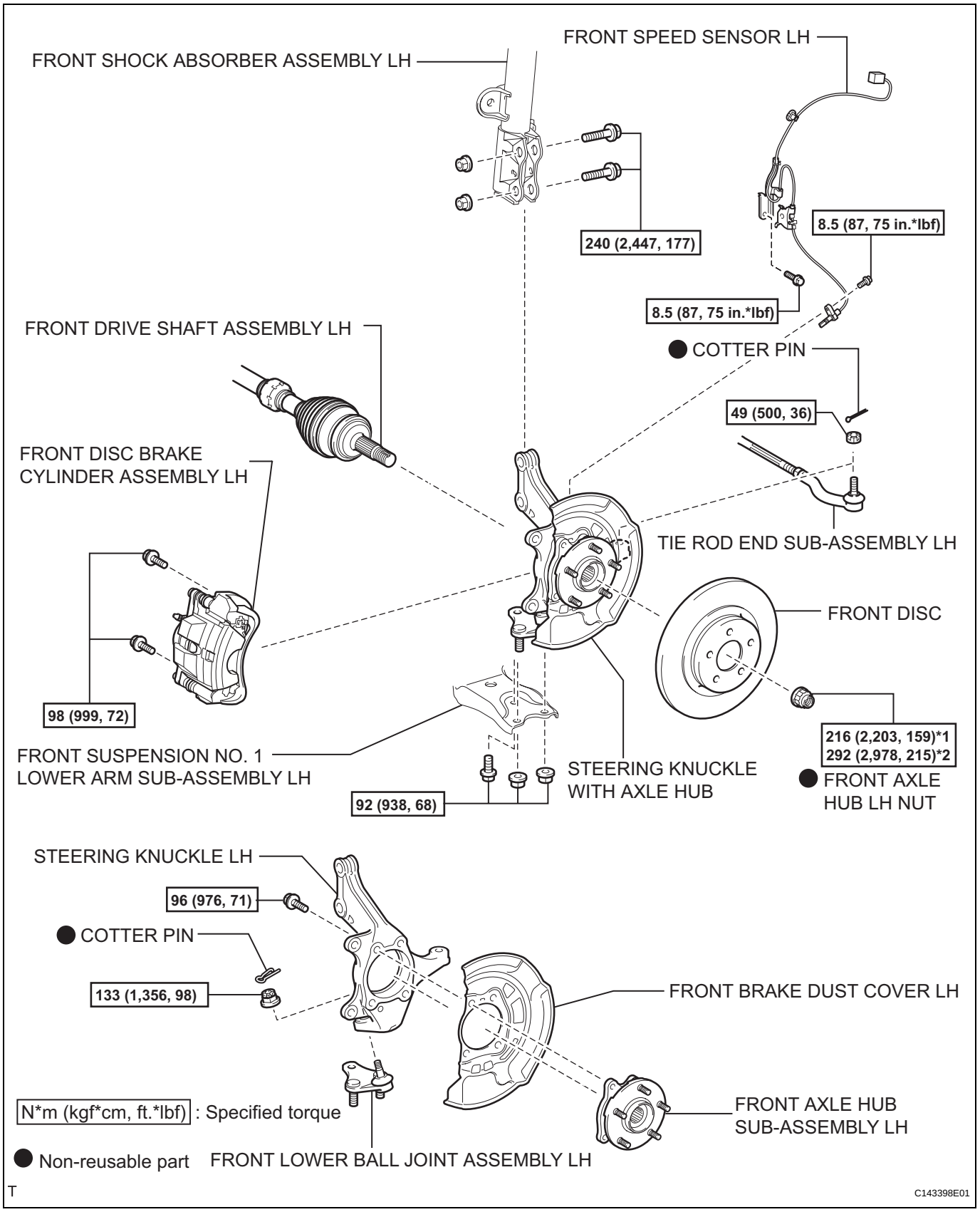

COMPONENTS

(2006/01-)

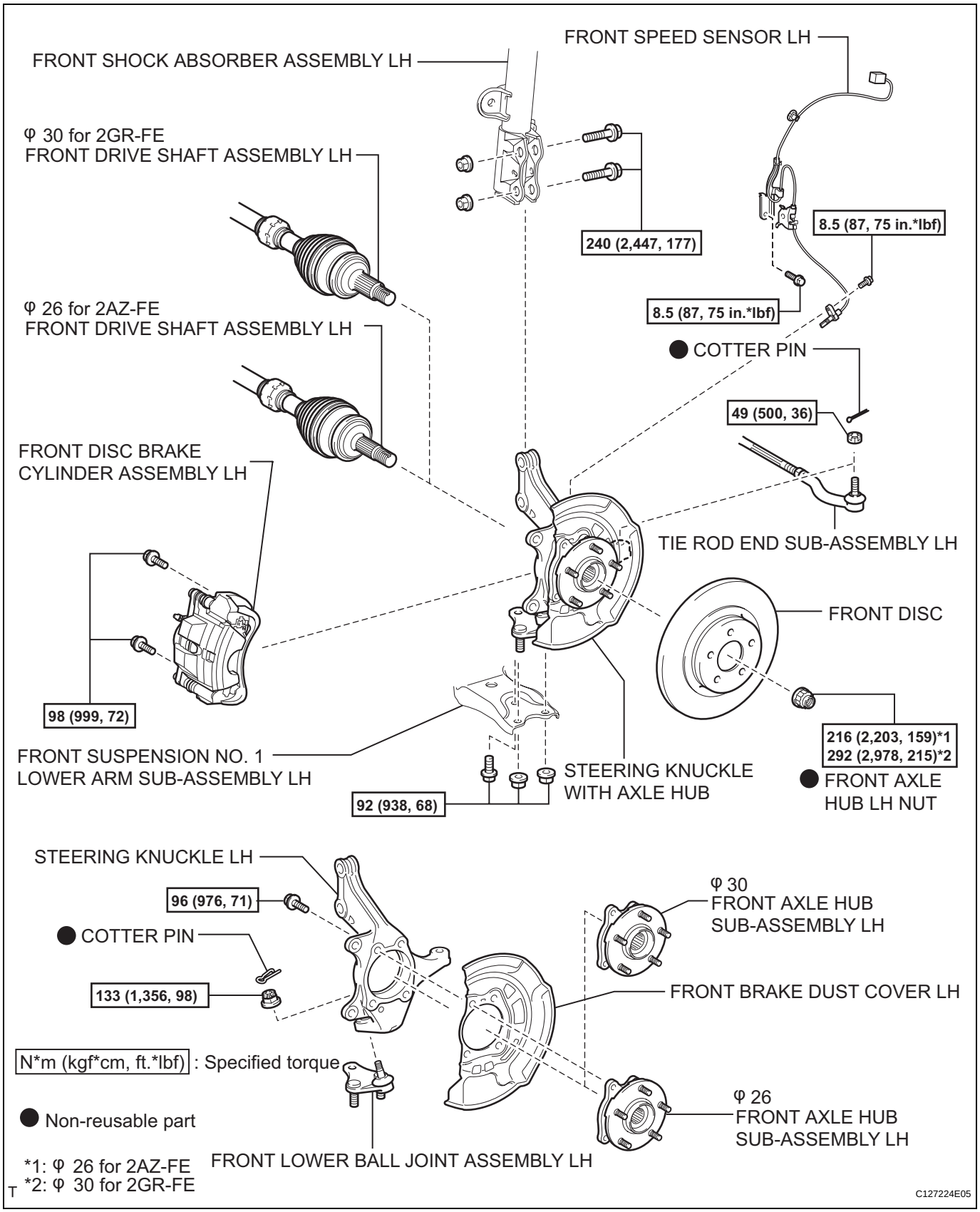

AH

T

FRONT AXLE HUB BOLT

COMPONENTS

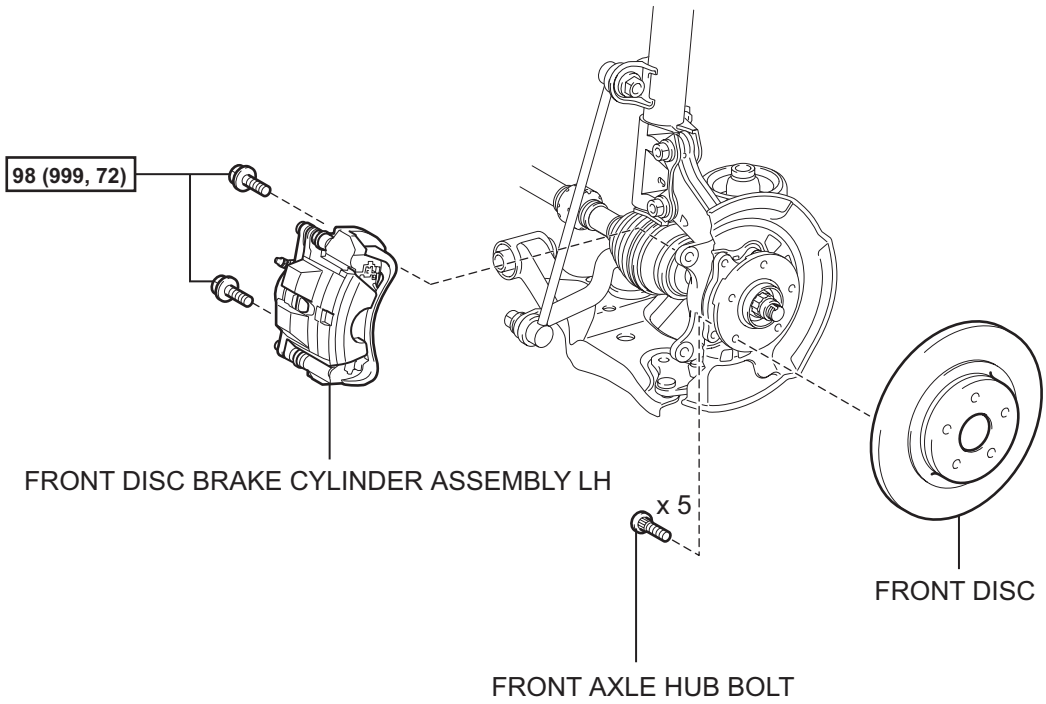

N*m (kgf*cm, ft.*lbf) : Specified torque

T

C129506E02

REPLACEMENT

HINT:
- Use the same procedures for the RH side and LH side.
- The procedures listed below are the LH side.

1. **REMOVE FRONT WHEEL**
2. **REMOVE FRONT DISC BRAKE CYLINDER ASSEMBLY LH (See page BR-40)**
3. **REMOVE FRONT DISC (See page BR-42)**
4. **REMOVE FRONT AXLE HUB BOLT**
   (a) Using SST, remove the hub bolt that needs to be replaced.
   SST 09650-17011

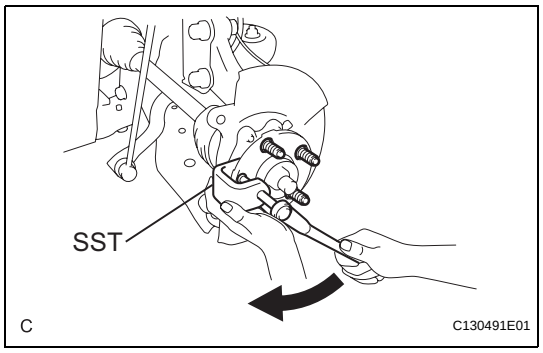

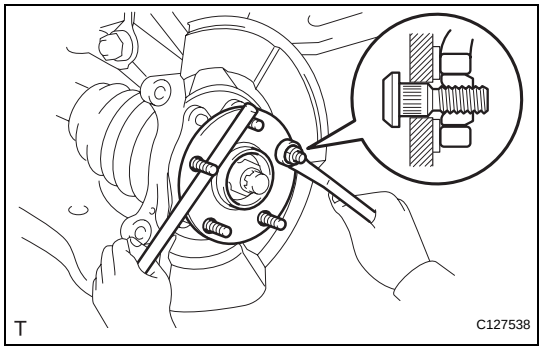

5. **INSTALL FRONT AXLE HUB BOLT**
   (a) Insert a new hub bolt into the bolt hole. Set a plate washer and nut on the hub bolt end.
   (b) Using a brass bar or equivalent to hold the front axle, install the hub bolt by tightening the nut. Then remove the nut and plate washer.
6. **INSTALL FRONT DISC (See page BR-43)**
7. **INSTALL FRONT DISC BRAKE CYLINDER ASSEMBLY LH (See page BR-46)**
8. **INSTALL FRONT WHEEL**
   Torque: 103 N*m (1,050 kgf*cm, 76 ft.*lbf)

AH

ON-VEHICLE INSPECTION

1. **REMOVE REAR WHEEL**
2. **DISCONNECT REAR DRIVE SHAFT ASSEMBLY LH (for 4WD)**
   (a) Disconnect the drive shaft (see page DS-69).
3. **REMOVE REAR DISC BRAKE CYLINDER ASSEMBLY LH (See page BR-55)**
4. **REMOVE REAR DISC (See page BR-57)**
5. **CHECK BEARING BACKLASH AND AXLE HUB DEVIATION**
   (a) Using a dial indicator, measure the backlash near the center of the axle hub.
   Maximum backlash:
   0.05 mm (0.0020 in.)
   If the backlash is greater than the maximum, replace the axle hub.

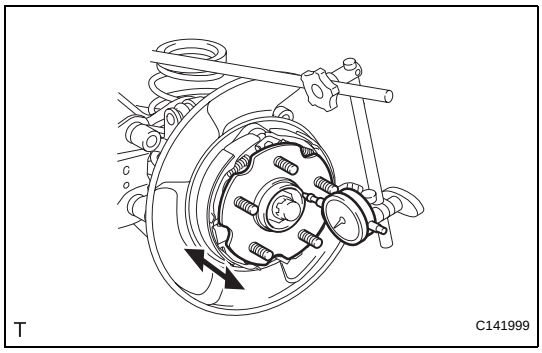

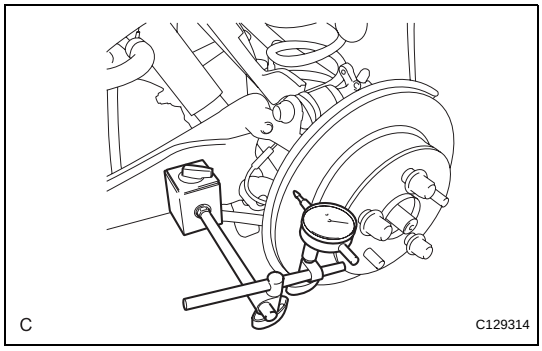

   (b) Using a dial indicator, measure the disc runout 10 mm (0.39 in.) inside the outer edge of the disc.
   Maximum deviation:
   0.08 mm (0.0031 in.) for 2WD
   0.06 mm (0.0024 in.) for 4WD
   NOTICE:
   If the runout exceeds the maximum, change the installation positions of the rear disc and axle hub so that the runout will be as low as possible. If the runout exceeds the maximum even when the installation positions are changed, shave the rear disc. If the rear disc needs to be shaved to less than the minimum, replace the rear disc. If the rear disc is replaced, perform the runout inspection again. If the runout still exceeds the maximum, replace the hub and bearing with a new one.

REMOVAL

1. **REMOVE REAR WHEEL**

2. **DISCONNECT CABLE FROM NEGATIVE BATTERY TERMINAL**
   CAUTION:
   Wait at least 90 seconds after disconnecting the cable from the negative (-) battery terminal to prevent airbag and seat belt pretensioner activation.

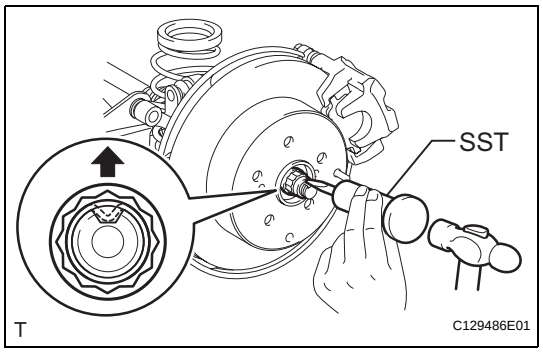

3. **REMOVE REAR AXLE SHAFT NUT (for 4WD)**
   (a) Using SST and hammer, unstake the staked part of the nut.
   SST 09930-00010
   NOTICE:
   Loosen the staked part of the nut completely, otherwise the screw of the drive shaft may be damaged.
   (b) While applying the brake, remove the lock axle hub nut.

4. **REMOVE REAR DISC BRAKE CYLINDER ASSEMBLY LH (See page BR-55)**

5. **REMOVE REAR DISC (See page BR-57)**

6. **REMOVE SKID CONTROL SENSOR WIRE (for 2WD) (See page BC-198)**

7. **REMOVE REAR SPEED SENSOR LH (for 4WD) (See page BC-205)**

8. **REMOVE REAR SUSPENSION NO. 1 ARM ASSEMBLY LH (See page SP-42)**

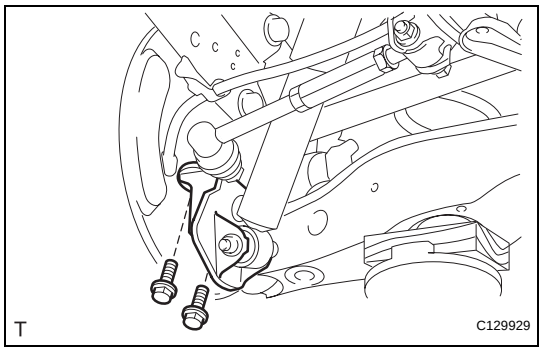

9. **DISCONNECT REAR SHOCK ABSORBER ASSEMBLY LH**
   (a) Remove the 2 bolts and disconnect the shock absorber with bracket from the axle carrier.

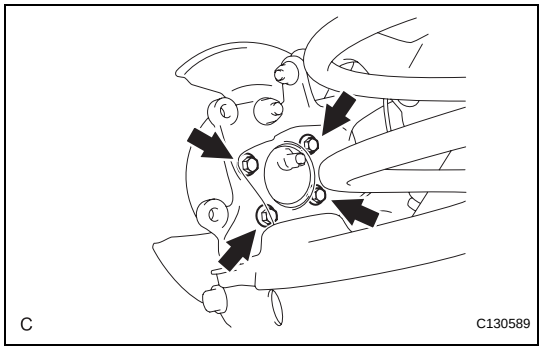

10. **REMOVE REAR AXLE HUB AND BEARING ASSEMBLY LH**
    (a) fro 2WD:
    (1) Remove the 4 bolts, and axle hub and the bearing from the axle carrier.
    NOTICE:
    Do not place the hub and bearing's magnet rotor side so that it is facing downward, and do not allow the magnet rotor side to become damaged or contact foreign matter.

AH

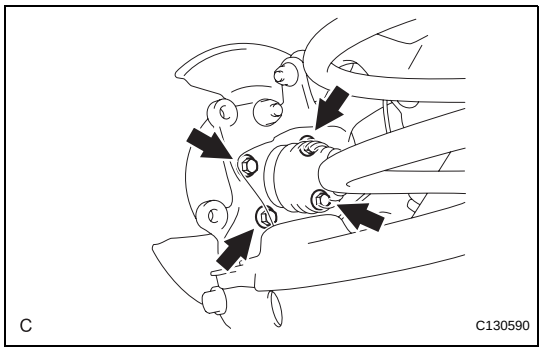

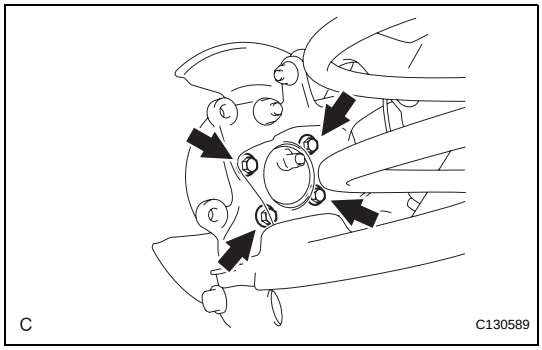

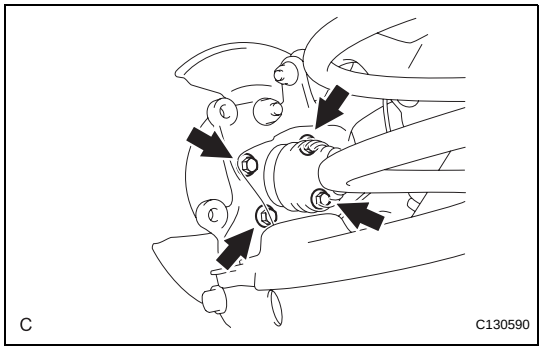

(b) for 4WD:
(1) Put matchmarks on the drive shaft and the axle hub and bearing.
(2) Remove the 4 bolts, and the axle hub and bearing from the axle carrier.
NOTICE:
Do not place the hub and bearing's magnet rotor side so that it is facing downward, and do not allow the magnet rotor side to become damaged or contact foreign matter.

INSTALLATION

1. INSTALL REAR AXLE HUB AND BEARING ASSEMBLY LH

(a) for 2WD:
(1) Install the axle hub and bearing to the axle carrier with the 4 bolts.
Torque: 90 N*m (918 kgf*cm, 68 ft.*lbf)
NOTICE:
Do not place the hub and bearing's magnet rotor side so that it is facing downward, and do not allow the magnet rotor side to become damaged or contact foreign matter.

(b) fro 4WD:
(1) Align the shaft splines and drive in the drive shaft to the axle hub and bearing.
(2) Install the axle hub and bearing assembly to the axle carrier with the 4 bolts.
Torque: 90 N*m (918 kgf*cm, 68 ft.*lbf)
NOTICE:
Do not place the hub and bearing's magnet rotor side so that it is facing downward, and do not allow the magnet rotor side to become damaged or contact foreign matter.

2. CONNECT REAR SHOCK ABSORBER ASSEMBLY LH

(a) Install the shock absorber to the axle carrier with bracket with the 2 bolts.

3. TEMPORARILY INSTALL REAR SUSPENSION NO. 1 ARM ASSEMBLY LH (See page SP-43)

4. INSTALL SKID CONTROL SENSOR WIRE (for 2WD) (See page BC-201)

5. INSTALL REAR SPEED SENSOR LH (for 4WD) (See page BC-206)

6. INSTALL REAR DISC (See page BR-58)

7. INSTALL REAR BRAKE CYLINDER ASSEMBLY LH (See page BR-61)

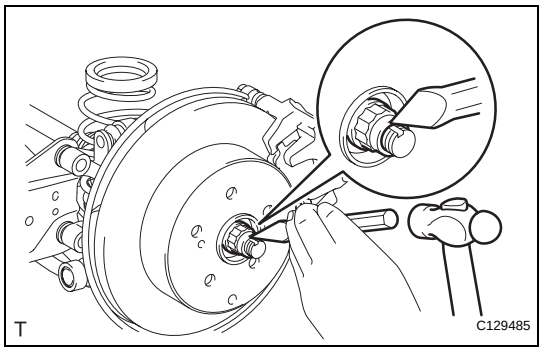

8. **INSTALL REAR AXLE SHAFT NUT (for 4WD)**
   (a) Install a new hub nut.
   Torque: 216 N*m (2,203 kgf*cm, 159 ft.*lbf)
   (b) Using a chisel and hammer, stake the hub nut.
9. **INSTALL REAR WHEEL**
   Torque: 103 N*m (1,050 kgf*cm, 76 ft.*lbf)
10. **STABILIZE SUSPENSION (See page SP-37)**
11. **TIGHTEN FRONT SHOCK ABSORBER ASSEMBLY LH (See page SP-37)**
12. **TIGHTEN REAR SUSPENSION NO. 1 ARM ASSEMBLY LH (See page SP-43)**
13. **INSPECT REAR WHEEL ALIGNMENT**
    (a) Inspect the rear wheel alignment (see page SP-7).
14. **CONNECT CABLE TO NEGATIVE BATTERY TERMINAL**
15. **CHECK SPEED SENSOR SIGNAL**
    (a) Check the speed sensor signal (see page BC-44).

REAR AXLE HUB AND BEARING

COMPONENTS

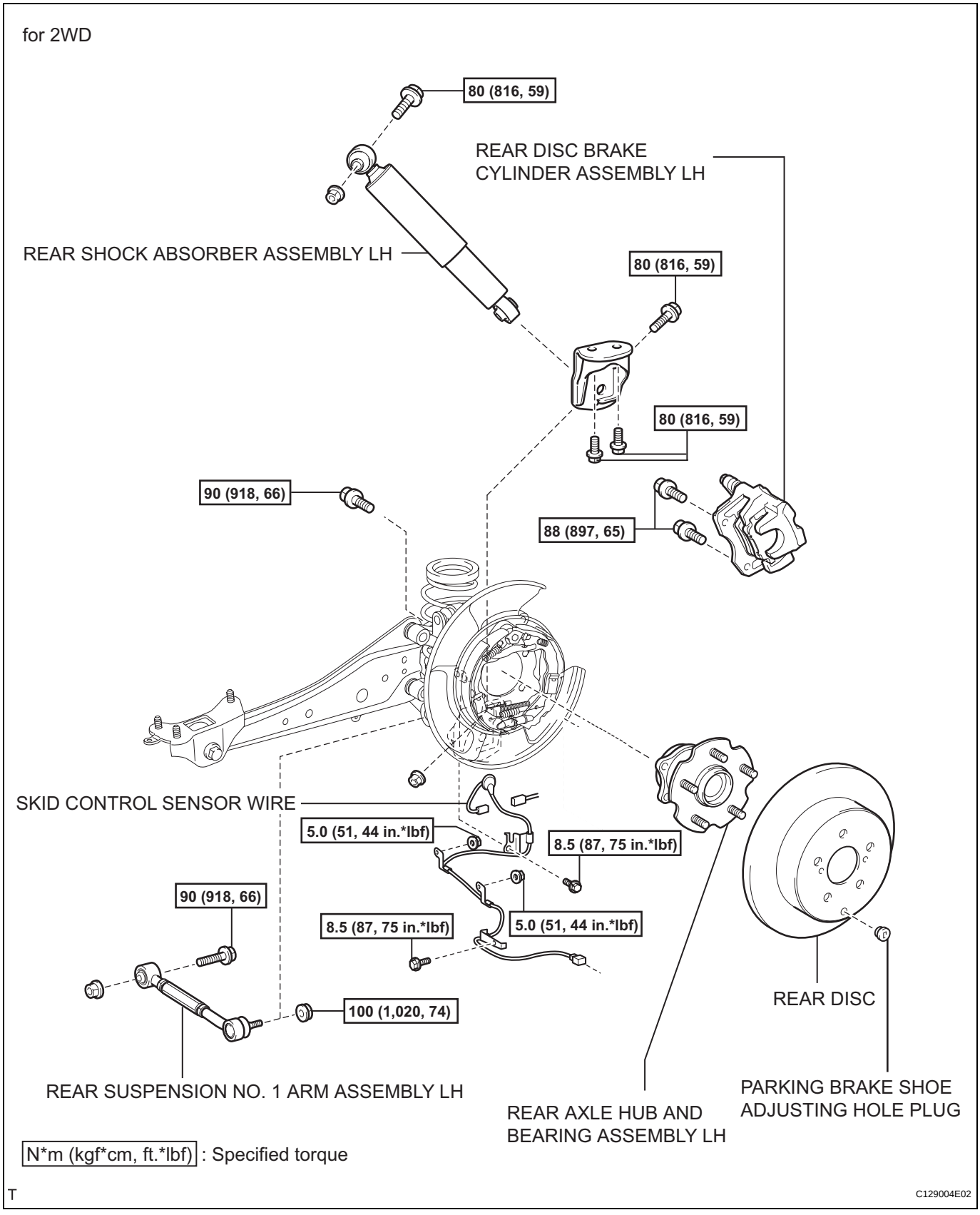

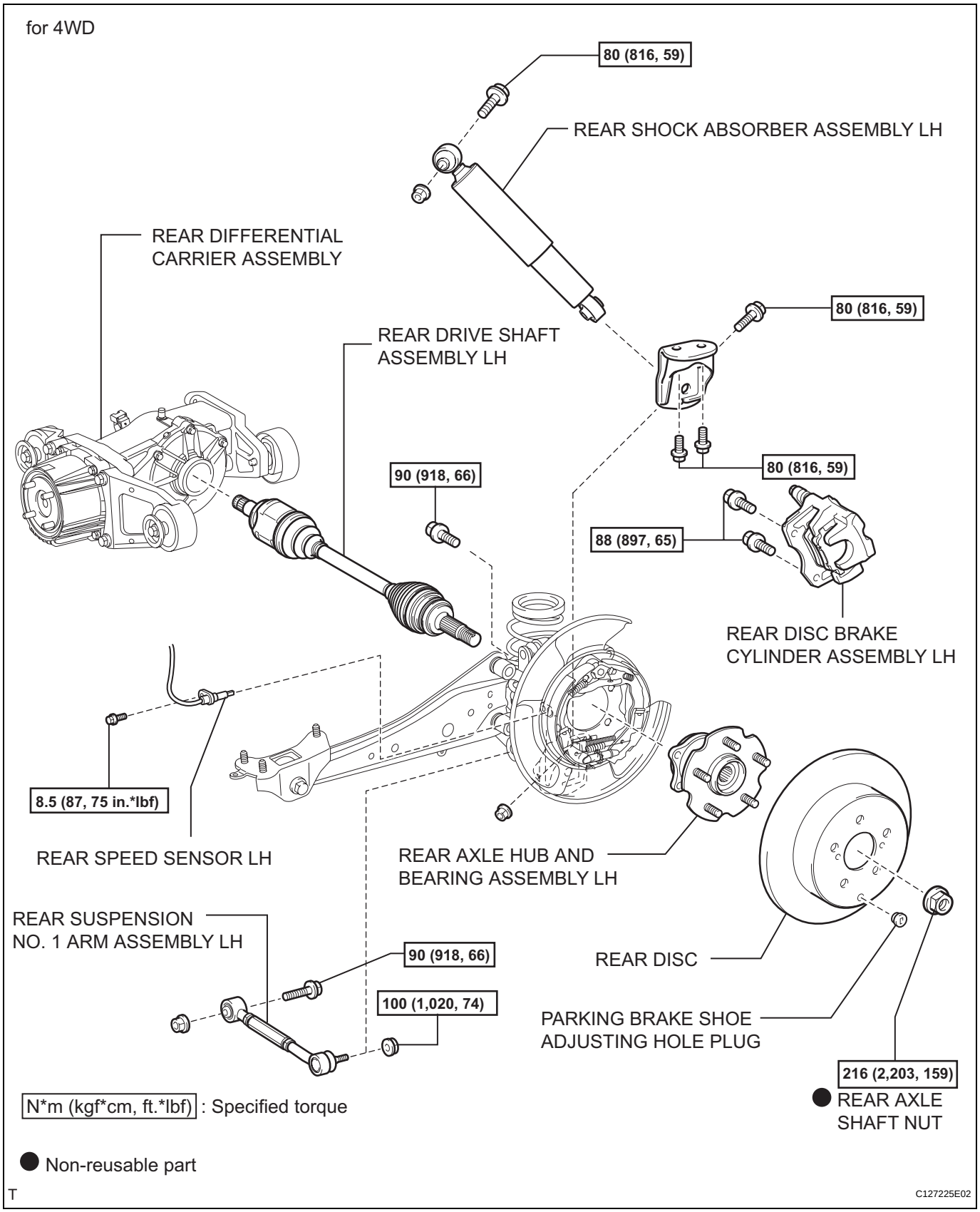
for 4WD
80 (816, 59)
REAR SHOCK ABSORBER ASSEMBLY LH
REAR DIFFERENTIAL CARRIER ASSEMBLY
REAR DRIVE SHAFT ASSEMBLY LH
80 (816, 59)
80 (816, 59)
90 (918, 66)
88 (897, 65)
REAR DISC BRAKE CYLINDER ASSEMBLY LH
8.5 (87, 75 in.*lbf)
REAR SPEED SENSOR LH
REAR AXLE HUB AND BEARING ASSEMBLY LH
REAR SUSPENSION NO. 1 ARM ASSEMBLY LH
90 (918, 66)
100 (1,020, 74)
REAR DISC
PARKING BRAKE SHOE ADJUSTING HOLE PLUG
216 (2,203, 159)
● REAR AXLE SHAFT NUT
N*m (kgf*cm, ft.*lbf) : Specified torque
● Non-reusable part
T
C127225E02

AH

REAR AXLE HUB BOLT

COMPONENTS

for 2WD

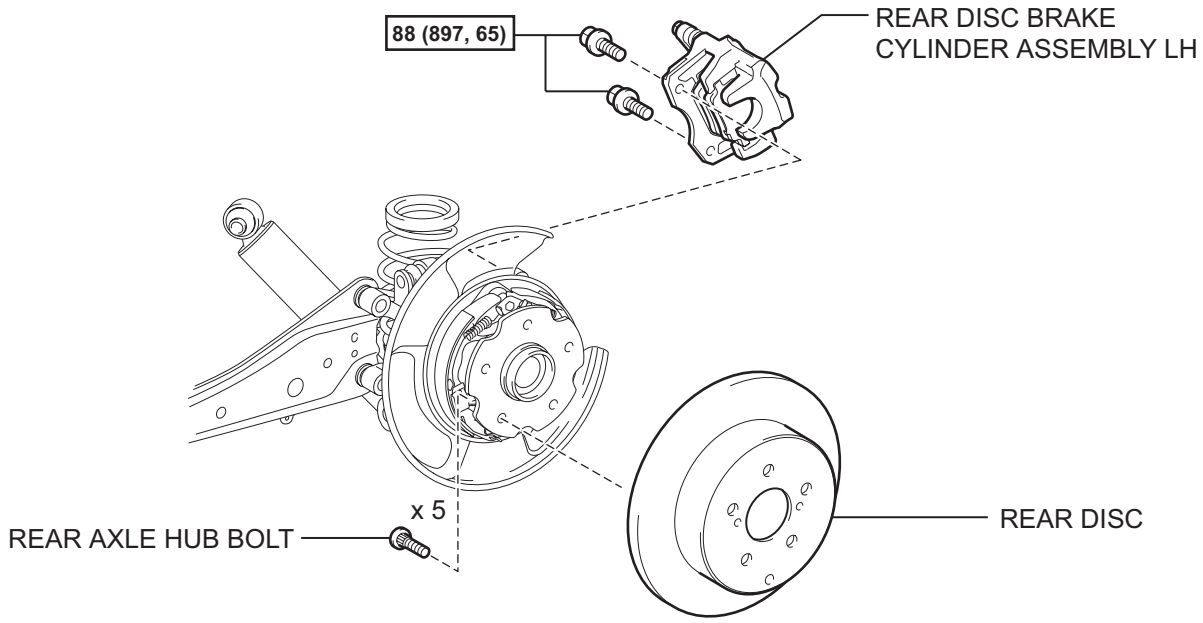

for 4WD

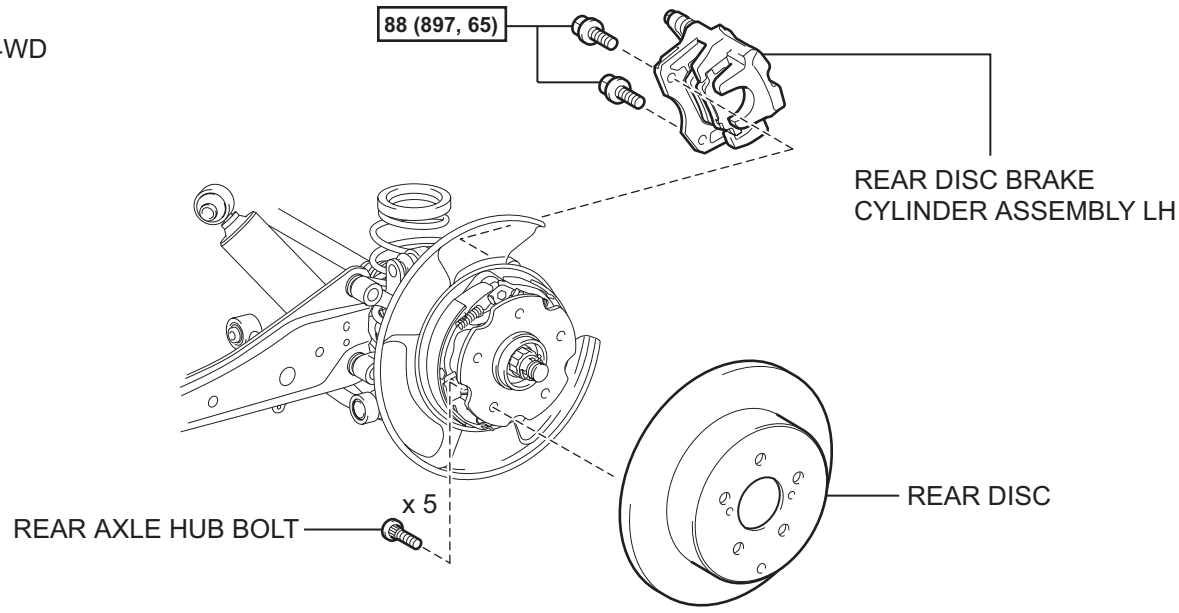

N*m (kgf*cm, ft.*lbf) : Specified torque

T

C129507E01

REPLACEMENT

HINT:
- Use the same procedures for the RH side and LH side.
- The procedures listed below are for the LH side.

1. **REMOVE REAR WHEEL**
2. **REMOVE REAR DISC BRAKE CYLINDER ASSEMBLY LH (See page BR-55)**
3. **REMOVE REAR DISC (See page BR-57)**
4. **REMOVE REAR AXLE HUB BOLT**
   (a) Using SST and a brass bar or equivalent to hold the axle shaft, remove the hub bolt that needs to be replaced.
   SST 09650-17011

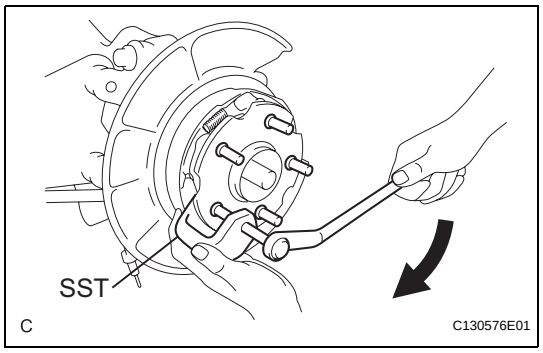

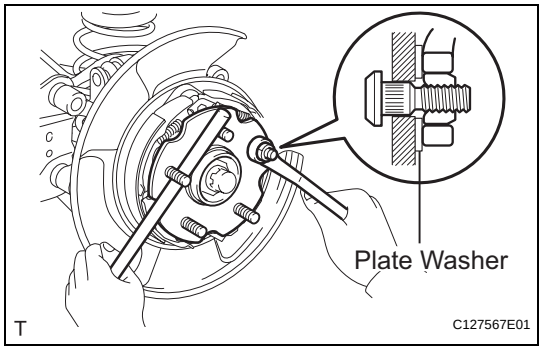

5. **INSTALL REAR AXLE HUB BOLT**
   (a) Insert a new hub bolt into the bolt hole. Set a plate washer and nut on the hub bolt end.
   (b) Using a brass bar or equivalent to hold the rear axle, install the hub bolt by tightening the nut. Then remove the nut and plate washer.
6. **INSTALL REAR DISC (See page BR-58)**
7. **INSTALL REAR DISC BRAKE CYLINDER ASSEMBLY LH (See page BR-61)**
8. **INSTALL REAR WHEEL**
   Torque: 103 N*m (1,050 kgf*cm, 76 ft.*lbf)

AH

REMOVAL

(2005/11-2006/01)

1. **REMOVE AIR CLEANER CASE SUB-ASSEMBLY**
   (a) Remove the air cleaner case (see page EM-98).
   HINT:
   Refer to the procedures from the removal of the purge VSV up until the removal of the air cleaner case.
2. **DRAIN BRAKE FLUID**
   NOTICE:
   Wash off brake fluid immediately if it comes in contact with any painted surface.
3. **DISCONNECT BRAKE LINES (See page BC-181)**
4. **REMOVE ABS AND TRACTION ACTUATOR ASSEMBLY WITH BRACKET (See page BC-182)**
5. **REMOVE BRAKE MASTER CYLINDER SUB-ASSEMBLY (See page BR-21)**
6. **DISCONNECT VACUUM HOSE**
7. **REMOVE PUSH ROD PIN**
   (a) Remove the clip from the push rod pin.
   (b) Remove the push rod pin from the push rod clevis.
8. **REMOVE BRAKE MASTER CYLINDER PUSH ROD CLEVIS**
   (a) Loosen the push rod clevis lock nut.
   (b) Remove the push rod clevis.
9. **REMOVE BRAKE BOOSTER ASSEMBLY**
   (a) Remove the 4 nuts.
   (b) Pull out the booster with gasket.
10. **REMOVE BRAKE BOOSTER GASKET**
11. **REMOVE BRAKE VACUUM CHECK VALVE ASSEMBLY**
12. **REMOVE CHECK VALVE GROMMET**

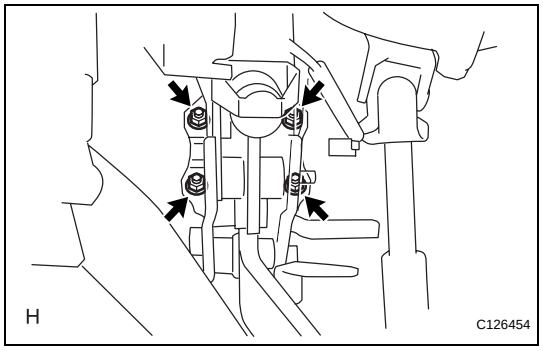

BR

REMOVAL

(2006/01-)

1. **REMOVE AIR CLEANER CASE SUB-ASSEMBLY (for 2AZ-FE)**
   (a) Remove the air cleaner case (see page EM-98).
   HINT:
   Refer to the procedures from the removal of the purge VSV up until the removal of the air cleaner case.

2. **REMOVE AIR CLEANER CASE (for 2GR-FE)**
   (a) Remove the air cleaner case (see page EM-21).
   HINT:
   Refer to the procedures from the removal of the air cleaner cap sub-assembly up until the removal of the air cleaner case.

3. **DRAIN BRAKE FLUID**
   NOTICE:
   Wash off brake fluid immediately if it comes in contact with any painted surface.

4. **DISCONNECT BRAKE LINES (See page BC-183)**

5. **REMOVE ABS AND TRACTION ACTUATOR ASSEMBLY WITH BRACKET (See page BC-184)**

6. **REMOVE BRAKE MASTER CYLINDER SUB-ASSEMBLY (See page BR-22)**

7. **DISCONNECT VACUUM HOSE**

8. **REMOVE PUSH ROD PIN**
   (a) Remove the clip from the push rod pin.
   (b) Remove the push rod pin from the push rod clevis.

9. **REMOVE BRAKE MASTER CYLINDER PUSH ROD CLEVIS**
   (a) Loosen the push rod clevis lock nut.
   (b) Remove the push rod clevis.

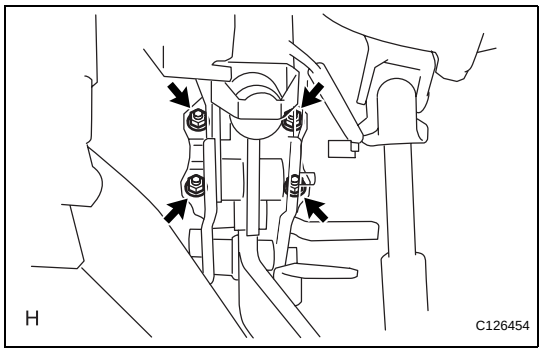

10. **REMOVE BRAKE BOOSTER ASSEMBLY**
    (a) Remove the 4 nuts.
    (b) Pull out the booster with gasket.

11. **REMOVE BRAKE BOOSTER GASKET**

12. **REMOVE BRAKE VACUUM CHECK VALVE ASSEMBLY**

13. **REMOVE CHECK VALVE GROMMET**

BR

INSTALLATION

(2005/11-2006/01)

1. **INSTALL CHECK VALVE GROMMET**
   (a) Install the grommet to the booster.
2. **INSTALL BRAKE VACUUM CHECK VALVE ASSEMBLY**
   (a) Install the check valve to the grommet.
3. **INSTALL BRAKE BOOSTER GASKET**
   (a) Install a new gasket to the booster.
4. **INSTALL BRAKE MASTER CYLINDER PUSH ROD CLEVIS**
   (a) Install the push rod clevis to the booster.
   (b) Temporarily tighten the push rod clevis lock nut.
   HINT:
   The push rod clevis lock nut will be tightened to a torque specification in the "CHECK AND ADJUST BRAKE PEDAL HEIGHT" procedures.

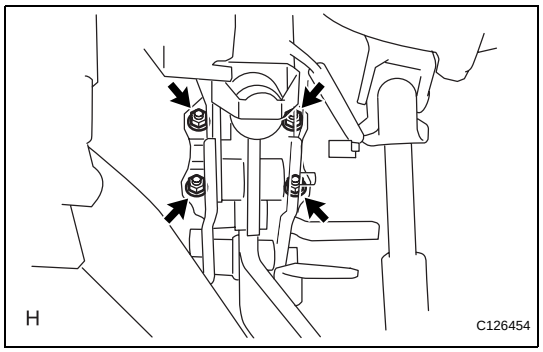

5. **INSTALL BRAKE BOOSTER ASSEMBLY**
   (a) Install the booster with the 4 nuts.
   Torque: 12.7 N*m (130 kgf*cm, 9 ft.*lbf)
6. **INSTALL PUSH ROD PIN**

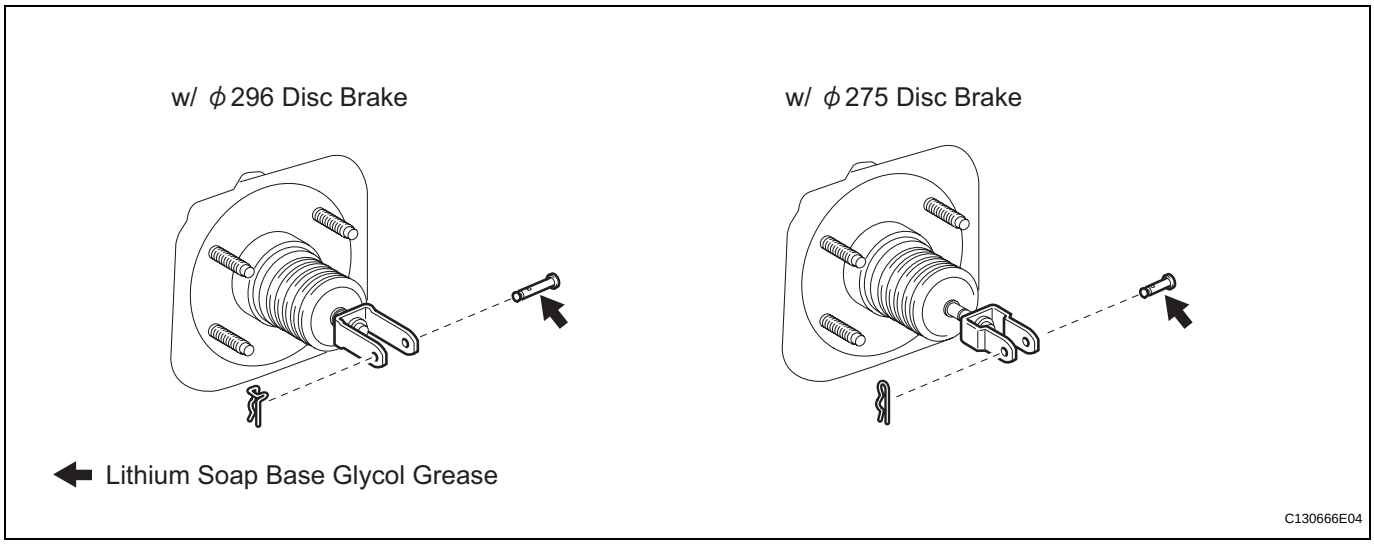

   (a) Apply lithium soap base glycol grease to the push rod pin.
   (b) Install the push rod pin to the push rod clevis.
   NOTICE:
   The push rod pin must be installed as shown in the illustration.

BR

(c) Install the clip to the push rod pin.
NOTICE:
The clip must be installed as shown in the illustration.

7. **CHECK AND ADJUST BRAKE BOOSTER PUSH ROD (See page BR-24)**
8. **CONNECT VACUUM HOSE**
   (a) Connect the vacuum hose to the check valve.
9. **INSTALL BRAKE MASTER CYLINDER SUB-ASSEMBLY (See page BR-25)**
10. **INSTALL ABS AND TRACTION ACTUATOR ASSEMBLY WITH BRACKET (See page BC-186)**
11. **CONNECT BRAKE LINES (See page BC-187)**
12. **FILL RESERVOIR WITH BRAKE FLUID (See page BR-6)**
13. **BLEED AIR FROM BRAKE MASTER CYLINDER (See page BR-7)**
14. **BLEED AIR FROM BRAKE LINE (See page BR-7)**
15. **BLEED AIR FROM ABS AND TRACTION ACTUATOR ASSEMBLY (See page BR-8)**
16. **CHECK AND ADJUST BRAKE PEDAL HEIGHT (See page BR-13)**
17. **CHECK BRAKE PEDAL FREE PLAY (See page BR-14)**
18. **CHECK BRAKE PEDAL RESERVE DISTANCE (See page BR-14)**
19. **CHECK BRAKE FLUID LEVEL IN RESERVOIR (See page BR-6)**
20. **CHECK FOR BRAKE FLUID LEAKAGE**
21. **INSTALL AIR CLEANER CASE SUB-ASSEMBLY**
    (a) Install the air cleaner case (see page EM-105).
    HINT:
    Refer to the procedures from the installation of the air cleaner case up until the installation of the purge VSV.

INSTALLATION

(2006/01-)

1. INSTALL CHECK VALVE GROMMET

(a) Install the grommet to the booster.

2. INSTALL BRAKE VACUUM CHECK VALVE ASSEMBLY

(a) Install the check valve to the grommet.

3. INSTALL BRAKE BOOSTER GASKET

(a) Install a new gasket to the booster.

4. INSTALL BRAKE MASTER CYLINDER PUSH ROD CLEVIS

(a) Install the push rod clevis to the booster.

(b) Temporarily tighten the push rod clevis lock nut.
HINT:
The push rod clevis lock nut will be tightened to a torque specification in the "CHECK AND ADJUST BRAKE PEDAL HEIGHT" procedures.

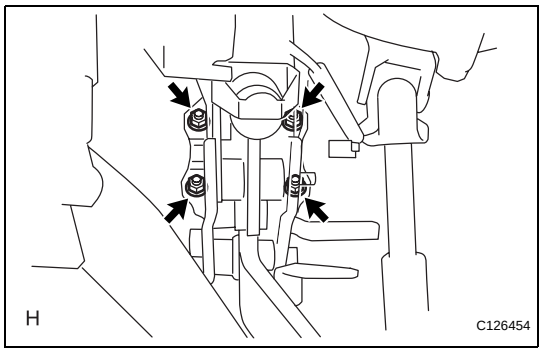

5. INSTALL BRAKE BOOSTER ASSEMBLY

(a) Install the booster with the 4 nuts.
Torque: 12.7 N*m (130 kgf*cm, 9 ft.*lbf)

6. INSTALL PUSH ROD PIN

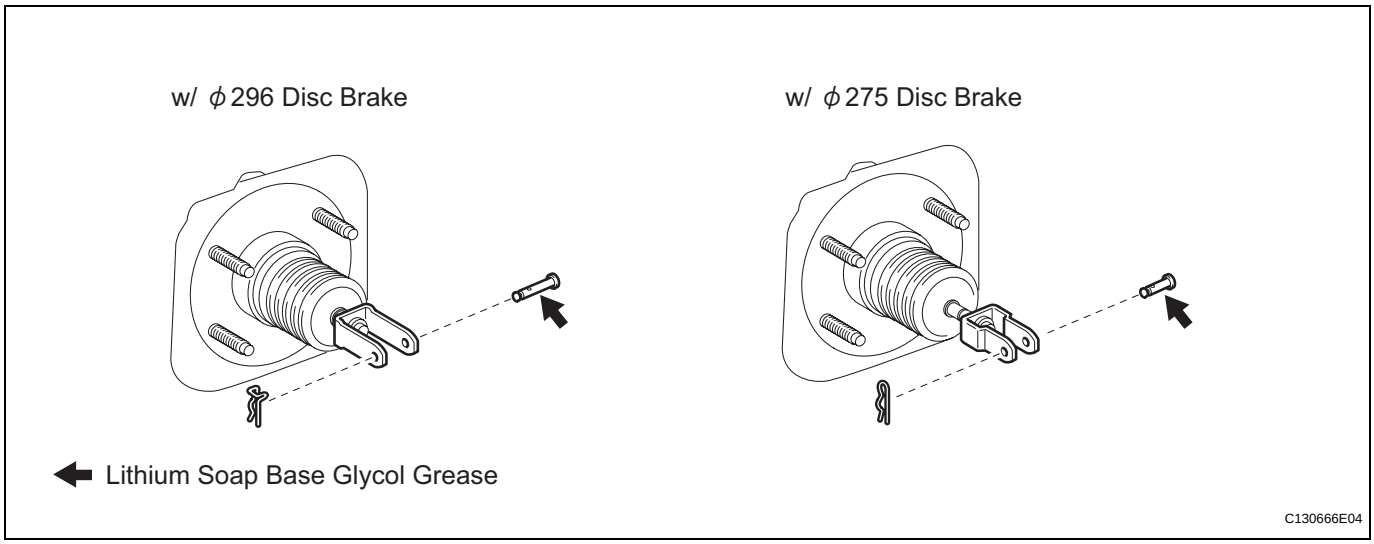

(a) Apply lithium soap base glycol grease to the push rod pin.

(b) Install the push rod pin to the push rod clevis.
NOTICE:
The push rod pin must be installed as shown in the illustration.

BR

(c) Install the clip to the push rod pin.
NOTICE:
The clip must be installed as shown in the illustration.

7. **CHECK AND ADJUST BRAKE BOOSTER PUSH ROD (See page BR-24)**
8. **CONNECT VACUUM HOSE**
   (a) Connect the vacuum hose to the check valve.
9. **INSTALL BRAKE MASTER CYLINDER SUB-ASSEMBLY (See page BR-26)**
10. **INSTALL ABS AND TRACTION ACTUATOR ASSEMBLY WITH BRACKET (See page BC-187)**
11. **CONNECT BRAKE LINES (See page BC-188)**
12. **FILL RESERVOIR WITH BRAKE FLUID (See page BR-6)**
13. **BLEED AIR FROM BRAKE MASTER CYLINDER (See page BR-7)**
14. **BLEED AIR FROM BRAKE LINE (See page BR-7)**
15. **BLEED AIR FROM ABS AND TRACTION ACTUATOR ASSEMBLY (See page BR-8)**
16. **CHECK AND ADJUST BRAKE PEDAL HEIGHT (See page BR-15)**
17. **CHECK BRAKE PEDAL FREE PLAY (See page BR-15)**
18. **CHECK BRAKE PEDAL RESERVE DISTANCE (See page BR-16)**
19. **CHECK BRAKE FLUID LEVEL IN RESERVOIR (See page BR-6)**
20. **CHECK FOR BRAKE FLUID LEAKAGE**
21. **INSTALL AIR CLEANER CASE SUB-ASSEMBLY (for 2AZ-FE)**
    (a) Install the air cleaner case (see page EM-105).
    HINT:
    Refer to the procedures from the installation of the air cleaner case up until the installation of the purge VSV.
22. **INSTALL AIR CLEANER CASE (for 2GR-FE)**
    (a) Install the air cleaner case (see page EM-31).
    HINT:
    Refer to the procedures from the installation of the air cleaner case up until the installation of the air cleaner cap sub-assembly.

BRAKE BOOSTER

COMPONENTS

w/ φ275 Disc Brake

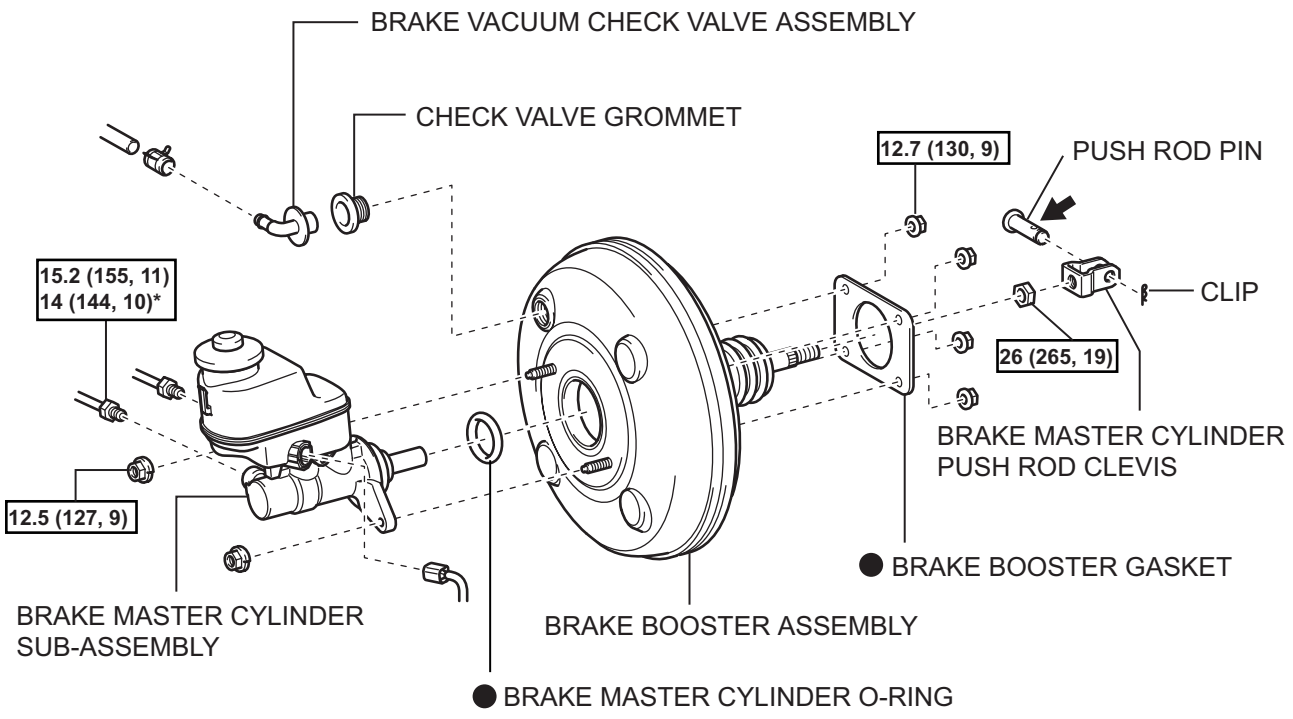

N*m (kgf*cm, ft.*lbf) : Specified torque

● Non-reusable part

* For use with SST

⬅ Lithium soap base glycol grease

C130672E02

BR

w/ φ296 Disc Brake

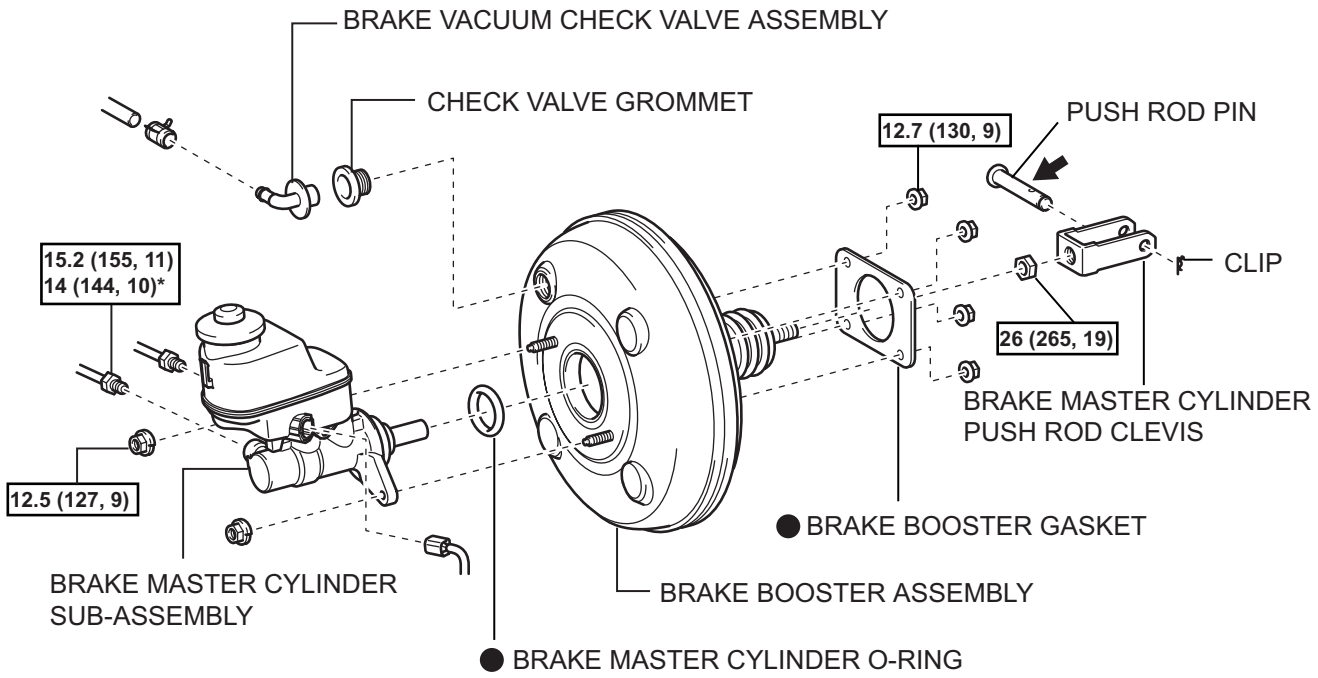

N*m (kgf*cm, ft.*lbf) : Specified torque

● Non-reusable part

* For use with SST

⬅ Lithium soap base glycol grease

C130673E02

BR

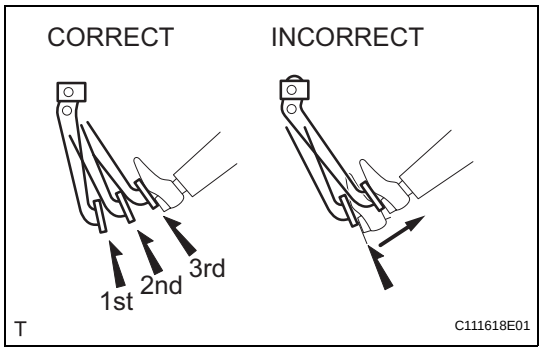

ON-VEHICLE INSPECTION

1. CHECK BRAKE BOOSTER ASSEMBLY

(a) Airtightness check.

(1) Start the engine and stop it after 1 or 2 minutes. Slowly depress the brake pedal several times.

(2) Make sure the booster is airtight. Check that the distance the pedal can be depressed decreases gradually in correlation with each subsequent press of the pedal.
If the pedal is not as specified, check the check valve.
If the check valve is normal, replace the booster.

(3) Start the engine. Depress and hold down the pedal, and stop the engine.

(4) Make sure the booster is airtight. Hold the pedal for 30 seconds and check that there is no change in the pedal reserve distance.
If the pedal is not as specified, check the check valve.

If the check valve is normal, replace the booster.

(b) Operation check.

(1) Stop the engine.

(2) Depress the pedal several times and check that there is no change in the pedal reserve distance.

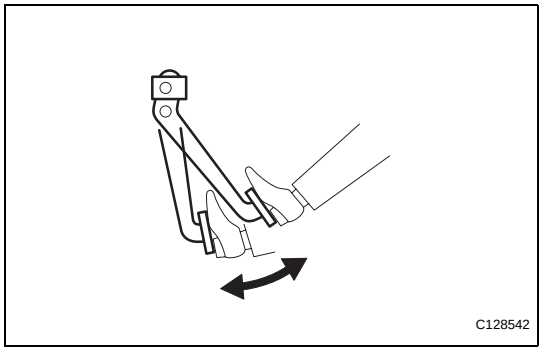

(3) Depress and hold down the pedal, and start the engine. Check that the pedal can only be depressed slightly.
If the pedal is not as specified, check the check valve.
If the check valve is normal, replace the booster.

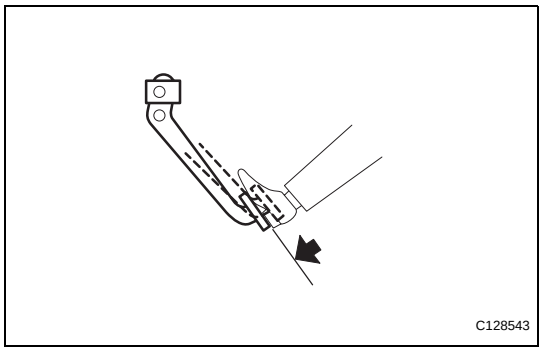

2. CHECK BRAKE VACUUM CHECK VALVE ASSEMBLY

(a) Check the check valve.

(1) Slide the clip and disconnect the vacuum hose.

(2) Remove the check valve from the booster.

(3) Check that there is ventilation from the booster to the engine, and no ventilation from the engine to the booster.
If the results are not as specified, replace the check valve assembly.

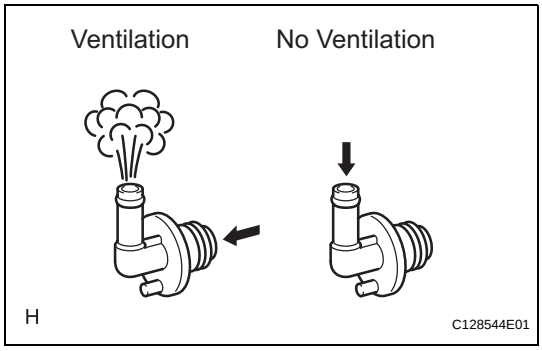

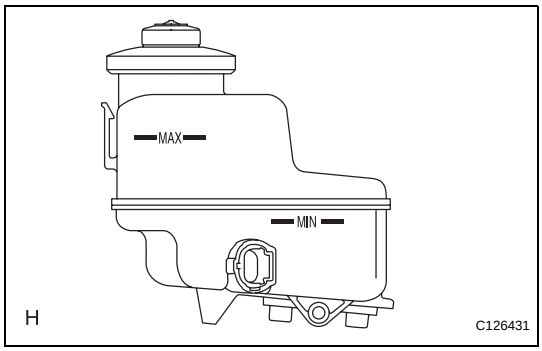

BRAKE FLUID

ON-VEHICLE INSPECTION

1. CHECK BRAKE FLUID LEVEL IN RESERVOIR

(a) Check the fluid level and add fluid if necessary.

Fluid:

SAE J1703 or FMVSS No. 116 DOT3

HINT:

Add fluid to a level between the reservoir's MIN and MAX lines.

BLEEDING

HINT:
If any work is performed on the brake system or if air in the brake lines is suspected, bleed air from the brake system.
NOTICE:
Wash off brake fluid immediately if it comes in contact with any painted surface.

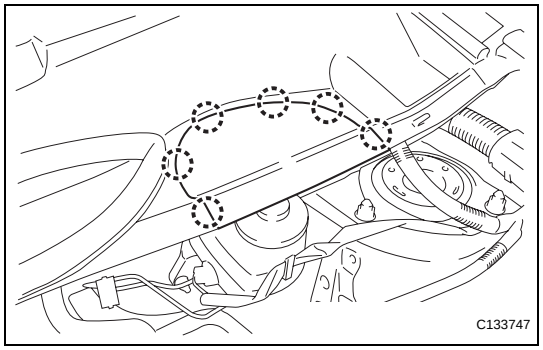

1. REMOVE COWL TOP VENTILATOR LOUVER BRACKET LH
(a) Detach the 6 claws and remove the bracket.

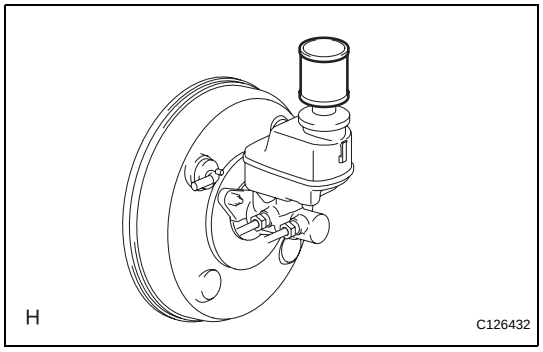

2. FILL RESERVOIR WITH BRAKE FLUID
(a) Set the brake fluid can upside down on the reservoir.
Fluid:
SAE J1703 or FMVSS No. 116 DOT3
NOTICE:
- **Make sure there is sufficient brake fluid in the can.**
- **After adding brake fluid, make sure the reservoir is sufficiently full.**

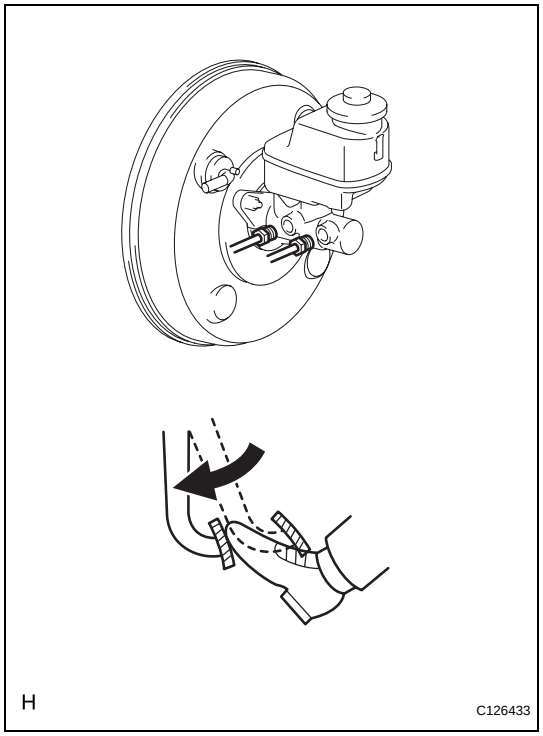

3. BLEED AIR FROM BRAKE MASTER CYLINDER
HINT:
If the master cylinder has been disassembled or if the reservoir becomes empty, bleed air from the master cylinder.
(a) Using SST, disconnect the 2 brake lines from the master cylinder.
SST 09023-00101
(b) Slowly depress and hold the brake pedal.

BR

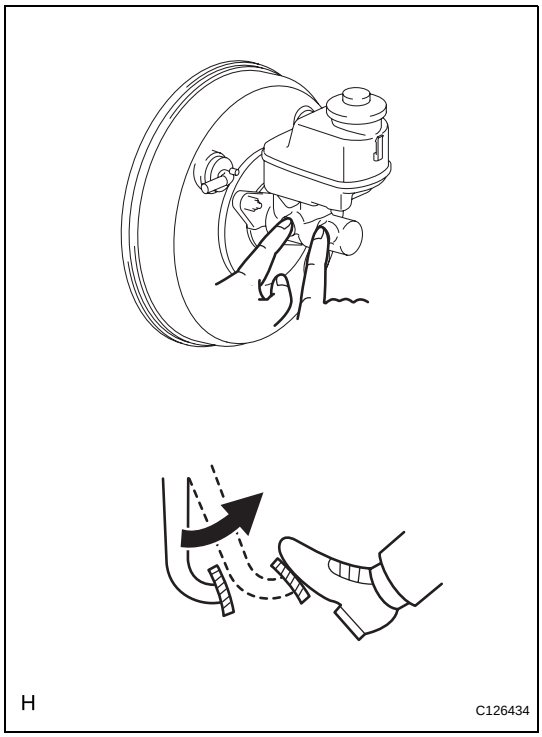

(c) Block the outer holes with your fingers, and release the pedal.
(d) Repeat the 2 previous steps 3 or 4 times.
(e) Using SST, connect the 2 brake lines to the master cylinder.
SST 09023-00101
Torque: 15.2 N*m (155 kgf*cm, 11 ft.*lbf) without SST
14 N*m (144 kgf*cm, 10 ft.*lbf) with SST
HINT:
Use a torque wrench with a fulcrum length of 30 cm (11.81 in.).

4. BLEED AIR FROM BRAKE LINE

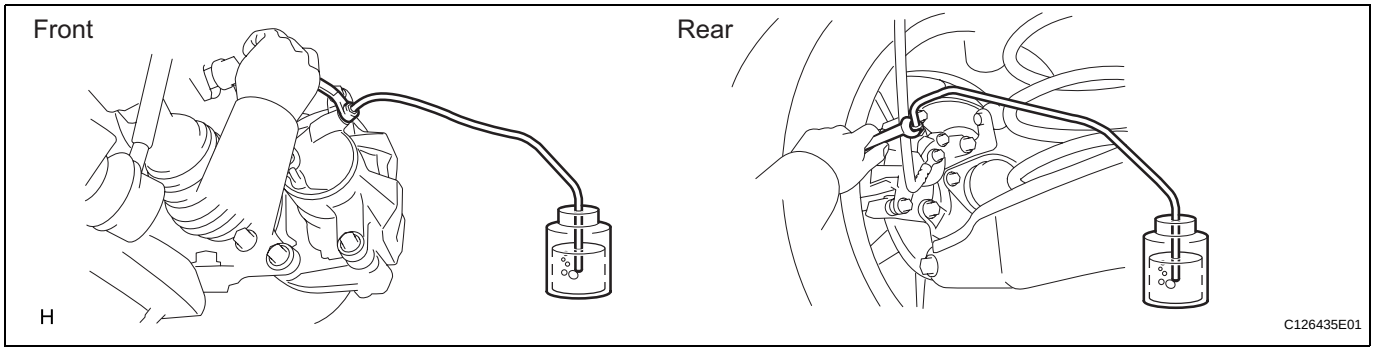

(a) Remove the bleeder plug cap.
(b) Connect the vinyl tube to the bleeder plugs.
(c) Depress the brake pedal several times, and then loosen the bleeder plug with the pedal depressed.
(d) When fluid stops coming out, immediately tighten the bleeder plug. Then release the pedal.
(e) Repeat the 2 previous steps until all the air in the brake fluid is gone.
(f) Tighten the bleeder plug.
Torque: 8.3 N*m (85 kgf*cm, 73 in.*lbf)
(g) Install the cap.
(h) Bleed air from the brake line for each wheel by repeating the above procedures.

5. BLEED AIR FROM ABS AND TRACTION ACTUATOR ASSEMBLY
NOTICE:
After bleeding the air from the brake system, if the height or feel of the brake pedal cannot be obtained, perform air bleeding of the brake actuator with the intelligent tester by following the procedure below.
(a) Depress the brake pedal more than 20 times with the engine off.

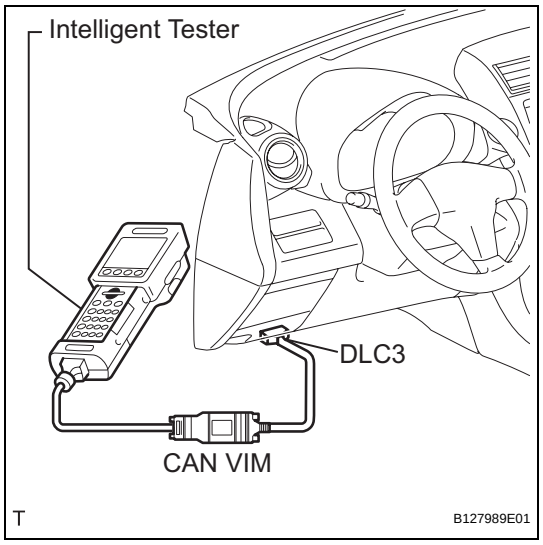

(b) Connect the intelligent tester to the DLC3, and turn the ignition switch ON.
NOTICE:
Do not start the engine.

(c) Select AIR BLEEDING on the intelligent tester.
HINT:
Refer to the intelligent tester operator's manual for further details.

(d) Bleed the air out of the suction line.
NOTICE:
- **Perform the bleeding at the right front wheel and right rear wheel.**
- **Bleed the air by following the steps displayed on the intelligent tester.**

(1) Connect a vinyl tube to the bleeder plug at the right front wheel or the right rear wheel.
(2) Loosen the bleeder plug.
(3) Operate the brake actuator to bleed the air using the intelligent tester.
NOTICE:
Release the brake pedal at this time.
HINT:
This operation stops automatically after 4 seconds.
(4) Check if the operation has stopped by referring to the intelligent tester display.
(5) Temporarily tighten the bleeder plug.
(6) Repeat the 4 previous steps until all air in the fluid is completely bled out.
(7) Tighten the bleeder plug.
Torque: 8.3 N*m (85 kgf*cm, 73 in.*lbf)
(8) Repeat all of the above procedures for the right rear wheel to bleed the air out of the suction line.

(e) Bleed the air out of the pressure reduction line.
NOTICE:
- **Perform the bleeding at the 4 wheels.**
- **Bleed the air by following the steps displayed on the intelligent tester.**

(1) Connect a vinyl tube to either one of the bleeder plugs.
(2) Loosen the bleeder plug.
(3) Using the intelligent tester, operate the brake actuator assembly, completely depress the brake pedal and hold it there.
NOTICE:
- **During this procedure, the pedal will feel heavy, but completely depress it so that the brake fluid comes out of the bleeder plug.**
- **Depress and hold the brake pedal. Do not depress and release the pedal repeatedly.**

HINT:
The operation stops automatically after 4 seconds. When performing this procedure continuously, set an interval of at least 20 seconds.

(4) Tighten the bleeder plug, then release the brake pedal.
(5) Repeat the 3 previous steps until all air in the fluid is completely bled out.
(6) Tighten the bleeder plug.
Torque: 8.3 N*m (85 kgf*cm, 73 in.*lbf)
(7) Repeat all of the above procedures for the other wheels to bleed the air out of the pressure reduction line.

6. CHECK BRAKE FLUID LEVEL IN RESERVOIR (See page BR-6)

7. INSTALL COWL TOP VENTILATOR LOUVER BRACKET LH

(a) Attach the 6 claws to install the bracket.

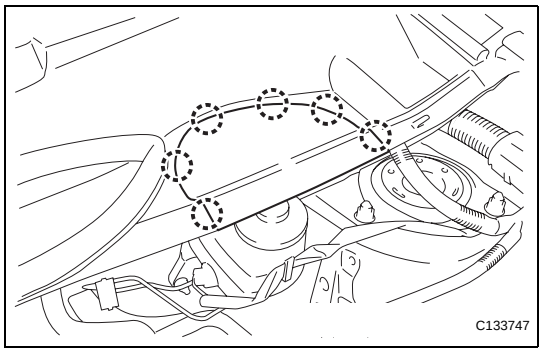

ON-VEHICLE INSPECTION

1. CHECK BRAKE FLUID LEVEL WARNING SWITCH

(a) Remove the reservoir filler cap and strainer.

(b) Disconnect the brake fluid level warning switch connector.

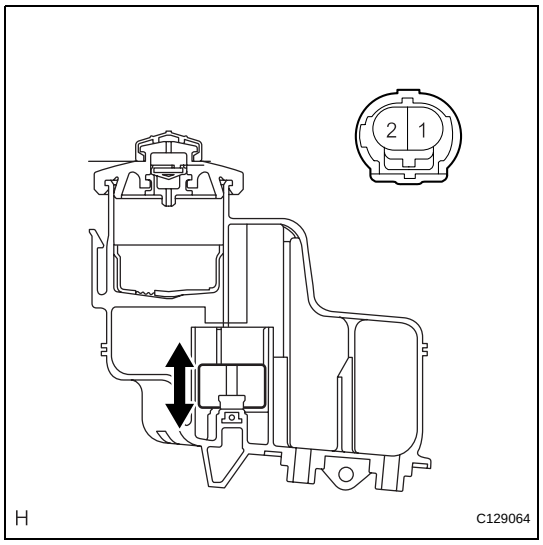

(c) Measure the resistance of the switch.
HINT:
There is a float inside the reservoir. Its position can be changed by increasing or decreasing the brake fluid level.
Standard resistance

Tester Connection	Condition	Specified Condition
1 - 2	Float up (Switch OFF)	10 kΩ or higher
1 - 2	Float down (Switch ON)	Below 1 Ω

If the value is not as specified, replace the brake master cylinder reservoir sub-assembly.

(d) Add brake fluid to the MAX level.

REMOVAL

(2005/11-2006/01)

NOTICE:

- **The master cylinder and piston are designed so that the piston can easily fall out. Prevent this by making sure that the tip of the master cylinder points downward when handling the master cylinder.**
- **Make sure foreign matter does not attach to the master cylinder's piston. If foreign matter attaches, clean it off with a cloth. Then apply lithium soap base glycol grease to the entire outer circumference contact surface area of the piston.**

1. REMOVE AIR CLEANER CASE SUB-ASSEMBLY

(a) Remove the air cleaner case (see page EM-98).
HINT:
Refer to the procedures from the removal of the purge VSV up until the removal of the air cleaner case.

2. DRAIN BRAKE FLUID

NOTICE:
Wash off brake fluid immediately if it comes in contact with any painted surface.

3. REMOVE BRAKE MASTER CYLINDER SUB-ASSEMBLY

(a) Release the vacuum pressure in the brake booster as follows.
(1) Stop the engine.
(2) Depress the brake pedal several times.

(b) Disconnect the brake fluid level warning switch connector labeled A.

(c) Using SST, disconnect the 2 brake lines labeled B from the master cylinder.
SST 09023-00101

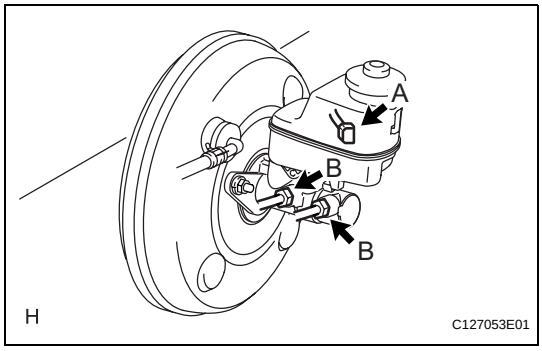

(d) Remove the 2 nuts.

(e) Pull out the master cylinder from the brake booster.
NOTICE:
- **The master cylinder and piston are designed so that the piston can easily fall out. Prevent this by making sure that the tip of the master cylinder points downward when handling the master cylinder.**

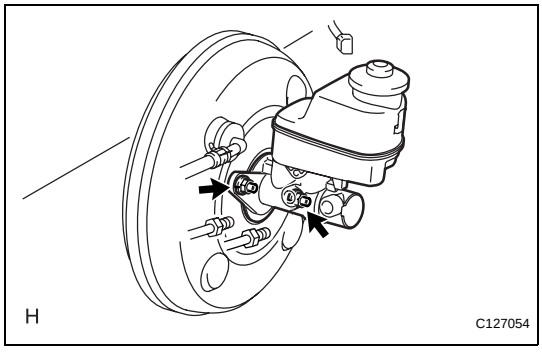

- **Make sure foreign matter does not attach to the master cylinder's piston. If foreign matter attaches, clean it off with a cloth. Then apply lithium soap base glycol grease to the entire outer circumference contact surface area of the piston.**

(f) Remove the O-ring from the master cylinder.

REMOVAL

(2006/01-)

NOTICE:

- **The master cylinder and piston are designed so that the piston can easily fall out. Prevent this by making sure that the tip of the master cylinder points downward when handling the master cylinder.**
- **Make sure foreign matter does not attach to the master cylinder's piston. If foreign matter attaches, clean it off with a cloth. Then apply lithium soap base glycol grease to the entire outer circumference contact surface area of the piston.**

1. REMOVE AIR CLEANER CASE SUB-ASSEMBLY (for 2AZ-FE)

(a) Remove the air cleaner case (see page EM-98).
HINT:
Refer to the procedures from the removal of the purge VSV up until the removal of the air cleaner case.

2. REMOVE AIR CLEANER CASE (for 2GR-FE)

(a) Remove the air cleaner case (see page EM-21).
HINT:
Refer to the procedures from the removal of the air cleaner cap sub-assembly up until the removal of the air cleaner case.

3. DRAIN BRAKE FLUID

NOTICE:
Wash off brake fluid immediately if it comes in contact with any painted surface.

4. REMOVE BRAKE MASTER CYLINDER SUB-ASSEMBLY

(a) Release the vacuum pressure in the brake booster as follows.
(1) Stop the engine.
(2) Depress the brake pedal several times.

(b) Disconnect the brake fluid level warning switch connector labeled A.

(c) Using SST, disconnect the 2 brake lines labeled B from the master cylinder.
SST 09023-00101

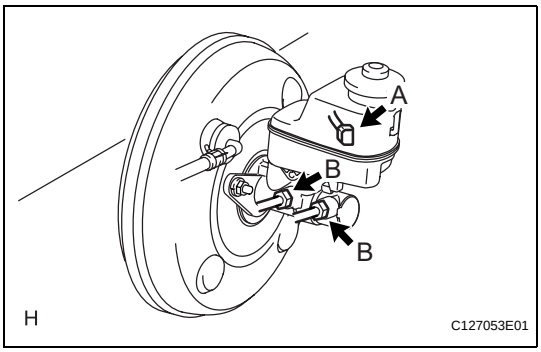

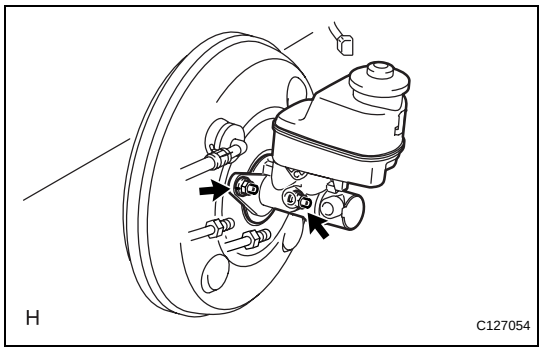

(d) Remove the 2 nuts.
(e) Pull out the master cylinder from the brake booster.
NOTICE:
- **The master cylinder and piston are designed so that the piston can easily fall out. Prevent this by making sure that the tip of the master cylinder points downward when handling the master cylinder.**
- **Make sure foreign matter does not attach to the master cylinder's piston. If foreign matter attaches, clean it off with a cloth. Then apply lithium soap base glycol grease to the entire outer circumference contact surface area of the piston.**

(f) Remove the O-ring from the master cylinder.

DISASSEMBLY

NOTICE:

- **The master cylinder and piston are designed so that the piston can easily fall out. Prevent this by making sure to tip of the master cylinder points downward when handling the master cylinder.**
- **Make sure foreign matter does not attach to the master cylinder's piston. If foreign matter attaches, clean it off with a cloth. Then apply lithium soap base glycol grease to the entire outer circumference contact surface area of the piston.**

1. **REMOVE BRAKE MASTER CYLINDER RING PIN**
2. **REMOVE BRAKE MASTER CYLINDER RESERVOIR SUB-ASSEMBLY**
3. **REMOVE MASTER CYLINDER RESERVOIR GROMMET**
4. **REMOVE BRAKE MASTER CYLINDER RESERVOIR FILLER CAP ASSEMBLY**
5. **REMOVE BRAKE MASTER CYLINDER RESERVOIR STRAINER**

INSPECTION

NOTICE:

- **The master cylinder and piston are designed so that the piston can easily fall out. Prevent this by making sure that the tip of the master cylinder points downward when handling the master cylinder.**
- **Make sure foreign matter does not attach to the master cylinder's piston. If foreign matter attaches, clean it off with a cloth. Then apply lithium soap base glycol grease to the entire outer circumference contact surface area of the piston.**

1. INSPECT AND ADJUST BRAKE BOOSTER PUSH ROD

HINT:

Adjust the booster push rod when the master cylinder is replaced with a new one. Adjustment is not necessary when the master cylinder is reinstalled and the booster is replaced with a new one.

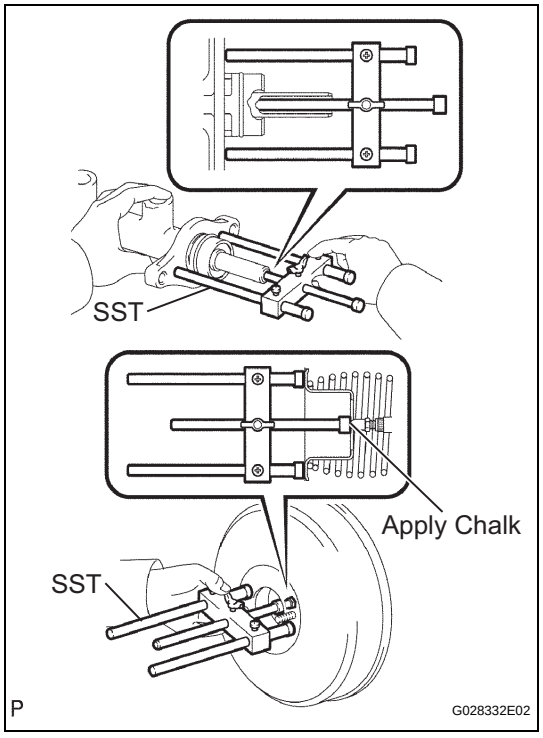

(a) Set SST on the master cylinder and lower the rod of SST until it just touches the piston.
SST 09737-00013

(b) Apply chalk to the flat tip of the SST rod. Turn SST upside down and measure the clearance between the brake booster push rod and SST.
Standard clearance:
-0.21 to 0 mm (-0.0083 to 0 in.)
If there is clearance between the SST main body and the shell of the brake booster, the push rod is protruding too far. If the chalk does not stick to the tip of the brake booster push rod, the push rod protrusion is insufficient.

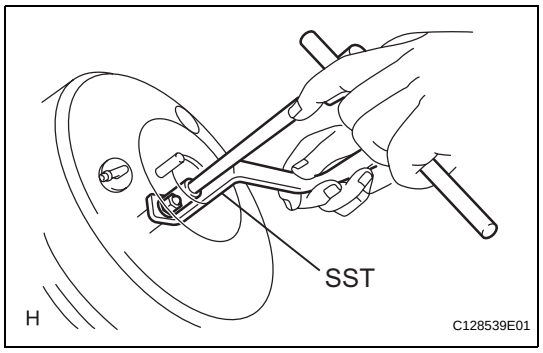

(c) If the clearance is not within the standard, adjust the length by holding the rod using SST and turning the tip of the rod using a 7 mm socket driver.
SST 09737-00020
NOTICE:
Check the push rod clearance again after adjusting.

BR

REASSEMBLY

NOTICE:

- **The master cylinder and piston are designed so that the piston can easily fall out. Prevent this by making sure to tip of the master cylinder points downward when handling the master cylinder.**
- **Make sure foreign matter does not attach to the master cylinder's piston. If foreign matter attaches, clean it off with a cloth. Then apply lithium soap base glycol grease to the entire outer circumference contact surface area of the piston.**

1. INSTALL BRAKE MASTER CYLINDER RESERVOIR STRAINER

2. INSTALL BRAKE MASTER CYLINDER RESERVOIR FILLER CAP ASSEMBLY

3. INSTALL MASTER CYLINDER RESERVOIR GROMMET

(a) Apply lithium soap base glycol grease to 2 new grommets, and then install them to the master cylinder.

4. INSTALL BRAKE MASTER CYLINDER RESERVOIR SUB-ASSEMBLY

5. INSTALL BRAKE MASTER CYLINDER RING PIN

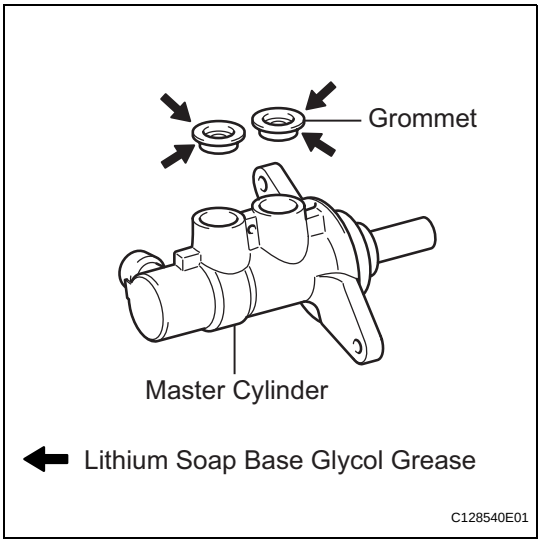

INSTALLATION

(2005/11-2006/01)

1. **INSTALL BRAKE MASTER CYLINDER SUB-ASSEMBLY**

NOTICE:

- **The master cylinder and piston are designed so that the piston can easily fall out. Prevent this by making sure that the tip of the master cylinder points downward when handling the master cylinder.**
- **Make sure foreign matter does not attach to the master cylinder's piston. If foreign matter attaches, clean it off with a cloth. Then apply lithium soap base glycol grease to the entire outer circumference contact surface area of the piston.**

(a) Install a new O-ring to the master cylinder.

(b) Install the master cylinder to the booster with the 2 nuts.

Torque: 12.5 N*m (127 kgf*cm, 9 ft.*lbf)

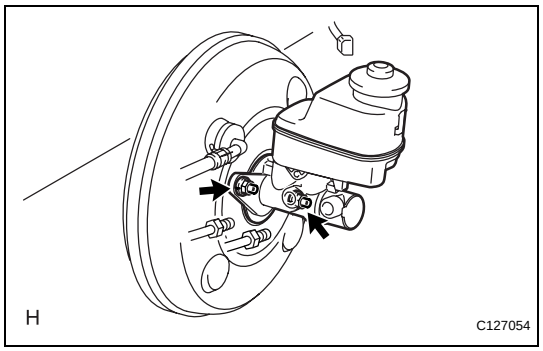

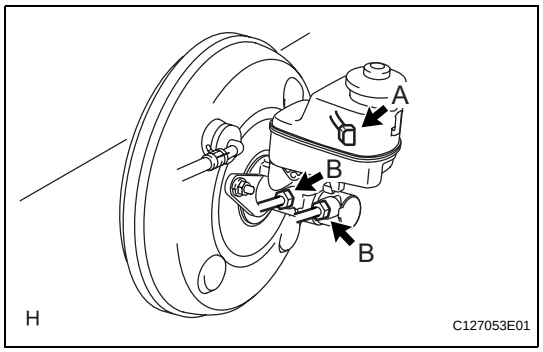

(c) Using SST, connect the 2 brake lines labeled B to the master cylinder.

SST 09023-00101

Torque: 15.2 N*m (155 kgf*cm, 11 ft.*lbf) without SST

14 N*m (144 kgf*cm, 10 ft.*lbf) with SST

HINT:

Use a torque wrench with a fulcrum length of 30 cm (11.81 in.).

(d) Connect the brake fluid level warning switch connector labeled A to the master cylinder.

2. **FILL RESERVOIR WITH BRAKE FLUID (See page BR-6)**
3. **BLEED AIR FROM BRAKE MASTER CYLINDER (See page BR-7)**
4. **BLEED AIR FROM BRAKE LINE (See page BR-7)**
5. **BLEED AIR FROM ABS AND TRACTION ACTUATOR ASSEMBLY (See page BR-8)**
6. **CHECK BRAKE FLUID LEVEL IN RESERVOIR (See page BR-6)**
7. **CHECK FOR BRAKE FLUID LEAKAGE**

8. INSTALL AIR CLEANER CASE SUB-ASSEMBLY

(a) Install the air cleaner case (see page EM-105).
HINT:
Refer to the procedures from the installation of the air cleaner case up until the installation of the purge VSV.

INSTALLATION

(2006/01-)

1. INSTALL BRAKE MASTER CYLINDER SUB-ASSEMBLY

NOTICE:

- **The master cylinder and piston are designed so that the piston can easily fall out. Prevent this by making sure that the tip of the master cylinder points downward when handling the master cylinder.**
- **Make sure foreign matter does not attach to the master cylinder's piston. If foreign matter attaches, clean it off with a cloth. Then apply lithium soap base glycol grease to the entire outer circumference contact surface area of the piston.**

(a) Install a new O-ring to the master cylinder.

(b) Install the master cylinder to the booster with the 2 nuts.

Torque: 12.5 N*m (127 kgf*cm, 9 ft.*lbf)

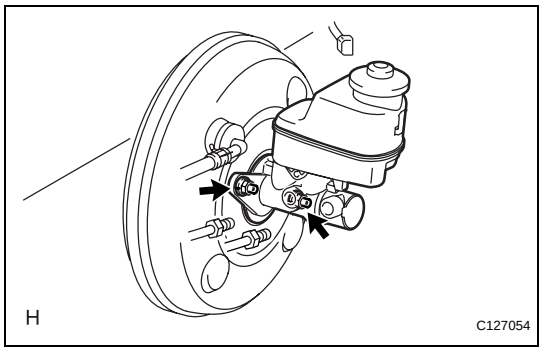

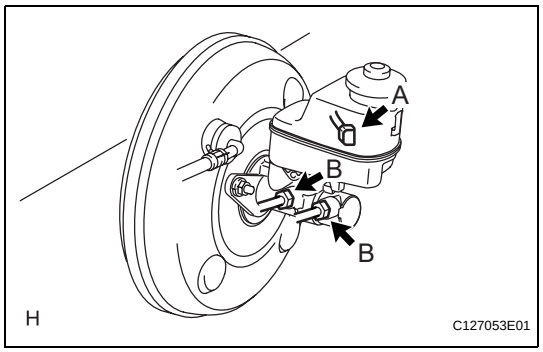

(c) Using SST, connect the 2 brake lines labeled B to the master cylinder.

SST 09023-00101

Torque: 15.2 N*m (155 kgf*cm, 11 ft.*lbf) without SST

14 N*m (144 kgf*cm, 10 ft.*lbf) with SST

HINT:

Use a torque wrench with a fulcrum length of 30 cm (11.81 in.).

(d) Connect the brake fluid level warning switch connector labeled A to the master cylinder.

2. FILL RESERVOIR WITH BRAKE FLUID (See page BR-6)

3. BLEED AIR FROM BRAKE MASTER CYLINDER (See page BR-7)

4. BLEED AIR FROM BRAKE LINE (See page BR-7)

5. BLEED AIR FROM ABS AND TRACTION ACTUATOR ASSEMBLY (See page BR-8)

6. CHECK BRAKE FLUID LEVEL IN RESERVOIR (See page BR-6)

7. CHECK FOR BRAKE FLUID LEAKAGE

8. **INSTALL AIR CLEANER CASE SUB-ASSEMBLY (for 2AZ-FE)**
   (a) Install the air cleaner case (see page EM-105).
   HINT:
   Refer to the procedures from the installation of the air cleaner case up until the installation of the purge VSV.

9. **INSTALL AIR CLEANER CASE (for 2GR-FE)**
   (a) Install the air cleaner case (see page EM-31).
   HINT:
   Refer to the procedures from the installation of the air cleaner case up until the installation of the air cleaner cap sub-assembly.

BRAKE MASTER CYLINDER

COMPONENTS

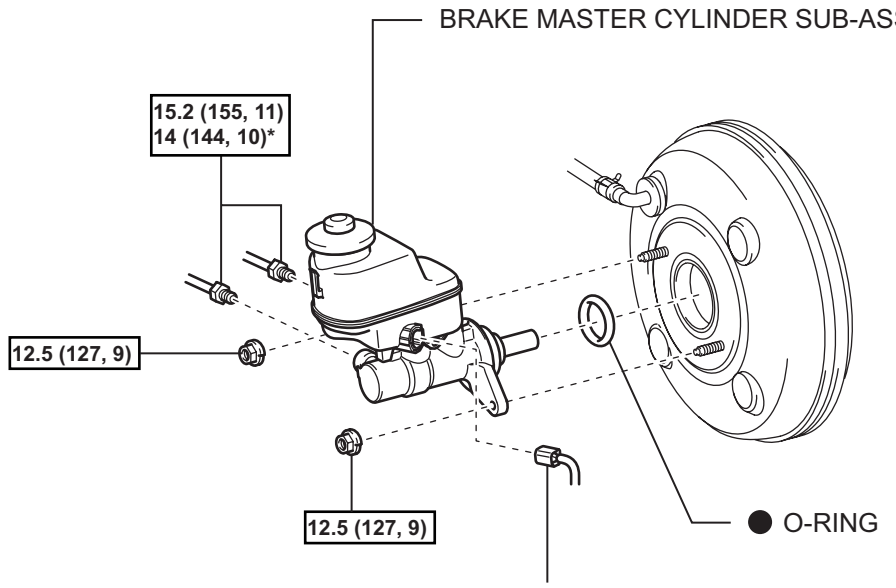

N*m (kgf*cm, ft.*lbf) : Specified torque

● Non-reusable part

* For use with SST

H

C128553E03

BR

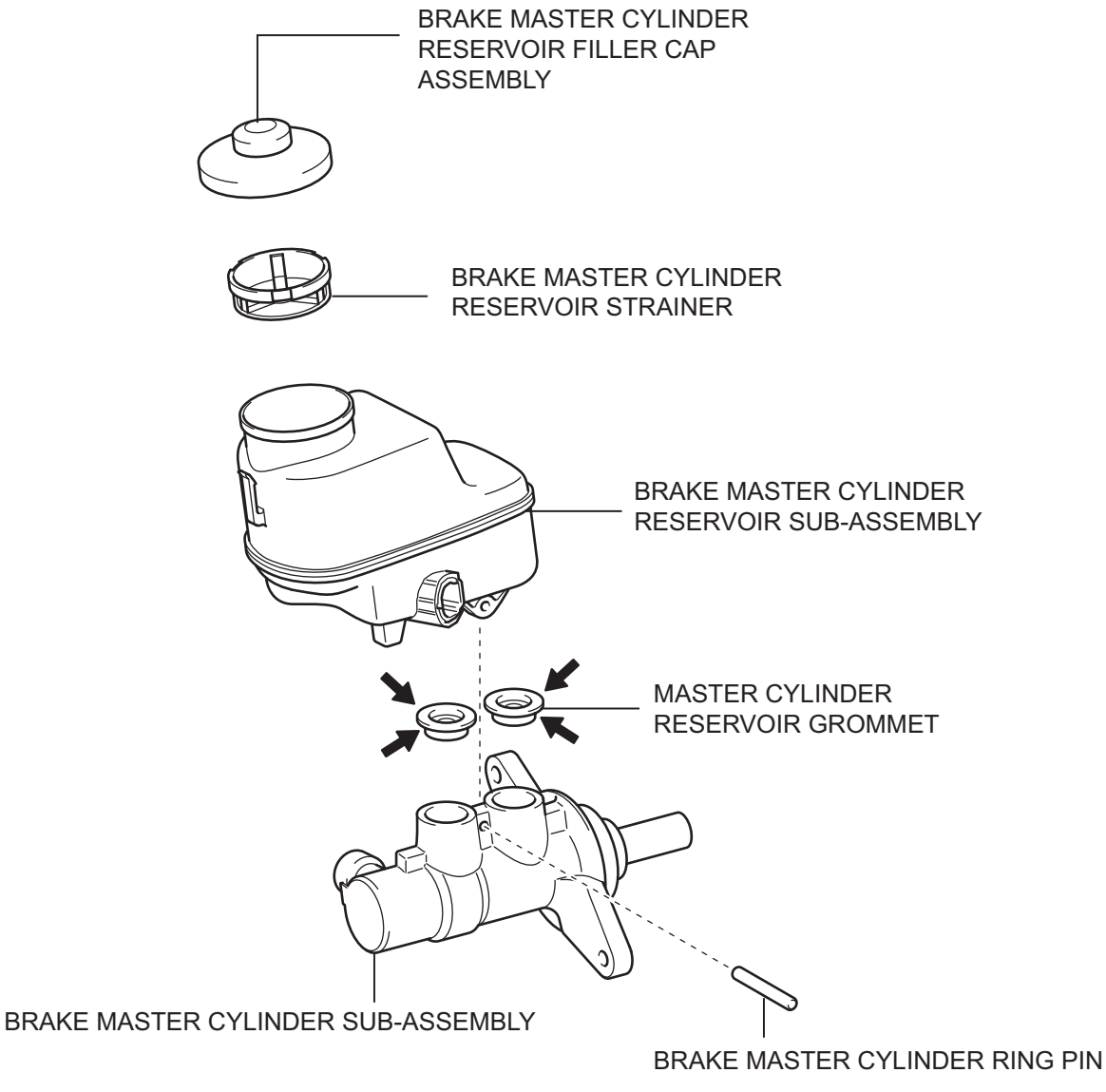
BRAKE MASTER CYLINDER RESERVOIR FILLER CAP ASSEMBLY
BRAKE MASTER CYLINDER RESERVOIR STRAINER
BRAKE MASTER CYLINDER RESERVOIR SUB-ASSEMBLY
MASTER CYLINDER RESERVOIR GROMMET
BRAKE MASTER CYLINDER SUB-ASSEMBLY
BRAKE MASTER CYLINDER RING PIN
Lithium soap base glycol grease
H
C126447E01

REMOVAL

1. **DISCONNECT CABLE FROM NEGATIVE BATTERY TERMINAL**
   CAUTION:
   Wait at least 90 seconds after disconnecting the cable from the negative (-) battery terminal to prevent airbag and seat belt pretensioner activation.
2. **REMOVE INSTRUMENT PANEL SUB-ASSEMBLY**
   (a) Remove the instrument panel (see page IP-4).
3. **DISCONNECT CONNECTORS**
   (a) Disconnect the stop light switch connector.
   (b) w/ ϕ296 disc brake:
   Disconnect the brake pedal load sensing switch connector.
4. **REMOVE STOP LIGHT SWITCH ASSEMBLY**
   (a) Turn the switch counterclockwise and remove it.
5. **REMOVE PUSH ROD PIN**
   (a) Remove the clip from the push rod pin.
   (b) Remove the push rod pin from the push rod clevis.
6. **REMOVE BRAKE PEDAL SUPPORT ASSEMBLY**
   (a) Remove the bolt from the support.

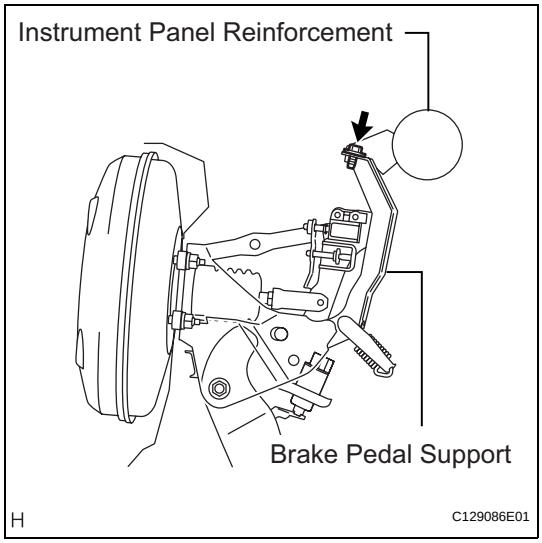

   (b) Remove the 4 nuts and support.

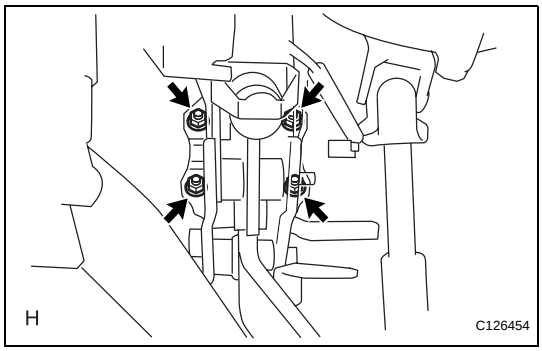

DISASSEMBLY

1. REMOVE STOP LIGHT SWITCH MOUNTING ADJUSTER

(a) Remove the adjuster from the support.

2. REMOVE BRAKE PEDAL PAD

(a) Remove the pad from the pedal.

INSPECTION

1. INSPECT STOP LIGHT SWITCH ASSEMBLY

(a) Measure the resistance of the switch.
Standard resistance

Tester Connection	Switch Condition	Specified Condition
1 - 2	Switch pin released	Below 1 Ω
1 - 2	Switch pin pushed in	10 kΩ or higher

If the result is not as specified, replace the stop light switch assembly.

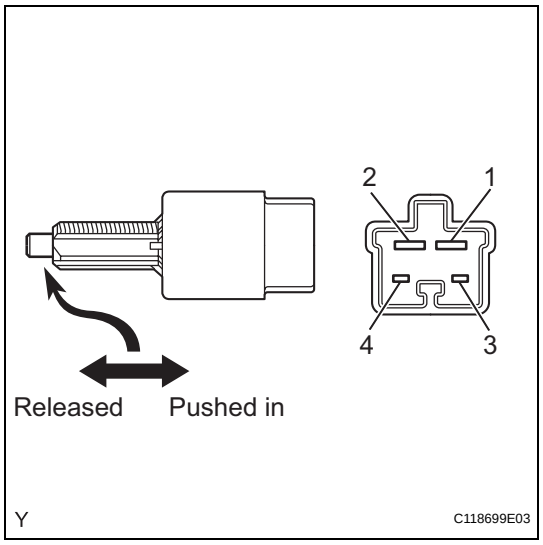

ADJUSTMENT

(2005/11-2006/01)

1. CHECK AND ADJUST BRAKE PEDAL HEIGHT

(a) Check the pedal height.
Standard pedal height from dash panel:
184.2 to 194.2 mm (7.252 to 7.646 in.)

(b) Adjust the pedal height.

(1) Disconnect the connector from the stop light switch.

(2) Remove the switch.

(3) Loosen the push rod clevis lock nut.

(4) Adjust the pedal height by turning the push rod.

(5) Tighten the lock nut.
Torque: 26 N*m (265 kgf*cm, 19 ft.*lbf)

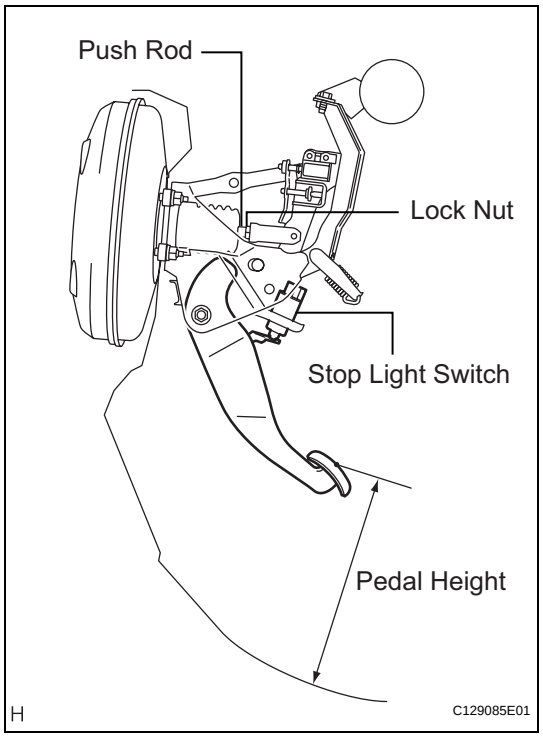

BR

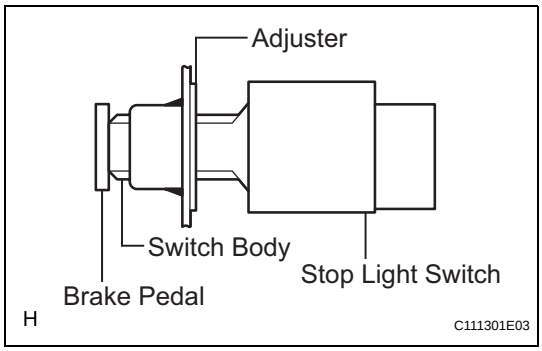

(6) Insert the switch into the adjuster until the switch body touches the pedal.
NOTICE:
Do not depress the pedal.

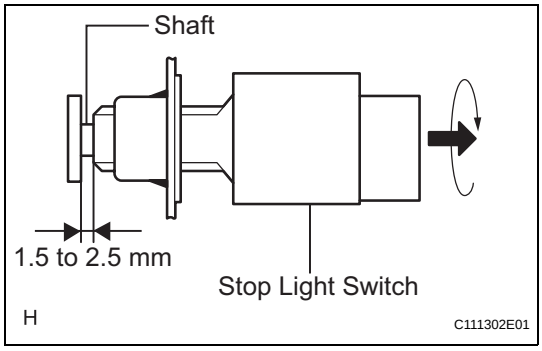

(7) Turn the switch a quarter turn clockwise.
Torque: 1.5 N*m (15 kgf*cm, 13 in.*lbf) or less
NOTICE:
Do not depress the pedal.
(8) Connect the connector to the switch.
(9) Check the switch clearance.
Standard stop light switch clearance:
1.5 to 2.5 mm (0.059 to 0.098 in.)

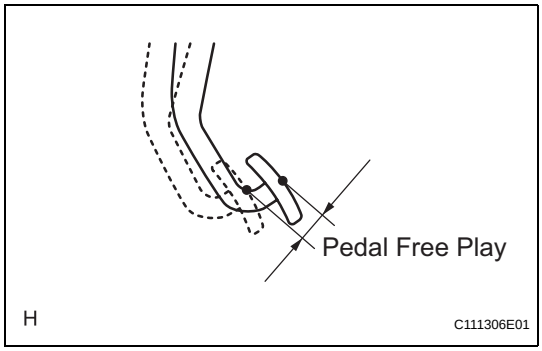

2. CHECK BRAKE PEDAL FREE PLAY

(a) Stop the engine. Depress the pedal several times until there is no vacuum in the booster. Then release the pedal.
(b) Depress the pedal until resistance is felt.
(c) Check the pedal's free play by measuring the distance between the position in the previous step and the pedal's released position.
Standard pedal free play:
1.0 to 6.0 mm (0.039 to 0.236 in.)
If the free play is not as specified, check the switch clearance in the next step.
If the free play is as specified, proceed to the "CHECK BRAKE PEDAL RESERVE DISTANCE" procedure.
(d) Check the switch clearance.
Standard stop light switch clearance:
1.5 to 2.5 mm (0.059 to 0.098 in.)
If the clearance is not as specified, reinstall the switch and recheck the pedal's free play.
If the clearance is as specified, troubleshoot the brake system and proceed to the "CHECK BRAKE PEDAL RESERVE DISTANCE" procedure.

BR

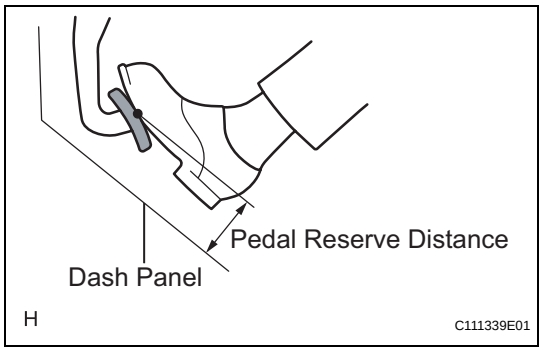

3. CHECK BRAKE PEDAL RESERVE DISTANCE

(a) Release the parking brake lever. Start the engine.

(b) Depress the pedal and check the pedal reserve distance.

(1) Depress the pedal with a force of 490 N (50 kgf, 110 lbf).

(2) Measure the distance between the pedal and dash panel shown in the illustration.

Standard pedal reserve distance

Engine	Seat Type	Specified Condition
2AZ-FE	w/o 3rd seat	More than 95 mm (3.74 in.)
	w/ 3rd seat	More than 120 mm (4.72 in.)

If the distance is not as specified, troubleshoot the brake system.

ADJUSTMENT

(2006/01-)

1. CHECK AND ADJUST BRAKE PEDAL HEIGHT

(a) Check the pedal height.

Standard pedal height from dash panel: 184.2 to 194.2 mm (7.252 to 7.646 in.)

(b) Adjust the pedal height.

(1) Disconnect the connector from the stop light switch.

(2) Remove the switch.

(3) Loosen the push rod clevis lock nut.

(4) Adjust the pedal height by turning the push rod.

(5) Tighten the lock nut.

Torque: 26 N*m (265 kgf*cm, 19 ft.*lbf)

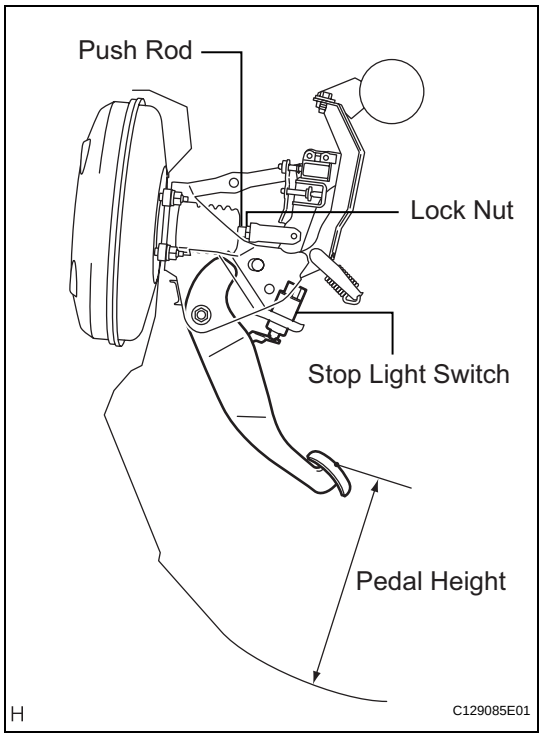

(6) Insert the switch into the adjuster until the switch body touches the pedal.

NOTICE:

Do not depress the pedal.

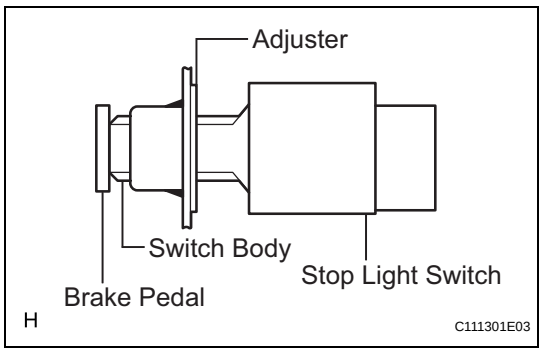

BR

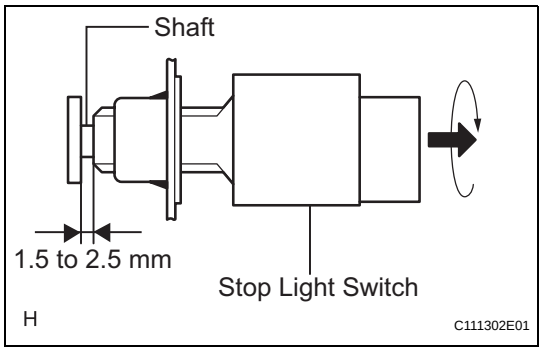

(7) Turn the switch a quarter turn clockwise.
Torque: 1.5 N*m (15 kgf*cm, 13 in.*lbf) or less
NOTICE:
Do not depress the pedal.
(8) Connect the connector to the switch.
(9) Check the switch clearance.
Standard stop light switch clearance:
1.5 to 2.5 mm (0.059 to 0.098 in.)

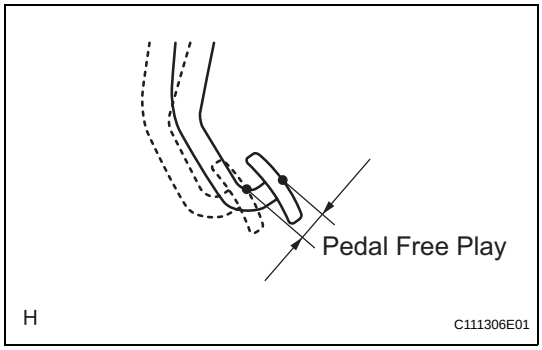

2. CHECK BRAKE PEDAL FREE PLAY
(a) Stop the engine. Depress the pedal several times until there is no vacuum in the booster. Then release the pedal.
(b) Depress the pedal until resistance is felt.
(c) Check the pedal's free play by measuring the distance between the position in the previous step and the pedal's released position.
Standard pedal free play:
1.0 to 6.0 mm (0.039 to 0.236 in.)
If the free play is not as specified, check the switch clearance in the next step.
If the free play is as specified, proceed to the "CHECK BRAKE PEDAL RESERVE DISTANCE" procedure.
(d) Check the switch clearance.
Standard stop light switch clearance:
1.5 to 2.5 mm (0.059 to 0.098 in.)
If the clearance is not as specified, reinstall the switch and recheck the pedal's free play.
If the clearance is as specified, troubleshoot the brake system and proceed to the "CHECK BRAKE PEDAL RESERVE DISTANCE" procedure.

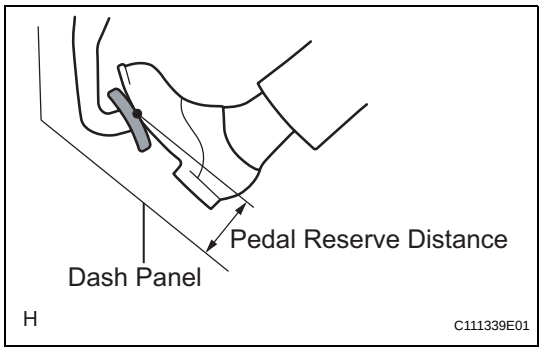

3. CHECK BRAKE PEDAL RESERVE DISTANCE
(a) Release the parking brake lever. Start the engine.
(b) Depress the pedal and check the pedal reserve distance.
(1) Depress the pedal with a force of 490 N (50 kgf, 110 lbf).
(2) Measure the distance between the pedal and dash panel shown in the illustration.
Standard pedal reserve distance

Engine	Specified Condition
2AZ-FE (w/o 3rd seat)	More than 95 mm (3.74 in.)
2AZ-FE (w/ 3rd seat)	More than 120 mm (4.72 in.)
2GR-FE	More than 120 mm (4.72 in.)

If the distance is not as specified, troubleshoot the brake system.

BR

REASSEMBLY

1. INSTALL BRAKE PEDAL PAD

(a) Install the pad to the pedal.

2. INSTALL STOP LIGHT SWITCH MOUNTING ADJUSTER

(a) Install a new adjuster to the support.

INSTALLATION

1. INSTALL BRAKE PEDAL SUPPORT ASSEMBLY

(a) Install the support with the 4 nuts.
Torque: 12.7 N*m (130 kgf*cm, 9 ft.*lbf)

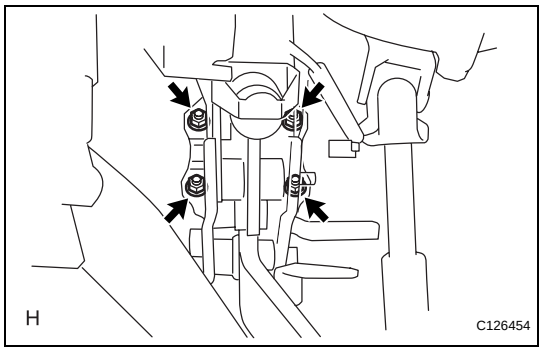

(b) Install the bolt to the support.
Torque: 25 N*m (255 kgf*cm, 18 ft.*lbf)

2. INSTALL PUSH ROD PIN

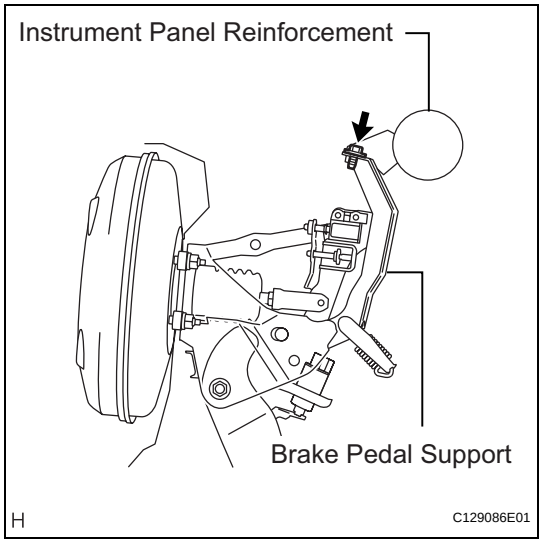

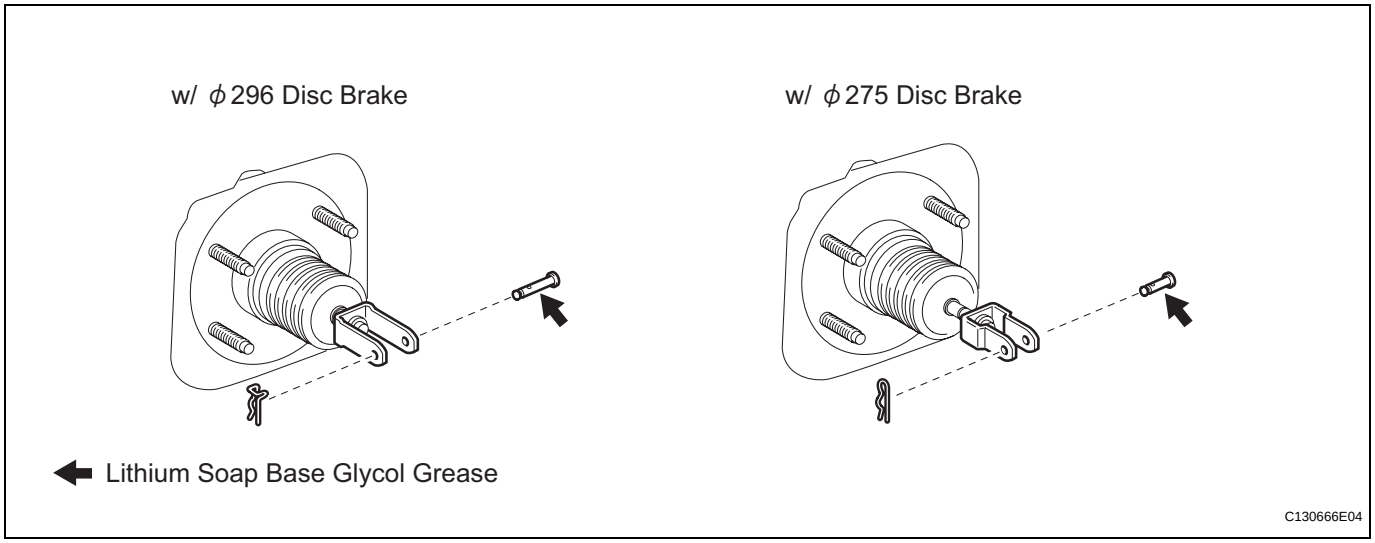

(a) Apply lithium soap base glycol grease to the push rod pin.

BR

(b) Install the push rod pin to the push rod clevis.
NOTICE:
The push rod pin must be installed as shown in the illustration.
(c) Install the clip to the push rod pin.
NOTICE:
The clip must be installed as shown in the illustration.

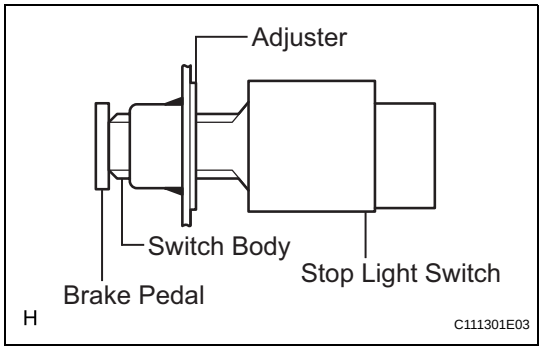

3. INSTALL STOP LIGHT SWITCH ASSEMBLY
(a) Insert the switch into the adjuster until the switch body touches the pedal.
NOTICE:
Do not depress the pedal.

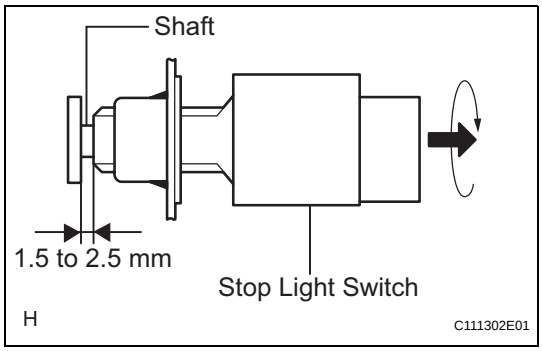

(b) Turn the switch a quarter turn clockwise.
Torque: 1.5 N*m (15 kgf*cm, 13 in.*lbf) or less
NOTICE:
Do not depress the pedal.
(c) Check the switch clearance.
Standard stop light switch clearance:
1.5 to 2.5 mm (0.059 to 0.098 in.)

4. CONNECT CONNECTORS
(a) w/ ϕ296 disc brake:
Connect the brake pedal load sensing switch connector.
(b) Connect the stop light switch connector.

5. CHECK AND ADJUST BRAKE PEDAL HEIGHT (See page BR-13)

6. CHECK BRAKE PEDAL FREE PLAY (See page BR-14)

7. CHECK BRAKE PEDAL RESERVE DISTANCE (See page BR-14)

8. INSTALL INSTRUMENT PANEL SUB-ASSEMBLY
(a) Install the instrument panel (see page IP-9).

9. CONNECT CABLE TO NEGATIVE BATTERY TERMINAL

BR

BRAKE PEDAL LOAD SENSING SWITCH

ON-VEHICLE INSPECTION

1. INSPECT BRAKE PEDAL LOAD SENSING SWITCH

HINT:

- Do not remove the brake pedal load sensing switch from the brake pedal support.
- When there is a malfunction in the brake pedal load sensing switch, replace the brake pedal support.

(a) Disconnect the brake pedal load sensing switch connector.

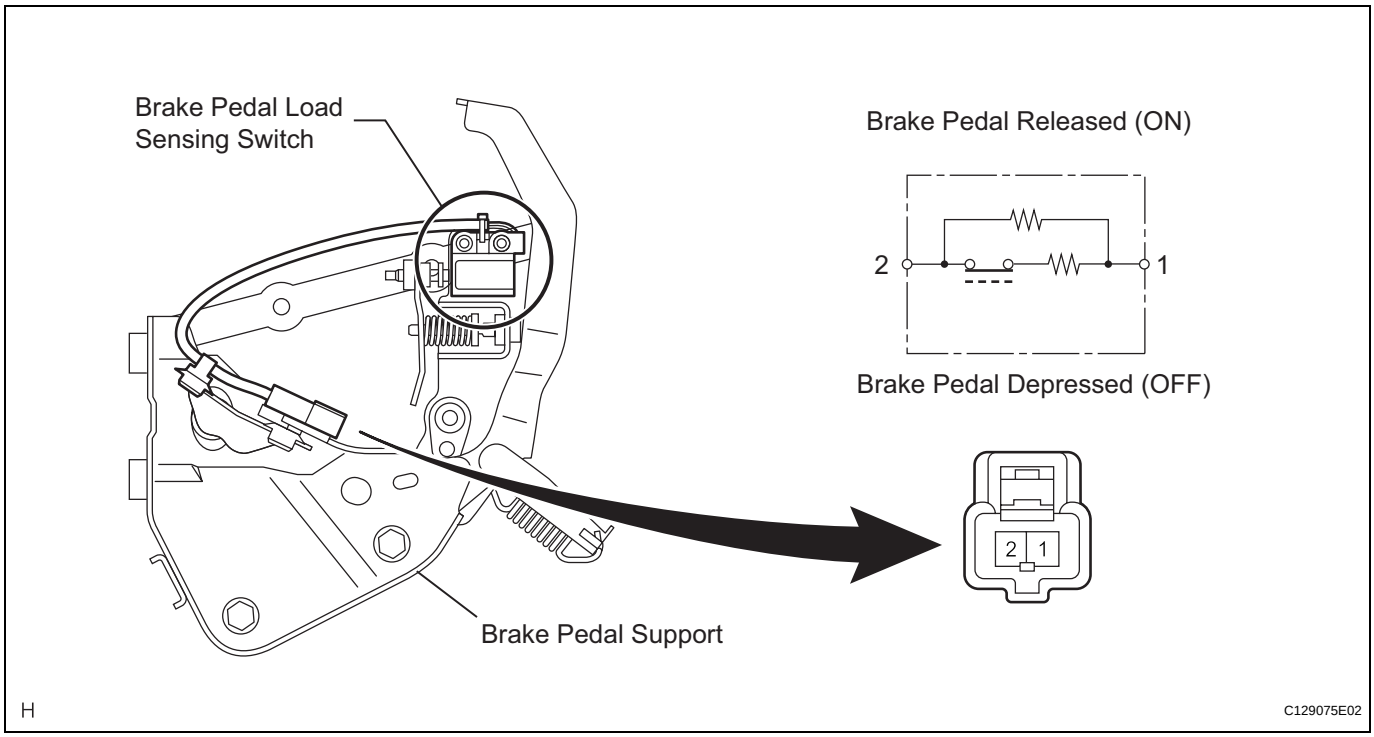

(b) Measure the resistance of the switch.

Standard resistance

Tester Connection	Condition	Specified Condition
1 - 2	Brake pedal depressed	Approx. 1 kΩ
1 - 2	Brake pedal released	Approx. 213 Ω

If the value is not as specified, replace the brake pedal support assembly (see page BR-12).

BRAKE PEDAL

COMPONENTS

w/ ϕ275 Disc Brake

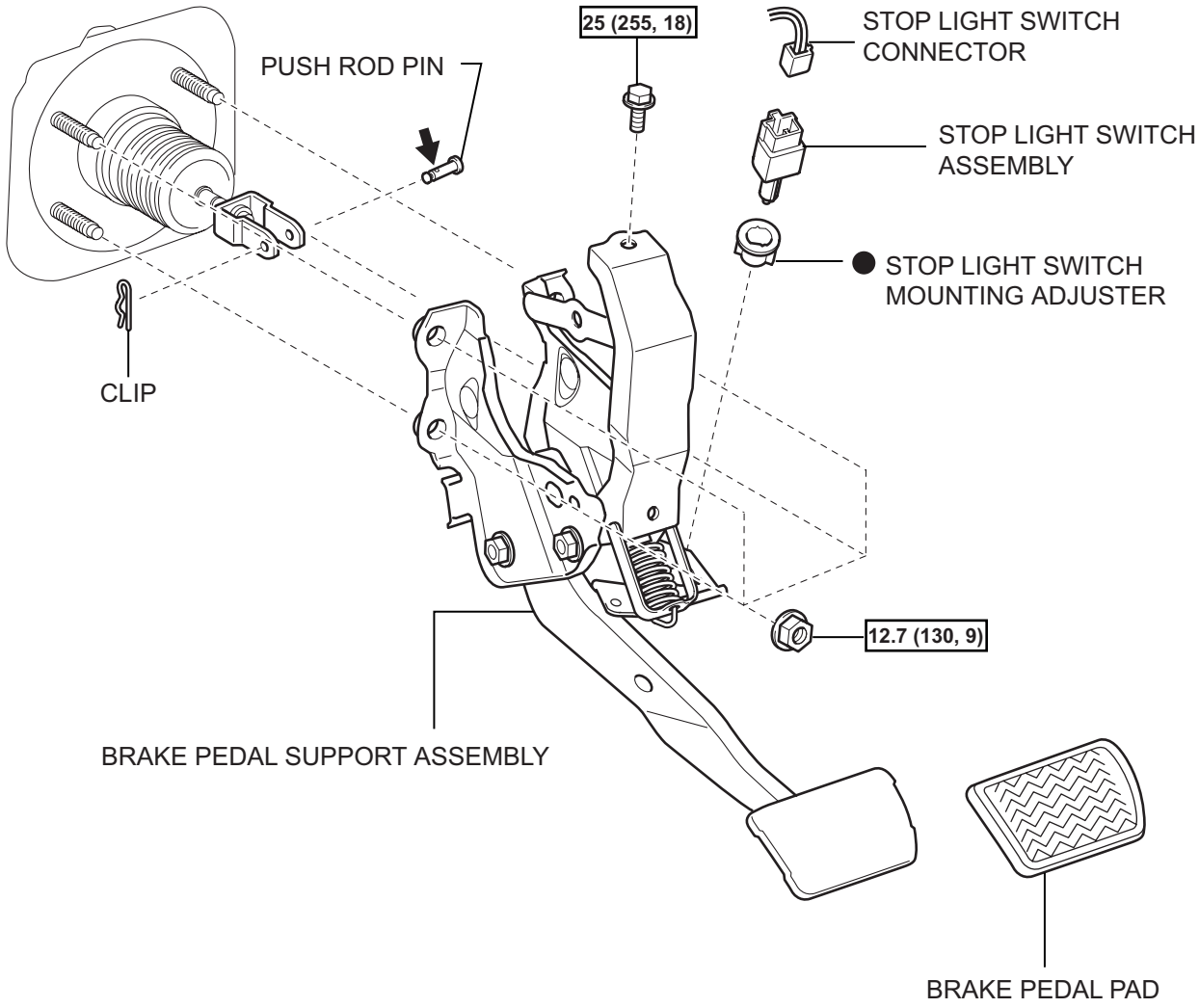

N*m (kgf*cm, ft.*lbf) : Specified torque

● Non-reusable part

⬅ Lithium soap base glycol grease

H

C130671E03

w/ ϕ296 Disc Brake

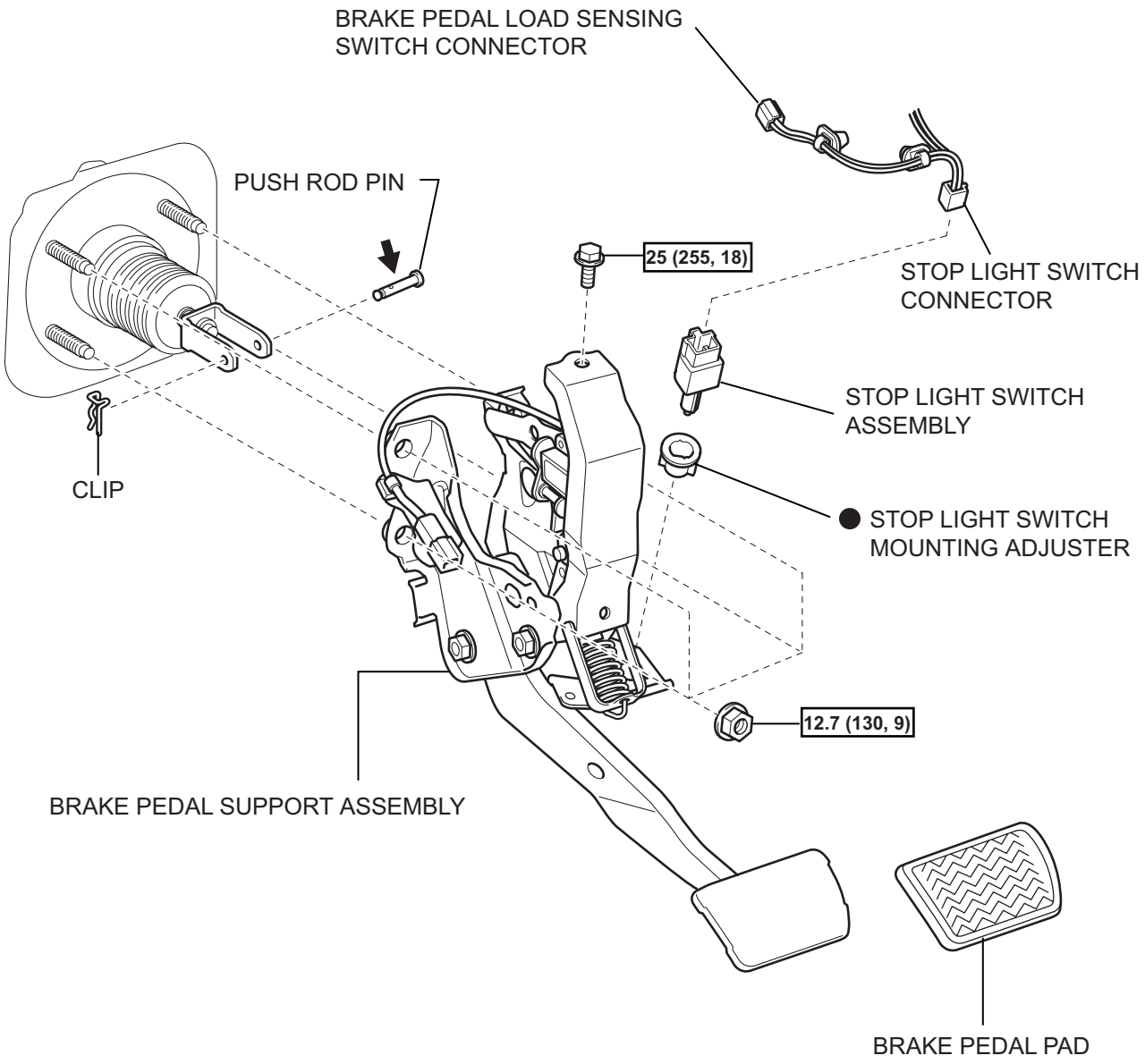

N*m (kgf*cm, ft.*lbf) : Specified torque

● Non-reusable part

⬅ Lithium soap base glycol grease

H

C130670E01

BR

PROBLEM SYMPTOMS TABLE

(2005/11-2006/01)
HINT:
Use the table below to help determine the cause of the problem symptom. The potential causes of the symptoms are listed in order of probability in the "Suspected area" column of the table. Check each symptom by checking the suspected areas in the order they are listed. Replace parts as necessary.

Brake system

Symptom	Suspected area	See page
Low pedal or spongy pedal	1. Fluid leaks in brake system	-
	2. Air in brake system	BR-6
	3. Front brake piston seals (worn or damaged)	BR-40
	4. Rear brake piston seals (worn or damaged)	BR-55
	5. Brake master cylinder (faulty)	BR-21
	6. Booster push rod (adjustment necessary)	BR-24
Brake drag	1. Brake pedal free play (minimum)	BR-14
	2. Parking brake lever travel (adjustment necessary)	PB-1
	3. Parking brake cable (sticking)	PB-8
	4. Parking brake shoe clearance (adjustment necessary)	PB-17
	5. Front brake pad (cracked or distorted)	BR-40
	6. Rear brake pad (cracked or distorted)	BR-55
	7. Parking brake lining (cracked or distorted)	PB-13
	8. Front brake piston (stuck or frozen)	BR-40
	9. Rear brake piston (stuck or frozen)	BR-55
	10. Parking brake shoe return tension spring	PB-13
	11. Booster push rod (adjustment necessary)	BR-24
	12. Vacuum leaks in booster system	BR-29
	13. Brake master cylinder (faulty)	BR-21
Brake pull	1. Front brake piston (stuck or frozen)	BR-40
	2. Rear brake piston (stuck or frozen)	BR-55
	3. Front brake pad (oily, cracked or distorted)	BR-40
	4. Rear brake pad (oily, cracked or distorted)	BR-55
	5. Parking brake lining (oily, cracked or distorted)	PB-13
	6. Front brake disc (uneven wear)	BR-40
	7. Rear brake disc (uneven wear)	BR-55
Hard pedal but braking inefficient	1. Front brake pad (worn, cracked, distorted, oily or glazed)	BR-40
	2. Rear brake pad (worn, cracked, distorted, oily or glazed)	BR-55
	3. Parking brake lining (worn, cracked, distorted, oily or glazed)	PB-13
	4. Front brake disc (uneven wear)	BR-40
	5. Rear brake disc (uneven wear)	BR-55
	6. Booster push rod (adjustment necessary)	BR-24
	7. Vacuum leaks in booster system	BR-29

Symptom	Suspected area	See page
Noise from brakes	1. Front brake pad (cracked, distorted, dirty or glazed)	BR-40
	2. Rear brake pad (cracked, distorted, dirty or glazed)	BR-55
	3. Front disc brake pad support plate (loose)	BR-40
	4. Rear disc brake pad support plate (loose)	BR-55
	5. Front disc brake cylinder slide pin (worn)	BR-40
	6. Rear disc brake cylinder slide pin (worn)	BR-55
	7. Front brake installation bolt (loose)	BR-45
	8. Rear brake installation bolt (loose)	BR-60
	9. Front brake disc (scored)	BR-40
	10. Rear brake disc (scored)	BR-55
	11. Parking brake shoe return tension spring (faulty)	PB-13
	12. Front brake anti-squeal shim (damaged)	BR-40
	13. Rear brake anti-squeal shim (damaged)	BR-55
	14. Parking brake shoe hold-down spring (damaged)	PB-13

PROBLEM SYMPTOMS TABLE

(2006/01-)

HINT:

Use the table below to help determine the cause of the problem symptom. The potential causes of the symptoms are listed in order of probability in the "Suspected Area" column of the table. Check each symptom by checking the suspected areas in the order they are listed. Replace parts as necessary.

Brake system

Symptom	Suspected Area	See page
Low pedal or spongy pedal	1. Fluid leaks in brake system	-
	2. Air in brake system	BR-6
	3. Front brake piston seals (worn or damaged)	BR-40
	4. Rear brake piston seals (worn or damaged)	BR-55
	5. Brake master cylinder (faulty)	BR-22
	6. Booster push rod (adjustment necessary)	BR-24
Brake drag	1. Brake pedal free play (minimum)	BR-15
	2. Parking brake lever travel (adjustment necessary)	PB-1
	3. Parking brake cable (sticking)	PB-8
	4. Parking brake shoe clearance (adjustment necessary)	PB-17
	5. Front brake pad (cracked or distorted)	BR-40
	6. Rear brake pad (cracked or distorted)	BR-55
	7. Parking brake lining (cracked or distorted)	PB-13
	8. Front brake piston (stuck or frozen)	BR-40
	9. Rear brake piston (stuck or frozen)	BR-55
	10. Parking brake shoe return tension spring	PB-13
	11. Booster push rod (adjustment necessary)	BR-24
	12. Vacuum leaks in booster system	BR-29
	13. Brake master cylinder (faulty)	BR-22
Brake pull	1. Front brake piston (stuck or frozen)	BR-40
	2. Rear brake piston (stuck or frozen)	BR-55
	3. Front brake pad (oily, cracked or distorted)	BR-40
	4. Rear brake pad (oily, cracked or distorted)	BR-55
	5. Parking brake lining (oily, cracked or distorted)	PB-13
	6. Front brake disc (uneven wear)	BR-40
	7. Rear brake disc (uneven wear)	BR-55
Hard pedal but braking inefficient	1. Front brake pad (worn, cracked, distorted, oily or glazed)	BR-40
	2. Rear brake pad (worn, cracked, distorted, oily or glazed)	BR-55
	3. Parking brake lining (worn, cracked, distorted, oily or glazed)	PB-13
	4. Front brake disc (uneven wear)	BR-40
	5. Rear brake disc (uneven wear)	BR-55
	6. Booster push rod (adjustment necessary)	BR-24
	7. Vacuum leaks in booster system	BR-29

Symptom	Suspected Area	See page
Noise from brakes	1. Front brake pad (cracked, distorted, dirty or glazed)	BR-40
	2. Rear brake pad (cracked, distorted, dirty or glazed)	BR-55
	3. Front disc brake pad support plate (loose)	BR-40
	4. Rear disc brake pad support plate (loose)	BR-55
	5. Front disc brake cylinder slide pin (worn)	BR-40
	6. Rear disc brake cylinder slide pin (worn)	BR-55
	7. Front brake installation bolt (loose)	BR-45
	8. Rear brake installation bolt (loose)	BR-60
	9. Front brake disc (scored)	BR-40
	10. Rear brake disc (scored)	BR-55
	11. Parking brake shoe return tension spring (faulty)	PB-13
	12. Front brake anti-squeal shim (damaged)	BR-40
	13. Rear brake anti-squeal shim (damaged)	BR-55
	14. Parking brake shoe hold-down spring (damaged)	PB-13

BRAKE SYSTEM

PRECAUTION

NOTICE:

- **Take extra care to replace each part properly. Improper installation or repair could affect the performance of the brake system and cause a driving hazard.**
- **It is very important to keep the brake system parts and the work area clean when repairing the brake system.**
- **If the vehicle is equipped with a mobile communication system, refer to the Precautions in the INTRODUCTION section (see page IN-5).**
- **Care must be taken when using magnets as they could affect the performance of the speed sensors.**
- **Since the brake line is one of the critical safety-related parts, be sure to disassemble the components if a brake fluid leak is found. If any abnormality is found, replace the component with a new one.**
- **When removing brake components, cover the brake tube connections to prevent foreign matter such as dust or dirt from entering the tubes.**
- **Do not damage or deform the brake tubes when removing or installing them.**
- **When installing a brake tube grommet to the body, ensure that the brake tube passes through the center of the grommet.**
- **When installing a brake tube or flexible hose, ensure that it is not twisted or bent.**
- **If the fitting of the flexible hose does not match the groove on the bracket, twist the hose slightly to insert it.**
- **Flexible hoses must be free from absorber oil, grease, etc.**
- **When installing a brake tube to a plastic clamp, ensure that the brake tube is not loose or being pinched.**
- **Do not reuse a clip or plastic clamp removed from a flexible hose.**
- **After installing a brake tube and flexible hose, ensure that they do not interfere with any other components.**
- **Do not allow brake fluid to adhere to any painted surface such as the vehicle body. If brake fluid leaks onto any painted surface, immediately wash it off.**

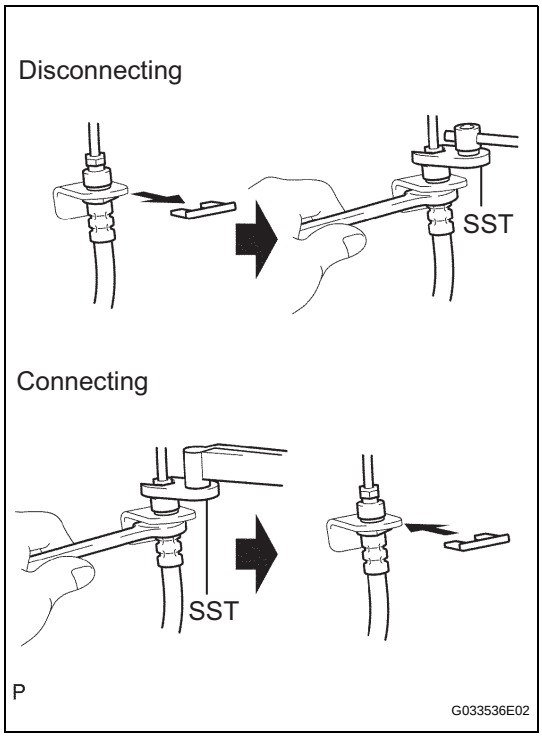

- **Follow these procedures when disconnecting the flexible hose and brake tube.**
  (a) Remove the clip.
  (b) Hold the flexible hose with a wrench. Using SST, disconnect the brake tube without deforming the tube.
- **Follow these procedures when connecting the flexible hose and brake tube.**
  (a) Hold the flexible hose with a wrench. Using a union nut wrench, connect the brake tube without deforming the tube.
  (b) Install a new clip.

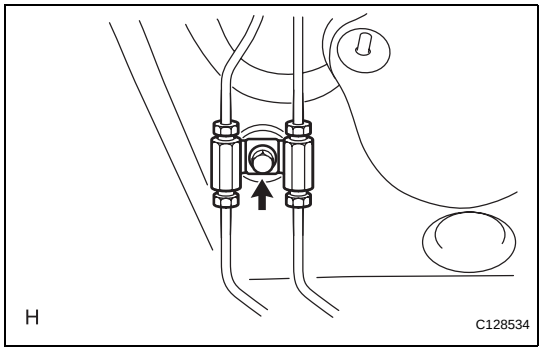

- **Follow these procedures when connecting the brake tube and 2-way.**
  (a) Support the 2-way to prevent deformation to the brake tube and connect the brake tube to the 2-way with a union nut wrench.
  (b) Support the 2-way to prevent deformation to the brake tube and install the bolt to fix the 2-way to the body.

PARKING BRAKE SYSTEM

PROBLEM SYMPTOMS TABLE

HINT:
Use the table below to help determine the cause of the problem symptom. The potential causes of the symptoms are listed in order of probability in the "Suspected area" column of the table. Check each symptom by checking the suspected areas in the order they are listed. Replace parts as necessary.

Parking brake system

Symptom	Suspected area	See page
Parking brake drags	1. Parking brake lever travel (adjustment necessary)	PB-1
	2. No. 1 parking brake cable (sticking)	PB-4
	3. No. 2 parking brake cable (sticking)	PB-8
	4. No. 3 parking brake cable (sticking)	PB-8
	5. Parking brake shoe clearance (adjustment necessary)	PB-15
	6. Shoe return tension spring (damaged)	PB-13

ADJUSTMENT

1. **CHECK PARKING BRAKE LEVER TRAVEL**
   (a) Pull the lever upward with a force of approximately 200 N (20 kgf, 44 lbf) and count the number of clicks.
   OK:
   7 to 9 clicks (without rear brake dragging)
2. **REMOVE UPPER REAR CONSOLE PANEL SUB-ASSEMBLY (See page IP-19)**
3. **LOOSEN LOCK NUT AND NO. 1 WIRE ADJUSTING NUT**

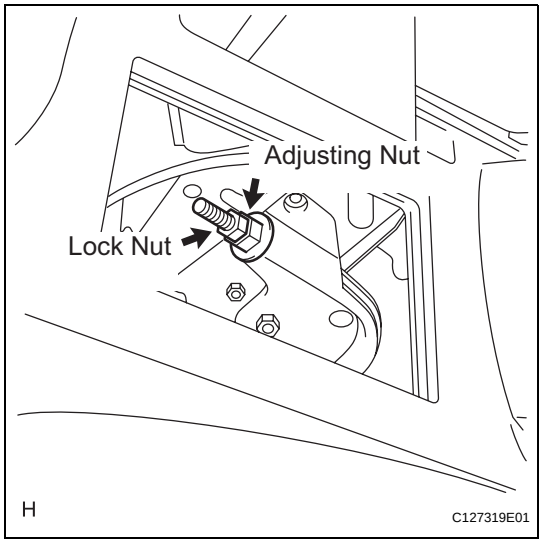

4. **REMOVE REAR WHEEL**
5. **ADJUST PARKING BRAKE SHOE CLEARANCE (See page PB-17)**
6. **INSTALL REAR WHEEL**
   Torque: 103 N*m (1,050 kgf*cm, 76 ft.*lbf)

PB

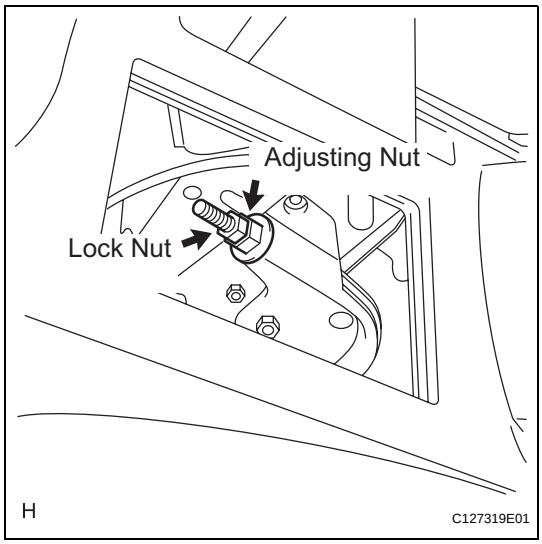

7. **ADJUST PARKING BRAKE LEVER TRAVEL**
   (a) Turn the No. 1 wire adjusting nut until the lever travel is correct.
   OK:
   7 to 9 clicks (without rear brake dragging)
   <Lever pulling force: approximately 200 N (20 kgf, 44 lbf)>
   (b) Tighten the lock nut.
   Torque: 6.0 N*m (61 kgf*cm, 53 in.*lbf)
   (c) Operate the parking brake lever 3 to 4 times, and check the parking brake lever travel.
   OK:
   7 to 9 clicks (without rear brake dragging)
   <Lever pulling force: approximately 200 N (20 kgf, 44 lbf)>
   (d) When operating the parking brake lever, check that the brake warning light illuminates at the first click.
   Standard condition:
   Brake warning light always illuminates at the first click.

REMOVAL

HINT:
- Use the same procedures for the LH side and RH side.
- The procedures listed below are for the LH side.

1. REMOVE FRONT WHEEL

2. DRAIN BRAKE FLUID
NOTICE:
Wash off brake fluid immediately if it comes in contact with any painted surface.

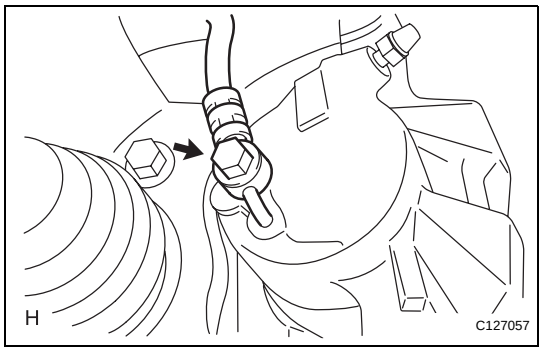

3. DISCONNECT FRONT FLEXIBLE HOSE
(a) Remove the union bolt and gasket(s).
(b) Disconnect the flexible hose from the brake cylinder.

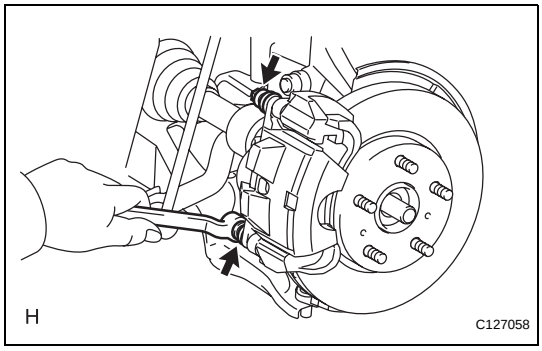

4. REMOVE DISC BRAKE CYLINDER ASSEMBLY LH
(a) Remove the 2 bolts and cylinder.

DISASSEMBLY

HINT:
- Use the same procedures for the LH side and RH side.
- The procedures listed below are for the LH side.

1. REMOVE FRONT DISC BRAKE PAD
(a) Remove the 2 disc brake pads.

2. REMOVE ANTI-SQUEAL SHIM KIT FRONT
(a) Remove the shims from each pad.

3. REMOVE NO. 1 PAD WEAR INDICATOR PLATE
(a) Remove the indicator plates from each pad.

4. REMOVE FRONT DISC BRAKE PAD SUPPORT PLATE
(a) Remove the 4 plates from the brake cylinder mounting.

5. REMOVE FRONT DISC BRAKE CYLINDER MOUNTING LH
(a) Remove the 2 bolts and cylinder mounting.

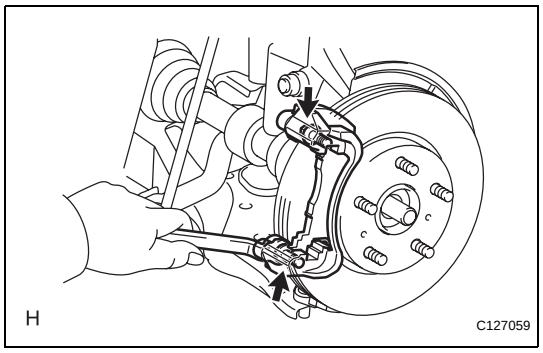

6. REMOVE FRONT DISC BRAKE CYLINDER SLIDE PIN
(a) Remove the 2 pins (upper and lower) from the mounting.

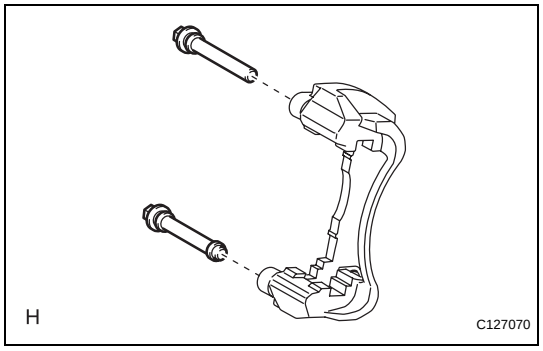

(b) Using a screwdriver, remove the slide bush from the pin (lower).
NOTICE:
Be careful not to damage the pin.
HINT:
Tape the screwdriver tip before use.

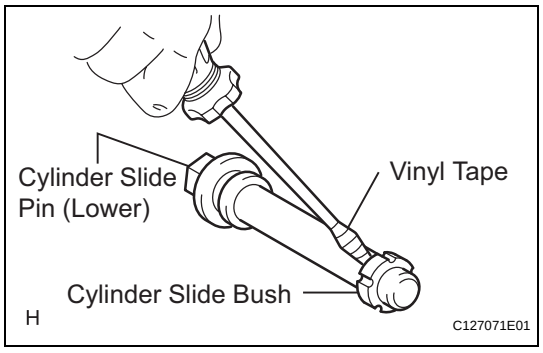

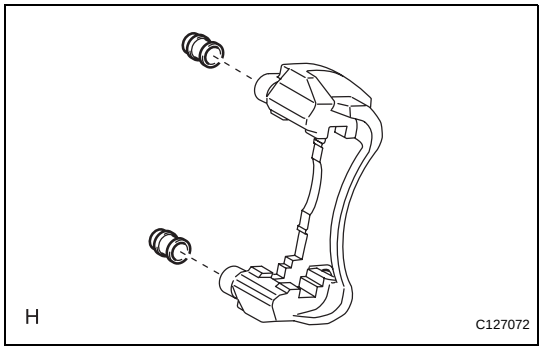

7. REMOVE FRONT DISC BRAKE BUSH DUST BOOT

(a) Remove the 2 boots from the mounting.

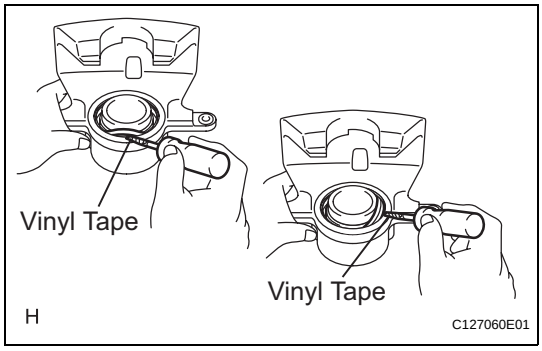

8. REMOVE CYLINDER BOOT

(a) Using a screwdriver, pry out the set ring and boot.

NOTICE:

Be careful not to damage the brake piston and cylinder.

HINT:

Tape the screwdriver tip before use.

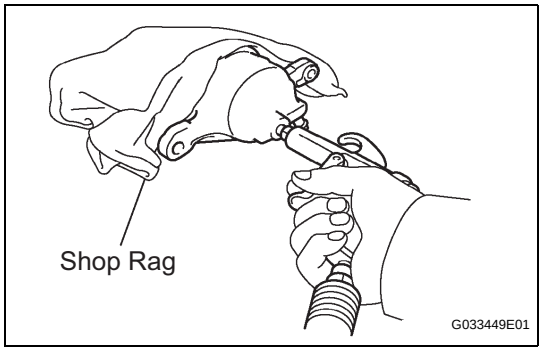

9. REMOVE FRONT DISC BRAKE PISTON

(a) Place a shop rag or piece of cloth between the piston and disc brake cylinder.

(b) Apply compressed air to remove the piston from the disc brake cylinder.

CAUTION:

Do not place your fingers in front of the piston when applying compressed air.

NOTICE:

Be careful not to spatter the brake fluid.

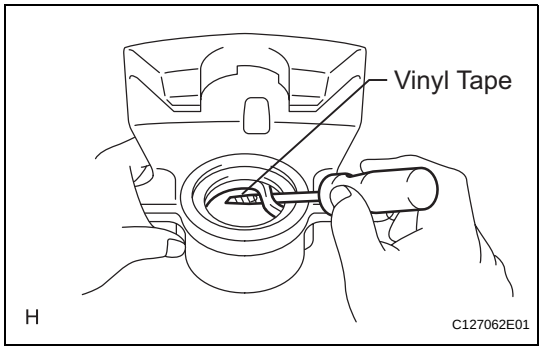

10. REMOVE PISTON SEAL

(a) Using a screwdriver, pry out the seal from the cylinder.

NOTICE:

Be careful not to damage the inner cylinder and piston seal groove.

HINT:

Tape the screwdriver tip before use.

11. REMOVE FRONT DISC BRAKE BLEEDER PLUG

(a) Remove the bleeder plug cap and bleeder plug from the cylinder.

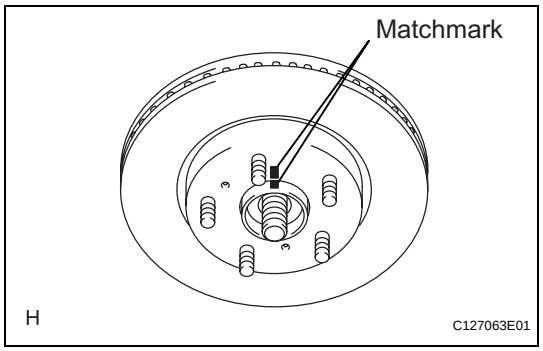

12. REMOVE FRONT DISC

(a) Put matchmarks on the disc and axle hub.

(b) Remove the disc.

INSPECTION

1. CHECK BRAKE CYLINDER AND PISTON

(a) Check the cylinder bore and piston for rust or scoring.
If necessary, replace the cylinder and piston.

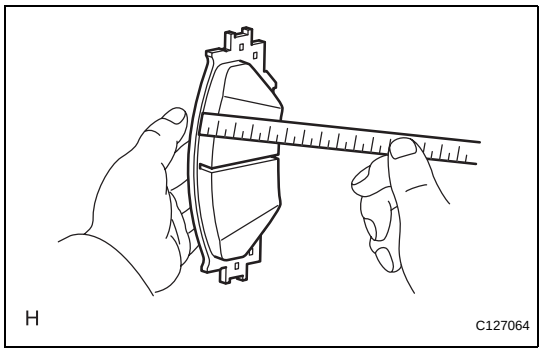

2. CHECK PAD LINING THICKNESS

(a) Using a ruler, measure the pad lining thickness.
Standard thickness:
12.0 mm (0.472 in.)
Minimum thickness:
1.0 mm (0.039 in.)
If the pad lining thickness is equal to or less than the minimum, replace the pad.

3. CHECK FRONT DISC BRAKE PAD SUPPORT PLATE

(a) Check the 4 plates as follows. If necessary, replace the plates.
(1) Use brake cleaner to clean the pad support plate's pad and cylinder mounting contact surface. Inspect for deformation, cracks, rust and foreign matter that is difficult to remove.
(2) Use brake cleaner to clean the cylinder mounting's pad support plate contact surface. After installing the pad support plate to the cylinder mounting, inspect for looseness and deformation.
(3) After installing the pad, inspect if the pad falls off easily (due to the spring force of the pad support plate).

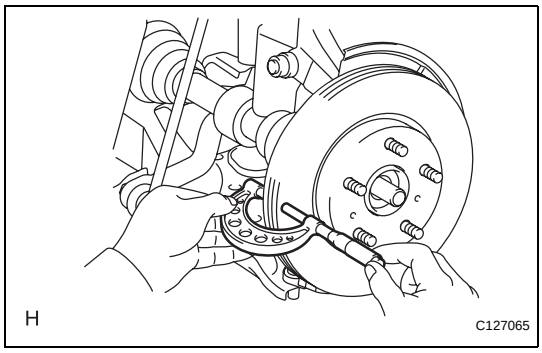

4. CHECK DISC THICKNESS

(a) Using a micrometer, measure the disc thickness.
Standard thickness

Model	Specified Condition
With ϕ275 disc	25.0 mm (0.984 in.)
With ϕ296 disc	28.0 mm (1.102 in.)

Minimum thickness

Model	Specified Condition
With ϕ275 disc	22.0 mm (0.866 in.)
With ϕ296 disc	25.0 mm (0.984 in.)

If the disc thickness is less than the minimum, replace the disc.

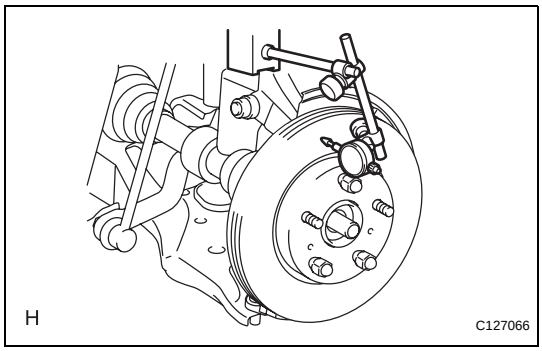

5. CHECK DISC RUNOUT

(a) Check the axle hub bearing (see page AH-6).
(b) Tighten the disc with the 3 hub nuts.
(c) Using a dial indicator, measure the disc runout 10.0 mm (0.39 in.) from the outer edge of the disc.
Maximum disc runout:
0.05 mm (0.0020 in.)

If the runout is greater than the maximum, change the installation positions of the disc and axle so that the runout will become minimal. If the runout is greater than the maximum even when the installation positions are changed, grind the disc. If the disc thickness is less than the minimum, replace the disc.

(d) Remove the 3 hub nuts.

REASSEMBLY

HINT:
- Use the same procedures for the LH side and RH side.
- The procedures listed below are for the LH side.

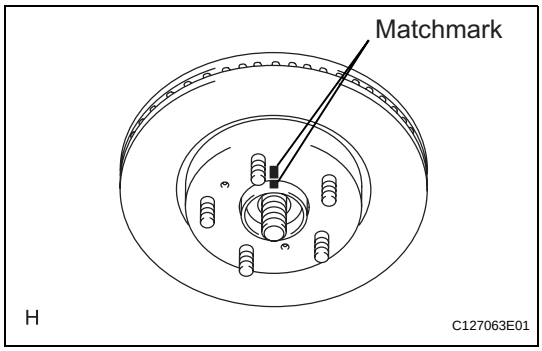

1. INSTALL FRONT DISC

(a) Align the matchmarks and install the disc.
HINT:
When replacing the disc with a new one, select the installation position where the disc has the minimum runout.

2. CHECK DISC RUNOUT (See page BR-43)

3. TEMPORARILY TIGHTEN FRONT DISC BRAKE BLEEDER PLUG

(a) Install the bleeder plug to the cylinder.
HINT:
The bleeder plug will be tightened to a torque specification in the "BLEED AIR FROM BRAKE LINE" procedures.
(b) Install the bleeder plug cap.

4. INSTALL PISTON SEAL

(a) Apply lithium soap base glycol grease to a new seal.
(b) Install the seal to the cylinder.
NOTICE:
Securely install the piston seal into the groove of the disc brake cylinder.

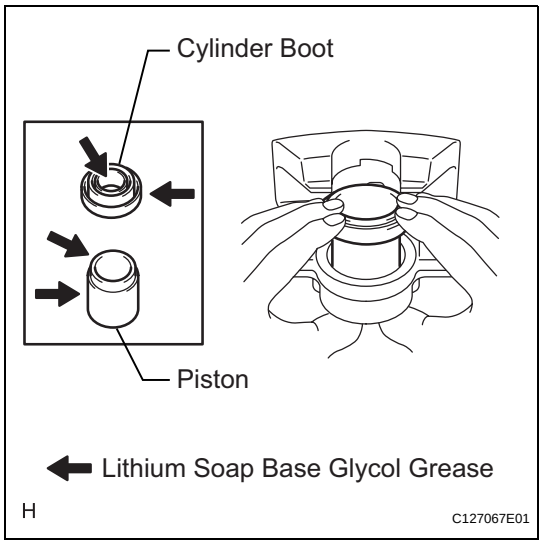

5. INSTALL FRONT DISC BRAKE PISTON

(a) Apply lithium soap base glycol grease to the piston and a new cylinder boot.
(b) Install the boot to the piston.
(c) Install the piston (with boot) to the cylinder.
NOTICE:
Do not forcibly install the piston to the cylinder.

BR

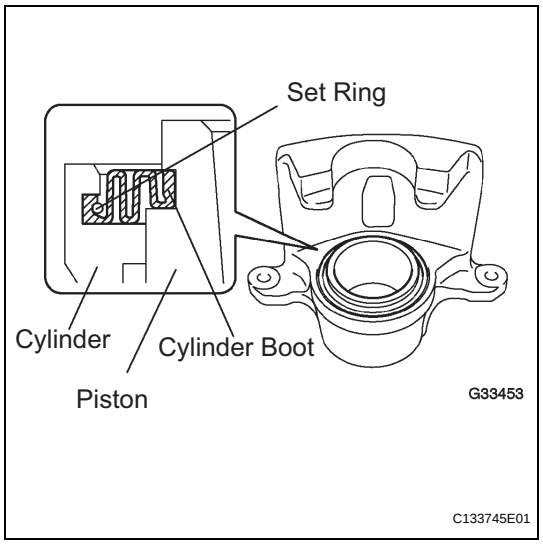

6. INSTALL CYLINDER BOOT

(a) Install the cylinder boot to the cylinder.
NOTICE:
Securely install the cylinder boot into the groove of the disc brake cylinder.

(b) Using a screwdriver, install a new set ring.
NOTICE:
Do not damage the cylinder boot.
HINT:
Tape the screwdriver tip before use.

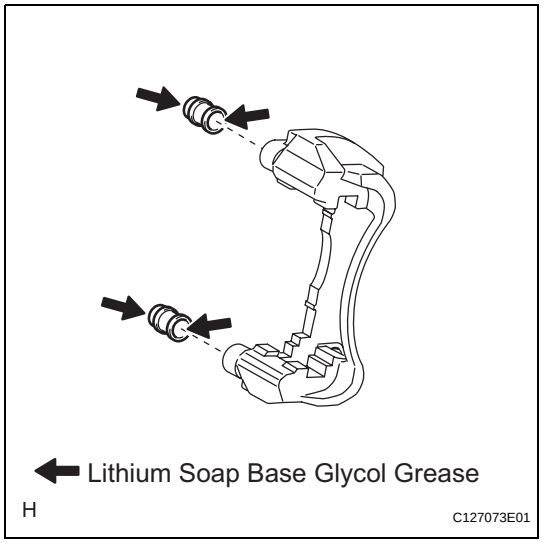

7. INSTALL FRONT DISC BRAKE BUSH DUST BOOT

(a) Apply lithium soap base glycol grease to 2 new boots.

(b) Install the 2 boots to the mounting.

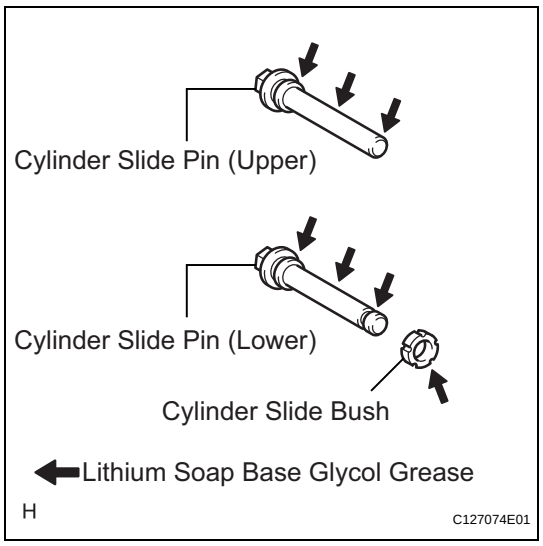

8. INSTALL FRONT DISC BRAKE CYLINDER SLIDE PIN

(a) Apply lithium soap base glycol grease to the pins and a new bush as shown in the illustration.

(b) Install the bush to the pin (lower).

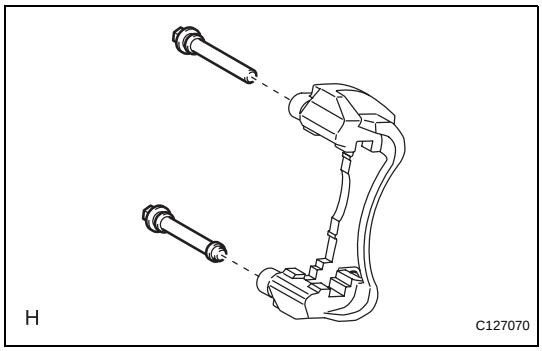

(c) Install the 2 pins (upper and lower) to the mounting.

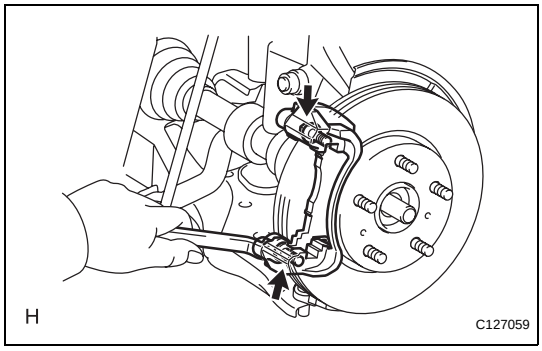

9. INSTALL FRONT DISC BRAKE CYLINDER MOUNTING LH

(a) Install the cylinder mounting with the 2 bolts.
Torque: 98 N*m (999 kgf*cm, 72 ft.*lbf)

10. INSTALL FRONT DISC BRAKE PAD SUPPORT PLATE

(a) Install the 4 plates to the mounting.

11. INSTALL NO. 1 PAD WEAR INDICATOR PLATE

(a) Install the 2 indicator plates to the upper side of each pad.

12. INSTALL ANTI-SQUEAL SHIM KIT FRONT

(a) w/ ϕ275 disc brake:

(1) Apply disc brake grease to both sides of each No. 1 shim.

(2) Install the No. 1 and No. 2 shims to each pad.
NOTICE:
- **When replacing a worn pad, the shims must be replaced together with the pads.**
- **Install the shims in the correct positions and direction as shown in the illustration.**

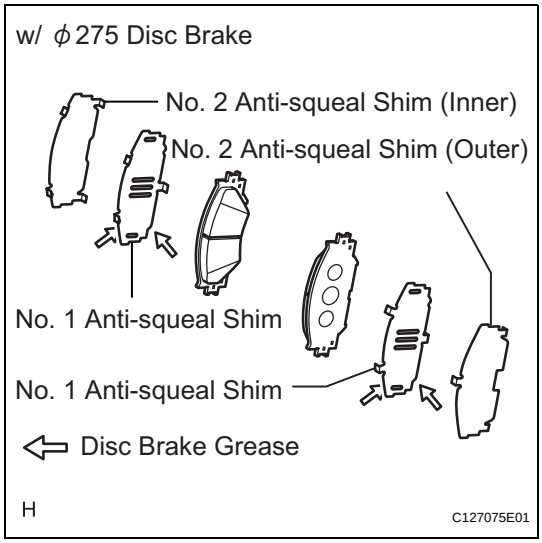

(b) w/ ϕ296 disc brake:

(1) Install the No. 1 and No. 2 shims to each pad.
NOTICE:
- **When replacing a worn pad, the shims must be replaced together with the pads.**
- **Install the shims in the correct positions and direction as shown in the illustration.**

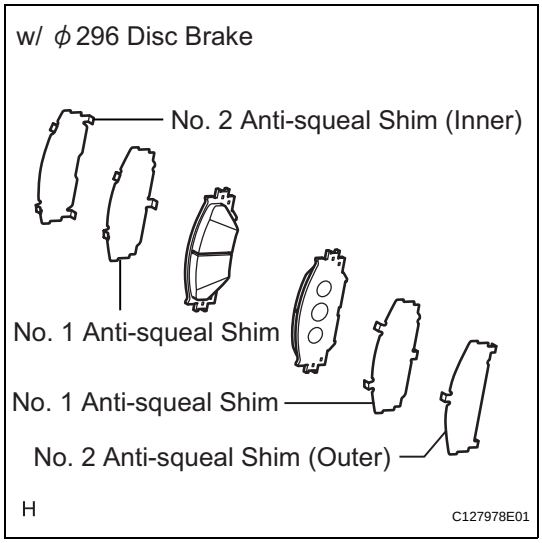

13. INSTALL FRONT DISC BRAKE PAD

(a) Install the 2 disc brake pads to the mounting.
NOTICE:
There should be no oil or grease on the friction surface of the pads and disc.

INSTALLATION

HINT:

- Use the same procedures for the LH side and RH side.
- The procedures listed below are for the LH side.

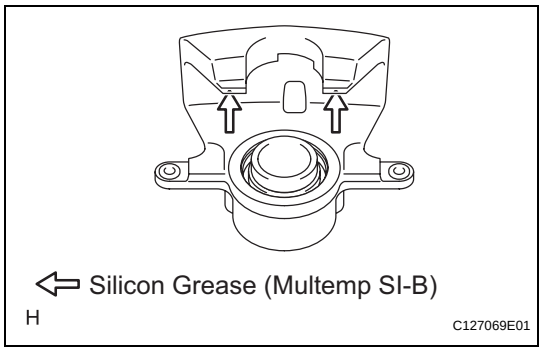

1. INSTALL DISC BRAKE CYLINDER ASSEMBLY LH

(a) Apply silicon grease (Multemp SI-B) on the contact surfaces of the cylinder parts indicated by the arrows.

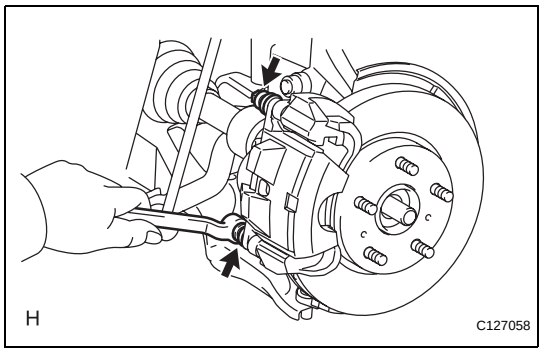

(b) Install the cylinder with the 2 bolts.
Torque: 34.3 N*m (350 kgf*cm, 25 ft.*lbf)

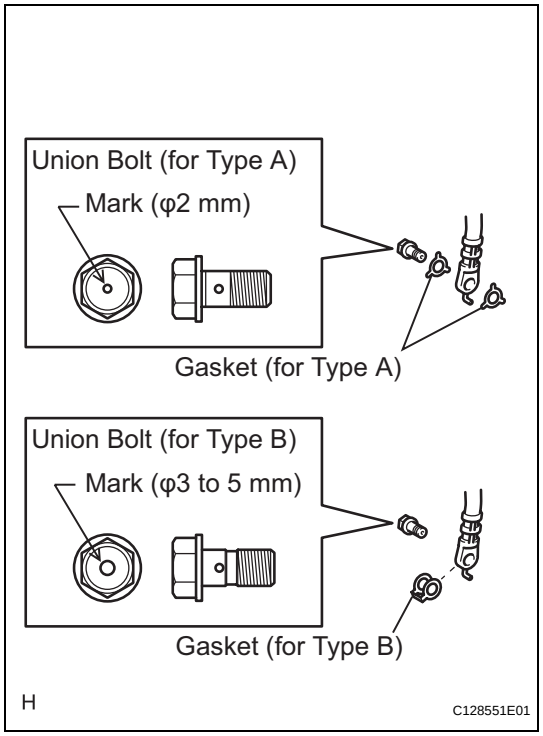

2. CONNECT FRONT FLEXIBLE HOSE
NOTICE:
The gasket and union bolt must be used as a set, as shown in the illustration.

BR

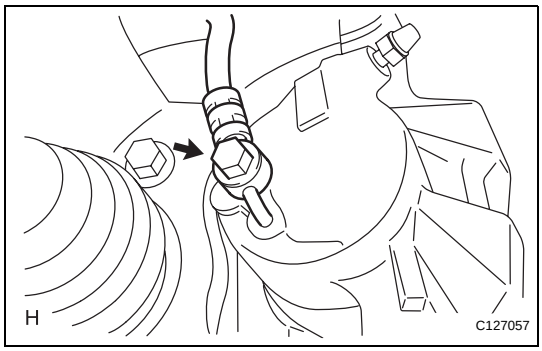

(a) Connect the flexible hose with new gasket(s) and the union bolt.
Torque: 29.4 N*m (300 kgf*cm, 22 ft.*lbf)
HINT:
Install the flexible hose lock securely in the lock hole in the cylinder.

3. **FILL RESERVOIR WITH BRAKE FLUID (See page BR-6)**
4. **BLEED AIR FROM BRAKE MASTER CYLINDER (See page BR-7)**
5. **BLEED AIR FROM BRAKE LINE (See page BR-7)**
6. **BLEED AIR FROM ABS AND TRACTION ACTUATOR ASSEMBLY (See page BR-8)**
7. **CHECK BRAKE FLUID LEVEL IN RESERVOIR (See page BR-6)**
8. **CHECK FOR BRAKE FLUID LEAKAGE**
9. **INSTALL FRONT WHEEL**
Torque: 103 N*m (1,050 kgf*cm, 76 ft.*lbf)

INSTALLATION

HINT:
- Use the same procedures for the LH side and RH side.
- The procedures listed below are for the LH side.

1. INSTALL FRONT FLEXIBLE HOSE
NOTICE:
- **The flexible hose has an identification color. Make sure of the identification color when installing the flexible hose.**

Item	Identification color
Flexible hose LH	Green
Flexible hose RH	Orange

- **The gasket and union bolt must be used as a set, as shown in the illustration.**

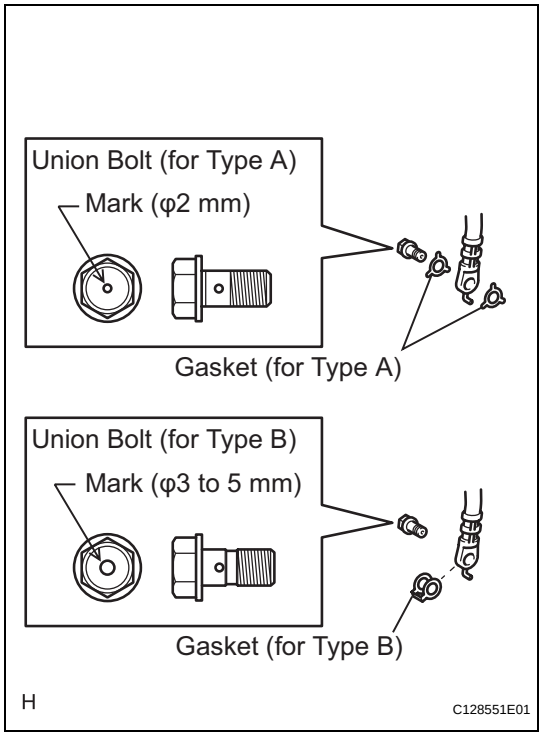

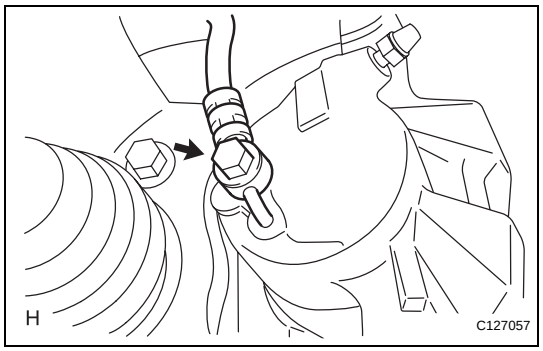

(a) Connect the flexible hose with new gasket(s) and the union bolt to the disc brake cylinder.
Torque: 29.4 N*m (300 kgf*cm, 22 ft.*lbf)
HINT:
Install the flexible hose lock securely in the lock hole in the cylinder.

BR

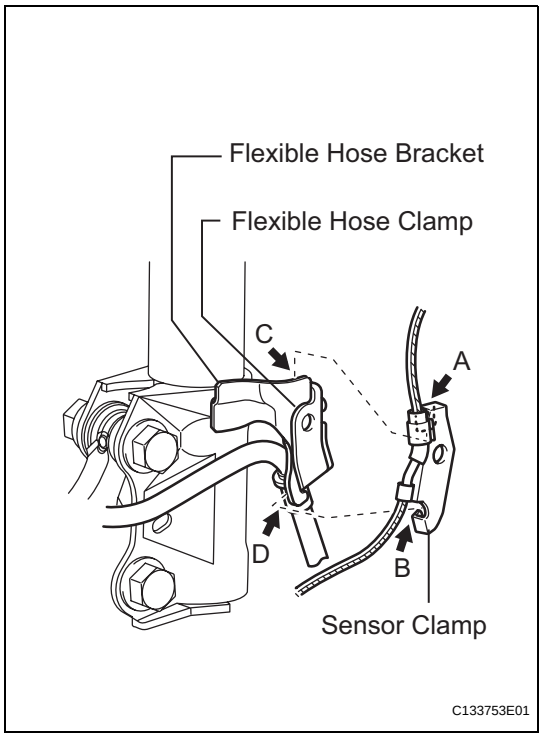

(b) Set the flexible hose clamp on the flexible hose bracket.
(c) Simultaneously perform the following: 1) hang the hook part of the sensor clamp (labeled A) on the flexible hose bracket (labeled C); and 2) insert the hook part of the sensor clamp (labeled B) into the flexible hose bracket (labeled D).

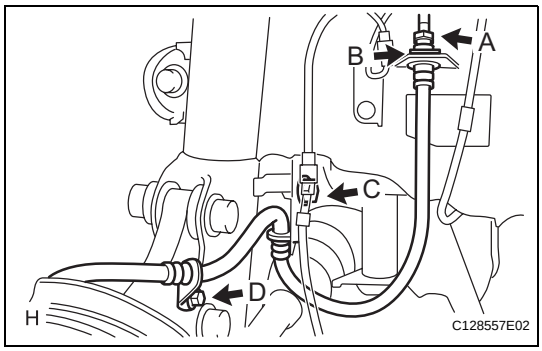

BR

(d) Tighten the bolt (labeled C) to fix the flexible hose clamp and sensor clamp.
Torque: 18.5 N*m (189 kgf*cm, 14 ft.*lbf)
(e) Install the flexible hose with the bolt (labeled D).
Torque: 18.5 N*m (189 kgf*cm, 14 ft.*lbf)
(f) Set the flexible hose to the connecting point with the brake tube (labeled A), and then attach a new clip (labeled B).
(g) Using SST, connect the flexible hose to the brake tube (labeled A) while holding the flexible hose with a wrench.
SST 09023-00101
Torque: 15.2 N*m (155 kgf*cm, 11 ft.*lbf) without SST
14 N*m (144 kgf*cm, 10 ft.*lbf) with SST
HINT:
Use a torque wrench with a fulcrum length of 30 cm (11.81 in.).
NOTICE:
- **Do not bend or damage the brake tube.**
- **Do not allow any foreign matter such as dirt and dust to enter the brake tube from the connecting point.**

2. **FILL RESERVOIR WITH BRAKE FLUID (See page BR-6)**
3. **BLEED AIR FROM BRAKE MASTER CYLINDER (See page BR-7)**
4. **BLEED AIR FROM BRAKE LINE (See page BR-7)**
5. **BLEED AIR FROM ABS AND TRACTION ACTUATOR ASSEMBLY (See page BR-8)**

6. **CHECK BRAKE FLUID LEVEL IN RESERVOIR (See page BR-6)**
7. **CHECK FOR BRAKE FLUID LEAKAGE**
8. **INSTALL FRONT WHEEL**
   Torque: 103 N*m (1,050 kgf*cm, 76 ft.*lbf)

FRONT BRAKE

COMPONENTS

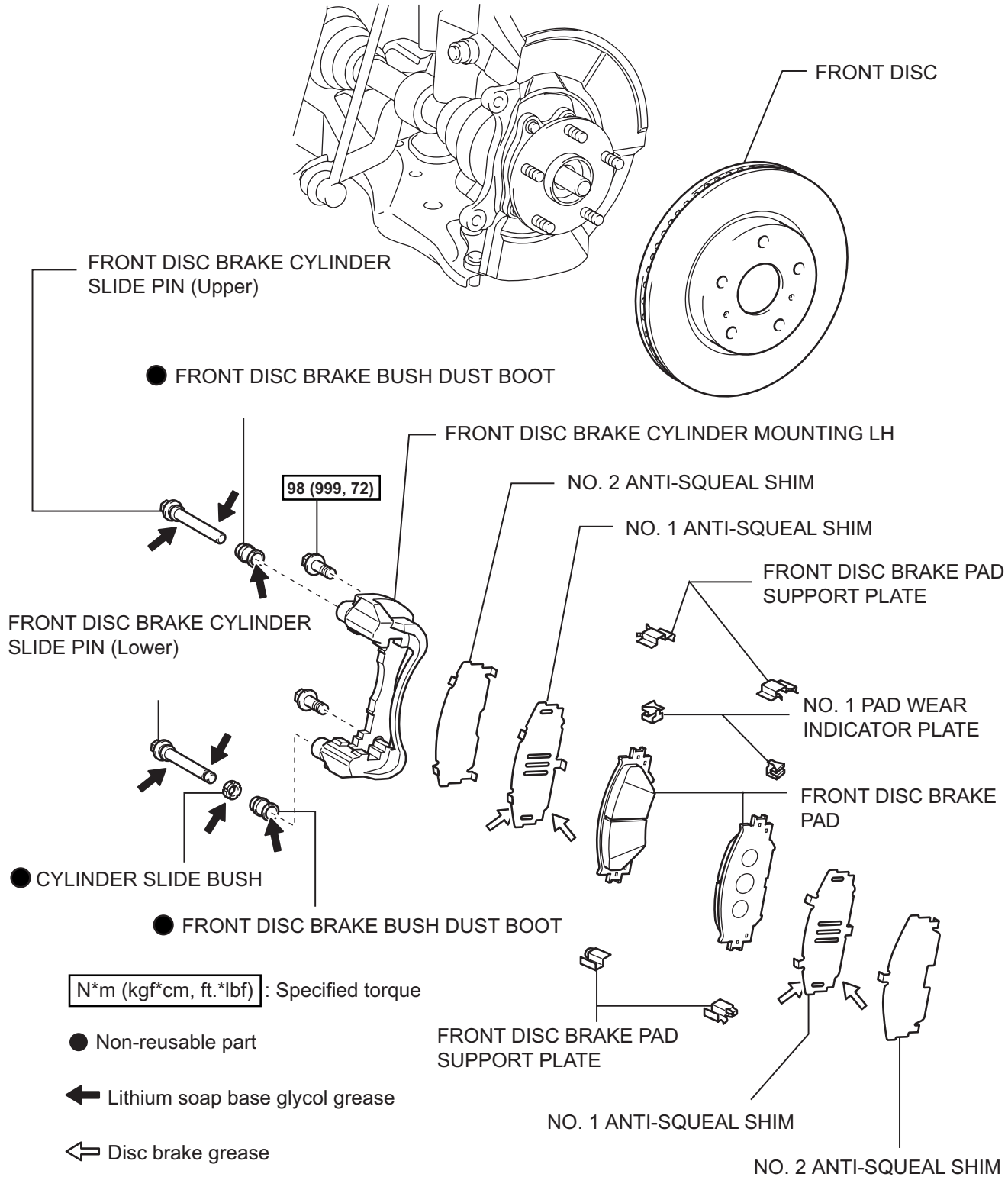

BR

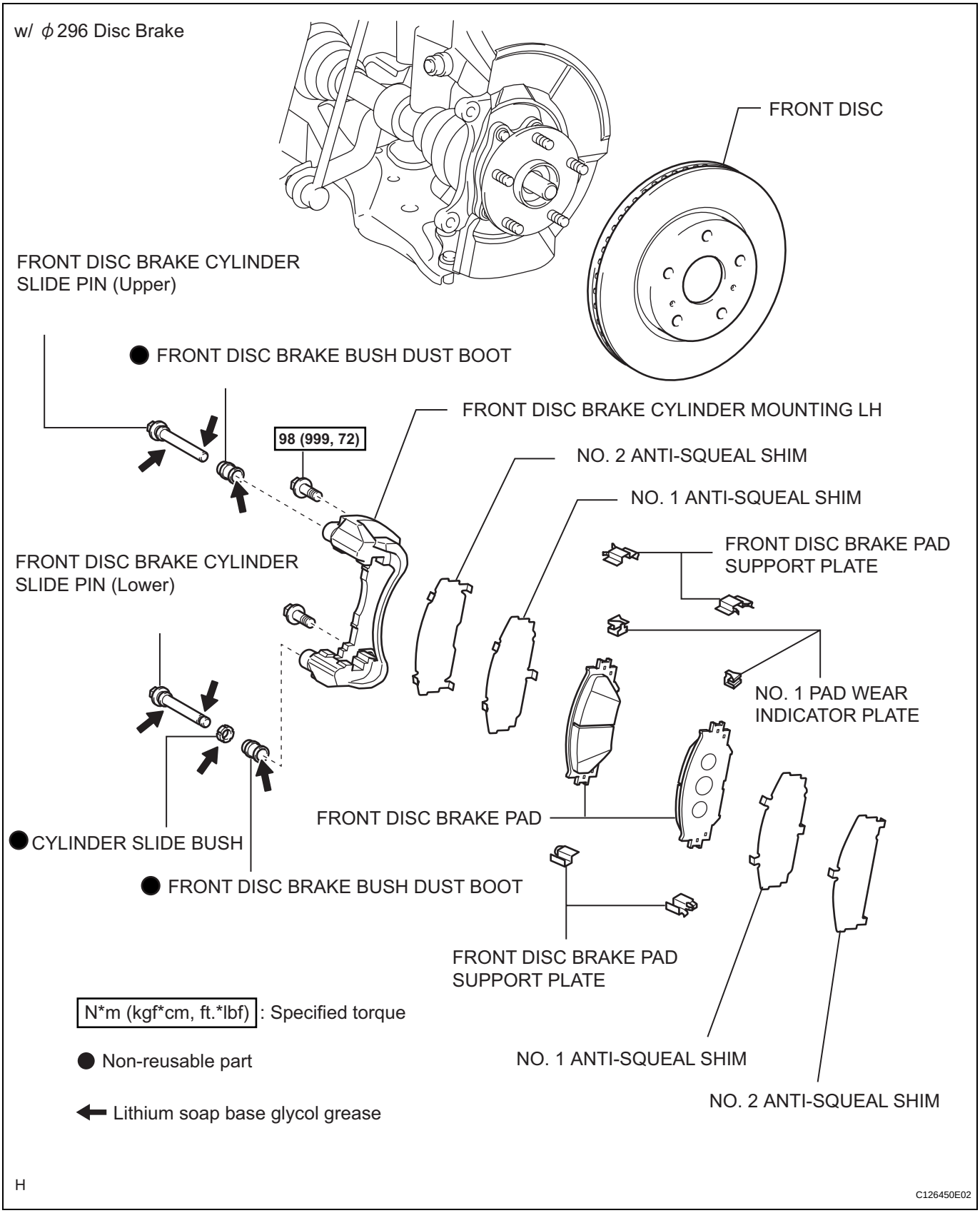
w/ ϕ296 Disc Brake
FRONT DISC
FRONT DISC BRAKE CYLINDER SLIDE PIN (Upper)
● FRONT DISC BRAKE BUSH DUST BOOT
FRONT DISC BRAKE CYLINDER MOUNTING LH
98 (999, 72)
NO. 2 ANTI-SQUEAL SHIM
NO. 1 ANTI-SQUEAL SHIM
FRONT DISC BRAKE PAD SUPPORT PLATE
FRONT DISC BRAKE CYLINDER SLIDE PIN (Lower)
NO. 1 PAD WEAR INDICATOR PLATE
FRONT DISC BRAKE PAD
● CYLINDER SLIDE BUSH
● FRONT DISC BRAKE BUSH DUST BOOT
FRONT DISC BRAKE PAD SUPPORT PLATE
N*m (kgf*cm, ft.*lbf) : Specified torque
● Non-reusable part
← Lithium soap base glycol grease
NO. 1 ANTI-SQUEAL SHIM
NO. 2 ANTI-SQUEAL SHIM
H
C126450E02

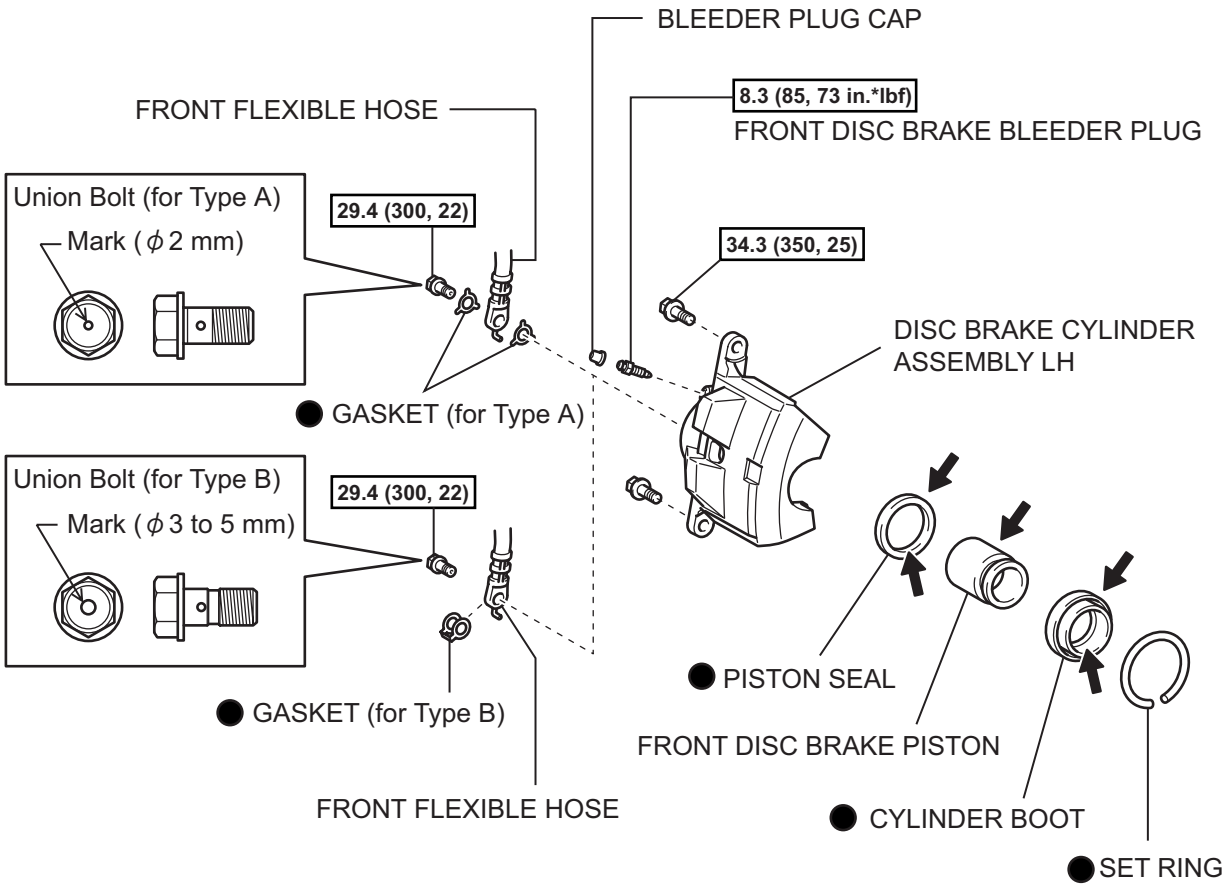

N*m (kgf*cm, ft.*lbf) : Specified torque

● Non-reusable part

⬅ Lithium soap base glycol grease

H

C128550E01

BR

FRONT BRAKE FLEXIBLE HOSE

COMPONENTS

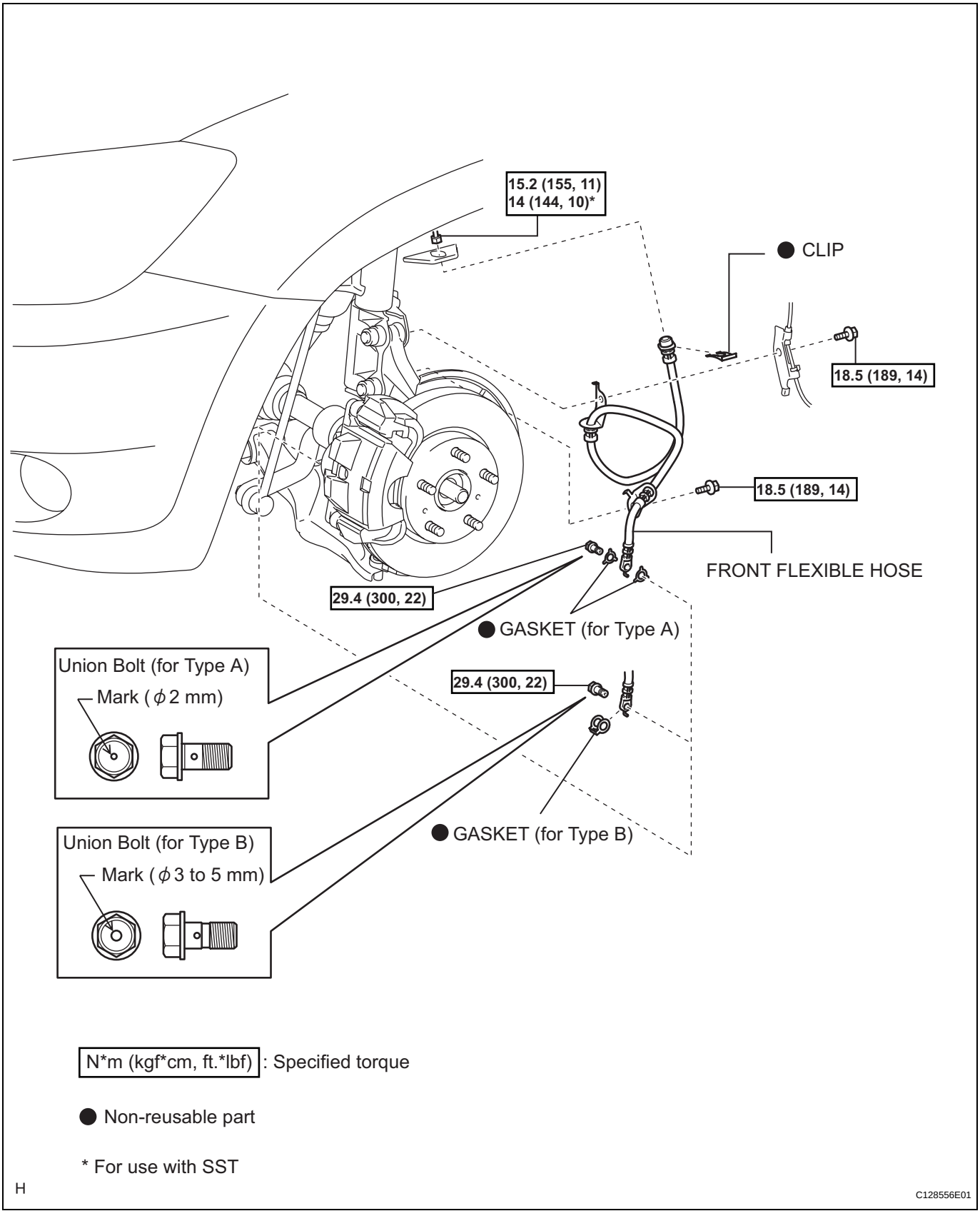

BR

REMOVAL

HINT:

- Use the same procedures for the LH side and RH side.
- The procedures listed below are for the LH side.

1. REMOVE FRONT WHEEL

2. DRAIN BRAKE FLUID

NOTICE:

Wash off brake fluid immediately if it comes in contact with any painted surface.

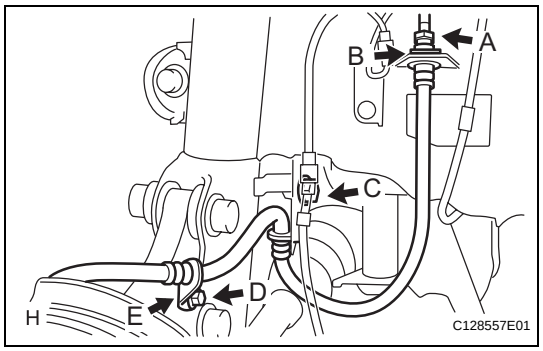

3. REMOVE FRONT FLEXIBLE HOSE

(a) Disconnect the brake tube (labeled A) from the flexible hose with SST while holding the flexible hose with a wrench.

SST 09023-00101

NOTICE:

- **Do not bend or damage the brake tube.**
- **Do not allow any foreign matter such as dirt and dust to enter the brake tube from the connecting point.**

(b) Remove the clip (labeled B).

(c) Remove the 2 bolts (labeled C, D) and then remove the flexible hose clamp (labeled E) from the knuckle.

(d) Remove the sensor clamp and flexible hose clamp from the flexible hose bracket.

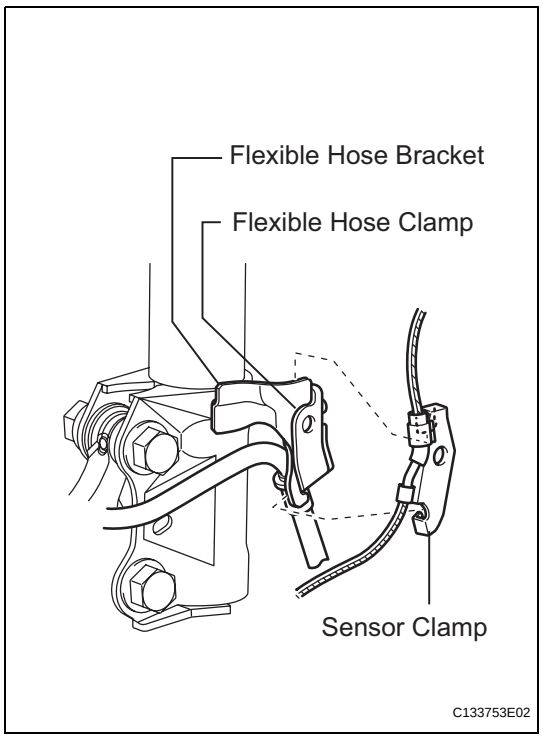

BR

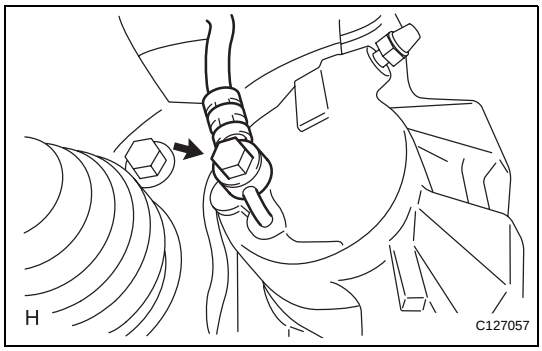

(e) Remove the union bolt and gasket(s), and then remove the flexible hose from the disc brake cylinder.

INSTALLATION

HINT:
- Use the same procedures for the LH side and RH side.
- The procedures listed below are for the LH side.

1. INSTALL FRONT FLEXIBLE HOSE
NOTICE:
- **The flexible hose has an identification color. Make sure of the identification color when installing the flexible hose.**

Item	Identification color
Flexible hose LH	Green
Flexible hose RH	Orange

- **The gasket and union bolt must be used as a set, as shown in the illustration.**

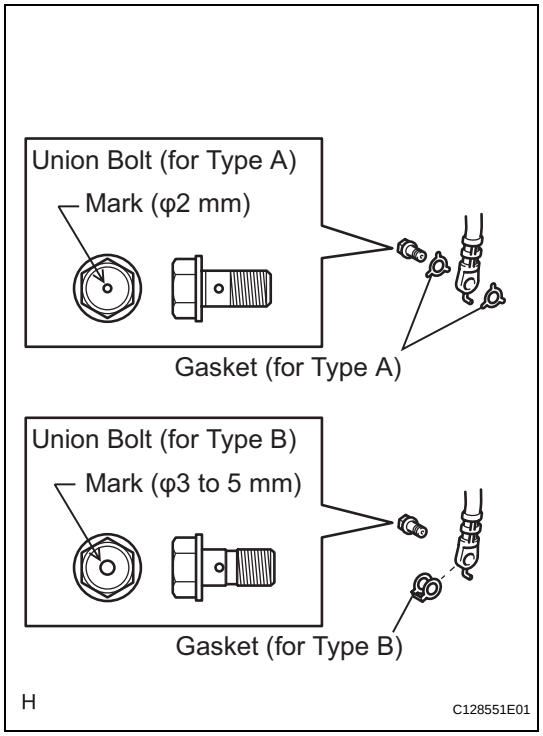

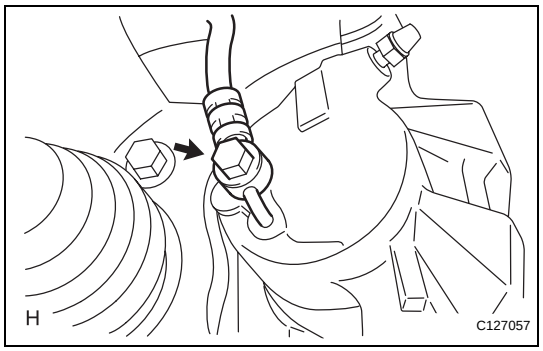

(a) Connect the flexible hose with new gasket(s) and the union bolt to the disc brake cylinder.
Torque: 29.4 N*m (300 kgf*cm, 22 ft.*lbf)
HINT:
Install the flexible hose lock securely in the lock hole in the cylinder.

BR

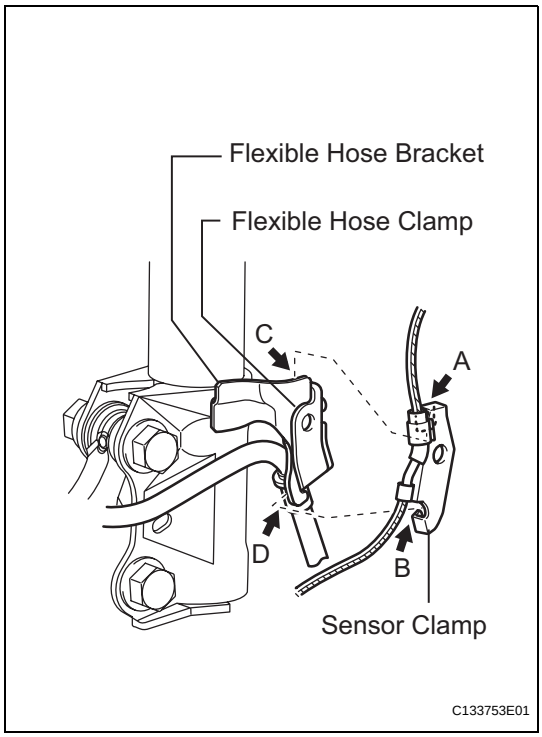

(b) Set the flexible hose clamp on the flexible hose bracket.
(c) Simultaneously perform the following: 1) hang the hook part of the sensor clamp (labeled A) on the flexible hose bracket (labeled C); and 2) insert the hook part of the sensor clamp (labeled B) into the flexible hose bracket (labeled D).

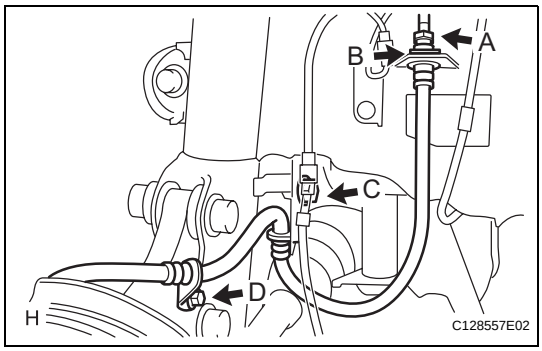

BR

(d) Tighten the bolt (labeled C) to fix the flexible hose clamp and sensor clamp.
Torque: 18.5 N*m (189 kgf*cm, 14 ft.*lbf)
(e) Install the flexible hose with the bolt (labeled D).
Torque: 18.5 N*m (189 kgf*cm, 14 ft.*lbf)
(f) Set the flexible hose to the connecting point with the brake tube (labeled A), and then attach a new clip (labeled B).
(g) Using SST, connect the flexible hose to the brake tube (labeled A) while holding the flexible hose with a wrench.
SST 09023-00101
Torque: 15.2 N*m (155 kgf*cm, 11 ft.*lbf) without SST
14 N*m (144 kgf*cm, 10 ft.*lbf) with SST
HINT:
Use a torque wrench with a fulcrum length of 30 cm (11.81 in.).
NOTICE:
- **Do not bend or damage the brake tube.**
- **Do not allow any foreign matter such as dirt and dust to enter the brake tube from the connecting point.**

2. **FILL RESERVOIR WITH BRAKE FLUID (See page BR-6)**
3. **BLEED AIR FROM BRAKE MASTER CYLINDER (See page BR-7)**
4. **BLEED AIR FROM BRAKE LINE (See page BR-7)**
5. **BLEED AIR FROM ABS AND TRACTION ACTUATOR ASSEMBLY (See page BR-8)**

6. **CHECK BRAKE FLUID LEVEL IN RESERVOIR (See page BR-6)**
7. **CHECK FOR BRAKE FLUID LEAKAGE**
8. **INSTALL FRONT WHEEL**
   Torque: 103 N*m (1,050 kgf*cm, 76 ft.*lbf)

FRONT BRAKE FLEXIBLE HOSE

COMPONENTS

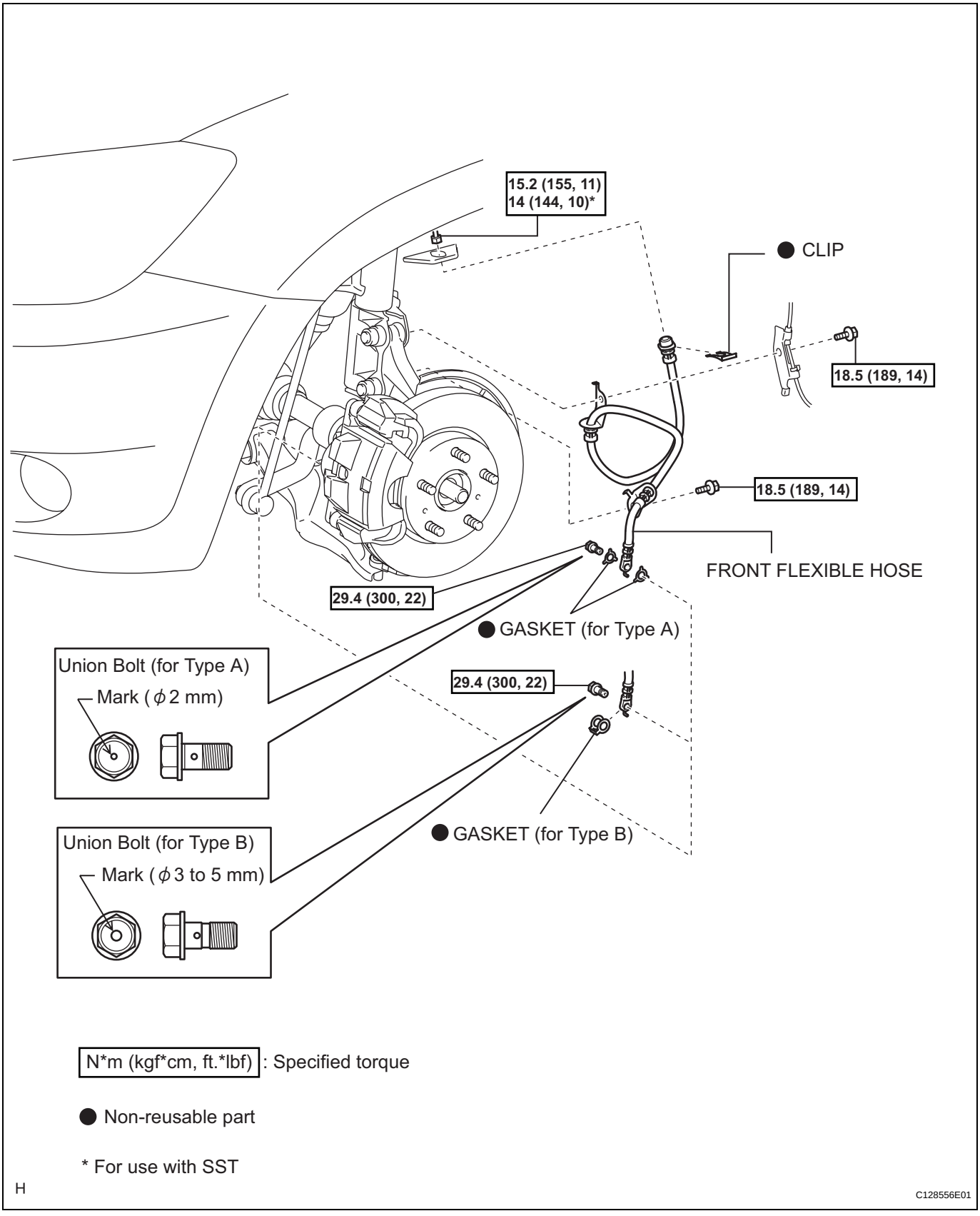

BR

REMOVAL

HINT:

- Use the same procedures for the LH side and RH side.
- The procedures listed below are for the LH side.

1. REMOVE FRONT WHEEL

2. DRAIN BRAKE FLUID

NOTICE:

Wash off brake fluid immediately if it comes in contact with any painted surface.

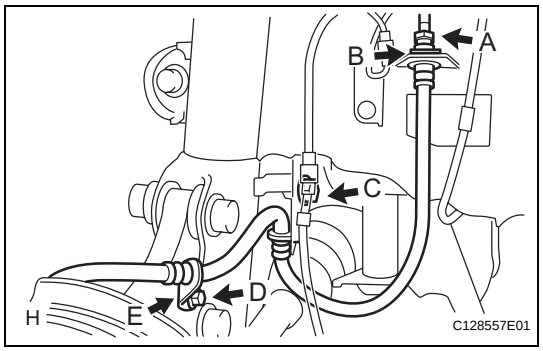

3. REMOVE FRONT FLEXIBLE HOSE

(a) Disconnect the brake tube (labeled A) from the flexible hose with SST while holding the flexible hose with a wrench.

SST 09023-00101

NOTICE:

- **Do not bend or damage the brake tube.**
- **Do not allow any foreign matter such as dirt and dust to enter the brake tube from the connecting point.**

(b) Remove the clip (labeled B).

(c) Remove the 2 bolts (labeled C, D) and then remove the flexible hose clamp (labeled E) from the knuckle.

(d) Remove the sensor clamp and flexible hose clamp from the flexible hose bracket.

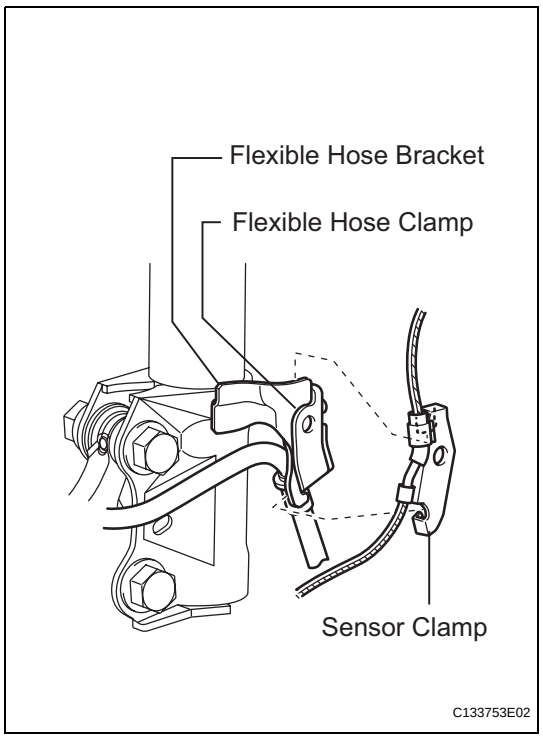

BR

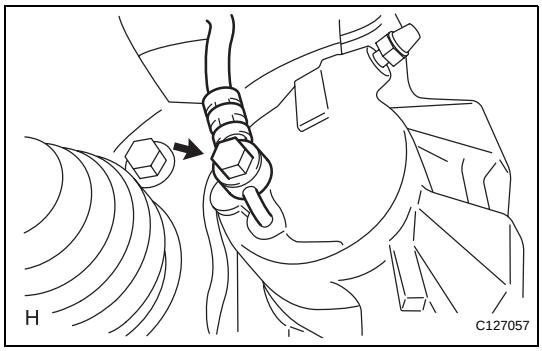

(e) Remove the union bolt and gasket(s), and then remove the flexible hose from the disc brake cylinder.

REMOVAL

HINT:
- Use the same procedures for the LH side and RH side.
- The procedures listed below are for the LH side.

1. REMOVE REAR WHEEL

2. DRAIN BRAKE FLUID
NOTICE:
Wash off brake fluid immediately if it comes in contact with any painted surface.

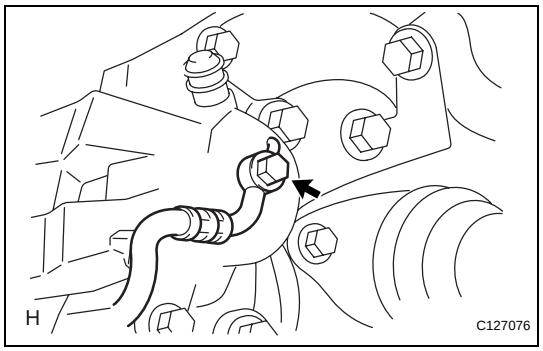

3. DISCONNECT REAR FLEXIBLE HOSE LH
(a) Remove the union bolt and gasket(s).
(b) Disconnect the flexible hose from the brake cylinder.

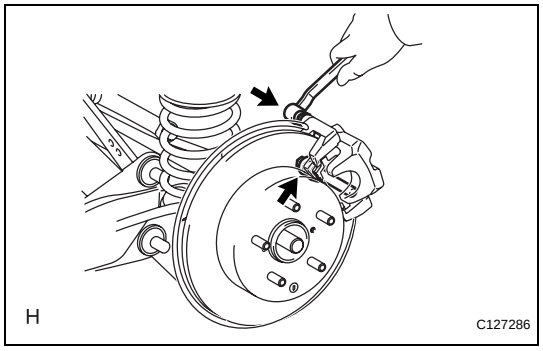

4. REMOVE REAR DISC BRAKE CYLINDER ASSEMBLY LH
(a) Remove the 2 bolts and cylinder.

DISASSEMBLY

HINT:
- Use the same procedures for the LH side and RH side.
- The procedures listed below are for the LH side.

1. REMOVE REAR DISC BRAKE PAD
(a) Remove the 2 disc brake pads.

2. REMOVE ANTI-SQUEAL SHIM
(a) Remove the shims from each pad.

3. REMOVE PAD WEAR INDICATOR PLATE
(a) Remove the indicator plates from each pad.

4. REMOVE REAR DISC BRAKE PAD SUPPORT PLATE
(a) Remove the 2 plates from the brake cylinder mounting.

5. REMOVE REAR DISC BRAKE CYLINDER MOUNTING LH
(a) Remove the 2 bolts and cylinder mounting.

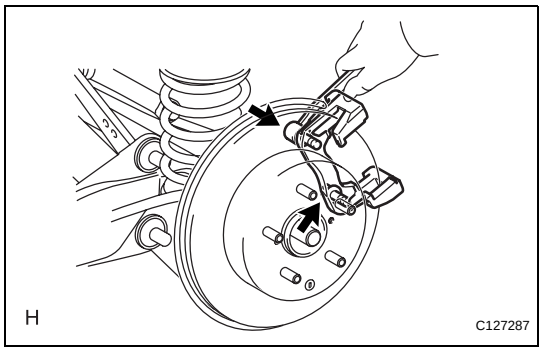

6. REMOVE REAR DISC BRAKE CYLINDER SLIDE PIN
(a) Remove the 2 pins (upper and lower) from the mounting.

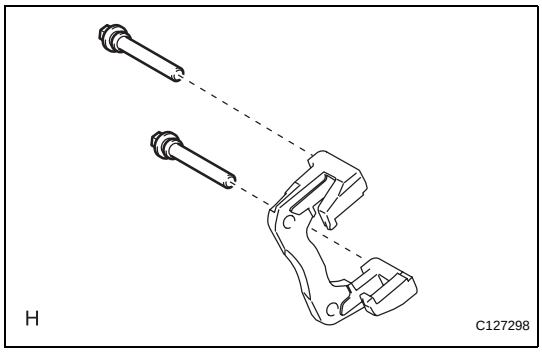

7. REMOVE REAR DISC BRAKE BUSH DUST BOOT
(a) Remove the 2 boots from the mounting.

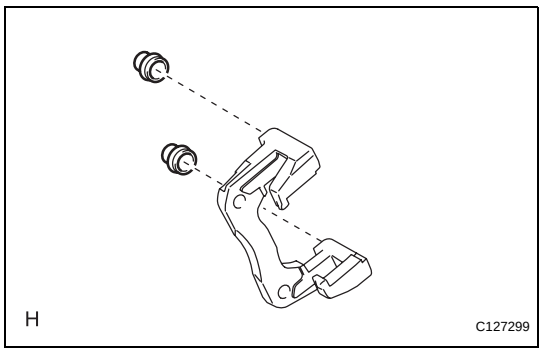

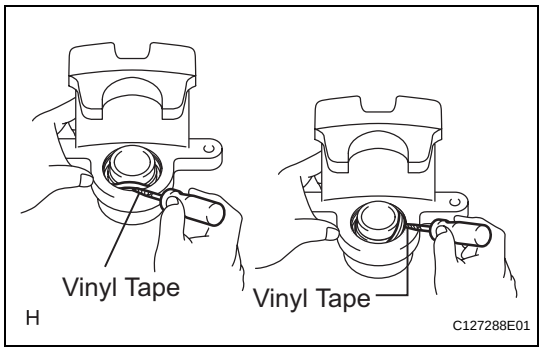

8. REMOVE CYLINDER BOOT

(a) Using a screwdriver, pry out the set ring and boot.

NOTICE:

Be careful not to damage the brake piston and cylinder.

HINT:

Tape the screwdriver tip before use.

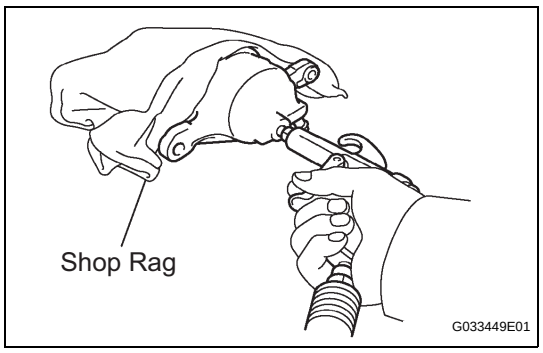

9. REMOVE REAR DISC BRAKE PISTON

(a) Place a shop rag or piece of cloth between the piston and disc brake cylinder.

(b) Apply compressed air to remove the piston from the disc brake cylinder.

CAUTION:

Do not place your fingers in front of the piston when applying compressed air.

NOTICE:

Be careful not to spatter the brake fluid.

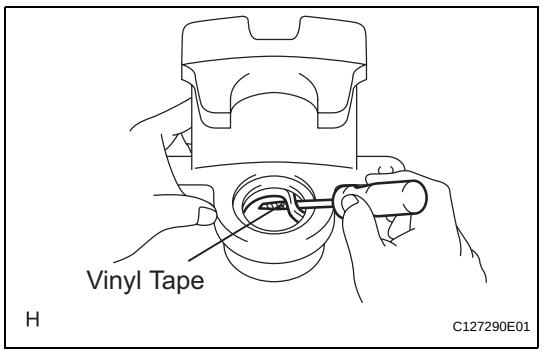

10. REMOVE PISTON SEAL

(a) Using a screwdriver, pry out the seal from the cylinder.

NOTICE:

Be careful not to damage the inner cylinder and piston seal groove.

HINT:

Tape the screwdriver tip before use.

11. REMOVE REAR DISC BRAKE BLEEDER PLUG

(a) Remove the bleeder plug cap and bleeder plug from the cylinder.

12. REMOVE PARKING BRAKE SHOE ADJUSTING HOLE PLUG

(a) Remove the shoe adjusting hole plug from the rear disc.

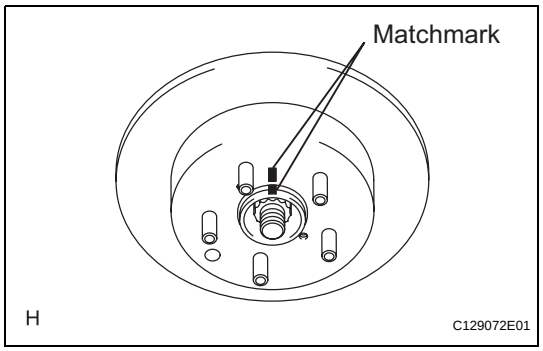

13. REMOVE REAR DISC

(a) Put matchmarks on the disc and axle hub.

(b) Release the parking brake.

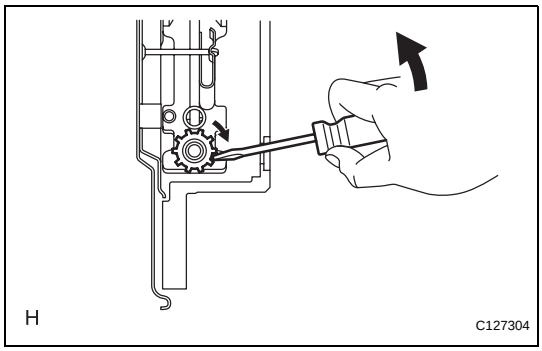

(c) Turn the shoe adjuster until the disc turns freely, and then remove the disc.
(d) Install the shoe adjusting hole plug from the rear disc.

INSPECTION

1. CHECK BRAKE CYLINDER AND PISTON

(a) Check the cylinder bore and piston for rust or scoring.
If necessary, replace the cylinder and piston.

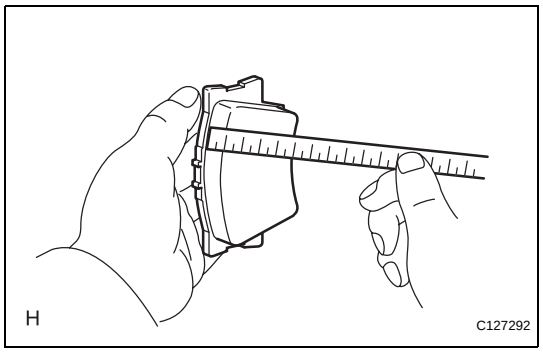

2. CHECK PAD LINING THICKNESS

(a) Using a ruler, measure the pad lining thickness.
Standard thickness:
10.5 mm (0.413 in.)
Minimum thickness:
1.0 mm (0.039 in.)
If the pad lining thickness is equal to or less than the minimum, replace the pad.

3. CHECK REAR DISC BRAKE PAD SUPPORT PLATE

(a) Check the 2 plates as follows. If necessary, replace the plates.
(1) Use brake cleaner to clean the pad support plate's pad and cylinder mounting contact surface. Inspect for deformation, cracks, rust and foreign matter that is difficult to remove.
(2) Use brake cleaner to clean the cylinder mounting's pad support plate contact surface. After installing the pad support plate to the cylinder mounting, inspect for looseness and deformation.
(3) After installing the pad, inspect if the pad falls off easily (due to the spring force of the pad support plate).

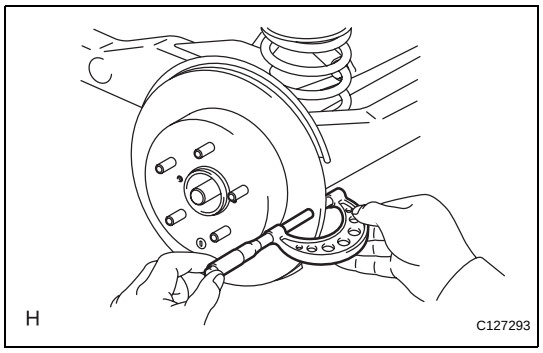

4. CHECK DISC THICKNESS

(a) Using a micrometer, measure the disc thickness.
Standard thickness:
12.0 mm (0.472 in.)
Minimum thickness:
10.5 mm (0.413 in.)
If the disc thickness is less than the minimum, replace the disc.

5. CHECK DISC RUNOUT

(a) Check the bearing backlash and axle hub deviation (see page AH-16).

(b) Tighten the disc with the 3 hub nuts.
Torque: 103 N*m (1,050 kgf*cm, 76 ft.*lbf)

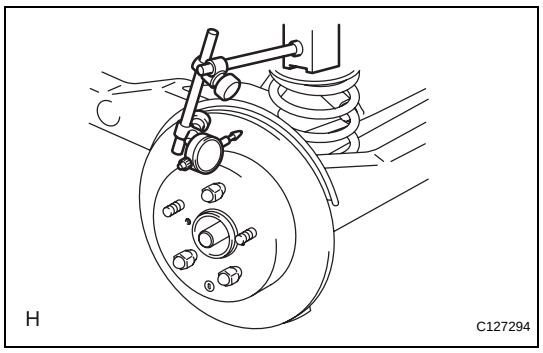

(c) Using a dial indicator, measure the disc runout 10 mm (0.39 in.) from the outer edge of the disc.
Maximum disc runout:
0.15 mm (0.0059 in.)
If the runout is greater than the maximum, change the installation positions of the disc and axle so that the runout will become minimal.
If the runout is greater than the maximum even when the installation positions are changed, grind the disc.

If the disc thickness is less than the minimum, replace the disc.

(d) Remove the 3 hub nuts.

REASSEMBLY

HINT:

- Use the same procedures for the LH side and RH side.
- The procedures listed below are for the LH side.

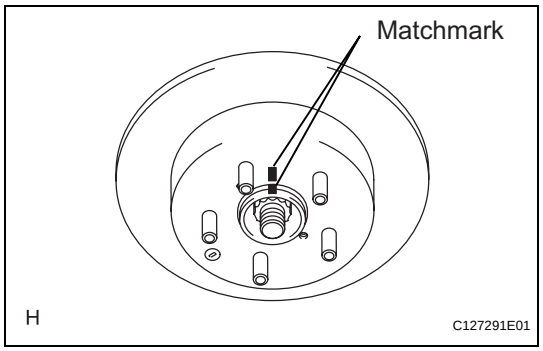

1. INSTALL REAR DISC

(a) Align the matchmarks and install the disc.
HINT:
When replacing the disc with a new one, select the installation position where the disc has the minimum runout.

2. INSTALL PARKING BRAKE SHOE ADJUSTING HOLE PLUG

(a) Install the adjusting hole plug to the rear disc.

3. CHECK DISC RUNOUT (See page BR-58)

4. ADJUST PARKING BRAKE SHOE CLEARANCE (See page PB-17)

5. TEMPORARILY TIGHTEN REAR DISC BRAKE BLEEDER PLUG

(a) Install the bleeder plug to the brake cylinder.
HINT:
The bleeder plug will be tightened to a torque specification in the "BLEED AIR FROM BRAKE LINE" procedures.

(b) Install the bleeder plug cap to the bleeder plug.

6. INSTALL PISTON SEAL

(a) Apply lithium soap base glycol grease to a new piston seal.

(b) Install the piston seal to the brake cylinder.
NOTICE:
Securely install the piston seal into the groove of the disc brake cylinder.

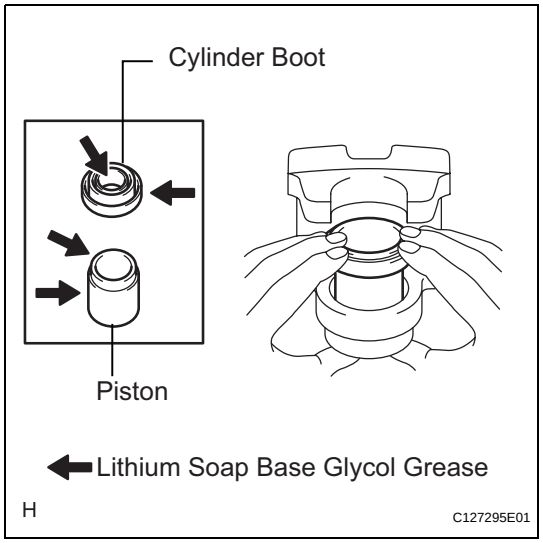

7. INSTALL REAR DISC BRAKE PISTON

(a) Apply lithium soap base glycol grease to the brake piston and a new cylinder boot.

(b) Install the cylinder boot to the brake piston.

(c) Install the brake piston (with the cylinder boot) to the brake cylinder.
NOTICE:
Do not forcibly install the brake piston to the brake cylinder.

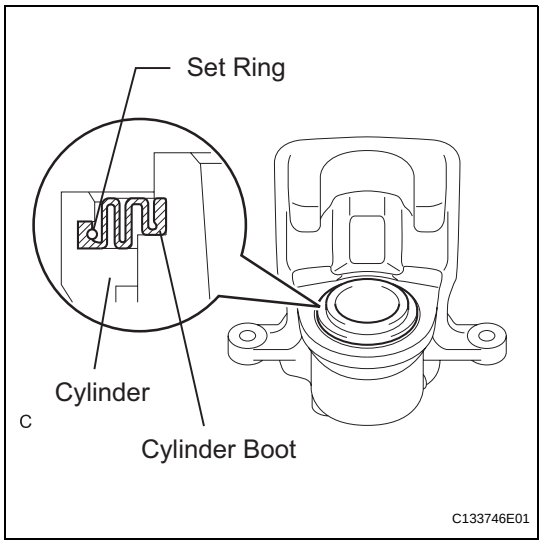

8. INSTALL CYLINDER BOOT

(a) Install the cylinder boot to the cylinder.
NOTICE:
- **Install the boot securely into the grooves of the brake cylinder and brake piston.**
- **Be careful not to damage the boot.**

(b) Using a screwdriver, install a new set ring.
NOTICE:
Be careful not to damage the boot.
HINT:
Tape the screwdriver tip before use.

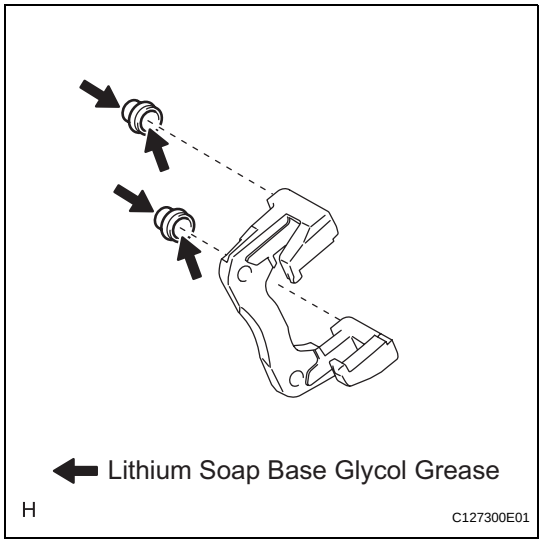

9. INSTALL REAR DISC BRAKE BUSH DUST BOOT

(a) Apply lithium soap base glycol grease to 2 new boots.
(b) Install the 2 boots to the mounting.

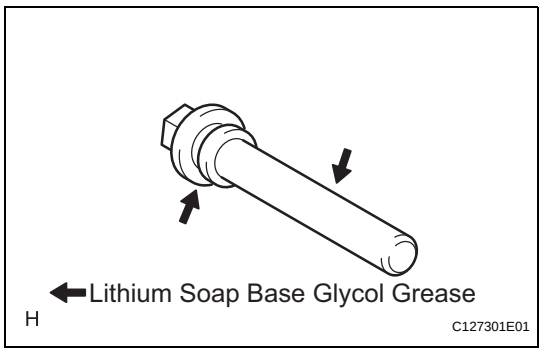

10. INSTALL REAR DISC BRAKE CYLINDER SLIDE PIN

(a) Apply lithium soap base glycol grease to the pins.
(b) Install the 2 pins (upper and lower) to the mounting.

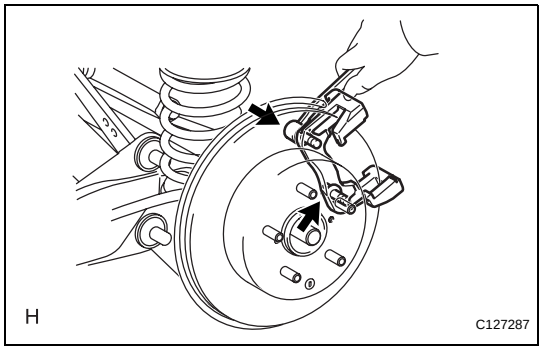

11. INSTALL REAR DISC BRAKE CYLINDER MOUNTING LH

(a) Install the cylinder mounting with the 2 bolts.
Torque: 88 N*m (897 kgf*cm, 65 ft.*lbf)

12. INSTALL REAR DISC BRAKE PAD SUPPORT PLATE

(a) Install the 2 plates to the mounting.

13. INSTALL PAD WEAR INDICATOR PLATE

(a) Install the 2 indicator plates to the lower side of each pad.

BR

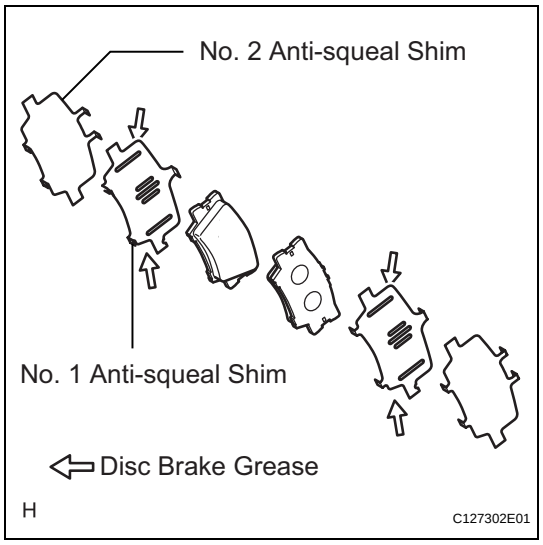

14. INSTALL ANTI-SQUEAL SHIM

(a) Apply disc brake grease to both sides of each No. 1 shim.

(b) Install the No. 1 and No. 2 shims to each pad.
NOTICE:
- **When replacing a worn pad, the shims must be replaced together with the pads.**
- **Install the shims in the correct positions and direction.**

15. INSTALL REAR DISC BRAKE PAD

(a) Install the 2 disc brake pads to the mounting.
NOTICE:
There should be no oil or grease on the friction surface of the pads and disc.

INSTALLATION

HINT:
- Use the same procedures for the LH side and RH side.
- The procedures listed below are for the LH side.

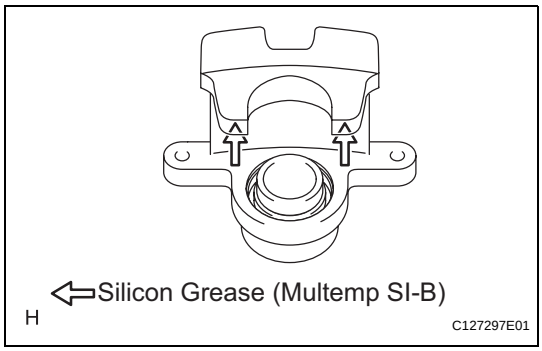

1. INSTALL REAR DISC BRAKE CYLINDER ASSEMBLY LH

(a) Apply silicon grease (Multemp SI-B) on the contact surfaces of the cylinder parts indicated by the arrows.

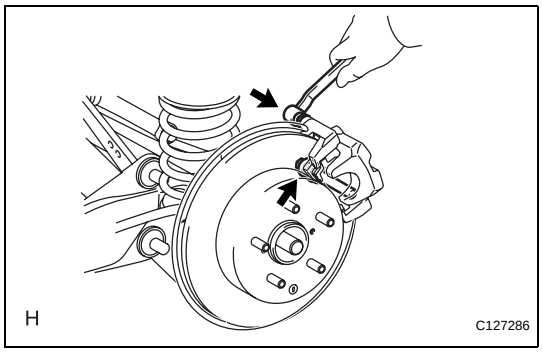

(b) Install the cylinder with the 2 bolts.
Torque: 26.5 N*m (270 kgf*cm, 20 ft.*lbf)

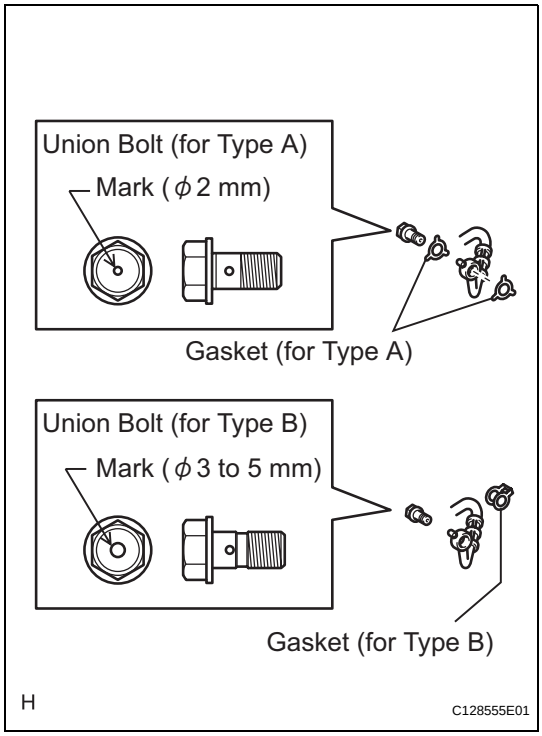

2. CONNECT REAR FLEXIBLE HOSE LH
NOTICE:
The gasket and union bolt must be used as a set, as shown in the illustration.

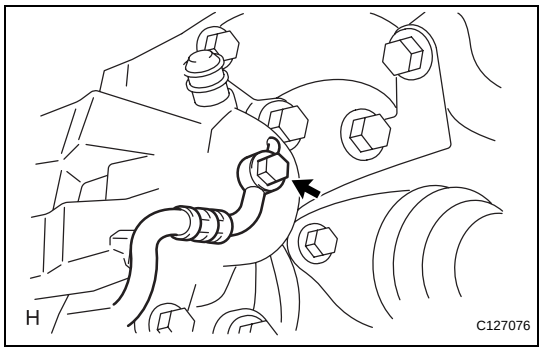

(a) Connect the flexible hose with new gasket(s) and the union bolt.
Torque: 30.4 N*m (310 kgf*cm, 22 ft.*lbf)
HINT:
Install the flexible hose lock securely in the lock hole in the cylinder.

3. **FILL RESERVOIR WITH BRAKE FLUID (See page BR-6)**
4. **BLEED AIR FROM BRAKE MASTER CYLINDER (See page BR-7)**
5. **BLEED AIR FROM BRAKE LINE (See page BR-7)**
6. **BLEED AIR FROM ABS AND TRACTION ACTUATOR ASSEMBLY (See page BR-8)**
7. **CHECK BRAKE FLUID LEVEL IN RESERVOIR (See page BR-6)**
8. **CHECK FOR BRAKE FLUID LEAKAGE**
9. **INSTALL REAR WHEEL**
Torque: 103 N*m (1,050 kgf*cm, 76 ft.*lbf)

INSTALLATION

HINT:
- Use the same procedures for the LH side and RH side.
- The procedures listed below are for the LH side.

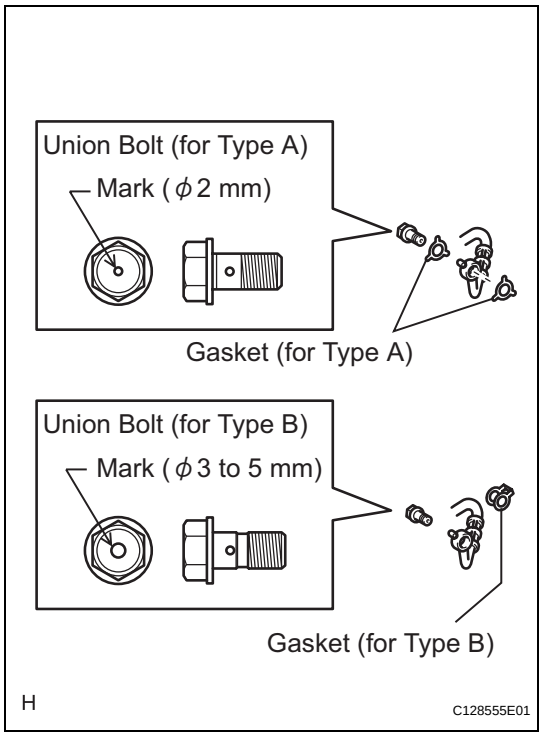

1. INSTALL REAR BRAKE TUBE FLEXIBLE HOSE
NOTICE:
The gasket and union bolt must be used as a set, as shown in the illustration.

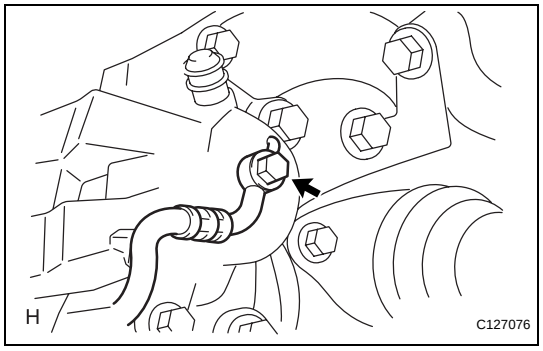

(a) Connect the flexible hose with new gasket(s) and the union bolt to the disc brake cylinder.
Torque: 30.4 N*m (310 kgf*cm, 22 ft.*lbf)
HINT:
Install the flexible hose lock securely in the lock hole in the cylinder.

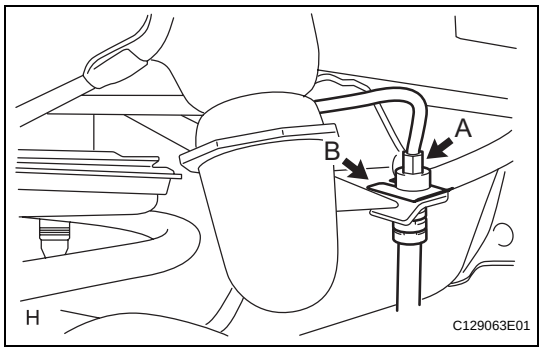

(b) Set the flexible hose to the connecting point with the brake tube (labeled A), and then attach a new clip (labeled B).

(c) Using SST, connect the flexible hose to the brake tube (labeled A) while holding the flexible hose with a wrench.
SST 09023-00101
Torque: 15.2 N*m (155 kgf*cm, 11 ft.*lbf) without SST
14 N*m (144 kgf*cm, 10 ft.*lbf) with SST
HINT:
Use a torque wrench with a fulcrum length of 30 cm (11.81 in.).
NOTICE:
- **Do not bend or damage the brake tube.**

BR

- **Do not allow any foreign matter such as dirt and dust to enter the brake tube from the connecting point.**

2. **FILL RESERVOIR WITH BRAKE FLUID (See page BR-6)**
3. **BLEED AIR FROM BRAKE MASTER CYLINDER (See page BR-7)**
4. **BLEED AIR FROM BRAKE LINE (See page BR-7)**
5. **BLEED AIR FROM ABS AND TRACTION ACTUATOR ASSEMBLY (See page BR-8)**
6. **CHECK BRAKE FLUID LEVEL IN RESERVOIR (See page BR-6)**
7. **CHECK FOR BRAKE FLUID LEAKAGE**
8. **INSTALL REAR WHEEL**
   Torque: 103 N*m (1,050 kgf*cm, 76 ft.*lbf)

REAR BRAKE

COMPONENTS

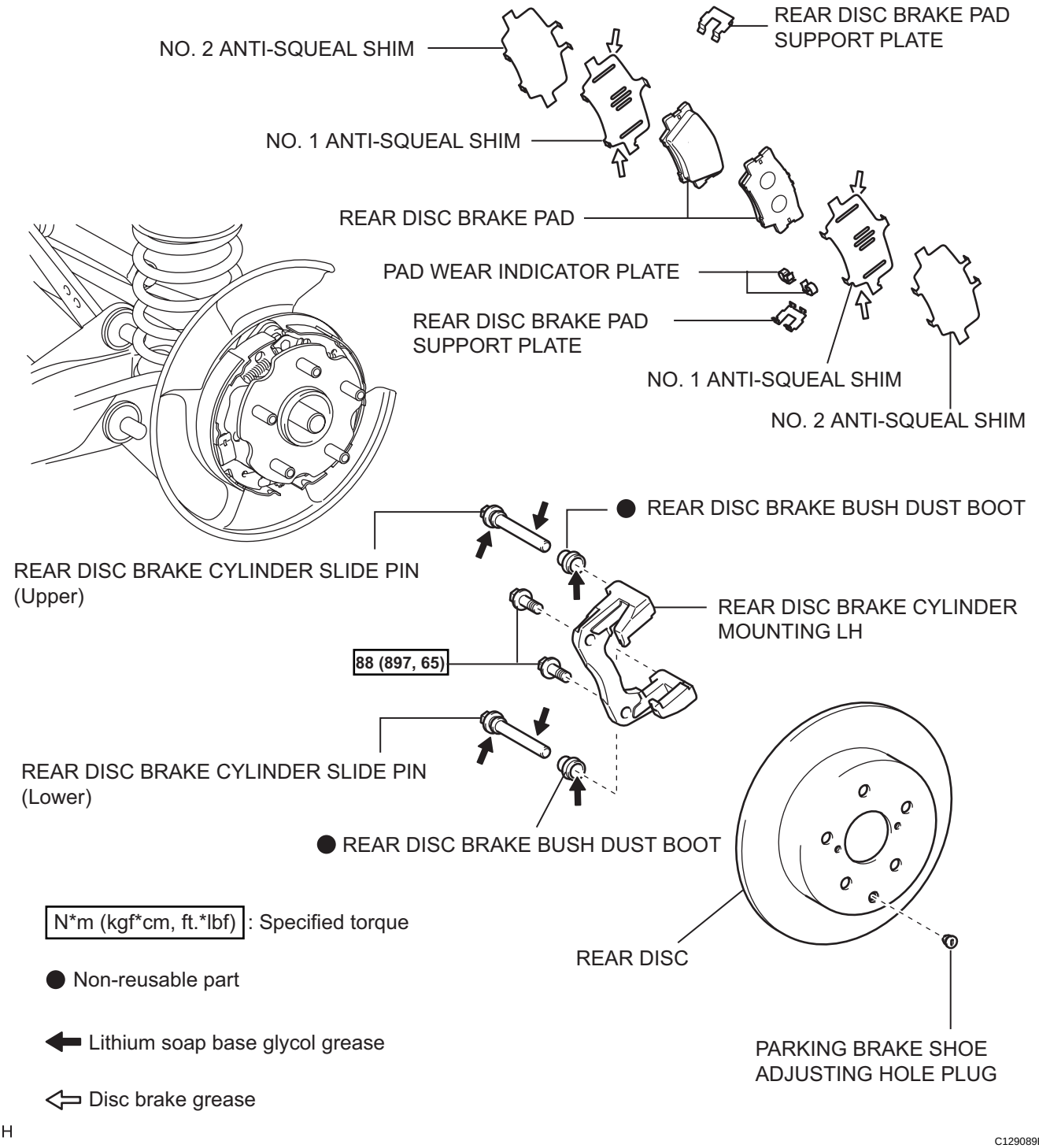

BR

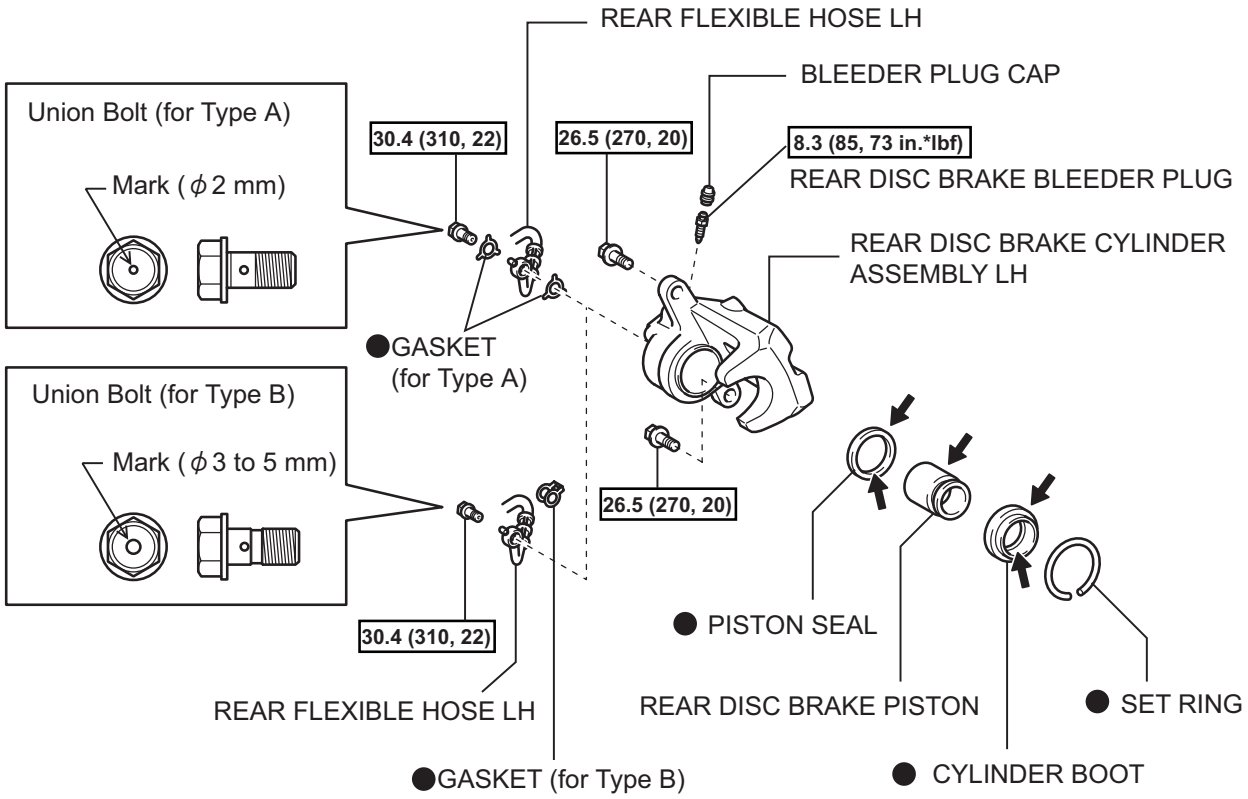

N*m (kgf*cm, ft.*lbf) : Specified torque

● Non-reusable part

⬅ Lithium soap base glycol grease

C129090E01

REAR BRAKE FLEXIBLE HOSE

COMPONENTS

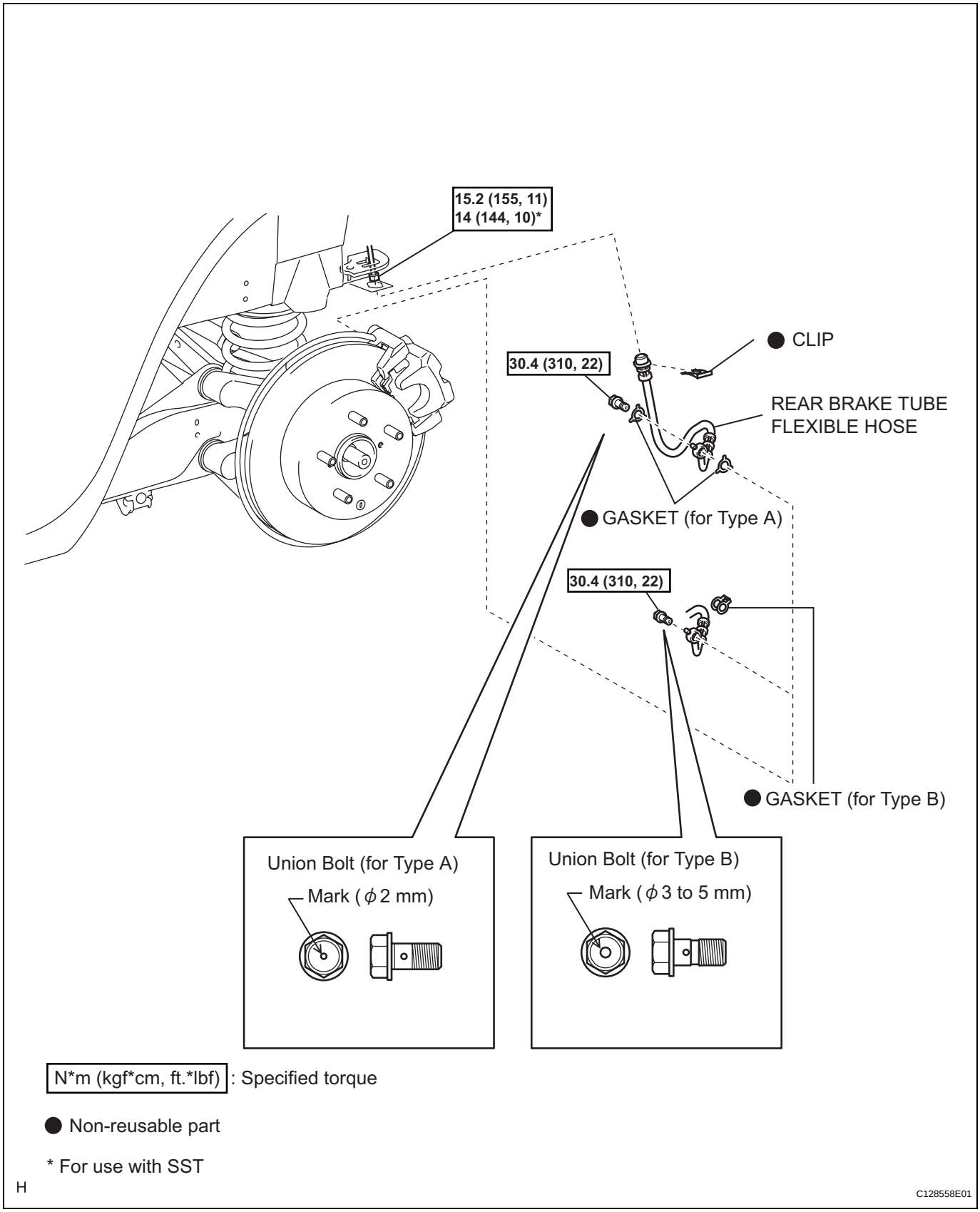

N*m (kgf*cm, ft.*lbf) : Specified torque

● Non-reusable part

* For use with SST

H

C128558E01

BR

REMOVAL

HINT:
- Use the same procedures for the LH side and RH side.
- The procedures listed below are for the LH side.

1. REMOVE REAR WHEEL

2. DRAIN BRAKE FLUID
NOTICE:
Wash off brake fluid immediately if it comes in contact with any painted surface.

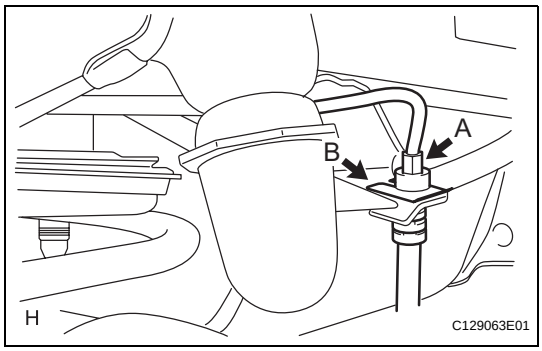

3. REMOVE REAR BRAKE TUBE FLEXIBLE HOSE

(a) Disconnect the brake tube (labeled A) from the flexible hose with SST while holding the flexible hose with a wrench.
SST 09023-00101
NOTICE:
- **Do not bend or damage the brake tube.**
- **Do not allow any foreign matter such as dirt and dust to enter the brake tube from the connecting point.**

(b) Remove the clip (labeled B).

(c) Remove the union bolt and gasket(s), and then remove the flexible hose from the disc brake cylinder.

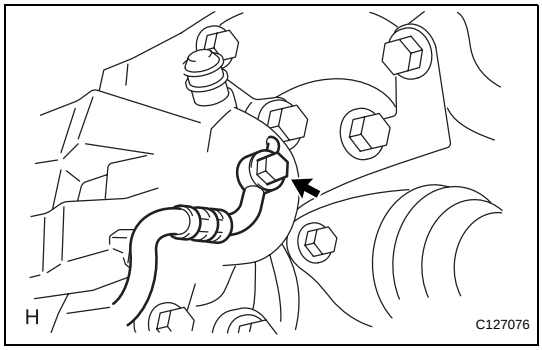

BR

INSTALLATION

HINT:
- Use the same procedures for the LH side and RH side.
- The procedures listed below are for the LH side.

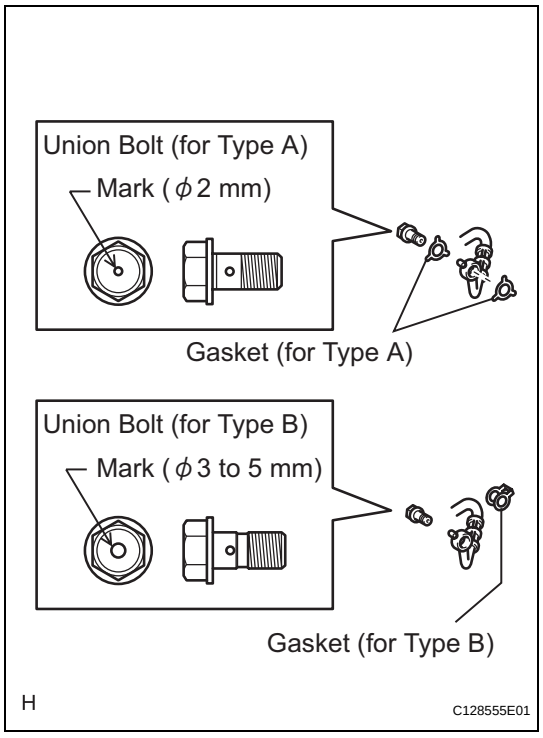

1. INSTALL REAR BRAKE TUBE FLEXIBLE HOSE
NOTICE:
The gasket and union bolt must be used as a set, as shown in the illustration.

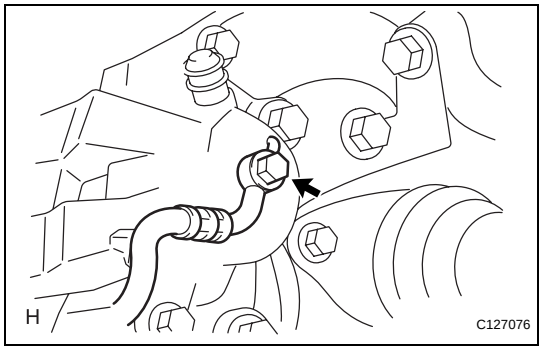

(a) Connect the flexible hose with new gasket(s) and the union bolt to the disc brake cylinder.
Torque: 30.4 N*m (310 kgf*cm, 22 ft.*lbf)
HINT:
Install the flexible hose lock securely in the lock hole in the cylinder.

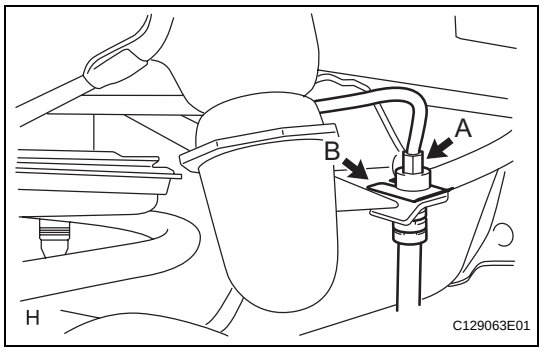

(b) Set the flexible hose to the connecting point with the brake tube (labeled A), and then attach a new clip (labeled B).

(c) Using SST, connect the flexible hose to the brake tube (labeled A) while holding the flexible hose with a wrench.
SST 09023-00101
Torque: 15.2 N*m (155 kgf*cm, 11 ft.*lbf) without SST
14 N*m (144 kgf*cm, 10 ft.*lbf) with SST
HINT:
Use a torque wrench with a fulcrum length of 30 cm (11.81 in.).
NOTICE:
- **Do not bend or damage the brake tube.**

BR

- **Do not allow any foreign matter such as dirt and dust to enter the brake tube from the connecting point.**

2. **FILL RESERVOIR WITH BRAKE FLUID (See page BR-6)**
3. **BLEED AIR FROM BRAKE MASTER CYLINDER (See page BR-7)**
4. **BLEED AIR FROM BRAKE LINE (See page BR-7)**
5. **BLEED AIR FROM ABS AND TRACTION ACTUATOR ASSEMBLY (See page BR-8)**
6. **CHECK BRAKE FLUID LEVEL IN RESERVOIR (See page BR-6)**
7. **CHECK FOR BRAKE FLUID LEAKAGE**
8. **INSTALL REAR WHEEL**
   Torque: 103 N*m (1,050 kgf*cm, 76 ft.*lbf)

REAR BRAKE FLEXIBLE HOSE

COMPONENTS

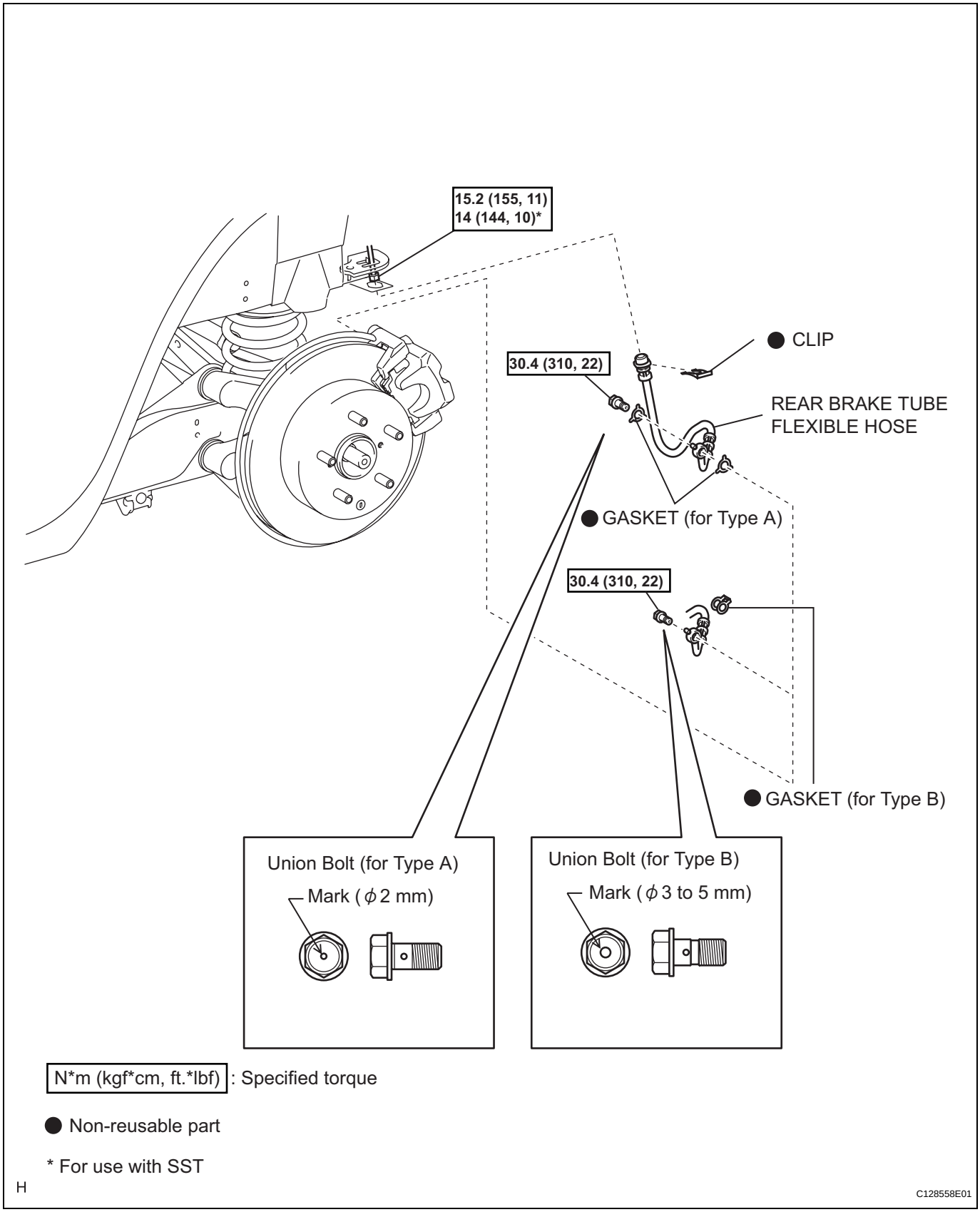

N*m (kgf*cm, ft.*lbf) : Specified torque

● Non-reusable part

* For use with SST

H

C128558E01

BR

REMOVAL

HINT:
- Use the same procedures for the LH side and RH side.
- The procedures listed below are for the LH side.

1. REMOVE REAR WHEEL

2. DRAIN BRAKE FLUID
NOTICE:
Wash off brake fluid immediately if it comes in contact with any painted surface.

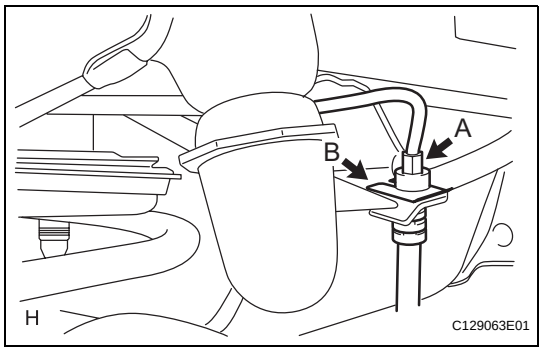

3. REMOVE REAR BRAKE TUBE FLEXIBLE HOSE

(a) Disconnect the brake tube (labeled A) from the flexible hose with SST while holding the flexible hose with a wrench.
SST 09023-00101
NOTICE:
- **Do not bend or damage the brake tube.**
- **Do not allow any foreign matter such as dirt and dust to enter the brake tube from the connecting point.**

(b) Remove the clip (labeled B).

(c) Remove the union bolt and gasket(s), and then remove the flexible hose from the disc brake cylinder.

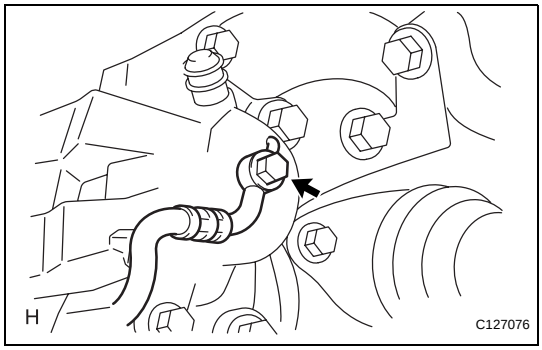

BR

REMOVAL

(2006/01-)

1. **DISCONNECT CABLE FROM NEGATIVE BATTERY TERMINAL**
   CAUTION:
   Wait at least 90 seconds after disconnecting the cable from the negative (-) battery terminal to prevent airbag and seat belt pretensioner activation.

2. **REMOVE AIR CLEANER CASE SUB-ASSEMBLY (for 2AZ-FE)**
   (a) Remove the air cleaner case (see page EM-98).
   HINT:
   Refer to the procedures from the removal of the purge VSV up until the removal of the air cleaner case.

3. **REMOVE AIR CLEANER CASE (for 2GR-FE)**
   (a) Remove the air cleaner case (see page EM-21).
   HINT:
   Refer to the procedures from the removal of the air cleaner cap sub-assembly up until the removal of the air cleaner case.

4. **DRAIN BRAKE FLUID**
   NOTICE:
   Wash off brake fluid immediately if it comes in contact with any painted surface.

5. **DISCONNECT BRAKE LINES**
   (a) Using SST, disconnect the 6 brake lines from the actuator.
   SST 09023-00101

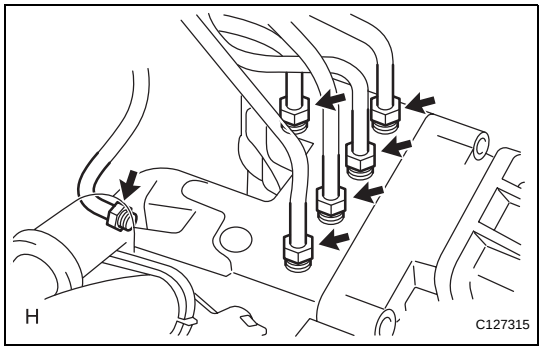

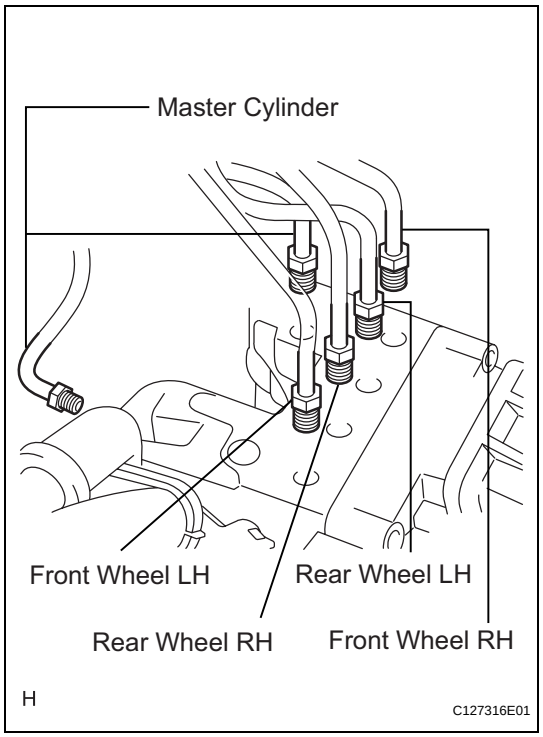

(b) Place tags or marks to identify the installation locations of each brake line.

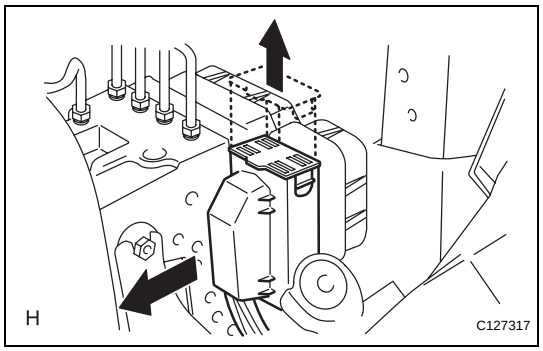

6. REMOVE ABS AND TRACTION ACTUATOR ASSEMBLY WITH BRACKET

(a) Pull the lock lever upward and disconnect the connector.

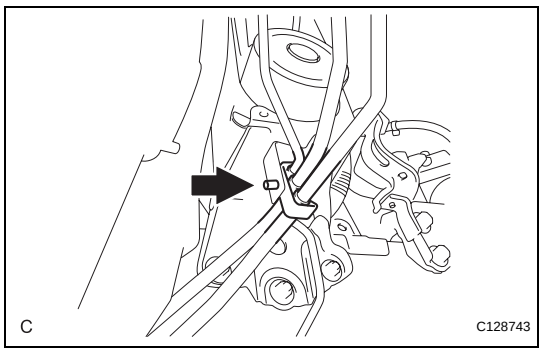

(b) Disconnect the brake tube clamp from the bracket.

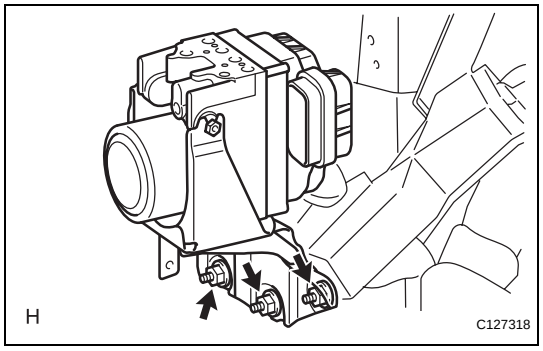

(c) Remove the 3 nuts and actuator with bracket.
NOTICE:
Be careful not to damage the brake tubes.

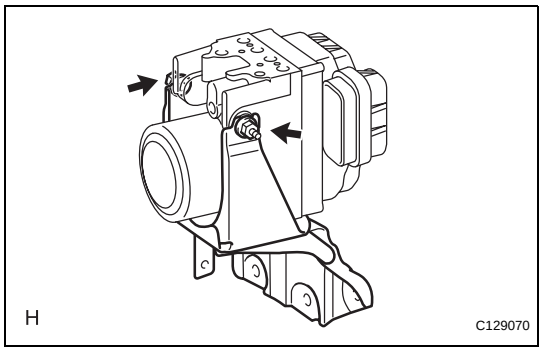

DISASSEMBLY

1. REMOVE ABS AND TRACTION ACTUATOR ASSEMBLY

(a) Remove the 2 nuts and actuator from the bracket.

2. REMOVE BRAKE ACTUATOR BOLT HOLDER

(a) Remove the 2 bolt holders from the actuator.

3. REMOVE BRAKE ACTUATOR BOLT CUSHION

(a) Remove the 3 cushions from the actuator.

REASSEMBLY

1. INSTALL BRAKE ACTUATOR BOLT CUSHION

(a) Install the 3 cushions to the actuator.

2. INSTALL BRAKE ACTUATOR BOLT HOLDER

(a) Install the 2 bolt holders to the actuator.

3. INSTALL ABS AND TRACTION ACTUATOR ASSEMBLY

NOTICE:

Do not remove the hole plug before connecting the brake tube. New actuators are filled with brake fluid.

(a) Set the actuator on the bracket.

NOTICE:

- **Insert the cushion to the pin of the bracket securely.**

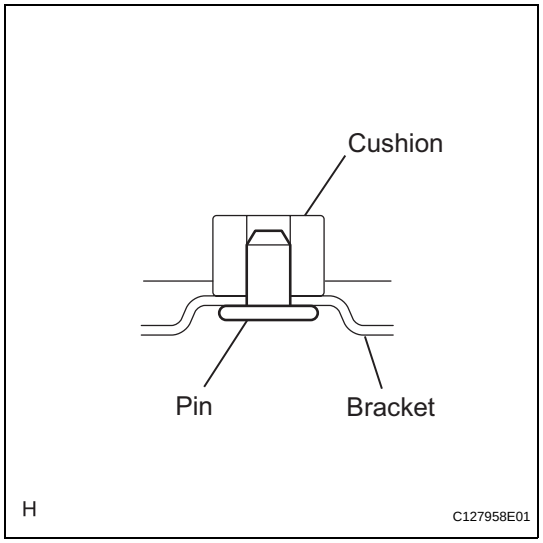

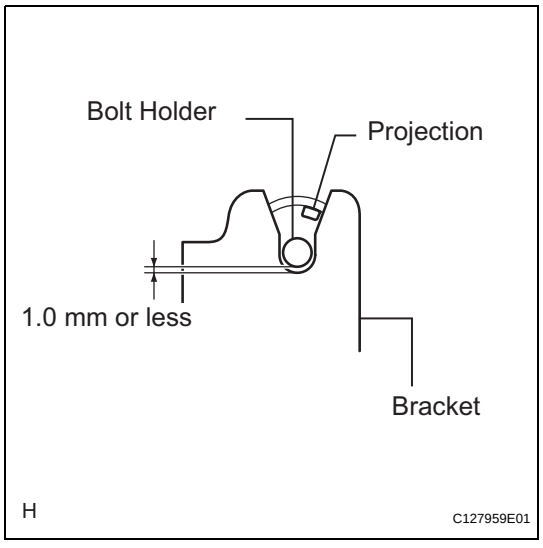

- **The clearance between the bolt holder and bracket is less than 1.0 mm (0.039 in.).**
- **The projection should be set as shown in the illustration.**

BC

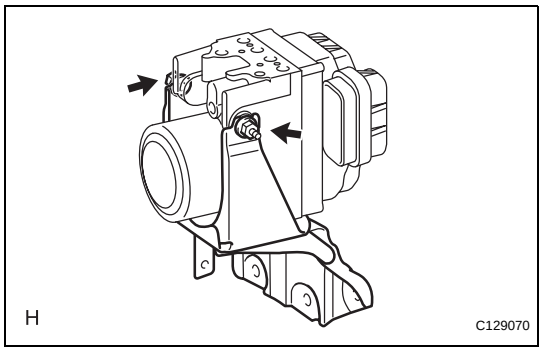

(b) Install the 2 nuts to assemble the actuator and bracket.
Torque: 5.4 N*m (55 kgf*cm, 48 in.*lbf)

INSTALLATION

(2005/11-2006/01)

1. INSTALL ABS AND TRACTION ACTUATOR ASSEMBLY WITH BRACKET

NOTICE:

Do not remove the hole plug before connecting the brake tube. New actuators are filled with brake fluid.

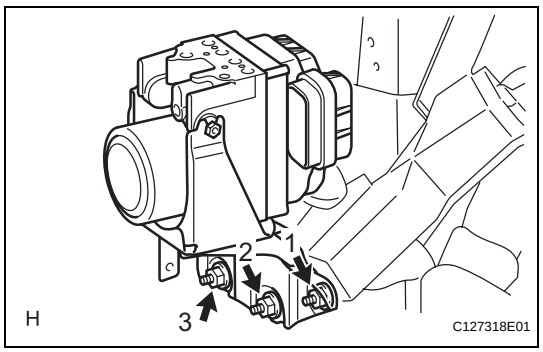

(a) Install the actuator with bracket with the 3 nuts.

Torque: 19 N*m (194 kgf*cm, 14 ft.*lbf)

HINT:

The nuts should be tightened in order from 1 to 3 as shown in the illustration.

NOTICE:

Be careful not to damage the brake tubes.

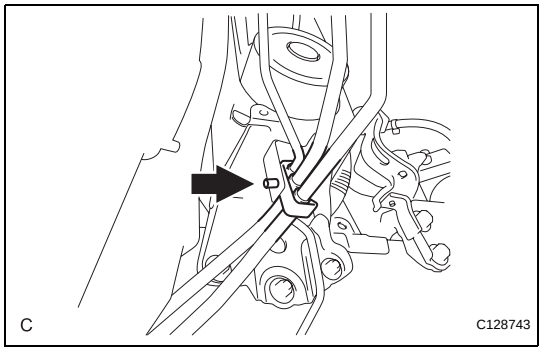

(b) Connect the brake tube clamp to the bracket.

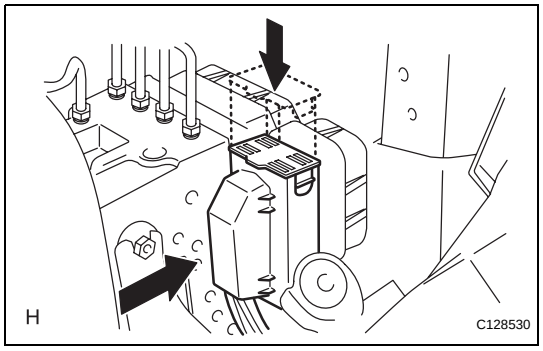

(c) Connect the connector and push the lock lever downward.

BC

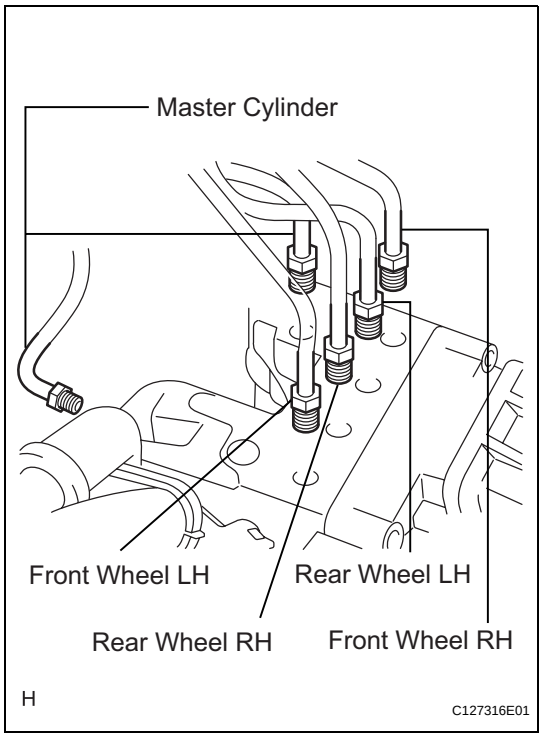

2. **CONNECT BRAKE LINES**
   (a) Using SST, connect the 6 brake lines to the correct locations on the actuator, as shown in the illustration.
   SST 09023-00101
   Torque: 15.2 N*m (155 kgf*cm, 11 ft.*lbf) without SST
   14 N*m (144 kgf*cm, 10 ft.*lbf) with SST
   HINT:
   Use a torque wrench with a fulcrum length of 30 cm (11.81 in.).

3. **FILL RESERVOIR WITH BRAKE FLUID (See page BR-6)**

4. **BLEED AIR FROM BRAKE MASTER CYLINDER (See page BR-7)**

5. **BLEED AIR FROM BRAKE LINE (See page BR-7)**

6. **BLEED AIR FROM ABS AND TRACTION ACTUATOR ASSEMBLY (See page BR-8)**

7. **CHECK BRAKE FLUID LEVEL IN RESERVOIR (See page BR-6)**

8. **CHECK FOR BRAKE FLUID LEAKAGE**

9. **INSTALL AIR CLEANER CASE SUB-ASSEMBLY**
   (a) Install the air cleaner case (see page EM-105).
   HINT:
   Refer to the procedures from the installation of the air cleaner case up until the installation of the purge VSV.

10. **CONNECT CABLE TO NEGATIVE BATTERY TERMINAL**

11. **CHECK ABS AND TRACTION ACTUATOR ASSEMBLY WITH INTELLIGENT TESTER**
   (a) Check the ABS and traction actuator with the intelligent tester (see page BC-180).

INSTALLATION

(2006/01-)

1. INSTALL ABS AND TRACTION ACTUATOR ASSEMBLY WITH BRACKET

NOTICE:

Do not remove the hole plug before connecting the brake tube. New actuators are filled with brake fluid.

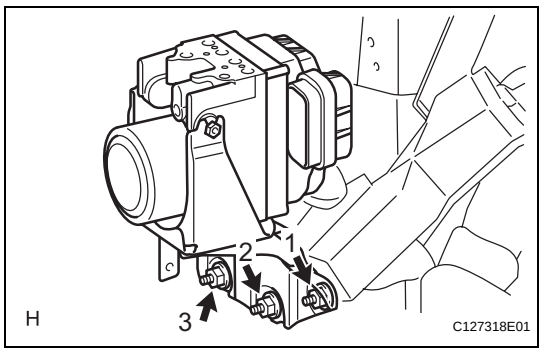

(a) Install the actuator with bracket with the 3 nuts.

Torque: 19 N*m (194 kgf*cm, 14 ft.*lbf)

HINT:

The nuts should be tightened in order from 1 to 3 as shown in the illustration.

NOTICE:

Be careful not to damage the brake tubes.

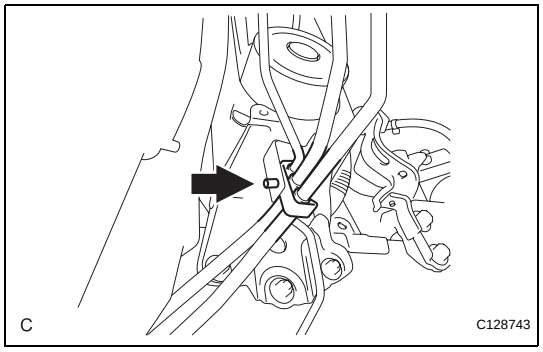

(b) Connect the brake tube clamp to the bracket.

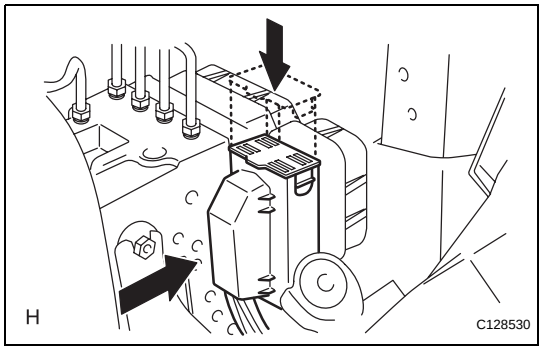

(c) Connect the connector and push the lock lever downward.

BC

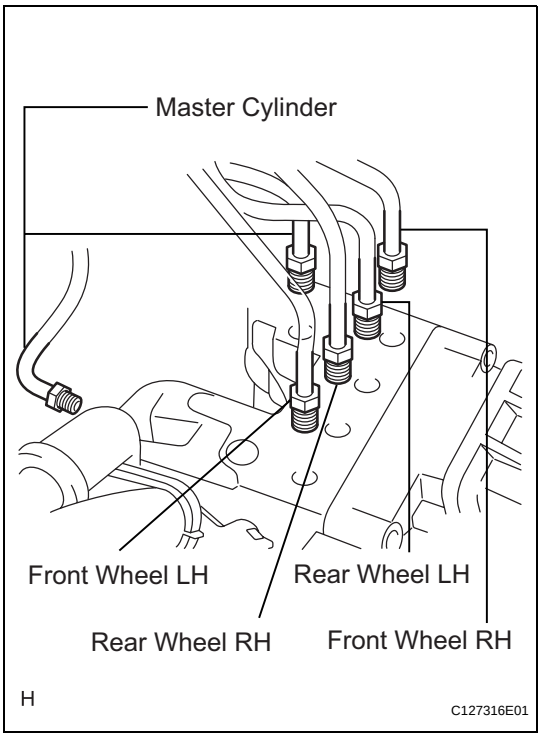

BC

2. CONNECT BRAKE LINES

(a) Using SST, connect the 6 brake lines to the correct locations on the actuator, as shown in the illustration.

SST 09023-00101

Torque: 15.2 N*m (155 kgf*cm, 11 ft.*lbf) without SST
14 N*m (144 kgf*cm, 10 ft.*lbf) with SST

HINT:
Use a torque wrench with a fulcrum length of 30 cm (11.81 in.).

3. FILL RESERVOIR WITH BRAKE FLUID (See page BR-6)

4. BLEED AIR FROM BRAKE MASTER CYLINDER (See page BR-7)

5. BLEED AIR FROM BRAKE LINE (See page BR-7)

6. BLEED AIR FROM ABS AND TRACTION ACTUATOR ASSEMBLY (See page BR-8)

7. CHECK BRAKE FLUID LEVEL IN RESERVOIR (See page BR-6)

8. CHECK FOR BRAKE FLUID LEAKAGE

9. INSTALL AIR CLEANER CASE SUB-ASSEMBLY (for 2AZ-FE)

(a) Install the air cleaner case (see page EM-105).
HINT:
Refer to the procedures from the installation of the air cleaner case up until the installation of the purge VSV.

10. INSTALL AIR CLEANER CASE (for 2GR-FE)

(a) Install the air cleaner case (see page EM-31).
HINT:
Refer to the procedures from the installation of the air cleaner case up until the installation of the air cleaner cap sub-assembly.

11. CONNECT CABLE TO NEGATIVE BATTERY TERMINAL

12. CHECK ABS AND TRACTION ACTUATOR ASSEMBLY WITH INTELLIGENT TESTER

(a) Check the ABS and traction actuator with the intelligent tester (see page BC-180).

ABS AND TRACTION ACTUATOR

COMPONENTS

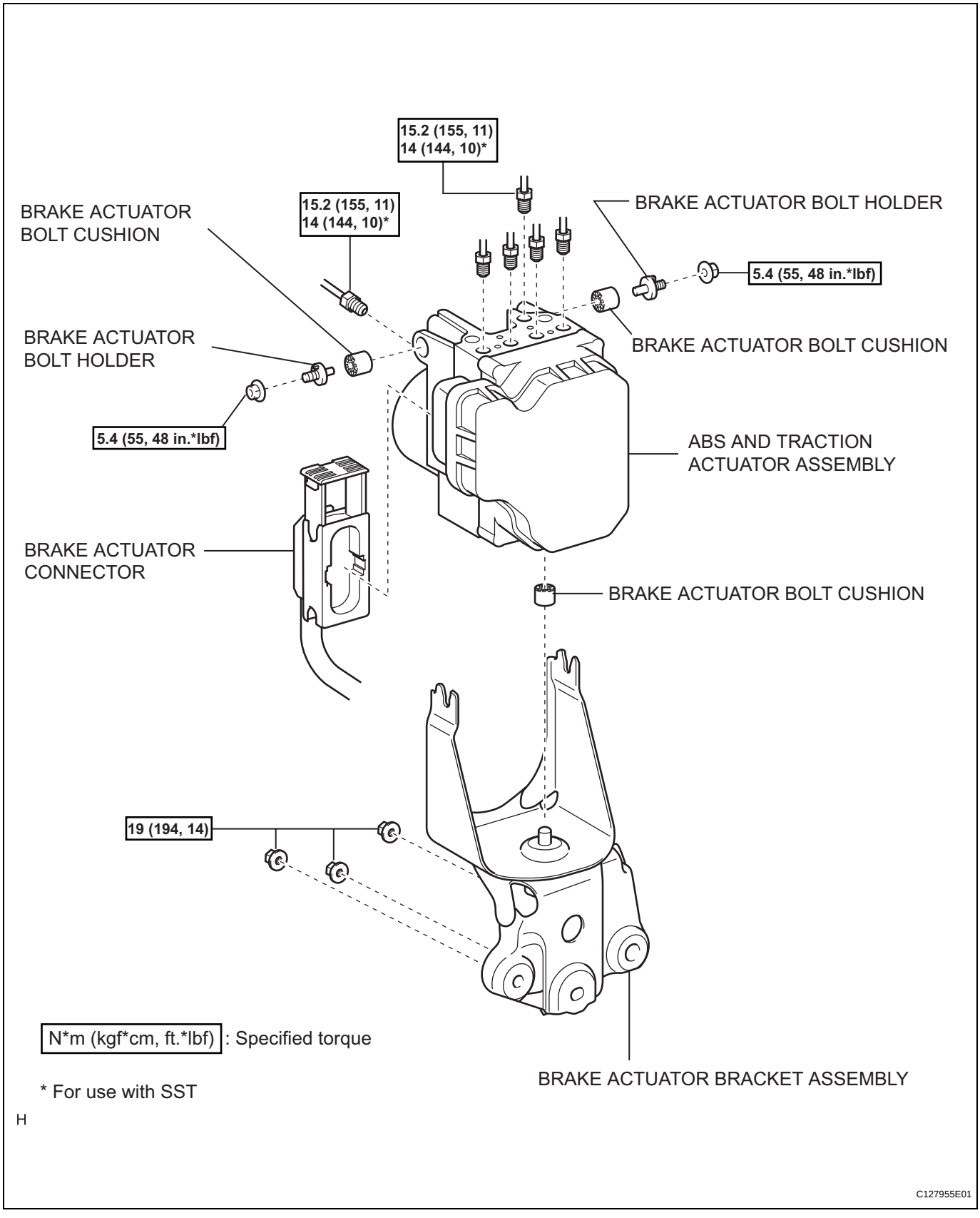

BC

H

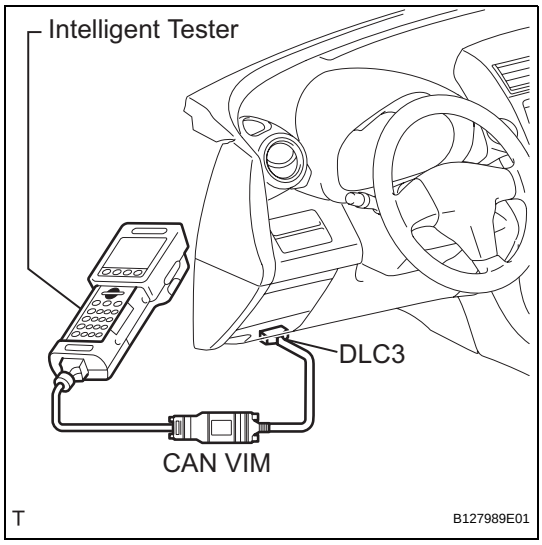

ON-VEHICLE INSPECTION

1. CONNECT INTELLIGENT TESTER

(a) Connect the intelligent tester to the DLC3.
(b) Start the engine and idle it.
(c) Select the Active Test mode on the intelligent tester.
HINT:
Please refer to the intelligent tester operator's manual for further details.

2. CHECK ACTUATOR MOTOR OPERATION

NOTICE:
Do not keep a motor relay ON for more than 5 seconds. When operating it consecutively, wait 20 seconds between each operation.

(a) Turn the motor relay ON and check the actuator motor operation noise.
(b) Turn the motor relay OFF.
(c) Fully depress the brake pedal and hold it for approximately 15 seconds. Check that the pedal's initial depth is maintained for the entire 15 seconds.
(d) Turn the motor relay ON and check that the pedal does not pulsate.
(e) Turn the motor relay OFF and release the pedal.

3. CHECK BRAKE ACTUATOR SOLENOID (for Front Right Wheel)

NOTICE:
- **Be sure to follow the procedures below when turning ON a solenoid.**
- **Do not keep a solenoid ON for more than 10 seconds. When operating it consecutively, wait 20 seconds between each operation.**
- **Do not keep a motor relay ON for more than 5 seconds. When operating it consecutively, wait 20 seconds between each operation.**

(a) With the pedal depressed as much as possible, perform the following operations.
(1) Turn the SFRH and SFRR solenoids ON simultaneously, and check that the pedal cannot be depressed further.
(2) Turn the SFRH and SFRR solenoids OFF simultaneously, and check that the pedal can be depressed further.
(3) Turn the motor relay ON. Check that the pedal returns to the "depressed as much as possible" position.
(b) Turn the motor relay OFF and release the pedal.

4. CHECK BRAKE ACTUATOR SOLENOID (for Front Left Wheel)

(a) Use the same procedures described for the front right wheel to check the solenoids of the front left wheel.
HINT:
Front left wheel: SFLH, SFLR

BC

5. **CHECK BRAKE ACTUATOR SOLENOID (for Rear Right Wheel)**
   (a) Use the same procedures described for the front right wheel to check the solenoids of the rear right wheel.
   HINT:
   Rear right wheel: SRRH, SRRR

6. **CHECK BRAKE ACTUATOR SOLENOID (for Rear Left Wheel)**
   (a) Use the same procedures described for the front right wheel to check the solenoids of the rear left wheel.
   HINT:
   Rear left wheel: SRLH, SRLR

7. **CHECK AND CLEAR DTC**
   (a) Check and clear the DTC (see page BC-47).

REMOVAL

(2005/11-2006/01)

1. **DISCONNECT CABLE FROM NEGATIVE BATTERY TERMINAL**
   CAUTION:
   Wait at least 90 seconds after disconnecting the cable from the negative (-) battery terminal to prevent airbag and seat belt pretensioner activation.

2. **REMOVE AIR CLEANER CASE SUB-ASSEMBLY**
   (a) Remove the air cleaner case (see page EM-98).
   HINT:
   Refer to the procedures from the removal of the purge VSV up until the removal of the air cleaner case.

3. **DRAIN BRAKE FLUID**
   NOTICE:
   Wash off brake fluid immediately if it comes in contact with any painted surface.

4. **DISCONNECT BRAKE LINES**
   (a) Using SST, disconnect the 6 brake lines from the actuator.
   SST 09023-00101

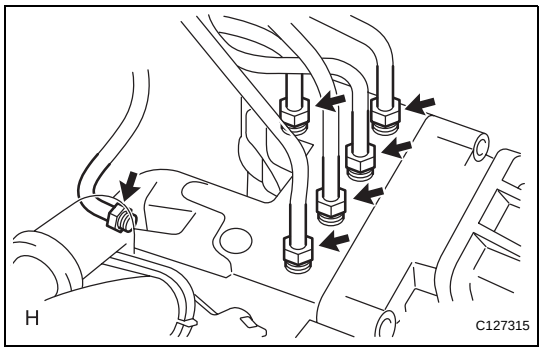

(b) Place tags or marks to identify the installation locations of each brake line.

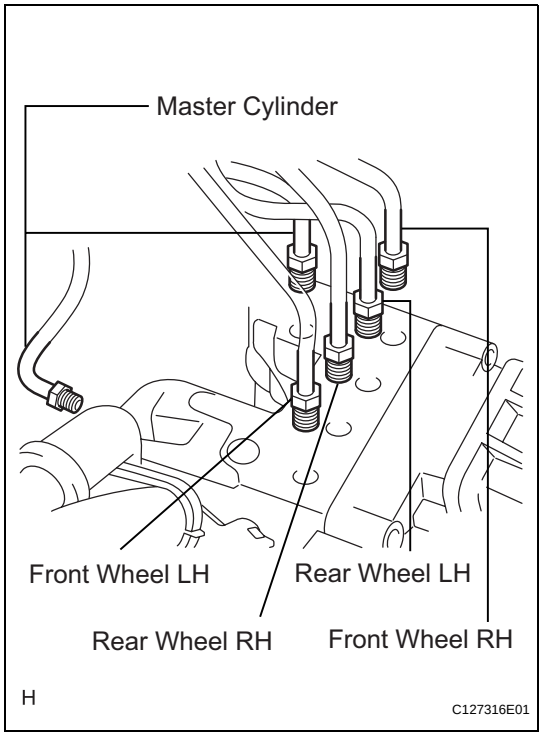

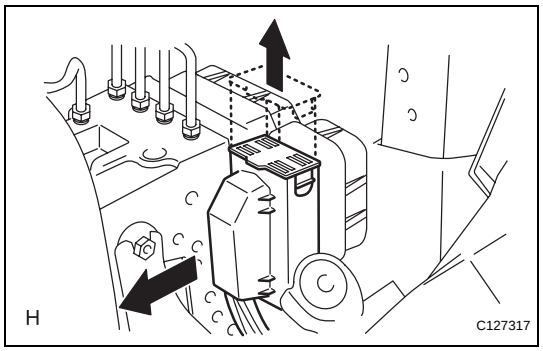

5. REMOVE ABS AND TRACTION ACTUATOR ASSEMBLY WITH BRACKET

(a) Pull the lock lever upward and disconnect the connector.

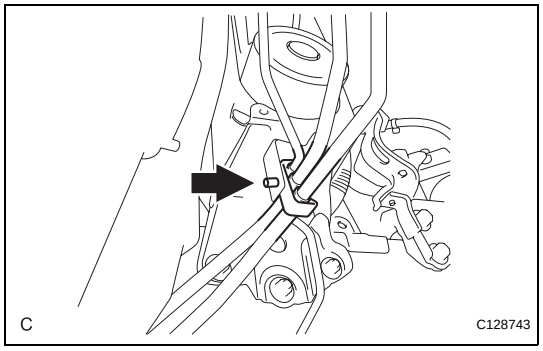

(b) Disconnect the brake tube clamp from the bracket.

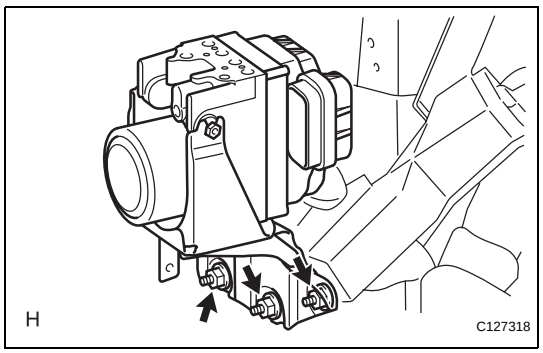

(c) Remove the 3 nuts and actuator with bracket.
NOTICE:
Be careful not to damage the brake tubes.

BC

BRAKE PEDAL LOAD SENSING SWITCH

ON-VEHICLE INSPECTION

1. INSPECT BRAKE PEDAL LOAD SENSING SWITCH

HINT:

- Do not remove the brake pedal load sensing switch from the brake pedal support.
- When there is a malfunction in the brake pedal load sensing switch, replace the brake pedal support.

(a) Disconnect the brake pedal load sensing switch connector.

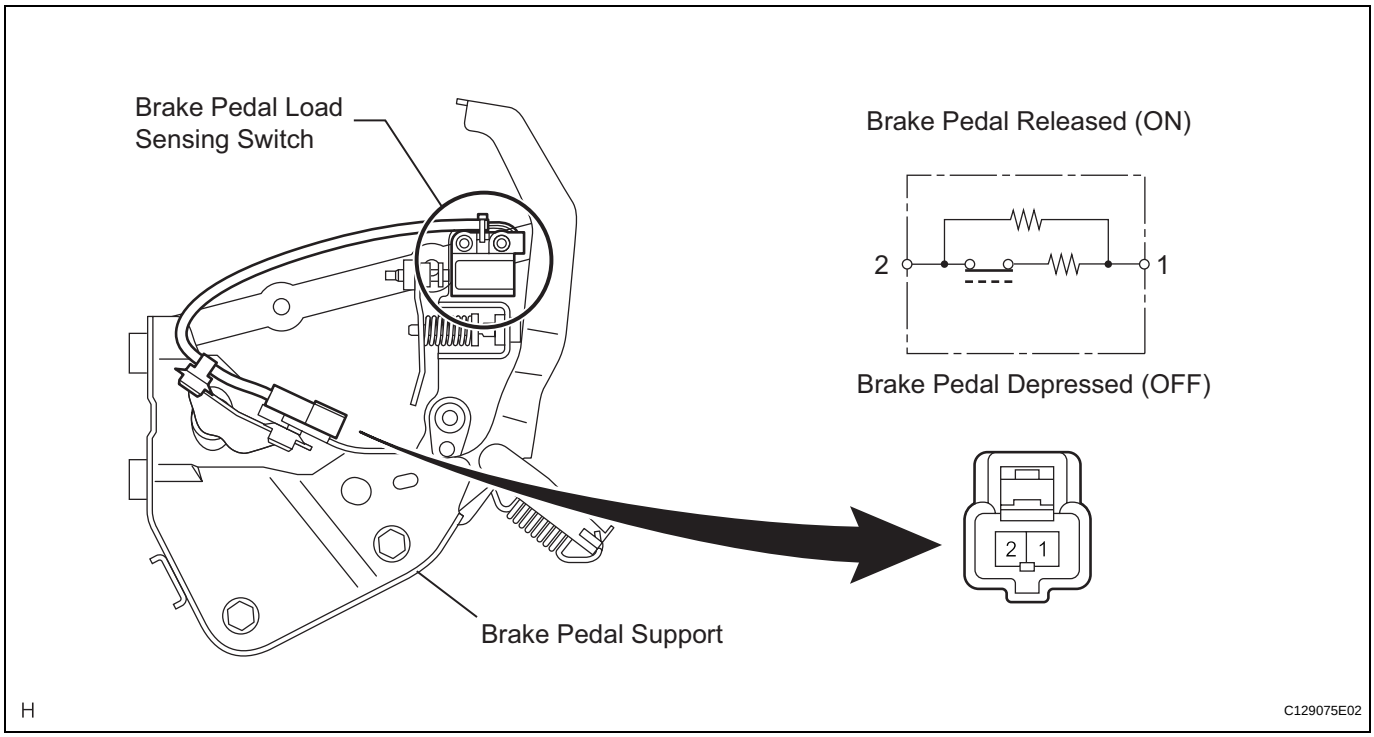

(b) Measure the resistance of the switch.

Standard resistance

Tester Connection	Condition	Specified Condition
1 - 2	Brake pedal depressed	Approx. 1 kΩ
1 - 2	Brake pedal released	Approx. 213 Ω

If the value is not as specified, replace the brake pedal support assembly (see page BR-12).

DOWNHILL ASSIST CONTROL SWITCH

COMPONENTS

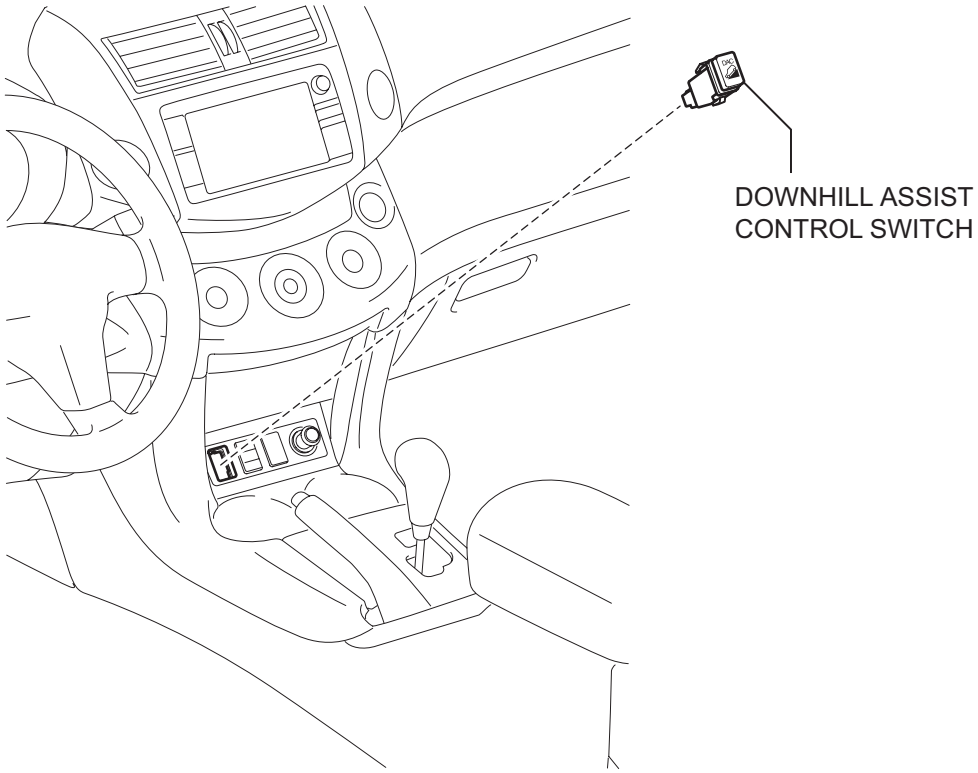

T

C129079E01

REMOVAL

1. **DISCONNECT CABLE FROM NEGATIVE BATTERY TERMINAL**
   CAUTION:
   Wait at least 90 seconds after disconnecting the cable from the negative (-) battery terminal to prevent airbag and seat belt pretensioner activation.
2. **REMOVE DOWNHILL ASSIST CONTROL SWITCH**
   (a) Detach the 2 claws and remove the switch.

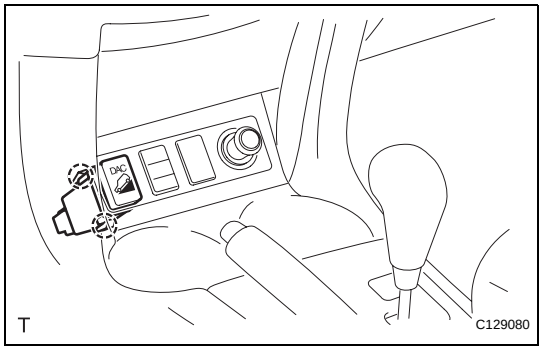

INSPECTION

1. **CHECK DOWNHILL ASSIST CONTROL SWITCH**
   (a) Measure the resistance of the switch.
   Standard resistance

Tester Connection	Switch Condition	Specified Condition
1 - 4	Released	10 kΩ or higher
1 - 4	Pushed in	Below 25 Ω

   If the result is not as specified, replace the switch.
   (b) Check illumination operation.
   (1) Connect the battery's positive (+) lead to terminal 3 and negative (-) lead to terminal 2. Then check that the bulb illuminates.
   OK:
   Bulb illuminates.
   If the result is not as specified, replace the switch.

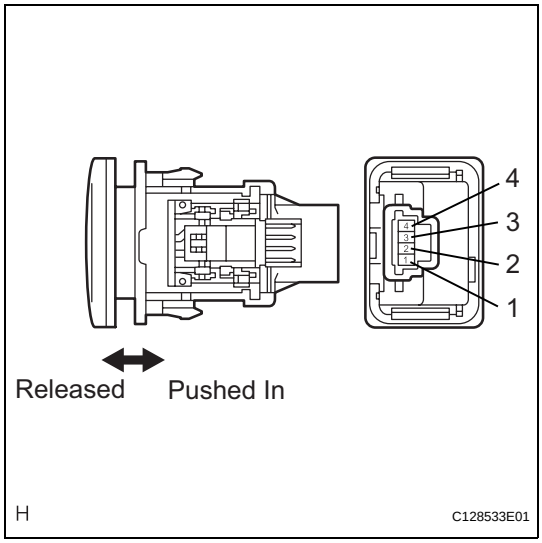

INSTALLATION

1. **INSTALL DOWNHILL ASSIST CONTROL SWITCH**
   (a) Attach the 2 claws to install the switch.
2. **CONNECT CABLE TO NEGATIVE BATTERY TERMINAL**

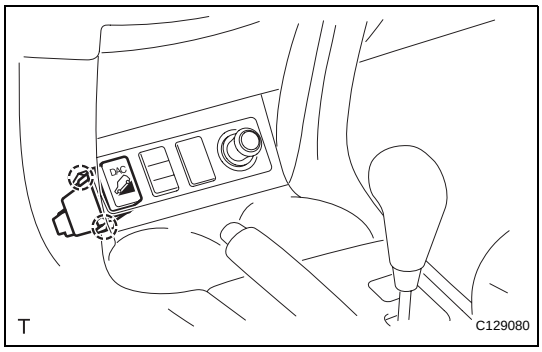

INSPECTION

1. INSPECT FRONT SPEED SENSOR

(a) Check the speed sensor. If any of the following occurs, replace the speed sensor with a new one.

- The surface of the speed sensor is cracked, dented, or chipped.
- The connector or wire harness is scratched, cracked, or damaged.
- The speed sensor has been dropped.

INSTALLATION

HINT:

- Use the same procedures for the LH side and RH side.
- The procedures listed below are for the LH side.

1. INSTALL SPEED SENSOR FRONT LH

NOTICE:

To prevent interference with other parts, do not twist the sensor wire's painted line areas when installing it.

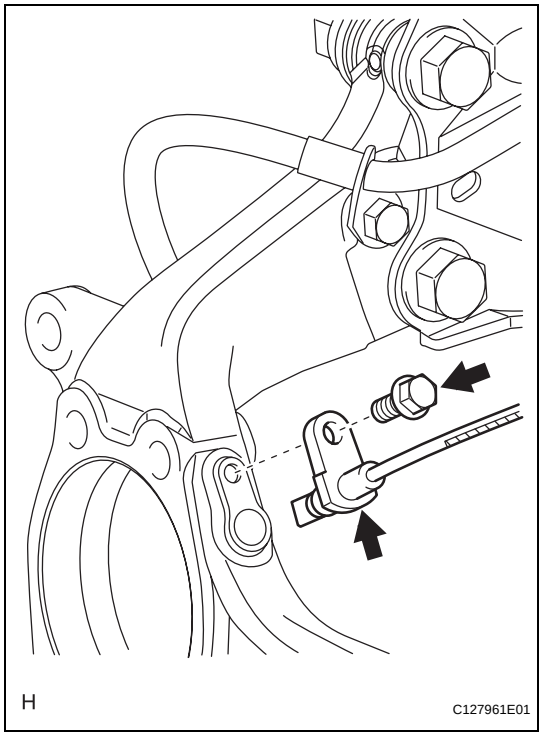

(a) Set the sensor body to the knuckle, and then install the sensor with the bolt.

Torque: 8.5 N*m (87 kgf*cm, 75 in.*lbf)

NOTICE:

- **Keep the sensor tip and sensor installation hole free from foreign matter.**
- **Firmly insert the sensor body into the knuckle before tightening the bolt.**
- **After installing the sensor to the knuckle, make sure that there is no clearance between the sensor stay and knuckle. Also make sure that no foreign matter is stuck between the parts.**
- **To prevent interference between the sensor and magnetic rotor, do not rotate the sensor body during or after the insertion of the sensor body to the knuckle.**

(b) Install the sensor clamp and sensor clip as follows.

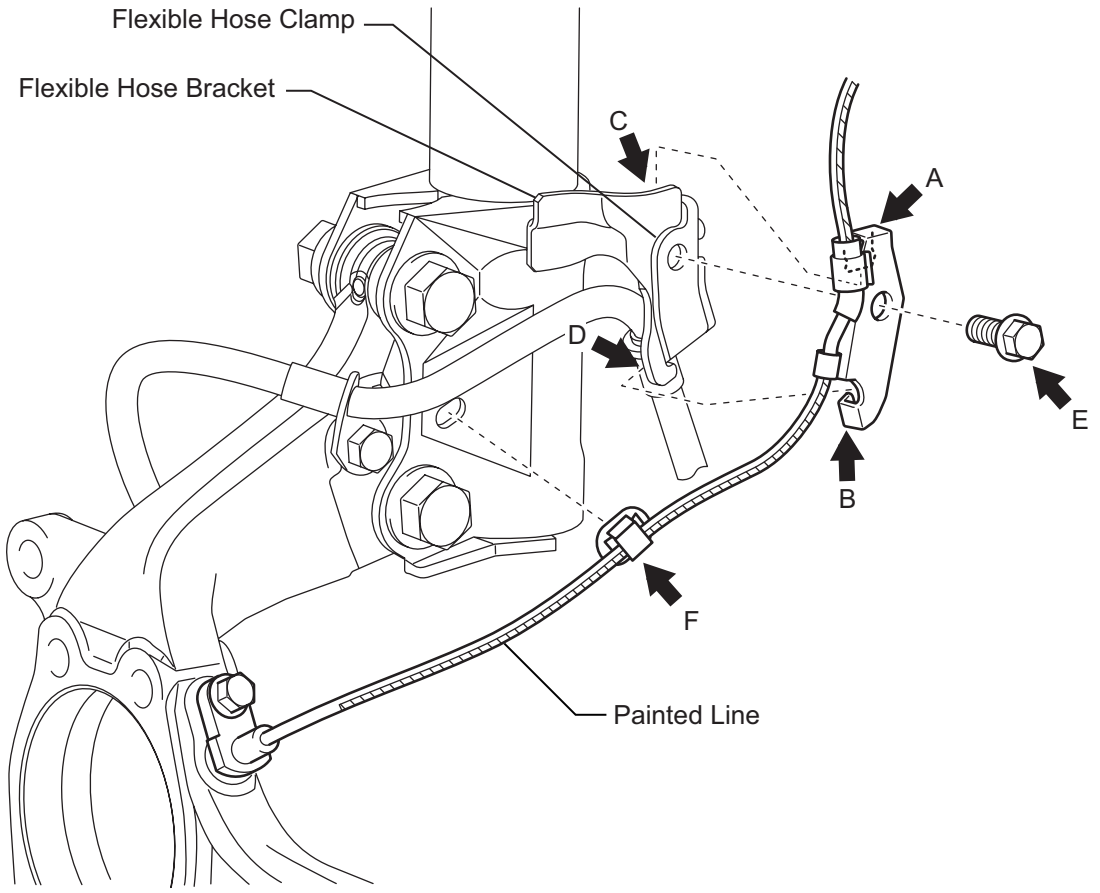

(1) Set the flexible hose clamp on the flexible hose bracket.

(2) Simultaneously perform the following: 1) hang the hook part of the sensor clamp (labeled A) on the flexible hose bracket (labeled C); and 2) insert the hook part of the sensor clamp (labeled B) into the flexible hose bracket (labeled D).
NOTICE:
Do not twist the sensor wire when installing the clamp.

(3) Tighten together the sensor clamp, flexible hose clamp and flexible hose bracket with the bolt (labeled E).
Torque: 18.5 N*m (189 kgf*cm, 14 ft.*lbf)

(4) Insert the sensor clip (labeled F) into the hole on the absorber lower bracket.

BC

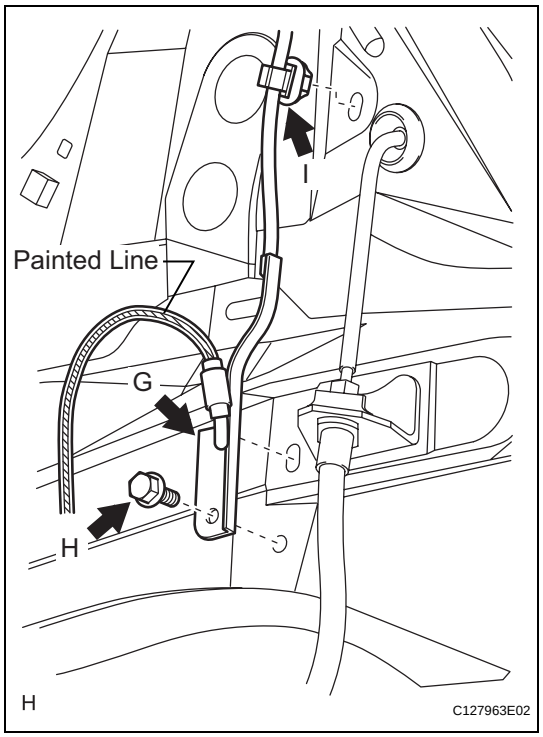

(c) Install the sensor clamp, and sensor clip as follows.
  (1) Set the sensor clamp (labeled G) on the side member, and then tighten it with the bolt (labeled H).
  Torque: 8.5 N*m (87 kgf*cm, 75 in.*lbf)
  NOTICE:
  Do not twist the sensor wire when installing the clamp.
  (2) Insert the sensor clip (labeled I) into the hole on the apron.

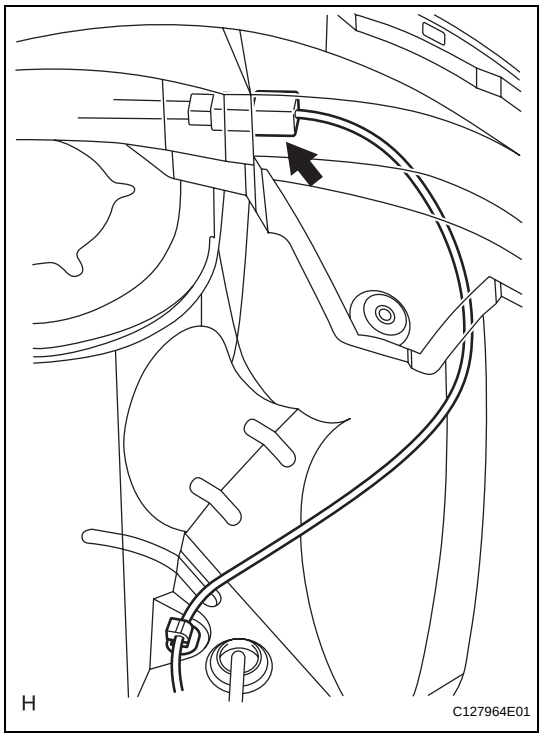

(d) Connect the sensor connector.

BC

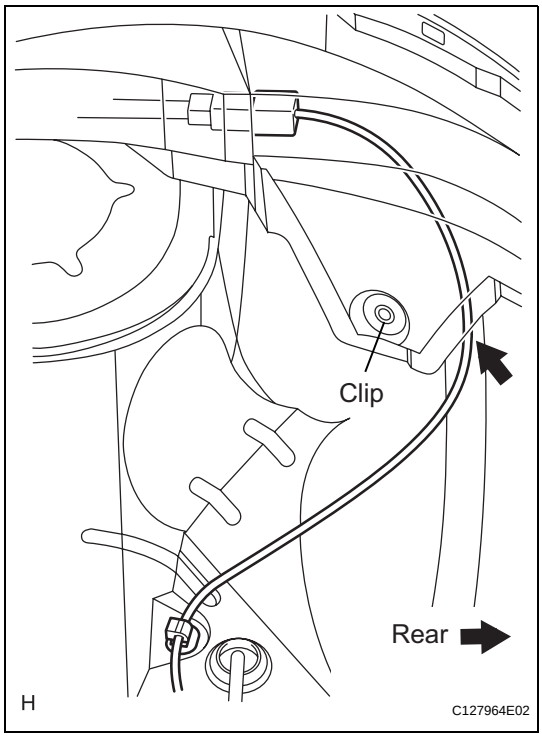

2. **INSTALL FRONT FENDER LINER LH**
   HINT:
   Install the fender liner so that the sensor wire harness passes beyond the fender liner installation clip towards the rear side of the vehicle.

3. **INSTALL FRONT WHEEL**
   Torque: 103 N*m (1,050 kgf*cm, 76 ft.*lbf)

4. **CONNECT CABLE TO NEGATIVE BATTERY TERMINAL**

5. **CHECK ABS SPEED SENSOR SIGNAL**
   (a) Check the speed sensor signal (see page BC-28).

FRONT SPEED SENSOR

COMPONENTS

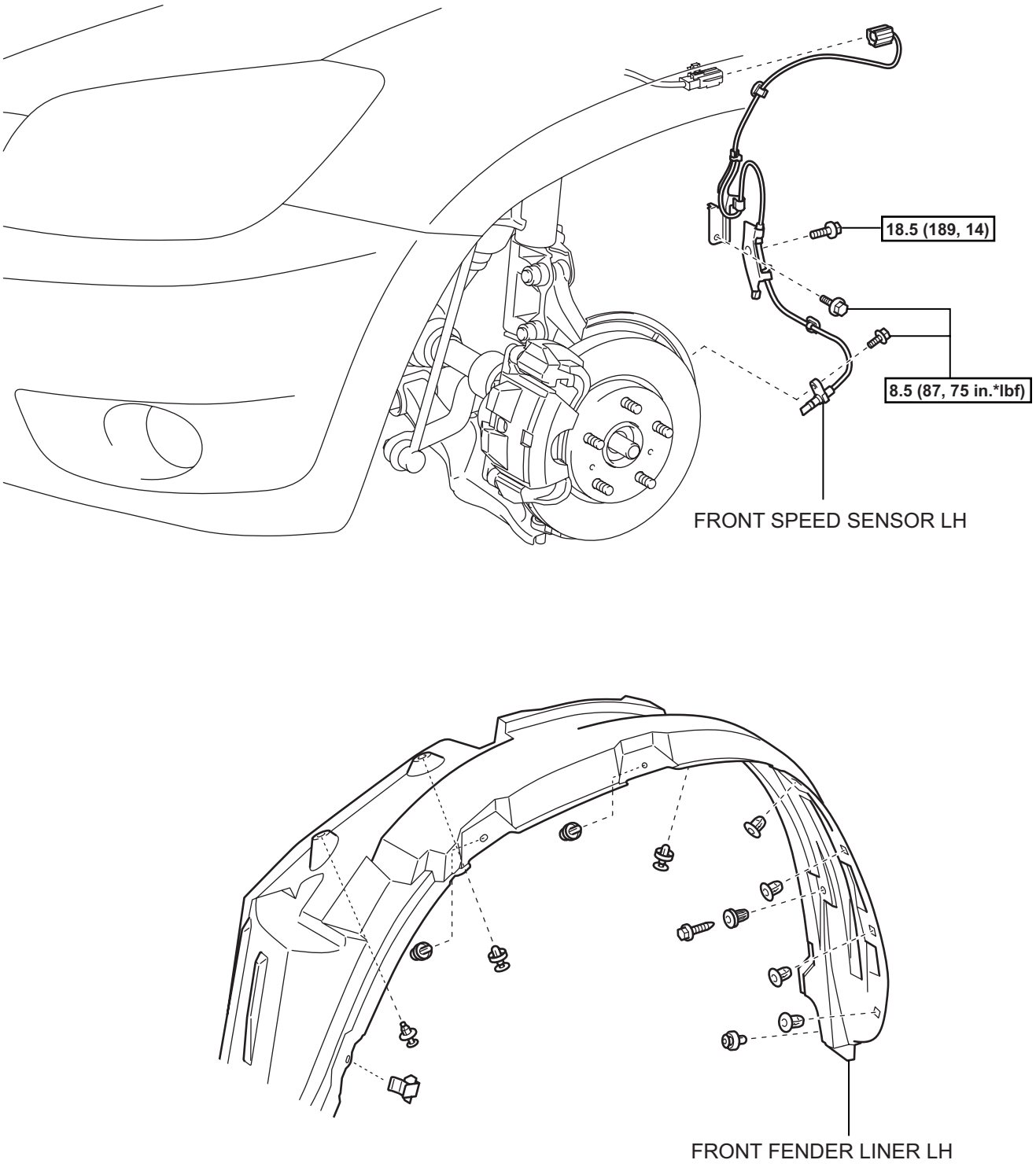

N*m (kgf*cm, ft.*lbf) : Specified torque

H

C127325E01

REMOVAL

HINT:

- Use the same procedures for the LH side and RH side.
- The procedures listed below are for the LH side.

1. DISCONNECT CABLE FROM NEGATIVE BATTERY TERMINAL

CAUTION:

Wait at least 90 seconds after disconnecting the cable from the negative (-) battery terminal to prevent airbag and seat belt pretensioner activation.

2. REMOVE FRONT WHEEL

3. REMOVE FRONT FENDER LINER LH

4. REMOVE FRONT SPEED SENSOR LH

(a) Disconnect the sensor connector.

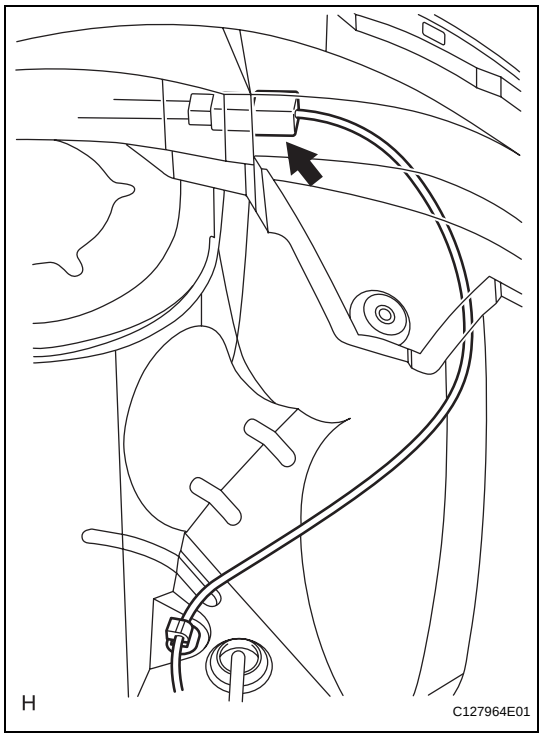

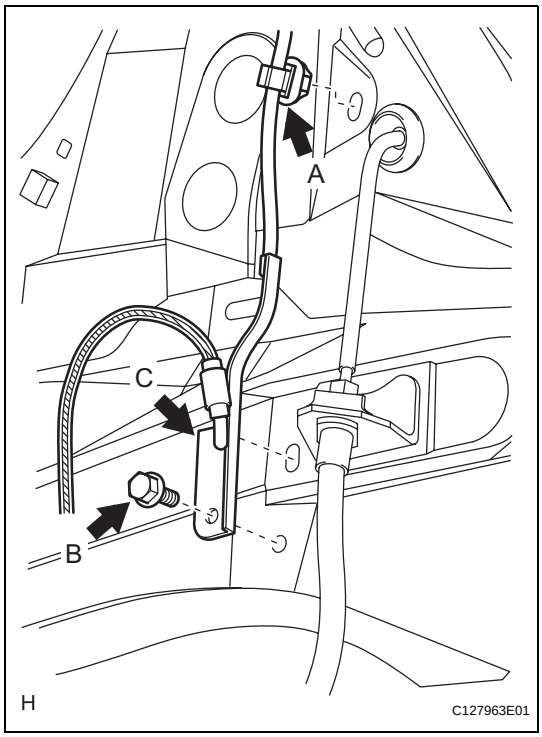

(b) Remove the sensor clip (labeled A), bolt (labeled B) and sensor clamp (labeled C).
(c) Remove the sensor clip (labeled D), bolt (labeled E) and sensor clamp (labeled F).

BC

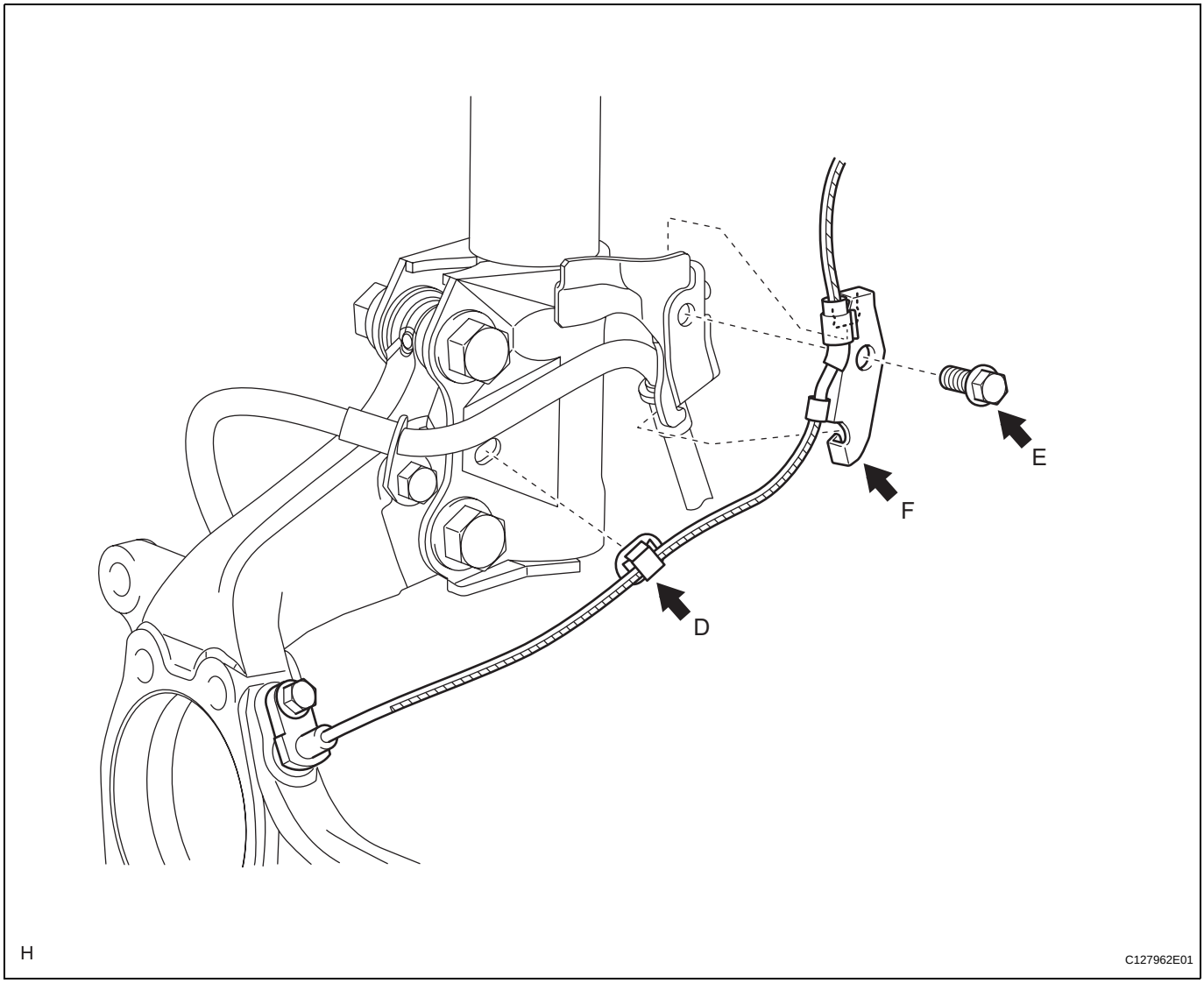

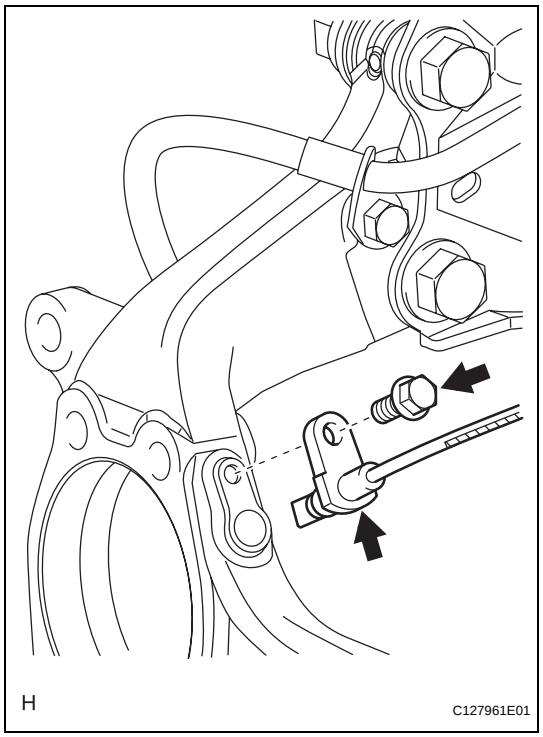

(d) Remove the bolt and sensor body from the knuckle.
NOTICE:
Keep the sensor tip and sensor installation hole free from foreign matter.

INSPECTION

1. INSPECT REAR SPEED SENSOR

(a) Check the speed sensor. If any of the following occurs, replace the speed sensor with a new one.

- The surface of the speed sensor is cracked, dented, or chipped off.
- The connector or wire harness is scratched, cracked, or damaged.
- The speed sensor has been dropped.

INSTALLATION

HINT:
- Use the same procedures for the LH side and RH side.
- The procedures listed below are for the LH side.

1. INSTALL REAR SPEED SENSOR LH

NOTICE:
To prevent interference with other parts, do not twist the sensor wire's painted line areas when installing it.

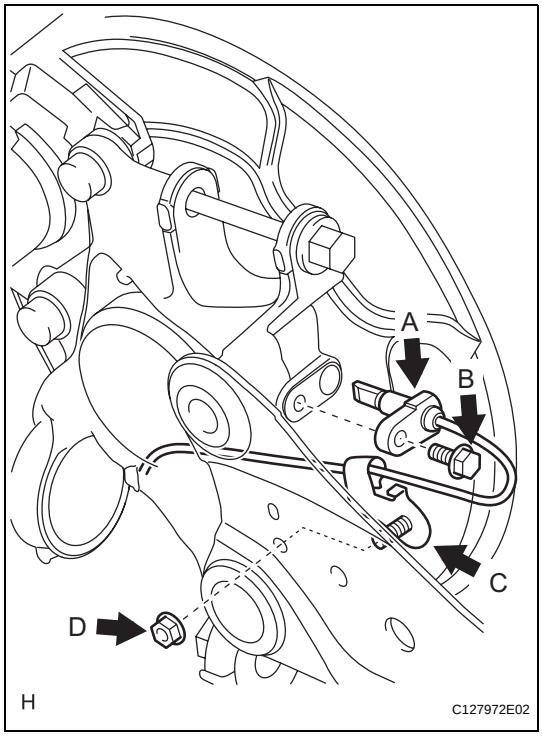

(a) Install the sensor (labeled A) with the bolt (labeled B).
Torque: 8.5 N*m (87 kgf*cm, 75 in.*lbf)
NOTICE:
- **Keep the sensor tip and sensor installation hole free from foreign matter.**
- **To prevent interference with the bearing rotor, do not rotate the sensor body when inserting the sensor body or after inserting the sensor body.**

(b) Install the sensor clamp (labeled C) with the nut (labeled D).
Torque: 5.0 N*m (51 kgf*cm, 44 in.*lbf)

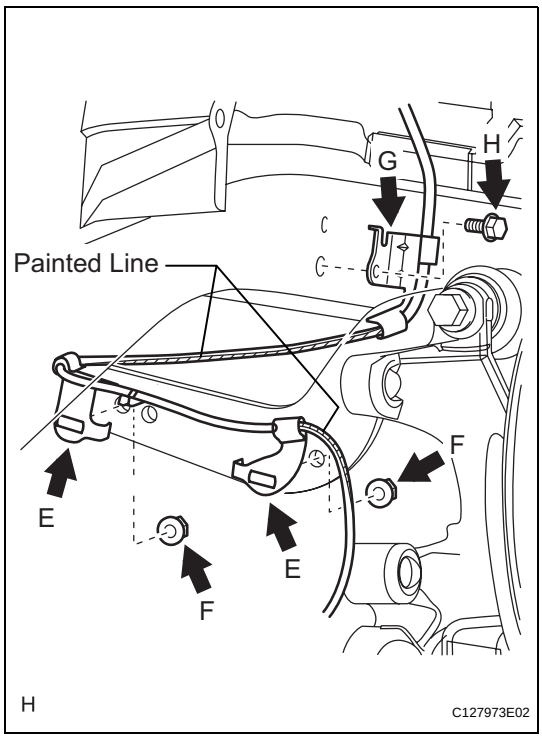

(c) Install the sensor clamps (labeled E) with the 2 nuts (labeled F).
Torque: 5.0 N*m (51 kgf*cm, 44 in.*lbf)
NOTICE:
Do not twist the sensor wire when installing the clamps.

(d) Install the sensor clamp (labeled G) with the bolt (labeled H).
Torque: 8.5 N*m (87 kgf*cm, 75 in.*lbf)
NOTICE:
Do not twist the sensor wire when installing the clamp.

BC

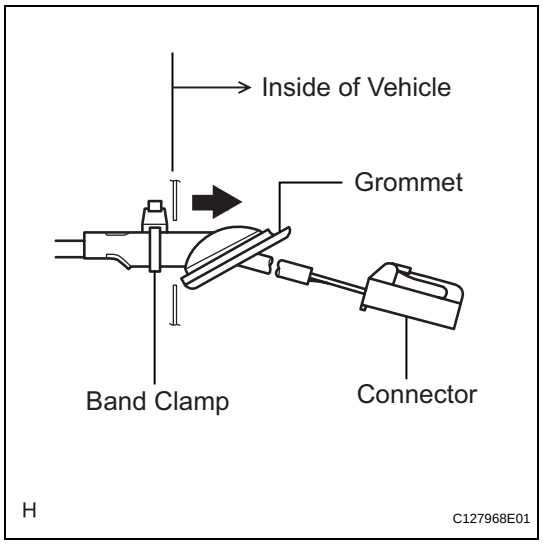

(e) Insert the connector and grommet to the inside of the vehicle through the passage hole in the wheel house.
NOTICE:
Make sure the grommet's band clamp remains on the outside of the vehicle.

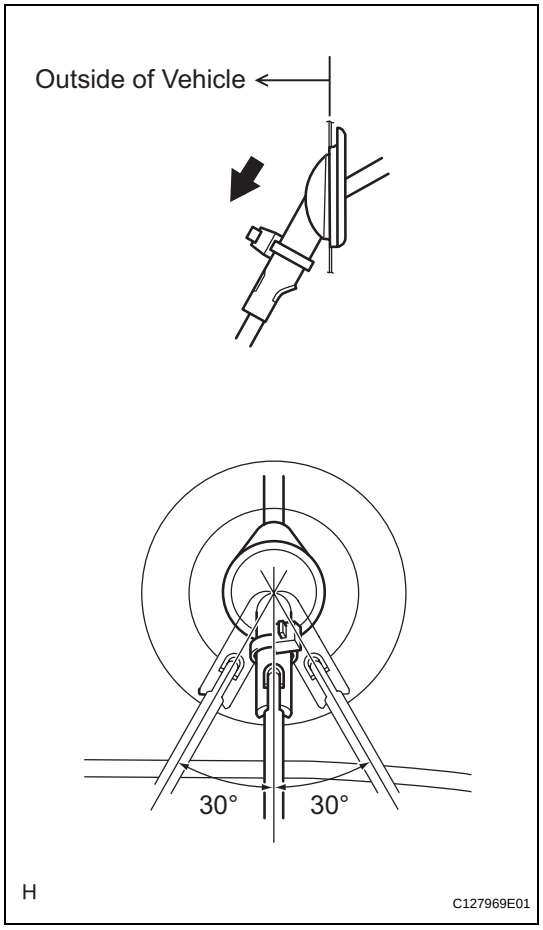

(f) Hold the grommet and pull it from the inside of the vehicle to the outside of the vehicle. Then fix it in place so that it is not tilted.
NOTICE:
- **When pulling out the grommet, do not grip the sensor wire.**
- **Fix the grommet in place within the range shown in the illustration.**

BC

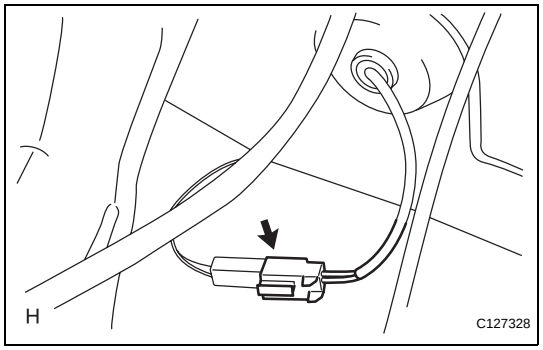

(g) Connect the speed sensor connector.

2. INSTALL DECK TRIM SIDE PANEL ASSEMBLY LH

(a) Install the deck trim side panel LH (see page IR-49).
HINT:
Refer to the procedures from the installation of the deck trim side panel LH up until the installation of the rear door scuff plate LH.

3. INSTALL REAR WHEEL
Torque: 103 N*m (1,050 kgf*cm, 76 ft.*lbf)

4. **CONNECT CABLE TO NEGATIVE BATTERY TERMINAL**

5. **CHECK SPEED SENSOR SIGNAL**
   (a) Check the speed sensor signal (see page BC-28).

REAR SPEED SENSOR (for 4WD)

COMPONENTS

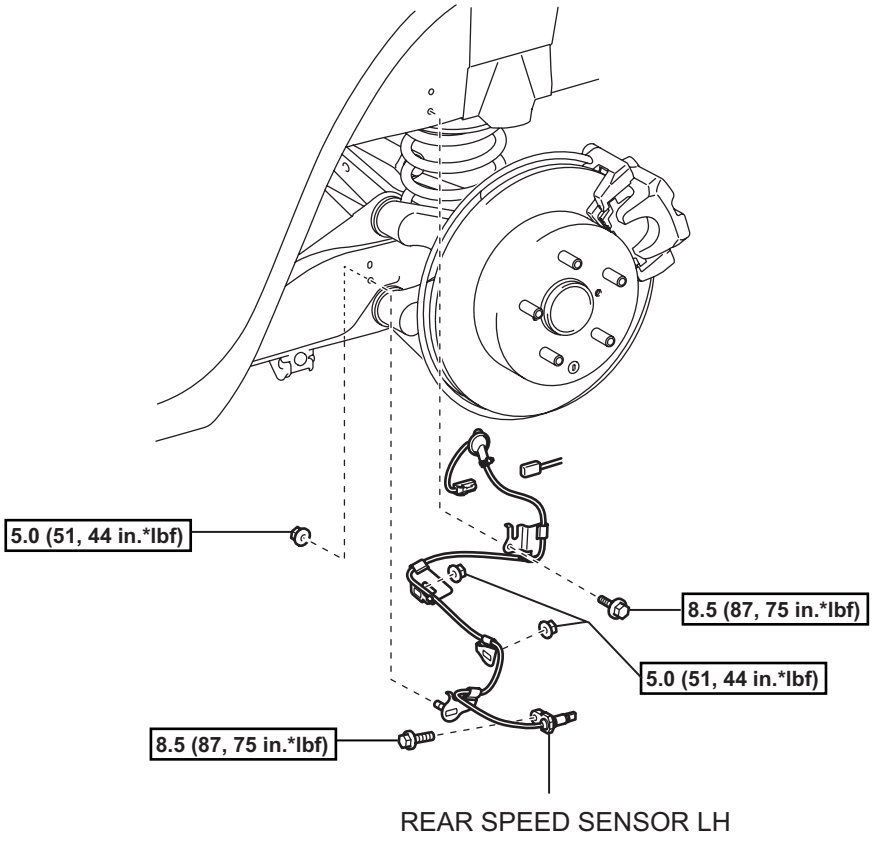

N*m (kgf*cm, ft.*lbf) : Specified torque

H

C128536E01

REMOVAL

HINT:

- Use the same procedures for the LH side and RH side.
- The procedures listed below are for the LH side.

1. DISCONNECT CABLE FROM NEGATIVE BATTERY TERMINAL

CAUTION:

Wait at least 90 seconds after disconnecting the cable from the negative (-) battery terminal to prevent airbag and seat belt pretensioner activation.

2. REMOVE REAR WHEEL

3. REMOVE DECK TRIM SIDE PANEL ASSEMBLY LH

(a) Remove the deck trim side panel LH (see page IR-26).

HINT:

Refer to the procedures from the removal of the rear door scuff plate LH up until the removal of the deck trim side panel assembly LH.

4. REMOVE REAR SPEED SENSOR LH

(a) Disconnect the speed sensor connector.

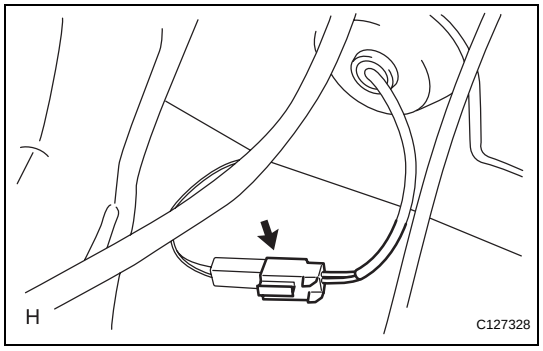

(b) Disconnect the grommet of the speed sensor wire from the hole of the wheel house.

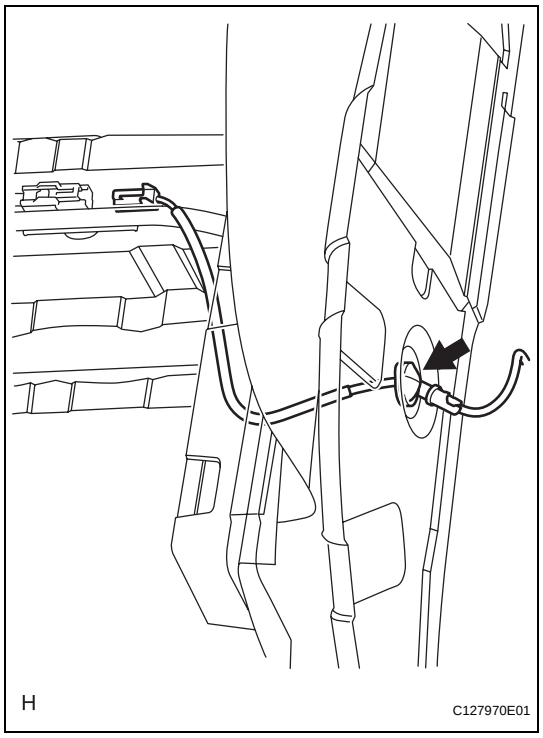

BC

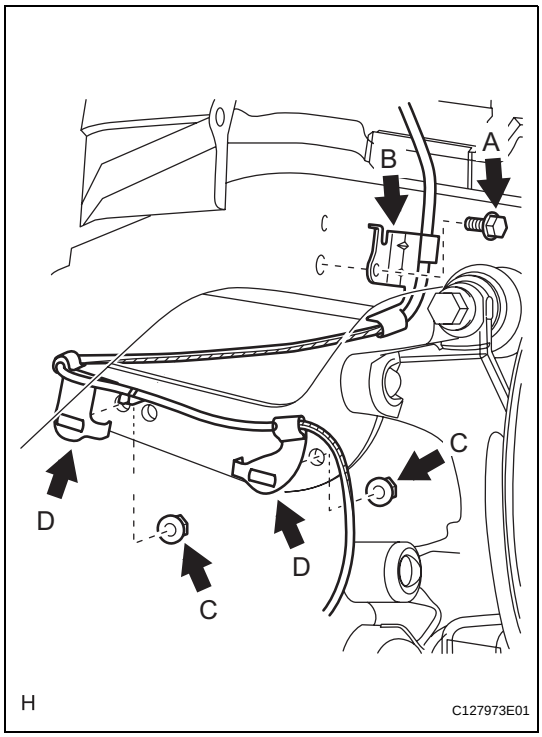

(c) Remove the bolt (labeled A) and sensor clamp (labeled B) from the side member.
(d) Remove the 2 nuts (labeled C) and sensor clamps (labeled D) from the upper arm.

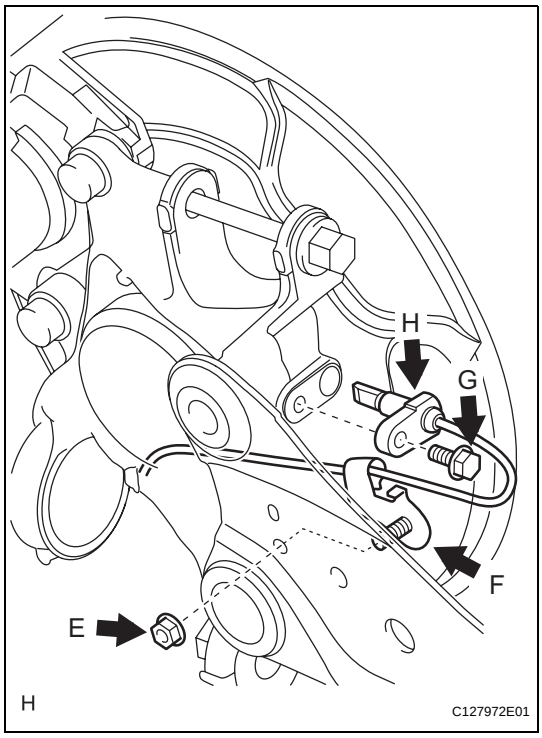

(e) Remove the nut (labeled E) and sensor clamp (labeled F) from the trailing arm.
(f) Remove the bolt (labeled G) and sensor body (labeled H) from the carrier.
NOTICE:
Keep the sensor tip and sensor installation hole free from foreign matter.

INSPECTION

1. INSPECT SKID CONTROL SENSOR

(a) Check the speed sensor. If any of the following occurs, replace the speed sensor with a new one.

- The surface of the speed sensor is cracked, dented, or chipped.
- The speed sensor has been dropped.

2. INSPECT SKID CONTROL SENSOR WIRE

(a) Check the sensor wire. If any of the following occurs, replace the sensor wire with a new one.
The connector or wire harness is scratched, cracked, or damaged.

INSTALLATION

HINT:
- Use the same procedures for the LH side and RH side.
- The procedures listed below are for the LH side.

1. INSTALL SKID CONTROL SENSOR LH

(a) Clean the contact surfaces of the axle hub and speed sensor.
NOTICE:
Make sure the sensor rotor is clean.

(b) Place the speed sensor on the axle hub so that the connector position is as high as possible when the axle hub is installed to the vehicle.

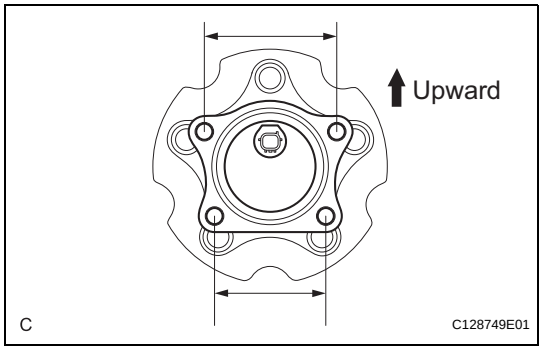

BC

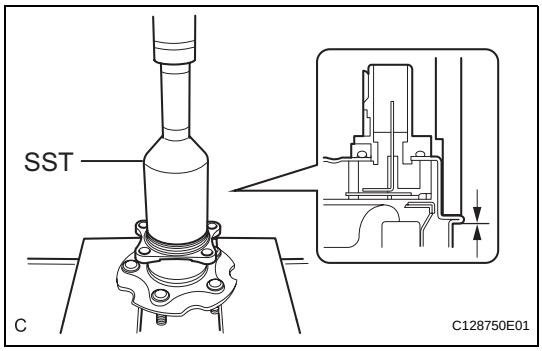

(c) Using SST and a press, press the speed sensor into the hub and bearing.
SST 09214-76011
NOTICE:
- **Do not tap the speed sensor directly with a hammer.**
- **Check that the speed sensor detection part is clean.**
- **Press in the speed sensor straight and slowly.**

2. INSTALL REAR AXLE HUB AND BEARING ASSEMBLY LH

(a) Install the rear axle hub and bearing LH (see page AH-18).

3. INSTALL REAR DISC (See page BR-58)

4. INSTALL REAR DISC BRAKE CYLINDER MOUNTING LH (See page BR-60)

5. INSTALL SKID CONTROL SENSOR WIRE
NOTICE:
To prevent interference with other parts, do not twist the sensor wire's painted line areas when installing it.

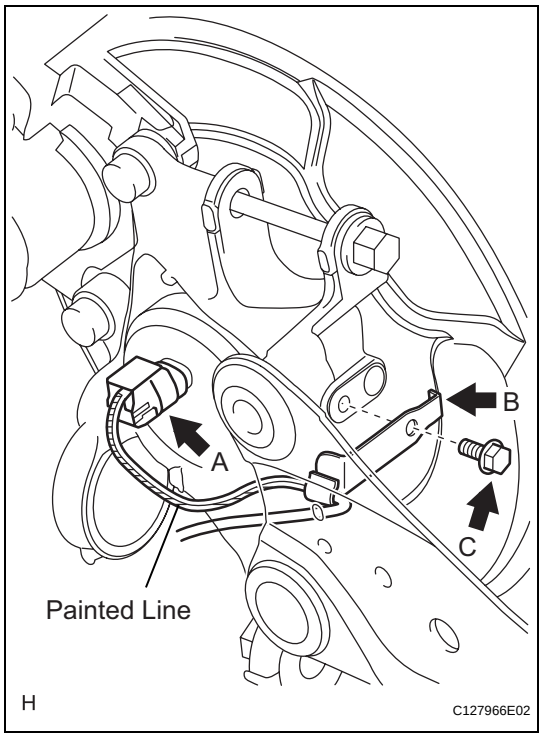

(a) Connect the skid control sensor wire connector (labeled A) to the speed sensor.

(b) Install the sensor clamp (labeled B) with the bolt (labeled C).
Torque: 8.5 N*m (87 kgf*cm, 75 in.*lbf)
NOTICE:
Do not twist the sensor wire when installing the clamp.

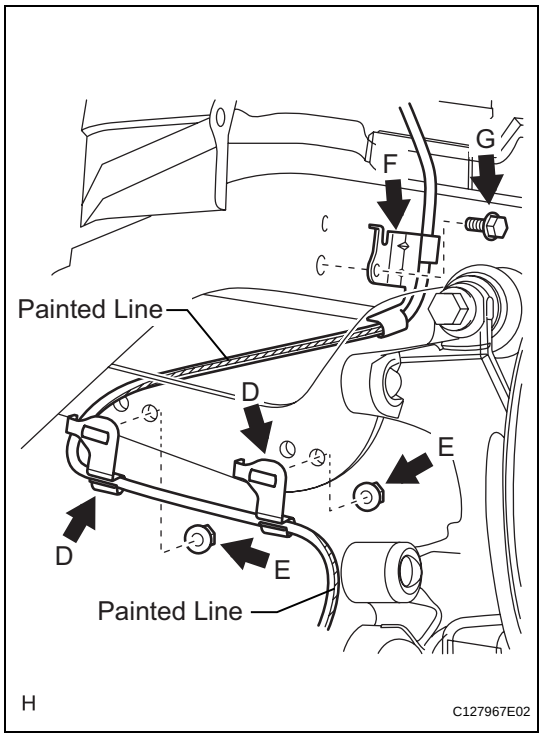

(c) Install the 2 sensor clamps (labeled D) with the 2 nuts (labeled E).
Torque: 5.0 N*m (51 kgf*cm, 44 in.*lbf)
NOTICE:
Do not twist the sensor wire when installing the clamps.

(d) Install the sensor clamp (labeled F) with the bolt (labeled G).
Torque: 8.5 N*m (87 kgf*cm, 75 in.*lbf)
NOTICE:
Do not twist the sensor wire when installing the clamp.

BC

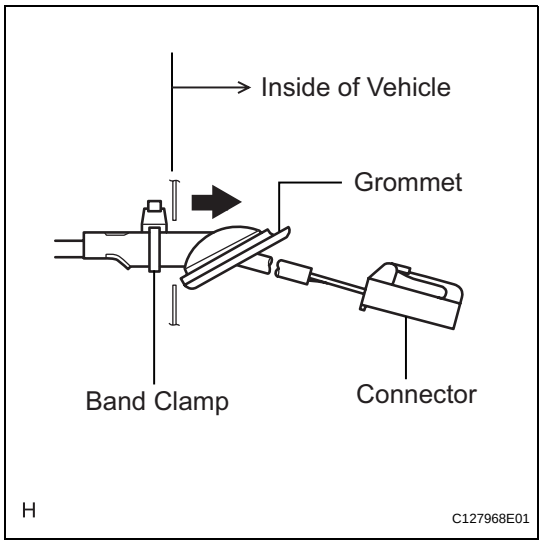

(e) Insert the connector and grommet to the inside of the vehicle through the hole in the wheel house.
NOTICE:
Make sure the grommet's band clamp remains on the outside of the vehicle.

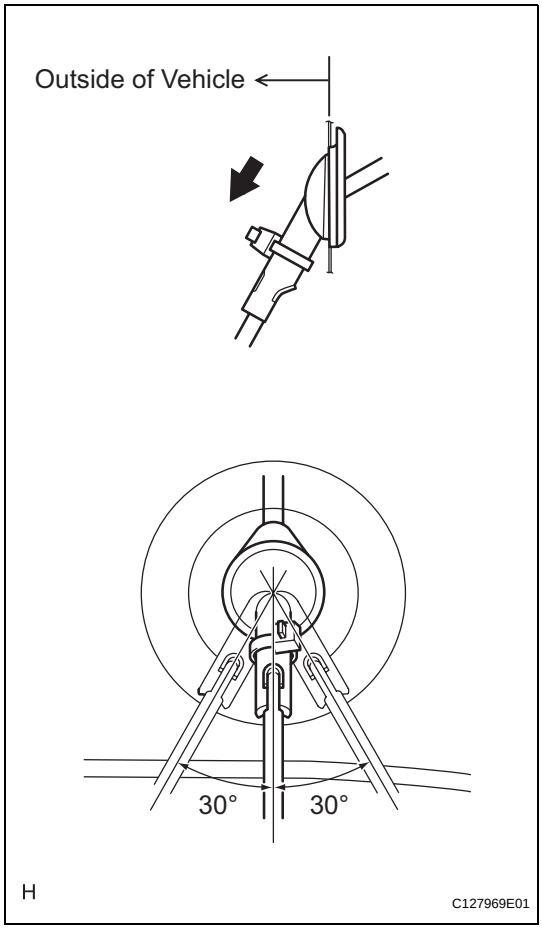

(f) Hold the grommet and pull it from the inside of the vehicle to the outside of the vehicle. Then fix it in place so that it is not tilted.
NOTICE:
- **When pulling out the grommet, do not grip the sensor wire.**
- **Fix the grommet in place within the range shown in the illustration.**

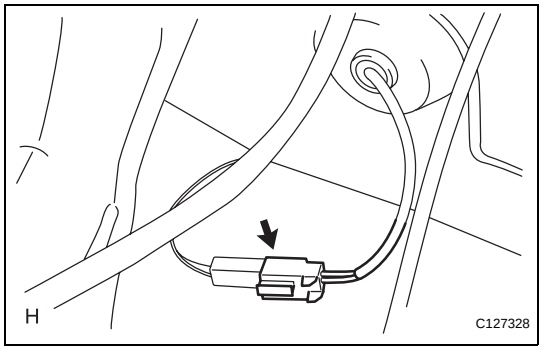

(g) Connect the skid control sensor wire connector.

6. INSTALL DECK TRIM SIDE PANEL ASSEMBLY LH

(a) Install the deck trim side panel LH (see page IR-49).
HINT:
Refer to the procedures from the installation of the deck trim side panel LH up until the installation of the rear door scuff plate LH.

7. INSTALL REAR WHEEL
Torque: 103 N*m (1,050 kgf*cm, 76 ft.*lbf)

8. **CONNECT CABLE TO NEGATIVE BATTERY TERMINAL**

9. **CHECK SPEED SENSOR SIGNAL**
   (a) Check the speed sensor signal (see page BC-28).

SKID CONTROL SENSOR (for 2WD)

COMPONENTS

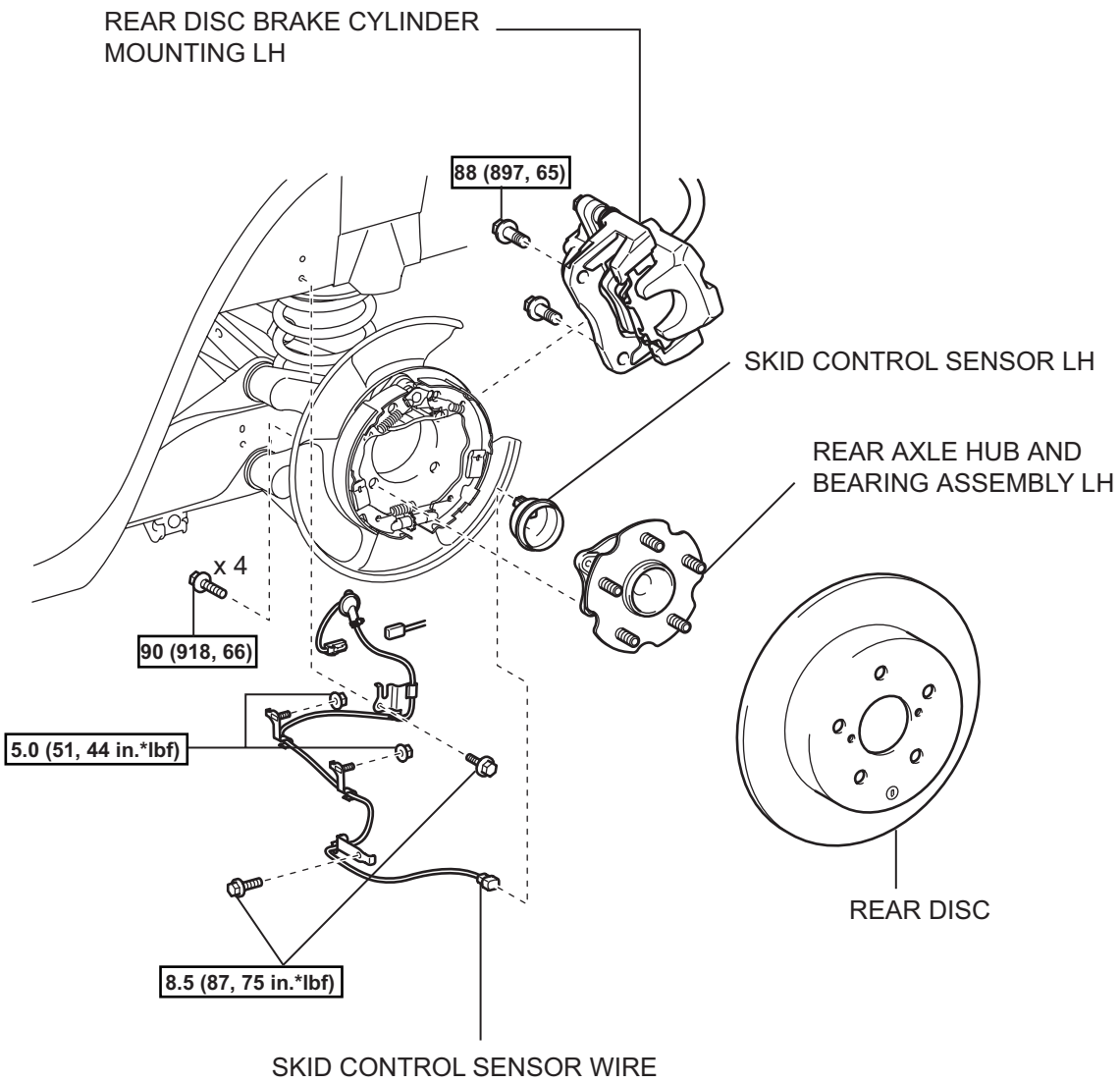

BC

N*m (kgf*cm, ft.*lbf) : Specified torque

H

C128535E01

REMOVAL

HINT:

- Use the same procedures for the LH side and RH side.
- The procedures listed below are for the LH side.

1. DISCONNECT CABLE FROM NEGATIVE BATTERY TERMINAL

CAUTION:

Wait at least 90 seconds after disconnecting the cable from the negative (-) battery terminal to prevent airbag and seat belt pretensioner activation.

2. REMOVE REAR WHEEL

3. REMOVE DECK TRIM SIDE PANEL ASSEMBLY LH

(a) Remove the deck trim side panel LH (see page IR-26).

HINT:

Refer to the procedures from the removal of the rear door scuff plate LH up until the removal of the deck trim side panel LH.

4. REMOVE SKID CONTROL SENSOR WIRE

(a) Disconnect the skid control sensor wire connector.

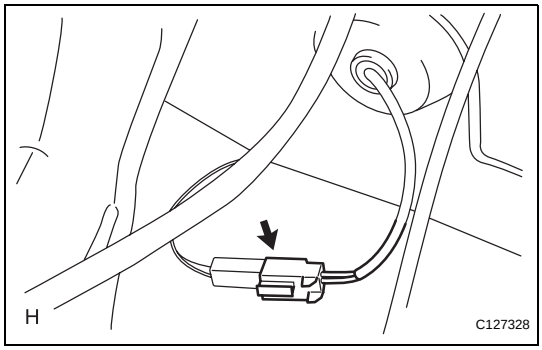

(b) Disconnect the grommet of the skid control sensor wire from the hole of the wheel house.

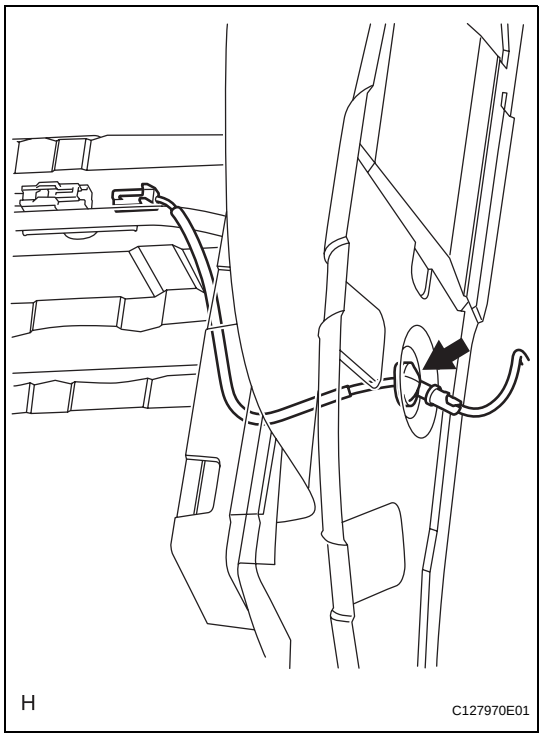

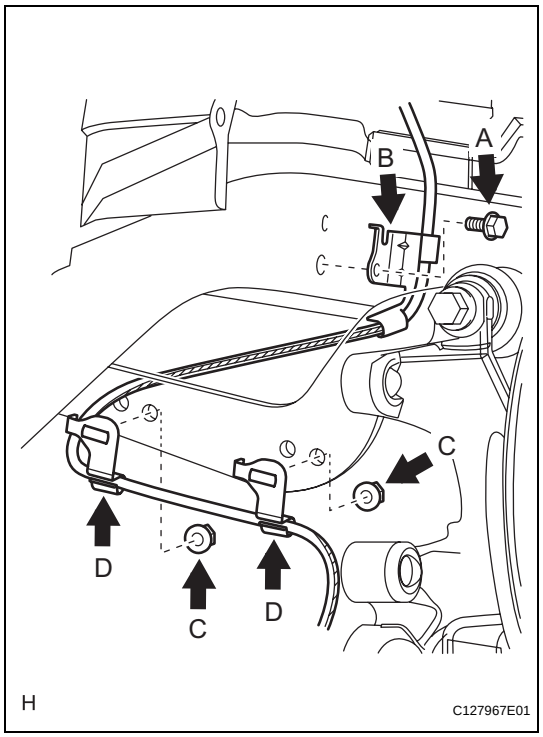

(c) Remove the bolt (labeled A) and sensor clamp (labeled B) from the side member.
(d) Remove the 2 nuts (labeled C) and sensor clamps (labeled D) from the upper arm.

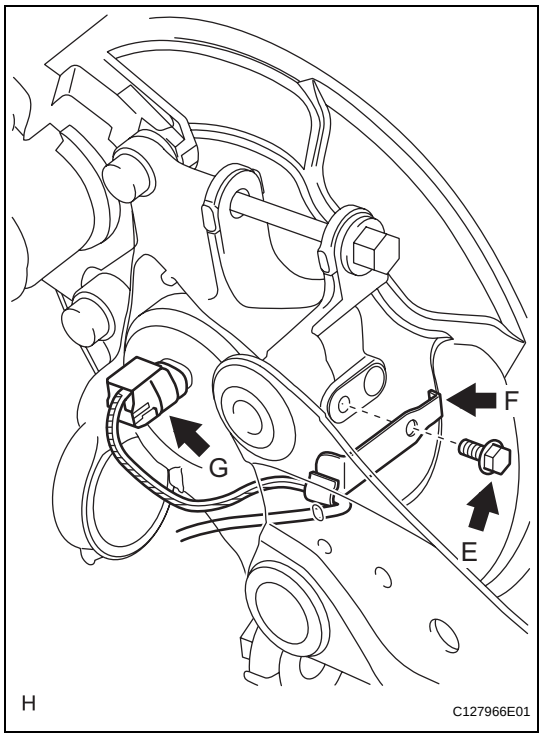

(e) Remove the bolt (labeled E) and sensor clamp (labeled F) from the carrier.
(f) Disconnect the skid control sensor wire connector (labeled G) from the speed sensor.

5. REMOVE REAR DISC BRAKE CYLINDER MOUNTING LH (See page BR-55)

6. REMOVE REAR DISC (See page BR-57)

7. REMOVE REAR AXLE HUB AND BEARING ASSEMBLY LH

(a) Remove the rear axle hub and bearing LH (see page AH-16).

8. REMOVE SKID CONTROL SENSOR LH

(a) Mount the front axle hub in a soft jaw vise.
NOTICE:
Replace the hub and bearing if it is dropped or receives a strong shock.
(b) Using a pin punch and hammer, tap out the 2 pins and remove the 2 attachments from SST.

BC

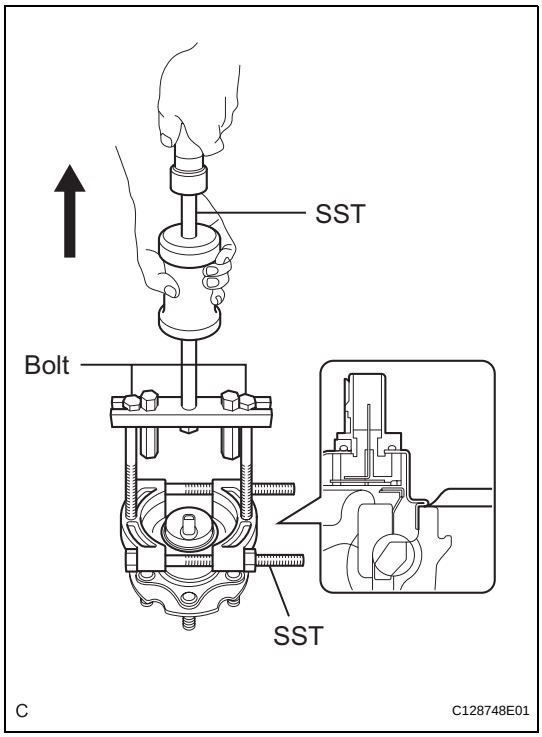

(c) Using SST and the 2 bolts (diameter: 12 mm; pitch: 1.5 mm), remove the skid control sensor from the hub and bearing.

SST 09520-00031 (09520-00040), 09521-00020, 09950-00020

NOTICE:

- **If the sensor rotor is damaged, replace the axle hub.**
- **Do not scratch the contacting surface of the hub and bearing and skid control sensor.**

INSPECTION

1. **INSPECT STEERING ANGLE SENSOR**
   (a) Inspect the sensor. If any of the following occurs, replace the sensor with a new one:
   - The surface of the sensor is cracked, dented, or chipped.
   - The connector or wire harness is scratched, cracked, or damaged.
   - The sensor has been dropped.

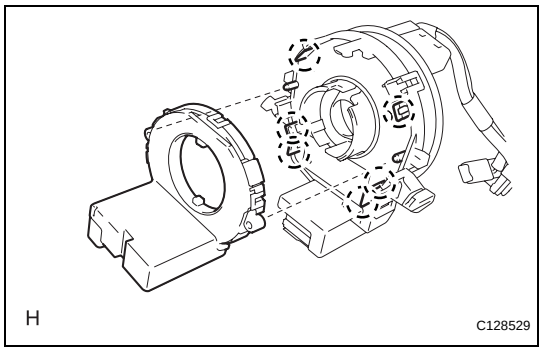

INSTALLATION

1. **INSTALL STEERING ANGLE SENSOR**
   (a) Align the locating pins, attach the 6 claws and install the sensor to the spiral cable.
2. **INSTALL SPIRAL CABLE SUB-ASSEMBLY (See page SR-20)**
3. **INSTALL STEERING COLUMN COVER (See page SR-20)**
4. **INSTALL STEERING WHEEL ASSEMBLY (See page SR-21)**
5. **INSTALL STEERING PAD ASSEMBLY (See page RS-336)**
6. **INSPECT STEERING WHEEL CENTER POINT**
7. **CONNECT CABLE TO NEGATIVE BATTERY TERMINAL**
   NOTICE:
   When reconnecting the cable to the negative (-) battery terminal after installing the steering angle sensor, check that the front tires and steering wheel are kept aligned straight ahead before and after connecting the cable to the negative (-) battery terminal.
8. **INSPECT STEERING PAD ASSEMBLY (See page RS-337)**
9. **CHECK SRS WARNING LIGHT**
   (a) Check the SRS warning light (see page RS-37).

STEERING ANGLE SENSOR

COMPONENTS

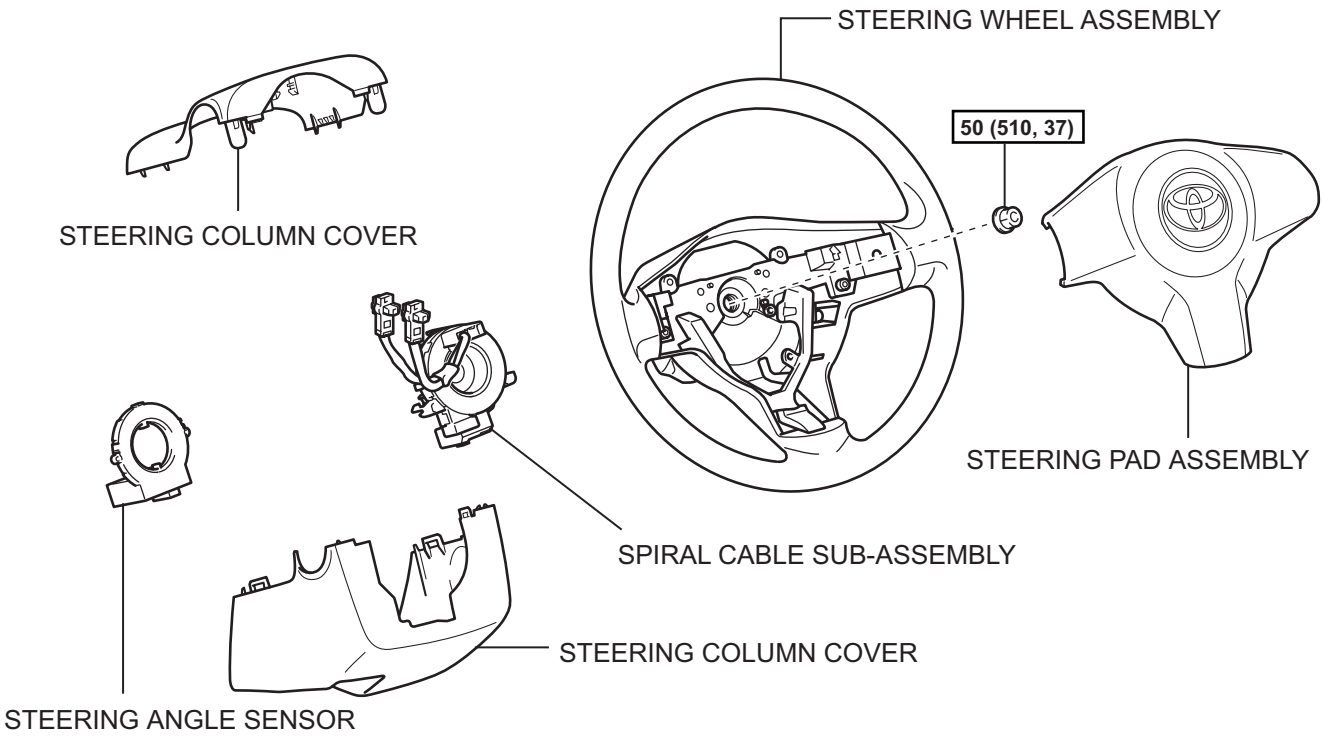

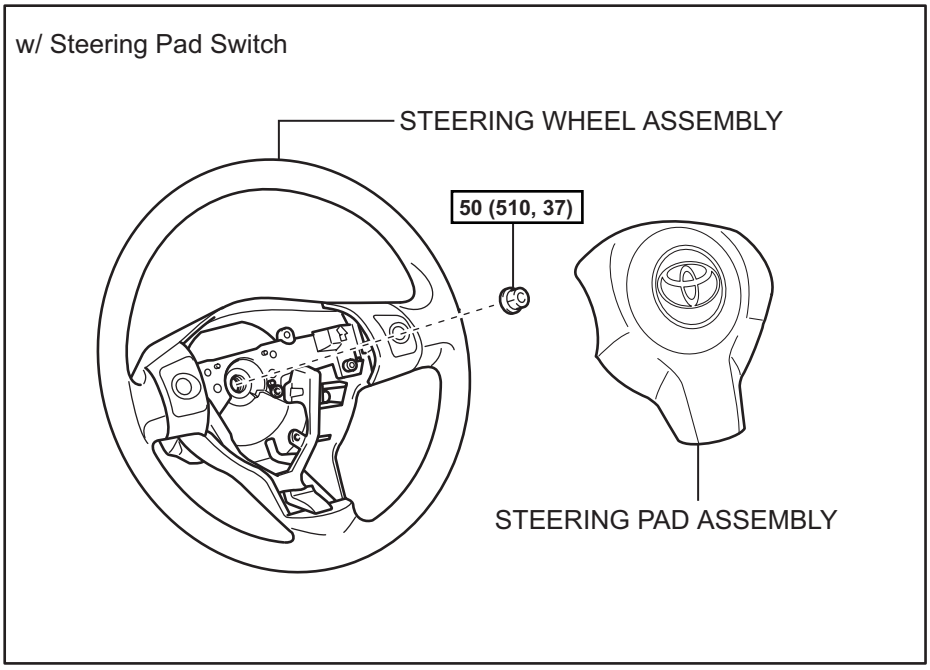

N*m (kgf*cm, ft.*lbf) : Specified torque

H

C127336E01

BC

REMOVAL

1. **PRECAUTION**
   CAUTION:
   Be sure to read the "PRECAUTION" thoroughly before servicing (see page RS-1).
2. **DISCONNECT CABLE FROM NEGATIVE BATTERY TERMINAL**
   CAUTION:
   Wait at least 90 seconds after disconnecting the cable from the negative (-) battery terminal to prevent airbag and seat belt pretensioner activation.
3. **PLACE FRONT WHEELS FACING STRAIGHT AHEAD**
4. **REMOVE STEERING PAD ASSEMBLY (See page RS-336)**
5. **REMOVE STEERING WHEEL ASSEMBLY (See page SR-12)**
6. **REMOVE STEERING COLUMN COVER (See page SR-12)**
7. **REMOVE SPIRAL CABLE SUB-ASSEMBLY (See page SR-13)**
8. **REMOVE STEERING ANGLE SENSOR**
   (a) Detach the 6 claws and remove the sensor from the spiral cable.

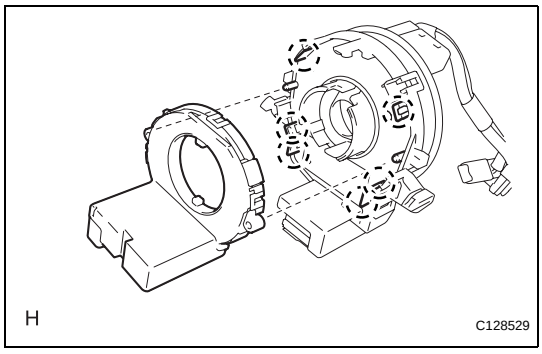

BC

TRACTION CONTROL SWITCH (for 2WD)

COMPONENTS

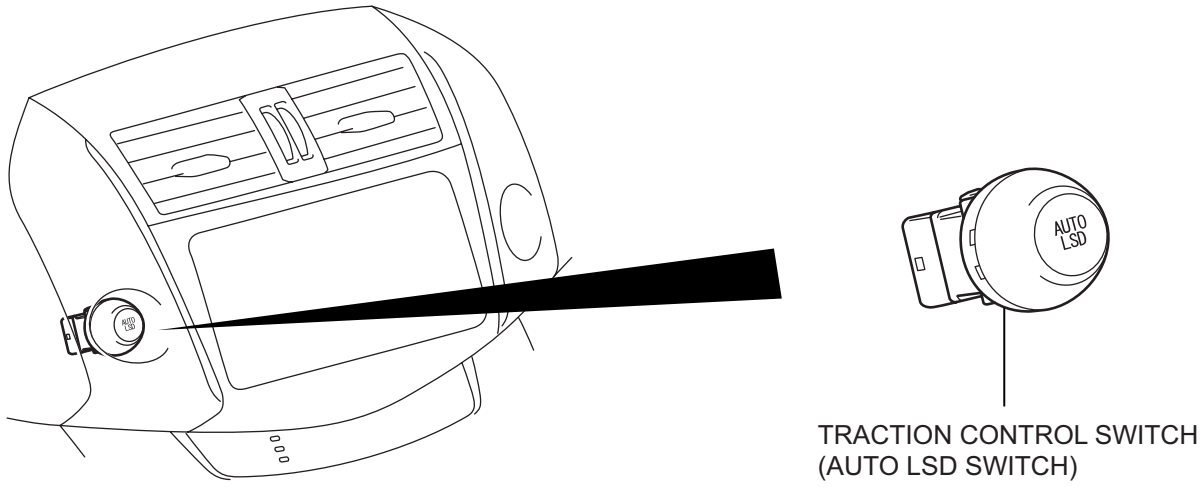

H

C129078E01

REMOVAL

1. DISCONNECT CABLE FROM NEGATIVE BATTERY TERMINAL

CAUTION:

Wait at least 90 seconds after disconnecting the cable from the negative (-) battery terminal to prevent airbag and seat belt pretensioner activation.

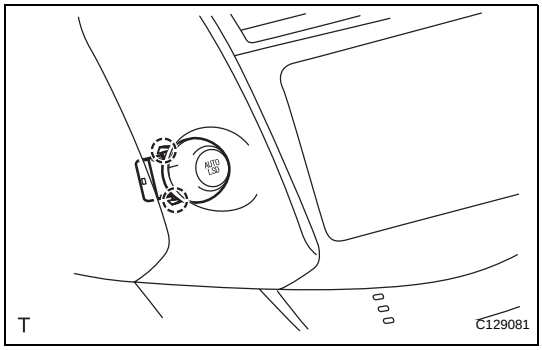

2. REMOVE TRACTION CONTROL SWITCH (AUTO LSD SWITCH)

(a) Detach the 2 claws and remove the switch.

INSPECTION

1. CHECK TRACTION CONTROL SWITCH (AUTO LSD SWITCH)

(a) Measure the resistance of the switch.

Standard resistance

Tester Connection	Switch Condition	Specified Condition
3 - 6	Released	10 kΩ or higher
3 - 6	Pushed in	Below 25 Ω

If the result is not as specified, replace the switch.

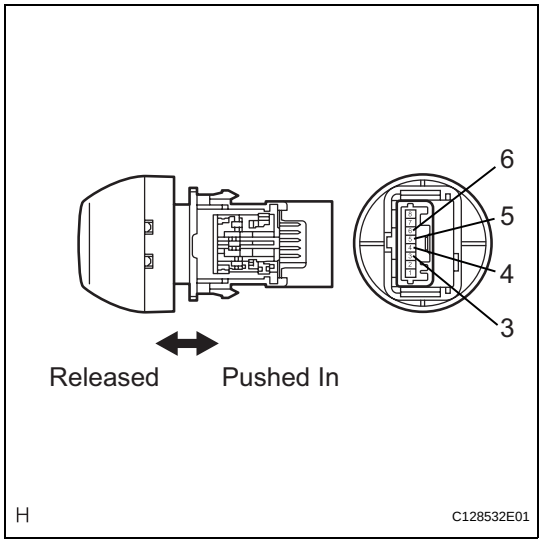

(b) Check illumination operation.

(1) Connect the battery's positive (+) lead to terminal 5 and negative (-) lead to terminal 4. Then check that the bulb illuminates.

OK:

Bulb illuminates.

If the result is not as specified, replace the switch.

INSTALLATION

1. INSTALL TRACTION CONTROL SWITCH (AUTO LSD SWITCH)

(a) Attach the 2 claws to install the switch.

2. CONNECT CABLE TO NEGATIVE BATTERY TERMINAL

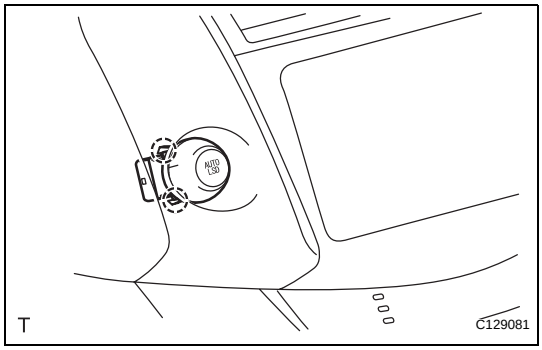

SYSTEM DIAGRAM

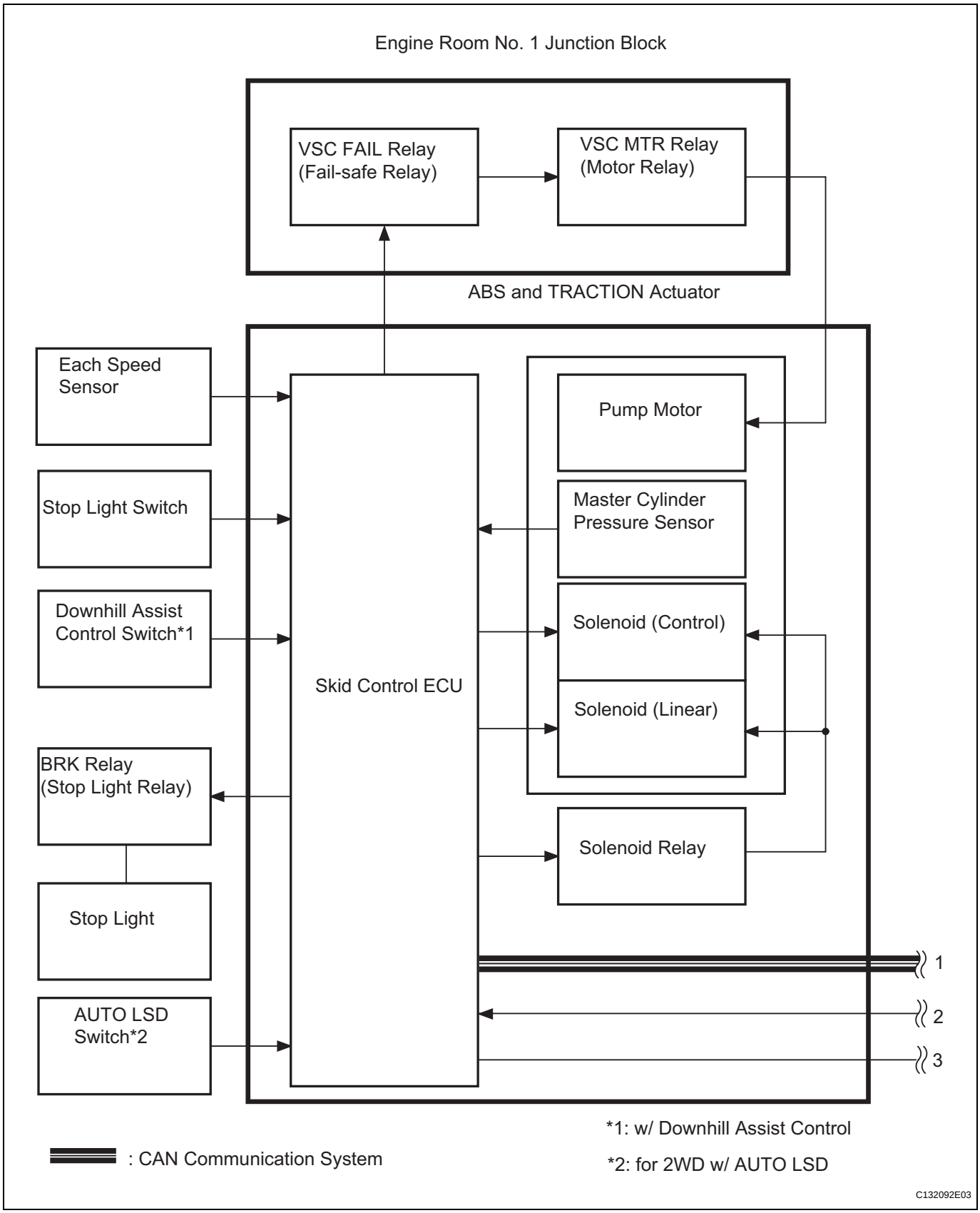

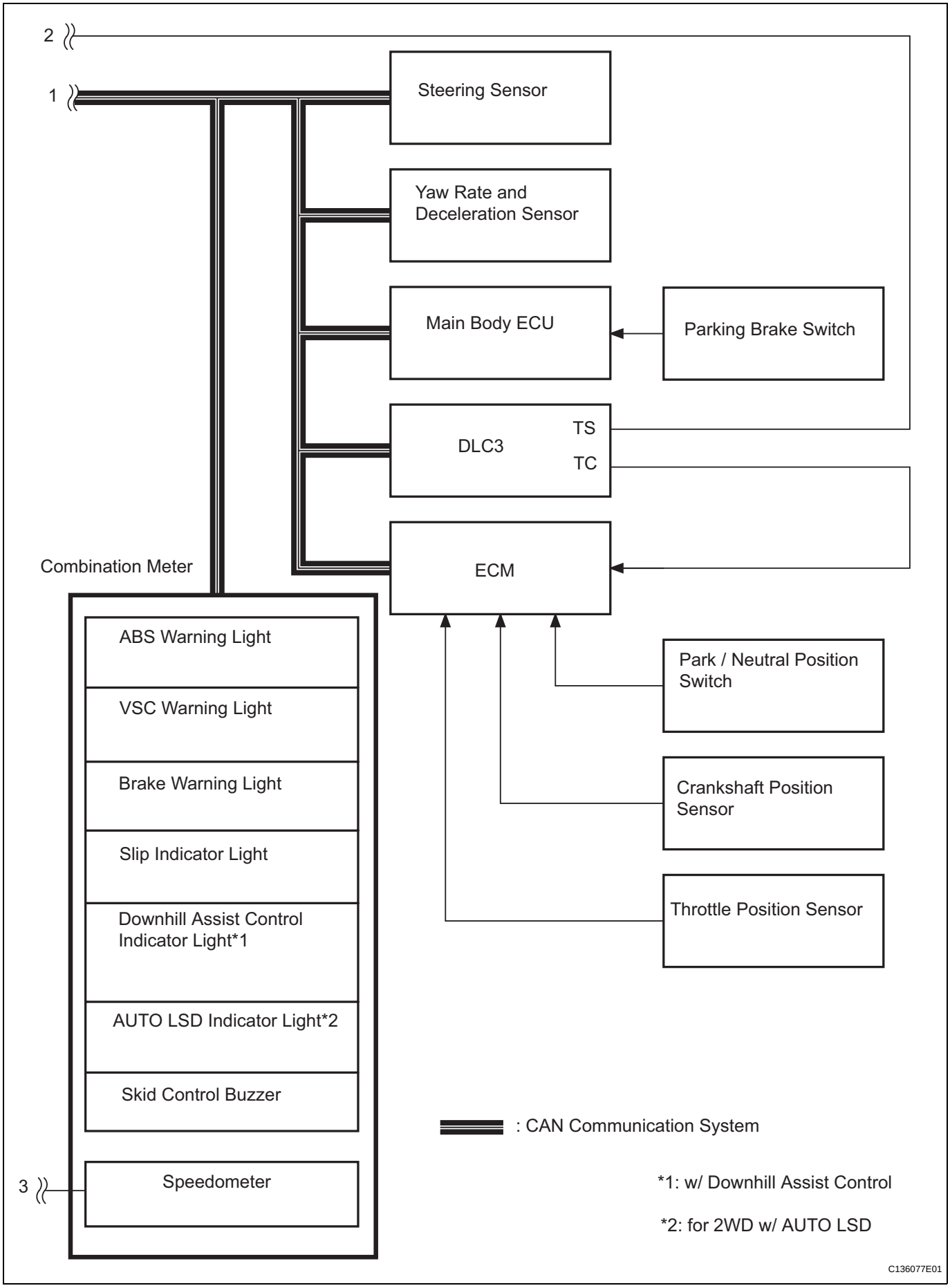
2
1
Steering Sensor
Yaw Rate and Deceleration Sensor
Main Body ECU
Parking Brake Switch
DLC3
TS
TC
ECM
Combination Meter
ABS Warning Light
VSC Warning Light
Brake Warning Light
Slip Indicator Light
Downhill Assist Control Indicator Light*1
AUTO LSD Indicator Light*2
Skid Control Buzzer
Park / Neutral Position Switch
Crankshaft Position Sensor
Throttle Position Sensor
3
Speedometer
: CAN Communication System
*1: w/ Downhill Assist Control
*2: for 2WD w/ AUTO LSD
C136077E01

BC

SYSTEM DESCRIPTION

1. SYSTEM DESCRIPTION

HINT:
The skid control ECU forms a single unit with the ABS and TRACTION actuator.

(a) ABS (Anti-lock Brake System):
The ABS helps prevent the wheels from locking when the brakes are applied firmly or on a slippery surface.

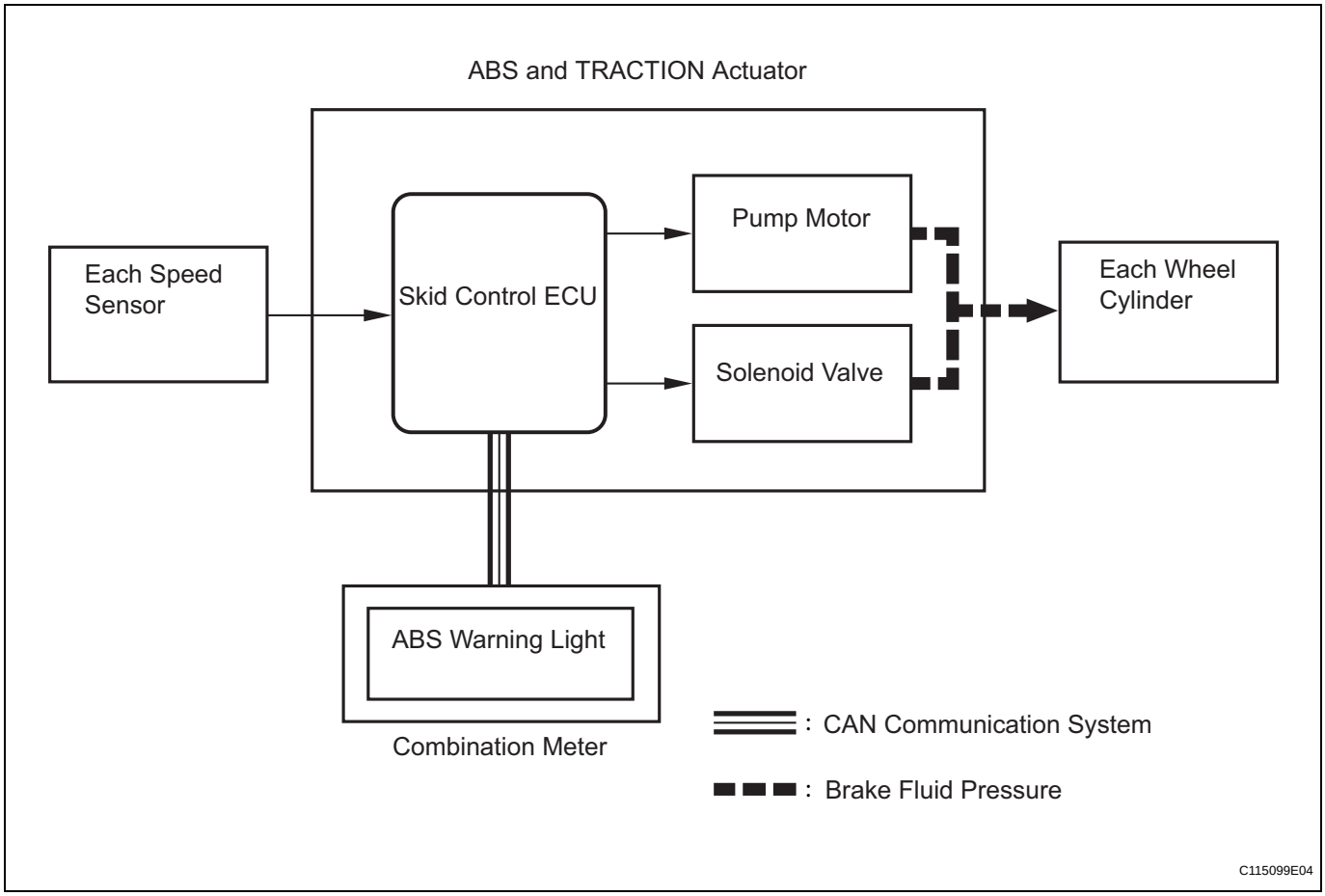

(1) Operation description:
The skid control ECU detects wheel lock conditions by receiving vehicle speed signals from each speed sensor, and sends control signals to the pump motor and solenoid valve to prevent wheels from locking by controlling the brake fluid pressure of each wheel cylinder.
The ABS warning light comes on when the ABS system malfunctions.

(b) EBD (Electronic Brake Force Distribution):
The EBD control utilizes the ABS to create the proper brake force distribution between the front and rear wheels in accordance with the driving conditions and vehicle load. In addition, when the brakes are applied while cornering, it also controls the braking forces of the right and left wheels, helping to maintain vehicle stability.

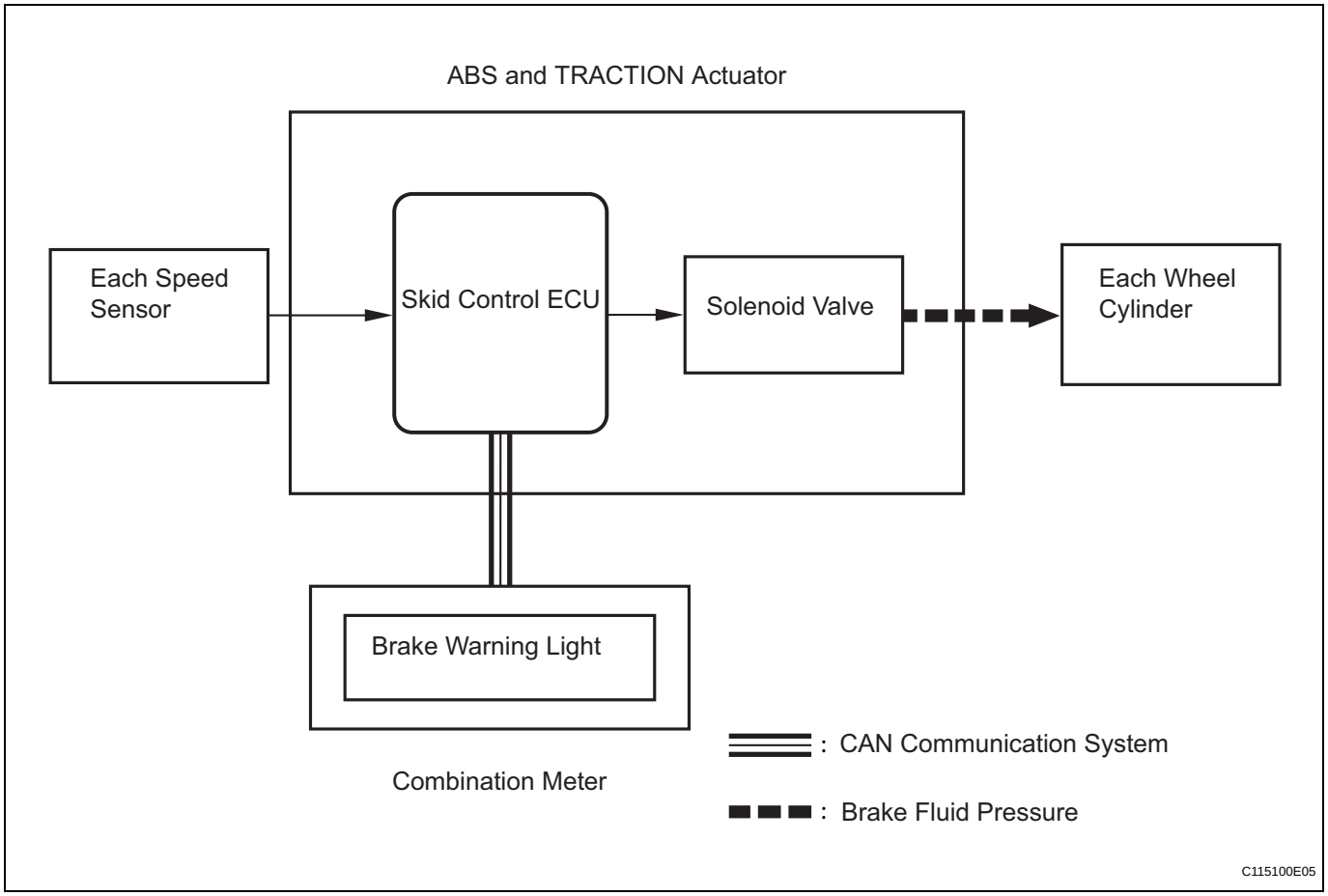

(1) Operation description:
The skid control ECU receives speed signals from each speed sensor to detect the slip conditions of the wheels and sends control signals to the solenoid.
The solenoid valve controls the brake fluid pressure of each wheel cylinder and divides the control power properly between the front and rear wheels and the right and left wheels.
The brake warning light comes on to indicate malfunctions in the EBD system.

BC

(c) BA (Brake Assist):
The primary purpose of the brake assist system is to provide auxiliary brake force to assist drivers who cannot generate a large enough brake force during emergency braking, thus helping to maximize the vehicle's braking performance.

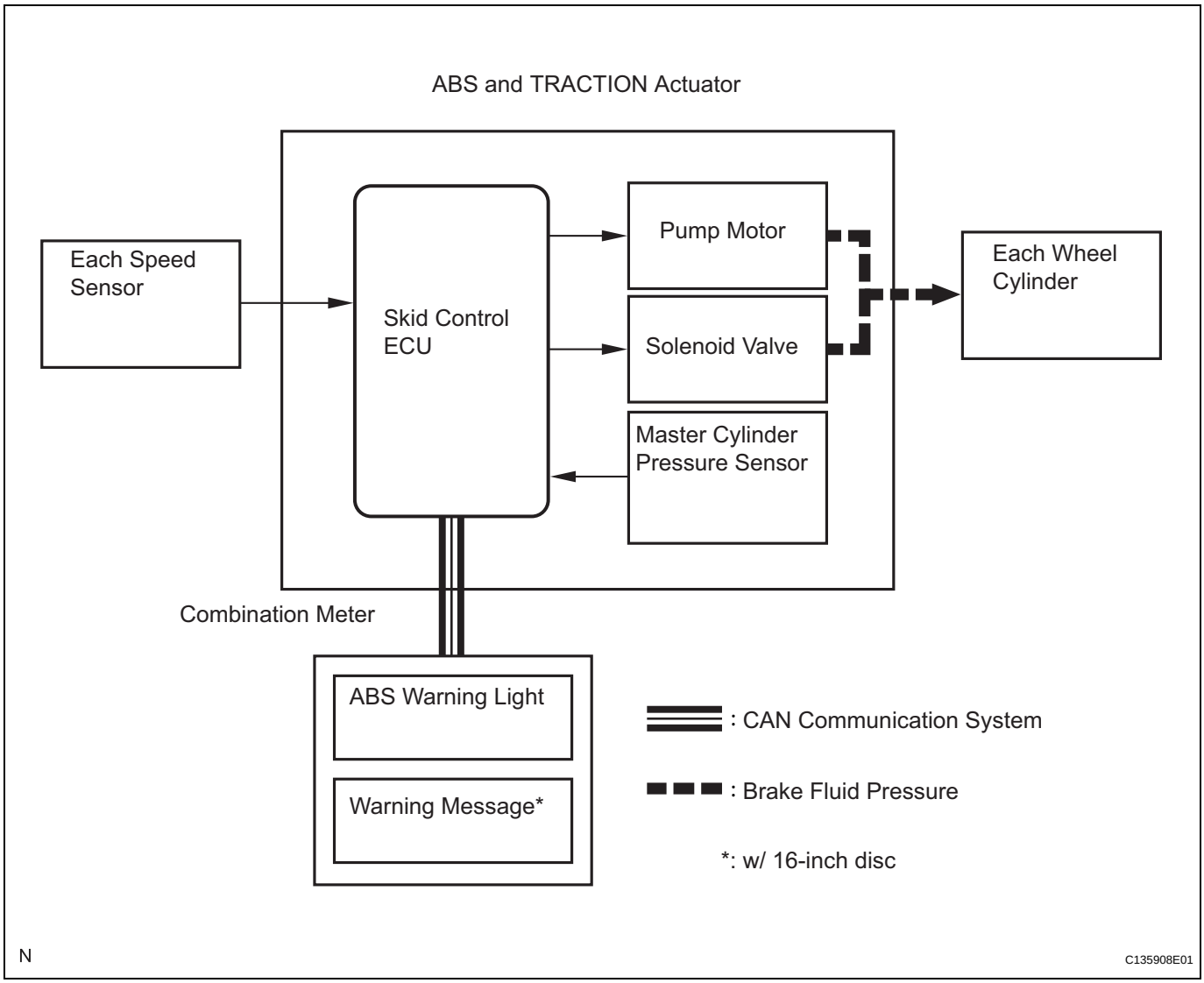

(1) Operation description:
The skid control ECU receives speed signals from each speed sensor and the fluid pressure signal from the master cylinder pressure sensor to determine whether brake assist is necessary. If brake assist is deemed necessary, the skid control ECU sends control signals to the pump motor and solenoid. The pump and the solenoid valve then control the pressure applied to each wheel cylinder. The ABS warning light comes on to indicate malfunctions in the BA (brake assist) system.
w/ 16-inch disc: The brake warning light and ABS warning light come on to indicate malfunctions in the BA system.

(d) TRC (Traction Control):
The TRC system helps prevent the drive wheels from slipping if the driver presses down on the accelerator pedal excessively when starting off or accelerating on a slippery surface.

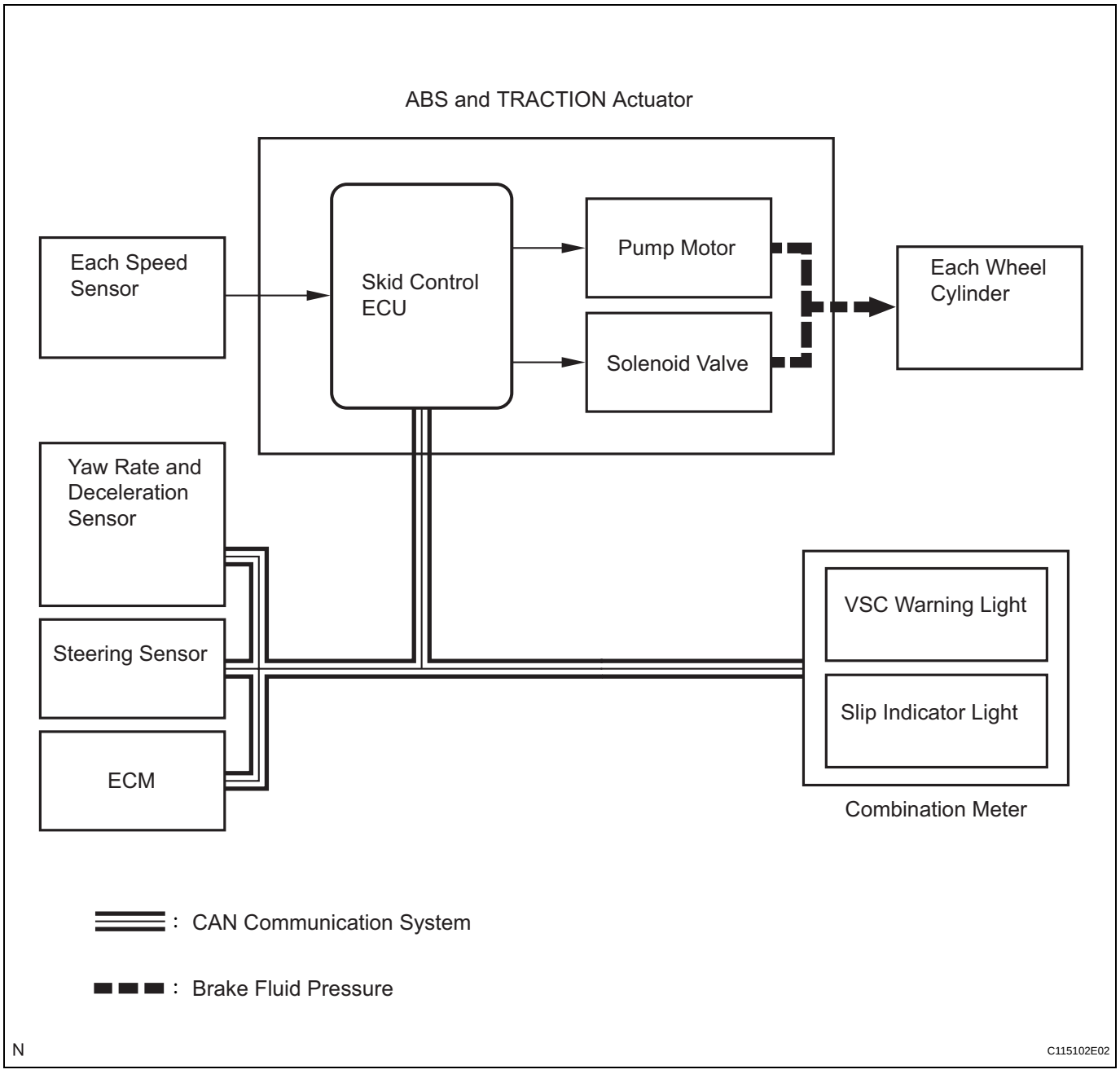

(1) Operation description:
The skid control ECU detects the vehicle's slip condition by receiving signals from each speed sensor and the ECM via CAN communication. The skid control ECU controls engine torque with the ECM via CAN communication and brake fluid pressure through the pump and solenoid valve. The slip indicator light blinks when the system is operating.
for 4WD: The VSC warning light comes on when the TRC system malfunctions.
for 2WD: The VSC warning light and SLIP indicator light comes on when the TRC system malfunctions.

(e) VSC (Vehicle Stability Control):
The VSC system helps prevent the vehicle from slipping sideways when front or rear wheel skidding occurs while cornering.

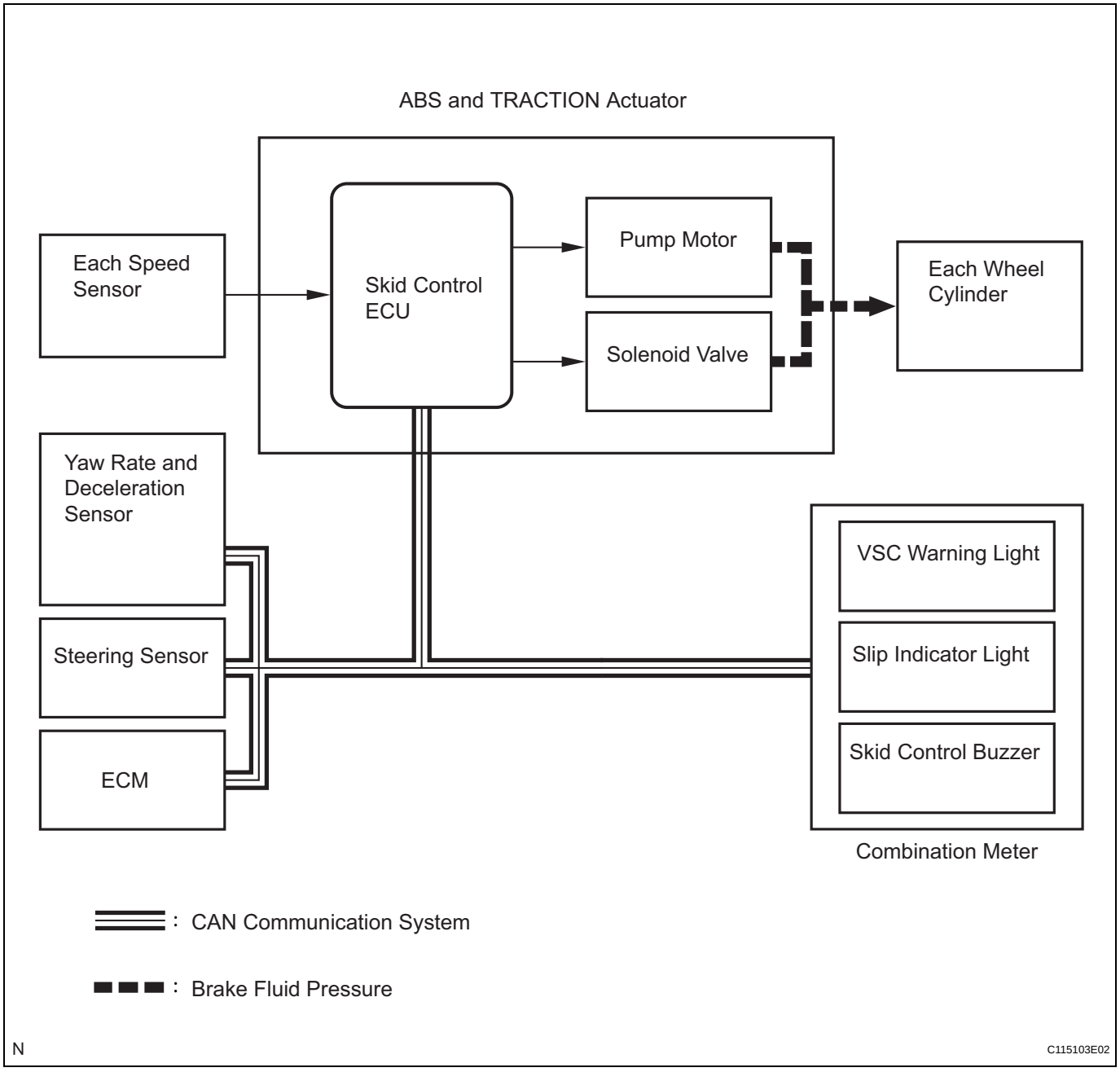

(1) Operation description:
The skid control ECU determines the vehicle condition by receiving signals from the speed sensor, the yaw rate and deceleration sensor and the steering sensor. The skid control ECU controls engine torque with the ECM via CAN communication and brake fluid pressure through the pump and solenoid valve. The slip indicator light blinks and the skid control buzzer sounds when the system is operating.
for 4WD: The VSC warning light comes on when the TRC system malfunctions.
for 2WD: The VSC warning light and slip indicator light come on when the TRC system malfunctions.

(f) Downhill Assist Control:
When the downhill assist control switch is pressed with the shift lever on L or R range and the accelerator and brake pedals not depressed, downhill assist control is activated. When activated, 4-wheel hydraulic pressure control occurs in order to maintain a constant low vehicle speed without causing the wheels to become locked. Thus, the vehicle can descend a steep hill in a stable manner.
HINT:
- Depressing the accelerator and brake pedal cancels control of the downhill assist control.
- Downhill assist control begins operating when driving down on a slope at a speed of 25 km/h (16 mph) or less with the engine brake applied.

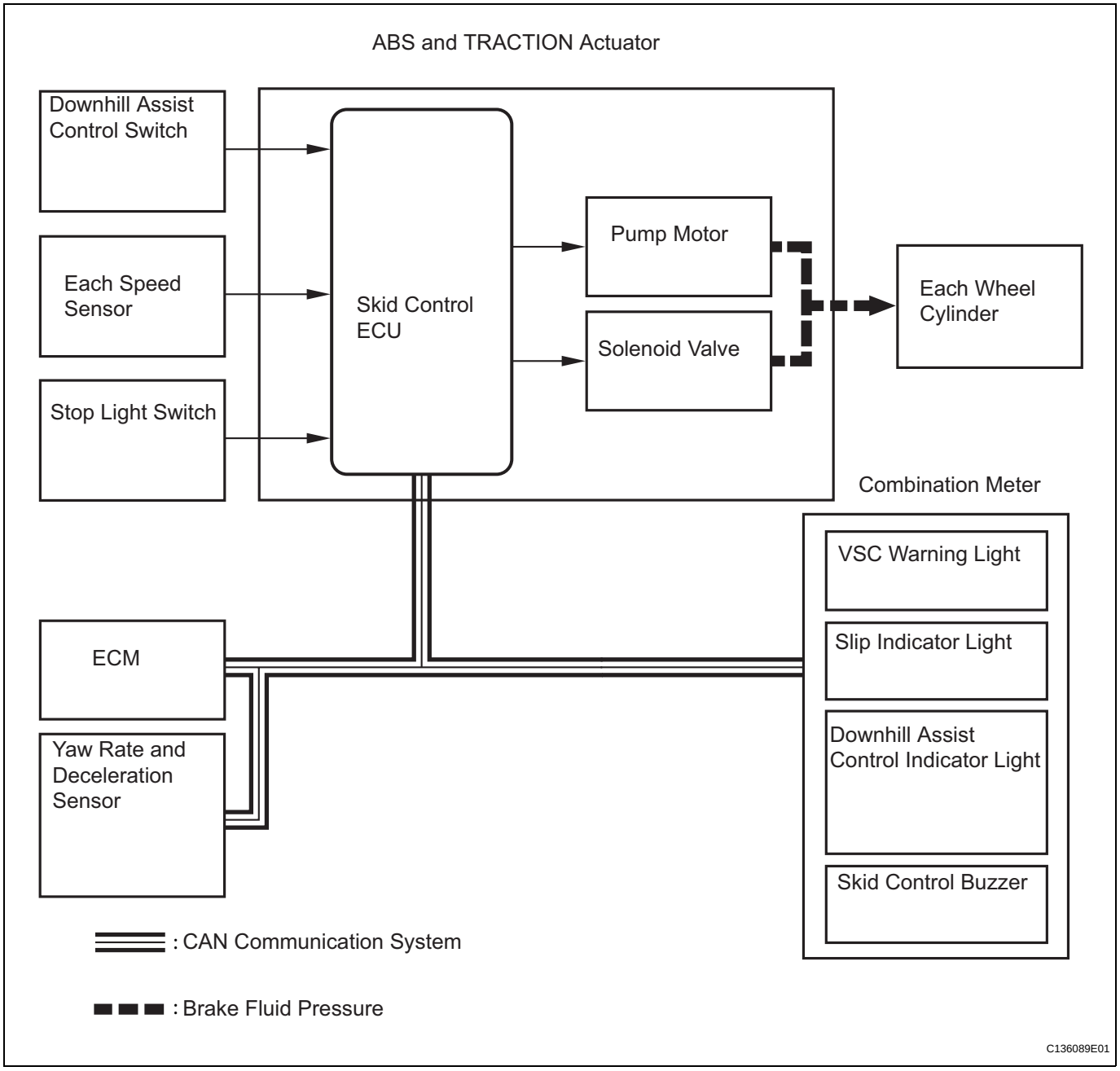

(1) Operation description:
The slip indicator light blinks and the downhill assist control indicator light and brake light come on when the system is in operation.
The VSC warning light comes on and the downhill assist control indicator light blinks to indicate a malfunction in the downhill assist control.

BC

(g) Hill-start assist control:
When the vehicle starts off on a steep hill, hill-start assist control effects 4-wheel hydraulic pressure control to prevent the vehicle from rolling backwards.
After a maximum of 2 seconds after the control has started, fluid pressure is gradually released and control will be complete.
HINT:
- Depressing the brake pedal cancels control of the hill-start assist control.
- Hill-start assist control does not operate when the shift lever is in the P position, or when the vehicle is running, the parking brake lever is set, or the accelerator pedal is depressed.

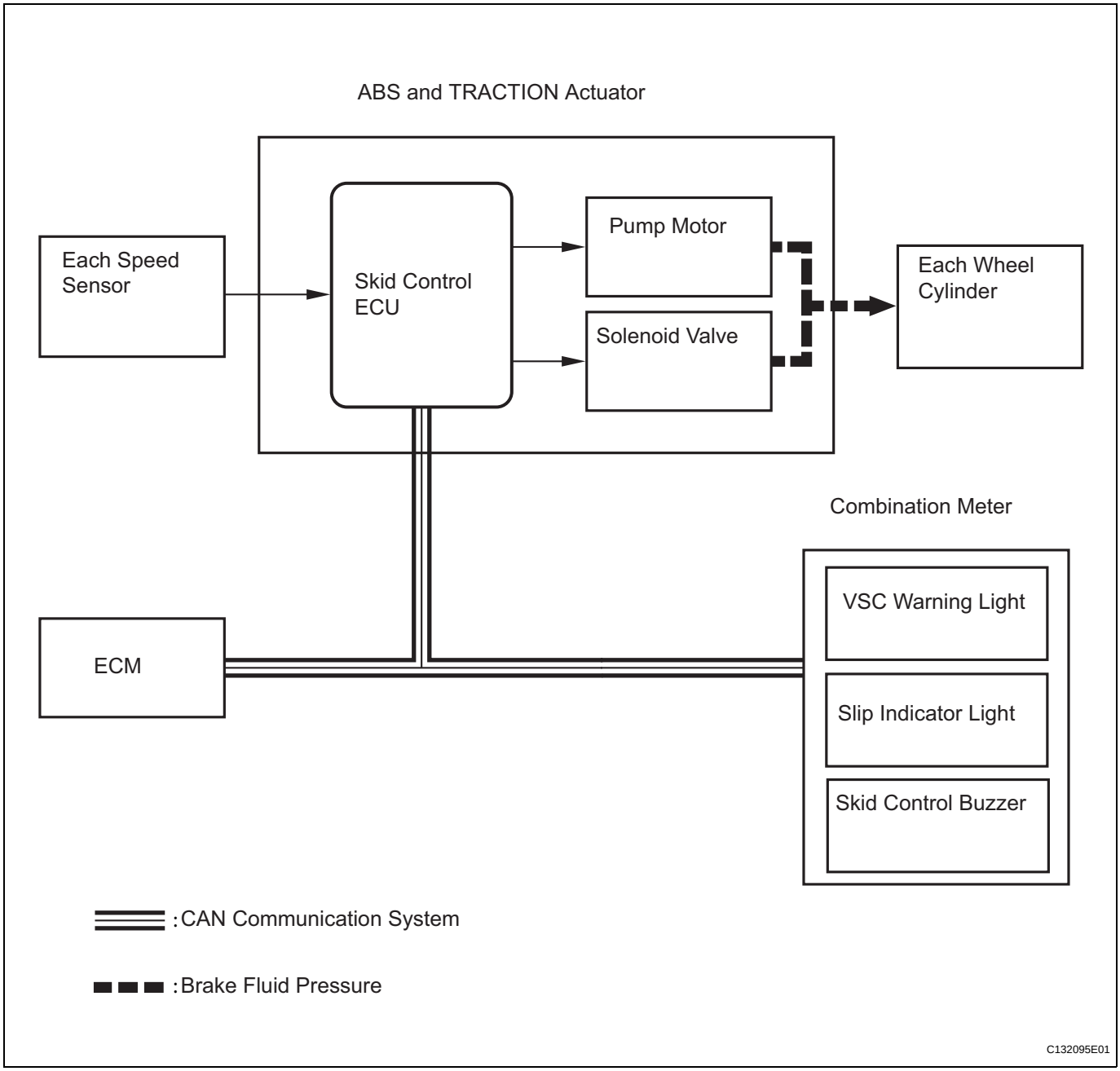

(1) Operation description:
When the system is in operation, the following occurs: 1) the slip indicator light blinks; 2) the VSC light comes on; and 3) when hill-start assist control operation starts, the skid control buzzer sounds once; when hill-start assist control operation ends, the skid control buzzer sounds twice.
The VSC warning light comes on when the hill-start assist control is malfunctioning.

(h) AUTO LSD (Auto Limited Slip Differential) for 2WD:
The AUTO LSD achieves the equivalent functions of an LSD (Limited Slip Differential) through the use of a traction control system. When the driver presses the AUTO LSD switch, this system achieves the LSD effect by regulating the hydraulic pressure that acts on the drive wheels and controlling the engine output in accordance with the amount of pedal effort applied on the accelerator. The AUTO LSD operates with the AUTO LSD switch on and the accelerator pedal depressed.
Auto LSD restrains brake pressure and reduces differential movement, thus transmitting the drive torque to the other drive wheel to ensure stability under the following conditions:
- Wheels run off the road.
- Drive wheels spin in place when starting on a slope with one wheel on snow/ice.

HINT:
Releasing the accelerator pedal cancels control of the AUTO LSD system.

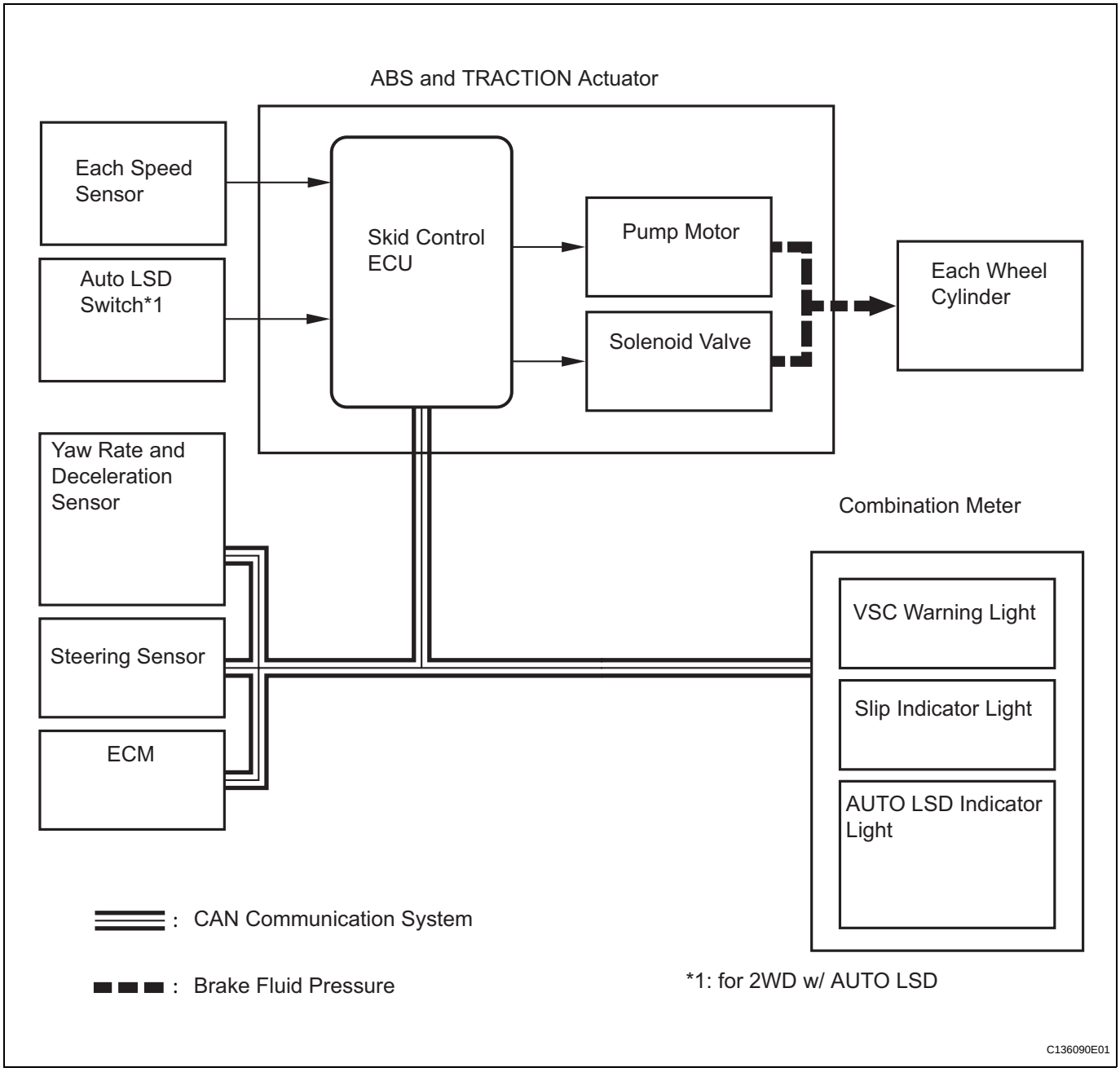
ABS and TRACTION Actuator
Each Speed Sensor
Auto LSD Switch*1
Skid Control ECU
Pump Motor
Solenoid Valve
Each Wheel Cylinder
Yaw Rate and Deceleration Sensor
Steering Sensor
ECM
Combination Meter
VSC Warning Light
Slip Indicator Light
AUTO LSD Indicator Light
: CAN Communication System
: Brake Fluid Pressure
*1: for 2WD w/ AUTO LSD
C136090E01

BC

(1) Operation description:
The skid control ECU determines that the vehicle is in a state in which the AUTO LSD can operate by using various sensors and switches to detect the operating conditions of the AUTO LSD switch, shift position, accelerator pedal, and brake pedal. When the vehicle is in a state in which the AUTO LSD can operate, the skid control ECU effects hydraulic pressure control of the wheel cylinder at the wheel with the faster wheel speed so that the wheel speeds of the right and left drive wheels will become equal. The slip indicator light blinks and the AUTO LSD indicator light comes on when the system is operating. Both the VSC warning light and SLIP indicator light come on when the AUTO LSD system malfunctions.

2. COOPERATIVE CONTROL FUNCTION

(a) Description

(1) Braking when Surface Resistance Differs Between Left and Right Wheels
If the driver suddenly applies the brakes on a road surface with a considerable difference in friction coefficient between the right and left wheels, the difference in the brake force between the right and left wheels will cause the vehicle posture to become unstable and create a yaw movement. In this state, the skid control ECU controls the VSC to stabilize the vehicle posture. At the same time, it effects cooperative control with the EPS to provide steering torque assist, which facilitates the driver's steering maneuvers to stabilize the vehicle posture.

(2) Accelerating when Surface Resistance Differs Between Left and Right Wheels
If the driver suddenly starts off or accelerates on a road surface with a considerable difference in friction coefficient between the right and left wheels, the slippage of a drive wheel will cause the vehicle posture to become unstable and negatively affect its acceleration performance. In this state, the skid control ECU causes the TRC to control the hydraulic brake of the slipping drive wheel, and requests the engine ECU to effect engine output control. At the same time, it effects cooperative control with the EPS to provide steering torque assist, which facilitates the driver's steering maneuvers to stabilize the vehicle posture.

(3) Front Wheel Skid Tendency
When the skid control ECU determines that there is a front wheel skid tendency, it controls the VSC to dampen the front wheel skid. At the same time, it effects cooperative control with the EPS to provide steering torque assist, which facilitates the driver's steering maneuvers to stabilize the vehicle posture. To prevent excessive steering maneuvers, it provides a steering torque assist. This assist increases the resistance to counter the driver's steering effort, if the driver turns the steering wheel excessively.

(4) Rear Wheel Skid Tendency
When the skid control ECU determines that there is a rear wheel skid tendency, it controls the VSC to dampen the rear wheel skid. At the same time, it effects cooperative control with the EPS to provide steering torque assist, which facilitates the driver's steering maneuvers in the direction to correct the rear wheel skid.

(5) Acceleration During Cornering
A sudden acceleration of the vehicle during cornering may cause a drive wheel to freewheel, which could cause the front wheels or rear wheels to skid. If the skid control ECU determines that there is freewheeling of a drive wheel, a front wheel skid tendency, or a rear wheel skid tendency, it effects cooperative control with the 4WD system to optimally control the drive torque distribution to the front and rear wheels. Furthermore, it controls the TRC and the VSC as needed to ensure driving stability and acceleration performance.

(b) Operation
The operation of the solenoid valves under the cooperative control is the same as the TRC or VSC operation.

3. ABS WITH EBD, BA, TRC AND VSC OPERATION

(a) The skid control ECU calculates vehicle stability tendency based on the signals from the 4 wheel speed sensors, the yaw rate and deceleration sensor and the steering sensor. In addition, it evaluates the results of the calculations to determine whether any control actions (control of the engine output torque by electronic throttle control and of the brake fluid pressure by the ABS and TRACTION actuator) should be implemented.

(b) The slip indicator blinks and the skid control buzzer sounds to inform the driver that the VSC system is operating. The slip indicator also blinks when traction control is operating, and the operation being performed is displayed.

4. FAIL SAFE FUNCTION

(a) When a failure occurs in the ABS with BA, TRC and VSC systems, the ABS and VSC warning lights illuminate, the slip indicator light comes on*1 or remains off*2, and the operations of those systems are prohibited. In addition to this, when a failure which disables the EBD operation occurs, the brake warning light comes on and its operation is prohibited.
HINT:
*1: for 2WD
*2: for 4WD

(b) If control is prohibited due to a malfunction during operation, control is disabled gradually to avoid sudden vehicle instability.

5. INITIAL CHECK

(a) When the vehicle speed first reaches approximately 6 km/h (4 mph) or more after the ignition switch is turned ON, each solenoid valve and the motor of the ABS and TRACTION actuator are sequentially activated to perform electrical checks. During the initial check, the operating sound of the solenoid valve and motor can be heard from the engine compartment, but this does not indicate a malfunction.

6. SERVICE MODE

(a) VSC operation can be disabled by operating the intelligent tester.
HINT:
Refer to the intelligent tester operator's manual for further details.

7. FUNCTION OF COMPONENTS

Components	Functions
Speed Sensor (Semiconductor Type)	Detects the wheel speed and sends the signal to skid control ECU
Skid Control ECU (Housed in ABS and TRACTION Actuator)	• Processes the signals from each sensor to control the ABS, BA, TRC, and VSC • Sends and receives control signals to and from the ECM, yaw rate and deceleration sensor, steering sensor, etc. via CAN communication.
ABS and TRACTION Actuator	• Consists of the master cylinder cut solenoid valve, holding solenoid valve, pressure reduction solenoid valve, pump motor, and reservoir, and adjusts the brake fluid pressure applied to each wheel cylinder • Houses the skid control ECU
Solenoid Relay	• Supplies power to each solenoid • Housed in the skid control ECU
Motor Relay (VSC MTR Relay)	• Supplies power to the pump motor • Installed in engine room No. 1 relay block
Fail-safe Relay (VSC FAIL Relay)	• Cuts off power to the motor when the pump motor circuit malfunctions • Installed in engine room No. 1 relay block

Components		Functions
Steering Sensor		• Detects the steering extent and direction and sends signals to the skid control ECU via CAN communication • Has a magnetic resistance element which detects the rotation of the magnet housed in the detection gear in order to detect the changes in magnetic resistance and the steering amount and direction
Yaw Rate and Deceleration Sensor		• Yaw rate sensor detects the vehicle's angular velocity (yaw rate) in the vertical direction based on the extent and direction of the deflection of the piezoelectric ceramics • Deceleration sensor measures the capacity of the condenser that changes the distance between the electrodes depending on G force, which occurs when the vehicle is accelerated, and converts the measured value into electrical signals • Sends signals to the skid control ECU via CAN communication
Master Cylinder Pressure Sensor		• Detects the brake fluid pressure in the master cylinder • Housed in the ABS and TRACTION actuator
ECM		• Controls the engine output when TRC and VSC are operating with the skid control ECU via CAN communication
Downhill Assist Control switch*1		Allows the driver to turn downhill assist control ON and OFF
AUTO LSD switch*2		Allows the driver to turn AUTO LSD ON and OFF
Combination Meter	ABS Warning Light	• Illuminates to inform the driver that a malfunction in the ABS has occurred • Blinks to indicate DTCs that relate to the ABS
	VSC Warning Light	• Illuminates to inform the driver that a malfunction in the VSC system has occurred • Blinks to indicate DTCs that relate to the VSC
	Brake Warning light	• Illuminates to inform the driver that the parking brake is ON when the system is normal, and when the brake fluid has decreased • Illuminates to inform the driver that a malfunction in the EBD has occurred
	Slip Indicator Light	• Blinks to inform the driver that TRC, VSC, downhill assist control and hill-start assist control are operating • Illuminates to inform the driver that a malfunction has occurred in the TRC or VSC system
	AUTO LSD Indicator Light*2	Lights up to inform the driver when AUTO LSD operation is possible
	Downhill Assist Control Indicator Light*1	Lights up to inform the driver when downhill assist control operation is possible
	Skid Control Buzzer	• Intermittently sounds to inform the driver that the VSC is operating • Housed in the combination meter

HINT:
*1: w/ Downhill assist control
*2: for 2WD w/ AUTO LSD

HOW TO PROCEED WITH TROUBLESHOOTING

HINT:

- Use these procedures to troubleshoot the vehicle stability control system.
- *: Use the intelligent tester.

1	VEHICLE BROUGHT TO WORKSHOP

NEXT

2	INSPECT BATTERY VOLTAGE

Standard voltage:
11 to 14 V

If the voltage is below 11 V, recharge or replace the battery before proceeding.

NEXT

3	CHECK AND CLEAR DTC*

NEXT

4	PROBLEM SYMPTOM CONFIRMATION

Result

Result	Proceed to
Symptom does not occur	A
Symptom occurs	B

B → Go to step 7

A

5	SYMPTOM SIMULATION

NEXT

6	CHECK COMMUNICATION FUNCTION OF CONTROLLER AREA NETWORK (CAN)*

(a) Use the intelligent tester to check for normal functioning of the CAN communication system.
  (1) Perform bus check (communication malfunction DTC).

Result

Result	Proceed to
DTC is not output	A
DTC is output	B

B → Go to CAN COMMUNICATION SYSTEM

A

7	CHECK FOR DTC*

Result

Result	Proceed to
DTC is not output	A
DTC is output	B

B → Go to step 10

A

BC

8	PROBLEM SYMPTOMS TABLE

Result

Result	Proceed to
Fault is not listed in problem symptoms table	A
Fault is listed in problem symptoms table	B

B → Go to step 10

A

9	OVERALL ANALYSIS AND TROUBLESHOOTING

(a) Terminals of ECU (see page BC-41)
(b) Data List / Active Test (see page BC-52)

NEXT

Go to step 11

10	CHECK FOR FLUID LEAKAGE

NEXT

11	**REPAIR OR REPLACE**

NEXT

12	**CONFIRMATION TEST**

NEXT

END

CHECK FOR INTERMITTENT PROBLEMS

1. CHECK FOR INTERMITTENT PROBLEMS

HINT:
A momentary interruption (open circuit) in the connectors and/or wire harness between the sensors and ECUs can be detected by using the ECU DATA LIST function of an intelligent tester.

(a) Turn the ignition switch OFF and connect the intelligent tester (with CAN VIM) to the DLC3.
(b) Turn the ignition switch ON.

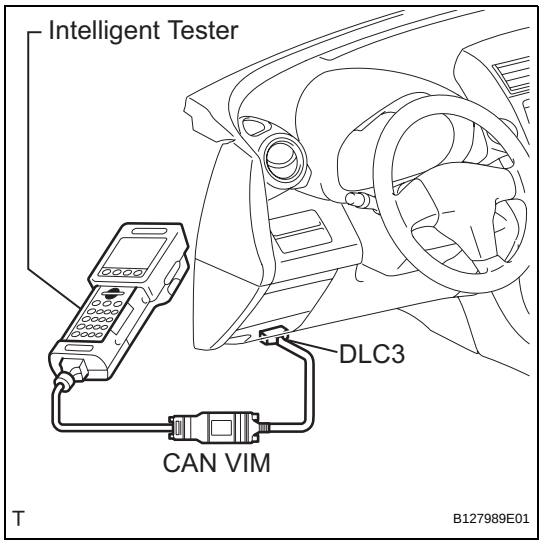

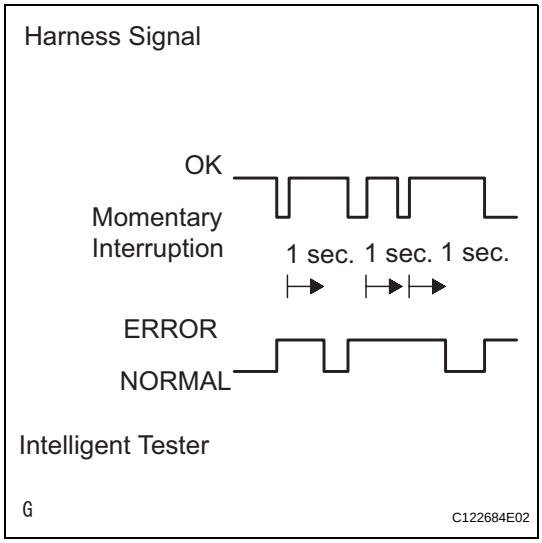

(c) Follow the prompts on the intelligent tester to display the DATA LIST and select areas where a momentary interruption should be monitored.
HINT:
- A momentary interruption (open circuit) cannot be detected for 3 seconds after the ignition switch is turned ON (initial check).
- If the status remains on the ERROR display, check for continuity between the ECU and the sensors, or between ECUs.
- The ERROR display on the intelligent tester remains on for 1 second after the harness signal changes from a momentary interruption (open circuit) to normal condition.

Item (Display)	Measurement Item / Range (Display)	Normal Condition	Diagnostic Note
FR SPD OPN	FR speed sensor open detection / ERROR or NORMAL	ERROR: Momentary interruption NORMAL: Normal	-
FL SPD OPN	FL speed sensor open detection / ERROR or NORMAL	ERROR: Momentary interruption NORMAL: Normal	-
RR SPD OPN	RR speed sensor open detection / ERROR or NORMAL	ERROR: Momentary interruption NORMAL: Normal	-
RL SPD OPN	RL speed sensor open detection / ERROR or NORMAL	ERROR: Momentary interruption NORMAL: Normal	-
EFI COM OPN	EFI communication open detection / ERROR or NORMAL	ERROR: Momentary interruption NORMAL: Normal	-

Item (Display)	Measurement Item / Range (Display)	Normal Condition	Diagnostic Note
YAW RATE OPN	Yaw rate sensor open detection / ERROR or NORMAL	ERROR: Momentary interruption NORMAL: Normal	-
DECELERAT OPN	Deceleration sensor open detection / ERROR or NORMAL	ERROR: Momentary interruption NORMAL: Normal	-
STEERING OPN	Steering angle sensor open detection / ERROR or NORMAL	ERROR: Momentary interruption NORMAL: Normal	-
M/C OPN	Master cylinder pressure sensor open detection / ERROR or NORMAL	ERROR: Momentary interruption NORMAL: Normal	-

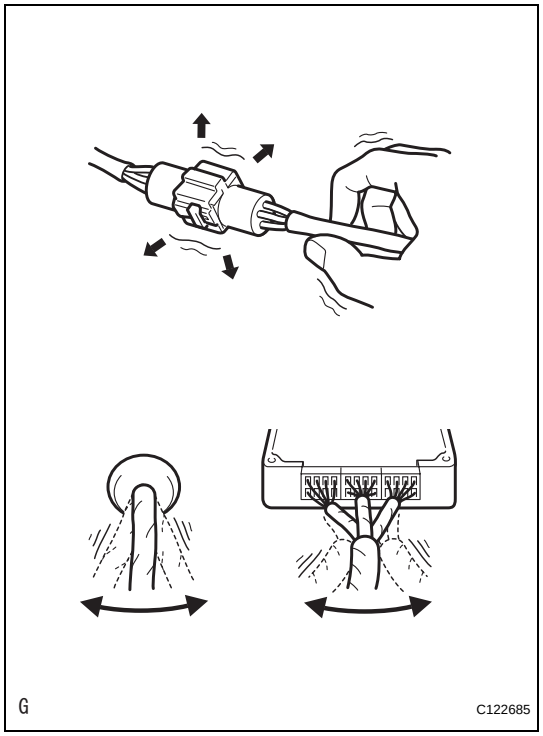

(d) While observing the screen, gently jiggle the connector or wire harness between the ECU and sensors, or between ECUs.

OK:

ERROR display does not change.

HINT:

The connector and/or wire harness have a momentary interruption (open circuit) if the display changes. Repair or replace the connector and wire harness if either of them is faulty.

BC

CALIBRATION

1. DESCRIPTION

(a) After replacing components relating to the VSC or performing "Front wheel alignment adjustment", clear and read the sensor calibration data.

(b) Follow the chart to perform calibration.

Replacing Parts / Operation	Necessary Operation
Skid Control ECU	Yaw rate and deceleration sensor zero point calibration.
Yaw Rate Sensor	1. Clearing zero point calibration data 2. Yaw rate and deceleration sensor zero point calibration
Front Wheel Alignment Adjustment	1. Clearing zero point calibration data 2. Yaw rate and deceleration sensor zero point calibration

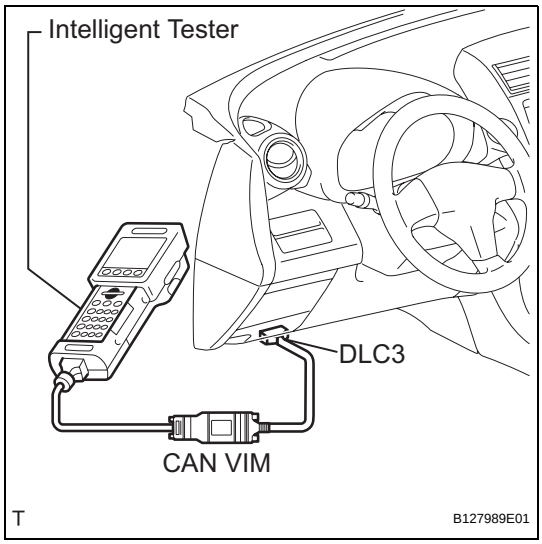

2. CLEAR ZERO POINT CALIBRATION DATA (When Using Intelligent Tester)

(a) Clear the zero point calibration data.

(1) Connect the intelligent tester (with CAN VIM) to the DLC3.

(2) Turn the ignition switch ON.

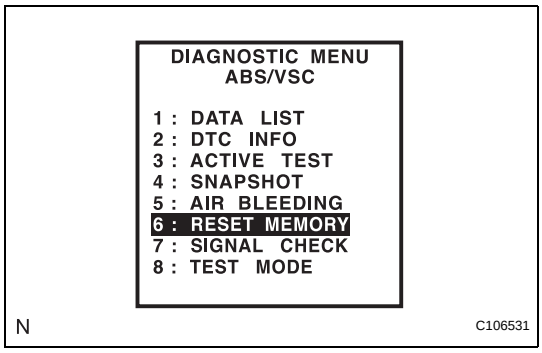

(3) Operate the intelligent tester to erase the codes (select "Reset Memory").
HINT:
Refer to the intelligent tester operator's manual for further details.

(4) Using the intelligent tester, perform the zero point calibration of the yaw rate and deceleration sensor.
CAUTION:
If the ignition switch is turned ON for more than 15 seconds with the shift lever in the P position after zero point of the yaw rate and acceleration sensor has been cleared, only the zero point of the yaw rate sensor will be stored. If the vehicle is driven under this condition, the skid control ECU will recognize that zero point calibration of the acceleration sensor is not completed and will indicate that there is a malfunction in the VSC system using the indicator light.

3. PREFORM ZERO POINT CALIBRATION OF YAW RATE AND DECELERATION SENSOR (When Using Intelligent Tester)

NOTICE:

- **While obtaining the zero point, do not vibrate the vehicle by tilting, moving or shaking it and keep it stationary. (Do not start the engine.)**
- **Perform this on a level surface (with an inclination of less than 1°).**

(a) Procedures for Test Mode.

(1) Check that the shift lever is in the P position and apply the parking brake.

NOTICE:
DTCs C1210/36 and C1336/39 will be recorded if the shift lever is not the P position (see page BC-88).

(2) Connect the intelligent tester (with CAN VIM) to the DLC3.

(3) Turn the ignition switch ON.

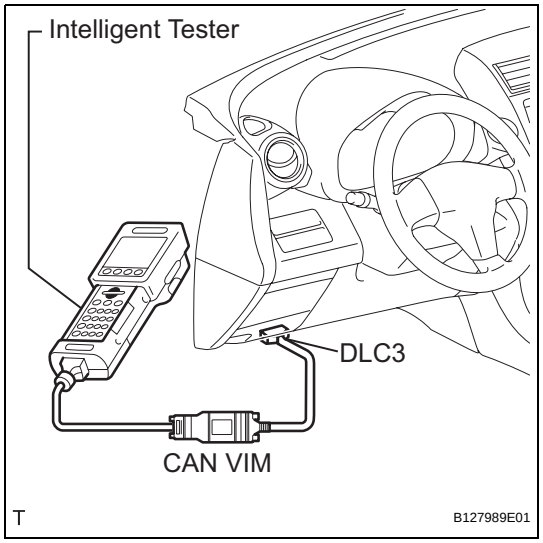

(4) Set the intelligent tester to test mode (select "Test Mode").

HINT:
Refer to the intelligent tester operator's manual for further details.

(b) Obtain the zero point of the yaw rate and deceleration sensor.

(1) Keep the vehicle stationary on a level surface for 2 seconds or more.

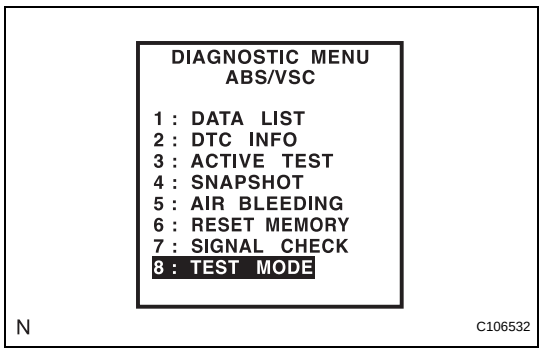

(2) Check that the VSC warning light blinks as shown in the illustration.

HINT:

- If the VSC warning light does not blink, perform the zero point calibration again.
- The zero point calibration is performed only once after the system enters test mode.
- Calibration cannot be performed again until the stored data is cleared once.

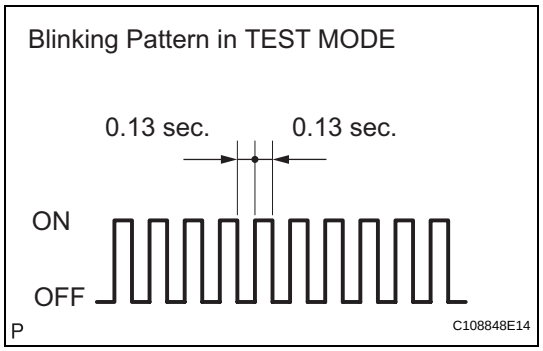

(3) Turn the ignition switch OFF.

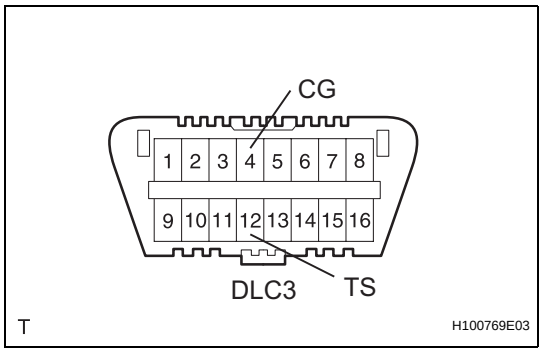

4. **CLEAR ZERO POINT CALIBRATION DATA (When not Using Intelligent Tester)**
   (a) Clear the zero point calibration data.
      (1) Turn the ignition switch ON.
      (2) The warning light and indicator light come on for 3 seconds to indicate that the initial check is completed.
      (3) Using SST, connect and disconnect terminals 12 (TS) and 4 (CG) of the DLC3 4 times or more within 8 seconds.
      SST 09843-18040
      (4) Check that the VSC warning light comes on.
      (5) Remove SST from the terminals of the DLC3.
      (6) Using a check wire, perform the zero point calibration of the yaw rate and deceleration sensor.
      CAUTION:
      If the ignition switch is turned ON for more than 15 seconds with the shift lever in the P position after zero point of the yaw rate and acceleration sensor has been cleared, only the zero point of the yaw rate sensor will be stored. If the vehicle is driven under this condition, the skid control ECU will recognize that zero point calibration of the acceleration sensor is not completed and will indicate that there is a malfunction in the VSC system using the indicator light.

5. **PERFORM ZERO POINT CALIBRATION OF YAW RATE AND DECELERATION SENSOR (When not Using Intelligent Tester)**
   NOTICE:
   - **While obtaining the zero point, do not vibrate the vehicle by tilting, moving or shaking it and keep it stationary. (Do not start the engine.)**
   - **Perform this on a level surface (with an inclination of less than 1°).**
   (a) Procedures for Test Mode.
      (1) Turn the ignition switch OFF.
      (2) Using SST, connect terminals 12 (TS) and 4 (CG) of the DLC3.
      SST 09843-18040
      (3) Check that the shift lever is in the P position and apply the parking brake.
      NOTICE:
      DTCs C1210/36 and C1336/39 will be recorded if the shift lever is not the P position (see page BC-88).
   (b) Obtain the zero point of the yaw rate and deceleration sensor.
      (1) Turn the ignition switch ON.
      (2) Keep the vehicle stationary on a level surface for 2 seconds or more.

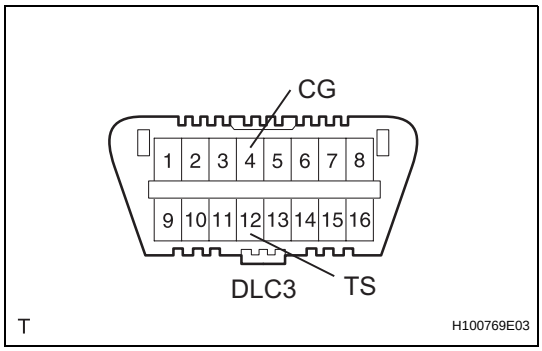

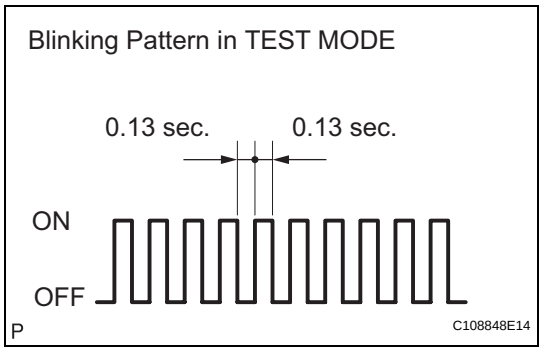

(3) Check that the VSC warning light blinks as shown in the illustration.
HINT:
- If the VSC warning light does not blink, perform the zero point calibration again.
- The zero point calibration is performed only once after the system enters test mode.
- Calibration cannot be performed again until the stored data is cleared once.

(4) Turn the ignition switch OFF.

TEST MODE PROCEDURE

HINT:

- By switching the skid control ECU from normal mode to test mode, abnormality detection sensitivity is enhanced and troubleshooting can be conducted efficiently.
- Perform a sensor check in test mode after the speed sensor or sensor rotor has been repaired or replaced.
- If the ignition switch is turned from ON to ACC or OFF during test mode, DTCs related to the signal check function will be erased.
- During test mode, the skid control ECU stores all DTCs related to the signal check function, and the DTCs are erased if normality is confirmed. Any remaining DTCs are those indicating abnormalities that were found.

1. CHECK SENSOR SIGNAL BY TEST MODE (When Using Intelligent Tester)

(a) Procedures for test mode:

(1) Turn the ignition switch OFF.

(2) Check that the steering wheel is in the centered position.

(3) Check that the shift lever is in the P position and apply the parking brake.

(4) Connect the intelligent tester (with CAN VIM) to the DLC3.

(5) Turn the ignition switch ON.

(6) Turn the tester on.

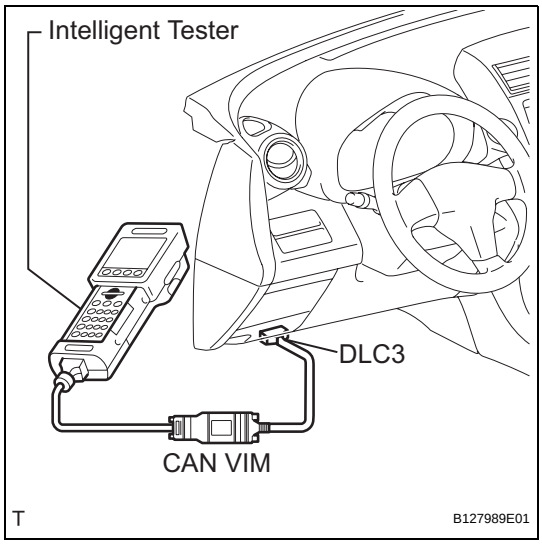

(7) Set the intelligent tester to Test Mode (select "Signal Check").
HINT:
Refer to the intelligent tester operator's manual for further details.

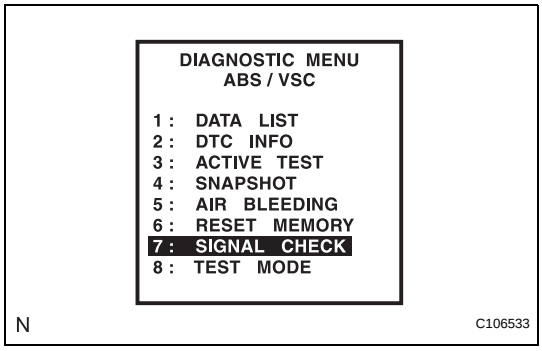

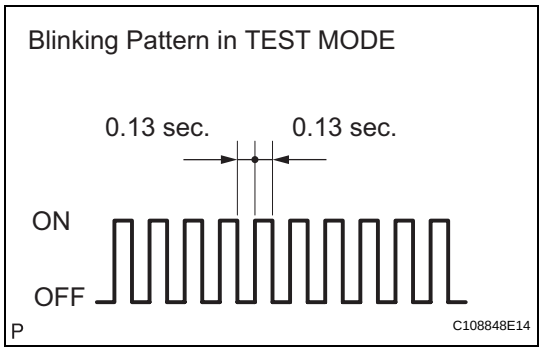

(8) Check that the ABS warning light and VSC warning light blink as shown in the illustration.
HINT:
If the ABS warning light and VSC warning warning light do not blink, check the TS and CG terminal circuit, and ABS and VSC warning light circuits.

Section Title	See procedure
ABS Warning Light does not Come ON	BC-138
VSC Warning Light does not Come ON	BC-142
TS and CG Terminal Circuit	BC-177

(9) Start the engine.

(b) w/ 16-inch disc only:
Check the lost booster pressure judgment and perform the master cylinder pressure sensor zero point calibration.
NOTICE:
Preform the check in the lost booster pressure state (negative pressure in the booster is depressurized).

(1) Turn the ignition switch ON.
(2) Check that the brake warning light comes on when depressing the brake pedal with a force of 59 N (6 kgf, 13.2 lbf) or more for 1 second or more. (The lost booster pressure state is judged normal.)
(3) Start the engine depressing the brake pedal with a force of 59 N (6 kgf, 13.2 lbf) or more for 1 second or more.
(4) Check that the brake warning light goes off when quickly releasing the brake pedal. (The lost booster pressure state is judged normal.)
(5) Leave the vehicle for 1 second or more. (Master cylinder pressure sensor zero point calibration.)
NOTICE:
- **If you slowly depress the brake pedal or depress it again, master cylinder pressure sensor zero point calibration is not performed normally.**
- **If the lost booster pressure judgment check is not completed normally, the master cylinder pressure sensor check is not judged.**
- **If a recheck is performed after the engine has started, end the Test Mode, enter Test Mode again, and release the vacuum in the booster by pumping the brake pedal prior to the recheck.**

(c) Check the deceleration sensor.
(1) Keep the vehicle stationary on a level surface for 1 second or more.
HINT:
The deceleration sensor check can be performed together with the following master cylinder pressure sensor check.

(d) Check the master cylinder pressure sensor.
(1) Leave the vehicle in a stationary condition and release the brake pedal for 1 second or more, and quickly depress the brake pedal with a force of 98 N (10 kgf, 22 lbf) or more for 1 second. Check that the ABS warning light remains illuminated for 3 seconds.
HINT:
- Ensure that the ABS warning light comes on.
- While the ABS warning light remains illuminated, continue depressing the brake pedal with a force of 98 N (10 kgf, 22 lbf) or more.
- The ABS warning light comes on for 3 seconds every time the brake pedal operation above is performed.

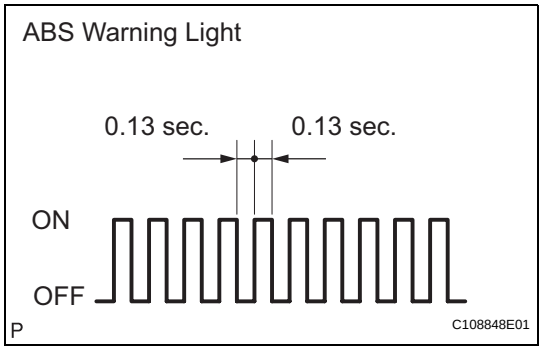

(e) Check the speed sensor.
(1) Check that the ABS warning light is blinking as shown in the illustration.
(2) Check the speed sensor signal.
1. Drive the vehicle straight forward at a speed of 45 km/h (28 mph) or more for several seconds.
2. Check that the ABS warning light goes off.
NOTICE:
- **The speed sensor check may not be completed if the sensor check is started with the steering wheel turned or one or more wheels spinning.**
- **If the speed sensor check is commenced while the steering wheel is turned, the ABS warning light may come on after the low speed check is finished.**
- **The ABS warning light comes on immediately when an abnormality is detected.**
- **When the speed sensor signal is normal, the ABS warning light goes off while driving at 45 km/h (28 mph) or more, and blinks in the test mode pattern while the vehicle is stationary.**

- **Do not drive the vehicle at a speed of 80 km/h (50 mph) or more after the ABS warning light turns off, because test mode DTCs are set again when the vehicle speed exceeds 80 km/h (50 mph).**

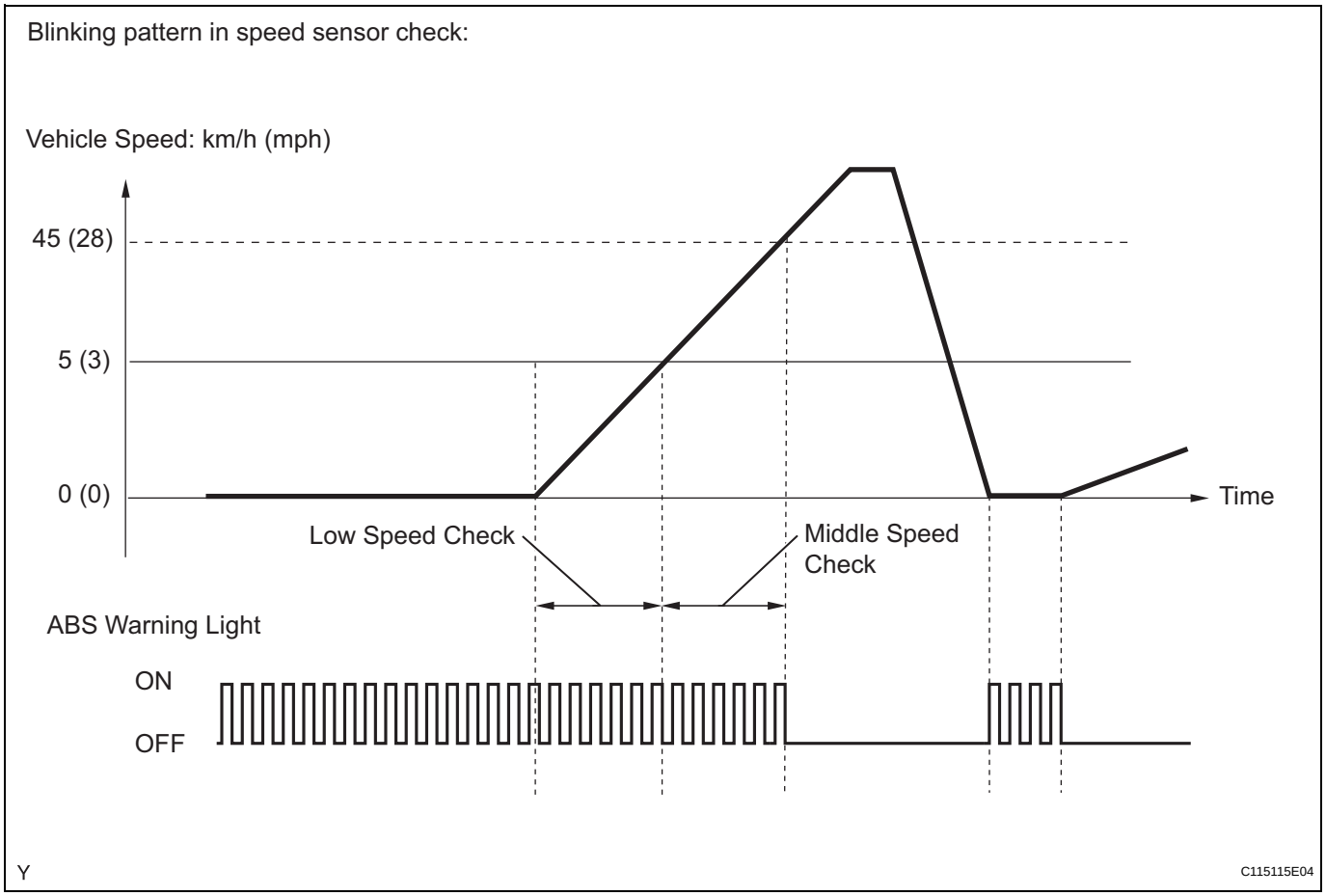

3. Stop the vehicle.

(f) Check the yaw rate sensor.

(1) Move the shift lever to P and set the parking brake lever.

(2) Check that the VSC warning light is blinking as shown in the illustration.

(3) Keep the vehicle stationary on a level surface for 1 second or more.

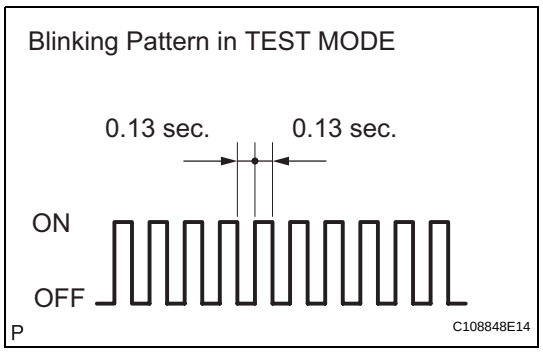

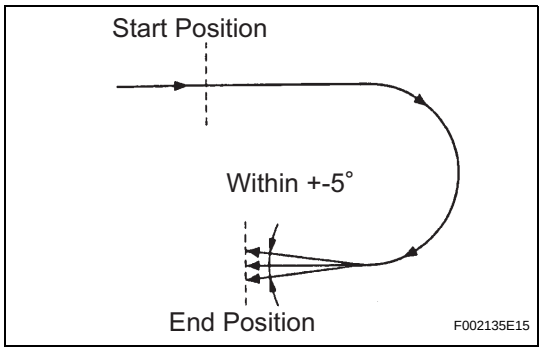

(4) Shift the shift lever to the D position and drive the vehicle at a speed of approximately 5 km/h (3 mph), and turn the steering wheel either to the left or right 90° or more to turn the vehicle through 180°.
(5) Stop the vehicle, move the shift lever into the P position, and then apply the parking brake.
(6) Check that the skid control buzzer sounds for 3 seconds.
HINT:
- If the skid control buzzer sounds, the signal check has been completed normally.
- If the skid control buzzer does not sound, check the skid control buzzer circuit (see page BC-172).
- If the skid control buzzer still does not sound, there is a malfunction in the yaw rate sensor, so check for DTCs.
- Drive the vehicle in a 180° semi circle. At the end of the turn, the direction of the vehicle should be within 180 +-5° of its start position.
- Complete the vehicle turn within 20 seconds.
- Do not spin the wheels.

BC

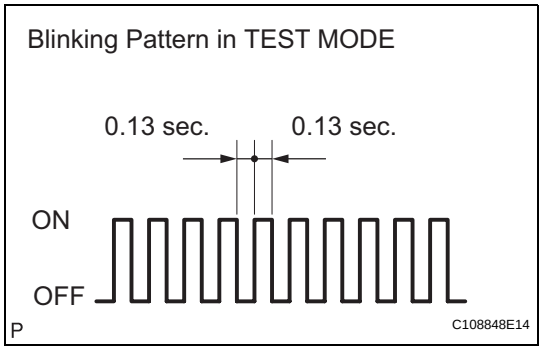

(g) w/ Downhill assist control only:
Check the downhill assist control operation switch.
(1) Check that the VSC warning light is blinking as shown in the illustration.
(2) Check the downhill assist control switch.
1. Push the downhill assist control switch on.
2. Push the downhill assist control switch off.

(h) w/ Auto LSD only:
(1) Check that the AUTO LSD light illuminates only when the AUTO LSD switch is pressed.

(i) Check the end of sensor.
(1) When the sensor check is successfully completed, the ABS warning light blinks in the test mode pattern when the vehicle is stopped, and goes off when the vehicle is driven.
NOTICE:
If the sensor check is not completed, the ABS warning light blinks even while the vehicle is driving and the ABS does not operate.

(j) Read the DTCs of signal check function.
(1) Read the DTC(s) by following the instructions on the tester screen.
NOTICE:
- **If only the DTCs are displayed, repair the malfunction area and clear the DTCs.**
- **If the DTCs or Test Mode codes (DTC of signal check function) are displayed, repair the malfunction area, clear the DTCs and perform the Test Mode inspection.**

HINT:
See the list of the DTCs (refer to "DTC OF TEST MODE FUNCTION (SIGNAL CHECK)" below).

2. CHECK SENSOR SIGNAL BY TEST MODE (When not Using Intelligent Tester)

(a) Procedures for test mode:

(1) Turn the ignition switch OFF.

(2) Check that the steering wheel is in the centered position.

(3) Check that the shift lever is in the P position and apply the parking brake.

(4) Using SST, connect terminals 12 (TS) and 4 (CG) of the DLC3.
SST 09843-18040

(5) Turn the ignition switch ON.

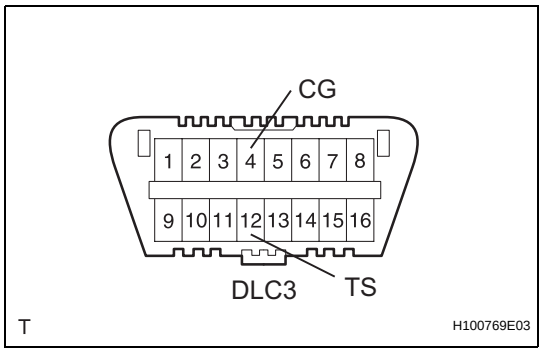

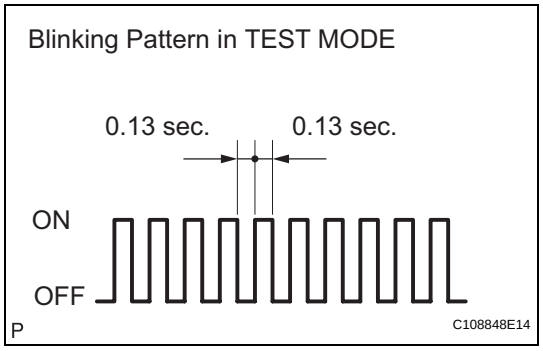

(6) Check that the ABS warning light and VSC warning light blink as shown in the illustration.
HINT:
If the ABS warning light and VSC warning warning light and multi information display and master caution indicator light do not blink, check the TS and CG terminal circuit, and ABS and VSC warning light circuits.

Section Title	See procedure
ABS Warning Light does not Come ON	BC-138
VSC Warning Light does not Come ON	BC-142
TS and CG Terminal Circuit	BC-177

(7) Start the engine.

(b) w/ 16-inch disc:
Check the lost booster pressure judgment and perform the master cylinder pressure sensor zero point calibration.
NOTICE:
Preform the check in the lost booster pressure state (negative pressure in the booster is depressurized).

(1) Turn the ignition switch ON.

(2) Check that the BRAKE warning light comes on when depressing the brake pedal with a force of 59 N (6 kgf, 13.2 lbf) or more for 1 second or more. (The lost booster pressure state is judged normal.)

(3) Start the engine depressing the brake pedal with a force of 59 N (6 kgf, 13.2 lbf) or more for 1 second or more.

BC

(4) Check that the brake warning light goes off when quickly releasing the brake pedal. (The lost booster pressure state is judged normal.)

(5) Leave the vehicle for 1 second or more. (Master cylinder pressure sensor zero point calibration.)
NOTICE:
- **If you slowly depress the brake pedal or depress it again, master cylinder pressure sensor zero point calibration is not performed normally.**
- **If the lost booster pressure judgment check is not completed normally, the master cylinder pressure sensor check is not judged.**
- **If a recheck is performed after the engine has started, end the Test Mode, enter Test Mode again, and release the vacuum in the booster by pumping the brake pedal prior to the recheck.**

(c) Check the deceleration sensor.

(1) Keep the vehicle stationary on a level surface for 1 second or more.
HINT:
The deceleration sensor check can be performed together with the following master cylinder pressure sensor check.

(d) Check the master cylinder pressure sensor.

(1) Leave the vehicle in a stationary condition and release the brake pedal for 1 second or more, and quickly depress the brake pedal with a force of 98 N (10 kgf, 22 lbf) or more for 1 second. Check that the ABS warning light remains illuminated for 3 seconds.
HINT:
- Ensure that the ABS warning light comes on.
- While the ABS warning light remains illuminated, continue depressing the brake pedal with a force of 98 N (10 kgf, 22 lbf) or more.
- The ABS warning light comes on for 3 seconds every time the brake pedal operation above is performed.

(e) Check the speed sensor.

(1) Check that the ABS warning light is blinking as shown in the illustration.

(2) Check the speed sensor signal.
1. Drive the vehicle straight forward at a speed of 45 km/h (28 mph) or more for several seconds.

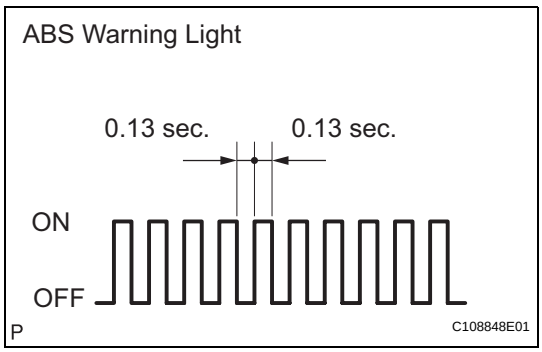

2. Check that the ABS warning light goes off.
NOTICE:
   - **The speed sensor check may not be completed if the sensor check is started with the steering wheel turned or one or more wheels spinning.**
   - **If the speed sensor check is commenced while the steering wheel is turned, the ABS warning light may come on after the low speed check is finished.**
   - **The ABS warning light comes on immediately when an abnormality is detected.**
   - **When the speed sensor signal is normal, the ABS warning light goes off while driving at 45 km/h (28 mph) or more, and blinks in the test mode pattern while the vehicle is stationary.**
   - **Do not drive the vehicle at a speed of 80 km/h (50 mph) or more after the ABS warning light turns off, because test mode DTCs are set again when the vehicle speed exceeds 80 km/h (50 mph).**

Blinking pattern in speed sensor check:

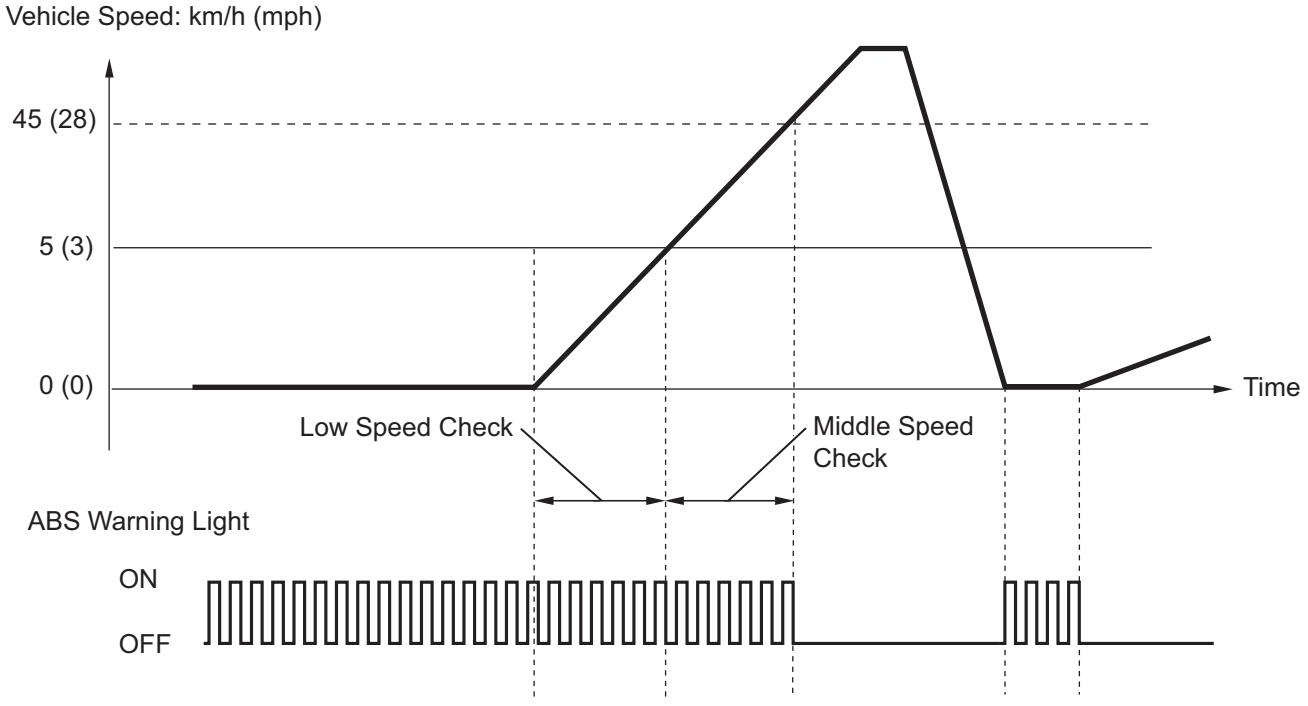

3. Stop the vehicle.

(f) Check the yaw rate sensor.
(1) Move the shift lever to P and set the parking brake lever.

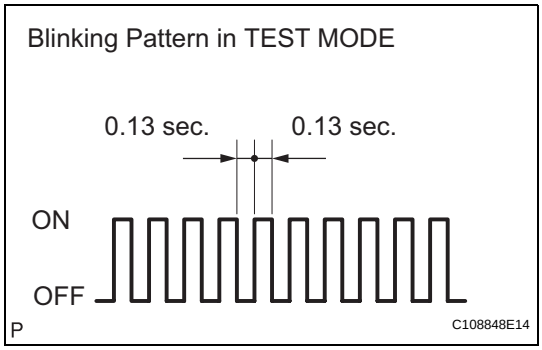

(2) Check that the VSC warning light is blinking as shown in the illustration.
(3) Keep the vehicle stationary on a level surface for 1 second or more.

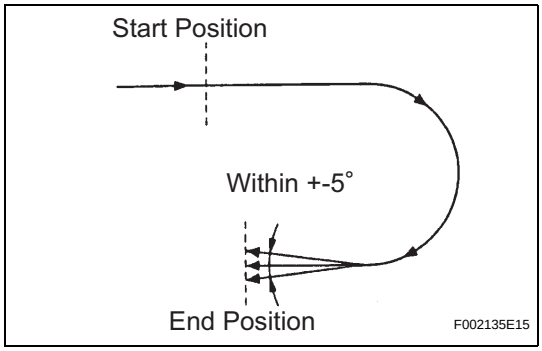

(4) Shift the shift lever to the D position and drive the vehicle at a speed of approximately 5 km/h (3 mph), and turn the steering wheel either to the left or right 90° or more to turn the vehicle through 180°.
(5) Stop the vehicle, move the shift lever into the P position, and then apply the parking brake.
(6) Check that the skid control buzzer sounds for 3 seconds.
HINT:
- If the skid control buzzer sounds, the signal check has been completed normally.
- If the skid control buzzer does not sound, check the skid control buzzer circuit (see page BC-172).
- If the skid control buzzer still does not sound, there is a malfunction in the yaw rate sensor, so check for DTCs.
- Drive the vehicle in a 180° semi circle. At the end of the turn, the direction of the vehicle should be within 180 +-5° of its start position.
- Complete the vehicle turn within 20 seconds.
- Do not spin the wheels.

(g) w/ Downhill assist control only:
Check the downhill assist control operation switch.
(1) Check that the VSC warning light is blinking as shown in the illustration.

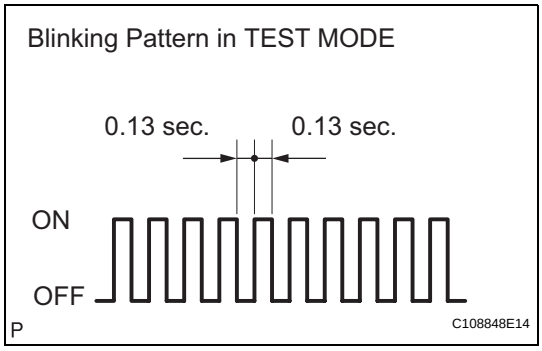

(2) Check the downhill assist control switch.
1. Push the downhill assist control switch on.
2. Push the downhill assist control switch off.

BC

(h) w/ Auto LSD only:
Check the end of the sensor.
(1) When the sensor check is successfully completed, the ABS warning light blinks in the test mode pattern when the vehicle is stopped, and goes off when the vehicle is driven.
NOTICE:
If the sensor check is not completed, the ABS warning light blinks even while the vehicle is driving and the ABS does not operate.

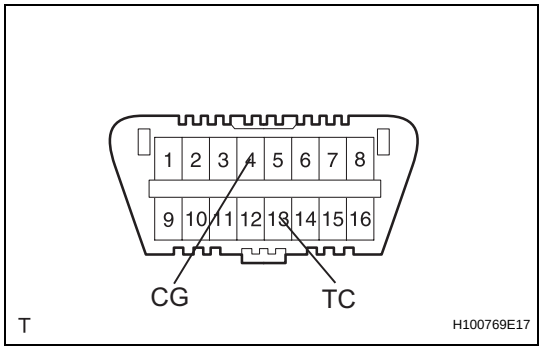

(i) Read the DTCs of the signal check function.
(1) Using SST, connect terminals 13 (TC) and 4 (CG) of the DLC3.
SST 09843-18040
(2) Turn the ignition switch ON.
(3) Count the number of blinks of the ABS and VSC warning light.
HINT:
As an example, the blinking patters of DTCs 71 and 74 are shown below.

BC

ABS and VSC Warning Light

Trouble Code of ABS (Example Codes 71 and 72):

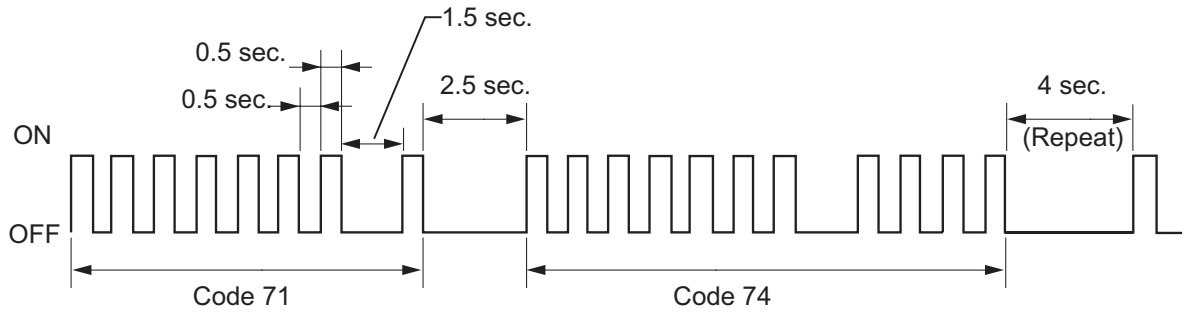

NOTICE:
- **If only DTCs are displayed, repair the malfunctioning area and clear the DTCs.**
- **If the DTCs or test mode codes (DTC of signal check function) are displayed, repair the malfunctioning area, clear the DTCs and perform the test mode inspection.)**

HINT:
- If more than 1 malfunction is detected at the same time, the lowest numbered code will be displayed first.
- See the list of DTCs (refer to "DTC OF TEST MODE FUNCTION (SIGNAL CHECK)" below).

- If all sensors are normal, a normal system code is output (the light comes on for 0.25 seconds at intervals of 0.25 seconds).

(4) After the check, disconnect SST from terminals 13 (TC) and 4 (CG) of the DLC3.

(5) Turn the ignition switch OFF.

3. DTC OF TEST MODE FUNCTION (SIGNAL CHECK)

DTC of ABS sensor check function:

DTC No.	Diagnosis	Trouble Areas
C1271/71	Low output signal of front speed sensor RH	• Front speed sensor RH • Speed sensor circuit • Sensor installation
C1272/72	Low output signal of front speed sensor LH	• Front speed sensor LH • Speed sensor circuit • Sensor installation
C1273/73	Low output signal of rear speed sensor RH	• Rear speed sensor RH (for 4WD) • Skid control sensor RH (for 2WD) • Speed sensor circuit • Sensor installation
C1274/74	Low output signal of rear speed sensor LH	• Rear speed sensor LH (4WD) • Skid control sensor LH (2WD) • Speed sensor circuit • Sensor installation
C1275/75	Abnormal change in output signal of front speed sensor RH	• Sensor installation • Speed sensor rotor • Foreign matter on sensor tip or sensor rotor
C1276/76	Abnormal change in output signal of front speed sensor LH	• Sensor installation • Speed sensor rotor • Foreign matter on sensor tip or sensor rotor
C1277/77	Abnormal change in output signal of rear speed sensor RH	• Sensor installation • Speed sensor rotor • Foreign matter on sensor tip or sensor rotor
C1278/78	Abnormal change in output signal of rear speed sensor LH	• Sensor installation • Speed sensor rotor • Foreign matter on sensor tip or sensor rotor
C1279/79	Deceleration sensor output voltage malfunction	• Yaw rate sensor • Sensor installation
C1281/81	Master cylinder pressure sensor output malfunction	• Master cylinder pressure sensor • Brake pedal load sensing switch (w/ 16-inch disc)

DTC of VSC sensor check function:

DTC No.	Diagnosis	Trouble Areas
C0371/71	Yaw rate sensor	Yaw rate sensor
C1379/74*	Downhill assist control operation switch	Downhill assist control switch

HINT:

- *: w/ Downhill assist control
- The DTCs in this table are only output in Test Mode.
- The detection of DTCs from C1271/71 to C1274/74 is completed before the vehicle speed reaches 5 km/h (3 mph).
- The detection of DTCs from C1275/75 to C1278/78 is completed before the vehicle speed reaches 45 km/h (28 mph).

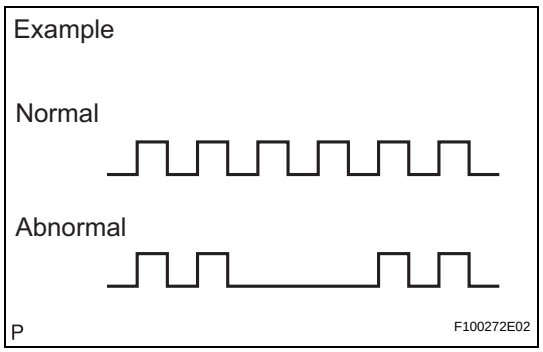

- C1271/71 to C1274/74: The speed output from only one wheel is extremely low despite other wheel speed outputs reaching 5 km/h (3 mph).
- C1275/75 to C1278/78: The abnormal speed sensor output frequency is as shown in the illustration.

PROBLEM SYMPTOMS TABLE

HINT:

- Use the table below to help determine the cause of the problem symptom. The potential causes of the symptoms are listed in order of probability in the "Suspected area" column of the table. Check each symptom by checking the suspected areas in the order they are listed. Replace parts as necessary.
- Inspect the fuses and relays related to this system before inspecting the suspected areas below.

NOTICE:

When replacing the ABS and TRACTION actuator or sensor, turn the ignition switch OFF.

Vehicle stability control system

Symptom	Suspected area	See page
ABS, BA and/or EBD does not operate	1. Check for DTCs again and make sure that normal system code displayed	BC-47
	2. IG power source circuit	BC-99
	3. Front speed sensor circuit	BC-62
	4. Rear speed sensor circuit	BC-69
	5. Check ABS and TRACTION actuator using intelligent tester (Check ABS and TRACTION actuator operation using ACTIVE TEST function). If abnormal, check hydraulic circuit for leakage.	BC-180
	6. If symptoms still occur even after above circuits in suspected areas inspected and proved to be normal, replace ABS and TRACTION actuator (skid control ECU)	BC-181
ABS, BA and/or EBD does not operate efficiently	1. Check for DTCs again and make sure that normal system code displayed	BC-47
	2. Front speed sensor circuit	BC-62
	3. Rear speed sensor circuit	BC-69
	4. Stop light switch circuit	BC-105
	5. Check ABS and TRACTION actuator using intelligent tester (Check ABS and TRACTION actuator operation using ACTIVE TEST function). If abnormal, check hydraulic circuit for leakage.	BC-180
	6. If symptoms still occur even after above circuits in suspected areas inspected and proved to be normal, replace ABS and TRACTION actuator (skid control ECU)	BC-181
VSC and/or TRC does not operate	1. Check for DTCs again and make sure that normal system code displayed	BC-47
	2. IG power source circuit	BC-99
	3. Check hydraulic circuit for leakage	-
	4. Front speed sensor circuit	BC-62
	5. Rear speed sensor circuit	BC-69
	6. Yaw rate sensor circuit	BC-96
	7. Steering angle sensor circuit	BC-92
	8. If symptoms still occur even after above circuits in suspected areas inspected and proved to be normal, replace ABS and TRACTION actuator (skid control ECU)	BC-181
Sensor signal check cannot be performed	1. TS and CG terminal circuit	BC-177
	2. ABS and TRACTION actuator (skid control ECU)	BC-181

Symptom	Suspected area	See page
DTC check cannot be performed	1. Check for DTCs again and make sure that normal system code displayed	BC-47
	2. TC and CG terminal circuit	BC-174
	3. If symptoms still occur even after above circuits in suspected areas inspected and proved to be normal, replace ABS and TRACTION actuator (skid control ECU)	BC-181
ABS warning light abnormal (Remains on)	1. ABS warning light circuit	BC-134
	2. ABS and TRACTION actuator (skid control ECU)	BC-181
ABS warning light abnormal (Does not come on)	1. ABS warning light circuit	BC-138
	2. ABS and TRACTION actuator (skid control ECU)	BC-181
VSC warning light abnormal (Remains on)	1. VSC warning light circuit	BC-139
	2. ABS and TRACTION actuator (skid control ECU)	BC-181
VSC warning light abnormal (Does not come on)	1. VSC warning light circuit	BC-142
	2. ABS and TRACTION actuator (skid control ECU)	BC-181
BRAKE warning light abnormal (Remains on)	1. BRAKE warning light circuit	-
	2. ABS and TRACTION actuator (skid control ECU)	BC-144
BRAKE warning light abnormal (Does not come on)	1. BRAKE warning light circuit	BC-151
	2. ABS and TRACTION actuator (skid control ECU)	BC-181
SLIP indicator light abnormal (Remains on)	1. SLIP indicator light circuit	BC-152
	2. ABS and TRACTION actuator (skid control ECU)	BC-181
SLIP indicator light abnormal (Does not come on)	1. SLIP indicator light circuit	BC-154
	2. ABS and TRACTION actuator (skid control ECU)	BC-181
Skid control buzzer abnormal	1. Skid control buzzer circuit	BC-172
	2. ABS and TRACTION actuator (skid control ECU)	BC-181
Downhill assist control does not operate*1	1. Check for DTCs again and make sure that normal system code displayed	BC-47
	2. Downhill assist control switch circuit	BC-119
	3. Downhill assist control indicator light circuit	BC-161
	4. If symptoms still occur even after above circuits in suspected areas inspected and proved to be normal, replace ABS and TRACTION actuator (skid control ECU)	BC-181
Downhill assist control indicator light abnormal (Remains on)*1	1. Downhill assist control indicator light circuit	BC-156
	2. ABS and TRACTION actuator (skid control ECU)	BC-181
Downhill assist control indicator light abnormal (Does not come on)*1	1. Downhill assist control indicator light circuit	BC-161
	2. ABS and TRACTION actuator (skid control ECU)	BC-181
Hill-start assist control does not operate*2	1. ABS and TRACTION actuator (skid control ECU)	BC-181
AUTO LSD does not operate*3	1. Check for DTCs again and make sure that normal system code displayed	BC-47
	2. Auto LSD switch circuit	BC-169
	3. AUTO LSD indicator circuit	BC-169
	4. If symptoms still occur even after above circuits in suspected areas inspected and proved to be normal, replace ABS and TRACTION actuator (skid control ECU)	BC-181
AUTO LSD indicator light abnormal (Remains on)*3	1. AUTO LSD indicator circuit	BC-164
	2. ABS and TRACTION actuator (skid control ECU)	BC-181
AUTO LSD indicator light abnormal (Does not come on)*3	1. AUTO LSD indicator circuit	BC-169
	2. ABS and TRACTION actuator (skid control ECU)	BC-181

HINT:
*1: w/ Downhill assist control
*2: w/ Hill-start assist contol
*3: for 2WD w/ AUTO LSD

TERMINALS OF ECU

1. SKID CONTROL ECU

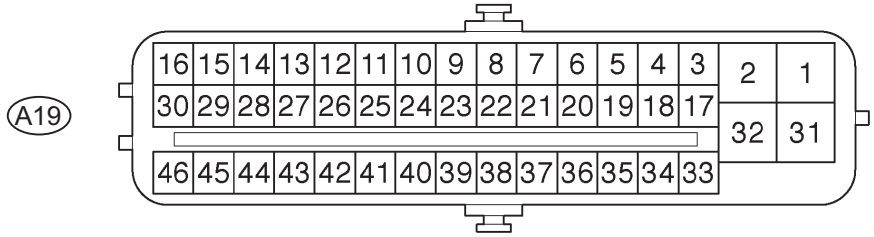

N C110610E04

Symbols (Terminal No.)	Terminal Description
GND2 (A19-1)	Motor ground
BM (A19-2)	Motor relay input
FR+ (A19-3)	Front RH wheel speed sensor power supply
FL- (A19-4)	Front LH wheel speed signal input
RR+ (A19-5)	Rear RH wheel speed signal power supply
RL- (A19-6)	Rear LH wheel speed signal input
FSW+ (A19-7)*1	Brake pedal load sensing switch input
CANH (A19-11)	CAN communication line H
SP1 (A19-12)	Speed signal output for combination meter
MRF (A19-14)	Fail safe motor relay output
MR (A19-15)	Motor relay output
STPO (A19-16)	Stop light relay output
FR- (A19-17)	Front RH wheel speed signal input
FL+ (A19-18)	Front LH wheel speed sensor power supply
RR- (A19-19)	Rear RH wheel speed signal input
RL+ (A19-20)	Rear LH wheel speed sensor power supply
STP2 (A19-21)	Stop light relay input
TS (A19-24)	Sensor diagnosis check input
CANL (A19-25)	CAN communication line L
STP1 (A19-27)	Stop light switch input
HDCS (A19-28)*2	Downhill assist control switch input
+BS (A19-31)	Solenoid valve power supply
GND1 (A19-32)	Skid control ECU ground
CSW (A19-43)*3	AUTO LSD switch input
R+ (A19-45)	Power supply for motor relay
IG1 (A19-46)	ECU power supply

HINT:
*1: w/ 16-inch disc
*2: w/ Downhill assist control
*3: for 2WD (w/ AUTO LSD)

2. CHECK SKID CONTROL ECU

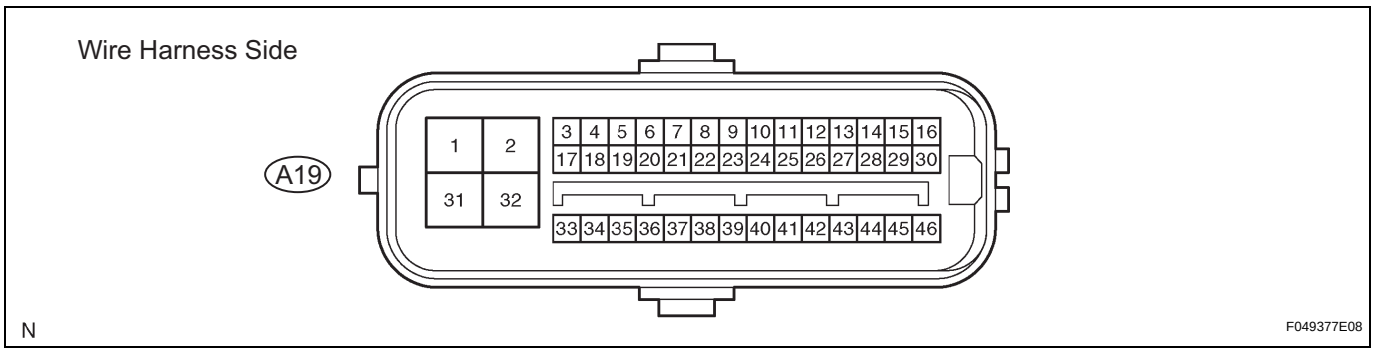

(a) Disconnect the A19 ECU connector.
(b) Measure the voltage and resistance of the wire harness side connector.
HINT:
The voltage cannot be measured with the connector connected to the skid control ECU as the connector is water resistant.

Skid control ECU:

Symbols (Terminal No.)	Wiring Color	Terminal Description	Condition	Specified Condition
GND2 (A19-1) - Body ground	W-B - Body ground	Skid control ECU ground	Always	Below 1 Ω
STP1 (A19-27) - Body ground	L - Body ground	Stop light switch input	Stop light switch OFF Brake pedal released	Below 1.5 V
STP1 (A19-27) - Body ground	L - Body ground	Stop light switch input	Stop light switch ON Brake pedal depressed	8 to 16 V
STP2 (A19-21) - Body ground	L - Body ground	Stop light relay input	Stop light switch OFF Brake pedal released	Below 1.5 V
STP2 (A19-21) - Body ground	L - Body ground	Stop light relay input	Stop light switch ON Brake pedal depressed	8 to 16 V
STPO (A19-16) - Body ground	W - Body ground	Stop light relay output	Always	10 to 14 V
+BS (A19-31) - Body ground	W - Body ground	Solenoid relay power supply	Always	10 to 14 V
IG1 (A19-46) - Body ground	L - Body ground	ECU power supply	Ignition switch ON	10 to 14 V
HDCS (A19-28)*2	Y - Body ground	Downhill assist control switch input	Downhill assist control switch ON	Below 1 Ω
HDCS (A19-28)*2	Y - Body ground	Downhill assist control switch input	Downhill assist control switch OFF	10 kΩ or higher
FSW+ (A19-7)*1	P - Body ground	Brake pedal load sensing switch input	Brake pedal load sensing switch ON Brake pedal released	202.4 to 223.7 Ω
FSW+ (A19-7)*1	P - Body ground	Brake pedal load sensing switch input	Brake pedal load sensing switch OFF Brake pedal released	0,95 to 1.05 kΩ
CSW (A19-43)*3	L - Body ground	AUTO LSD switch input	AUTO LSD switch ON	Below 1 Ω
CSW (A19-43)*3	L - Body ground	AUTO LSD switch input	AUTO LSD switch OFF	10 kΩ or higher

HINT:
*1: w/ 16-inch disc
*2: w/ Downhill assist control
*3: for 2WD (w/ AUTO LSD)
If the result is not as specified, there may be a malfunction on the wire harness side.

3. CHECK INSTRUMENT PANEL JUNCTION BLOCK (MAIN BODY ECU)

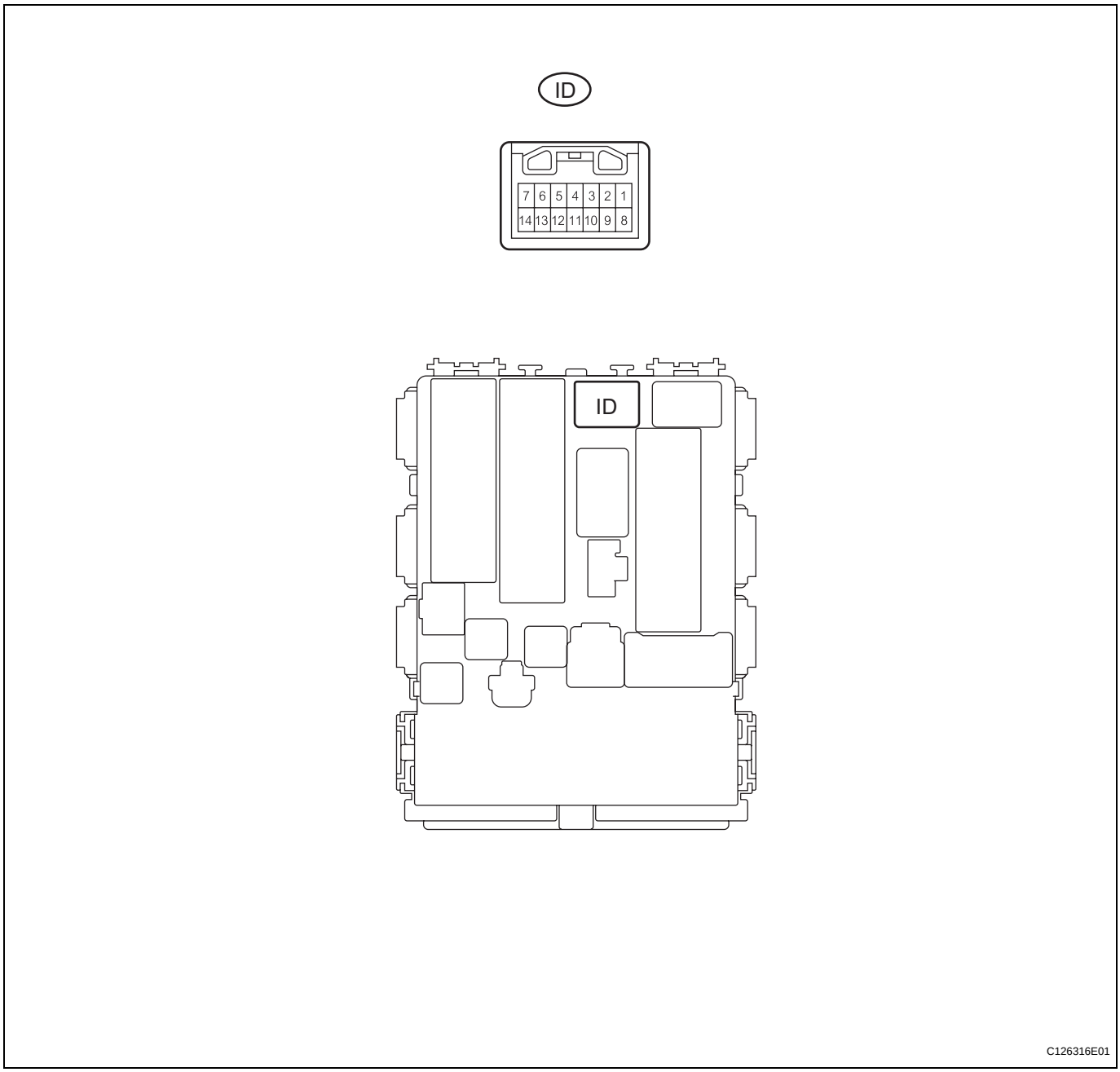

(a) Disconnect the ID junction block connector.
(b) Measure the resistance of the wire harness side connector.

Symbols (Terminal No.)	Wiring Color	Terminal Description	Condition	Specified Condition
PKB (ID-4) - Body ground	B - Body ground	Parking brake switch input	Parking brake switch ON	Below 1 Ω
PKB (ID-4) - Body ground	B - Body ground	Parking brake switch input	Parking brake switch OFF	10 kΩ or higher

If the result is not as specified, there may be a malfunction on the wire harness side.
(c) Reconnect the ID junction block connector.

(d) Measure the voltage of the wire harness side connector.

Symbols (Terminal No.)	Wiring Color	Terminal Description	Condition	Specified Condition
PKB (ID-4) - Body ground	B - Body ground	Parking brake switch input	Parking brake switch ON	Below 1 V
PKB (ID-4) - Body ground	B - Body ground	Parking brake switch input	Parking brake switch OFF	10 to 14 V

If the result is not as specified, the junction block (ECU) may be a malfunction.

DIAGNOSIS SYSTEM

1. DIAGNOSIS

If the skid control ECU detects a malfunction, the ABS, VSC and brake warning lights and the slip, downhill assist control and AUTO LSD indicator lights come on in accordance with the trouble area to warn the driver. The table below indicates which lights come on when there are malfunctions in particular functions.

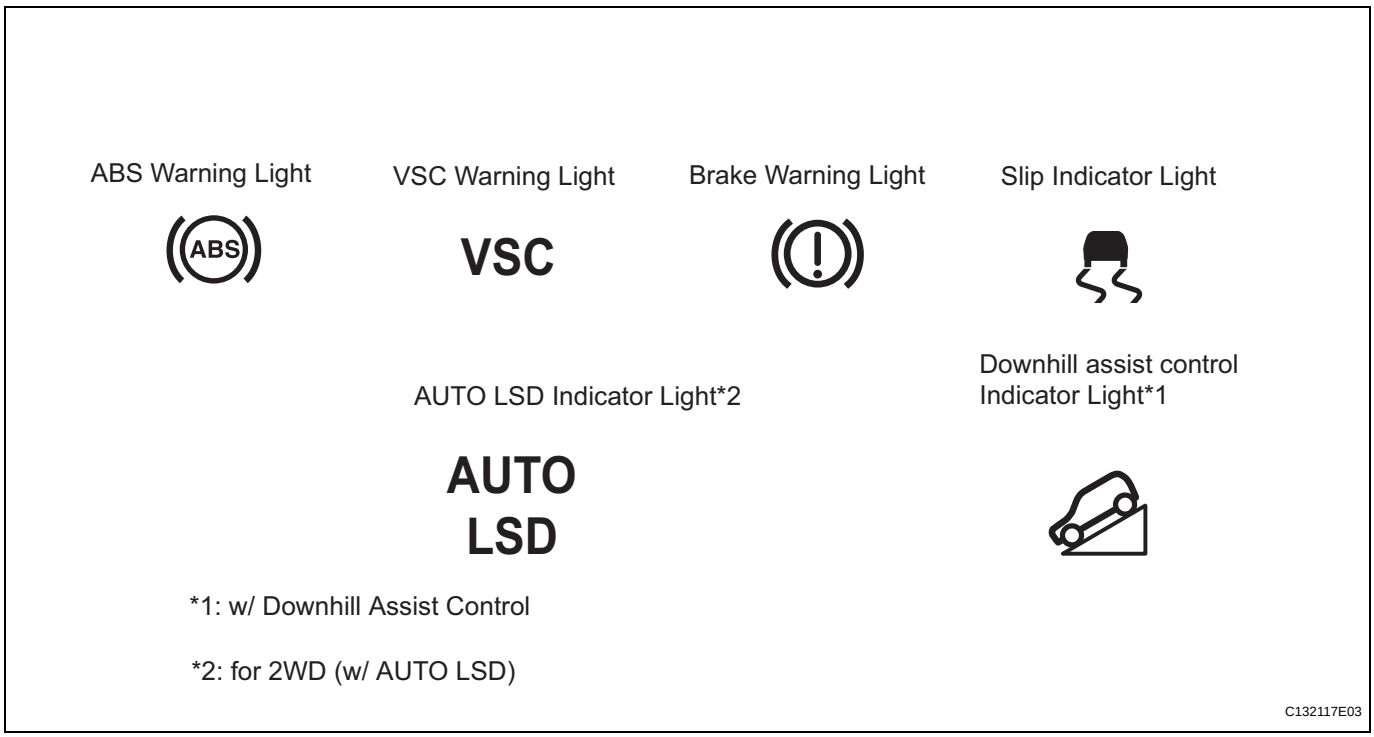

Item / Trouble Area	ABS	EBD	BA (Brake Assist)	TRC	VSC	Downhill assist control*1	Hill-start assist control*2	AUTO LSD*3
ABS warning light	○	○	○	-	-	-	-	-
Brake warning light	-	○	○*4	-	-	-	-	-
VSC warning light	○	○	○	○	○	○	○	○
Slip indicator light	○	○	○	○	○	○	○	○
Downhill assist control indicator light*1	● (Downhill assist control switch ON)	● (Downhill assist control switch ON)	● (Downhill assist control switch ON)	● (Downhill assist control switch ON)	● (Downhill assist control switch ON)	● (Downhill assist control switch ON)	● (Downhill assist control switch ON)	● (Downhill assist control switch ON)
AUTO LSD indicator light*3	-	-	-	-	-	-	-	-

○: Light ON
●: Light ON (Blinking)
-: Light OFF
HINT:
- *1: w/ Downhill assist control
- *2: w/ Hill-start assist control
- *3: for 2WD w/ AUTO LSD

- *4: w/ 16-inch disc
- The DTCs can be read by connecting SST (09843-18040) between the TC and CG terminals of the DLC3 and observing the blinking pattern of the ABS and VSC warning lights, or by using an intelligent tester (see page BC-47).
- This system has a sensor signal check function (see page BC-28).

2. CHECK WARNING LIGHT AND INDICATOR LIGHT

(a) Release the parking brake lever.

NOTICE:
Before releasing the parking brake lever, set chocks to hold the vehicle for safety.

HINT:
When the parking brake is applied or the brake fluid level is low, the brake warning light comes on.

(b) When the ignition switch is turned ON, check that the ABS, VSC and brake warning lights and the slip, downhill assist control and AUTO LSD indicator lights come on and go off in about 3 seconds.

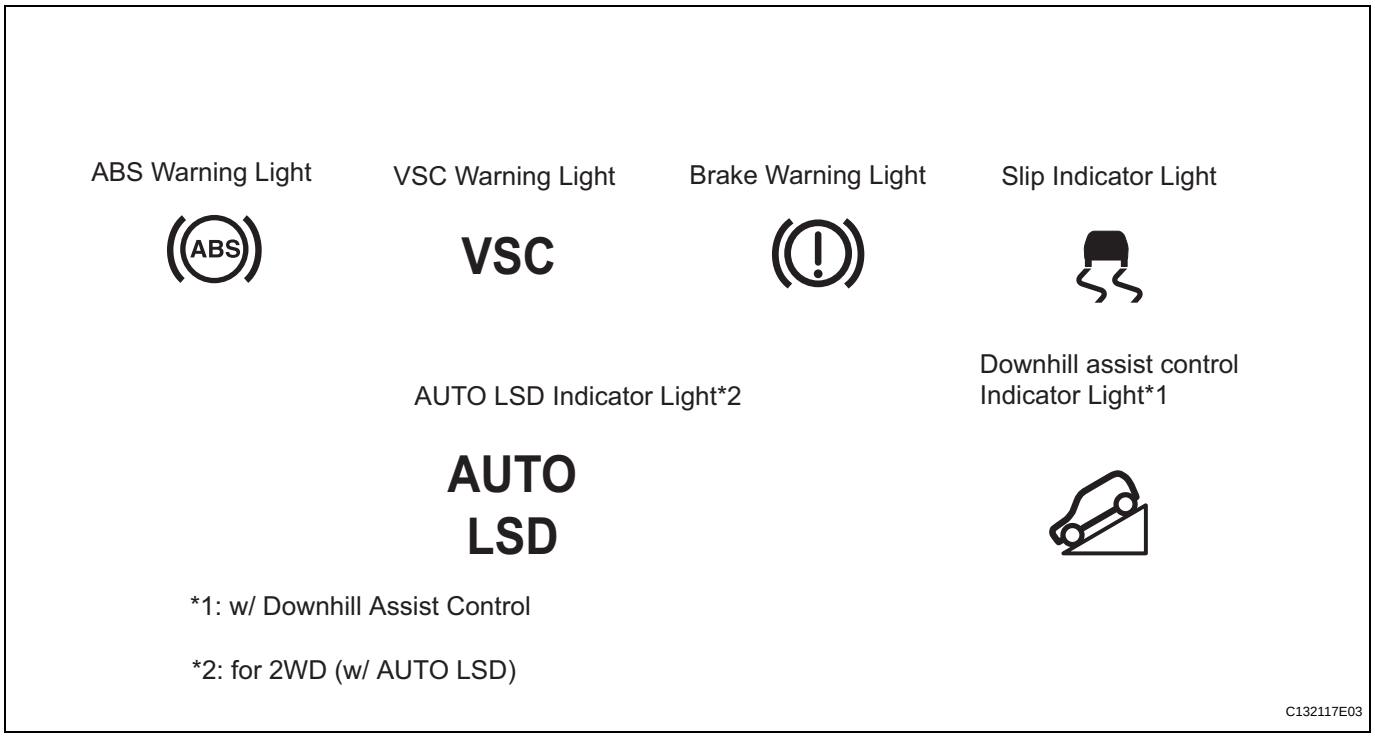

HINT:
If the warning lights do not illuminate, confirm whether the bulbs have burned out, and also check for CAN communication system DTCs, since the skid control ECU and combination meter are connected by the CAN communication line.
If the warning light remains on, perform relevant troubleshooting procedures. The relevant troubleshooting procedures are in the sections listed in the table below.

Section Title	See procedure
ABS Warning Light Remains ON	BC-134

Section Title	See procedure
VSC Warning Light Remains ON	BC-139
Brake Warning Light Remains ON	BC-144
Slip Indicator Light Remains ON	BC-152
Downhill assist control Indicator Light Remains ON	BC-156
AUTO LSD Indicator Light Remains ON	BC-164

DTC CHECK / CLEAR

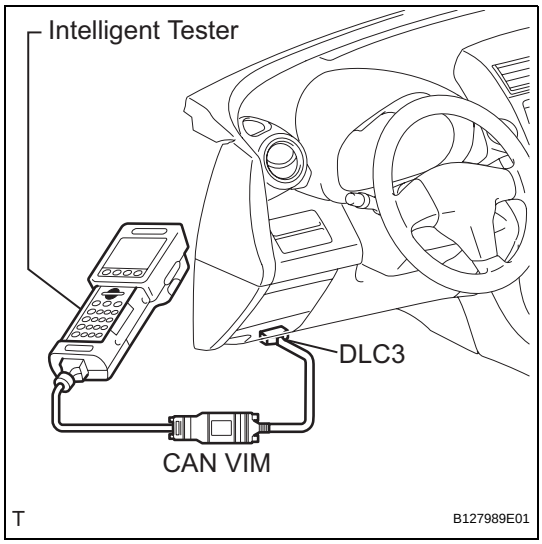

1. CHECK DTC (When Using Intelligent Tester)

(a) Connect the intelligent tester (with CAN VIM) to the DLC3.
(b) Turn the ignition switch ON.
(c) Turn the tester on.
(d) Read the DTCs by following the prompts on the tester screen.
HINT:
Refer to the intelligent tester operator's manual for further details.

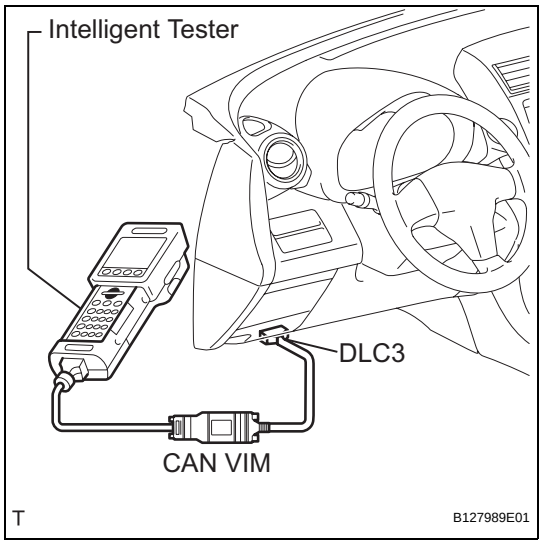

2. CLEAR DTC (When Using Intelligent Tester)

(a) Connect the intelligent tester (with CAN VIM) to the DLC3.
(b) Turn the ignition switch ON.
(c) Turn the tester on.
(d) Operate the intelligent tester to clear the codes.
HINT:
Refer to the intelligent tester operator's manual for further details.

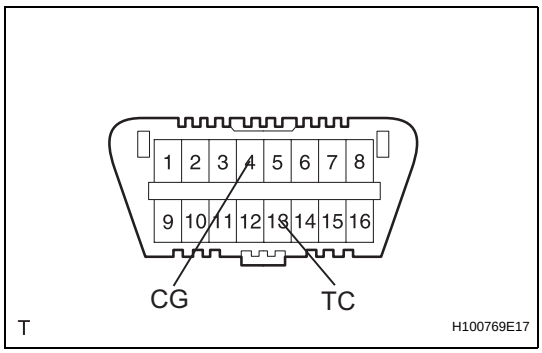

3. CHECK DTC (When not Using Intelligent Tester)

(a) Using SST, connect terminals 13 (TC) and 4 (CG) of the DLC3.
SST 09843-18040
(b) Turn the ignition switch ON.
(c) Read DTCs from the ABS warning light on the combination meter.
HINT:
- If the ABS warning light does not blink, perform relevant troubleshooting procedures. The relevant troubleshooting procedures are in the sections listed in the table below.

Trouble Area	See Procedure
ABS warning light circuit	BC-134 or BC-138

Trouble Area	See Procedure
VSC warning light circuit	BC-139 or BC-142
TC and CG terminal circuit	BC-174

- As an example, the blinking patterns of the normal system code and DTCs 11 and 21 are shown below.

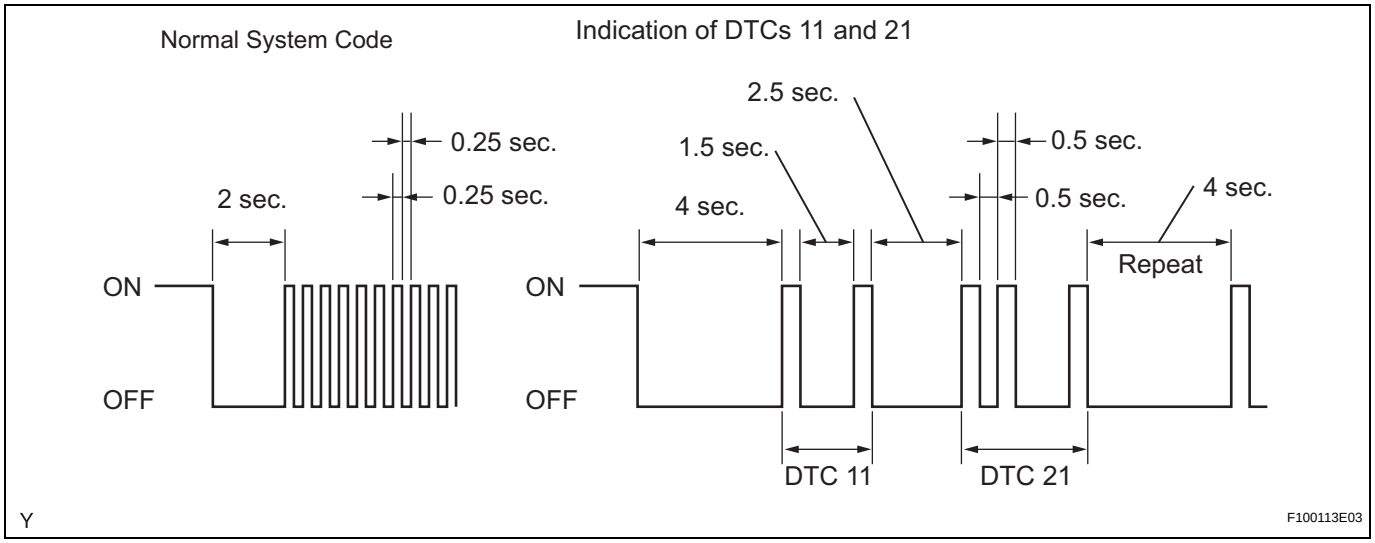

- DTCs are explained in the "DIAGNOSTIC TROUBLE CODE CHART" (see page BC-57).

(d) After completing the check, disconnect SST from terminals 13 (TC) and 4 (CG) of the DLC3, and turn the ignition switch OFF.

HINT:

- If 2 or more malfunctions are detected at the same time, the lowest numbered DTC is displayed first.

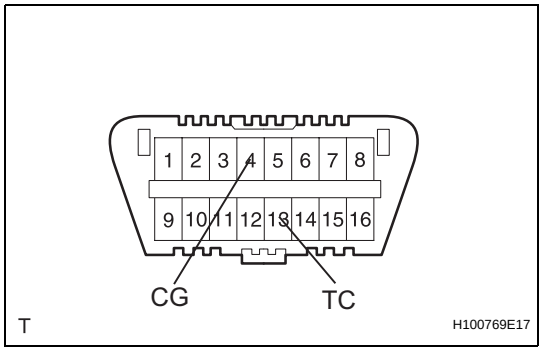

4. CLEAR DTC (When not Using Intelligent Tester)

(a) Using SST, connect terminals 13 (TC) and 4 (CG) of the DLC3.

SST 09843-18040

(b) Turn the ignition switch ON.

BC

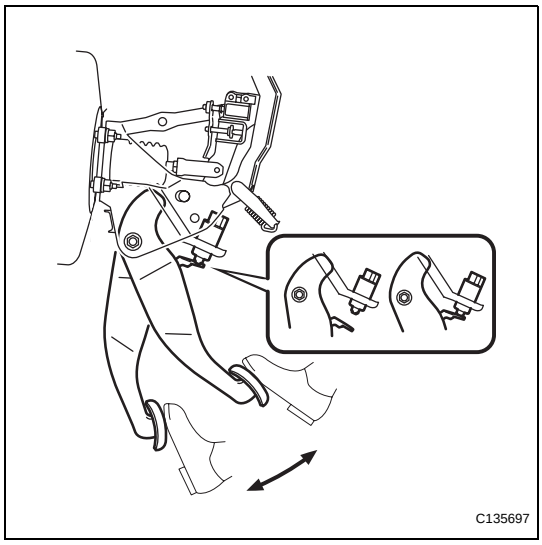

(c) Clear the DTCs stored in the skid control ECU by depressing the brake pedal 8 times or more within 5 seconds.
(d) Check that the ABS and VSC warning lights come on.
(e) Remove SST from the terminals of the DLC3.
(f) Turn the ignition switch OFF.
HINT:
Clearing the DTCs cannot be performed by removing the cable from the negative (-) battery terminal or the ECU-IG1 fuse.

5. END OF DTC CHECK/CLEAR

(a) Turn the ignition switch ON.
(b) Check that the ABS and VSC warning lights go off within approximately 3 seconds.
(c) Turn the ignition switch OFF.

FREEZE FRAME DATA

1. FREEZE FRAME DATA

HINT:

- Whenever a DTC is detected or the ABS operates, the skid control ECU stores the current vehicle (sensor) state as freeze frame data.
- The skid control ECU stores the number of times (maximum: 31) the ignition switch has been turned from OFF to ON since the last time the ABS was activated. However, if the vehicle was stationary or running at a low speed (7 km/h [4.3 mph] or less), or if a DTC is detected, the skid control ECU stops counting.
- Freeze frame data at the time the ABS operates: The skid control ECU stores and updates the data whenever the ABS system operates.
  When the ECU stores data at the time a DTC is detected, the data stored when the ABS operated is erased.
- Freeze frame data at the time a DTC is detected: When the skid control ECU stores data at the time a DTC is detected, no updates will be performed until the data is cleared.

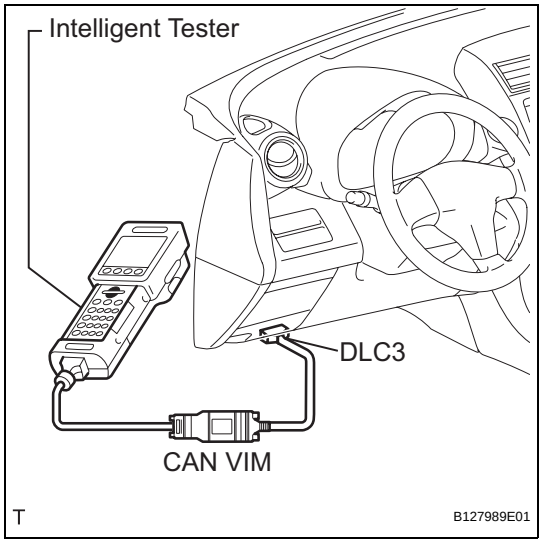

(a) Connect the intelligent tester (with CAN VIM) to the DLC3.
(b) Turn the ignition switch ON.
(c) Turn the tester on.
(d) From the display on the tester, select "FREEZE FRAME DATA".

Item (Display)	Measurement Item	Reference Values
FREEZE TIME	Elapsed time after freeze frame data recorded	Min.: 0 ms Max.: 500 ms
#IG ON	Number of ignition switch ON operations since freeze frame data stored	1 to 31
BUZZER	Skid control buzzer signal	ON: Skid control buzzer ON OFF: Skid control buzzer OFF
STOP LAMP SW	Stop light switch signal	ON: Stop light switch ON OFF: Stop light switch OFF
PARKING BRAKE SW	Parking brake switch signal	ON: Parking brake switch ON OFF: Parking brake switch OFF
BRK PEDAL SW	Brake pedal load sensing switch signal	ON: Brake pedal released OFF: Brake pedal depressed

Item (Display)	Measurement Item	Reference Values
GEAR POSITION	Gear position information	FAIL 1st 2nd 3rd 4th 5th 6th P, N R NOT R
LEVER POSITION	Shift lever position information	FAIL 1st 2nd 3rd 4th 5th 6th/B D/M P, N R
OPERATED SYSTEM	Operated system status	ABS: ABS activated VSC: VSC activated TRC: TRC activated BA: BA activated FAIL: Fail safe mode activated HA-CTRL: Hill-start assist control activated SYS: System prohibited NON: No system activated
MAS CYL PRESS 1	Master cylinder pressure sensor reading	Brake pedal released: 0.3 V to 0.9 V Brake pedal depressed: 0.8 V to 4.5 V
M/C Sensor Grade	Master cylinder pressure sensor change	Min.: -30 MPa/s Max.: 225 MPa/s
YAW RATE	Yaw rate sensor reading	Min.: -128 deg/s Max.: 127 deg/s
STEERING SEN	Steering sensor reading	Left turn: Increase Right turn: Decrease
LATERAL G	Lateral G	Min.: -25.11 m/s^2 Max.: 24.91 m/s^2
FORWARD&REA G	Forward and backward G	Min.: -25.11 m/s^2 Max.: 24.91 m/s^2
FR WHEEL SPD	FR wheel speed	Min.: 0 km/h (0 mph) Max.: 326.4 km/h (202.8 mph)
FL WHEEL SPD	FL wheel speed	Min.: 0 km/h (0 mph) Max.: 326.4 km/h (202.8 mph)
RR WHEEL SPD	RR wheel speed	Min.: 0 km/h (0 mph) Max.: 326.4 km/h (202.8 mph)
RL WHEEL SPD	RL wheel speed	Min.: 0 km/h (0 mph) Max.: 326.4 km/h (202.8 mph)
VEHICLE SPD	Vehicle speed	Min.: 0 km/h (0 mph) Max.: 326.4 km/h (202.8 mph)
SPD GARDE	Vehicle speed grade	Min.: -25.11 m/s^2 Max.: 24.91 m/s^2
ENGINE TORQUE	Real engine torque	Min.: -1024 Nm Max.: 1023 Nm
ACCELERATOR %	Accelerator pedal opening angle %	Min.: 0% Max.: 128%
INSPECTION MODE	Inspection mode	OTHER: Normal INSPECT: Service

FAIL-SAFE CHART

1. FAIL SAFE OPERATION

- If there is a problem with any sensor signals or actuator systems, the skid control ECU prohibits the power supply to the ABS and TRACTION actuator and informs the ECM of VSC system failure.
  The ABS and TRACTION actuator turns off the solenoids and the ECM shuts off VSC control (traction control signal) from the skid control ECU accordingly, the result being that it is as if the ABS, TRC and VSC systems were not installed.
- ABS control is prohibited, but EBD control continues as far as possible. If EBD control is impossible, the BRAKE warning light comes on to warn the driver (see page BC-44).
- If system components have any malfunctions before starting control, the operation stops immediately. If system components have any malfunctions during control, the control stops gradually so as not to trigger a sudden change in vehicle conditions.
  If it is impossible to control the systems, the warning light comes on to inform the driver of malfunctions in the systems (see page BC-44).

HINT:

- If the ABS system malfunctions, the brake system operates normally without the ABS system.
- If the brake actuator malfunctions, a gradual loss of brake performance is expected, and ABS system control is prohibited.

BC

ABS, EBD and BA system

Malfunction Area	Fail-Safe Operation
ABS system	ABS, BA, TRC and VSC control prohibited
BA system	ABS, BA, TRC and VSC control prohibited
EBD system	ABS, EBD, BA, TRC and VSC control prohibited

TRC and VSC system:

Malfunction Area	Fail-Safe Operation
Engine control system (TRC and VSC systems)	Before control: Disables control During control: Uses only the brakes to effect control
Brake control system (VSC system)	Before control: Disables control During control: Uses only the engine to effect control
Brake control system (TRC system)	Before control: Disables control During control: Disables control (by gradually ending control)

DATA LIST / ACTIVE TEST

1. READ DATA LIST

HINT:

Using the intelligent tester's DATA LIST allows switch, sensor, actuator and other item values to be read without out removing any parts. Reading the DATA LIST early in troubleshooting is one way to save time.

(a) Connect the intelligent tester (with CAN VIM) to the DLC3.
(b) Turn the ignition switch ON.
(c) Turn the intelligent tester on.
(d) Read the DATA LIST according to the display on the tester.

Skid control ECU

Tester Display	Measurement Item/Range	Normal Condition	Diagnostic Note
ABS WARN LAMP	ABS warning light / ON or OFF	ON: ABS warning light ON OFF: ABS warning light OFF	-
VSC WARN LAMP	VSC warning light / ON or OFF	ON: VSC warning light ON OFF: VSC warning light OFF	-
BRAKE WARN LAMP	Brake warning light / ON or OFF	ON: Brake warning light ON OFF: Brake warning light OFF	-
SLIP INDI LAMP	Slip indicator light / ON or OFF	ON: Slip indicator light ON OFF: Slip indicator light OFF	-
D-HILL LIGHT*9	Downhill assist control indicator light / ON or OFF	ON: Downhill assist control switch ON OFF: Downhill assist control switch OFF	-
AUTO LSD LAMP*10	AUTO LSD indicator light / ON or OFF	ON: Traction control switch ON OFF: Traction control switch OFF	-
BUZZER	Skid control buzzer / ON or OFF	ON: Buzzer ON OFF: Buzzer OFF	-
STOP LAMP SW	Stop light switch / ON or OFF	ON: Brake pedal depressed OFF: Brake pedal released	-
PARKING BRAKE SW	Parking brake switch / ON or OFF	ON: Parking brake applied OFF: Parking brake released	-
BRK PEDAL SW	Brake pedal load sensing switch / ON or OFF	ON: Brake pedal depressed beyond the specified point OFF: Brake pedal not depressed beyond the specified point	-
IDLE SW	Main idle switch / ON or OFF	ON: Accelerator pedal released OFF: Accelerator pedal depressed	-
DAC SW*9	Downhill assist control switch / ON or OFF	ON: Downhill assist control switch ON ON: Downhill assist control switch ON	-
AUTO LSD SW*10	AUTO LSD switch / ON or OFF	ON: AUTO LSD switch ON ON: AUTO LSD switch ON	-
GEAR POSITION	Gear position information / P/N, R, 1st-6th, FAIL, NOT R	-	-
LEVER POSITION	Shift lever position information / P/N, R, D/M, 1st-6th/B, FAIL	-	-
SHIFT INFO	Shift information / ON or OFF	ON: During gear change	-
MAS CYL PRESS 1	Master cylinder pressure sensor 1 reading / min.: 0 V, max.: 5 V	When brake pedal released: 0.3 to 0.9 V	Reading increases when brake pedal depressed
ZERO M/C SEN	Memorized zero point value of master cylinder pressure sensor / min.: -12.5 MPa, max.: 12.4 MPa	Min.: -12.5 MPa Max.: 12.4 MPa	-

Tester Display	Measurement Item/Range	Normal Condition	Diagnostic Note
DECELERAT SEN	Deceleration sensor 1 reading / min.: -18.52 m/s^2, max.: 18.39 m/s^2	Min.: -18.52 m/s^2 Max.: 18.39 m/s^2	-
ZERO DECELERAT	Memorized zero point value of deceleration sensor 1 / min.: -25.11 m/s^2, max.: 24.91 m/s^2	Min.: -25.11 m/s^2 Max.: 24.91 m/s^2	-
DECELERAT SEN 2	Deceleration sensor 2 reading / min.: -18.52 m/s^2, max.: 18.39 m/s^2	Min.: -18.52 m/s^2 Max.: 18.39 m/s^2	-
ZERO DECELERAT 2	Memorized zero point value of deceleration sensor 2 / min.: -25.11 m/s^2, max.: 24.91 m/s^2	Min.: -25.11 m/s^2 Max.: 24.91 m/s^2	-
YAW RATE SENS 1	Yaw rate sensor 1 reading / min.: -128 deg/s, max.: 127 deg/s	Min.: -128 deg/s Max.: 127 deg/s	-
YAW RATE SENS 2	Yaw rate sensor 2 reading / min.: -128 deg/s, max.: 127 deg/s	Min.: -128 deg/s Max.: 127 deg/s	-
ZERO YAW RATE	Memorized zero point value of yaw rate sensor 1 / min.: -128 deg/s, max.: 127 deg/s	Min.: -128 deg/s Max.: 127 deg/s	-
STEERING SEN	Steering sensor reading / min.: -3276.8 deg, max.: 3276.7 deg	Left turn: Increase Right turn: Decrease	-
ZERO STEERING	Memorized zero point value of steering sensor / min.: -3276.8 deg, max.: 3276.7 deg	Min.: -3276.8 deg Max.: 3276.7 deg	-
LATERAL G	Lateral G / min.: -25.11 m/s^2, max.: 24.91 m/s^2	Min.: -25.11 m/s^2 Max.: 24.91 m/s^2	-
FORWARD&REA G	Forward and rearward G / min.: -25.11 m/s^2, max.: 24.91 m/s^2	Min.: -25.11 m/s^2 Max.: 24.91 m/s^2	-
YAW RATE VALUE	Yaw rate value / min.: -128 deg/s, max.: 127 deg/s	Min.: -128 deg/s Max.: 127 deg/s	-
STEERING ANGLE	Steering angle value / min.: -3276.8 deg, max.: 3276.7 deg	Min.: -3276.8 deg Max.: 3276.7 deg	-
FR WHEEL SPD	Wheel speed sensor (FR) reading / min.: 0 km/h (0 mph), max.: 326.4 km/h (202.8 mph)	Actual wheel speed	Similar to speed indicated on speedometer
FL WHEEL SPD	Wheel speed sensor (FL) reading / min.: 0 km/h (0 mph), max.: 326.4 km/h (202.8 mph)	Actual wheel speed	Similar to speed indicated on speedometer
RR WHEEL SPD	Wheel speed sensor (RR) reading / min.: 0 km/h (0 mph), max.: 326.4 km/h (202.8 mph)	Actual wheel speed	Similar to speed indicated on speedometer
RL WHEEL SPD	Wheel speed sensor (RL) reading / min.: 0 km/h (0 mph), max.: 326.4 km/h (202.8 mph)	Actual wheel speed	Similar to speed indicated on speedometer
VEHICLE SPD	Maximum speed sensor reading / min.: 0 km/h (0 mph), max.: 326.4 km/h (202.8 mph)	Actual wheel speed	Similar to speed indicated on speedometer
FR WHEEL ACCEL	FR wheel acceleration / min.: -200.84 m/s^2, max.: 199.27 m/s^2	Min.: -200.84 m/s^2 Max.: 199.27 m/s^2	-
FL WHEEL ACCEL	FL wheel acceleration / min.: -200.84 m/s^2, max.: 199.271 m/s^2	Min.: -200.84 m/s^2 Max.: 199.27 m/s^2	-
RR WHEEL ACCEL	RR wheel acceleration / min.: -200.84 m/s^2, max.: 199.27 m/s^2	Min.: -200.84 m/s^2 Max.: 199.27 m/s^2	-
RL WHEEL ACCEL	RL wheel acceleration / min.: -200.84 m/s^2, max.: 199.27 m/s^2	Min.: -200.84 m/s^2 Max.: 199.27 m/s^2	-

Tester Display	Measurement Item/Range	Normal Condition	Diagnostic Note
FR ABS STATUS	FR wheel ABS control status / ON or OFF	ON: During control	-
FL ABS STATUS	FL wheel ABS control status / ON or OFF	ON: During control	-
RR ABS STATUS	RR wheel ABS control status / ON or OFF	ON: During control	-
RL ABS STATUS	RL wheel ABS control status / ON or OFF	ON: During control	-
RR EBD STATUS	RR wheel EBD control status / ON or OFF	ON: During control	-
RL EBD STATUS	RL wheel EBD control status / ON or OFF	ON: During control	-
BA STATUS	BA control status / ON or OFF	ON: During control	-
TRAC STATUS	TRC control status / ON or OFF	ON: During control	-
TRAC ENG STATUS	TRC engine control status / ON or OFF	ON: During control	-
TRAC BRK STATUS	TRC brake control status / ON or OFF	ON: During control	-
FR VSC STATUS	FR wheel VSC control status / ON or OFF	ON: During control	-
FL VSC STATUS	FL wheel VSC control status / ON or OFF	ON: During control	-
RR VSC STATUS	RR wheel VSC control status / ON or OFF	ON: During control	-
RL VSC STATUS	RL wheel VSC control status / ON or OFF	ON: During control	-
ENG REVOLUTIONS	Engine revolutions / min.: 0 r/min, max.: 65535 r/min	-	-
ENGINE TORQUE	Real engine torque / min.: -1024 Nm, max.: 1023 Nm	-	-
ACCELERATOR %	Percentage of accelerator pedal opening angle / min.: 0%, max.: 128%	-	-
SOL RELAY	Solenoid relay / ON or OFF	ON: Solenoid relay ON OFF: Solenoid relay OFF	-
ELECTRONICALLY CONTROLLED BRAKE SYSTEM MTR RELAY	Electronically Controlled Brake System Motor relay (VSC1 relay) / ON or OFF	ON: Motor relay ON OFF: Motor relay OFF	-
FAIL MTR RELAY	Fail-safe motor relay / ON or OFF	ON: Motor relay ON OFF: Motor relay OFF	-
SM2	TRC / VSC solenoid (SM2) / ON or OFF	ON: Operates	-
SM1	TRC / VSC solenoid (SM1) / ON or OFF	ON: Operates	-
SFRH*1	ABS solenoid (SFRH) / ON or OFF	ON: Operates OFF: Does not operate	-
SFRR*2	ABS solenoid (SFRR) / ON or OFF	ON: Operates OFF: Does not operate	-
SFLH*3	ABS solenoid (SFLH) / ON or OFF	ON: Operates OFF: Does not operate	-
SFLR*4	ABS solenoid (SFLR) / ON or OFF	ON: Operates OFF: Does not operate	-
SRRH*5	ABS solenoid (SRRH) / ON or OFF	ON: Operates OFF: Does not operate	-
SRRR*6	ABS solenoid (SRRR) / ON or OFF	ON: Operates OFF: Does not operate	-
SRLH*7	ABS solenoid (SRLH) / ON or OFF	ON: Operates OFF: Does not operate	-

Tester Display	Measurement Item/Range	Normal Condition	Diagnostic Note
SRLR*8	ABS solenoid (SRLR) / ON or OFF	ON: Operates OFF: Does not operate	-
FR SPD OPN	FR speed sensor open detection / ERROR or NORMAL	ERROR: Momentary interruption NORMAL: Normal	-
FL SPD OPN	FL speed sensor open detection / ERROR or NORMAL	ERROR: Momentary interruption NORMAL: Normal	-
RR SPD OPN	RR speed sensor open detection / ERROR or NORMAL	ERROR: Momentary interruption NORMAL: Normal	-
RL SPD OPN	RL speed sensor open detection / ERROR or NORMAL	ERROR: Momentary interruption NORMAL: Normal	-
EFI COM OPN	EFI communication open detection / ERROR or NORMAL	ERROR: Momentary interruption NORMAL: Normal	-
YAW RATE OPN	Yaw rate sensor open detection / ERROR or NORMAL	ERROR: Momentary interruption NORMAL: Normal	-
DECELERAT OPN	Deceleration sensor open detection / ERROR or NORMAL	ERROR: Momentary interruption NORMAL: Normal	-
STEERING OPN	Steering angle sensor open detection / ERROR or NORMAL	ERROR: Momentary interruption NORMAL: Normal	-
M/C OPN	Master cylinder pressure sensor open detection / ERROR or NORMAL	ERROR: Momentary interruption NORMAL: Normal	-
#DTC	Number of recorded DTCs/ min.: 0, max.: 255	Min.: 0 Max.: 255	-
INSPECTION MODE	Inspection mode / OTHER or INSPECT	-	-
#IG ON2	Number of ignition switch ON operations after entering the inspection mode / min.: 0, max.: 255	-	-

BC

HINT:

- *1: SFRH (S: Solenoid, F: Front, R: Right, H: Holding)
- *2: SFRR (S: Solenoid, F: Front, R: Right, R: Reduction)
- *3: SFLH (S: Solenoid, F: Front, L: Left, H: Holding)
- *4: SFLR (S: Solenoid, F: Front, L: Left, R: Reduction)
- *5: SRRH (S: Solenoid, R: Rear, R: Right, H: Holding)
- *6: SRRR (S: Solenoid, R: Rear, R: Right, R: Reduction)
- *7: SRLH (S: Solenoid, R: Rear, L: Left, H: Holding)
- *8: SRLR (S: Solenoid, R: Rear, L: Left, R: Reduction)
- *9: w/ Downhill assist control
- *10: for 2WD (w/ AUTO LSD)

2. PARFORM ACTIVE TEST

HINT:

Performing the intelligent tester's ACTIVE TEST allows relay, VSV, actuator and other items to be operated without removing any parts. Performing the ACTIVE TEST early in troubleshooting is one way to save time. The DATA LIST can be displayed during the ACTIVE TEST.

(a) Connect the intelligent tester (with CAN VIM) to the DLC3.
(b) Turn the ignition switch ON.
(c) Turn the intelligent tester on.
(d) Perform the ACTIVE TEST according to the display on the tester.

HINT:

- The ignition switch must be turned ON to proceed to the ACTIVE TEST using the intelligent tester.
- The ACTIVE TESTs of the ABS solenoid, ABS motor relay, ABS warning light and BRAKE warning light are available when the vehicle is stopped.
- The motors stop automatically after 5 seconds of activation to prevent them from being damaged. When the motors are driven repeatedly, certain intervals are required.
- Each solenoid stops automatically after 2 seconds of activation to prevent them from being damaged, and can be operated again after a certain interval.
- Do not depress the brake pedal while only the pressure reduction solenoid valves are on.
- Do not drive 2 or more solenoids simultaneously except to operate the pressure holding solenoid valves and pressure reduction solenoid valves of each wheel.

Skid control ECU

Tester Display	Test Part	Control Range
ABS WARN LAMP	Turns ABS warning light ON / OFF	Observe combination meter
VSC WARN LAMP	Turns VSC warning light ON / OFF	Observe combination meter
BRAKE WARN LAMP	Turns Brake warning light ON / OFF	Observe combination meter
SLIP INDI LAMP	Turns Slip indicator light ON / OFF	Observe combination meter
D-HILL LIGHT*1	Turns downhill assist control indicator light ON / OFF	Observe combination meter
AUTO LSD LAMP*2	Turns AUTO LSD indicator light ON / OFF	Observe combination meter
BUZZER	Turns skid control buzzer ON / OFF	Buzzer can be heard
STP LAMP RELAY	Turns stop light relay (BRK relay) ON / OFF	Operation sound of motor can be heard
SOL RELAY	Turns ABS solenoid relay ON / OFF	-
MOTOR RELAY	Turns ABS motor relay ON / OFF	Operation sound of motor can be heard
SRLR	Turns ABS solenoid (SRLR) ON / OFF	Operation sound of solenoid (clicking sound) can be heard
SRLH	Turns ABS solenoid (SRLH) ON / OFF	Operation sound of solenoid (clicking sound) can be heard

Tester Display	Test Part	Control Range
SRRR	Turns ABS solenoid (SRRR) ON / OFF	Operation sound of solenoid (clicking sound) can be heard
SRRH	Turns ABS solenoid (SRRH) ON / OFF	Operation sound of solenoid (clicking sound) can be heard
SFLR	Turns ABS solenoid (SFLR) ON / OFF	Operation sound of solenoid (clicking sound) can be heard
SFLH	Turns ABS solenoid (SFLH) ON / OFF	Operation sound of solenoid (clicking sound) can be heard
SFRR	Turns ABS solenoid (SFRR) ON / OFF	Operation sound of solenoid (clicking sound) can be heard
SFRH	Turns ABS solenoid (SFRH) ON / OFF	Operation sound of solenoid (clicking sound) can be heard
SMR	Turns VSC / TRC solenoid (SMR) ON / OFF	Operation sound of solenoid (clicking sound) can be heard
SMF	Turns VSC / TRC solenoid (SMF (BA-SOL)) ON / OFF	Operation sound of solenoid (clicking sound) can be heard

HINT:
*1: w/ Downhill assist control
*2: for 2WD (w/ AUTO LSD)

DIAGNOSTIC TROUBLE CODE CHART

HINT:

- If no abnormality is found when inspecting parts, check the skid control ECU and check for poor contact at the ground points.
- If a DTC is displayed during the DTC check, check the circuit for the DTC listed in the table below. For details of each DTC, refer to the page indicated.
- When 2 or more DTCs are detected, perform circuit inspections one by one until the problem is identified.
- All DTCs in the table below are detected in accordance with 1 trip detection logic.

DTC chart of ABS

DTC No.	Detection Item	Trouble Area	See page
C0200/31*1	Right Front Wheel Speed Sensor Signal	- Front speed sensor - Front speed sensor circuit - Sensor installation - Foreign matter on sensor rotor	BC-62
C0205/32*1	Left Front Wheel Speed Sensor Signal	- Front speed sensor - Front speed sensor circuit - Sensor installation - Foreign matter on sensor rotor	BC-62
C0210/33*1	Right Rear Wheel Speed Sensor Signal	- Skid control sensor RH (2WD) - Rear speed sensor RH (4WD) - Skid control sensor RH circuit (2WD) - Rear speed sensor RH circuit (4WD) - Sensor installation - Foreign matter on sensor rotor	BC-69
C0215/34*1	Left Rear Wheel Speed Sensor Signal	- Skid control sensor RH (2WD) - Rear speed sensor RH (4WD) - Skid control sensor RH circuit (2WD) - Rear speed sensor RH circuit (4WD) - Sensor installation - Foreign matter on sensor rotor	BC-69
C0226/21	SFR Solenoid Circuit	- ABS and TRACTION actuator	BC-76
C0236/22	SFL Solenoid Circuit	- ABS and TRACTION actuator	BC-76
C0246/23	SRR Solenoid Circuit	- ABS and TRACTION actuator	BC-76
C0256/24	SRL Solenoid Circuit	- ABS and TRACTION actuator	BC-76
C0273/13*1	Open in ABS Motor Relay Circuit	- ABS1 H-fuse - VSC MTR relay - VSC MTR relay circuit - VSC FAIL relay - VSC FAIL relay circuit - ABS and TRACTION actuator	BC-78
C0274/14	Short to B+ in ABS Motor Relay Circuit	- ABS1 H-fuse - VSC MTR relay - VSC MTR relay circuit - VSC FAIL relay - VSC FAIL relay circuit - ABS and TRACTION actuator	BC-78
C0278/11	Open in ABS Solenoid Relay Circuit	- ABS2 H-fuse - Wire harness (+BS circuit) - ABS and TRACTION actuator	BC-83
C0279/12	Short to B+ in ABS Solenoid Relay Circuit	- ABS2 H-fuse - Wire harness (+BS circuit) - ABS and TRACTION actuator	BC-83
C1225/25	SM Solenoid Circuit	- ABS and TRACTION actuator	BC-76

DTC No.	Detection Item	Trouble Area	See page
C1235/35	Foreign Object is Attached on Tip of Front Speed Sensor RH	- Front speed sensor - Front speed sensor circuit - Sensor installation	BC-62
C1236/36	Foreign Object is Attached on Tip of Front Speed Sensor LH	- Front speed sensor - Front speed sensor circuit - Sensor installation	BC-62
C1238/38	Foreign Object is Attached on Tip of Rear Speed Sensor RH	- Skid control sensor RH (2WD) - Rear speed sensor RH (4WD) - Skid control sensor RH circuit (2WD) - Rear speed sensor RH circuit (4WD) - Sensor installation	BC-69
C1239/39	Foreign Object is Attached on Tip of Rear Speed Sensor LH	- Skid control sensor RH (2WD) - Rear speed sensor RH (4WD) - Skid control sensor RH circuit (2WD) - Rear speed sensor RH circuit (4WD) - Sensor installation	BC-69
C1241/41	Low Battery Positive Voltage	- Battery - Charging system - Power source circuit - Internal power supply circuit of skid control ECU	BC-99
C1243/43*1	Acceleration Sensor Stuck Malfunction	- Yaw rate sensor - Yaw rate sensor circuit	BC-96
C1244/44	Open or Short in Deceleration Sensor Circuit	- Yaw rate sensor - Yaw rate sensor circuit	BC-96
C1245/45*1	Acceleration Sensor Output Malfunction	- Yaw rate sensor - Yaw rate sensor circuit	BC-96
C1246/46*2	Master Cylinder Pressure Sensor Malfunction	- Master cylinder pressure sensor - Master cylinder pressure sensor circuit - Stop light switch circuit - ABS and TRACTION actuator	BC-103
C1249/49	Open in Stop Light Switch Circuit	- STOP fuse - Stop light switch - Stop light switch circuit - ABS and TRACTION actuator - Stop light control relay	BC-105
C1251/51*1	Open in Pump Motor Circuit	- Wire harness - ABS and TRACTION actuator	BC-109
C1267/67*3	Brake Pedal Load Sensing Switch	- Brake pedal load sensing switch - Brake pedal load sensing switch circuit	BC-111
C1337/37	Different Diameter Tire Malfunction	- Tire size	BC-117
C1361/91	Short Circuit in ABS Motor Fail Safe Relay Circuit	- ABS1 H-fuse - VSC MTR relay - VSC MTR relay circuit - VSC FAIL relay - VSC FAIL relay circuit - ABS and TRACTION actuator	BC-78
C1381/97	Yaw Rate and / or Acceleration Sensor Power Supply Voltage Malfunction	- Yaw rate sensor - Yaw rate sensor circuit	BC-96
U0073/94	Control Module Communication Bus OFF	- CAN communication system	BC-130

HINT:
*1, *2

Even after the trouble areas are repaired, the ABS warning light will not go off unless the following operations are performed.

- *1:
  (a) Drive the vehicle at 20 km/h (12 mph) for 30 seconds or more and check that the ABS warning light goes off.
  (b) Clear the DTC(s).
- *2:
  (a) Keep the vehicle stationary for 5 seconds or more and depress the brake pedal lightly 2 or 3 times.
  (b) Drive the vehicle at a vehicle speed of 50 km/h (31 mph) and keep depressing the brake pedal firmly for approximately 3 seconds.
  (c) Repeat the above operation 3 times or more and check that the ABS warning light goes off.
  (d) Clear the DTC(s).
- *3: 16-inch disc

DTC chart of VSC

DTC No.	Detection Item	Trouble Area	See page
C1201/51	Engine Control System Malfunction	- Engine control system	BC-85
C1203/53	ECM Communication Circuit Malfunction	- ECM	BC-87
C1210/36	Zero Point Calibration of Yaw Rate Sensor Undone	- ABS and TRACTION actuator (skid control ECU) - Zero point calibration incomplete	BC-88
C1223/43	ABS Control System Malfunction	- Skid control ECU	BC-91
C1231/31	Steering Angle Sensor Circuit Malfunction	- Steering sensor - Steering sensor circuit - Steering sensor power supply - CAN communication system	BC-92
C1232/32	Stuck in Deceleration Sensor	- Yaw rate sensor - Yaw rate sensor circuit	BC-96
C1234/34	Yaw Rate Sensor Malfunction	- Yaw rate sensor - Yaw rate sensor circuit	BC-96
C1290/66	Steering Angle Sensor Zero Point Malfunction	- Yaw rate and deceleration sensor zero point calibration incomplete - Poor adjustment of centered position of steering wheel - Poor adjustment of front wheel alignment	BC-115
C1336/39	Zero Point Calibration of Acceleration Sensor Undone	- ABS and TRACTION actuator (skid control ECU) - Zero point calibration incomplete	BC-88
C1380/64	Stop Light Control Relay Malfunction	- Stop light assembly - Stop light switch circuit - STOP LP CTRL relay - ABS and TRACTION Actuator (skid control ECU)	BC-121
U0100/65	Lost Communication with ECM / PCM	- CAN communication system (Skid control ECU to ECM)	BC-130
U0123/62	Lost Communication with Yaw Rate Sensor Module	- CAN communication system (Skid control ECU to yaw rate and acceleration sensor)	BC-130
U0126/63	Lost Communication with Steering Angle Sensor Module	- CAN communication system	BC-130

DTC of ABS sensor check function

DTC No.	Detection Item	Trouble Area	See page
C1271/71	Low Output Signal of Front Speed Sensor RH (Test Mode DTC)	- Front speed sensor - Front speed sensor circuit - Sensor installation - Foreign matter on sensor rotor	BC-62
C1272/72	Low Output Signal of Front Speed Sensor LH (Test Mode DTC)	- Front speed sensor - Front speed sensor circuit - Sensor installation - Foreign matter on sensor rotor	BC-62
C1273/73	Low Output Signal of Rear Speed Sensor RH (Test Mode DTC)	- Skid control sensor RH (2WD) - Rear speed sensor RH (4WD) - Skid control sensor RH circuit (2WD) - Rear speed sensor RH circuit (4WD) - Sensor installation - Foreign matter on sensor rotor	BC-69
C1274/74	Low Output Signal of Rear Speed Sensor LH (Test Mode DTC)	- Skid control sensor RH (2WD) - Rear speed sensor RH (4WD) - Skid control sensor RH circuit (2WD) - Rear speed sensor RH circuit (4WD) - Sensor installation - Foreign matter on sensor rotor	BC-69
C1275/75	Abnormal Change in Output Signal of Front Speed Sensor RH (Test Mode DTC)	- Front speed sensor - Front speed sensor circuit - Sensor installation	BC-62
C1276/76	Abnormal Change in Output Signal of Front Speed Sensor LH (Test Mode DTC)	- Front speed sensor - Front speed sensor circuit - Sensor installation	BC-62
C1277/77	Abnormal Change in Output Signal of Rear Speed Sensor RH (Test Mode DTC)	- Skid control sensor RH (2WD) - Rear speed sensor RH (4WD) - Skid control sensor RH circuit (2WD) - Rear speed sensor RH circuit (4WD) - Sensor installation	BC-69
C1278/78	Abnormal Change in Output Signal of Rear Speed Sensor LH (Test Mode DTC)	- Skid control sensor RH (2WD) - Rear speed sensor RH (4WD) - Skid control sensor RH circuit (2WD) - Rear speed sensor RH circuit (4WD) - Sensor installation	BC-69
C1279/79	Deceleration Sensor Output Voltage Malfunction (Test Mode DTC)	- Yaw rate sensor - Yaw rate sensor circuit	BC-96
C1281/81	Master Cylinder Pressure Sensor Output Malfunction (Test Mode DTC)	- Master cylinder pressure sensor - Master cylinder pressure sensor circuit - Stop light switch circuit - ABS and TRACTION actuator	BC-103
U0124/95	Lost Communication with Lateral Acceleration Sensor Module	- CAN communication system (Skid control ECU to yaw rate and acceleration sensor)	BC-130

DTC of VSC sensor check function

DTC No.	Detection Item	Trouble Area	See page
C0371/71	Yaw Rate Sensor (Test Mode DTC)	- Yaw rate sensor - Yaw rate sensor circuit	BC-96
C1379/74*	Downhill Assist Control Operation Switch (Test Mode DTC)	- Downhill assist control switch	BC-119

HINT:
*: w/ Downhill assist control

DTC	C0200/31	Right Front Wheel Speed Sensor Signal
DTC	C0205/32	Left Front Wheel Speed Sensor Signal
DTC	C1235/35	Foreign Object is Attached on Tip of Front Speed Sensor RH
DTC	C1236/36	Foreign Object is Attached on Tip of Front Speed Sensor LH
DTC	C1271/71	Low Output Signal of Front Speed Sensor RH (Test Mode DTC)
DTC	C1272/72	Low Output Signal of Front Speed Sensor LH (Test Mode DTC)
DTC	C1275/75	Abnormal Change in Output Signal of Front Speed Sensor RH (Test Mode DTC)
DTC	C1276/76	Abnormal Change in Output Signal of Front Speed Sensor LH (Test Mode DTC)

DESCRIPTION

The speed sensors detect the wheel speeds and send appropriate signals to the skid control ECU. Speed sensor rotors have rows of alternating N and S magnetic poles, and their magnetic fields change as the rotors turn.

The speed sensors detect those magnetic changes and send pulse signals to the skid control ECU. The ECU monitors the wheel speeds through these pulse signals to control the ABS control system.

DTCs C1271/71, C1272/72, C1275/75 and C1276/76 can be deleted when the speed sensor sends a vehicle speed signal or the test mode ends. DTCs C1271/71, C1272/72, C1275/75/75 and C1276/76 are output only in the test mode.

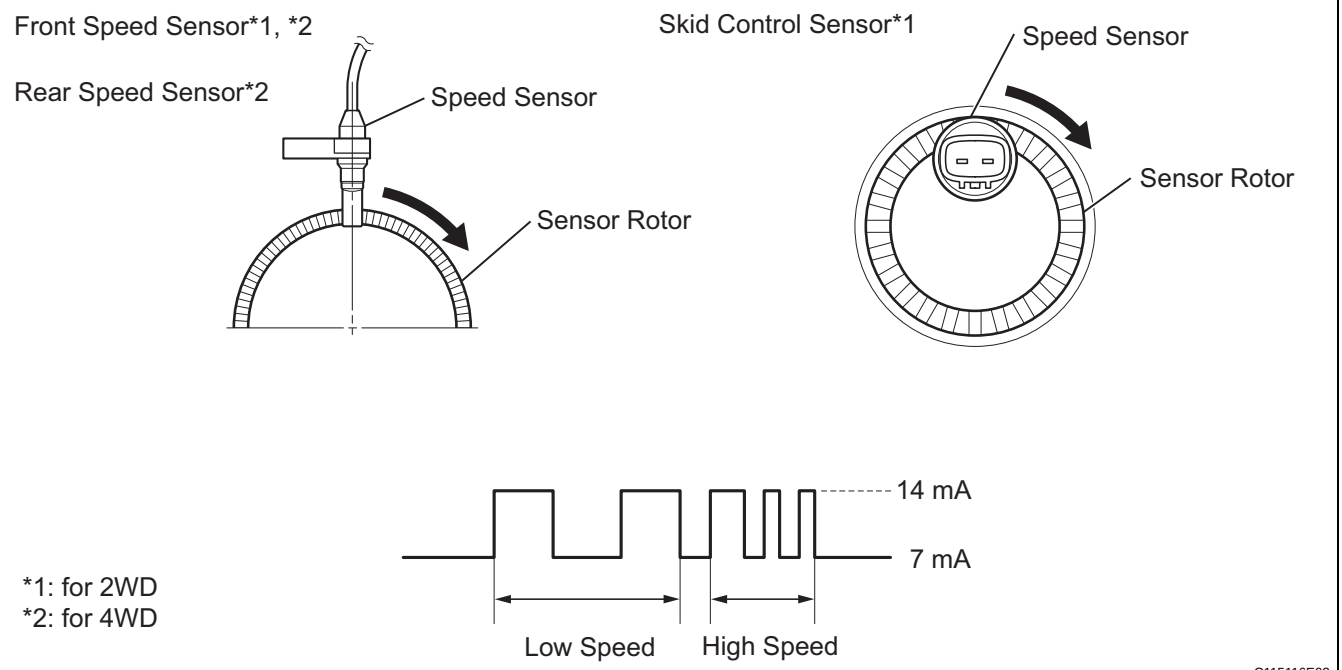

BC

DTC No.	DTC Detection Condition	Trouble Area
C0200/31 C0205/32	When one of following conditions is met: 1. At vehicle speed of 10 km/h (6 mph) or more, open or short in sensor signal circuit continues for 1 second or more. 2. Momentary interruption of sensor signal from abnormal wheel occurs 255 times or more. 3. Open in speed sensor signal circuit continues for 0.5 seconds or more. 4. With IG1 terminal voltage 9.5 V or more, sensor power supply voltage decreases for 0.5 seconds or more.	• Front speed sensor • Front speed sensor circuit • Sensor installation • Foreign matter on sensor rotor
C1235/35 C1236/36	When either of following is detected: 1. At vehicle speed of 20 km/h (12 mph) or more, noise in malfunctioning wheel sensor signal condition continues for 5 seconds or more. 2. At vehicle speed of 10 km/h (6 mph) or more, noise input occurs once per rotor rotation for 15 seconds or more.	• Front speed sensor • Front speed sensor circuit • Sensor installation
C1271/71 C1272/72	Detected only during test mode.	• Front speed sensor • Front speed sensor circuit • Sensor installation • Foreign matter on sensor rotor
C1275/75 C1276/76	Detected only during test mode.	• Front speed sensor • Front speed sensor circuit • Sensor installation

HINT:

- DTCs C0200/31 and C1235/35 relate to the front speed sensor RH.
- DTCs C0205/32 and C1236/36 relate to the front speed sensor LH.

WIRING DIAGRAM

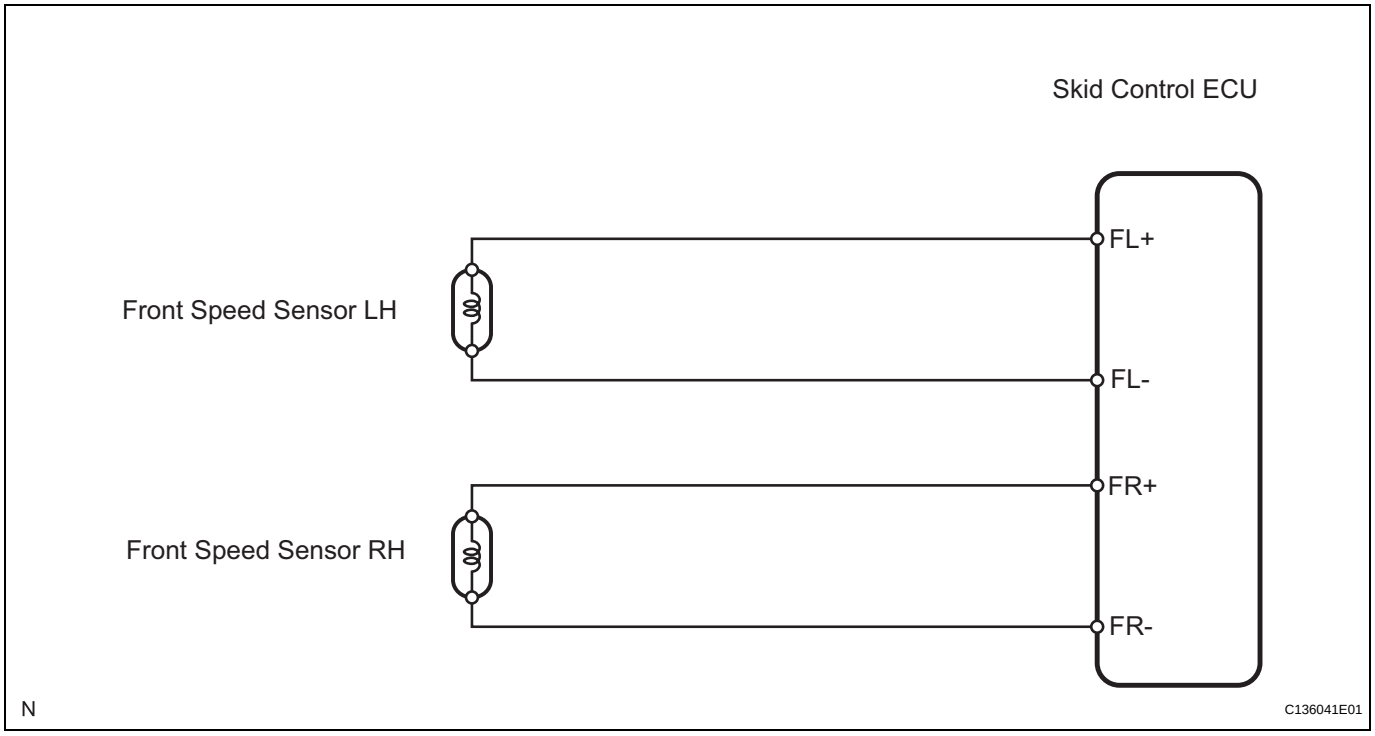

BC

INSPECTION PROCEDURE

NOTICE:

Check the speed sensor signal in test mode after cleaning or replacement (see page BC-28).

1	CHECK HARNESS AND CONNECTOR (MOMENTARY INTERRUPTION)

(a) Using the DATA LIST of the intelligent tester, check for any momentary interruption in the wire harness and connector corresponding to a DTC (see page BC-23).

Skid control ECU

Item (Display)	Measurement Item / Range (Display)	Normal Condition	Diagnostic Note
FR SPD OPN	FR speed sensor open detection / ERROR or NORMAL	ERROR: Momentary interruption NORMAL: Normal	-
FL SPD OPN	FL speed sensor open detection / ERROR or NORMAL	ERROR: Momentary interruption NORMAL: Normal	-

OK:

There are no momentary interruptions.

HINT:

Perform the above inspection before removing the sensor and connector.

NG → **CHECK AND REPAIR HARNESS AND CONNECTOR (SPEED SENSOR CIRCUIT)**

OK

2	READ VALUE OF DATA LIST (FRONT SPEED SENSOR)

(a) Check the DATA LIST for proper functioning of the front speed sensor.

Skid control ECU

Item (Display)	Measurement Item / Range (Display)	Normal Condition
FR WHEEL SPD	Wheel speed sensor (FR) reading / min.: 0 km/h (0 mph), max.: 326 km/h (202.8 mph)	Similar to speed indicated on speedometer
FL WHEEL SPD	Wheel speed sensor (FL) reading / min.: 0 km/h (0 mph), max.: 326 km/h (202.8 mph)	Similar to speed indicated on speedometer

OK:

There is almost no difference between actual wheel speed and displayed speed value.

HINT:

There is a tolerance of +-10% in the speedometer indication.

NG → **Go to step 5**

OK

BC

3	PERFORM TEST MODE INSPECTION (SIGNAL CHECK)

(a) Perform a TEST MODE inspection and check for DTCs (see page BC-28).

OK:

No DTC output.

NG → **CHECK AND REPAIR HARNESS AND CONNECTOR (SPEED SENSOR CIRCUIT)**

OK

4	RECONFIRM DTC

(a) Clear the DTC(s) (see page BC-47).
(b) Start the engine.
(c) Drive the vehicle at a speed of 20 km/h (12 mph) or more for at least 60 seconds.
(d) Check if the same DTC(s) is output (see page BC-47).

Result

Result	Proceed to
DTC is not output	A
DTC is output	B

B → **Go to step 10**

A

END

5	INSPECT FRONT SPEED SENSOR (INSTALLATION)

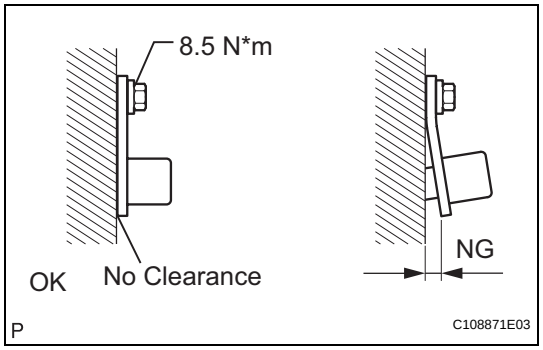

(a) Check that the speed sensor installation bolt is tightened properly.
OK:
The installation bolt is tightened properly, and there is no clearance between the sensor and front steering knuckle.

Torque: 8.5 N*m (87 kgf*cm, 75 in.*lbf)

HINT:
If the installation portion of the sensor is dirty, clean it and reinstall the sensor.
Check the speed sensor after the speed sensor replacement (see page BC-28).

NG → **TIGHTEN BOLT PROPERLY OR REPLACE FRONT SPEED SENSOR**

OK

6	CHECK SPEED SENSOR (TIP)

(a) Remove the front speed sensor.
(b) Check the sensor tip.
OK:
No scratches or foreign matter on the sensor tip.
HINT:
Check the speed sensor signal after the speed sensor clearing or replacement (see page BC-28).

NG → **CLEAN OR REPLACE FRONT SPEED SENSOR**

OK

BC

7 CHECK WIRE HARNESS (SKID CONTROL ECU - FRONT SPEED SENSOR)

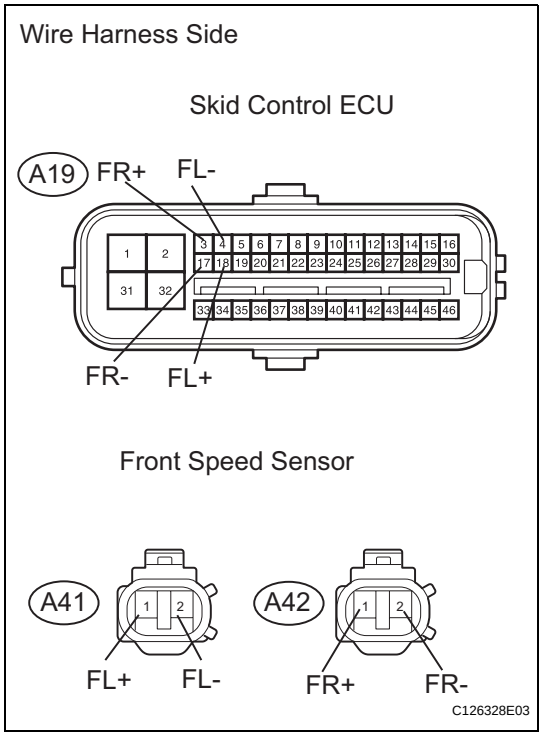

(a) Disconnect the A19 ECU connector.
(b) Disconnect the A41 and A42 sensor connectors.
(c) Measure the resistance of the wire harness side connectors.

Standard resistance:

for LH

Tester Connection	Specified Condition
A19-18 (FL+) - A41-1 (FL+)	Below 1 Ω
A19-4 (FL-) - A41-2 (FL-)	Below 1 Ω
A19-18 (FL+) - Body ground	10 kΩ or higher
A19-4 (FL-) - Body ground	10 kΩ or higher

for RH

Tester Connection	Specified Condition
A19-3 (FR+) - A42-1 (FR+)	Below 1 Ω
A19-17 (FR-) - A42-2 (FR-)	Below 1 Ω
A19-3 (FR+) - Body ground	10 kΩ or higher
A19-17 (FR-) - Body ground	10 kΩ or higher

NG → **REPAIR OR REPLACE HARNESS AND CONNECTOR**

OK

8 CHECK SKID CONTROL ECU (SENSOR INPUT VOLTAGE)

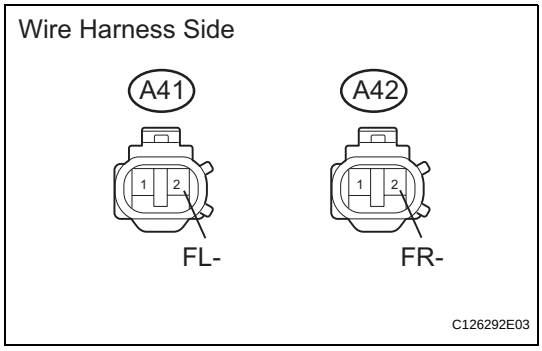

(a) Disconnect the A41 and A42 sensor connectors.
(b) Measure the voltage of the wire harness side connector.

Standard voltage

Tester Connection	Condition	Specified Condition
A41-2 (FL-) - Body ground	Ignition switch ON	5.7 to 17.3 V
A42-2 (FR-) - Body ground	Ignition switch ON	5.7 to 17.3 V

NG → **REPLACE ABS AND TRACTION ACTUATOR ASSEMBLY**

OK

9 RECONFIRM DTC

(a) Clear the DTC(s) (see page BC-47).
(b) Start the engine.
(c) Drive the vehicle at a speed of 20 km/h (12 mph) or more for at least 60 seconds.

(d) Check if the same DTC(s) is output (see page BC-47).

Result

Result	Proceed to
DTC is output	A
DTC is not output	B

B → END

A

10 REPLACE FRONT SPEED SENSOR

(a) Replace the front speed sensor.

NEXT

11 RECONFIRM DTC

(a) Clear the DTC(s) (see page BC-47).
(b) Start the engine.
(c) Drive the vehicle at a speed of 20 km/h (12 mph) or more for at least 60 seconds.
(d) Check if the same DTC(s) is output (see page BC-47).

Result

Result	Proceed to
DTC is output	A
DTC is not output	B

B → END

A

REPLACE ABS AND TRACTION ACTUATOR ASSEMBLY

DTC	C0210/33	Right Rear Wheel Speed Sensor Signal
DTC	C0215/34	Left Rear Wheel Speed Sensor Signal
DTC	C1238/38	Foreign Object is Attached on Tip of Rear Speed Sensor RH
DTC	C1239/39	Foreign Object is Attached on Tip of Rear Speed Sensor LH
DTC	C1273/73	Low Output Signal of Rear Speed Sensor RH (Test Mode DTC)
DTC	C1274/74	Low Output Signal of Rear Speed Sensor LH (Test Mode DTC)
DTC	C1277/77	Abnormal Change in Output Signal of Rear Speed Sensor RH (Test Mode DTC)
DTC	C1278/78	Abnormal Change in Output Signal of Rear Speed Sensor LH (Test Mode DTC)

BC

DESCRIPTION

Refer to DTC C0200/31 (see page BC-62).

DTCs C1273/73, C1274/74, C1277/77 and C1278/78 can be deleted when the speed sensor sends a vehicle speed signal or the test mode ends. DTCs C1273/73, C1274/74, C1277/77 and C1278/78 are output only in the test mode.

DTC No.	DTC Detection Condition	Trouble Area
C0210/33 C0215/34	When one of following conditions is met: 1. At vehicle speed of 10 km/h (6 mph) or more, open or short in sensor signal circuit continues for 1 second or more. 2. Momentary interruption of sensor signal from abnormal wheel occurs 255 times or more. 3. Open in speed sensor signal circuit continues for 0.5 seconds or more. 4. With IG1 terminal voltage 9.5 V or more, sensor power supply voltage decreases for 0.5 seconds or more.	• Skid control sensor (for 2WD) • Rear speed sensor (for 4WD) • Skid control sensor circuit (for 2WD) • Rear speed sensor circuit (4WD) • Sensor installation • Foreign matter on sensor rotor
C1238/38 C1239/39	When either condition below is met: 1. At vehicle speed of 20 km/h (12 mph) or more, noise in malfunctioning wheel sensor signal condition continues for 5 seconds or more. 2. At vehicle speed of 10 km/h (6 mph) or more, noise input occurs once per rotor rotation for 15 seconds or more.	• Skid control sensor (for 2WD) • Rear speed sensor (for 4WD) • Skid control sensor circuit (for 2WD) • Rear speed sensor circuit (for 4WD) • Sensor installation
C1273/73 C1274/74	Detected only during test mode.	• Skid control sensor (for 2WD) • Rear speed sensor (for 4WD) • skid control sensor circuit (for 2WD) • Rear speed sensor circuit (for 4WD) • Sensor installation • Foreign matter on sensor rotor

DTC No.	DTC Detection Condition	Trouble Area
C1277/77 C1278/78	Detected only during test mode.	• Skid control sensor (for 2WD) • Rear speed sensor (for 4WD) • Skid control sensor circuit (for 2WD) • Rear speed sensor circuit (for 4WD) • Sensor installation

HINT:
- DTC C0210/33 and C1238/38 relate to the skid control sensor RH.
- DTC C0215/34 and C1239/39 relate to the skid control sensor LH.

WIRING DIAGRAM

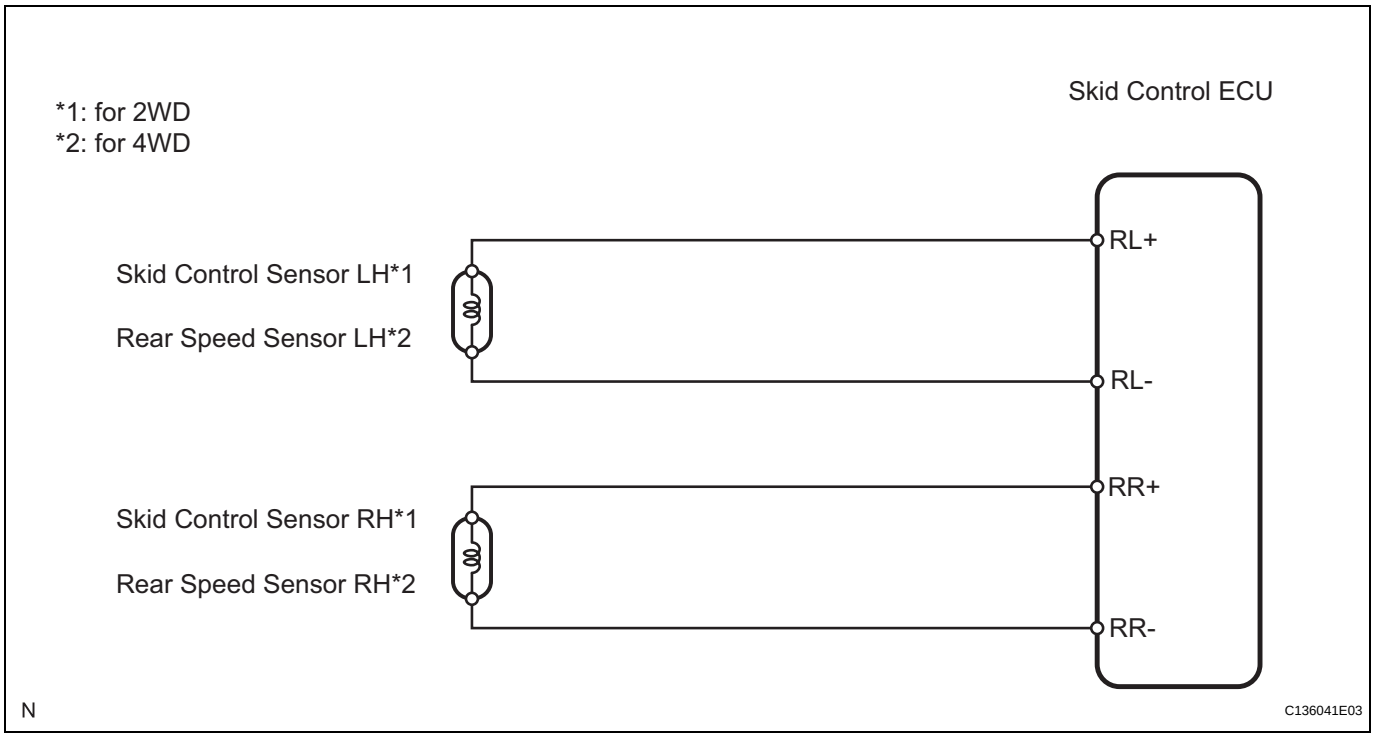

BC

INSPECTION PROCEDURE

NOTICE:
Check the speed sensor signal in test mode after cleaning or replacement (see page BC-28).

1	CHECK HARNESS AND CONNECTOR (MOMENTARY INTERRUPTION)

(a) Using the DATA LIST of the intelligent tester, check for any momentary interruption in the wire harness corresponding to a DTC (see page BC-23).

Skid control ECU

Item (Display)	Measurement Item / Range (Display)	Normal Condition	Diagnostic Note
RR SPD OPN Open	RR speed sensor open detection / ERROR or NORMAL	ERROR: Momentary interruption NORMAL: Normal	-
RL SPD OPN	RL speed sensor open detection / ERROR or NORMAL	ERROR: Momentary interruption NORMAL: Normal	-

OK:
There are no momentary interruptions.

HINT:
Perform this inspection before removing the sensor and connector.

NG → **REPAIR OR REPLACE HARNESS AND CONNECTOR**

OK

2	READ VALUE OF INTELLIGENT TESTER (REAR SPEED SENSOR)

(a) Check the DATA LIST for proper functioning of the rear speed sensor.

Skid control ECU

Item (Display)	Measurement Item / Range (Display)	Normal Condition	Diagnostic Note
RR WHEEL SPD	Wheel speed sensor (RR) reading : min.: 0 km/h (0 mph), max.: 326 km/h (202.8 mph)	Similar to speed indicated on speedometer	-
RL WHEEL SPD	Wheel speed sensor (RL) reading : min.: 0 km/h (0 mph), max.: 326 km/h (202.8 mph)	Similar to speed indicated on speedometer	-

BC

OK:
There is almost no difference between actual wheel speed and displayed speed value.

HINT:
There is a tolerance of +-10% in the speedometer indication.

NG → **Go to step 5**

OK

3	PERFORM TEST MODE INSPECTION (SIGNAL CHECK)

(a) Perform a TEST MODE inspection and check for DTCs (see page BC-28).

OK:
No DTCs output.

NG → **REPAIR OR REPLACE HARNESS AND CONNECTOR**

OK

4	RECONFIRM DTC

(a) Clear the DTC(s) (see page BC-47).
(b) Start the engine.
(c) Drive the vehicle at a speed of 20 km/h (12 mph) or more for at least 60 seconds.

(d) Check if the same DTC(s) is output (see page BC-47).
Result

Result	Proceed to
DTC is not output	A
DTC is output	B

B → **Go to step 11**

A

END

5 INSPECT SKID CONTROL SENSOR OR REAR SPEED SENSOR (INSTALLATION)

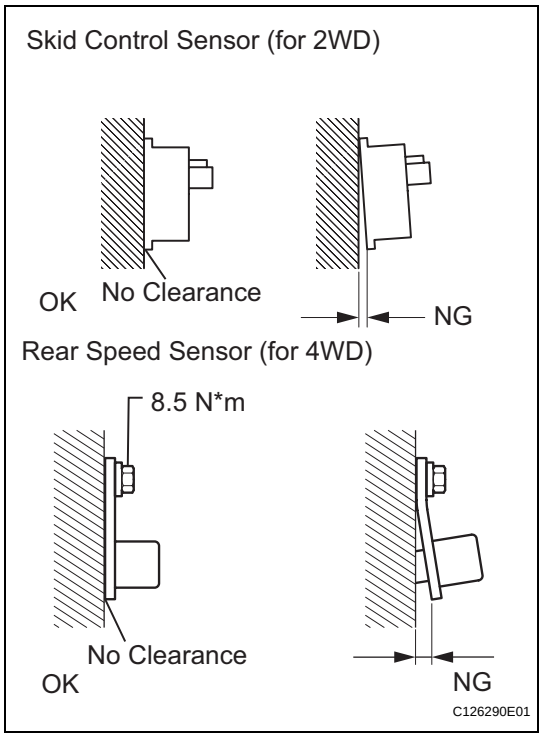

(a) Check the speed sensor installation.
OK:
for 2WD
There is no clearance between the sensor and rear axle carrier.
for 4WD
The installation bolt is tightened properly and there is no clearance between the sensor and rear axle carrier.
Torque: 8.5 N*m (87 kgf*cm, 75 in.*lbf)
HINT:
Check the speed sensor signal after the replacement (see page BC-28).

NG → **CHECK AND REPLACE SKID CONTROL SENSOR OR REAR SPEED SENSOR**

OK

6 CHECK SKID CONTROL SENSOR OR REAR SPEED SENSOR (TIP)

(a) Remove the skid control sensor (for 2WD) or rear speed sensor (for 4WD).
(b) Check the sensor tip.
OK:
No scratches or foreign matter on the sensor tip.

NG → **CLEAR OR REPLACE SKID CONTROL SENSOR OR REAR SPEED SENSOR**

OK

7	CHECK WIRE HARNESS (SKID CONTROL ECU - REAR SPEED SENSOR)

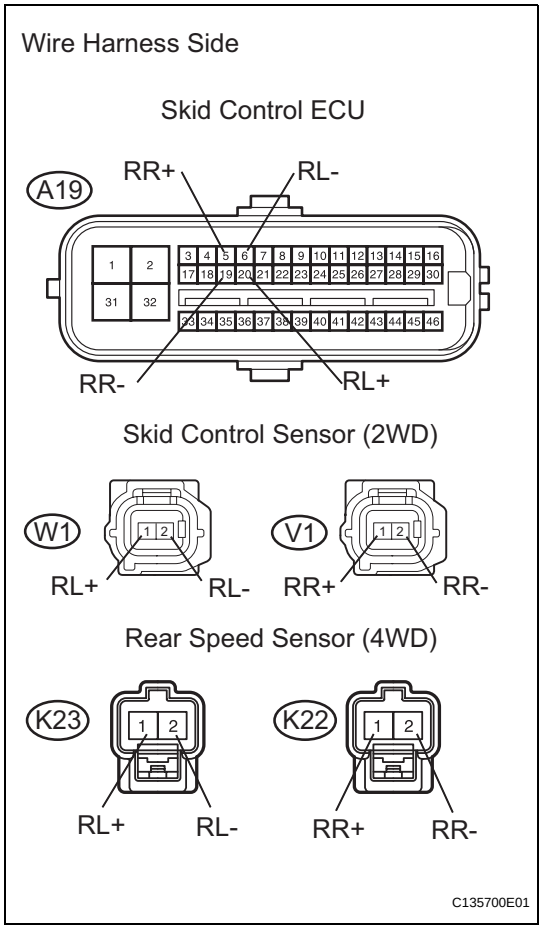

(a) Disconnect the A19 ECU connector.
(b) Disconnect W1 and V1 sensor connectors for 2WD. Disconnect K23 and K22 sensor connectors for 4WD.
(c) Measure the resistance of the wire harness side connectors.

Standard resistance:

for 2WD (LH Side)

Tester Connection	Specified Condition
A19-20 (RL+) - W1-1 (RL+)	Below 1 Ω
A19-6 (RL-) - W1-2 (RL-)	Below 1 Ω
A19-20 (RL+) - Body ground	10 kΩ or higher
A19-6 (RL-) - Body ground	10 kΩ or higher

for 2WD (RH Side)

Tester Connection	Specified Condition
A19-5 (RR+) - V1-1 (RR+)	Below 1 Ω
A19-19 (RR-) - V1-2 (RR-)	Below 1 Ω
A19-5 (RR+) - Body ground	10 kΩ or higher
A19-19 (RR-) - Body ground	10 kΩ or higher

for 4WD (LH Side)

Tester Connection	Specified Condition
A19-20 (RL+) - K23-1 (RL+)	Below 1 Ω
A19-6 (RL-) - K23-2 (RL-)	Below 1 Ω
A19-20 (RL+) - Body ground	10 kΩ or higher
A19-6 (RL-) - Body ground	10 kΩ or higher

for 4WD (RH Side)

Tester Connection	Specified Condition
A19-5 (RR+) - K22-1 (RR+)	Below 1 Ω
A19-19 (RR-) - K22-2 (RR-)	Below 1 Ω
A19-5 (RR+) - Body ground	10 kΩ or higher
A19-19 (RR-) - Body ground	10 kΩ or higher

NG → **REPAIR OR REPLACE HARNESS AND CONNECTOR**

OK

BC

8 CHECK SKID CONTROL ECU (SENSOR INPUT VOLTAGE)

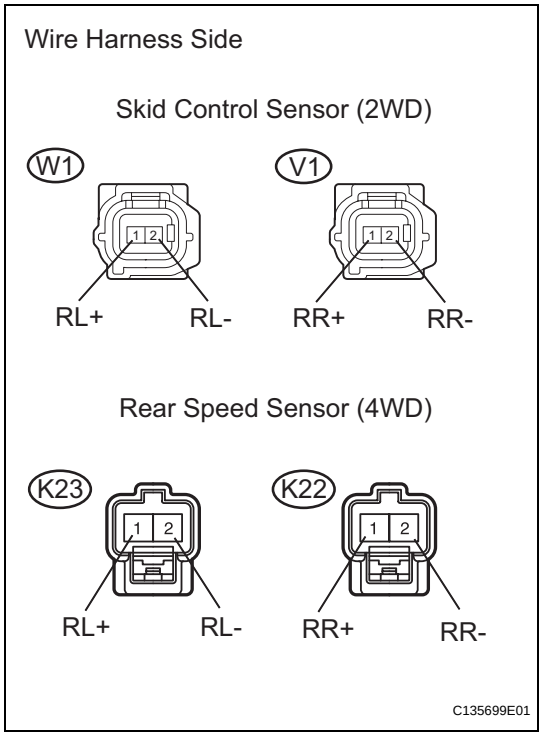

(a) Disconnect the W1 and V1 sensor connectors for 2WD. Disconnect the K23 and K22 sensor connectors for 4WD.

(b) Measure the voltage of the wire harness side connectors.

Standard voltage:

for 2WD

Tester Connection	Condition	Specified Condition
W1-1 (RL+) - Body ground	Ignition switch ON	5.7 to 17.3 V
V1-1 (RR+) - Body ground	Ignition switch ON	5.7 to 17.3 V

for 4WD

Tester Connection	Condition	Specified Condition
K23-1 (RL+) - Body ground	Ignition switch ON	5.7 to 17.3 V
K22-1 (RR+) - Body ground	Ignition switch ON	5.7 to 17.3 V

NG → **REPLACE ABS AND TRACTION ACTUATOR ASSEMBLY**

OK

9 RECONFIRM DTC

(a) Clear the DTC(s) (see page BC-47).

(b) Start the engine.

(c) Drive the vehicle at a speed of 20 km/h (12 mph) or more for at least 60 seconds.

(d) Check if the same DTC(s) is output (see page BC-47).

Result

Result	Proceed to
DTC is output	A
DTC is not output	B

B → **END**

A

10 REPLACE SKID CONTROL SENSOR OR REAR SPEED SENSOR

(a) Replace the skid control sensor (2WD) or rear speed sensor (4WD).

NEXT

BC

11	RECONFIRM DTC

(a) Clear the DTC(s) (see page BC-47).
(b) Start the engine.
(c) Drive the vehicle at a speed of 20 km/h (12 mph) or more for at least 60 seconds.
(d) Check if the same DTC(s) is output (see page BC-47).

Result

Result	Proceed to
DTC is output	A
DTC is not output	B

B → **END**

A → **REPLACE ABS AND TRACTION ACTUATOR ASSEMBLY**

DTC	C0226/21	SFR Solenoid Circuit

DTC	C0236/22	SFL Solenoid Circuit

DTC	C0246/23	SRR Solenoid Circuit

DTC	C0256/24	SRL Solenoid Circuit

DTC	C1225/25	SM Solenoid Circuit

DESCRIPTION

This solenoid is turned on in accordance with signals from the skid control ECU and controls the pressure on the wheel cylinders to control the braking force.

The solenoid and solenoid relay are built into the ABS and TRACTION actuator.

DTC No.	DTC Detection Condition	Trouble Area
C0226/21 C0236/22 C0246/23 C0256/24	Open or short in solenoid circuit continues for 0.05 seconds or more.	ABS and TRACTION actuator
C1225/25	When one of following conditions is met: 1. During switching solenoid (SM1 or SM2) ON signal input, overcurrent continues for 0.05 seconds or more. 2. During switching solenoid (SM1 or SM2) OFF signal input, open circuit continues for 0.05 seconds or more. 3. During switching solenoid (SM1 or SM2) OFF signal input, current continues to be applied for 0.1 second or more. 4. Short to GND in switching solenoid (SM1 or SM2) continues for 0.1 second or more. 5. Switching solenoids SM1 and SM2 are shorted for 0.1 second or more. 6. Switch solenoids (SM1 or SM2) ON signal output occurs for 0.1 seconds or more.	ABS and TRACTION actuator

HINT:

DTCs C0226/21, C0236/22, C0246/23, C0256/24 and C1225/25:

The skid control ECU begins to detect these DTCs when the vehicle speed exceeds 6 km/h (4 mph).

WIRING DIAGRAM

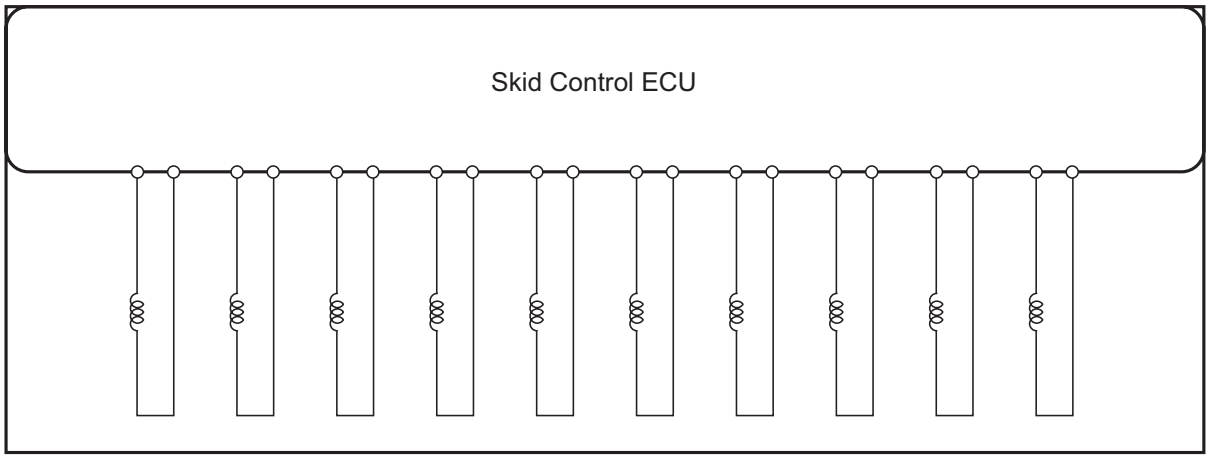

C126325E01

BC

INSPECTION PROCEDURE

1	RECONFIRM DTC

(a) Clear the DTC(s) (see page BC-47).
(b) Start the engine.
(c) Drive the vehicle at 6 km/h (4 mph) or more to activate the initial check.
(d) Check if the same DTC(s) is output (see page BC-47).

Result

Result	Proceed to
DTC is output	A
DTC is not output	B

HINT:
The DTCs may be stored due to a malfunction in the connector terminal.

B → **END**

A

REPLACE ABS AND TRACTION ACTUATOR

DTC	C0273/13	Open in ABS Motor Relay Circuit

DTC	C0274/14	Short to B+ in ABS Motor Relay Circuit

DTC	C1361/91	Short Circuit in ABS Motor Fail Safe Relay Circuit

DESCRIPTION

If a DTC related to the motor line is stored, the VSC FAIL (fail-safe) relay cuts off the power supply to the VSC MTR relay and performs the fail-safe operation.
While the ABS, TRC, VSC, or BA is operating, the skid control ECU turns the VSC FAIL relay on and activates the pump motor in the ABS and TRACTION actuator.
These DTCs may be stored if the motor relay (+BM) voltage becomes lower than the DTC detecting condition due to insufficient output from the battery or alternator.

DTC No.	DTC Detection Condition	Trouble Area
C0273/13	When either condition below is met: 1. All of following conditions continue for 0.12 seconds or more. (a) IG1 terminal voltage between 9.5 V and 17.2 V. (b) During initial check or ABS/TRC/VSC/BA. (c) Relay contact open when relay on. 2. Both of following conditions continue for 0.12 seconds or more. (a) IG1 terminal voltage 9.5 V or less. (b) Relay contact remains open when relay on.	• ABS1 H-fuse • VSC MTR relay • VSC MTR relay circuit • VSC FAIL relay • VSC FAIL relay circuit • ABS and TRACTION actuator
C0274/14	Despite motor relay (VSC MTR relay) off, motor relay remains closed for 4 seconds or more.	• ABS1 H-fuse • VSC MTR relay • VSC MTR relay circuit • VSC FAIL relay • VSC FAIL relay circuit • ABS and TRACTION actuator
C1361/91	Immediately after ignition switch ON, motor fail-safe relay (VSC FAIL relay) contact closed for 4 seconds when motor fail-safe relay (VSC FAIL relay) off.	• ABS1 H-fuse • VSC MTR relay • VSC MTR relay circuit • VSC FAIL relay • VSC FAIL relay circuit • ABS and TRACTION actuator

HINT:
DTCs C0273/13, C0274/14 and C1361/91: The skid control ECU begins to detect these DTCs when the vehicle speed exceeds 6 km/h (4 mph).

WIRING DIAGRAM

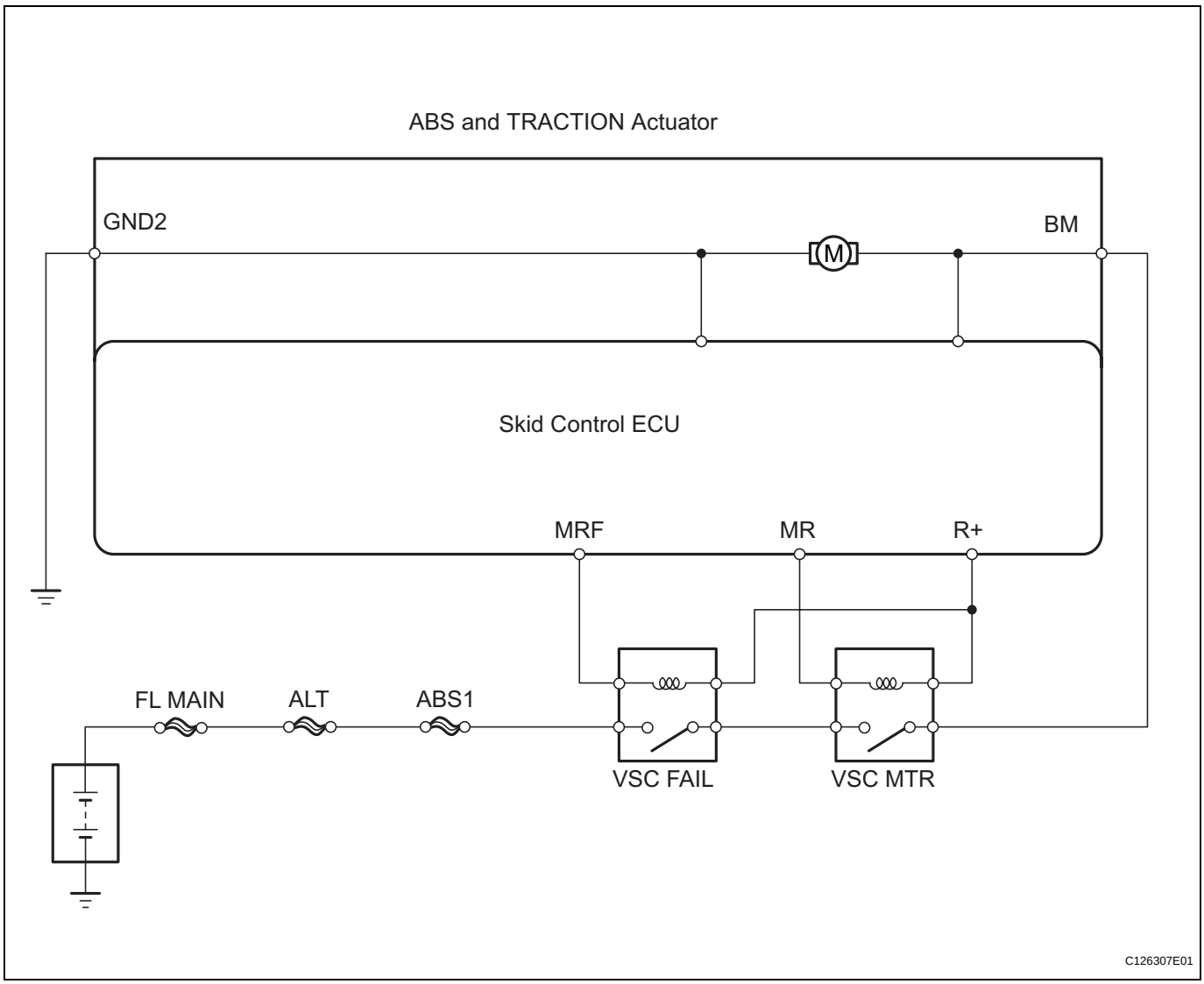

BC

INSPECTION PROCEDURE

1	PERFORM ACTIVE TEST BY INTELLIGENT TESTER (MOTOR RELAY)

(a) Select the ACTIVE TEST, generate a control command, and then check that the ABS motor relay operates.

Skid control ECU

Item (Display)	Test Details	Diagnostic Note
MOTOR RELAY	Turns ABS motor relay ON / OFF	Operating sound of motor can be heard

OK:

The operation sound of the ABS motor can be heard.

OK	Go to step 8

NG

2 INSPECT FUSE (ABS1)

(a) Remove the ABS1 H-fuse from the engine room No. 1 relay block.
(b) Measure the resistance of the fuse.
Standard resistance:
Below 1 Ω

NG → **REPLACE FUSE**

OK

3 INSPECT VSC MOTOR RELAY (Marking: VSC MTR)

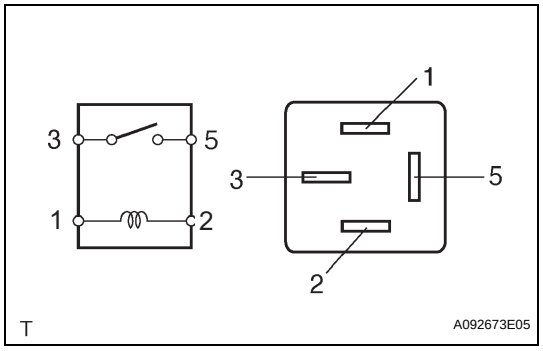

(a) Remove the VSC motor relay from the engine room No. 1 relay block.
(b) Measure the resistance of the relay.
Standard resistance

Tester Connection	Specified Condition
3 - 5	10 kΩ or higher
3 - 5	Below 1 Ω (when battery voltage is applied to terminals 1 and 2)

NG → **REPLACE VSC MOTOR RELAY**

OK

4 INSPECT FAIL-SAFE RELAY (Marking: VSC FAIL)

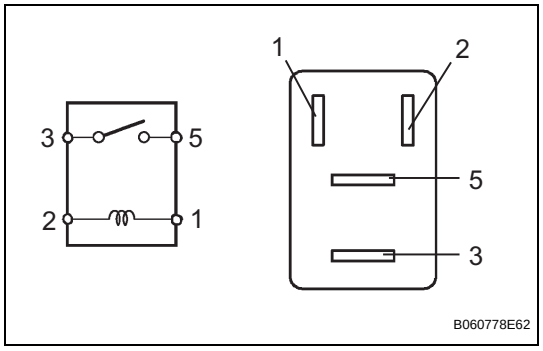

(a) Remove the faile-safe relay from the engine room No. 1 relay block.
(b) Measure the resistance of the relay.
Standard resistance

Tester Connection	Specified Condition
3 - 5	10 kΩ or higher
3 - 5	Below 1 Ω (when battery voltage is applied to terminals 1 and 2)

NG → **REPLACE FAIL-SAFE RELAY**

OK

BC

5	CHECK WIRE HARNESS (FAIL-SAFE RELAY - BATTERY)

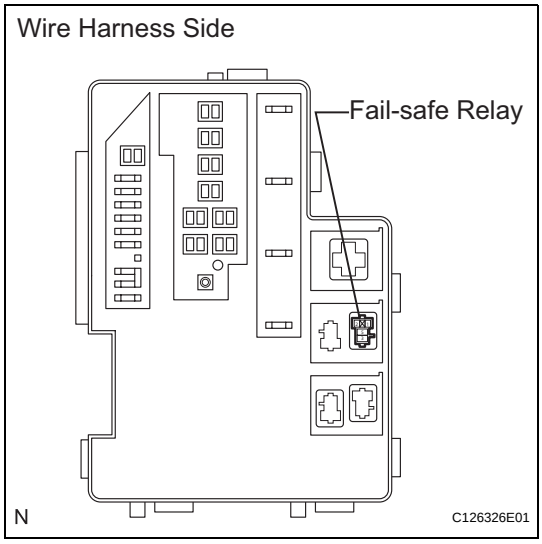

(a) Remove the fail-safe relay from the engine room No. 1 relay block.
(b) Measure the voltage of the wire harness side connector.
Standard voltage

Tester Connection	Specified Condition
VSC FAIL relay terminal 5 - Body ground	10 to 14 V

NG → **REPAIR OR REPLACE HARNESS AND CONNECTOR**

OK

BC

6	CHECK ENGINE ROOM NO. 1 RELAY BLOCK (FAIL-SAFE RELAY - VSC MOTOR RELAY AND BODY GROUND)

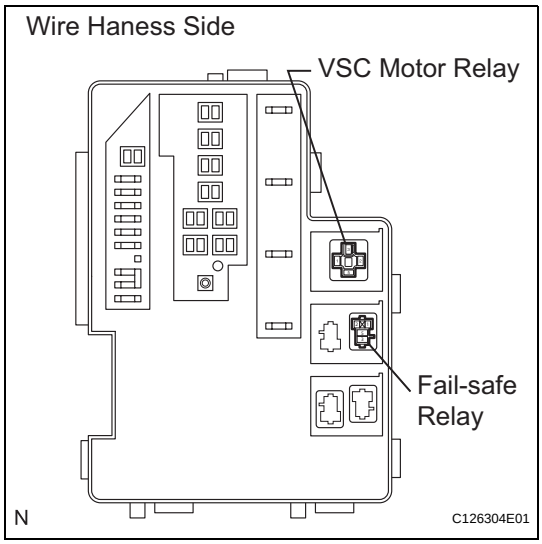

(a) Remove the fail-safe and VSC motor relays from the engine room No. 1 relay block.
(b) Measure the resistance of the relay terminals.
Standard resistance

Tester Connection	Specified Condition
VSC FAIL relay terminal 3 - VSC MTR relay terminal 5	Below 1 Ω
VSC FAIL relay terminal 3 - Body ground	10 kΩ or higher

NG → **REPLACE ENGINE ROOM NO. 1 RELAY BLOCK**

OK

7 CHECK WIRE HARNESS (ENGINE ROOM NO. 1 RELAY BLOCK - SKID CONTROL ECU)

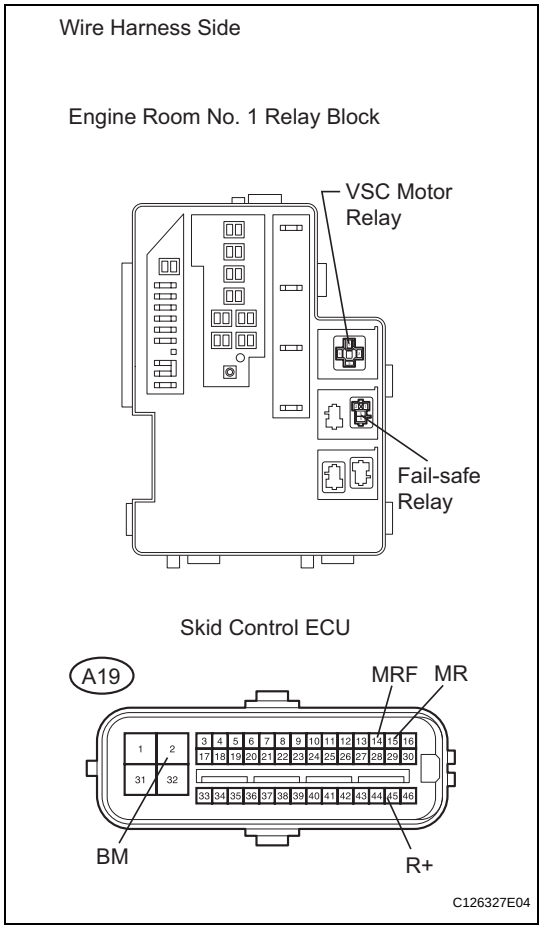

(a) Disconnect the A19 ECU connector.
(b) Remove the fail-safe and VSC motor relays from the engine room No. 1 relay block.
(c) Measure the resistance of the wire harness connectors.

Standard resistance

Tester Connection	Specified Condition
A19-2 (BM) - VSC MTR relay terminal 3	Below 1 Ω
A19-14 (MRF) - VSC FAIL relay terminal 2	Below 1 Ω
A19-15 (MR) - VSC MTR relay terminal 2	Below 1 Ω
A19-45 (R+) - VSC FAIL relay terminal 1	Below 1 Ω
A19-2 (BM) - Body ground	10 kΩ or higher
A19-14 (MRF) - Body ground	10 kΩ or higher
A19-15 (MR) - Body ground	10 kΩ or higher
A19-45 (R+) - Body ground	10 kΩ or higher

NG → **REPAIR OR REPLACE HARNESS AND CONNECTOR**

OK

8 RECONFIRM DTC

(a) Clear the DTC(s) (see page BC-47).
(b) Start the engine.
(c) Drive the vehicle at 6 km/h (4 mph) or more to activate the initial check.
(d) Check if the same DTC(s) is output (see page BC-47).

Result

Result	Proceed to
DTC is output	A
DTC is not output	B

B → **END**

A

REPLACE ABS AND TRACTION ACTUATOR ASSEMBLY

BC

DTC	C0278/11	Open in ABS Solenoid Relay Circuit

DTC	C0279/12	Short to B+ in ABS Solenoid Relay Circuit

DESCRIPTION

The solenoid relay supplies power to the ABS solenoid and TRC solenoid.
After the ignition switch is turned ON, the vehicle speed has reached 6 km/h (4 mph) and the solenoid is determined to be normal by the initial check self-diagnosis, the relay switches on. If any open or short circuits are detected, the relay switches off.
These DTCs may be set if the voltage supply to the solenoid relay (+BS) falls below the DTC detection threshold due to the battery or alternator outputs being insufficient.

DTC No.	DTC Detection Condition	Trouble Area
C0278/11	When either condition below is met: 1. Both of following conditions continue for 0.2 seconds or more. (a) IG1 terminal voltage between 9.5 V and 17.2 V. (b) Solenoid relay contact open when relay on. 2. Both of following conditions continue for 0.2 seconds or more. (a) IG1 terminal voltage becomes lower than 9.5 V when relay turned on. (b) Relay contact remains open.	• ABS2 H-fuse • Wire harness (+BS circuit) • ABS and TRACTION actuator
C0279/12	Immediately after ignition switch turned ON, solenoid relay contact closed for 0.2 seconds or more when relay off.	• ABS2 H-fuse • Wire harness (+BS circuit) • ABS and TRACTION actuator

BC

HINT:
DTCs C0278/11 and C0279/12: The skid control ECU begins to detect these DTCs when the vehicle speed exceeds 6 km/h (4 mph).

WIRING DIAGRAM

Refer to DTC C0273/13, C0274/14, C1361/91 (see page BC-79).

INSPECTION PROCEDURE

1	INSPECT FUSES (ABS2)

(a) Remove the ABS2 H-fuse from the engine room No. 1 relay block.
(b) Measure the resistance of the fuse.
Standard resistance:
Below 1 Ω

NG → **REPLACE FUSE**

OK

2 CHECK WIRE HARNESS (SKID CONTROL ECU - BATTERY AND BODY GROUND)

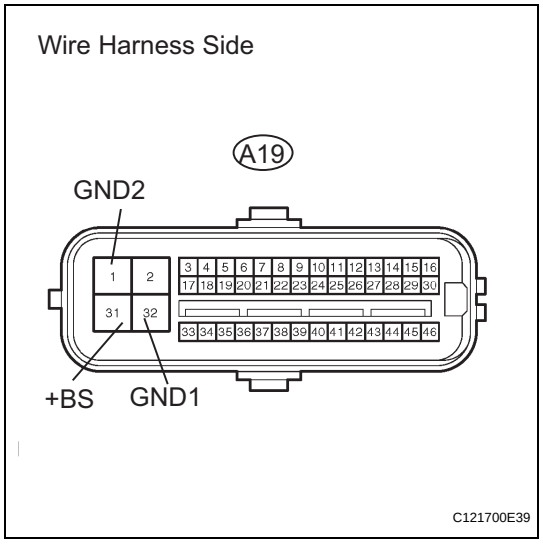

(a) Disconnect the A19 ECU connector.
(b) Measure the voltage of the wire harness side connector.
Standard voltage

Tester Connection	Specified Condition
A19-31 (+BS) - Body ground	10 to 14 V

(c) Measure the resistance of the wire harness side connector.
Standard resistance

Tester Connection	Specified Condition
A19-32 (GND1) - Body ground	Below 1 Ω
A19-1 (GND2) - Body ground	Below 1 Ω

NG → **REPAIR OR REPLACE HARNESS AND CONNECTOR**

OK

3 RECONFIRM DTC

(a) Clear the DTCs (see page BC-47).
(b) Start the engine.
(c) Drive the vehicle at 6 km/h (4 mph) or more to activate the initial check.
(d) Check if the same DTCs is output (see page BC-47).
Result

Result	Proceed to
DTC is output	A
DTC is not output	B

B → **END**

A

REPLACE ABS AND TRACTION ACTUATOR ASSEMBLY

BC

DTC	C1201/51	Engine Control System Malfunction

DESCRIPTION

If a malfunction in the engine control system is detected, the operations of VSC and TRC are prohibited by the fail-safe function. When the signals from the engine are input normally, the fail-safe is canceled and the DTC is not stored.

DTC No.	DTC Detection Condition	Trouble Area
C1201/51	Engine control system malfunction signal continues for 5 seconds.	Engine control system

INSPECTION PROCEDURE

1	CHECK HARNESS AND CONNECTOR (MOMENTARY INTERRUPTION)

(a) Using the DATA LIST of the intelligent tester, check for any momentary interruption in the wire harness corresponding to the DTC (see page BC-23).

Skid control ECU

Item	Measurement Item / Range (Display)	Normal Condition
EFI COM OPN	EFI communication open detection / ERROR or NORMAL	ERROR: Momentary interruption NORMAL: Normal

OK:

There are no momentary interruptions.

HINT:

Perform the above inspection before removing the sensor and connector.

NG → **Go to step 3**

OK

2	CHECK DTC FOR ENGINE CONTROL SYSTEM

(a) Clear the DTC (engine control system).

(b) Check the DTC (engine control system).

Result

Result	Proceed to
DTC is output	A
DTC is not output	B

B → **REPLACE ECM**

A

REPAIR ENGINE CONTROL SYSTEM

3	REPAIR OR REPLACE HARNESS AND CONNECTOR (ECM - SKID CONTROL ECU)

NEXT

4	RECONFIRM DTC

(a) Clear the DTC (see page BC-47).
(b) Perform a road test.
(c) Check if the same DTC is recorded (see page BC-47).

Result

Result	Proceed to
DTC is not output	A
DTC C1201/51 is output	B

B → **Go to step 2**

A

END

DTC	C1203/53	ECM Communication Circuit Malfunction

DESCRIPTION

The circuit is used to send TRC and VSC control information from the skid control ECU to the ECM, and engine control information from the ECM to the skid control ECU.

DTC No.	DTC Detection Condition	Trouble Area
C1203/53	Information relating to engine, drive source or destination stored in ECM does not match information stored in skid control ECU.	ECM

INSPECTION PROCEDURE

HINT:
Check that the part numbers of the installed ECM and skid control ECU are correct before performing the following procedure.

1 RECONFIRM DTC

(a) Clear the DTC (see page BC-47).
(b) Start the engine.
(c) Check if the same DTC is output (see page BC-47).

Result

Result	Proceed to
DTC is output	A
DTC is not output	B

B → **END**

A → **REPLACE ECM**

DTC	C1210/36	Zero Point Calibration of Yaw Rate Sensor Undone

DTC	C1336/39	Zero Point Calibration of Acceleration Sensor Undone

DESCRIPTION

The ABS and TRACTION actuator (Skid control ECU) receives signals from the yaw rate and deceleration sensor via the CAN communication system. The yaw rate sensor has a built-in deceleration sensor and detects the vehicle's condition using 2 circuits (GL1, GL2). If there are problems in the bus lines between the yaw rate and deceleration sensor and the CAN communication system, DTCs U0123/62 (yaw rate sensor communication trouble) and U0124/95 (deceleration sensor communication trouble) are output. The DTCs are also output when the calibration has not been completed.

DTC No.	DTC Detection Condition	Trouble Area
C1210/36	Zero point calibration of yaw rate sensor not completed	• ABS and TRACTION actuator (skid control ECU) • Zero point calibration incomplete • Yaw rate sensor
C1336/39	When either condition below is met: • Vehicle driven without completion of zero point calibration • After zero point has been obtained, zero point voltage of sensor not between 2.38 V and 2.62 V	• ABS and TRACTION actuator (skid control ECU) • Zero point calibration incomplete • Yaw rate sensor

WIRING DIAGRAM

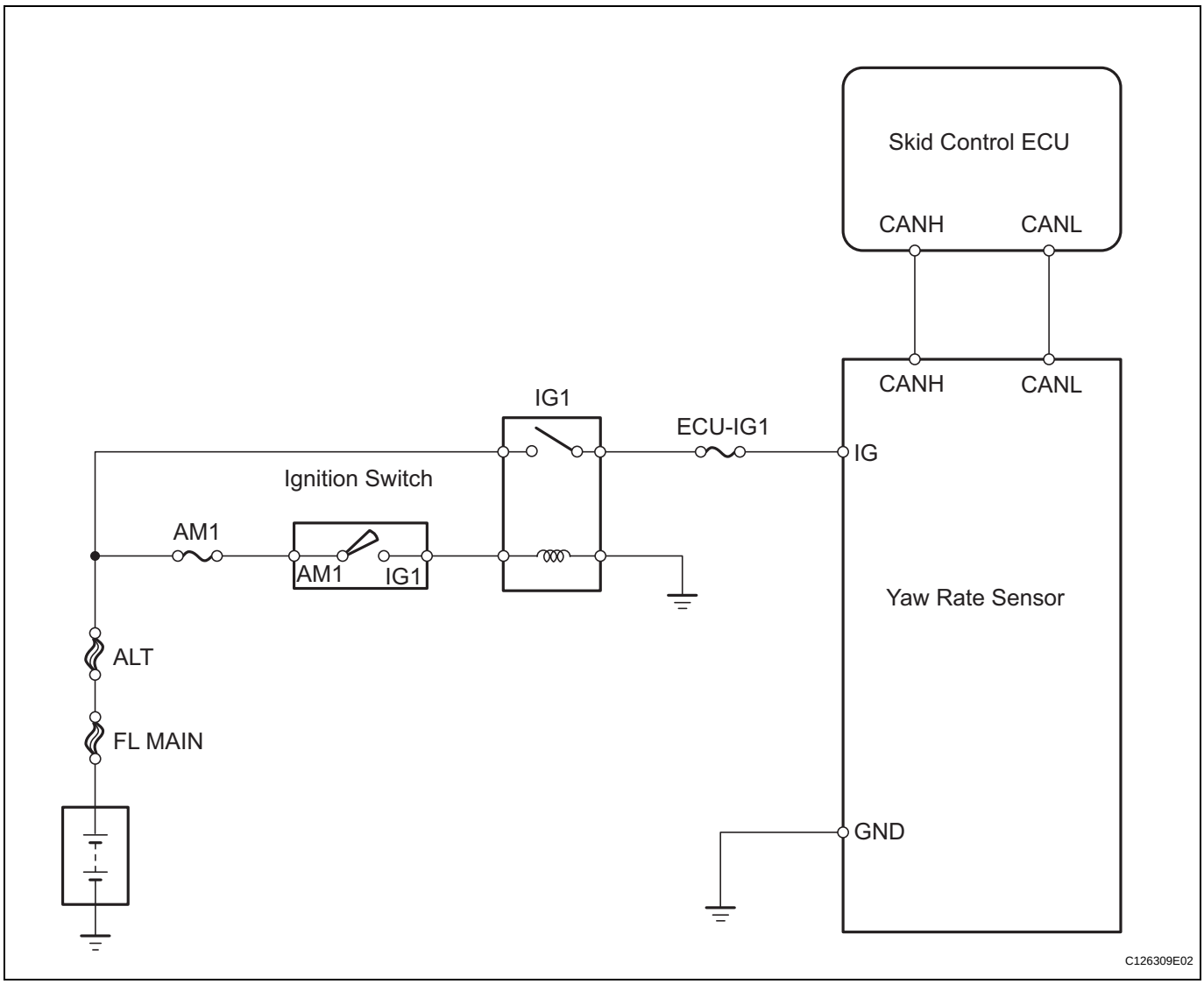

BC

INSPECTION PROCEDURE

NOTICE:

When replacing the ABS and TRACTION actuator, perform the zero point calibration (see page BC-24).

HINT:

When DTC U0123/62, U0124/95 or U0126/63 is output together with DTC C1210/36 or C1336/39, inspect and repair trouble areas indicated by DTC U0123/62, U0124/95 or U0126/63 first.

1	CHECK YAW RATE SENSOR INSTALLATION

(a) Check that the yaw rate sensor has been installed properly (see page BC-211).

OK:

The sensor is tightened to the specified torque.
The sensor is not tilted.

NG	INSTALL YAW RATE SENSOR CORRECTLY

OK

2	PERFORM ZERO POINT CALIBRATION OF YAW RATE SENSOR

(a) Perform zero point calibration of the yaw rate and deceleration sensor (see page BC-24).

NEXT

3	RECONFIRM DTC

(a) Clear the DTC(s) (see page BC-47).
(b) Start the engine.
(c) Drive the vehicle and turn the steering wheel to the right and left at a speed of 45 km/h (28 mph) or more.
(d) Check if the same DTC(s) is recorded (See page BC-47).

Result

Result	Proceed to
DTC is output	A
DTC is not output	B

HINT:
- The DTC(s) is set if the zero point calibration has not been completed successfully.
- End the procedure when the same DTC(s) is not set after completion of the zero point calibration.

B → END

A

REPLACE ABS AND TRACTION ACTUATOR ASSEMBLY

DTC	C1223/43	ABS Control System Malfunction

DESCRIPTION

This DTC is output when the VSC system detects a malfunction in the ABS system.

DTC No.	DTC Detecting Condition	Trouble Area
C1223/43	Malfunction in ABS control system	Skid control ECU

INSPECTION PROCEDURE

1	CHECK DTC FOR ABS SYSTEM

(a) Clear the DTC (see page BC-47).
(b) Turn the ignition switch ON.
(c) Check if the same DTC is recorded (see page BC-47).

Result

Result	Proceed to
DTC is output	A
DTC is not output	B

BC

B → END

A

REPAIR CIRCUIT INDICATED BY OUTPUT DTC

DTC	C1231/31	Steering Angle Sensor Circuit Malfunction

DESCRIPTION

The steering sensor signal is sent to the skid control ECU via the CAN communication system. When there is a malfunction in the CAN communication system, it is detected by the steering sensor zero point malfunction diagnostic function.

DTC No.	DTC Detection Condition	Trouble Area
C1231/31	When IG1 terminal voltage 9.5 V or more, steering angle sensor malfunction signal received.	• Steering sensor • Steering sensor circuit • Steering sensor power supply • CAN communication system

WIRING DIAGRAM

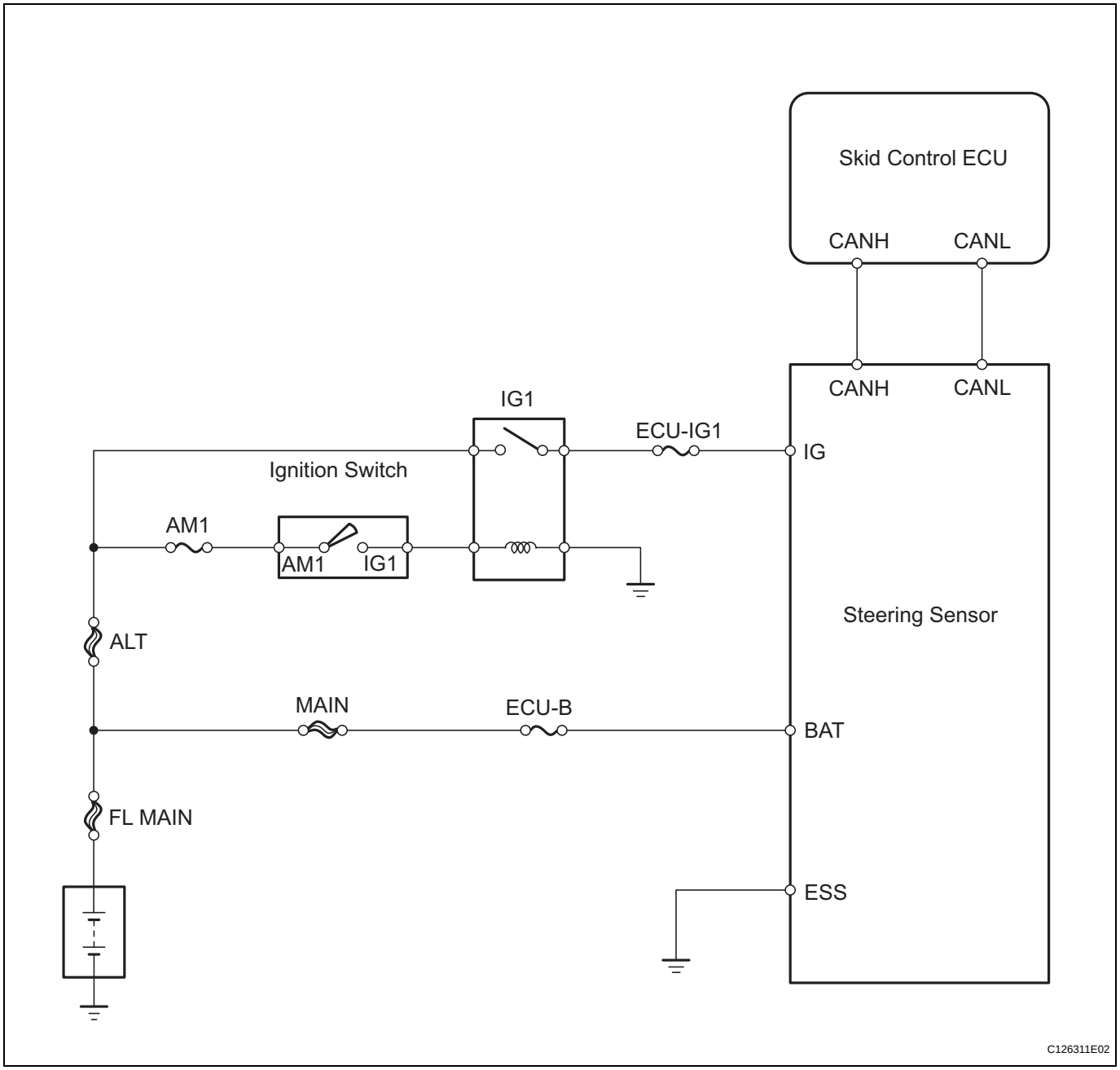

BC

INSPECTION PROCEDURE

HINT:

- When U0073/94, U0123/62, U0124/95 or U0126/63 is output together with C1231/31, inspect and repair the trouble areas indicated by U0073/94, U0123/62, U0124/95 or U0126/63 first.
- When there are problems with the speed sensor or the yaw rate sensor, DTCs for the steering sensor may be output even when the steering sensor is normal. When DTCs for the speed sensor or yaw rate sensor are output together with other DTCs for the steering sensor, inspect and repair the speed sensor and yaw rate sensor first, and then inspect and repair the steering sensor.

1	CHECK HARNESS AND CONNECTOR (MOMENTARY INTERRUPTION)

(a) Using the DATA LIST of the intelligent tester, check for any momentary interruptions in the wire harness and connectors between the skid control ECU and the steering sensor (see page BC-23).

Skid control ECU

Item (Display)	Measurement Item / Range (Display)	Normal Condition	Diagnostic Note
STEERING OPN	Steering angle sensor open detection / ERROR or NORMAL	ERROR: Momentary interruption NORMAL: Normal	-

OK:

There are no momentary interruptions.

HINT:

Perform the above inspection before removing the sensor and connector.

NG → **Go to step 4**

OK

2	CHECK DTC

(a) Clear the DTC (see page BC-47).
(b) Turn the ignition switch OFF.
(c) Turn the ignition switch ON again and check that no CAN communication system DTC is output.
(d) Drive the vehicle and turn the steering wheel to the right and left at a speed of 35 km/h (24 mph) and check that no speed and yaw rate sensor DTCs are output.

Result

Result	Proceed to
DTC is not output	A
CAN communication system DTC is output	B
Speed sensor or yaw rate sensor DTC is output	C

B → **CHECK CAN COMMUNICATION SYSTEM**

C → **REPAIR CIRCUIT INDICATED BY OUTPUT DTC**

A

3	CHECK WIRE HARNESS (STEERING SENSOR - BATTERY AND BODY GROUND)

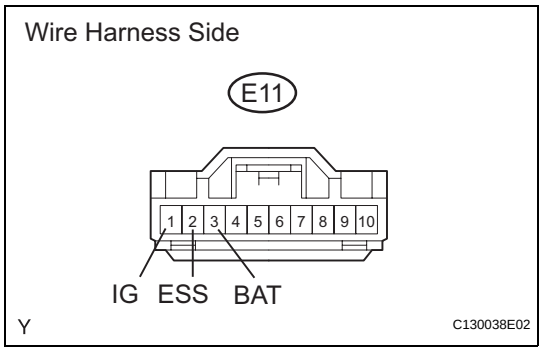

(a) Remove the steering wheel assembly and the column cover.
(b) Disconnect the E11 sensor connector.
(c) Measure the voltage of the wire harness side connector.
Standard voltage

Tester Connection	Condition	Specified Condition
E11-1(IG) - Body ground	Ignition switch ON	10 to 14 V
E11-3 (BAT) - Body ground	Always	10 to 14 V

(d) Measure the resistance of the wire harness side connector.
Standard resistance

Tester Connection	Specified Condition
E11-2 (ESS) - Body ground	Below 1Ω

NG → **REPAIR OR REPLACE HARNESS AND CONNECTOR**

BC

OK

REPLACE STEERING SENSOR

4	REPAIR OR REPLACE HARNESS AND CONNECTOR (STEERING SENSOR TO SKID CONTROL ECU)

NEXT

5	RECONFIRM DTC

(a) Clear the DTC (see page BC-47).
(b) Start the engine.
(c) Drive the vehicle and turn the steering wheel to the right and left at a speed of 45 km/h (28 mph) or more for several seconds.
(d) Check if the same DTC is recorded (see page BC-47).
Result

Result	Proceed to
DTC is not output	A
DTC is output	B

B → **Go to step 2**

A

END

DTC	**C1232/32**	**Stuck in Deceleration Sensor**
DTC	**C0371/71**	**Yaw Rate Sensor (Test Mode DTC)**
DTC	**C1234/34**	**Yaw Rate Sensor Malfunction**
DTC	**C1243/43**	**Acceleration Sensor Stuck Malfunction**
DTC	**C1244/44**	**Open or Short in Deceleration Sensor Circuit**
DTC	**C1245/45**	**Acceleration Sensor Output Malfunction**
DTC	**C1279/79**	**Deceleration Sensor Output Voltage Malfunction (Test Mode DTC)**
DTC	**C1381/97**	**Yaw Rate and / or Acceleration Sensor Power Supply Voltage Malfunction**

BC

DESCRIPTION

The skid control ECU receives signals from the yaw rate and deceleration sensor via the CAN communication system.
The yaw rate sensor has a built-in deceleration sensor and detects the vehicle's condition using 2 circuits (GL1: G sensor 1, GL2: G sensor 2).
If there is trouble in the bus lines between the yaw rate and deceleration sensor and the CAN communication system, DTC U0123/62 (malfunction in CAN communication with the yaw rate sensor) and U0124/95 (malfunction in CAN communication with the deceleration sensor) are output.
These DTCs are also output when the calibration has not been completed.
DTCs C0371/71 and C1279/79 are deleted when the yaw rate and deceleration sensor sends a yaw rate and/or deceleration signal or test mode ends. DTCs C0371/71 and C1279/79 are output only in test mode.

DTC No.	DTC Detection Condition	Trouble Area
C1232/32	At vehicle speed of 10 km/h (6 mph) or more, either GL1 or GL2 (input signal) does not change for 30 seconds or more.	• Yaw rate sensor • Yaw rate sensor circuit
C0371/71	Detected only during test mode	• Yaw rate sensor • Yaw rate sensor circuit
C1234/34	Sensor malfunction signal received from yaw rate sensor.	• Yaw rate sensor • Yaw rate sensor circuit
C1243/43	While vehicle speed changes from 30 km/h (19 mph) to 0 km/h (0 mph), condition that values of GL1 and GL2 do not change occurs 16 times or more.	• Yaw rate sensor • Yaw rate sensor circuit
C1244/44	When either condition below is met: 1. IG terminal voltage is 9.5 V to 17.2 V and YD1 malfunction signal from yaw rate sensor is received. 2. After difference between GL1 and GL2 becomes 0.6 G or more with vehicle stationary, difference remains 0.4 G or more for 60 seconds or more.	• Yaw rate sensor • Yaw rate sensor circuit

DTC No.	DTC Detection Condition	Trouble Area
C1245/45	At vehicle speed of 30 km/h (19 mph) or more, difference between forward and backward G calculated from deceleration sensor value and that calculated from vehicle speed sensor value exceeds 0.35 G for 60 seconds or more.	• Yaw rate sensor • Yaw rate sensor circuit
C1279/79	Detected only during test mode.	• Yaw rate sensor • Yaw rate sensor circuit
C1381/97	At vehicle speed of more than 3 km/h (2 mph), deceleration sensor power source malfunction signal received for 10 seconds or more.	• Yaw rate sensor • Yaw rate sensor circuit

WIRING DIAGRAM

Refer to DTC C1210/23, C1336/39 (see page BC-89).

INSPECTION PROCEDURE

NOTICE:

When replacing yaw rate and deceleration sensor, perform zero point calibration (see page BC-24).

HINT:

When DTC U0123/62, U0124/95 or U0126/63 is output together with DTC C1232/32, C1234/34, C1243/43, C1244/44, C1245/45, or C1387/97, inspect and repair the trouble areas indicated by DTC U0123/62, U0124/95 or U0126/63 first.

BC

1 CHECK DTC

(a) Clear the DTC (see page BC-47).
(b) Turn the ignition switch OFF.
(c) Turn the ignition switch ON again and check that no CAN communication system DTC(s) is output.
(d) Drive the vehicle at a speed of 30 km/h (19 mph) or more and check that no DTCs are output.

Result

Result	Proceed to
DTC is output (relating to yaw rate and deceleration sensor)	A
DTC is output (relating to CAN communication system)	B
DTC is not output	C

B → **REPAIR CAN COMMUNICATION SYSTEM**

C → **END**

A

2 CHECK YAW RATE SENSOR INSTALLATION

(a) Check that the yaw rate sensor has been installed correctly (see page BC-211).

OK:

The sensor is tightened to the specified torque.
The sensor is not tilted.

NG → **INSTALL YAW RATE SENSOR CORRECTLY**

OK

3	**CHECK WIRE HARNESS (YAW RATE SENSOR - BATTERY AND BODY GROUND)**

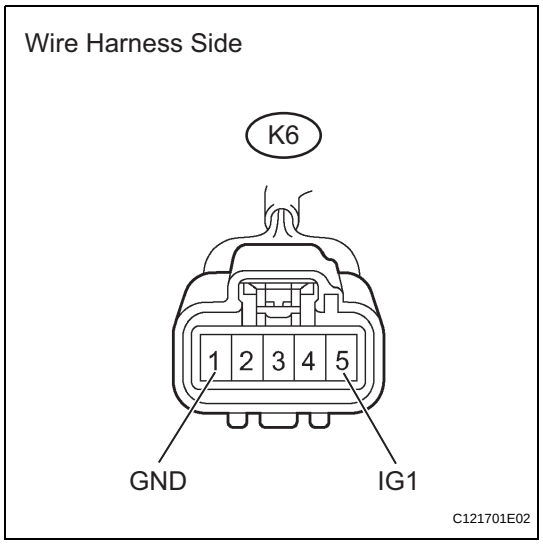

(a) Disconnect the K6 sensor connector.
(b) Measure the voltage of the wire harness side connector.
Standard voltage

Tester Connection	Condition	Specified Condition
K6-5 (IG) - Body ground	Ignition switch ON	10 to 14 V

(c) Measure the resistance of the wire harness side connector.
Standard resistance

Tester Connection	Specified Condition
K6-1 (GND) - Body ground	Below 1 Ω

NG → **REPAIR OR REPLACE HARNESS AND CONNECTOR**

OK

REPLACE YAW RATE SENSOR

BC

DTC	C1241/41	Low Battery Positive Voltage

DESCRIPTION

When there is an abnormality in the power supply circuit of the brake actuator (skid control ECU), the skid control ECU sets a DTC and the operation is prohibited by the fail-safe function. This DTC is set when the voltage supplied to terminal IG1 is outside the DTC detection threshold, due to abnormalities of the battery, power source circuits or charging circuits such as the alternator circuit.
The fail-safe function is canceled when the voltage to terminal IG1 returns to normal.

DTC No.	DTC Detection Condition	Trouble Area
C1241/41	When one of following conditions is met: 1. At vehicle speed of 3 km/h (2 mph) or more, IG1 terminal voltage 9.5 V or less for 10 seconds or more. 2. When solenoid relay remains ON and IG1 terminal voltage 9.5 V or less, relay contact open for 0.2 seconds or more. 3. When motor relay terminals ON and IG terminal voltage 9.5 V or less, actuator pump activation motor OFF status continues for 0.1 seconds or more. 4. When IG1 terminal voltage 9.5 V or less, vehicle speed sensor power supply decreases for 60 seconds or more.	• Battery • Charging system • Power source circuit • Internal power supply circuit of skid control ECU

WIRING DIAGRAM

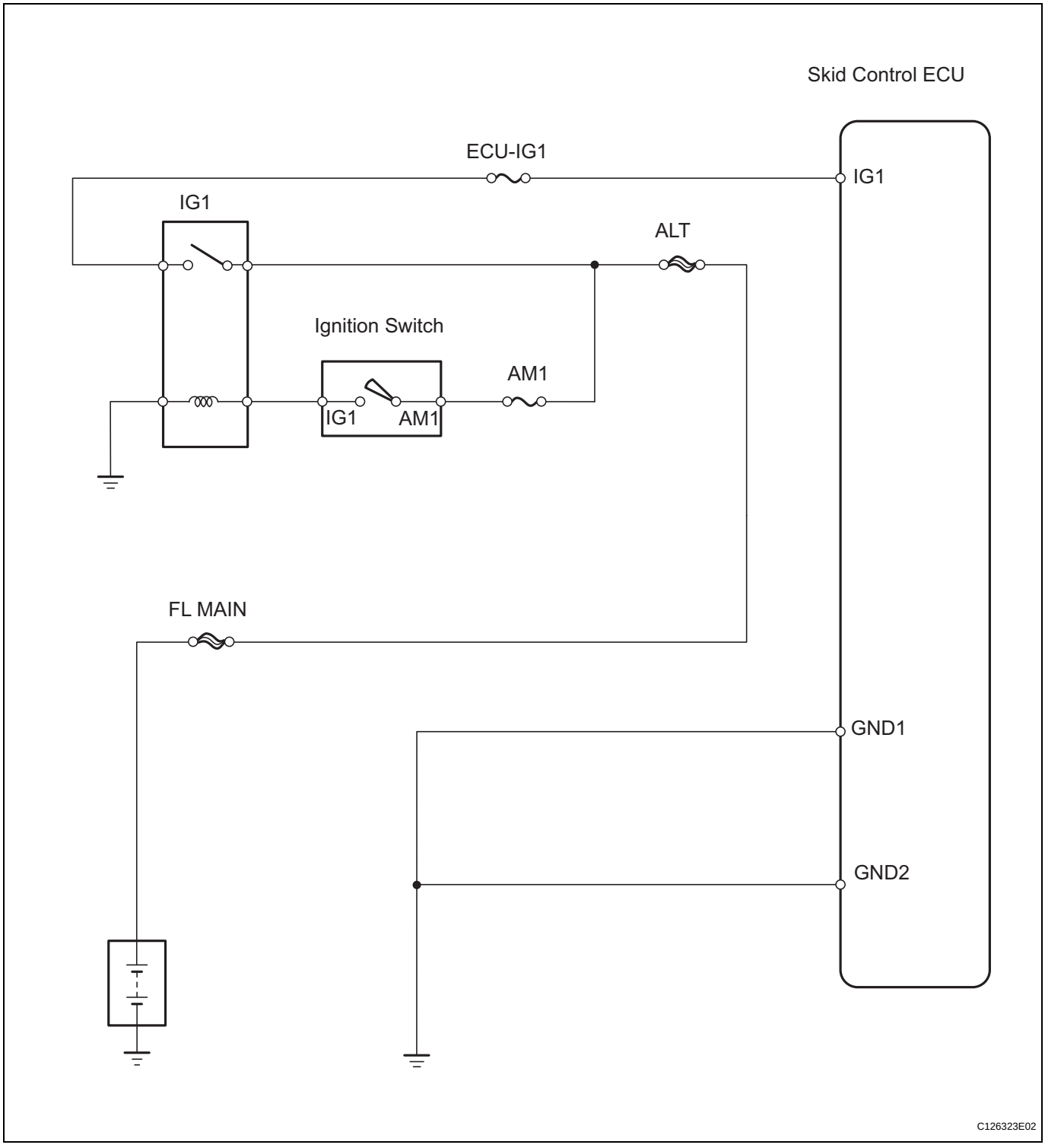

BC

INSPECTION PROCEDURE

1	**INSPECT FUSE (ECU-IG1)**

(a) Remove the ECU-IG1 fuse from the instrument panel junction block.
(b) Measure the resistance of the fuse.

Standard resistance:
Below 1 Ω

NG → **REPLACE FUSE**

OK

2	INSPECT BATTERY

(a) Check the battery voltage.
Standard voltage:
11 to 14 V

NG → **CHECK CHARGING SYSTEM**

OK

3	CHECK WIRE HARNESS (SKID CONTROL ECU - BATTERY)

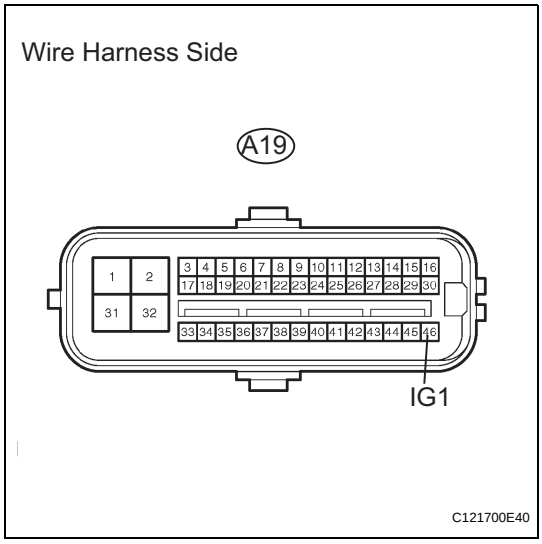

(a) Disconnect the A19 ECU connector.
(b) Measure the voltage of the wire harness side connector.
Standard voltage

Tester Connection	Condition	Specified Condition
A19-46 (IG1) - Body ground	Ignition switch ON	10 to 14 V

NG → **REPAIR OR REPLACE HARNESS AND CONNECTOR**

OK

BC

4 CHECK WIRE HARNESS (SKID CONTROL ECU - BODY GROUND)

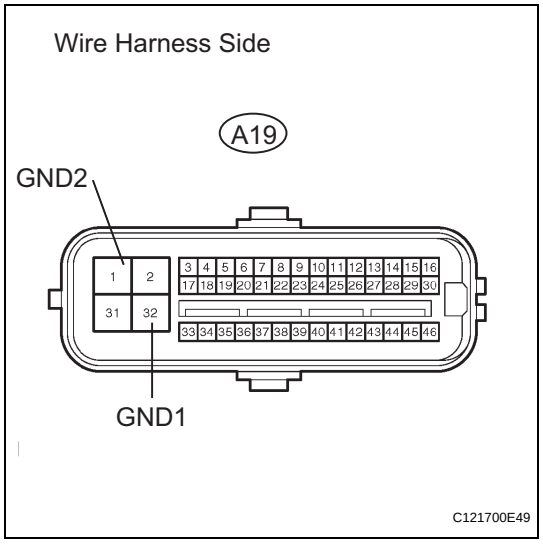

(a) Disconnect the A19 ECU connector.
(b) Measure the resistance of the wire harness side connector.

Standard resistance

Tester Connection	Specified Condition
A19-32 (GND1) - Body ground	Below 1 Ω
A19-1 (GND2) - Body ground	Below 1 Ω

NG → **REPAIR OR REPLACE HARNESS AND CONNECTOR**

OK

5 RECONFIRM DTC

(a) Clear the DTC (see page BC-47).
(b) Drive the vehicle at 3 km/h (2 mph) or more for several seconds.
(c) Check if the same DTC is output (see page BC-47).

Result

Result	Proceed to
DTC is output	A
DTC is not output	B

B → **END**

A

REPLACE ABS AND TRACTION ACTUATOR ASSEMBLY

BC

DTC	C1246/46	Master Cylinder Pressure Sensor Malfunction

DTC	C1281/81	Master Cylinder Pressure Sensor Output Malfunction (Test Mode DTC)

DESCRIPTION

The master cylinder pressure sensor is connected to the skid control ECU in the ABS and TRACTION actuator.
DTC C1281/81 can be detected when the master cylinder pressure sensor sends a master cylinder pressure signal or test mode ends. DTC C1281/81 is output only in test mode.

DTC No.	DTC Detection Condition	Trouble Area
C1246/46	When one of following conditions is met: 1. At vehicle speed of 7 km/h (4.3 mph) or more, when PMC terminal voltage over 0.86 V, voltage does not change by 0.005 V or more for 30 seconds. 2. Noise occurs in the PMC terminal 7 times or more within 5 seconds. 3. When stop light switch OFF, PMC terminal voltage more than 0.86 V or less than 0.3 V for 5 seconds or more. 4. With IG1 terminal voltage between 9.5 V and 17.2 V, VCM terminal voltage not between 4.4 V and 5.6 V for 1.2 seconds or more. 5. When VCM terminal voltage between 4.4 V and 5.6 V, PCM terminal voltage not between 0.14 V and 4.85 V for 1.2 seconds or more.	• Master cylinder pressure sensor • Master cylinder pressure sensor circuit • Stop light switch circuit • ABS and TRACTION actuator
C1281/81	Detected only during test mode.	• Master cylinder pressure sensor • Master cylinder pressure sensor circuit • Stop light switch circuit • ABS and TRACTION actuator

BC

INSPECTION PROCEDURE

NOTICE:
When replacing the ABS and TRACTION actuator, perform zero point calibration (see page BC-24).

1	READ VALUE OF INTELLIGENT TESTER (STOP LIGHT SWITCH)

(a) Check the DATA LIST for proper functioning of the stop light switch.

Skid control ECU

Item (Display)	Measurement Item / Range (Display)	Normal Condition	Diagnostic Note
STOP LAMP SW	Stop light switch / ON or OFF	ON: Brake pedal applied OFF: Brake pedal released	-

OK:
ON (brake pedal is depressed) appears on the screen.

NG → **CHECK STOP LIGHT SWITCH CIRCUIT**

OK

2	READ VALUE OF INTELLIGENT TESTER (MASTER CYLINDER PRESSURE SENSOR)

(a) Check the DATA LIST for proper functioning of the master cylinder pressure sensor.

Skid control ECU

Item (Display)	Measurement Item / Range (Display)	Normal Condition	Diagnostic Note
MAS CYL PRESS 1	Master cylinder pressure sensor 1 reading / min.: 0 V, max.: 5 V	When brake pedal released: 0.3 to 0.9 V	-

OK:
When the pedal is depressed, the sensor output voltage increases.

NG → **REPLACE ABS AND TRACTION ACTUATOR ASSEMBLY**

OK

3	RECONFIRM DTC

(a) Clear the DTC(s) (see page BC-47).
(b) Drive the vehicle at a speed of 30 km/h (18 mph) or more and perform a braking test (decelerate the vehicle by depressing the brake pedal).
(c) Check if the same DTC(s) is recorded (see page BC-47).

Result

Result	Proceed to
DTC is output	A
DTC is not output	B

B → **END**

A

REPLACE ABS AND TRACTION ACTUATOR ASSEMBLY

BC

DTC	C1249/49	Open in Stop Light Switch Circuit

DESCRIPTION

The skid control ECU detects the brake operating conditions through a signal transmitted by the stop light switch. The skid control ECU incorporates an open circuit detection circuit. This DTC is set under either of the following conditions:

- An open is detected in the stop light signal input line when the stop light switch is off.
- An open is detected in the stop light circuit lead to the ground when the stop light switch is off.

DTC No.	DTC Detection Condition	Trouble Area
C1249/49	When either condition below is met: 1. When IG1 terminal voltage 9.5 to 17.2 V, open circuit of stop light switch continues for 0.3 seconds more. 2. w/ 16-inch disc: With brake pedal load sensing switch ON, master pressure 2 MPa or more, vehicle deceleration 0.2 G or more (calculated based on vehicle speed), stop switch OFF condition continues for 2 seconds or more.	• ECU-IG1 fuse • STOP fuse • BRK relay • Stop light switch • Stop light switch circuit • ABS and TRACTION actuator

WIRING DIAGRAM

BC

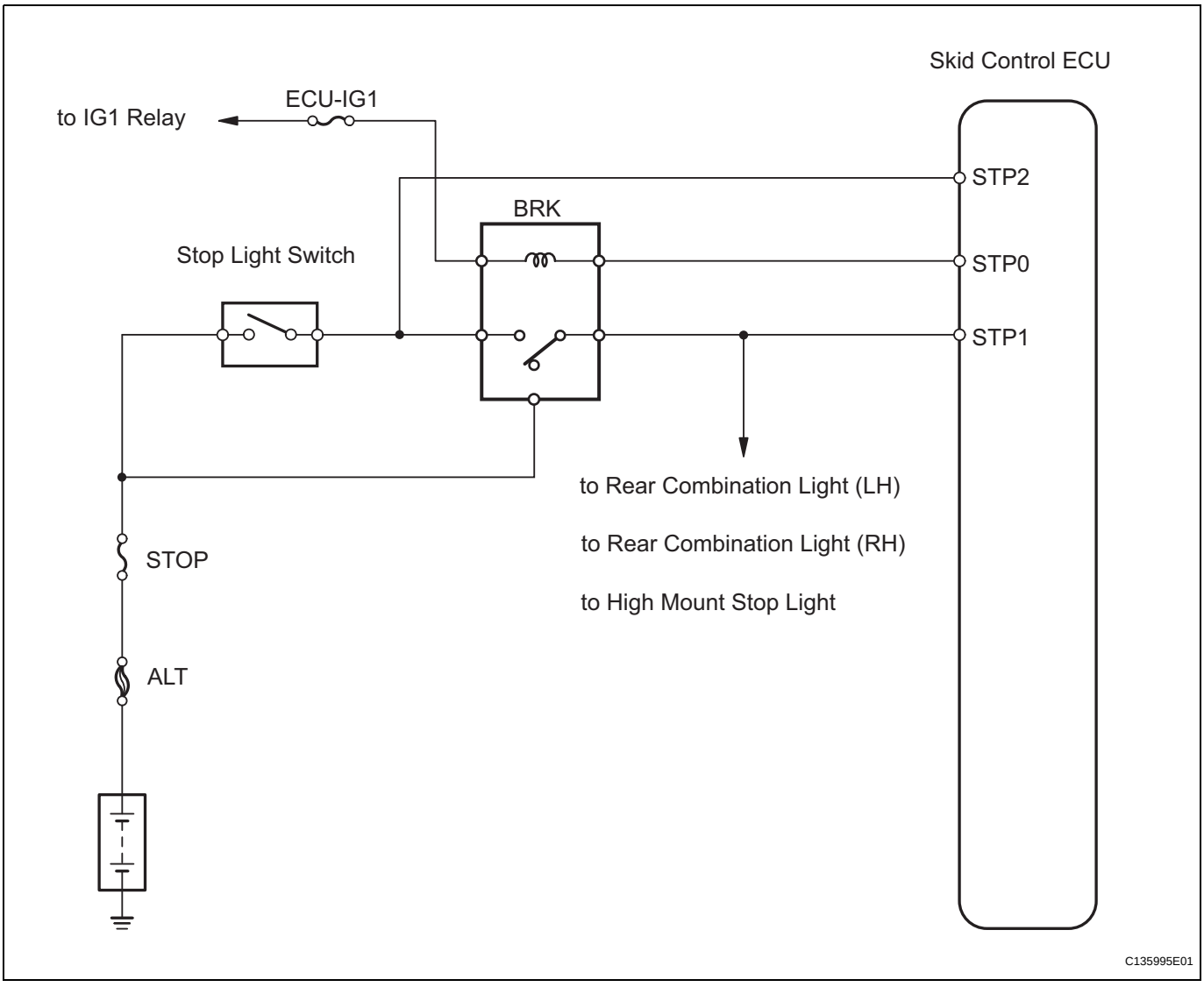

INSPECTION PROCEDURE

1 **READ VALUE OF INTELLIGENT TESTER (STOP LIGHT SWITCH)**

(a) Check the DATA LIST for proper functioning of the stop light switch.

Skid control ECU

Item (Display)	Measurement Item / Range (Display)	Normal Conditions	Diagnostic Note
STOP LAMP SW	Stop light switch / ON or OFF	ON: Brake pedal depressed OFF: Brake pedal released	-

OK:
ON (brake pedal is depressed) appears on the screen.

NG → **Go to step 3**

OK

2 **CHECK WIRE HARNESS (STP VOLTAGE)**

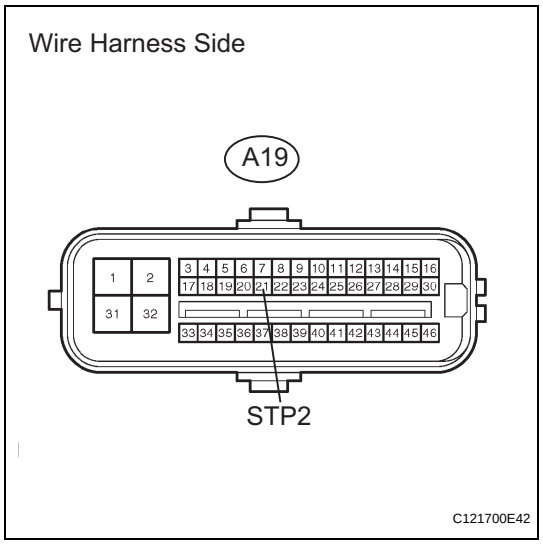

(a) Disconnect the A19 ECU connector.
(b) Measure the voltage of the wire harness side connector.
Standard voltage

Tester Connection	Switch Condition	Specified Condition
A19-21 (STP2) - Body ground	Brake pedal depressed	8 to 14 V
A19-21 (STP2) - Body ground	Brake pedal released	Below 4.0 V

NG → **Go to step 6**

OK

REPLACE ABS AND TRACTION ACTUATOR ASSEMBLY

3 **INSPECT FUSE (STOP, ECU-IG1)**

(a) Remove the STOP fuse and ECU-IG1 fuse from the instrument panel junction block.
(b) Measure the resistance of the fuse.
Standard resistance:
Below 1 Ω

NG → **REPLACE FUSE**

BC

OK

4	INSPECT STOP LIGHT CONTROL RELAY (Marking: BRK)

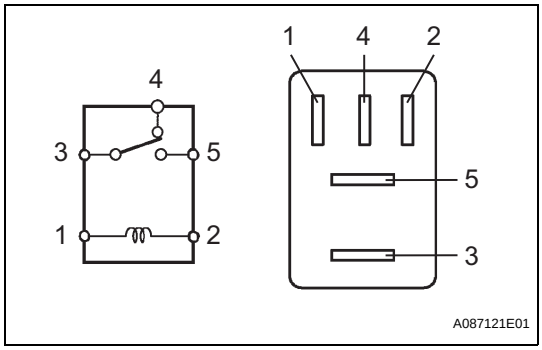

(a) Remove the stop light control relay from the engine room No. 1 relay block.
(b) Measure the resistance of the relay.

Tester Connection	Specified Condition
3 - 4	Below 1 Ω
3 - 5	10 kΩ or higher
3 - 4	10 kΩ or higher (when battery voltage is applied to terminals 1 and 2)
3 - 5	Below 1 Ω (when battery voltage is applied to terminals 1 and 2)

NG → REPLACE STOP LIGHT CONTROL RELAY

OK

BC

5	INSPECT STOP LIGHT SWITCH ASSEMBLY

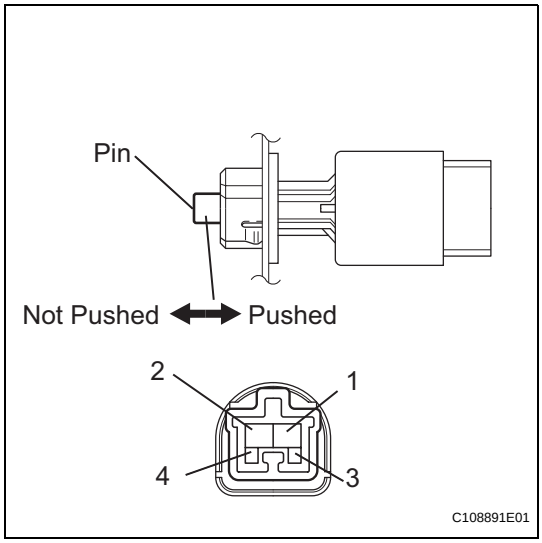

(a) Disconnect the stop light switch connector.
(b) Measure the resistance of the switch.
Standard resistance

Tester Connection	Switch Condition	Specified Condition
1 - 2	Pin not pushed	Below 1 Ω
1 - 2	Pin pushed	10 kΩ or higher
3 - 4	Pin not pushed	10 kΩ or higher
3 - 4	Pin pushed	Below 1 Ω

NG → REPLACE STOP LIGHT SWITCH ASSEMBLY

OK

6 CHECK WIRE HARNESS (SKID CONTROL ECU - STOP LIGHT SWITCH)

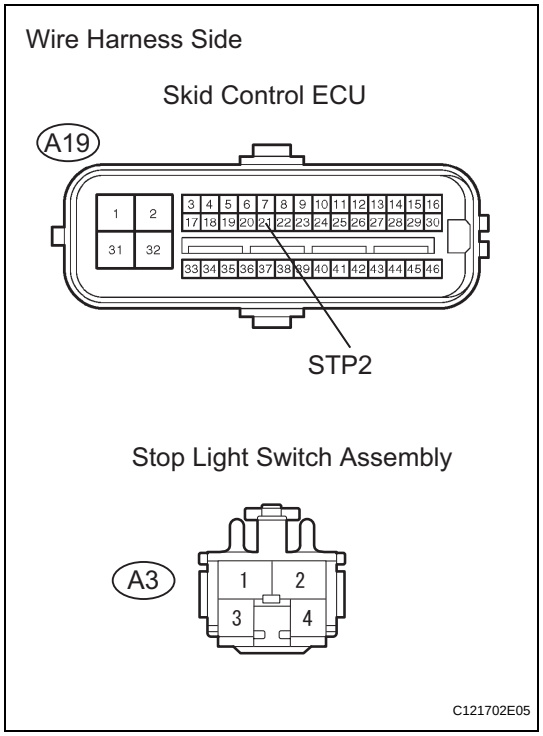

(a) Disconnect the A19 ECU connector.
(b) Disconnect the A3 switch connector.
(c) Measure the resistance of the wire harness side connectors.

Standard resistance

Tester Connection	Specified Condition
A19-21 (STP2) - A3-1	Below 1 Ω

NG → **REPAIR OR REPLACE HARNESS AND CONNECTOR**

OK

7 RECONFIRM DTC

(a) Clear the DTC (see page BC-47).
(b) Check if the same DTC is output (see page BC-47).

Result

Result	Proceed to
DTC is output	A
DTC is not output	B

B → **END**

A

REPLACE ABS AND TRACTION ACTUATOR ASSEMBLY

BC

DTC	C1251/51	Open in Pump Motor Circuit

DESCRIPTION

The motor relay drives the pump motor based on a signal from the skid control ECU.

DTC No.	DTC Detection Condition	Trouble Area
C1251/51	When either condition below is met: 1. Actuator pump motor does not operate properly. 2. Open in actuator pump motor circuit continues for at least 2 seconds.	• Wire harness • ABS and TRACTION actuator

WIRING DIAGRAM

Refer to DTC C0273/13, C0274/14, C1361/91 (see page BC-79).

INSPECTION PROCEDURE

1 PERFORM ACTIVE TEST BY INTELLIGENT TESTER (MOTOR RELAY)

(a) Select the ACTIVE TEST, generate a control command, and then check that the ABS motor relay operates.

BC

Skid control ECU

Item	Test Details	Diagnosis Note
MOTOR RELAY	Turn ABS motor relay ON / OFF	Operation sound of motor can be heard

OK:

Operation sound of ABS motor is heard.

NG → **Go to step 3**

OK

2 RECONFIRM DTC

(a) Clear the DTC (see page BC-47).
(b) Start the engine.
(c) Drive the vehicle at a speed of 6 km/h (4 mph) or more for several seconds.
(d) Check if the same DTC is output (see page BC-47).

Result

Result	Proceed to
DTC is output	A
DTC is not output	B

B → **END**

A

REPLACE ABS AND TRACTION ACTUATOR ASSEMBLY

3	INSPECT FUSE (ABS1)

(a) Remove the ABS1 H-fuse from the engine room No. 1 relay block.
(b) Measure the resistance of the fuse.
Standard resistance:
Below 1 Ω

NG → **REPLACE FUSE**

OK

4	CHECK WIRE HARNESS (SKID CONTROL ECU - BATTERY AND BODY GROUND)

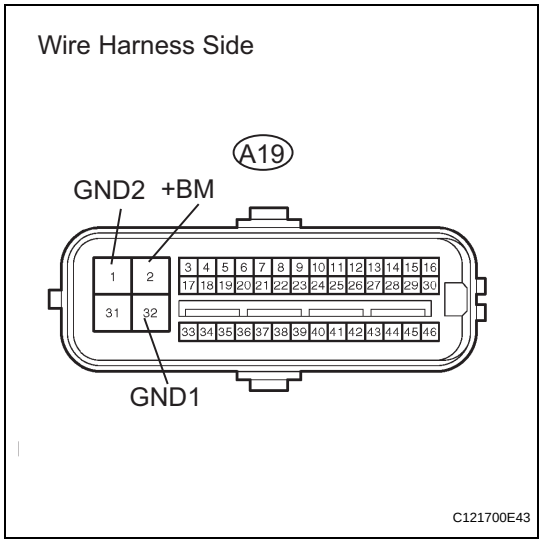

(a) Disconnect the A19 connector.
(b) Measure the resistance of the wire harness side connector.
Standard resistance

Tester Connection	Specified Condition
A19-32 (GND1) - Body ground	Below 1 Ω
A19-1 (GND2) - Body ground	Below 1 Ω

(c) Measure the voltage of the wire harness side connector.
Standard voltage

Tester Connection	Specified Condition
A19-2 (BM) - Body ground	10 to 14 V

NG → **REPAIR OR REPLACE HARNESS AND CONNECTOR**

OK

REPLACE ABS AND TRACTION ACTUATOR ASSEMBLY

BC

DTC	C1267/67	Brake Pedal Load Sensing Switch

DESCRIPTION

The brake pedal load sensing switch is turned on when the brake pedal is depressed with force exceeding a predetermined level.
The skid control ECU detects if the brake pedal is depressed or not via this circuit.

DTC No.	DTC Detection Condition	Trouble Area
C1267/67	When one of following conditions is met: 1. An open or short in the brake pedal load sensing switch continues for 0.3 seconds or more. 2. Immediately after the ignition switch is turned ON, the brake pedal load sensing switch is ON and the stop light switch is OFF for 10 seconds or more. 3. While the vehicle speed change from 0 mph (0 km/h) to 18 mph (30 km/h), the condition that the brake pedal load sensing switch remains ON occurs 5 times in succession. 4. With the stop light switch ON, the brake pedal load sensing switch OFF, and the master cylinder pressure 6 Mpa or more, the deceleration is 0.4 G or more for 1 second or more. 5. With the stop light switch ON, the brake pedal load sensing switch OFF, and the master cylinder pressure 6 Mpa or more, the vehicle speed is 0 mph (0 km/h) for 5 seconds or more.	• Brake pedal load sensing switch • Brake pedal load sensing switch circuit

BC

WIRING DIAGRAM

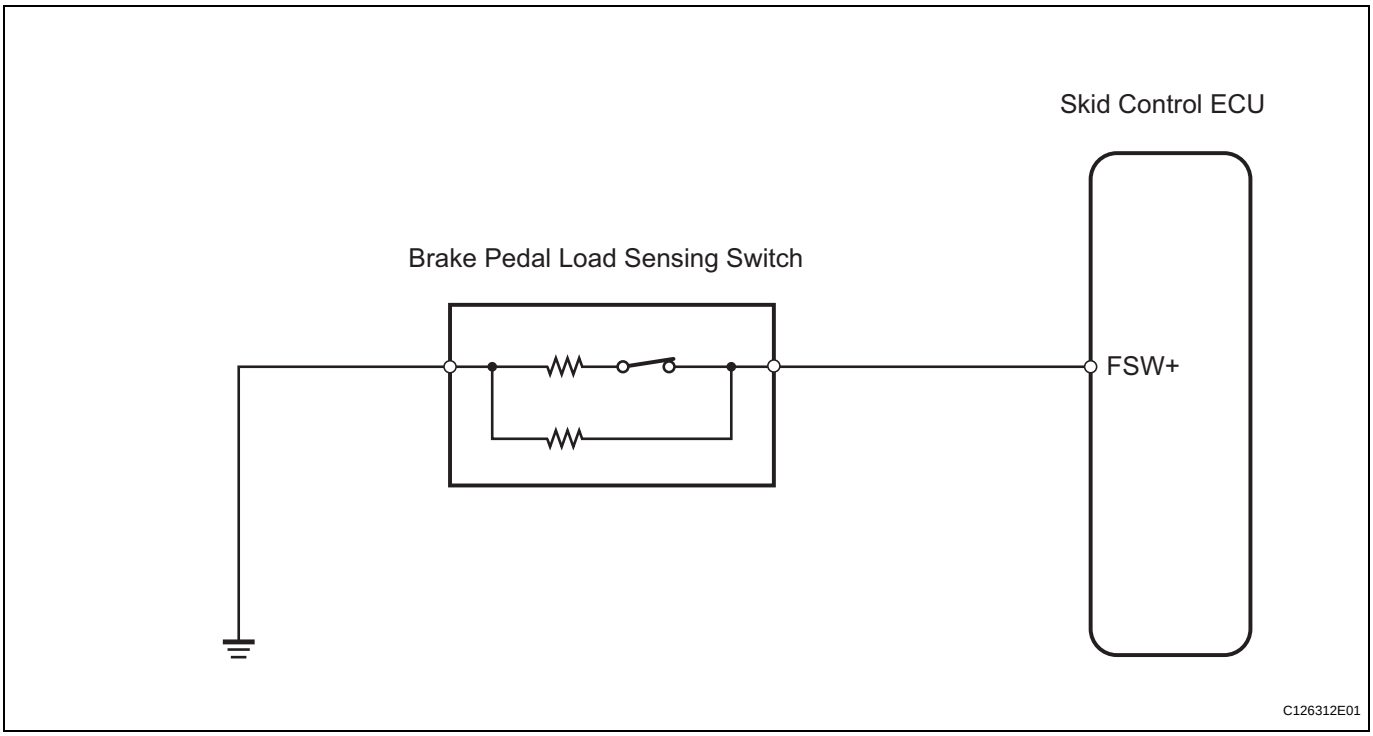

INSPECTION PROCEDURE

NOTICE:

When replacing the brake actuator assembly, perform zero point calibration (see page BC-24).

HINT:

If DTC C1249/49 is output, repair it before repairing DTC C1267/67 based on the flowchart below.

1	READ VALUE OF INTELLIGENT TESTER (BRAKE PEDAL LOAD SENSING SWITCH)

(a) Check the DATA LIST for proper functioning of the brake pedal load sensing switch.

Skid control ECU

Item (Display)	Measurement Item / Range (Display)	Normal Condition	Diagnostic Note
BRAKE PEDAL SW	Brake pedal load sensing switch / ON or OFF	ON: Depressed brake pedal OFF: Released brake pedal	-

OK:

ON (brake pedal is depressed) appears on the screen.

OK → **Go to step 4**

NG

2	INSPECT BRAKE PEDAL LOAD SENSING SWITCH

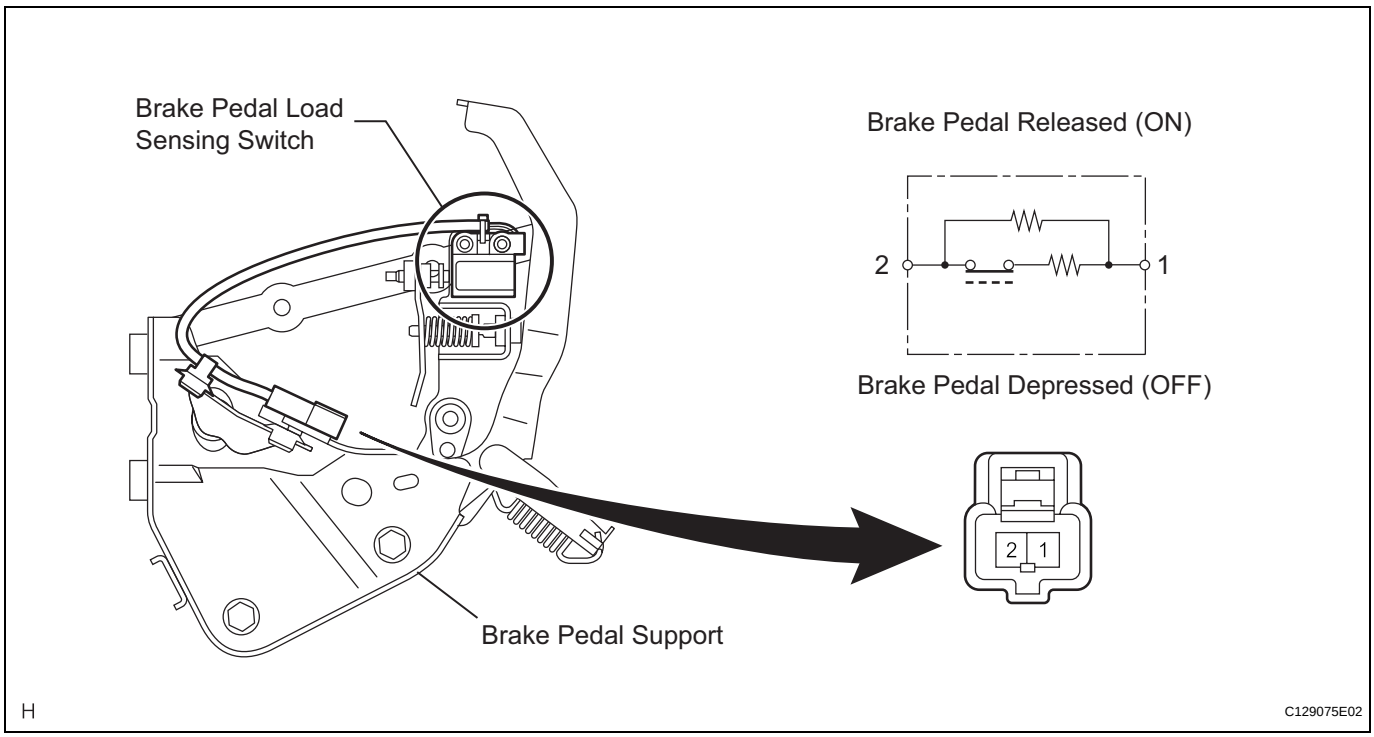

NOTICE:

- **Do not remove the brake pedal load sensing switch from the brake pedal.**
- **When there is a malfunction in the brake pedal load sensing switch, replace the brake pedal.**

(a) Turn the ignition switch OFF.

(b) Disconnect the brake pedal load sensing switch connector.
(c) Measure the resistance of the switch.

Standard resistance

Tester Connection	Condition	Specified Condition
2 - 1	Brake pedal depressed (OFF)	0.95 to 1.05 kΩ
2 - 1	Brake pedal released (ON)	202.4 to 223.7 Ω

NG → **REPLACE BRAKE PEDAL SUPPORT ASSEMBLY**

OK

3 CHECK WIRE HARNESS (SKID CONTROL ECU - BRAKE PEDAL LOAD SENSING SWITCH)

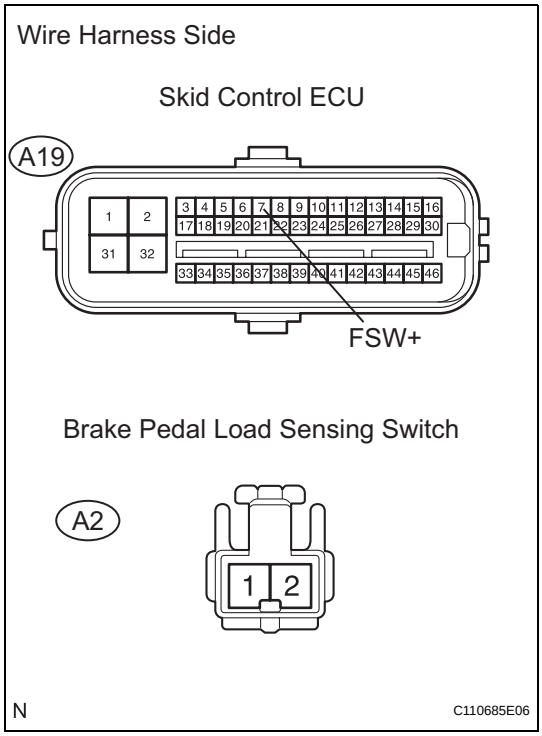

(a) Disconnect the A19 ECU connector.
(b) Measure the resistance of the wire harness side connectors.

Standard resistance

Tester Connection	Specified Condition
A19-7 (FSW+) - A2-2	Below 1 Ω
19-7 (FSW+) - Body ground	10 kΩ or higher
A2-1 - Body ground	Below 1 Ω

NG → **REPAIR OR REPLACE HARNESS AND CONNECTOR**

OK

4 RECONFIRM DTC

(a) Clear the DTC (see page BC-47).
(b) Check if the same DTC is recorded (see page BC-47).

Result

Result	Proceed to
DTC (C1267/67) is not output	A
DTC (C1267/67) is output	B

B → **REPLACE ABS AND TRACTION ACTUATOR ASSEMBLY**

A

USE SIMULATION METHOD TO CHECK

DTC	C1290/66	Steering Angle Sensor Zero Point Malfunction

DESCRIPTION

The skid control ECU learns the steering sensor zero point every time the ignition switch is turned ON and the vehicle is driven at 35 km/h (22 mph) or more for approximately 5 seconds. The ECU also stores the previous zero point.
If front wheel alignment or the steering wheel position is adjusted without disconnecting the negative battery terminal, or if the yaw rate and deceleration sensor zero point is not set after the adjustments have been completed, the skid control ECU detects the difference between the previously stored zero point and the newly learned zero point and outputs this DTC to indicate a poor adjustment.
Indication of the steering sensor zero point malfunction is canceled by turning the ignition switch OFF.

DTC No.	DTC Detection Condition	Trouble Area
C1290/66	Steering sensor zero point calibration position differs significantly from recorded value	• Yaw rate and deceleration sensor zero point calibration incomplete • Poor adjustment of centered position of steering wheel • Poor adjustment of front wheel alignment

INSPECTION PROCEDURE

NOTICE:

BC

When replacing the ABS and TRACTION actuator, perform zero point calibration (see page BC-24).

1	PERFORM YAW RATE AND DECELERATION SENSOR ZERO POINT CALIBRATION

(a) Perform the zero point calibration of the yaw rate and deceleration sensor (see page BC-24).
HINT:
- When the stored zero point of the yaw rate and deceleration sensor is erased, the steering sensor zero point is also erased.
- If the zero point and output value of the yaw rate and deceleration sensor and the output values of the speed sensors are not normal, the steering sensor zero point cannot be learned normally even if the vehicle is driven straight ahead at 35 km/h (22 mph) or more.

NEXT

2	CHECK STEERING SENSOR

(a) Drive the vehicle straight ahead at 35 km/h (22 mph) or more for 5 seconds or more.
(b) Check that the centered position of the steering wheel is correctly set while driving straight ahead.
HINT:
If the front wheel alignment and steering position are adjusted due to an incorrectly centered position of the steering wheel, set the yaw rate and deceleration sensor zero point again after the adjustments are completed.

OK:
The center position of the steering wheel is correctly set.

NG → **ADJUST FRONT WHEEL ALIGNMENT**

OK ↓

3	RECONFIRM DTC

(a) Turn the ignition switch OFF.
(b) Clear the DTC (see page BC-47).
(c) Check if the same DTC is recorded (see page BC-47).

Result

Result	Proceed to
DTC (C1290/66) is not output	A
DTC (C1290/66) is output	B

B → **REPLACE ABS AND TRACTION ACTUATOR ASSEMBLY**

A ↓

USE SIMULATION METHOD TO CHECK

DTC	C1337/37	Different Diameter Tire Malfunction

DESCRIPTION

The skid control ECU measures the speed of each wheel by receiving signals from the speed sensor. These signals are used for recognizing that all 4 wheels are operating properly. Therefore, all wheel signals must be equal.

DTC No.	DTC Detection Condition	Trouble Area
C1337/37	With vehicle speed at 20 km/h (12 mph), condition that difference in average speed between front wheels and rear wheels is 20% or more continues for 20 seconds, and occurs consecutively 3 times each time the vehicle is driven.	Tire size

INSPECTION PROCEDURE

1 CHECK TIRE SIZE

(a) Check the diameter of all 4 tires.
OK:
Diameter of all 4 tires are equal.

NG → **REPLACE TIRES WITH 4 EQUAL SIZE TIRES**

OK

2 CHECK SPEED SENSOR ROTOR

(a) Remove the drive shaft, and check around the speed sensor rotor.
OK:
No scratches or foreign matter on the sensor tip.

NG → **REPLACE SPEED SENSOR ROTOR**

OK

3 CHECK SPEED SENSOR

(a) Check the speed sensor circuit (see page BC-64 or BC-70).

NG → **REPLACE SPEED SENSOR**

OK

4 CHECK WIRE HARNESS (SKID CONTROL ECU - EACH SPEED SENSOR)

(a) Check the speed sensor circuit (see page BC-69 or BC-70).

NG → **REPAIR OR REPLACE HARNESS AND CONNECTOR**

OK

5 RECONFIRM DTC

(a) Clear the DTCs (see page BC-47).
(b) Drive the vehicle at more than 20 km/h (12 mph) for more than 60 seconds.
(c) Check if the same DTCs are detected.

Result

Result	Proceed to
DTC is output	A
DTC is not output	B

B → **END**

A

REPLACE ABS AND TRACTION ACTUATOR ASSEMBLY

DTC	C1379/74	Downhill Assist Control Operation Switch (Test Mode DTC)

DESCRIPTION

The downhill assist control switch is connected to the skid control ECU in the ABS and TRACTION actuator.
DTC C1379/74 can be detected when the downhill assist control switch sends the downhill assist control switch signal or test mode ends. DTC C1379/74 is output only in test mode.

DTC No. DTC	DTC Detection Condition	Trouble Area
C1379/74	Detected only during test mode.	Downhill assist control switch

WIRING DIAGRAM

Refer to downhill assist control switch circuit (see page BC-157).

INSPECTION PROCEDURE

NOTICE:
When replacing the ABS and TRACTION actuator, perform zero point calibration (see page BC-24).

BC

1	CHECK WIRE HARNESS (SKID CONTROL ECU - BODY GROUND)

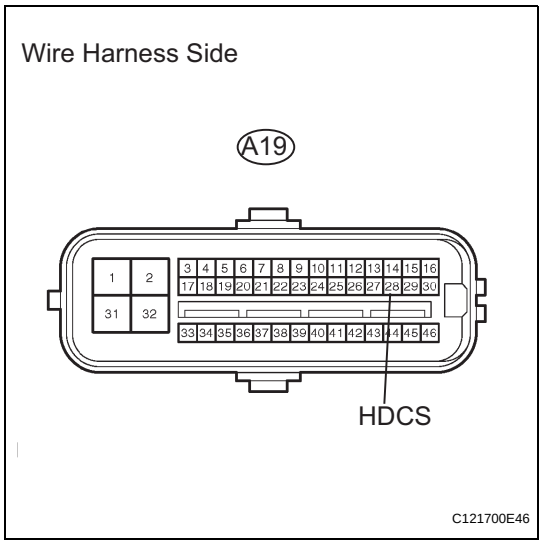

(a) Disconnect the A19 ECU.
(b) Measure the resistance of the wire harness side connector.

Standard resistance

Tester Connection	Switch Condition	Specified Condition
A19-28 (HDCS) - Body ground	Downhill assist control switch is not pushed	10 kΩ or higher

OK → **REPLACE ABS AND TRACTION ACTUATOR ASSEMBLY**

NG

2 INSPECT DOWNHILL ASSIST CONTROL SWITCH

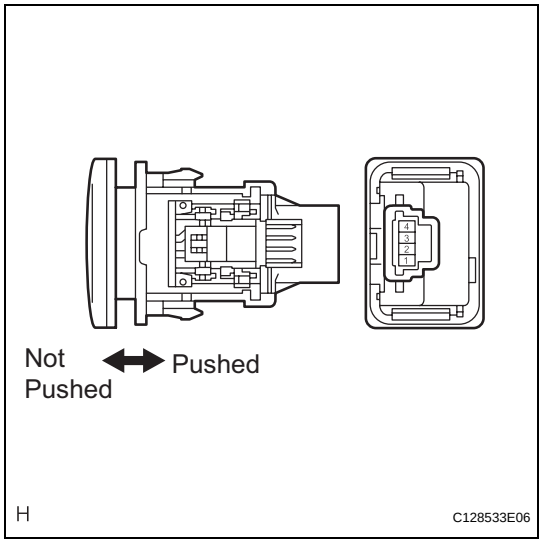

(a) Remove the downhill assist control switch.
(b) Measure the resistance of the switch.
Standard resistance

Tester Connection	Switch Condition	Specified Condition
4 - 1	Switch is pushed	Below 1 Ω
4 - 1	Switch is not pushed	10 kΩ or higher

NG → **REPLACE DOWNHILL ASSIST CONTROL SWITCH**

OK

BC

3 CHECK WIRE HARNESS (SKID CONTROL ECU - DOWNHILL ASSIST CONTROL SWITCH)

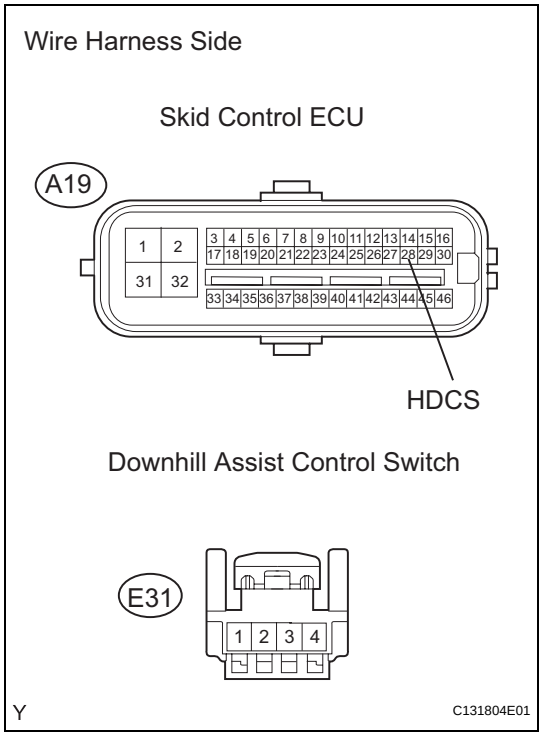

(a) Disconnect the A19 ECU connector.
(b) Disconnect the E31 switch connector.
(c) Measure the resistance of the wire harness side connectors.
Standard resistance

Tester Connection	Specified Condition
A19-28 (HDCS) - E31-4	Below 1 Ω
E31-4 - Body ground	Below 1 Ω
A19-28 (HDCS) - Body ground	10 kΩ or higher

NG → **REPAIR OR REPLACE HARNESS AND CONNECTOR**

OK

REPLACE ABS AND TRACTION ACTUATOR ASSEMBLY

DTC	C1380/64	Stop Light Control Relay Malfunction

DESCRIPTION

The skid control ECU inputs the stop light switch signal and detects the status of the brake operation.

DTC No.	DTC Detection Condition	Trouble Area
C1380/64	When one of following conditions is met: 1. When stop light control relay is ON, relay OFF condition continues for 5 seconds or more. 2. When stop light control relay is OFF, relay ON condition continues for 5 seconds. 3. When stop light control relay is OFF, stop switch monitor (STP2) OFF condition continues for 5 seconds or more.	• Stop light • Stop light switch circuit • Stop light control (BRK) relay • ABS and TRACTION actuator (skid control ECU)

WIRING DIAGRAM

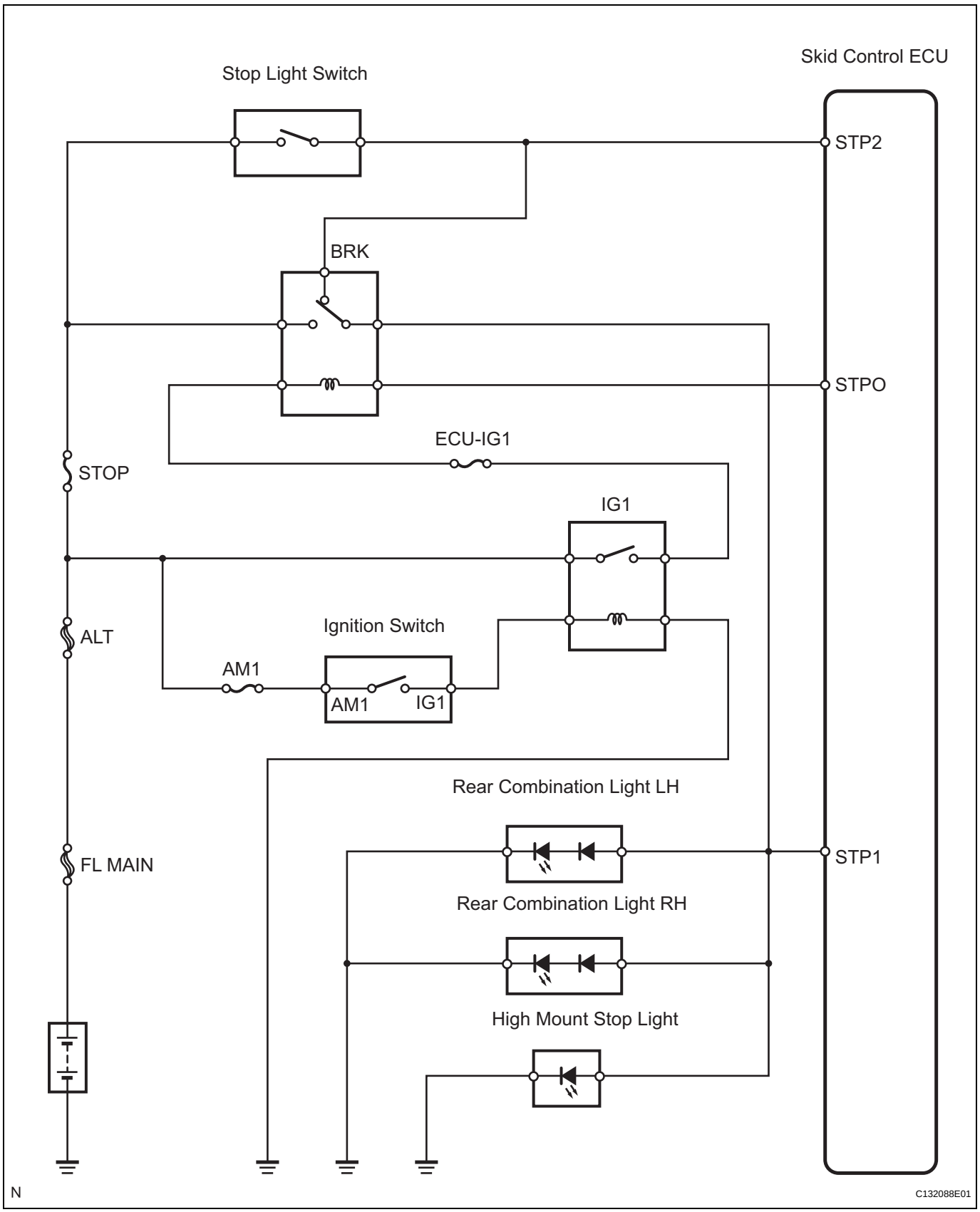

BC

INSPECTION PROCEDURE

NOTICE:

When replacing the ABS and TRACTION actuator, perform zero point calibration (see page BC-24).

1	CHECK STOP LIGHT (OPERATION)

(a) Check that the light illuminates when the brake pedal is depressed, and turns off when the brake pedal is released.

OK

Condition	Stop Light Condition
Brake pedal depressed	Illuminates
Brake pedal released	Turn off

NG → **Go to step 9**

OK

2	CHECK WIRE HARNESS (SKID CONTROL ECU - BATTERY)

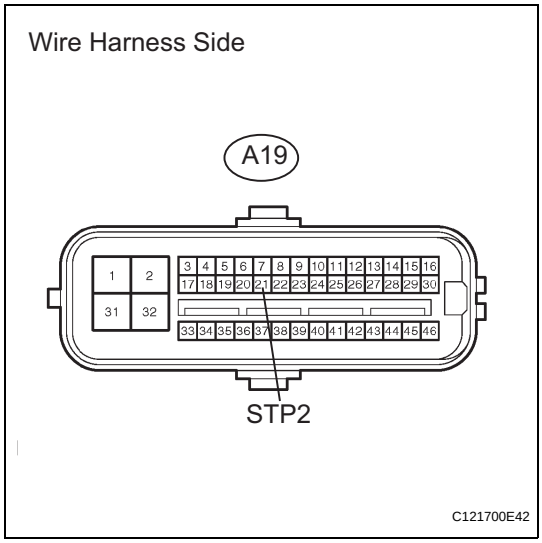

(a) Disconnect the A19 ECU connector.
(b) Measure the voltage of the wire harness side connector.

Standard voltage

Tester Connection	Switch Condition	Specified Condition
A19-21 (STP2) - Body ground	Brake pedal depressed	8 to 16 V
A19-21 (STP2) - Body ground	Brake pedal released	Below 1.5 V

NG → **REPAIR OR REPLACE HARNESS AND CONNECTOR**

OK

3 CHECK WIRE HARNESS (SKID CONTROL ECU)

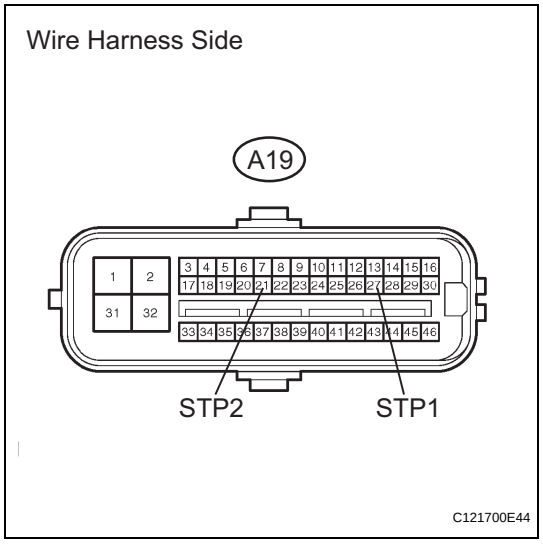

(a) Disconnect the A19 ECU connector.
(b) Measure the resistance of the wire harness side connector.

Standard resistance

Tester Connection	Specified Condition
A19-21 (STP2) - A19-27 (STP1)	Below 1 Ω

NG → **REPAIR OR REPLACE HARNESS AND CONNECTOR**

OK

4 PERFORM ACTIVE TEST BY INTELLIGENT TESTER (STOP LIGHT RELAY)

(a) Select the ACTIVE TEST, generate a control command, and then check that the stop light relay operates.

Skid control ECU

Item	Test Details	Diagnosis Note
STP LAMP RELAY	Turn stop light relay ON / OFF	Observe stop light

OK:
The stop lights illuminate or turn off.

NG → **Go to step 6**

OK

5 RECONFIRM DTC

(a) Clear the DTC (see page BC-47).
(b) Start the engine.
(c) Drive the vehicle at a speed of 5 km/h (3 mph) or more for several seconds.
(d) Check if the same DTC is output (see page BC-47).

Result

Result	Proceed to
DTC is not output	A
DTC is output	B

B → **END**

BC

A

REPLACE ABS AND TRACTION ACTUATOR ASSEMBLY

6 INSPECT STOP LIGHT CONTROL RELAY (Marking: BRK)

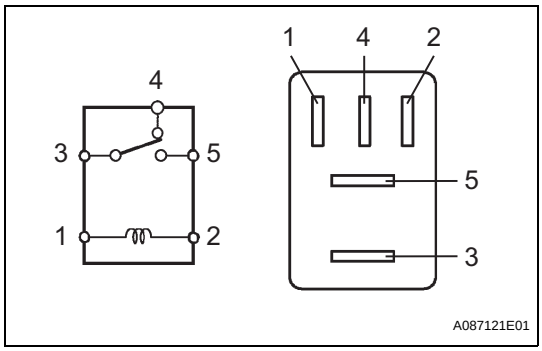

(a) Remove the stop light control relay from the engine room No. 1 relay block.
(b) Measure the resistance of the relay.
Standard resistance

Tester Connection	Specified Condition
3 - 4	Below 1 Ω
3 - 5	10 kΩ or higher
3 - 4	10 kΩ or higher (when battery voltage is applied to terminals 1 and 2)
3 - 5	Below 1 Ω (when battery voltage is applied to terminals 1 and 2)

BC

NG → **REPLACE STOP LIGHT CONTROL RELAY**

OK

7	CHECK WIRE HARNESS (ENGINE ROOM NO. 1 RELAY BLOCK - SKID CONTROL ECU AND BATTERY)

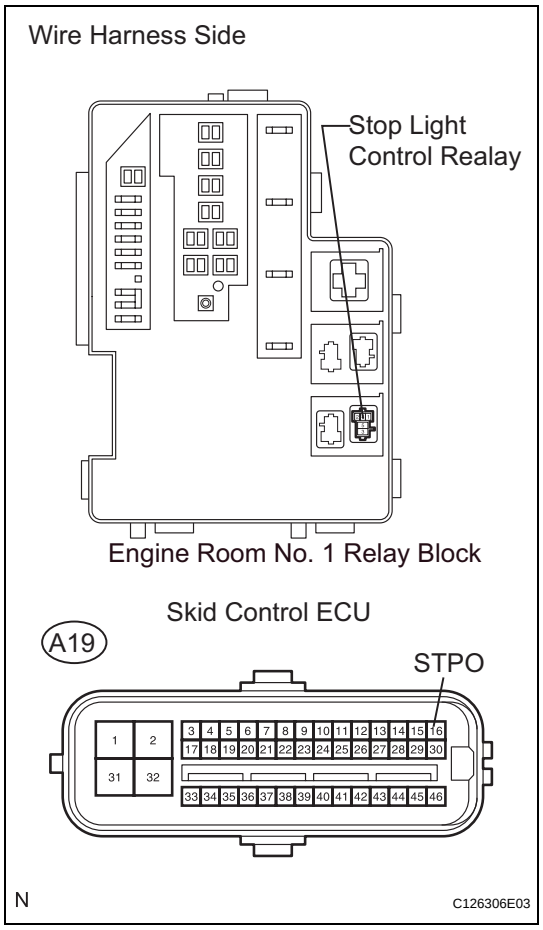

(a) Remove the stop light control relay.
(b) Disconnect the A19 ECU connector.
(c) Measure the voltage of the wire harness side connector.

Standard voltage

Tester Connection	Condition	Specified Condition
BRK relay terminal 5 - Body ground	Always	8 to 16 V
BRK relay terminal 2- Body ground	Ignition switch ON	8 to 16 V

(d) Measure the resistance of the wire harness side connector.

Standard resistance

Tester Connection	Specified Condition
BRK relay terminal 1 - A19-16 (STPO)	Below 1 Ω

NG → **REPAIR OR REPLACE HARNESS AND CONNECTOR**

OK

8	RECONFIRM DTC

(a) Clear the DTC (see page BC-47).
(b) Start the engine.
(c) Drive the vehicle at a speed of 5 km/h (3 mph) or more for several seconds.
(d) Check if the same DTC is output (see page BC-47).

Result

Result	Proceed to
DTC is not output	A
DTC is output	B

B → **END**

A

REPLACE ABS AND TRACTION ACTUATOR ASSEMBLY

BC

9	CHECK WIRE HARNESS (STOP LIGHT SWITCH - BATTERY)

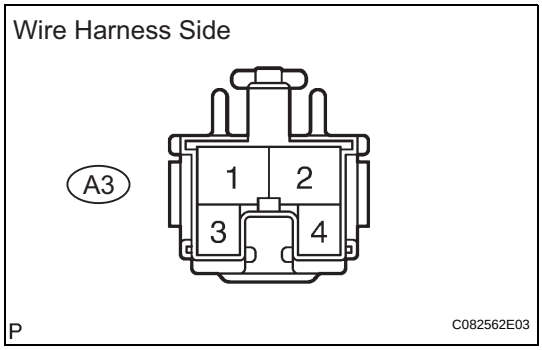

(a) Disconnect the A3 switch connector.
(b) Measure the voltage of the wire harness side connector.
Standard voltage

Tester Connection	Specified Condition
A3-2 - Body ground	10 to 14 V

NG → **REPAIR OR REPLACE HARNESS AND CONNECTOR**

OK

10	INSPECT STOP LIGHT SWITCH ASSEMBLY

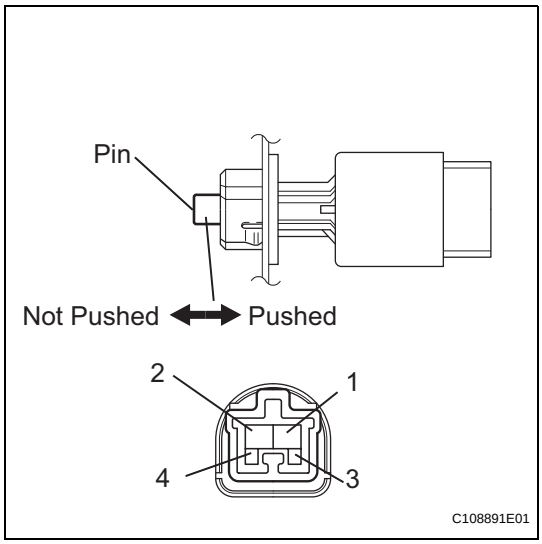

(a) Remove the stop light switch connector.
(b) Measure the resistance of the switch.
Standard resistance

Tester Connection	Switch Condition	Specified Condition
1 - 2	Switch pin not pushed	Below 1 Ω
1 - 2	Switch pin pushed	10 kΩ or higher
3 - 4	Switch pin not pushed	10 kΩ or higher
3 - 4	Switch pin pushed	Below 1 Ω

NG → **REPLACE STOP LIGHT SWITCH ASSEMBLY**

OK

BC

11 CHECK WIRE HARNESS (STOP LIGHT SWITCH - STOP LIGHT CONTROL RELAY)

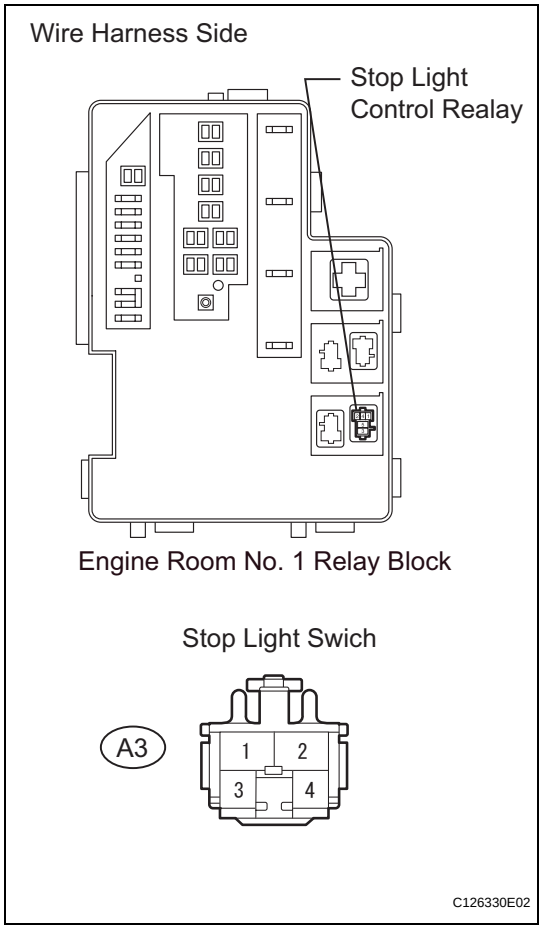

(a) Disconnect the A3 switch connector.
(b) Remove the stop light control relay.
(c) Measure the resistance of the wire harness side connectors.

Standard resistance

Tester Connection	Specified Condition
A3-1 - BKR relay terminal 4	Below 1 Ω
A3-1 - Body ground	10 kΩ or higher

NG → **REPAIR OR REPLACE HARNESS AND CONNECTOR**

OK

12 INSPECT STOP LIGHT CONTROL RELAY (Marking: BRK)

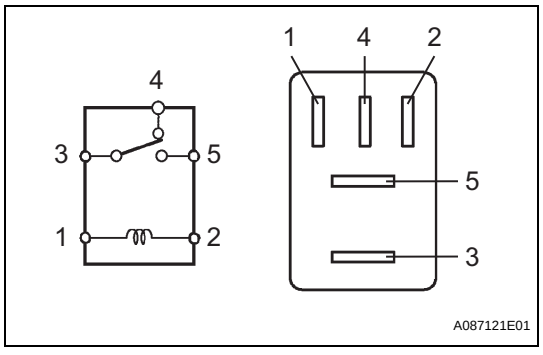

(a) Remove the stop light control relay from the engine room No. 1 relay block.
(b) Measure the resistance of the relay.

Standard resistance

Tester Connection	Specified Condition
3 - 4	Below 1 Ω
3 - 5	10 kΩ or higher
3 - 4	10 kΩ or higher (when battery voltage is applied to terminals 1 and 2)
3 - 5	Below 1 Ω (when battery voltage is applied to terminals 1 and 2)

NG → **REPLACE STOP LIGHT CONTROL RELAY**

OK

BC

13	CHECK WIRE HARNESS (STOP LIGHT AND REAR COMBINATION LIGHT - CONTROL RELAY)

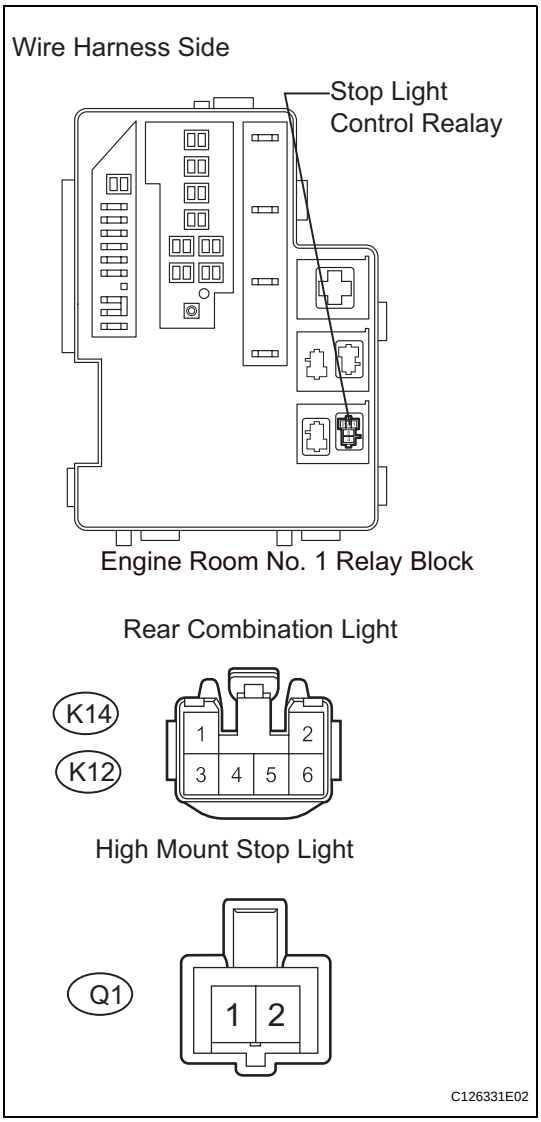

(a) Disconnect the Q1, K12 and K14 light connectors.
(b) Remove the stop light control relay.
(c) Measure the resistance of the wire harness side connectors.

Standard resistance

Tester Connection	Specified Condition
K14-4 - BKR relay terminal 3	Below 1 Ω
K14-4 - Body ground	10 kΩ or higher
K14-1 - Body ground	Below 1 Ω
K12-4 - BKR relay terminal 3	Below 1 Ω
K12-4 - Body ground	10 kΩ or higher
K12-1 - Body ground	Below 1 Ω
Q1-2 - BKR relay terminal 3	Below 1 Ω
Q1-2 - Body ground	10 kΩ or higher
Q1-1 - Body ground	Below 1 Ω

NG → **REPAIR OR REPLACE HARNESS AND CONNECTOR**

OK

CHECK FOR INTERMITTENT PROBLEMS

DTC	U0073/94	Control Module Communication Bus OFF

DTC	U0100/65	Lost Communication with ECM / PCM

DTC	U0123/62	Lost Communication with Yaw Rate Sensor Module

DTC	U0124/95	Lost Communication with Lateral Acceleration Sensor Module

DTC	U0126/63	Lost Communication with Steering Angle Sensor Module

DESCRIPTION

DTC No.	DTC Detection Condition	Trouble Area
U0073/94	When one of following conditions is met: 1. With the IG1 terminal voltage 10 V or more, after the output of data from the skid control ECU is completed, the sending continues for 5 seconds or more. 2. The condition that bus OFF state occurs once or more within 100 ms occurs 10 times in succession. (Sent signals cannot be received.) 3. With the IG1 terminal voltage 10 V or more, a delay in receiving data from the yaw rate and acceleration sensor and steering angle sensor continues for 1 second or more. 4. With the IG1 terminal voltage 10 V or more, the condition that a delay in receiving data from the yaw rate and acceleration sensor occurs more than once within 5 seconds occurs 10 times in succession.	CAN communication system
U0100/65	When either condition below is met: 1. With the IG1 terminal voltage 10 V or more and the vehicle speed 15 km/h (9 mph) or more, data cannot be sent to the ECM for 2 seconds or more. 2. With the IG1 terminal voltage 10 V or more and the vehicle speed 15 km/h (9 mph) or more for 2 seconds or more.	CAN communication system (Skid control ECU to ECM)
U0123/62	When either condition below is met: 1. With the IG1 terminal voltage 10 V or more, data from the acceleration sensor cannot be received for 1 second or more. 2. With the IG1 terminal voltage 10 V or more, the following occurs 10 times in succession within 60 seconds. (a) The condition that data from the acceleration sensor cannot be received occurs once or more within 5 seconds.	CAN communication system (Skid control ECU to yaw rate and acceleration sensor)
U0124/95	When either condition below is met: 1. With the IG1 terminal voltage 10 V or more, data from the acceleration sensor cannot be received for 1 second or more. 2. With the IG1 terminal voltage 10 V or more, the following occurs 10 times in succession within 60 seconds. (a) The condition that data from the acceleration sensor cannot be received occurs once or more within 5 seconds.	CAN communication system (Skid control ECU to yaw rate and acceleration sensor)

DTC No.	DTC Detection Condition	Trouble Area
U0126/63	When either of following conditions detected: 1. When IG1 terminal voltage 10 V or more, data from steering sensor cannot be received for 1 second or more. 2. When IG1 terminal voltage 10 V or more, following condition occurs 10 times in succession.	CAN communication system

INSPECTION PROCEDURE

The skid control ECU inputs the signals from the ECM, steering angle sensor, and yaw rate and acceleration sensor via CAN communication system.

1 CHECK HARNESS AND CONNECTOR (MOMENTARY INTERRUPTION)

(a) Using the DATA LIST of the intelligent tester, check for any momentary interruption in the wire harness and connector corresponding to a DTC (see page BC-23).

Skid control ECU:

Item (Display)	Measurement Item / Range (Display)	Normal Condition	Diagnostic Note
EFI COM OPN	EFI communication open detection / ERROR or NORMAL	ERROR: Momentary interruption NORMAL: Normal	-
STEERING OPN	Steering sensor open detection / ERROR or NORMAL	ERROR: Momentary interruption NORMAL: Normal	-
YAW RATE OPN	Yaw rate sensor open detection / ERROR or NORMAL	ERROR: Momentary interruption NORMAL: Normal	-

Result

Condition	Proceed to
There is a constant open circuit	A
There are no momentary interruptions	B
There are momentary interruptions	C

HINT:
Perform the above inspection before removing the sensor and connector.

B → Go to step 3

C → Go to step 4

A

2 CHECK IF EACH SENSOR AND ECM CONNECTOR IS SECURELY CONNECTED

(a) Check if each sensor or ECM connector is securely connected.

OK:

The connector should be securely connected.

NG → CONNECT CONNECTOR TO EACH SENSOR OR ECM CORRECTLY

OK

3	RECONFIRM DTC

(a) Record the output DTCs (for ABS, VSC and CAN communication) (see page BC-47).
HINT:
If the CAN communication system DTC and the relevant sensor DTCs are output simultaneously, troubleshoot the relevant sensor DTCs (for ABS and VSC) after the CAN communication system returns to normal.

Result

Condition	Proceed to
DTC (CAN communication system DTC) is not output	A
DTC (ABS and/or VSC DTC) is output	B
DTC is not output	C

B → **REPAIR CIRCUIT INDICATED BY OUTPUT CODE**

C → **USE SIMULATION METHOD TO CHECK**

BC

A

INSPECT CAN COMMUNICATION SYSTEM

4	REPAIR OR REPLACE HARNESS AND CONNECTOR

(a) Repair or replace the harness or connector.
(b) Check for any momentary interruption between the skid control ECU and each sensor or ECM (see page BC-23).
(c) Check that there is no momentary interruption.

NEXT

5	RECONFIRM DTC

(a) Clear the DTC (see page BC-47).
(b) Turn the ignition switch ON.
(c) Drive the vehicle and turn the steering wheel to the right and left at a speed of 15 km/h (9 mph) or more.
(d) Check that no CAN communication system DTC is output (see page BC-47).
(e) If ABS and/or VSC DTCs are output, record them.

Result

Condition	Proceed to
DTC for the CAN communication system is not output	A
No DTC is output (ABS and/or VSC DTC are output)	B

Condition	Proceed to
No DTC is output (No ABS and/or VSC DTC are output)	C

HINT:
The CAN communication system must be normal when repairing the sensor DTCs (for ABS and VSC).

B	**REPAIR CIRCUIT INDICATED BY OUTPUT CODE**
C	**END**

A

INSPECT CAN COMMUNICATION SYSTEM

ABS Warning Light Remains ON

DESCRIPTION

If any of the following conditions are detected, the ABS warning light remains on:

1. The ECU connectors are disconnected from the skid control ECU.
2. There is a malfunction in the skid control ECU internal circuit.
3. There is an open or short in the wire harness between the combination meter and the skid control ECU.

HINT:

The intelligent tester may not be used when there is a malfunction in the skid control ECU.

WIRING DIAGRAM

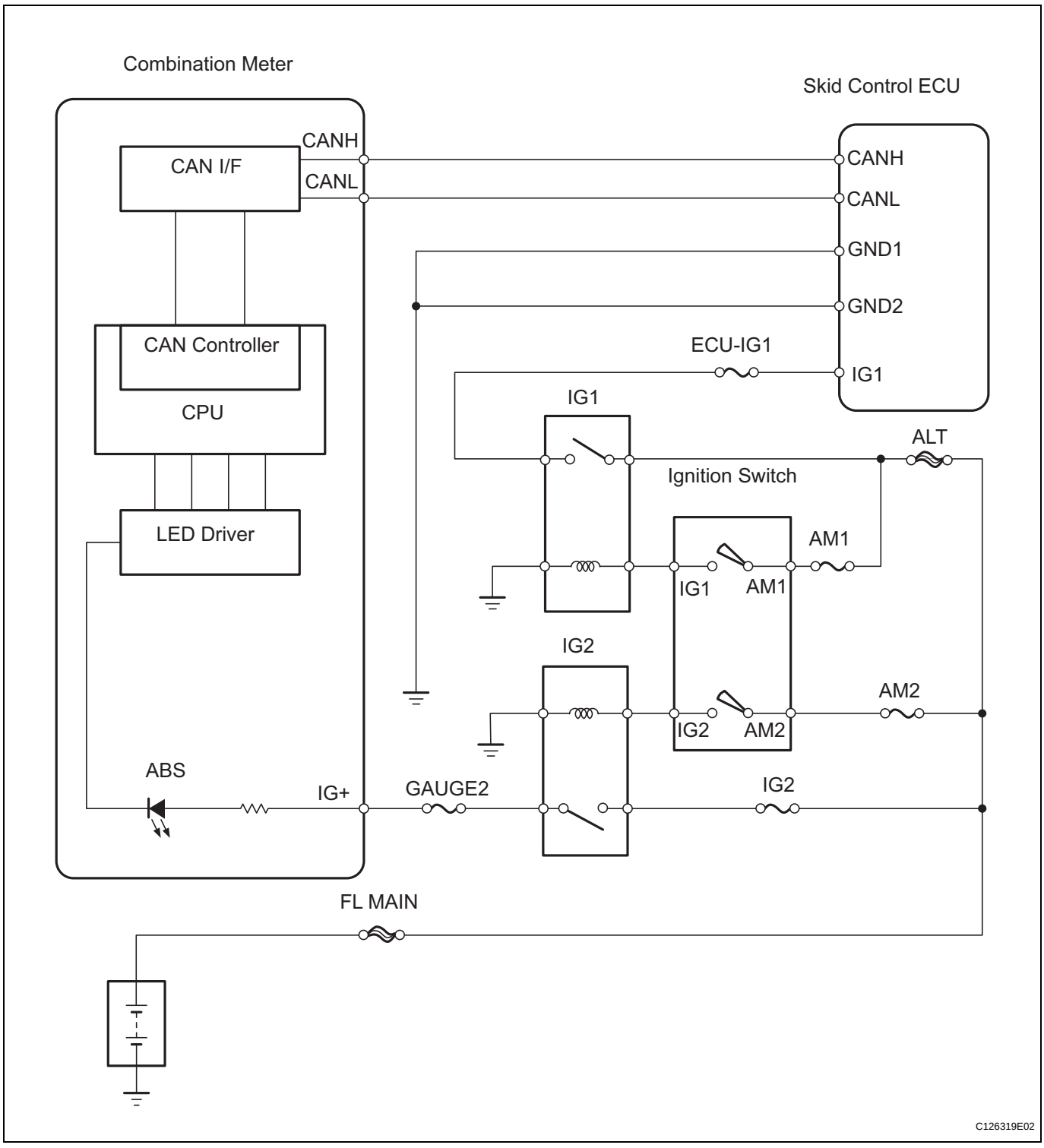

BC

INSPECTION PROCEDURE

1 CHECK CAN COMMUNICATION SYSTEM

(a) Check if the CAN communication system DTC is output (see page CA-34).

Result

Result	Proceed to
DTC is not output	A
DTC is output	B

B → **REPAIR CAN COMMUNICATION SYSTEM**

A

2 INSPECT SKID CONTROL ECU CONNECTOR

(a) Check if the skid control ECU connector is properly installed.

OK:

The skid control ECU connector is properly installed.

NG → **CONNECT CONNECTOR TO ECU SECURELY**

OK

3 CHECK WIRE HARNESS (SKID CONTROL ECU - BATTERY AND BODY GROUND)

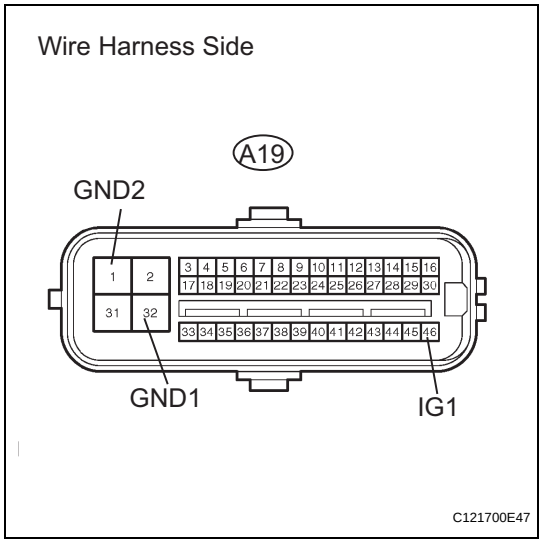

(a) Disconnect the A19 ECU connector.

(b) Measure the resistance of the wire harness side connector.

Standard resistance

Tester Connection	Specified Condition
A19-32 (GND1) - Body ground	Below 1 Ω
A19-1 (GND2) - Body ground	Below 1 Ω

(c) Measure the voltage of the wire harness side connector.

Standard voltage

Tester Connection	Condition	Specified Condition
A19-46 (IG1) - Body ground	Ignition switch ON	10 to 14 V

NG → **REPAIR OR REPLACE HARNESS AND CONNECTOR**

OK

4	PERFORM ACTIVE TEST BY INTELLIGENT TESTER (ABS WARNING LIGHT)

(a) Select the ACTIVE TEST, generate a control command, and then check that the ABS warning light operates.

Skid control ECU

Item (Display)	Test Details	Diagnostic Note
ABS WARN LAMP	Turns ABS warning light / ON or OFF	Observe combination meter

OK:

The ABS warning light is turned on or off.

HINT:

When the ABS warning light remains illuminated, opens in the wire harness of the combination meters or abnormalities in the meter circuit should be considered.

NG → **CHECK METER / GAUGE SYSTEM**

OK

REPLACE ABS AND TRACTION ACTUATOR ASSEMBLY

BC

ABS Warning Light does not Come ON

WIRING DIAGRAM

Refer to the ABS warning light circuit (see page BC-135).

INSPECTION PROCEDURE

1	CHECK CAN COMMUNICATION SYSTEM

(a) Check if the CAN communication system DTC is output (see page CA-34).

Result

Result	Proceed to
DTC is not output	A
DTC is output	B

B → **REPAIR CAN COMMUNICATION SYSTEM**

A

BC

2	PERFORM ACTIVE TEST BY INTELLIGENT TESTER (ABS WARNING LIGHT)

(a) Select the ACTIVE TEST, generate a control command, and then check that the ABS warning light operates.

Skid control ECU

Item (Display)	Test Details	Diagnostic Note
ABS WARN LAMP	Turns ABS warning light / ON or OFF	Observe combination meter

OK:

The ABS warning light turns on or off.

NG → **CHECK METER / GAUGE SYSTEM**

OK

REPLACE ABS AND TRACTION ACTUATOR ASSEMBLY

VSC Warning Light Remains ON

DESCRIPTION

The skid control ECU is connected to the combination meter via the CAN communication system.
w/o Multi information display:
If the skid control ECU stores any DTCs which relate to the VSC system, the VSC warning light comes on in the combination meter.
w/ Multi information display:
If the skid control ECU stores any DTCs which relate to the VSC system, the master caution indicator light comes on and the warning message is displayed on the multi information display in the combination meter.

WIRING DIAGRAM

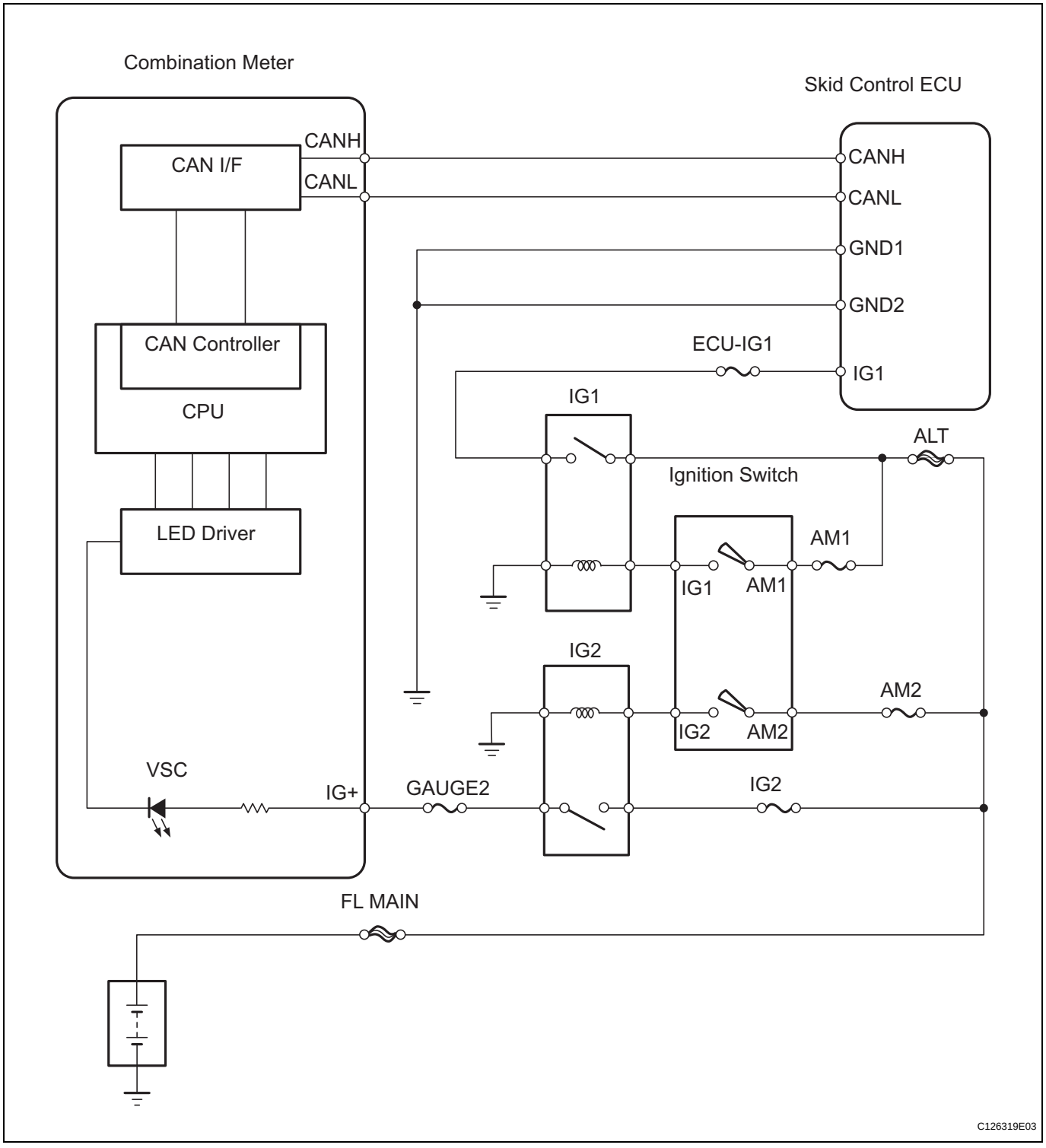

BC

INSPECTION PROCEDURE

NOTICE:

When replacing the ABS and TRACTION actuator, perform the zero point calibration (see page BC-24).

1 CHECK CAN COMMUNICATION SYSTEM

(a) Check if the CAN communication system DTC is output (see page BC-47).

Result

Result	Proceed to
DTC is not output	A
DTC is output	B

NG → **REPAIR CAN COMMUNICATION SYSTEM**

OK

2 INSPECT SKID CONTROL ECU CONNECTOR

(a) Check if the skid control ECU connector is securely connected.

OK:

The connector is securely connected.

NG → **CONNECT CONNECTOR CORRECTLY**

OK

3 CHECK COMBINATION METER ASSEMBLY

(a) Check the combination meter (see page ME-15).

NG → **REPLACE COMBINATION METER ASSEMBLY**

OK

REPLACE ABS AND TRACTION ACTUATOR ASSEMBLY

VSC Warning Light does not Come ON

DESCRIPTION

Refer to the description of "VSC Warning Light Remains ON" (see page BC-139).

WIRING DIAGRAM

Refer to the VSC warning light circuit (see page BC-140).

INSPECTION PROCEDURE

NOTICE:

When replacing the ABS and TRACTION actuator, perform the zero point calibration (see page BC-24).

1	INSPECT CAN COMMUNICATION SYSTEM

(a) Check if the CAN communication system DTC is output (see page BC-47).

Result

Result	Proceed to
DTC is not output	A
DTC is output	B

B → **REPAIR CAN COMMUNICATION SYSTEM**

A

2	PERFORM ACTIVE TEST BY INTELLIGENT TESTER (VSC WARNING LIGHT)

(a) Select the ACTIVE TEST, generate a control command, and then check that the VSC warning light operates.

Skid control ECU

Item (Display)	Test Details	Diagnostic Note
VSC WARN LAMP	Turn VSC warning light ON / OFF	Observe combination meter

OK:

The VSC warning light turns on or off.

OK → **REPLACE ABS AND TRACTION ACTUATOR ASSEMBLY**

NG

3	CHECK COMBINATION METER ASSEMBLY

(a) Check the combination meter (see page CA-34).

NG → **REPLACE COMBINATION METER ASSEMBLY**

OK

REPLACE ABS AND TRACTION ACTUATOR ASSEMBLY

Brake Warning Light Remains ON

DESCRIPTION

If any of the following conditions are detected, the brake warning light remains on:

1. The ECU connectors are disconnected from the skid control ECU.
2. The brake fluid level is insufficient.
3. The parking brake is applied.
4. The EBD is defective.

WIRING DIAGRAM

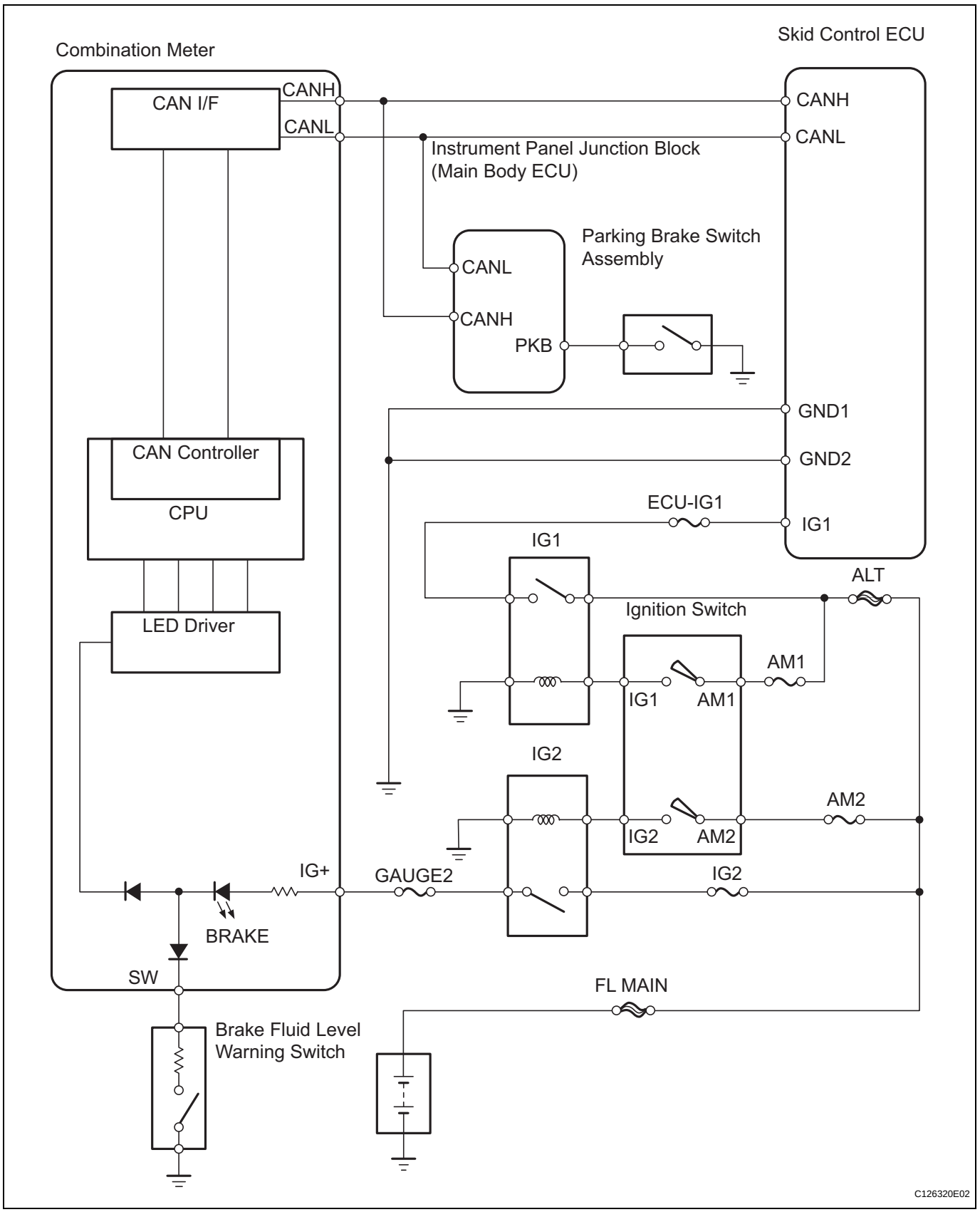

INSPECTION PROCEDURE

1 PREPARE FOR INSPECTION

(a) Check that both of the following conditions are satisfied.
- The brake fluid level in the brake master cylinder reservoir is correct.
- The parking brake is released.

HINT:
When the ABS warning light remains illuminated, repair the malfunctions in the ABS system first.

NEXT

2 CHECK DTC FOR ABS

(a) Check if any ABS DTCs are output (see page BC-47).
Result

Result	Proceed to
DTC is not output	A
DTC is output	B

B → **REPAIR CIRCUITS INDICATED BY OUTPUT DTCS**

A

3 CHECK CAN COMMUNICATION SYSTEM

(a) Check if the CAN communication system DTC is output (see page CA-34).
Result

Result	Proceed to
DTC is not output	A
DTC is output	B

B → **REPAIR CAN COMMUNICATION SYSTEM**

A

4 INSPECT SKID CONTROL ECU CONNECTOR

(a) Check if the skid control ECU connector is properly installed.
OK:
The skid control ECU connector is properly installed.

NG → **CONNECT CONNECTOR TO ECU SECURELY**

BC

OK

5	CHECK WIRE HARNESS (SKID CONTROL ECU - BATTERY AND BODY GROUND)

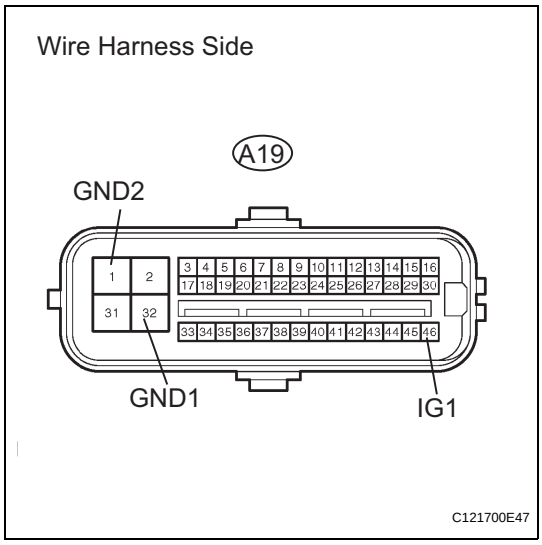

(a) Disconnect the A19 ECU connector.
(b) Measure the resistance of the wire harness side connector.
Standard resistance

Tester Connection	Specified Condition
A19-32 (GND1) - Body ground	Below 1 Ω
A19-1 (GND2) - Body ground	Below 1 Ω

(c) Measure the voltage of the wire harness side connector.
Standard voltage

Tester Connection	Condition	Specified Condition
A19-46 (IG1) - Body ground	Ignition switch ON	10 to 14 V

NG → **REPAIR OR REPLACE HARNESS AND CONNECTOR**

BC

OK

6	READ VALUE OF INTELLIGENT TESTER (PARKING BRAKE SWITCH)

(a) Using the DATA LIST, check for proper functioning of the parking brake switch.

Skid control ECU

Item (Display)	Measurement Item / Range (Display)	Normal Condition	Diagnostic Note
PARKING BRAKE SW	Parking brake switch / ON or OFF	ON: Parking brake applied OFF: Parking brake released	-

OK:
When the parking brake lever is operated, the display changes as shown above.

NG → **Go to step 10**

OK

7 INSPECT BRAKE FLUID LEVEL WARNING SWITCH

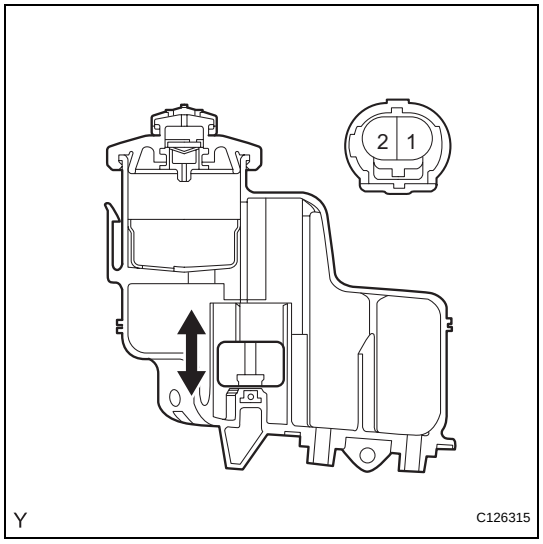

(a) Remove the reservoir tank cap and strainer.
(b) Disconnect the brake fluid level warning switch connector.
(c) Measure the resistance of the switch.
HINT:
A float is placed inside the reservoir. Its position can be changed by increasing or decreasing the brake fluid level.
Standard resistance

Tester Connection	Condition	Specified Condition
1 - 2	Float up (Switch OFF)	10 kΩ or higher
1 - 2	Float down (Switch ON)	Below 1 Ω

HINT:
If there is no problem after the above check is finished, adjust the brake fluid level to the MAX level.

NG → **REPLACE BRAKE MASTER CYLINDER RESERVOIR SUB-ASSEMBLY**

OK

8 CHECK WIRE HARNESS (LEVEL WARNING SWITCH - COMBINATION METER AND BODY GROUND)

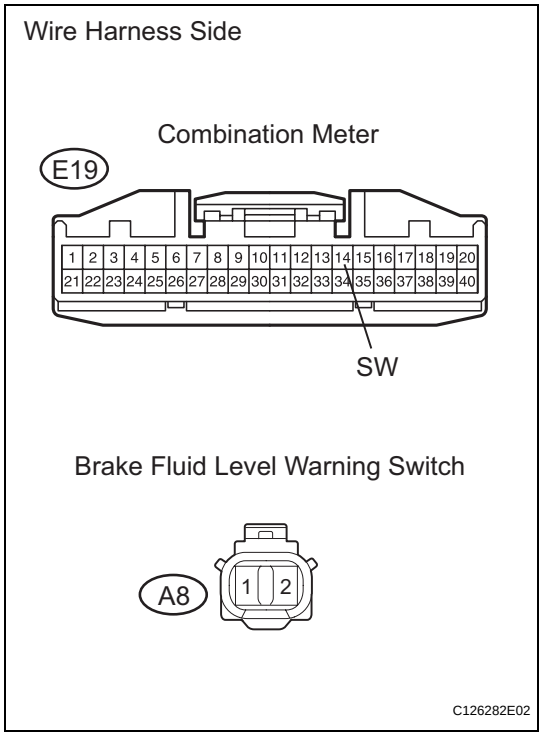

(a) Disconnect the E19 combination meter connector.
(b) Disconnect the A8 switch connector.
(c) Measure the resistance of the wire harness side connectors.
Standard resistance

Tester Connection	Specified Condition
E19-14 (SW) - A8-1	Below 1 Ω
E19-14 (SW) - Body ground	10 kΩ or higher
A8-2 - Body ground	Below 1 Ω

NG → **REPAIR OR REPLACE HARNESS AND CONNECTOR**

OK

BC

9	INSPECT COMBINATION METER

(a) Inspect the combination meter (see page ME-15).

NG → REPLACE COMBINATION METER

OK

REPLACE ABS AND TRACTION ACTUATOR ASSEMBLY

10	INSPECT PARKING BRAKE SWITCH ASSEMBLY

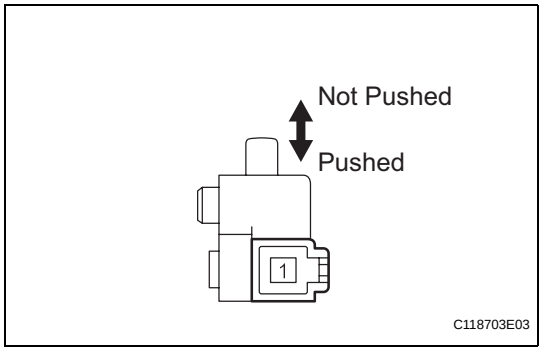

(a) Remove the parking brake switch.
(b) Measure the resistance of the switch.

Standard resistance

Tester Connection	Condition	Specified Condition
1 - Body ground	Parking brake switch ON (Switch pin not pushed)	Below 1 Ω
1 - Body ground	Parking brake switch OFF (Switch pin pushed)	10 kΩ or higher

NG → REPLACE PARKING BRAKE SWITCH ASSEMBLY

OK

BC

11	CHECK WIRE HARNESS (JUNCTION BLOCK - PARKING BRAKE SWITCH AND BODY GROUND)

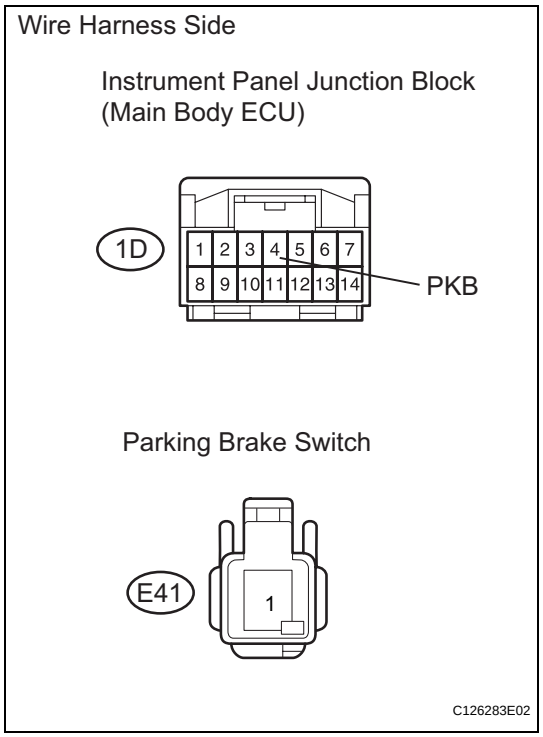

(a) Disconnect the 1D junction block connector.
(b) Disconnect the E41 switch connector.
(c) Measure the resistance of the wire harness side connectors.

Standard resistance

Tester Connection	Specified Condition
1D-4 (PKB) - E41-1	Below 1 Ω
1D-4 (PKB) - Body ground	10 kΩ or higher

NG → **REPAIR OR REPLACE HARNESS AND CONNECTOR**

OK

REPLACE INSTRUMENT PANEL JUNCTION BLOCK

BC

Brake Warning Light does not Come ON

WIRING DIAGRAM

Refer to the brake warning light circuit (see page BC-145).

INSPECTION PROCEDURE

1 CHECK CAN COMMUNICATION SYSTEM

(a) Check if the CAN communication system DTC is output (see page CA-34).

Result

Result	Proceed to
DTC is not output	A
DTC is output	B

B → **REPAIR CAN COMMUNICATION SYSTEM**

A

2 PERFORM ACTIVE TEST BY INTELLIGENT TESTER (BRAKE WARNING LIGHT)

(a) Select the ACTIVE TEST, generate a control command, and then check that BRAKE warning light operates.

Skid control ECU

Item (Display)	Test Details	Diagnostic Note
BRAKE WARN LAMP	Turns BRAKE warning light / ON or OFF	Observe combination meter

OK:

The BRAKE warning light turns on or off.

OK → **REPLACE ABS AND TRACTION ACTUATOR ASSEMBLY**

NG

3 INSPECT COMBINATION METER

(a) Inspect the combination meter (see page ME-15).

NG → **REPLACE COMBINATION METER**

OK

REPLACE ABS AND TRACTION ACTUATOR ASSEMBLY

Slip Indicator Light Remains ON

DESCRIPTION

The slip indicator blinks during VSC and/or TRC operation.
When the system fails, the slip indicator comes on to warn the driver.
For 2WD: With Auto LSD switch ON, when the hydraulic brake booster is at a high temperature, the slip indicator illuminates.

WIRING DIAGRAM

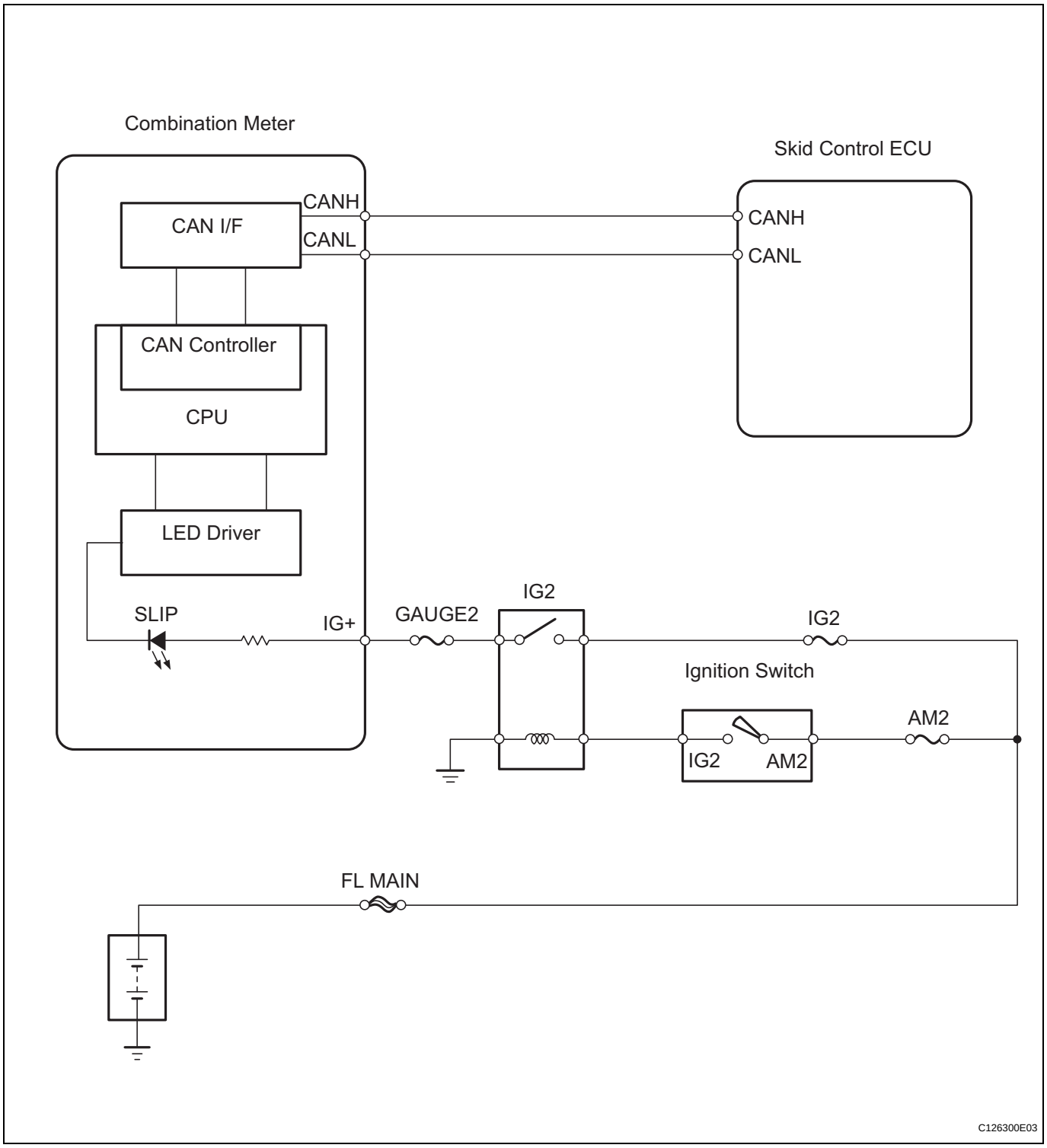

INSPECTION PROCEDURE

NOTICE:

When replacing the ABS and TRACTION actuator, perform the zero point calibration (see page BC-24).

1 CHECK CAN COMMUNICATION SYSTEM

(a) Check if the CAN communication system DTC is output (see page CA-34).

Result

Result	Proceed to
DTC is not output	A
DTC is output	B

B → **REPAIR CAN COMMUNICATION SYSTEM**

A

2 CHECK SKID CONTROL ECU CONNECTOR

(a) Check if the skid control ECU connector is securely connected.

OK:

The connector is securely connected.

NG → **CONNECT CONNECTOR CORRECTLY**

OK

3 CHECK COMBINATION METER

(a) Check the combination meter (see page ME-15).

NG → **REPLACE COMBINATION METER**

OK

REPLACE ABS AND TRACTION ACTUATOR ASSEMBLY

Slip Indicator Light does not Come ON

DESCRIPTION

Refer to the description of "Slip Indicator Light Remains ON" (see page BC-152).

WIRING DIAGRAM

Refer to the SLIP indicator light circuit (see page BC-152).

INSPECTION PROCEDURE

NOTICE:

When replacing the ABS and TRACTION actuator, perform the zero point calibration (see page BC-24).

1 CHECK CAN COMMUNICATION SYSTEM

(a) Check if the CAN communication system DTC is output (see page CA-34).

Result

Result	Proceed to
DTC is not output	A
DTC is output	B

B → **REPAIR CAN COMMUNICATION SYSTEM**

A

2 PERFORM ACTIVE TEST BY INTELLIGENT TESTER (SLIP INDICATOR LIGHT)

(a) Using the intelligent tester's ACTIVE TEST, generate a control command, and then check that the SLIP indicator light operates.

Skid control ECU

Item (Display)	Test Details	Diagnostic Note
SLIP INDI LAMP	Turn slip indicator light ON / OFF	Observe combination meter

OK:

The SLIP indicator light turns ON and OFF.

NG → **Go to step 3**

OK

REPLACE ABS AND TRACTION ACTUATOR ASSEMBLY

3 CHECK COMBINATION METER

(a) Inspect the combination meter (see page ME-15).

NG → **REPLACE COMBINATION METER**

OK

REPLACE ABS AND TRACTION ACTUATOR ASSEMBLY

Downhill Assist Control Indicator Light Remains ON

DESCRIPTION

When the downhill assist control switch is pushed on, the downhill assist control function is available and the downhill assist control indicator light illuminates.

HINT:

Even if the downhill assist control switch is pressed, the downhill assist control indicator light will blink and downhill assist control will not be activated under the following conditions:

- Gear position is not L or R.
- The system is malfunctioning.
- Temperature of the hydraulic brake booster increases and downhill assist control is temporarily canceled.
- The vehicle speed is 25 km/h (15 mph) or more.

WIRING DIAGRAM

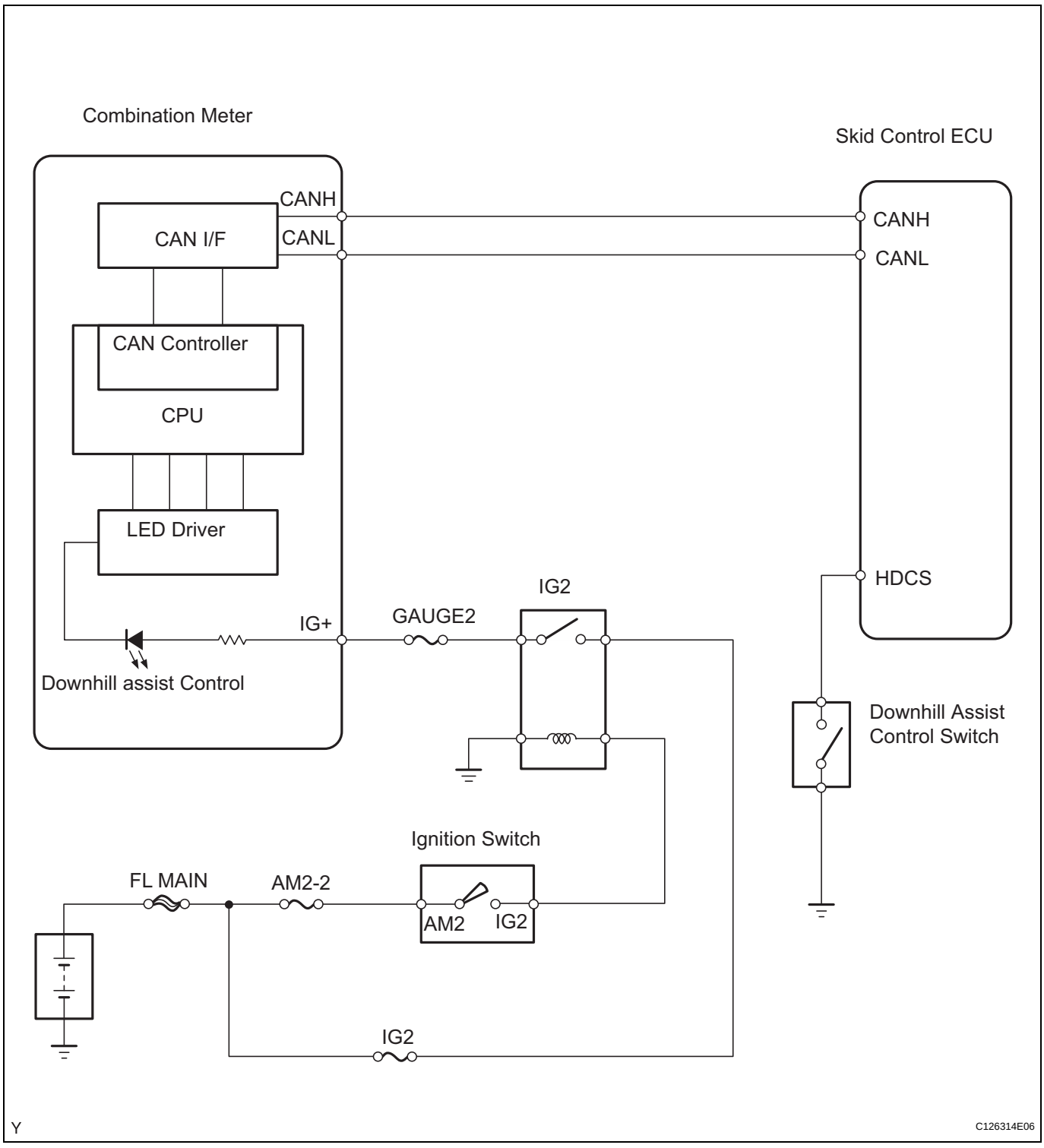

BC

INSPECTION PROCEDURE

1 CHECK CAN COMMUNICATION SYSTEM

(a) Check if the CAN communication system DTC is output (see page CA-34).

Result

Result	Proceed to
DTC not output	A
DTC output	B

B → **REPAIR CAN COMMUNICATION SYSTEM**

A

2 CHECK SKID CONTROL ECU CONNECTOR

(a) Check if the skid control ECU connector is securely connected.

OK:

The connector is securely connected.

NG → **CONNECT CONNECTOR CORRECTLY**

OK

3 CHECK WIRE HARNESS (SKID CONTROL ECU - BODY GROUND)

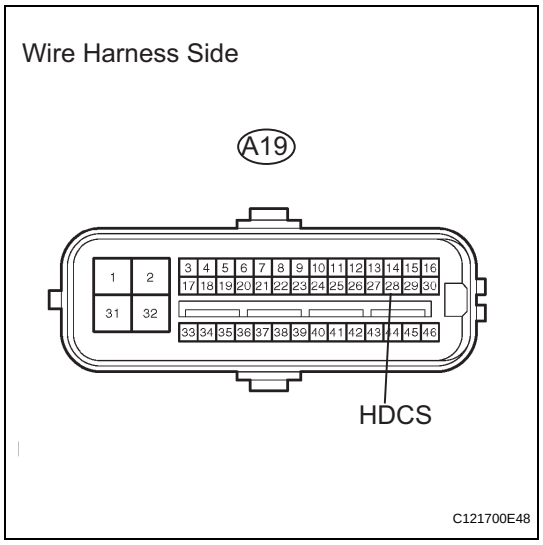

(a) Disconnect the A19 ECU connector.

(b) Measure the resistance of the wire harness side connector.

Standard resistance

Tester Connection	Switch Condition	Specified Condition
A19-28 (HDCS) - Body ground	Downhill assist control switch is pushed	Below 1 Ω
A19-28 (HDCS) - Body ground	Downhill assist control switch is not pushed	10 kΩ or higher

OK → **Go to step 6**

NG

4	INSPECT DOWNHILL ASSIST CONTROL SWITCH

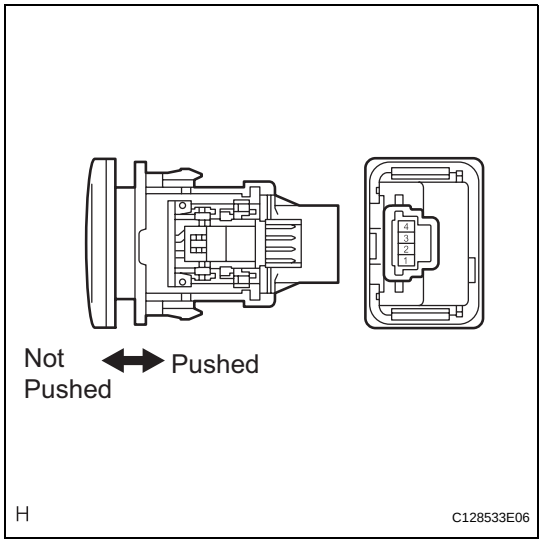

(a) Remove the downhill assist control switch.
(b) Measure the resistance of the switch.
Standard resistance

Tester Connection	Switch Condition	Specified Condition
1 - 4	Switch is pushed	Below 1 Ω
1 - 4	Switch is not pushed	10 kΩ or higher

NG → **REPLACE DOWNHILL ASSIST CONTROL SWITCH**

OK

BC

5	CHECK WIRE HARNESS (CONTROL SWITCH - SKID CONTROL ECU AND BODY GROUND)

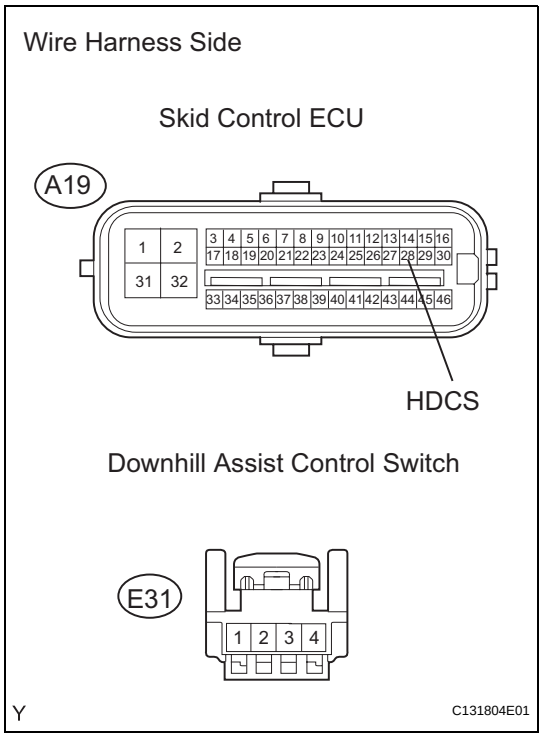

(a) Disconnect the A19 ECU connector.
(b) Disconnect the E31 switch connector.
(c) Measure the resistance of the wire harness side connectors.
Standard resistance

Tester Connection	Specified Condition
A19-28 (HDCS) - E31-4	Below 1 Ω
E31-1 - Body ground	Below 1 Ω
A19-28 (HDCS) - Body ground	10 kΩ or higher

NG → **REPAIR OR REPLACE HARNESS AND CONNECTOR**

OK

6	CHECK COMBINATION METER

(a) Check the combination meter (see page ME-15).

NG → **REPLACE COMBINATION METER**

OK

REPLACE ABS AND TRACTION ACTUATOR ASSEMBLY

Downhill Assist Control Indicator Light does not Come ON

DESCRIPTION

Refer to the description of "Downhill Assist Control Indicator Light Remains ON" (see page BC-156).

WIRING DIAGRAM

Refer to the downhill assist control indicator light circuit (see page BC-157).

INSPECTION PROCEDURE

1 CHECK CAN COMMUNICATION SYSTEM

(a) Check if the CAN communication system DTC is output (see page CA-34)

Result

Result	Proceed to
DTC is not output	A
DTC is output	B

B → **REPAIR CAN COMMUNICATION SYSTEM**

A

2 READ VALUE OF INTELLIGENT TESTER (DOWNHILL ASSIST CONTROL SWITCH)

(a) Check the DATA LIST for proper functioning of the downhill assist control switch.

Skid control ECU

Item (Display)	Measurement Item / Range (Display)	Normal Condition	Diagnostic Note
Downhill assist control SW	Downhill assist control switch / ON or OFF	ON: Downhill assist control switch is ON OFF: Downhill assist control switch is OFF	-

OK:

ON (downhill assist control switch is ON) appears on the screen.

NG → **Go to step 5**

OK

3 PERFORM ACTIVE TEST BY INTELLIGENT TESTER (DAC INDICATOR LIGHT)

(a) Select the ACTIVE TEST, generate a control command, and then check that the downhill assist control indicator light operates.

Skid control ECU

Item (Display)	Test Details	Diagnostic Note
Downhill assist control INDI LAMP	Turn downhill assist control indicator light ON / OFF	Observe combination meter

OK:
The downhill assist control indicator light turns ON and OFF.

OK → **REPLACE ABS AND TRACTION ACTUATOR ASSEMBLY**

NG

4	INSPECT COMBINATION METER

(a) Inspect the combination meter (see page ME-15).

NG → **REPLACE COMBINATION METER ASSEMBLY**

OK

REPLACE ABS AND TRACTION ACTUATOR ASSEMBLY

5	INSPECT DOWNHILL ASSIST CONTROL SWITCH

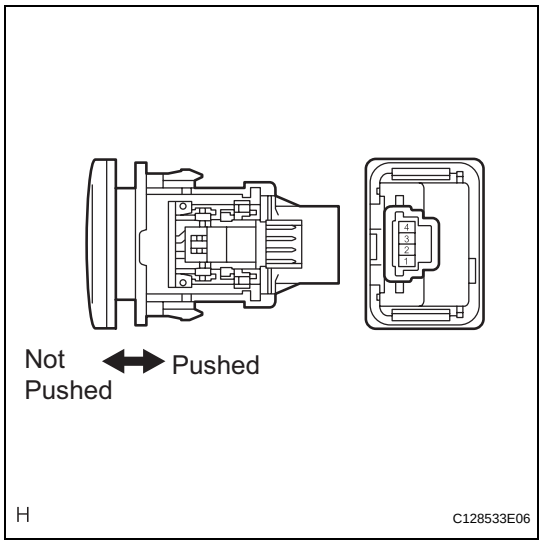

(a) Remove the downhill assist control switch.
(b) Measure the resistance of the switch.
Standard resistance

Tester Connection	Switch Condition	Specified Condition
4 - 1	Switch is pushed	Below 1 Ω
4 - 1	Switch is not pushed	10 kΩ or higher

NG → **REPLACE DOWNHILL ASSIST CONTROL SWITCH**

OK

BC

6	CHECK WIRE HARNESS (CONTROL SWITCH - SKID CONTROL ECU AND BODY GROUND)

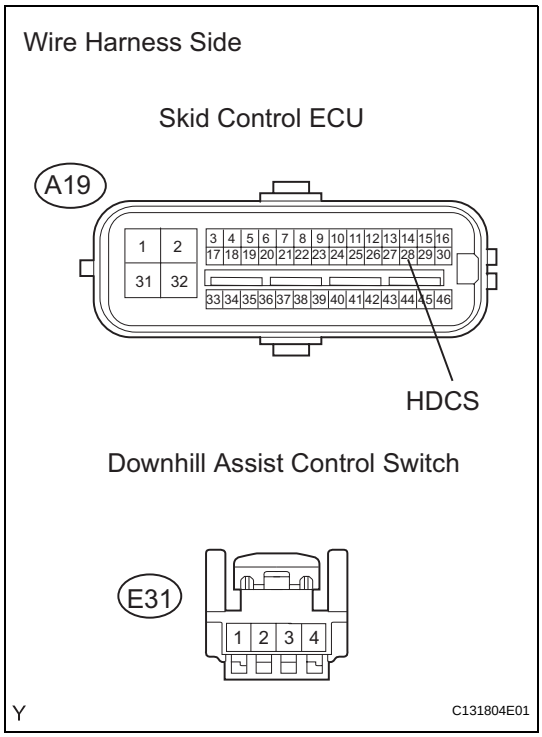

(a) Disconnect the A19 ECU connector.
(b) Disconnect the E31 switch connector.
(c) Measure the resistance of the wire harness side connectors.

Standard resistance

Tester Connection	Specified Condition
A19-28 (HDCS) - E31-4	Below 1 Ω
E31-1 - Body ground	Below 1 Ω
A19-28 (HDCS) - Body ground	10 kΩ or higher

NG → **REPAIR OR REPLACE HARNESS AND CONNECTOR**

OK

REPLACE ABS AND TRACTION ACTUATOR ASSEMBLY

BC

AUTO LSD Indicator Light Remains ON

DESCRIPTION

This is the auto LSD switch for 2WD. When the auto LSD switch is pushed on, the auto LSD function is available and the auto LSD indicator light illuminates.

HINT:

The auto LSD does not operate even if the auto LSD switch is pressed under the following conditions:

- The TRC or VSC system is faulty.
- The temperature inside the hydraulic brake booster increases and the auto LSD operation is suspended.

WIRING DIAGRAM

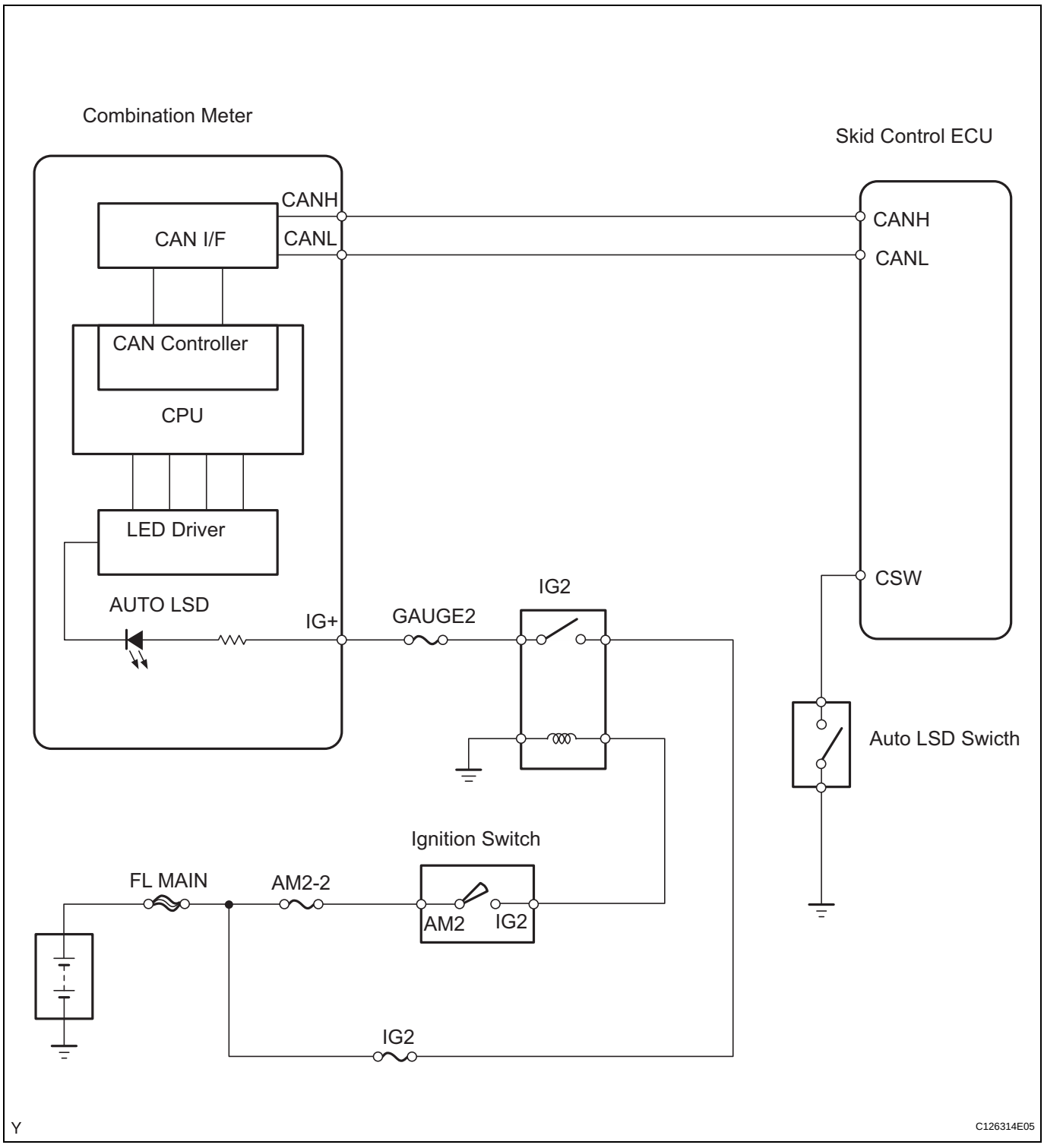

INSPECTION PROCEDURE

1	CHECK CAN COMMUNICATION SYSTEM

(a) Check if the CAN communication system DTC is output (see page CA-34).

Result

Result	Proceed to
DTC is not output	A
DTC is output	B

OK:

The connector is securely connected.

B → **REPAIR CAN COMMUNICATION SYSTEM**

A

2 CHECK SKID CONTROL ECU CONNECTOR

(a) Check if the skid control ECU connector is securely connected.

OK:

The connector is securely connected.

NG → **CONNECTOR CORRECTLY**

OK

BC

3 CHECK WIRE HARNESS (SKID CONTROL ECU - BODY GROUND)

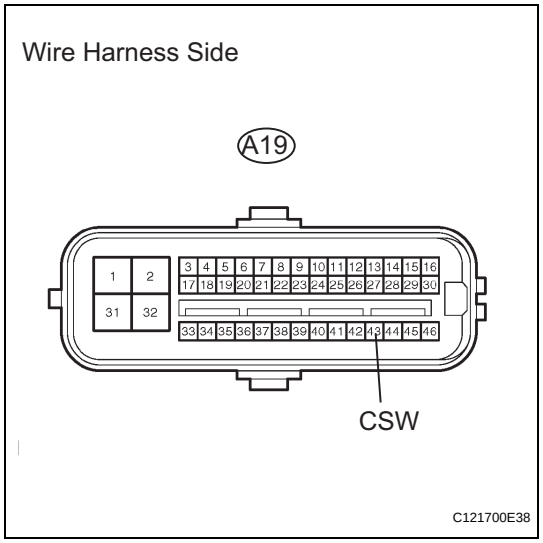

(a) Disconnect the A19 ECU connector.

(b) Measure the resistance of the wire harness side connector.

Standard resistance

Tester Connection	Switch Condition	Specified Condition
A19-43 (CSW) - Body ground	AUTO LSD switch is not pushed	10 kΩ or higher
A19-43 (CSW) - Body ground	AUTO LSD switch is pushed	Below 1Ω

OK → **Go to step 6**

NG

4 INSPECT AUTO LSD SWITCH

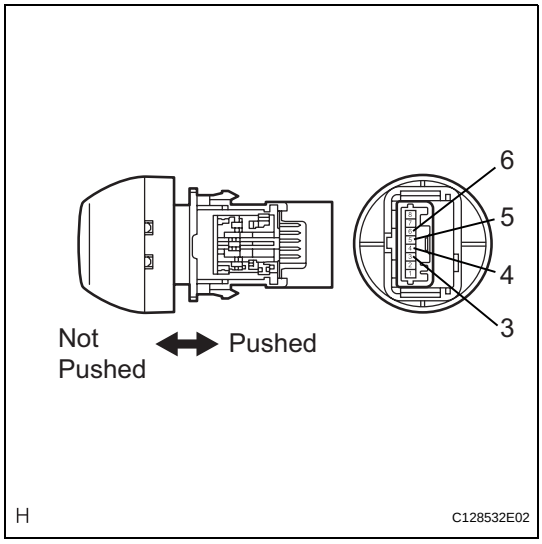

(a) Remove the auto LSD switch.
(b) Measure the resistance of the switch.
Standard resistance

Tester Connection	Switch Condition	Specified Condition
3 - 6	Not pushed	10 kΩ or higher
3 - 6	Pushed	Below 1Ω

NG → **REPLACE TRACTION CONTROL SWITCH**

OK

BC

5 CHECK WIRE HARNESS (SKID CONTROL ECU - TRACTION CONTROL SWITCH)

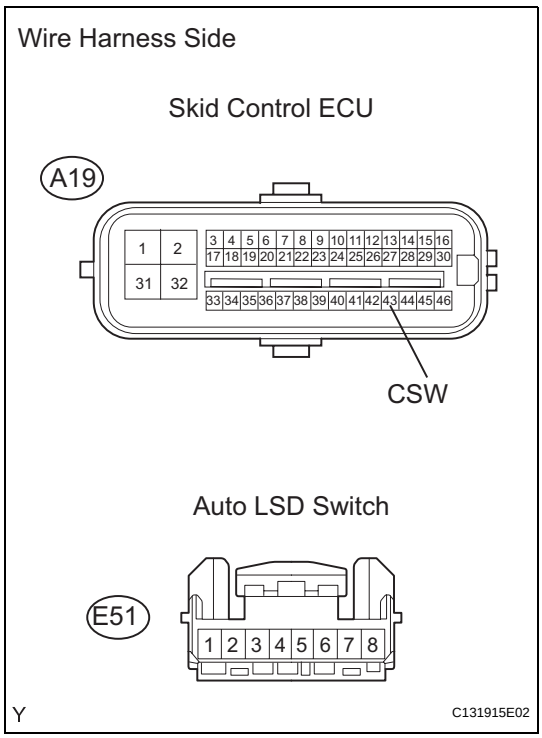

(a) Disconnect the A19 ECU connector.
(b) Disconnect the E51 switch connector.
(c) Measure the resistance of the wire harness side connectors.
Standard resistance

Tester Connection	Specified Condition
A19-43 (CSW) - E51-6	Below 1 Ω
E51-3 - Body ground	Below 1 Ω
A19-43 (CSW) - Body ground	10 kΩ or higher

NG → **REPAIR OR REPLACE HARNESS AND CONNECTOR**

OK

6 CHECK COMBINATION METER

(a) Check the combination meter (see page ME-15).

NG → **REPLACE COMBINATION METER ASSEMBLY**

OK

REPLACE ABS AND TRACTION ACTUATOR ASSEMBLY

AUTO LSD Indicator Light does not Come ON

DESCRIPTION

Refer to the description of "AUTO LSD Indicator Light Remains ON" (see page BC-164).

WIRING DIAGRAM

Refer to the AUTO LSD indicator light circuit (see page BC-165).

INSPECTION PROCEDURE

1 CHECK CAN COMMUNICATION SYSTEM

(a) Check if the CAN communication system DTC is output (see page CA-34).

Result

Result	Proceed to
DTC is not output	A
DTC is output	B

B → **REPAIR CAN COMMUNICATION SYSTEM**

A

2 READ VALUE OF INTELLIGENT TESTER (AUTO LSD SWITCH)

(a) Check the Data List for proper functioning of the Auto LSD switch.

Skid control ECU

Item (Display)	Measurement Item / Range (Display)	Normal Condition	Diagnostic Note
AUTO LSD SW	Auto LSD switch (AUTO LSD switch) / ON or OFF	ON: Auto LSD switch is ON OFF: Auto LSD switch is OFF	-

OK:

ON (downhill assist control switch is ON) appears on the screen.

NG → **Go to step 5**

OK

3 PERFORM ACTIVE TEST BY INTELLIGENT TESTER (AUTO LSD INDICATOR LIGHT)

(a) Select the ACTIVE TEST, generate a control command, and then check that the AUTO LSD indicator light operates.

Skid control ECU

Item (Display)	Test Details	Diagnostic Note
AUTO LSD LAMP	Turn AUTO LSD indicator light ON / OFF	Observe combination meter

OK:

The AUTO LSD indicator light turns ON and OFF.

NG → REPLACE ABS AND TRACTION ACTUATOR ASSEMBLY

OK

4 INSPECT COMBINATION METER ASSEMBLY

(a) Inspect the combination meter (see page ME-15).

NG → REPLACE COMBINATION METER ASSEMBLY

OK

REPLACE ABS AND TRACTION ACTUATOR ASSEMBLY

5 INSPECT AUTO LSD SWITCH

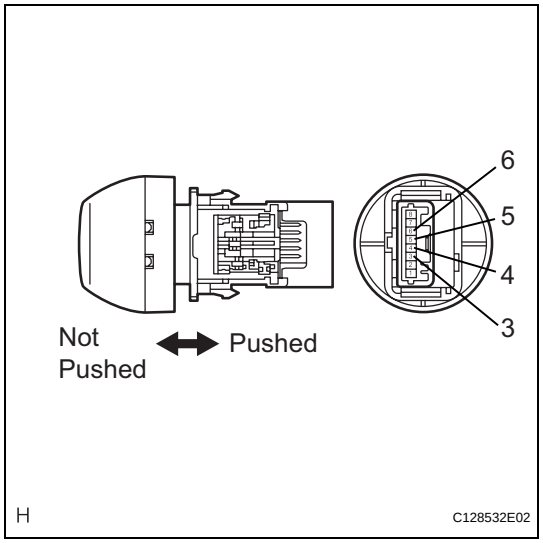

(a) Disconnect the auto LSD switch switch.
(b) Measure the resistance of the switch.
Standard resistance

Tester Connection	Switch Condition	Specified Condition
3 - 6	Not pushed	10 kΩ or higher
3 - 6	Pushed	Below 1Ω

NG → REPLACE AUTO LSD SWITCH

OK

BC

6	CHECK WIRE HARNESS (AUTO LSD SWITCH - SKID CONTROL ECU AND BODY GROUND)

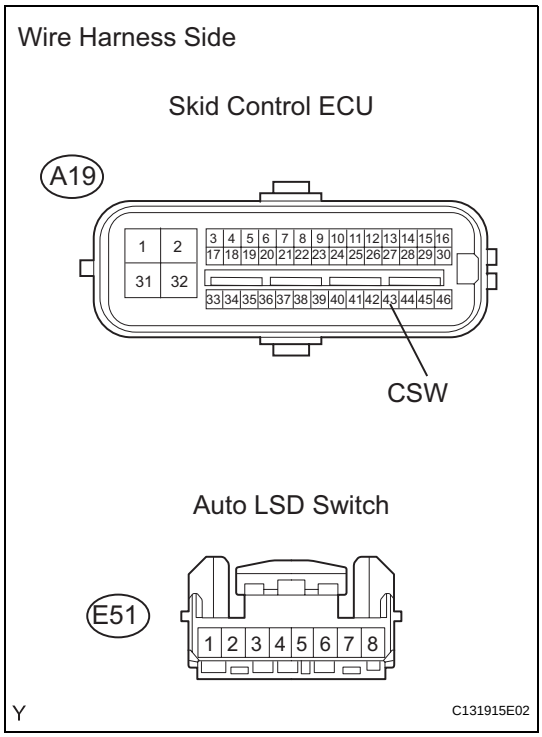

(a) Disconnect the A19 ECU connector.
(b) Disconnect the E51 switch connector.
(c) Measure the resistance of the wire harness side connectors.

Standard resistance

Tester Connection	Specified Condition
A19-43 (CSW) - E51-6	Below 1 Ω
E51-3 - Body ground	Below 1 Ω
A19-43 (CSW) - Body ground	10 kΩ or higher

NG → **REPAIR OR REPLACE HARNESS AND CONNECTOR**

OK

REPLACE ABS AND TRACTION ACTUATOR ASSEMBLY

BC

Skid Control Buzzer Circuit

DESCRIPTION

The skid control buzzer sounds while the VSC is activated.

WIRING DIAGRAM

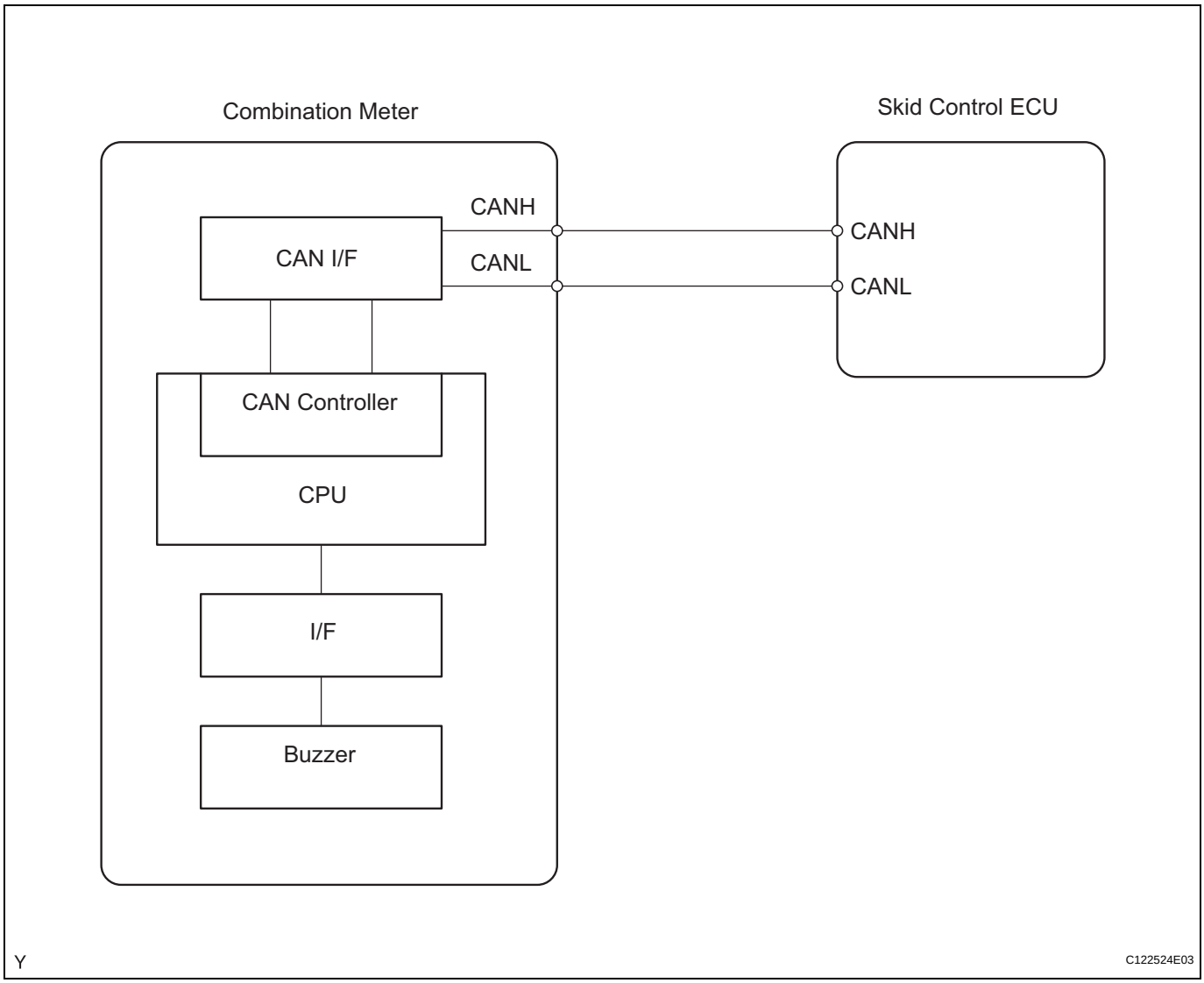

INSPECTION PROCEDURE

NOTICE:

When replacing the ABS and TRACTION actuator, perform the zero point calibration (see page BC-24).

1	CHECK CAN COMMUNICATION SYSTEM

(a) Check if the CAN communication DTC is output (see page CA-34).

Result

Result	Proceed to
DTC is not output	A

Result	Proceed to
DTC is output	B

B → REPAIR CAN COMMUNICATION SYSTEM

A

2 PERFORM ACTIVE TEST BY INTELLIGENT TESTER (SKID CONTROL BUZZER)

(a) Select the ACTIVE TEST, generate a control command, and then check that the skid control buzzer operate.

Skid control ECU

Item (Display)	Test Details	Diagnostic Note
BUZZER	Turns skid control buzzer ON / OFF	Buzzer can be heard

OK:
The skid control buzzer can be heard.

OK → REPLACE ABS AND TRACTION ACTUATOR ASSEMBLY

NG

BC

3 INSPECT COMBINATION METER

(a) Inspect the combination meter (see page ME-15).

NG → REPLACE COMBINATION METER

OK

REPLACE ABS AND TRACTION ACTUATOR ASSEMBLY

TC and CG Terminal Circuit

DESCRIPTION

Connecting terminals TC and CG of the DLC3 causes the skid control ECU to display 2-digit DTCs by flashing the ABS warning light.

WIRING DIAGRAM

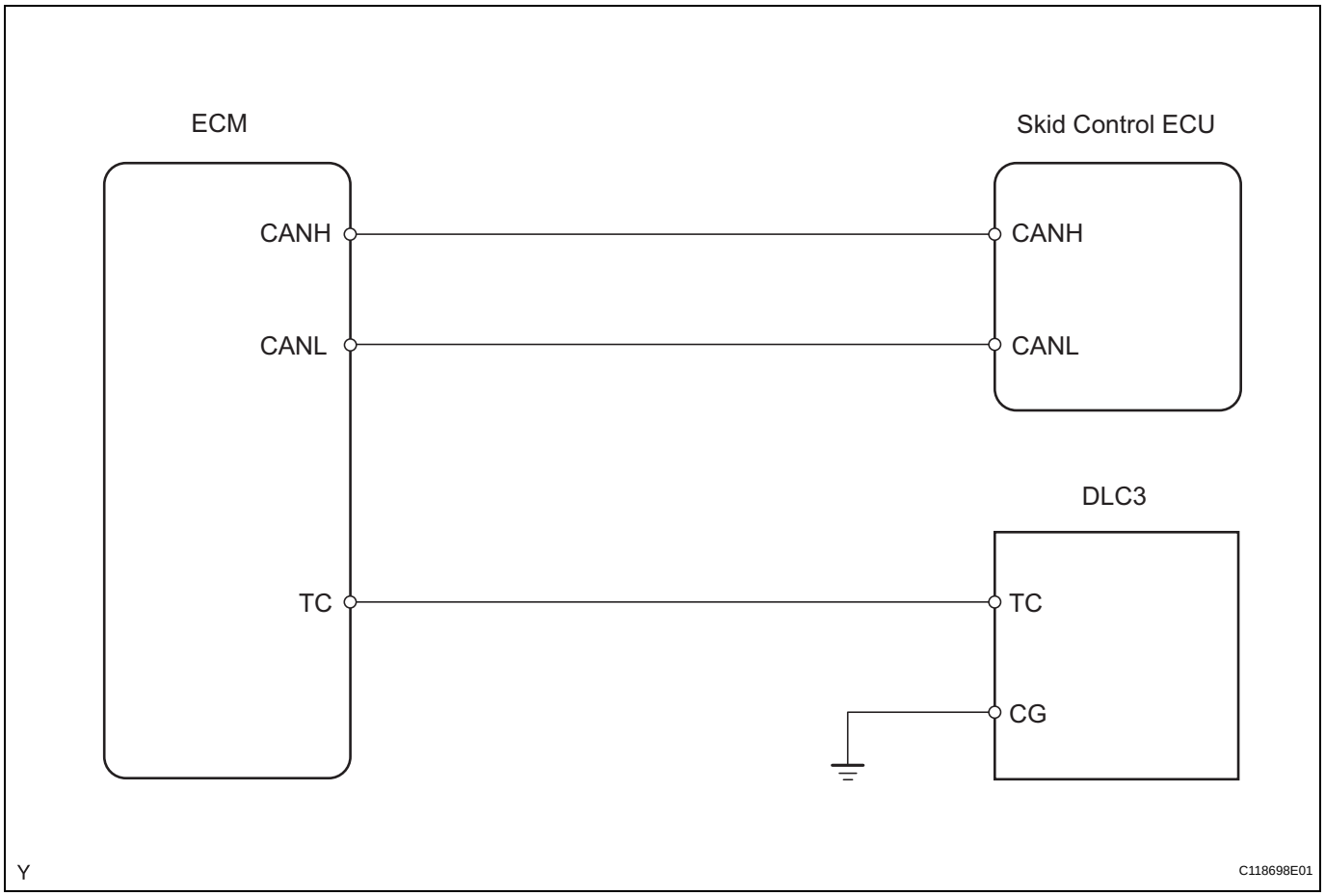

BC

INSPECTION PROCEDURE

1	CHECK DLC3 (TC VOLTAGE)

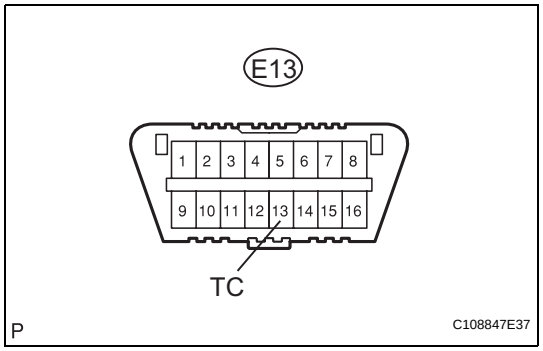

(a) Turn the ignition switch ON.
(b) Measure the voltage of the DLC3.

Standard voltage

Tester Connection	Specified Condition
E13-13 (TC) - Body ground	10 to 14 V

NG → **Go to step 3**

OK

2	CHECK CAN COMMUNICATION SYSTEM

(a) Check the DTC (see page CA-34).

Result

Result	Proceed to
DTC is not output	A
DTC is output	B

B → **REPAIR CIRCUIT INDICATED BY OUTPUT DTC**

A

REPLACE ABS AND TRACTION ACTUATOR ASSEMBLY

3	CHECK WIRE HARNESS (DLC3 - ECM AND BODY GROUND)

BC

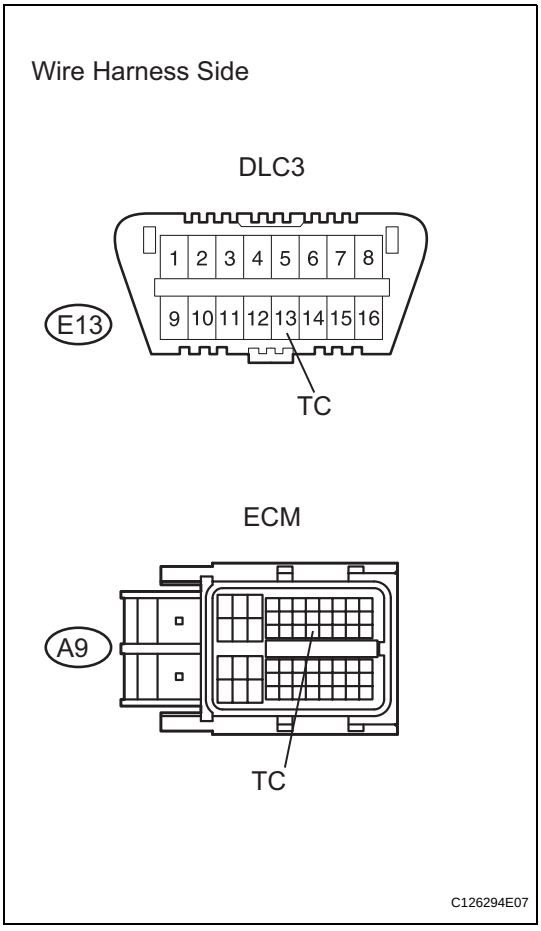

(a) Turn the ignition switch OFF.
(b) Disconnect the A12 ECM connector.
(c) Measure the resistance of the wire harness side connectors.

Standard resistance

Tester Connection	Specified Condition
E13-13 (TC) - A9-27 (TC)	Below 1 Ω
A9-27 (TC) - Body ground	10 kΩ or higher

NG → **REPAIR OR REPLACE HARNESS AND CONNECTOR**

OK

4	CHECK WIRE HARNESS (DLC3 - BODY GROUND)

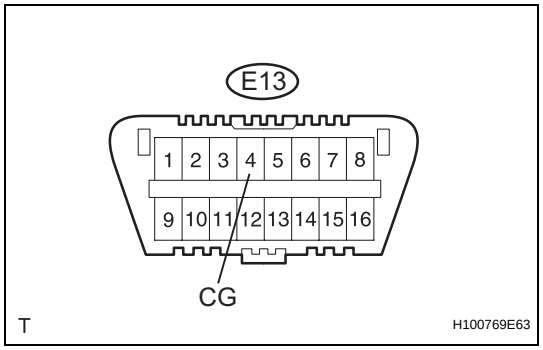

(a) Measure the resistance of the DLC3.
Standard resistance

Tester Connection	Specified Condition
E13-4 (CG) - Body ground	Below 1 Ω

NG → **REPAIR OR REPLACE HARNESS AND CONNECTOR**

OK

5	CHECK CAN COMMUNICATION SYSTEM

(a) Check if the CAN communication DTC is output (see page CA-34).
Result

Result	Proceed to
DTC is not output	A
DTC is output	B

B → **REPAIR CIRCUIT INDICATED BY OUTPUT DTC**

A

REPLACE ABS AND TRACTION ACTUATOR ASSEMBLY

BC

TS and CG Terminal Circuit

DESCRIPTION

If the vehicle is stationary during sensor check mode, speed sensor malfunctions cannot be detected. The vehicle must be driven for speed sensor malfunctions to be detected.
HINT:
Change to sensor check mode by connecting terminals TC and CG of the DLC3, and turning the ignition switch from OFF to ON.

WIRING DIAGRAM

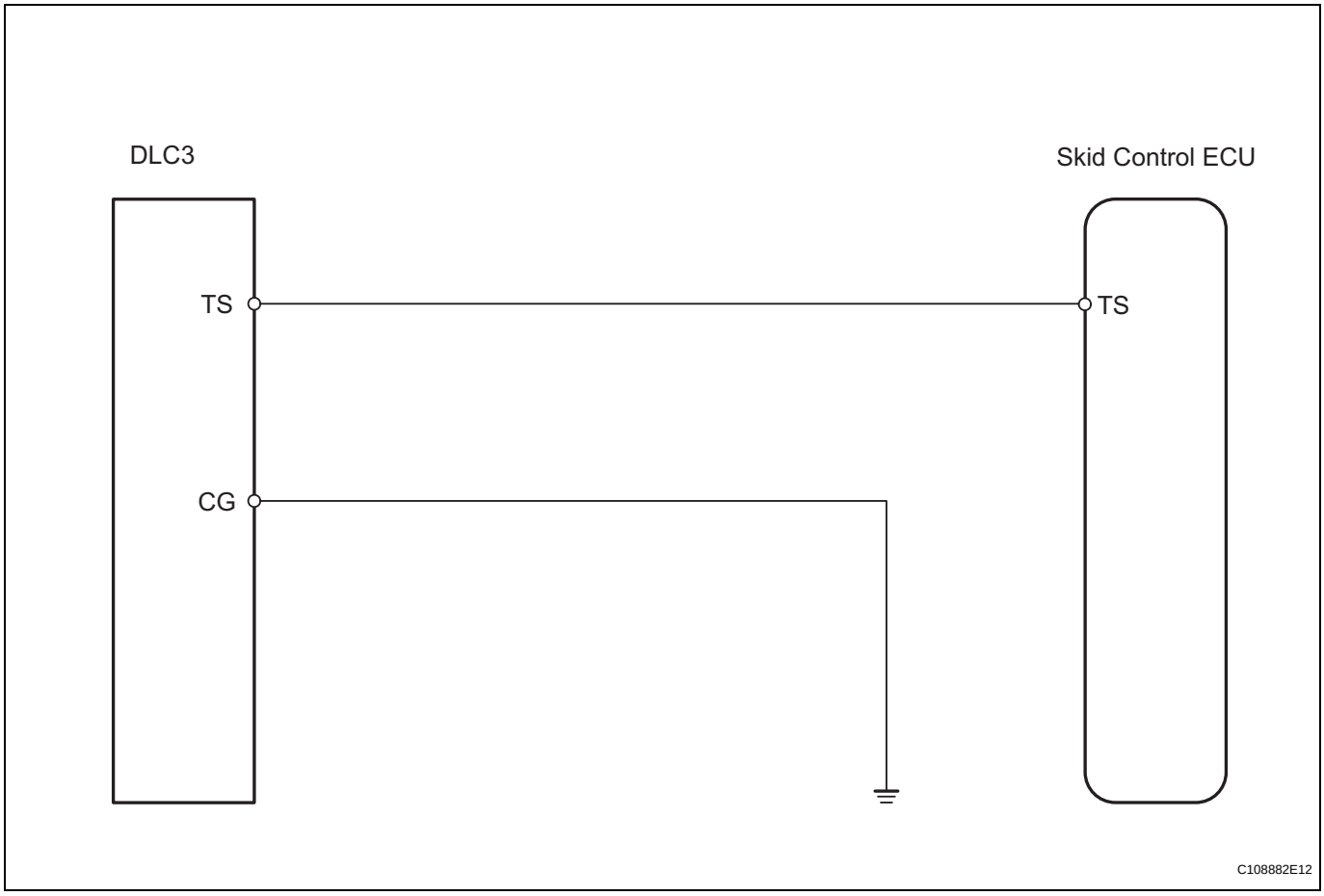

INSPECTION PROCEDURE

1	CHECK WIRE HARNESS (DLC3 - SKID CONTROL ECU AND BODY GROUND)

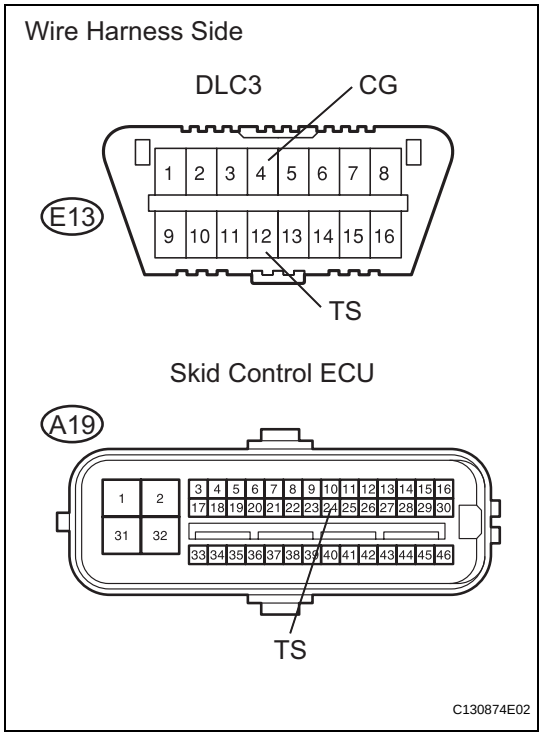

(a) Disconnect the A27 ECU connector.
(b) Measure the resistance of the wire harness side connectors.

Standard resistance

Tester Connection	Specified Condition
E13-4 (CG) - Body ground	Below 1 Ω
E13-12 (TS) - A19-15 (TS)	Below 1 Ω
A19-15 (TS) - Body ground	10 kΩ or higher

NG → **REPAIR OR REPLACE HARNESS AND CONNECTOR**

OK

REPLACE ABS AND TRACTION ACTUATOR ASSEMBLY

BC

VEHICLE STABILITY CONTROL SYSTEM

PRECAUTION

1. TROUBLESHOOTING PRECAUTION

- When there are malfunctions in the contact points of the terminals or installation problems with any parts, removal and installation of the suspected problem parts may return the system to its normal condition either entirely or temporarily.
- In order to determine the location of the malfunction, be sure to check the conditions at the time the malfunction occurred through data such as DTC and freeze frame data outputs. Record this information before disconnecting any connectors and removing or installing any parts.
- Since the vehicle stability control system may be influenced by malfunctions in other systems, be sure to check for DTCs in other systems.
- Be sure to remove and install the ABS and TRACTION actuator and each sensor with the ignition switch OFF, unless specified in the inspection procedures.
- When removing and installing the ABS and TRACTION actuator and each sensor, be sure to check that the normal display is output during a test mode inspection and a DTC output inspection after reinstalling all the parts.
- After replacing the ABS and TRACTION actuator and/or yaw rate sensor, be sure to perform yaw rate and deceleration sensor zero point calibration (see page BC-24).
- The CAN communication system is used for data communication between the skid control ECU, the steering sensor and the yaw rate sensor (the deceleration sensor is included). If there is trouble in the CAN communication line, the DTC of the communication line is output.
- If the DTC of the CAN communication line is output, repair the malfunction in the communication line and then troubleshoot the vehicle stability control system.
- Since the CAN communication line has its own length and route, it cannot be repaired temporarily with a bypass wire, etc.

PARTS LOCATION

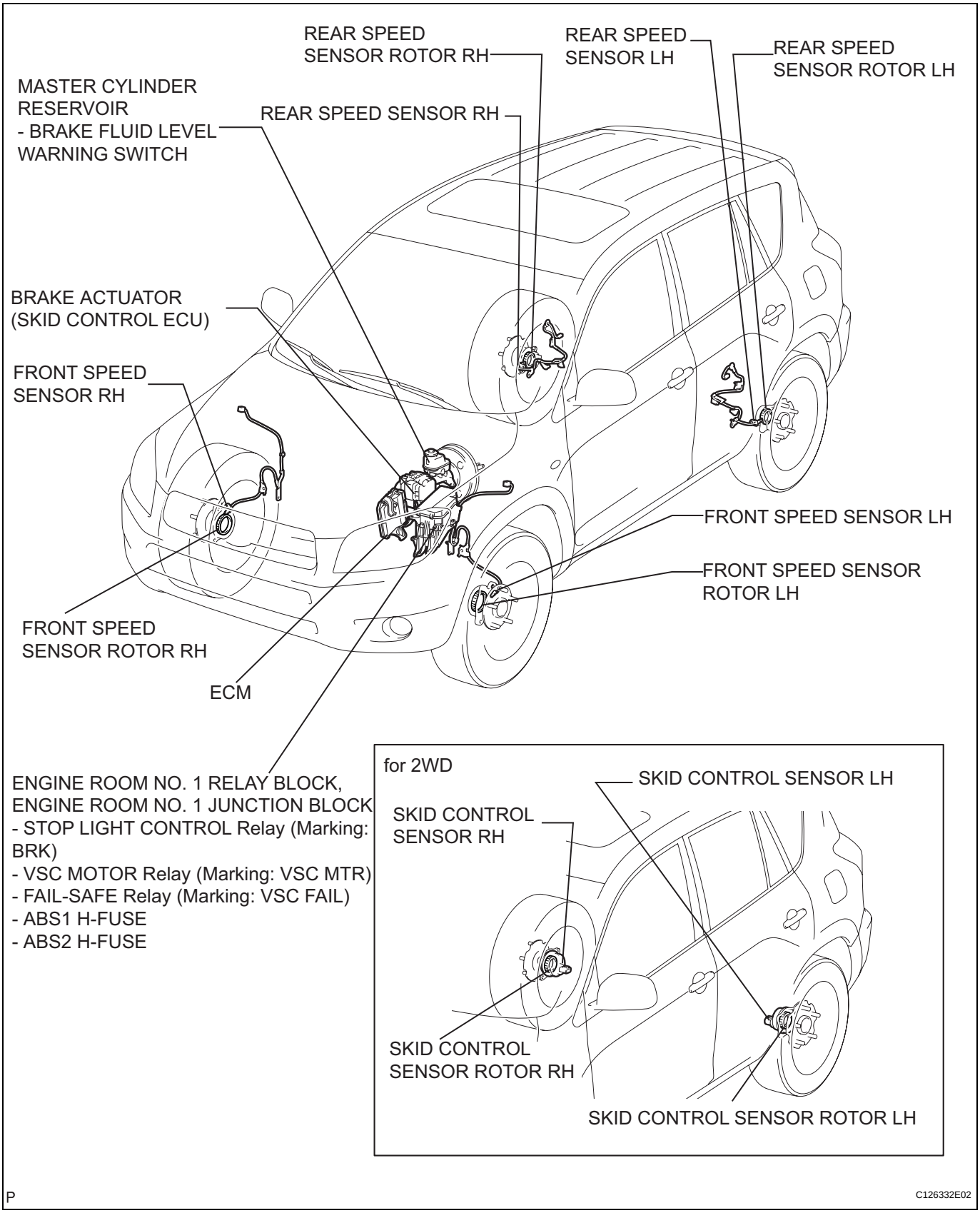

P

C126332E02

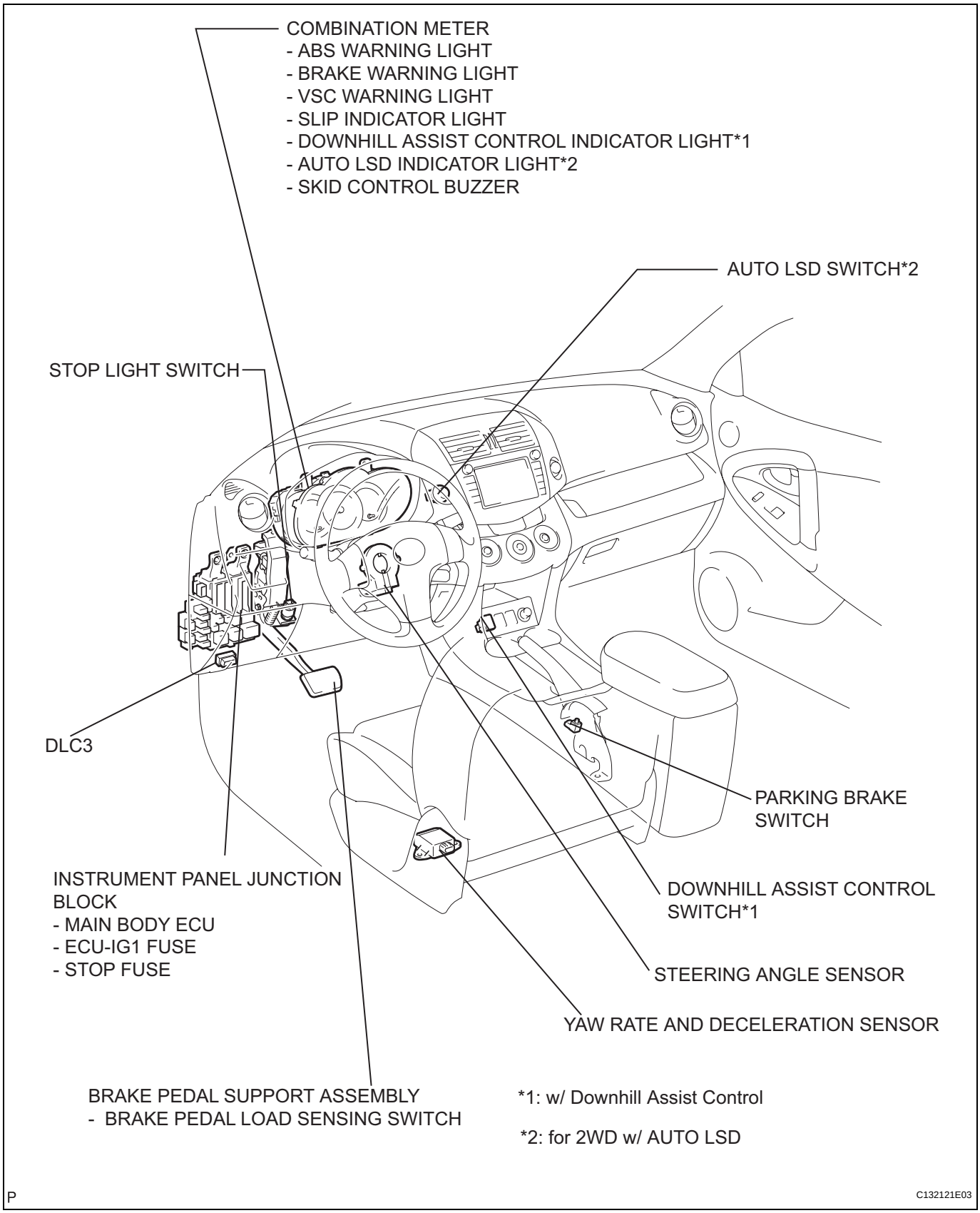
COMBINATION METER
- ABS WARNING LIGHT
- BRAKE WARNING LIGHT
- VSC WARNING LIGHT
- SLIP INDICATOR LIGHT
- DOWNHILL ASSIST CONTROL INDICATOR LIGHT*1
- AUTO LSD INDICATOR LIGHT*2
- SKID CONTROL BUZZER
AUTO LSD SWITCH*2
STOP LIGHT SWITCH
DLC3
PARKING BRAKE SWITCH
INSTRUMENT PANEL JUNCTION BLOCK
- MAIN BODY ECU
- ECU-IG1 FUSE
- STOP FUSE
DOWNHILL ASSIST CONTROL SWITCH*1
STEERING ANGLE SENSOR
YAW RATE AND DECELERATION SENSOR
BRAKE PEDAL SUPPORT ASSEMBLY
- BRAKE PEDAL LOAD SENSING SWITCH
*1: w/ Downhill Assist Control
*2: for 2WD w/ AUTO LSD
P
C132121E03

BC

INSPECTION

1. **INSPECT YAW RATE SENSOR**
   (a) Inspect the yaw rate sensor. If any of the following occurs, replace the yaw rate sensor with a new one.
   - The surface of the sensor is cracked, dented, or chipped.
   - The connector or wire harness is scratched, cracked, or damaged.
   - The sensor has been dropped.

INSTALLATION

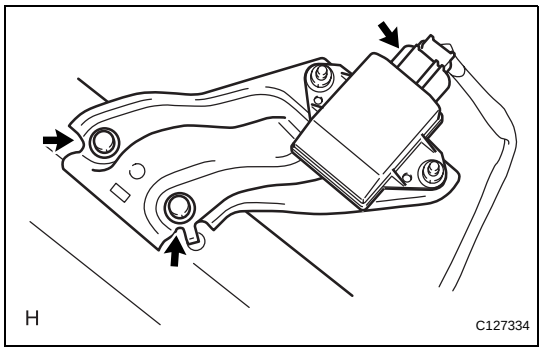

1. **INSTALL YAW RATE SENSOR ASSEMBLY**
   (a) Install the yaw rate sensor with the 2 bolts.
   Torque: 14.5 N*m (148 kgf*cm, 11 ft.*lbf)
   NOTICE:
   - **Do not damage the yaw rate sensor.**
   - **Make sure that the yaw rate sensor is installed securely.**
   (b) Connect the yaw rate sensor connector.
2. **INSTALL YAW RATE SENSOR BRACKET**
   (a) Install the bracket with the bolt.
   Torque: 14.5 N*m (148 kgf*cm, 11 ft.*lbf)
3. **INSTALL FRONT DOOR SCUFF PLATE LH (See page IR-59)**
4. **INSTALL FRONT SEAT ASSEMBLY LH**
   (a) for Manual Seat:
   Install the front seat (see page SE-22).
   (b) for Power Seat:
   Install the front seat (see page SE-37).
5. **CONNECT CABLE TO NEGATIVE BATTERY TERMINAL**
6. **PERFORM ZERO POINT CALIBRATION OF YAW RATE AND DECELERATION SENSOR**
   (a) Perform the yaw rate and deceleration sensor zero point calibration (see page BC-24).
7. **INSPECT YAW RATE SENSOR SIGNAL**
   (a) Inspect the yaw rate sensor signal (see page BC-28).

BC

YAW RATE AND DECELERATION SENSOR

COMPONENTS

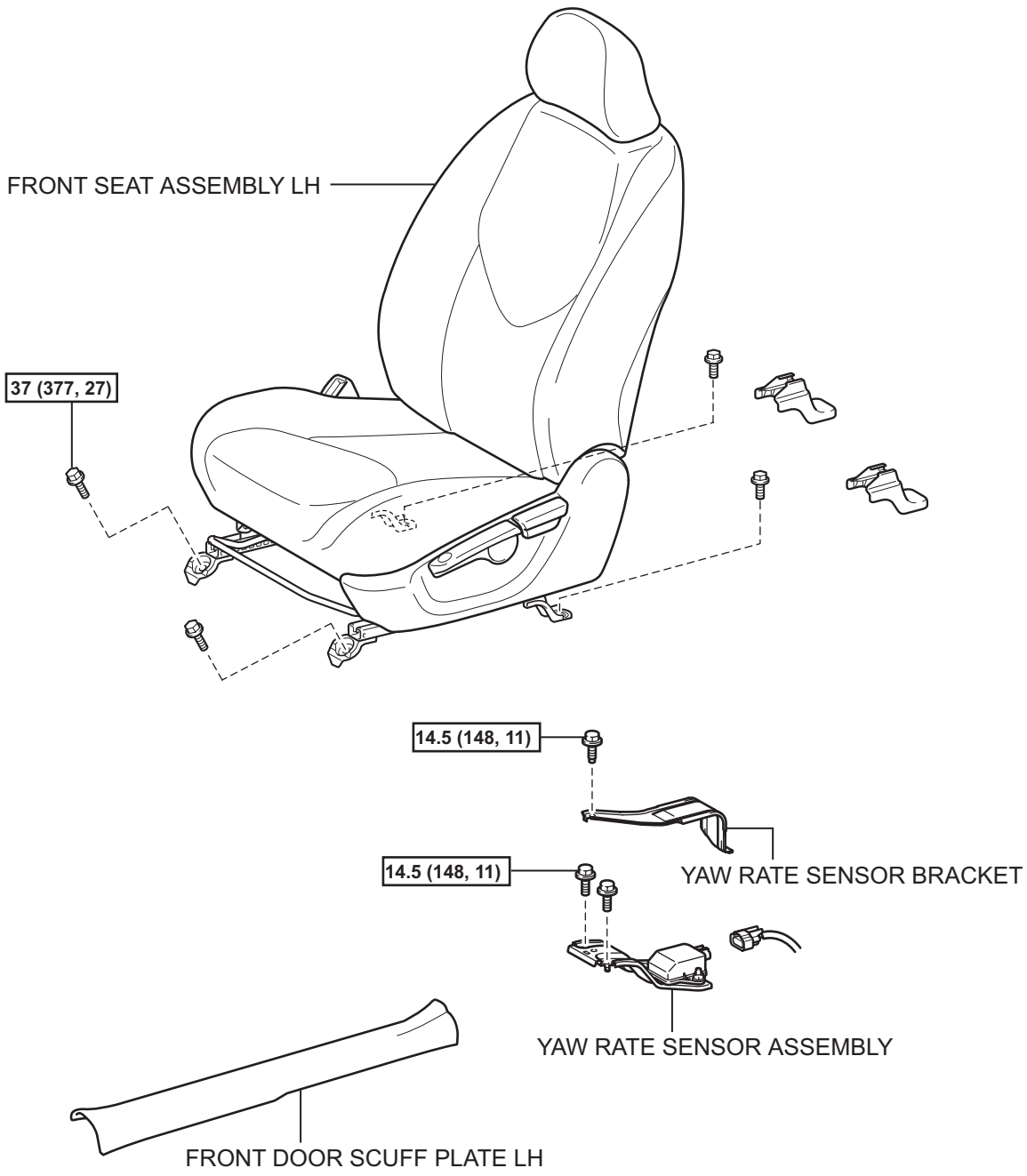

N*m (kgf*cm, ft.*lbf) : Specified torque

T

C127333E02

REMOVAL

1. **DISCONNECT CABLE FROM NEGATIVE BATTERY TERMINAL**
   CAUTION:
   Wait at least 90 seconds after disconnecting the cable from the negative (-) battery terminal to prevent airbag and seat belt pretensioner activation.

2. **REMOVE FRONT SEAT ASSEMBLY LH**
   (a) for Manual Seat:
   Remove the front seat LH (see page SE-11).
   (b) for Power Seat:
   Remove the front seat LH (see page SE-27).

3. **REMOVE FRONT DOOR SCUFF PLATE LH (See page IR-26)**

4. **REMOVE YAW RATE SENSOR BRACKET**
   (a) Remove the bolt and yaw rate sensor bracket.

5. **REMOVE YAW RATE SENSOR ASSEMBLY**
   (a) Disconnect the yaw rate sensor connector.
   (b) Remove the 2 bolts and yaw rate sensor.
   NOTICE:
   Do not remove the sensor from the bracket.

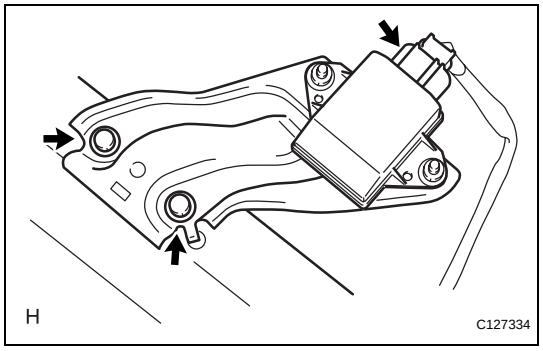

BC

PARTS LOCATION

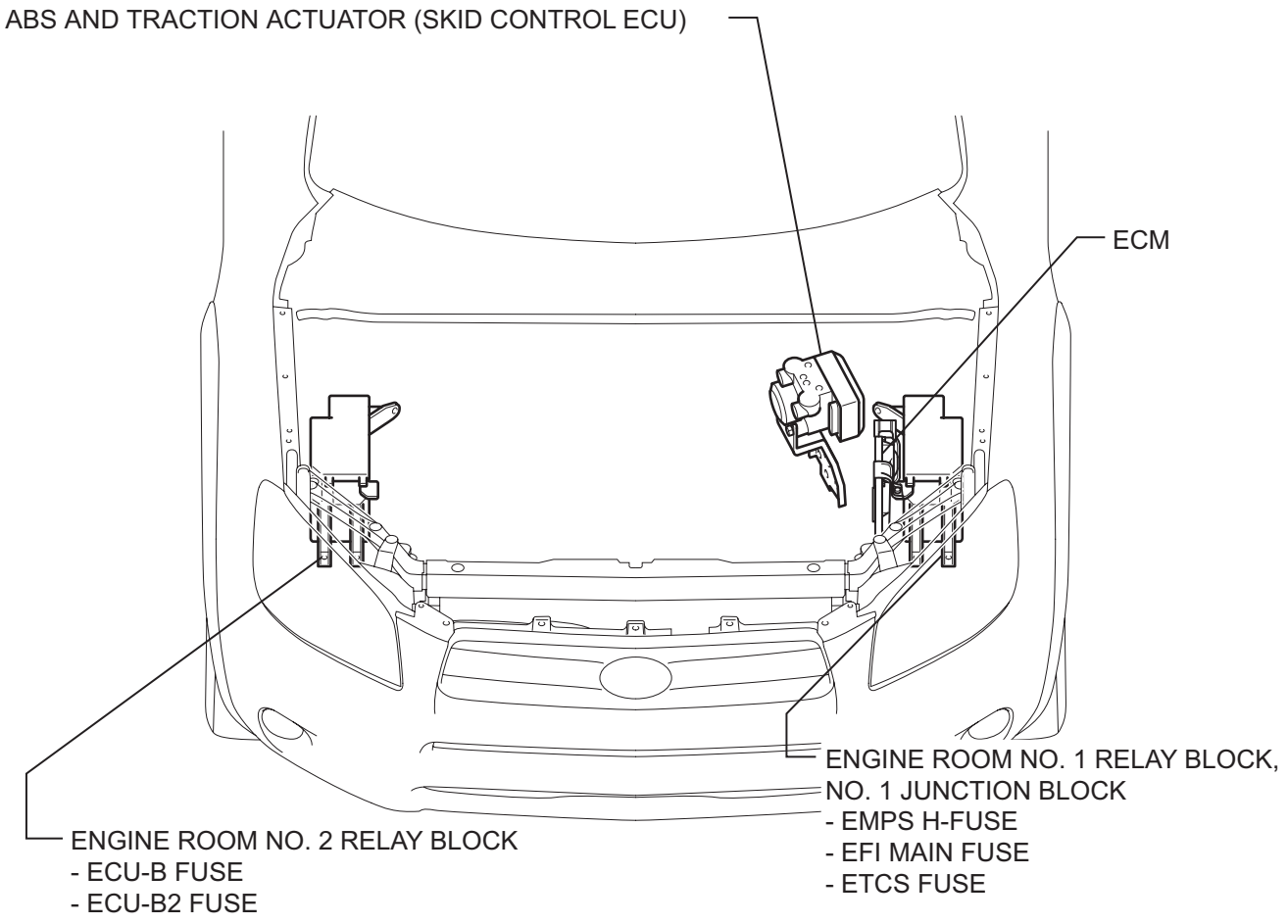

T

C130531E03

CA

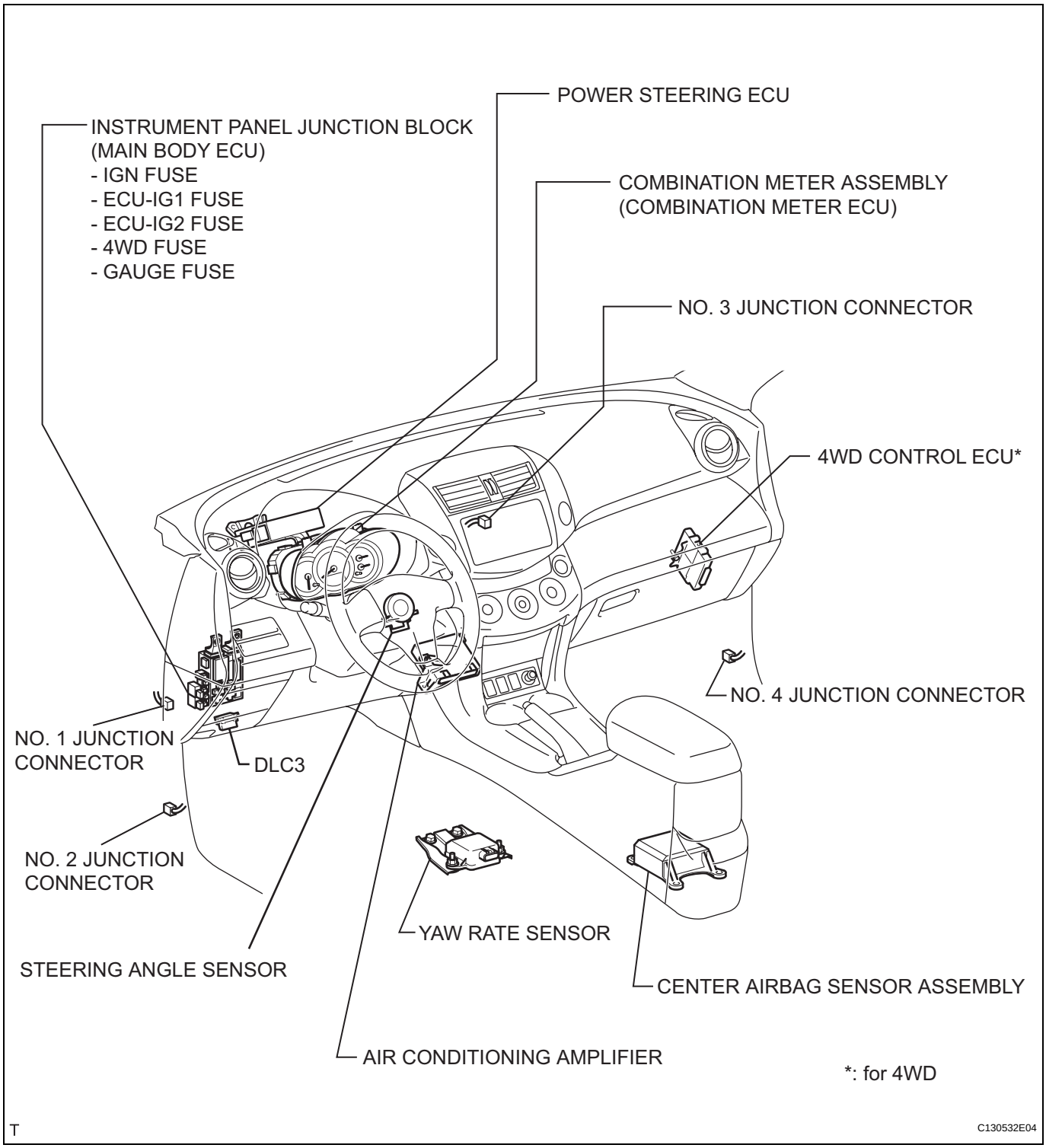
POWER STEERING ECU
INSTRUMENT PANEL JUNCTION BLOCK
(MAIN BODY ECU)
- IGN FUSE
- ECU-IG1 FUSE
- ECU-IG2 FUSE
- 4WD FUSE
- GAUGE FUSE
COMBINATION METER ASSEMBLY
(COMBINATION METER ECU)
NO. 3 JUNCTION CONNECTOR
4WD CONTROL ECU*
NO. 4 JUNCTION CONNECTOR
NO. 1 JUNCTION
CONNECTOR
DLC3
NO. 2 JUNCTION
CONNECTOR
YAW RATE SENSOR
STEERING ANGLE SENSOR
CENTER AIRBAG SENSOR ASSEMBLY
AIR CONDITIONING AMPLIFIER
*: for 4WD
T
C130532E04

SYSTEM DIAGRAM

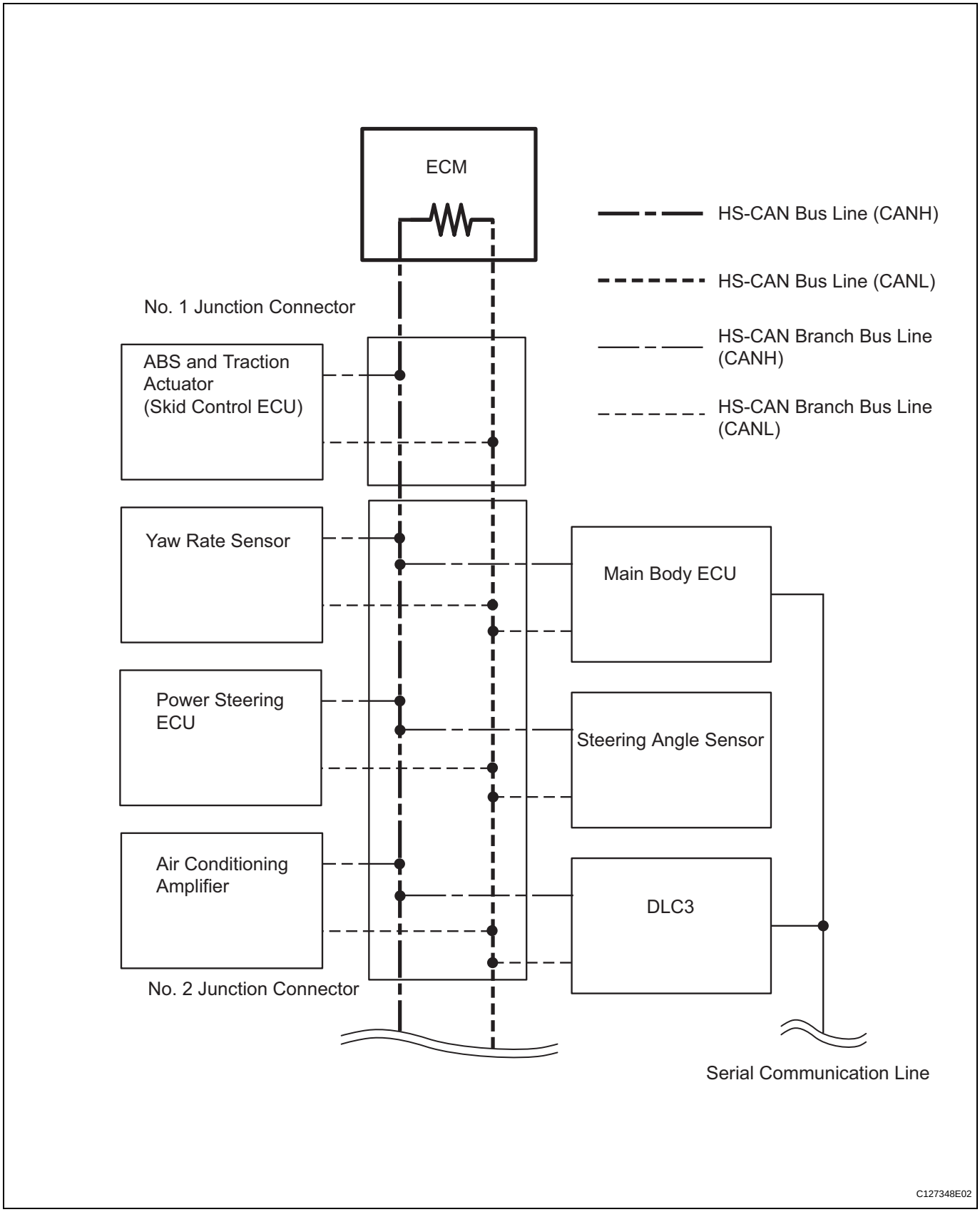

CA

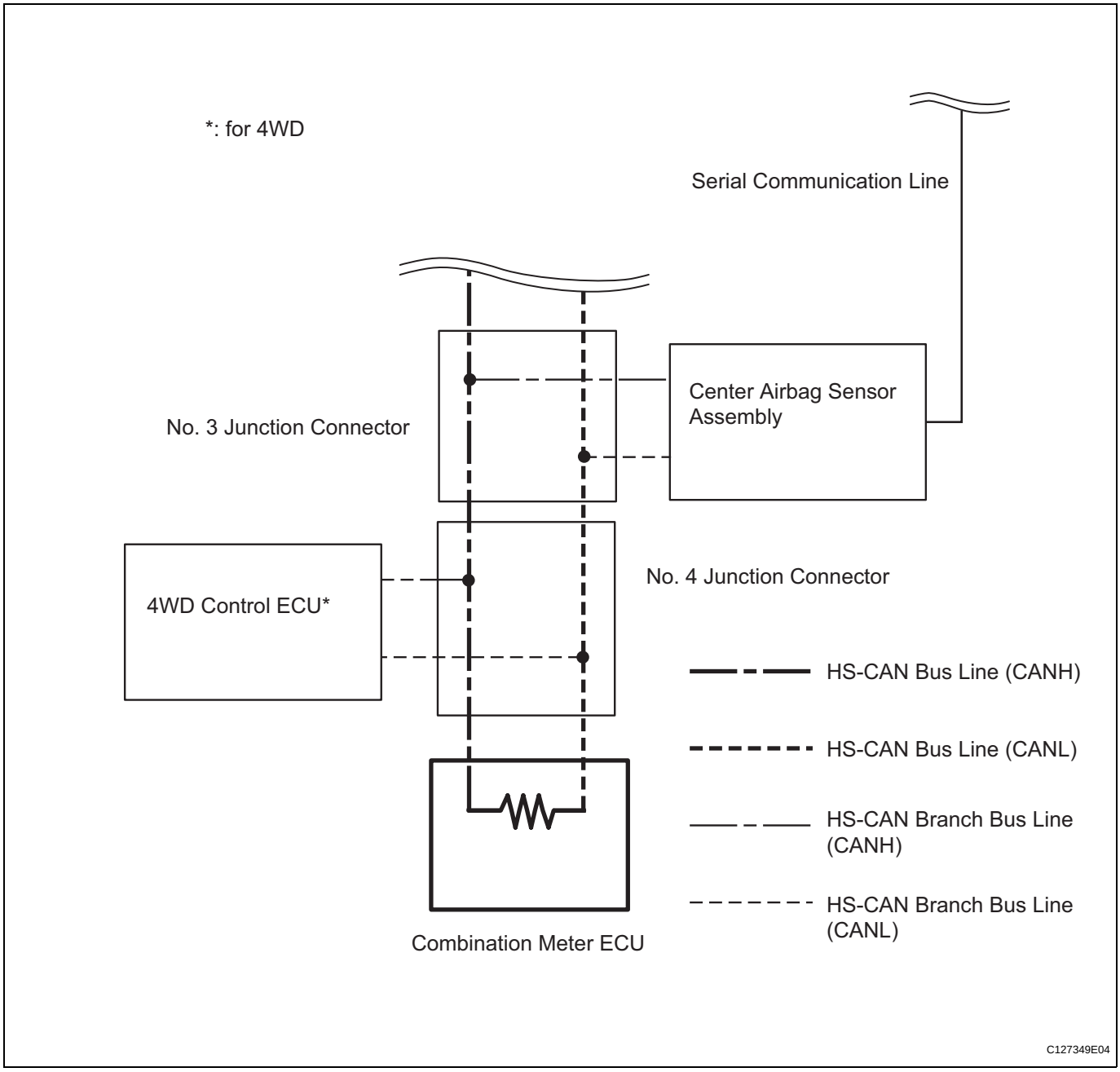

HINT:

- The ABS and traction actuator (skid control ECU) detects and stores steering sensor and yaw rate sensor DTCs and performs DTC communication by receiving information from the steering sensor and yaw rate sensor.
- The ECM uses the CAN communication system to perform DTC communication instead of the conventional communication line (SIL).

SYSTEM DESCRIPTION

1. BRIEF DESCRIPTION

(a) The CAN (Controller Area Network) is a serial data communication system for real time application. It is a vehicle multiplex communication system which has a high communication speed (500 kbps) and the ability to detect malfunctions.

(b) By pairing the CANH and CANL bus lines, the CAN performs communication based on differential voltages.

(c) Many ECUs (sensors) installed on the vehicle operate by sharing information and communicating with each other.

(d) The CAN has 2 resistors of 120 Ω which are necessary to communicate with the main wire.

2. DEFINITION OF TERMS

(a) Main wire

(1) The main wire is a wire harness between the 2 terminus circuits on the bus (communication line). This is the main bus in the CAN communication system.

(b) Branch wire

(1) The branch wire is a wire harness which diverges from the main wire to an ECU or sensor.

(c) Terminus circuit

(1) The terminus circuit is a circuit which converts the communication current of the CAN communication into the bus voltage. It consists of a resistor and condenser. 2 terminus circuits are necessary on a bus.

(d) CAN J/C

(1) The CAN J/C is a junction designed for CAN communication, which contains a terminus circuit.

3. ECU OR SENSOR WHICH COMMUNICATE VIA CAN COMMUNICATION SYSTEM

(a) ABS and traction actuator (Skid control ECU)
(b) Power steering ECU
(c) Steering Angle sensor
(d) Yaw rate sensor
(e) ECM
(f) Center airbag sensor
(g) Air conditioning amplifier
(h) Combination meter ECU
(i) Main body ECU
(j) 4WD control ECU*

HINT:
*: for 4WD

4. DIAGNOSTIC CODES FOR CAN COMMUNICATION SYSTEM

(a) DTCs for the CAN communication system are as follows: U0073, U0100, U0105, U0121, U0122, U0123, U0124, U0126, U0129, C1280, C1296, C1297, and B1499.

5. NOTES REGARDING TROUBLESHOOTING

(a) Trouble in the CAN bus (communication line) can be checked through the DLC3 (except when there is a wire break other than in the branch wire of the DLC3).

NOTICE:

Do not connect the tester directly to the DLC3 connector. Be sure to use a service wire.

(b) DTCs regarding the CAN communication system can be checked using the intelligent tester.

(c) The CAN communication system cannot detect trouble in the branch line of the DLC3 even though the DLC3 is also connected to the CAN communication system.

HOW TO PROCEED WITH TROUBLESHOOTING

NOTICE:

- **DTCs for the CAN communication system are as follows: U0073, U0100, U0105, U0121, U0122, U0123, U0124, U0126, U0129, C1280, C1296, C1297, and B1499.**
- **Refer to the troubleshooting procedures of each system if DTCs regarding the CAN communication system are not output.**
- **Turn the ignition switch off before measuring the resistances of the main wire and the branch wire.**
- **After the ignition switch is turned off, check that the key reminder warning system and light reminder warning system are not in operation.**
- **Before measuring the resistance, leave the vehicle for at least 1 minute and do not operate the ignition switch, any switches or doors. If doors need to be opened in order to check connectors, open the doors and leave them open.**

HINT:

- *: Use the intelligent tester (with CAN VIM).
- Operating the ignition switch, any switches or any doors triggers related ECU and sensor communication with the CAN, which causes resistance variation.

1	VEHICLE BROUGHT TO WORKSHOP

NEXT

2	INSPECT BATTERY VOLTAGE

Standard voltage::
11 to 14 V

If the voltage is below 11 V, recharge or replace the battery before proceeding.

NEXT

3	CHECK CAN BUS LINE

(a) Check the CAN bus line (see page CA-75).

NEXT

4	CHECK INSTALLED SYSTEMS (ECU AND SENSOR) THAT USE CAN COMMUNICATION

NEXT

5	CHECK AND CLEAR DTC*

NEXT

6	CHECK INTELLIGENT TESTER VIA CAN VIM*

(a) Select "COMMUNICATION BUS CHECK" (see page CA-34).

Result

Result	Proceed to
All ECUs and sensors connected to CAN communication system displayed on screen.	A
One ECU or sensor connected to CAN communication system not displayed on screen.	B
2 or more ECU and sensors connected to CAN communication system not displayed on screen.	C

CA

NOTICE:

- **The systems (ECUs and sensors) that use CAN communication vary depending on the vehicle and option settings. Check which systems (ECUs and sensors) are installed on the vehicle (see page CA-34).**
- **Non-installed ECUs or sensors are not displayed. Do not mistake them for being in communication stop mode.**
- **If 2 or more ECUs or sensors are not displayed on the intelligent tester, perform troubleshooting for open circuits in one side of the CAN branch line for each undisplayed ECU or sensor.**

B	GO TO COMMUNICATION STOP MODE TABLE

C	GO TO OPEN IN ONE SIDE OF CAN BRANCH WIRE

A

7	DTC COMBINATION TABLE

(a) Confirm the trouble according to the combination of output DTCs regarding the CAN communication system.

HINT:

Previous CAN communication system DTCs may be the cause if CAN communication system DTCs are output and all ECUs and sensors connected to the CAN communication system are displayed on the intelligent tester "Communication BUS CHECK" screen.

(b) Check the DTC combination table (see page CA-34).

NEXT

8	**CIRCUIT INSPECTION**

NEXT

9	**IDENTIFY PROBLEM**

NEXT

10	**REPAIR OR REPLACE**

NEXT

11	**CONFIRMATION TEST**

NEXT

END

PROBLEM SYMPTOMS TABLE

(2005/11-2006/01)

Result list of check can bus line

Symptom	Suspected Area	See page
Open in CAN Main Wire	CAN MAIN WIRE FOR DISCONNECTION	CA-80
Short in CAN Bus Line	CAN BUS LINES FOR SHORT CIRCUIT	CA-91
Short to +B in CAN Bus line	CAN BUS LINE FOR SHORT TO +B	CA-109
Short to GND in CAN Bus Line	CAN BUS LINE FOR SHORT TO GND	CA-126
Open in One Side of CAN Branch Wire	OPEN IN ONE SIDE OF CAN BRANCH WIRE	CA-160

Communication stop mode table

Symptom	Suspected Area	See page
ABS / VSC / TRAC not displayed on intelligent tester	ABS AND TRACTION ACTUATOR (SKID CONTROL ECU) WITH ACTUATOR COMMUNICATION STOP MODE	CA-42
EPS not displayed on intelligent tester	POWER STEERING ECU COMMUNICATION STOP MODE	CA-49
STEERING SENSOR not displayed on intelligent tester	STEERING ANGLE SENSOR COMMUNICATION STOP MODE	CA-52
YAW / DECELERAT not displayed on intelligent tester	YAW RATE SENSOR COMMUNICATION STOP MODE	CA-55
ENGINE not displayed on intelligent tester via CAN VIM	ECM COMMUNICATION STOP MODE	CA-58
SRS AIRBAG not displayed on intelligent tester	AIRBAG ECU COMMUNICATION STOP MODE	CA-69
A/C not displayed on intelligent tester	AIR CONDITION AMPLIFIER ECU COMMUNICATION STOP MODE	CA-45
METER not displayed on intelligent tester	COMBINATION METER ECU COMMUNICATION STOP MODE	CA-67
MAIN BODY not displayed on intelligent tester	MAIN BODY ECU COMMUNICATION STOP MODE	CA-64
4WD not displayed on intelligent tester*	4WD CONTROL ECU COMMUNICATION STOP MODE	CA-72

PROBLEM SYMPTOMS TABLE

(2006/01-)

Result list of check can bus line

Symptom	Suspected Area	See page
Open in CAN Main Wire	CAN MAIN WIRE FOR DISCONNECTION	CA-80
Short in CAN Bus Line	CAN BUS LINES FOR SHORT CIRCUIT	CA-91
Short to +B in CAN Bus line	CAN BUS LINE FOR SHORT TO +B	CA-109
Short to GND in CAN Bus Line	CAN BUS LINE FOR SHORT TO GND	CA-143
Open in One Side of CAN Branch Wire	OPEN IN ONE SIDE OF CAN BRANCH WIRE	CA-160

Communication stop mode table

Symptom	Suspected Area	See page
ABS / VSC / TRAC not displayed on intelligent tester	ABS AND TRACTION ACTUATOR (SKID CONTROL ECU) WITH ACTUATOR COMMUNICATION STOP MODE	CA-42
EPS not displayed on intelligent tester	POWER STEERING ECU COMMUNICATION STOP MODE	CA-49
STEERING SENSOR not displayed on intelligent tester	STEERING ANGLE SENSOR COMMUNICATION STOP MODE	CA-52
YAW / DECELERAT not displayed on intelligent tester	YAW RATE SENSOR COMMUNICATION STOP MODE	CA-55
ENGINE not displayed on intelligent tester via CAN VIM	ECM COMMUNICATION STOP MODE	CA-60
SRS AIRBAG not displayed on intelligent tester	AIRBAG ECU COMMUNICATION STOP MODE	CA-69
A/C not displayed on intelligent tester	AIR CONDITION AMPLIFIER ECU COMMUNICATION STOP MODE	CA-45
METER not displayed on intelligent tester	COMBINATION METER ECU COMMUNICATION STOP MODE	CA-67
MAIN BODY not displayed on intelligent tester	MAIN BODY ECU COMMUNICATION STOP MODE	CA-64
4WD not displayed on intelligent tester*	4WD CONTROL ECU COMMUNICATION STOP MODE	CA-72

HINT:
*: for 4WD

TERMINALS OF ECU

(2005/11-2006/01)

NOTICE:

- **Turn the ignition switch OFF before measuring the resistances of the main wire and the branch wire.**
- **After the ignition switch is turned OFF, check that the key reminder warning system and light reminder warning system are not in operation.**
- **Before measuring the resistance, leave the vehicle for at least 1 minute and do not operate the ignition switch, any switches or doors. If doors need to be opened in order to check connectors, open the doors and leave them open.**

HINT:

Operating the ignition switch, any switches or any doors triggers related ECU and sensor communication with the CAN, which causes resistance variation.

CA

1. JUNCTION CONNECTOR

(a) No. 1 junction connector

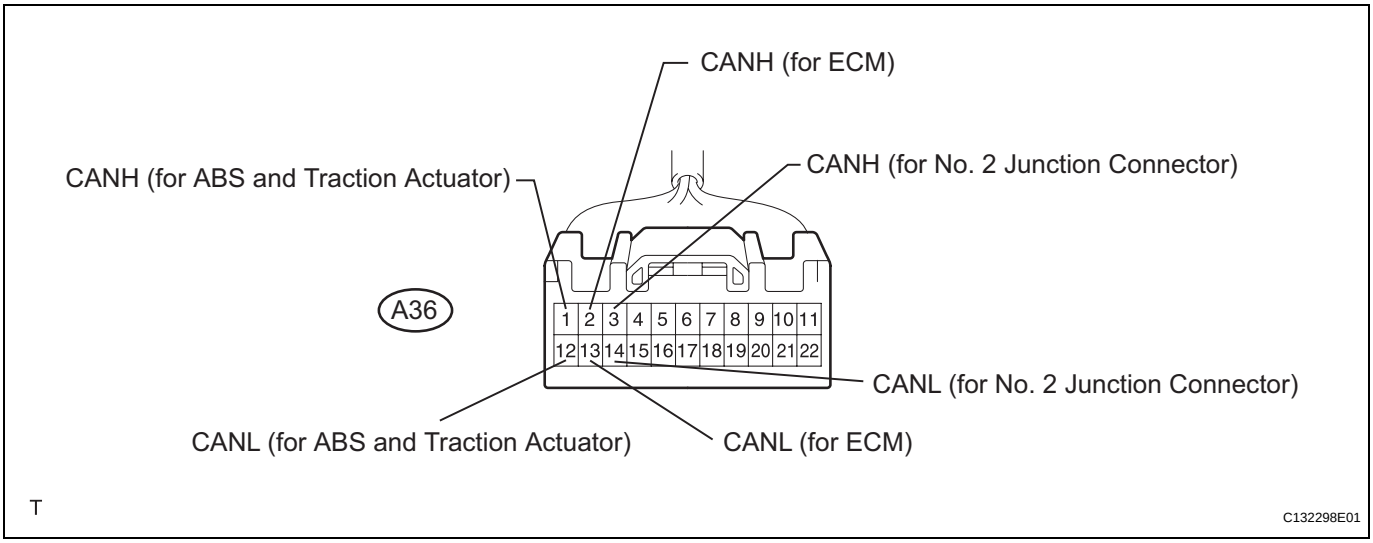

No. 1 Junction Connector	Wiring Color	Connect to
CANH (A36-1)	R	ABS and traction actuator (skid control ECU)
CANL (A36-12)	W	ABS and traction actuator (skid control ECU)
CANH (A36-2)	Y	ECM
CANL (A36-13)	W	ECM
CANH (A36-3)	L	No. 2 junction connector
CANL (A36-14)	W	No. 2 junction connector

(b) No. 2 junction connector

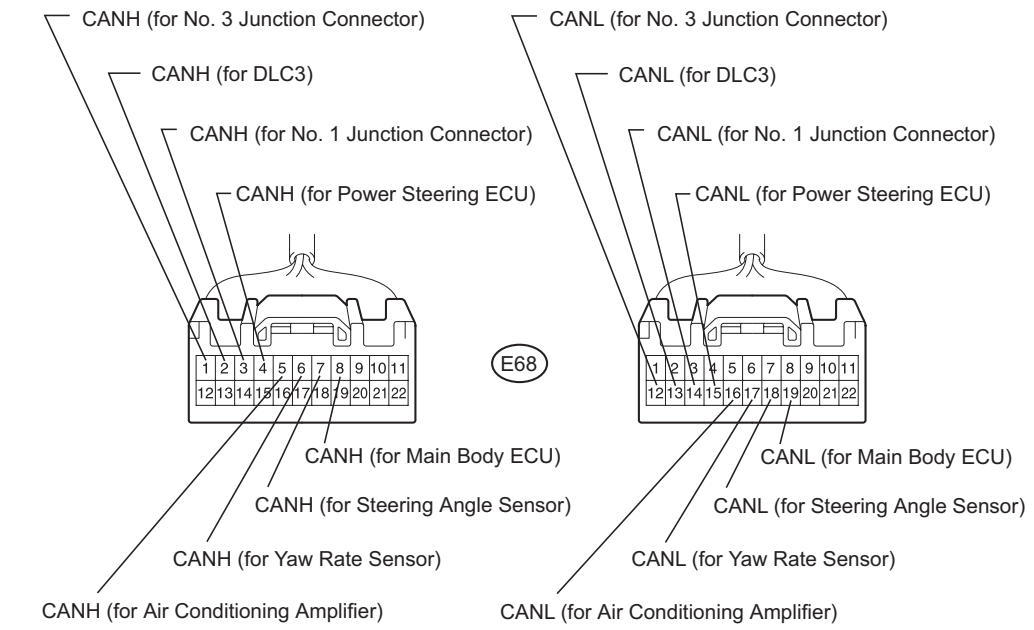

No. 2 Junction Connector	Wiring Color	Connect to
CANH (E68-3)	L	No. 1 junction connector
CANL (E68-14)	W	No. 1 junction connector
CANH (E68-6)	L	Yaw rate sensor
CANL (E68-17)	W	Yaw rate sensor
CANH (E68-4)	Y	Power steering ECU
CANL (E68-15)	W	Power steering ECU
CANH (E68-8)	R	Main body ECU
CANL (E68-19)	W	Main body ECU
CANH (E68-7)	BR	Steering angle sensor
CANL (E68-18)	W	Steering angle sensor
CANH (E68-2)	B	DLC3
CANL (E68-13)	W	DLC3
CANH (E68-5)	V	Air conditioning amplifier
CANL (E68-16)	W	Air conditioning amplifier
CANH (E68-1)	O	No. 3 junction connector
CANL (E68-12)	W	No. 3 junction connector

(c) No. 3 junction connector

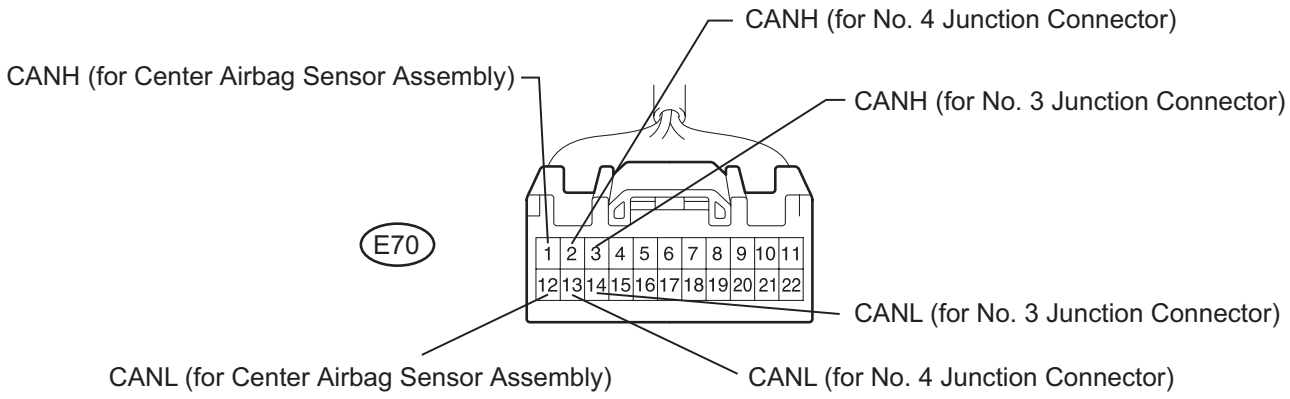

CA

No. 3 Junction Connector	Wiring Color	Connect to
CANH (E70-3)	O	No. 2 Junction Connector
CANL (E70-14)	W	No. 2 Junction Connector
CANH (E70-1)	B	Center airbag sensor assembly
CANL (E70-12)	W	Center airbag sensor assembly
CANH (E70-2)	V	No. 4 Junction Connector
CANL (E70-13)	W	No. 4 Junction Connector

(d) No. 4 junction connector

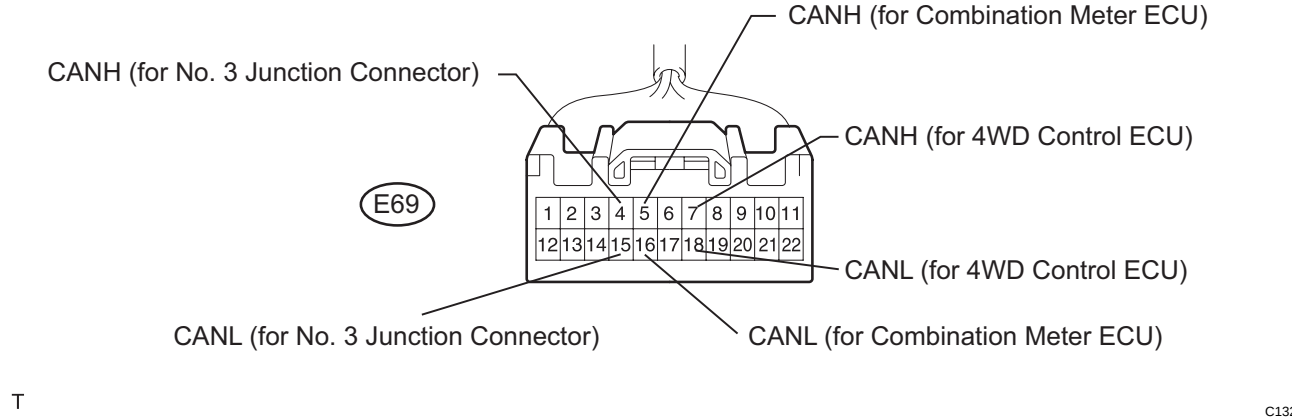

No. 4 Junction Connector	Wiring Color	Connect to
CANH (E69-4)	V	No. 3 Junction Connector
CANL (E69-15)	W	No. 3 Junction Connector
CANH (E69-7)	P	4WD control ECU*
CANL (E69-18)	W	4WD control ECU*
CANH (E69-5)	G	Combination meter ECU
CANL (E69-16)	W	Combination meter ECU

HINT:
*: for 4WD

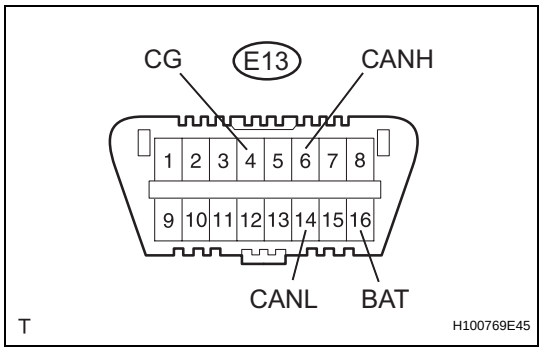

2. CHECK DLC3

(a) Measure the resistance of the connector.

Symbols (Terminal No.)	Wiring Color	Condition	Specified Condition
CANH (E13-6) - CANL (E13-14)	B - W	Ignition switch OFF	54 to 69 Ω
CANH (E13-6) - CG (E13-4)	B - BR	Ignition switch OFF	200 Ω or more
CANL (E13-14) - CG (E13-4)	W - BR	Ignition switch OFF	200 Ω or more
CANH (E13-6) - BAT (E13-16)	B - L	Ignition switch OFF	1 MΩ or more
CANL (E13-14) - BAT (E13-16)	W - L	Ignition switch OFF	1 MΩ or more

3. CHECK ABS AND TRACTION ACTUATOR (SKID CONTROL ECU)

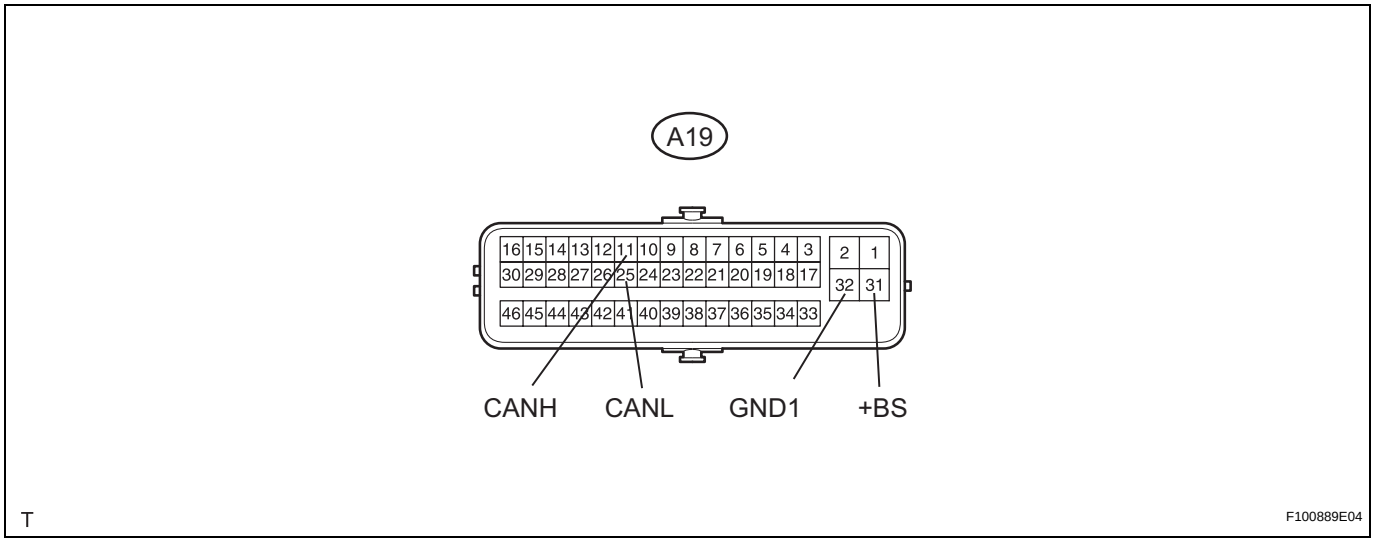

(a) Disconnect the A19 ECU connector.

(b) Measure the resistance of the wire harness side connector.

Symbols (Terminal No.)	Wiring Color	Condition	Specified Condition
CANH (A19-11) - CANL (A19-25)	R - W	Ignition switch OFF	54 to 69 Ω
CANH (A19-11) - GND1 (A19-32)	R - W-B	Ignition switch OFF	200 Ω or more
CANL (A19- 25) - GND1 (A19-32)	W - W-B	Ignition switch OFF	200 Ω or more
CANH (A19-11) - +BS (A19-31)	R - W	Ignition switch OFF	1 MΩ or more
CANL (A19-25) - +BS (A19-31)	W - W	Ignition switch OFF	1 MΩ or more

CA

4. CHECK STEERING ANGLE SENSOR

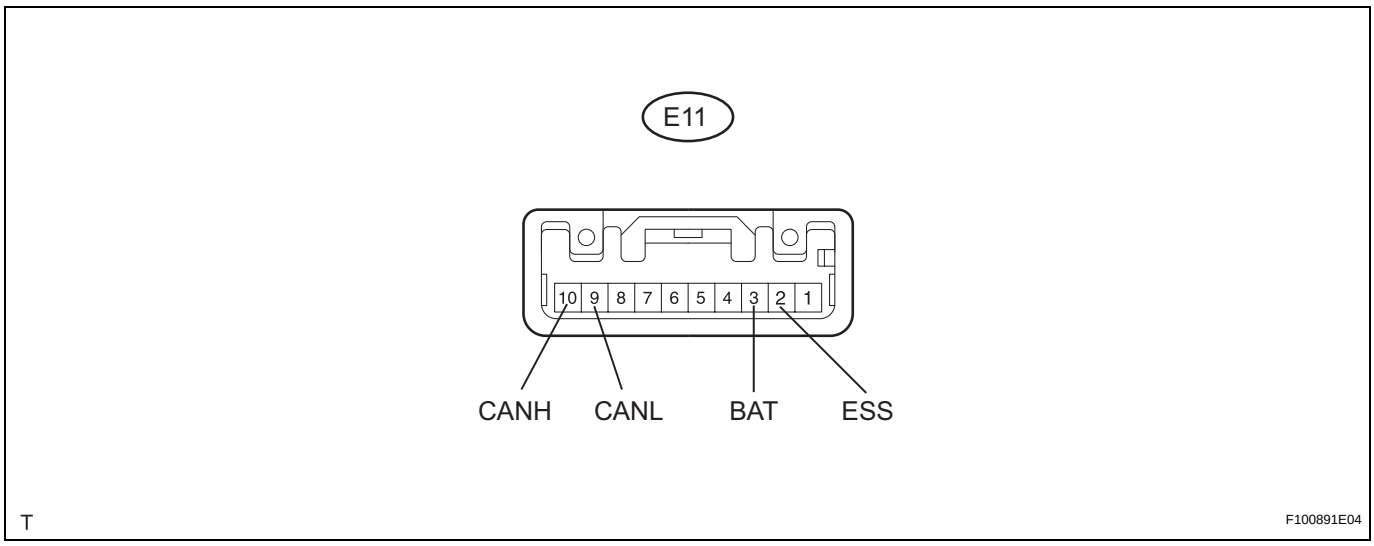

(a) Disconnect the E11 sensor connector.
(b) Measure the resistance of the wire harness side connector.

Symbols (Terminal No.)	Wiring Color	Condition	Specified Condition
CANH (E11-10) - CANL (E11-9)	BR - W	Ignition switch OFF	54 to 69 Ω
CANH (E11-10) - ESS (E11-2)	BR - W-B	Ignition switch OFF	200 Ω or more
CANL (E11-9) - ESS (E11-2)	W - W-B	Ignition switch OFF	200 Ω or more
CANH (E11-10) - BAT (E11-3)	BR - R	Ignition switch OFF	1 MΩ or more
CANL (E11-9) - BAT (E11-3)	W - R	Ignition switch OFF	1 MΩ or more

5. CHECK YAW RATE SENSOR

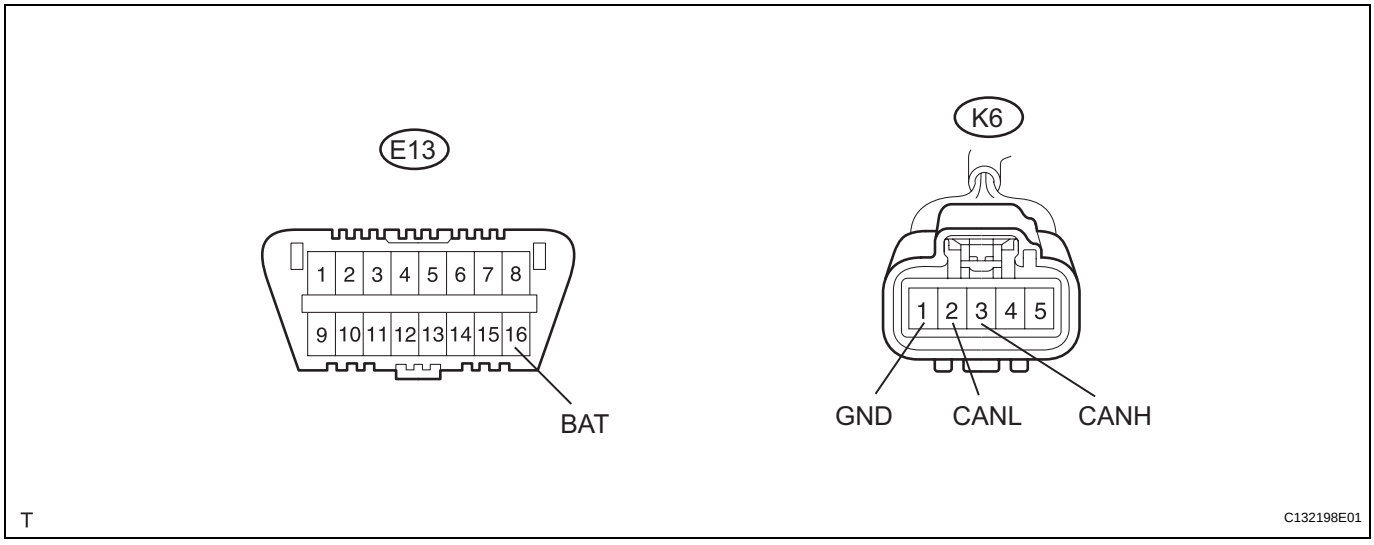

(a) Disconnect the K6 sensor connector.
(b) Measure the resistance of the wire harness side connector.

Symbols (Terminal No.)	Wiring Color	Condition	Specified Condition
CANH (K6-3) - CANL (K6-2)	L - W	Ignition switch OFF	54 to 69 Ω
CANH (K6-3) - GND (K6-1)	L - W-B	Ignition switch OFF	200 Ω or more
CANL (K6-2) - GND (K6-1)	W - W-B	Ignition switch OFF	200 Ω or more
CANH (K6-3) - BAT (E13-16)	L - L	Ignition switch OFF	1 MΩ or more
CANL (K6-2) - BAT (E13-16)	W - L	Ignition switch OFF	1 MΩ or more

6. CHECK AIR CONDITIONING AMPLIFIER (for AUTOMATIC AIR CONDITIONING SYSTEM)

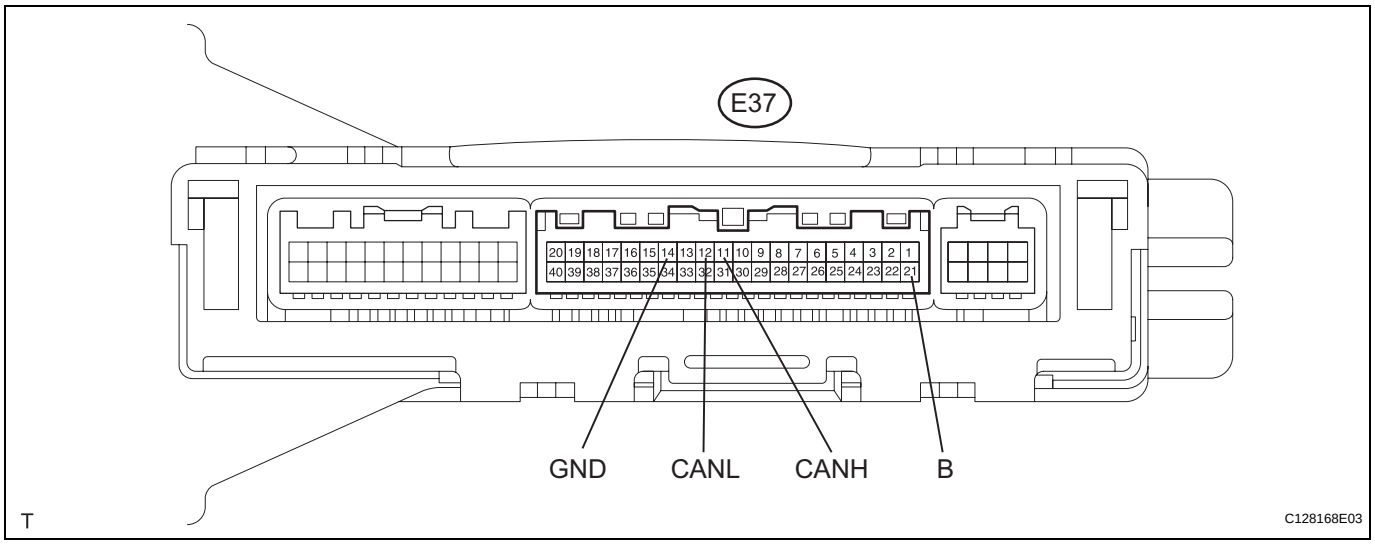

(a) Disconnect the E37 amplifier connector.
(b) Measure the resistance of the wire harness side connector.

Symbols (Terminal No.)	Wiring Color	Condition	Specified Condition
CANH (E37-11) - CANL (E37-12)	V - W	Ignition switch OFF	54 to 69 Ω
CANH (E37-11) - GND (E37-14)	V - W-B	Ignition switch OFF	200 Ω or more
CANL (E37-12) - GND (E37-14)	W - W-B	Ignition switch OFF	200 Ω or more
CANH (E37-11) - B (E37-21)	V - R	Ignition switch OFF	1 MΩ or more
CANL (E37-12) - B (E37-21)	W - R	Ignition switch OFF	1 MΩ or more

7. CHECK AIR CONDITIONING AMPLIFIER (for MANUAL AIR CONDITIONING SYSTEM)

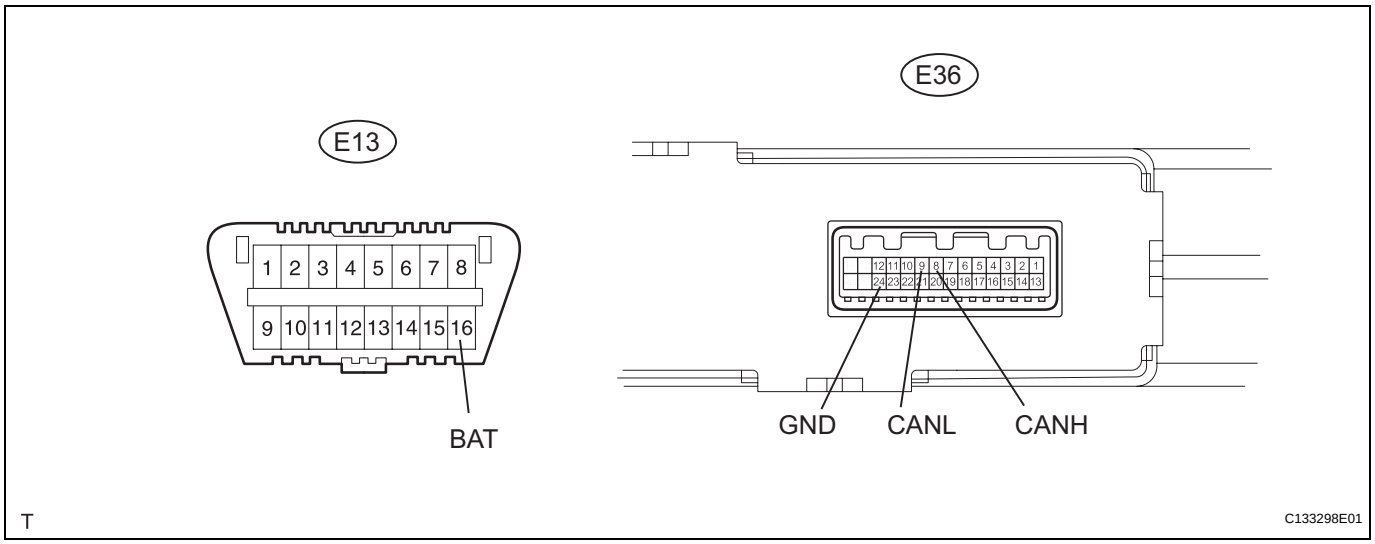

(a) Disconnect the E36 amplifier connector.
(b) Measure the resistance of the wire harness side connector.

Symbols (Terminal No.)	Wiring Color	Condition	Specified Condition
CANH (E36-8) - CANL (E36-9)	V - W	Ignition switch OFF	54 to 69 Ω
CANH (E36-8) - GND (E36-24)	V - W-B	Ignition switch OFF	200 Ω or more
CANL (E36-9) - GND (E36-24)	W - W-B	Ignition switch OFF	200 Ω or more

CA

Symbols (Terminal No.)	Wiring Color	Condition	Specified Condition
CANH (E36-8) - BAT (E13-16)	V - L	Ignition switch OFF	1 MΩ or more
CANH (E36-9) - BAT (E13-16)	W - L	Ignition switch OFF	1 MΩ or more

8. CHECK ECM

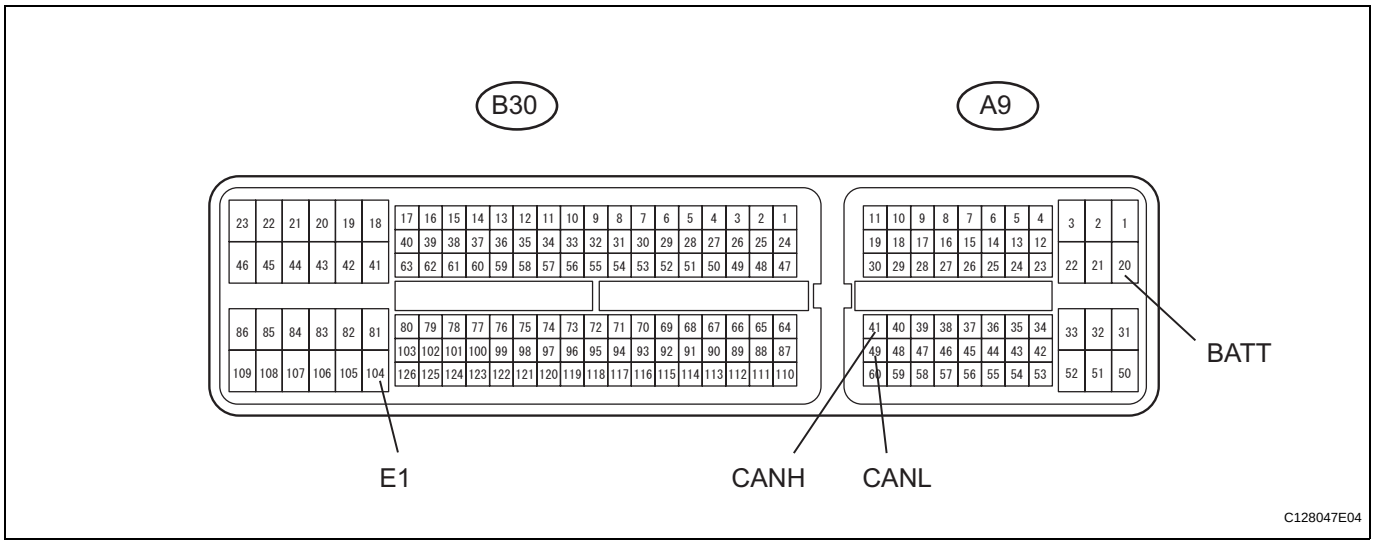

(a) Disconnect the A19 and B30 ECM connectors.
(b) Measure the resistance of the wire harness side connectors.

Symbols (Terminal No.)	Wiring Color	Condition	Specified Condition
CANH (A9-41) - CANL (A9-49)	Y - W	Ignition switch OFF	108 to 132 Ω
CANH (A9-41) - E1 (B30-104)	Y - BR	Ignition switch OFF	200 Ω or more
CANL (A9-49) - E1 (B30-104)	W - BR	Ignition switch OFF	200 Ω or more
CANH (A9-41) - BATT (A9-20)	Y - W	Ignition switch OFF	1 MΩ or more
CANL (A9-49) - BATT (A9-20)	W - W	Ignition switch OFF	1 MΩ or more

9. CHECK CENTER AIRBAG SENSOR ASSEMBLY

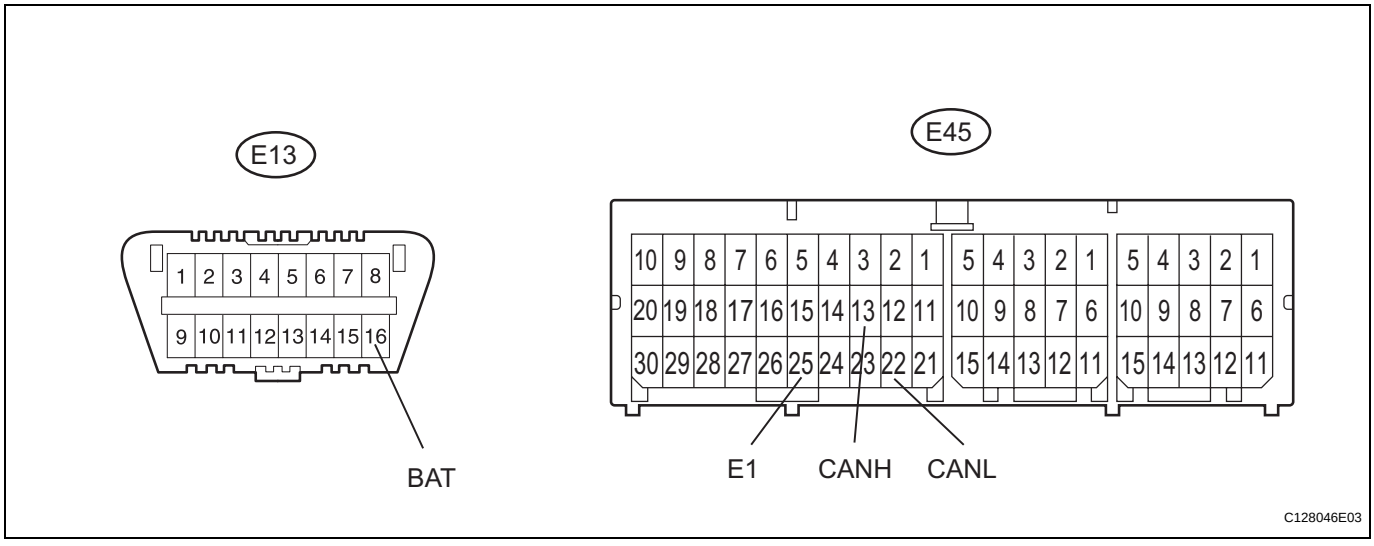

(a) Disconnect the E45 sensor connector.
(b) Measure the resistance of the wire harness side connectors.

Symbols (Terminal No.)	Wiring Color	Condition	Specified Condition
CANH (E45-13) - CANL (E45-22)	B - W	Ignition switch OFF	54 to 69 Ω

Symbols (Terminal No.)	Wiring Color	Condition	Specified Condition
CANH (E45-13 - E1 (E45-25)	B - W-B	Ignition switch OFF	200 Ω or more
CANL (E45-22) - E1 (E45-25)	W - W-B	Ignition switch OFF	200 Ω or more
CANH (E45-13) - BAT (E13-16)	B - L	Ignition switch OFF	1 MΩ or more
CANL (E45-22) - BAT (E13-16)	W - L	Ignition switch OFF	1 MΩ or more

10. CHECK POWER STEERING ECU

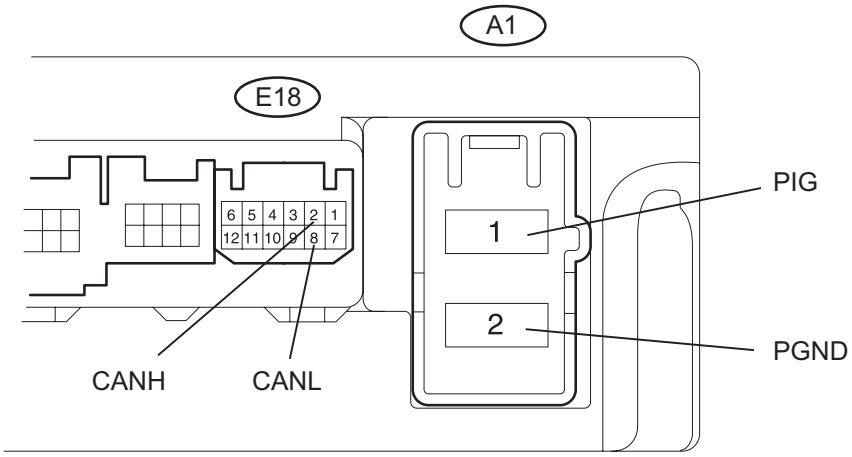

T C128167E02

(a) Disconnect the A1 and E18 ECU connectors.
(b) Measure the resistance of the wire harness side connectors.

Symbols (Terminal No.)	Wiring Color	Condition	Specified Condition
CANH (E18-2) - CANL (E18-8)	Y - W	Ignition switch OFF	54 to 69 Ω
CANH (E18-2) - PGND (A1-2)	Y - W-B	Ignition switch OFF	200 Ω or more
CANL (E18-8) - PGND (A1-2)	W - W-B	Ignition switch OFF	200 Ω or more
CANH (E18-2) - PIG (A1-1)	Y - W-B	Ignition switch OFF	1 MΩ or more
CANL (E18-8) - PIG (A1-1)	W - W-B	Ignition switch OFF	1 MΩ or more

11. CHECK COMBINATION METER ECU

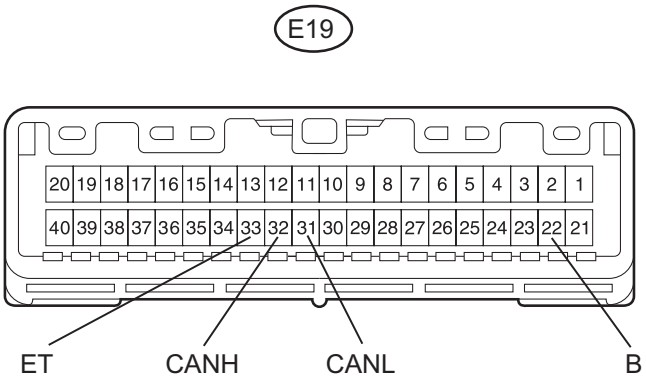

T C128516E04

(a) Disconnect the E19 ECU connector.

CA

(b) Measure the resistance of the wire harness side connector.

Symbols (Terminal No.)	Wiring Color	Condition	Specified Condition
CANH (E19-32) - CANL (E19-31)	G - W	Ignition switch OFF	108 to 132 Ω
CANH (E19-32) - CANL (E19-31)	G - BR	Ignition switch OFF	200 Ω or more
CANL (E19-31) - ET (E19-33)	W - BR	Ignition switch OFF	200 Ω or more
CANH (E19-32) - B (E19-22)	G - R	Ignition switch OFF	1 MΩ or more
CANL (E19-31) - B (E19-22)	W - R	Ignition switch OFF	1 MΩ or more

12. CHECK INSTRUMENT PANEL JUNCTION BLOCK (MAIN BODY ECU)

Vehicle Rear Side

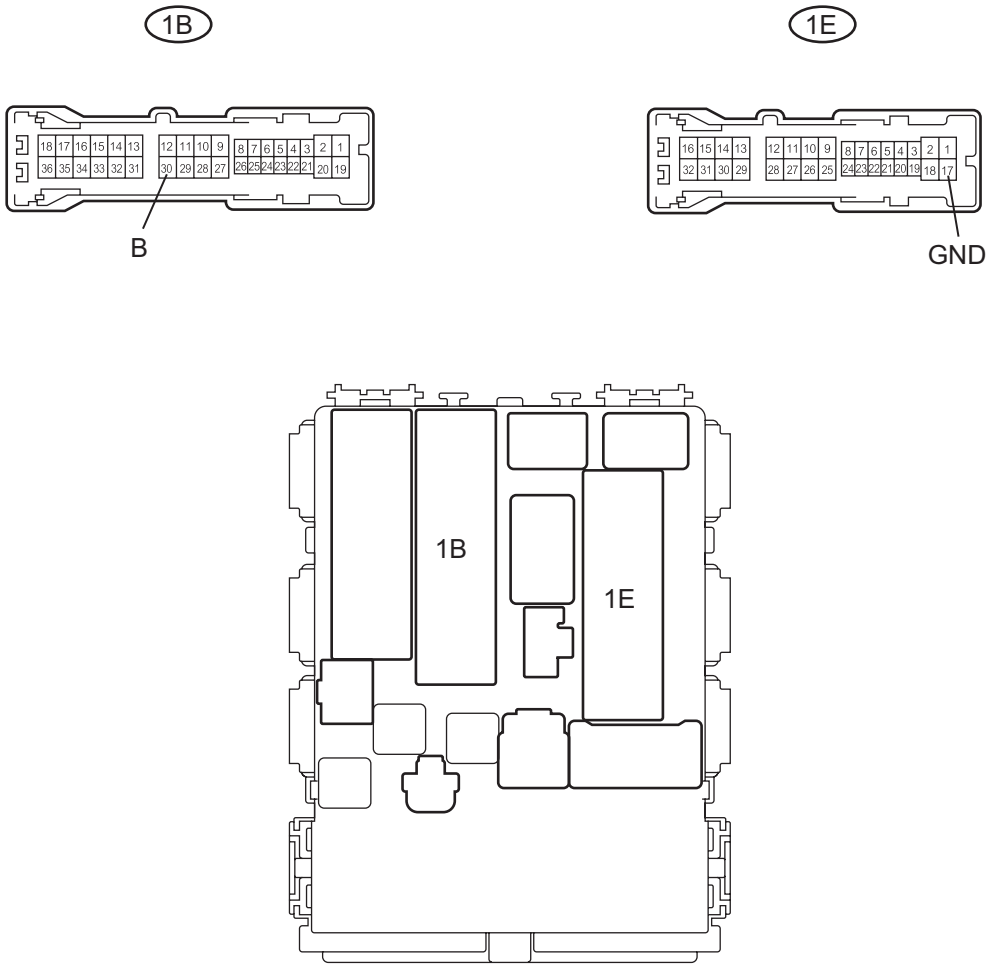

H

C129203E04

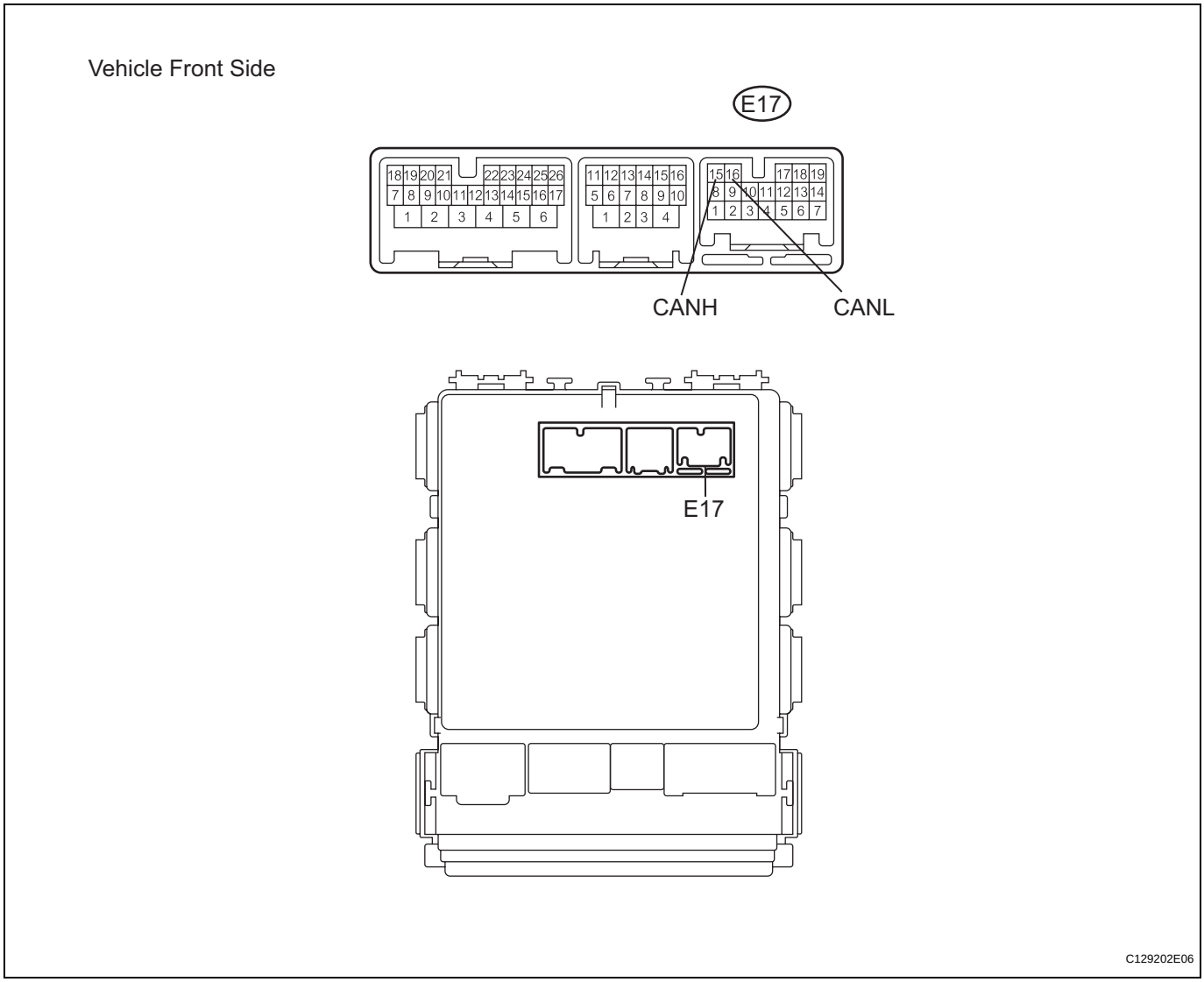

(a) Disconnect the 1B and 1E junction block connectors.
(b) Disconnect the E17 ECU connector.
(c) Measure the resistance of the wire harness side connectors.

Symbols (Terminal No.)	Wiring Color	Condition	Specified Condition
CANH (E17-15) - CANL (E17-16)	R - W	Ignition switch OFF	54 to 69 Ω
CANH (E17-15) - GND1 (1E-17)	R - W-B	Ignition switch OFF	200 Ω or more
CANL (E17-16) - GND1 (1E-17)	W - W-B	Ignition switch OFF	200 Ω or more
CANH (E17-15) - BECU (1B-30)	R - R	Ignition switch OFF	1 MΩ or more
CANL (E17-16) - BECU (1B-30)	W - R	Ignition switch OFF	1 MΩ or more

CA

13. CHECK 4WD CONTROL ECU (for 4WD)

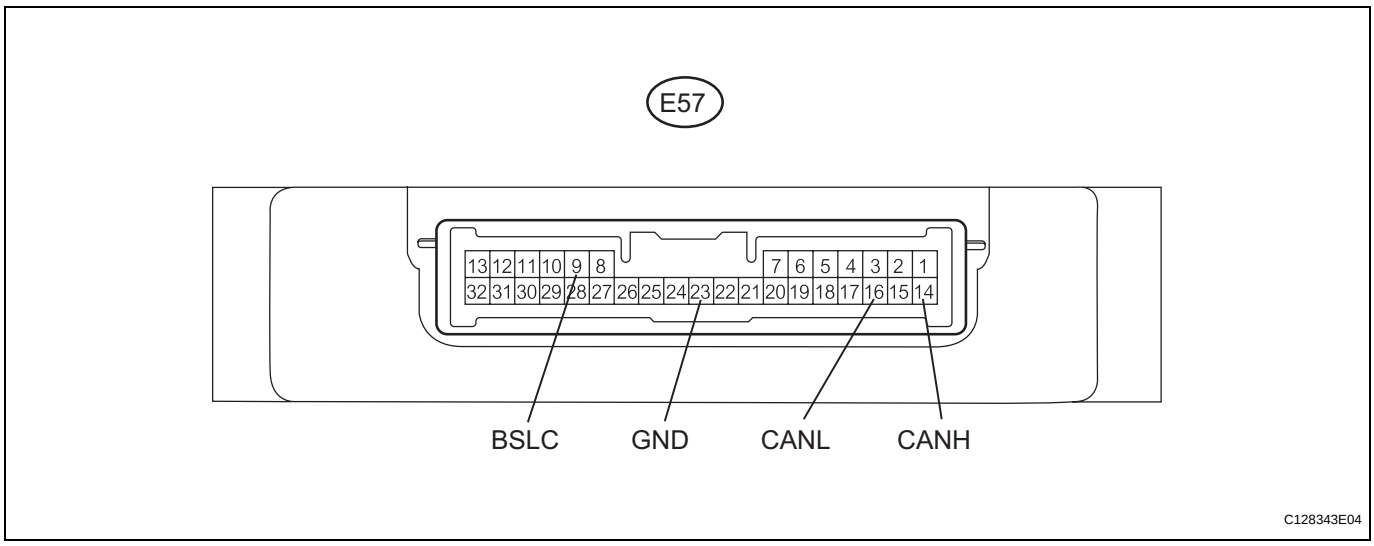

CA

(a) Disconnect the E57 ECU connector.
(b) Measure the resistance of the wire harness side connector.

Symbols (Terminal No.)	Wiring Color	Condition	Specified Condition
CANH (E57-14) - CANL (E57-16)	P - W	Ignition switch OFF	54 to 69 Ω
CANH (E57-14) - GND (E57-23)	P - W-B	Ignition switch OFF	200 Ω or more
CANL (E57-16) - GND (E57-23)	W - W-B	Ignition switch OFF	200 Ω or more
CANH (E57-14) - BSLC (E57-9)	P - R	Ignition switch OFF	1 MΩ or more
CANL (E57-16) - BSLC (E57-9)	W -R	Ignition switch OFF	1 MΩ or more

TERMINALS OF ECU

(2006/01-)

NOTICE:

- **Turn the ignition switch OFF before measuring the resistances of the main wire and branch wire.**
- **After the ignition switch is turned OFF, check that the key reminder warning system and light reminder warning system are not in operation.**
- **Before measuring the resistance, leave the vehicle as is for at least 1 minute and do not operate the ignition switch, any other switches or the doors. If doors need to be opened in order to check connectors, open the doors and leave them open.**

HINT:

Operating the ignition switch, any other switches or the doors triggers related ECU and sensor communication with the CAN, which causes resistance variation.

1. JUNCTION CONNECTOR

(a) No. 1 junction connector

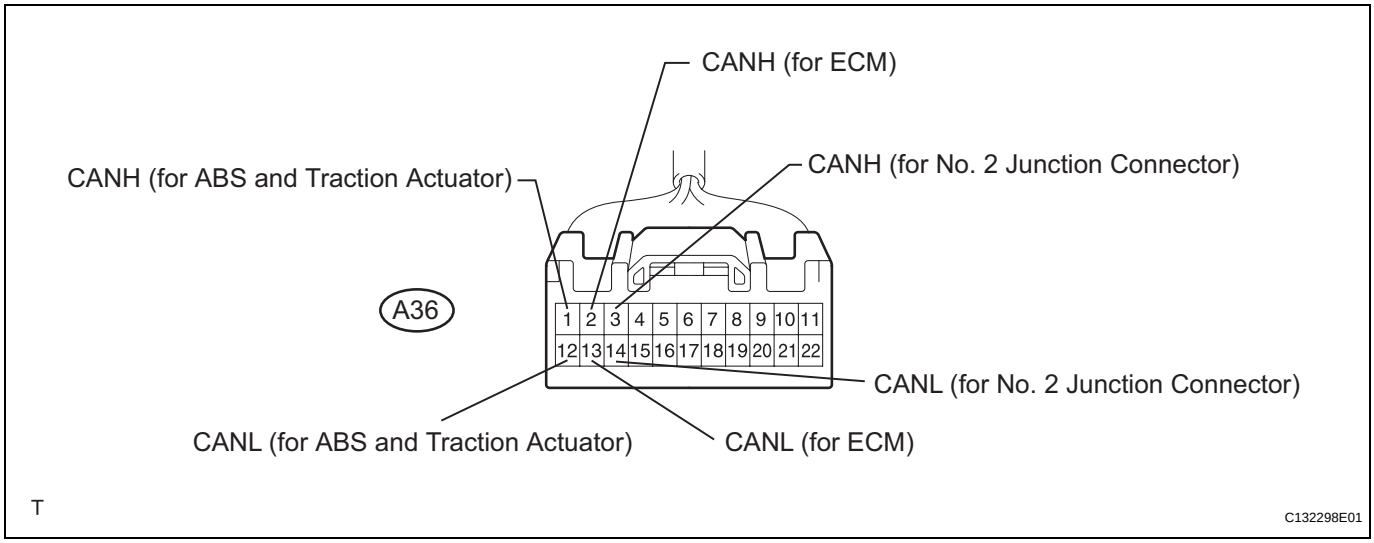

No. 1 Junction Connector	Wiring Color	Connect to
CANH (A36-1)	R	ABS and traction actuator (skid control ECU)
CANL (A36-12)	W	ABS and traction actuator (skid control ECU)
CANH (A36-2)	Y	ECM
CANL (A36-13)	W	ECM
CANH (A36-3)	L	No. 2 junction connector
CANL (A36-14)	W	No. 2 junction connector

(b) No. 2 junction connector

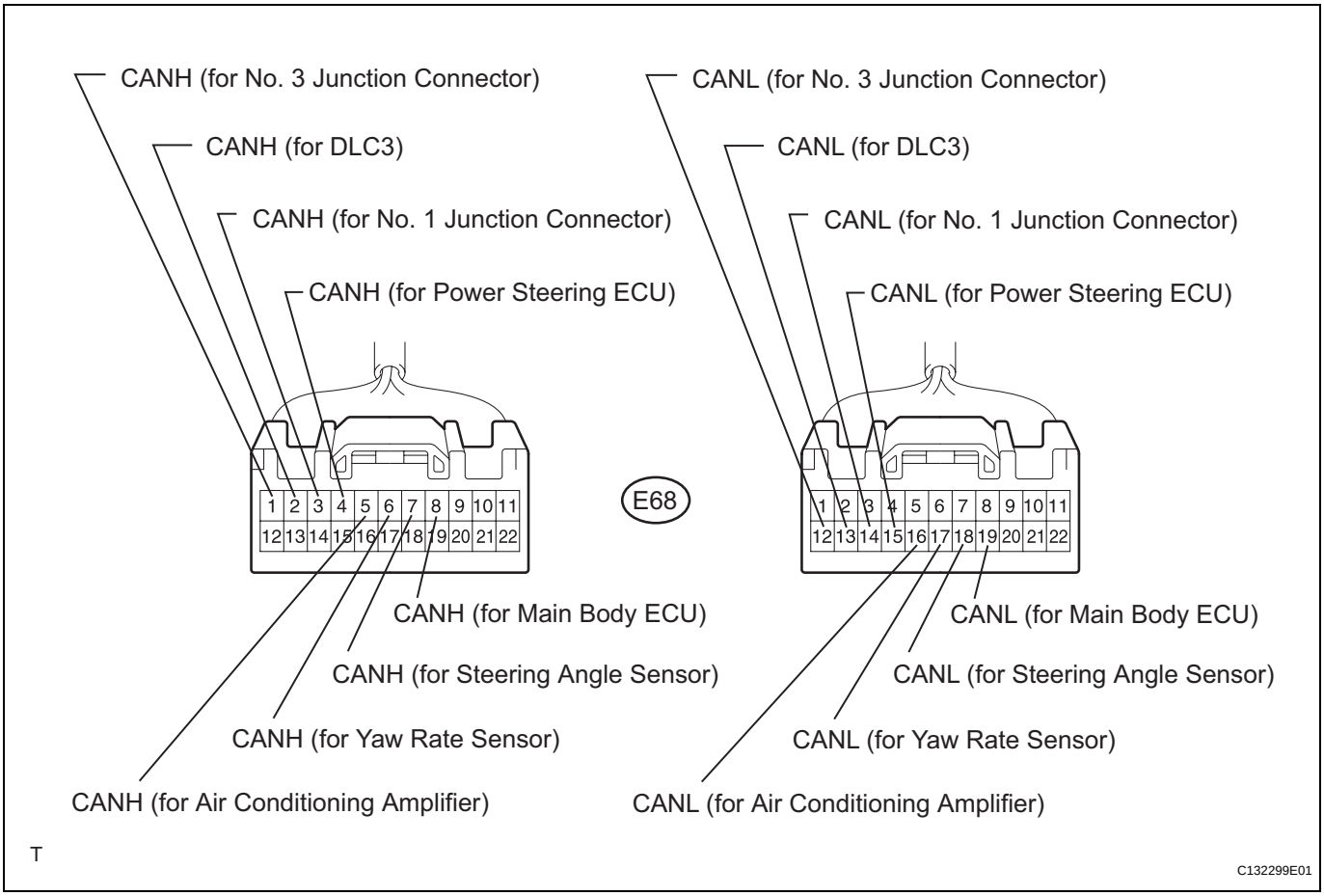

No. 2 Junction Connector	Wiring Color	Connect to
CANH (E68-3)	L	No. 1 junction connector
CANL (E68-14)	W	No. 1 junction connector
CANH (E68-6)	L	Yaw rate sensor
CANL (E68-17)	W	Yaw rate sensor
CANH (E68-4)	Y	Power steering ECU
CANL (E68-15)	W	Power steering ECU
CANH (E68-8)	R	Main body ECU
CANL (E68-19)	W	Main body ECU
CANH (E68-7)	BR	Steering angle sensor
CANL (E68-18)	W	Steering angle sensor
CANH (E68-2)	B	DLC3
CANL (E68-13)	W	DLC3
CANH (E68-5)	V	Air conditioning amplifier
CANL (E68-16)	W	Air conditioning amplifier
CANH (E68-1)	O	No. 3 junction connector
CANL (E68-12)	W	No. 3 junction connector

(c) No. 3 junction connector

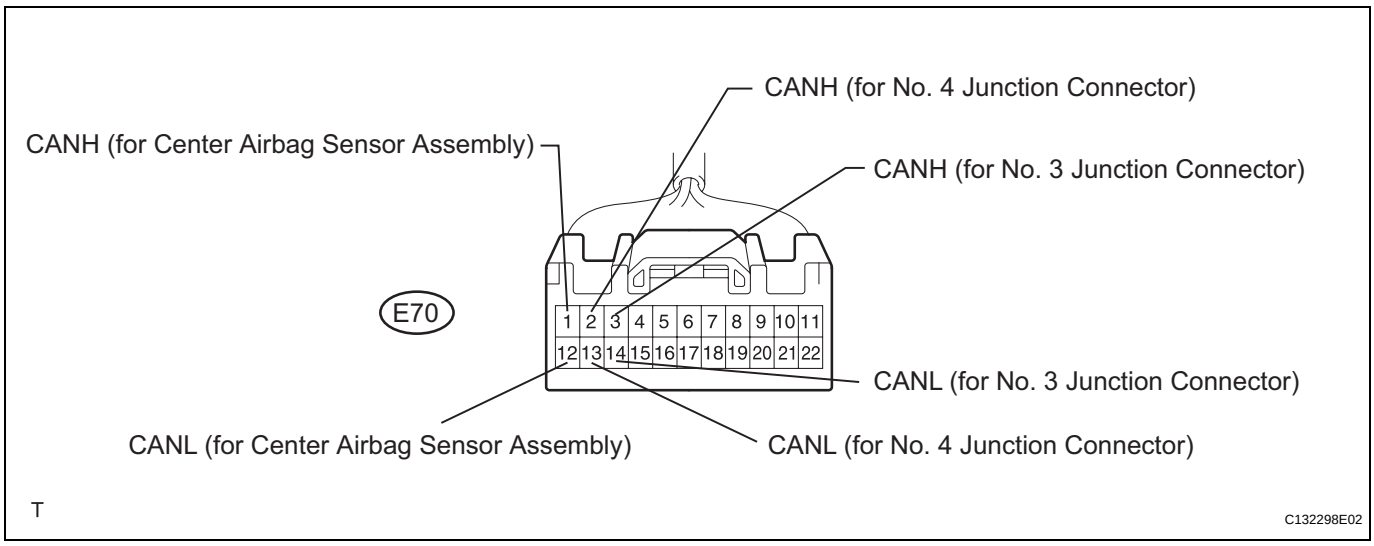

No. 3 Junction Connector	Wiring Color	Connect to
CANH (E70-3)	O	No. 2 junction connector
CANL (E70-14)	W	No. 2 junction connector
CANH (E70-1)	B	Center airbag sensor assembly
CANL (E70-12)	W	Center airbag sensor assembly
CANH (E70-2)	V	No. 4 junction connector
CANL (E70-13)	W	No. 4 junction connector

(d) No. 4 junction connector

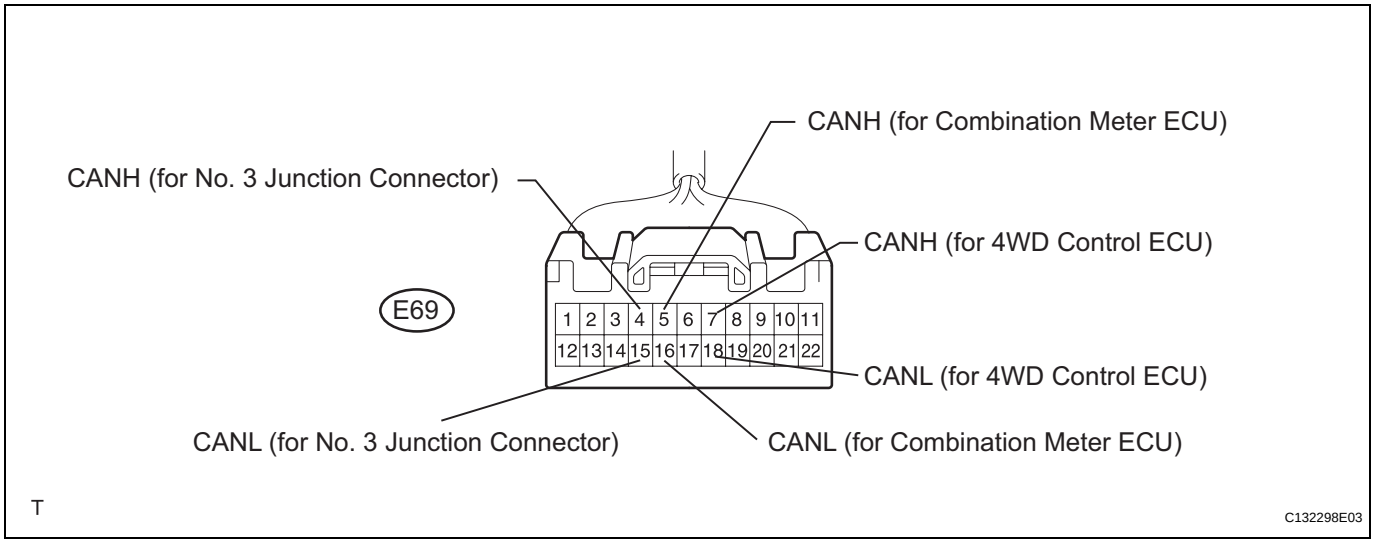

No. 4 Junction Connector	Wiring Color	Connect to
CANH (E69-4)	V	No. 3 junction connector
CANL (E69-15)	W	No. 3 junction connector
CANH (E69-7)	P	4WD control ECU*
CANL (E69-18)	W	4WD control ECU*
CANH (E69-5)	G	Combination meter ECU
CANL (E69-16)	W	Combination meter ECU

HINT:
*: for 4WD

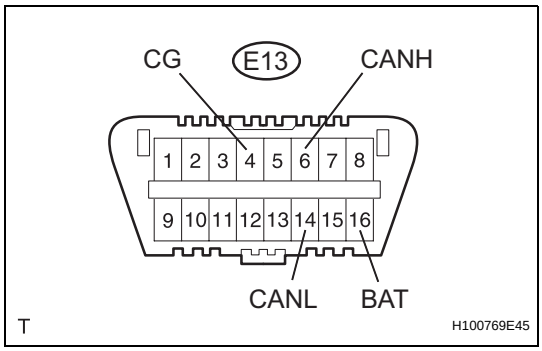

2. CHECK DLC3

(a) Measure the resistance of the connector.

Symbols (Terminal No.)	Wiring Color	Condition	Specified Condition
CANH (E13-6) - CANL (E13-14)	B - W	Ignition switch OFF	54 to 69 Ω
CANH (E13-6) - CG (E13-4)	B - BR	Ignition switch OFF	200 Ω or more
CANL (E13-14) - CG (E13-4)	W - BR	Ignition switch OFF	200 Ω or more
CANH (E13-6) - BAT (E13-16)	B - L	Ignition switch OFF	1 MΩ or more
CANL (E13-14) - BAT (E13-16)	W - L	Ignition switch OFF	1 MΩ or more

CA

3. CHECK ABS AND TRACTION ACTUATOR (SKID CONTROL ECU)

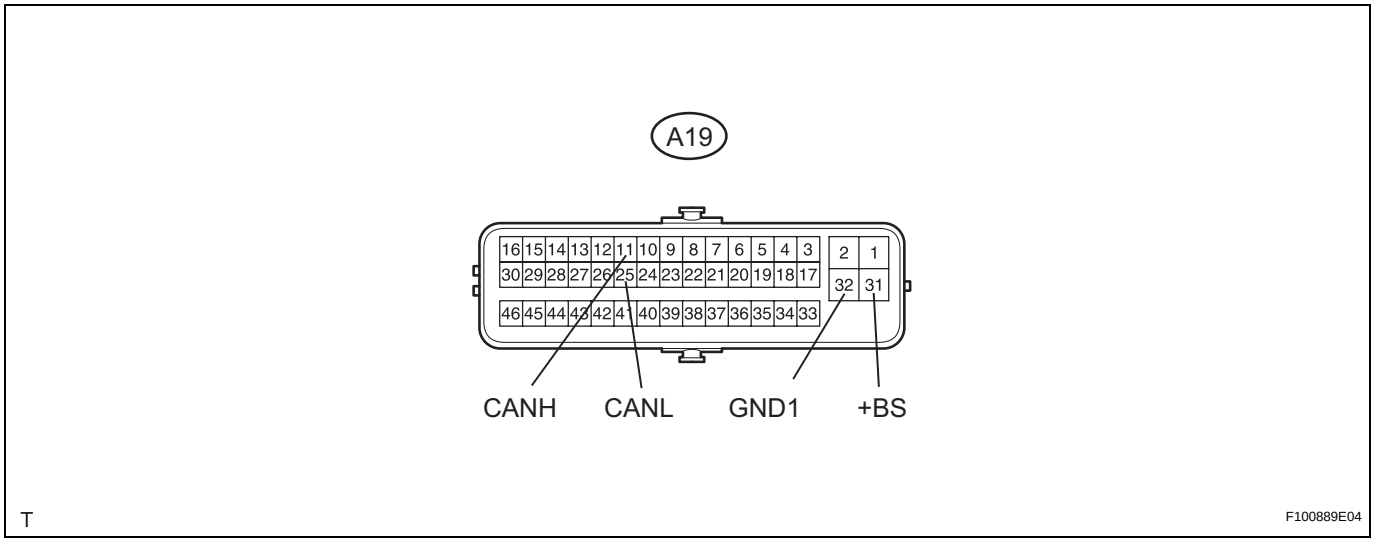

(a) Disconnect the A19 ECU connector.

(b) Measure the resistance of the wire harness side connector.

Symbols (Terminal No.)	Wiring Color	Condition	Specified Condition
CANH (A19-11) - CANL (A19-25)	R - W	Ignition switch OFF	54 to 69 Ω
CANH (A19-11) - GND1 (A19-32)	R - W-B	Ignition switch OFF	200 Ω or more
CANL (A19- 25) - GND1 (A19-32)	W - W-B	Ignition switch OFF	200 Ω or more
CANH (A19-11) - +BS (A19-31)	R - W	Ignition switch OFF	1 MΩ or more
CANL (A19-25) - +BS (A19-31)	W - W	Ignition switch OFF	1 MΩ or more

4. CHECK STEERING ANGLE SENSOR

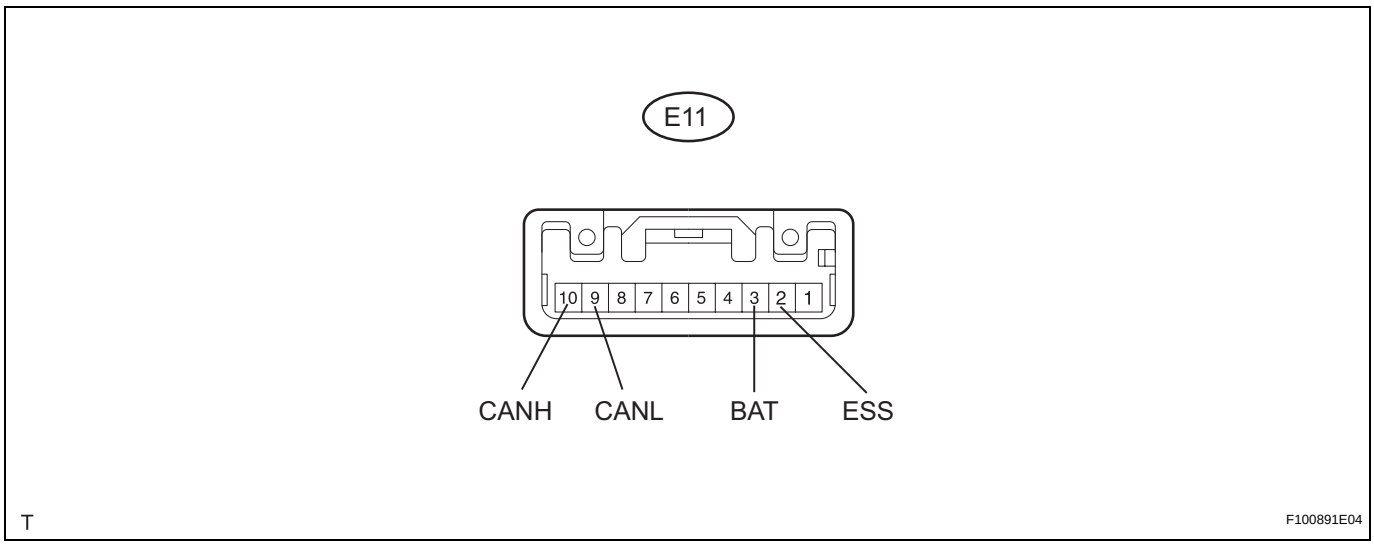

(a) Disconnect the E11 sensor connector.
(b) Measure the resistance of the wire harness side connector.

Symbols (Terminal No.)	Wiring Color	Condition	Specified Condition
CANH (E11-10) - CANL (E11-9)	BR - W	Ignition switch OFF	54 to 69 Ω
CANH (E11-10) - ESS (E11-2)	BR - W-B	Ignition switch OFF	200 Ω or more
CANL (E11-9) - ESS (E11-2)	W - W-B	Ignition switch OFF	200 Ω or more
CANH (E11-10) - BAT (E11-3)	BR - R	Ignition switch OFF	1 MΩ or more
CANL (E11-9) - BAT (E11-3)	W - R	Ignition switch OFF	1 MΩ or more

5. CHECK YAW RATE SENSOR

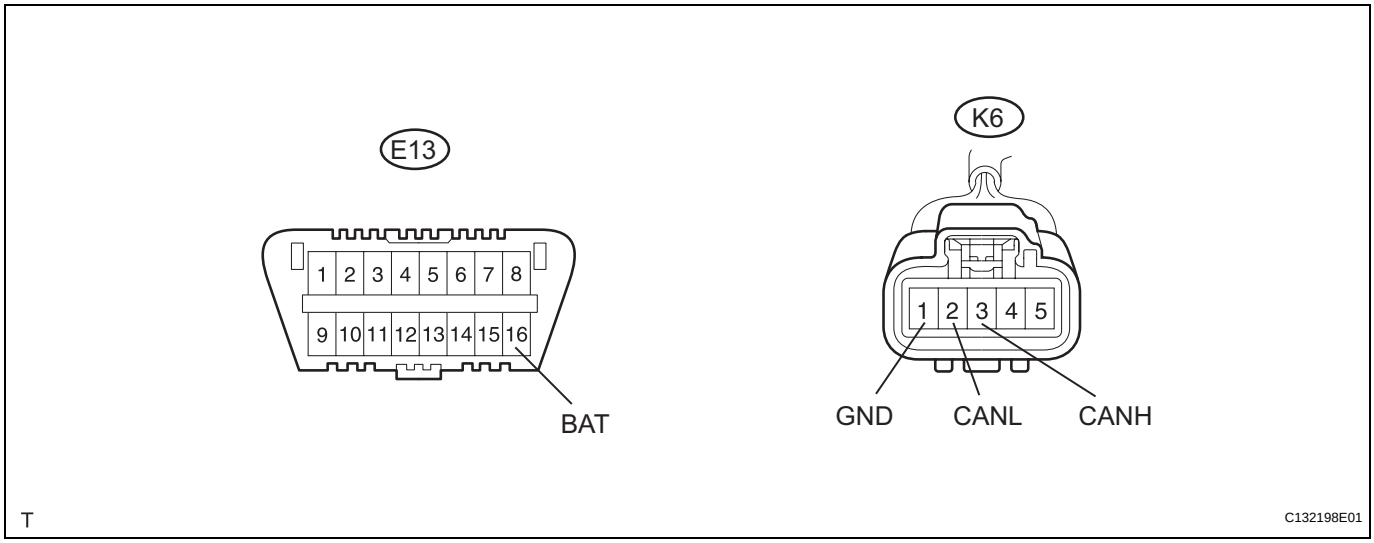

(a) Disconnect the K6 sensor connector.
(b) Measure the resistance of the wire harness side connector.

Symbols (Terminal No.)	Wiring Color	Condition	Specified Condition
CANH (K6-3) - CANL (K6-2)	L - W	Ignition switch OFF	54 to 69 Ω
CANH (K6-3) - GND (K6-1)	L - W-B	Ignition switch OFF	200 Ω or more
CANL (K6-2) - GND (K6-1)	W - W-B	Ignition switch OFF	200 Ω or more
CANH (K6-3) - BAT (E13-16)	L - L	Ignition switch OFF	1 MΩ or more
CANL (K6-2) - BAT (E13-16)	W - L	Ignition switch OFF	1 MΩ or more

6. CHECK AIR CONDITIONING AMPLIFIER (for Automatic Air Conditioning System)

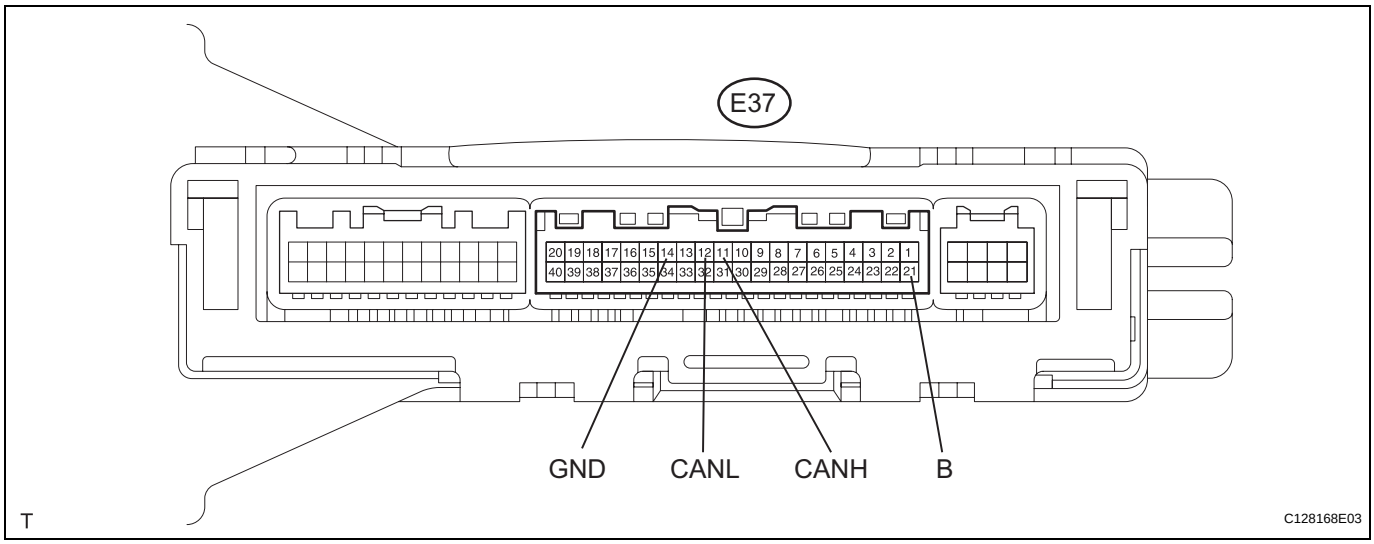

(a) Disconnect the E37 amplifier connector.
(b) Measure the resistance of the wire harness side connector.

Symbols (Terminal No.)	Wiring Color	Condition	Specified Condition
CANH (E37-11) - CANL (E37-12)	V - W	Ignition switch OFF	54 to 69 Ω
CANH (E37-11) - GND (E37-14)	V - W-B	Ignition switch OFF	200 Ω or more
CANL (E37-12) - GND (E37-14)	W - W-B	Ignition switch OFF	200 Ω or more
CANH (E37-11) - B (E37-21)	V - R	Ignition switch OFF	1 MΩ or more
CANL (E37-12) - B (E37-21)	W - R	Ignition switch OFF	1 MΩ or more

7. CHECK AIR CONDITIONING AMPLIFIER (for Manual Air Conditioning System)

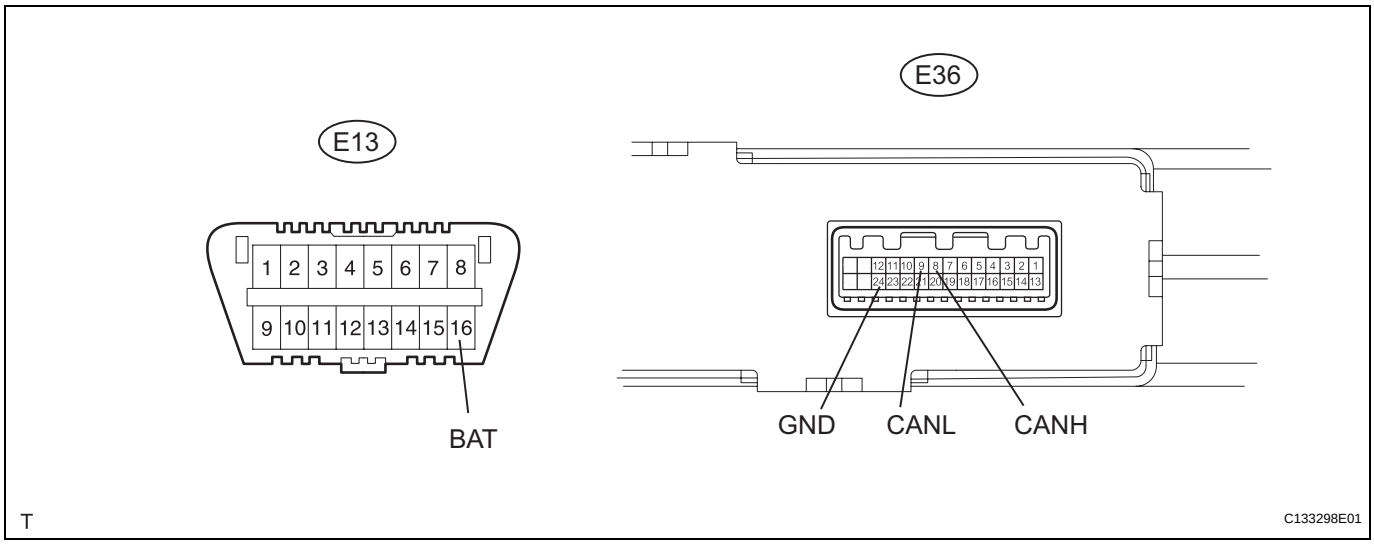

(a) Disconnect the E36 amplifier connector.
(b) Measure the resistance of the wire harness side connector.

Symbols (Terminal No.)	Wiring Color	Condition	Specified Condition
CANH (E36-8) - CANL (E36-9)	V - W	Ignition switch OFF	54 to 69 Ω
CANH (E36-8) - GND (E36-24)	V - W-B	Ignition switch OFF	200 Ω or more
CANL (E36-9) - GND (E36-24)	W - W-B	Ignition switch OFF	200 Ω or more

Symbols (Terminal No.)	Wiring Color	Condition	Specified Condition
CANH (E36-8) - BAT (E13-16)	V - L	Ignition switch OFF	1 MΩ or more
CANH (E36-9) - BAT (E13-16)	W - L	Ignition switch OFF	1 MΩ or more

8. CHECK ECM

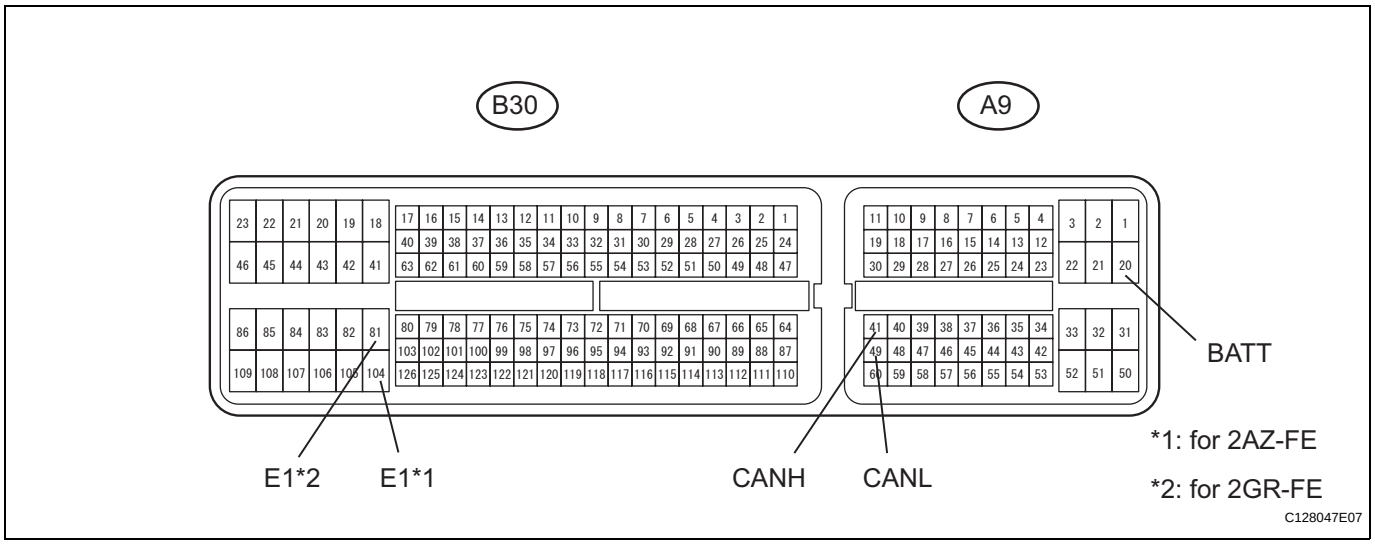

(a) Disconnect the A9 and B30 ECM connectors.
(b) Measure the resistance of the wire harness side connectors.

Symbols (Terminal No.)	Wiring Color	Condition	Specified Condition
CANH (A9-41) - CANL (A9-49)	Y - W	Ignition switch OFF	108 to 132 Ω
CANH (A9-41) - E1 (B30-104)*1	Y - BR	Ignition switch OFF	200 Ω or more
CANL (A9-49) - E1 (B30-104)*1	W - BR	Ignition switch OFF	200 Ω or more
CANH (A9-41) - E1 (B30-81)*2	Y - BR	Ignition switch OFF	200 Ω or more
CANL (A9-49) - E1 (B30-81)*2	W - BR	Ignition switch OFF	200 Ω or more
CANH (A9-41) - BATT (A9-20)	Y - W	Ignition switch OFF	1 MΩ or more
CANL (A9-49) - BATT (A9-20)	W - W	Ignition switch OFF	1 MΩ or more

HINT:
*1: for 2AZ-FE
*2: for 2GR-FE

9. CHECK CENTER AIRBAG SENSOR ASSEMBLY

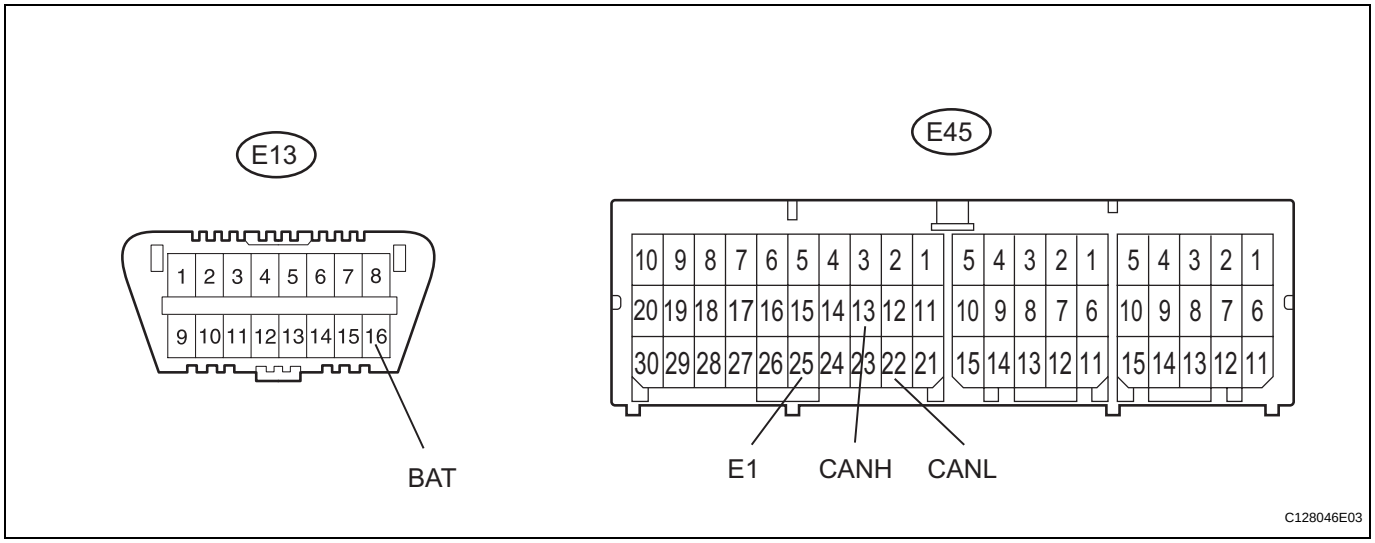

CA

(a) Disconnect the E45 sensor connector.
(b) Measure the resistance of the wire harness side connectors.

Symbols (Terminal No.)	Wiring Color	Condition	Specified Condition
CANH (E45-13) - CANL (E45-22)	B - W	Ignition switch OFF	54 to 69 Ω
CANH (E45-13 - E1 (E45-25)	B - W-B	Ignition switch OFF	200 Ω or more
CANL (E45-22) - E1 (E45-25)	W - W-B	Ignition switch OFF	200 Ω or more
CANH (E45-13) - BAT (E13-16)	B - L	Ignition switch OFF	1 MΩ or more
CANL (E45-22) - BAT (E13-16)	W - L	Ignition switch OFF	1 MΩ or more

10. CHECK POWER STEERING ECU

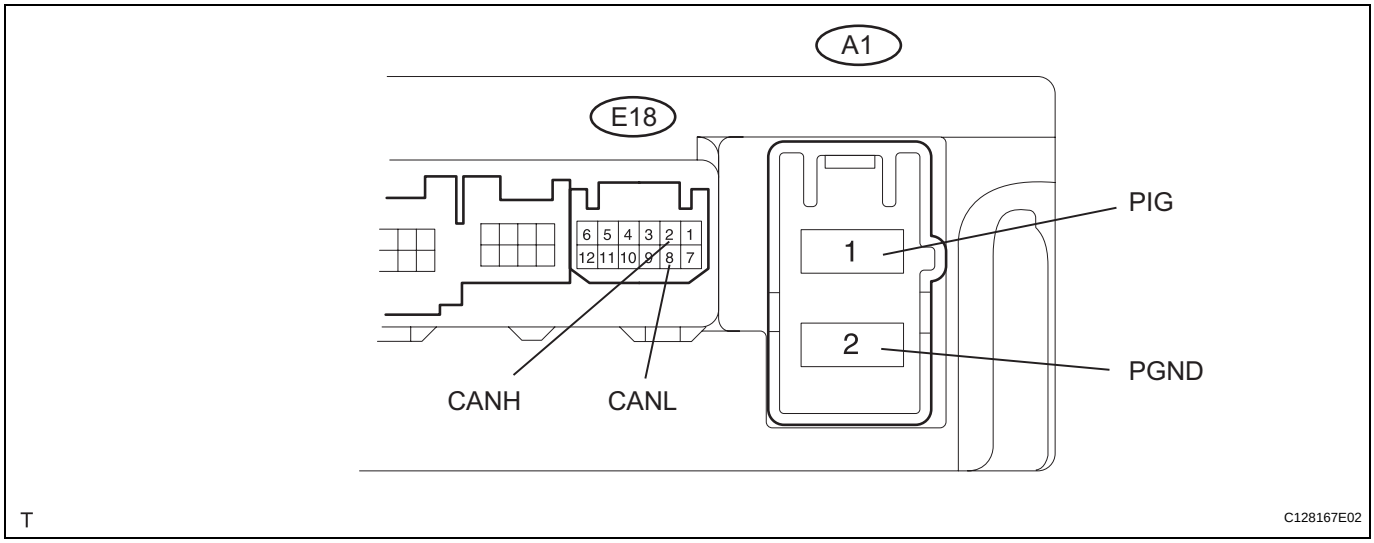

(a) Disconnect the A1 and E18 ECU connectors.
(b) Measure the resistance of the wire harness side connectors.

Symbols (Terminal No.)	Wiring Color	Condition	Specified Condition
CANH (E18-2) - CANL (E18-8)	Y - W	Ignition switch OFF	54 to 69 Ω
CANH (E18-2) - PGND (A1-2)	Y - W-B	Ignition switch OFF	200 Ω or more
CANL (E18-8) - PGND (A1-2)	W - W-B	Ignition switch OFF	200 Ω or more
CANH (E18-2) - PIG (A1-1)	Y - W-B	Ignition switch OFF	1 MΩ or more
CANL (E18-8) - PIG (A1-1)	W - W-B	Ignition switch OFF	1 MΩ or more

11. CHECK COMBINATION METER ECU

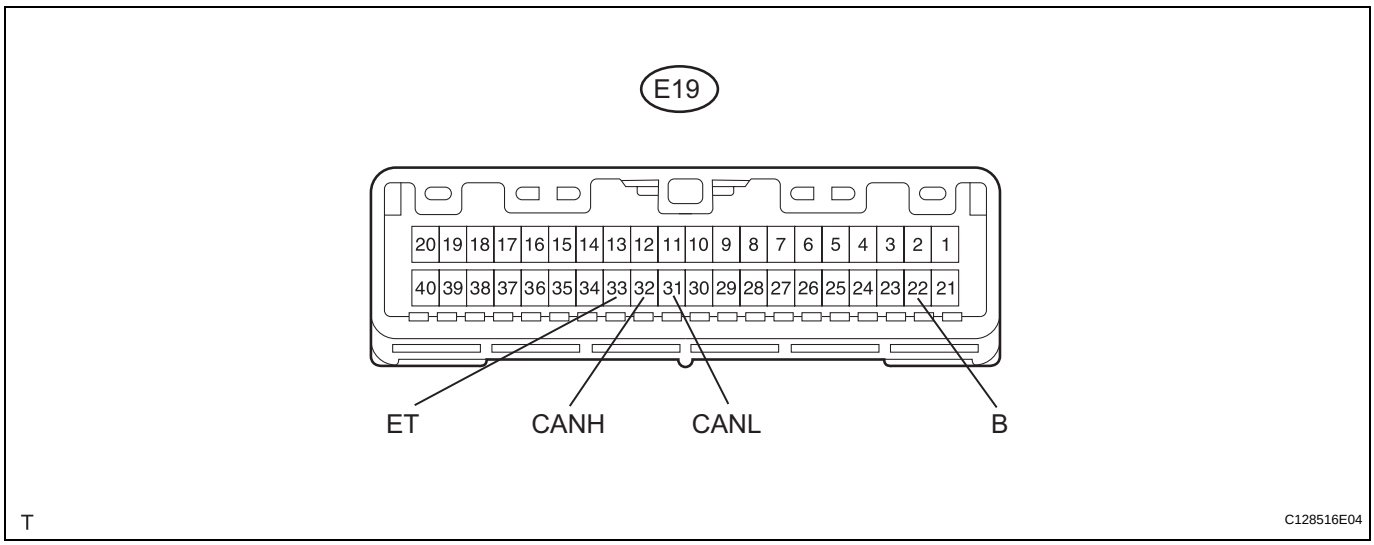

(a) Disconnect the E19 ECU connector.
(b) Measure the resistance of the wire harness side connector.

CA

Symbols (Terminal No.)	Wiring Color	Condition	Specified Condition
CANH (E19-32) - CANL (E19-31)	G - W	Ignition switch OFF	108 to 132 Ω
CANH (E19-32) - CANL (E19-31)	G - BR	Ignition switch OFF	200 Ω or more
CANL (E19-31) - ET (E19-33)	W - BR	Ignition switch OFF	200 Ω or more
CANH (E19-32) - B (E19-22)	G - R	Ignition switch OFF	1 MΩ or more
CANL (E19-31) - B (E19-22)	W - R	Ignition switch OFF	1 MΩ or more

12. CHECK INSTRUMENT PANEL JUNCTION BLOCK (MAIN BODY ECU)

Vehicle Rear Side

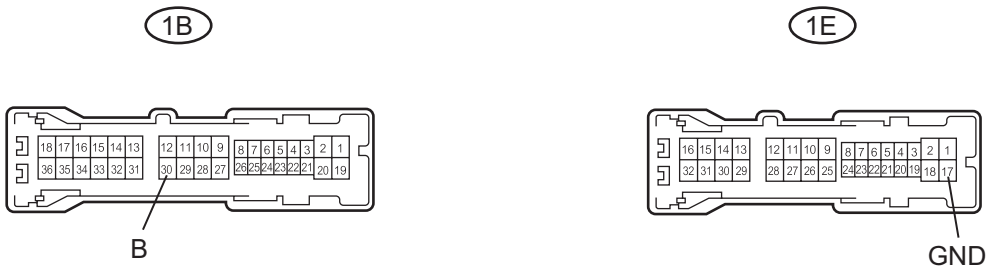

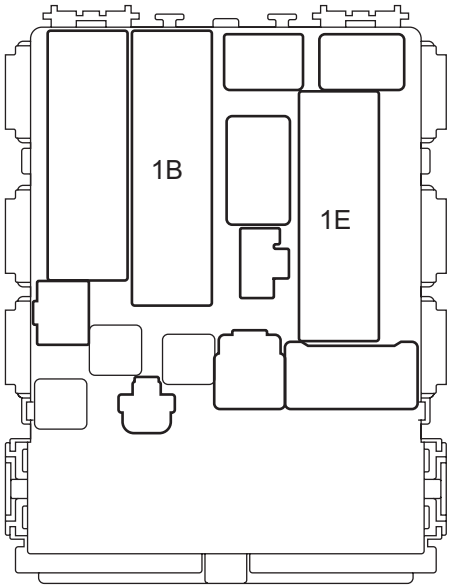

CA

H

C129203E04

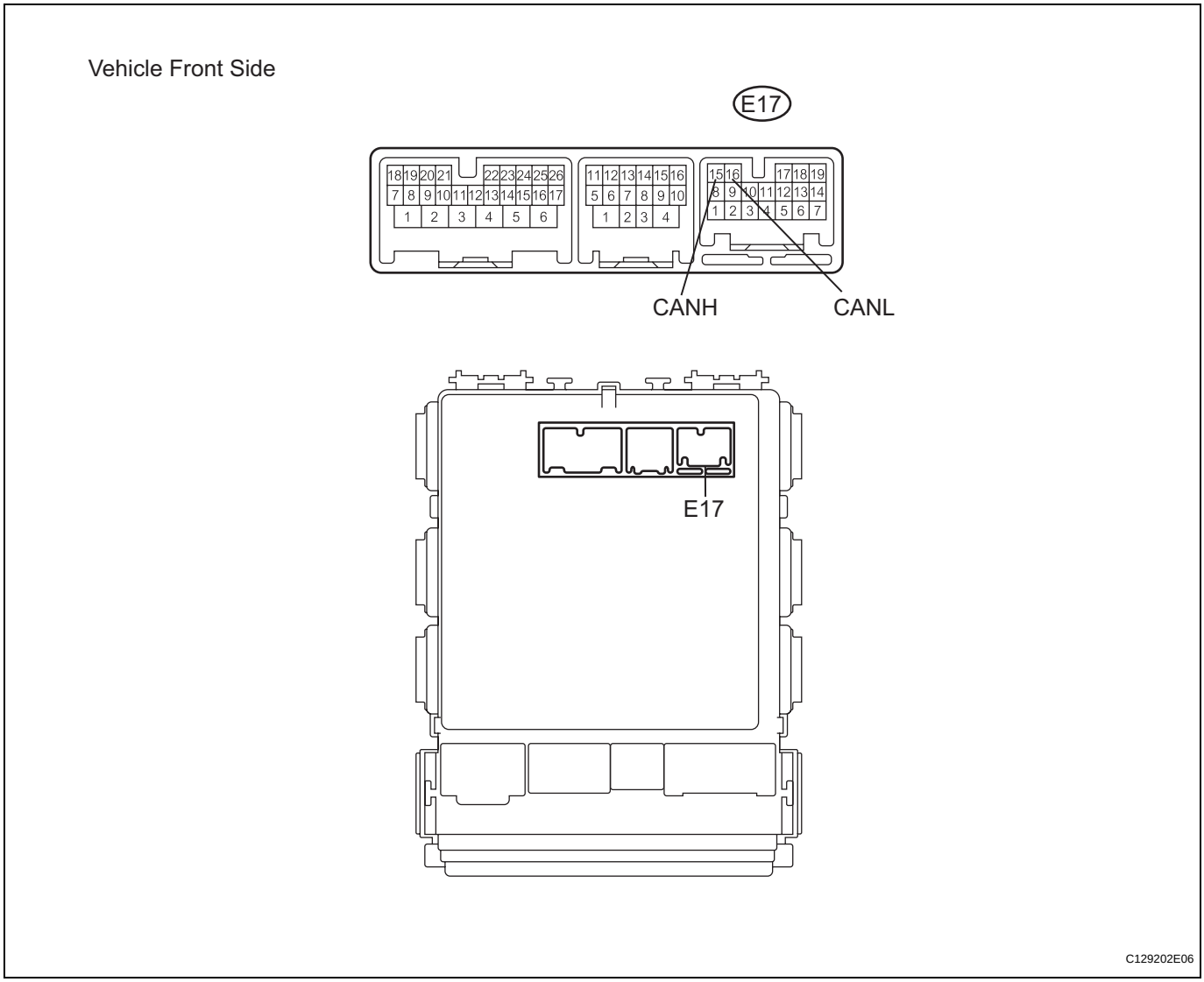

(a) Disconnect the 1B and 1E junction block connectors.
(b) Disconnect the E17 ECU connector.
(c) Measure the resistance of the wire harness side connectors.

Symbols (Terminal No.)	Wiring Color	Condition	Specified Condition
CANH (E17-15) - CANL (E17-16)	R - W	Ignition switch OFF	54 to 69 Ω
CANH (E17-15) - GND1 (1E-17)	R - W-B	Ignition switch OFF	200 Ω or more
CANL (E17-16) - GND1 (1E-17)	W - W-B	Ignition switch OFF	200 Ω or more
CANH (E17-15) - BECU (1B-30)	R - R	Ignition switch OFF	1 MΩ or more
CANL (E17-16) - BECU (1B-30)	W - R	Ignition switch OFF	1 MΩ or more

13. CHECK 4WD CONTROL ECU (for 4WD)

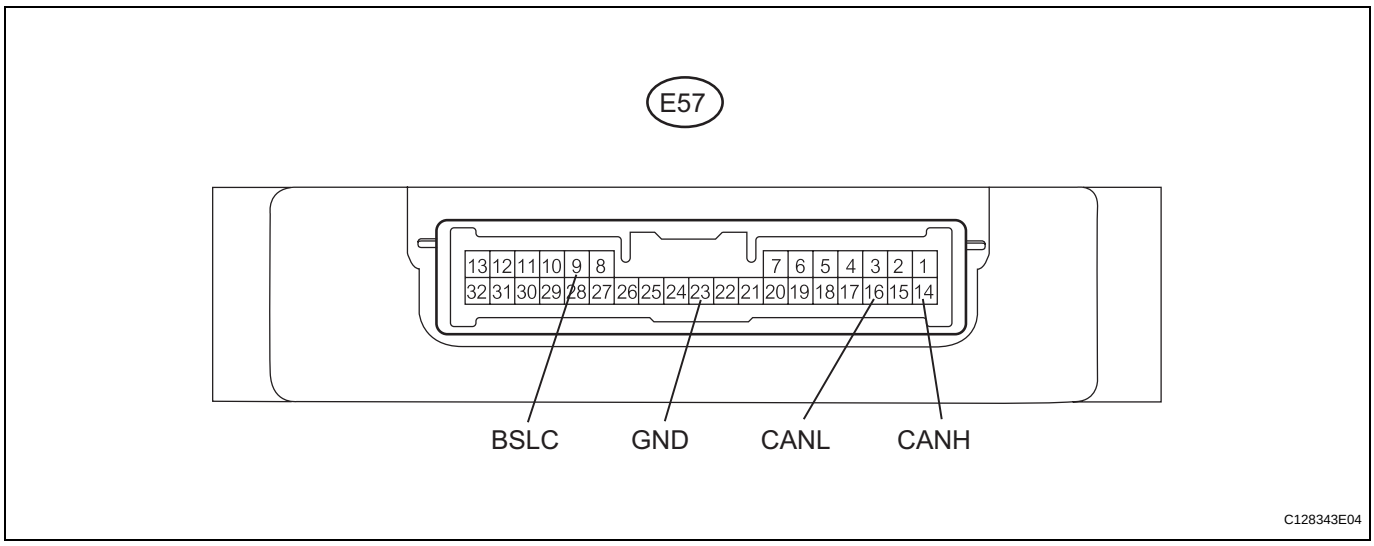

CA

(a) Disconnect the E57 ECU connector.
(b) Measure the resistance of the wire harness side connector.

Symbols (Terminal No.)	Wiring Color	Condition	Specified Condition
CANH (E57-14) - CANL (E57-16)	P - W	Ignition switch OFF	54 to 69 Ω
CANH (E57-14) - GND (E57-23)	P - W-B	Ignition switch OFF	200 Ω or more
CANL (E57-16) - GND (E57-23)	W - W-B	Ignition switch OFF	200 Ω or more
CANH (E57-14) - BSLC (E57-9)	P - R	Ignition switch OFF	1 MΩ or more
CANL (E57-16) - BSLC (E57-9)	W -R	Ignition switch OFF	1 MΩ or more

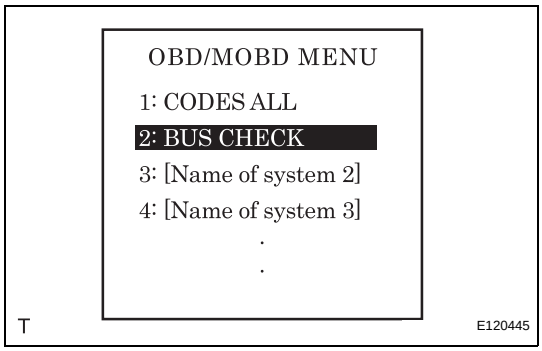

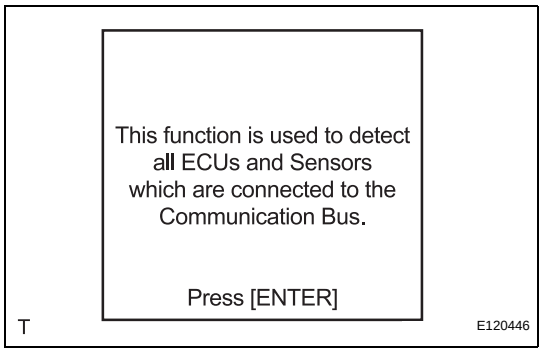

DIAGNOSIS SYSTEM

1. BUS CHECK

(a) Select "BUS CHECK" from the "OBD / MOBD MENU" screen.
HINT:
The ECUs and sensors that are properly connected to the CAN communication system can be displayed using the intelligent tester via CAN VIM.

(b) Press "ENTER" on the intelligent tester via CAN VIM.

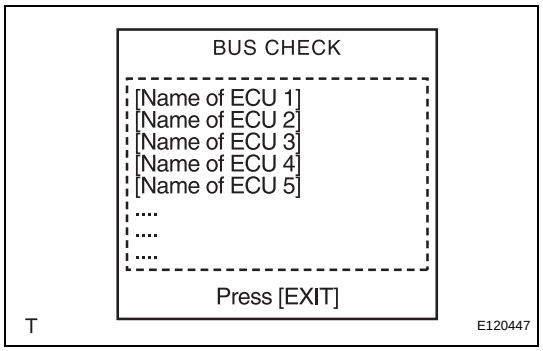

(c) The screen displayed the ECUs and sensors that are properly connected to the CAN communication system.
HINT:
There is a communication stop in the system of any properly connected ECUs or sensors that are not displayed (see page CA-10).

2. CHECK INSTALLED SYSTEMS (ECUS AND SENSORS) THAT USE CAN COMMUNICATION

(a) System (ECUs and sensors) that use CAN communication vary depending on the vehicle's optional settings. Check which systems (ECUs and sensors) are installed on the vehicle.

ECU / Sensor name	Installed to
ABS and traction actuator (skid control ECU)	Vehicle with VSC
Steering sensor	Vehicle with VSC
Yaw rate sensor	Vehicle with VSC
Air conditioning amplifier	All vehicles (Automatic air conditioning system and manual air conditioning system)
ECM	All vehicles
Center airbag sensor assembly	All vehicles
Power steering ECU	All vehicles
Main body ECU	All vehicles
Combination meter ECU	All vehicles
4WD control ECU	Vehicle with 4WD

CA

3. DTC TABLE BY ECU

HINT:
- In the CAN communication system, CAN communication system DTCs output by the ECU can be displayed by using the intelligent tester.
- If CAN communication system DTCs are output, the trouble cannot be determined solely from the DTCs. Perform troubleshooting according to "HOW TO PROCEED WITH TROUBLESHOOTING" (see page CA-8).

(a) ABS AND TRACTION ACTUATOR (SKID CONTROL ECU)
HINT:
DTC communication uses the CAN communication system.

DTC No.	Detection Item
U0073/94	Control Module Communication Bus OFF
U0100/65	Lost Communication with ECM / PCM
U0123/62	Lost Communication with Yaw Rate Sensor Module
U0124/95	Lost Communication with Lateral Acceleration Sensor Module
U0126/63	Lost Communication with Steering Angle Sensor Module

(b) POWER STEERING ECU
HINT:
DTC communication uses the CAN communication system.

DTC No.	Detection Item
U0073/49	Control Module Communication Bus OFF
U0105/41	Lost Communication with ECM
U0121/42	Lost Communication with Anti-lock Brake System (ABS) Control Module

(c) ECM
HINT:
DTC communication uses the CAN communication system.

DTC No.	Detection Item
U0122	Lost Communication with Vehicle Dynamic Control Module
U0129	Lost Communication with Brake System Control Module

(d) AIR CONDITIONING AMPLIFIER
For vehicle with air conditioning (Automatic air conditioning system and Manual air conditioning system).
HINT:
DTC communication uses the CAN communication system.

DTC No.	Detection Item
B1499/99	Multiplex Communication Circuit

(e) COMBINATION METER ECU
HINT:
DTC communication uses the CAN communication system.

DTC No.	Detection Item
U0100	Lost Communication with ECM/PCM "A"
U0129	Lost Communication with Skid Control ECU

(f) 4WD CONTROL ECU
For vehicle with 4WD only.
HINT:
DTC communication uses the CAN communication system.

DTC No.	Detection Item
U0073/86	Control Module Communication Bus OFF
U0100/85	Lost Communication with ECM / PCM "A"
U0126/84	Lost Communication with Steering Angle Sensor Module
U0129/83	Lost Communication with Brake System Control Module

(g) MAIN BODY ECU
HINT:
The center airbag sensor is connected to the CAN communication system but CAN communication DTCs are not output.

(h) CENTER AIRBAG SENSOR
HINT:
The center airbag sensor is connected to the CAN communication system but CAN communication DTCs are not output.

4. DTC COMBINATION TABLE

DTC		**Detected Communication Stop Mode**				
Output from	Output DTC	ABS AND TRACTION ACTUATOR (SKID CONTROL ECU) COMMUNICATION STOP MODE	POWER STEERING ECU COMMUNICATION STOP MODE	STEERING ANGLE SENSOR COMMUNICATION STOP MODE	YAW RATE SENSOR COMMUNICATION STOP MODE	ECM COMMUNICATION STOP MODE
ABS and Traction Actuator (Skid Control ECU)	U0073/94	O	X	X	X	X
	U0100/65	O	X	X	X	O
	U0123/62	O	X	X	O	X
	U0124/95	O	X	X	O	X
	U0126/63	O	X	O	X	X
Power Steering ECU	U0073/49	X	O	X	X	X
	U0105/41	X	O	X	X	X
	U0121/42	X	O	X	X	X
ECM	U0122	O	X	X	X	O
	U0129	O	X	X	X	O
Air Conditioning Amplifier	B1499/99	X	X	X	X	O
Combination Meter ECU	U0100	X	X	X	X	O
	U0129	O	X	X	X	X
4WD Control ECU	U0073/86	X	X	X	X	X
	U0100/85	X	X	X	X	O
	U0126/84	X	X	O	X	X
	U0129/83	O	X	X	X	X

HINT:

- O: Outputs under condition shown in table above
- X: Not output

DTC		**Detected Communication Stop Mode**				
Output from	Output DTC	CENTER AIRBAG ASSEMBLY COMMUNICATION MODE	AIR CONDITIONING AMPLIFIER COMMUNICATION STOP MODE	COMBINATION METER ECU COMMUNICATION STOP MODE	MAIN BODY ECU COMMUNICATION STOP MODE	4WD CONTROL ECU COMMUNICATION STOP MODE
ABS and Traction Actuator (Skid Control ECU)	U0073/94	X	X	X	X	X
	U0100/65	X	X	X	X	X
	U0123/62	X	X	X	X	X
	U0124/95	X	X	X	X	X
	U0126/63	X	X	X	X	X
Power Steering ECU	U0073/49	X	X	X	X	X
	U0105/41	X	X	X	X	X
	U0121/42	X	X	X	X	X
ECM	U0122	X	X	X	X	X
	U0129	X	X	X	X	X
Air Conditioning Amplifier	B1499/99	X	O	O	X	X
Combination Meter ECU	U0100	X	X	X	X	X
	U0129	X	X	X	X	X

CA

DTC		Detected Communication Stop Mode				
4WD Control ECU	U0073/86	X	X	X	X	O
	U0100/85	X	X	X	X	O
	U0126/84	X	X	X	X	O
	U0129/83	X	X	X	X	O

HINT:

- O: Outputs under condition shown in table above
- X: Not output
- Check the stop mode by using the results of the BUS CHECK for the center airbag sensor (see page CA-69) and main body ECU (see page CA-64).

(a) Perform troubleshooting according to the combination of DTCs output.

- ABS AND TRACTION ACTUATOR (SKID CONTROL ECU) COMMUNICATION STOP MODE: (see page CA-42)
- POWER STEERING ECU COMMUNICATION STOP MODE: (see page CA-49)
- STEERING ANGLE SENSOR COMMUNICATION STOP MODE: (see page CA-52)
- YAW RATE SENSOR COMMUNICATION STOP MODE: (see page CA-55)
- ECM COMMUNICATION STOP MODE: (see page CA-58)
- AIR CONDITIONING AMPLIFIER COMMUNICATION STOP MODE: (see page CA-45)
- COMBINATION METER ECU COMMUNICATION SYSTEM: (see page CA-67)
- 4WD CONTROL ECU COMMUNICATION STOP MODE: (see page CA-72)

CA

FAIL-SAFE CHART

1. FAIL-SAFE FUNCTION

(a) When communication fails in any of the main wires (communication lines) due to a short circuit or other causes, the fail-safe function, which is specified for each system, operates to prevent the system from malfunctioning.

(b) The table below shows the effects on each system when communication is impossible. For further details, refer to each system.

Function	ECM	ABS and Traction Actuator (Skid Control ECU)	Yaw Rate Sensor	Steering Angle Sensor	4WD Control ECU	Condition when communication impossible	DTC detection (Driver detectable)
Navi-CVT cooperative control (appropriate gear change control according to curve, incline, or driver's instructions)	●					Cooperative control cancellation	None (Brakes are not as effective when entering curves)
Normal cruise control (Maintains vehicle speed)	●	○				Normal cruise function stops	Detectable (Light comes on)
Neutral control	●	○				Neutral control function stops	None
Air conditioning control (Vehicle interior A/C control)	○					Air conditioning function stops	None (Air conditioning inoperative)
VSC control (Controls driving force while VSC in operation)	○	●	○	○		Control inoperative (gradually stops controlling during VSC control)	Detectable (Light comes on)
TRC control (Controls driving force and engine power when wheel slip detected during acceleration)	○	●				Control inoperative (gradually stops controlling during TRC control)	Detectable (Light comes on)
4WD control (Controls vehicle driving power distribution to front and rear wheels according to driving conditions)	○	○		○	●	4WD control function stops (same as 2WD)	Detectable (Light comes on)

CA

Function	ECM	ABS and Traction Actuator (Skid Control ECU)	Yaw Rate Sensor	Steering Angle Sensor	4WD Control ECU	Condition when communication impossible	DTC detection (Driver detectable)
Electric power steering control (Vehicle speed response type torque control)	○	○				EPS assist function canceled or reduced (steering wheel becomes harder to turn)	When VSC is abnormal (Light comes on)
							When engine is abnormal (Function canceled / Recognizable by decrease in steering power assist)
Meter display (Vehicle condition display, indicator light control)	○	○			○	Light does not come on, illuminates abnormally, or blinks abnormally	Detectable (Abnormal display)

CA

HINT:
- ●: Control master ECU
- ○: Related ECU or sensor

Function	Power Steering ECU	Center Airbag Sensor Assembly	Air Conditioning Amplifier	Combination Meter ECU	Main Body ECU	Condition when communication impossible	DTC detection (Driver detectable)
Navi-CVT cooperative control (appropriate gear change control according to curve, incline, or driver's instructions)						Cooperative control cancellation	None (Brakes are not as effective when entering curves)
Normal cruise control (Maintains vehicle speed)						Normal cruise function stops	Detectable (Light comes on)
Neutral control						Neutral control function stops	None
Air conditioning control (Vehicle interior A/C control)			●			Air conditioning function stops	None (Air conditioning inoperative)
VSC control (Controls driving force while VSC in operation)						Control inoperative (gradually stops controlling during VSC control)	Detectable (Light comes on)

Function	Power Steering ECU	Center Airbag Sensor Assembly	Air Conditioning Amplifier	Combination Meter ECU	Main Body ECU	Condition when communication impossible	DTC detection (Driver detectable)
TRC control (Controls driving force and engine power when wheel slip detected during acceleration)						Control inoperative (gradually stops controlling during TRC control)	Detectable (Light comes on)
4WD control (Controls vehicle driving power distribution to front and rear wheels according to driving conditions)						4WD control function stops (same as 2WD)	Detectable (Light comes on)
Electric power steering control (Vehicle speed response type torque control)	●					EPS assist function canceled or reduced (steering wheel becomes harder to turn)	When VSC is abnormal (Light comes on)
							When engine is abnormal (Function canceled / Recognizable by decrease in steering power assist)
Meter display (Vehicle condition display, indicator light control)	○	○	○	●	○	Light does not come on, illuminates abnormally, or blinks abnormally	Detectable (Abnormal display)

HINT:
- ●: Control master ECU
- ○: Related ECU or sensor

CA

ABS and Traction Actuator (Skid Control ECU) Communication Stop Mode

DESCRIPTION

Detection Item	Symptom	Trouble Area
ABS AND TRACTION ACTUATOR (SKID CONTROL ECU) COMMUNICATION STOP MODE	• ABS / VSC / TRAC is not displayed on "BUS CHECK" screen of intelligent tester • Applies to "ABS AND TRACTION ACTUATOR (SKID CONTROL ECU) COMMUNICATION STOP MODE" in "DTC COMBINATION TABLE"	• Power source or inside skid control ECU • ABS and traction actuator (skid control ECU) branch wire and connector • ABS and traction actuator (skid control ECU)

WIRING DIAGRAM

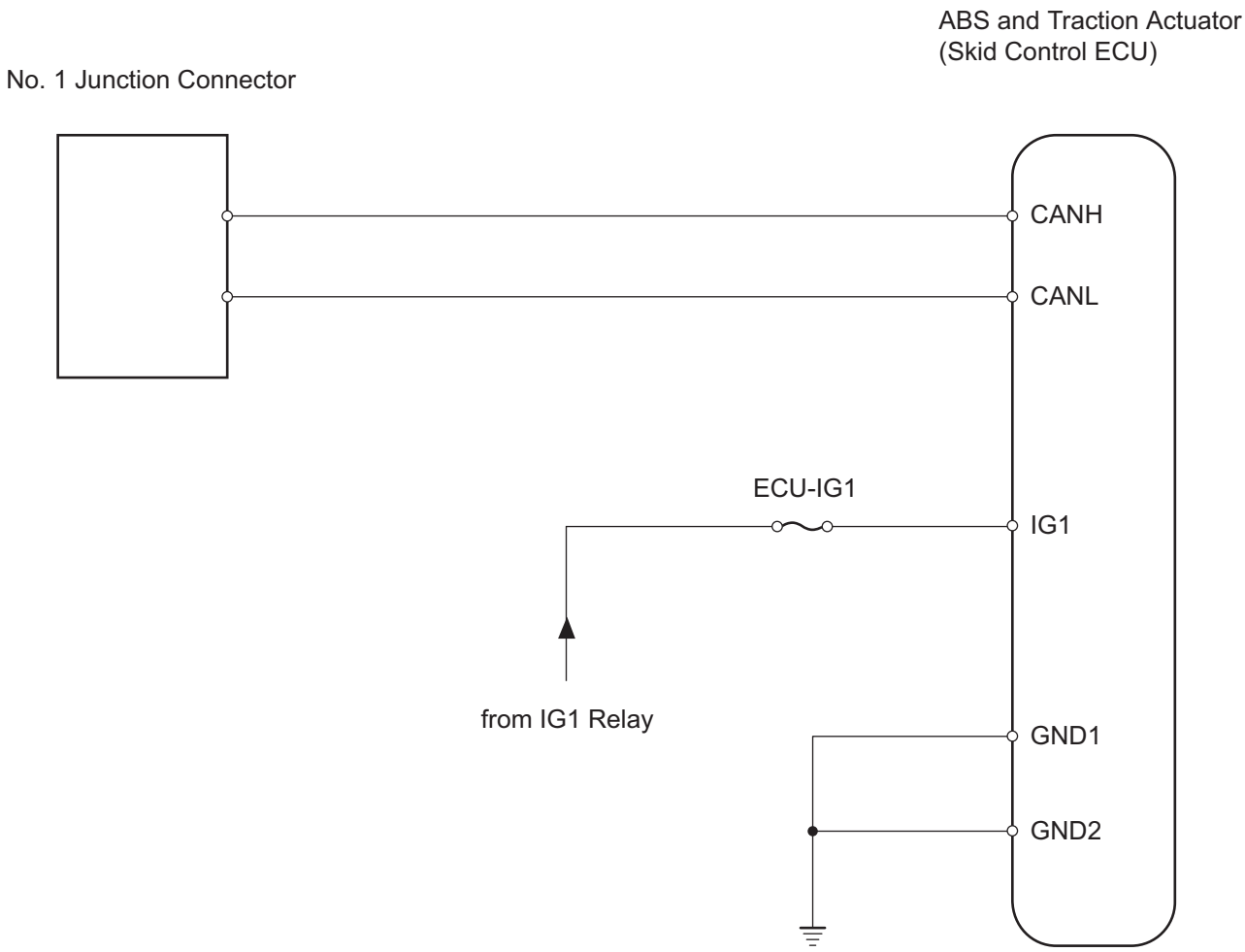

T

C132192E01

INSPECTION PROCEDURE

NOTICE:

- **Turn the ignition switch OFF before measuring the resistances of the main wire and the branch wire.**
- **After the ignition switch is turned OFF, check that the key reminder warning system and light reminder warning system are not in operation.**
- **Before measuring the resistance, leave the vehicle for at least 1 minute and do not operate the ignition switch, any switches or doors. If doors need to be opened in order to check connectors, open the doors and leave them open.**

HINT:

Operating the ignition switch, any switches or any doors triggers related ECU and sensor communication with the CAN, which causes resistance variation.

1 CHECK CAN BUS LINE DISCONNECTION (ABS AND TRACTION ACTUATOR BRANCH WIRE)

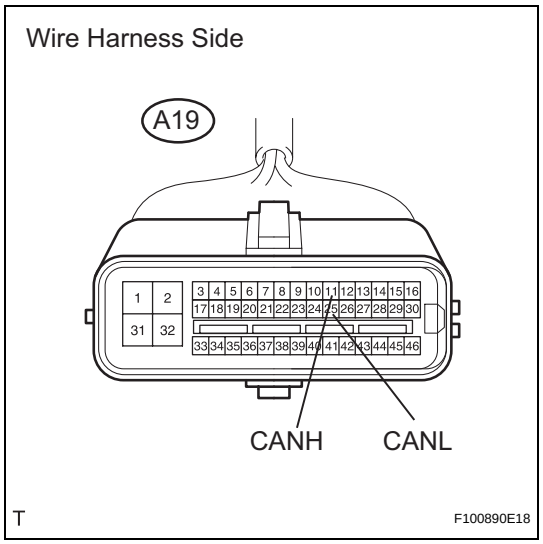

(a) Disconnect the A19 ABS and traction actuator (skid control ECU) connector.

(b) Measure the resistance of the wire harness side connector.

Standard resistance

Tester Connection	Condition	Specified Condition
A19-11 (CANH) - A19-25 (CANL)	Ignition switch OFF	54 to 69 Ω

NG → **REPAIR OR REPLACE ABS AND TRACTION ACTUATOR BRANCH WIRE AND CONNECTOR (CANH, CANL)**

OK

2 CHECK WIRE HARNESS (ABS AND TRACTION ACTUATOR - BATTERY AND BODY GROUND)

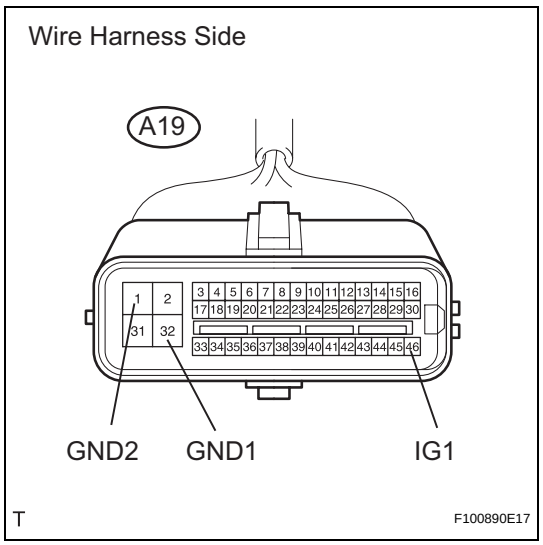

(a) Disconnect the A19 ABS and traction actuator (skid control ECU) connector.

(b) Measure the resistance of the wire harness side connector.

Standard resistance

Tester Connection	Specified Condition
A19-1 (GND2) - Body ground	Below 1 Ω
A19-32 (GND1) - Body ground	Below 1 Ω

(c) Measure the voltage of the wire harness side connector.

Standard voltage

Tester Connection	Condition	Specified Condition
A19-46 (IG1) - Body ground	Ignition switch ON	10 to 14 V

NG → **REPAIR OR REPLACE HARNESS AND CONNECTOR**

OK

REPLACE ABS AND TRACTION ACTUATOR (SKID CONTROL ECU)

Air Conditioning Amplifier Communication Stop Mode

DESCRIPTION

Detection Item	Symptom	Trouble Area
AIR CONDITIONING AMPLIFIER COMMUNICATION STOP MODE	• A/C is not displayed on "BUS CHECK" screen of intelligent tester • Applies to "AIR CONDITIONING AMPLIFIER COMMUNICATION STOP MODE" in "DTC COMBINATION TABLE"	• Power source or inside air conditioning amplifier • Air conditioning amplifier branch wire and connector • Air conditioning amplifier

WIRING DIAGRAM

for Automatic Air Conditioning System

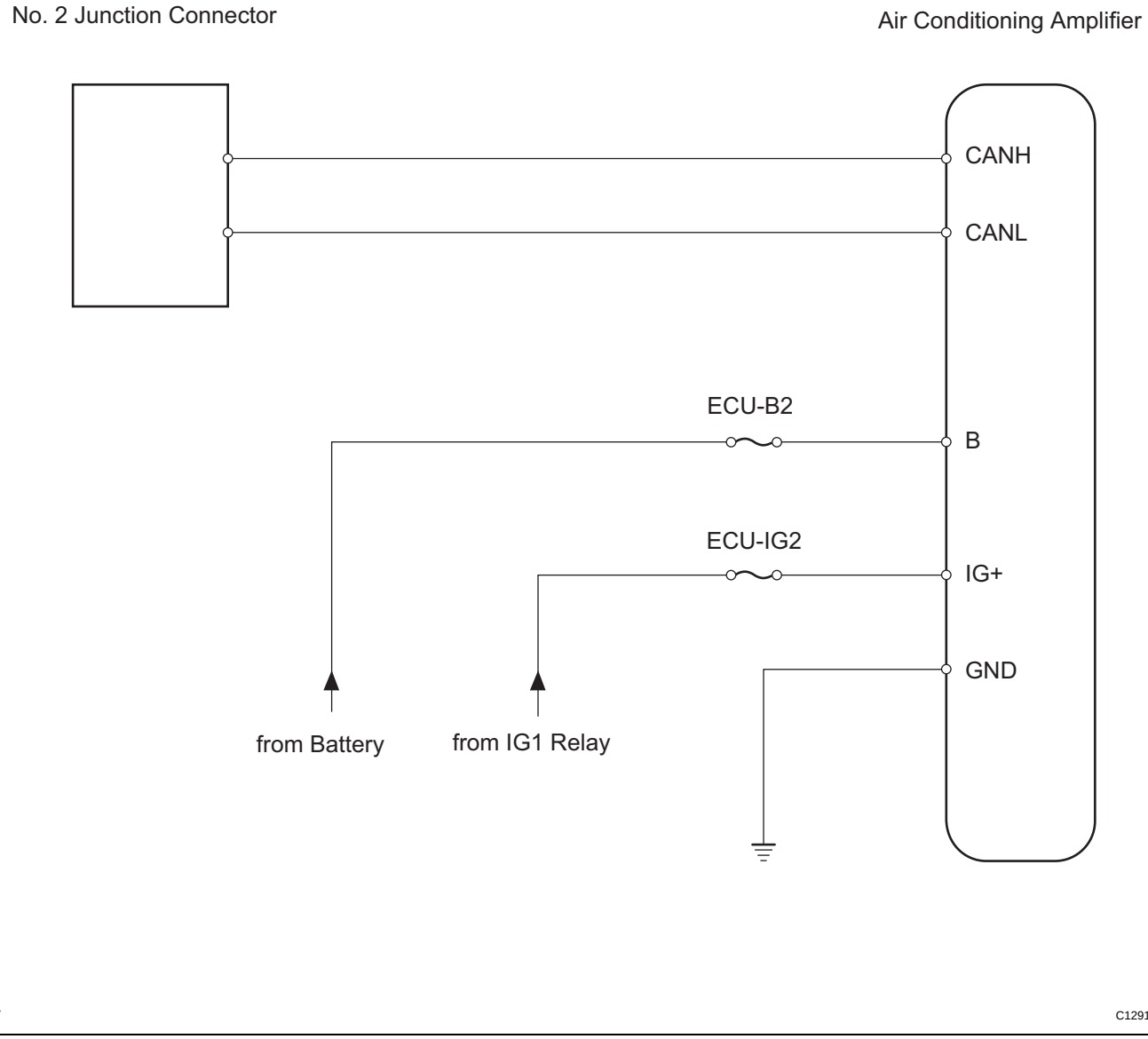

T

C129192E09

CA

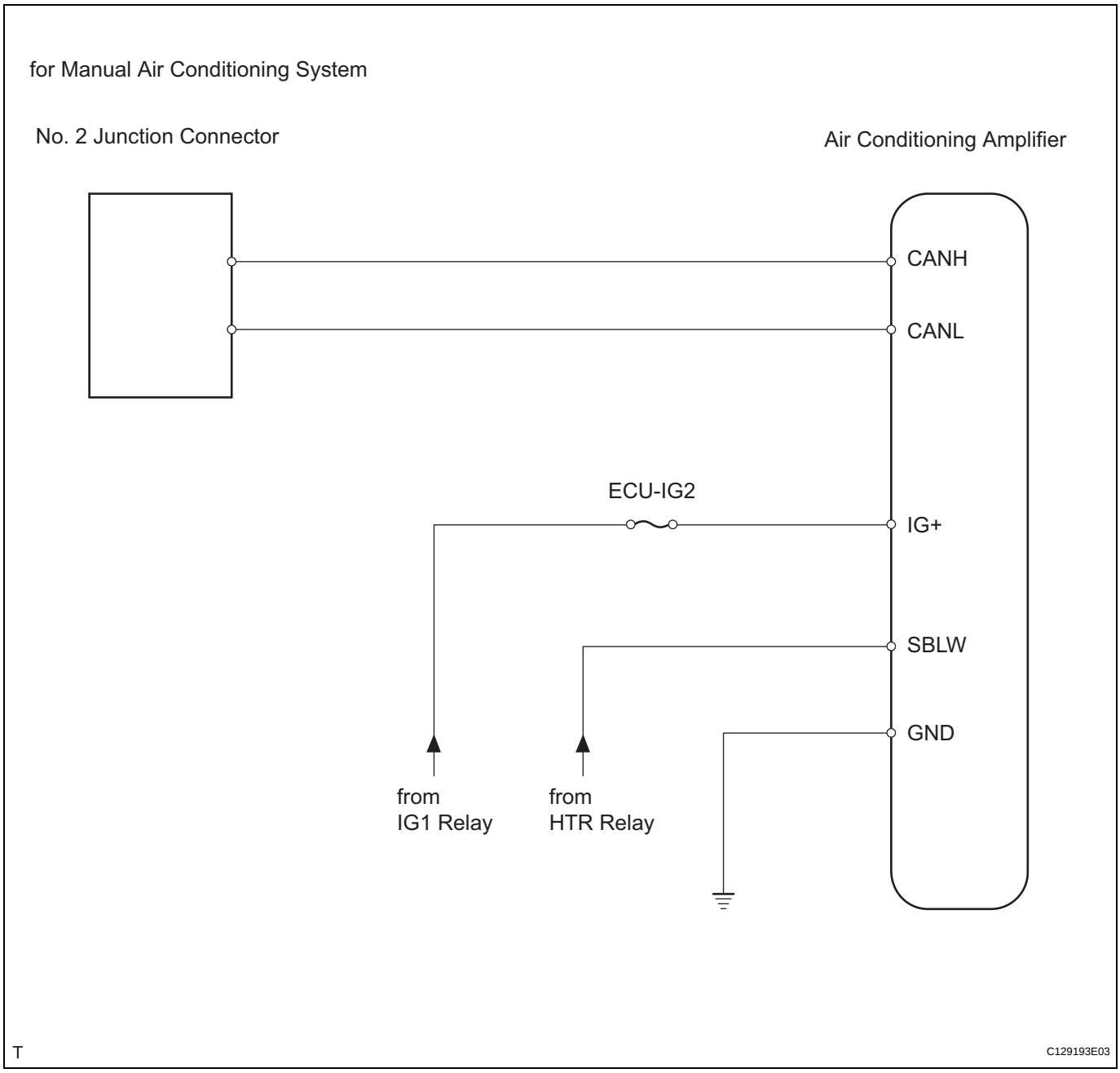

INSPECTION PROCEDURE

NOTICE:

- **Turn the ignition switch OFF before measuring the resistances of the main wire and the branch wire.**
- **After the ignition switch is turned OFF, check that the key reminder warning system and light reminder warning system are not in operation.**
- **Before measuring the resistance, leave the vehicle for at least 1 minute and do not operate the ignition switch, any switches or doors. If doors need to be opened in order to check connectors, open the doors and leave them open.**

HINT:

Operating the ignition switch, any switches or any doors triggers related ECU and sensor communication with the CAN, which causes resistance variation.

1	**CHECK CAN BUS LINE FOR DISCONNECTION (AIR CONDITIONING AMPLIFIER BRANCH WIRE)**

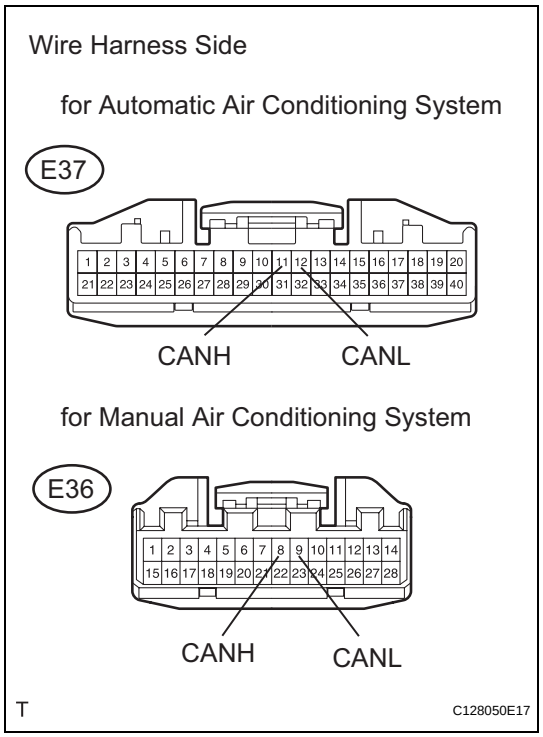

(a) Disconnect the E37*1 or E36*2 air conditioning amplifier connector.
HINT:
- *1: for Automatic air conditioning system.
- *2: for Manual air conditioning system.

(b) Measure the resistance of the wire harness side connector.
Standard resistance:
for Automatic Air Conditioning System

Tester Connection	Condition	Specified Condition
E37-11 (CANH) - E37-12 (CANL)	Ignition switch OFF	54 to 69 Ω

for Manual Air Conditioning System

Tester Connection	Condition	Specified Condition
E36-8 (CANH) - E36-9 (CANL)	Ignition switch OFF	54 to 69 Ω

NG → **REPAIR OR REPLACE CAN BRANCH WIRE CONNECTED TO AIR CONDITIONING AMPLIFIER (CANH, CANL)**

OK

2	**CHECK WIRE HARNESS (AIR CONDITIONING AMPLIFIER - BATTERY AND BODY GROUND)**

(a) Disconnect the E37*1 or E36*2 air conditioning amplifier connector.
HINT:
- *1: for Automatic air conditioning system.

CA

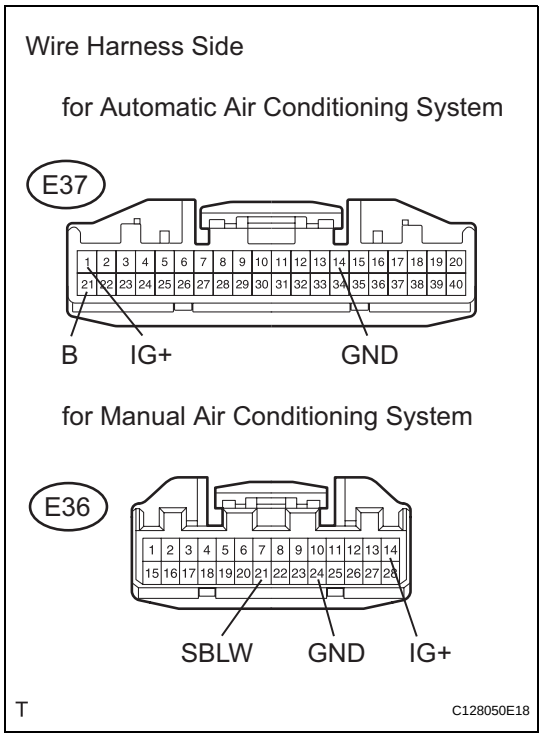

- *2: for Manual air conditioning system.

(b) Measure the resistance of the wire harness side connectors.

Standard resistance:

for Automatic Air Conditioning System

Tester Connection	Specified Condition
E37-14 (GND) - Body ground	Below 1 Ω

for Manual Air Conditioning System

Tester Connection	Specified Condition
E36-24 (GND) - Body ground	Below 1 Ω

(c) Measure the voltage of the wire harness side connector.

Standard voltage:

for Automatic Air Conditioning System

Tester Connection	Condition	Specified Condition
E37-21 (B) - Body ground	Always	10 to 14 V
E37-1 (IG+) - Body ground	Ignition switch ON	10 to 14 V

for Manual Air Conditioning System

Tester Connection	Condition	Specified Condition
E36-14 (IG+) - Body ground	Ignition switch ON	10 to 14 V

NG → **REPAIR OR REPLACE HARNESS AND CONNECTOR**

OK

REPLACE AIR CONDITIONING AMPLIFIER

CA

Power Steering ECU Communication Stop Mode

DESCRIPTION

Detection Item	Symptom	Trouble Area
POWER STEERING ECU COMMUNICATION STOP MODE	• EPS is not displayed on "BUS CHECK" screen of intelligent tester • Applies to "POWER STEERING ECU COMMUNICATION STOP MODE" in "DTC COMBINATION TABLE"	• Power source or inside power steering ECU • Power steering ECU branch wire and connector • Power steering ECU

WIRING DIAGRAM

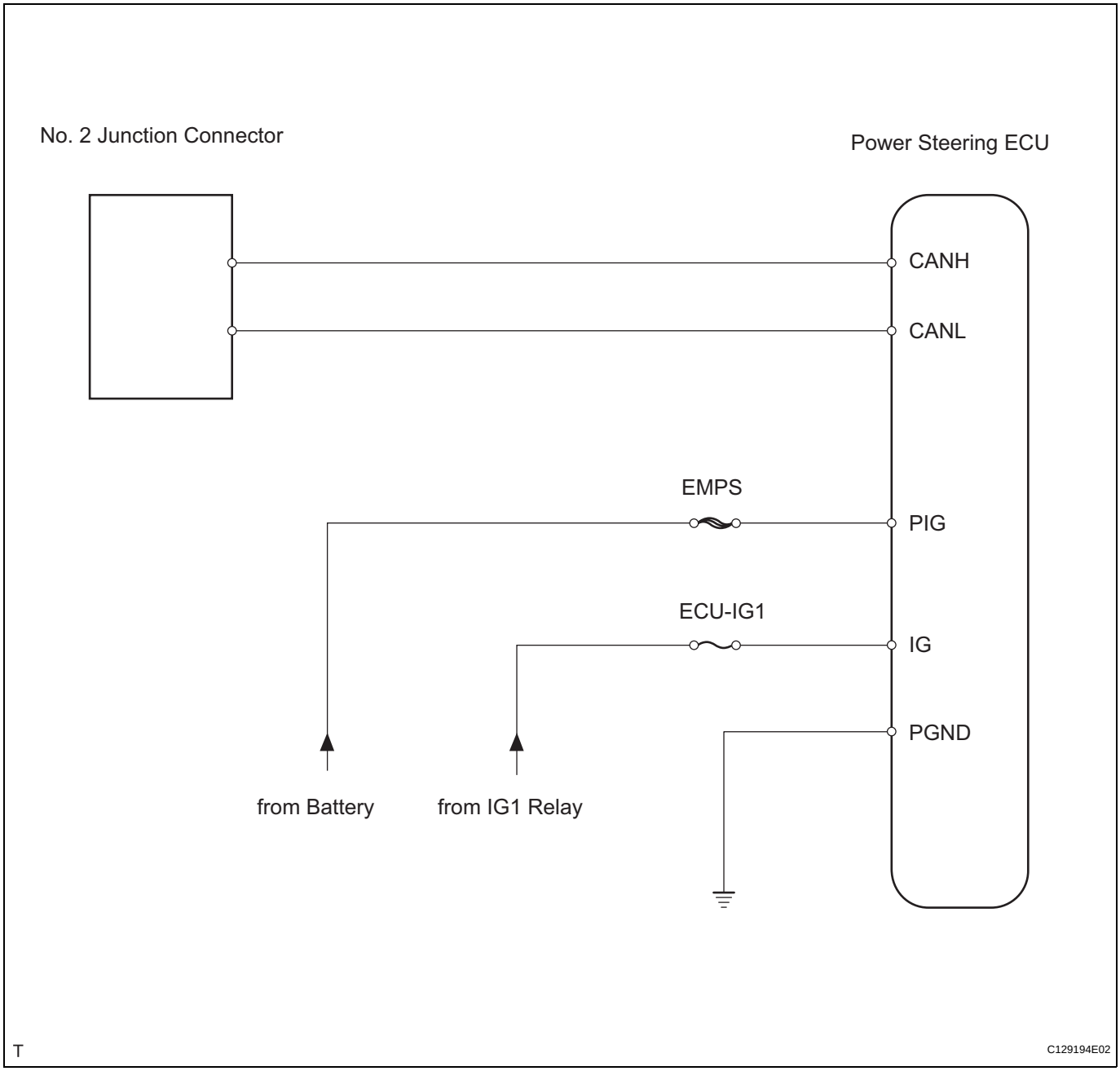

CA

INSPECTION PROCEDURE

NOTICE:

- **Turn the ignition switch OFF before measuring the resistances of the main wire and the branch wire.**
- **After the ignition switch is turned OFF, check that the key reminder warning system and light reminder warning system are not in operation.**
- **Before measuring the resistance, leave the vehicle for at least 1 minute and do not operate the ignition switch, any switches or doors. If doors need to be opened in order to check connectors, open the doors and leave them open.**

HINT:

Operating the ignition switch, any switches or any doors triggers related ECU and sensor communication with the CAN, which causes resistance variation.

1	CHECK CAN BUS LINE FOR DISCONNECTION (POWER STEERING ECU MAIN WIRE)

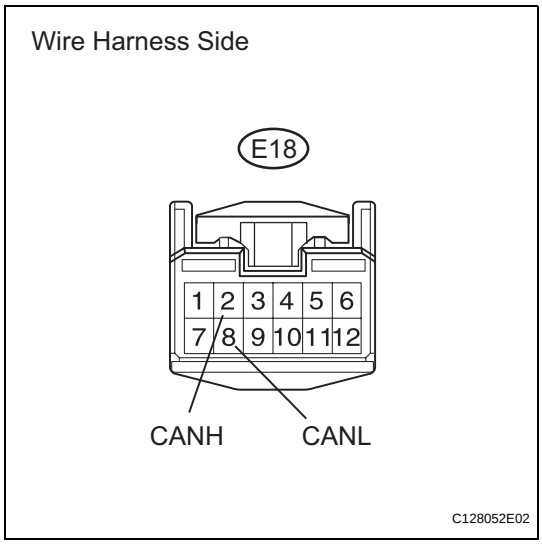

(a) Disconnect the E18 power steering ECU connector.

(b) Measure the resistance of the wire harness side connector.

Standard resistance

Tester Connection	Condition	Specified Condition
E18-2 (CANH) - E18-8 (CANL)	Ignition switch OFF	54 to 69 Ω

NG → **REPAIR OR REPLACE CAN MAIN WIRE CONNECTED TO POWER STEERING ECU (CANH, CANL)**

OK

2	CHECK WIRE HARNESS (POWER STEERING ECU - BATTERY AND BODY GROUND)

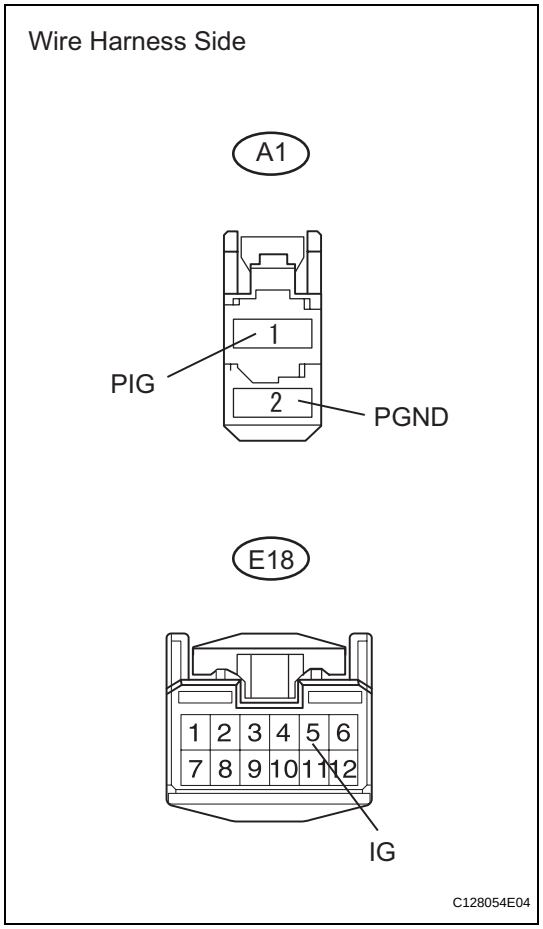

(a) Disconnect the A1 and E18 power steering ECU connectors.

(b) Measure the resistance of the wire harness side connector.

Standard resistance

Tester Connection	Specified Condition
A1-2 (PGND) - Body ground	Below 1 Ω

(c) Measure the voltage of the wire harness side connectors.

Standard voltage

Tester Connection	Condition	Specified Condition
A1-1 (PIG) - Body ground	Always	10 to 14 V
E18-5 (IG) - Body ground	Ignition switch ON	10 to 14 V

CA

NG → **REPAIR OR REPLACE HARNESS AND CONNECTOR**

OK

REPLACE POWER STEERING ECU

Steering Angle Sensor Communication Stop Mode

DESCRIPTION

Detection Item	Symptom	Trouble Area
STEERING ANGLE SENSOR COMMUNICATION STOP MODE	• STEERING SENSOR is not displayed on "BUS CHECK" screen of intelligent tester • Applies to "STEERING ANGLE SENSOR COMMUNICATION STOP MODE" in "DTC COMBINATION TABLE"	• Power source or inside steering angle sensor • Steering angle sensor branch wire and connector • Steering angle sensor

WIRING DIAGRAM

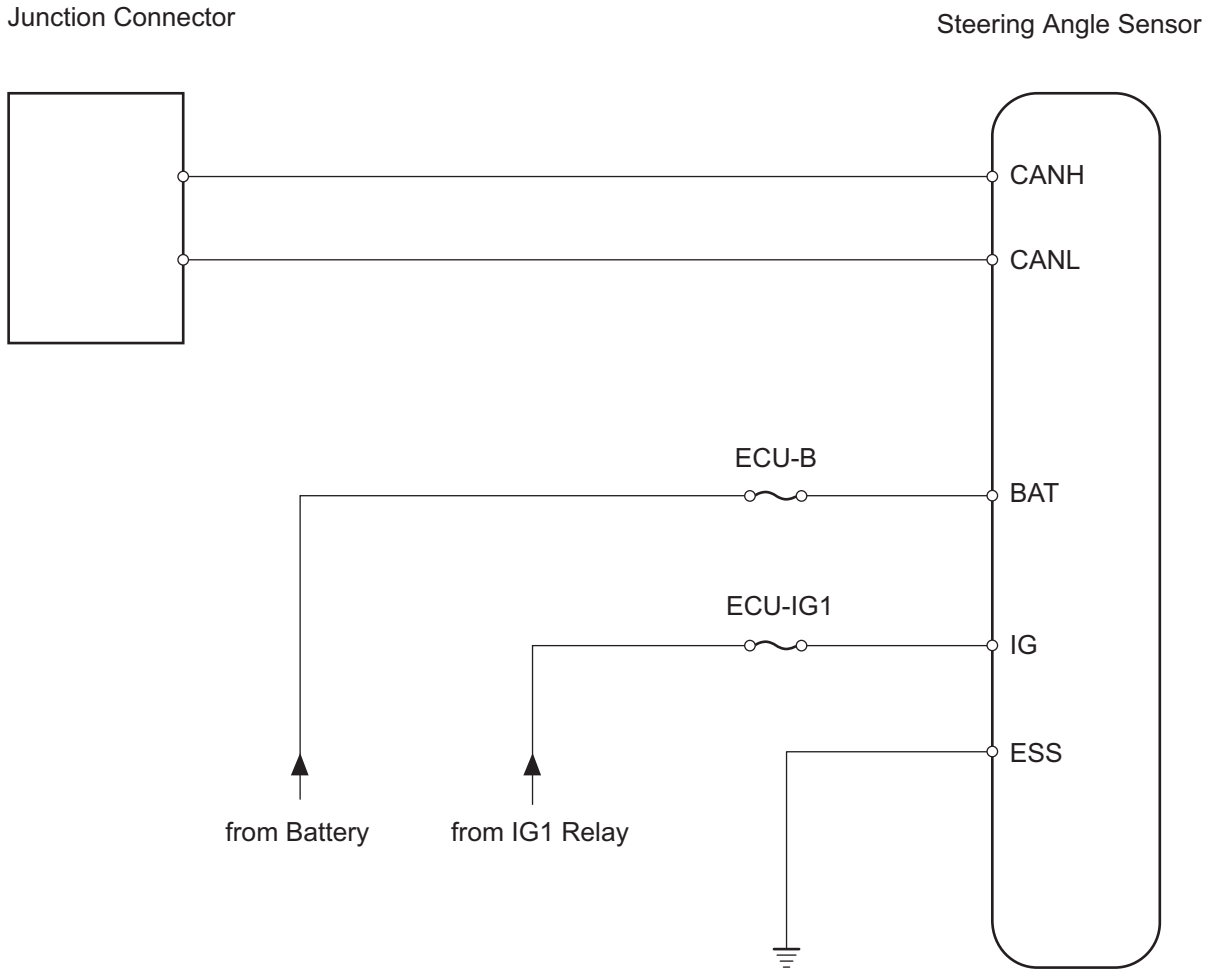

T

C129192E06

INSPECTION PROCEDURE

NOTICE:

- **Turn the ignition switch OFF before measuring the resistances of the main wire and the branch wire.**
- **After the ignition switch is turned OFF, check that the key reminder warning system and light reminder warning system are not in operation.**
- **Before measuring the resistance, leave the vehicle for at least 1 minute and do not operate the ignition switch, any switches or doors. If doors need to be opened in order to check connectors, open the doors and leave them open.**

HINT:

Operating the ignition switch, any switches or any doors triggers related ECU and sensor communication with the CAN, which causes resistance variation.

1 CHECK CAN BUS LINE FOR DISCONNECTION (STEERING ANGLE SENSOR BRANCH WIRE)

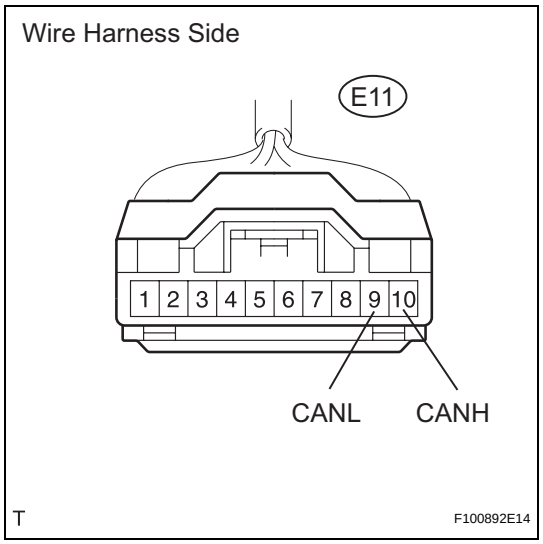

(a) Disconnect the E11 steering angle sensor connector.
(b) Measure the resistance of the wire harness side connector.

Standard resistance

Tester Connection	Condition	Specified Condition
E11-10 (CANH) - E11-9 (CANL)	Ignition switch OFF	54 to 69 Ω

NG → **REPAIR OR REPLACE BRANCH WIRE CONNECTED TO STEERING ANGLE SENSOR (CANH, CANL)**

OK

2 CHECK WIRE HARNESS (STEERING ANGLE SENSOR - BATTERY AND BODY GROUND)

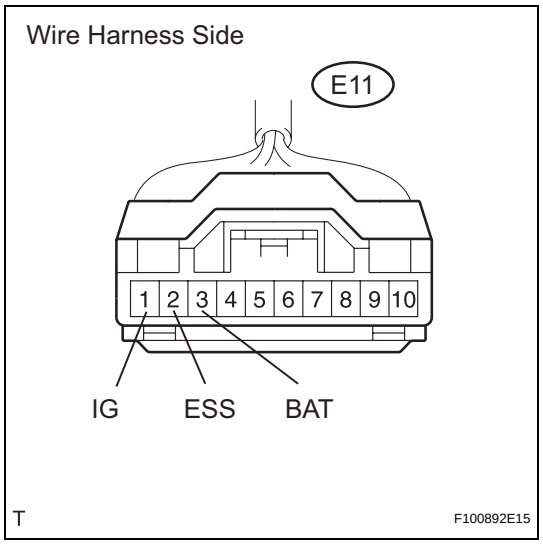

(a) Disconnect the E11 steering angle sensor connector.
(b) Measure the resistance of the wire harness side connector.

Standard resistance

Tester Connection	Specified Condition
E11-2 (ESS) - Body ground	Below 1 Ω

(c) Measure the voltage of the wire harness side connector.

Standard voltage

Tester Connection	Condition	Specified Condition
E11-3 (BAT) - Body ground	Always	10 to 14 V
E11-1 (IG) - Body ground	Ignition switch ON	10 to 14 V

CA

NG → **REPAIR OR REPLACE HARNESS AND CONNECTOR**

OK

REPLACE STEERING ANGLE SENSOR

Yaw Rate Sensor Communication Stop Mode

DESCRIPTION

Detection Item	Symptom	Trouble Area
YAW RATE SENSOR COMMUNICATION STOP MODE	• YAW / DECELERAT is not displayed on "BUS CHECK" screen of intelligent tester • Applies to "YAW RATE SENSOR COMMUNICATION STOP MODE" in "DTC COMBINATION TABLE"	• Power source or inside yaw rate sensor • Yaw rate sensor branch wire and connector • Yaw rate sensor

WIRING DIAGRAM

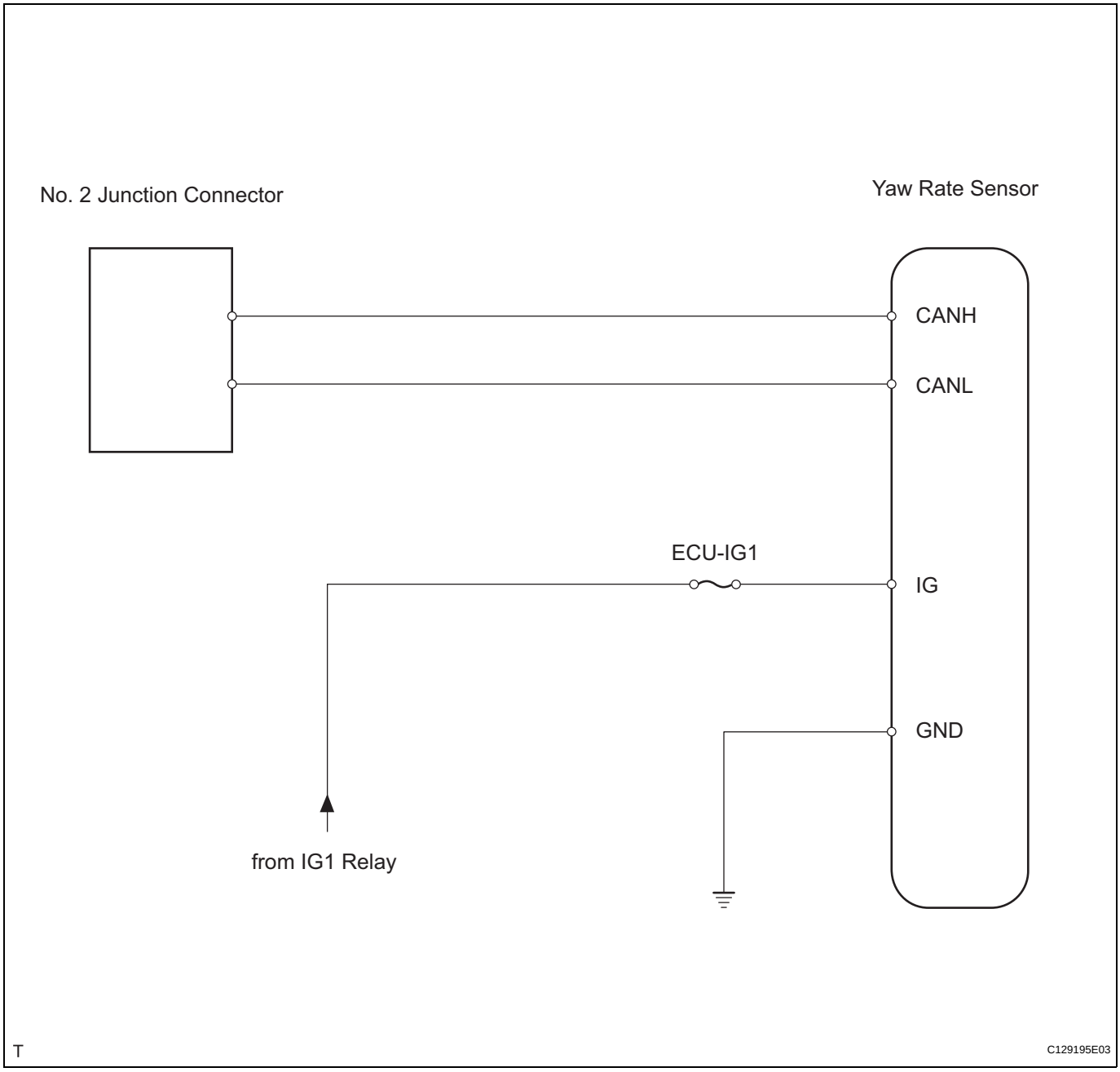

CA

INSPECTION PROCEDURE

NOTICE:

- **Turn the ignition switch OFF before measuring the resistances of the main wire and the branch wire.**
- **After the ignition switch is turned OFF, check that the key reminder warning system and light reminder warning system are not in operation.**
- **Before measuring the resistance, leave the vehicle for at least 1 minute and do not operate the ignition switch, any switches or doors. If doors need to be opened in order to check connectors, open the doors and leave them open.**

HINT:

Operating the ignition switch, any switches or any doors triggers related ECU and sensor communication with the CAN, which causes resistance variation.

1 CHECK CAN BUS LINE FOR DISCONNECTION (YAW RATE SENSOR BRANCH WIRE)

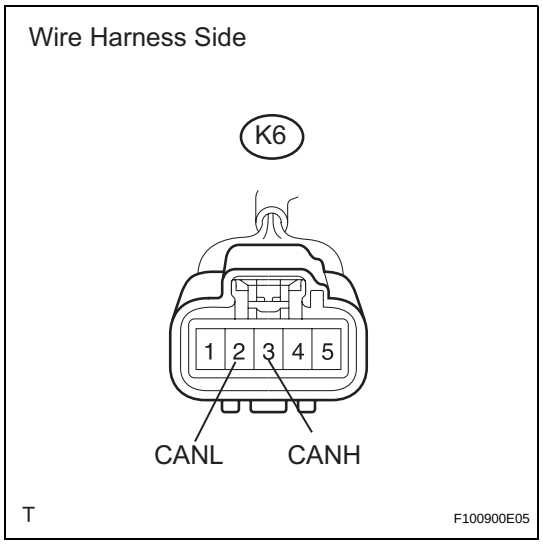

(a) Disconnect the K6 yaw rate sensor connector.
(b) Measure the resistance of the wire harness side connector.

Standard resistance

Tester Connection	Condition	Specified Condition
K6-3 (CANH) - K6-2 (CANL)	Ignition switch OFF	54 to 69 Ω

NG → **REPAIR OR REPLACE CAN BRANCH WIRE CONNECTED TO YAW RATE SENSOR (CANH, CANL)**

OK

2 CHECK WIRE HARNESS (YAW RATE SENSOR - BATTERY AND BODY GROUND)

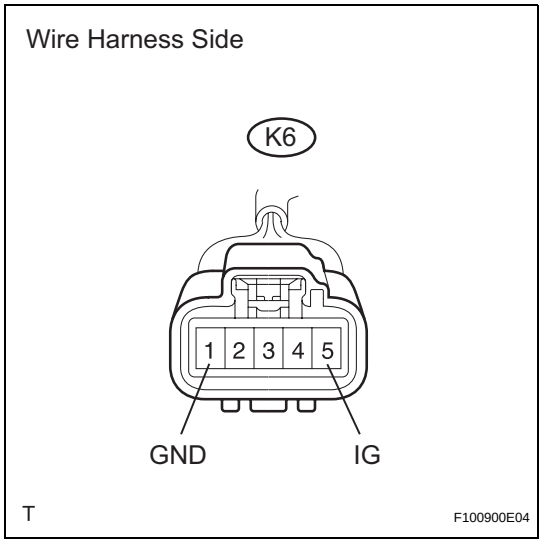

(a) Disconnect the K6 yaw rate sensor connector.
(b) Measure the resistance of the wire harness side connector.

Standard resistance

Tester Connection	Specified Condition
K6-1 (GND) - Body ground	Below 1 Ω

(c) Measure the voltage of the wire harness side connector.

Standard voltage

Tester Connection	Condition	Specified Condition
K6-5 (IG) - Body ground	Ignition switch ON	10 to 14 V

NG → **REPAIR OR REPLACE HARNESS AND CONNECTOR**

OK

REPLACE YAW RATE SENSOR

ECM Communication Stop Mode

(2005/11-2006/01)

DESCRIPTION

Detection Item	Symptom	Trouble Area
ECM COMMUNICATION STOP MODE	• ENGINE is not displayed on "BUS CHECK" screen of intelligent tester • Applies to "ECM COMMUNICATION STOP MODE" in "DTC COMBINATION TABLE"	• Power source or inside ECM • ECM main wire and connector • ECM

WIRING DIAGRAM

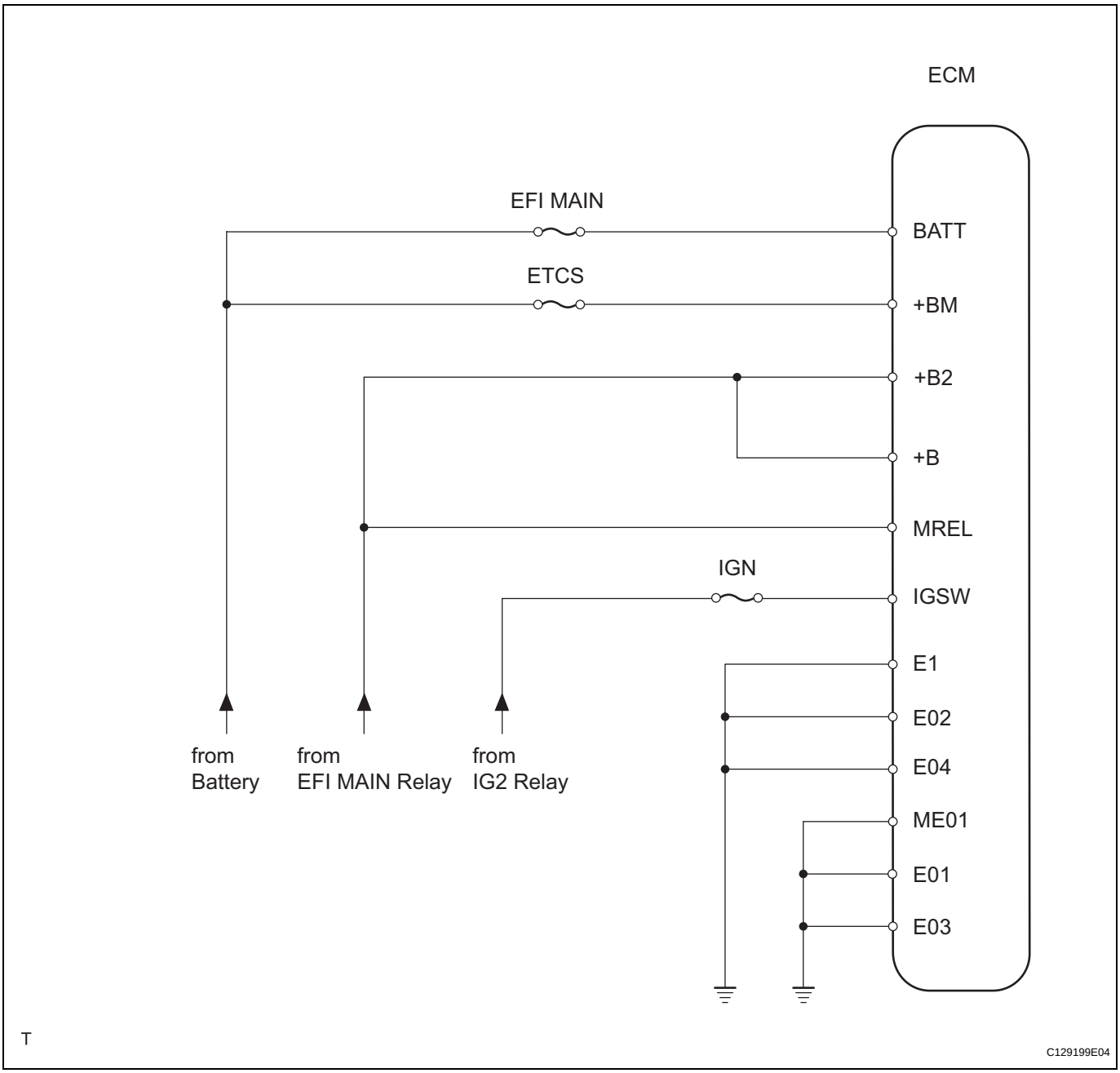

INSPECTION PROCEDURE

NOTICE:

- **Turn the ignition switch OFF before measuring the resistances of the main wire and the branch wire.**
- **After the ignition switch is turned OFF, check that the key reminder warning system and light reminder warning system are not in operation.**
- **Before measuring the resistance, leave the vehicle for at least 1 minute and do not operate the ignition switch, any switches or doors. If doors need to be opened in order to check connectors, open the doors and leave them open.**

HINT:

Operating the ignition switch, any switches or any doors triggers related ECU and sensor communication with the CAN, which causes resistance variation.

1 CHECK WIRE HARNESS (ECM - BATTERY AND BODY GROUND)

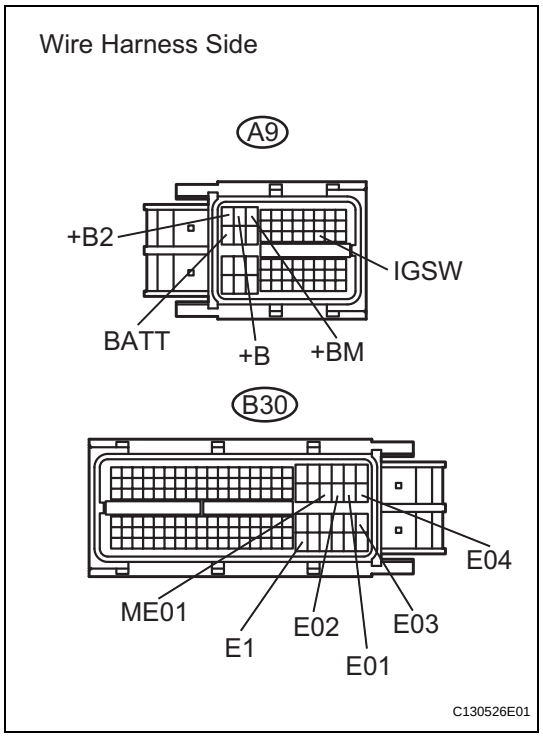

(a) Disconnect the A9 and B30 ECM connectors.

(b) Measure the resistance of the wire harness side connector.

Standard resistance

Tester Connection	Specified Condition
B30-104 (E1) - Body ground	Below 1 Ω
B30-45 (E01) - Body ground	Below 1 Ω
B30-44 (E02) - Body ground	Below 1 Ω
B30-86 (E03) - Body ground	Below 1 Ω
B30-46 (E04) - Body ground	Below 1 Ω
B30-43 (ME01) - Body ground	Below 1 Ω

(c) Measure the voltage of the wire harness side connector.

Standard voltage

Tester Connection	Condition	Specified Condition
A9-1 (+B2) - Body ground	When battery's positive (+) voltage is applied to terminal MREL	10 to 14 V
A9-2 (+B) - Body ground	When battery's positive (+) voltage is applied to terminal MREL	10 to 14 V
A9-3 (+BM) - Body ground	Always	10 to 14 V
A9-20 (BATT) - Body ground	Always	10 to 14 V
A9-28 (IGSW) - Body ground	Ignition switch ON	10 to 14 V

NG → **REPAIR OR REPLACE HARNESS AND CONNECTOR**

OK

REPLACE ECM

CA

ECM Communication Stop Mode

(2006/01-)

DESCRIPTION

Detection Item	Symptom	Trouble Area
ECM COMMUNICATION STOP MODE	• ENGINE is not displayed on "BUS CHECK" screen of intelligent tester • Applies to "ECM COMMUNICATION STOP MODE" in "DTC COMBINATION TABLE"	• Power source or inside ECM • ECM main wire and connector • ECM

WIRING DIAGRAM

for 2AZ-FE

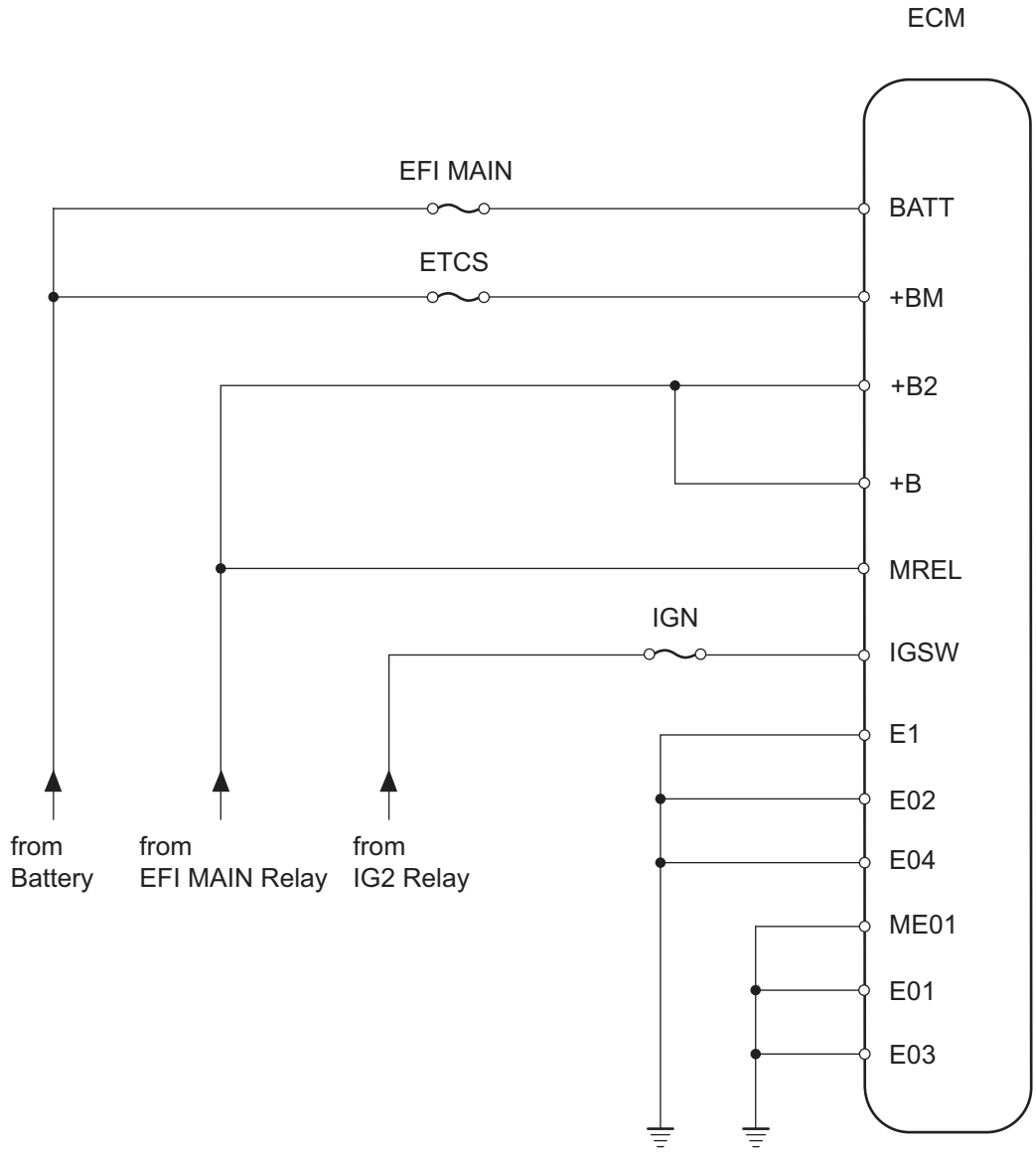

T

C129199E06

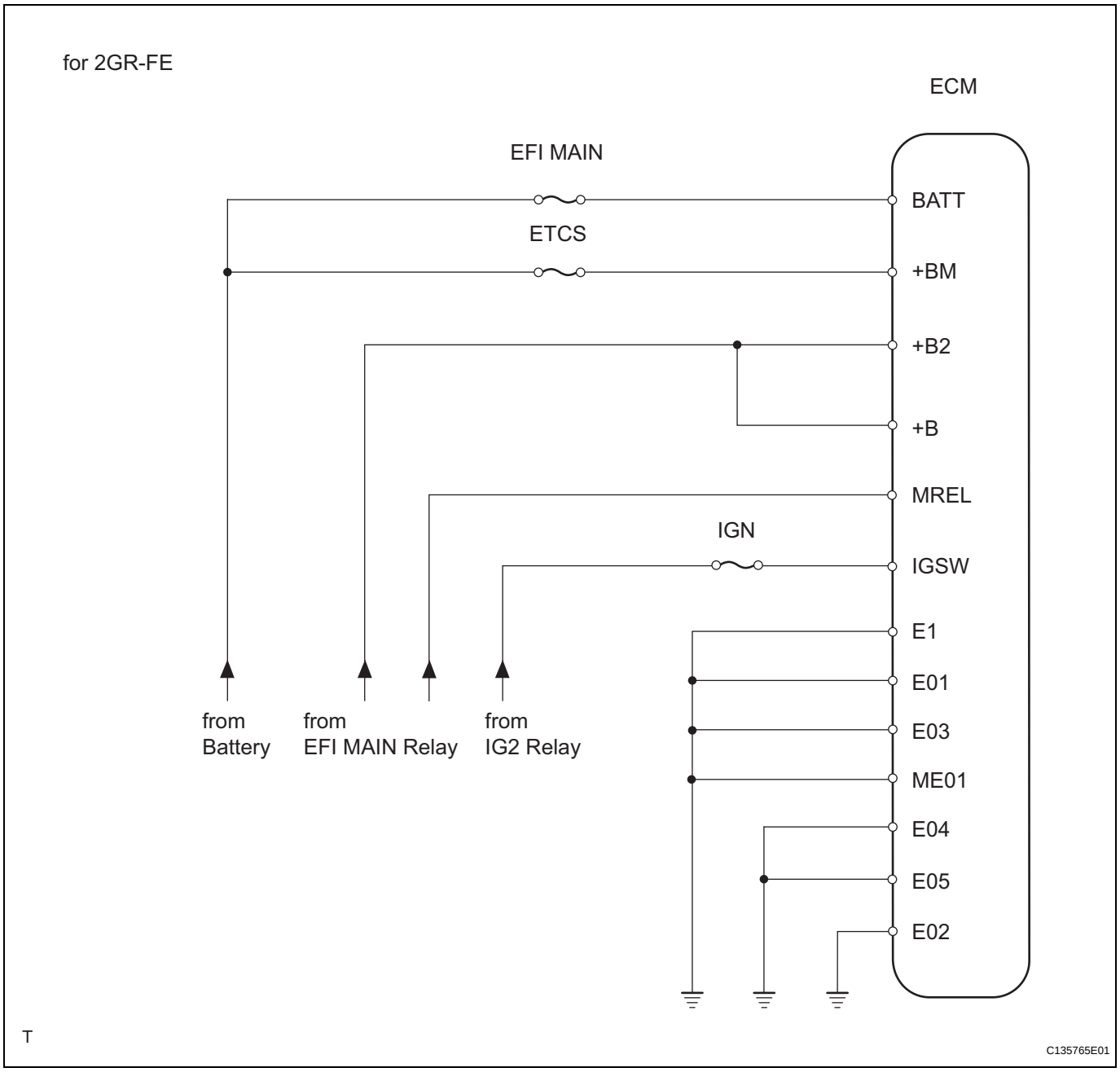

INSPECTION PROCEDURE

NOTICE:

- **Turn the ignition switch OFF before measuring the resistances of the main wire and branch wire.**
- **After the ignition switch is turned OFF, check that the key reminder warning system and light reminder warning system are not in operation.**
- **Before measuring the resistance, leave the vehicle as is for at least 1 minute and do not operate the ignition switch, any other switches or the doors. If doors need to be opened in order to check connectors, open the doors and leave them open.**

HINT:

Operating the ignition switch, any switches or any doors triggers related ECU and sensor communication with the CAN, which causes resistance variation.

1	**CHECK WIRE HARNESS (ECM - BATTERY AND BODY GROUND)**

(a) Disconnect the A9 and B30 ECM connectors.

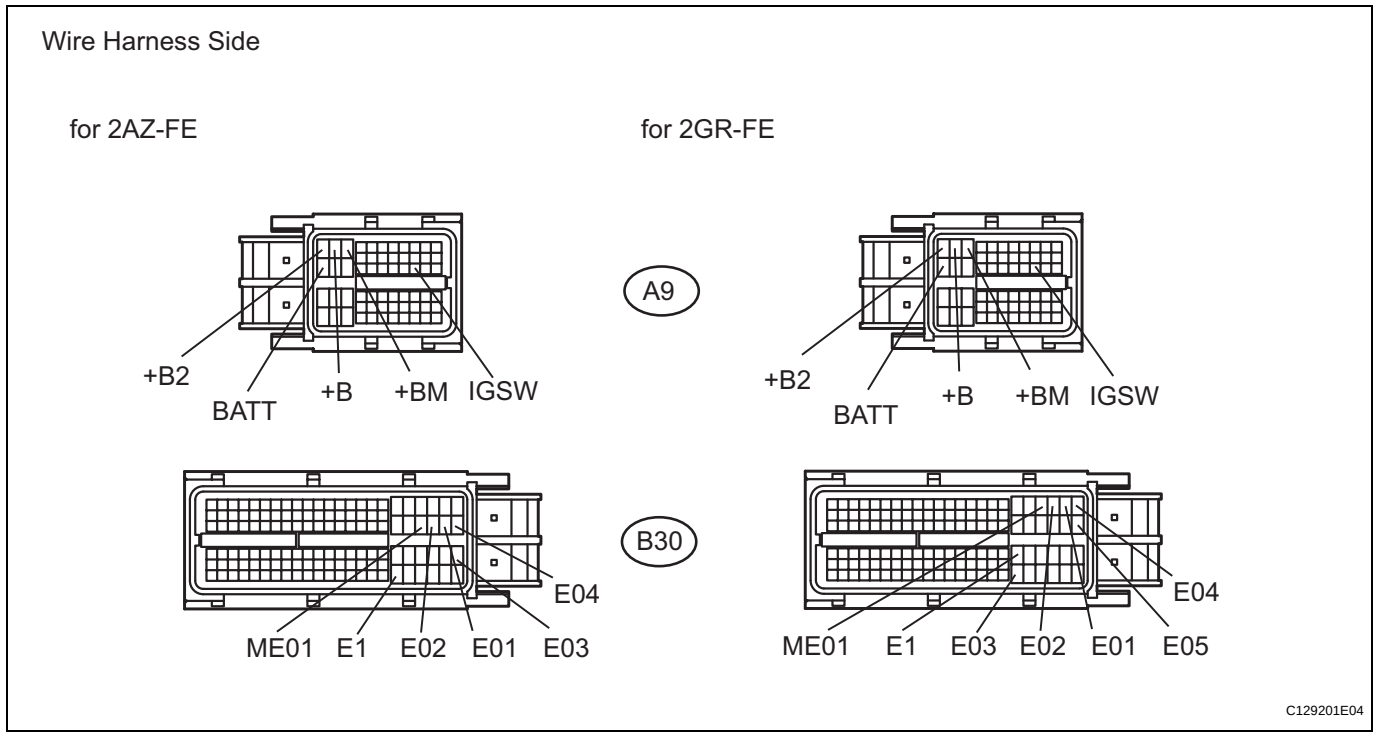

(b) Measure the resistance of the wire harness side connector.

Standard resistance:

for 2AZ-FE

Tester Connection	Specified Condition
B30-104 (E1) - Body ground	Below 1 Ω
B30-45 (E01) - Body ground	Below 1 Ω
B30-44 (E02) - Body ground	Below 1 Ω
B30-86 (E03) - Body ground	Below 1 Ω
B30-46 (E04) - Body ground	Below 1 Ω
B30-43 (ME01) - Body ground	Below 1 Ω

for 2GR-FE

Tester Connection	Specified Condition
B30-81 (E1) - Body ground	Below 1 Ω
B30-22 (E01) - Body ground	Below 1 Ω
B30-21 (E02) - Body ground	Below 1 Ω
B30-104 (E03) - Body ground	Below 1 Ω
B30-23 (E04) - Body ground	Below 1 Ω
B30-46 (E05) - Body ground	Below 1 Ω
B30-20 (ME01) - Body ground	Below 1 Ω

(c) Measure the voltage of the wire harness side connector.

Standard voltage

Tester Connection	Condition	Specified Condition
A9-1 (+B2) - Body ground	When battery's positive (+) voltage is applied to terminal MREL	10 to 14 V
A9-2 (+B) - Body ground	When battery's positive (+) voltage is applied to terminal MREL	10 to 14 V
A9-3 (+BM) - Body ground	Always	10 to 14 V
A9-20 (BATT) - Body ground	Always	10 to 14 V
A9-28 (IGSW) - Body ground	Ignition switch ON	10 to 14 V

NG → **REPAIR OR REPLACE HARNESS AND CONNECTOR**

OK

REPLACE ECM

Main Body ECU Communication Stop Mode

DESCRIPTION

Detection Item	Symptom	Trouble Area
MAIN BODY ECU COMMUNICATION STOP MODE	• MAIN BODY is not displayed on "BUS CHECK" screen of intelligent tester • Applies to "MAIN BODY ECU COMMUNICATION STOP MODE" in "DTC COMBINATION TABLE"	• Power source or inside main body ECU • Main body ECU branch wire and connector • Instrument panel junction block (Main body ECU)

WIRING DIAGRAM

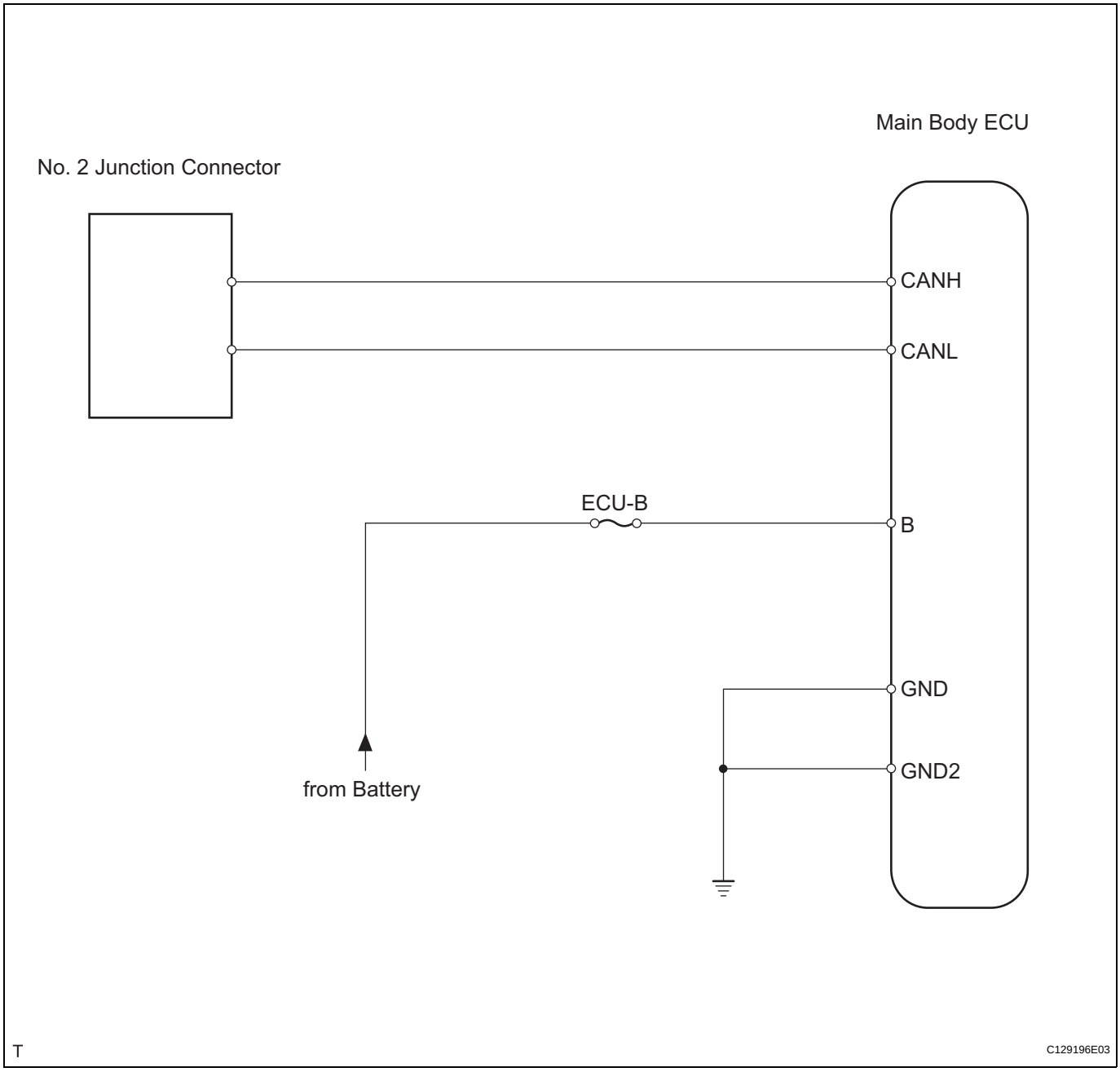

INSPECTION PROCEDURE

NOTICE:

- **Turn the ignition switch OFF before measuring the resistances of the main wire and the branch wire.**
- **After the ignition switch is turned OFF, check that the key reminder warning system and light reminder warning system are not in operation.**
- **Before measuring the resistance, leave the vehicle for at least 1 minute and do not operate the ignition switch, any switches or doors. If doors need to be opened in order to check connectors, open the doors and leave them open.**

HINT:

Operating the ignition switch, any switches or any doors triggers related ECU and sensor communication with the CAN, which causes resistance variation.

1	CHECK CAN BUS LINE FOR DISCONNECTION (MAIN BODY ECU BRANCH WIRE)

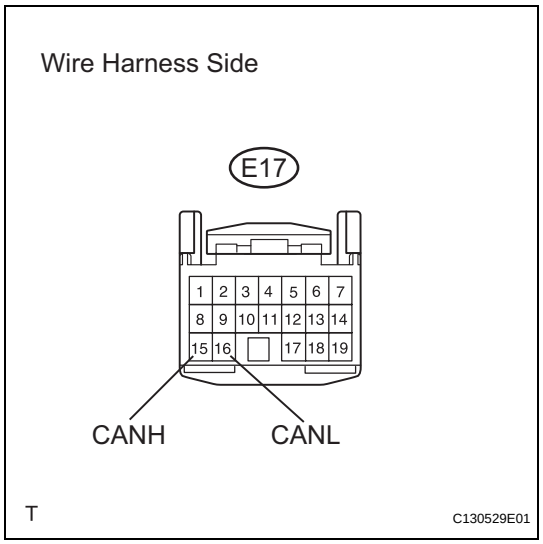

(a) Disconnect the E17 main body ECU connector.

(b) Measure the resistance of the wire harness side connector.

Standard resistance

Tester Connection	Condition	Specified Condition
E17-15 (CANH) - E17-16 (CANL)	Ignition switch OFF	54 to 69 Ω

NG → **REPAIR OR REPLACE CAN BRANCH WIRE CONNECTED TO MAIN BODY ECU (CANH, CANL)**

OK

CA

2	CHECK WIRE HARNESS (MAIN BODY ECU - BATTERY AND BODY GROUND)

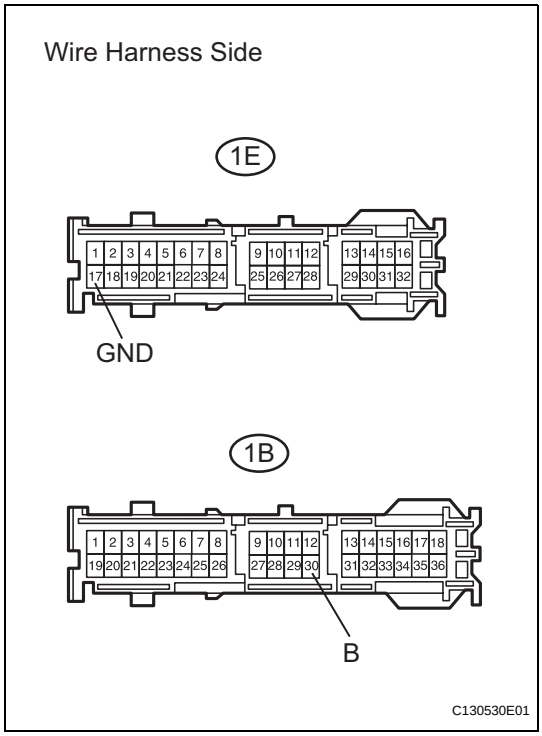

(a) Disconnect the 1E and 1B junction block connectors.
(b) Measure the resistance of the wire harness side connector.
Standard resistance

Tester Connection	Specified Condition
1E-17 (GND) - Body ground	Below 1 Ω

(c) Measure the voltage of the wire harness side connector.
Standard voltage

Tester Connection	Specified Condition
1B-30 (B) - Body ground	10 to 14 V

NG → **REPAIR OR REPLACE HARNESS AND CONNECTOR**

OK

REPLACE INSTRUMENT PANEL JUNCTION BLOCK (MAIN BODY ECU)

CA

Combination Meter ECU Communication Stop Mode

DESCRIPTION

Detection Item	Symptom	Trouble Area
COMBINATION METER ECU COMMUNICATION STOP MODE	• METER is not displayed on "BUS CHECK" screen of intelligent tester • Applies to "COMBINATION METER ECU COMMUNICATION STOP MODE" in "DTC COMBINATION TABLE"	• Power source or inside combination meter ECU • Combination meter ECU branch wire and connector • Combination meter ECU

WIRING DIAGRAM

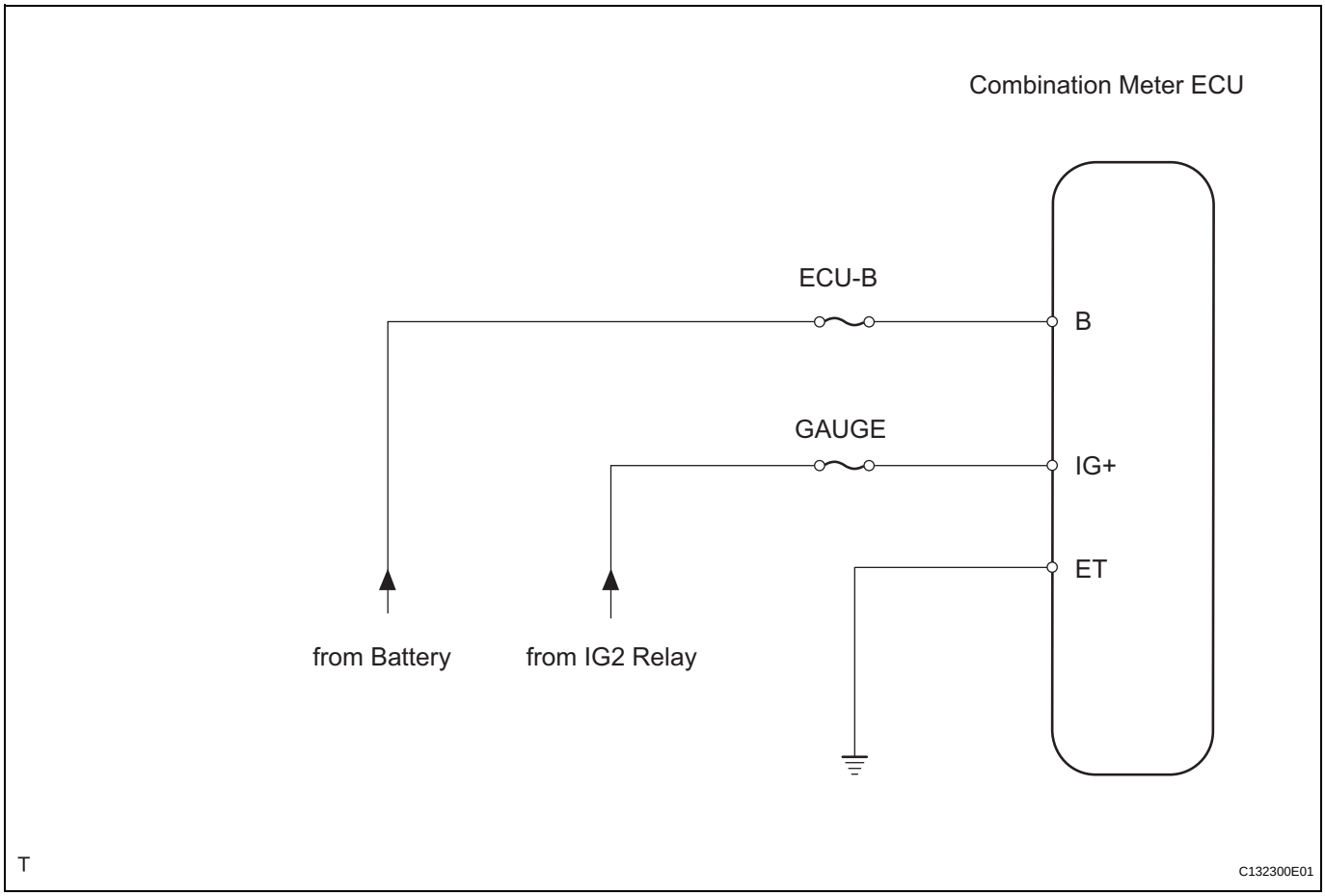

CA

INSPECTION PROCEDURE

NOTICE:

- **Turn the ignition switch OFF before measuring the resistances of the main wire and the branch wire.**
- **After the ignition switch is turned OFF, check that the key reminder warning system and light reminder warning system are not in operation.**
- **Before measuring the resistance, leave the vehicle for at least 1 minute and do not operate the ignition switch, any switches or doors. If doors need to be opened in order to check connectors, open the doors and leave them open.**

HINT:

Operating the ignition switch, any switches or any doors triggers related ECU and sensor communication with the CAN, which causes resistance variation.

1	CHECK WIRE HARNESS (COMBINATION METER ECU - BATTERY AND BODY GROUND)

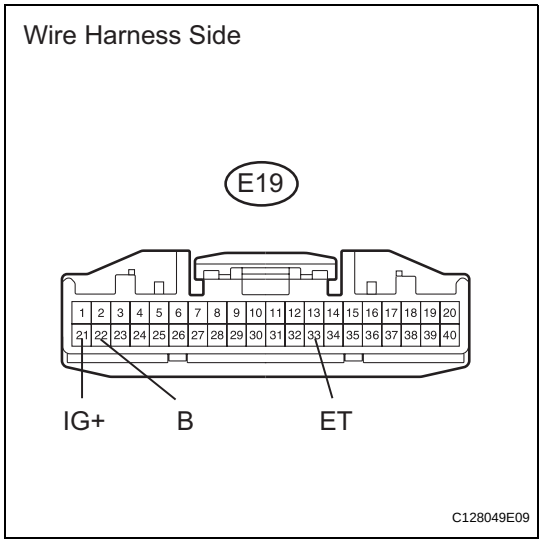

(a) Disconnect the E19 combination meter ECU connector.
(b) Measure the resistance of the wire harness side connector.
Standard resistance

Tester Connection	Specified Condition
E19-33 (ET) - Body ground	Below 1 Ω

(c) Measure the voltage of the wire harness side connector.
Standard voltage

Tester Connection	Condition	Specified Condition
E19-22 (B) - Body ground	Always	10 to 14 V
E19-21 (IG+) - Body ground	Ignition switch ON	10 to 14 V

NG → **REPAIR OR REPLACE HARNESS AND CONNECTOR**

OK

REPLACE COMBINATION METER ECU

CA

Center Airbag Sensor Communication Stop Mode

DESCRIPTION

Detection Item	Symptom	Trouble Area
CENTER AIRBAG SENSOR COMMUNICATION STOP MODE	• SRS AIRBAG is not displayed on "BUS CHECK" screen of intelligent tester. • Applies to "CENTER AIRBAG SENSOR COMMUNICATION STOP MODE" in "DTC COMBINATION TABLE"	• Power source or inside center airbag sensor assembly • Center airbag sensor assembly branch wire and connector • Center airbag sensor assembly

WIRING DIAGRAM

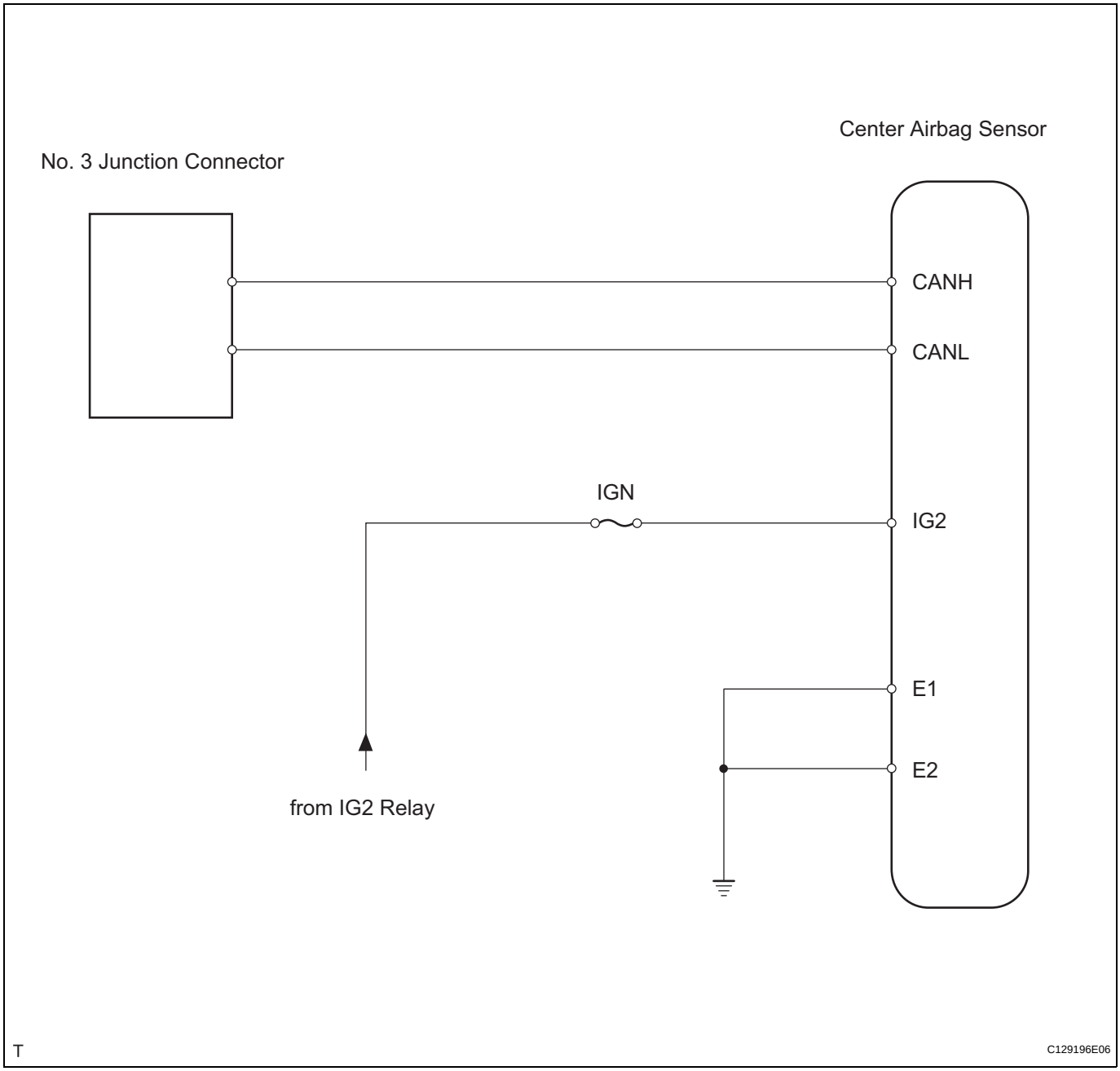

CA

INSPECTION PROCEDURE

NOTICE:

- **Turn the ignition switch OFF before measuring the resistances of the main wire and the branch wire.**
- **After the ignition switch is turned OFF, check that the key reminder warning system and light reminder warning system are not in operation.**
- **Before measuring the resistance, leave the vehicle for at least 1 minute and do not operate the ignition switch, any switches or doors. If doors need to be opened in order to check connectors, open the doors and leave them open.**

HINT:

Operating the ignition switch, any switches or any doors triggers related ECU and sensor communication with the CAN, which causes resistance variation.

1 CHECK CAN BUS LINE FOR DISCONNECTION (CENTER AIRBAG SENSOR ASSEMBLY BRANCH WIRE)

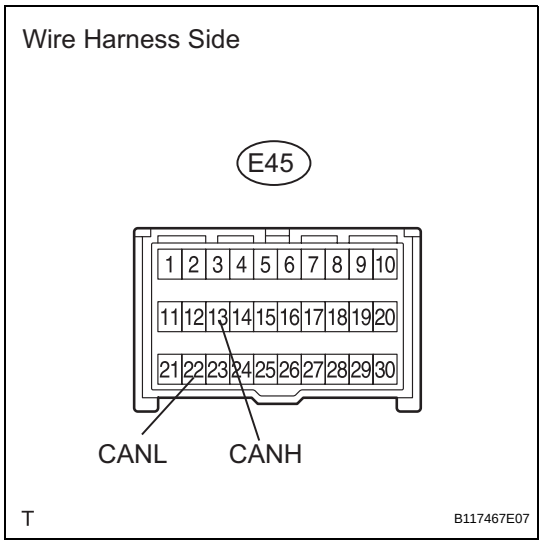

(a) Disconnect the E45 center airbag sensor connector.

(b) Measure the resistance of the wire harness side connector.

Standard resistance

Tester Connection	Condition	Specified Condition
E45-13 (CANH) - E45-22 (CANL)	Ignition switch OFF	54 to 69 Ω

NG → **REPAIR OR REPLACE CENTER AIRBAG SENSOR ASSEMBLY BRANCH WIRE AND CONNECTOR (CANH, CANL)**

OK

2 CHECK WIRE HARNESS (CENTER AIRBAG SENSOR ASSEMBLY - BATTERY AND BODY GROUND)

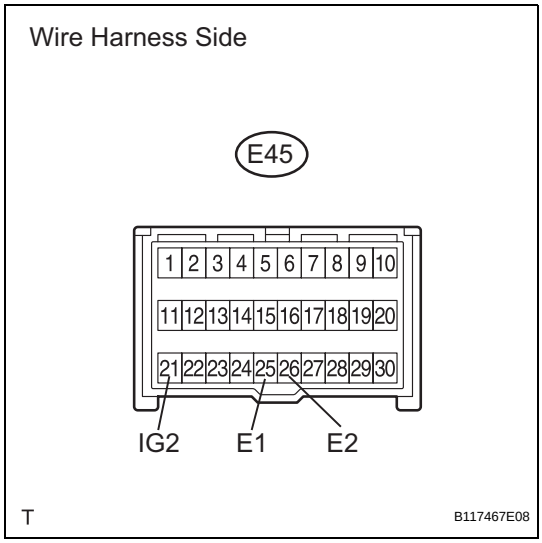

(a) Disconnect the E45 center airbag sensor connector.

(b) Measure the resistance of the wire harness side connector.

Standard resistance

Tester Connection	Specified Condition
E45-25 (E1) - Body ground	Below 1 Ω
E45-26 (E2) - Body ground	Below 1 Ω

(c) Measure the voltage of the wire harness side connector.

Standard voltage

Tester Connection	Condition	Specified Condition
E45-21 (IG2) - Body ground	Ignition switch ON	10 to 14 V

NG → **REPAIR OR REPLACE HARNESS AND CONNECTOR**

OK

REPLACE CENTER AIRBAG SENSOR ASSEMBLY

4WD Control ECU Communication Stop Mode

DESCRIPTION

Detection Item	Symptom	Trouble Area
4WD CONTROL ECU COMMUNICATION STOP MODE	• 4WD is not displayed on "BUS CHECK" screen of intelligent tester • Applies to "4WD CONTROL ECU COMMUNICATION STOP MODE" in "DTC COMBINATION TABLE"	• Power source or inside 4WD control ECU • 4WD control ECU branch wire and connector • 4WD control ECU

HINT:
For vehicle with 4WD only.

WIRING DIAGRAM

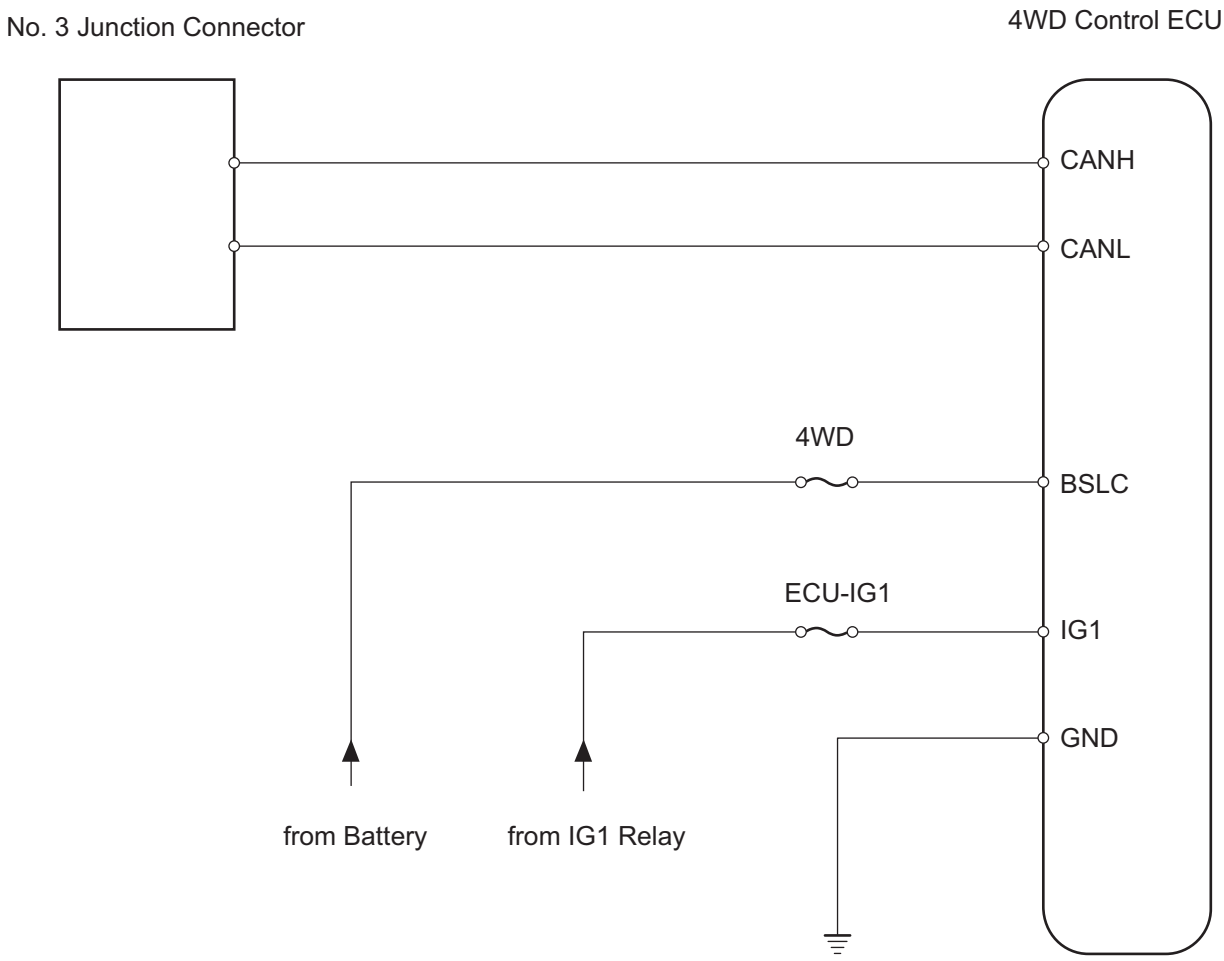

T

C129192E08

INSPECTION PROCEDURE

NOTICE:

- **Turn the ignition switch OFF before measuring the resistances of the main wire and the branch wire.**
- **After the ignition switch is turned OFF, check that the key reminder warning system and light reminder warning system are not in operation.**
- **Before measuring the resistance, leave the vehicle for at least 1 minute and do not operate the ignition switch, any switches or doors. If doors need to be opened in order to check connectors, open the doors and leave them open.**

HINT:

Operating the ignition switch, any switches or any doors triggers related ECU and sensor communication with the CAN, which causes resistance variation.

1 CHECK CAN BUS LINE FOR DISCONNECTION (4WD CONTROL ECU BRANCH WIRE)

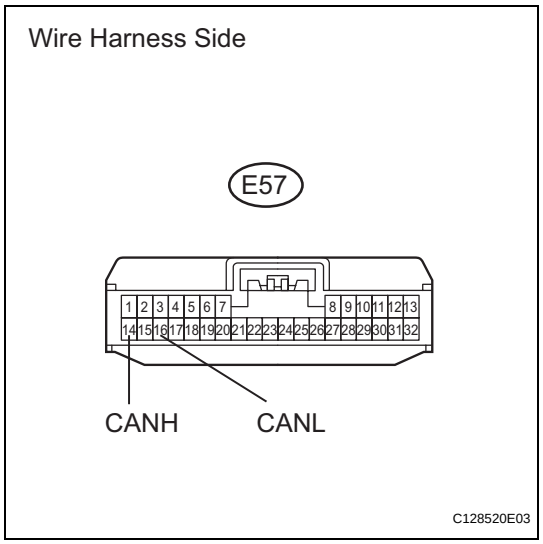

(a) Disconnect the E57 4WD control ECU connector.
(b) Measure the resistance of the wire harness side connector.

Standard resistance

Tester Connection	Condition	Specified Condition
E57-14 (CANH) - E57-16 (CANL)	Ignition switch OFF	54 to 69 Ω

NG → **REPAIR OR REPLACE CAN BRANCH WIRE CONNECTED TO 4WD CONTROL ECU (CANH, CANL)**

OK

2 CHECK WIRE HARNESS (4WD CONTROL ECU - BATTERY AND BODY GROUND)

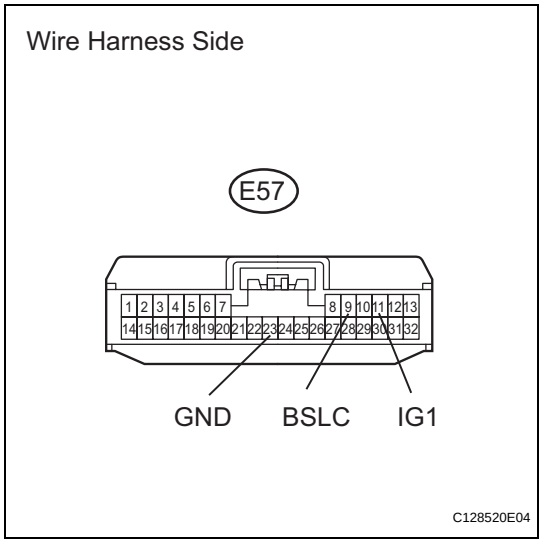

(a) Disconnect the E57 4WD control ECU connector.
(b) Measure the resistance of the wire harness side connector.

Standard resistance

Tester Connection	Specified Condition
E57-23 (GND) - Body ground	Below 1 Ω

(c) Measure the voltage of the wire harness side connector.

Standard voltage

Tester Connection	Condition	Specified Condition
E57-9 (BSLC) - Body ground	Always	10 to 14 V
E57-11 (IG1) - Body ground	Ignition switch ON	10 to 14 V

NG → **REPAIR OR REPLACE HARNESS AND CONNECTOR**

CA

OK

REPLACE 4WD CONTROL ECU

CAN Bus Line

DESCRIPTION

When any DTC for the CAN communication system is output, first measure the resistance between the terminals of the DLC3 to specify the trouble area, and check that there is not a short in the CAN main wire, between the main wire, to +B, or to GND.

WIRING DIAGRAM

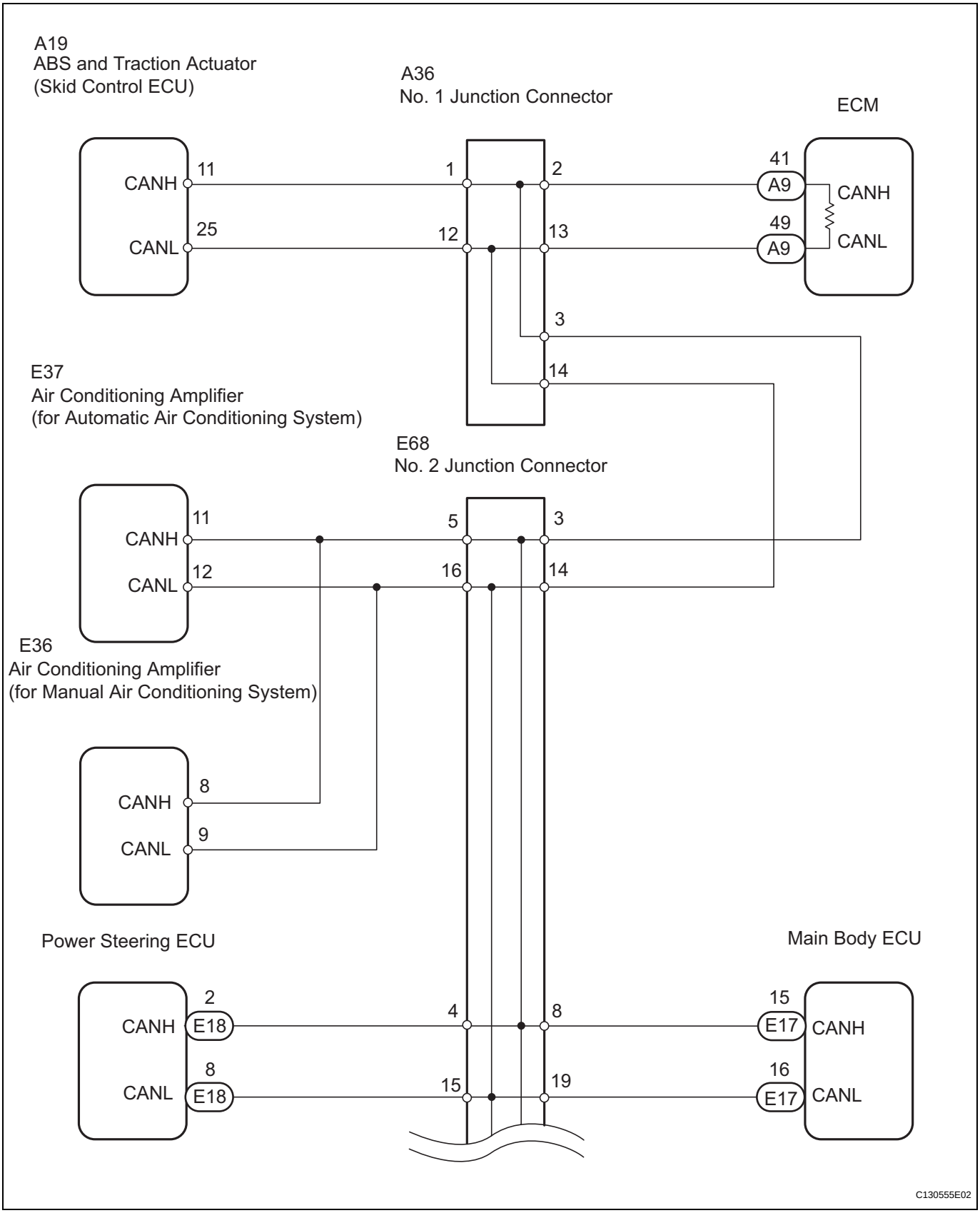

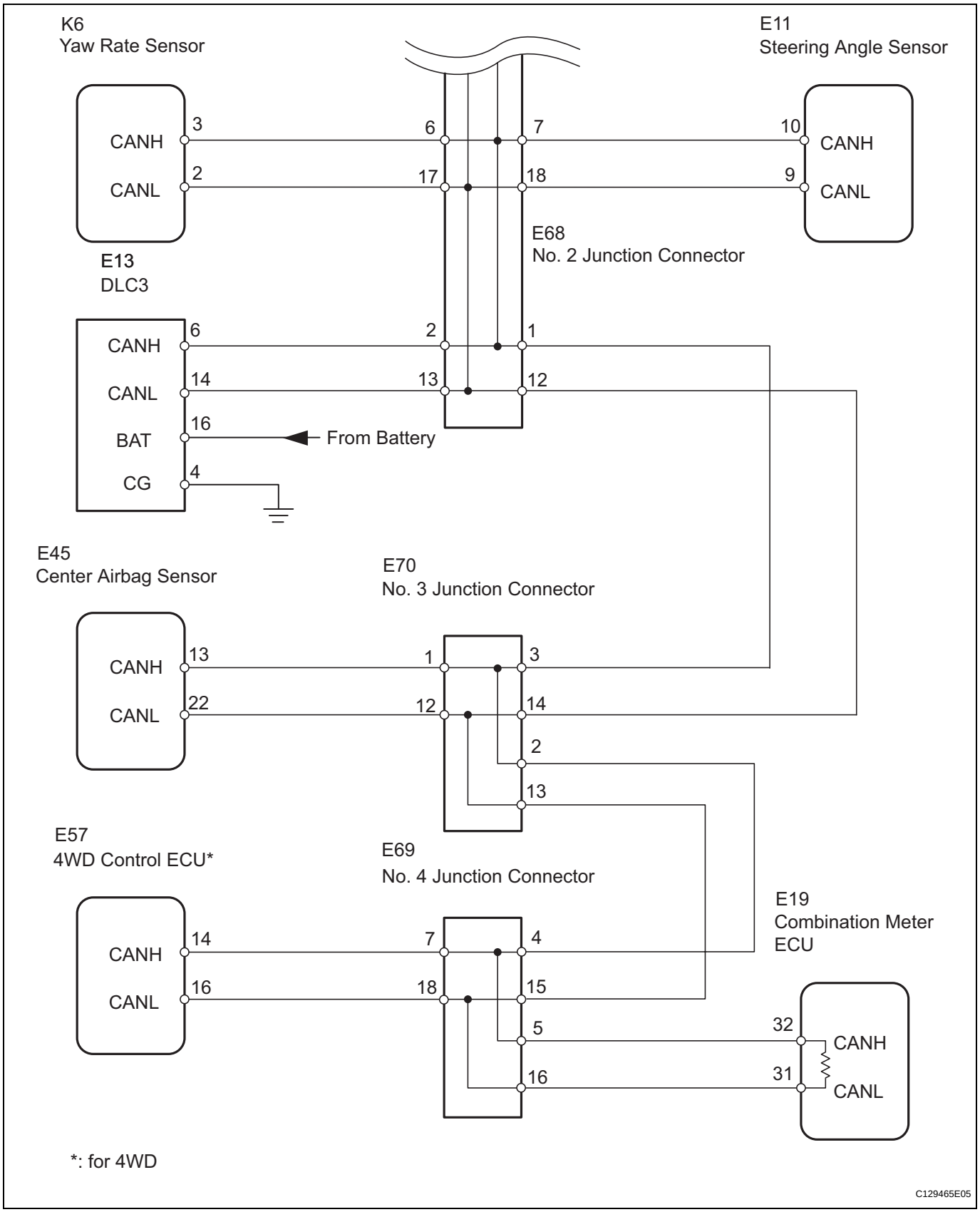

INSPECTION PROCEDURE

NOTICE:

- **Turn the ignition switch OFF before measuring the resistances of the main wire and the branch wire.**

- **After the ignition switch is turned OFF, check that the key reminder warning system and light reminder warning system are not in operation.**
- **Before measuring the resistance, leave the vehicle for at least 1 minute and do not operate the ignition switch, any switches or doors. If doors need to be opened in order to check connectors, open the doors and leave them open.**

HINT:
Operating the ignition switch, any switches or any doors triggers related ECU and sensor communication with the CAN, which causes resistance variation.

1 CHECK CAN BUS WIRE (MAIN WIRE FOR OPEN, CAN BUS LINES FOR SHORT CIRCUIT)

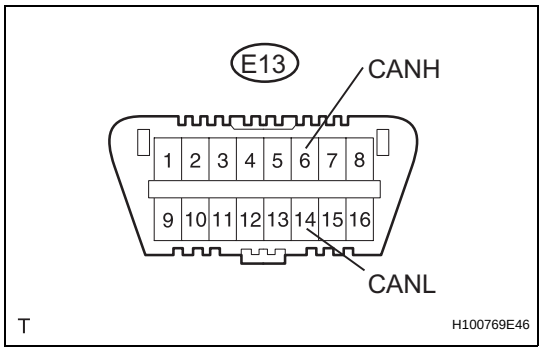

(a) Measure the resistance of the DLC3.
Standard resistance

Tester Connection	Condition	Specified Condition	Proceed to
E13-6 (CANH) - E13-14 (CANL)	Ignition switch OFF	54 to 69 Ω	OK
E13-6 (CANH) - E13-14 (CANL)	Ignition switch OFF	69 Ω or more	NG-A
E13-6 (CANH) - E13-14 (CANL)	Ignition switch OFF	54 Ω or less	NG-B

NG-A → **CHECK CAN MAIN WIRE FOR OPEN**

NG-B → **CHECK CAN BUS LINES FOR SHORT CIRCUIT**

OK

2 CHECK CAN BUS LINE FOR SHORT TO +B

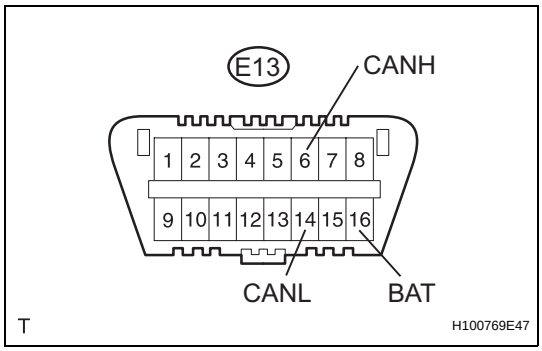

(a) Measure the resistance of the DLC3.
Standard resistance

Tester Connection	Condition	Specified Condition
E13-6 (CANH) - E13-16 (BAT)	Ignition switch OFF	1 MΩ or more
E13-14 (CANL) - E13-16 (BAT)	Ignition switch OFF	1 MΩ or more

NG → **CHECK CAN BUS LINE FOR SHORT TO +B**

OK

3	CHECK CAN BUS LINE FOR SHORT TO GND

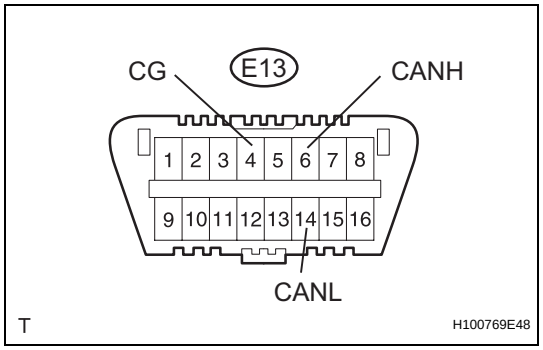

(a) Measure the resistance of the DLC3.
Standard resistance

Tester Connection	Condition	Specified Condition
E13-6 (CANH) - E13-4 (CG)	Ignition switch OFF	200 Ω or more
E13-14 (CANL) - E13-4 (CG)	Ignition switch OFF	200 Ω or more

NG → **CHECK CAN BUS LINE FOR SHORT TO GND**

OK

CHECK HOW TO PROCEED WITH TROUBLESHOOTING

CA

Open in CAN Main Wire

DESCRIPTION

There may be an open circuit in the CAN main wire and / or the DLC3 branch wire when the resistance between terminals 6 (CANH) and 14 (CANL) of the DLC3 is 69 Ω or more.

Symptom	Trouble Area
Resistance between terminals 6 (CANH) and 14 (CANL) of DLC3 is 69 Ω or more.	• CAN main wire and connector • No. 1 junction connector • No. 2 junction connector • No. 3 junction connector • No. 4 junction connector • ECM • Combination meter ECU

WIRING DIAGRAM

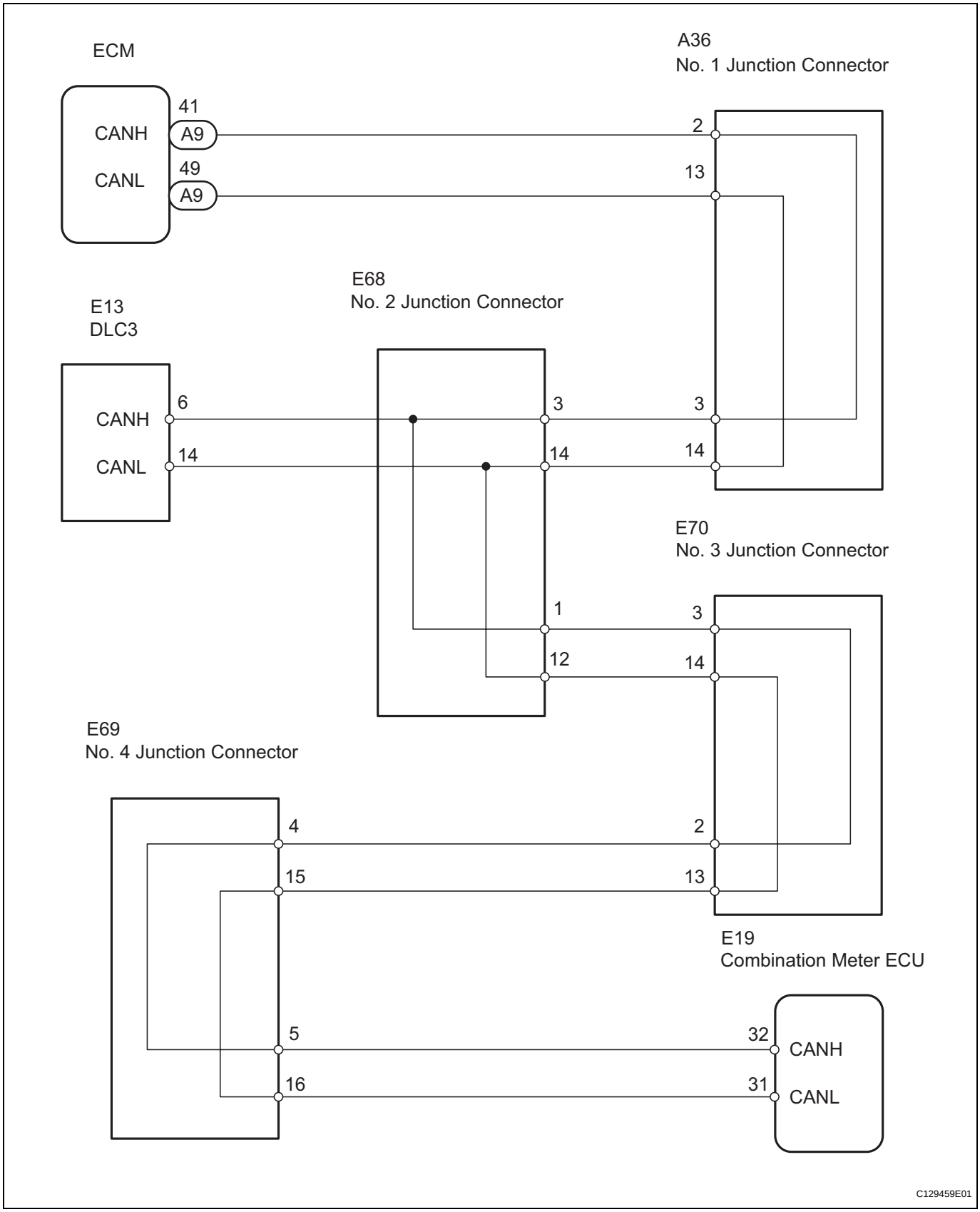

CA

INSPECTION PROCEDURE

NOTICE:

- **Turn the ignition switch OFF before measuring the resistances of the main wire and the branch wire.**
- **After the ignition switch is turned OFF, check that the key reminder warning system and light reminder warning system are not in operation.**
- **Before measuring the resistance, leave the vehicle for at least 1 minute and do not operate the ignition switch, any switches or doors. If doors need to be opened in order to check connectors, open the doors and leave them open.**

HINT:

Operating the ignition switch, any switches or any doors triggers related ECU and sensor communication with the CAN, which causes resistance variation.

1	CHECK DLC3

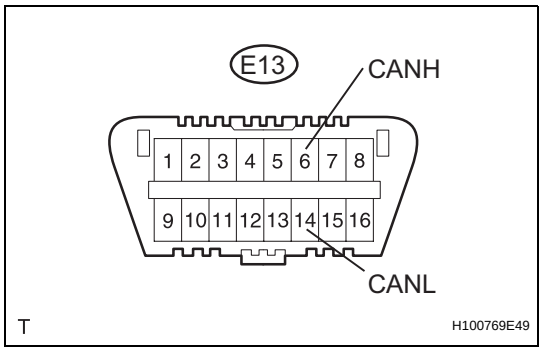

(a) Measure the resistance of the DLC3.

Standard resistance

Tester Connection	Condition	Specified Condition	Proceed to
E13-6 (CANH) - E13-14 (CANL)	Ignition switch OFF	108 to 132 Ω	A
E13-6 (CANH) - E13-14 (CANL)	Ignition switch OFF	132 Ω or more	B

NOTICE:

When the measured value is 132 Ω or more and a CAN communication system diagnostic trouble code is output, there may be a fault besides disconnection of the DLC3 branch wire. For that reason, troubleshooting should be performed again from "HOW TO PROCEED WITH TROUBLESHOOTING" (see page CA-8) after repairing the trouble area.

B → **REPAIR OR REPLACE CAN BRANCH WIRE CONNECTED TO DLC3 (CANH, CANL)**

A

2	CHECK CAN MAIN WIRE FOR DISCONNECTION (NO. 2 JUNCTION CONNECTOR - ECM)

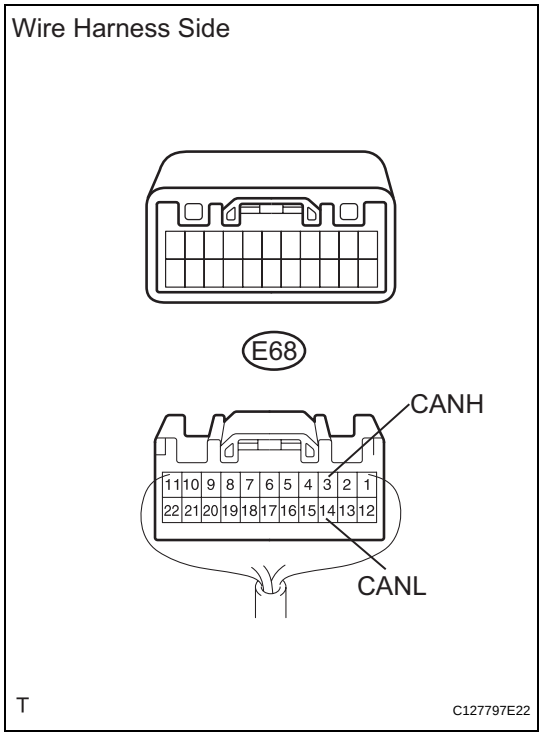

(a) Disconnect the E68 No. 2 junction connector.
(b) Measure the resistance of the wire harness side connector.

Standard resistance

Tester Connection	Condition	Specified Condition
E68-3 (CANH) - E68-14 (CANL)	Ignition switch OFF	108 to 132 Ω

NG → **Go to step 4**

OK

3	CHECK CAN MAIN WIRE FOR DISCONNECTION (NO. 2 JUNCTION CONNECTOR - COMBINATION METER ECU)

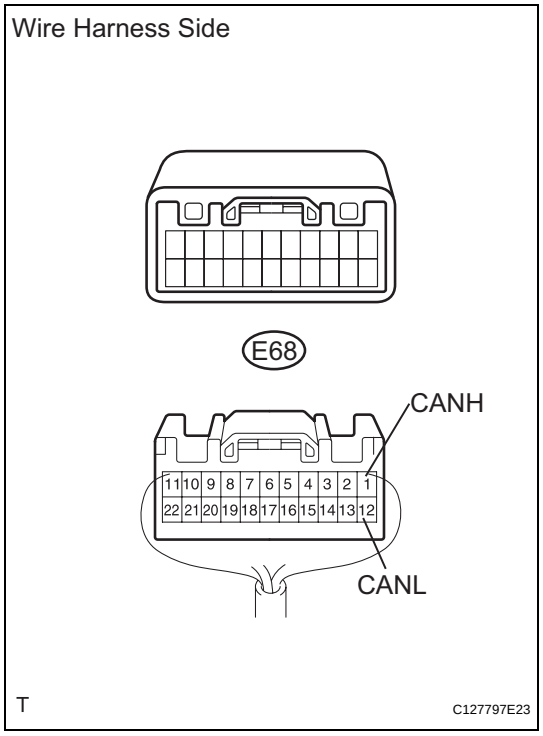

(a) Measure the resistance of the wire harness side connector.

Standard resistance

Tester Connection	Condition	Specified Condition
E68-1 (CANH) - E68-12 (CANL)	Ignition switch OFF	108 to 132 Ω

NG → **Go to step 9**

CA

OK

REPLACE NO. 2 JUNCTION CONNECTOR

4	CONNECT CONNECTOR

(a) Reconnect the E68 No. 2 junction connector.

NEXT

5	CHECK CAN MAIN WIRE FOR DISCONNECTION (NO. 1 JUNCTION CONNECTOR - ECM)

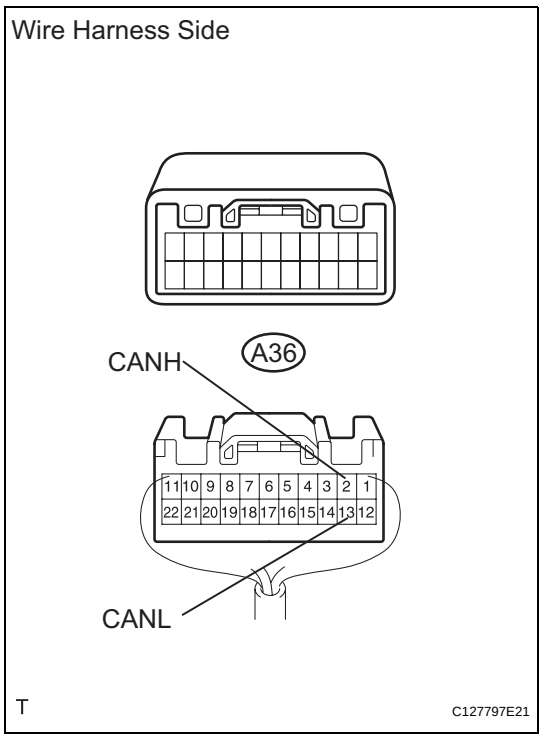

(a) Disconnect the A36 No. 1 junction connector.
(b) Measure the resistance of the wire harness side connector.

Standard resistance

Tester Connection	Condition	Specified Condition
A36-2 (CANH) - A36-13 (CANL)	Ignition switch OFF	108 to 132 Ω

NG → **Go to step 7**

OK

6	**CHECK CAN MAIN WIRE FOR DISCONNECTION (NO. 1 JUNCTION CONNECTOR - NO. 2 JUNCTION CONNECTOR)**

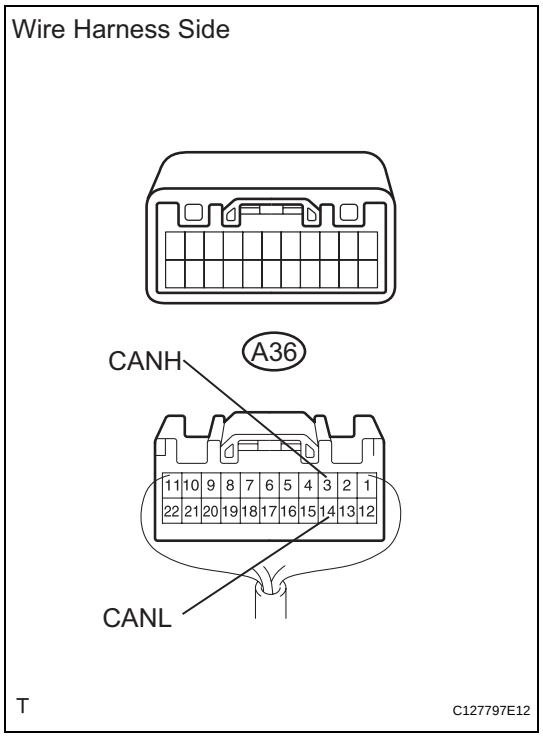

(a) Measure the resistance of the wire harness side connector.

Standard resistance

Tester Connection	Condition	Specified Condition
A36-3 (CANH) - A36-14 (CANL)	Ignition switch OFF	108 to 132 Ω

NG → **REPAIR OR REPLACE CAN MAIN WIRE AND CONNECTOR (NO. 1 JUNCTION CONNECTOR - NO. 2 UNCTION CONNECTOR)**

OK

REPLACE NO. 1 JUNCTION CONNECTOR

7	**CONNECT CONNECTOR**

(a) Reconnect the A36 No. 1 junction connector.

NEXT

CA

8	CHECK CAN MAIN WIRE FOR DISCONNECTION (ECM - NO. 1 JUNCTION CONNECTOR)

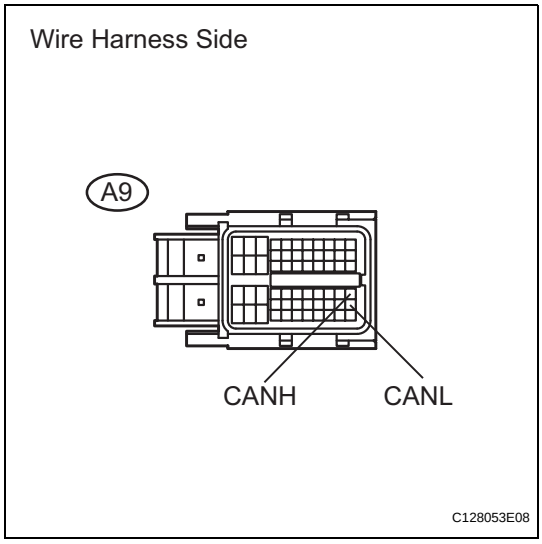

(a) Disconnect the A9 ECM connector.
(b) Measure the resistance of the wire harness side connector.

Standard resistance

Tester Connection	Condition	Specified Condition
A9-41 (CANH) - A9-49 (CANL)	Ignition switch OFF	108 to 132 Ω

NG → **REPAIR OR REPLACE CAN MAIN WIRE CONNECTED TO ECM (ECM - NO. 1 JUNCTION CONNECTOR)**

OK

REPLACE ECM

9	CONNECT CONNECTOR

(a) Reconnect the E68 No. 2 junction connector.

NEXT

CA

10	**CHECK CAN MAIN WIRE FOR DISCONNECTION (NO. 4 JUNCTION CONNECTOR - NO. 2 JUNCTION CONNECTOR)**

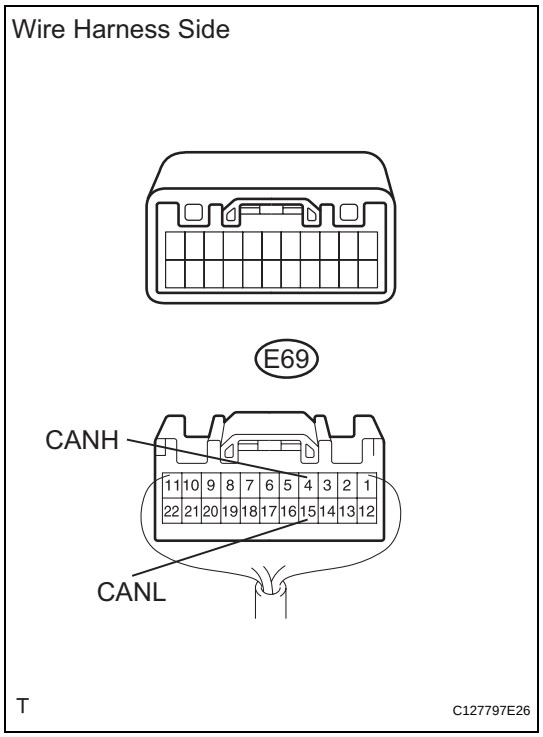

(a) Disconnect the E69 No. 4 junction connector.
(b) Measure the resistance of the wire harness side connector.

Standard resistance

Tester Connection	Condition	Specified Condition
E69-4 (CANH) - E69-15 (CANL)	Ignition switch OFF	108 to 132 Ω

NG → **Go to step 14**

OK

11	**CHECK CAN MAIN WIRE FOR DISCONNECTION (NO. 4 JUNCTION CONNECTOR - COMBINATION METER)**

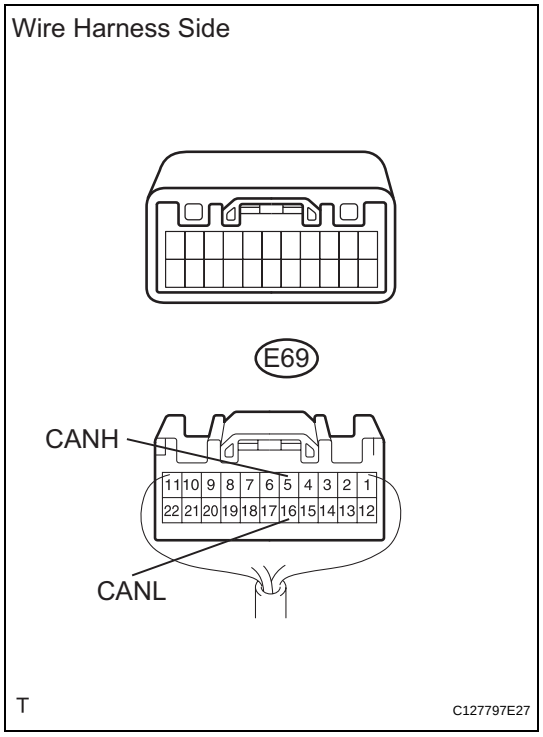

(a) Measure the resistance of the wire harness side connector.

Standard resistance

Tester Connection	Condition	Specified Condition
E69-5 (CANH) - E69-16 (CANL)	Ignition switch OFF	108 to 132 Ω

NG → **Go to step 12**

CA

OK

REPLACE NO. 4 JUNCTION CONNECTOR

12	CONNECT CONNECTOR

(a) Reconnect the E69 No. 4 junction connector.

NEXT

13	CHECK CAN MAIN BUS LINE FOR DISCONNECTION (COMBINATION METER ECU - NO. 4 JUNCTION CONNECTOR)

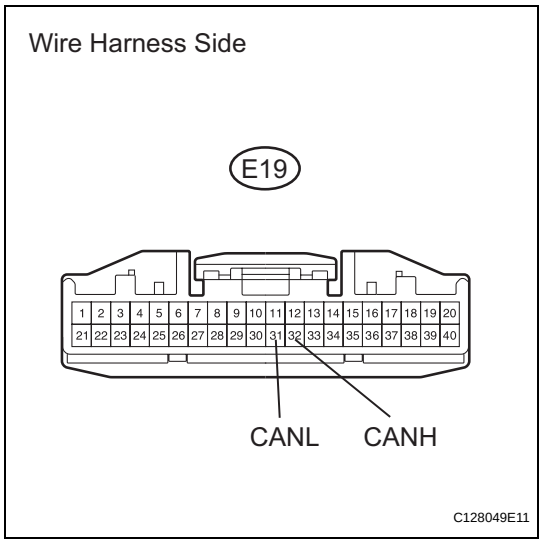

(a) Disconnect the E19 combination meter ECU connector.
(b) Measure the resistance of the wire harness side connector.

Standard resistance

Tester Connection	Condition	Specified Condition
E19-32 (CANH) - E19-31 (CANL)	Ignition switch OFF	108 to 132 Ω

NG → **REPAIR OR REPLACE CAN MAIN WIRE CONNECTED TO COMBINATION METER ECU (COMBINATION METER ECU - NO. 4 JUNCTION CONNECTOR)**

OK

REPLACE COMBINATION METER ASSEMBLY (COMBINATION METER ECU)

14	CONNECT CONNECTOR

(a) Reconnect the E69 No. 4 junction connector.

NEXT

15	CHECK CAN MAIN WIRE FOR DISCONNECTION (NO. 2 JUNCTION CONNECTOR - NO. 3 JUNCTION CONNECTOR)

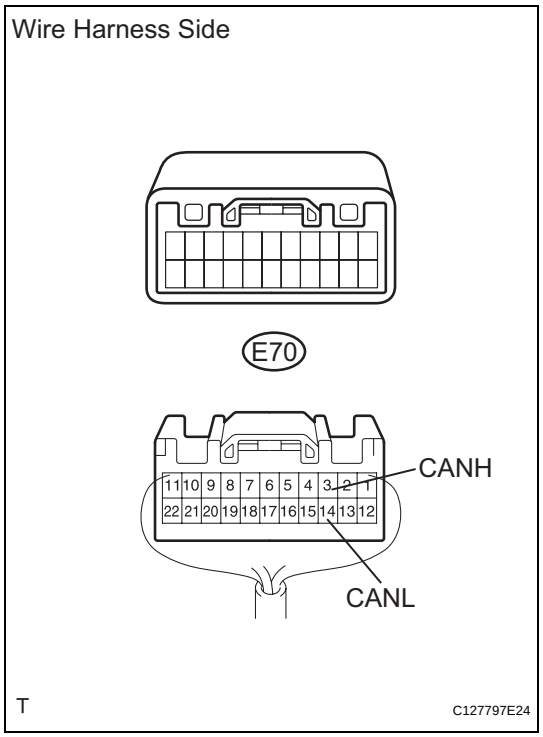

(a) Disconnect the E70 No. 3 junction connector.
(b) Measure the resistance of the wire harness side connector.

Standard resistance

Tester Connection	Condition	Specified Condition
E70-3 (CANH) - E70-14 (CANL)	Ignition switch OFF	108 to 132 Ω

NG → **REPAIR OR REPLACE CAN MAIN WIRE AND CONNECTOR (NO. 3 JUNCTION CONNECTOR - NO. 2 JUNCTION CONNECTOR)**

OK

16	CHECK CAN MAIN WIRE FOR DISCONNECTION (NO. 3 JUNCTION CONNECTOR - NO. 4 JUNCTION CONNECTOR)

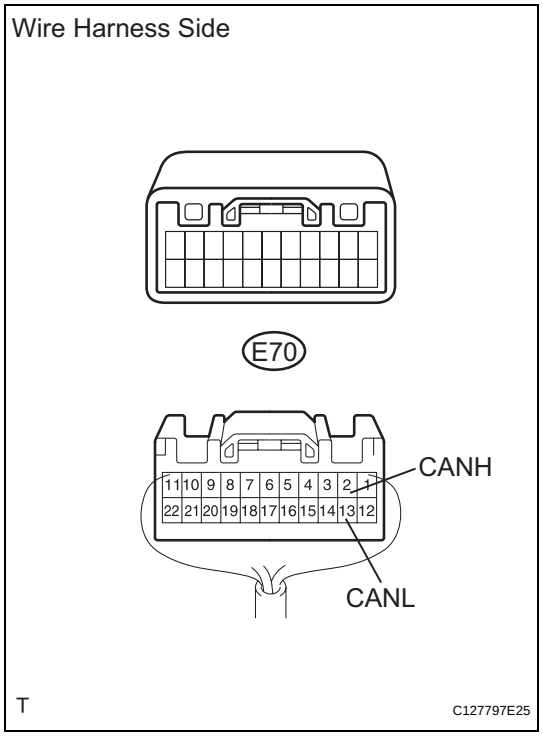

(a) Measure the resistance of the wire harness side connector.

Standard resistance

Tester Connection	Condition	Specified Condition
E70-2 (CANH) - E70-13 (CANL)	Ignition switch OFF	108 to 132 Ω

NG → **REPAIR OR REPLACE CAN MAIN WIRE AND CONNECTOR (NO. 3 JUNCTION CONNECTOR - NO. 4 JUNCTION CONNECTOR)**

CA

OK

REPLACE NO. 3 JUNCTION CONNECTOR

Short in CAN Bus Lines

DESCRIPTION

There may be a short circuit between the CAN bus lines when the resistance between terminals 6 (CANH) and 14 (CANL) of the DLC3 is below 54 Ω.

Symptom	Trouble Area
Resistance between terminals 6 (CANH) and 14 (CANL) of DLC3 is below 54 Ω.	• Short between CAN bus lines • ABS and traction actuator (skid control ECU) • Power steering ECU • Steering angle sensor • Yaw rate sensor • ECM • Center airbag sensor • Air conditioning amplifier • Combination meter ECU • Instrument panel junction block (Main body ECU) • 4WD control ECU • No. 1 junction connector • No. 2 junction connector • No. 3 junction connector • No. 4 junction connector

WIRING DIAGRAM

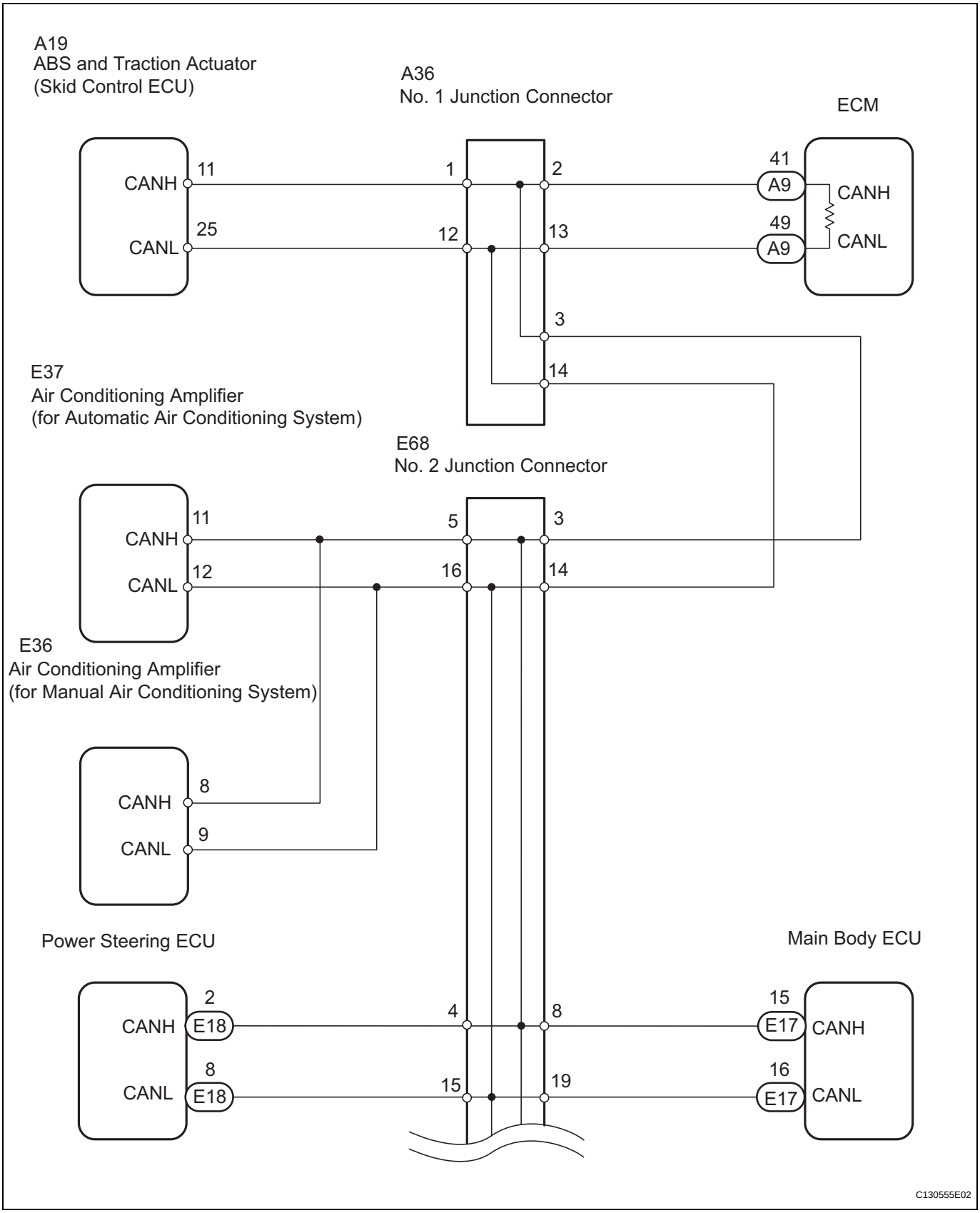

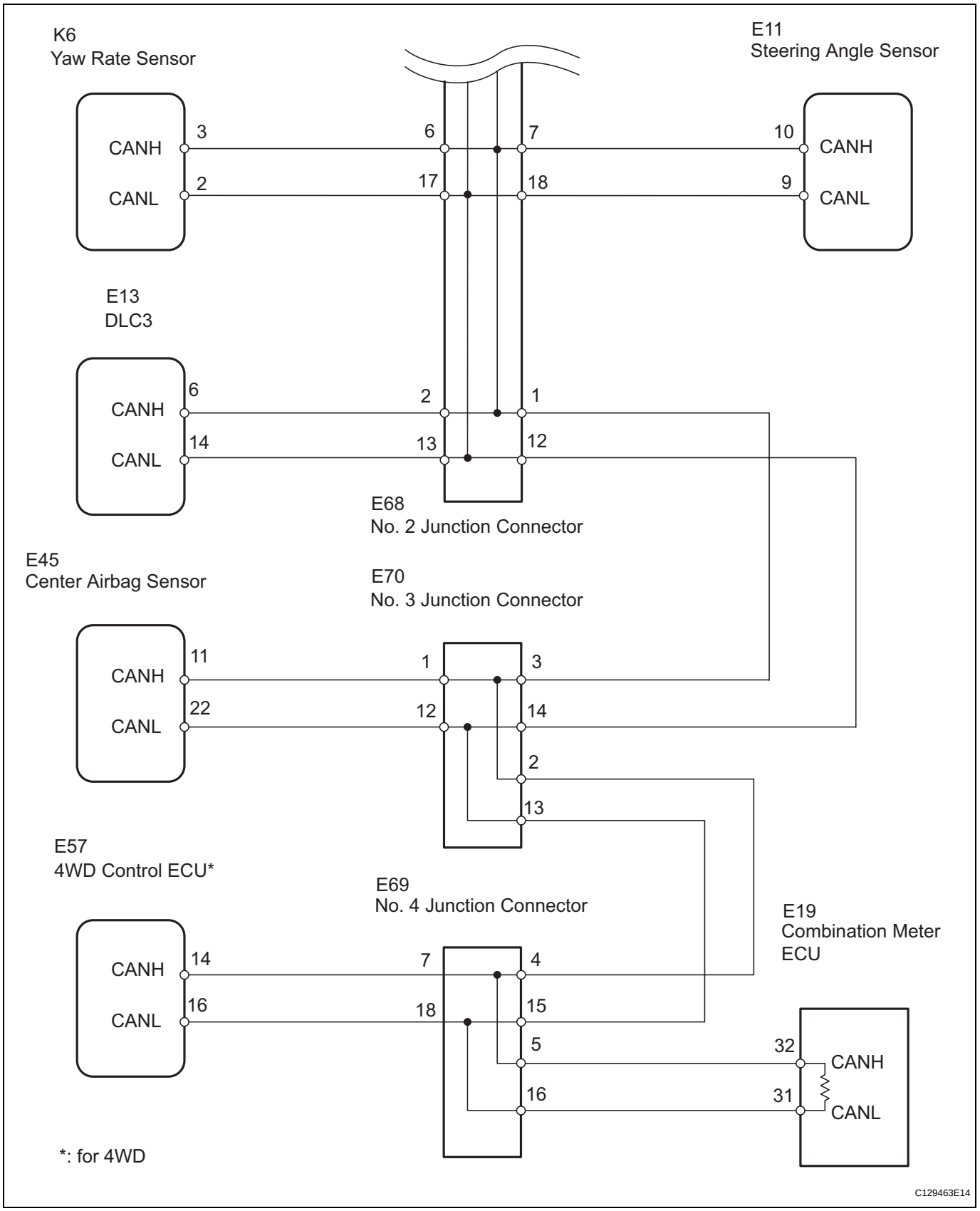

INSPECTION PROCEDURE

NOTICE:

- **Turn the ignition switch OFF before measuring the resistances of the main wire and the branch wire.**

- **After the ignition switch is turned OFF, check that the key reminder warning system and light reminder warning system are not in operation.**
- **Before measuring the resistance, leave the vehicle for at least 1 minute and do not operate the ignition switch, any switches or doors. If doors need to be opened in order to check connectors, open the doors and leave them open.**

HINT:
Operating the ignition switch, any switches or any doors triggers related ECU and sensor communication with the CAN, which causes resistance variation.

1	CHECK CAN BUS LINES FOR SHORT CIRCUIT (DLC3 BRANCH WIRE)

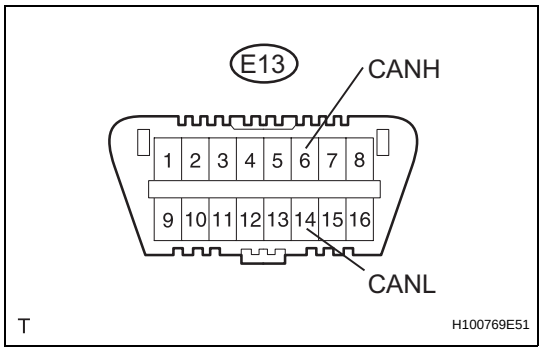

(a) Disconnect the E68 No. 2 junction connector.
(b) Measure the resistance of the DLC3.
Standard resistance

Tester Connection	Condition	Specified Condition
E13-6 (CANH) - E13-14 (CANL)	Ignition switch OFF	1 MΩ or more

NG → **REPAIR OR REPLACE DLC3 BRANCH WIRE AND CONNECTOR (CANH, CANL)**

OK

2	CONNECT CONNECTOR

(a) Reconnect the E68 No. 2 junction connector.

NEXT

3	CHECK CAN BUS LINES FOR SHORT CIRCUIT (NO. 1 JUNCTION CONNECTOR SIDE)

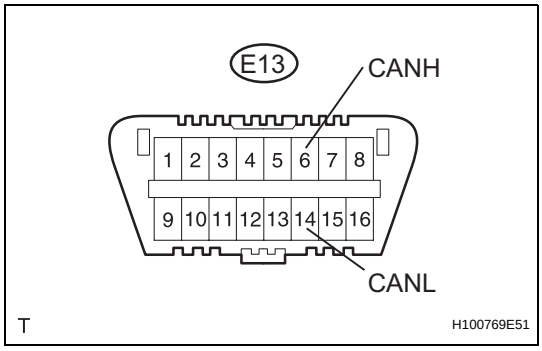

(a) Disconnect the A36 No. 1 junction connector.
(b) Measure the resistance of the DLC3.
Standard resistance

Tester Connection	Condition	Specified Condition
E13-6 (CANH) - E13-14 (CANL)	Ignition switch OFF	108 to 132 Ω

OK → **Go to step 14**

NG

4	**CHECK CAN BUS LINES FOR SHORT CIRCUIT (NO. 1 JUNCTION CONNECTOR - NO. 2 JUNCTION CONNECTOR)**

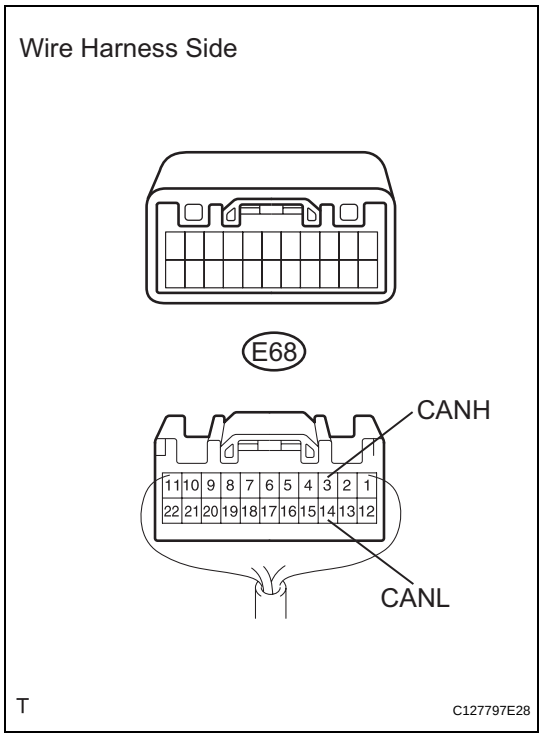

(a) Disconnect the E68 No. 2 junction connector.
(b) Measure the resistance of the wire harness side connector.

Standard resistance

Tester Connection	Condition	Specified Condition
E68-3 (CANH) - E68-14 (CANL)	Ignition switch OFF	1 MΩ or more

NG → **REPAIR OR REPLACE CAN MAIN WIRE AND CONNECTOR (NO. 1 JUNCTION CONNECTOR - NO. 2 JUNCTION CONNECTOR)**

OK

5	**CONNECT CONNECTOR**

(a) Reconnect the A36 No. 1 junction connector.
(b) Reconnect the E68 No. 2 junction connector.

NEXT

6	**CHECK CAN BUS LINES FOR SHORT CIRCUIT (NO. 3 JUNCTION CONNECTOR, NO. 4 JUNCTION CONNECTOR SIDE)**

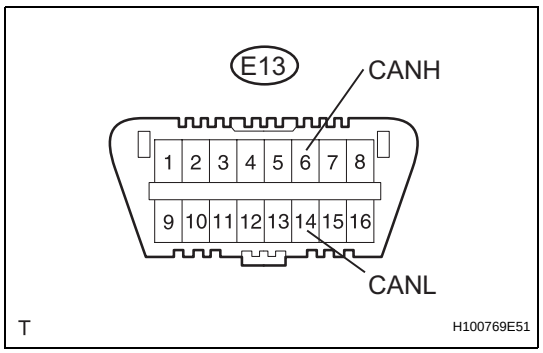

(a) Disconnect the E70 No. 3 junction connector.
(b) Measure the resistance of the DLC3.

Standard resistance

Tester Connection	Condition	Specified Condition
E13-6 (CANH) - E13-14 (CANL)	Ignition switch OFF	108 to 132 Ω

NG → **Go to step 20**

OK

CA

7	CONNECT CONNECTOR

(a) Reconnect the E70 No. 3 junction connector.

NEXT

8	CHECK CAN BUS LINES FOR SHORT CIRCUIT (NO. 4 JUNCTION CONNECTOR SIDE)

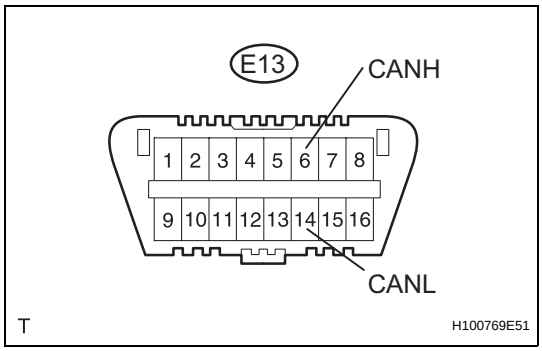

(a) Disconnect the E69 No. 4 junction connector.
(b) Measure the resistance of the DLC3.

Standard resistance

Tester Connection	Condition	Specified Condition
E13-6 (CANH) - E13-14 (CANL)	Ignition switch OFF	108 to 132 Ω

OK → Go to step 36

NG

9	CHECK CAN BUS LINES FOR SHORT CIRCUIT (NO. 3 JUNCTION CONNECTOR - NO. 4 JUNCTION CONNECTOR)

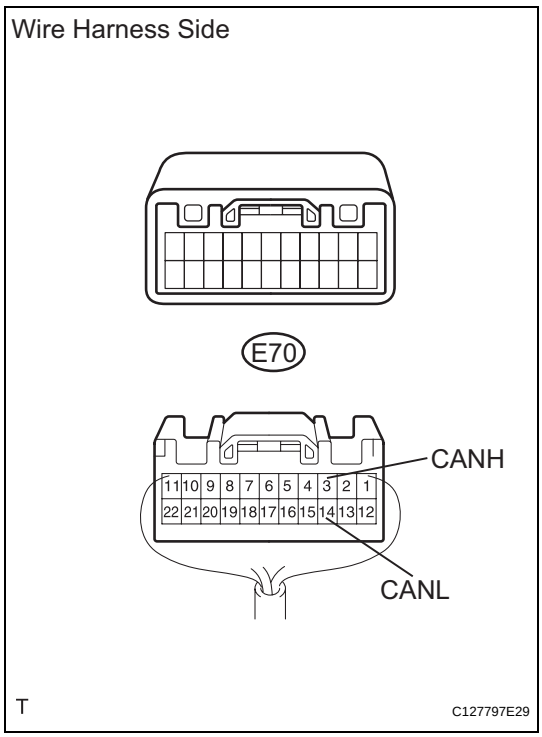

(a) Disconnect the E70 No. 3 junction connector.
(b) Measure the resistance of the wire harness side connector.

Standard resistance

Tester Connection	Condition	Specified Condition
E70-3 (CANH) - E70-14 (CANL)	Ignition switch OFF	1 MΩ or more

NG → REPAIR OR REPLACE CAN MAIN WIRE AND CONNECTOR (NO. 3 JUNCTION CONNECTOR - NO. 4 JUNCTION CONNECTOR)

OK

10	CONNECT CONNECTOR

(a) Reconnect the E69 No. 4 junction connector.

NEXT

11	CHECK CAN BUS LINES FOR SHORT CIRCUIT (NO. 3 JUNCTION CONNECTOR - CENTER AIRBAG SENSOR ASSEMBLY)

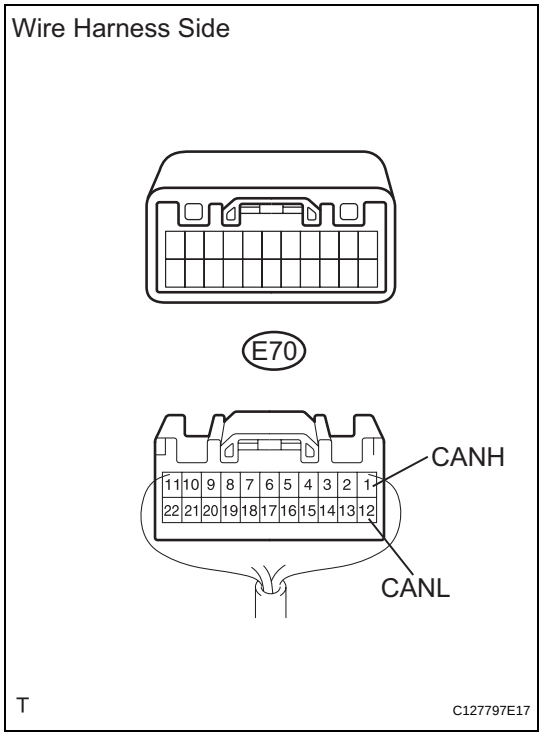

(a) Measure the resistance of the wire harness side connector.

Result

Tester Connection	Condition	Specified Condition	Proceed to
E70-1 (CANH) - E70-12 (CANL)	Ignition switch OFF	Below 1 Ω	A
E70-1 (CANH) - E70-12 (CANL)	Ignition switch OFF	Other	B

B → REPAIR OR REPLACE NO. 3 JUNCTION CONNECTOR

A

12	CONNECT CONNECTOR

(a) Reconnect the E70 No. 3 junction connector.

NEXT

13	CHECK CAN BUS LINES FOR SHORT CIRCUIT (CENTER AIRBAG SENSOR ASSEMBLY)

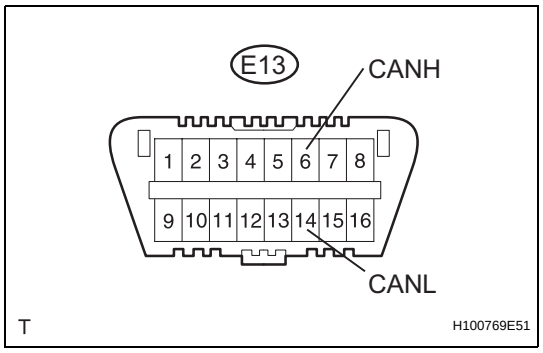

(a) Disconnect the E45 center airbag sensor connector.
(b) Measure the resistance of the DLC3.

Standard resistance

Tester Connection	Condition	Specified Condition
E13-6 (CANH) - E13-14 (CANL)	Ignition switch OFF	54 to 69 Ω

NG → REPAIR OR REPLACE CAN BRANCH WIRE CONNECTED TO CENTER AIRBAG SENSOR ASSEMBLY (CANH, CANL)

OK

REPLACE CENTER AIRBAG SENSOR ASSEMBLY

CA

14	CHECK CAN BUS LINES FOR SHORT CIRCUIT (NO. 1 JUNCTION CONNECTOR - ECM)

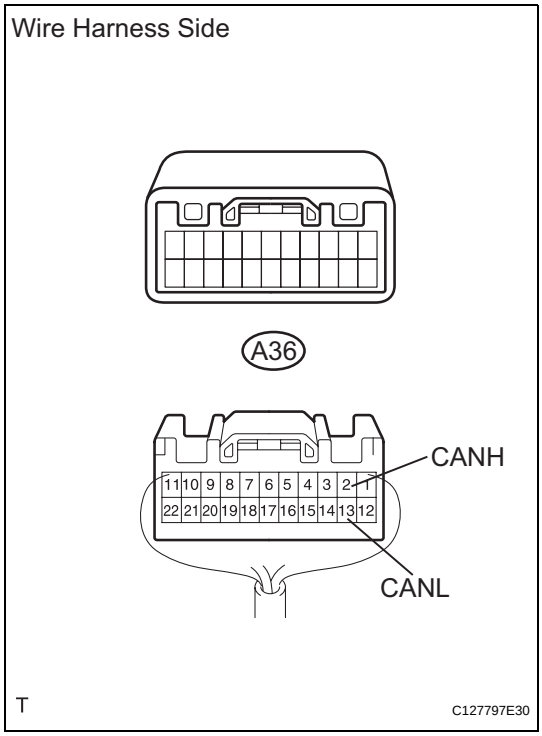

(a) Measure the resistance of the wire harness side connector.

Result

Tester Connection	Condition	Specified Condition	Proceed to
A36-2 (CANH) - A36-13 (CANL)	Ignition switch OFF	Below 1 Ω	A
A36-2 (CANH) - A36-13 (CANL)	Ignition switch OFF	Other	B

A	Go to step 16

B

15	CHECK CAN BUS LINES FOR SHORT CIRCUIT (NO. 1 JUNCTION CONNECTOR - ABS AND TRACTION ACTUATOR)

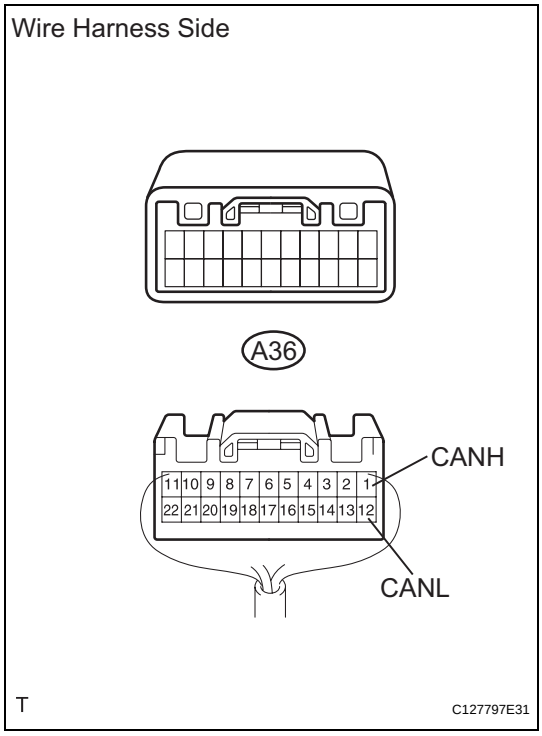

(a) Measure the resistance of the wire harness side connector.

Result

Tester Connection	Condition	Specified Condition	Proceed to
A36-1 (CANH) - A36-12 (CANL)	Ignition switch OFF	Below 1 Ω	A
A36-1 (CANH) - A36-12 (CANL)	Ignition switch OFF	Other	B

A	Go to step 18

B

REPAIR OR REPLACE NO. 1 JUNCTION CONNECTOR

16 CONNECT CONNECTOR

(a) Reconnect the A36 No. 1 junction connector.

NEXT

17 CHECK CAN BUS LINES FOR SHORT CIRCUIT (ECM)

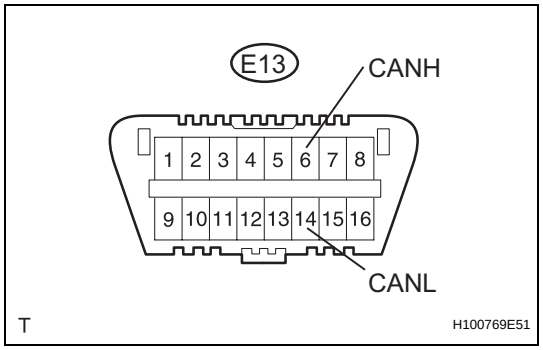

(a) Disconnect the A9 ECM connector.
(b) Measure the resistance of the DLC3.
Standard resistance

Tester Connection	Condition	Specified Condition
E13-6 (CANH) - E13-14 (CANL)	Ignition switch OFF	108 to 132 Ω

NG → **REPAIR OR REPLACE CAN MAIN WIRE CONNECTED TO ECM (NO. 1 JUNCTION CONNECTOR - ECM)**

OK

REPLACE ECM

18 CONNECT CONNECTOR

(a) Reconnect the A36 No. 1 junction connector.

NEXT

19 CHECK CAN BUS LINES FOR SHORT CIRCUIT (ABS AND TRACTION ACTUATOR)

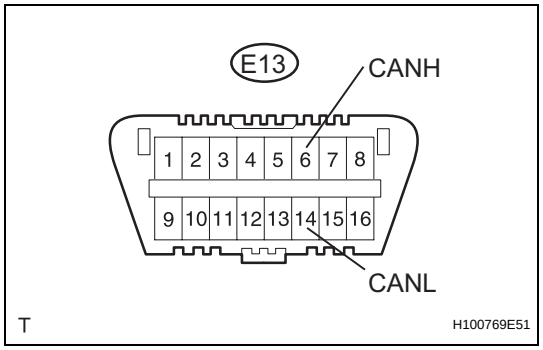

(a) Disconnect the A19 ABS and brake actuator (skid control ECU) connector.
(b) Measure the resistance of the DLC3.
Standard resistance

Tester Connection	Condition	Specified Condition
E13-6 (CANH) - E13-14 (CANL)	Ignition switch OFF	54 to 69 Ω

NG → **REPAIR OR REPLACE CAN BRANCH WIRE CONNECTED TO ABS AND TRACTION ACTUATOR (CANH, CANL)**

CA

OK

REPLACE ABS AND TRACTION ACTUATOR (SKID CONTROL ECU)

20	CONNECT CONNECTOR

(a) Reconnect the E70 No. 3 junction connector.

NEXT

21	CHECK CAN BUS LINES FOR SHORT CIRCUIT (NO. 2 JUNCTION CONNECTOR - YAW RATE SENSOR)

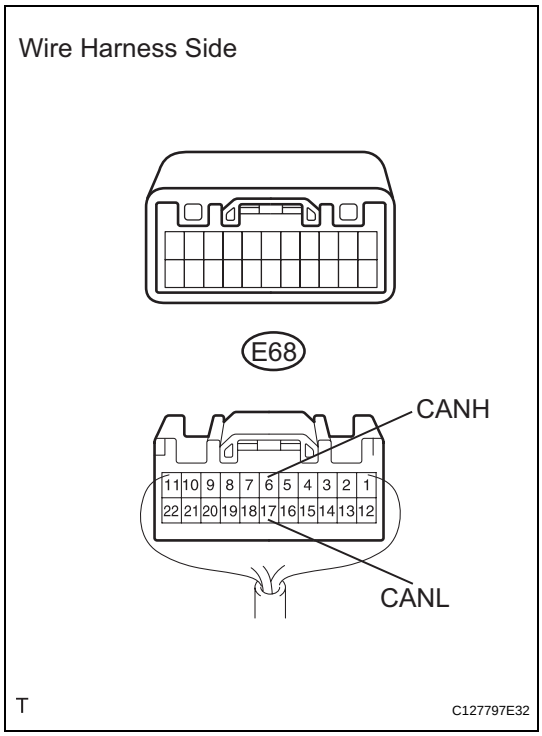

(a) Disconnect the E68 No. 2 junction connector.
(b) Measure the resistance of the wire harness side connector.

Result

Tester Connection	Condition	Specified Condition	Proceed to
E68-6 (CANH) - E68-17 (CANL)	Ignition switch OFF	Below 1 Ω	A
E68-6 (CANH) - E68-17 (CANL)	Ignition switch OFF	Other	B

A → **Go to step 26**

B

CA

22 CHECK CAN BUS LINES FOR SHORT CIRCUIT (NO. 2 JUNCTION CONNECTOR - POWER STEERING ECU)

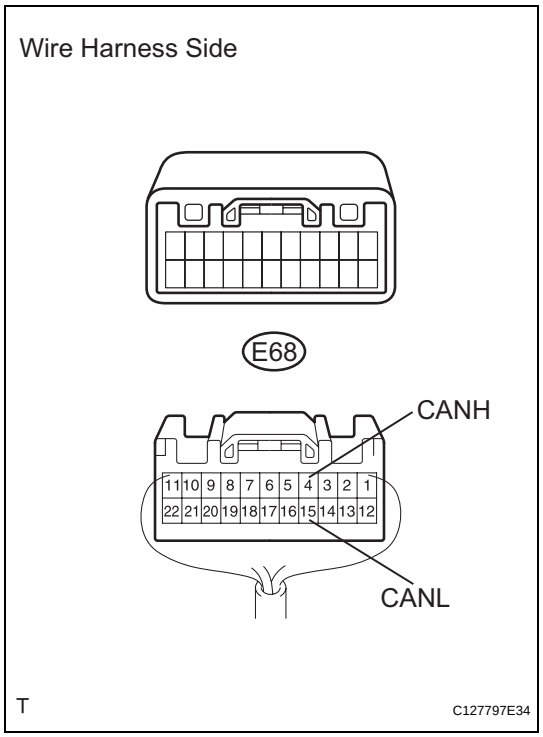

(a) Measure the resistance of the wire harness side connector.

Result

Tester Connection	Condition	Specified Condition	Proceed to
E68-4 (CANH) - E68-15 (CANL)	Ignition switch OFF	Below 1 Ω	A
E68-4 (CANH) - E68-15 (CANL)	Ignition switch OFF	Other	B

A → **Go to step 28**

B

23 CHECK CAN BUS LINES FOR SHORT CIRCUIT (NO. 2 JUNCTION CONNECTOR - MAIN BODY ECU)

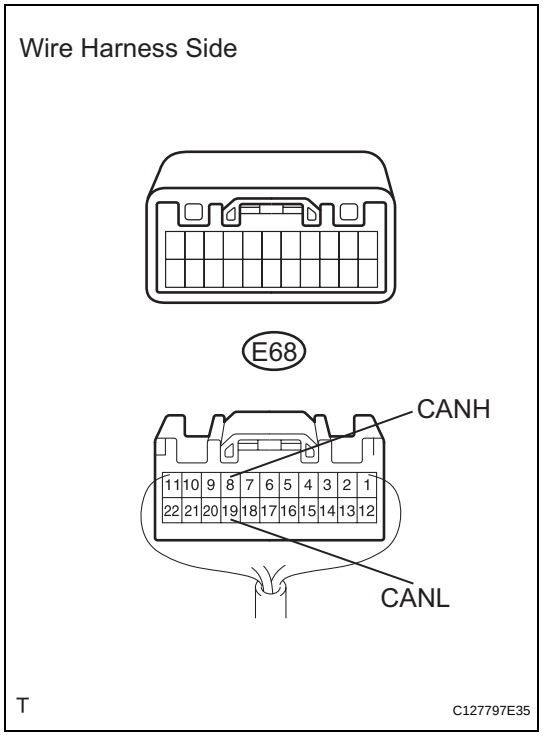

(a) Measure the resistance of the wire harness side connector.

Result

Tester Connection	Condition	Specified Condition	Proceed to
E68-8 (CANH) - E68-19 (CANL)	Ignition switch OFF	Below 1 Ω	A
E68-8 (CANH) - E68-19 (CANL)	Ignition switch OFF	Other	B

A → **Go to step 30**

CA

B

24	CHECK CAN BUS LINES FOR SHORT CIRCUIT (NO. 2 JUNCTION CONNECTOR - AIR CONDITIONING AMPLIFIER)

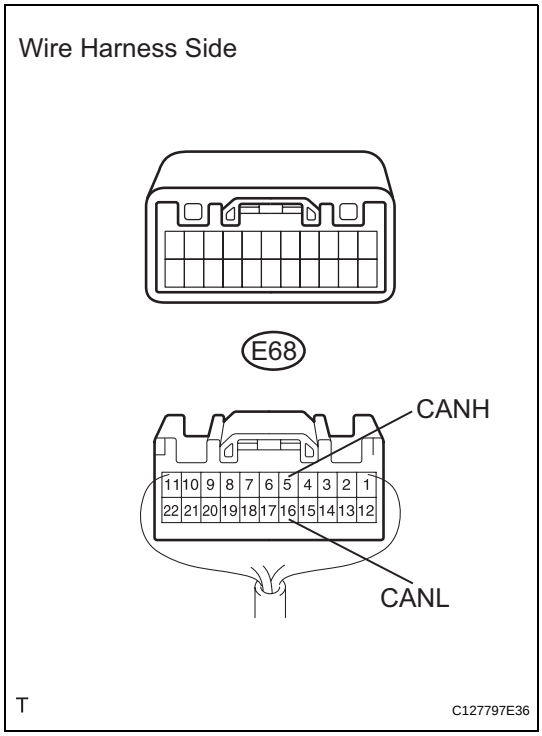

(a) Measure the resistance of the wire harness side connector.

Result

Tester Connection	Condition	Specified Condition	Proceed to
E68-5 (CANH) - E68-16 (CANL)	Ignition switch OFF	Below 1 Ω	A
E68-5 (CANH) - E68-16 (CANL)	Ignition switch OFF	Other	B

A	Go to step 32

B

CA

25	CHECK CAN BUS LINES FOR SHORT CIRCUIT (NO. 2 JUNCTION CONNECTOR - STEERING ANGLE SENSOR)

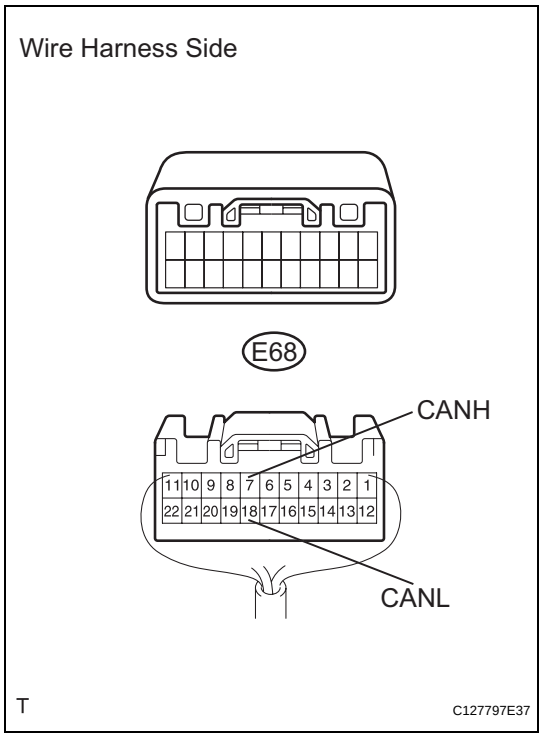

(a) Measure the resistance of the wire harness side connector.

Result

Tester Connection	Condition	Specified Condition	Proceed to
E68-7 (CANH) - E68-18 (CANL)	Ignition switch OFF	Below 1 Ω	A
E68-7 (CANH) - E68-18 (CANL)	Ignition switch OFF	Other	B

A → **Go to step 34**

B

REPAIR OR REPLACE NO. 2 JUNCTION CONNECTOR

26	CONNECT CONNECTOR

(a) Reconnect the E68 No. 2 junction connector.

NEXT

27	CHECK CAN BUS LINES FOR SHORT CIRCUIT (YAW RATE SENSOR)

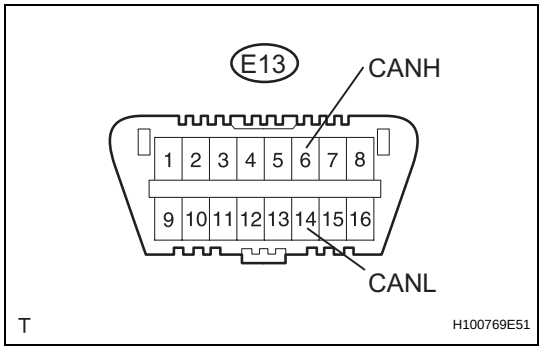

(a) Disconnect the K6 yaw rate sensor connector.
(b) Measure the resistance of the DLC3.

Standard resistance

Tester Connection	Condition	Specified Condition
E13-6 (CANH) - E13-14 (CANL)	Ignition switch OFF	54 to 69 Ω

NG → **REPAIR OR REPLACE CAN BRANCH WIRE CONNECTED TO YAW RATE SENSOR (CANH, CANL)**

CA

OK

REPLACE YAW RATE SENSOR

28	CONNECT CONNECTOR

(a) Reconnect the E68 No. 2 junction connector.

NEXT

29	CHECK CAN BUS LINES FOR SHORT CIRCUIT (POWER STEERING ECU)

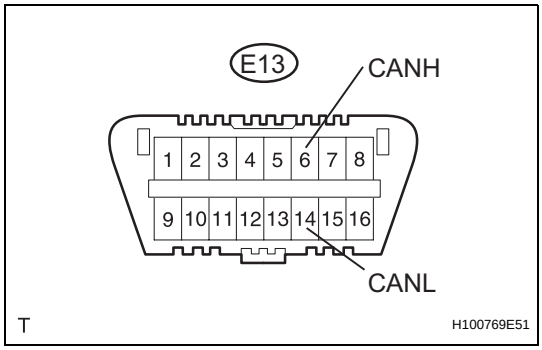

(a) Disconnect the E18 power steering ECU connector.
(b) Measure the resistance of the DLC3.
Standard resistance

Tester Connection	Condition	Specified Condition
E13-6 (CANH) - E13-14 (CANL)	Ignition switch OFF	54 to 69 Ω

NG → **REPAIR OR REPLACE CAN BRANCH WIRE CONNECTED TO POWER STEERING ECU (CANH, CANL)**

OK

REPLACE POWER STEERING ECU

30	CONNECT CONNECTOR

(a) Reconnect the E68 No. 2 junction connector.

NEXT

31	CHECK CAN BUS LINES FOR SHORT CIRCUIT (MAIN BODY ECU)

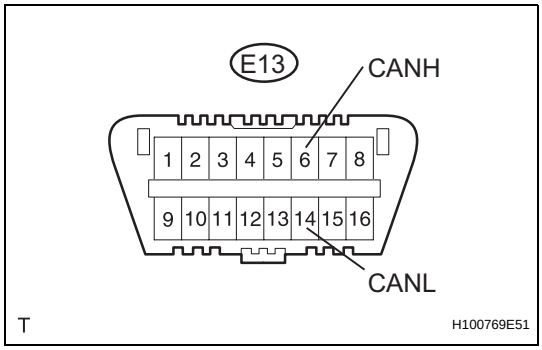

(a) Disconnect the E17 main body ECU connector.
(b) Measure the resistance of the DLC3.
Standard resistance

Tester Connection	Condition	Specified Condition
E13-6 (CANH) - E13-14 (CANL)	Ignition switch OFF	108 to 132 Ω

NG → **REPAIR OR REPLACE CAN BRANCH WIRE CONNECTED TO MAIN BODY ECU (CANH, CANL)**

OK

REPLACE INSTRUMENT PANEL JUNCTION BLOCK (MAIN BODY ECU)

32 CONNECT CONNECTOR

(a) Reconnect the E68 No. 2 junction connector.

NEXT

33 CHECK CAN BUS LINES FOR SHORT CIRCUIT (AIR CONDITIONING AMPLIFIER)

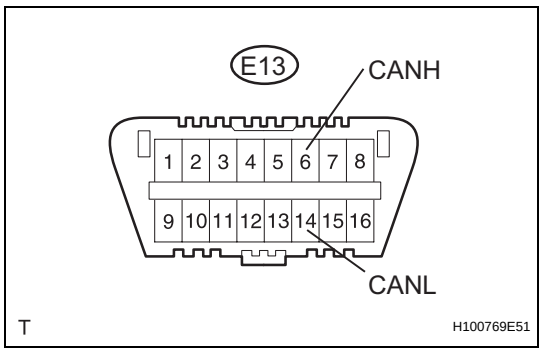

(a) Disconnect the E37*1 or E36*2 air conditioning amplifier connector.
HINT:
- *1: for Automatic air conditioning system.
- *2: for Manual air conditioning system.

(b) Measure the resistance of the DLC3.
Standard resistance

Tester Connection	Condition	Specified Condition
E13-6 (CANH) - E13-14 (CANL)	Ignition switch OFF	54 to 69 Ω

NG → **REPAIR OR REPLACE CAN BRANCH WIRE CONNECTED TO AIR CONDITIONING AMPLIFIER (CANH, CANL)**

OK

REPLACE AIR CONDITIONING AMPLIFIER

34 CONNECT CONNECTOR

(a) Reconnect the E68 No. 2 junction connector.

NEXT

CA

35 CHECK CAN BUS LINES FOR SHORT CIRCUIT (STEERING ANGLE SENSOR)

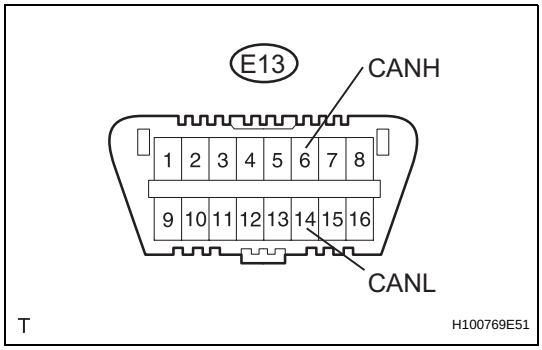

(a) Disconnect the E11 steering sensor connector.
(b) Measure the resistance of the DLC3.
Standard resistance

Tester Connection	Condition	Specified Condition
E13-6 (CANH) - E13-14 (CANL)	Ignition switch OFF	54 to 69 Ω

NG → **REPAIR OR REPLACE CAN BRANCH WIRE CONNECTED TO STEERING ANGLE SENSOR (CANH, CANL)**

OK

CA

REPLACE STEERING ANGLE SENSOR

36 CHECK CAN BUS LINES FOR SHORT CIRCUIT (NO. 4 JUNCTION CONNECTOR - 4WD CONTROL ECU)

NOTICE:
For vehicles without 4WD, go to "CHECK CAN BUS LINES FOR SHORT CIRCUIT (NO. 4 JUNCTION CONNECTOR - COMBINATION METER ECU)".

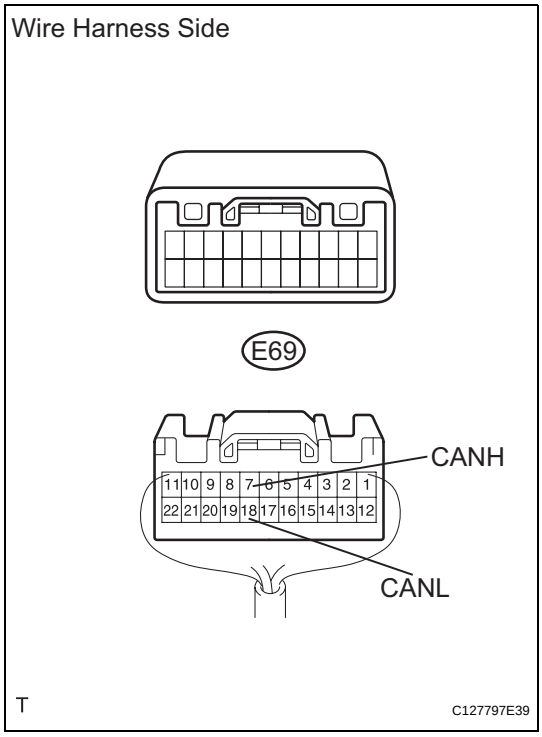

(a) Measure the resistance of the wire harness side connector.
Result

Tester Connection	Condition	Specified Condition	Proceed to
E69-7 (CANH) - E69-18 (CANL)	Ignition switch OFF	Below 1 Ω	A
E69-7 (CANH) - E69-18 (CANL)	Ignition switch OFF	Other	B

A → **Go to step 38**

B

37	CHECK CAN BUS LINES FOR SHORT CIRCUIT (NO. 4 JUNCTION CONNECTOR - COMBINATION METER ECU)

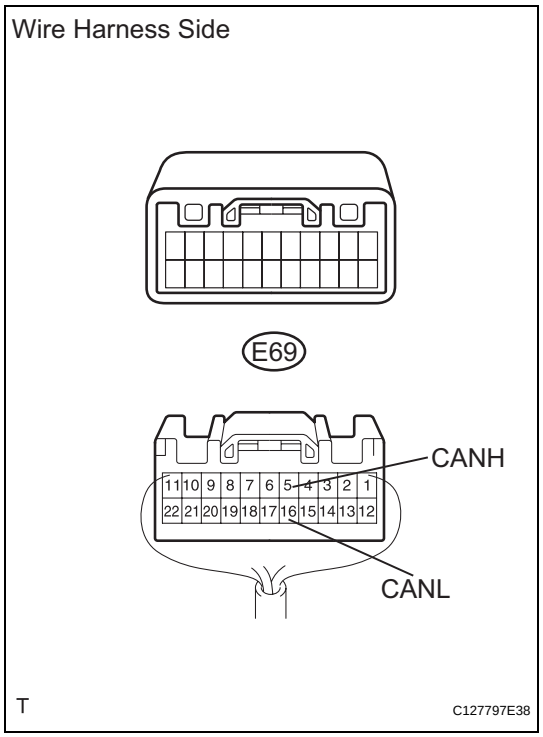

(a) Measure the resistance of the wire harness side connector.

Result

Tester Connection	Condition	Specified Condition	Proceed to
E69-5 (CANH) - E69-16 (CANL)	Ignition switch OFF	Below 1 Ω	A
E69-5 (CANH) - E69-16 (CANL)	Ignition switch OFF	Other	B

A → **Go to step 40**

B

REPAIR OR REPLACE NO. 4 JUNCTION CONNECTOR

38	CONNECT CONNECTOR

(a) Reconnect the E69 No. 4 junction connector.

NEXT

39	CHECK CAN BUS LINES FOR SHORT CIRCUIT (4WD CONTROL ECU)

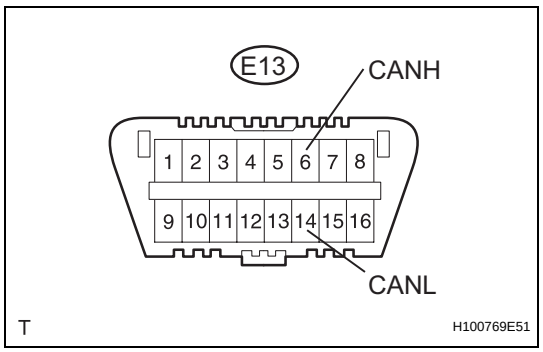

(a) Disconnect the E57 4WD control ECU connector.
(b) Measure the resistance of the DLC3.

Standard resistance

Tester Connection	Condition	Specified Condition
E13-6 (CANH) - E13-14 (CANL)	Ignition switch OFF	54 to 69 Ω

NG → **REPAIR OR REPLACE CAN BRANCH WIRE CONNECTED TO 4WD CONTROL ECU (CANH, CANL)**

CA

OK

REPLACE 4WD CONTROL ECU

40	CONNECT CONNECTOR

(a) Reconnect the E69 No. 4 junction connector.

NEXT

41	CHECK CAN BUS LINES FOR SHORT CIRCUIT (COMBINATION METER ECU)

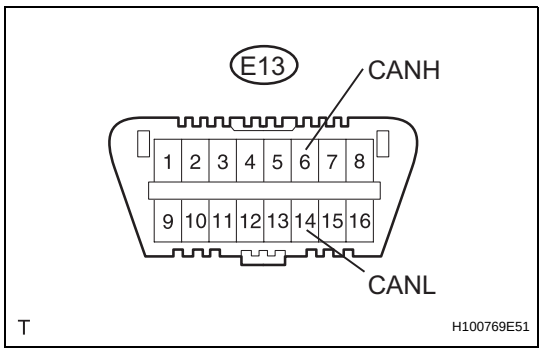

(a) Disconnect the E19 combination meter ECU connector.
(b) Measure the resistance of the DLC3.
Standard resistance

Tester Connection	Condition	Specified Condition
E13-6 (CANH) - E13-14 (CANL)	Ignition switch OFF	108 to 132 Ω

NG → **REPAIR OR REPLACE CAN MAIN WIRE CONNECTED TO COMBINATION METER ECU (CANH, CANL)**

OK

REPLACE COMBINATION METER ECU

Short to B+ in CAN Bus Line

DESCRIPTION

There may be a short circuit between the CAN bus line and +B when there is resistance between terminals 6 (CANH) and 16 (BAT) or terminals 14 (CANL) and 16 (BAT) of the DLC3.

Symptom	Trouble Area
There is resistance between terminals 6 (CANH) and 16 (BAT) or terminals 14 (CANL) and 16 (BAT) of DLC3.	• Short to +B • ABS and traction actuator (skid control ECU) • Power steering ECU • Steering angle sensor • Yaw rate sensor • ECM • Center airbag sensor • Combination meter ECU • Air conditioning amplifier • Instrument panel junction block (Main body ECU) • 4WD control ECU

WIRING DIAGRAM

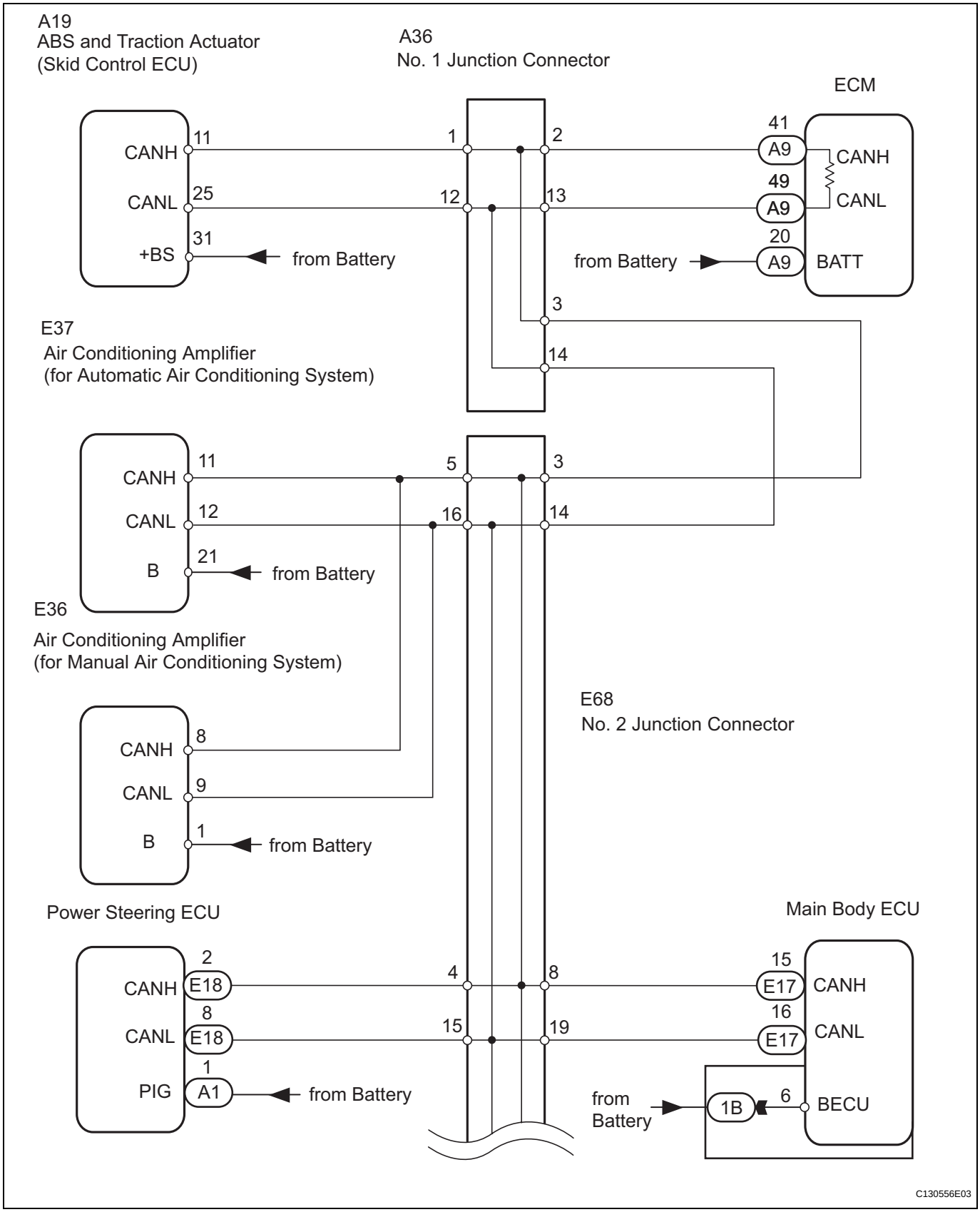

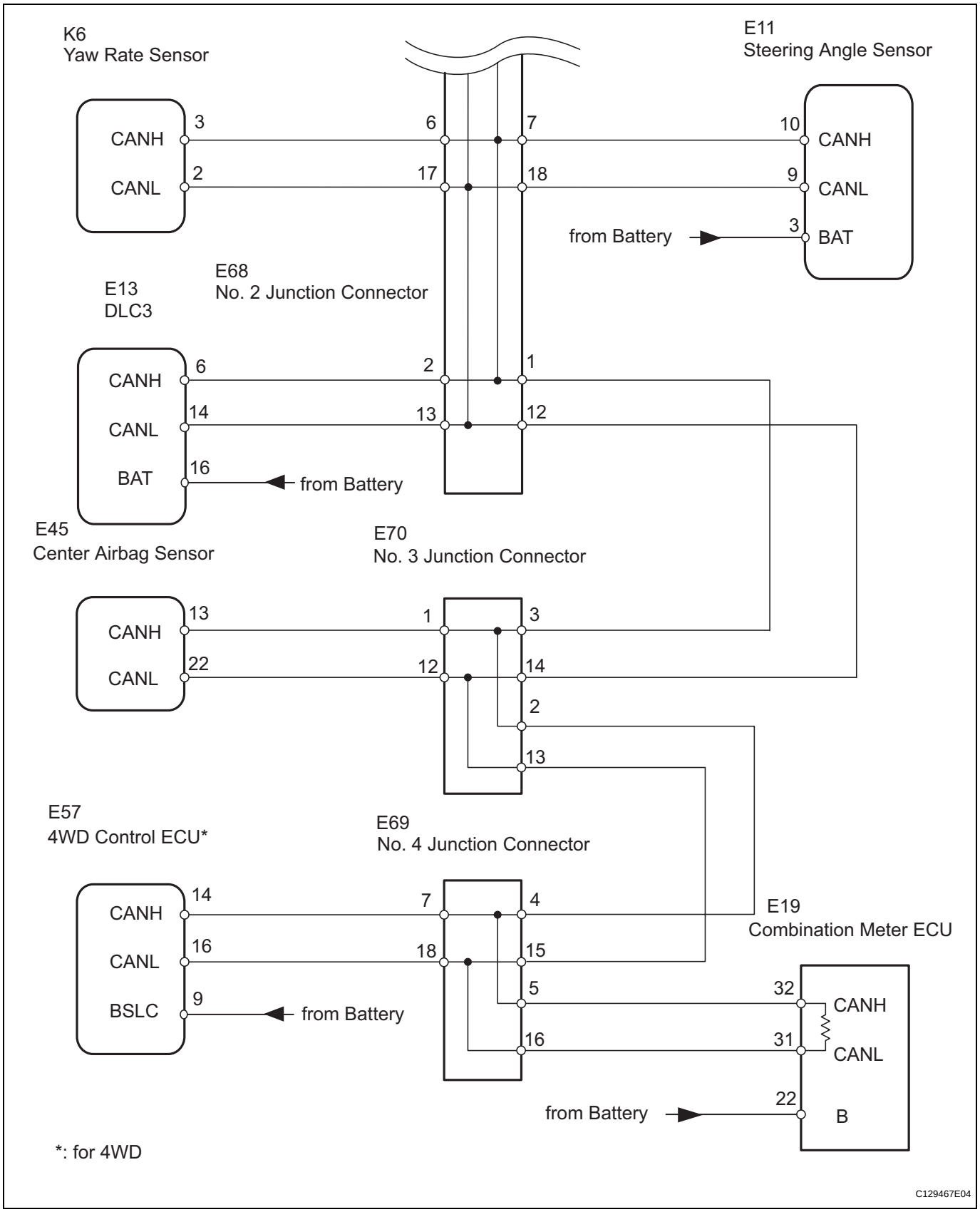

INSPECTION PROCEDURE

NOTICE:

- **Turn the ignition switch OFF before measuring the resistances of the main wire and the branch wire.**

- **After the ignition switch is turned OFF, check that the key reminder warning system and light reminder warning system are not in operation.**
- **Before measuring the resistance, leave the vehicle for at least 1 minute and do not operate the ignition switch, any switches or doors. If doors need to be opened in order to check connectors, open the doors and leave them open.**

HINT:
Operating the ignition switch, any switches or any doors triggers related ECU and sensor communication with the CAN, which causes resistance variation.

1 CHECK CAN BUS LINE FOR SHORT TO +B (DLC3 BRANCH WIRE)

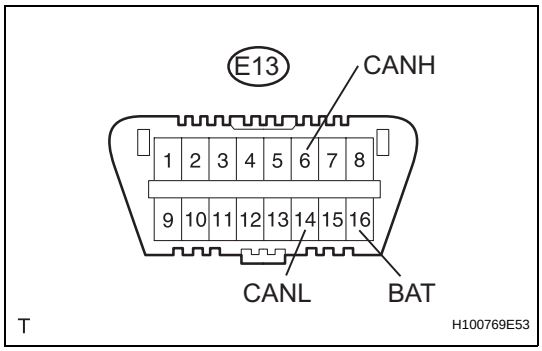

(a) Disconnect the E68 No. 2 junction connector.
(b) Measure the resistance of the DLC3.
Standard resistance

Tester Connection	Condition	Specified Condition
E13-6 (CANH) - E13-16 (BAT)	Ignition switch OFF	1 MΩ or more
E13-14 (CANL) - E13-16 (BAT)	Ignition switch OFF	1 MΩ or more

NG → **REPAIR OR REPLACE CAN BRANCH WIRE CONNECTED TO DLC3 (CANH, CANL)**

OK

2 CONNECT CONNECTOR

(a) Reconnect the E68 No. 2 junction connector.

NEXT

3 CHECK CAN BUS LINE FOR SHORT TO +B (NO. 1 JUNCTION CONNECTOR SIDE)

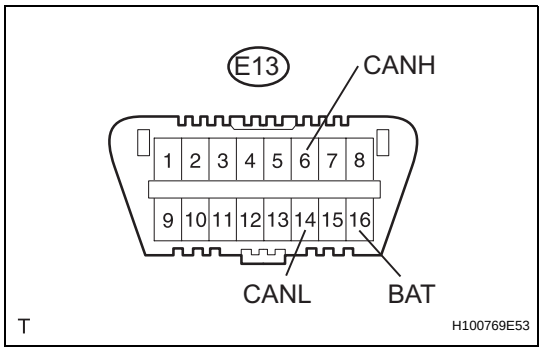

(a) Disconnect the A36 No. 1 junction connector.
(b) Measure the resistance of the DLC3.
Standard resistance

Tester Connection	Condition	Specified Condition
E13-6 (CANH) - E13-16 (BAT)	Ignition switch OFF	1 MΩ or more
E13-14 (CANL) - E13-16 (BAT)	Ignition switch OFF	1 MΩ or more

OK → **Go to step 12**

NG

4 CONNECT CONNECTOR

(a) Reconnect the A36 No. 1 junction connector.

NEXT

5	**CHECK CAN BUS LINE FOR SHORT TO +B (NO. 3 JUNCTION CONNECTOR, NO. 4 JUNCTION CONNECTOR SIDE)**

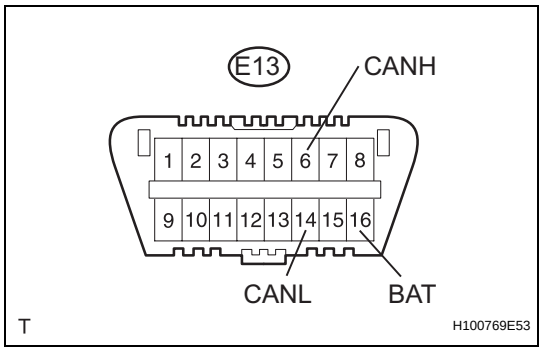

(a) Disconnect the E70 No. 3 junction connector.
(b) Measure the resistance of the DLC3.
Standard resistance

Tester Connection	Condition	Specified Condition
E13-6 (CANH) - E13-16 (BAT)	Ignition switch OFF	1 MΩ or more
E13-14 (CANL) - E13-16 (BAT)	Ignition switch OFF	1 MΩ or more

NG → **Go to step 18**

OK

6	**CONNECT CONNECTOR**

(a) Reconnect the E70 No. 3 junction connector.

NEXT

7	**CHECK CAN BUS LINE FOR SHORT TO +B (NO. 4 JUNCTION CONNECTOR SIDE)**

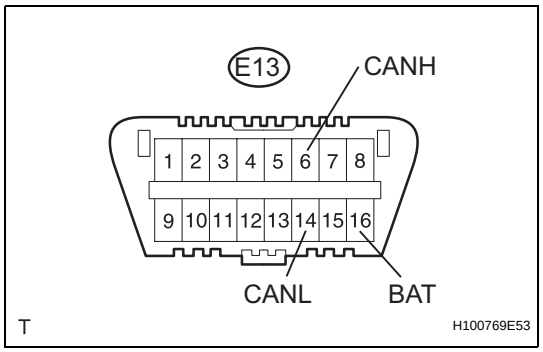

(a) Disconnect the E69 No. 4 junction connector.
(b) Measure the resistance of the DLC3.
Standard resistance

Tester Connection	Condition	Specified Condition
E13-6 (CANH) - E13-16 (BAT)	Ignition switch OFF	1 MΩ or more
E13-14 (CANL) - E13-16 (BAT)	Ignition switch OFF	1 MΩ or more

OK → **Go to step 34**

NG

8	**CONNECT CONNECTOR**

(a) Reconnect the E69 No. 4 junction connector.

NEXT

9	CHECK CAN BUS LINE FOR SHORT TO +B (NO. 3 JUNCTION CONNECTOR - CENTER AIRBAG SENSOR ASSEMBLY)

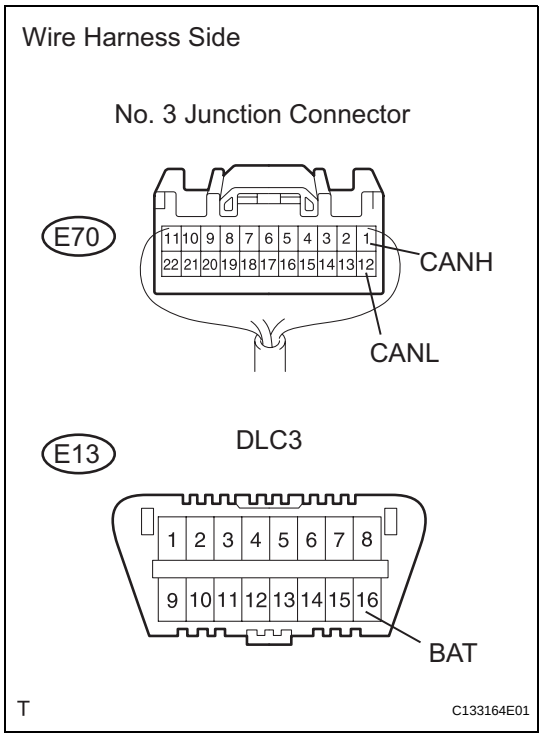

(a) Disconnect the E70 No. 3 junction connector.
(b) Measure the resistance of the wire harness side connectors.

Standard resistance

Tester Connection	Condition	Specified Condition
E70-1 (CANH) - E13-16 (BAT)	Ignition switch OFF	1 MΩ or more
E70-12 (CANL) - E13-16 (BAT)	Ignition switch OFF	1 MΩ or more

OK → **REPAIR OR REPLACE CAN MAIN WIRE AND CONNECTOR (NO. 3 JUNCTION CONNECTOR - NO. 4 JUNCTION CONNECTOR)**

NG

10	CONNECT CONNECTOR

(a) Reconnect the E70 No. 3 junction connector.

NEXT

11	CHECK CAN BUS LINE FOR SHORT TO +B (CENTER AIRBAG SENSOR ASSEMBLY)

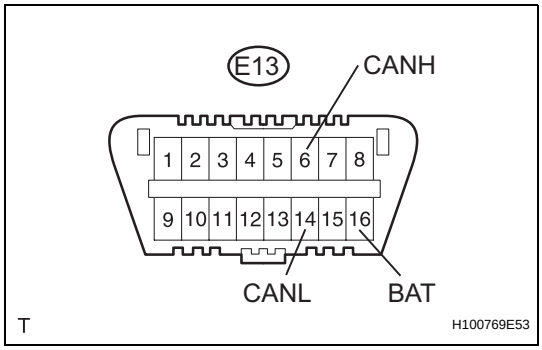

(a) Disconnect the E45 center airbag sensor connector.
(b) Measure the resistance of the DLC3.

Standard resistance

Tester Connection	Condition	Specified Condition
E13-6 (CANH) - E13-16 (BAT)	Ignition switch OFF	1 MΩ or more
E13-14 (CANL) - E13-16 (BAT)	Ignition switch OFF	1 MΩ or more

NG → **REPAIR OR REPLACE CAN BRANCH WIRE CONNECTED TO CENTER AIRBAG SENSOR ASSEMBLY (CANH, CANL)**

OK

REPLACE CENTER AIRBAG SENSOR ASSEMBLY

12 CHECK CAN BUS LINE FOR SHORT TO +B (NO. 1 JUNCTION CONNECTOR - ECM)

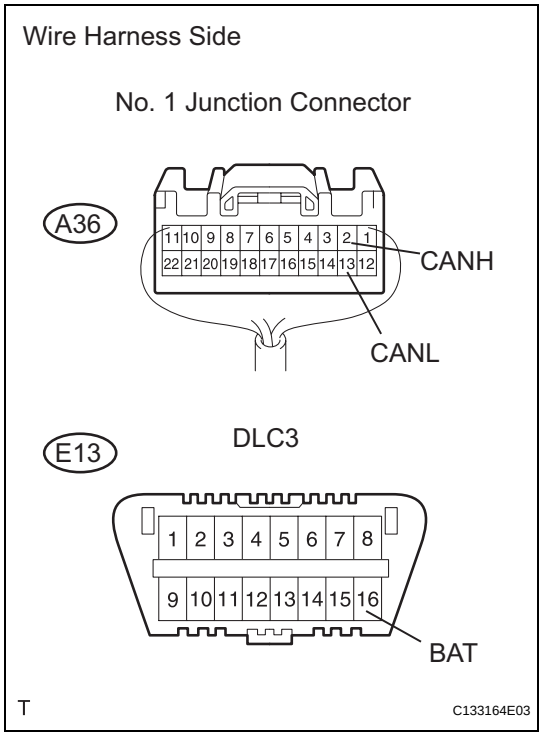

(a) Disconnect the A36 No. 1 junction connector.
(b) Measure the resistance of the wire harness side connectors.

Standard resistance

Tester Connection	Condition	Specified Condition
A36-2 (CANH) - E13-16 (BAT)	Ignition switch OFF	1 MΩ or more
A36-13 (CANL) - E13-16 (BAT)	Ignition switch OFF	1 MΩ or more

NG → **Go to step 14**

OK

13 CHECK CAN BUS LINE FOR SHORT TO +B (NO. 1 JUNCTION CONNECTOR - ABS AND TRACTION ACTUATOR)

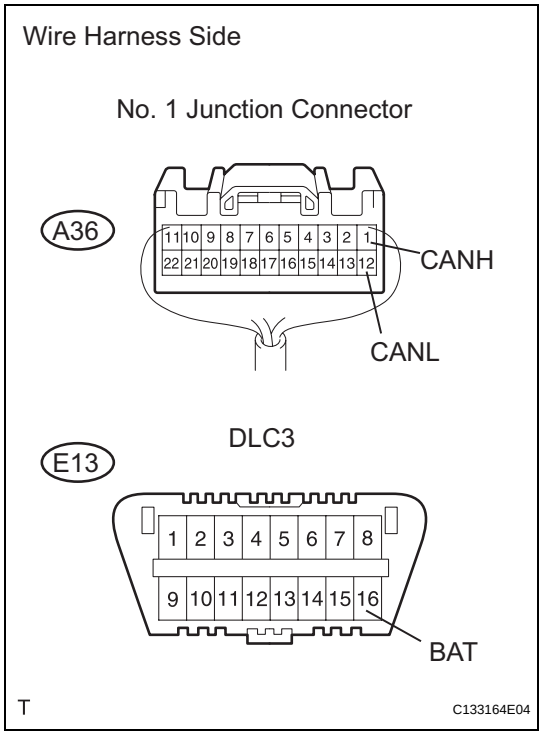

(a) Measure the resistance of the wire harness side connectors.

Standard resistance

Tester Connection	Condition	Specified Condition
A36-1 (CANH) - E13-16 (BAT)	Ignition switch OFF	1 MΩ or more
A36-12 (CANL) - E13-16 (BAT)	Ignition switch OFF	1 MΩ or more

NG → **Go to step 16**

CA

OK

REPAIR OR REPLACE CAN MAIN WIRE AND CONNECTOR (NO. 1 JUNCTION CONNECTOR - NO. 2 JUNCTION CONNECTOR)

14	CONNECT CONNECTOR

(a) Reconnect the A36 No. 1 junction connector.

NEXT

15	CHECK CAN BUS LINE FOR SHORT TO +B (ECM)

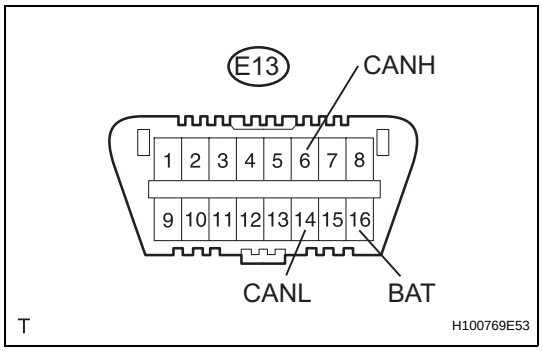

(a) Disconnect the A9 ECM connector.
(b) Measure the resistance of the DLC3.
Standard resistance

Tester Connection	Condition	Specified Condition
E13-6 (CANH) - E13-16 (BAT)	Ignition switch OFF	1 MΩ or more
E13-14 (CANL) - E13-16 (BAT)	Ignition switch OFF	1 MΩ or more

NG → **REPAIR OR REPLACE CAN MAIN WIRE CONNECTED TO ECM (NO. 1 JUNCTION CONNECTOR - ECM)**

OK

REPLACE ECM

16	CONNECT CONNECTOR

(a) Reconnect the A36 No. 1 junction connector.

NEXT

17	CHECK CAN BUS LINE FOR SHORT TO +B (ABS AND TRACTION ACTUATOR)

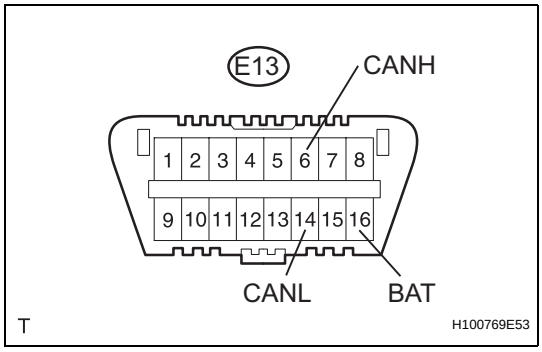

(a) Disconnect the A19 ABS and traction actuator (skid control ECU) connector.
(b) Measure the resistance of the DLC3.
Standard resistance

Tester Connection	Condition	Specified Condition
E13-6 (CANH) - E13-16 (BAT)	Ignition switch OFF	1 MΩ or more
E13-14 (CANL) - E13-16 (BAT)	Ignition switch OFF	1 MΩ or more

NG → **REPAIR OR REPLACE CAN BRANCH WIRE CONNECTED TO ABS AND TRACTION ACTUATOR (CANH, CANL)**

OK

REPLACE ABS AND TRACTION ACTUATOR (SKID CONTROL ECU)

18	CONNECT CONNECTOR

(a) Reconnect the E70 No. 3 junction connector.

NEXT

19	CHECK CAN BUS LINE FOR SHORT TO +B (NO. 2 JUNCTION CONNECTOR - YAW RATE SENSOR)

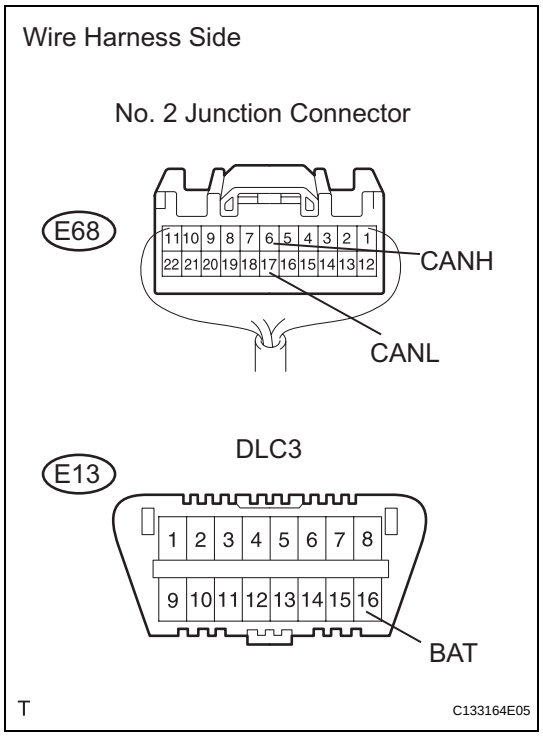

(a) Disconnect the E68 No. 2 junction connector.
(b) Measure the resistance of the wire harness side connectors.

Standard resistance

Tester Connection	Condition	Specified Condition
E68-6 (CANH) - E13-16 (BAT)	Ignition switch OFF	1 MΩ or more
E68-17 (CANL) - E13-16 (BAT)	Ignition switch OFF	1 MΩ or more

NG → **Go to step 24**

OK

20	CHECK CAN BUS LINE FOR SHORT TO +B (NO. 2 JUNCTION CONNECTOR - POWER STEERING ECU)

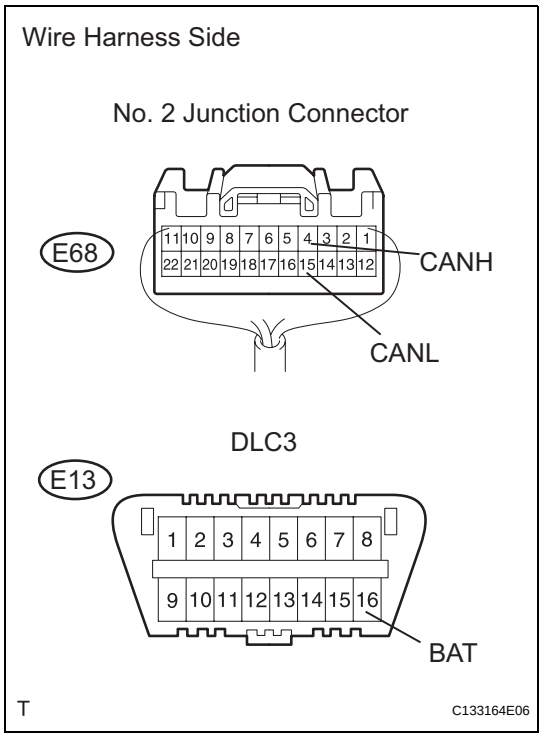

(a) Measure the resistance of the wire harness side connectors.

Standard resistance

Tester Connection	Condition	Specified Condition
E68-4 (CANH) - E13-16 (BAT)	Ignition switch OFF	1 MΩ or more
E68-15 (CANL) - E13-16 (BAT)	Ignition switch OFF	1 MΩ or more

NG → **Go to step 26**

OK

21	CHECK CAN BUS LINE FOR SHORT TO +B (NO. 2 JUNCTION CONNECTOR - MAIN BODY ECU)

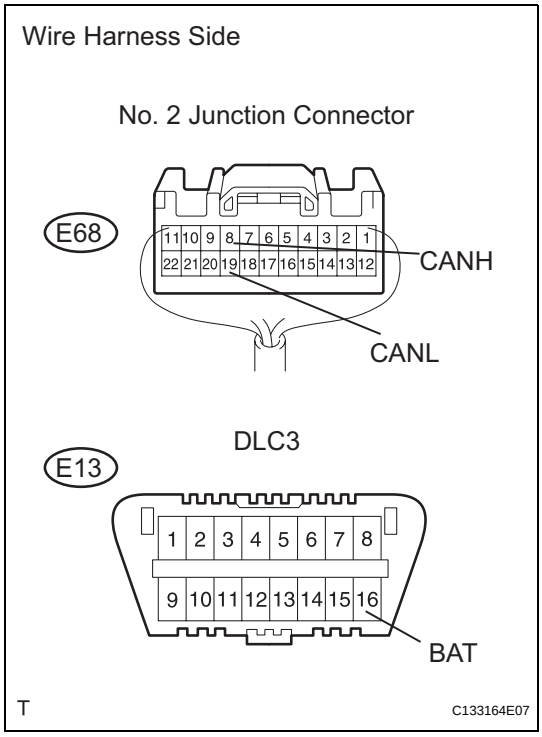

(a) Measure the resistance of the wire harness side connectors.

Standard resistance

Tester Connection	Condition	Specified Condition
E68-8 (CANH) - E13-16 (BAT)	Ignition switch OFF	1 MΩ or more
E68-19 (CANL) - E13-16 (BAT)	Ignition switch OFF	1 MΩ or more

NG → **Go to step 28**

OK

22	**CHECK CAN BUS LINE FOR SHORT TO +B (NO. 2 JUNCTION CONNECTOR - AIR CONDITIONING AMPLIFIER)**

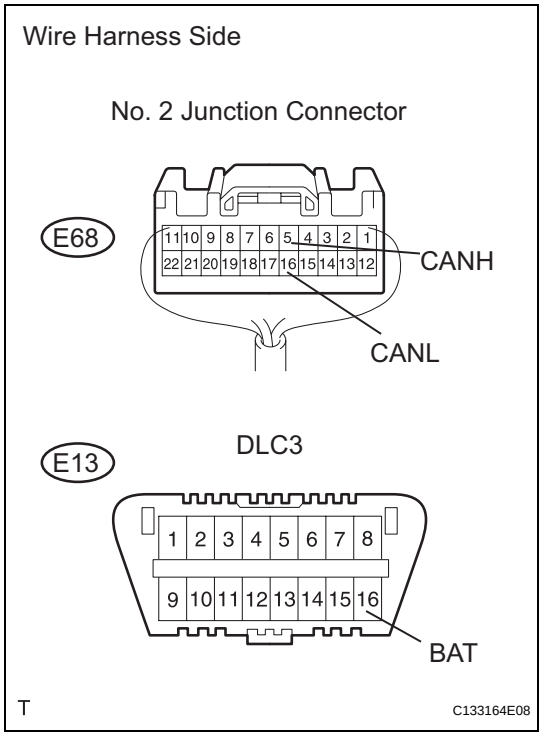

(a) Measure the resistance of the wire harness side connectors.
Standard resistance

Tester Connection	Condition	Specified Condition
E68-5 (CANH) - E13-16 (BAT)	Ignition switch OFF	1 MΩ or more
E68-16 (CANL) - E13-16 (BAT)	Ignition switch OFF	1 MΩ or more

NG → **Go to step 30**

OK

CA

23	CHECK CAN BUS LINE FOR SHORT TO +B (NO. 2 JUNCTION CONNECTOR - STEERING ANGLE SENSOR)

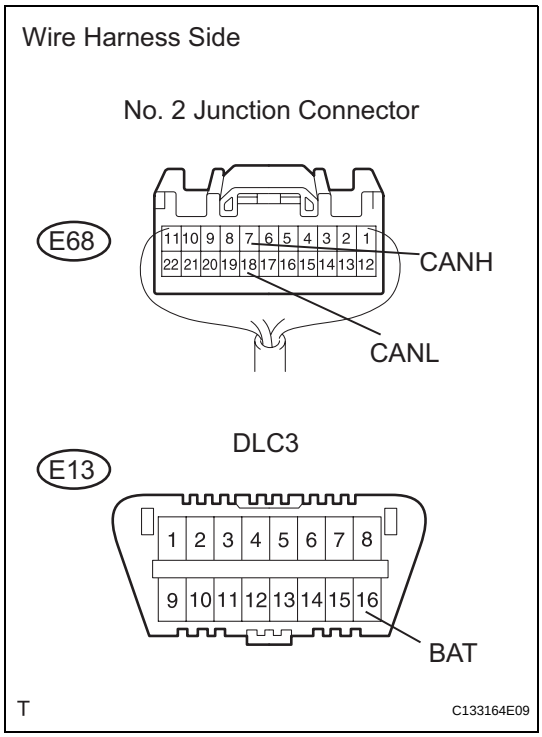

(a) Measure the resistance of the wire harness side connectors.

Standard resistance

Tester Connection	Condition	Specified Condition
E68-7 (CANH) - E13-16 (BAT)	Ignition switch OFF	1 MΩ or more
E68-18 (CANL) - E13-16 (BAT)	Ignition switch OFF	1 MΩ or more

NG → **Go to step 32**

OK

REPAIR OR REPLACE CAN MAIN WIRE AND CONNECTOR (NO. 2 JUNCTION CONNECTOR - NO. 3 JUNCTION CONNECTOR)

24	CONNECT CONNECTOR

(a) Reconnect the E68 No. 2 junction connector.

NEXT

25	CHECK CAN BUS LINE FOR SHORT TO +B (YAW RATE SENSOR)

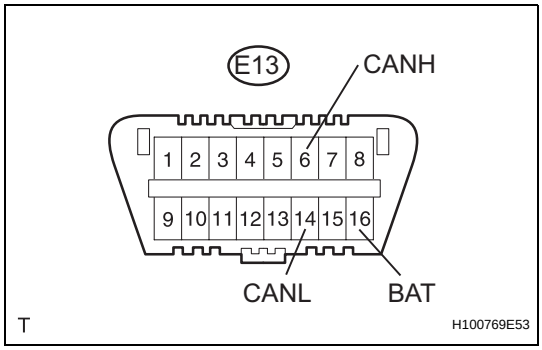

(a) Disconnect the K6 yaw rate sensor connector.
(b) Measure the resistance of the DLC3.

Standard resistance

Tester Connection	Condition	Specified Condition
E13-6 (CANH) - E13-16 (BAT)	Ignition switch OFF	1 MΩ or more
E13-14 (CANL) - E13-16 (BAT)	Ignition switch OFF	1 MΩ or more

NG → **REPAIR OR REPLACE CAN BRANCH WIRE CONNECTED TO YAW RATE SENSOR (CANH, CANL)**

OK

REPLACE YAW RATE SENSOR

26 **CONNECT CONNECTOR**

(a) Reconnect the E68 No. 2 junction connector.

NEXT

27 **CHECK CAN BUS LINE FOR SHORT TO +B (POWER STEERING ECU)**

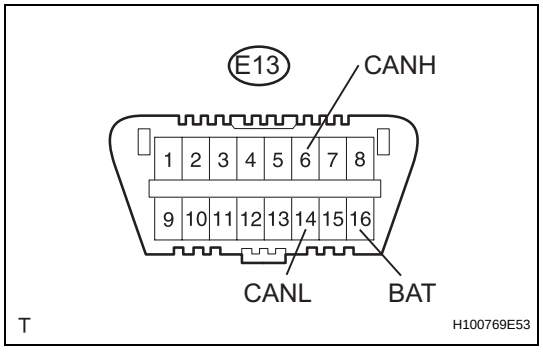

(a) Disconnect the E18 power steering ECU connector.
(b) Measure the resistance of the DLC3.
Standard resistance

Tester Connection	Condition	Specified Condition
E13-6 (CANH) - E13-16 (BAT)	Ignition switch OFF	1 MΩ or more
E13-14 (CANL) - E13-16 (BAT)	Ignition switch OFF	1 MΩ or more

NG → **REPAIR OR REPLACE CAN BRANCH WIRE CONNECTED TO POWER STEERING ECU (CANH, CANL)**

OK

REPLACE POWER STEERING ECU

28 **CONNECT CONNECTOR**

(a) Reconnect the E68 No. 2 junction connector.

NEXT

29 **CHECK CAN BUS LINE FOR SHORT TO +B (MAIN BODY ECU)**

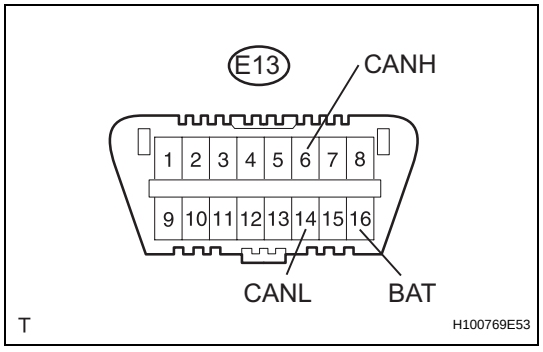

(a) Disconnect the E17 main body ECU connector.
(b) Measure the resistance of the DLC3.
Standard resistance

Tester Connection	Condition	Specified Condition
E13-6 (CANH) - E13-16 (BAT)	Ignition switch OFF	1 MΩ or more
E13-14 (CANL) - E13-16 (BAT)	Ignition switch OFF	1 MΩ or more

CA

NG → **REPAIR OR REPLACE CAN BRANCH WIRE CONNECTED TO MAIN BODY ECU (CANH, CANL)**

OK

REPLACE INSTRUMENT PANEL JUNCTION BLOCK (MAIN BODY ECU)

30 CONNECT CONNECTOR

(a) Reconnect the E68 No. 2 junction connector.

NEXT

31 CHECK CAN BUS LINE FOR SHORT TO +B (AIR CONDITIONING AMPLIFIER)

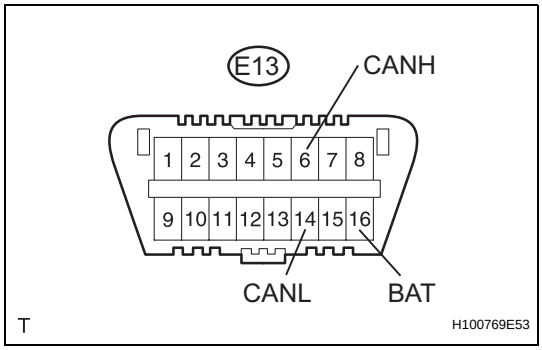

(a) Disconnect the E37*1 or E36*2 air conditioning amplifier connector.
HINT:
- *1: for Automatic air conditioning system.
- *2: for Manual air conditioning system.

(b) Measure the resistance of the DLC3.
Standard resistance

Tester Connection	Condition	Specified Condition
E13-6 (CANH) - E13-16 (BAT)	Ignition switch OFF	1 MΩ or more
E13-14 (CANL) - E13-16 (BAT)	Ignition switch OFF	1 MΩ or more

NG → **REPAIR OR REPLACE CAN BRANCH WIRE CONNECTED TO AIR CONDITIONING AMPLIFIER (CANH, CANL)**

OK

REPLACE AIR CONDITIONING AMPLIFIER

32 CONNECT CONNECTOR

(a) Reconnect the E68 No. 2 junction connector.

NEXT

33 CHECK CAN BUS LINE FOR SHORT TO +B (STEERING ANGLE SENSOR)

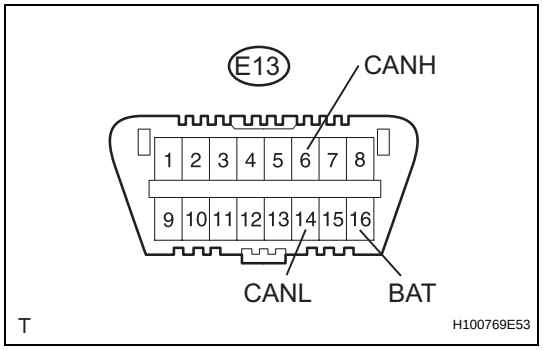

(a) Disconnect the E11 steering sensor connector.
(b) Measure the resistance of the DLC3.
Standard resistance

Tester Connection	Condition	Specified Condition
E13-6 (CANH) - E13-16 (BAT)	Ignition switch OFF	1 MΩ or more
E13-14 (CANL) - E13-16 (BAT)	Ignition switch OFF	1 MΩ or more

NG → **REPLACE CAN BRANCH WIRE CONNECTED TO STEERING ANGLE SENSOR (CANH, CANL)**

OK

REPLACE STEERING ANGLE SENSOR

34 CHECK CAN BUS LINE FOR SHORT TO +B (NO. 4 JUNCTION CONNECTOR - 4WD CONTROL ECU)

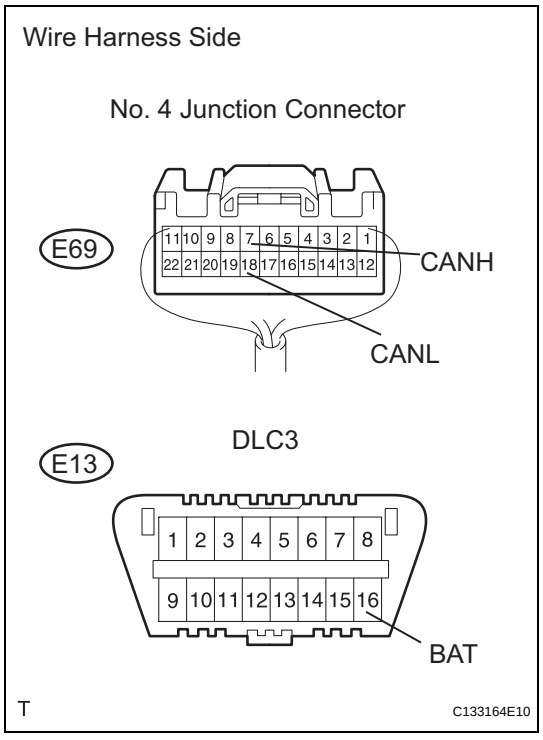

NOTICE:
For vehicles without 4WD, go to "CHECK CAN BUS LINE FOR SHORT TO +B (NO. 4 JUNCTION CONNECTOR - COMBINATION METER ECU)".

(a) Measure the resistance of the wire harness side connectors.
Standard resistance

Tester Connection	Condition	Specified Condition
E69-7 (CANH) - E13-16 (BAT)	Ignition switch OFF	1 MΩ or more
E69-18 (CANL) - E13-16 (BAT)	Ignition switch OFF	1 MΩ or more

NG → **Go to step 36**

OK

35	CHECK CAN BUS LINE FOR SHORT TO +B (NO. 4 JUNCTION CONNECTOR - COMBINATION METER ECU)

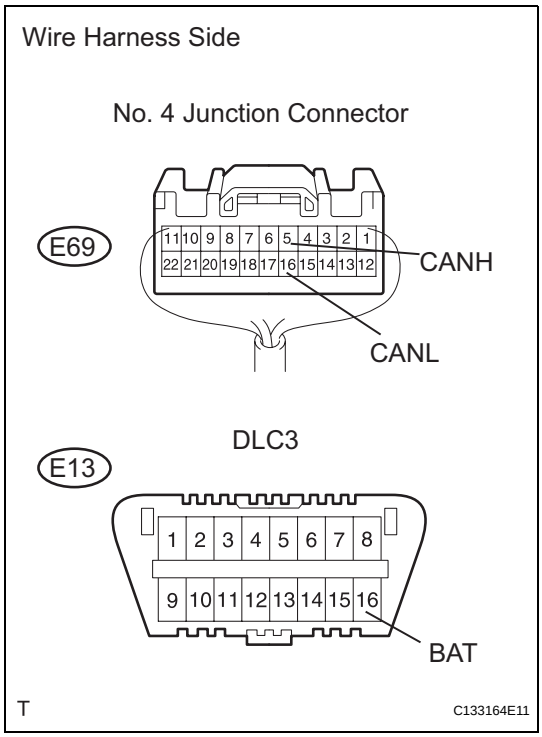

(a) Measure the resistance of the wire harness side connectors.

Standard resistance

Tester Connection	Condition	Specified Condition
E69-5 (CANH) - E13-16 (BAT)	Ignition switch OFF	1 MΩ or more
E69-16 (CANL) - E13-16 (BAT)	Ignition switch OFF	1 MΩ or more

NG → **Go to step 38**

OK

36	CONNECT CONNECTOR

(a) Reconnect the E69 No. 4 junction connector.

NEXT

37	CHECK CAN BUS LINE FOR SHORT TO +B (4WD CONTROL ECU)

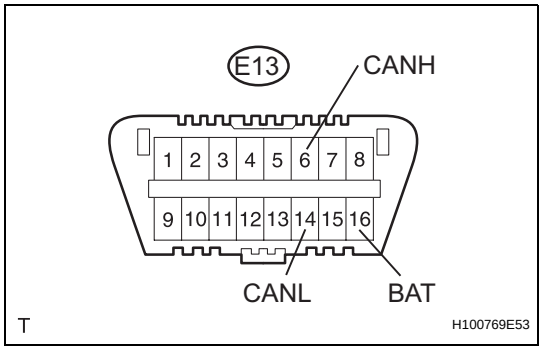

(a) Disconnect the E57 4WD control ECU connector.
(b) Measure the resistance of the DLC3.

Standard resistance

Tester Connection	Condition	Specified Condition
E13-6 (CANH) - E13-16 (BAT)	Ignition switch OFF	1 MΩ or more
E13-14 (CANL) - E13-16 (BAT)	Ignition switch OFF	1 MΩ or more

NG → **REPAIR OR REPLACE CAN BRANCH WIRE CONNECTED TO 4WD CONTROL ECU (CANH, CANL)**

OK

REPLACE 4WD CONTROL ECU

38	CONNECT CONNECTOR

(a) Reconnect the E69 No. 4 junction connector.

NEXT

39	CHECK CAN BUS LINE FOR SHORT TO +B (COMBINATION METER ECU)

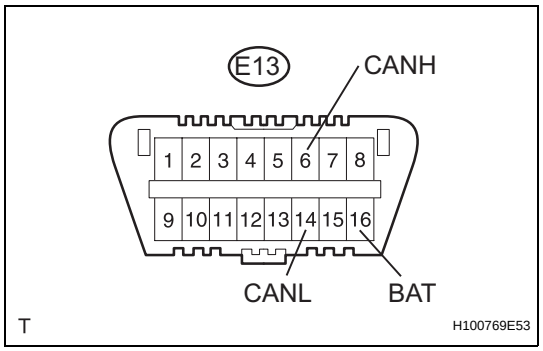

(a) Disconnect the E19 combination meter ECU connector.
(b) Measure the resistance of the DLC3.
Standard resistance

Tester Connection	Condition	Specified Condition
E13-6 (CANH) - E13-16 (BAT)	Ignition switch OFF	1 MΩ or more
E13-14 (CANL) - E13-16 (BAT)	Ignition switch OFF	1 MΩ or more

NG → **REPAIR OR REPLACE CAN MAIN WIRE CONNECTED TO COMBINATION METER ECU (CANH, CANL)**

OK

REPLACE COMBINATION METER ECU

CA

Short to GND in CAN Bus Line

(2005/11-2006/01)

DESCRIPTION

There may be a short circuit between the CAN bus line and GND when there is resistance between terminals 6 (CANH) and 4 (CG) or terminals 14 (CANL) and 4 (CG) of the DLC3.

Symptom	Trouble Area
There is resistance between terminals 6 (CANH) and 4 (CG) or terminals 14 (CANL) and 4 (CG) of DLC3.	• Short to GND • ABS and traction actuator (skid control ECU) • Power steering ECU • Steering angle sensor • Yaw rate sensor • ECM • Center airbag sensor • Air conditioning amplifier • Combination meter ECU • Instrument panel junction block (Main body ECU) • 4WD control ECU

WIRING DIAGRAM

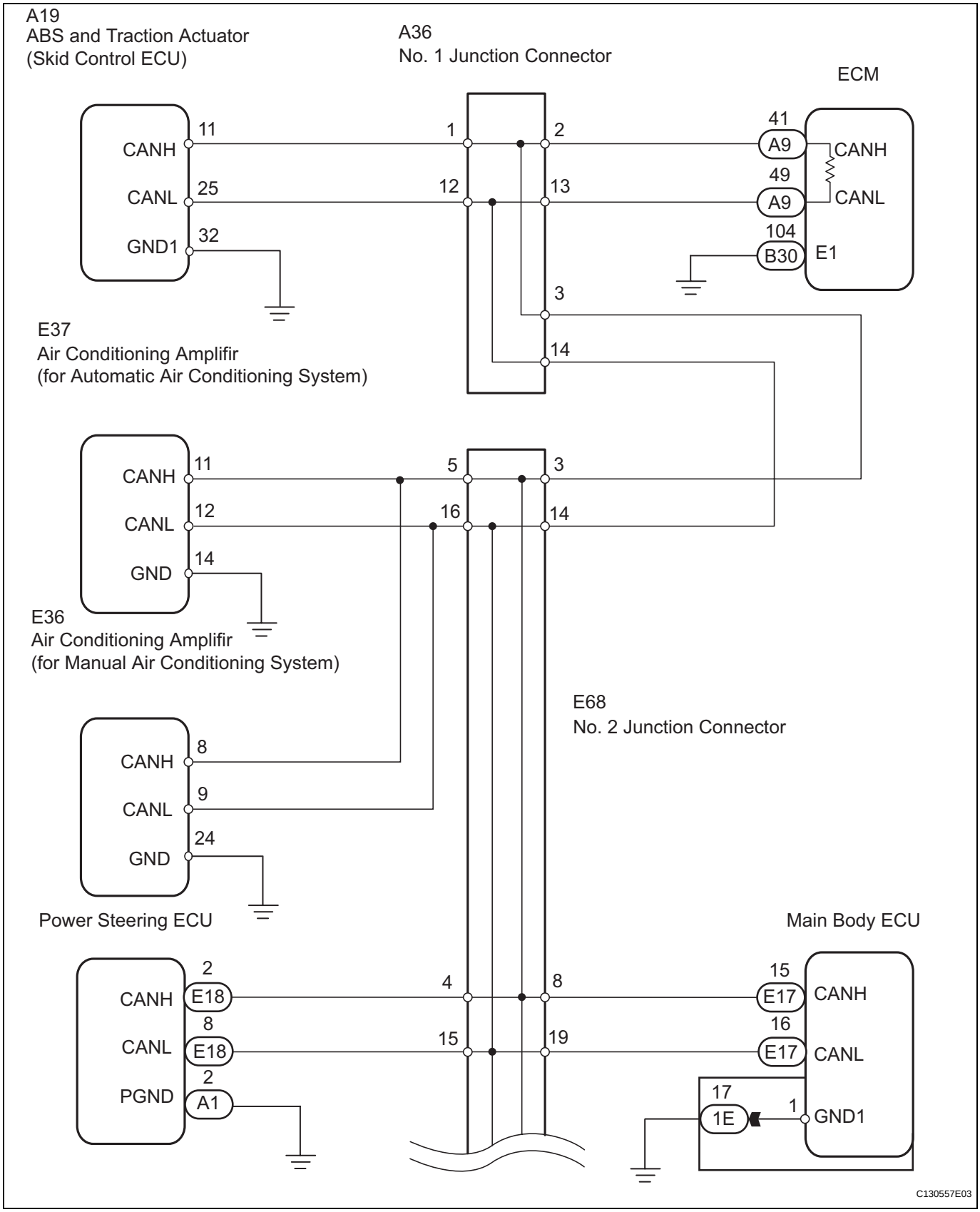

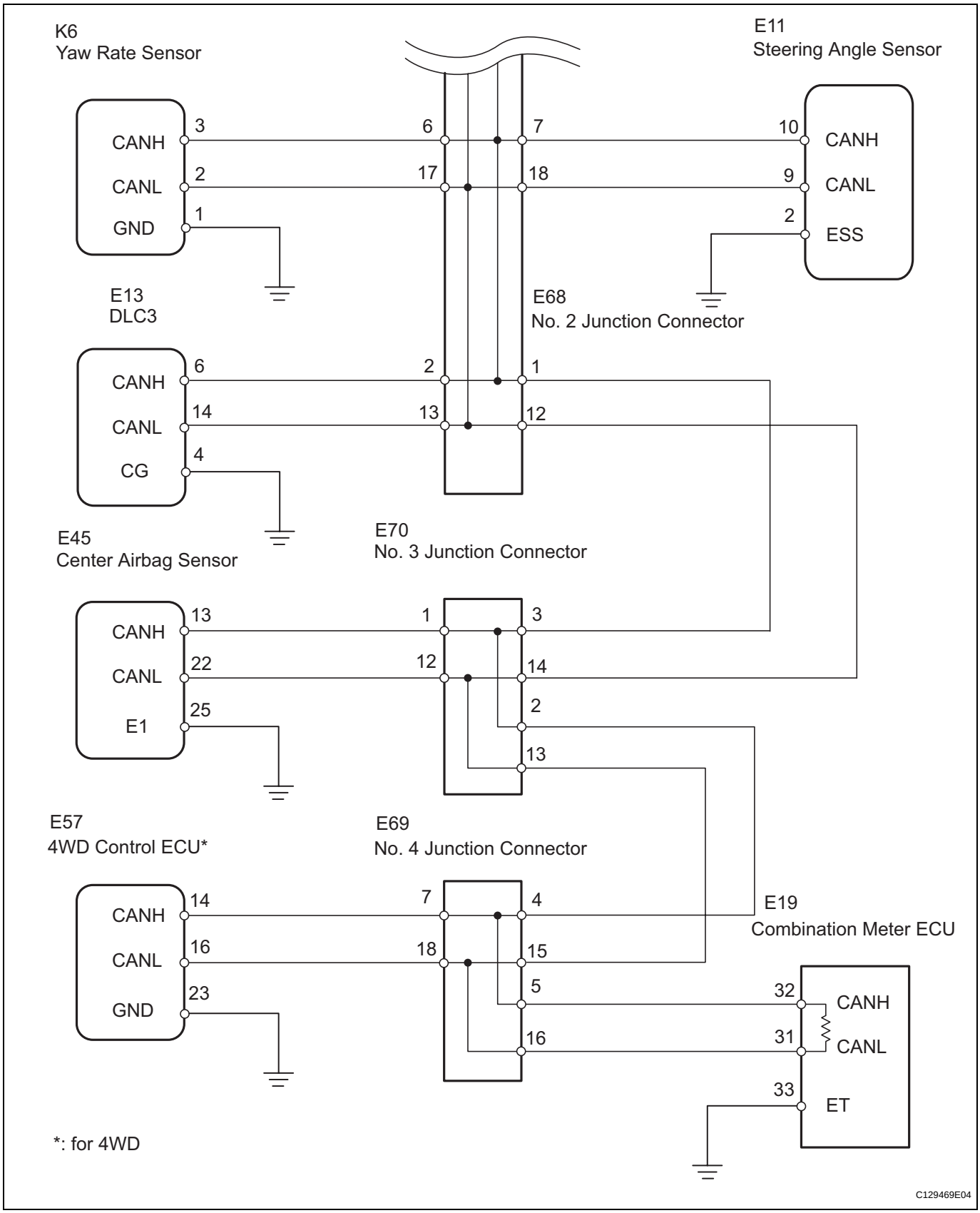

INSPECTION PROCEDURE

NOTICE:

- **Turn the ignition switch OFF before measuring the resistances of the main wire and the branch wire.**

- **After the ignition switch is turned OFF, check that the key reminder warning system and light reminder warning system are not in operation.**
- **Before measuring the resistance, leave the vehicle for at least 1 minute and do not operate the ignition switch, any switches or doors. If doors need to be opened in order to check connectors, open the doors and leave them open.**

HINT:
Operating the ignition switch, any switches or any doors triggers related ECU and sensor communication with the CAN, which causes resistance variation.

1	CHECK CAN BUS LINE FOR SHORT TO GND (DLC3 BRANCH WIRE)

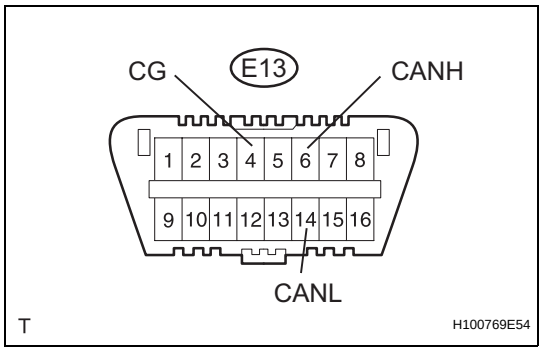

(a) Disconnect the E68 No. 2 junction connector.
(b) Measure the resistance of the DLC3.
Standard resistance

Tester Connection	Condition	Specified Condition
E13-6 (CANH) - E13-4 (CG)	Ignition switch OFF	200 Ω or more
E13-14 (CANL) - E13-4 (CG)	Ignition switch OFF	200 Ω or more

NG → **REPAIR OR REPLACE CAN BRANCH WIRE CONNECTED TO DLC3 (CANH, CANL)**

OK

2	CONNECT CONNECTOR

(a) Reconnect the E68 No. 2 junction connector.

NEXT

3	CHECK CAN BUS LINE FOR SHORT TO GND (NO. 1 JUNCTION CONNECTOR)

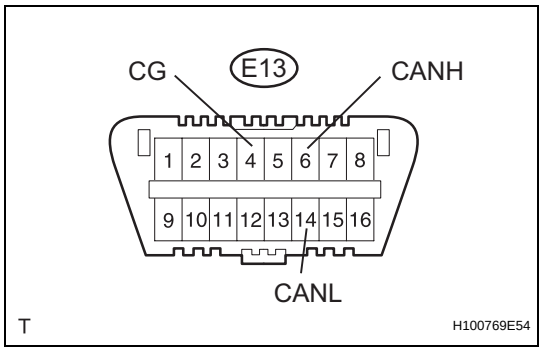

(a) Disconnect the A36 No. 1 junction connector.
(b) Measure the resistance of the DLC3.
Standard resistance

Tester Connection	Condition	Specified Condition
E13-6 (CANH) - E13-4 (CG)	Ignition switch OFF	200 Ω or more
E13-14 (CANL) - E13-4 (CG)	Ignition switch OFF	200 Ω or more

OK → **Go to step 12**

NG

4	CONNECT CONNECTOR

(a) Reconnect the A36 No. 1 junction connector.

NEXT

CA

5	CHECK CAN BUS LINE FOR SHORT TO GND (NO. 3 JUNCTION CONNECTOR, NO. 4 JUNCTION CONNECTOR SIDE)

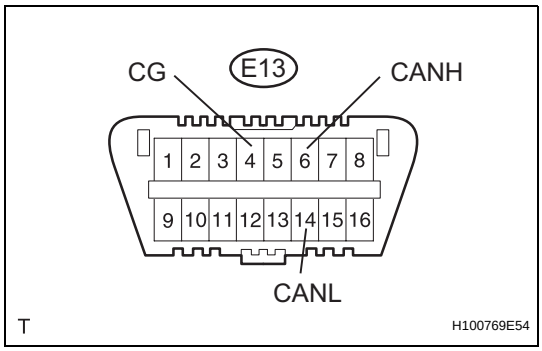

(a) Disconnect the E70 No. 3 junction connector.
(b) Measure the resistance of the DLC3.
Standard resistance

Tester Connection	Condition	Specified Condition
E13-6 (CANH) - E13-4 (CG)	Ignition switch OFF	200 Ω or more
E13-14 (CANL) - E13-4 (CG)	Ignition switch OFF	200 Ω or more

NG → **Go to step 18**

OK

CA

6	CONNECT CONNECTOR

(a) Reconnect the E70 No. 3 junction connector.

NEXT

7	CHECK CAN BUS LINE FOR SHORT TO GND (NO. 4 JUNCTION CONNECTOR SIDE)

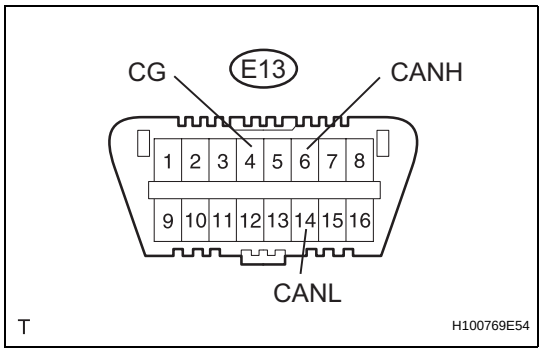

(a) Disconnect the E69 No. 4 junction connector.
(b) Measure the resistance of the DLC3.
Standard resistance

Tester Connection	Condition	Specified Condition
E13-6 (CANH) - E13-4 (CG)	Ignition switch OFF	200 Ω or more
E13-14 (CANL) - E13-4 (CG)	Ignition switch OFF	200 Ω or more

OK → **Go to step 34**

NG

8	CONNECT CONNECTOR

(a) Reconnect the E69 No. 4 junction connector.

NEXT

9	CHECK CAN BUS LINE FOR SHORT TO GND (NO. 3 JUNCTION CONNECTOR - CENTER AIRBAG SENSOR ASSEMBLY)

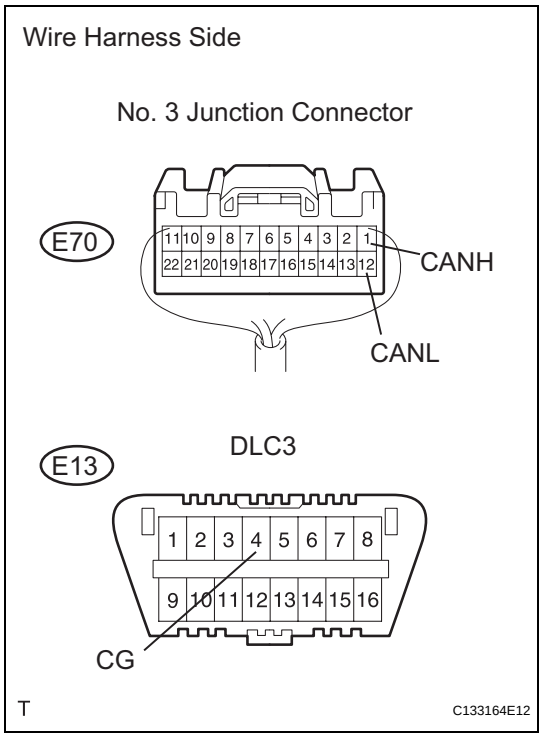

(a) Disconnect the E70 No. 3 junction connector.
(b) Measure the resistance of the wire harness side connectors.

Standard resistance

Tester Connection	Condition	Specified Condition
E70-1 (CANH) - E13-4 (CG)	Ignition switch OFF	200 Ω or more
E70-12 (CANL) - E13-4 (CG)	Ignition switch OFF	200 Ω or more

OK → **REPAIR OR REPLACE CAN MAIN WIRE AND CONNECTOR (NO. 3 JUNCTION CONNECTOR - NO. 4 JUNCTION CONNECTOR)**

NG

10	CONNECT CONNECTOR

(a) Reconnect the E70 No. 3 junction connector.

NEXT

11	CHECK CAN BUS LINE FOR SHORT TO GND (CENTER AIRBAG SENSOR ASSEMBLY)

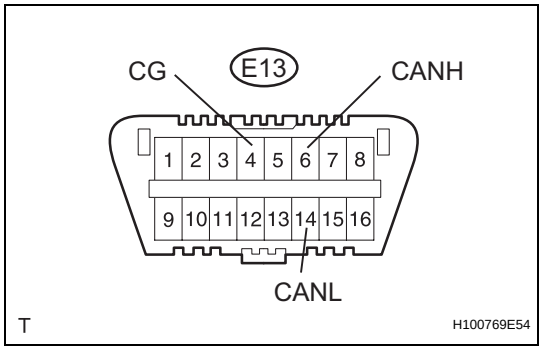

(a) Disconnect the E45 center airbag sensor connector.
(b) Measure the resistance of the DLC3.

Standard resistance

Tester Connection	Condition	Specified Condition
E13-6 (CANH) - E13-4 (CG)	Ignition switch OFF	200 Ω or more
E13-14 (CANL) - E13-4 (CG)	Ignition switch OFF	200 Ω or more

NG → **REPAIR OR REPLACE CAN BRANCH WIRE CONNECTED TO CENTER AIRBAG SENSOR ASSEMBLY (CANH, CANL)**

OK

REPLACE CENTER AIRBAG SENSOR ASSEMBLY

CA

12 CHECK CAN BUS LINE FOR SHORT TO GND (NO. 1 JUNCTION CONNECTOR - ECM)

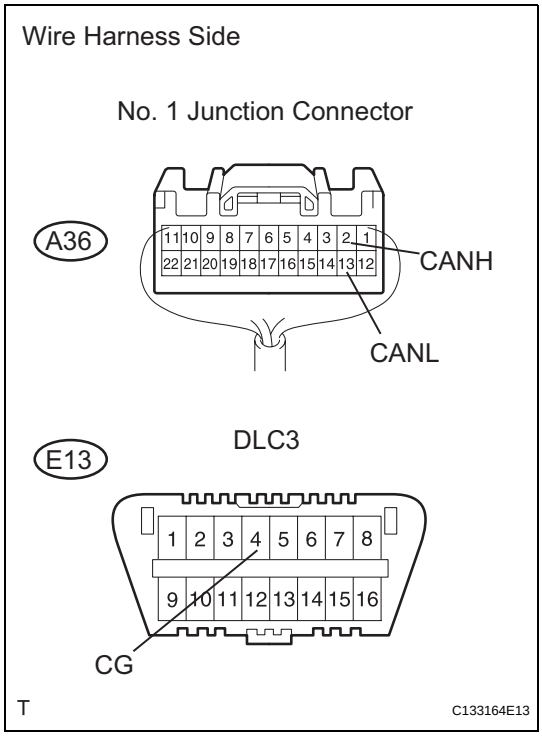

(a) Disconnect the A36 No. 1 junction connector.
(b) Measure the resistance of the wire harness side connectors.

Standard resistance

Tester Connection	Condition	Specified Condition
A36-2 (CANH) - E13-4 (CG)	Ignition switch OFF	200 Ω or more
A36-13 (CANL) - E13-4 (CG)	Ignition switch OFF	200 Ω or more

NG → **Go to step 14**

OK

13 CHECK CAN BUS LINE FOR SHORT TO GND (NO. 1JUNCTION CONNECTOR - ABS AND TRACTION ACTUATOR)

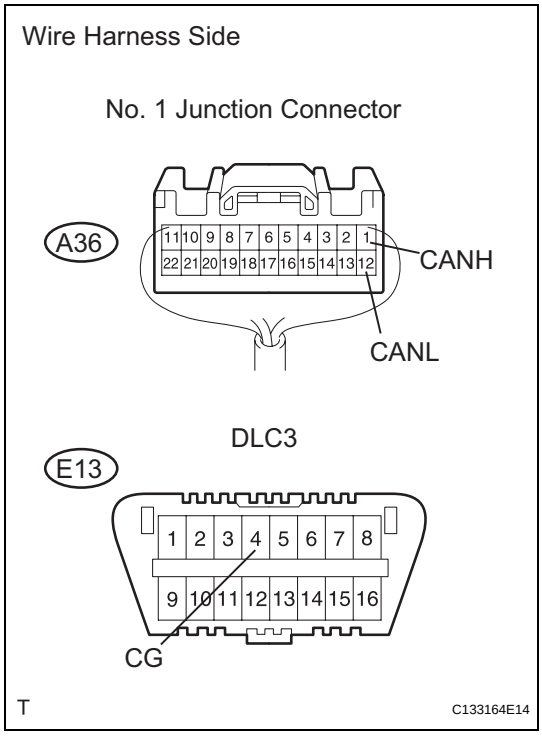

(a) Measure the resistance of the wire harness side connectors.

Standard resistance

Tester Connection	Condition	Specified Condition
A36-1 (CANH) - E13-4 (CG)	Ignition switch OFF	200 Ω or more
A36-12 (CANL) - E13-4 (CG)	Ignition switch OFF	200 Ω or more

NG → **Go to step 16**

OK

REPAIR OR REPLACE CAN MAIN WIRE AND CONNECTOR (NO. 1 JUNCTION CONNECTOR - NO. 2 JUNCTION CONNECTOR)

14	CONNECT CONNECTOR

(a) Reconnect the A36 No. 1 junction connector.

NEXT

15	CHECK CAN BUS LINE FOR SHORT TO GND (ECM)

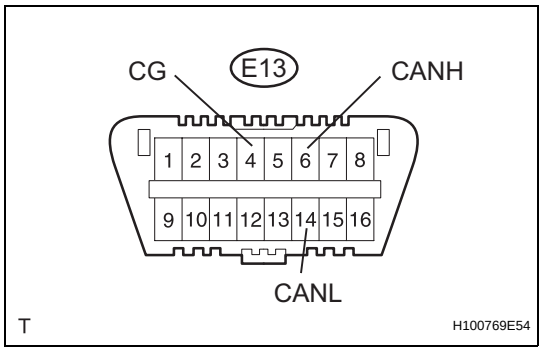

(a) Disconnect the A9 ECM connector.
(b) Measure the resistance of the DLC3.
Standard resistance

Tester Connection	Condition	Specified Condition
E13-6 (CANH) - E13-4 (CG)	Ignition switch OFF	200 Ω or more
E13-14 (CANL) - E13-4 (CG)	Ignition switch OFF	200 Ω or more

NG → **REPAIR OR REPLACE CAN MAIN WIRE CONNECTED TO ECM (NO. 1 JUNCTION CONNECTOR - ECM)**

OK

REPLACE ECM

16	CONNECT CONNECTOR

(a) Reconnect the A36 No. 1 junction connector.

NEXT

17	CHECK CAN BUS LINE FOR SHORT TO GND (ABS AND TRACTION ACTUATOR)

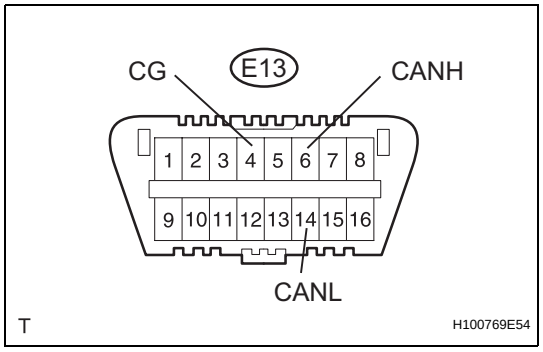

(a) Disconnect the A19 ABS and traction actuator (skid control ECU) connector.
(b) Measure the resistance of the DLC3.
Standard resistance

Tester Connection	Condition	Specified Condition
E13-6 (CANH) - E13-4 (CG)	Ignition switch OFF	200 Ω or more
E13-14 (CANL) - E13-4 (CG)	Ignition switch OFF	200 Ω or more

CA

NG → **REPAIR OR REPLACE CAN BRANCH WIRE CONNECTED TO ABS AND TRACTION ACTUATOR (CANH, CANL)**

OK

REPLACE ABS AND TRACTION ACTUATOR (SKID CONTROL ECU)

18	CONNECT CONNECTOR

(a) Reconnect the E70 No. 3 junction connector.

NEXT

19	CHECK CAN BUS LINE FOR SHORT TO GND (NO. 2 JUNCTION CONNECTOR - YAW RATE SENSOR)

CA

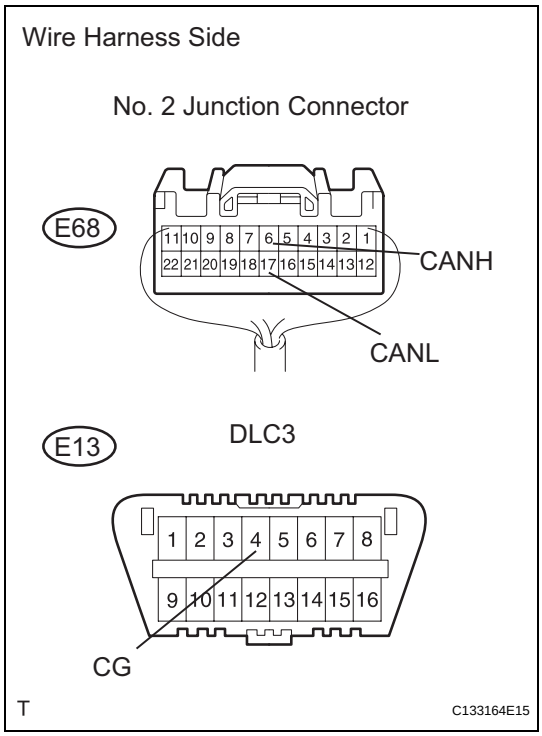

(a) Disconnect the E68 No. 2 junction connector.
(b) Measure the resistance of the wire harness side connectors.

Standard resistance

Tester Connection	Condition	Specified Condition
E68-6 (CANH) - E13-4 (CG)	Ignition switch OFF	200 Ω or more
E68-17 (CANL) - E13-4 (CG)	Ignition switch OFF	200 Ω or more

NG → **Go to step 24**

OK

20	**CHECK CAN BUS LINE FOR SHORT TO GND (NO. 2 JUNCTION CONNECTOR - POWER STEERING ECU)**

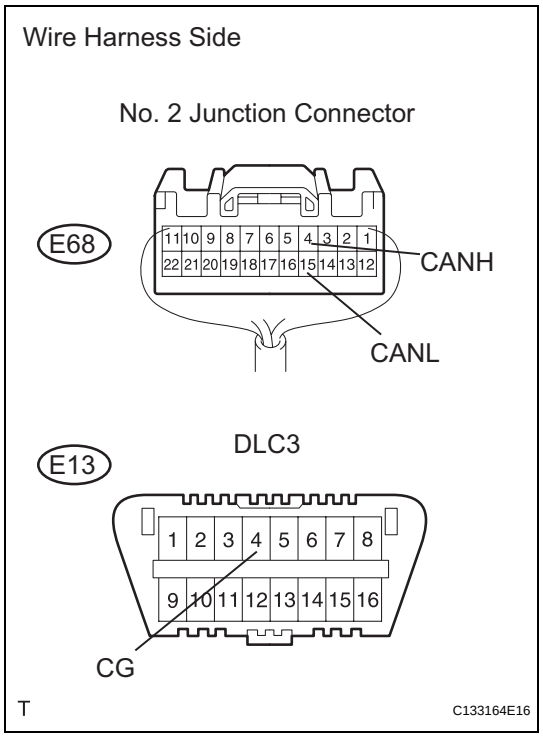

(a) Measure the resistance of the wire harness side connectors.

Standard resistance

Tester Connection	Condition	Specified Condition
E68-4 (CANH) - E13-4 (CG)	Ignition switch OFF	200 Ω or more
E68-15 (CANL) - E13-4 (CG)	Ignition switch OFF	200 Ω or more

NG → **Go to step 26**

OK

21	**CHECK CAN BUS LINE FOR SHORT TO GND (NO. 2 JUNCTION CONNECTOR - MAIN BODY ECU)**

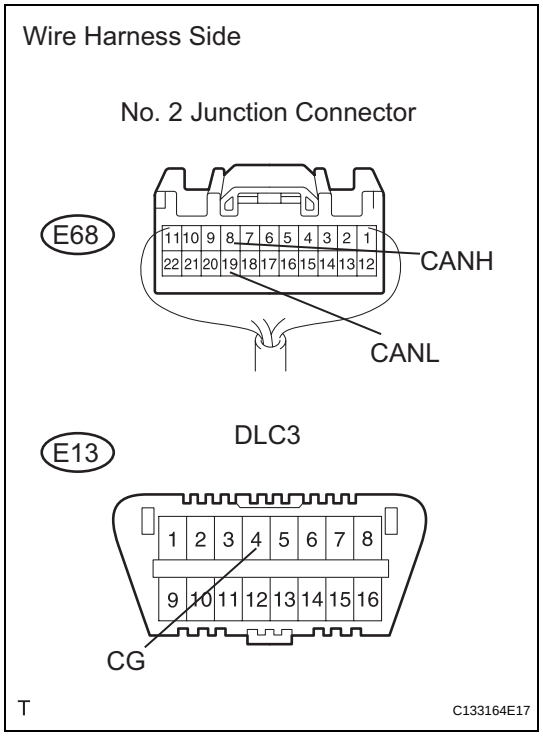

(a) Measure the resistance of the wire harness side connectors.

Standard resistance

Tester Connection	Condition	Specified Condition
E68-8 (CANH) - E13-4 (CG)	Ignition switch OFF	200 Ω or more
E68-19 (CANL) - E13-4 (CG)	Ignition switch OFF	200 Ω or more

NG → **Go to step 28**

CA

OK

22	CHECK CAN BUS LINE FOR SHORT TO GND (NO. 2 JUNCTION CONNECTOR - AIR CONDITIONING AMPLIFIER)

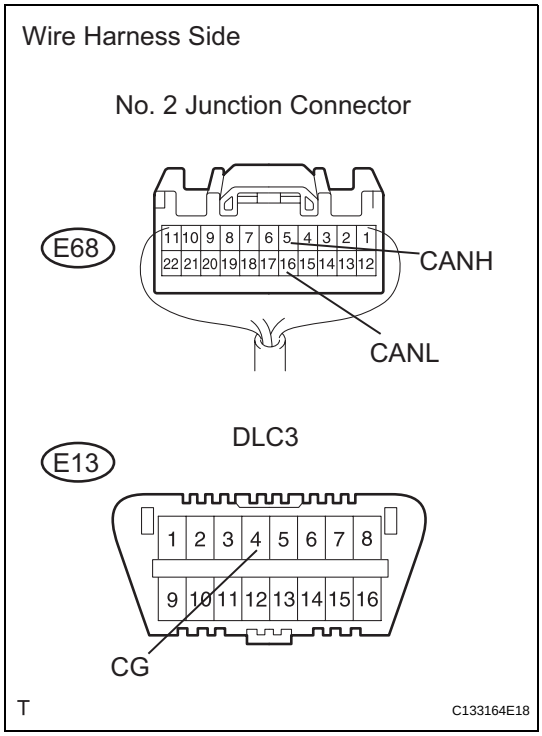

(a) Measure the resistance of the wire harness side connectors.

Standard resistance

Tester Connection	Condition	Specified Condition
E68-5 (CANH) - E13-4 (CG)	Ignition switch OFF	200 Ω or more
E68-16 (CANL) - E13-4 (CG)	Ignition switch OFF	200 Ω or more

NG → Go to step 30

OK

CA

23	CHECK CAN BUS LINE FOR SHORT TO GND (NO. 2 JUNCTION CONNECTOR - STEERING ANGLE SENSOR)

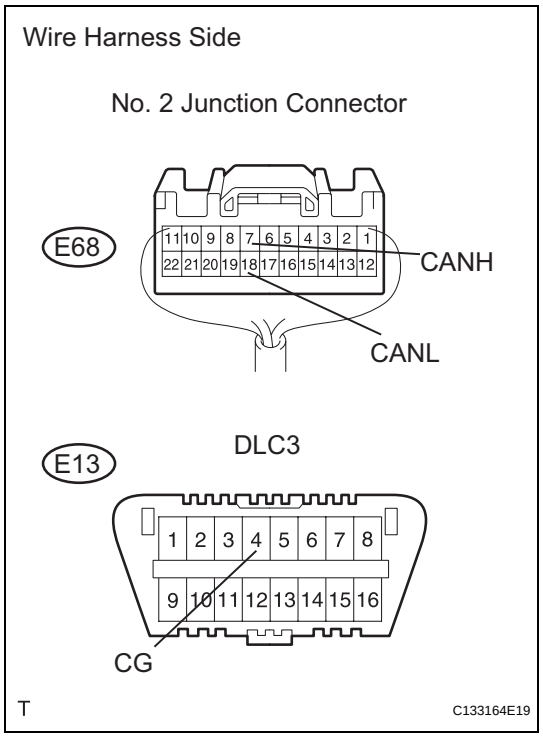

(a) Measure the resistance of the wire harness side connectors.

Standard resistance

Tester Connection	Condition	Specified Condition
E68-7 (CANH) - E13-4 (CG)	Ignition switch OFF	200 Ω or more
E68-18 (CANL) - E13-4 (CG)	Ignition switch OFF	200 Ω or more

NG → **Go to step 32**

OK

REPAIR OR REPLACE CAN MAIN WIRE AND CONNECTOR (NO. 2 JUNCTION CONNECTOR - NO. 3 JUNCTION CONNECTOR)

24	CONNECT CONNECTOR

(a) Reconnect the E68 No. 2 junction connector.

NEXT

25	CHECK CAN BUS LINE FOR SHORT TO GND (YAW RATE SENSOR)

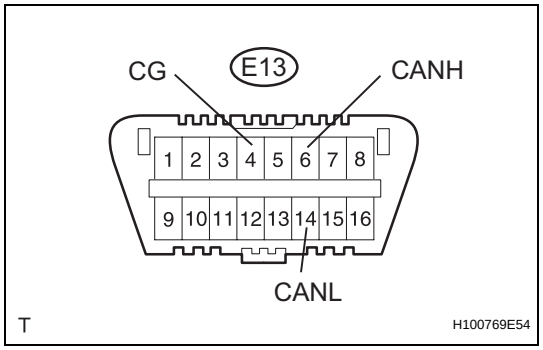

(a) Disconnect the K6 yaw rate sensor connector.
(b) Measure the resistance of the DLC3.

Standard resistance

Tester Connection	Condition	Specified Condition
E13-6 (CANH) - E13-4 (CG)	Ignition switch OFF	200 Ω or more
E13-14 (CANL) - E13-4 (CG)	Ignition switch OFF	200 Ω or more

OK → **REPAIR OR REPLACE CAN BRANCH WIRE CONNECTED TO YAW RATE SENSOR (CANH, CANL)**

OK

REPLACE YAW RATE SENSOR

26 CONNECT CONNECTOR

(a) Reconnect the E68 No. 2 junction connector.

NEXT

27 CHECK CAN BUS LINE FOR SHORT TO GND (POWER STEERING ECU)

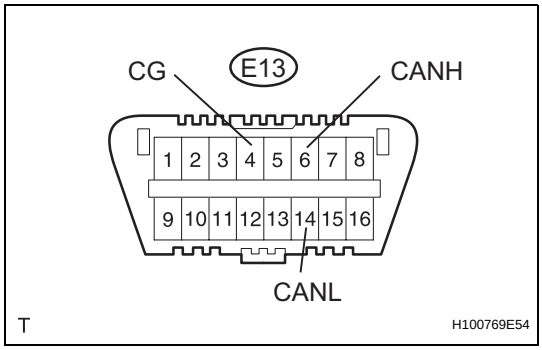

(a) Disconnect the E18 power steering ECU connector.
(b) Measure the resistance of the DLC3.
Standard resistance

Tester Connection	Condition	Specified Condition
E13-6 (CANH) - E13-4 (CG)	Ignition switch OFF	200 Ω or more
E13-14 (CANL) - E13-4 (CG)	Ignition switch OFF	200 Ω or more

OK → **REPAIR OR REPLACE CAN BRANCH WIRE CONNECTED TO POWER STEERING ECU (CANH, CANL)**

OK

REPLACE POWER STEERING ECU

28 CONNECT CONNECTOR

(a) Reconnect the E68 No. 2 junction connector.

NEXT

29 CHECK CAN BUS LINE FOR SHORT TO GND (MAIN BODY ECU)

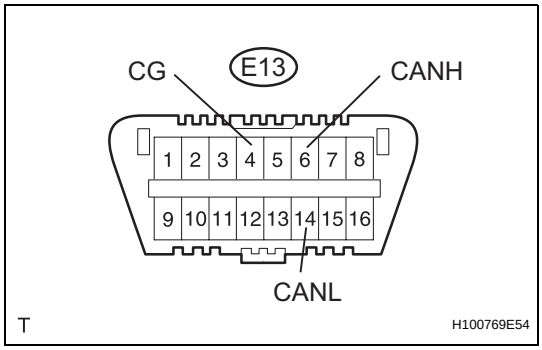

(a) Disconnect the E17 main body ECU connector.
(b) Measure the resistance of the DLC3.
Standard resistance

Tester Connection	Condition	Specified Condition
E13-6 (CANH) - E13-4 (CG)	Ignition switch OFF	200 Ω or more
E13-14 (CANL) - E13-4 (CG)	Ignition switch OFF	200 Ω or more

OK → REPAIR OR REPLACE CAN BRANCH WIRE CONNECTED TO MAIN BODY ECU (CANH, CANL)

OK

REPLACE INSTRUMENT PANEL JUNCTION BLOCK (MAIN BODY ECU)

30 CONNECT CONNECTOR

(a) Reconnect the E68 No. 2 junction connector.

NEXT

31 CHECK CAN BUS LINE FOR SHORT TO GND (AIR CONDITIONING AMPLIFIER)

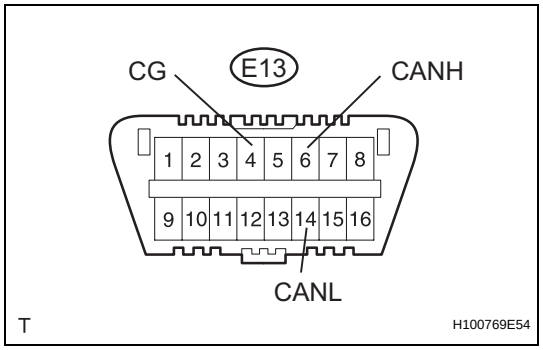

(a) Disconnect the E37*1 or E36*2 air conditioning amplifier connector.
HINT:
- *1: for Automatic air conditioning system.
- *2: for Manual air conditioning system.

(b) Measure the resistance of the DLC3.
Standard resistance

Tester Connection	Condition	Specified Condition
E13-6 (CANH) - E13-4 (CG)	Ignition switch OFF	200 Ω or more
E13-14 (CANL) - E13-4 (CG)	Ignition switch OFF	200 Ω or more

OK → REPAIR OR REPLACE CAN BRANCH WIRE CONNECTED TO AIR CONDITIONING AMPLIFIER (CANH, CANL)

OK

REPLACE AIR CONDITIONING AMPLIFIER

32 CONNECT CONNECTOR

(a) Reconnect the 68 No. 2 junction connector.

NEXT

33	CHECK CAN BUS LINE FOR SHORT TO GND (STEERING ANGLE SENSOR)

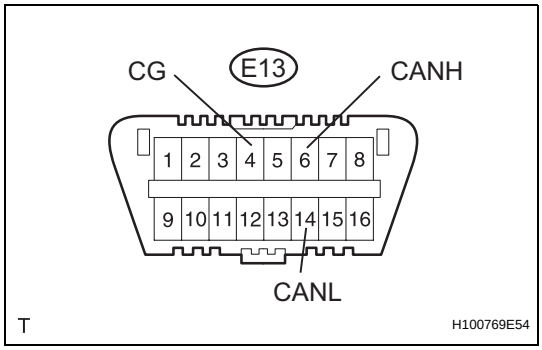

(a) Disconnect the E11 steering sensor connector.
(b) Measure the resistance of the DLC3.
Standard resistance

Tester Connection	Condition	Specified Condition
E13-6 (CANH) - E13-4 (CG)	Ignition switch OFF	200 Ω or more
E13-14 (CANL) - E13-4 (CG)	Ignition switch OFF	200 Ω or more

OK → **REPAIR OR REPLACE CAN BRANCH WIRE CONNECTED TO STEERING ANGLE SENSOR (CANH, CANL)**

OK

CA

REPLACE STEERING ANGLE SENSOR

34	CHECK CAN BUS LINE FOR SHORT TO GND (NO. 4 JUNCTION CONNECTOR - 4WD CONTROL ECU)

NOTICE:
For vehicles without 4WD, go to "CHECK CAN BUS LINE FOR SHORT TO GND (NO. 4 JUNCTION CONNECTOR - COMBINATION METER ECU)".

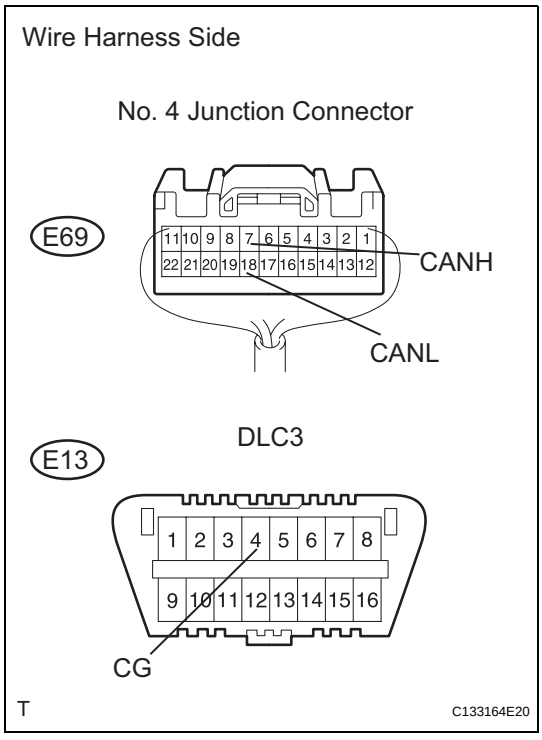

(a) Measure the resistance of the wire harness side connectors.
Standard resistance

Tester Connection	Condition	Specified Condition
E69-7(CANH) - E13-4 (CG)	Ignition switch OFF	200 Ω or more
E69-18 (CANL) - E13-4 (CG)	Ignition switch OFF	200 Ω or more

NG → **Go to step 36**

OK

35	CHECK CAN BUS LINE FOR SHORT TO GND (NO. 4 JUNCTION CONNECTOR - COMBINATION METER ECU)

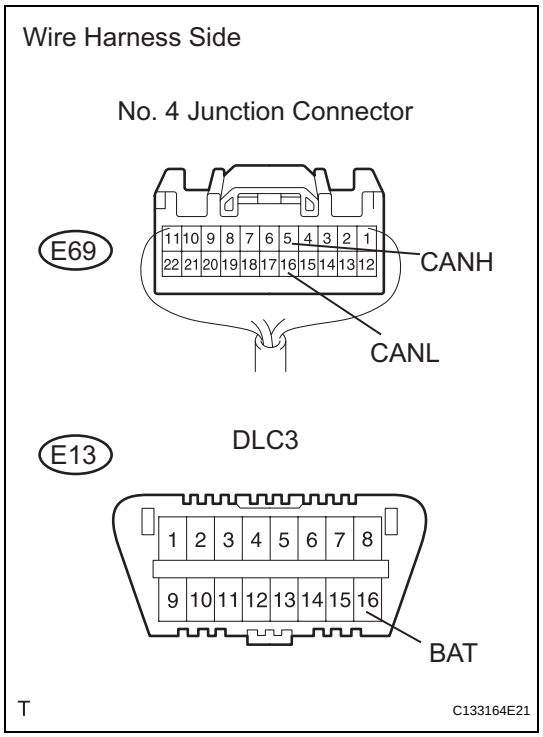

(a) Measure the resistance of the wire harness side connectors.

Standard resistance

Tester Connection	Condition	Specified Condition
E69-5(CANH) - E13-4 (CG)	Ignition switch OFF	200 Ω or more
E69-16 (CANL) - E13-4 (CG)	Ignition switch OFF	200 Ω or more

NG → **Go to step 38**

OK

36	CONNECT CONNECTOR

(a) Reconnect the E69 No. 4 junction connector.

NEXT

37	CHECK CAN BUS LINE FOR SHORT TO GND (4WD CONTROL ECU)

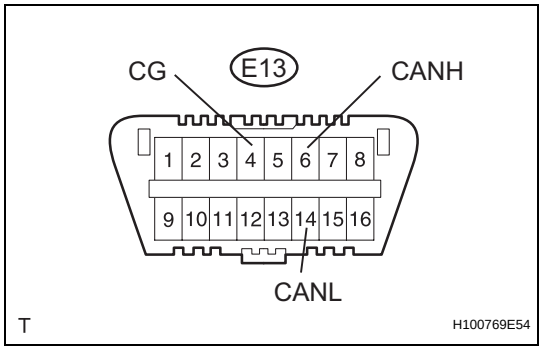

(a) Disconnect the E57 4WD control ECU connector.
(b) Measure the resistance of the DLC3.

Standard resistance

Tester Connection	Condition	Specified Condition
E13-6 (CANH) - E13-4 (CG)	Ignition switch OFF	200 Ω or more
E13-14 (CANL) - E13-4 (CG)	Ignition switch OFF	200 Ω or more

NG → **REPAIR OR REPLACE CAN BRANCH WIRE CONNECTED TO 4WD CONTROL ECU (CANH, CANL)**

OK

REPLACE 4WD CONTROL ECU

38	CONNECT CONNECTOR

(a) Reconnect the E69 No. 4 junction connector.

NEXT

39	CHECK CAN BUS LINE FOR SHORT TO GND (COMBINATION METER ECU)

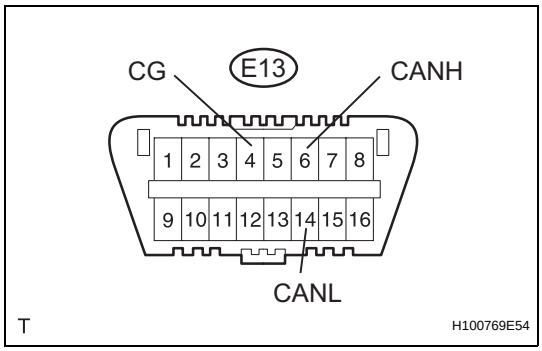

(a) Disconnect the E19 combination meter ECU connector.
(b) Measure the resistance of the DLC3.

Standard resistance

Tester Connection	Condition	Specified Condition
E13-6 (CANH) - E13-4 (CG)	Ignition switch OFF	200 Ω or more
E13-14 (CANL) - E13-4 (CG)	Ignition switch OFF	200 Ω or more

NG → REPAIR OR REPLACE CAN MAIN WIRE CONNECTED TO COMBINATION METER ECU (CANH, CANL)

OK

REPLACE COMBINATION METER ECU

CA

Short to GND in CAN Bus Line

(2006/01-)

DESCRIPTION

There may be a short circuit between the CAN bus line and GND when there is resistance between terminals 6 (CANH) and 4 (CG) or terminals 14 (CANL) and 4 (CG) of the DLC3.

Symptom	Trouble Area
There is resistance between terminals 6 (CANH) and 4 (CG) or terminals 14 (CANL) and 4 (CG) of DLC3.	• Short to GND • ABS and traction actuator (skid control ECU) • Power steering ECU • Steering angle sensor • Yaw rate sensor • ECM • Center airbag sensor • Air conditioning amplifier • Combination meter ECU • Instrument panel junction block (main body ECU) • 4WD control ECU

WIRING DIAGRAM

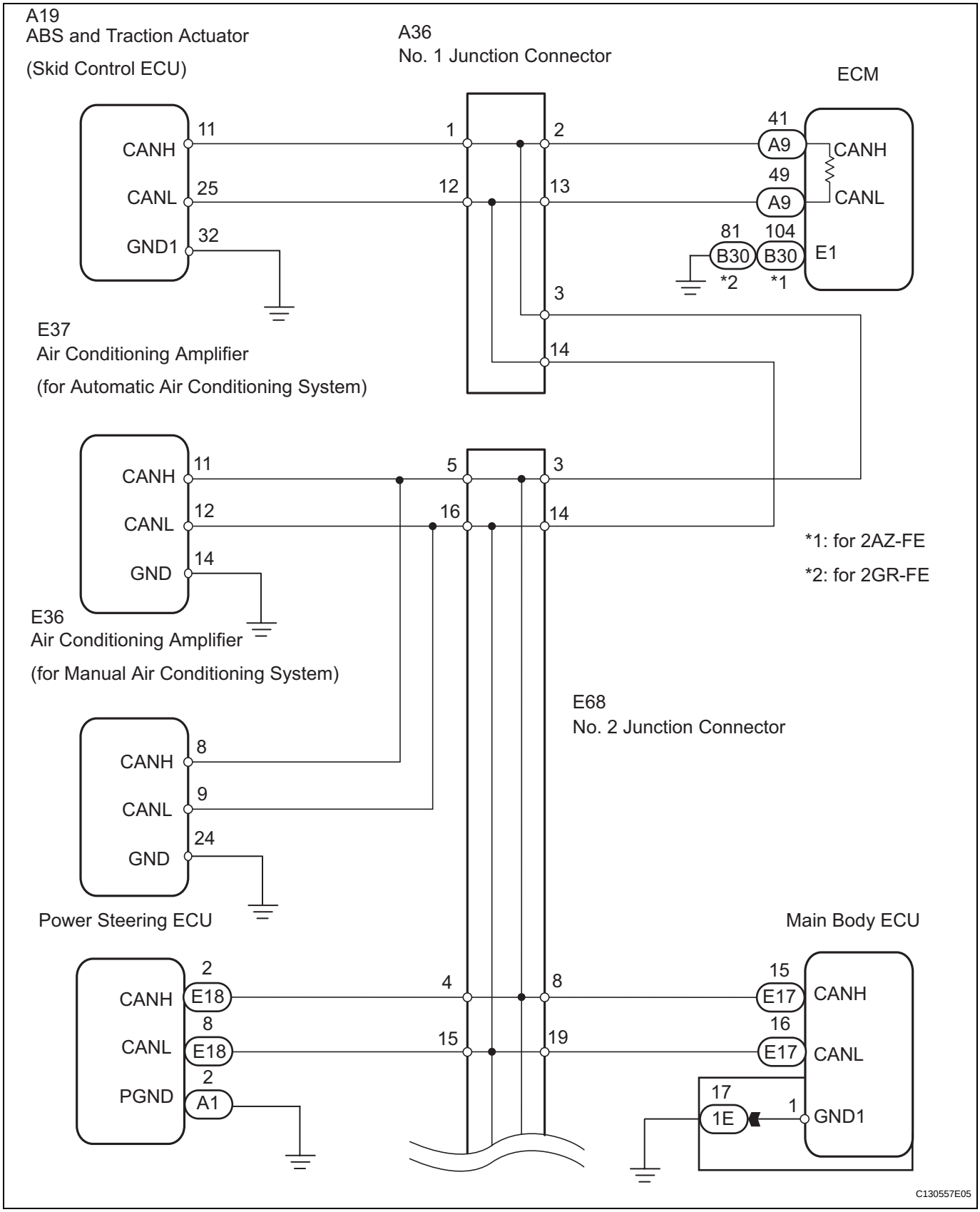

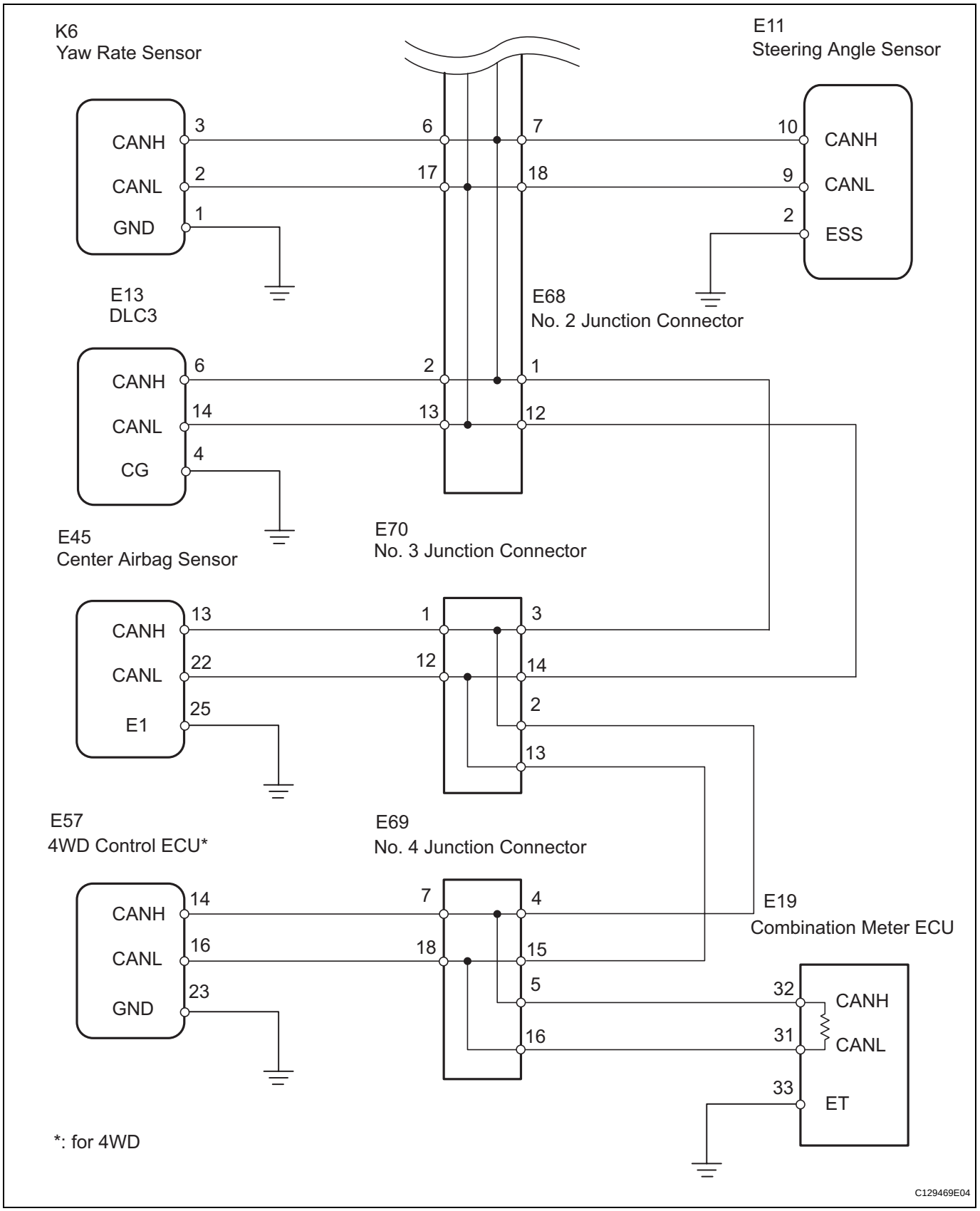

INSPECTION PROCEDURE

NOTICE:

- **Turn the ignition switch OFF before measuring the resistances of the main wire and branch wire.**

- **After the ignition switch is turned OFF, check that the key reminder warning system and light reminder warning system are not in operation.**
- **Before measuring the resistance, leave the vehicle as is for at least 1 minute and do not operate the ignition switch, any other switches or the doors. If doors need to be opened in order to check connectors, open the doors and leave them open.**

HINT:
Operating the ignition switch, any switches or any doors triggers related ECU and sensor communication with the CAN, which causes resistance variation.

1 CHECK CAN BUS LINE FOR SHORT TO GND (DLC3 BRANCH WIRE)

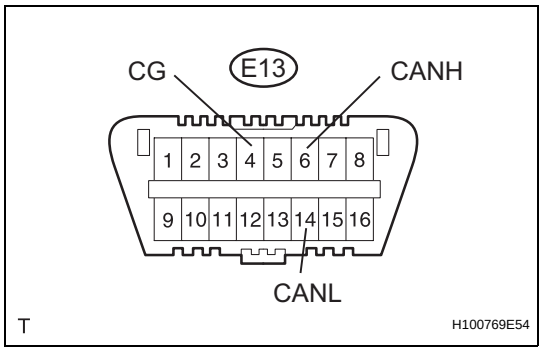

(a) Disconnect the E68 No. 2 junction connector.
(b) Measure the resistance of the DLC3.
Standard resistance

Tester Connection	Condition	Specified Condition
E13-6 (CANH) - E13-4 (CG)	Ignition switch OFF	200 Ω or more
E13-14 (CANL) - E13-4 (CG)	Ignition switch OFF	200 Ω or more

NG → **REPAIR OR REPLACE CAN BRANCH WIRE CONNECTED TO DLC3 (CANH, CANL)**

OK

2 CONNECT CONNECTOR

(a) Reconnect the E68 No. 2 junction connector.

NEXT

3 CHECK CAN BUS LINE FOR SHORT TO GND (NO. 1 JUNCTION CONNECTOR)

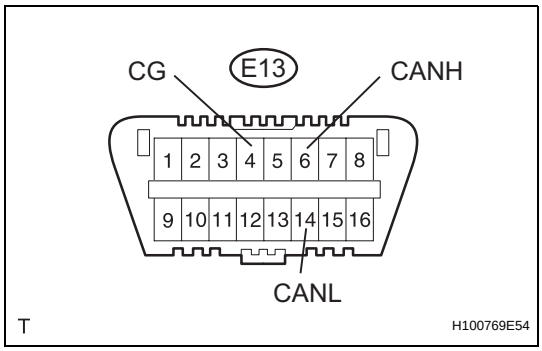

(a) Disconnect the A36 No. 1 junction connector.
(b) Measure the resistance of the DLC3.
Standard resistance

Tester Connection	Condition	Specified Condition
E13-6 (CANH) - E13-4 (CG)	Ignition switch OFF	200 Ω or more
E13-14 (CANL) - E13-4 (CG)	Ignition switch OFF	200 Ω or more

OK → **Go to step 12**

NG

4 CONNECT CONNECTOR

(a) Reconnect the A36 No. 1 junction connector.

NEXT

5	**CHECK CAN BUS LINE FOR SHORT TO GND (NO. 3 JUNCTION CONNECTOR, NO. 4 JUNCTION CONNECTOR SIDE)**

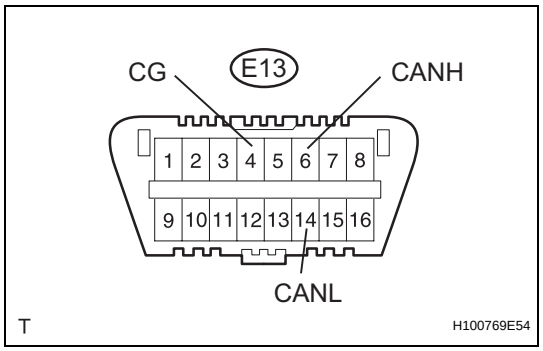

(a) Disconnect the E70 No. 3 junction connector.
(b) Measure the resistance of the DLC3.
Standard resistance

Tester Connection	Condition	Specified Condition
E13-6 (CANH) - E13-4 (CG)	Ignition switch OFF	200 Ω or more
E13-14 (CANL) - E13-4 (CG)	Ignition switch OFF	200 Ω or more

NG → **Go to step 18**

OK

6	**CONNECT CONNECTOR**

(a) Reconnect the E70 No. 3 junction connector.

NEXT

7	**CHECK CAN BUS LINE FOR SHORT TO GND (NO. 4 JUNCTION CONNECTOR SIDE)**

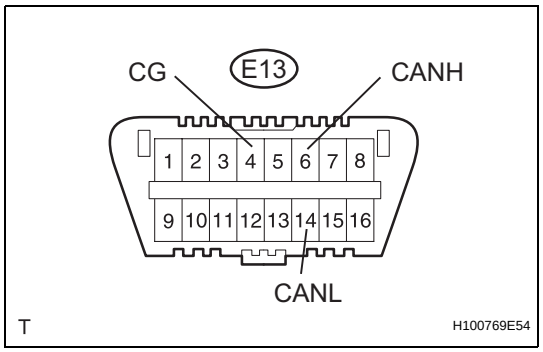

(a) Disconnect the E69 No. 4 junction connector.
(b) Measure the resistance of the DLC3.
Standard resistance

Tester Connection	Condition	Specified Condition
E13-6 (CANH) - E13-4 (CG)	Ignition switch OFF	200 Ω or more
E13-14 (CANL) - E13-4 (CG)	Ignition switch OFF	200 Ω or more

OK → **Go to step 34**

NG

8	**CONNECT CONNECTOR**

(a) Reconnect the E69 No. 4 junction connector.

NEXT

9	CHECK CAN BUS LINE FOR SHORT TO GND (NO. 3 JUNCTION CONNECTOR - CENTER AIRBAG SENSOR ASSEMBLY)

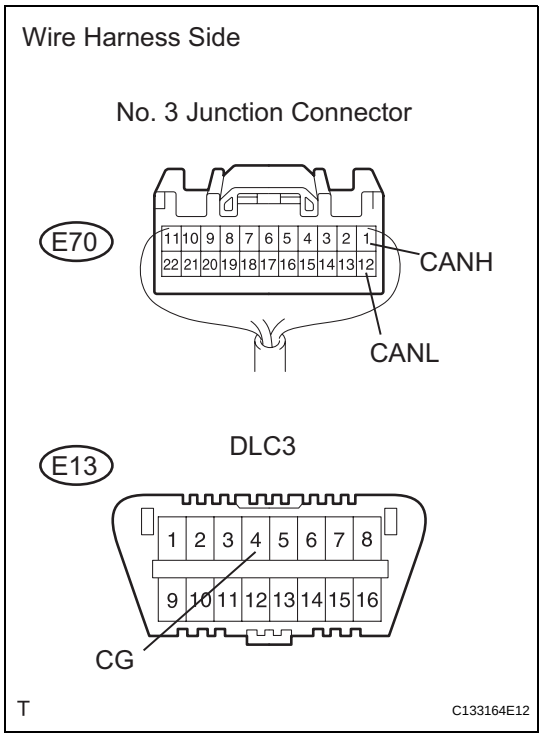

(a) Disconnect the E70 No. 3 junction connector.
(b) Measure the resistance of the wire harness side connectors.

Standard resistance

Tester Connection	Condition	Specified Condition
E70-1 (CANH) - E13-4 (CG)	Ignition switch OFF	200 Ω or more
E70-12 (CANL) - E13-4 (CG)	Ignition switch OFF	200 Ω or more

OK → **REPAIR OR REPLACE CAN MAIN WIRE AND CONNECTOR (NO. 3 JUNCTION CONNECTOR - NO. 4 JUNCTION CONNECTOR)**

NG

10	CONNECT CONNECTOR

(a) Reconnect the E70 No. 3 junction connector.

NEXT

11	CHECK CAN BUS LINE FOR SHORT TO GND (CENTER AIRBAG SENSOR ASSEMBLY)

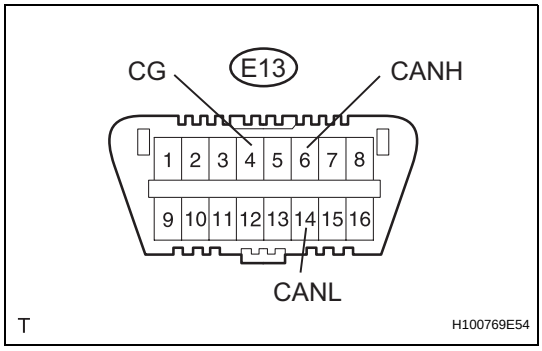

(a) Disconnect the E45 center airbag sensor connector.
(b) Measure the resistance of the DLC3.

Standard resistance

Tester Connection	Condition	Specified Condition
E13-6 (CANH) - E13-4 (CG)	Ignition switch OFF	200 Ω or more
E13-14 (CANL) - E13-4 (CG)	Ignition switch OFF	200 Ω or more

NG → **REPAIR OR REPLACE CAN BRANCH WIRE CONNECTED TO CENTER AIRBAG SENSOR ASSEMBLY (CANH, CANL)**

OK

REPLACE CENTER AIRBAG SENSOR ASSEMBLY

12 CHECK CAN BUS LINE FOR SHORT TO GND (NO. 1 JUNCTION CONNECTOR - ECM)

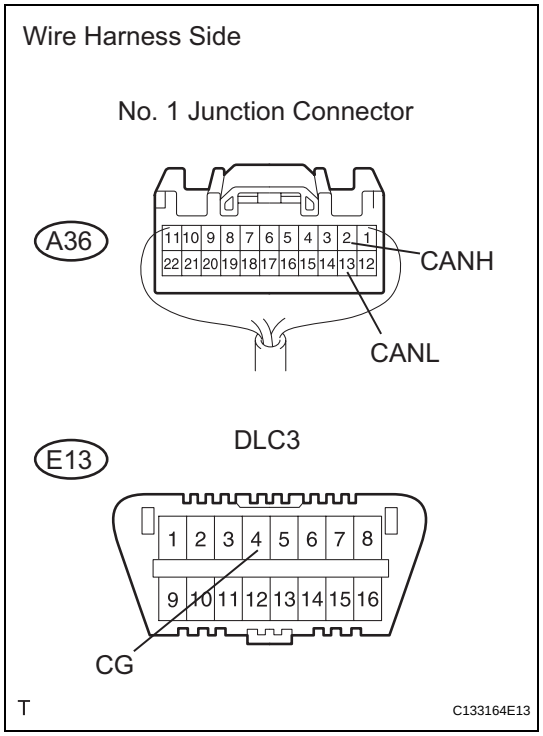

(a) Disconnect the A36 No. 1 junction connector.
(b) Measure the resistance of the wire harness side connectors.

Standard resistance

Tester Connection	Condition	Specified Condition
A36-2 (CANH) - E13-4 (CG)	Ignition switch OFF	200 Ω or more
A36-13 (CANL) - E13-4 (CG)	Ignition switch OFF	200 Ω or more

NG → **Go to step 14**

OK

13 CHECK CAN BUS LINE FOR SHORT TO GND (NO. 1 JUNCTION CONNECTOR - ABS AND TRACTION ACTUATOR)

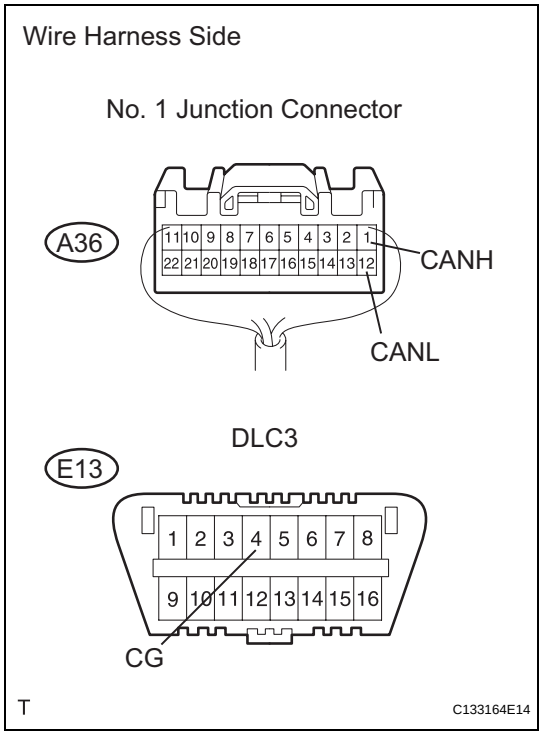

(a) Measure the resistance of the wire harness side connectors.

Standard resistance

Tester Connection	Condition	Specified Condition
A36-1 (CANH) - E13-4 (CG)	Ignition switch OFF	200 Ω or more
A36-12 (CANL) - E13-4 (CG)	Ignition switch OFF	200 Ω or more

NG → **Go to step 16**

CA

OK

REPAIR OR REPLACE CAN MAIN WIRE AND CONNECTOR (NO. 1 JUNCTION CONNECTOR - NO. 2 JUNCTION CONNECTOR)

14	CONNECT CONNECTOR

(a) Reconnect the A36 No. 1 junction connector.

NEXT

15	CHECK CAN BUS LINE FOR SHORT TO GND (ECM)

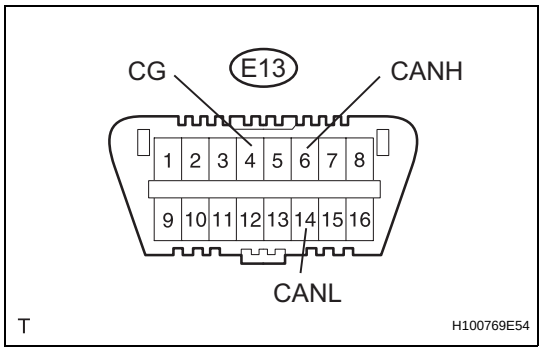

(a) Disconnect the A9 ECM connector.
(b) Measure the resistance of the DLC3.
Standard resistance

Tester Connection	Condition	Specified Condition
E13-6 (CANH) - E13-4 (CG)	Ignition switch OFF	200 Ω or more
E13-14 (CANL) - E13-4 (CG)	Ignition switch OFF	200 Ω or more

NG → **REPAIR OR REPLACE CAN MAIN WIRE CONNECTED TO ECM (NO. 1 JUNCTION CONNECTOR - ECM)**

OK

REPLACE ECM

16	CONNECT CONNECTOR

(a) Reconnect the A36 No. 1 junction connector.

NEXT

17	CHECK CAN BUS LINE FOR SHORT TO GND (ABS AND TRACTION ACTUATOR)

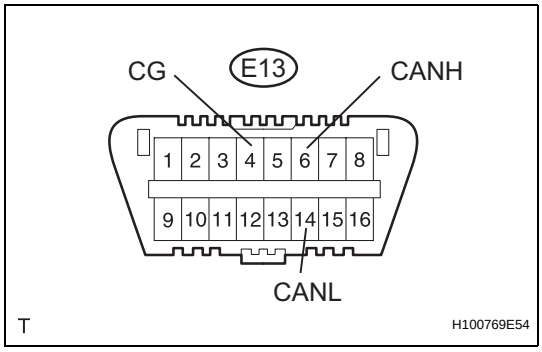

(a) Disconnect the A19 ABS and traction actuator (skid control ECU) connector.
(b) Measure the resistance of the DLC3.
Standard resistance

Tester Connection	Condition	Specified Condition
E13-6 (CANH) - E13-4 (CG)	Ignition switch OFF	200 Ω or more
E13-14 (CANL) - E13-4 (CG)	Ignition switch OFF	200 Ω or more

NG → **REPAIR OR REPLACE CAN BRANCH WIRE CONNECTED TO ABS AND TRACTION ACTUATOR (CANH, CANL)**

OK

REPLACE ABS AND TRACTION ACTUATOR (SKID CONTROL ECU)

18	CONNECT CONNECTOR

(a) Reconnect the E70 No. 3 junction connector.

NEXT

19	CHECK CAN BUS LINE FOR SHORT TO GND (NO. 2 JUNCTION CONNECTOR - YAW RATE SENSOR)

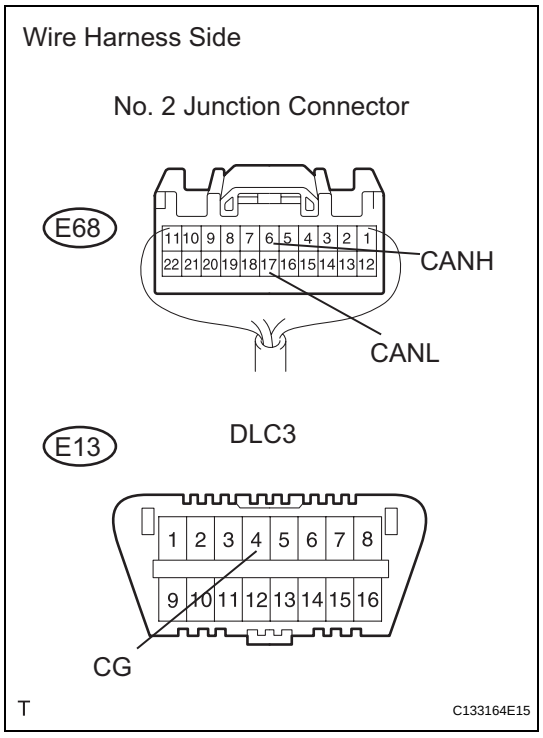

(a) Disconnect the E68 No. 2 junction connector.
(b) Measure the resistance of the wire harness side connectors.

Standard resistance

Tester Connection	Condition	Specified Condition
E68-6 (CANH) - E13-4 (CG)	Ignition switch OFF	200 Ω or more
E68-17 (CANL) - E13-4 (CG)	Ignition switch OFF	200 Ω or more

NG → **Go to step 24**

OK

20	CHECK CAN BUS LINE FOR SHORT TO GND (NO. 2 JUNCTION CONNECTOR - POWER STEERING ECU)

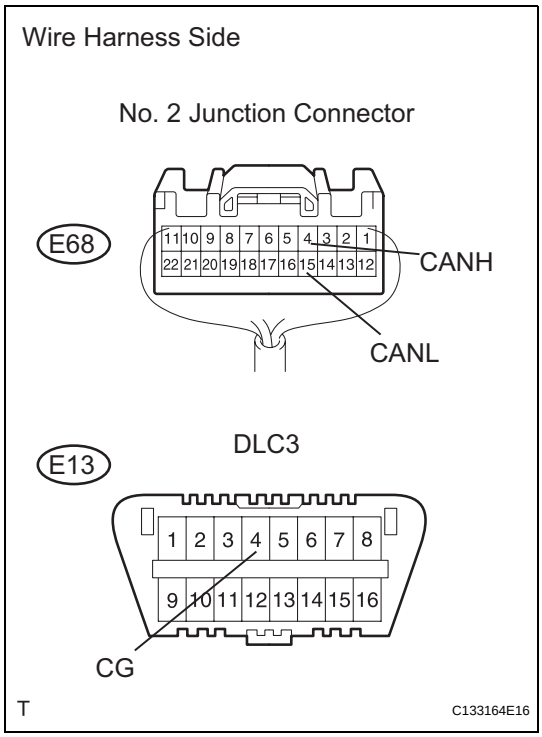

(a) Measure the resistance of the wire harness side connectors.

Standard resistance

Tester Connection	Condition	Specified Condition
E68-4 (CANH) - E13-4 (CG)	Ignition switch OFF	200 Ω or more
E68-15 (CANL) - E13-4 (CG)	Ignition switch OFF	200 Ω or more

NG → **Go to step 26**

OK

21	CHECK CAN BUS LINE FOR SHORT TO GND (NO. 2 JUNCTION CONNECTOR - MAIN BODY ECU)

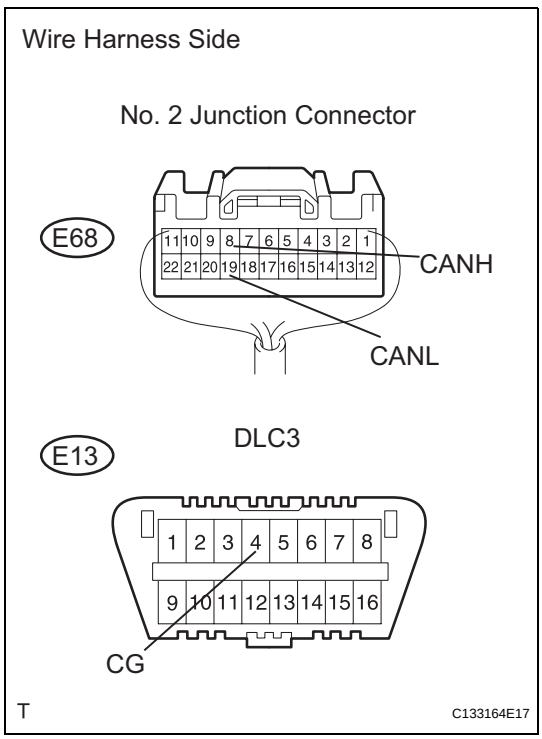

(a) Measure the resistance of the wire harness side connectors.

Standard resistance

Tester Connection	Condition	Specified Condition
E68-8 (CANH) - E13-4 (CG)	Ignition switch OFF	200 Ω or more
E68-19 (CANL) - E13-4 (CG)	Ignition switch OFF	200 Ω or more

NG → **Go to step 28**

OK

22	CHECK CAN BUS LINE FOR SHORT TO GND (NO. 2 JUNCTION CONNECTOR - AIR CONDITIONING AMPLIFIER)

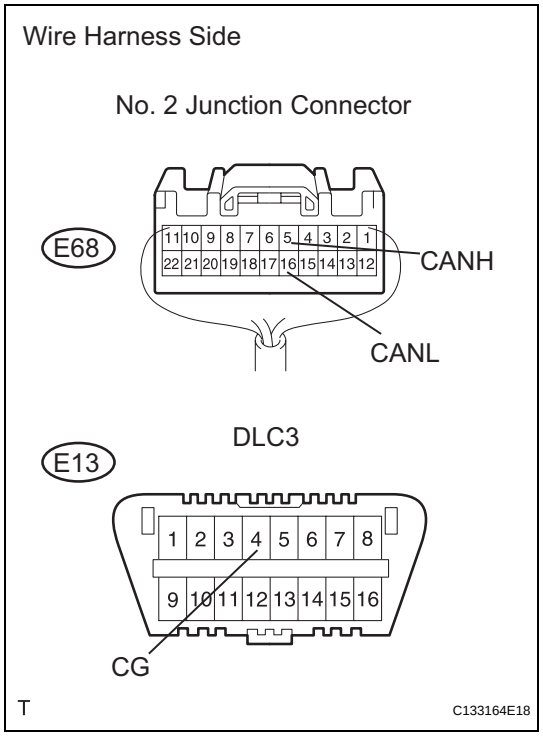

(a) Measure the resistance of the wire harness side connectors.

Standard resistance

Tester Connection	Condition	Specified Condition
E68-5 (CANH) - E13-4 (CG)	Ignition switch OFF	200 Ω or more
E68-16 (CANL) - E13-4 (CG)	Ignition switch OFF	200 Ω or more

NG → **Go to step 30**

OK

CA

23	CHECK CAN BUS LINE FOR SHORT TO GND (NO. 2 JUNCTION CONNECTOR - STEERING ANGLE SENSOR)

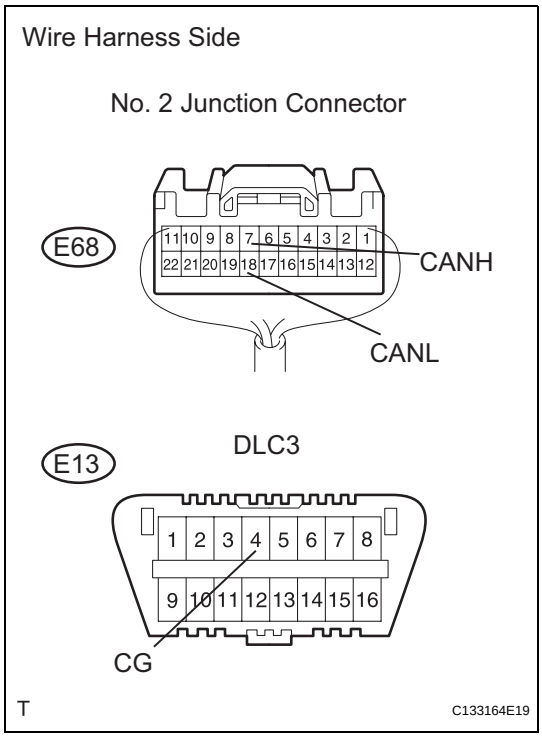

(a) Measure the resistance of the wire harness side connectors.

Standard resistance

Tester Connection	Condition	Specified Condition
E68-7 (CANH) - E13-4 (CG)	Ignition switch OFF	200 Ω or more
E68-18 (CANL) - E13-4 (CG)	Ignition switch OFF	200 Ω or more

NG → **Go to step 32**

OK

REPAIR OR REPLACE CAN MAIN WIRE AND CONNECTOR (NO. 2 JUNCTION CONNECTOR - NO. 3 JUNCTION CONNECTOR)

24	CONNECT CONNECTOR

(a) Reconnect the E68 No. 2 junction connector.

NEXT

25	CHECK CAN BUS LINE FOR SHORT TO GND (YAW RATE SENSOR)

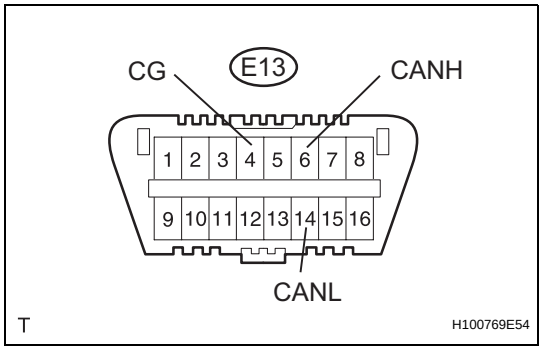

(a) Disconnect the K6 yaw rate sensor connector.
(b) Measure the resistance of the DLC3.

Standard resistance

Tester Connection	Condition	Specified Condition
E13-6 (CANH) - E13-4 (CG)	Ignition switch OFF	200 Ω or more
E13-14 (CANL) - E13-4 (CG)	Ignition switch OFF	200 Ω or more

OK → **REPAIR OR REPLACE CAN BRANCH WIRE CONNECTED TO YAW RATE SENSOR (CANH, CANL)**

OK

REPLACE YAW RATE SENSOR

26 CONNECT CONNECTOR

(a) Reconnect the E68 No. 2 junction connector.

NEXT

27 CHECK CAN BUS LINE FOR SHORT TO GND (POWER STEERING ECU)

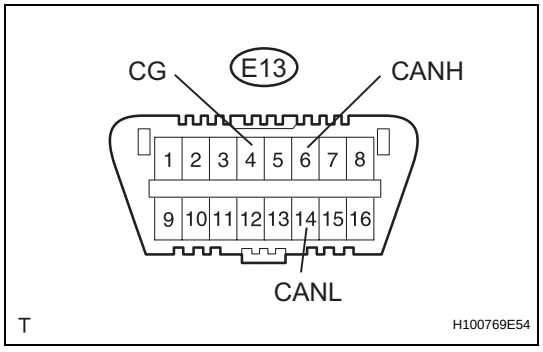

(a) Disconnect the E18 power steering ECU connector.
(b) Measure the resistance of the DLC3.
Standard resistance

Tester Connection	Condition	Specified Condition
E13-6 (CANH) - E13-4 (CG)	Ignition switch OFF	200 Ω or more
E13-14 (CANL) - E13-4 (CG)	Ignition switch OFF	200 Ω or more

OK → **REPAIR OR REPLACE CAN BRANCH WIRE CONNECTED TO POWER STEERING ECU (CANH, CANL)**

OK

REPLACE POWER STEERING ECU

28 CONNECT CONNECTOR

(a) Reconnect the E68 No. 2 junction connector.

NEXT

29 CHECK CAN BUS LINE FOR SHORT TO GND (MAIN BODY ECU)

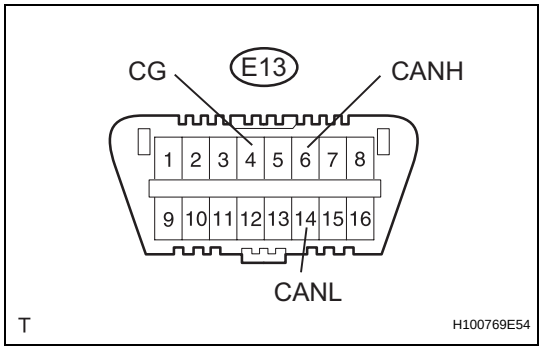

(a) Disconnect the E17 main body ECU connector.
(b) Measure the resistance of the DLC3.
Standard resistance

Tester Connection	Condition	Specified Condition
E13-6 (CANH) - E13-4 (CG)	Ignition switch OFF	200 Ω or more
E13-14 (CANL) - E13-4 (CG)	Ignition switch OFF	200 Ω or more

CA

OK → REPAIR OR REPLACE CAN BRANCH WIRE CONNECTED TO MAIN BODY ECU (CANH, CANL)

OK

REPLACE INSTRUMENT PANEL JUNCTION BLOCK (MAIN BODY ECU)

30 CONNECT CONNECTOR

(a) Reconnect the E68 No. 2 junction connector.

NEXT

31 CHECK CAN BUS LINE FOR SHORT TO GND (AIR CONDITIONING AMPLIFIER)

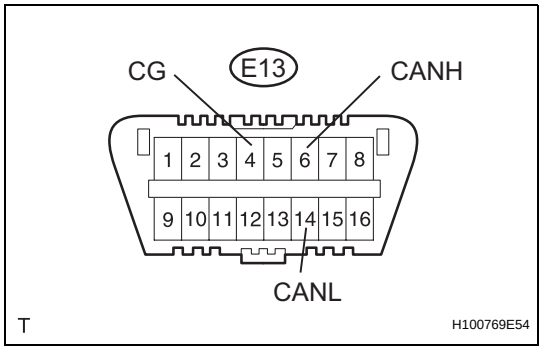

(a) Disconnect the E37*1 or E36*2 air conditioning amplifier connector.
HINT:
*1: for Automatic air conditioning system
*2: for Manual air conditioning system

(b) Measure the resistance of the DLC3.

Standard resistance

Tester Connection	Condition	Specified Condition
E13-6 (CANH) - E13-4 (CG)	Ignition switch OFF	200 Ω or more
E13-14 (CANL) - E13-4 (CG)	Ignition switch OFF	200 Ω or more

OK → REPAIR OR REPLACE CAN BRANCH WIRE CONNECTED TO AIR CONDITIONING AMPLIFIER (CANH, CANL)

OK

REPLACE AIR CONDITIONING AMPLIFIER

32 CONNECT CONNECTOR

(a) Reconnect the E68 No. 2 junction connector.

NEXT

33 CHECK CAN BUS LINE FOR SHORT TO GND (STEERING ANGLE SENSOR)

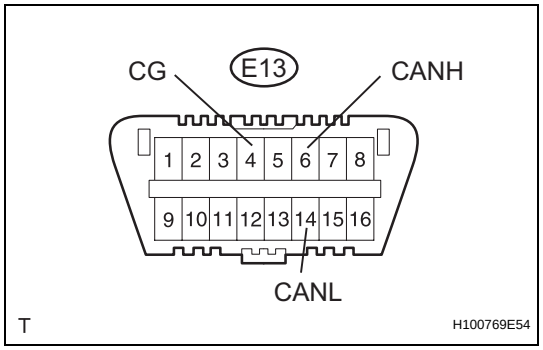

(a) Disconnect the E11 steering sensor connector.
(b) Measure the resistance of the DLC3.
Standard resistance

Tester Connection	Condition	Specified Condition
E13-6 (CANH) - E13-4 (CG)	Ignition switch OFF	200 Ω or more
E13-14 (CANL) - E13-4 (CG)	Ignition switch OFF	200 Ω or more

OK → **REPAIR OR REPLACE CAN BRANCH WIRE CONNECTED TO STEERING ANGLE SENSOR (CANH, CANL)**

OK

REPLACE STEERING ANGLE SENSOR

34 CHECK CAN BUS LINE FOR SHORT TO GND (NO. 4 JUNCTION CONNECTOR - 4WD CONTROL ECU)

NOTICE:
For vehicles without 4WD, go to "CHECK CAN BUS LINE FOR SHORT TO GND (NO. 4 JUNCTION CONNECTOR - COMBINATION METER ECU)".

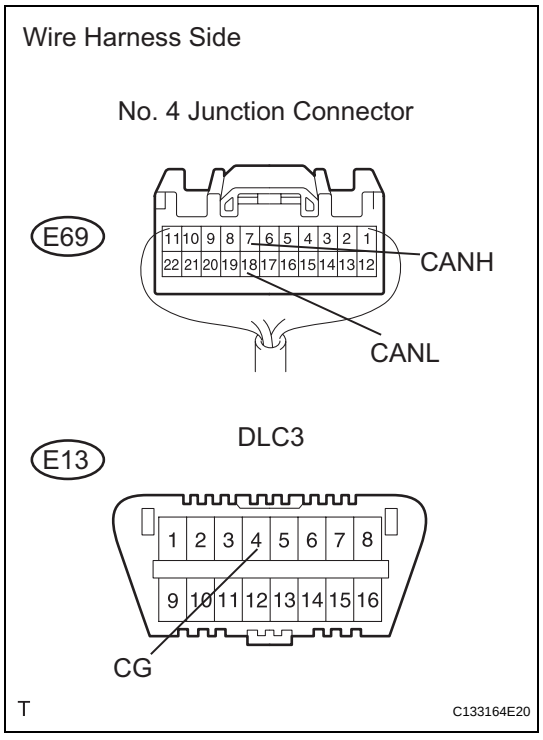

(a) Measure the resistance of the wire harness side connectors.
Standard resistance

Tester Connection	Condition	Specified Condition
E69-7(CANH) - E13-4 (CG)	Ignition switch OFF	200 Ω or more
E69-18 (CANL) - E13-4 (CG)	Ignition switch OFF	200 Ω or more

NG → **Go to step 36**

OK

CA

35	CHECK CAN BUS LINE FOR SHORT TO GND (NO. 4 JUNCTION CONNECTOR - COMBINATION METER ECU)

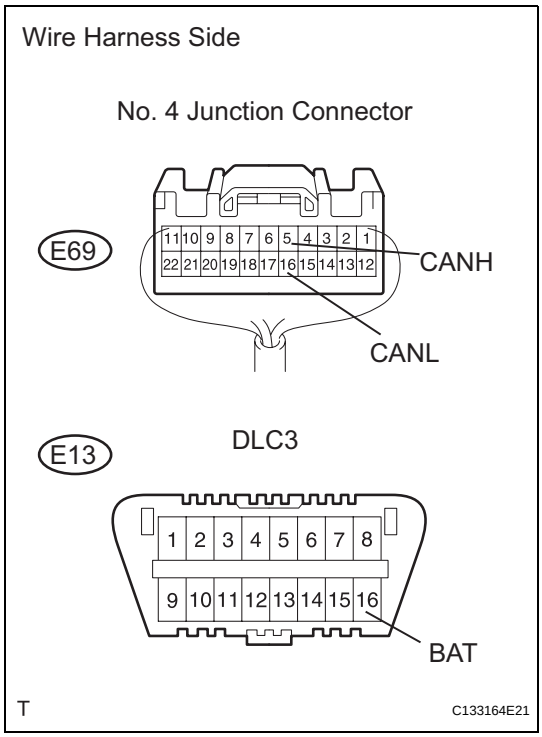

(a) Measure the resistance of the wire harness side connectors.

Standard resistance

Tester Connection	Condition	Specified Condition
E69-5(CANH) - E13-4 (CG)	Ignition switch OFF	200 Ω or more
E69-16 (CANL) - E13-4 (CG)	Ignition switch OFF	200 Ω or more

NG → **Go to step 38**

OK

36	CONNECT CONNECTOR

(a) Reconnect the E69 No. 4 junction connector.

NEXT

37	CHECK CAN BUS LINE FOR SHORT TO GND (4WD CONTROL ECU)

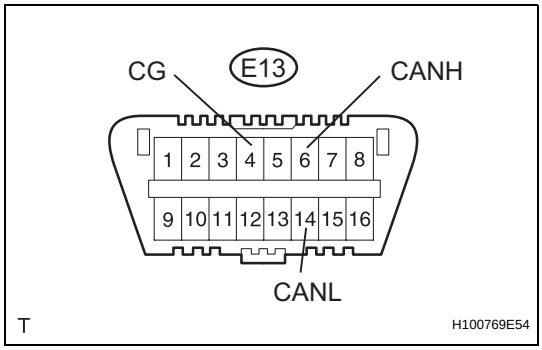

(a) Disconnect the E57 4WD control ECU connector.
(b) Measure the resistance of the DLC3.

Standard resistance

Tester Connection	Condition	Specified Condition
E13-6 (CANH) - E13-4 (CG)	Ignition switch OFF	200 Ω or more
E13-14 (CANL) - E13-4 (CG)	Ignition switch OFF	200 Ω or more

NG → **REPAIR OR REPLACE CAN BRANCH WIRE CONNECTED TO 4WD CONTROL ECU (CANH, CANL)**

OK

REPLACE 4WD CONTROL ECU

38	CONNECT CONNECTOR

(a) Reconnect the E69 No. 4 junction connector.

NEXT

39	CHECK CAN BUS LINE FOR SHORT TO GND (COMBINATION METER ECU)

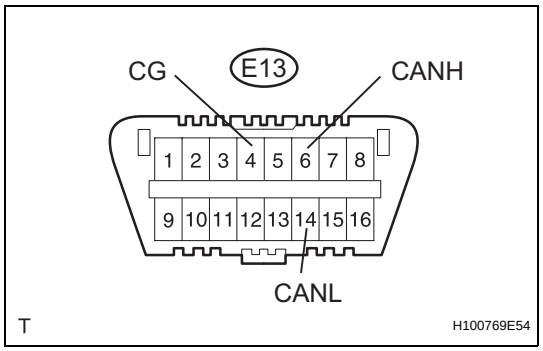

(a) Disconnect the E19 combination meter ECU connector.
(b) Measure the resistance of the DLC3.

Standard resistance

Tester Connection	Condition	Specified Condition
E13-6 (CANH) - E13-4 (CG)	Ignition switch OFF	200 Ω or more
E13-14 (CANL) - E13-4 (CG)	Ignition switch OFF	200 Ω or more

NG → **REPAIR OR REPLACE CAN MAIN WIRE CONNECTED TO COMBINATION METER ECU (CANH, CANL)**

OK

REPLACE COMBINATION METER ECU

CA

Open in One Side of CAN Branch Line

DESCRIPTION

If 2 or more ECUs and/or sensors do not appear on the intelligent tester's "BUS CHECK" screen via the CAN VIM, one side of the CAN branch wire may be open. (One side of the CANH [branch wire] /CANL [branch wire] of the ECU and/or sensor is open.)

Symptom	Trouble Area
2 or more ECUs and/or sensors do not appear on intelligent tester "BUS CHECK" screen via CAN VIM.	• One side of CAN branch wire is open • ABS and traction actuator (skid control ECU) • Power steering ECU • Steering angle sensor • Yaw rate sensor • Center airbag sensor • Air conditioning amplifier • Instrument panel junction block (Main body ECU) • 4WD control ECU • No. 1 junction connector • No. 2 junction connector • No. 3 junction connector • No. 4 junction connector

WIRING DIAGRAM

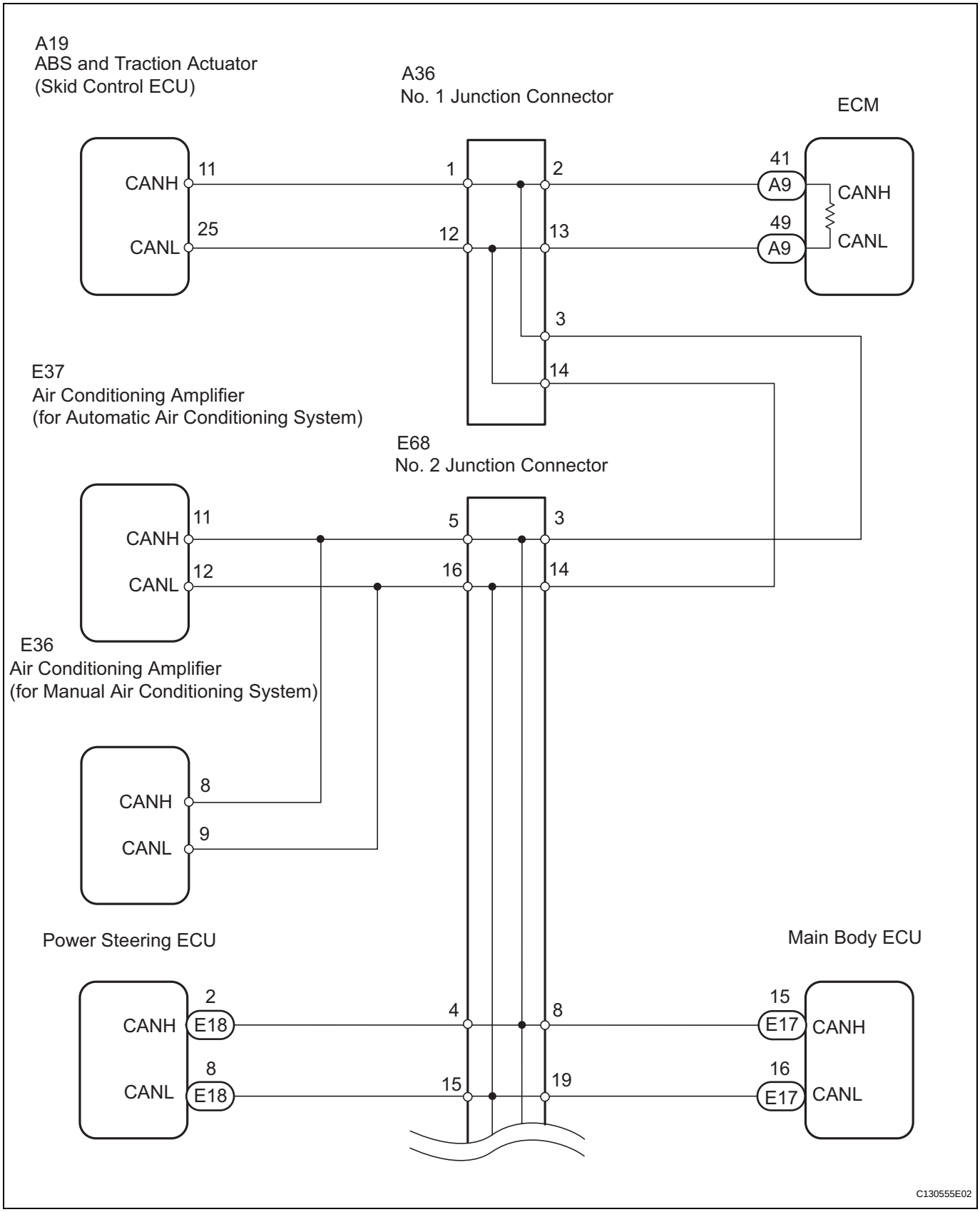

CA

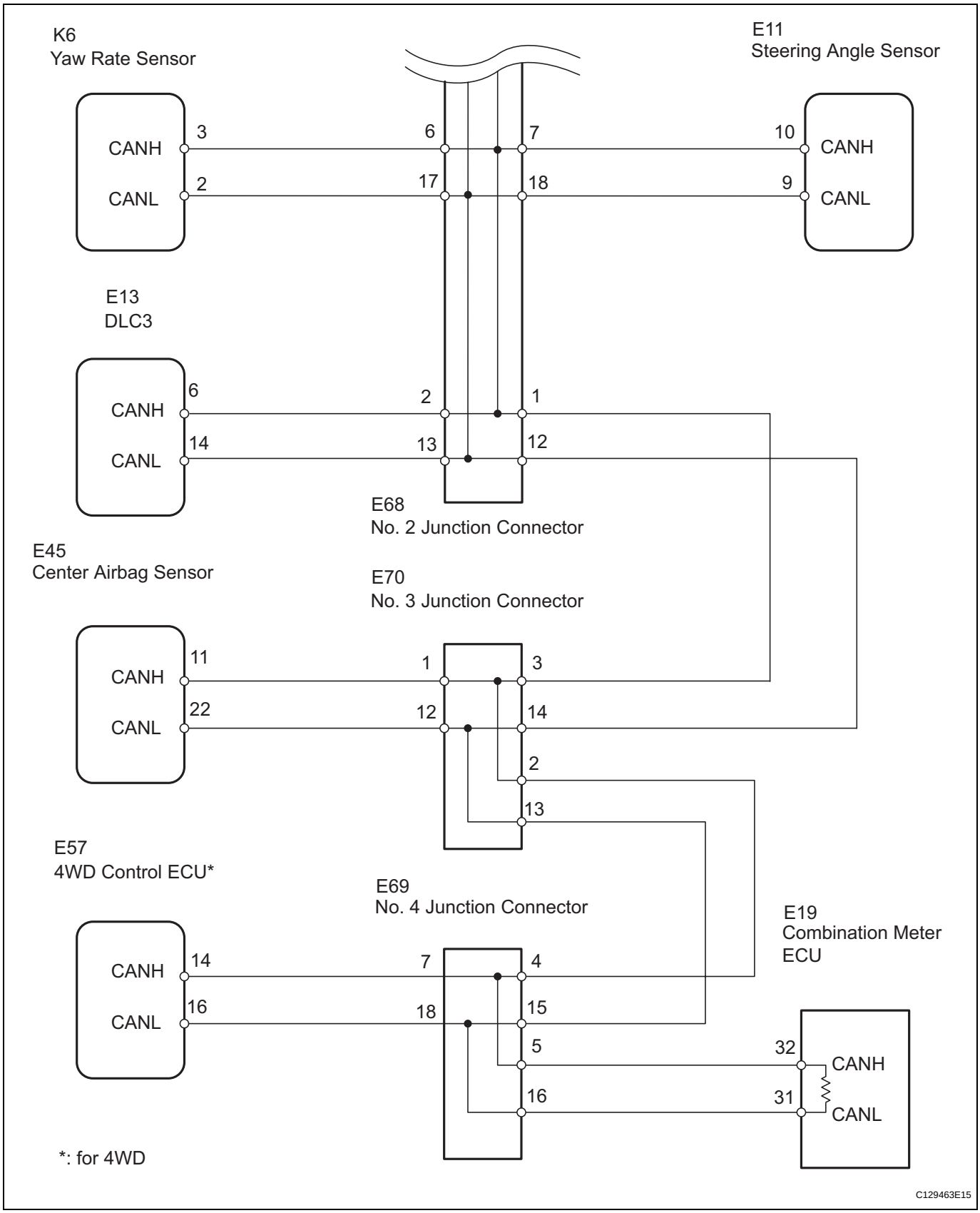

INSPECTION PROCEDURE

NOTICE:

- **Turn the ignition switch OFF before measuring the resistances of the main wire and the branch wire.**

- **After the ignition switch is turned OFF, check that the key reminder warning system and light reminder warning system are not in operation.**
- **Before measuring the resistance, leave the vehicle for at least 1 minute and do not operate the ignition switch, any switches or doors. If doors need to be opened in order to check connectors, open the doors and leave them open.**

HINT:

- Perform the following inspection for the ECUs (sensors) which are not displayed on the intelligent tester. If a malfunction cannot be identified, perform the following inspections for the ECUs (sensors) connected to the CAN communication system.
- Do not remove the combination meter and ECM, as they are the end parts of the circuit. If removed, CAN communication will not be possible.
- The open circuit confirmation of the combination meter, ECM and main wire is performed in the CHECK CAN BUS LINE procedure of HOW TO PROCEED WITH TROUBLESHOOTING. This inspection only has procedures for checking for an open circuit on one side of the CAN branch wire.

1	CHECK FOR OPEN IN ONE SIDE OF BRANCH WIRE (ABS AND TRACTION ACTUATOR)

(a) Disconnect the A19 ABS and traction actuator (skid control ECU) connector.

(b) Select "BUS CHECK" on the intelligent tester display via the CAN VIM (see page CA-34).

Result

Result	Proceed to
ABS/VSC/TRAC not displayed on intelligent tester.	A
Several ECUs and sensors other than ABS/VSC/TRAC not displayed on intelligent tester.	B

B → **Go to step 3**

A

2	CHECK FOR OPEN IN ONE SIDE OF BRANCH WIRE (ABS AND TRACTION ACTUATOR BRANCH WIRE)

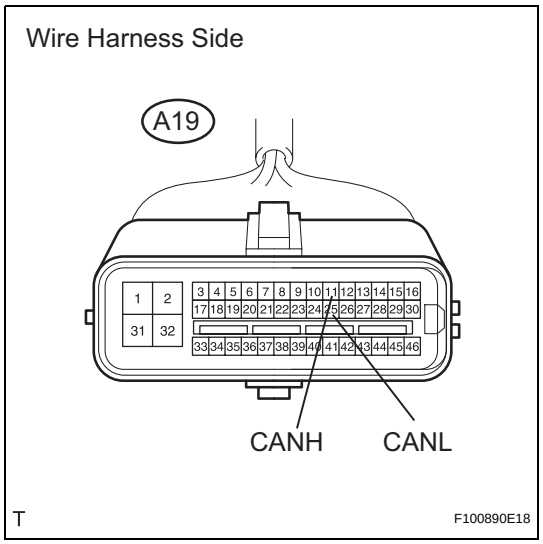

(a) Measure the resistance of the wire harness side connector.

Standard resistance:

54 to 69 Ω

NG → **REPAIR OR REPLACE CAN BRANCH WIRE AND CONNECTOR (ABS AND TRACTION ACTUATOR)**

OK

REPLACE ABS AND TRACTION ACTUATOR (SKID CONTROL ECU)

3	CHECK FOR OPEN IN ONE SIDE OF BRANCH WIRE (YAW RATE SENSOR)

(a) Disconnect the K6 yaw rate sensor connector.
(b) Select "BUS CHECK" on the intelligent tester display via the CAN VIM (see page CA-34).

Result

Result	Proceed to
YAW / DECELERAT Sensor not displayed on intelligent tester.	A
Several ECUs and sensors other than YAW / DECELERAT Sensor not displayed on intelligent tester.	B

B → **Go to step 5**

A

4	CHECK FOR OPEN IN ONE SIDE OF BRANCH WIRE (YAW RATE SENSOR BRANCH WIRE)

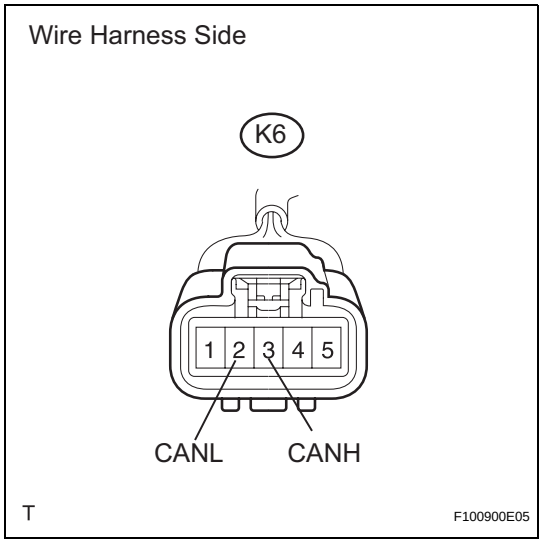

(a) Measure the resistance of the wire harness side connector.

Standard resistance:
54 to 69 Ω

NG → **REPAIR OR REPLACE CAN BRANCH WIRE AND CONNECTOR (YAW RATE SENSOR)**

OK

REPLACE YAW RATE SENSOR

5	CHECK FOR OPEN IN ONE SIDE OF BRANCH WIRE (POWER STEERING ECU)

(a) Disconnect the E18 power steering ECU connector.

(b) Select "BUS CHECK" on the intelligent tester display via the CAN VIM (see page CA-34).

Result

Result	Proceed to
EPS not displayed on intelligent tester.	A
Several ECUs and sensors other than EPS not displayed on intelligent tester.	B

B → **Go to step 7**

A

6 CHECK FOR OPEN IN ONE SIDE OF BRANCH WIRE (POWER STEERING ECU BRANCH WIRE)

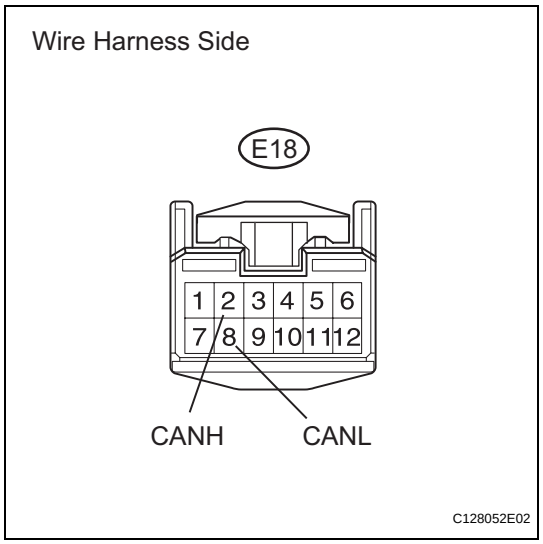

(a) Measure the resistance of the wire harness side connector.

Standard resistance:

54 to 69 Ω

NG → **REPAIR OR REPLACE CAN BRANCH WIRE AND CONNECTOR (POWER STEERING ECU)**

OK

REPLACE POWER STEERING ECU

7 CHECK FOR OPEN IN ONE SIDE OF BRANCH WIRE (MAIN BODY ECU)

(a) Disconnect the E17 main body ECU connector.

(b) Select "BUS CHECK" on the intelligent tester display via the CAN VIM (see page CA-34).

Result

Result	Proceed to
MAIN BODY not displayed on intelligent tester.	A
Several ECUs and sensors other than MAIN BODY not displayed on intelligent tester.	B

B → **Go to step 9**

CA

A

8 CHECK FOR OPEN IN ONE SIDE OF BRANCH WIRE (MAIN BODY ECU BRANCH WIRE)

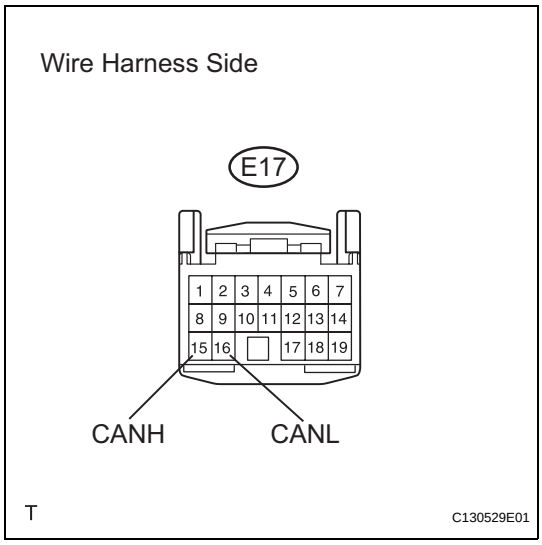

(a) Measure the resistance of the wire harness side connector.
Standard resistance:
54 to 69 Ω

NG → **REPAIR OR REPLACE CAN BRANCH WIRE AND CONNECTOR (MAIN BODY ECU)**

OK

REPLACE INSTRUMENT PANEL JUNCTION BLOCK (MAIN BODY ECU)

9 CHECK FOR OPEN IN ONE SIDE OF BRANCH WIRE (AIR CONDITIONING AMPLIFIER)

(a) Disconnect the E37*1 or E36*2 air conditioning amplifier connector.
HINT:
- *1: for Automatic air conditioning system.
- *2: for Manual air conditioning system.

(b) Select "BUS CHECK" on the intelligent tester display via the CAN VIM (see page CA-34).
Result

Result	Proceed to
A/C not displayed on intelligent tester.	A
Several ECUs and sensors other than A/C not displayed on intelligent tester.	B

B → **Go to step 11**

A

10	CHECK FOR OPEN IN ONE SIDE OF BRANCH WIRE (AIR CONDITIONING AMPLIFIER BRANCH WIRE)

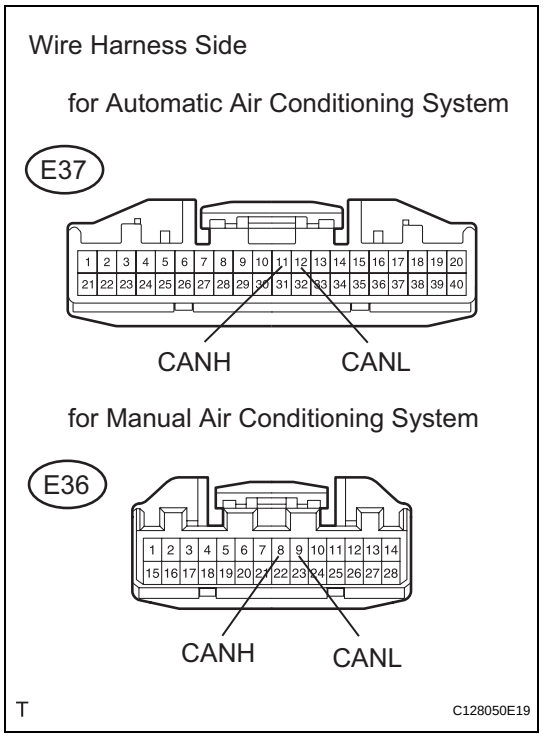

(a) Measure the resistance of the wire harness side connector.
Standard resistance:
54 to 69 Ω

NG → **REPAIR OR REPLACE CAN BRANCH WIRE AND CONNECTOR (AIR CONDITIONING AMPLIFIER)**

OK

REPLACE AIR CONDITIONING AMPLIFIER

11	CHECK FOR OPEN IN ONE SIDE OF BRANCH WIRE (STEERING ANGLE SENSOR)

(a) Disconnect the E11 steering angle sensor connector.
(b) Select "BUS CHECK" on the intelligent tester display via the CAN VIM (see page CA-34).
Result

Result	Proceed to
STEERING SENSOR not displayed on intelligent tester.	A
Several ECUs and sensors other than STEERING SENSOR not displayed on intelligent tester.	B

B → **Go to step 13**

A

12	CHECK FOR OPEN IN ONE SIDE OF BRANCH WIRE (STEERING ANGLE SENSOR BRANCH WIRE)

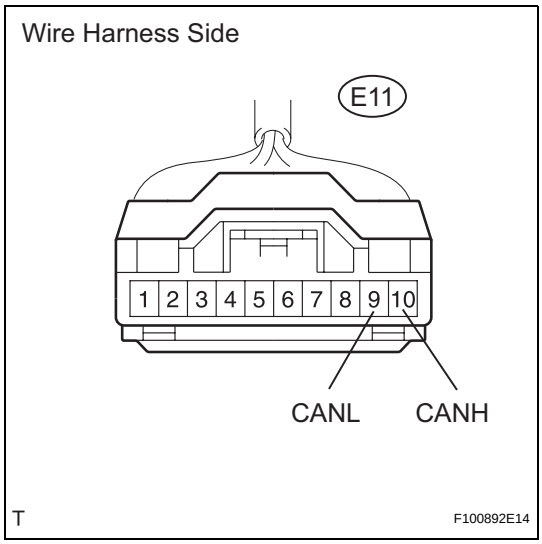

(a) Measure the resistance of the wire harness side connector.
Standard resistance:
54 to 69 Ω

NG → **REPAIR OR REPLACE CAN BRANCH WIRE AND CONNECTOR (STEERING ANGLE SENSOR)**

OK

REPLACE STEERING ANGLE SENSOR

13	CHECK FOR OPEN IN ONE SIDE OF BRANCH WIRE (4WD CONTROL ECU)

NOTICE:
For vehicles without 4WD, go to "CHECK FOR OPEN IN ONE SIDE OF BRANCH WIRE (CENTER AIRBAG SENSOR ASSEMBLY BRANCH WIRE)".

(a) Disconnect the E57 4WD control ECU connector.
(b) Select "BUS CHECK" on the intelligent tester display via the CAN VIM (see page CA-34).
Result

Result	Proceed to
4WD not displayed on intelligent tester.	A
Several ECUs and sensors other than 4WD not displayed on intelligent tester.	B

B → **Go to step 15**

A

14	CHECK FOR OPEN IN ONE SIDE OF BRANCH WIRE (4WD CONTROL ECU BRANCH WIRE)

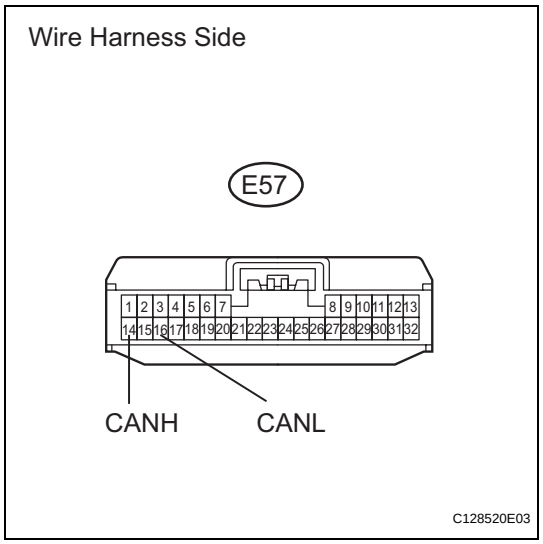

(a) Measure the resistance of the wire harness side connector.
Standard resistance:
54 to 69 Ω

NG → **REPAIR OR REPLACE CAN BRANCH WIRE AND CONNECTOR (4WD CONTROL ECU)**

OK

REPLACE 4WD CONTROL ECU

15	CHECK FOR OPEN IN ONE SIDE OF BRANCH WIRE (CENTER AIRBAG SENSOR ASSEMBLY BRANCH WIRE)

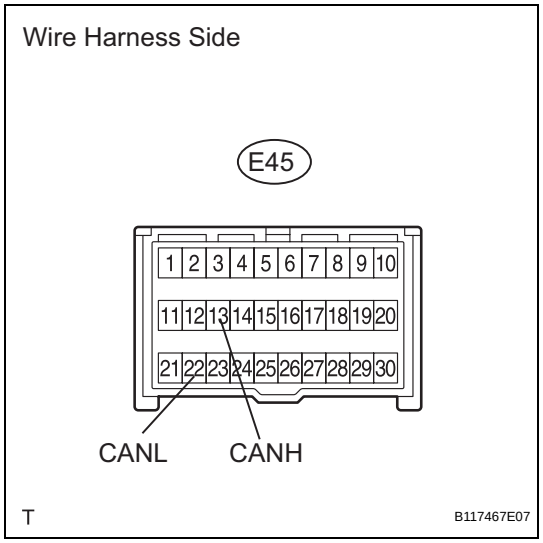

(a) Disconnect the E45 center airbag sensor connector.
(b) Measure the resistance of the wire harness side connector.
Standard resistance:
54 to 69 Ω

NG → **REPAIR OR REPLACE CAN BRANCH WIRE AND CONNECTOR (CENTER AIRBAG SENSOR ASSEMBLY)**

OK

REPLACE CENTER AIRBAG SENSOR ASSEMBLY

CA

CAN COMMUNICATION SYSTEM

PRECAUTION

1. PRECAUTION

(a) Turn the ignition switch OFF before measuring the resistance of the main wire and the branch wire.

(b) After the ignition switch is turned off, check that the key reminder warning system and light reminder warning system are not in operation.

(c) Before measuring the resistance, leave the vehicle for at least 1 minute and do not operate the ignition switch, any switches or doors. If doors need to be opened in order to check connectors, open the doors and leave them open.

HINT:

Operating the ignition switch, any switches or any doors triggers related ECU and sensor communication with the CAN, which causes resistance variation.

2. STEERING SYSTEM HANDLING PRECAUTIONS

(a) Care must be taken when replacing parts. Incorrect replacement could affect the performance of the steering system and result in hazards when driving.

3. SRS AIRBAG SYSTEM HANDLING PRECAUTIONS

(a) This vehicle is equipped with an SRS (Supplemental Restraint System) such as the driver airbag and front passenger airbag. Failure to carry out service operations in the correct sequence could cause unexpected SRS deployment during servicing and may lead to a serious accident. Before servicing (including installation/removal, inspection and replacement of parts), be sure to read the precautionary notice for the Supplemental Restraint System (see page RS-1).

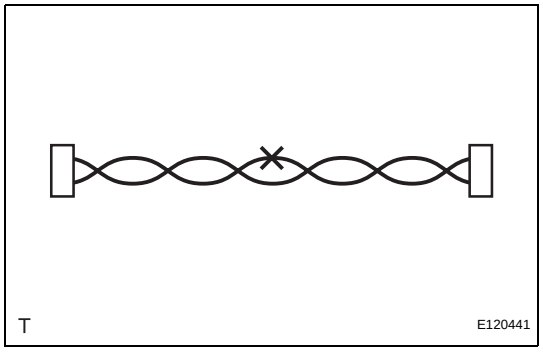

4. BUS LINE REPAIR

(a) After repairing the bus line with solder, wrap the repaired part with vinyl tape (see page IN-37).

NOTICE:

- **The CANL bus line and CANH bus line must be installed together.**
- **When installing, twist them together.**
- **CAN bus lines are likely to be influenced by noise if the bus lines are not twist together.**
- **The difference in length between the CANL bus line and CANH bus line should be less than 100 mm (3.937 in.).**
- **Leave approximately 80 mm (3.150 in.) loose in the twisted wires around the connectors.**

CA

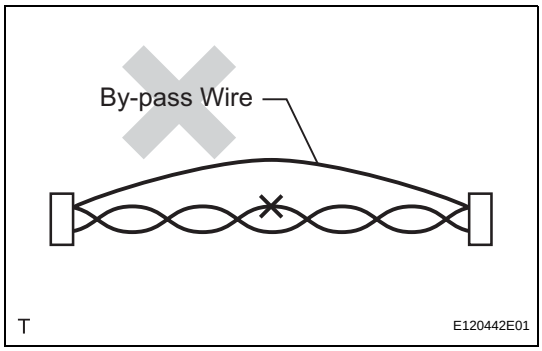

(b) Do not use bypass wiring between the connectors.
NOTICE:
The feature of the twisted wire harness will be lost if bypass wiring is used.

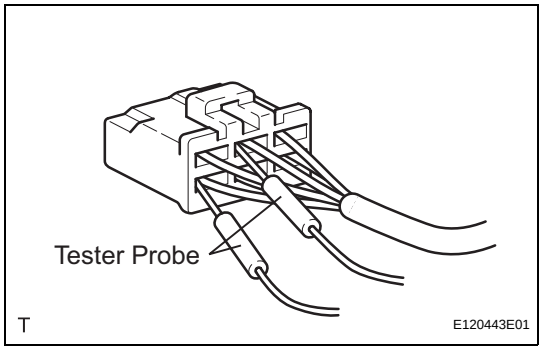

5. CONNECTOR HANDLING

(a) When inserting tester probes into a connector, insert them from the rear of the connector.

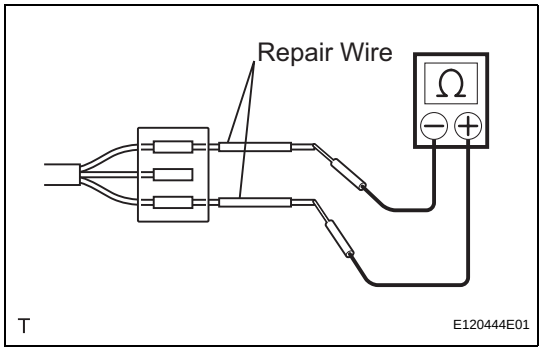

(b) Use a repair wire to check the connector if it is impossible to check resistance from the rear of the connector.

CA

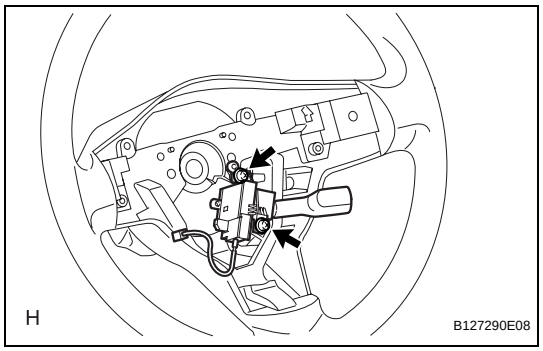

INSTALLATION

1. **INSTALL CRUISE CONTROL MAIN SWITCH**
   (a) Install the switch with the 2 screws.
   Torque: 1.7 to 3.0 N*m (17.34 to 30.60 kgf*cm, 15.04 to 26.55 in.*lbf)
   (b) Connect the connector.
2. **INSTALL STEERING PAD ASSEMBLY (See page RS-336)**
3. **CONNECT CABLE TO NEGATIVE BATTERY TERMINAL**
4. **CHECK SRS WARNING LIGHT**
   (a) Check the SRS warning light (see page RS-37).

CRUISE CONTROL MAIN SWITCH

COMPONENTS

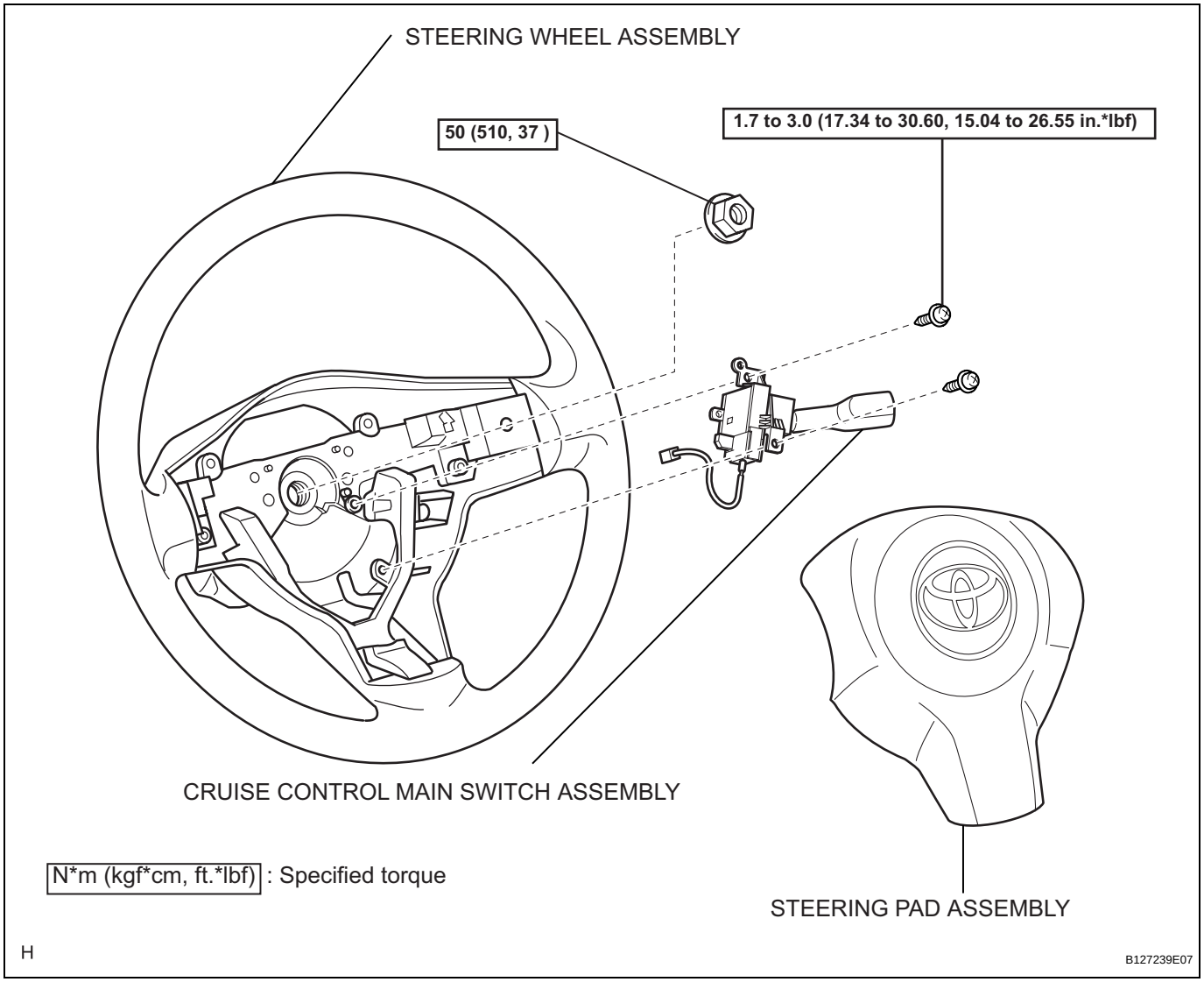

CC

REMOVAL

CAUTION:
Be sure to read the precautionary notices concerning the SRS airbag system before servicing it (see page RS-1).

1. **DISCONNECT CABLE FROM NEGATIVE BATTERY TERMINAL**
   CAUTION:
   Wait at least 90 seconds after disconnecting the cable from the negative (-) battery terminal to prevent airbag and seat belt pretensioner activation.
2. **REMOVE STEERING PAD ASSEMBLY (See page RS-336)**
3. **REMOVE CRUISE CONTROL MAIN SWITCH**
   (a) Disconnect the connector.
   (b) Remove the 2 screws and switch.

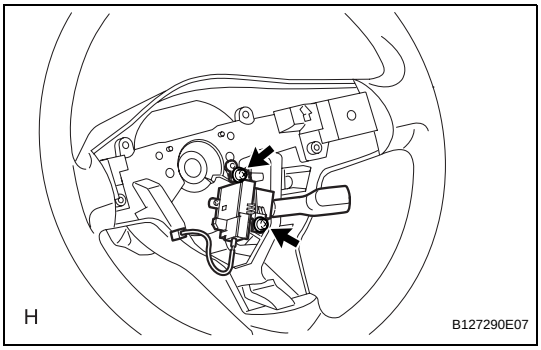

INSPECTION

1. **INSPECT CRUISE CONTROL MAIN SWITCH**
   (a) Measure the resistance of the switch.
   Standard resistance

Tester Connection	Switch Condition	Specified Condition
3 - 4	+/RES	216 to 264 Ω
	-/SET	567 to 693 Ω
	CANCEL	1,386 to 1,694 Ω
	Cruise control switch ON	Below 1 Ω
	Cruise control switch OFF	10 kΩ or higher

If the result is not as specified, replace the switch assembly.

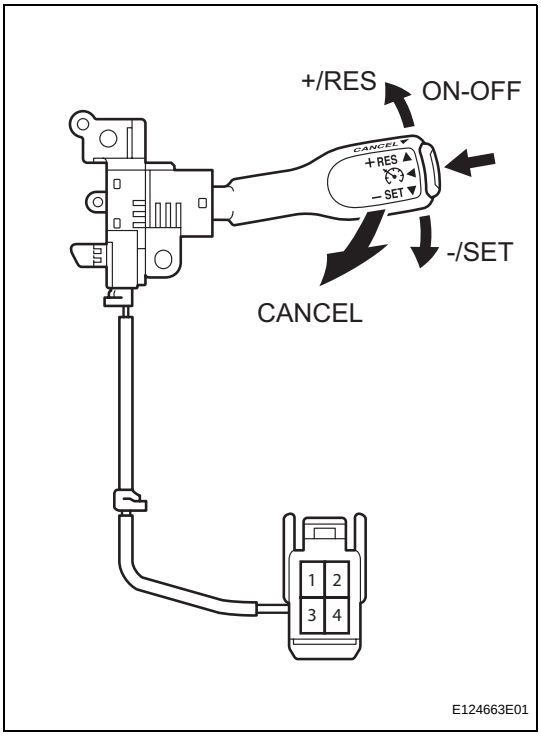

CC

SYSTEM DIAGRAM

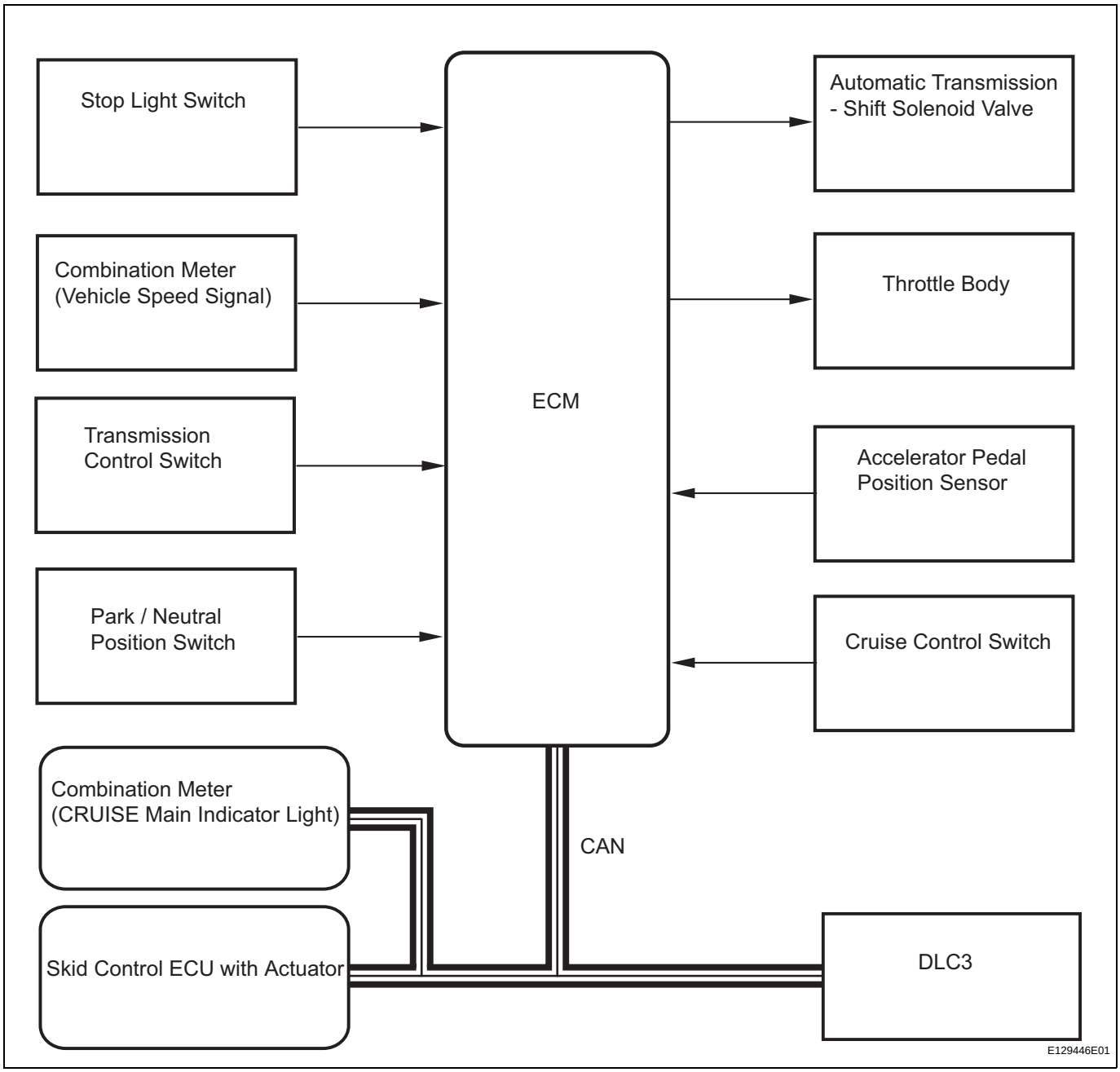

Communication table

Sender	Receiver	Signal	Line
ECM	Skid control ECU with actuator	• VSC operation signal • Coast brake operation signal	CAN
ECM	Combination meter	CRUISE main indicator light signal	CAN

CC

SYSTEM DESCRIPTION

1. CRUISE CONTROL SYSTEM

This system is controlled by the ECM, and is activated by the throttle position sensor and motor. The ECM controls the following functions: ON-OFF, SET / COAST, RESUME / ACCEL, CANCEL, vehicle speed operation, motor output control, and overdrive control.

- The ECM compares the driving vehicle speed from the combination meter with the stored vehicle speed set through the cruise control switch. The ECM controls the throttle valve motor of the throttle body to open the valve when the driving speed is less than the stored speed.
- The ECM receives signals such as ON-OFF, SET / COAST, RESUME / ACCEL, and CANCEL from the cruise control switch.
- The ECM illuminates the combination meter CRUISE main indicator light when it receives the cruise control switch ON signal.
- The ECM cancels the cruise control system when the brake pedal is depressed and the ECM receives the stop light switch signal.
- The ECM cancels the cruise control system when the shift lever is moved from D or 3 to a position other than D or 3, and the ECM receives the PNP switch signal.

2. LIMIT CONTROL

(a) Low speed limit

The lowest possible limit of the speed setting range is set at approximately 40 km/h (25 mph). The cruise control system cannot be set when the driving vehicle speed is below the low speed limit. Cruise control operation will be automatically canceled when the vehicle speed decreases below the low speed limit 40 km/h (25 mph) while the cruise control is in operation.

(b) High speed limit

The highest possible limit of the speed setting range is set at approximately 200 km/h (125 mph). The cruise control system cannot be set when the driving vehicle speed is over the high speed limit. Also, +/RES cannot be used to increase speed beyond the high speed limit.

3. OPERATION OF CRUISE CONTROL

The cruise control switch operates 7 functions: SET, COAST, TAP-DOWN, RESUME, ACCELERATION (ACCEL), TAP-UP, and CANCEL. The SET, TAP-DOWN and COAST functions, and the RESUME, TAP-UP and ACCEL functions are operated with the same switch. The cruise control switch is an automatic return type switch which turns on only when pressed in each arrow direction and turns off when released.

(a) SET CONTROL

Vehicle speed is stored and constant speed control is maintained when pushing the switch to -/SET while driving with the cruise control switch ON (the CRUISE main indicator light is illuminated), and the vehicle speed is within the set speed range (between the low and high speed limits).

(b) COAST CONTROL

The ECM changes the cruise control demanding throttle opening angle to 0° and decelerates the vehicle when -/SET on the cruise control switch is pressed and held while the cruise control system is operating. When the cruise control switch is released from -/SET, the vehicle speed is stored and constant speed control is maintained.

HINT:

- The throttle valve is not fully closed due to idle speed control, etc.
- w/ VSC:
  The brake is also used to decelerate the vehicle.

(c) TAP-DOWN CONTROL

When tapping down the cruise control switch to -/SET (for approximately 0.5 seconds) while the cruise control system is in operation, the stored vehicle speed decreases each time by approximately 1.6 km/h (1.0 mph). When the cruise control switch is released from -/SET and the difference between the driving and stored vehicle speed is less than 5 km/h (3 mph), the vehicle speed is stored and constant speed control is maintained.

(d) ACCEL CONTROL

The throttle valve motor of the throttle position sensor and motor is instructed by the ECM to open the throttle valve when +/RES on the cruise control switch is pressed and held while the cruise control system is operating. When the cruise control switch is released from +/RES, the vehicle speed is stored and constant speed is maintained.

(e) TAP-UP CONTROL
When tapping up the cruise control switch to +/RES (for approximately 0.5 seconds) while the cruise control system is in operation, the stored vehicle speed increases each time by approximately 1.6 km/h (1.0 mph). However, when the difference between the driving and the stored vehicle speed is more than 5 km/h (approximately 3.1 mph), the stored vehicle speed will not be changed.

(f) RESUME CONTROL
If the cruise control operation was canceled with the stop light switch or the CANCEL switch, and if driving speed is within the set speed range, setting the cruise control switch to +/RES restores the vehicle speed memorized at the time of cancellation, and constant speed is maintained.

(g) MANUAL CANCEL CONTROL
Performing any of the following cancels the cruise control system (the stored vehicle speed in the ECM is maintained).
- Depressing the brake pedal
- Moving the shift lever to any position except D or 3
- Pulling the cruise control switch to CANCEL
- Pushing the cruise control switch OFF (the stored vehicle speed in the ECM is not maintained)

4. AUTO CANCEL (FAIL-SAFE)
This system has an automatic cancellation function (fail-safe) (see page CC-17).

HOW TO PROCEED WITH TROUBLESHOOTING

HINT:

- Use these procedures to troubleshoot the cruise control system.
- *: Use the intelligent tester.

1	**VEHICLE BROUGHT TO WORKSHOP**

NEXT

2	**INSPECT BATTERY VOLTAGE**

Standard voltage:
11 to 14 V
If the voltage is below 11 V, recharge or replace the battery before proceeding.

NEXT

3	**CHECK COMMUNICATION FUNCTION OF CAN COMMUNICATION SYSTEM***

(a) Use the intelligent tester (with CAN VIM) to check if the CAN Communication System is functioning normally.
Result:

Result	Proceed to
CAN DTC is not output	A
CAN DTC is output	B

B → **Go to CAN COMMUNICATION SYSTEM**

A

4	**CHECK INDICATOR LIGHT**

NEXT

5	**CHECK DTC***

(a) Check for a DTC and note any codes that are output.
(b) Delete the DTC.
(c) Recheck for DTCs, and try to prompt the DTC by simulating the original activity that the DTC suggests.

Result

Result	Proceed to
DTC does not reoccur	A
DTC reoccurs	B

B → Go to step 8

A

6	PROBLEM SYMPTOMS TABLE

Result

Result	Proceed to
Fault is not listed in problem symptoms table	A
Fault is listed in problem symptoms table	B

B → Go to step 8

A

7	OVERALL ANALYSIS AND TROUBLESHOOTING*

(a) Terminals of ECM (see page CC-13)
(b) DATA LIST / ACTIVE TEST (see page CC-17)

NEXT

8	REPAIR OR REPLACE

NEXT

9	CONFIRMATION TEST

NEXT

END

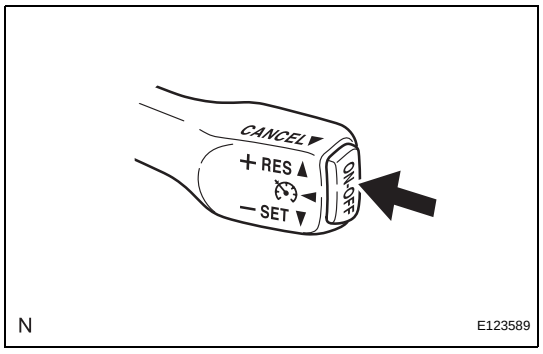

ROAD TEST

1. INSPECT SET SWITCH

(a) Push the main switch ON.
(b) Drive at a desired speed (40 km/h (25 mph) or higher).

CC

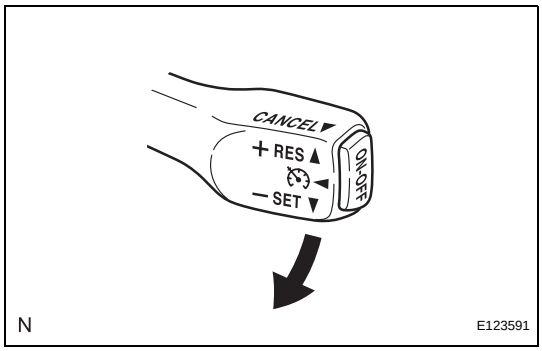

(c) Press the control switch to -/SET.
(d) After releasing the switch, check that the vehicle cruises at the desired speed.

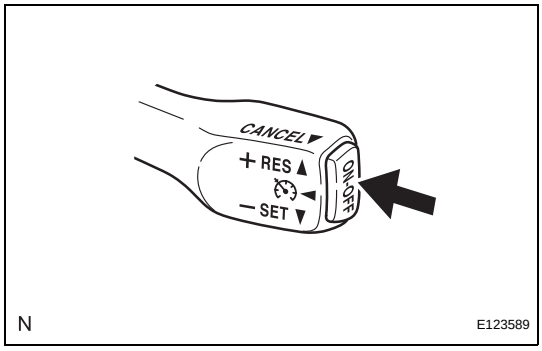

2. INSPECT "+" SWITCH
(a) Push the main switch button ON.
(b) Drive at a desired speed (40 km/h (25 mph) or higher).

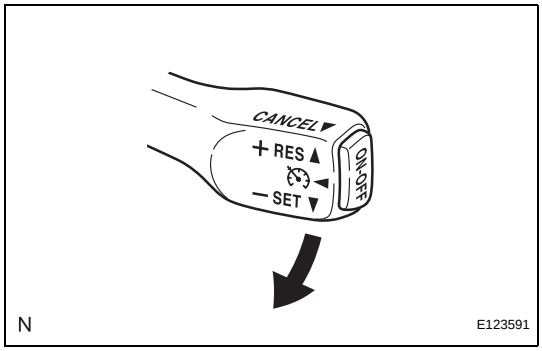

(c) Press the control switch to -/SET.
(d) Check that the vehicle speed increases while the control switch is pressed to +/RES, and that the vehicle cruises at the set speed when the switch is released.

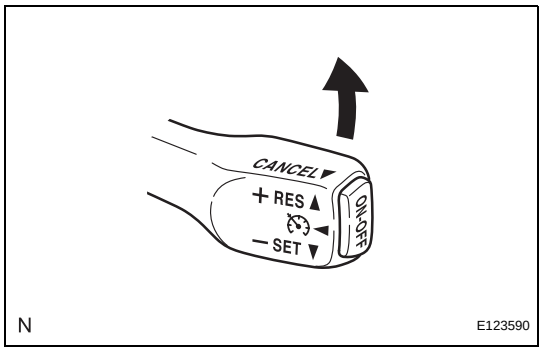

(e) Momentarily press the control switch to +/RES and then immediately release it. Check that the vehicle speed increases by about 1.6 km/h (1 mph) (Tap-up function).

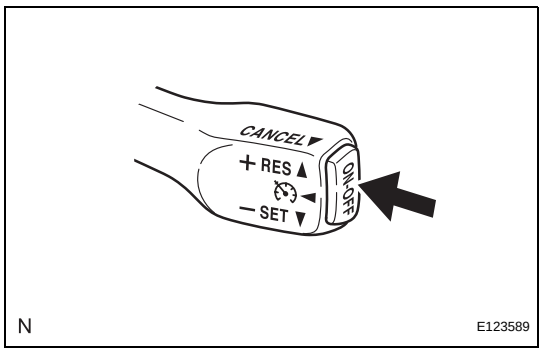

3. INSPECT "-" SWITCH
(a) Push the main switch button ON.
(b) Drive at a desired speed (40 km/h (25 mph) or higher).

CC

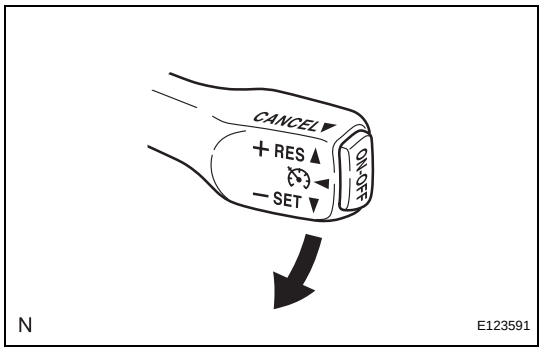

(c) Press the control switch to -/SET.
(d) Check that the vehicle speed decreases while the control switch is pressed to -/SET, and the vehicle cruises at the set speed when the switch is released.
(e) Momentarily press the control switch to -/SET, and then immediately release it. Check that the vehicle speed decreases by about 1.6 km/h (1 mph) (Tap-down function).

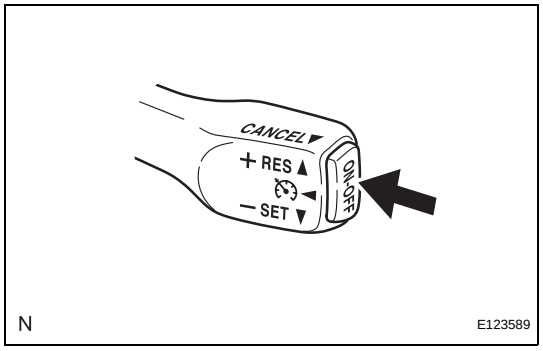

4. INSPECT CANCEL SWITCH
(a) Push the main switch button ON.
(b) Drive at a desired speed (40 km/h (25 mph) or higher).

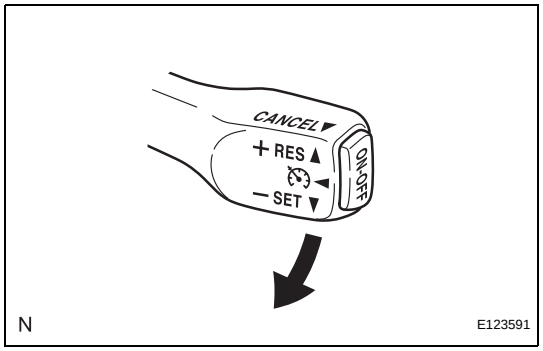

(c) Press the control switch to -/SET.

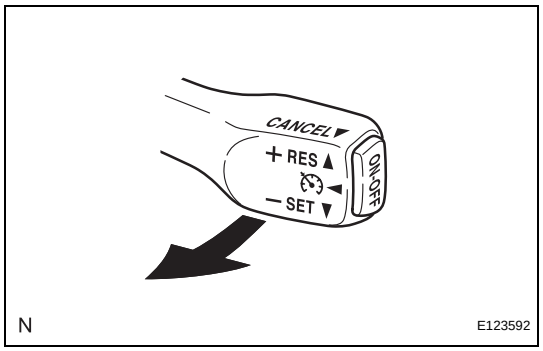

(d) When operating one of the following, check that the cruise control system is canceled.
- Depressing the brake pedal
- Pushing the cruise control main switch OFF
- Pulling the cruise control switch to CANCEL
- Moving the shift lever to any position except D or 3

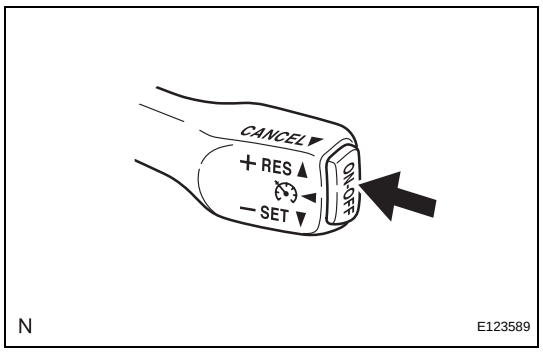

5. INSPECT RES (RESUME) SWITCH
(a) Push the main switch button ON.
(b) Drive at a desired speed (40 km/h (25 mph) or higher).

CC

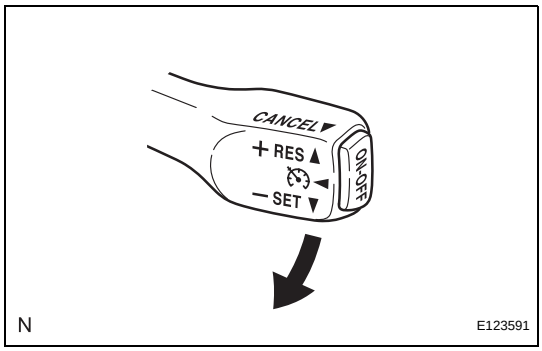

(c) Press the control switch to -/SET.

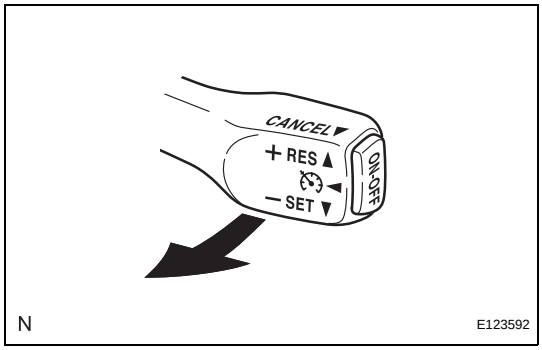

(d) When operating one of the following, check that the cruise control system is canceled.
- Depressing the brake pedal
- Pulling the cruise control switch to CANCEL
- Moving the shift lever to any position except D or 3

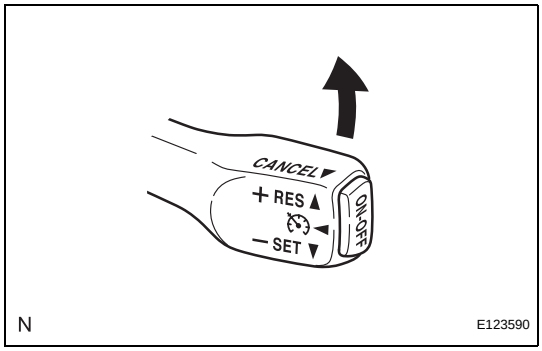

(e) After the control switch is pressed to +/RES at a driving speed of more than 40 km/h (25 mph), check that the vehicle restores the speed before the cancellation.

REGISTRATION

1. PERFORM VEHICLE STABILITY CONTROL SYSTEM RECOGNITION IN ECM

NOTICE:

If the vehicle has both cruise control and VSC, when replacing ECM, perform VSC recognition as follows:

(a) Turn the ignition switch ON.

(b) After waiting approximately 5 seconds, turn the cruise control main switch ON.

(c) Keep the cruise control main switch ON for approximately 5 seconds or more.

HINT:

The VSC recognition will not be reflected in the cruise control system until the ignition switch is turned OFF and ON.

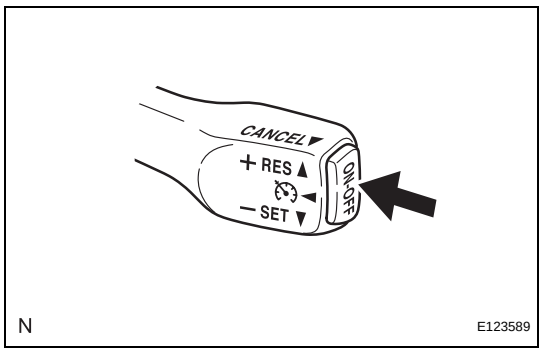

CC

PROBLEM SYMPTOMS TABLE

HINT:

- Use the table below to help determine the cause of the problem symptom. The potential causes of the symptoms are listed in order of probability in the "Suspected Area" column of the table. Check each symptom by checking the suspected areas in the order they are listed. Replace parts as necessary.
- Insect the fuses and relays related to this system before inspecting the suspected areas below.

Cruise control system

Symptom	Suspected Area	See page
SET not occurring or CANCEL occurring (DTC is normal)	1. Input signal circuit	CC-25
	2. Vehicle speed sensor circuit	CC-20
	3. Stop light switch circuit	CC-21
	4. Park / neutral position switch circuit	AX-39
	5. ECM	-
SET not occurring or CANCEL occurring (DTC is not output)	1. Cruise control switch circuit	CC-29
	2. ECM	-
Actual vehicle speed deviates above or below the set speed	1. Vehicle speed sensor circuit	CC-20
	2. ECM	-
Gear shifting occurs frequently between 3rd and O/D when driving on	1. Vehicle speed sensor circuit	CC-20
	2. ECM	-
Cruise control not canceled, even when brake pedal is depressed	1. Stop light switch circuit	CC-21
	2. ECM	-
Cruise control not canceled, even when transmission is shifted to N	1. Park / neutral position switch circuit	AX-108
	2. ECM	-
Control switch does not operate (-/SET, +/RES, CANCEL not possible)	1. Cruise control switch circuit	CC-29
	2. ECM	-
SET possible at 40 km/h (25 mph) or less, or CANCEL does not operate	1. Vehicle speed sensor circuit	CC-20
	2. ECM	-
Poor response in ACCEL and RESUME modes	1. ECM	-
O/D does not resume, even though road is not uphill	1. Vehicle speed sensor circuit	CC-20
	2. ECM	-
DTC memory is erased	1. ECM	-
DTC is not output, or is output when it should not be	1. Diagnosis circuit	CC-33
	2. ECM	-
Cruise main indicator light remains illuminated or fails to light up	1. Cruise control switch circuit	CC-29
	2. Combination meter	ME-52
	3. ECM	-

TERMINALS OF ECM

1. CHECK ECM

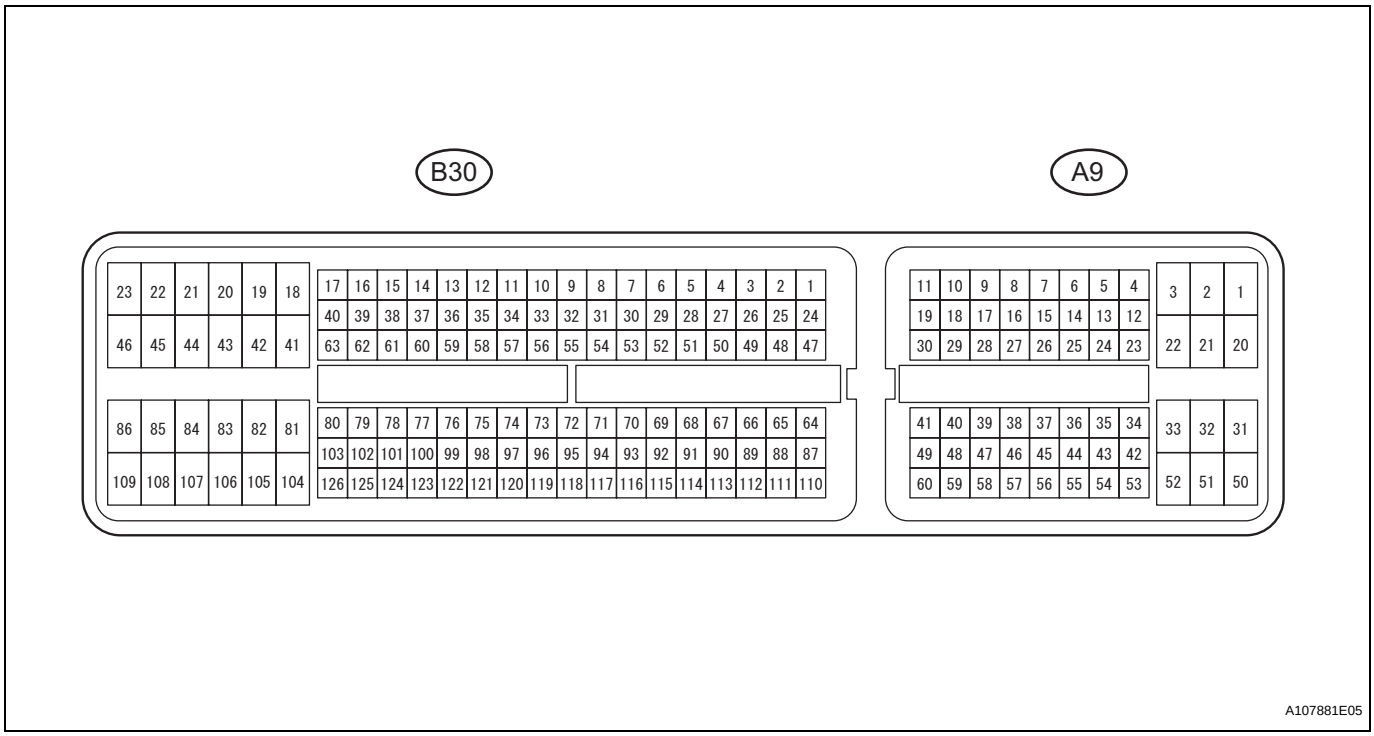

(a) Disconnect the A9 and B30 connectors.
(b) Measure the voltage and resistance of the wire harness side connectors.

Symbols (Terminal No.)	Wiring Color	Terminal Description	Condition	Specified Condition
STP (A9-36) - E1 (B30-104)	L - BR	Stop light switch input signal	Depress brake pedal	10 to 14 V
			Release brake pedal	Below 1 V
CCS (A9-40) - E1 (B30-104)	L - BR	Cruise control main switch signal	CANCEL switch hold ON	1.386 to 1,694 Ω
			-/SET switch hold ON	567 to 693 Ω
			+/RES switch hold ON	216 to 264 Ω
			Main switch OFF	10 kΩ or higher
			Main switch ON	Below 1 Ω
ST1- (A9-35) - E1 (B30-104)	GR - BR	Stop light switch input signal	Release brake pedal	10 to 14 V
			Depress brake pedal	Below 1 V

If the result is not as specified, there may be a malfunction on the wire harness side.

CC

DIAGNOSIS SYSTEM

1. DESCRIPTION

The ECM controls the function of cruise control on this vehicle. Data of the cruise control or DTC can be read from the DLC3 of the vehicle. When trouble occurs with cruise control, check that the CRUISE main indicator does not come on but DTC inspection is performed. Therefore, when there seems to be a problem with the cruise control, use the intelligent tester (with CAN VIM) or SST to check and troubleshoot it.

2. CHECK DLC3

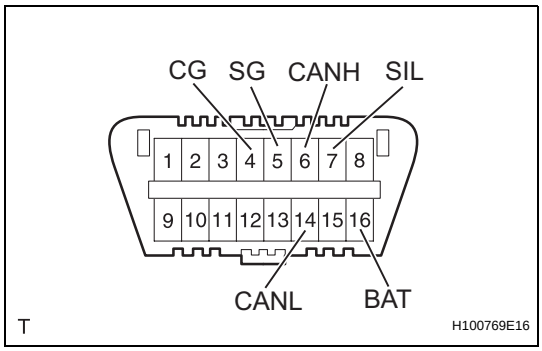

(a) The ECM uses ISO 15765-4 for communication. The terminal arrangement of the DLC3 complies with SAE J1962 and matches the ISO 15765-4 format.

Symbols (Terminal No.)	Terminal Description	Condition	Specified Condition
SIL (7) - SG (5)	Bus '+' line	During transmission	Pulse generation
CG (4) - Body ground	Chassis ground	Always	Below 1 Ω
SG (5) - Body ground	Signal ground	Always	Below 1 Ω
BAT (16) - Body ground	Battery positive	Always	11 to 14 V
CANH (6) - CANL (14)	HIGH-level CAN bus line	Ignition switch OFF*	54 to 69 Ω
CANH (6) - Body ground	HIGH-level CAN bus line	Ignition switch OFF*	1 MΩ or higher
CANH (6) - CG (4)	HIGH-level CAN bus line	Ignition switch OFF*	200 Ω or higher
CANL (14) - Body ground	LOW-level CAN bus line	Ignition switch OFF*	1 MΩ or higher
CANL (6) - CG (4)	LOW-level CAN bus line	Ignition switch OFF*	200 Ω or higher

NOTICE:

***: Before measuring the resistance, leave the vehicle as is for at least 1 minute and do not operate the ignition switch, other switches or doors.**

If the result is not as specified, the DLC3 may have a malfunction. Repair or replace the harness and connector.

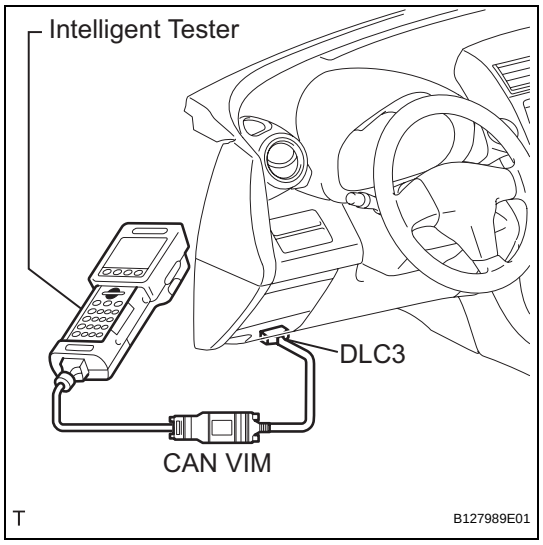

HINT:
Connect the cable of the intelligent tester (with CAN VIM) to the DLC3, turn the ignition switch ON and attempt to use the tester. If the display indicates that a communication error has occurred, there is a problem either with the vehicle or with the tester.

- If communication is normal when the tester is connected to another vehicle, inspect the DLC3 of the original vehicle.
- If communication is still not possible when the tester is connected to another vehicle, the problem may be in the tester itself. Consult the Service Department listed in the tester's instruction manual.

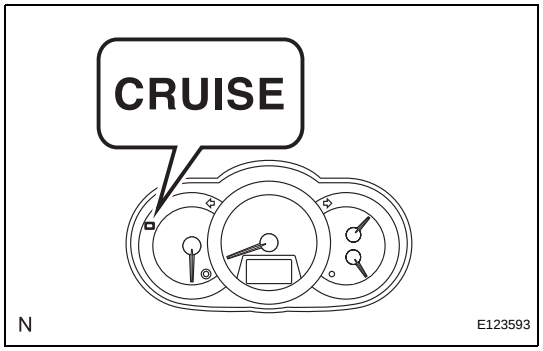

3. CHECK INDICATOR

(a) Turn the ignition switch ON.

(b) Check that the CRUISE main indicator light illuminates when the cruise control main switch is turned ON, and that the indicator light goes off when the main switch is turned OFF.

HINT:

- If the indicator check result is not normal, proceed to troubleshooting for the combination meter section (see page ME-15).

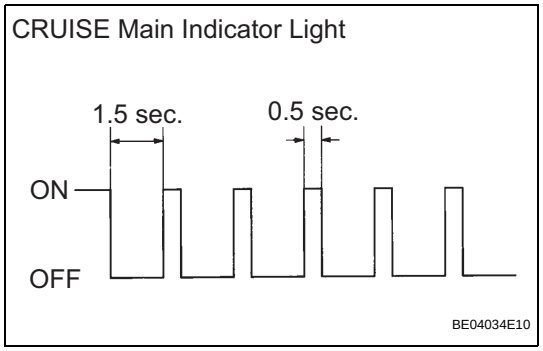

- If a malfunction occurs in the speed sensor or stop light switch, etc. during cruise control driving, the ECM activates the AUTO CANCEL of the cruise control and the CRUISE main indicator light blinks to inform the driver of a malfunction. At the same time, the malfunction is stored in memory as a diagnostic trouble code.

DTC CHECK / CLEAR

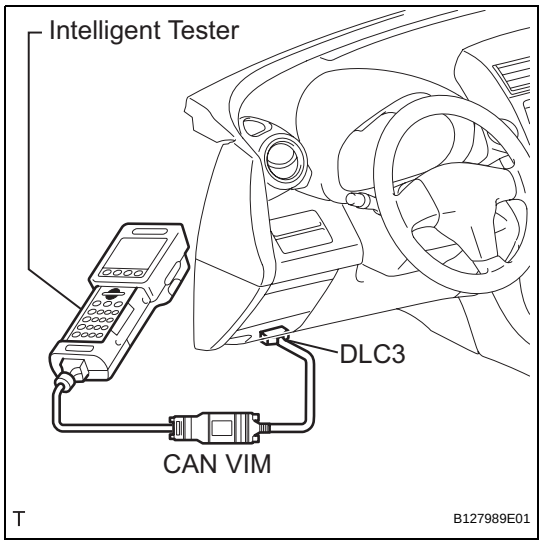

1. CHECK DTC (USING INTELLIGENT TESTER)

(a) Connect the intelligent tester (with CAN VIM) to the DLC3.

(b) Turn the ignition switch ON.

(c) Read the DTCs by following the directions on the tester screen.

HINT:

Refer to the intelligent tester operator's manual for further details.

CC

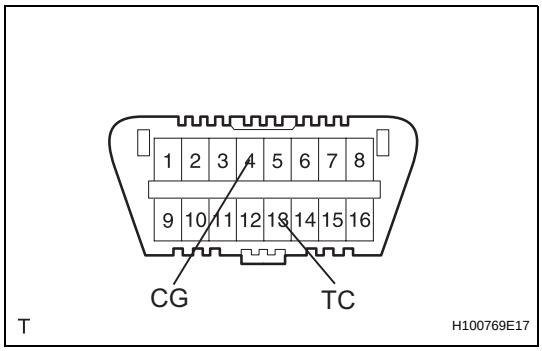

2. CHECK DTC (USING SST CHECK WIRE)

(a) Using SST, connect terminals 13 (TC) and 4 (CG) of the DLC3.
SST 09843-18040

(b) Turn the ignition switch ON.

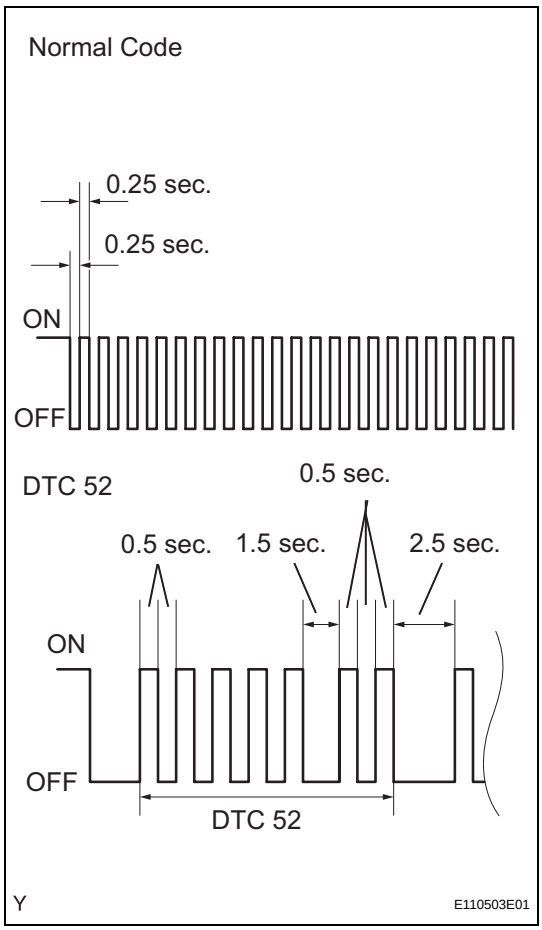

(c) Read the DTC on the CRUISE main indicator light.
HINT:
- If the DTC is not output, inspect the diagnosis circuit.
- As an example, the blinking patterns of a normal code and code 52 are shown in the illustration.

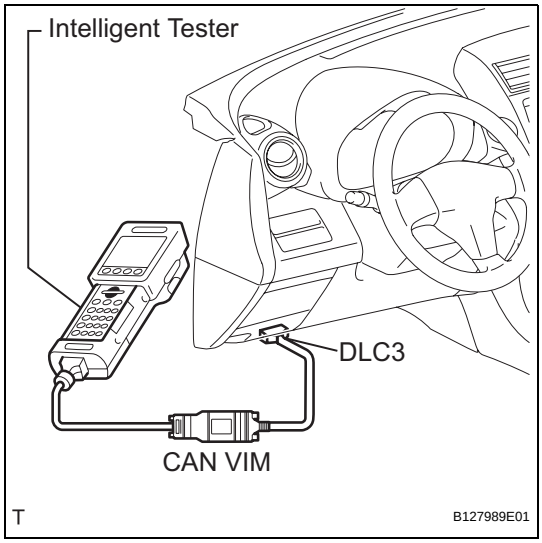

3. CLEAR DTC (USING INTELLIGENT TESTER)

(a) Connect the intelligent tester (with CAN VIM) to the DLC3.

(b) Turn the ignition switch ON.

(c) Read the DTCs by following the directions on the tester screen.
HINT:
Refer to the intelligent tester operator's manual for further details.

4. CLEAR DTC (USING SST CHECK WIRE)

(a) Read and record DTCs from the CRUISE main indicator light. Turn the ignition switch OFF.

(b) If DTCs are indicated, repair the relevant circuits using the DTC Chart (see page CC-18).

CC

(c) Clear the DTCs according to one of the following procedures.
- Disconnect the negative (-) battery cable for more than 1 minute.
- Remove the EFI NO. 1 and ETCS fuses from the engine room relay block (located inside the engine compartment) for more than 1 minute.

(d) Recheck for DTCs.

FAIL-SAFE CHART

HINT:
If the following conditions are detected while the cruise control is in operation, the system clears the stored vehicle speed in the ECM and cancels the cruise control operation.

Cruise control system

Vehicle Condition	Auto Cancel Condition	Fail-safe Deactivation Condition
CRUISE main indicator light blinks	• There is open or short in stop light switch circuit • There is problem with vehicle speed signal • There is problem with throttle position sensor and motor • VSC is damaged* • There is communication malfunction between VSC and ECM*	Turn cruise control main switch ON again
CRUISE main indicator light blinks	• There is problem with input circuit of stop light switch circuit • There is problem with cancel circuit	Turn ignition switch ON

HINT:
*: w/ VSC

DATA LIST / ACTIVE TEST

1. READ DATA LIST

HINT:

Using the intelligent tester's DATA LIST allows switch, sensor, actuator and other item values to be read without removing any parts. Reading the DATA LIST early in troubleshooting is one way to save time.

(a) Connect the intelligent tester (with CAN VIM) to the DLC3.

(b) Turn the ignition switch ON.

(c) Read the DATA LIST according to the display on the tester.

ECM

Item	Measurement Item / Display (Range)	Normal Condition	Diagnostic Note
VEHICLE SPD	Vehicle speed / min.: 0 km/h (0 mph) max.: 200 km/h (125 mph)	Actual vehicle speed	-
MEMORY SPD	Vehicle speed / min.: 0 km/h (0 mph) max.: 200 km/h (125 mph)	Actual vehicle speed stored in memory	-
THROTTLE	Throttle operating angle / min.: 0 deg. max.: 125 deg.	Actual demanded throttle angle	-
CRUISE CONTROL	Cruise control / ON or OFF	ON: Cruise control is SET OFF: Cruise control is UNSET	-
MAIN SW (MAIN)	Main switch (Main CPU) / ON or OFF	ON: Main switch (Main CPU) is SET OFF: Main switch (Main CPU) is UNSET	-
CCS READY M	Switch ready (Main CPU) / ON or OFF	ON: Switch ready (Main CPU) is SET OFF: Switch ready (Main CPU) is UNSET	-
CCS INDICATOR M	Switch indicator (Main CPU) / ON or OFF	ON: Switch indicator (Main CPU) is SET OFF: Switch indicator (Main CPU) is UNSET	-
CANCEL SW	CANCEL switch / ON or OFF	ON: CANCEL switch is SET OFF: CANCEL switch is UNSET	-
SET/COAST SW	- / SET switch / ON or OFF	ON: - / SET switch is SET OFF: - / SET switch is UNSET	-
RES/ACC SW	+ / RES switch / ON or OFF	ON: + / RES switch is SET OFF: + / RES switch is UNSET	-
STP LIGHT SW M	Stop light switch signal (Main CPU) / ON or OFF	ON: Brake pedal depressed OFF: Brake pedal released	-
SHIFT D POS	Shift D position / ON or OFF	ON: Shift is D or 3 position OFF: Shift is except D or 3 position	-

DIAGNOSTIC TROUBLE CODE CHART

HINT:
If a trouble code is displayed during the DTC check, check the trouble areas listed for that code in the table below and proceed to the appropriate page.

Cruise control system

DTC No.	Detection Item	Trouble Area	See page
P0500/21	Vehicle Speed Sensor "A"	- Combination meter - Vehicle speed sensor - Vehicle speed sensor circuit - ECM	CC-20
P0503/23	Vehicle Speed Sensor Circuit	- Combination meter - Vehicle speed sensor - Vehicle speed sensor circuit - ECM	CC-20
P0571/52	Stop Light Switch Circuit	- Stop light switch - BRK relay circuit* - Wire harness - ECM	CC-21
P0607/54	Input Signal Circuit Abnormal	- ECM	CC-25

Cruise control system (w/ VSC)

DTC No.	Detection Item	Trouble Area	See page
P1578/69	Brake System Malfunction	- VSC system	CC-26
P1630/64	Communication Error from Skid Control ECU to ECM	- Communication circuit - Skid control - ECM	CC-27
P1631/65	Communication Error from ECM to Skid Control ECU	- Communication circuit - ECM - Skid control	CC-28
U0100/78	Communication Stop from ECM to Distance Control ECU, VSC	- Communication circuit - ECM - Skid control	CC-28
U0122/82	Communication Stop from VSC to ECM	- Communication circuit - Skid control - ECM	CC-27

DTC	P0500/21	Vehicle Speed Sensor "A"

DTC	P0503/23	Vehicle Speed Sensor Circuit

DESCRIPTION

Refer to the SFI system (see page ES-224).

DTC No.	DTC Detection Condition	Trouble Area
P0500/21 P0503/23	No vehicle speed sensor signal to ECM under conditions (a) and (b) (2 trip detection logic): (a) Cruise control system is operating (b) Vehicle is being driven	• Combination meter • Vehicle speed sensor • Vehicle speed sensor circuit • ECM

WIRING DIAGRAM

Refer to the SFI system (see page ES-224).

INSPECTION PROCEDURE

Refer to the SFI system (see page ES-224).

DTC	P0571/52	Stop Light Switch Circuit

DESCRIPTION

While driving with the cruise control, if the ECM detects that the brake pedal is depressed, the cruise control operation will be canceled. The stop light switch sends brake pedal status signals to the ECM. When the brake pedal is not depressed, terminal ST1- is equal to the positive (+) battery voltage and terminal STP is below 1 V. When the brake pedal is depressed, the ECM cancels cruise control operation. The ECM outputs this DTC when the voltage of terminals ST1- and STP are both below 1 V for 0.5 seconds or more at the same time. The fail-safe function operates to enable normal driving even if there is a malfunction in the stop light signal circuit.

DTC No.	DTC Detection Condition	Trouble Area
P0571/52	ECM detects malfunction of stop light switch circuit under both of following conditions: • Voltage of terminal STP is less than 1 V for 0.5 seconds or more • Voltage of terminal ST1- is less than 1 V for 0.5 seconds or more	• Stop light switch • BRK relay circuit* • Wire harness • ECM

HINT:
*: w/ Vehicle stability control system

WIRING DIAGRAM

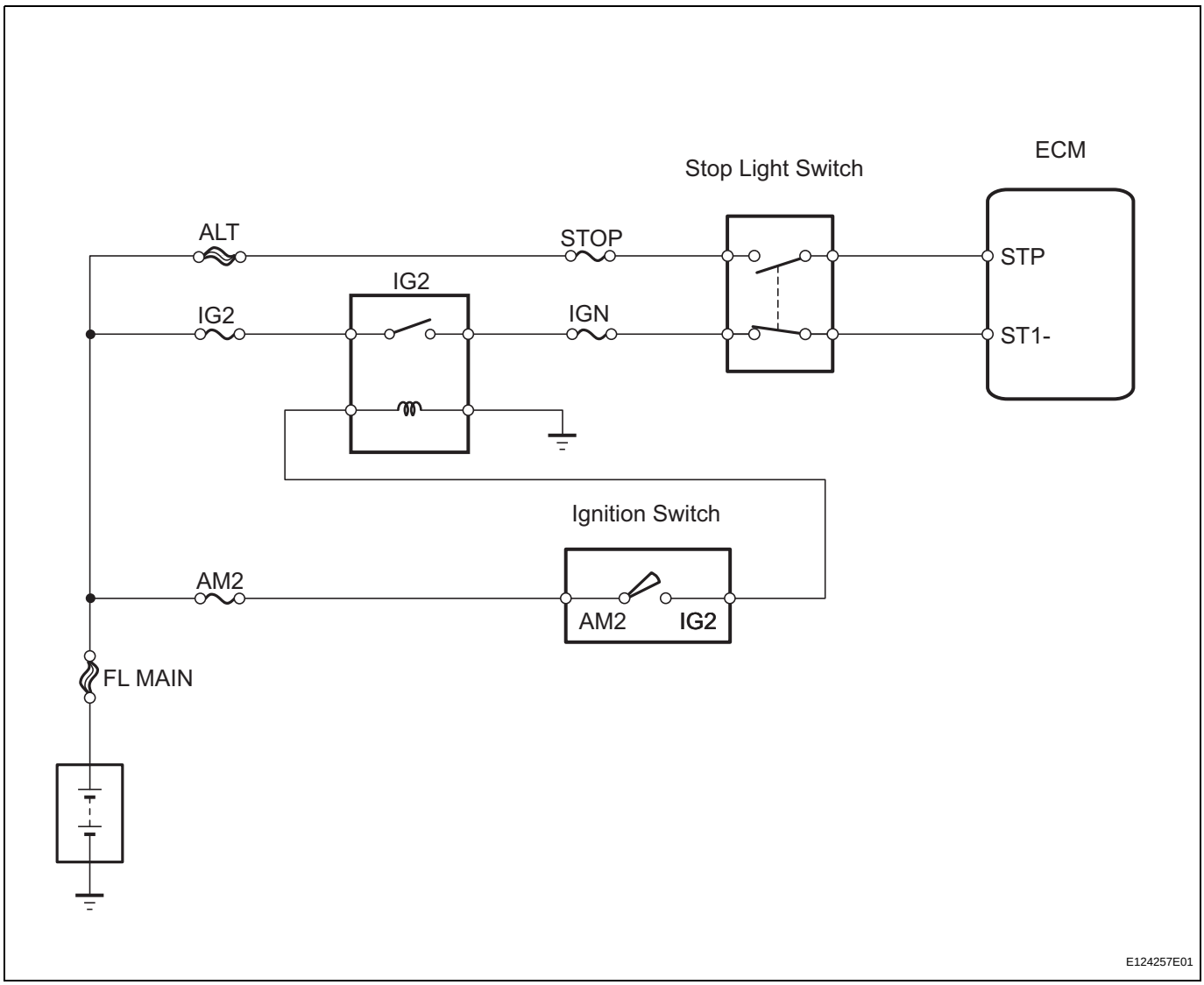

CC

INSPECTION PROCEDURE

1	READ VALUE OF INTELLIGENT TESTER (STOP LIGHT SWITCH)

(a) Check the DATA LIST for proper functioning of the stop light switch.

ECM

Item	Measurement Item / Display (Range)	Normal Condition	Diagnostic Note
ST LIGHT SW M	Stop light switch signal (Main CPU) / ON or OFF	ON: Brake pedal is depressed OFF: Brake pedal is released	-

OK:
Display changes according to brake pedal operation described in above table.

NG → **REPLACE ECM**

OK

2	INSPECT FUSE (STOP, IGN, IG2)

(a) Remove the STOP and IGN fuses from the instrument panel junction block.
(b) Remove the IG2 fuse from the engine room No. 1 relay block.
(c) Measure the resistance of the fuses.
Standard resistance:
Below 1 Ω

NG → **REPLACE FUSE**

OK

3	INSPECT IG2 RELAY

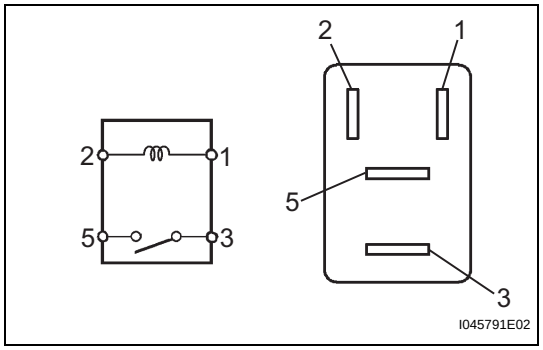

(a) Remove the IG2 relay from the instrument panel junction block.
(b) Measure the resistance of the relay.
Standard resistance

Tester Connection	Specified Condition
3 - 5	10 kΩ or higher
	Below 1 Ω (when battery voltage is applied to terminals 1 and 2)

NG → **REPLACE IG2 RELAY**

OK

CC

4 INSPECT STOP LIGHT SWITCH

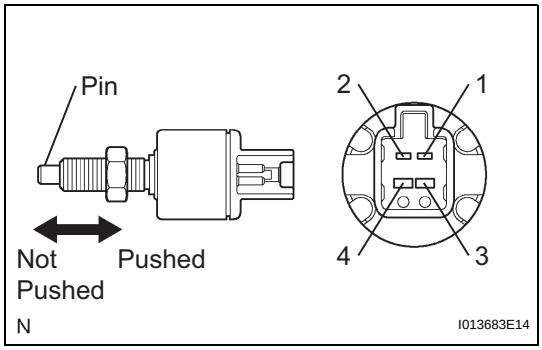

(a) Remove the stop light switch.
(b) Measure the resistance of the switch.
Standard resistance

Tester Connection	Switch Condition	Specified Condition
1 - 2	Not pushed	Below 1 Ω
3 - 4	Pushed	
1 - 2	Pushed	10 kΩ or higher
3 - 4	Not pushed	

NG → **REPLACE STOP LIGHT SWITCH**

OK

5 CHECK WIRE HARNESS (SWITCH - BATTERY)

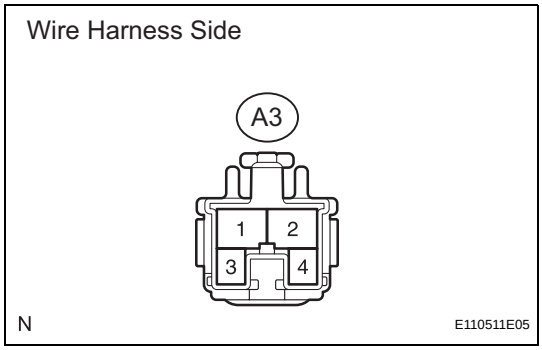

(a) Disconnect the A3 switch connector.
(b) Measure the voltage of the wire harness side connector.
Standard voltage

Tester Connection	Switch Condition	Specified Condition
A3-3 - Body ground	Always	10 to 14 V
A3-2 - Body ground	Ignition switch ON	

NG → **REPAIR OR REPLACE HARNESS AND CONNECTOR**

OK

6 CHECK WIRE HARNESS (ECM - BATTERY)

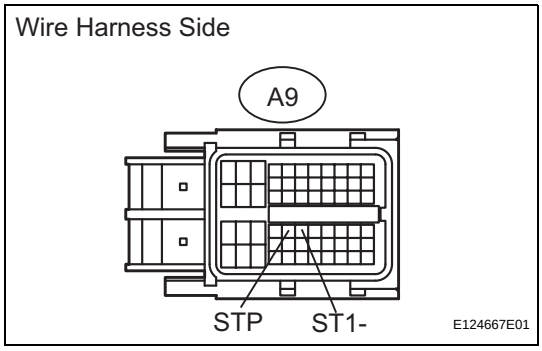

(a) Disconnect the A9 ECM connector.
(b) Turn the ignition switch ON.
(c) Measure the voltage of the wire harness side connector.
Standard voltage

Tester Connection	Switch Condition	Specified Condition
A9-35 (STP) - Body ground	Depressed	10 to 14 V
A9-36 (ST1-) - Body ground	Released	
A9-35 (STP) - Body ground	Released	Below 1 V
A9-36 (ST1-) - Body ground	Depressed	

NG → **REPAIR OR REPLACE HARNESS AND CONNECTOR**

CC

OK

REPLACE ECM

DTC	P0607/54	Input Signal Circuit Abnormal

DESCRIPTION

This DTC expresses the internal abnormalities of the ECM.

DTC No.	DTC Detection Condition	Trouble Area
P0607/54	When either of following conditions is met: • Cruise control input signal abnormal • Stop light switch input signal abnormal	ECM

INSPECTION PROCEDURE

1 CHECK FOR DTC

(a) Clear the DTC (see page CC-15).
(b) Check for DTC (see page CC-15).
OK:
DTC is not output.

NG → **REPLACE ECM**

OK

END

DTC	P1578/69	Brake System Malfunction

DESCRIPTION

This DTC is output when the VSC system has a problem. Check the VSC system when this DTC is output.

DTC No.	DTC Detection Condition	Trouble Area
P1578/69	ECM receives a brake system error signal for 0.2 seconds or more while cruise control is in operation	VSC system

INSPECTION PROCEDURE

HINT:
This circuit uses CAN communication. Therefore, if there are any malfunctions in the communication circuit, one or more DTCs in the CAN communication system are output.

1	CHECK BRAKE SYSTEM

Refer to HOW TO PROCEED WITH TROUBLESHOOTING (see page BC-20).

DTC	P1630/64	Communication Error from Skid Control ECU to ECM

DTC	U0122/82	Communication Stop from VSC to ECM

DESCRIPTION

The skid control ECU sends signals such as cruise control cancel demand signals and brake operation demand from ECM response signals to the ECM when the cruise control system is in operation.

DTC No.	DTC Detection Condition	Trouble Area
P1630/64	While cruise control is either preparing for operation or operating, if communication data from skid control ECU is logically inconsistent for a certain amount of time, ECM records this logical error code	• Communication circuit • Skid control ECU • ECM
U0122/82	While cruise control is either preparing for operation or operating, if communication data from skid control ECU is invalid for a certain amount of time, ECM records communication cut off code	• Communication circuit • Skid control ECU • ECM

INSPECTION PROCEDURE

HINT:
This circuit uses CAN communication. Therefore, if there are any malfunctions in the communication circuit, one or more DTCs in the CAN communication system are output.

1	CHECK CAN COMMUNICATION SYSTEM

Refer to HOW TO PROCEED WITH TROUBLESHOOTING (see page CA-8).

DTC	P1631/65	Communication Error from ECM to Skid Control ECU

DTC	U0100/78	Communication Stop from ECM to Distance Control ECU, VSC

DESCRIPTION

Therefore, if the skid control ECU detects a communication error from the ECM, it sends a malfunction signal back to the ECM.

DTC No.	DTC Detection Condition	Trouble Area
P1631/65	While the cruise control is either preparing for operation or operating, if the ECM continuously receives a logical error signal from the skid control ECU for a certain amount of time, the ECM records this logical error code	• Communication circuit • ECM • Skid control ECU
U0100/78	While the cruise control is either preparing for operation or operating, if the ECM continuously receives a communication cut off signal from the skid control ECU for a certain amount of time, the ECM records this communication cut off code	• Communication circuit • ECM • Skid control ECU

INSPECTION PROCEDURE

HINT:

This circuit uses CAN communication. Therefore, if there are any malfunctions in the communication circuit, one or more DTCs in the CAN communication system are output.

1	CHECK CAN COMMUNICATION SYSTEM

Refer to HOW TO PROCEED WITH TROUBLESHOOTING (see page CA-8).

CC

Cruise Control Switch Circuit

DESCRIPTION

This circuit sends signals to the ECM depending on the cruise control switch condition. The battery supplies positive (+) battery voltage to the cruise control switch. Then terminal CCS of the ECM receives the voltage according to the switch condition.

WIRING DIAGRAM

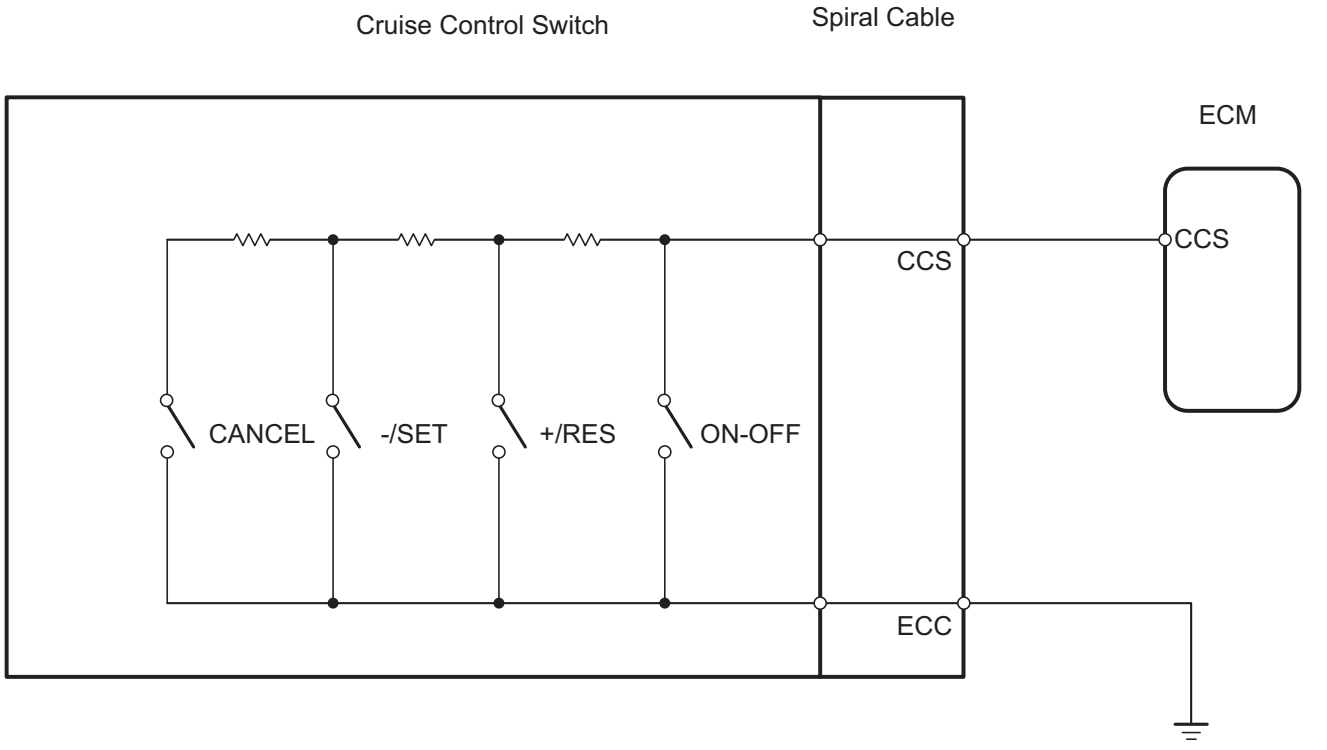

CC

INSPECTION PROCEDURE

1	READ VALUE OF INTELLIGENT TESTER (CRUISE CONTROL MAIN SWITCH)

(a) Check the DATA LIST for proper functioning of the cruise control switch.

ECM

Item	Measurement Item / Display (Range)	Normal Condition	Diagnostic Note
MAIN SW (MAIN)	Main switch (Main CPU) / ON or OFF	ON: Main switch (Main CPU) is ON OFF: Main switch (Main CPU) is OFF	-
CANCEL SW	CANCEL switch / ON or OFF	ON: CANCEL switch is ON OFF: CANCEL switch is OFF	-
SET/COAST SW	- / SET switch / ON or OFF	ON: - / SET switch is ON OFF: - / SET switch is OFF	-

Item	Measurement Item / Display (Range)	Normal Condition	Diagnostic Note
RES/ACC SW	+ / RES switch / ON or OFF	ON: + / RES switch is ON OFF: + / RES switch is OFF	-

OK:
When cruise control switch operation is performed, the results will be same as above.

OK → **PROCEED TO NEXT CIRCUIT INSPECTION SHOWN IN PROBLEM SYMPTOMS TABLE**

NG

2 INSPECT CRUISE CONTROL SWITCH

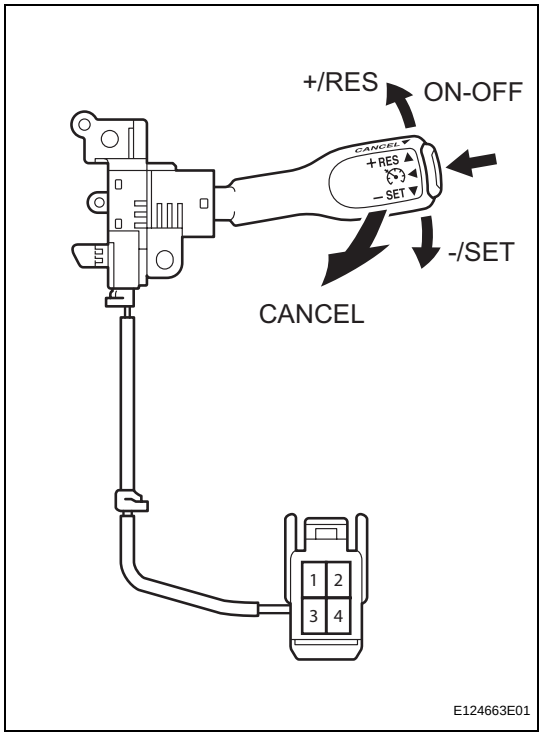

(a) Disconnect the cruise control switch connector.
(b) Measure the resistance of the switch.
Standard resistance

Tester Connection	Switch Condition	Specified Condition
3 - 4	cruise control switch ON	10 kΩ or higher
	cruise control switch OFF	Below 1 Ω
	+/RES	216 to 264 Ω
	-/SET	567 to 693 Ω
	CANCEL	1,386 to 1,694 Ω

NG → **REPLACE CRUISE CONTROL MAIN SWITCH**

OK

CC

3	**INSPECT SPIRAL CABLE SUB-ASSEMBLY**

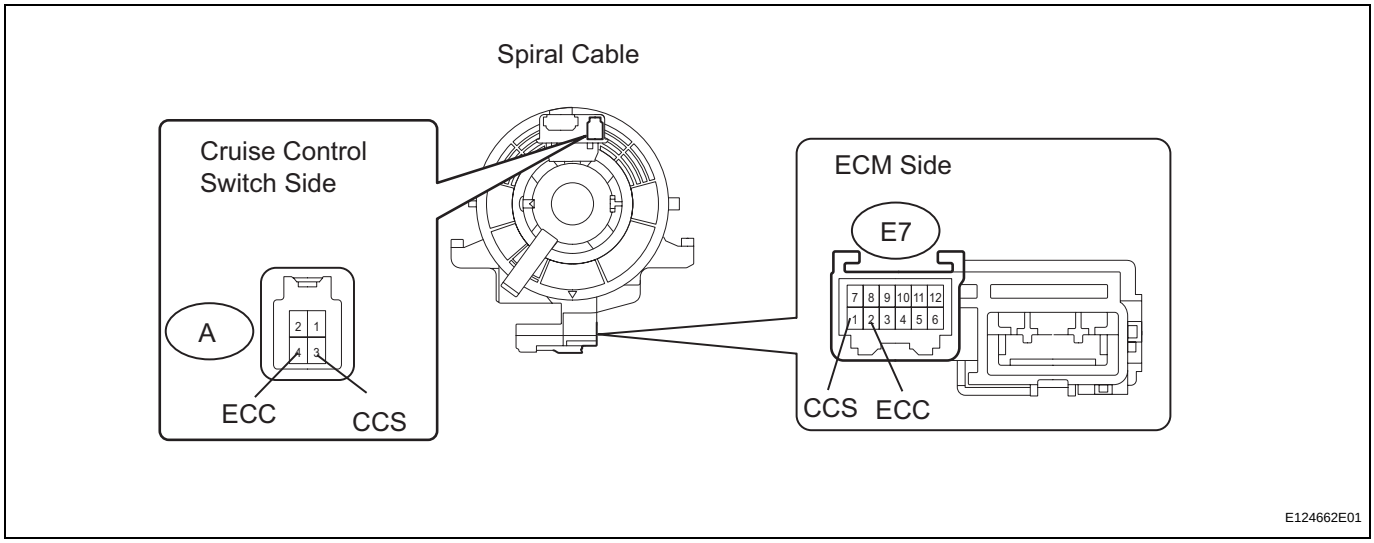

(a) Disconnect the cruise control switch connector.
(b) Disconnect the E7 cable connector.
(c) Measure the resistance of the spiral cable.
Standard resistance

Tester Connection	Specified Condition
A-3 (CCS) - E7-1 (CCS)	Below 1 Ω
A-2 (ECC) - E7-2 (ECC)	

NG → **REPLACE SPIRAL CABLE SUB-ASSEMBLY**

OK

CC

4	CHECK WIRE HARNESS (SPIRAL CABLE - ECM AND BODY GROUND)

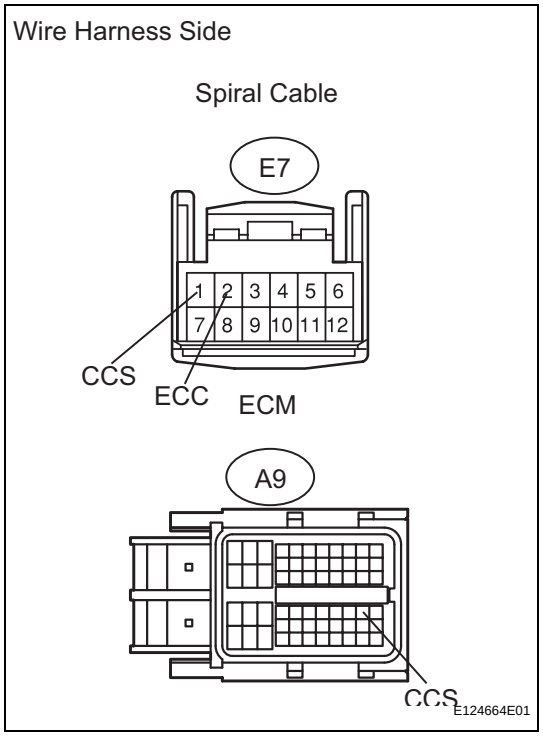

(a) Disconnect the E7 cable connector.
(b) Disconnect the A9 ECM connector.
(c) Measure the resistance of the wire harness side connectors.

Standard resistance

Tester Connection	Specified Condition
E7-1 (CCS) - A9-40 (CCS)	Below 1 Ω
E7-2 (ECC) - Body ground	

NG → **REPAIR OR REPLACE HARNESS AND CONNECTOR**

OK

PROCEED TO NEXT CIRCUIT INSPECTION SHOWN IN PROBLEM SYMPTOMS TABLE

TC and CG Terminal Circuit

DESCRIPTION

Connecting terminals TC and CG of the DLC3 enables DTCs to be read through blinking patterns of the combination meter's CRUISE main indicator light.
HINT:
When a warning light of the combination meter blinks continuously, terminal TC of the DLC3 or an ECM may have a ground short.

WIRING DIAGRAM

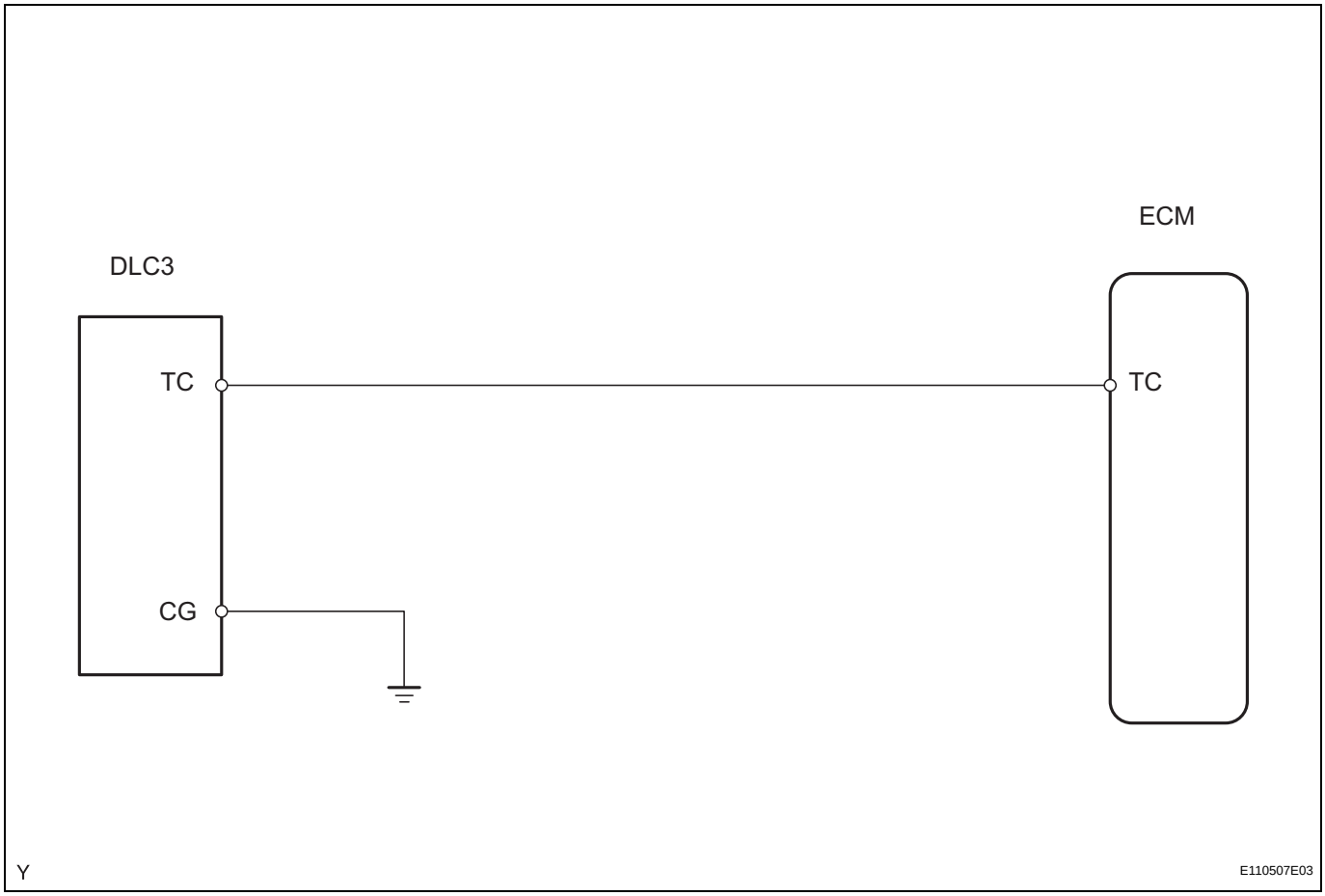

INSPECTION PROCEDURE

1	CHECK WIRE HARNESS (DLC3 - ECM AND BODY GROUND)

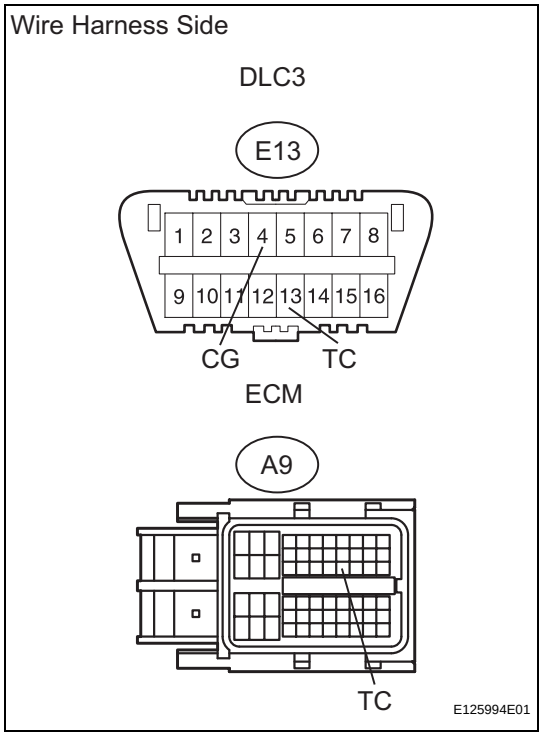

(a) Disconnect the E13 DLC3 connector.
(b) Disconnect the A9 ECM connector.
(c) Measure the resistance of the wire harness side connectors.

Standard resistance

Tester Connection	Specified Condition
E13-13 (TC) - A9-27 (TC)	Below 1 Ω
E13-4 (CG) - Body ground	

NG → **REPAIR OR REPLACE HARNESS AND CONNECTOR**

OK

REPLACE ECM

CRUISE CONTROL SYSTEM

PRECAUTION

1. HANDLING PRECAUTION FOR CRUISE CONTROL SYSTEM

(a) Turn the cruise control main switch OFF when not using the cruise control system.

(b) Be careful as the vehicle speed increases when driving downhill with the cruise control system on.

(c) The RESUME/ACCEL operation changes according to the cruise control system status. When the cruise control system is operating, ACCEL operates. When the cruise control system is not operating, RESUME operates.

(d) When the cruise control system is operating and the CRUISE main indicator light blinks, turn the cruise control main switch OFF to reset the cruise control system. After the reset, if the cruise control main switch cannot be turned ON, or the cruise control system is canceled immediately after turning the cruise control main switch ON, the system may have a malfunction.

(e) Do not use the cruise control system where the road conditions are as follows:

- Heavy traffic
- Steep downhill
- Roads with sharp turns
- Icy or snowy roads
- Slippery roads

PARTS LOCATION

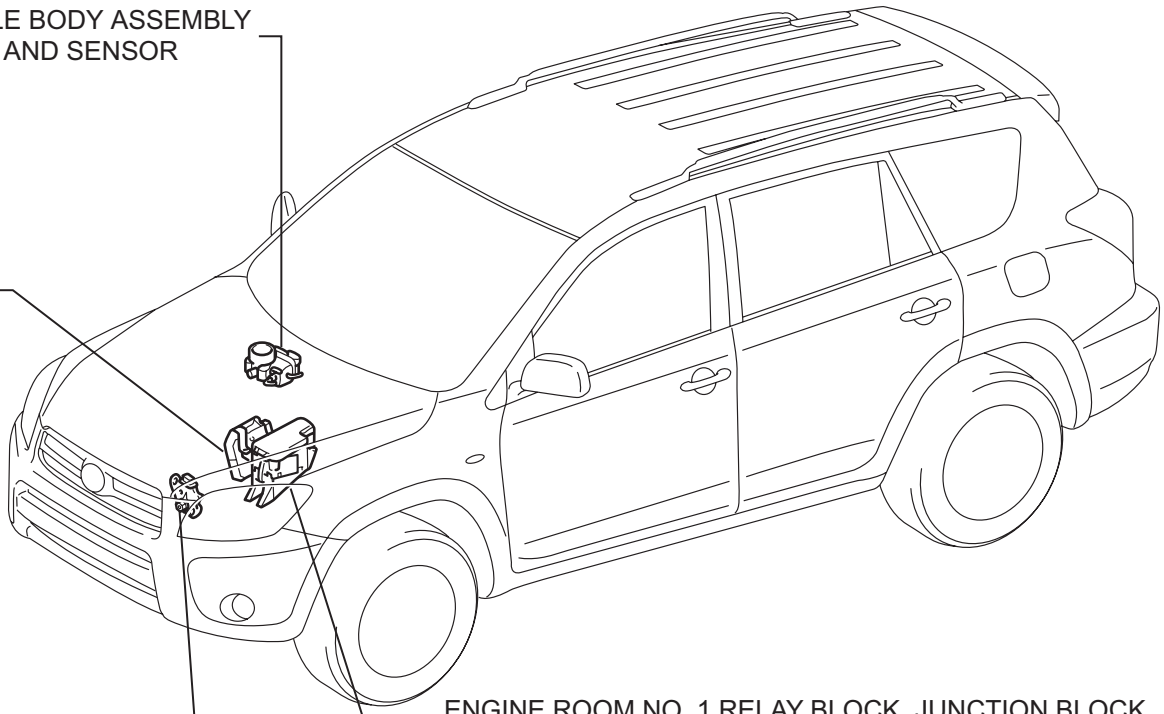

CC

N

E125069E01

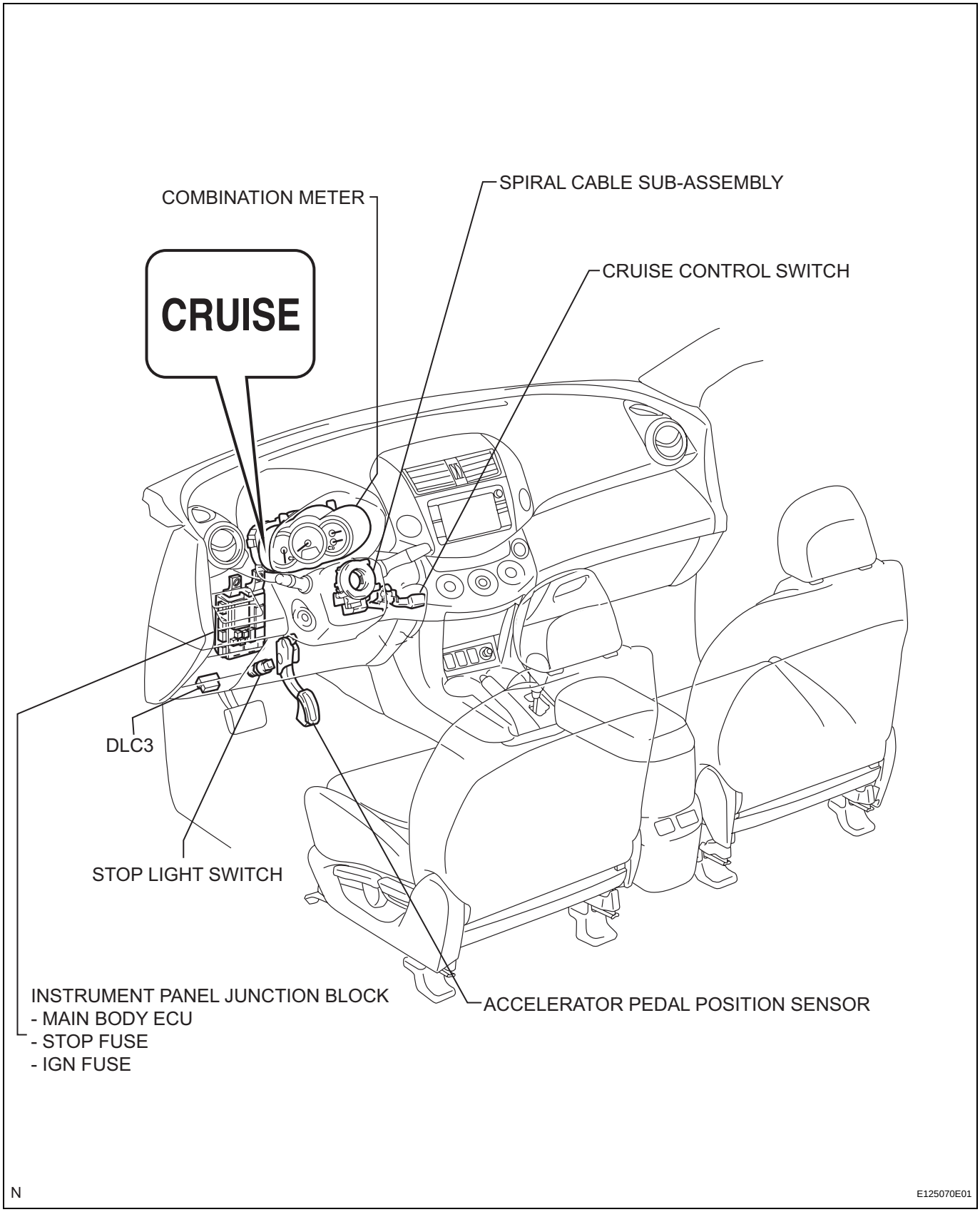
COMBINATION METER
SPIRAL CABLE SUB-ASSEMBLY
CRUISE
CRUISE CONTROL SWITCH
DLC3
STOP LIGHT SWITCH
INSTRUMENT PANEL JUNCTION BLOCK
- MAIN BODY ECU
- STOP FUSE
- IGN FUSE
ACCELERATOR PEDAL POSITION SENSOR
N
E125070E01

CC

DIAPHRAGM OIL SEAL

COMPONENTS

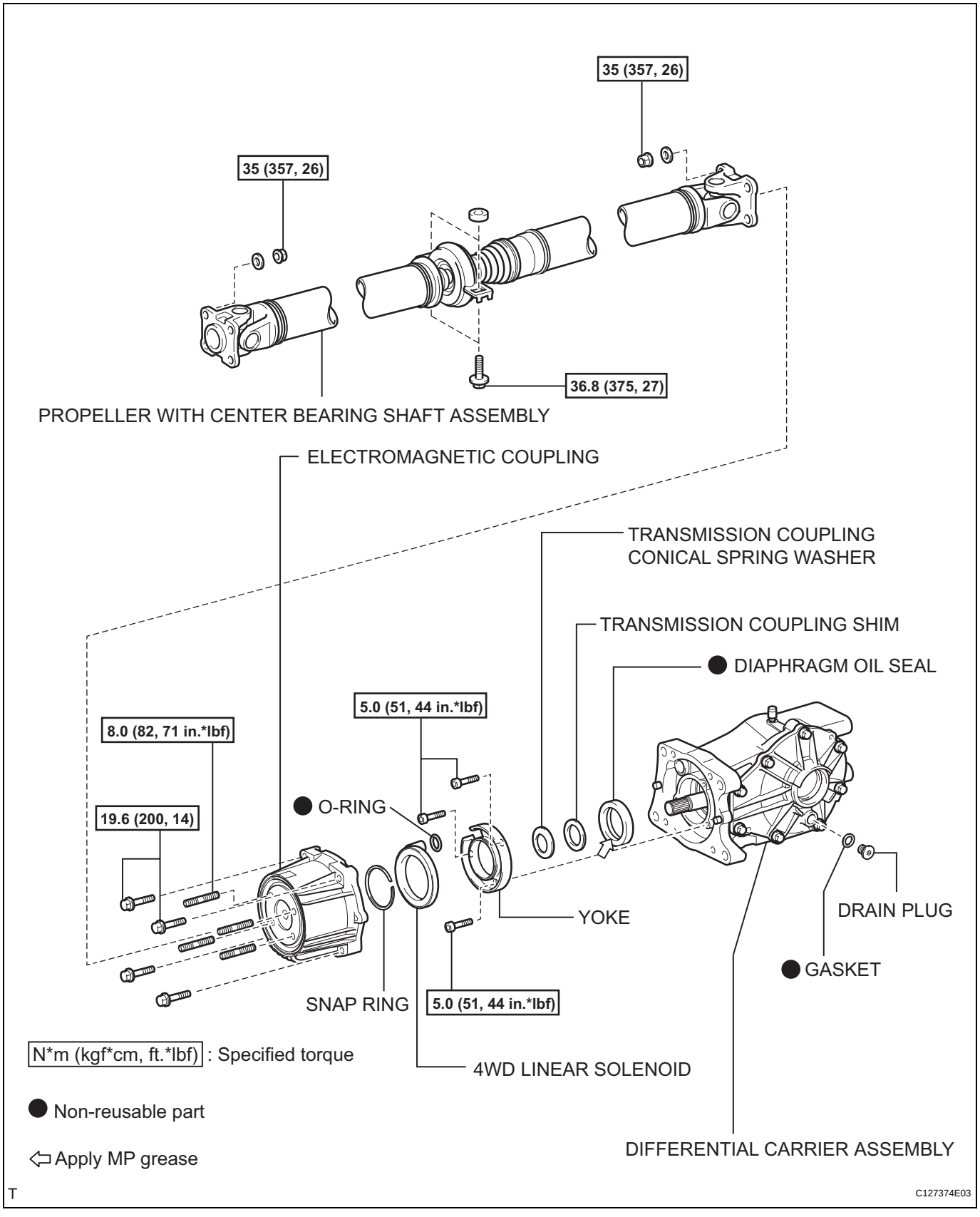

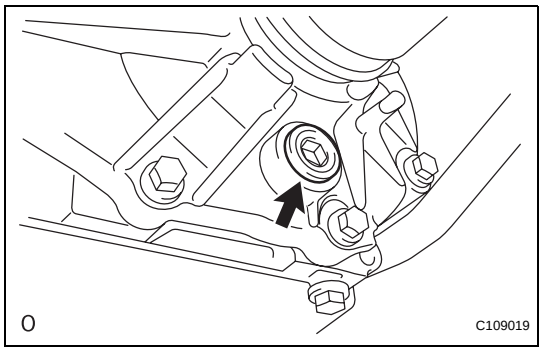

REMOVAL

1. **DRAIN DIFFERENTIAL OIL**
   (a) Using a 10 mm socket hexagon wrench, remove the rear differential drain plug and gasket, and drain the oil.
   (b) Install a new gasket to the rear differential drain plug.
   (c) Using a 10 mm socket hexagon wrench, install the rear differential drain plug and gasket.
2. **REMOVE PROPELLER WITH CENTER BEARING SHAFT ASSEMBLY (See page PR-3)**
3. **REMOVE ELECTROMAGNETIC COUPLING (See page DF-21)**
4. **REMOVE 4WD LINEAR SOLENOID (See page DF-22)**
5. **REMOVE YOKE (See page DF-22)**
6. **REMOVE TRANSMISSION COUPLING CONICAL SPRING WASHER (See page DF-22)**
7. **REMOVE TRANSMISSION COUPLING SHIM (See page DF-22)**
8. **REMOVE DIAPHRAGM OIL SEAL**
   (a) Using SST, remove the oil seal from the rear differential carrier.
   SST 09308-10010

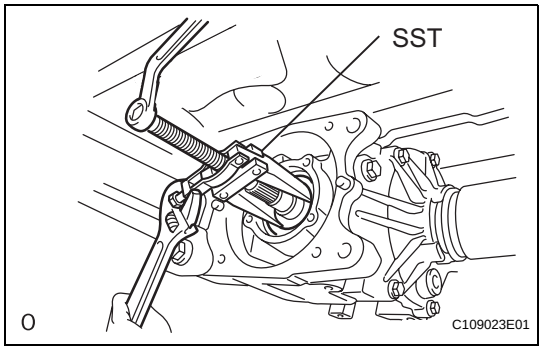

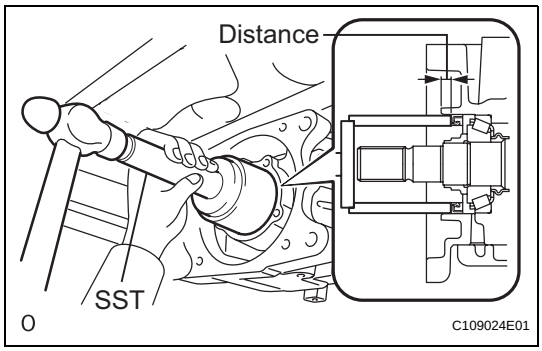

INSTALLATION

1. **INSTALL DIAPHRAGM OIL SEAL**
   (a) Apply a light coat of MP grease No. 2 to the lip of a new diaphragm oil seal.
   (b) Using SST and a hammer, tap the diaphragm oil seal into the rear differential carrier according to the specification.
   SST 09710-30021 (09710-03121), 09950-60010 (09951-00570), 09950-70010 (09951-07100)
   Standard distance:
   7.0 +-0.5 mm (0.28 +-0.02 in.)
2. **INSTALL TRANSMISSION COUPLING SHIM (See page DF-41)**
3. **INSTALL TRANSMISSION COUPLING CONICAL SPRING WASHER (See page DF-41)**
4. **INSTALL YOKE (See page DF-41)**
5. **INSTALL 4WD LINEAR SOLENOID (See page DF-41)**

6. **INSTALL ELECTROMAGNETIC COUPLING (See page DF-42)**
7. **TEMPORARILY INSTALL PROPELLER WITH CENTER BEARING SHAFT ASSEMBLY (See page PR-5)**
8. **FULLY TIGHTEN PROPELLER WITH CENTER BEARING SHAFT ASSEMBLY (See page PR-6)**
9. **INSPECT AND ADJUST JOINT ANGLE (See page PR-4)**
10. **ADD DIFFERENTIAL OIL**
    (a) Add differential oil (see page DF-3).
11. **CHECK FOR DIFFERENTIAL OIL LEAKAGE**
    If gas is leaking, tighten the areas necessary to stop the leak. Replace damaged parts as necessary.

DIFFERENTIAL OIL

ON-VEHICLE INSPECTION

1. CHECK DIFFERENTIAL OIL

(a) Stop the vehicle on a level surface.

(b) Using a 10 mm socket hexagon wrench, remove the rear differential filler plug and gasket.

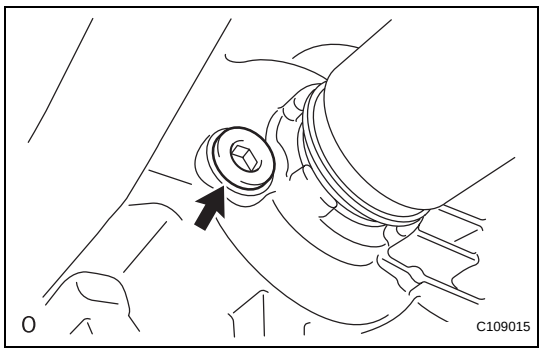

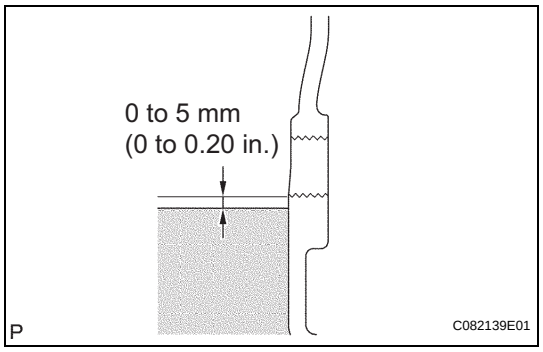

(c) Check that the oil level is between 0 to 5 mm (0 to 0.20 in.) from the bottom lip of the differential filler plug hole.

NOTICE:

- **After changing the oil seal, drive the vehicle and then check the oil level again.**
- **Too much or too little oil will lead to differential problems.**

HINT:

If necessary, fill the differential carrier assembly with hypoid gear oil.

Recommended viscosity:
SAE 90

Standard oil grade:
Hypoid gear oil SX API GL-5

Standard differential oil capacity:
0.45 to 0.55 liters (0.48 to 0.58 US qts., 0.40 to 0.48 Imp. qts.)

(d) Using a 10 mm socket hexagon wrench, install a new gasket and the rear differential filler plug.

Torque: 39 N*m (398 kgf*cm, 29 ft.*lbf)

DIFFERENTIAL SYSTEM

PRECAUTION

1. **Before disassembling the differential assembly, thoroughly clean it by removing any sand, mud or foreign matter. This will help prevent contamination during disassembly and reassembly.**
2. **When removing the rear differential carrier cover or any other light alloy part, do not pry it off with a screwdriver or other tool that may cause damage. Instead, tap the part with a plastic-faced hammer.**
3. **Always arrange disassembled parts in the order they were removed and protect them from foreign matter.**
4. **Before installation of each part, thoroughly clean and dry it. Then apply hypoid gear oil SX to it. Do not use alkaline chemicals to clean aluminum parts, rubber parts or ring gear set bolts. Also, do not use white gasoline or other cleaning oils to clean Orings, oil seals or rubber parts.**
5. **Coat any sliding surface and rotating parts with hypoid gear oil SX.**
6. **Do not directly fix a part in a vise. Place aluminum plates between the part and vise.**
7. **Be careful not to damage the contact surfaces of the case. Such damage may cause oil leakage.**
8. **Before applying sealant, remove deposited oil sealant and clean the part to be sealed using white gasoline.**
9. **After sealing parts, do not allow oil to contact the seal for at least an hour.**
10. **Do not allow scratches on a part's contact surface with an oil seal, O-ring or gasket. Scratches may lead to oil leakage.**
11. **When press-fitting an oil seal, be careful not to damage the lip of the oil seal and its outside periphery.**
12. **When replacing a bearing, replace the inner and outer races as a set.**

PROBLEM SYMPTOMS TABLE

HINT:
Use the table below to help determine the cause of the problem symptom. The potential causes of the symptoms are listed in order of probability in the "Suspected area" column of the table. Check each symptom by checking the suspected areas in the order they are listed. Replace parts as necessary.

Differential system

Symptom	Suspected area	See page
Noise in rear differential	1. Oil (Level low or wrong grade)	DF-3
	2. Ring gear or drive pinion (Worn or chipped)	DF-20
	3. Backlash adjustment (Defective)	DF-20
	4. Preload adjustment (Defective)	DF-20
	5. Tooth contact between ring gear and drive pinion (Defective)	DF-34
	6. Bearing (Worn)	DF-20
Oil leak from rear differential	1. Oil (Level too high or wrong grade)	DF-3
	2. Side gear shaft oil seal (Worn or damaged)	DF-6
	3. Seal packing (Damaged)	DF-28

DF

REMOVAL

1. **DRAIN DIFFERENTIAL OIL**
2. **REMOVE REAR WHEEL**
3. **REMOVE TAILPIPE ASSEMBLY**
   (a) Remove the tailpipe (see page EX-2).
4. **REMOVE CENTER EXHAUST PIPE ASSEMBLY**
   (a) Remove the center pipe (see page EX-2).
5. **REMOVE PROPELLER WITH CENTER BEARING SHAFT ASSEMBLY (See page PR-3)**
6. **REMOVE REAR SUSPENSION MEMBER BRACE LH**
   (a) Remove the 2 bolts and brace from the suspension member.

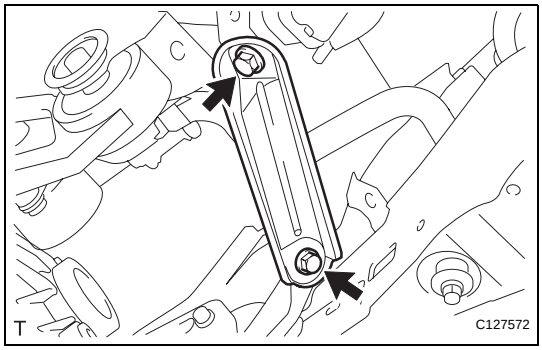

7. **REMOVE REAR SUSPENSION MEMBER BRACE RH**
   HINT:
   Use the same procedures described for the LH side.
8. **REMOVE REAR DIFFERENTIAL CARRIER SUB-ASSEMBLY**
   (a) Disconnect the harness clamp.
   (b) Remove the breather tube.
   (c) Disconnect the connector.

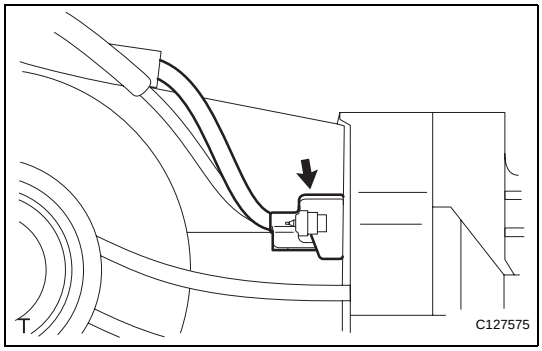

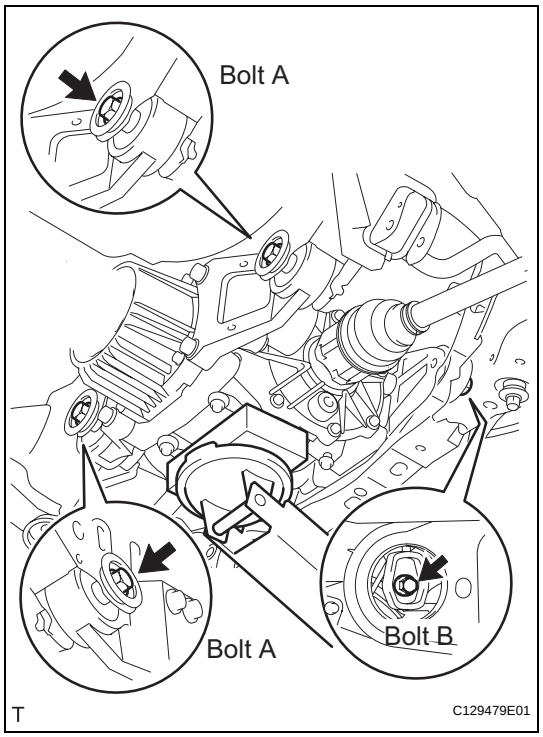

(d) Support the rear differential carrier with a transmission jack or equivalent.

(e) Fix the nuts in place and remove bolt A, bolt B and bolt C.
NOTICE:
Do not loosen the nuts. Loosen the bolts.

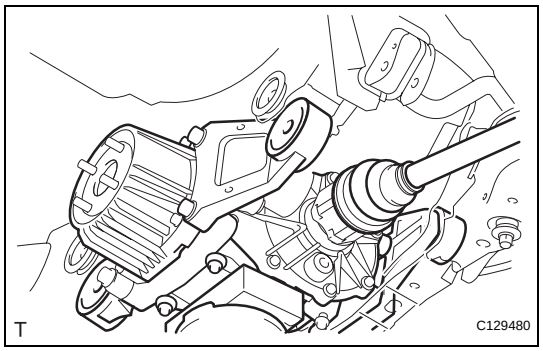

(f) Slowly lower the jack and then tilt the rear differential carrier.

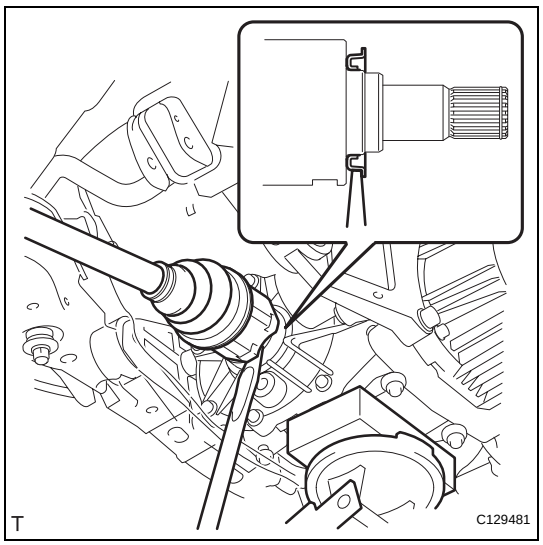

(g) Set the tip of the tire lever to the position on the rear drive shaft inboard joint shown in the illustration. Then, using the ribbed part of the rear differential carrier as a fulcrum, disconnect the left and right rear drive shafts.
NOTICE:
Do not scratch the rear drive shaft dust cover.

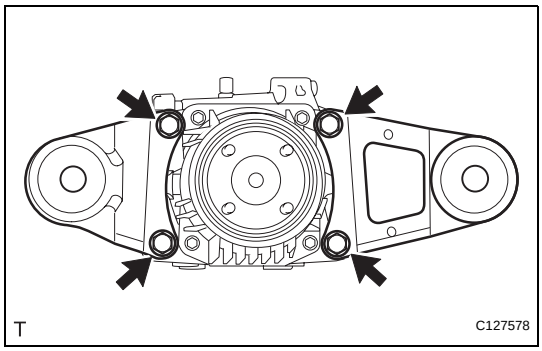

9. REMOVE REAR DIFFERENTIAL NO. 1 AND NO. 2 SUPPORT

(a) Remove the 4 bolts and differential No. 1 and No. 2 supports from the differential carrier.

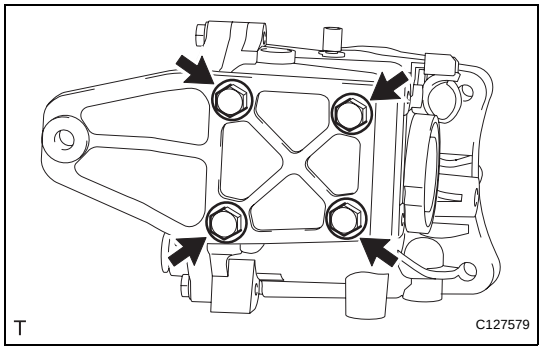

10. REMOVE REAR DIFFERENTIAL SUPPORT

(a) Remove the 4 bolts and differential support from the differential carrier.

DISASSEMBLY

1. FIX DIFFERENTIAL CARRIER SUB-ASSEMBLY

(a) Fix the rear differential carrier in place with the overhaul attachment.

2. REMOVE STUD BOLT

(a) Remove the 4 stud bolts from the transmission coupling.

3. REMOVE DIFFERENTIAL DRAIN PLUG

(a) Using a 10 mm socket hexagon wrench, remove the rear differential drain plug and gasket.

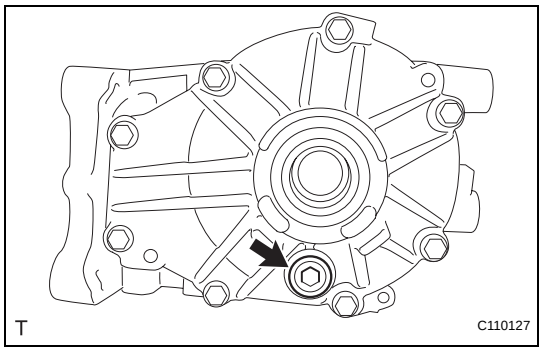

4. REMOVE DIFFERENTIAL FILLER PLUG

(a) Using a 10 mm socket hexagon wrench, remove the rear differential filler plug and gasket.

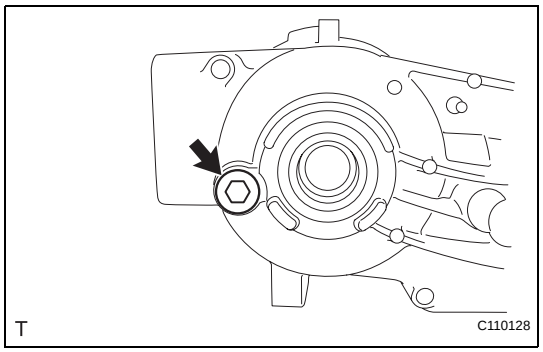

5. REMOVE DIFFERENTIAL CARRIER COVER PLUG

(a) Using an 8 mm socket hexagon wrench, remove rear differential carrier cover plug.

6. REMOVE DIFFERENTIAL CARRIER COVER BREATHER PLUG

(a) Using a chisel and hammer, slightly lift up the rear differential carrier cover breather plug.

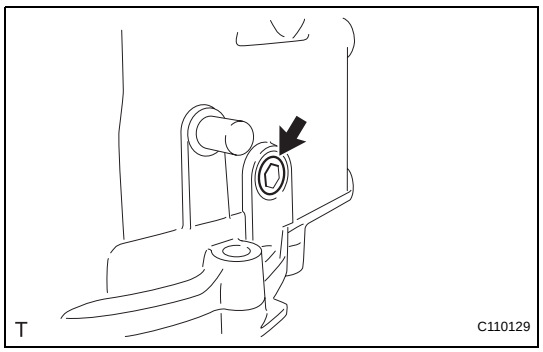

(b) Using a screwdriver, lightly pry up and remove the rear differential carrier cover breather plug.

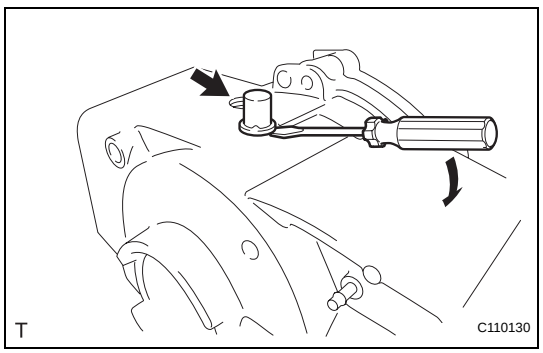

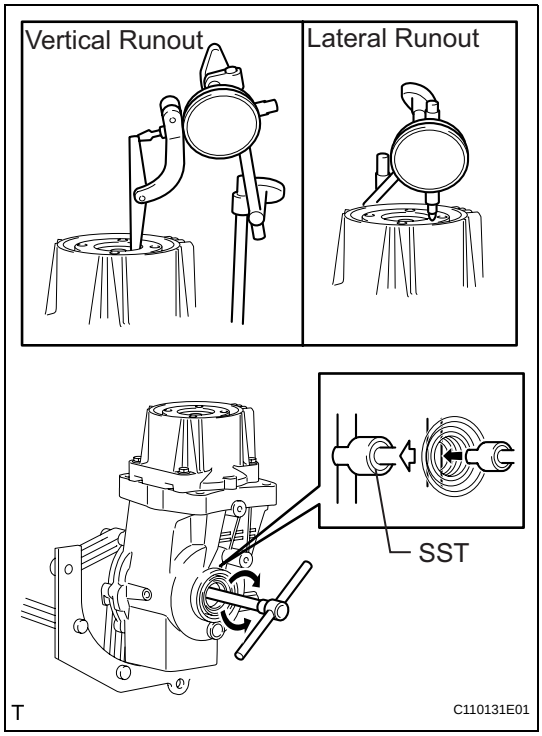

7. INSPECT RUNOUT OF TRANSMISSION COUPLING ASSEMBLY

(a) Install a dial gauge so that it is perpendicular to the inner side of the transmission coupling.

(b) Using SST, rotate the transmission coupling assembly forward and backward and measure the vertical runout.

SST 09564-32011

Maximum vertical runout :
0.06 mm (0.0024 in.)

(c) Install a dial gauge perpendicularly onto the transmission coupling assembly, as shown in the illustration.

(d) Using SST, rotate the transmission coupling assembly forward and backward and measure the lateral runout.

SST 09564-32011

Maximum lateral runout:
0.07 mm (0.0028)

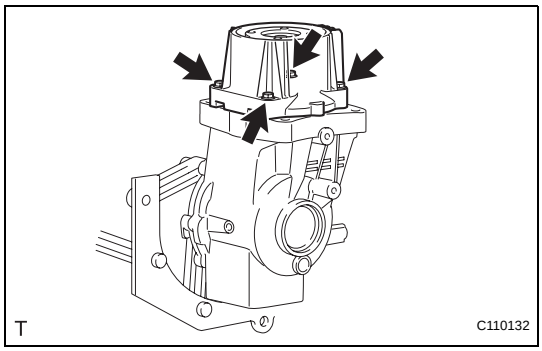

8. REMOVE ELECTROMAGNETIC COUPLING

(a) Remove the 4 bolts and, using a plastic-faced hammer, lightly tap the rear differential carrier cover to remove it from the rear differential carrier.

NOTICE:
Set the brass bar on the ribbed part of the rear differential carrier cover.

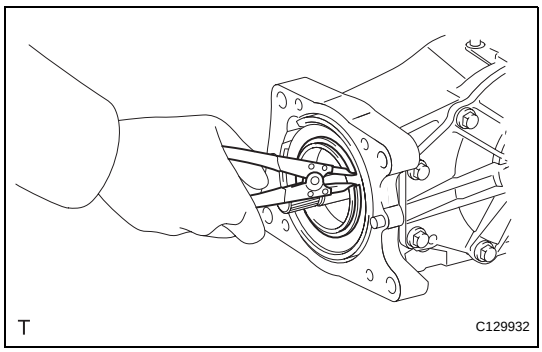

9. REMOVE 4WD LINEAR SOLENOID

(a) Using a snap ring expander, remove the snap ring.

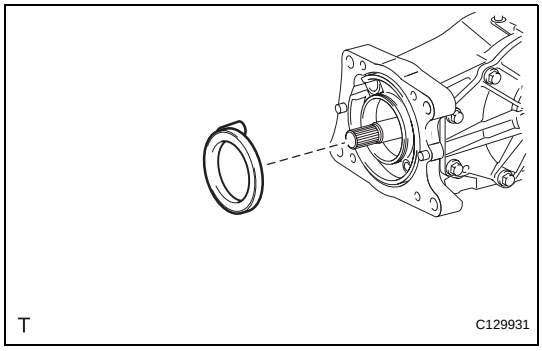

(b) Remove the solenoid from the yoke.

(c) Remove the O-ring from the solenoid.

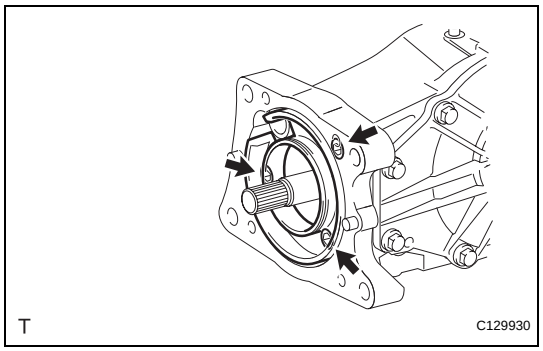

10. REMOVE YOKE

(a) Using a 5 mm socket hexagon wrench, remove the 3 bolts and yoke from the differential carrier.

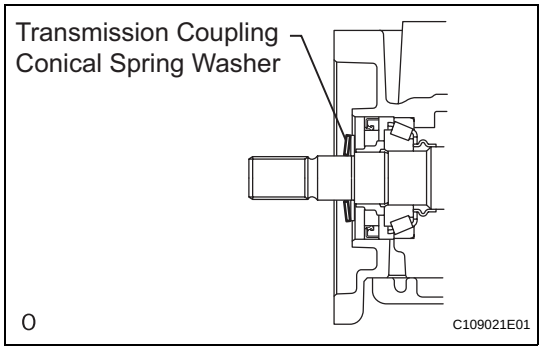

11. REMOVE TRANSMISSION COUPLING CONICAL SPRING WASHER

(a) Remove the spring washer from the differential carrier.

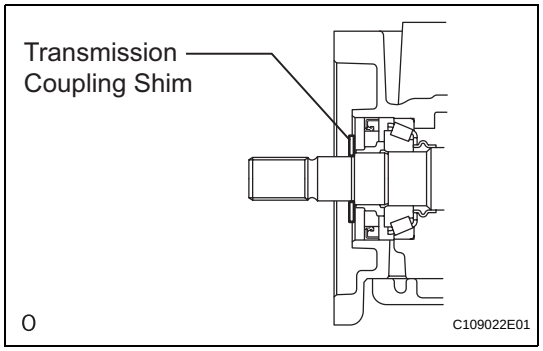

12. REMOVE TRANSMISSION COUPLING SHIM

(a) Remove the shim from the differential carrier.

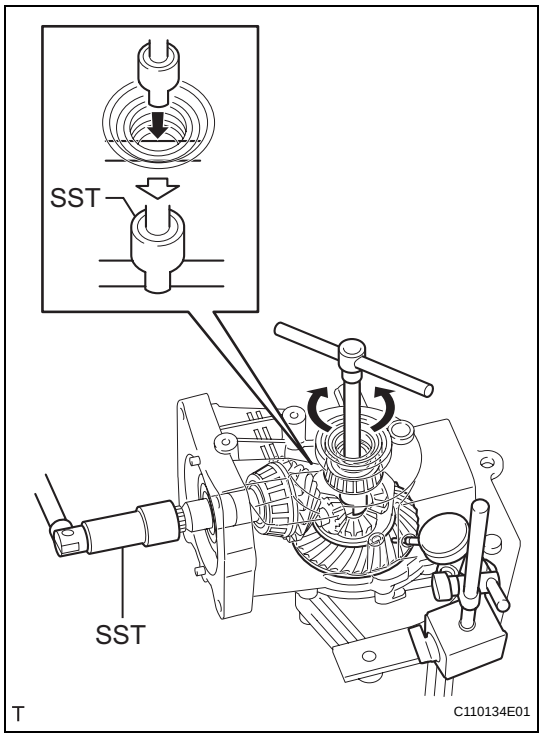

13. INSPECT DIFFERENTIAL RING GEAR BACKLASH

(a) Insert a dial gauge through the rear differential carrier cover plug hole, and set it perpendicular to the ring gear tooth surface's tip.

(b) Using SST, fix the drive pinion in place.
SST 09556-16011

(c) Using SST, rotate the rear differential case forward and backward, and measure the backlash.
SST 09564-32011
Standard backlash:
0.09 to 0.16 mm (0.0034 to 0.0063 in.)
NOTICE:
Measure at 3 or more areas around the circumference of the ring gear.

DF

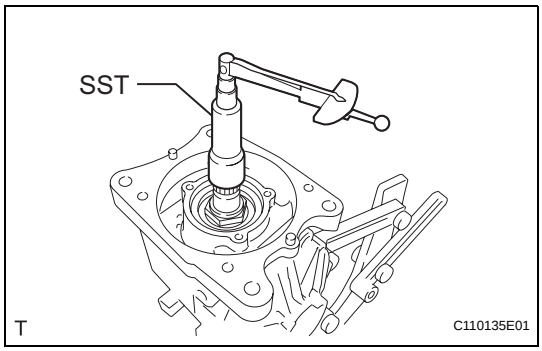

14. INSPECT DIFFERENTIAL DRIVE PINION PRELOAD

(a) Using SST and a torque wrench, inspect the preload (starting torque) within the differential drive pinion and differential ring gear backlash area.

SST 09556-16011

Standard drive pinion preload:

0.24 to 0.37 N*m (2 to 4 kgf*cm, 2 to 3 in.*lbf)

NOTICE:

For a more accurate measurement, rotate the case bearing forward and backward before measuring.

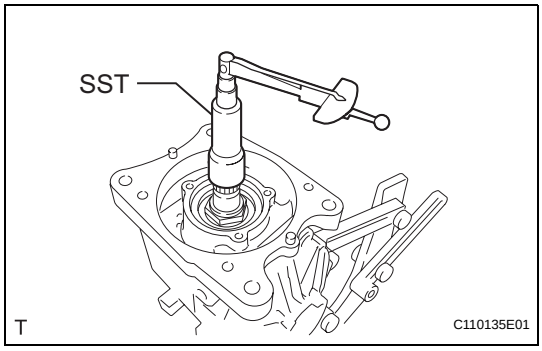

15. INSPECT TOTAL PRELOAD

(a) Using SST and a torque wrench, inspect the preload (starting torque) with the teeth of the differential drive pinion and differential ring gear in contact.

SST 09556-16011

Standard total preload:

Standard drive pinion preload plus 0.99 to 1.63 N*m (10 to 17 kgf*cm, 9 to 14 in.*lbf)

NOTICE:

For a more accurate measurement, rotate the case bearing forward and backward before measuring.

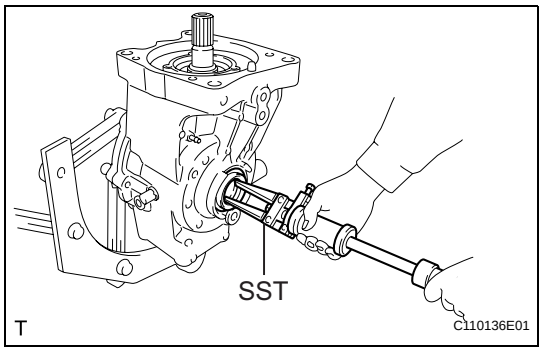

16. REMOVE DIFFERENTIAL SIDE GEAR SHAFT OIL SEAL

(a) Using SST, tap out the 2 rear differential side shaft gear oil seals from the rear differential carrier.

SST 09308-00010

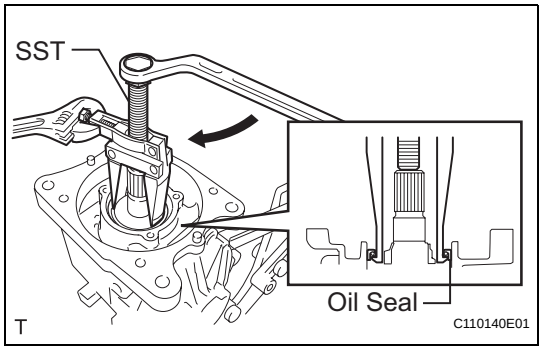

17. REMOVE DIAPHRAGM OIL SEAL

(a) Using SST, remove the diaphragm oil seal from the rear differential carrier.

SST 09308-10010

DF

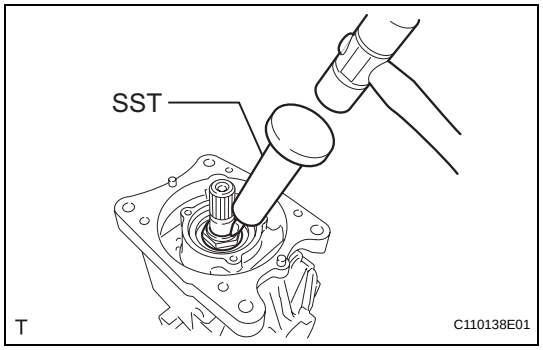

18. REMOVE DRIVE PINION NUT

(a) Using SST and a hammer, unstake the rear drive pinion nut.
SST 09930-00010
NOTICE:
- **Use SST with the tapered part against the shaft side.**
- **Do not modify the SST tip with a grinder or equivalent.**
- **Fully unstake the rear drive pinion nut**

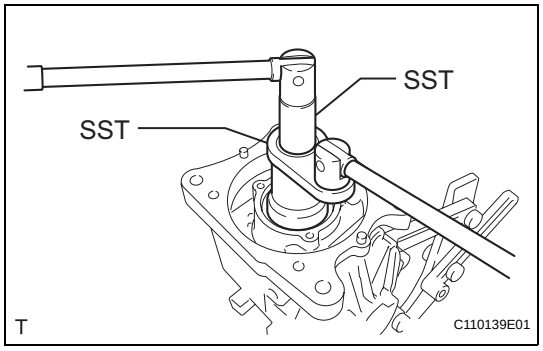

(b) Using SST, fix the differential drive pinion in place and remove the rear drive pinion nut from the differential drive pinion.
SST 09556-16011, 09564-16020

DF

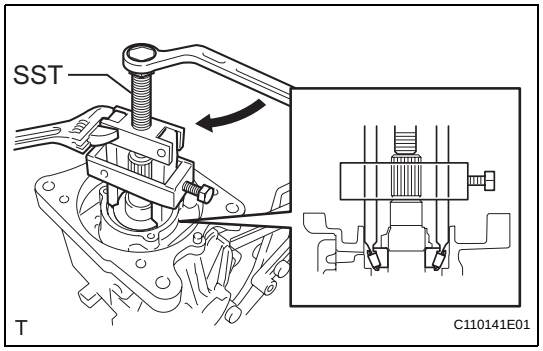

19. REMOVE REAR DRIVE PINION FRONT TAPERED ROLLER BEARING

(a) Using SST, remove the rear drive pinion tapered roller bearing front (inner race) from the rear differential carrier.
SST 09556-30010

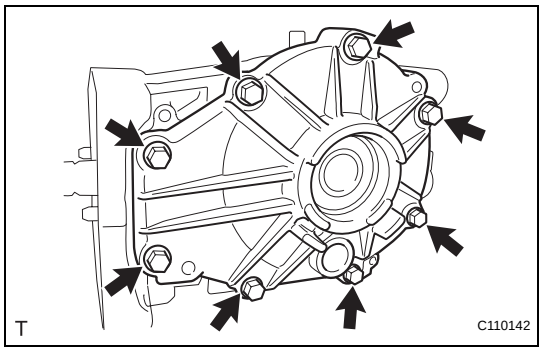

20. REMOVE DIFFERENTIAL SIDE BEARING RETAINER

(a) Remove the 8 bolts.

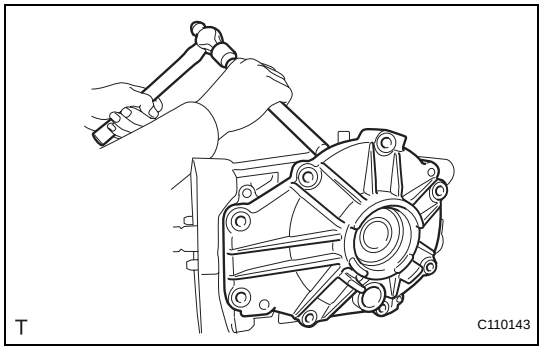

(b) Using a brass bar and hammer, lightly tap out the differential side bearing retainer.
NOTICE:
Set the brass bar on the ribbed part of the differential side bearing retainer.

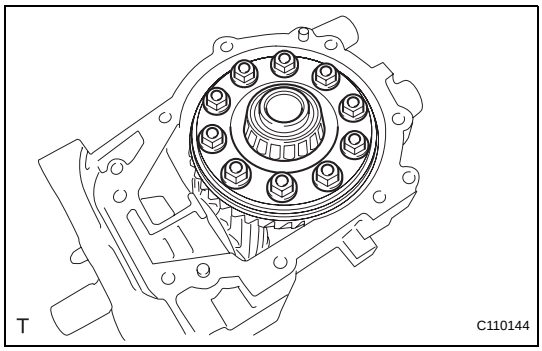

21. REMOVE DIFFERENTIAL CASE SUB-ASSEMBLY

(a) Remove the rear differential case from the rear differential carrier.

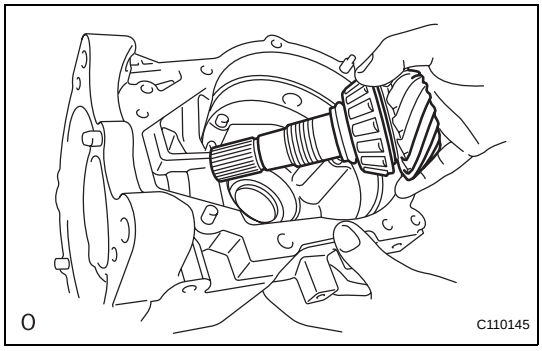

22. REMOVE DIFFERENTIAL DRIVE PINION

(a) Remove the differential drive pinion from the rear differential carrier.

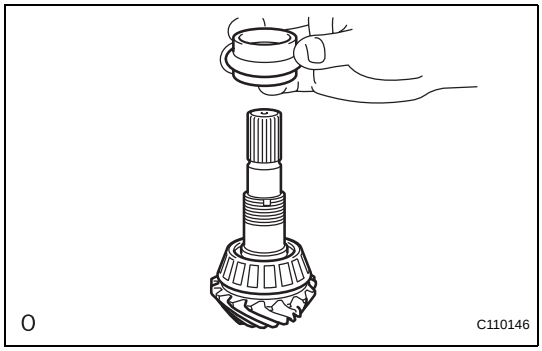

23. REMOVE DIFFERENTIAL DRIVE PINION BEARING SPACER

(a) Remove the rear differential drive pinion bearing spacer from the differential drive pinion.

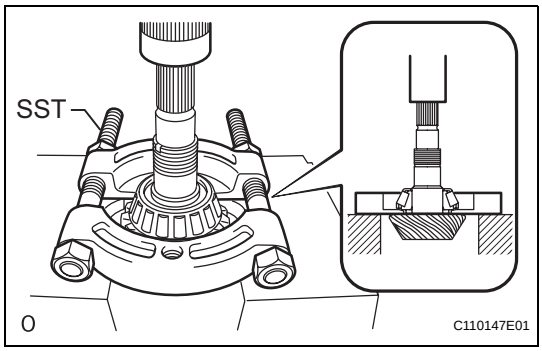

24. REMOVE REAR DRIVE PINION REAR TAPERED ROLLER BEARING

(a) Using SST and a press, press out the rear drive pinion tapered roller bearing rear (inner race) from the differential drive pinion.

SST 09950-00020

NOTICE:

If the rear differential drive pinion or differential ring gear is damaged, replace them both.

(b) Remove the rear differential drive pinion washer.

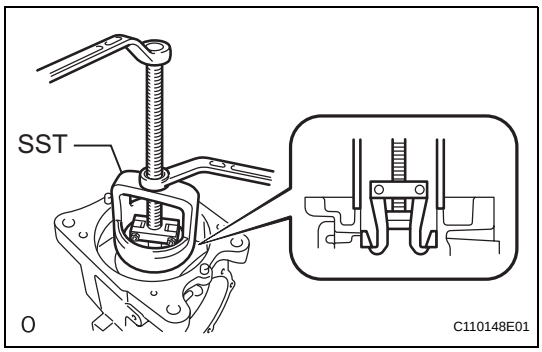

25. REMOVE REAR DRIVE PINION FRONT TAPERED ROLLER BEARING

(a) Using SST, remove the rear drive pinion tapered roller bearing front (outer race) from the rear differential carrier.

SST 09612-65014 (09612-01020, 09612-01050)

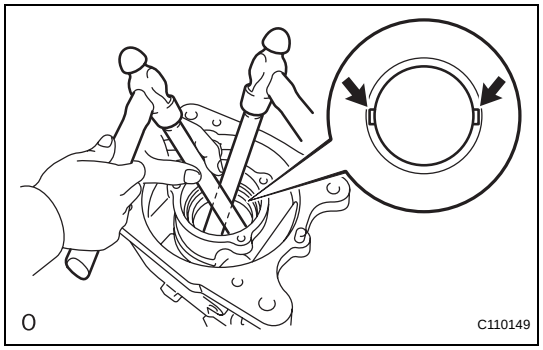

26. REMOVE REAR DRIVE PINION REAR TAPERED ROLLER BEARING

(a) Using a brass bar and hammer, lightly and uniformly tap out the rear drive pinion tapered roller bearing rear (outer race).

NOTICE:
Set the brass bar on the notch.

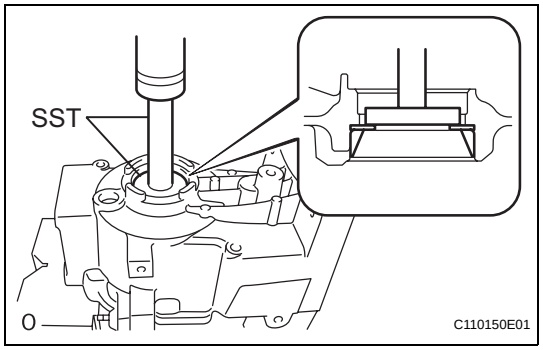

27. REMOVE DIFFERENTIAL CASE BEARING

SST 09950-60010 (09951-00460), 09950-70010 (09951-07100), 09649-17010 (09951-00510)

(a) Using SST and a press, press out the rear differential case bearing RH (outer race) and rear differential side gear shaft plate washer from the rear differential carrier.

SST 09950-60010, 09950-70010 (09951-07100)

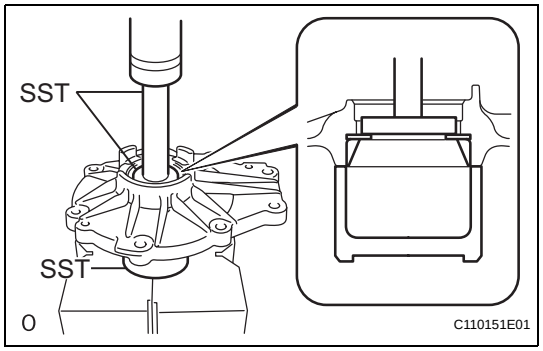

(b) Using SST and a press, press out the rear differential case bearing LH (outer race) and rear differential side gear shaft plate washer from the differential side bearing retainer.

SST 09950-60010 (09951-00460), 09950-70010 (09951-07100), 09649-17010

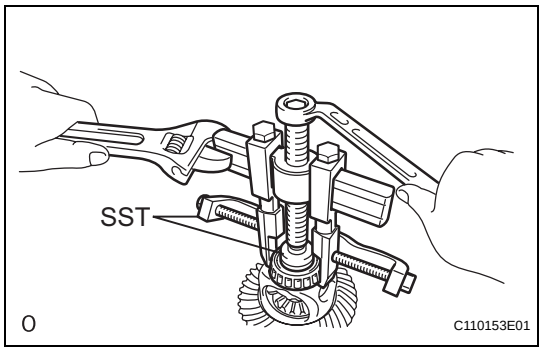

28. REMOVE DIFFERENTIAL CASE BEARING

(a) Using SST, remove the rear differential case bearing RH (inner race) from the rear differential case.

SST 09950-40011 (09951-04010, 09952-04010, 09953-04020, 09954-04010, 09955-04061, 09957-04010, 09958-04011), 09950-60010 (09951-00320, 09955-04071)

NOTICE:
Before using SST center bolt (09953-04020), apply hypoid gear oil to its threads and tip.

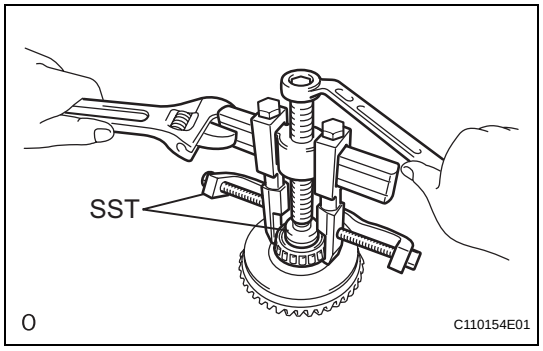

(b) Using SST, remove the rear differential case bearing LH (inner race) from the rear differential case.

SST 09950-40011 (09951-04010, 09952-04010, 09953-04020, 09954-04010, 09955-04071, 09957-04010, 09958-04011), 09950-60010 (09951-00320)

NOTICE:
Before using SST center bolt (09953-04020), apply hypoid gear oil to its threads and tip.

DF

HINT:
If the race is remains on the rear differential case, repeat the step above to remove the race.

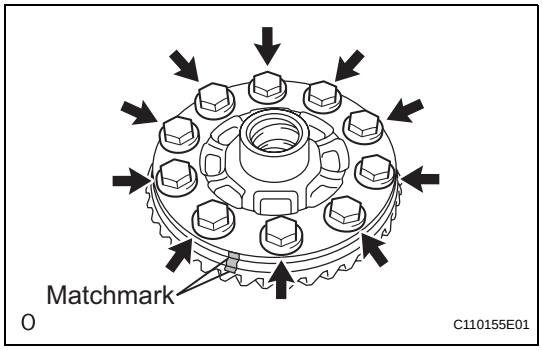

29. REMOVE DIFFERENTIAL RING GEAR

(a) Place matchmarks on the rear differential case and differential ring gear.
(b) Remove the 10 bolts.
(c) Using a plastic-faced hammer, lightly tap the outer circumference of the differential ring gear to remove it from the rear differential case.

DF

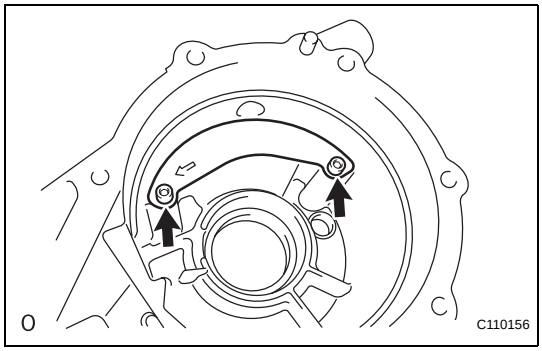

30. REMOVE DIFFERENTIAL BREATHER PLUG OIL DEFLECTOR

(a) Using a 5 mm socket hexagon wrench, remove the 2 bolts and rear differential breather plug oil deflector.

31. REMOVE STRAIGHT PIN

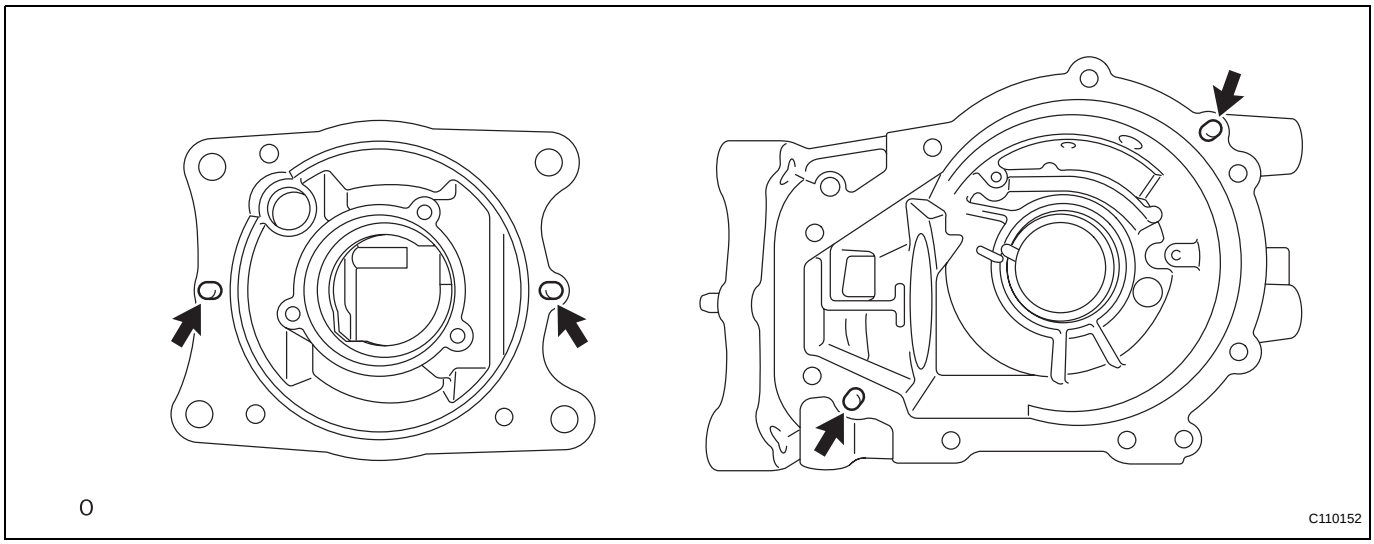

(a) Using pliers, remove the 4 straight pins from the rear differential carrier.

32. REMOVE ELBOW TUBE

33. REMOVE WIRING HARNESS CLAMP BRACKET

(a) Remove the bolt and bracket.

REASSEMBLY

1. INSTALL WIRING HARNESS CLAMP BRACKET

(a) Install the bracket with the bolt.

2. INSTALL ELBOW TUBE

3. INSTALL STRAIGHT PIN

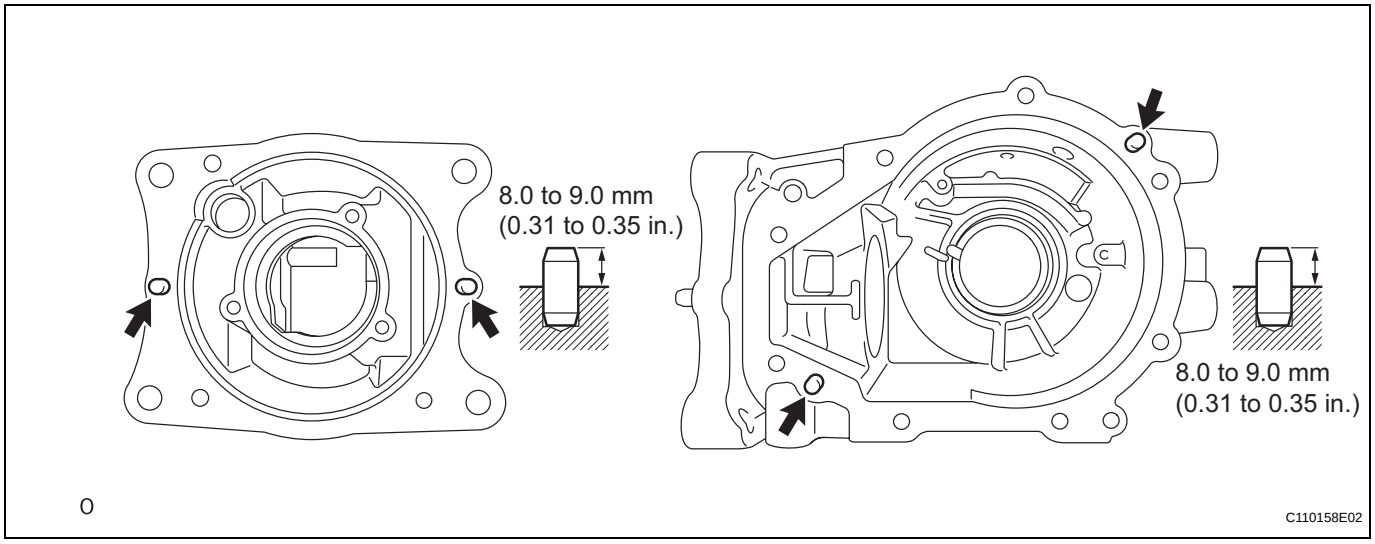

(a) Using a plastic hammer, install the 4 straight pins to the rear differential carrier.

(b) Thoroughly clean oil and water from the surface of the rear differential case that will face the differential ring gear.

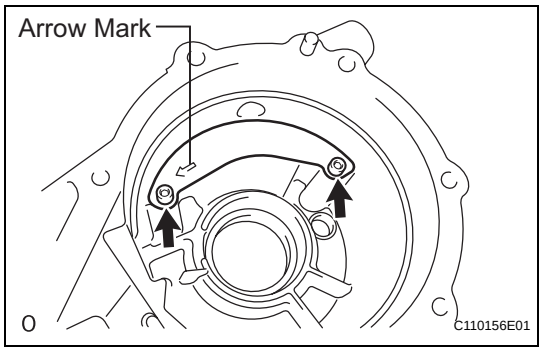

4. INSTALL DIFFERENTIAL BREATHER PLUG OIL DEFLECTOR

(a) Using a 5 mm socket hexagon wrench, install the rear differential breather plug oil deflector with the 2 bolts.

Torque: 5.0 N*m (51 kgf*cm, 44 in.*lbf)

NOTICE:

Install it so that the arrow mark faces the front (transmission coupling side) of the vehicle.

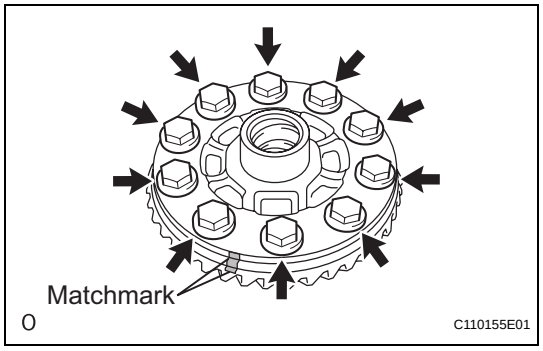

5. INSTALL DIFFERENTIAL RING GEAR

(a) Align the matchmarks on the rear differential case and differential ring gear, and install the differential ring gear.

(b) Install 10 new differential case bolts.

Torque: 90 N*m (918 kgf*cm, 66 ft.*lbf)

NOTICE:

- **The new bolts are coated with heat resistant oil. Do not wash it off.**
- **Install the rear differential case bolts by tightening diametrically opposite bolts uniformly in several passes.**

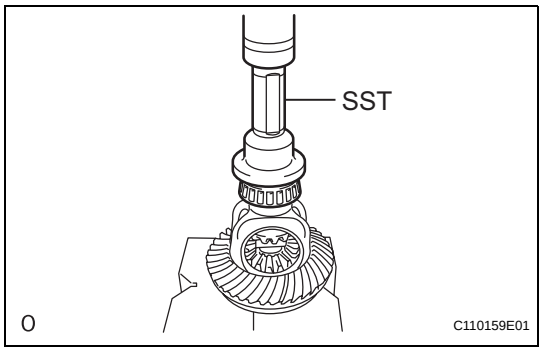

6. INSTALL DIFFERENTIAL CASE BEARING

(a) Using SST and a press, press-fit the rear differential case bearing RH (inner race) to the rear differential case.

SST 09223-50010

NOTICE:

If the rear differential case bearing inner race is damaged, replace it with a new one.

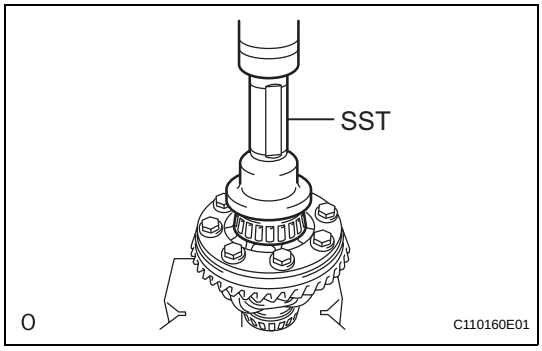

(b) Using SST and a press, press-fit the rear differential case bearing LH (inner race) to the rear differential case.

SST 09223-50010

NOTICE:

If the rear differential case bearing inner race is damaged, replace it with a new one.

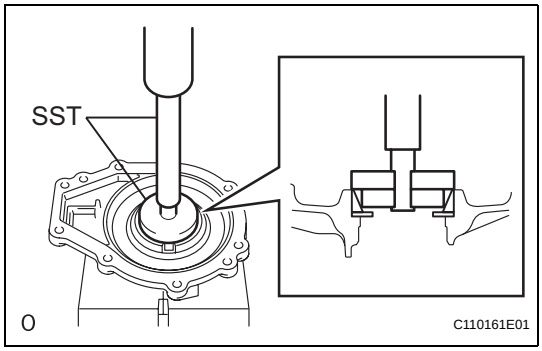

7. INSTALL DIFFERENTIAL CASE BEARING

(a) Using SST and a press, press-fit the rear differential side gear shaft washer and rear differential case bearing LH (outer race) to the differential side bearing retainer.

SST 09950-60010 (09951-00510, 09951-00620, 09952-06010), 09950-70010 (09951-07150)

NOTICE:

- **Install each rear differential side gear shaft washer to the place it was removed from.**
- **When replacing a bearing, replace the inner and outer races as a set.**
- **Install the rear differential side gear shaft oil seal after performing the teeth contact inspection and backlash adjustment.**

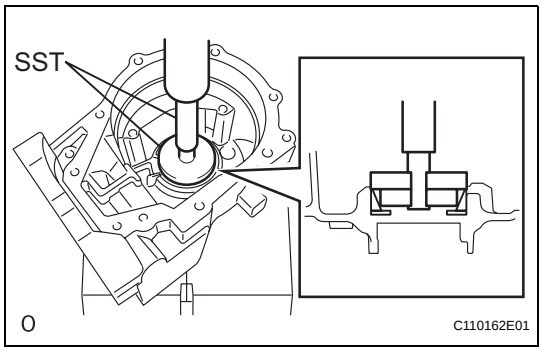

(b) Using SST and a press, press-fit the rear differential side gear shaft washer and rear differential case bearing RH (outer race) to the rear differential carrier.

SST 09950-60010 (09951-00510, 09951-00620, 09952-06010), 09950-70010 (09951-07150)

NOTICE:

- **Install each rear differential side gear shaft washer to the place it was removed from.**
- **When replacing a bearing, replace the inner and outer races as a set.**
- **Install the rear differential side gear shaft oil seal after performing the teeth contact inspection and backlash adjustment.**

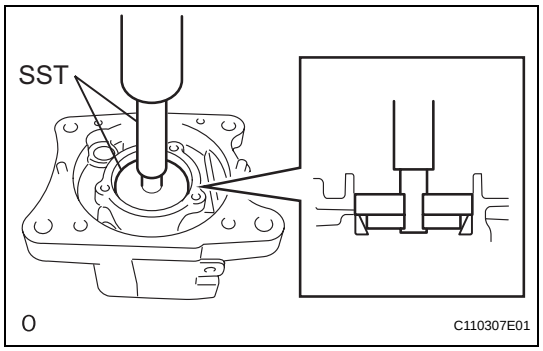

8. INSTALL REAR DRIVE PINION FRONT TAPERED ROLLER BEARING

(a) Using SST and a press, press-fit the rear drive pinion tapered roller bearing front (outer race) to the rear differential carrier.

SST 09950-60010 (09951-00550), 09950-60020 (09951-00680), 09950-70010 (09951-07100)

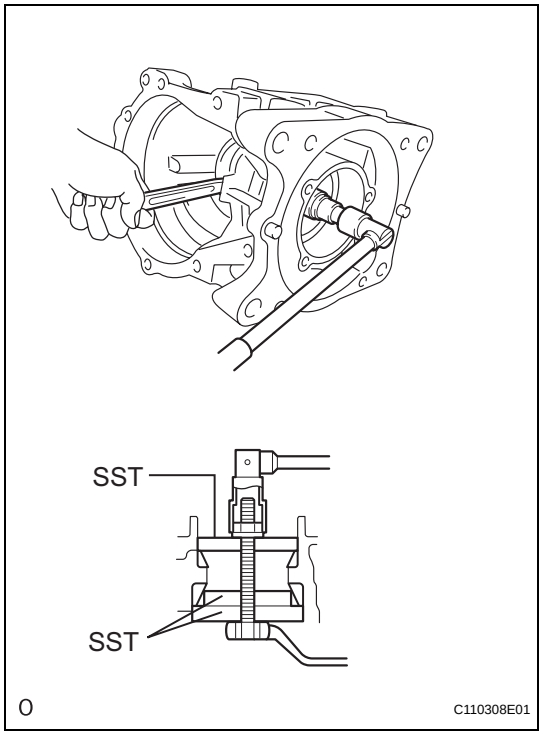

9. INSTALL REAR DRIVE PINION REAR TAPERED ROLLER BEARING

(a) Using SST, bolts, nuts and washers, install the rear drive pinion tapered roller bearing rear (outer race) to the rear differential carrier.

SST 09950-60010 (09951-00600), 09950-60020 (09951-00680, 09951-00750)

HINT:

Use M12 x P1.25 bolts with shaft lengths of 186 mm (part No. 90101-12159) and M12 x P1.25 nuts (part No. 90179-12051) for the installation.

10. INSTALL REAR DRIVE PINION REAR TAPERED ROLLER BEARING

(a) Install the rear differential drive pinion washer to the differential drive pinion.

NOTICE:

Install each rear differential drive pinion washer to the place it was removed from.

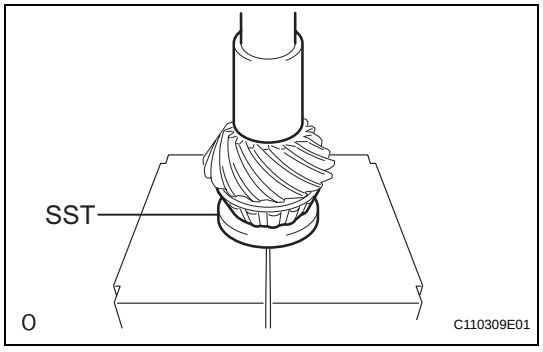

(b) Using SST and a press, press-fit the tapered roller rear (inner race) to the differential drive pinion.

SST 09506-30012

11. ADJUST DIFFERENTIAL DRIVE PINION PRELOAD

(a) Install the differential drive pinion (with rear drive pinion tapered roller bearing rear inner race) to the rear differential carrier.

(b) Install the rear drive pinion tapered roller bearing front inner race and a new rear drive pinion nut to the differential drive pinion.

NOTICE:

- **New bearings are coated with anti-rust oil. If using new bearings, do not wash it off.**
- **If reusing a bearing, coat it with hypoid gear oil SX.**

DF

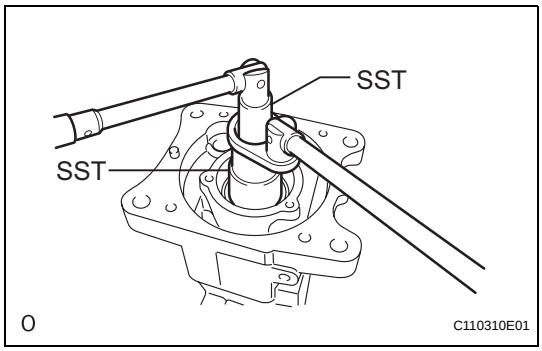

(c) Using SST, tighten a new rear drive pinion nut a little at a time until the specified preload is reached. Do not exceed the torque limit shown below.
SST 09556-16011, 09564-16020
Torque: 245 N*m (2,500 kgf*cm, 181 ft.*lbf) for use without SST
223 N*m (2,273 kgf*cm, 164 in.*lbf) for use with SST
HINT:
Use a torque wrench with a fulcrum length of 30 cm (11.81 in.)

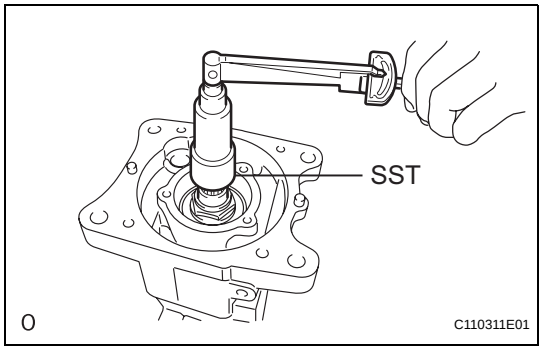

(d) Using SST and a torque wrench, measure the starting torque of the differential drive pinion.
SST 09556-16011
Standard drive pinion preload (start torque)

Bearing	Preload
New bearing	1.31 to 2.18 N*m (13 to 22 kgf*cm, 12 to 19 in.*lbf)
Reused bearing	0.24 to 0.37 N*m (2 to 4 kgf*cm, 2 to 3 in.*lbf)

NOTICE:
- **For a more accurate measurement, rotate the bearing forward and backward before inspecting.**
- **Record the preload measurement for use with the total preload inspection.**

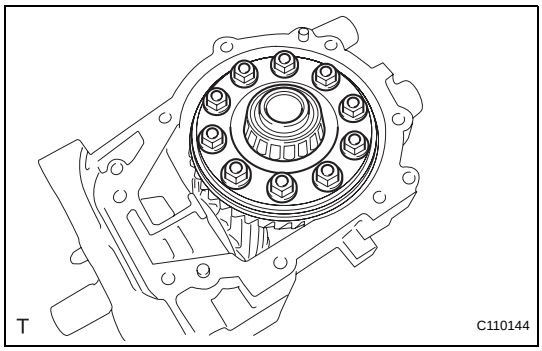

12. INSTALL DIFFERENTIAL CASE

(a) Install the rear differential case to the rear differential carrier.

13. INSTALL DIFFERENTIAL SIDE BEARING RETAINER

(a) Using a scraper and wire brush, clean the seal packing from the rear differential carrier and differential side bearing retainer.
NOTICE:
Do not scratch the installation area.

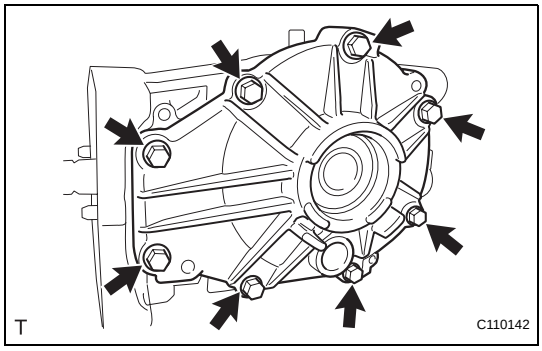

(b) Install the differential side bearing retainer to the rear differential carrier with the 8 bolts.
Torque: 34 N*m (350 kgf*cm, 25 ft.*lbf)

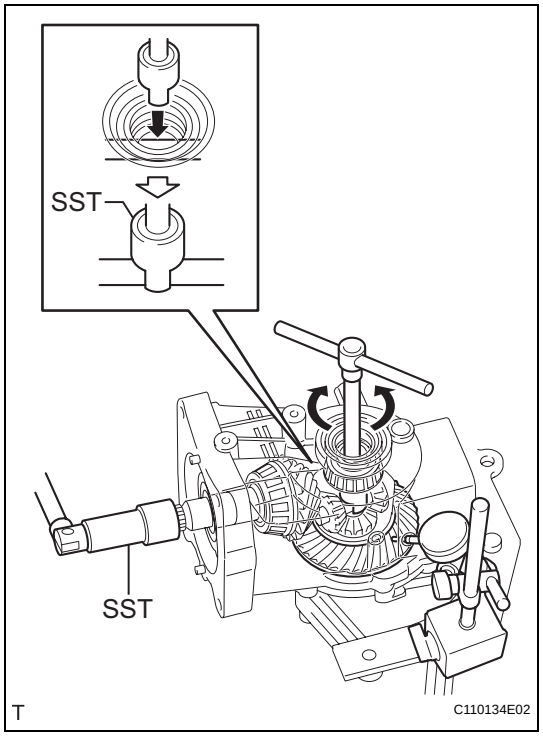

14. ADJUST DIFFERENTIAL RING GEAR BACKLASH

(a) Insert a dial gauge through the rear differential carrier cover plug hole, and set it perpendicular to the ring gear tooth surface's tip.

(b) Using SST, fix the drive pinion in place.
SST 09556-16011

(c) Using SST, rotate the rear differential case forward and backward, and measure the backlash.
SST 09564-16020
NOTICE:
Measure at 3 or more areas around the circumference of the ring gear.

(d) If the result is not within the specified range, select washers that are thicker or thinner as necessary, where the thickness for the left and right side is the same. Then perform the rear differential case bearing outer race installation.
HINT:
- If the backlash is small, select a thick washer for the RH side and a thin washer for the LH side.
- If the backlash is large, select a thin washer for the RH side and a thick washer for the LH side.

DF

Rear differential side gear shaft washer

Part No.	Thickness mm (in.)	Identifying Mark	Part No.	Thickness mm (in.)	Identifying Mark
90564-37022	1.59 to 1.61 (0.0625 to 0.0633)	A0	90564-37040	2.13 to 2.15 (0.0839 to 0.0846)	B8
90564-37023	1.62 to 1.64 (0.0637 to 0.0649)	A1	90564-37041	2.16 to 2.18 (0.0850 to 0.0858)	B9
90564-37024	1.65 to 1.67 (0.0650 to 0.0657)	A2	90564-37042	2.19 to 2.21 (0.0862 to 0.0870)	C0
90564-37025	1.68 to 1.70 (0.0661 to 0.0669)	A3	90564-37043	2.22 to 2.24 (0.0874 to 0.0882)	C1
90564-37026	1.71 to 1.73 (0.0673 to 0.0681)	A4	90564-37044	2.25 to 2.27 (0.0886 to 0.0894)	C2
90564-37027	1.74 to 1.76 (0.0685 to 0.0693)	A5	90564-37045	2.28 to 2.30 (0.0898 to 0.0906)	C3
90564-37028	1.77 to 1.79 (0.0697 to 0.0705)	A6	90564-37046	2.31 to 2.33 (0.0909 to 0.0917)	C4
90564-37029	1.80 to 1.82 (0.0709 to 0.0717)	A7	90564-37047	2.34 to 2.36 (0.0921 to 0.0929)	C5
90564-37030	1.83 to 1.85 (0.0720 to 0.0728)	A8	90564-37048	2.37 to 2.39 (0.0930 to 0.0941)	C6
90564-37031	1.86 to 1.88 (0.0732 to 0.0740)	A9	90564-37049	2.40 to 2.42 (0.0945 to 0.0953)	C7
90564-37032	1.89 to 1.91 (0.0744 to 0.0752)	B0	90564-37050	2.43 to 2.45 (0.0957 to 0.0965)	C8
90564-37033	1.92 to 1.94 (0.0756 to 0.0764)	B1	90564-37051	2.46 to 2.48 (0.0969 to 0.0976)	C9
90564-37034	1.95 to 1.97 (0.0768 to 0.0776)	B2	90564-37052	2.49 to 2.51 (0.0980 to 0.0988)	D0
90564-37035	1.98 to 2.00 (0.0780 to 0.0787)	B3	90564-37053	2.52 to 2.54 (0.0992 to 0.1000)	D1
90564-37036	2.02 to 2.04 (0.0795 to 0.0803)	B4	90564-37054	2.55 to 2.57 (0.1004 to 0.1012)	D2
90564-37037	2.04 to 2.06 (0.0803 to 0.0811)	B5	90564-37055	2.58 to 2.60 (0.1016 to 0.1024)	D3

Part No.	Thickness mm (in.)	Identifying Mark	Part No.	Thickness mm (in.)	Identifying Mark
90564-37038	2.07 to 2.09 (0.0815 to 823)	B6	90564-37056	2.61 to 2.63 (1.1028 to 0.1035)	D4
90564-37039	2.10 to 2.12 (0.0827 to 0.0835)	B7	90564-37057	2.64 to 2.66 (0.1039 to 0.1047)	D5

15. INSPECT TOOTH CONTACT BETWEEN RING GEAR AND DRIVE PINION

(a) Remove the 8 bolts and differential side bearing retainer from the rear differential carrier.
(b) Remove the rear differential carrier case.
(c) Uniformly apply a light coat of prussian blue on both sides of the differential ring gear teeth.
(d) Install the rear differential case.
(e) Temporarily install the differential side bearing retainer to the differential carrier with the 8 bolts.
(f) Rotate the differential side pinion several times.
(g) Remove the 8 bolts and rear differential side bearing retainer from the differential carrier.
(h) Check the tooth contact pattern of the differential drive pinion and differential ring gear.

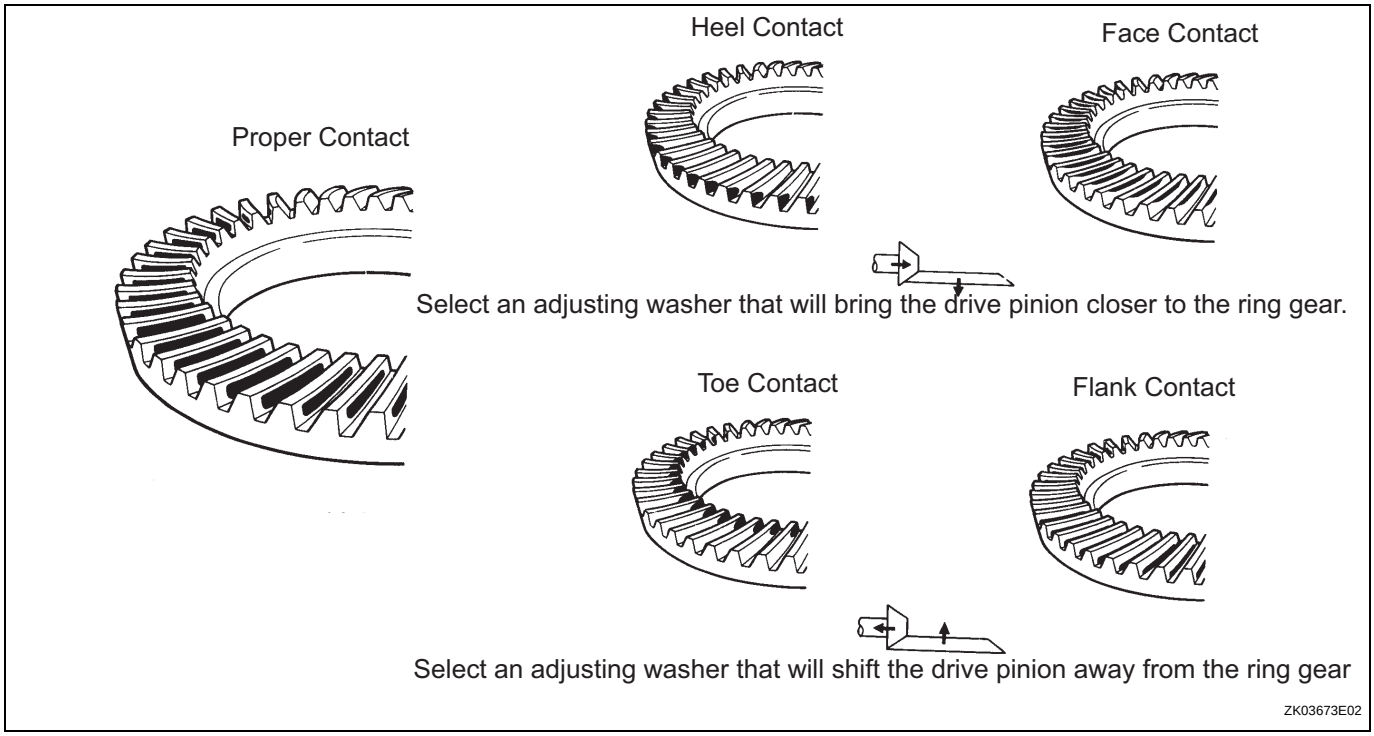

NOTICE:
Check the tooth contact pattern at 2 or more positions around circumference of the differential ring gear.

(i) Perform the following procedures for face or flank contact.
  (1) Select washers that are thicker or thinner as necessary, where the thickness for the left and right side is the same. Then install the rear differential case bearing outer race.(*1)

(2) Repeat the differential ring gear and differential drive pinion tooth contact pattern inspection.
HINT:
If the tooth contact pattern is not correct, repeat*1.

(3) Repeat the differential ring gear and differential drive pinion backlash inspection.
HINT:
If the differential ring gear and differential drive pinion backlash is not as specified, replace the differential ring gear and differential drive pinion with new ones.

(j) Perform the following procedures for heel or toe contact.

(1) Select a drive pinion washer again and perform the rear drive pinion tapered roller bearing rear installation.

Rear differential drive pinion washer

Part No.	Thickness (mm)	Identifying Mark	Part No.	Thickness (mm)	Identifying Mark
90564-35041	1.695 to 1.705 (0.0667 to 0.0671)	41	90564-35071	1.955 to 1.965 (0.0770 to 0.0774)	71
90564-35042	1.705 to 1.715 (0.0671 to 0.0675)	42	90564-35072	1.965 to 1.975 (0.0774 to 0.0778)	72
90564-35043	1.715 to 1.725 (0.0675 to 0.0679)	43	90564-35073	1.975 to 1.985 (0.0778 to 0.0781)	73
90564-35044	1.725 to 1.735 (0.0679 to 0.0683)	44	90564-35074	1.985 to 1.995 (0.0781 to 0.0785)	74
90564-35045	1.735 to 1.745 (0.0683 to 0.0687)	45	90564-35075	1.995 to 2.005 (0.0785 to 0.0789)	75
90564-35046	1.745 to 1.755 (0.0687 to 0.0690)	46	90564-35076	2.005 to 2.015 (0.0789 to 0.0793)	76
90564-35047	1.755 to 1.765 (0.0690 to 0.0695)	47	90564-35077	2.015 to 2.025 (0.0793 to 0.0797)	77
90564-35048	1.765 to 1.775 (0.0695 to 0.0699)	48	90564-35078	2.025 to 2.035 (0.0797 to 0.0801)	78
90564-35049	1.775 to 1.785 (0.0699 to 0.0703)	49	90564-35079	2.035 to 2.045 (0.0801 to 0.0805)	79
90564-35050	1.785 to 1.795 (0.0703 to 0.0707)	50	90564-35080	2.045 to 2.055 (0.0805 to 0.0809)	80
90564-35051	1.795 to 1.805 (0.0707 to 0.0711)	51	90564-35081	2.055 to 2.065 (0.0809 to 0.0813)	81
90564-35052	1.805 to 1.815 (0.0707 to 0.0715)	52	90564-35082	2.065 to 2.075 (0.0813 to 0.0817)	82
90564-35053	1.815 to 1.825 (0.0715 to 0.0719)	53	90564-35083	2.075 to 2.085 (0.0817 to 0.0821)	83
90564-35054	1.825 to 1.835 (0.0719 to 0.0720)	54	90564-35084	2.085 to 2.095 (0.0821 to 0.0825)	84
90564-35055	1.835 to 1.845 (0.0719 to 0.0726)	55	90564-35085	2.095 to 2.105 (0.0825 to 0.0829)	85
90564-35056	1.845 to 1.855 (0.0726 to 0.0730)	56	90564-35086	2.105 to 2.115 (0.0829 to 0.0833)	86
90564-35057	1.855 to 1.865 (0.0730 to 0.0734)	57	90564-35087	2.115 to 2.125 (0.0833 to 0.0837)	87
90564-35058	1.865 to 1.875 (0.0734 to 0.0738)	58	90564-35088	2.125 to 2.135 (0.0837 to 0.0841)	88
90564-35059	1.875 to 1.885 (0.0734 to 0.0742)	59	90564-35089	2.135 to 2.145 (0.0841 to 0.0844)	89

Part No.	Thickness (mm)	Identifying Mark	Part No.	Thickness (mm)	Identifying Mark
90564-35060	1.885 to 1.895 (0.0742 to 0.0746)	60	90564-35090	2.145 to 2.155 (0.0844 to 0.0848)	90
90564-35061	1.895 to 1.905 (0.0746 to 0.0750)	61	90564-35091	2.155 to 2.165 (0.0848 to 0.0852)	91
90564-35062	1.905 to 1.915 (0.0750 to 0.0754)	62	90564-35092	2.165 to 2.175 (0.0852 to 0.0856)	92
90564-35063	1.915 to 1.925 (0.0754 to 0.0758)	63	90564-35093	2.175 to 2.185 (0.0856 to 0.0860)	93
90564-35064	1.925 to 1.935 (0.0758 to 0.0762	64	90564-35094	2.185 to 2.195 (0.0860 to 0.0864)	94
90564-35065	1.935 to 1.945 (0.0762 to 0.0766)	65	90564-35095	2.195 to 2.205 (0.0864 to 0.0868)	95
90564-35070	1.945 to 1.955 (0.0766 to 0.0770)	70	-	-	-

DF

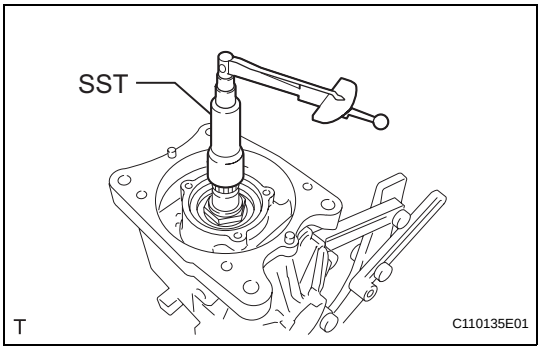

16. INSPECT TOTAL PRELOAD

(a) Using SST and a torque wrench, measure the starting torque with the teeth of the differential drive pinion and differential ring gear in contact.

SST 09556-16011

Standard total preload:

Standard drive pinion preload plus

Bearing	Preload
New bearing	1.18 to 1.63 N*m (12 to 17 kgf*cm, 10 to 14 in.*lbf)
Reused bearing	0.99 to 1.63 N*m (10 to 17 kgf*cm, 9 to 14 in.*lbf)

NOTICE:

For a more accurate measurement, rotate the case bearing forward and backward before measuring.

(b) If the results are not within the specification, perform the procedures below.

(1) Select a side gear shaft washer for the RH side again, and then perform the rear differential case bearing outer race installation (RH side only).

(2) Repeat the total preload inspection.

(3) Repeat the ring gear backlash inspection.

(4) Repeat the differential ring gear and drive pinion tooth contact pattern inspection.

17. REMOVE DIFFERENTIAL SIDE BEARING RETAINER

(a) Remove the 8 bolts and differential side bearing retainer from the rear differential carrier.

18. REMOVE DIFFERENTIAL CASE

(a) Remove the rear differential case from the rear differential carrier.

19. REMOVE DIFFERENTIAL DRIVE PINION

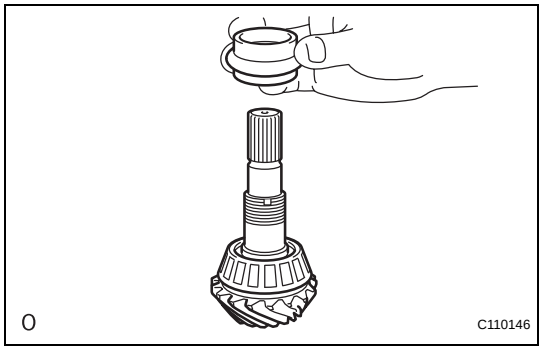

20. INSTALL DIFFERENTIAL DRIVE PINION BEARING SPACER

(a) Install a new rear differential drive pinion bearing spacer to the differential drive pinion.

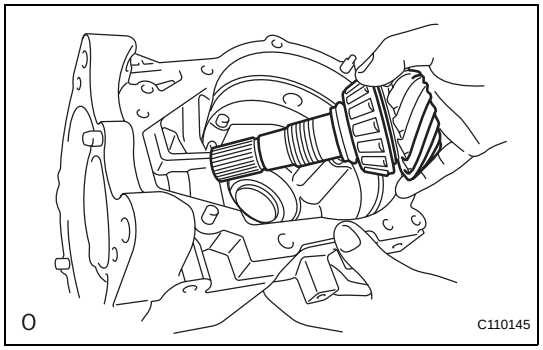

21. INSTALL DIFFERENTIAL DRIVE PINION

(a) Install the differential drive pinion to the rear differential carrier.

22. INSTALL REAR DRIVE PINION NUT

(a) Apply hypoid gear oil LSD to the threads of the rear drive pinion nut.

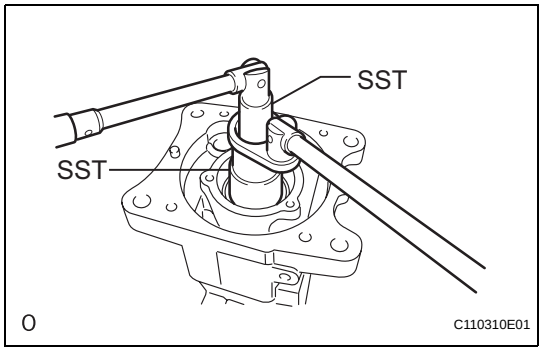

(b) Install a new rear drive pinion nut to the differential drive pinion. Using SST, tighten the nut while confirming the preload.

SST 09556-16011, 09564-16020
SST 09564-16020
Torque: 245 N*m (2,500 kgf*cm, 181 ft.*lbf) for use without SST
223 N*m (2,273 kgf*cm, 164 ft.*lbf) for use with SST

HINT:
Use a torque wrench with a fulcrum length of 30 cm (11.81 in.).

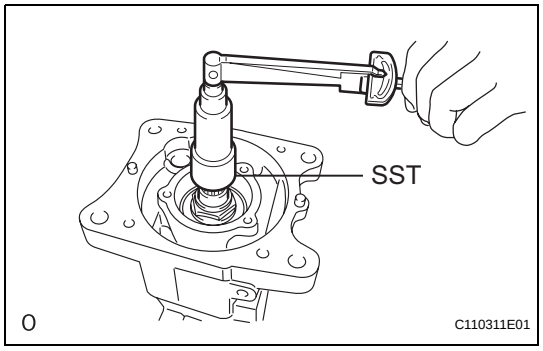

23. ADJUST DIFFERENTIAL DRIVE PINION PRELOAD

(a) Using SST and a torque wrench, inspect the starting torque.

SST 09556-16011
Standard drive pinion preload

Bearing	Preload
New bearing	1.31 to 2.18 N*m (13 to 22 kgf*cm, 12 to 19 in.*lbf)
Reused bearing	0.24 to 0.37 N*m (2 to 4 kgf*cm, 2 to 3 in.*lbf)

NOTICE:

- **For a more accurate measurement, rotate the bearing forward and backward before adjusting.**
- **Adjust it so that it matches the drive pinion temporary adjustment starting torque.**

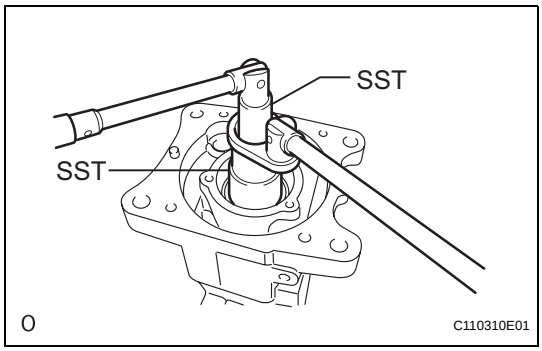

(b) If the preload is insufficient, use SST to tighten the drive pinion nut 5 to 10° at a time. Measure the starting torque and repeat the adjustment as necessary until the preload matches the specified torque.
SST 09564-16020

(c) If the tightening torque of the rear drive pinion nut exceeds 245 N*m { 2500 kgf*cm } but the preload is still insufficient, loosen the rear drive pinion nut. Then check if the rear drive pinion nut and differential drive pinion screw threads are damaged.

(d) If there is no defect, replace the rear drive differential drive pinion bearing spacer, apply hypoid gear oil LSD to its threads and repeat the procedure above.

DF

24. INSTALL DIFFERENTIAL CASE

25. INSTALL DIFFERENTIAL SIDE BEARING RETAINER

(a) Install the differential side bearing retainer to the rear differential carrier with the 8 bolts.
Torque: 34 N*m (350 kgf*cm, 25 ft.*lbf)

26. INSPECT DIFFERENTIAL RING GEAR BACKLASH

27. INSPECT TOTAL PRELOAD

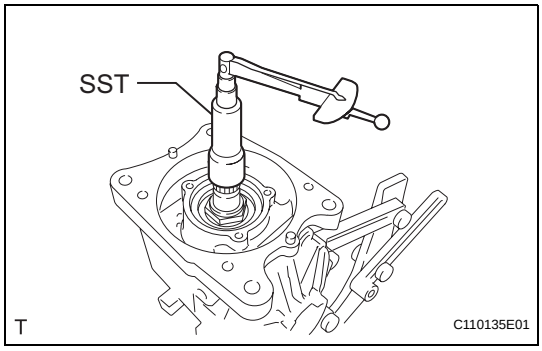

(a) Using SST and a torque wrench, measure the starting torque with the teeth of the differential drive pinion and differential ring gear in contact.
SST 09556-16011
Standard total preload:
Standard drive pinion preload plus

Bearing	Preload
New bearing	1.18 to 1.90 N*m (12 to 19 kgf*cm, 10 to 17 in.*lbf)
Reused bearing	0.99 to 1.63 N*m (10 to 17 kgf*cm, 9 to 14 in.*lbf)

NOTICE:
For a more accurate measurement, rotate the case bearing forward and backward before measuring.

(b) If the results are not within the specified range, select a rear differential side gear shaft washer for the RH side again, and then perform the rear differential case bearing outer race installation (RH side only).
NOTICE:
If using a different rear differential side gear shaft washer, adjust the ring gear backlash. Then adjust the total preload.

28. REMOVE DIFFERENTIAL SIDE BEARING RETAINER

(a) Remove the 8 bolts and side bearing retainer from the rear differential carrier.

29. INSTALL DIFFERENTIAL SIDE BEARING RETAINER

(a) Using white gasoline, remove grease and oil from the alignment surfaces of the rear differential carrier and differential side bearing retainer.

(b) Apply seal packing to the areas indicated in the illustration of the differential side bearing retainer.

Seal Packing:

Toyota Genuine Seal Packing 1281, Three Bond 1281 or equivalent

NOTICE:

- **Apply seal packing in a continuous line 2 to 3 mm (0.08 to 0.12 in.) in diameter.**
- **Perform the installation with 3 minutes of applying seal packing.**

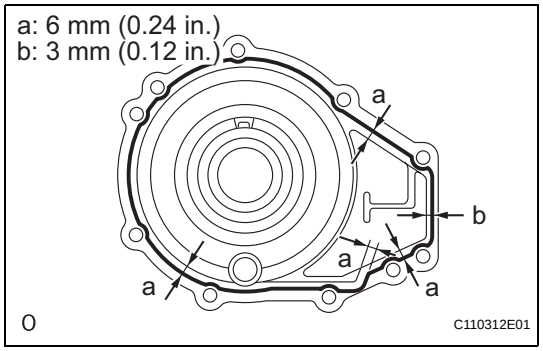

(c) Install the differential side bearing retainer to the rear differential carrier with the 8 bolts.

Torque: 34 N*m (350 kgf*cm, 25 ft.*lbf)

NOTICE:

After installing the cover, do not add oil or drive the vehicle, and leave it alone for 1 hour or more. Also, avoid sudden acceleration and deceleration for 12 hours or more.

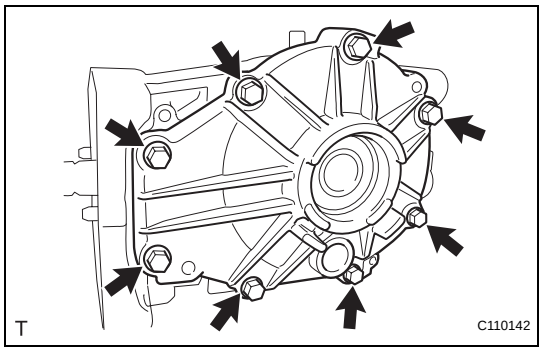

30. INSPECT TOTAL PRELOAD

(a) Using SST and a torque wrench, inspect the starting torque with the teeth of the differential drive pinion and differential ring gear in contact.

SST 09556-16011

Standard total preload:

Standard drive pinion preload plus

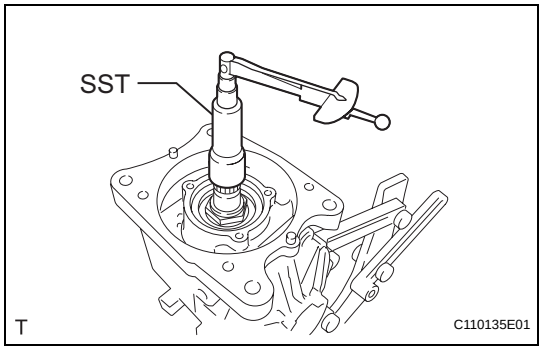

Bearing	Preload
New bearing	1.18 to 1.90 N*m (12 to 19 kgf*cm, 10 to 17 in.*lbf)
Reused bearing	0.99 to 1.63 N*m (10 to 17 kgf*cm, 9 to 14 in.*lbf)

NOTICE:

For a more accurate measurement, rotate the case bearing forward and backward before inspecting.

DF

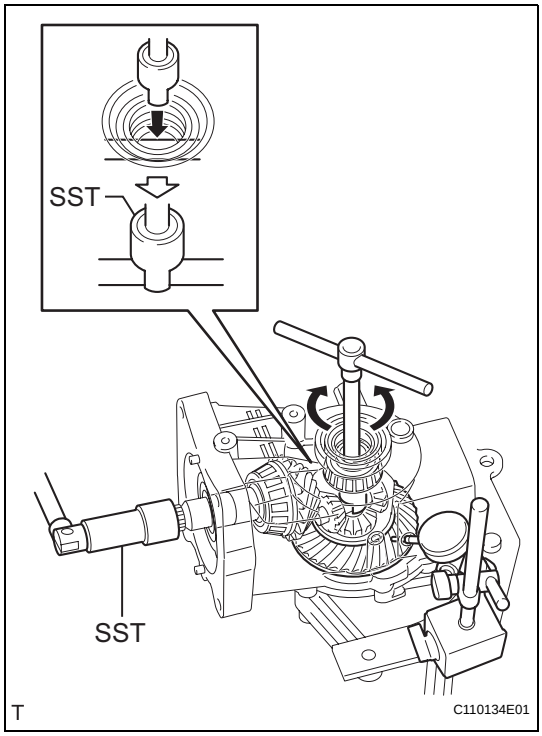

31. INSPECT DIFFERENTIAL RING GEAR BACKLASH

(a) Insert a dial gauge through the rear differential carrier cover plug hole, and set it perpendicular to the ring gear tooth surface's tip.

(b) Using SST, fix the drive pinion in place.
SST 09556-16011

(c) Using SST, rotate the rear differential case forward and backward, and inspect the backlash.
SST 09564-16020
Standard backlash:
0.09 to 0.16 mm (0.0004 to 0.006 in.)
NOTICE:
Inspect at 3 or more areas around the circumference of the ring gear.

32. INSTALL REAR DRIVE PINION NUT

(a) Using a chisel and hammer, stake the rear drive pinion nut.

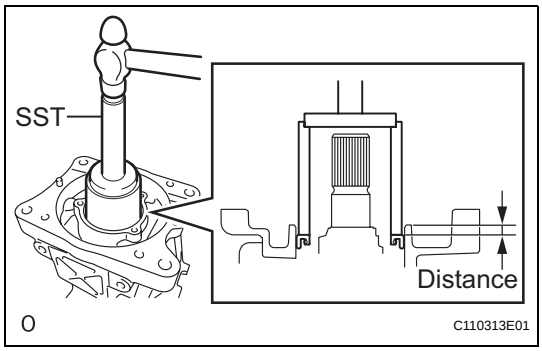

33. INSTALL DIAPHRAGM OIL SEAL

(a) Apply a light coat of MP grease No. 2 to the lip of a new diaphragm oil seal.

(b) Using SST and a hammer, tap the diaphragm oil seal into the rear differential carrier according to the specification.
SST 09710-30021 (09710-03121), 09950-60010 (09951-00570), 09950-70010 (09951-07100)
Standard distance:
7.0 +-0.5 mm (0.28 +-0.02 in.)

34. INSTALL DIFFERENTIAL SIDE GEAR SHAFT OIL SEAL

(a) Apply a light coat of MP grease No. 2 to the lip of a new rear differential side gear shaft oil seal.

(b) Using SST and a hammer, tap the 2 rear differential side gear shaft oil seals into the rear differential carrier and differential side bearing retainer according to the specification.
SST 09223-00010
Standard distance:
7.2 +-0.5 mm (0.28 +-0.02 in.)

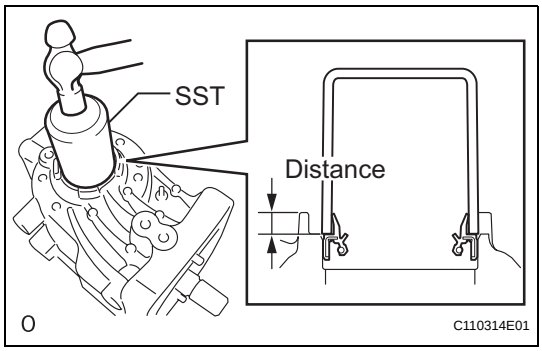

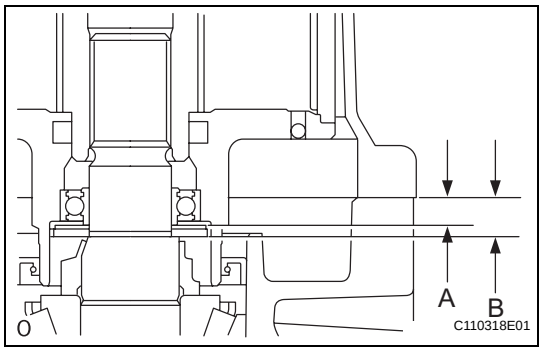

35. INSTALL TRANSMISSION COUPLING SHIM

(a) Measure each of the dimensions.
HINT:
- Dimension A: Bearing axis distance
- Dimension B: Drive pinion axis distance

(b) Select a transmission coupling shim based on the difference between dimensions A and B, and install the shim.

Transmission coupling shim

Difference of dimension A and B mm (in.)	Part No.	Thickness mm (in.)	Identifying Mark
3.96 to 4.01 (0.148 to 0.154)	90564-25024	1.98 to 2.02 (0.078 to 0.080)	1
4.26 to 4.31 (0.161 to 0.168)	90564-25025	2.28 to 2.32 (0.090 to 0.091)	2
4.56 to 4.61 (0.174 to 0.181)	90564-25026	2.58 to 2.62 (0.102 to 0.103)	3
3.81 to 3.86 (0.141 to 0.148)	90564-25027	1.83 to 1.87 (0.072 to 0.074)	4
4.11 to 4.16 (0.154 to 0.161)	90564-25028	2.13 to 2.17 (0.084 to 0.085)	5
4.41 to 4.16 (0.168 to 0.174)	90564-25029	2.43 to 2.47 (0.096 to 0.097)	6
3.71 to 3.76 (0.146 to 0.148)	90564-25031	1.73 to 1.77 (0.068 to 0.700)	8
3.76 to 3.81 (0.148 to 0.150)	90564-25032	1.78 to 1.82 (0.070 to 0.072)	9
3.86 to 3.91 (0.151 to 0.154)	90564-25033	1.88 to 1.92 (0.074 to 0.076)	10
3.91 to 3.96 (0.154 to 0.156)	90564-25034	1.93 to 1.97 (0.076 to 0.078)	11
4.01 to 4.06 (0.158 to 0.160)	90564-25035	2.03 to 2.07 (0.080 to 0.081)	12
4.06 to 4.11 (0.160 to 0.162)	90564-25036	2.08 to 2.12 (0.082 to 0.083)	13
4.16 to 4.21 (0.164 to 0.166)	90564-25037	2.18 to 2.22 (0.086 to 0.087)	14
4.21 to 4.26 (0.166 to 0.168)	90564-25038	2.23 to 2.27 (0.088 to 0.089)	15
4.31 to 4.36 (0.170 to 0.172)	90564-25039	2.33 to 2.37 (0.092 to 0.093)	16
4.36 to 4.41 (0.172 to 0.174)	90564-25040	2.38 to 2.42 (0.094 to 0.095)	17
4.46 to 4.51 (0.176 to 0.178)	90564-25041	2.48 to 2.52 (0.098 to 0.099)	18
4.51 to 4.56 (0.178 to 0.180)	90564-25042	2.53 to 2.57 (0.100 to 0.101)	19
4.61 to 4.66 (0.181 to 0.183)	90564-25043	2.63 to 2.67 (0.104 to 0.105)	20
4.66 to 4.71 (0.183 to 0.185)	90564-25044	2.68 to 2.72 (0.106 to 0.107)	21

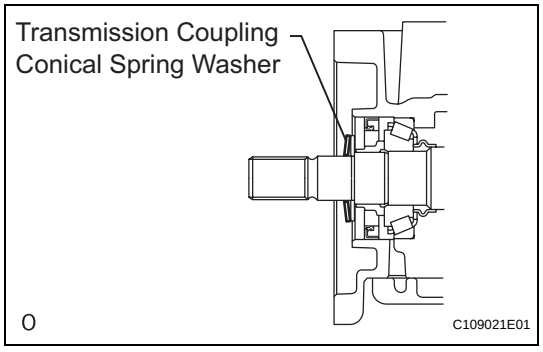

36. REMOVE TRANSMISSION COUPLING CONICAL SPRING WASHER

(a) Install the transmission coupling conical spring washer to the rear differential carrier.
NOTICE:
Install the transmission coupling conical spring washer so that the green marking (protruding part) is facing the front of the vehicle (coupling side).

37. INSTALL YOKE

(a) Using a 5 mm socket hexagon wrench, install the yoke with the 3 bolt.
Torque: 5.0 N*m (51 kgf*cm, 44 in.*lbf)

38. INSTALL 4WD LINEAR SOLENOID

(a) Install a new O-ring to the solenoid.
NOTICE:
Do not damage or twist the O-ring.

(b) Install the solenoid to the yoke.

DF

(c) Install the snap ring.

39. INSTALL ELECTROMAGNETIC COUPLING

(a) Using white gasoline, remove grease and oil from the alignment surfaces of the rear differential carrier and transmission coupling.

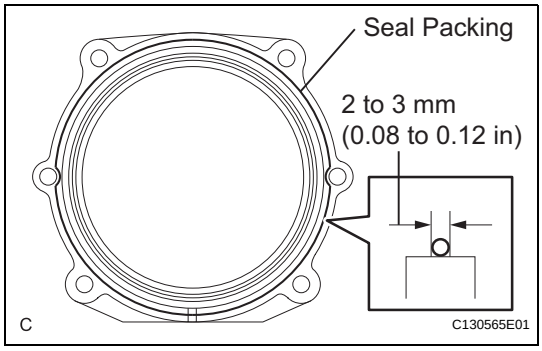

(b) Apply seal packing 1281 to the areas indicated in the illustration of the transmission coupling.
Seal Packing:
Toyota Genuine Seal Packing 1281, Three Bond 1281 or equivalent
NOTICE:
- **Apply seal packing 1281 in a continuous line 2 to 3 mm (0.08 to 0.12 in.) in diameter.**
- **Perform the installation with 3 minutes of applying seal packing 1281.**

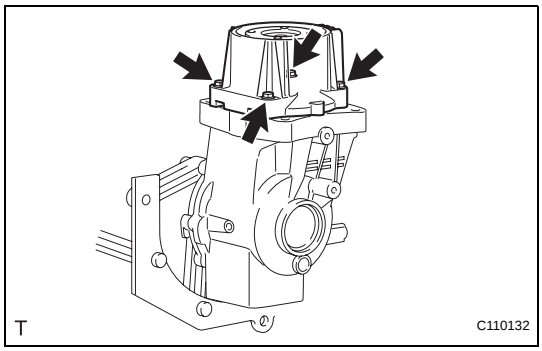

(c) Install the rear differential carrier cover to the rear differential carrier assembly with the 4 bolts.
Torque: 19.6 N*m (200 kgf*cm, 14 ft.*lbf)

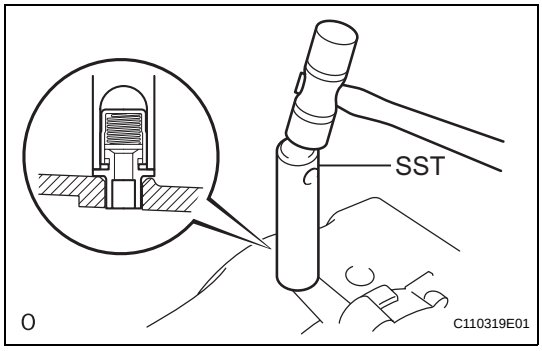

40. INSTALL DIFFERENTIAL CARRIER COVER BREATHER PLUG

(a) Using a plastic-faced hammer, tap in the breather plug.
SST 09612-07010 (09612-10061)

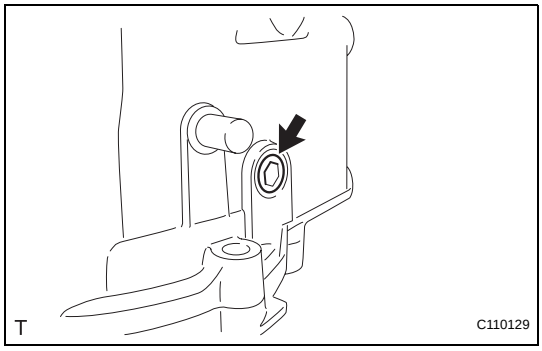

41. INSTALL DIFFERENTIAL CARRIER COVER PLUG

(a) Using an 8 mm socket hexagon wrench, install a new rear differential carrier cover plug.
Torque: 30 N*m (306 kgf*cm, 22 ft.*lbf)

DF

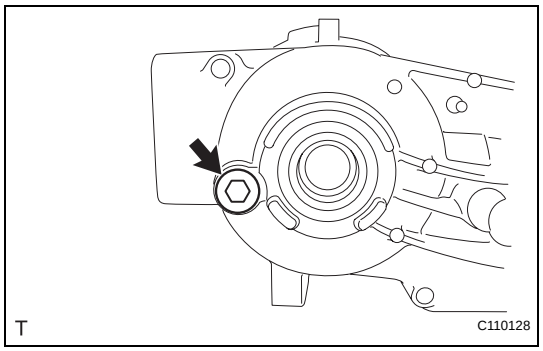

42. INSTALL DIFFERENTIAL FILLER PLUG

(a) Install a new gasket to the rear differential filler plug.

(b) Using a 10 mm socket hexagon wrench, install the rear differential filler plug.

Torque: 39 N*m (400 kgf*cm, 29 ft.*lbf)

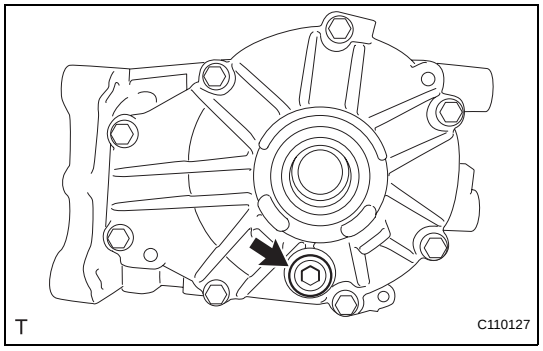

43. INSTALL DIFFERENTIAL DRAIN PLUG

(a) Install a new gasket to the rear differential drain plug.

(b) Using a 10 mm socket hexagon wrench, install the rear differential drain plug.

Torque: 39 N*m (400 kgf*cm, 29 ft.*lbf)

DF

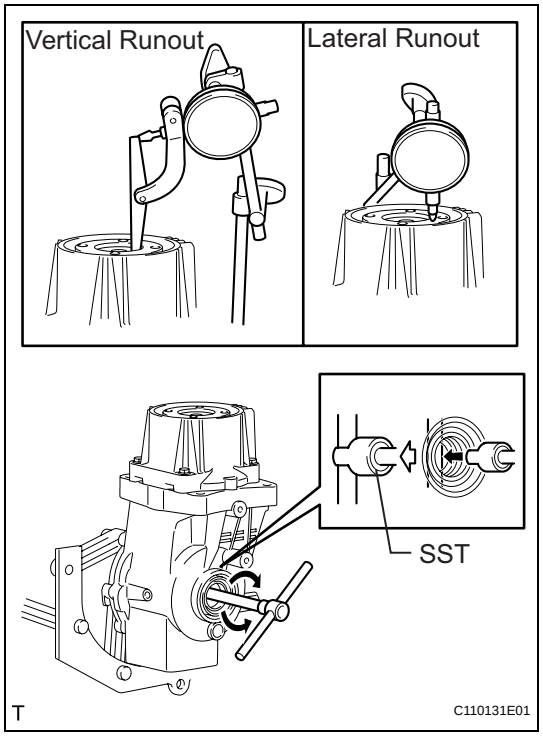

44. INSPECT RUNOUT OF TRANSMISSION COUPLING ASSEMBLY

(a) Install a dial gauge so that it is perpendicular to the inner side of the transmission coupling.

(b) Using SST, rotate the transmission coupling forward and backward and measure the vertical runout.

SST 09564-16020

Maximum vertical runout:
0.06 mm (0.0024 in.)

(c) Install a dial gauge perpendicularly onto the transmission coupling, as shown in the illustration.

(d) Using SST, rotate the transmission coupling forward and backward and measure the lateral runout.

SST 09564-16020

Maximum lateral runout:
0.07 mm (0.0028 in.)

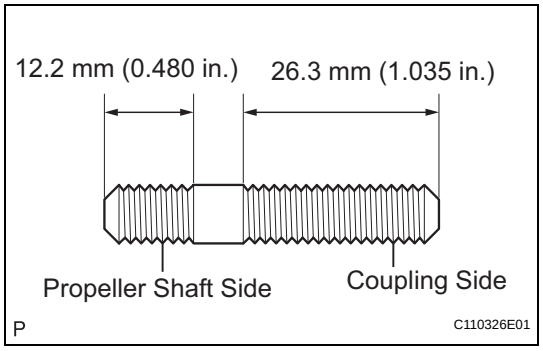

45. INSTALL STUD BOLT

(a) Install the differential support assembly rear with the 4 bolts.

Torque: 8 N*m (82 kgf*cm, 71 in.*lbf)

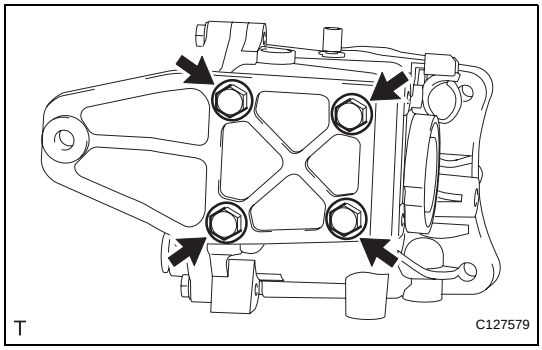

INSTALLATION

1. INSTALL REAR DIFFERENTIAL SUPPORT

(a) Install the differential support to the differential carrier with the 4 bolts.
Torque: 98 N*m (999 kgf*cm, 72 ft.*lbf)

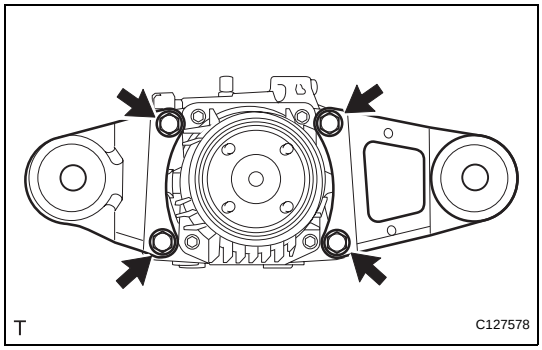

2. INSTALL REAR DIFFERENTIAL NO. 1 AND NO. 2 SUPPORT

(a) Install the differential No. 1 and No. 2 supports with the 4 bolts to the differential carrier.
Torque: 55 N*m (561 kgf*cm, 41 ft.*lbf)

3. INSTALL REAR DIFFERENTIAL CARRIER SUB-ASSEMBLY

(a) Support the rear differential carrier with a transmission jack or equivalent

(b) Apply hypoid gear oil to the splines of the left and right rear drive shaft inboard joints.

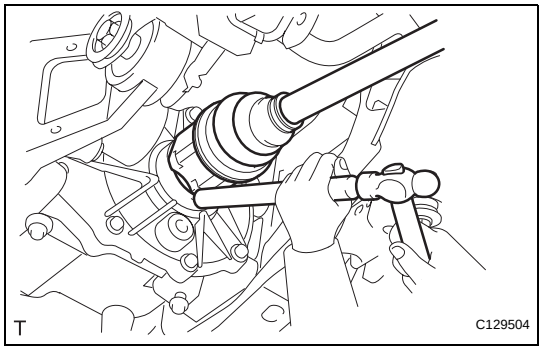

(c) Align the splines of the rear drive shaft inboard joints and, using a brass bar and hammer, tap in the left and right rear drive shafts.
NOTICE:
- **Face the cutout section of the snap ring downward.**
- **Do not damage the oil seal during the insertion.**
- **Do not strike the tip of the outboard joint with the hammer.**

HINT:
Determine whether or not the rear drive shaft is completely tapped in by checking for changes in sound or the reaction force of the brass bar.

DF

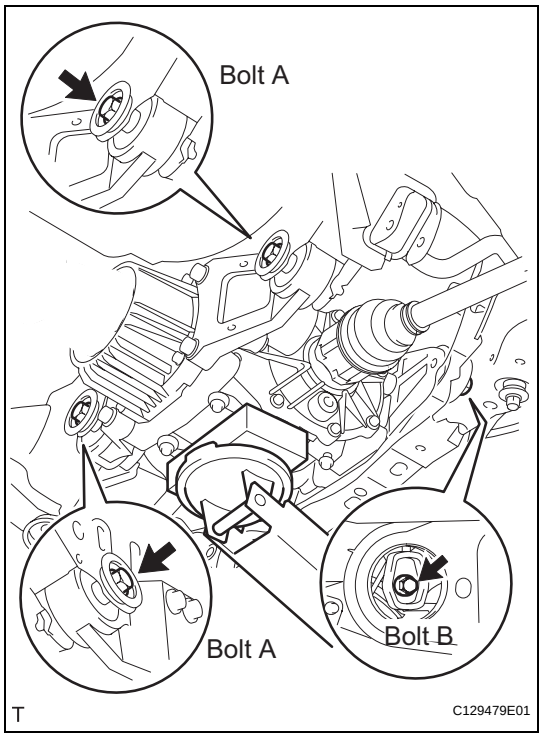

(d) Slowly raise the transmission jack, fix the nuts in place and install the 3 bolts.
Torque: 86 N*m (877 kgf*cm, 63 ft.*lbf) for bolt A
140 N*m (1,428 kgf*cm, 103 ft.*lbf) for bolt B
NOTICE:
Tighten the bolts, not the nuts.

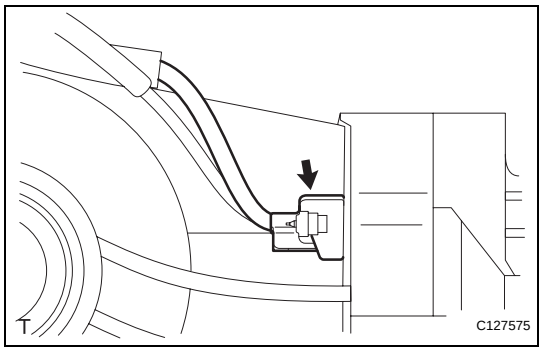

(e) Connect the connector.
(f) Install the breather tube.
(g) Connect the harness clamp.

4. **INSTALL REAR SUSPENSION MEMBER BRACE LH**
(a) Install the member brace to the suspension member with the 2 bolts.
Torque: 60 N*m (612 kgf*cm, 44 ft.*lbf)

5. **INSTALL REAR SUSPENSION MEMBER BRACE RH**
HINT:
Use the same procedures described for the LH side.

6. **TEMPORARILY INSTALL PROPELLER WITH CENTER BEARING SHAFT ASSEMBLY (See page PR-5)**

7. **TIGHTEN PROPELLER WITH CENTER BEARING SHAFT ASSEMBLY (See page PR-6)**

8. **INSPECT JOINT ANGLE (See page PR-4)**

9. **INSTALL CENTER EXHAUST PIPE ASSEMBLY (See page EX-5)**

10. **INSTALL TAILPIPE ASSEMBLY (See page EX-6)**

11. **INSTALL REAR WHEEL**
Torque: 103 N*m (1,050 kgf*cm, 76 ft.*lbf)

12. **ADD DIFFERENTIAL OIL**
(a) Add differential oil (see page DF-3).

13. **CHECK FOR DIFFERENTIAL OIL LEAKAGE**

14. **CHECK FOR EXHAUST GAS LEAKAGE**
If gas is leaking, tighten the areas necessary to stop the leak. Replace damaged parts as necessary.

REAR DIFFERENTIAL CARRIER ASSEMBLY

COMPONENTS

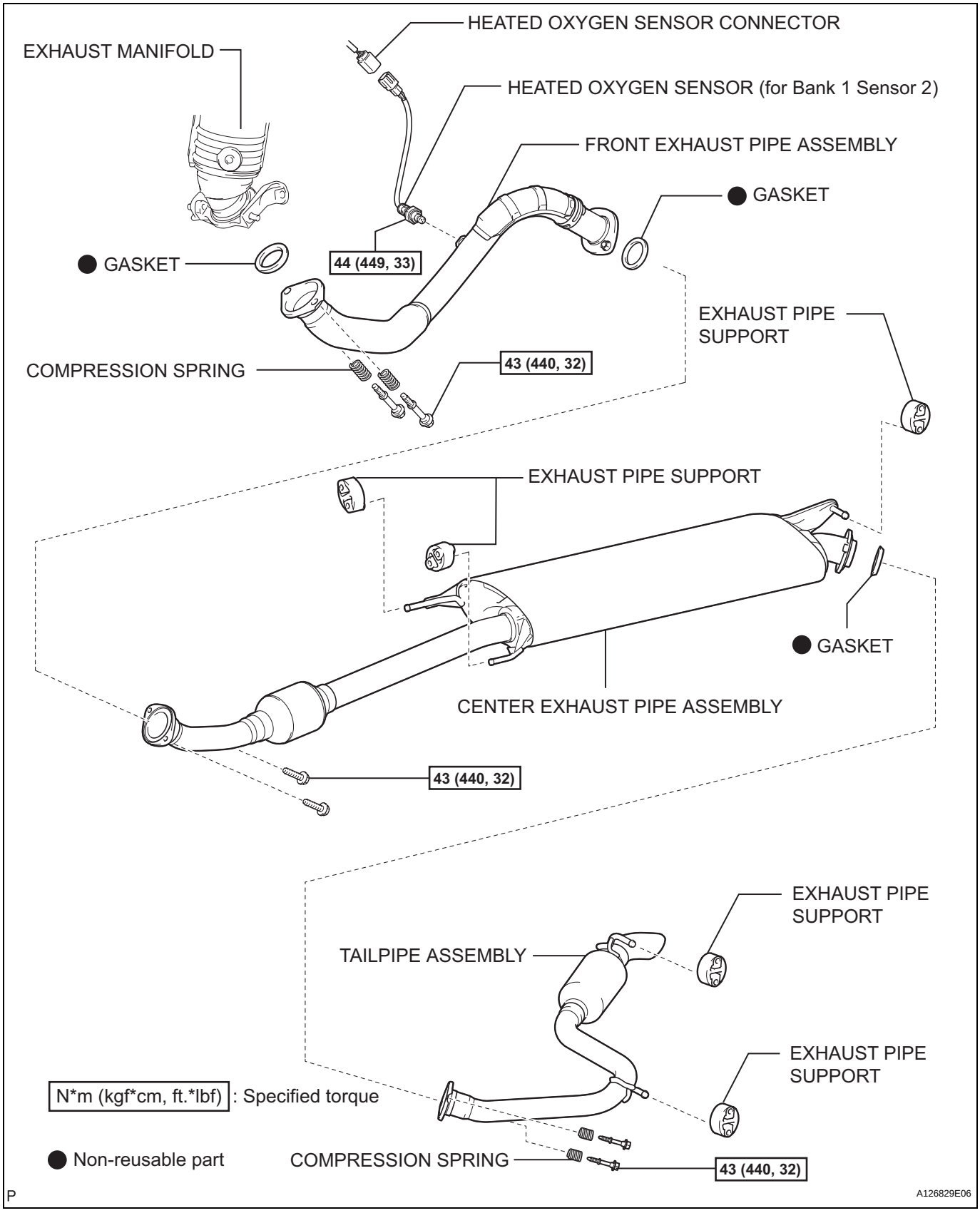

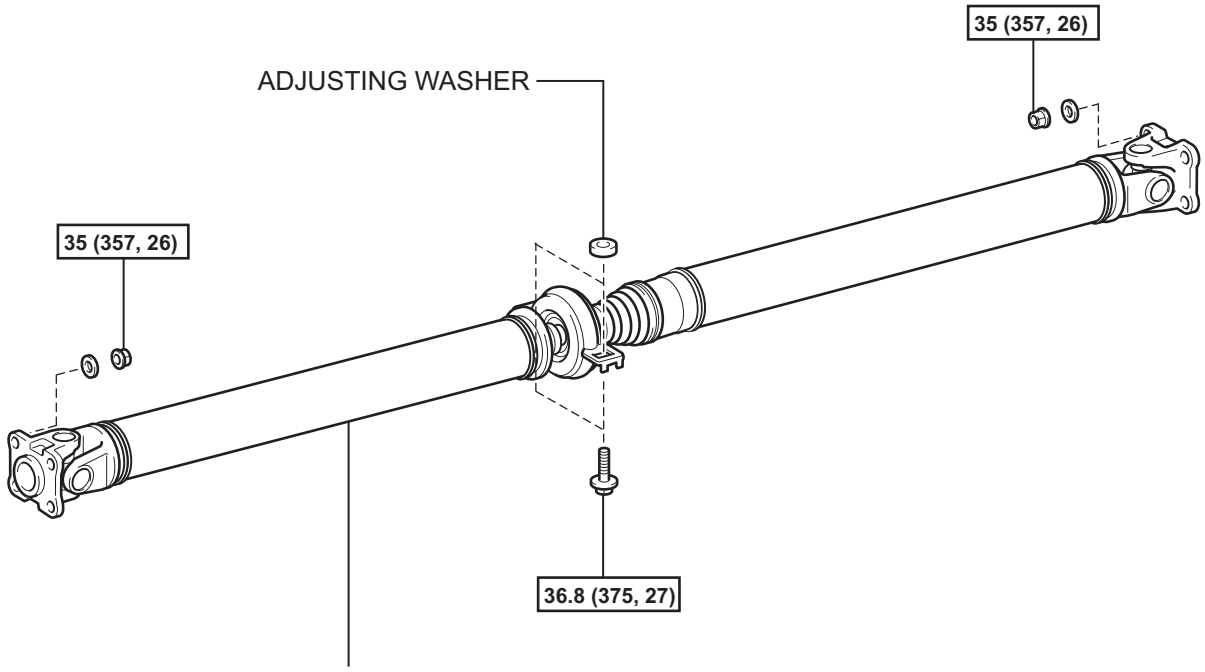

N*m (kgf*cm, ft.*lbf) : Specified torque

T

C129508E01

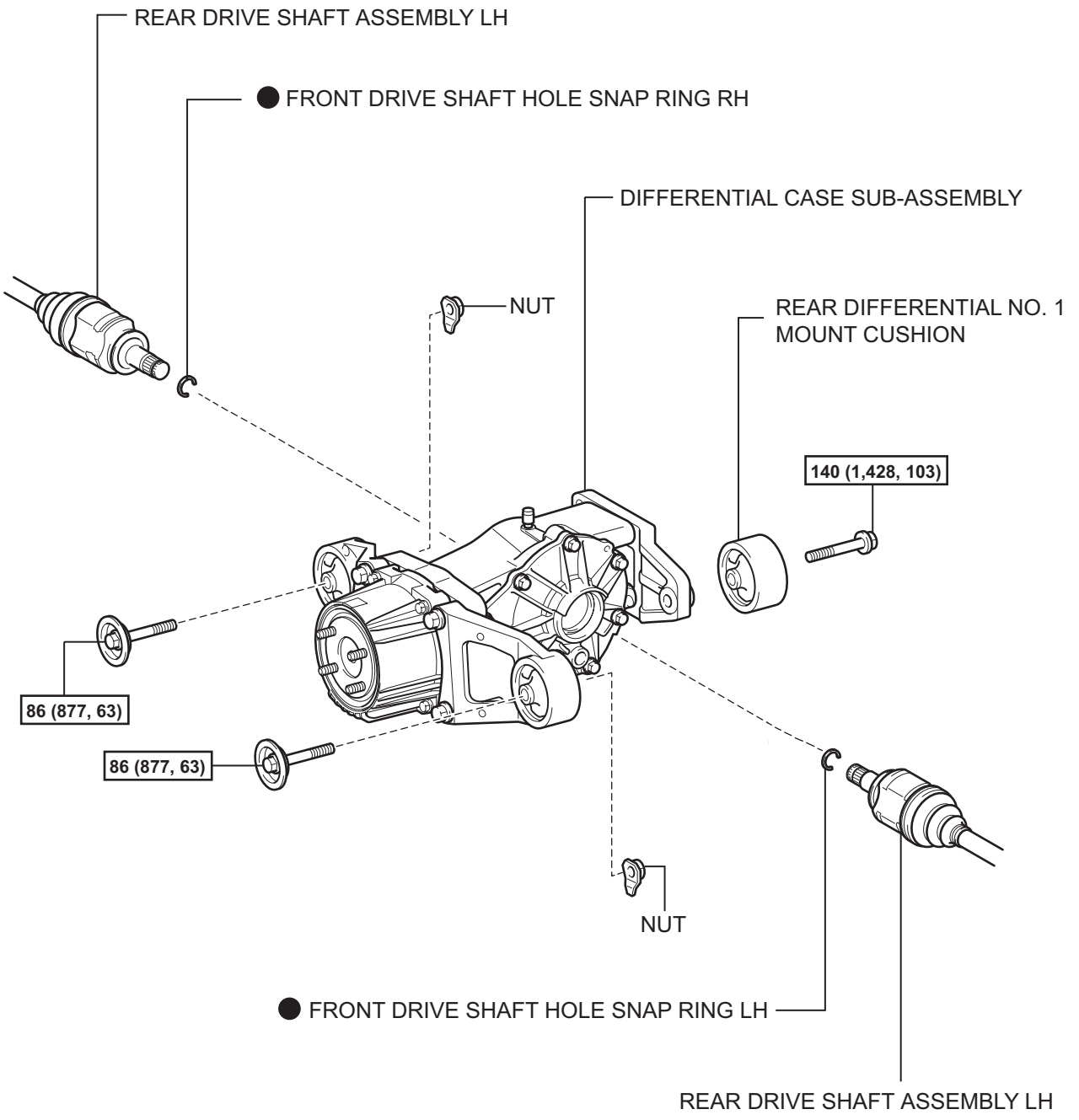

DF

N*m (kgf*cm, ft.*lbf) : Specified torque

● Non-reusable part

T

C127376E07

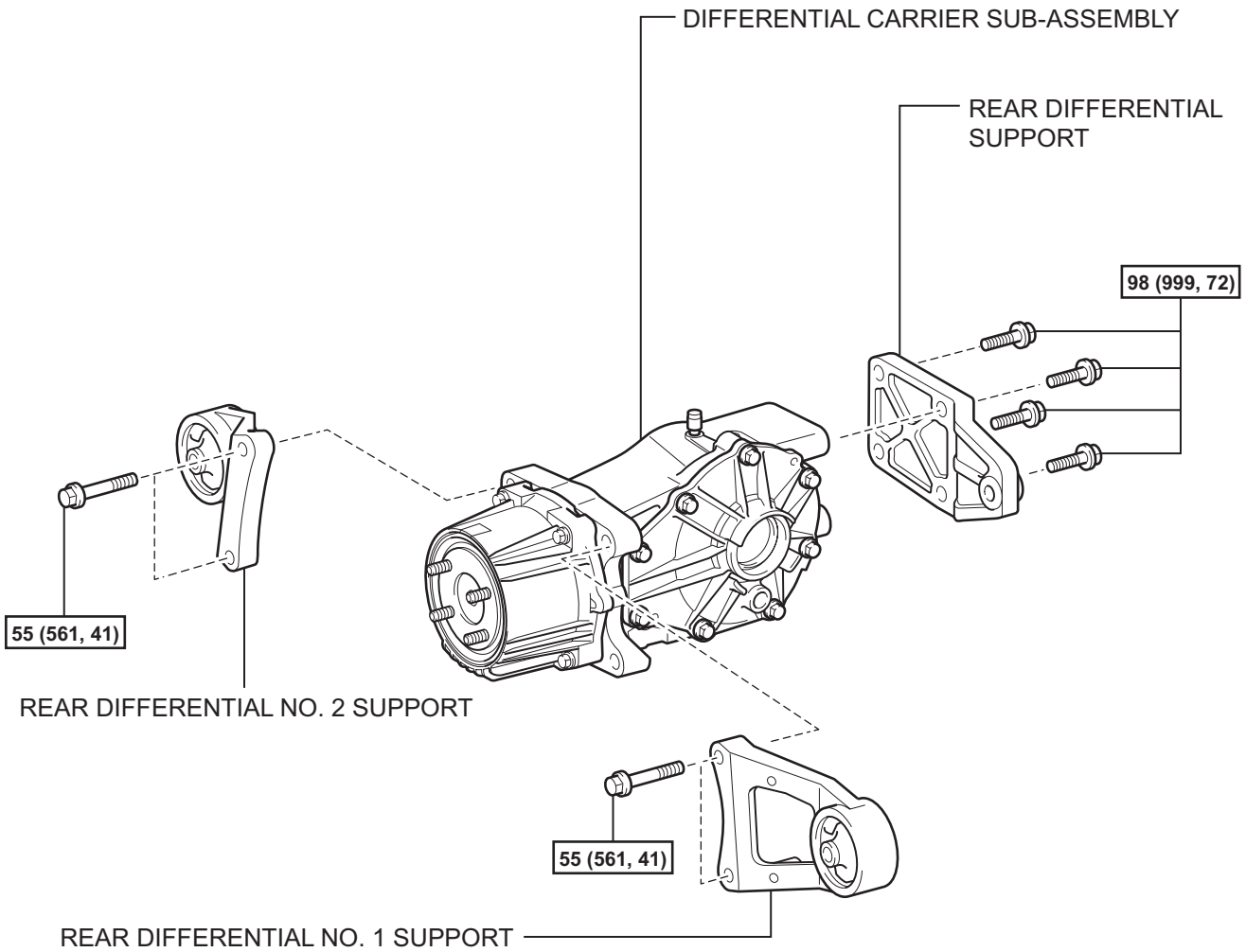

DF

N*m (kgf*cm, ft.*lbf) : Specified torque

● Non-reusable part

T

C127377E03

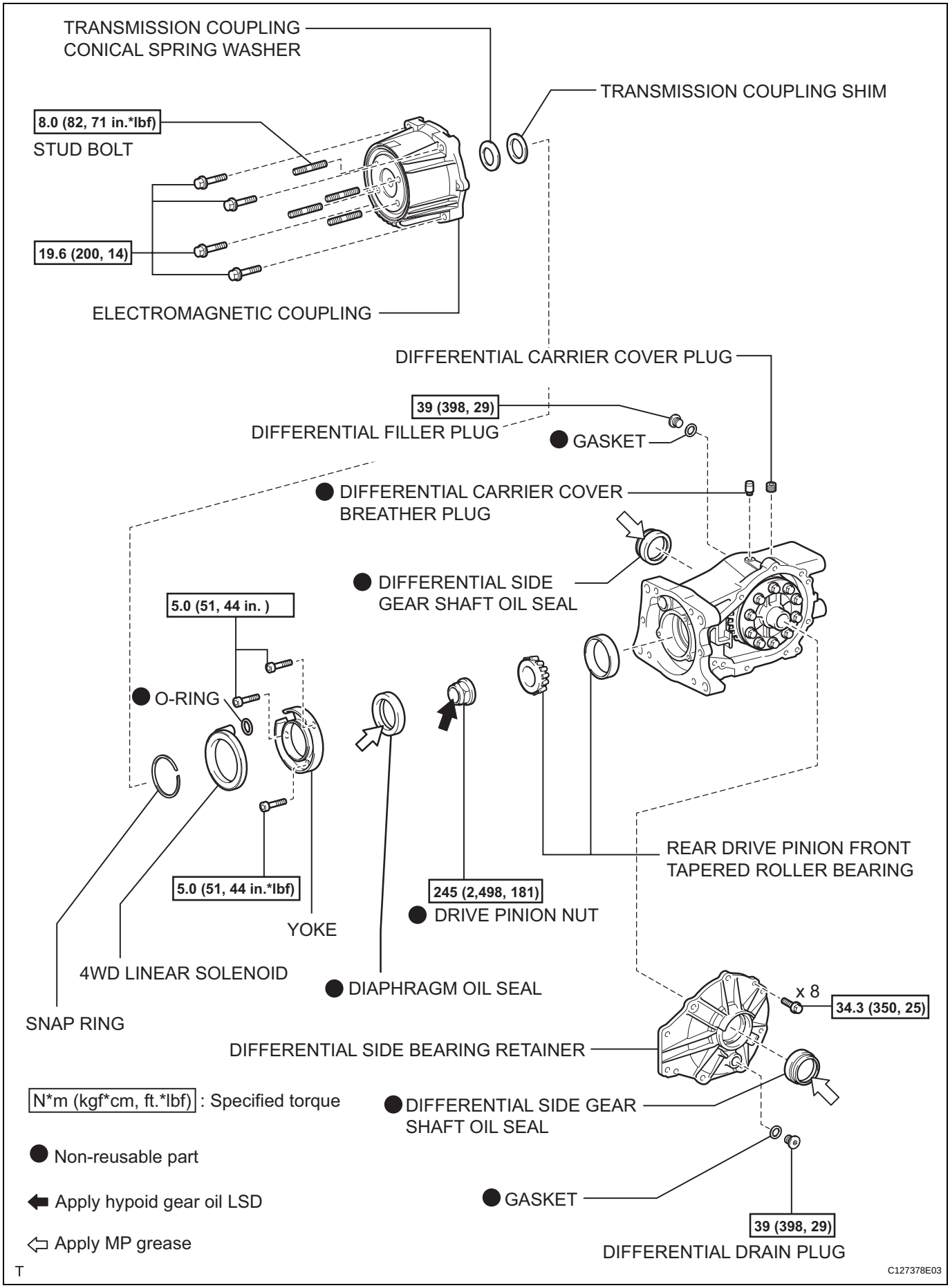
TRANSMISSION COUPLING
CONICAL SPRING WASHER
TRANSMISSION COUPLING SHIM
8.0 (82, 71 in.*lbf)
STUD BOLT
19.6 (200, 14)
ELECTROMAGNETIC COUPLING
DIFFERENTIAL CARRIER COVER PLUG
39 (398, 29)
DIFFERENTIAL FILLER PLUG
GASKET
DIFFERENTIAL CARRIER COVER
BREATHER PLUG
DIFFERENTIAL SIDE
GEAR SHAFT OIL SEAL
5.0 (51, 44 in.)
O-RING
5.0 (51, 44 in.*lbf)
YOKE
4WD LINEAR SOLENOID
SNAP RING
245 (2,498, 181)
DRIVE PINION NUT
DIAPHRAGM OIL SEAL
REAR DRIVE PINION FRONT
TAPERED ROLLER BEARING
x 8
34.3 (350, 25)
DIFFERENTIAL SIDE BEARING RETAINER
N*m (kgf*cm, ft.*lbf) : Specified torque
DIFFERENTIAL SIDE GEAR
SHAFT OIL SEAL
Non-reusable part
GASKET
Apply hypoid gear oil LSD
39 (398, 29)
Apply MP grease
DIFFERENTIAL DRAIN PLUG
T
C127378E03

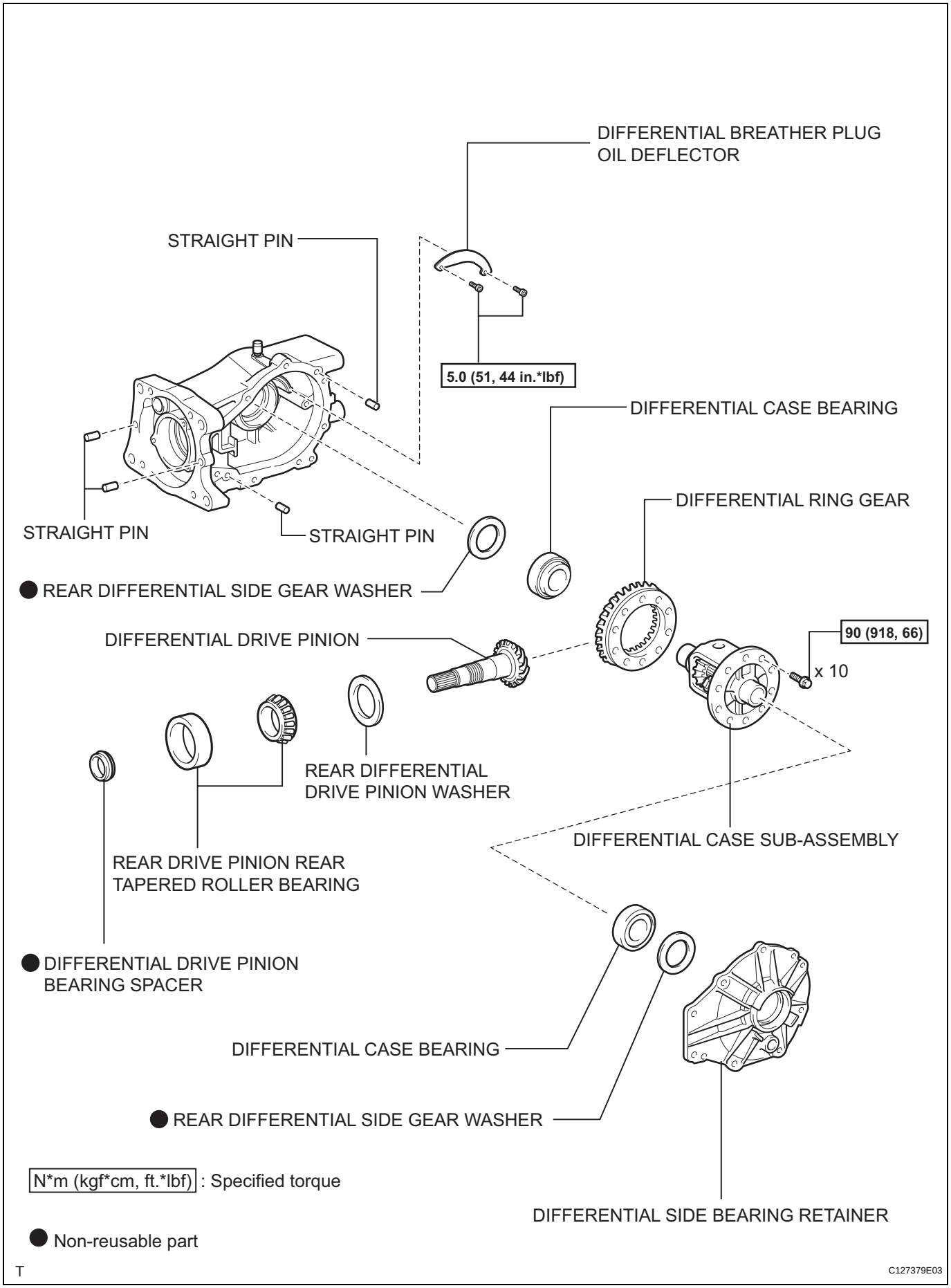
DIFFERENTIAL BREATHER PLUG
OIL DEFLECTOR
STRAIGHT PIN
5.0 (51, 44 in.*lbf)
DIFFERENTIAL CASE BEARING
DIFFERENTIAL RING GEAR
STRAIGHT PIN
STRAIGHT PIN
● REAR DIFFERENTIAL SIDE GEAR WASHER
DIFFERENTIAL DRIVE PINION
90 (918, 66)
x 10
REAR DIFFERENTIAL
DRIVE PINION WASHER
DIFFERENTIAL CASE SUB-ASSEMBLY
REAR DRIVE PINION REAR
TAPERED ROLLER BEARING
● DIFFERENTIAL DRIVE PINION
BEARING SPACER
DIFFERENTIAL CASE BEARING
● REAR DIFFERENTIAL SIDE GEAR WASHER
N*m (kgf*cm, ft.*lbf) : Specified torque
DIFFERENTIAL SIDE BEARING RETAINER
● Non-reusable part
T
C127379E03

REMOVAL

1. **DRAIN DIFFERENTIAL OIL (See page DF-10)**
2. **REMOVE TAILPIPE ASSEMBLY**
   (a) Remove the tailpipe (see page EX-2).
3. **REMOVE CENTER EXHAUST ASSEMBLY**
   (a) Remove the center pipe (see page EX-2).
4. **REMOVE PROPELLER WITH CENTER BEARING SHAFT ASSEMBLY (See page PR-3)**
5. **REMOVE REAR DIFFERENTIAL CARRIER SUB-ASSEMBLY (See page DF-18)**
6. **REMOVE REAR DIFFERENTIAL SIDE GEAR SHAFT OIL SEAL**
   (a) Using a SST, tap out the 2 oil seals.
   SST 09308-00010

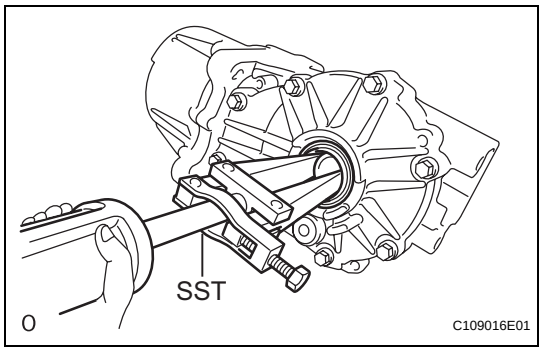

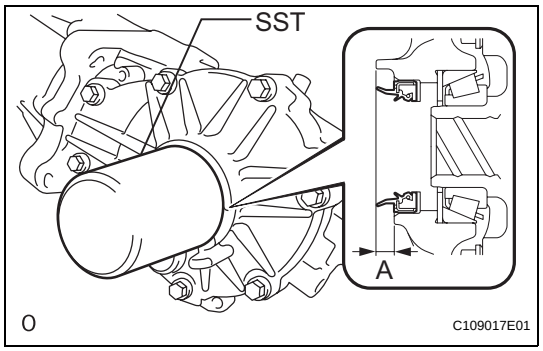

INSTALLATION

1. **INSTALL REAR DIFFERENTIAL SIDE GEAR SHAFT OIL SEAL**
   (a) Apply a light coat of MP grease to the lip of a new rear differential side gear shaft oil seal.
   (b) Using SST and a hammer, tap the 2 rear differential side gear shaft oil seals into the rear differential carrier and differential side bearing retainer according to the specification.
   SST 09223-00010
   Standard oil seal tapping amount (A value):
   7.2 +-0.5 mm (0.28 +-0.02 in.)
2. **INSTALL REAR DIFFERENTIAL CARRIER ASSEMBLY (See page DF-44)**
3. **TEMPORARILY INSTALL PROPELLER WITH CENTER BEARING SHAFT ASSEMBLY (See page PR-5)**
4. **TIGHTEN PROPELLER WITH CENTER BEARING SHAFT ASSEMBLY (See page PR-6)**
5. **INSPECT AND ADJUST JOINT ANGLE (See page PR-4)**
6. **INSTALL CENTER EXHAUST PIPE ASSEMBLY**
   (a) Install the center pipe (see page EX-5).
7. **INSTALL TAILPIPE ASSEMBLY**
   (a) Install the tailpipe (see page EX-6).
8. **ADD DIFFERENTIAL OIL**
   (a) Add differential oil (see page DF-3).

DF

9. CHECK FOR DIFFERENTIAL OIL LEAKAGE

10. CHECK FOR EXHAUST GAS LEAKAGE

If gas is leaking, tighten the areas necessary to stop the leak. Replace damaged parts as necessary.

REAR DIFFERENTIAL SIDE GEAR SHAFT OIL SEAL

COMPONENTS

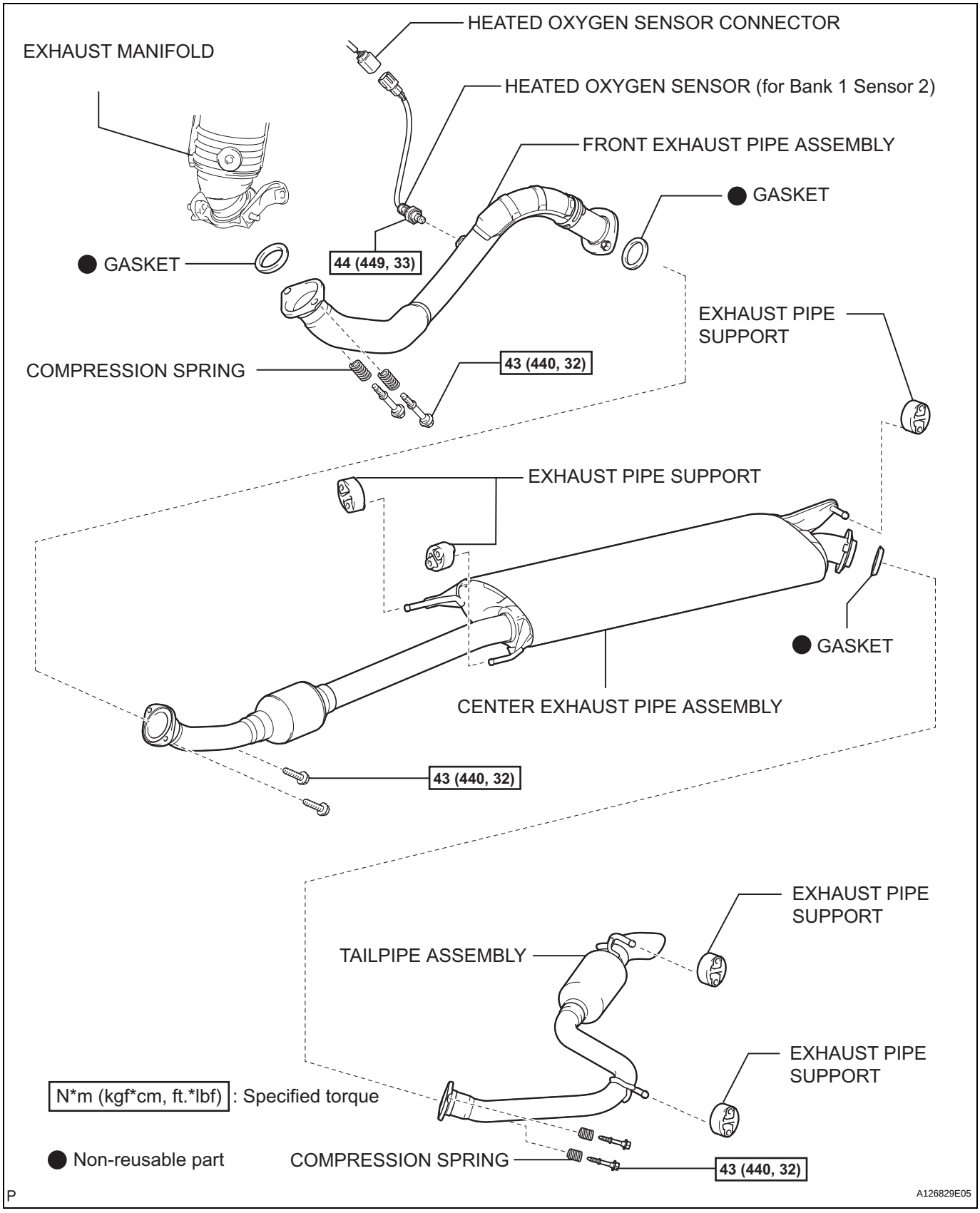

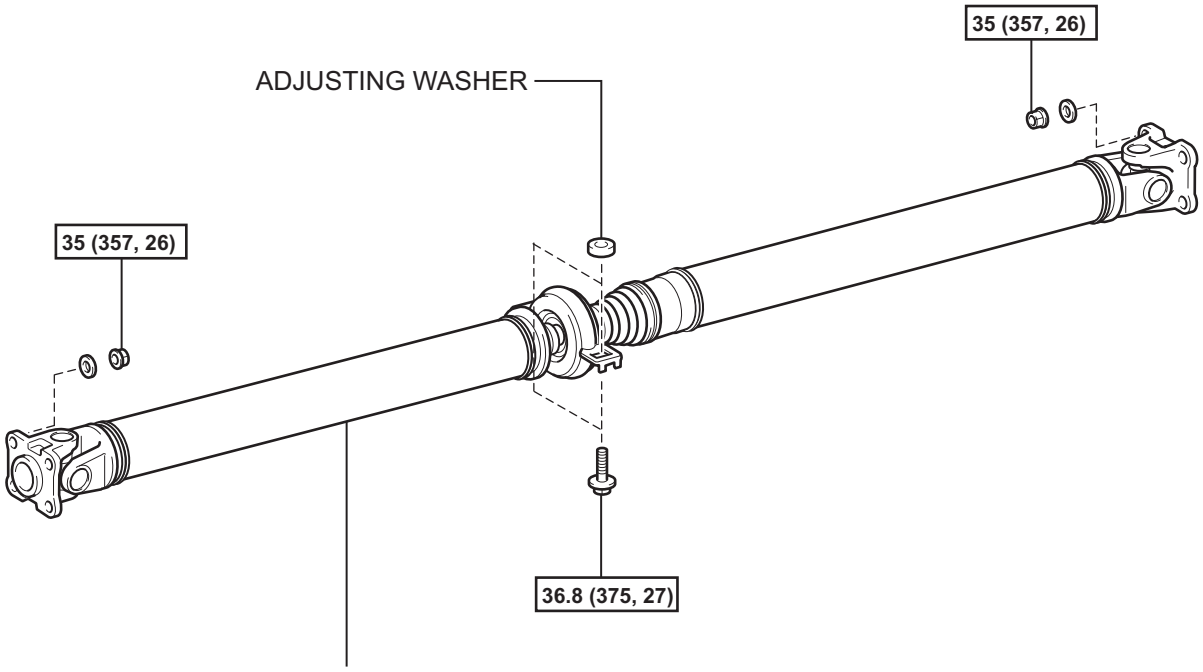

N*m (kgf*cm, ft.*lbf) : Specified torque

T

C129508E01

REAR DIFFERENTIAL SIDE GEAR SHAFT OIL SEAL

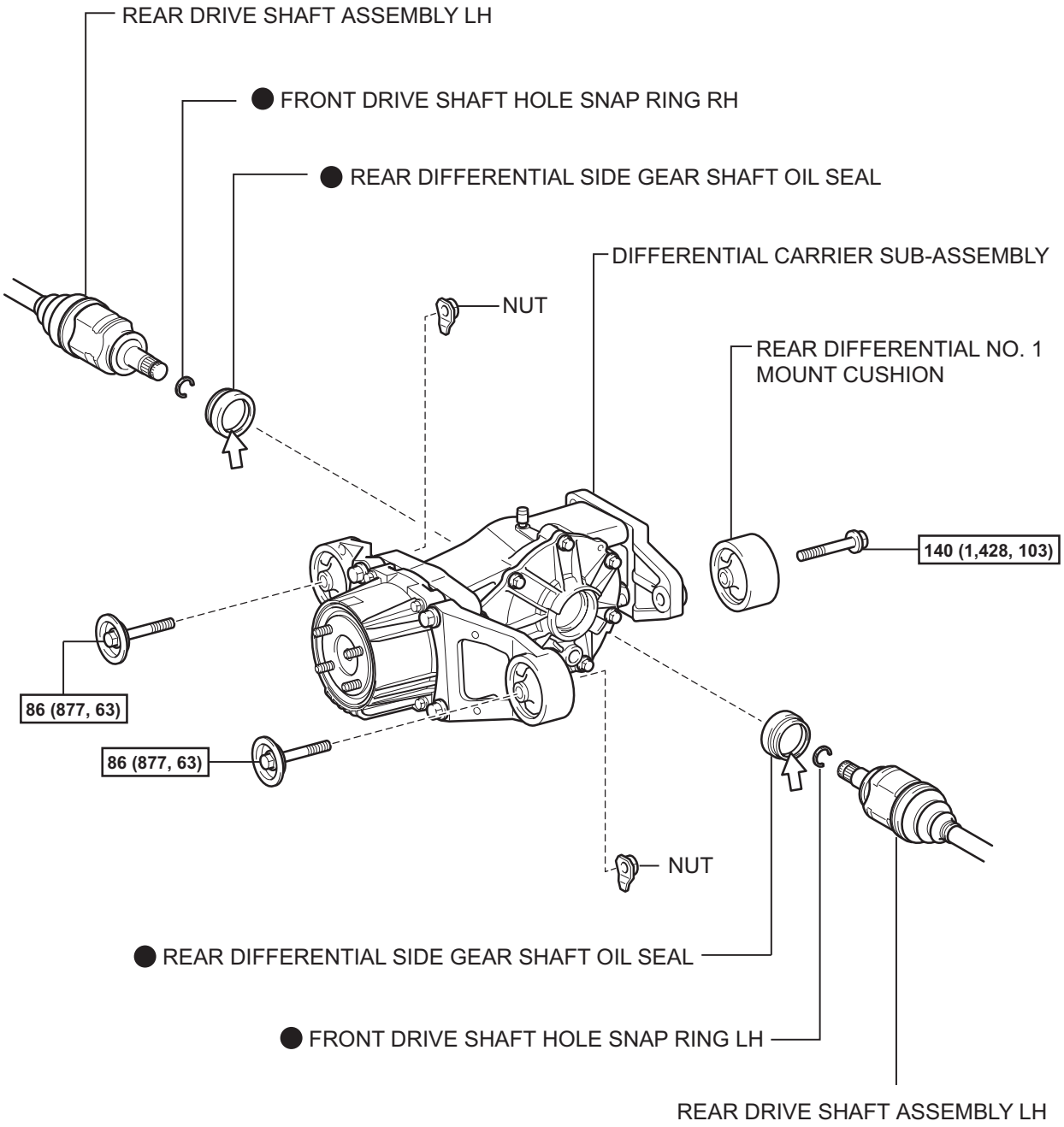

DF

N*m (kgf*cm, ft.*lbf) : Specified torque

● Non-reusable part

⇦ Apply MP grease

T

C127376E06

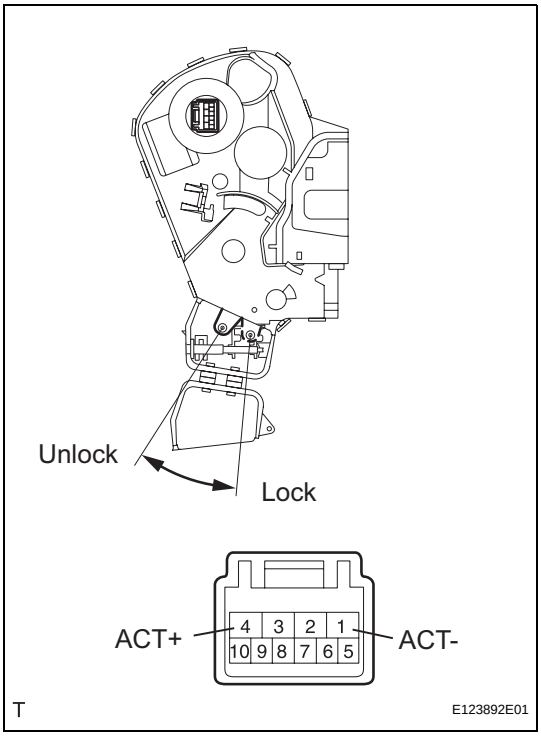

BACK DOOR LOCK

INSPECTION

1. INSPECT BACK DOOR WITH MOTOR LOCK ASSEMBLY

(a) Apply the battery voltage to the door lock motor and check the operation of the door lock motor.
OK

Measurement Condition	Specified Condition
Battery positive (+) → 4 (ACT+) Battery negative (-) → 1 (ACT-)	**Lock**
Battery positive (+) → 1 (ACT-) Battery negative (-) → 4 (ACT+)	**Unlock**

If the result is not as specified, replace the door lock assembly.

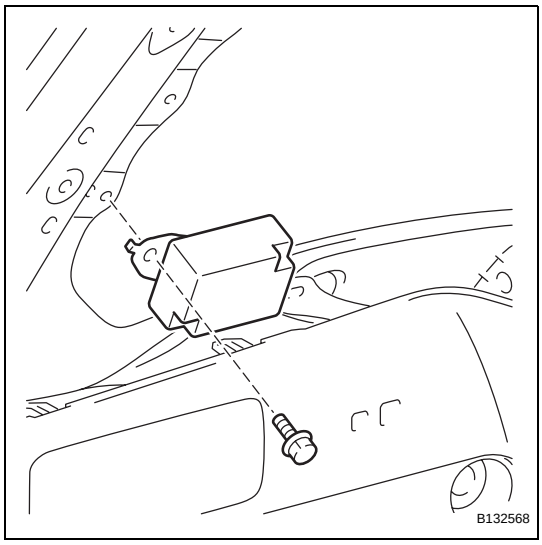

INSTALLATION

1. INSTALL DOOR CONTROL RECEIVER

(a) Install the receiver with the bolt.

(b) Connect the receiver connector.

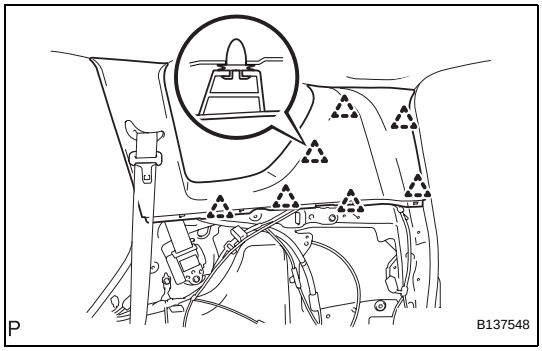

2. INSTALL INNER ROOF SIDE GARNISH ASSEMBLY RH (w/o Rear No. 2 Seat)

(a) Attach the 7 clips to install the garnish.

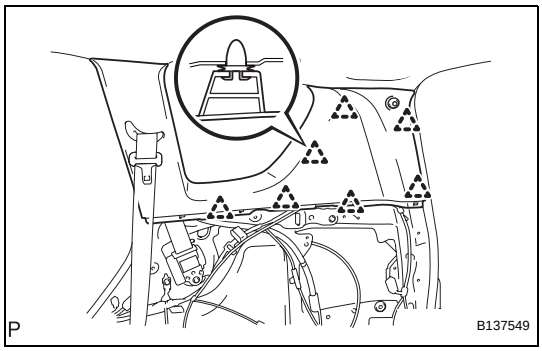

3. INSTALL INNER ROOF SIDE GARNISH ASSEMBLY RH (w/ Rear No. 2 Seat)

(a) Attach the 7 slips to install the garnish.

(b) Connect the rear No. 2 seat belt's shoulder anchor.

(1) Connect the shoulder anchor with the bolt.
Torque: 42 N*m (428 kgf*cm, 31 ft.*lbf)

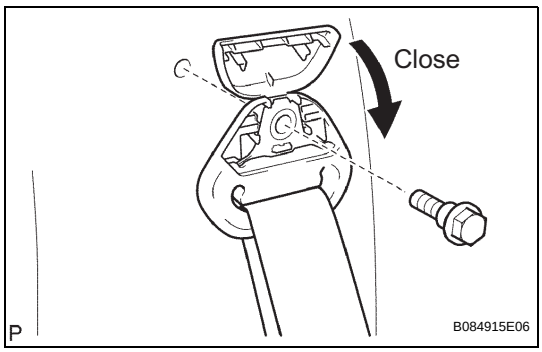

(2) Attach the claws to close the seat belt anchor cover.

4. INSTALL DECK TRIM SIDE PANEL ASSEMBLY RH (w/o Rear No. Seat) (See page IR-53)

5. INSTALL DECK TRIM SIDE PANEL ASSEMBLY RH (w/ Rear No. 2 Seat) (See page IR-54)

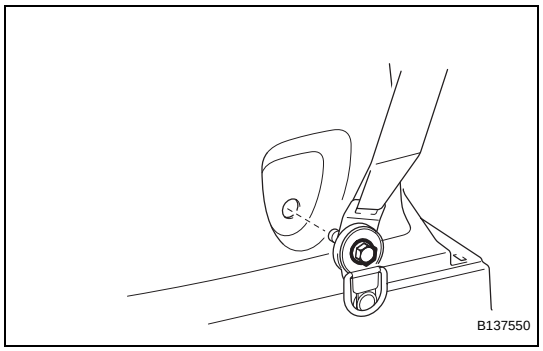

6. **INSTALL TETHER ANCHOR BRACKET SUB-ASSEMBLY (w/o Rear No. 2 Seat)**
   (a) Install the tether anchor bracket with the bolt.
7. **INSTALL RECLINING REMOTE CONTROL LEVER BEZEL RH (w/o Rear No. 2 Seat) (See page SE-105)**
8. **INSTALL REAR DECK TRIM COVER RH (w/ Rear No. 2 Seat)**
   (a) Attach the 4 claws to install the trim cover.
   (b) Install the belt.
9. **INSTALL REAR FLOOR FINISH PLATE (See page IR-55)**
10. **INSTALL REAR FLOOR NO. 1 MAT SUPPORT SIDE PLATE (See page IR-55)**
11. **INSTALL REAR FLOOR NO. 3 BOARD**
12. **INSTALL REAR FLOOR NO. 2 BOARD**
13. **INSTALL REAR NO. 2 SEAT ASSEMBLY LH (w/ Rear No. 2 Seat) (See page SE-121)**
14. **INSTALL REAR NO. 2 SEAT ASSEMBLY RH (w/ Rear No. 2 Seat)**
    HINT:
    Use the same procedures described for the LH side.
15. **INSTALL NO. 2 SEAT LEG COVER LH (w/ Rear No. 2 Seat) (See page SE-123)**
16. **INSTALL NO. 2 SEAT LEG COVER RH (w/ Rear No. 2 Seat)**
    HINT:
    Use the same procedures described for the LH side.
17. **INSTALL NO. 2 SEAT HINGE COVER LH (w/ Rear No. 2 Seat) (See page SE-123)**
18. **INSTALL NO. 2 SEAT HINGE COVER RH (w/ Rear No. 2 Seat)**
    HINT:
    Use the same procedures described for the LH side.
19. **INSTALL DECK BOARD ASSEMBLY (w/o Rear No. 2 Seat)**
20. **INSTALL REAR FLOOR NO. 1 BOARD (w/o Rear No. 2 Seat)**
21. **INSTALL REAR DOOR OPENING TRIM WEATHERSTRIP RH**

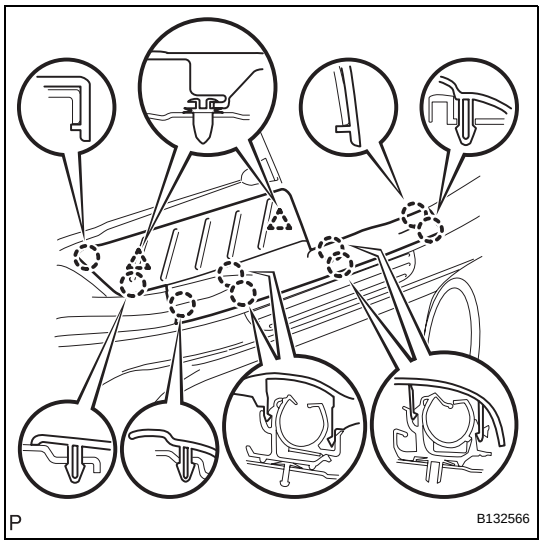

22. INSTALL REAR DOOR SCUFF PLATE RH

(a) Attach the 9 claws and 2 clips to install the scuff plate.

DOOR CONTROL RECEIVER

COMPONENTS

w/ Rear No. 2 Seat

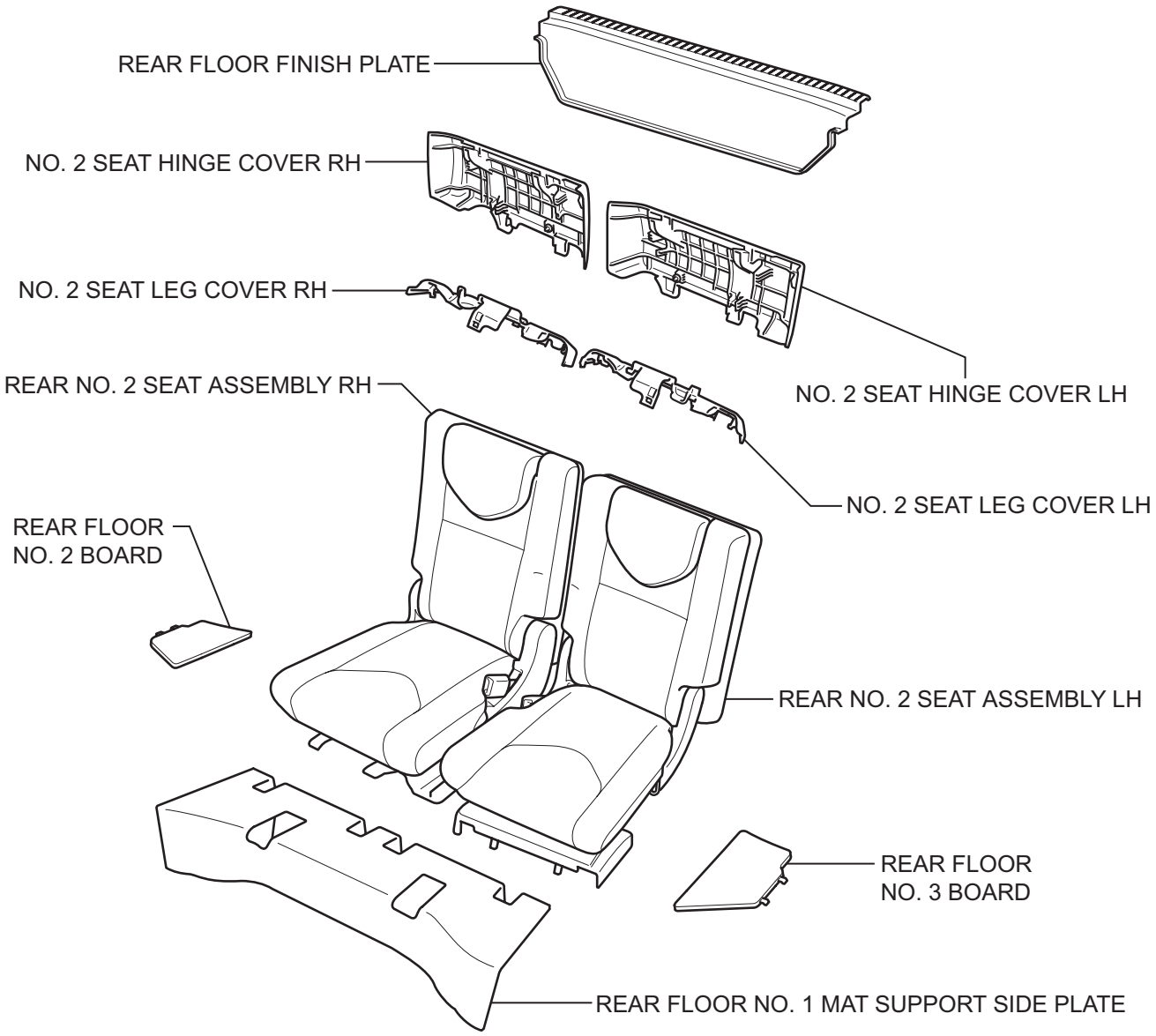

T

B130112E05

DL

w/o Rear No. 2 Seat

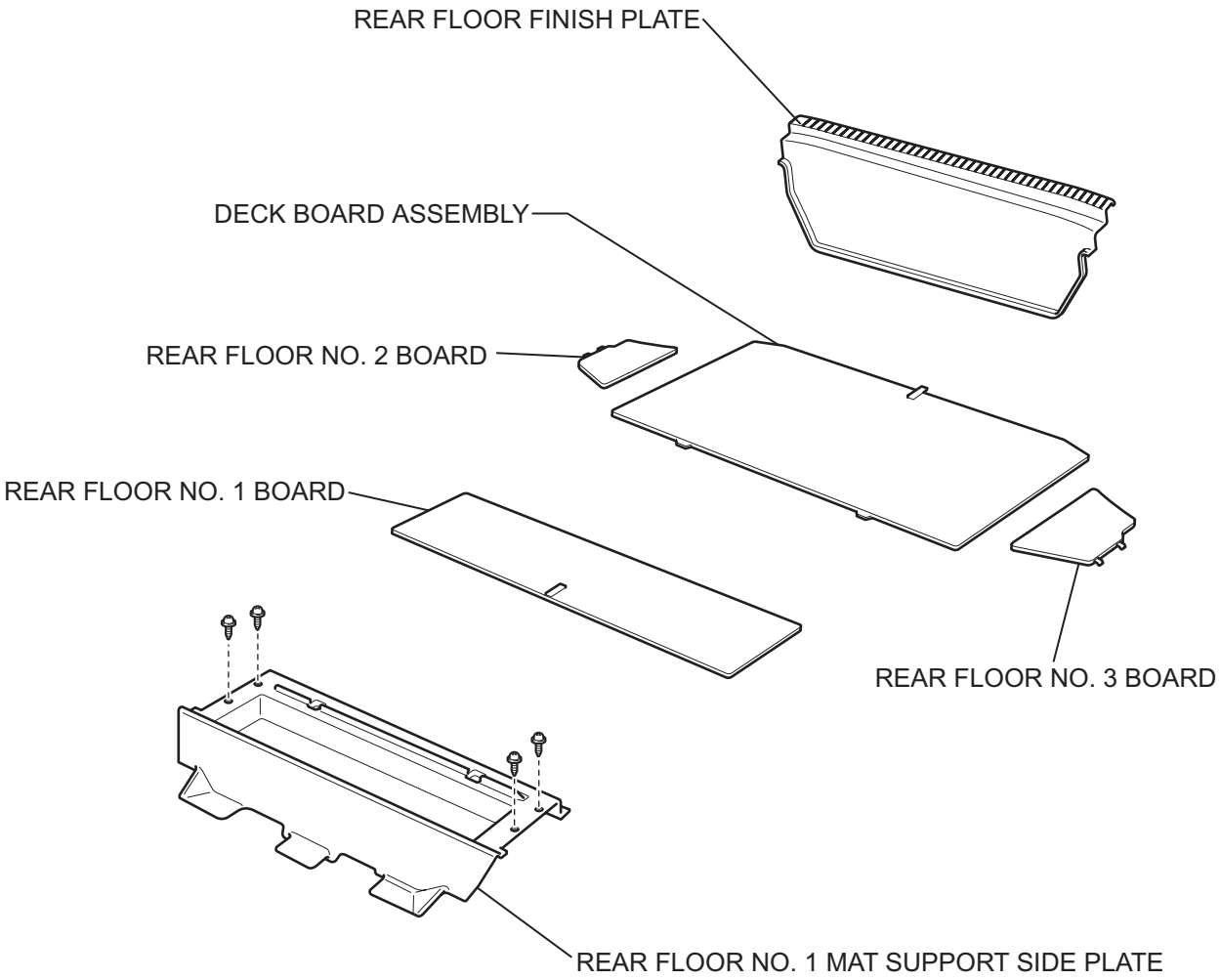

T

B132563E01

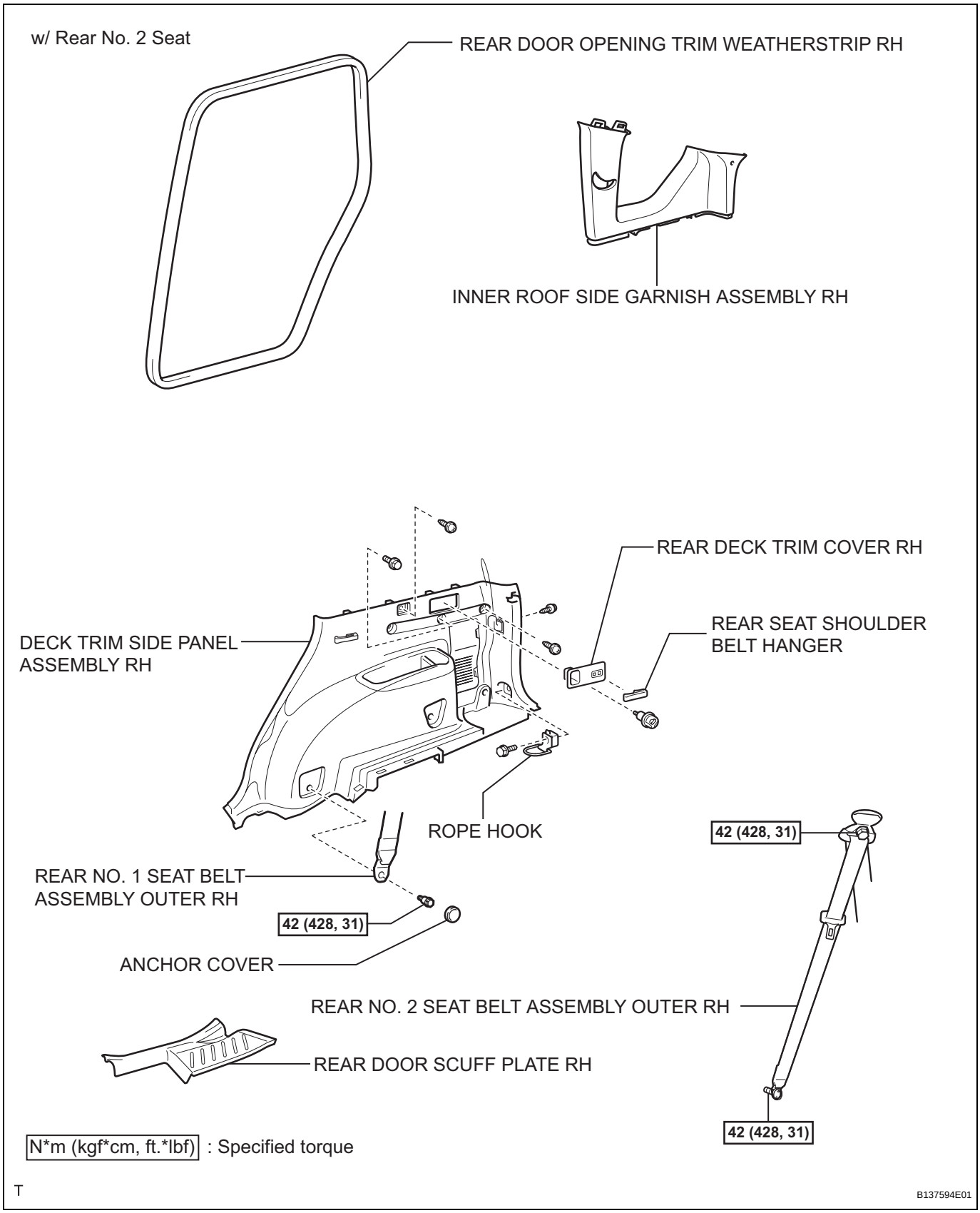
w/ Rear No. 2 Seat
REAR DOOR OPENING TRIM WEATHERSTRIP RH
INNER ROOF SIDE GARNISH ASSEMBLY RH
REAR DECK TRIM COVER RH
REAR SEAT SHOULDER BELT HANGER
DECK TRIM SIDE PANEL ASSEMBLY RH
ROPE HOOK
42 (428, 31)
REAR NO. 1 SEAT BELT ASSEMBLY OUTER RH
42 (428, 31)
ANCHOR COVER
REAR NO. 2 SEAT BELT ASSEMBLY OUTER RH
REAR DOOR SCUFF PLATE RH
42 (428, 31)
N*m (kgf*cm, ft.*lbf) : Specified torque
T
B137594E01

DL

w/o Rear No. 2 Seat

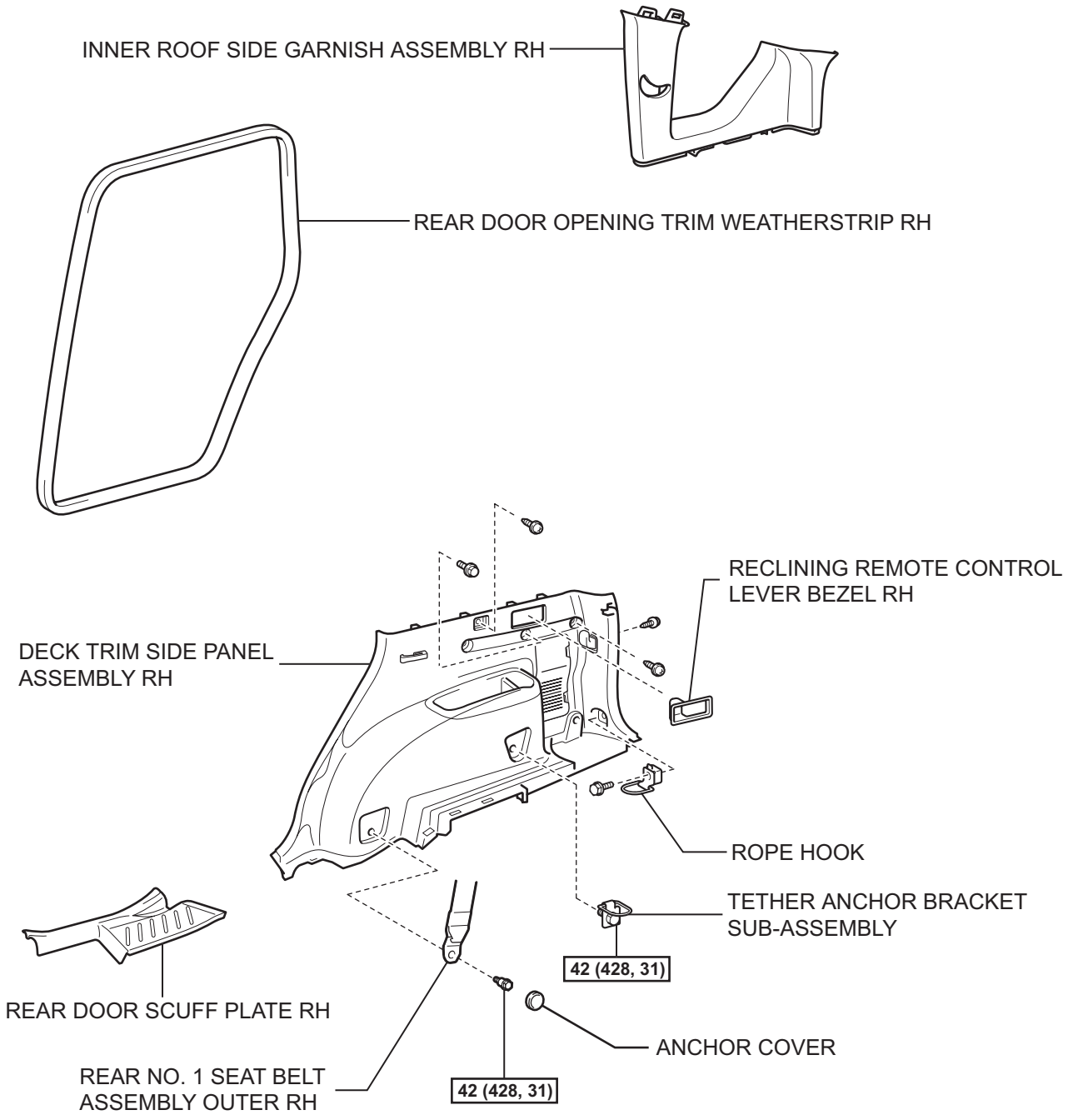

N*m (kgf*cm, ft.*lbf) : Specified torque

T

B137595E01

DL

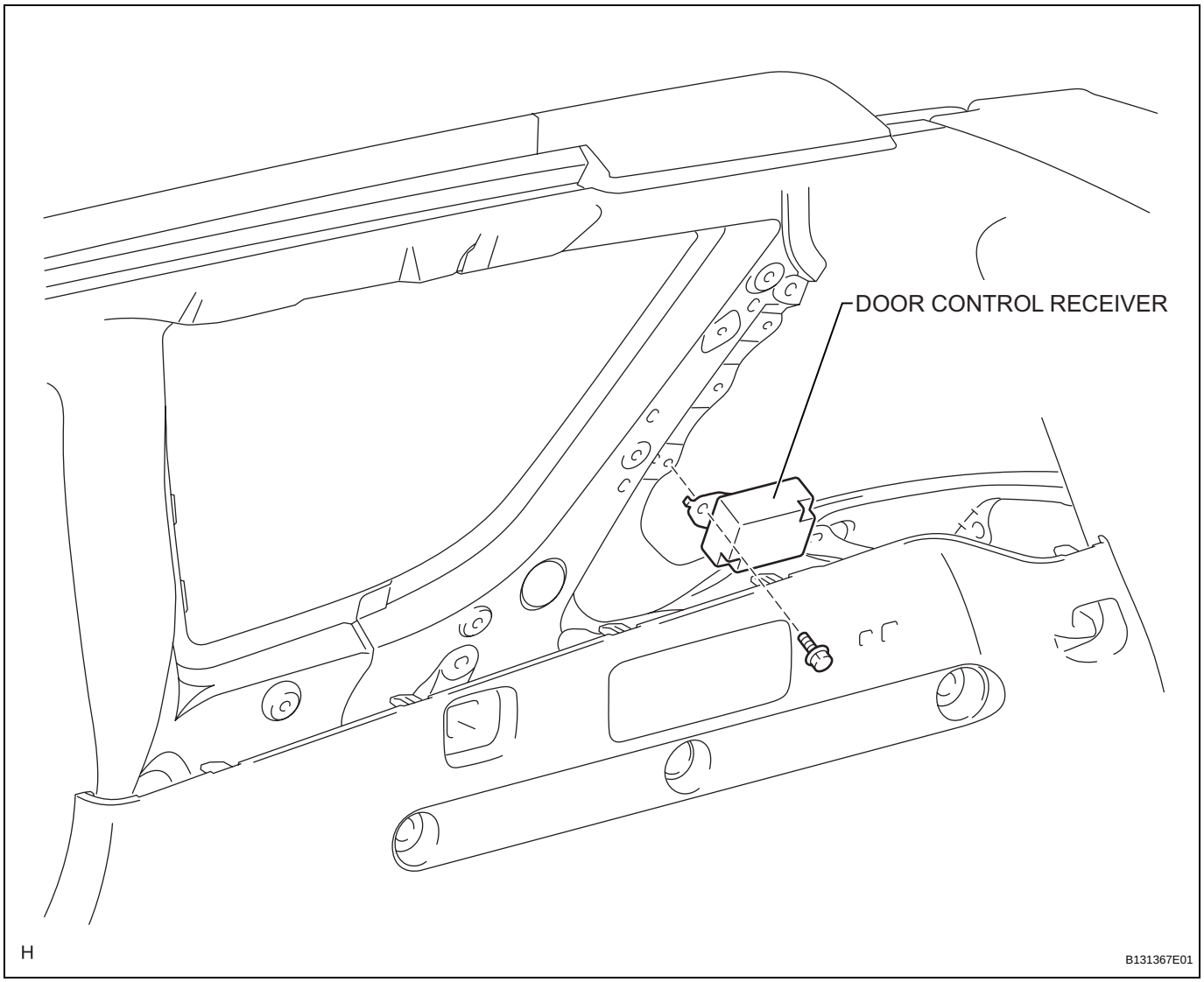

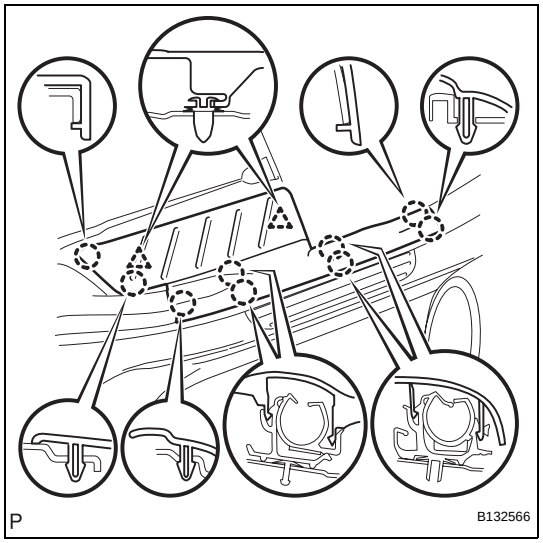

REMOVAL

1. **REMOVE REAR DOOR SCUFF PLATE RH**
   (a) Using a screwdriver, detach the 9 claws.
   HINT:
   Tape the screwdriver tip before use.
   (b) Using a clip remover, detach the 2 clips and remove the garnish.
2. **REMOVE REAR DOOR OPENING TRIM WEATHERSTRIP RH**
3. **REMOVE REAR FLOOR NO. 1 BOARD (w/o Rear No. 2 Seat)**
4. **REMOVE DECK BOARD ASSEMBLY (w/o Rear No. 2 Seat)**
5. **REMOVE NO. 2 SEAT HINGE COVER LH (w/ Rear No. 2 Seat) (See page SE-109)**
6. **REMOVE NO. 2 SEAT HINGE COVER RH (w/ Rear No. 2 Seat)**
   HINT:
   Use the same procedures described for the LH side.

7. **REMOVE NO. 2 SEAT LEG COVER LH (w/ Rear No. 2 Seat) (See page SE-109)**

8. **REMOVE NO. 2 SEAT LEG COVER RH (w/ Rear No. 2 Seat)**
   HINT:
   Use the same procedures described for the LH side.

9. **REMOVE REAR NO. 2 SEAT ASSEMBLY LH (w/ Rear No. 2 Seat) (See page SE-110)**

10. **REMOVE REAR NO. 2 SEAT ASSEMBLY RH (w/ Rear No. 2 Seat)**

11. **REMOVE REAR FLOOR NO. 3 BOARD**

12. **REMOVE REAR FLOOR NO. 2 BOARD**

13. **REMOVE REAR FLOOR NO. 1 MAT SUPPORT SIDE PLATE (See page IR-31)**

14. **REMOVE REAR FLOOR FINISH PLATE (See page IR-31)**

15. **REMOVE REAR DECK TRIM COVER RH (w/ Rear No. 2 Seat)**
   (a) Remove the bolt.
   (b) Using a screwdriver, detach the 4 claws and remove the trim cover.
   HINT:
   Tape the screwdriver tip before use.

16. **REMOVE RECLINING REMOTE CONTROL LEVER BEZEL RH (w/o Rear No. 2 Seat) (See page SE-80)**

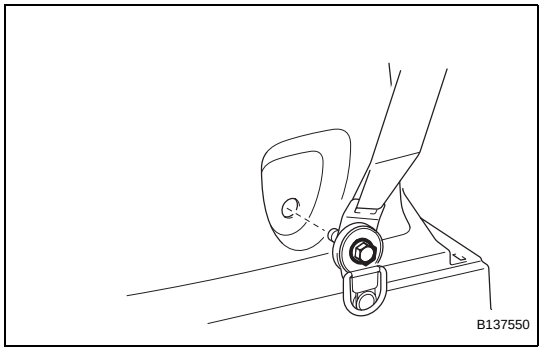

17. **REMOVE TETHER ANCHOR BRACKET SUB-ASSEMBLY (w/o Rear No. 2 Seat)**
   (a) Remove the bolt and tether anchor bracket.

18. **REMOVE DECK TRIM SIDE PANEL ASSEMBLY RH (w/o Rear No. 2 Seat) (See page IR-33)**

19. **REMOVE DECK TRIM SIDE PANEL ASSEMBLY RH (w/ Rear No. 2 Seat) (See page IR-34)**

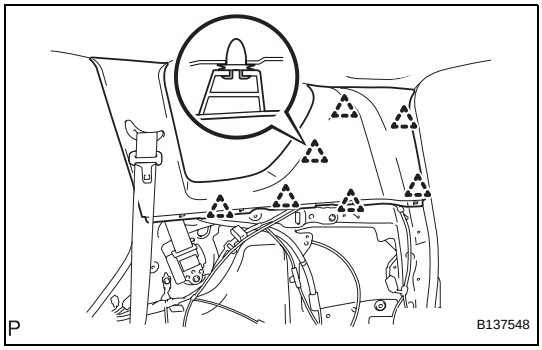

20. **REMOVE INNER ROOF SIDE GARNISH ASSEMBLY RH (w/o Rear No. 2 Seat)**
   (a) Using a clip remover, detach the 7 clips and remove the garnish.

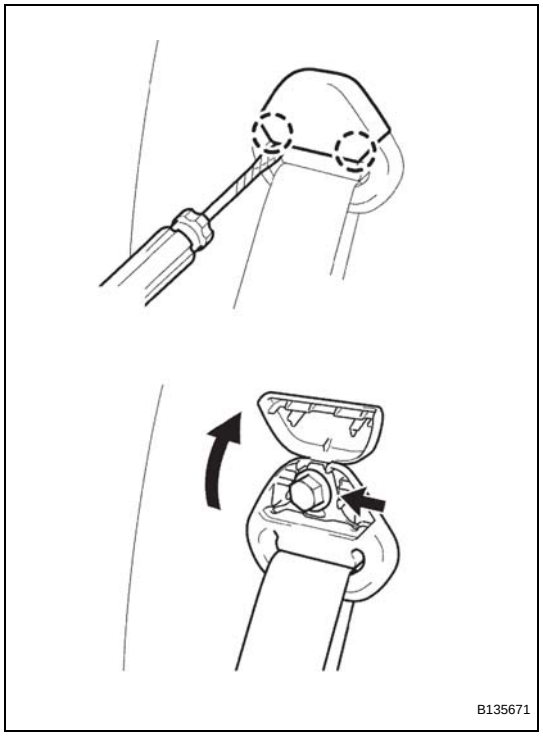

21. REMOVE INNER ROOF SIDE GARNISH ASSEMBLY RH (w/ Rear No. 2 Seat)

(a) Disconnect the rear No. 2 seat outer belt's shoulder anchor.
  (1) Using a screwdriver, detach the 2 claws and open the seat belt anchor cover.
  HINT:
  Tape the screwdriver tip before use.
  (2) Remove the bolt and disconnect the shoulder anchor.

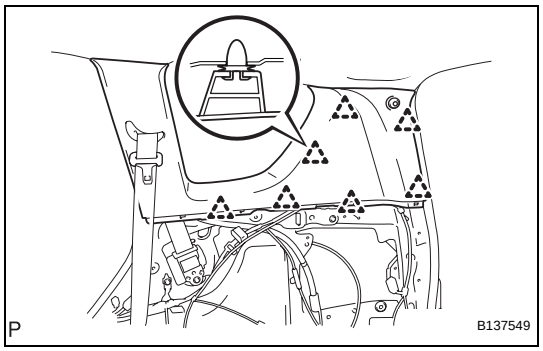

(b) Using a clip remover, detach the 7 clips and remove the garnish.

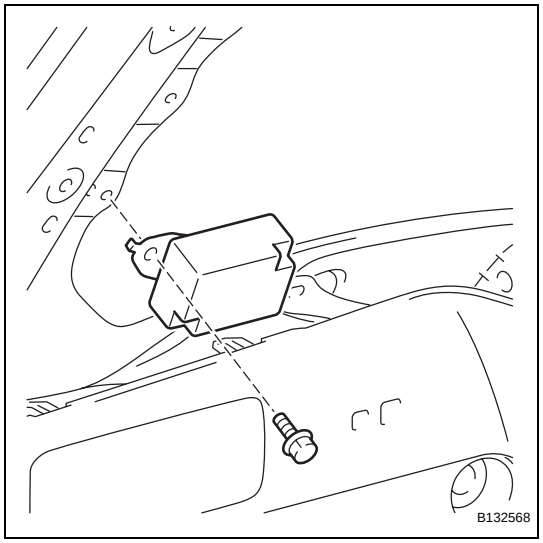

22. REMOVE DOOR CONTROL RECEIVER

(a) Disconnect the receiver connector.
(b) Remove the bolt and receiver.

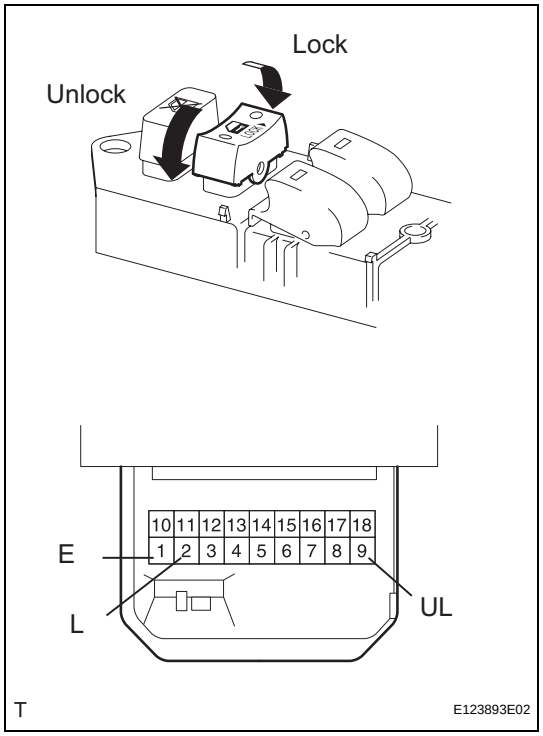

DOOR CONTROL SWITCH

INSPECTION

1. INSPECT POWER WINDOW REGULATOR MASTER SWITCH ASSEMBLY (DOOR CONTROL SWITCH)

(a) Measure the resistance of the door control switch.

Standard resistance

Tester Connection	Switch Condition	Specified Condition
2 (L) - 1 (E)	Lock	Below 80 Ω
2 (L) - 1 (E)	OFF	10 kΩ or higher
9 (UL) - 1 (E)	Unlock	Below 80 Ω
9 (UL) - 1 (E)	OFF	10 kΩ or higher

If the result is not as specified, replace the power window regulator master switch assembly.

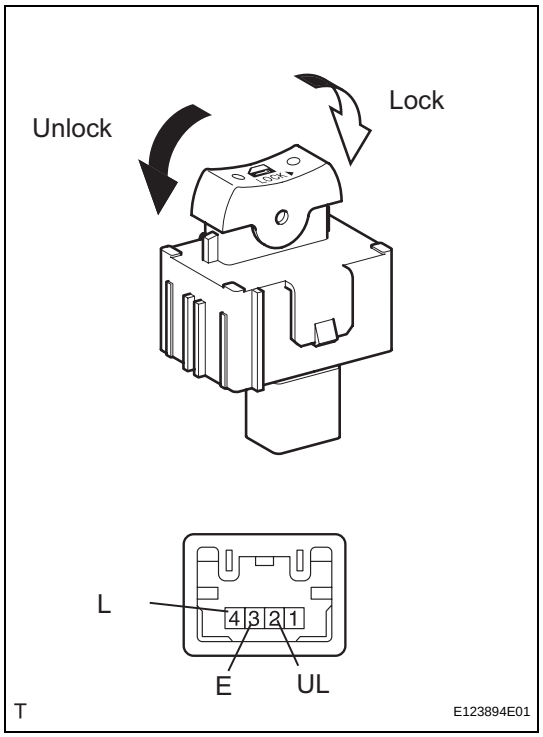

2. INSPECT DOOR CONTROL SWITCH ASSEMBLY

(a) Measure the resistance of the door control switch.

Standard resistance

Tester Connection	Switch Condition	Specified Condition
4 (L) - 3 (E)	Lock	Below 200 Ω
4 (L) - 3 (E)	OFF	10 kΩ or higher
2 (UL) - 3 (E)	Unlock	Below 200 Ω
2 (UL) - 3 (E)	OFF	10 kΩ or higher

If the result is not as specified, replace the door control switch assembly.

INSPECTION

1. INSPECT DOOR CONTROL TRANSMITTER MODULE

(a) Inspect operation of the transmitter.

(1) Remove the battery (lithium battery: CR2016) from the transmitter.

(2) Install a new or non-depleted battery (lithium battery: CR2016).

HINT:

When a new or non-depleted battery is not available, first connect 2 new 1.5 V batteries in series. Then connect leads to the batteries and use the leads to apply 3 V to the transmitter, as shown in the illustration.

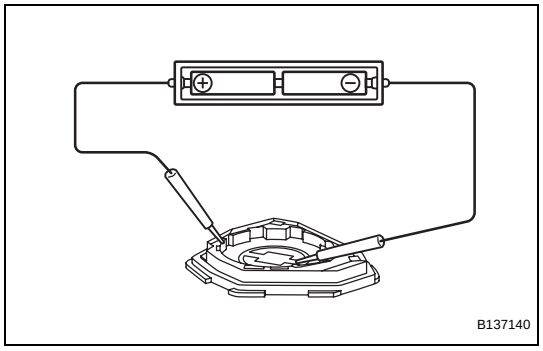

(3) From outside the vehicle, approximately 1 m (3.28 ft.) from the driver side outside door handle, test the transmitter by pointing its key plate at the vehicle and pressing a transmitter switch.

OK:

Door lock can be operated via the transmitter. LED illuminates more than once.

HINT:

- The operating range differs depending on the user, the way the transmitter is held and the location.
- The transmitter's faint electric waves may be affected if the area has strong electric waves or noise. The transmitter's operating range may be shortened or the transmitter may not function.

(b) Inspect the battery capacity.

HINT:

- When checking the amount of energy left in the battery, the battery must be checked while it is installed in the transmitter (a resistance of 1.2 kΩ is applied to the battery). When the battery energy is checked by itself (uninstalled), the voltage reading will be more than 2.5 V until the energy is depleted.
- If the transmitter is malfunctioning, the voltage reading of the energy left in the battery will be inaccurate.

(1) Remove the battery from the transmitter.

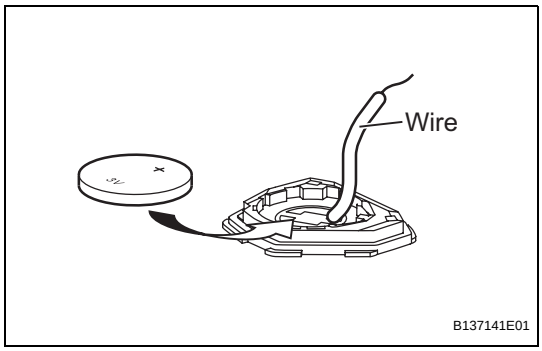

(2) Connect a wire to the negative (-) terminal of the transmitter and install the battery.
(3) Connect the tester's positive (+) lead to the battery and the negative (-) lead to the wire.
(4) Press one of the transmission switches on the transmitter for approximately 1 second.
(5) Press the transmission switch on the transmitter again to check the voltage.
Standard voltage:
2.2 V or higher
HINT:
- When the temperature of the battery is low, the inspection result will not be accurate. When the inspection result is less than 2.2 V, conduct the test again after leaving the battery in a place with a temperature of 18°C (64°F) for more than 30 minutes.
- Read the voltage immediately after the switch is pressed. When 0.8 seconds have passed after the switch is pressed, the automatic power off function starts and resistance applied to the battery will cease. The voltage of the battery will be 2.5 V or more.
- Press the switch at least 3 times before reading the voltage. If the battery temperature has just returned to 18°C (64°F), the voltage may be unusually high for the first or second voltage reading.

INSTALLATION

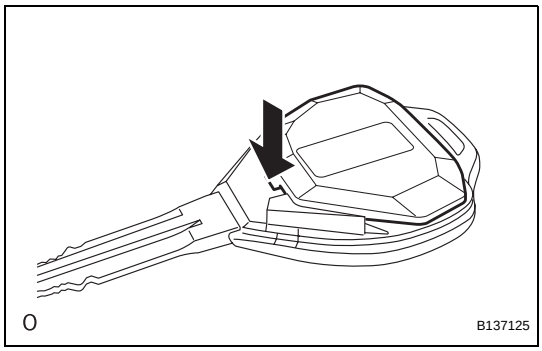

1. INSTALL DOOR CONTROL TRANSMITTER MODULE
NOTICE:
Take extra care when handling these precision electronic components.

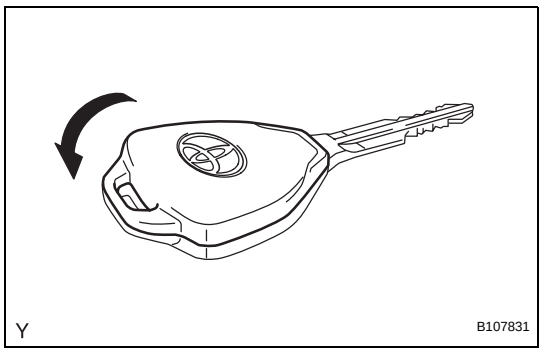

2. INSTALL TRANSMITTER HOUSING COVER
(a) Install the transmitter housing cover to the transmitter housing case.
(b) Check that the transmitter's LED illuminates 3 times when the switch is pressed 3 times.
OK:
Transmitter's LED illuminates 3 times when switch is pressed 3 times.

DOOR CONTROL TRANSMITTER MODULE

COMPONENTS

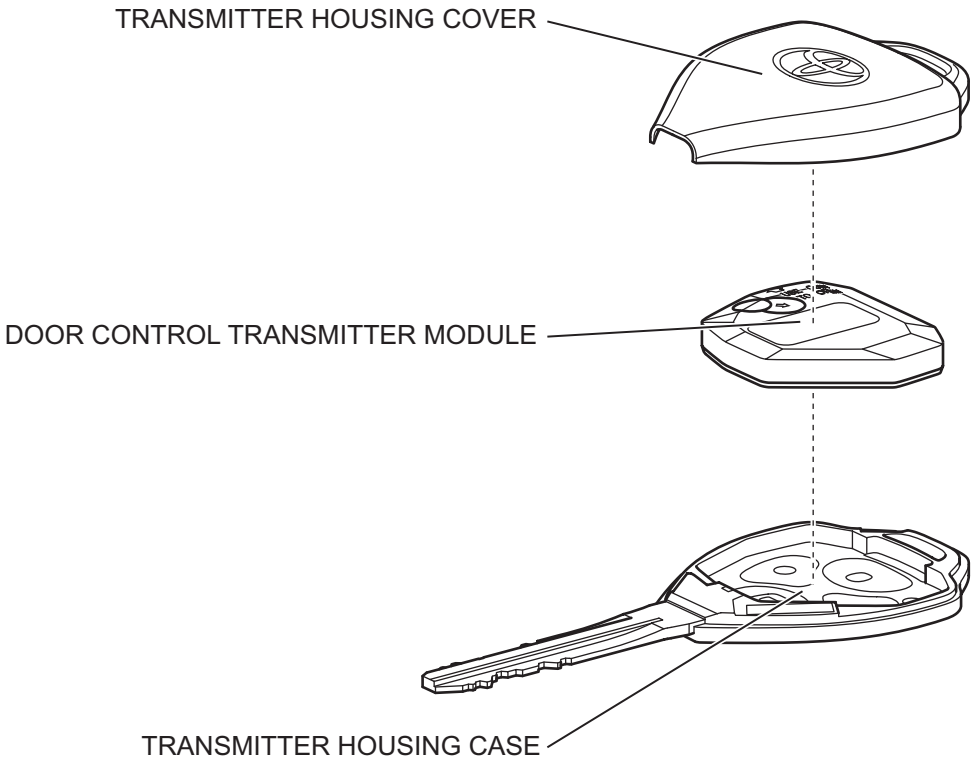

H

B137122E01

REMOVAL

1. REMOVE TRANSMITTER HOUSING COVER

NOTICE:

Take extra care when handling these precision electronic components.

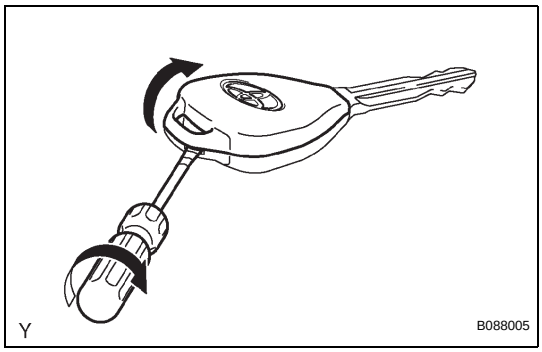

(a) Twist the screwdriver in the direction of the arrow mark in the illustration, and open the transmitter housing cover.

NOTICE:

Do not forcibly pry the cover.

HINT:

Tape the screwdriver tip before use.

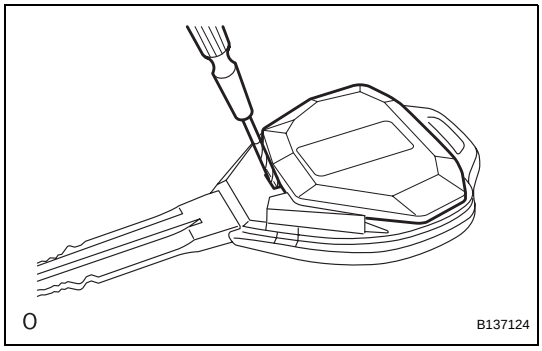

2. REMOVE DOOR CONTROL TRANSMITTER MODULE

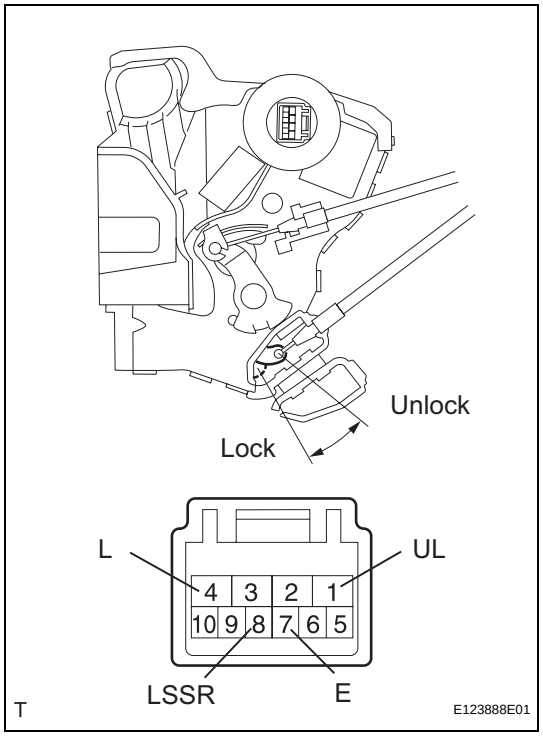

FRONT DOOR LOCK

INSPECTION

1. INSPECT FRONT DOOR WITH MOTOR LOCK ASSEMBLY LH

(a) Apply the battery voltage to the motor terminals and check the operation of the door lock motor.
OK

Measurement Condition	Specified Condition
Battery positive (+) → 4 (L) Battery negative (-) → 1 (UL)	Lock
Battery positive (+) → 1 (UL) Battery negative (-) → 4 (L)	Unlock

If the result is not as specified, replace the door lock assembly.

(b) Measure the resistance of the door lock position switch.
Standard resistance

Tester Connection	Switch Condition	Specified Condition
8 (LSSR) - 7 (E)	Lock	10 kΩ or higher
8 (LSSR) - 7 (E)	Unlock	Below 1 Ω

If the result is not as specified, replace the door lock assembly.

(c) Measure the resistance of the door key lock and unlock switch operation.
Standard resistance

Tester Connection	Switch Condition	Specified Condition
9 (L) - 7 (E)	Lock	Below 1 Ω
9 (L) - 7 (E)	OFF	10 kΩ or higher
10 (UL) - 7 (E)	Unlock	Below 1 Ω
10 (UL) - 7 (E)	OFF	10 kΩ or higher

If the result is not as specified, replace the door lock assembly.

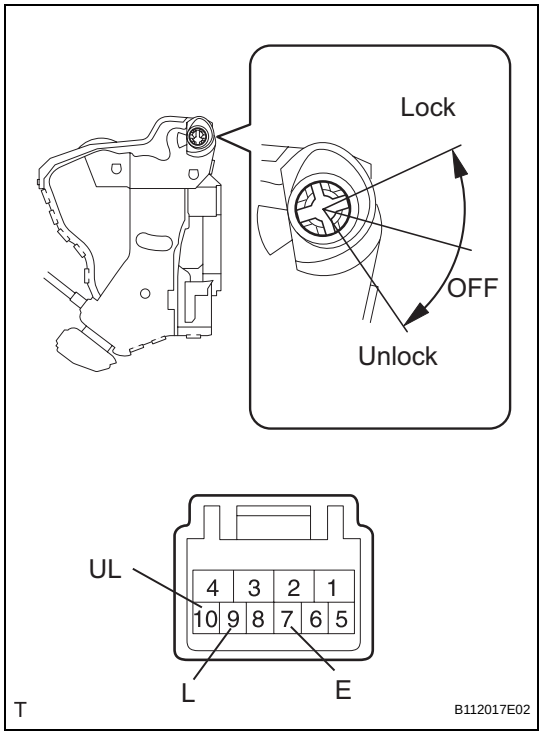

DL

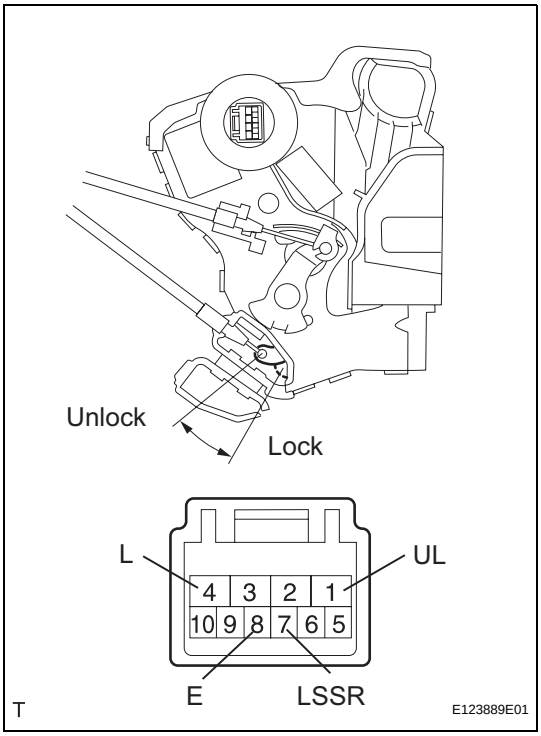

2. INSPECT FRONT DOOR WITH MOTOR LOCK ASSEMBLY RH

(a) Apply the battery voltage to the door lock motor and check that the operation of the door lock motor.

OK

Measurement Condition	Specified Condition
Battery positive (+) → 4 (L) Battery negative (-) → 1 (UL)	Lock
Battery positive (+) → 1 (UL) Battery negative (-) → 4 (L)	Unlock

If the result is not as specified, replace the door lock assembly.

(b) Measure the resistance of the door lock position switch.

Standard resistance

Tester Connection	Switch Condition	Specified Condition
7 (LSSR) - 8 (E)	Lock	10 kΩ or higher
7 (LSSR) - 8 (E)	Unlock	Below 1 Ω

If the result is not as specified, replace the door lock assembly.

SYSTEM DESCRIPTION

1. KEY REMINDER WARNING SYSTEM DESCRIPTION

(a) When the driver side door is opened with the key in the ignition key cylinder and ignition switch in the ACC or OFF position, this system causes the key reminder warning buzzer to sound in order to warn the driver that the ignition key has not been removed.

2. FUNCTION OF COMPONENT

Component	Function
Front Door Courtesy Light Switch Assembly LH	Detects front door status (open or closed) and outputs signal to instrument panel junction block (main body ECU)
Unlock Warning Switch Assembly	Detects if key is inserted into ignition key cylinder or not and outputs signal to instrument panel junction block (main body ECU)
Combination Meter Assembly	Receives buzzer request signal from main body ECU after main body ECU receives ignition switch signal and front door courtesy light switch signal, and actuates inner circuit to sound built-in buzzer intermittently

HOW TO PROCEED WITH TROUBLESHOOTING

HINT:
- Use these procedures to troubleshoot the key reminder warning system.
- *: Use the intelligent tester.

1 VEHICLE BROUGHT TO WORKSHOP

NEXT

2 INSPECT BATTERY VOLTAGE

Standard voltage:
11 to 14 V

HINT:
If the voltage is below 11 V, recharge or replace the battery before proceeding.

NEXT

3 INSPECT COMMUNICATION FUNCTION OF CAN COMMUNICATION SYSTEM*

(a) Use the intelligent tester to check if the CAN communication system is functioning normally.
Result:

Result	Proceed to
DTC is not output	A
DTC is output	B

B → **GO TO CAN COMMUNICATION SYSTEM**

A

4 PROBLEM SYMPTOMS TABLE

Result:

Result	Proceed to
Fault is not listed in problem symptoms table	A
Fault is listed in problem symptoms table	B

B → **Go to step 6**

A

5 OVERALL ANALYSIS AND TROUBLESHOOTING*

(a) Operation Check (see page DL-79)
(b) Terminals of ECU (see page DL-80)

DL

(c) DATA LIST / ACTIVE TEST (see page DL-83)

NEXT

6	REPAIR OR REPLACE

NEXT

7	CONFIRMATION TEST

NEXT

END

OPERATION CHECK

1. CHECK KEY REMINDER WARNING SYSTEM

(a) Check that the key reminder warning buzzer sounds.

(1) With the driver side door closed, insert the key into the ignition key cylinder and then turn the ignition switch to LOCK or ACC.

(2) Check that the buzzer sounds intermittently when the driver side door is open.

(b) Check that the key reminder warning buzzer stops.

(1) Check that the buzzer stops sounding if any of the following operations is performed while the buzzer is sounding:

- Close the driver side door (front door courtesy light switch is off).
- Turn the ignition switch ON.
- Remove the key from the ignition key cylinder.

PROBLEM SYMPTOMS TABLE

HINT:
Use the table below to help determine the cause of the problem symptom. The potential causes of the symptoms are listed in order of probability in the "Suspected Area" column of the table. Check each symptom by checking the suspected areas in the order they are listed. Replace parts as necessary.

Key reminder warning system:

Symptom	Suspected Area	See page
Key reminder buzzer does not sound	1. Unlock warning switch	DL-84
	2. Front door courtesy switch (Driver side)	DL-84
	3. Combination meter (Key reminder warning buzzer)	DL-84
	4. Instrument panel junction block (Main body ECU)	DL-84
	5. Wire harness	DL-84

TERMINALS OF ECU

1. CHECK COMBINATION METER ASSEMBLY

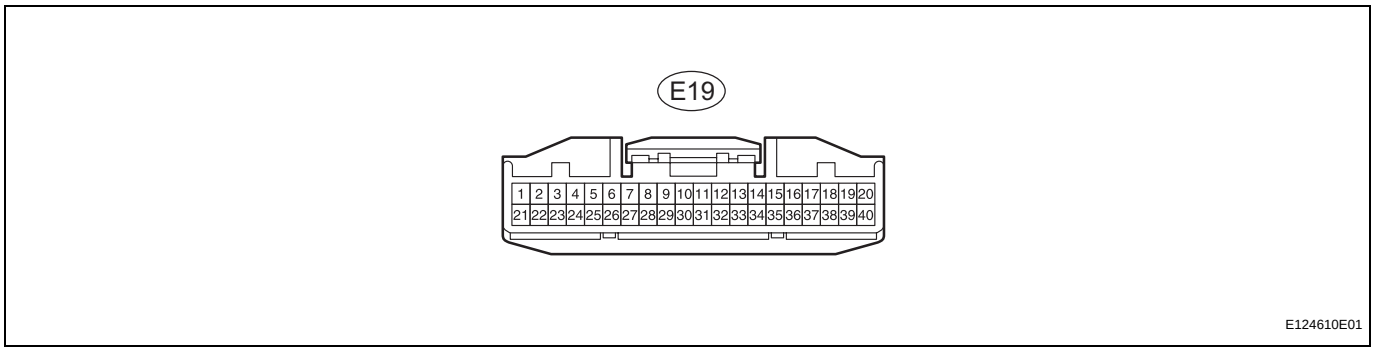

(a) Measure the voltage and resistance of the connector.

Symbols (Terminal No.)	Wiring Color	Terminal Description	Condition	Specified Condition
IG+ (E19-21) - Body ground	B - Body ground	Ignition switch signal	Ignition switch OFF	Below 1 V
			Ignition switch ON	10 to 14 V
B (E19-22) - Body ground	R - Body ground	Battery	Always	10 to 14 V
CANH (E19-32) - Body ground	G - Body ground	CAN communication line	Ignition switch ON	Pulse generation
CANL (E19-31) - Body ground	W - Body ground	CAN communication line	Ignition switch ON	Pulse generation
ET (E19-33) - Body ground	BR - Body ground	Ground	Always	Below 1 Ω

2. CHECK INSTRUMENT PANEL JUNCTION BLOCK (MAIN BODY ECU)

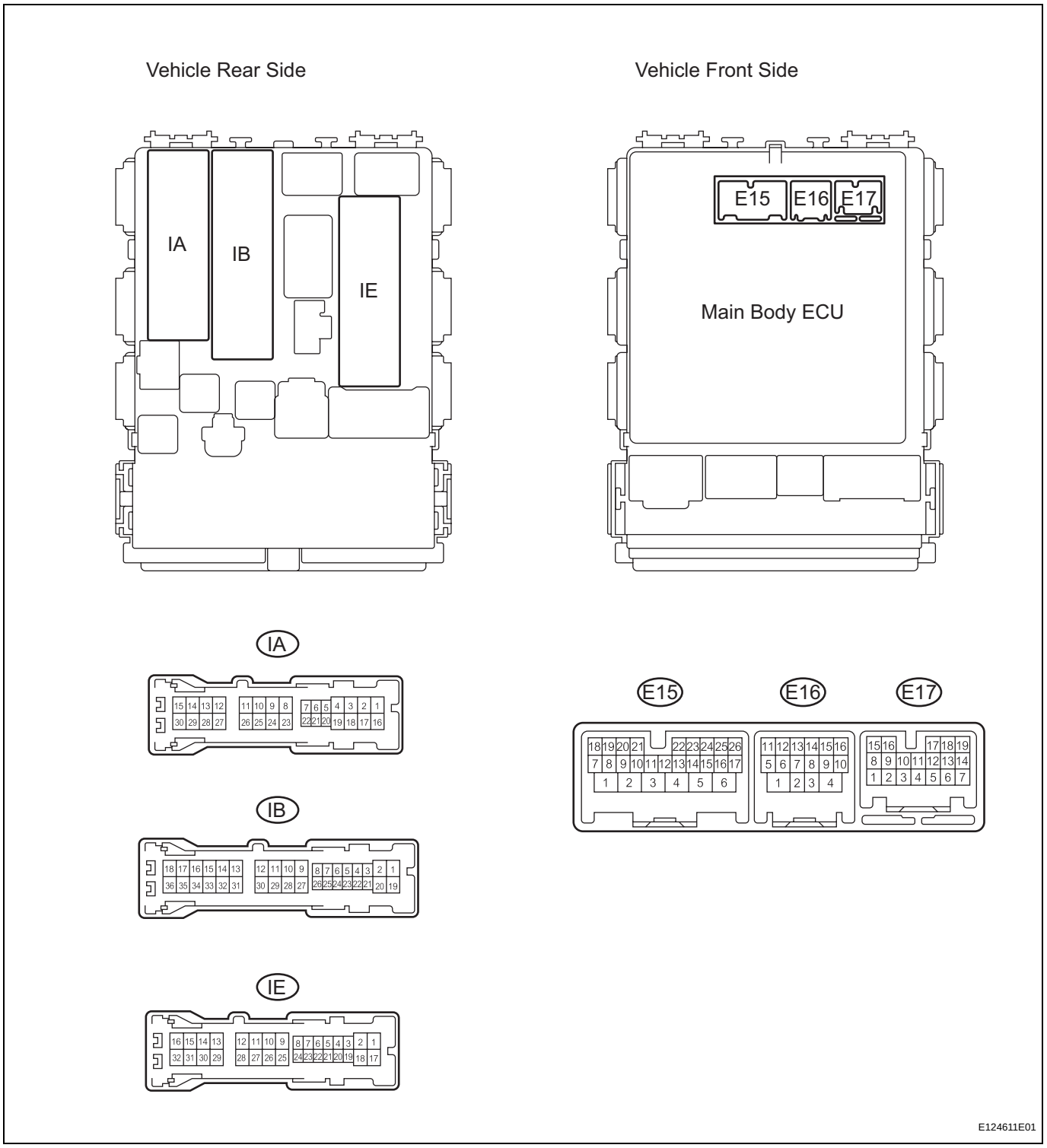

(a) Measure the voltage and resistance of the connectors.

Symbols (Terminal No.)	Wiring Color	Terminal Description	Condition	Specified Condition
KSW (IE-26) - Body ground	L - Body ground	Key unlock warning switch input	Key inserted	Below 1 V
			Key removed from ignition key cylinder	10 to 14 V
GND (IE-17) - Body ground	W-B - Body ground	Ground	Always	Below 1 Ω

DL

Symbols (Terminal No.)	Wiring Color	Terminal Description	Condition	Specified Condition
B (IB-30) - Body ground	R - Body ground	Battery	Always	10 to 14 V
DTCY (IA-21) - Body ground	W - Body ground	Driver door courtesy switch input	Driver door closed	10 to 14 V
			Driver door open	Below 1 V
CANL (E17-16) - Body ground	W - Body ground	CAN communication line	Ignition switch ON	Pulse generation
CANH (E17-15) - Body ground	R - Body ground	CAN communication line	Ignition switch ON	Pulse generation

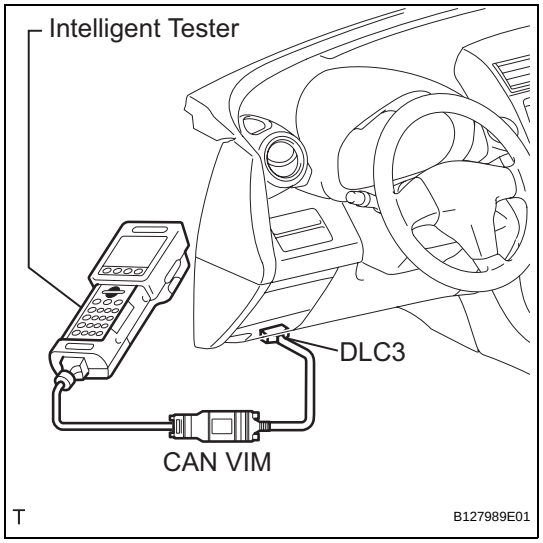

DIAGNOSIS SYSTEM

1. DESCRIPTION

(a) Key reminder warning system data can be read through the Data Link Connector 3 (DLC3) of the vehicle. When the system seems to be malfunctioning, use the intelligent tester (with CAN VIM) to check for malfunctions and perform repairs.

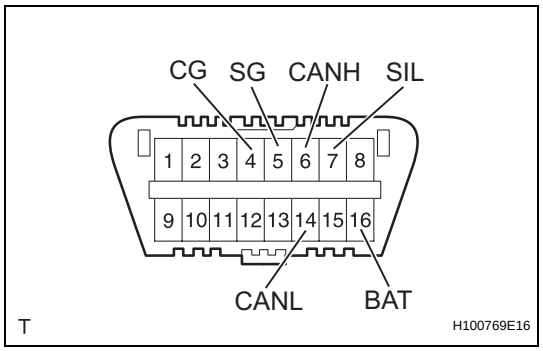

2. CHECK DLC3

The vehicle's ECM uses ISO 15765-4 communication protocol. The terminal arrangement of the DLC3 complies with ISO 15031-03 and matches the ISO 15765-4 format.

Symbols (Terminal No.)	Terminal Description	Condition	Specified Condition
SIL (7) - SG (5)	Bus "+" line	During transmission	Pulse generation
CG (4) - Body ground	Chassis ground	Always	Below 1 Ω
SG (5) - Body ground	Signal ground	Always	Below 1 Ω
BAT (16) - Body ground	Battery positive	Always	10 to 14 V
CANH (6) - CANL (14)	HIGH-level CAN bus line	Ignition switch OFF*	54 to 69 Ω
CANH (6) - Battery positive	HIGH-level CAN bus line	Ignition switch OFF*	1 MΩ or higher
CANL (6) - CG (4)	HIGH-level CAN bus line	Ignition switch OFF*	200 MΩ or higher
CANH (14) - Battery positive	LOW-level CAN bus line	Ignition switch OFF*	1 MΩ or higher
CANL (14) - CG (4)	LOW-level CAN bus line	Ignition switch OFF*	200 MΩ or higher

NOTICE:

***: Before measuring the resistance, leave the vehicle as is for at least 1 minute and do not operate the ignition switch, other switches or doors.**

If the result is not as specified, the DLC3 may have a malfunction. Repair or replace the harness and connector.

HINT:
Connect the cable of the intelligent tester (with CAN VIM) to the DCL3, turn the ignition switch ON and attempt to use the tester. If the display indicates that a communication error has occurred, there is a problem either with the vehicle or with the tester.

- If communication is normal when the tester is connected to another vehicle, inspect the DLC3 on the original vehicle.
- If communication is still not possible when the tester is connected to another vehicle, the problem may be in the tester itself. Consult the Service Department listed in the tester's instruction manual.

DATA LIST / ACTIVE TEST

1. READ DATA LIST

HINT:

Using the intelligent tester's DATA LIST allows switch, actuator and other item values to be read without removing any parts. Reading the DATA LIST early in troubleshooting is one way to save time.

(a) Connect the intelligent tester (with CAN VIM) to the DLC3.

(b) Turn the ignition switch ON.

(c) Read the DATA LIST.

Main body ECU

Item	Measurement Item / Display (Range)	Normal Condition	Diagnostic Note
KEY UNLOCK WARNING SW	Unlock warning switch signal / ON or OFF	ON: Key is in ignition key cylinder OFF: No key is in ignition key cylinder	-
D DOOR COURTESY SW	Driver side door courtesy switch signal / ON or OFF	ON: Driver side door is open OFF: Driver side door is closed	-

Key Reminder Buzzer does not Sound

DESCRIPTION

The key reminder warning buzzer sounds when the driver side door is opened while the ignition switch is in the LOCK or ACC positions. The key reminder warning buzzer is activated when the main body ECU sends a key switch signal and driver side courtesy switch signal to the combination meter.
HINT:
Since the key reminder warning system has functions that use CAN communication, first confirm that there is no malfunction in the communication system by inspecting the CAN communication functions in accordance with the "HOW TO PROCEED WITH TROUBLESHOOTING" procedures. Then, conduct the following inspection procedure.

WIRING DIAGRAM

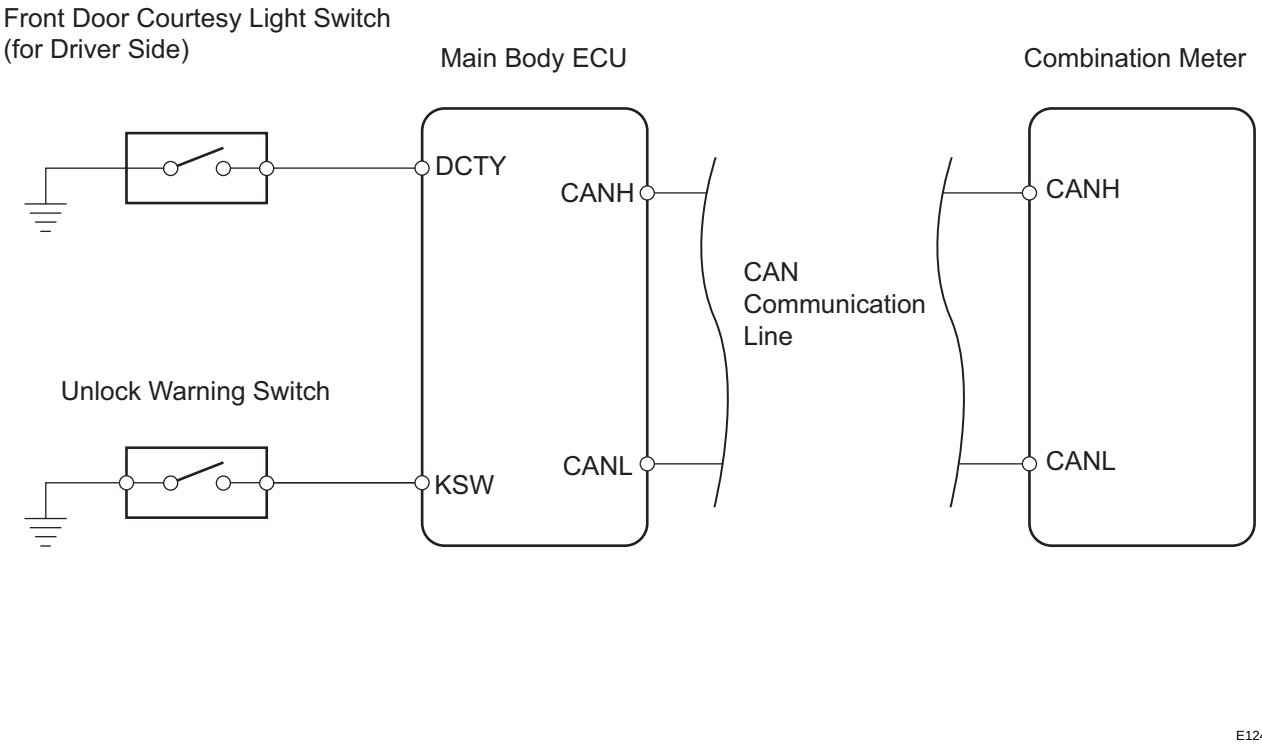

DL

INSPECTION PROCEDURE

1	READ VALUE USING INTELLIGENT TESTER (FRONT DOOR COURTESY LIGHT SWITCH)

(a) Check the DATA LIST to ensure proper operation of the front door courtesy light switch.

Main body ECU

Item	Measurement Item / Display (Range)	Normal Condition	Diagnostic Note
D DOOR COURTESY SW	Driver side door courtesy switch signal / ON or OFF	ON: Driver side door is open OFF: Driver side door is closed	-

OK:
"ON" (driver door is open) appears on the screen.

NG → **Go to step 5**

OK

2 READ VALUE USING INTELLIGENT TESTER (UNLOCK WARNING SWITCH)

(a) Check the DATA LIST to ensure proper operation of the door unlock warning switch.

Main body ECU

Item	Measurement Item / Display (Range)	Normal Condition	Diagnostic Note
KEY UNLOCK WARNING SW	Unlock warning switch signal / ON or OFF	ON: Key is in ignition key cylinder OFF: No key is in ignition key cylinder	-

OK:
"ON" (key is in ignition key cylinder) appears on the screen.

OK → **REPLACE COMBINATION METER ASSEMBLY**

NG

3 INSPECT UNLOCK WARNING SWITCH ASSEMBLY

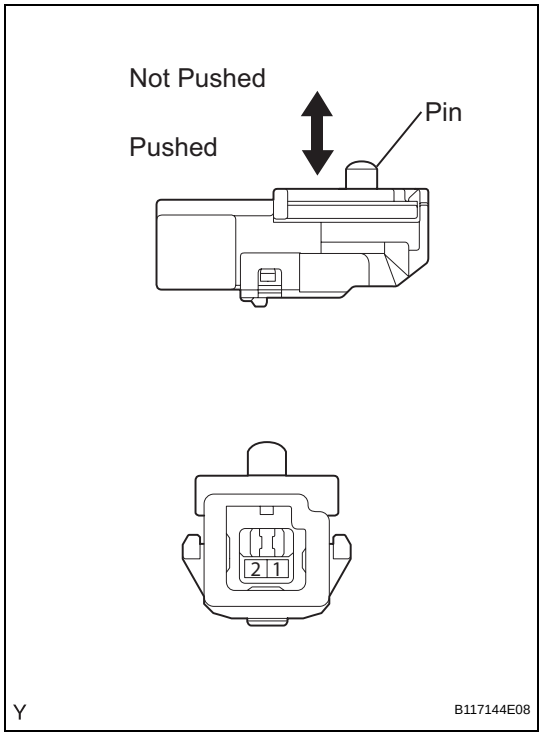

(a) Remove the unlock warning switch.
(b) Measure the resistance of the switch.
Standard resistance

Tester Connection	Condition	Specified Condition
1 - 2	Not pushed	10 kΩ or higher
1 - 2	Pushed	Below 1 Ω

NG → **REPLACE UNLOCK WARNING SWITCH ASSEMBLY**

OK

DL

4 CHECK WIRE HARNESS (UNLOCK WARNING SWITCH - MAIN BODY ECU)

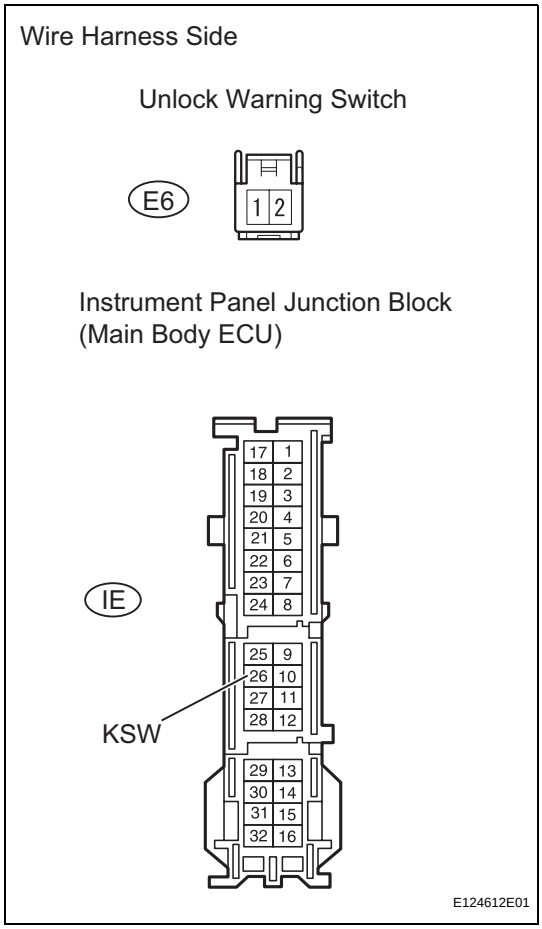

(a) Disconnect the E6 switch connector.
(b) Disconnect the IE junction block connector.
(c) Measure the resistance between the wire harness side connectors.

Standard resistance

Tester Connection	Specified Condition
E6-1 - IE-26 (KSW)	Below 1 Ω
E6-2 - Body ground	Below 1 Ω

NG → **REPAIR OR REPLACE HARNESS AND CONNECTOR**

OK

REPLACE INSTRUMENT PANEL JUNCTION BLOCK (MAIN BODY ECU)

5 INSPECT FRONT DOOR COURTESY LIGHT SWITCH (for Driver Side)

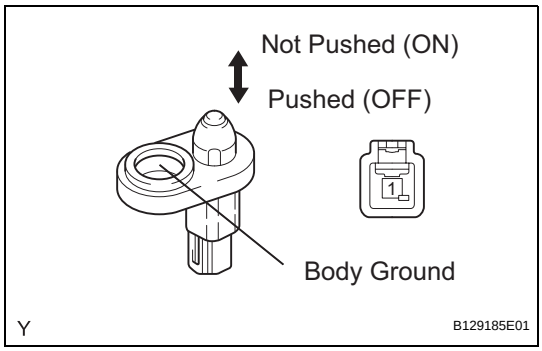

(a) Remove the courtesy light switch.
(b) Measure the resistance of the switch.

Standard resistance

Tester Connection	Condition	Specified Condition
1 - Body ground	Not pushed (ON)	Below 1 Ω
1 - Body ground	Pushed (OFF)	10 kΩ or higher

NG → **REPLACE FRONT DOOR COURTESY LIGHT SWITCH (for Driver Side)**

OK

DL

6	**CHECK WIRE HARNESS AND CONNECTORS (FRONT DOOR COURTESY LIGHT SWITCH - MAIN BODY ECU)**

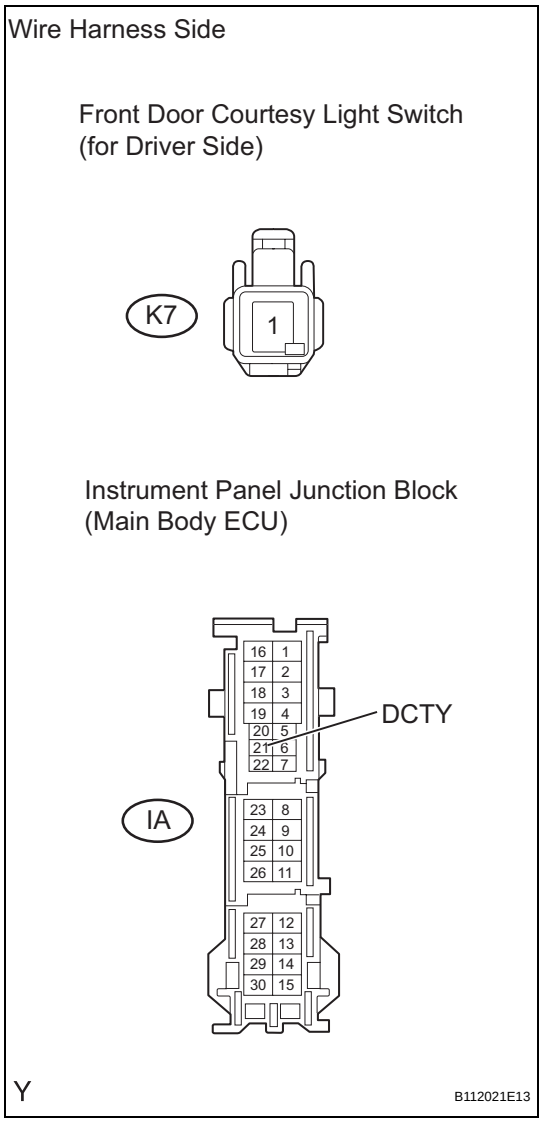

(a) Disconnect the K7 connector.
(b) Disconnect the IA junction block connector.
(c) Measure the resistance between the wire harness side connectors.

Standard resistance

Tester Connection	Specified Condition
K7-1 - IA-21 (DCTY)	Below 1 Ω

NG → **REPAIR OR REPLACE HARNESS AND CONNECTOR**

OK

REPLACE INSTRUMENT PANEL JUNCTION BLOCK (MAIN BODY ECU)

DL

KEY REMINDER WARNING SYSTEM

PARTS LOCATION

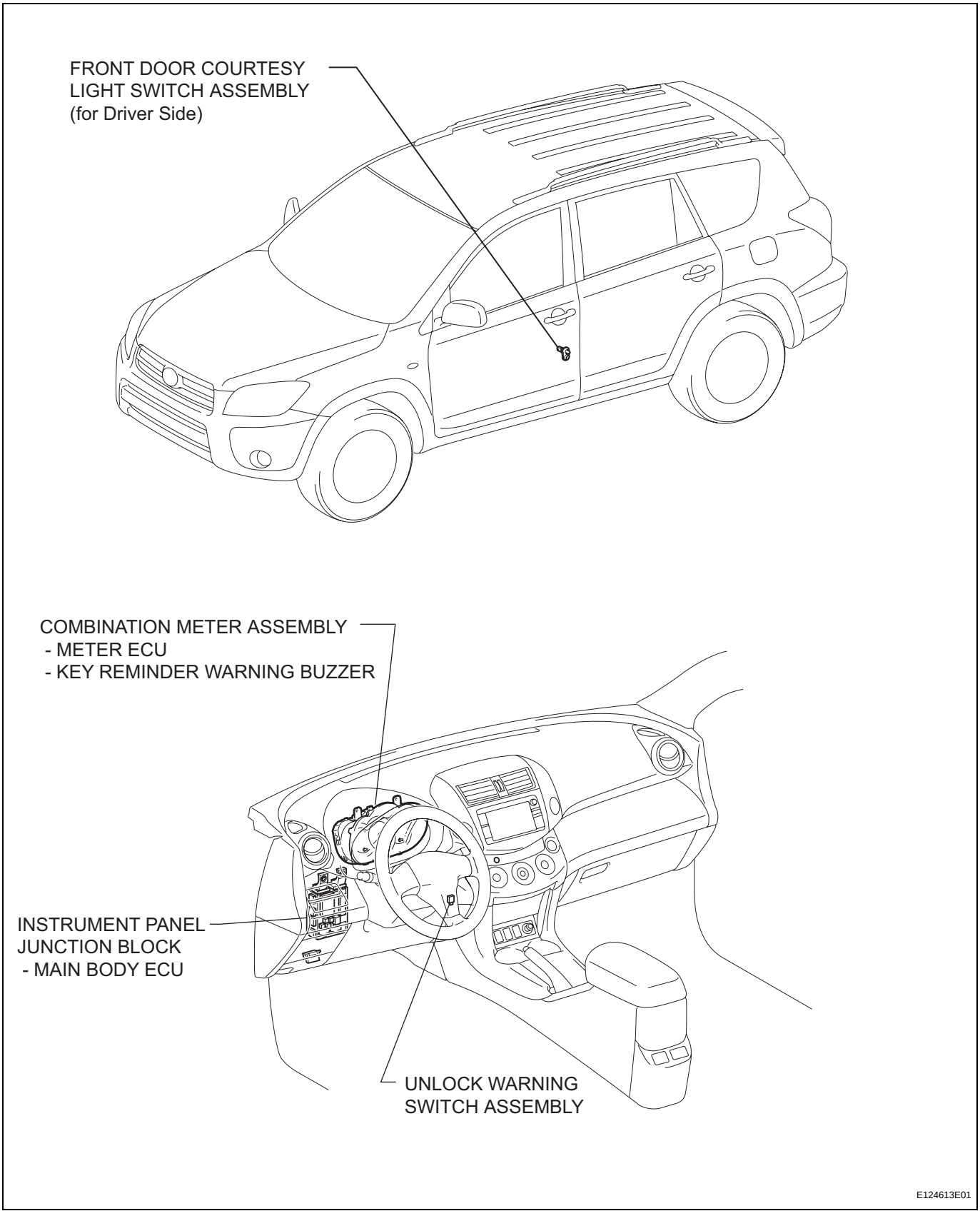

SYSTEM DIAGRAM

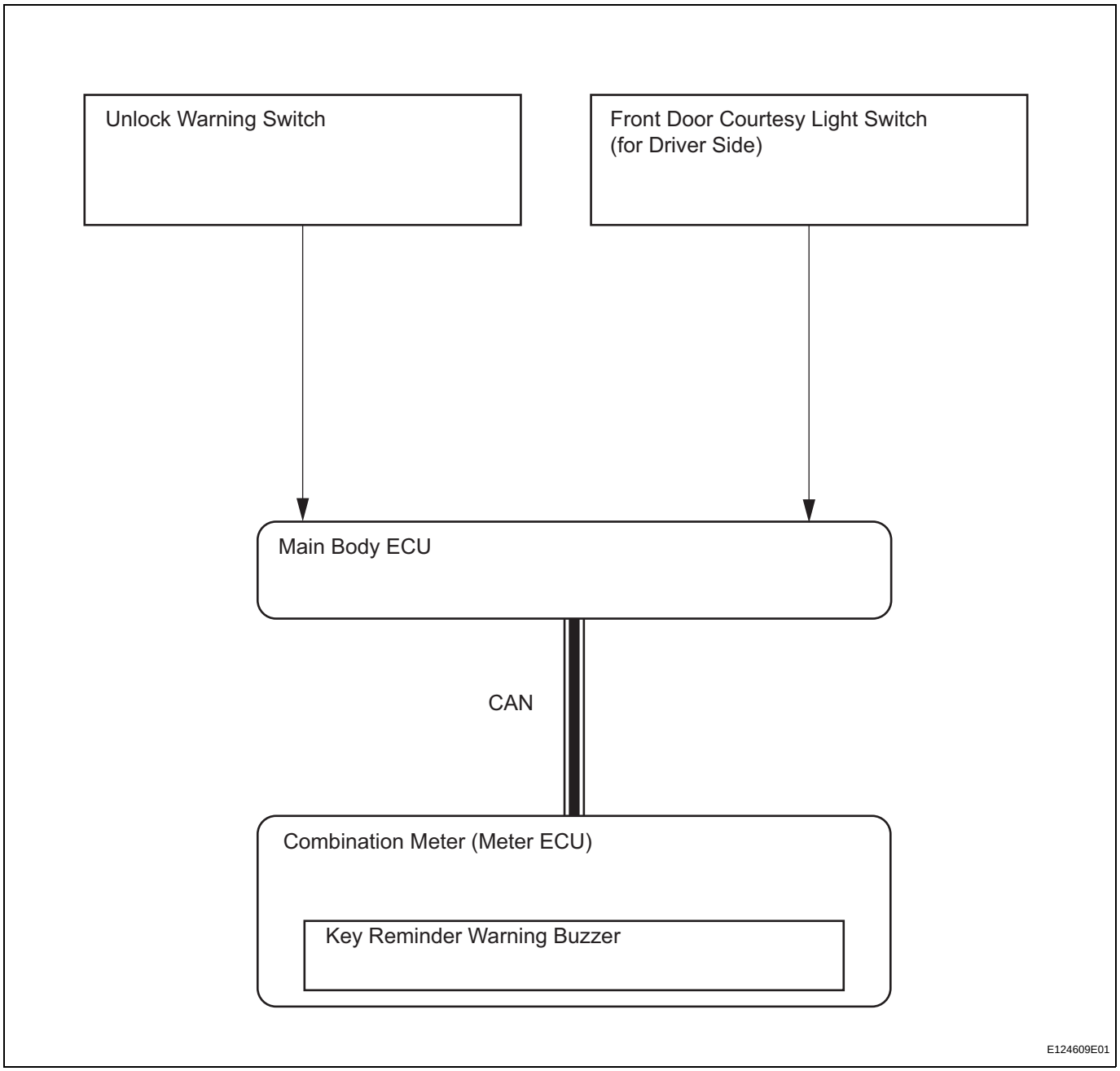

SYSTEM DIAGRAM

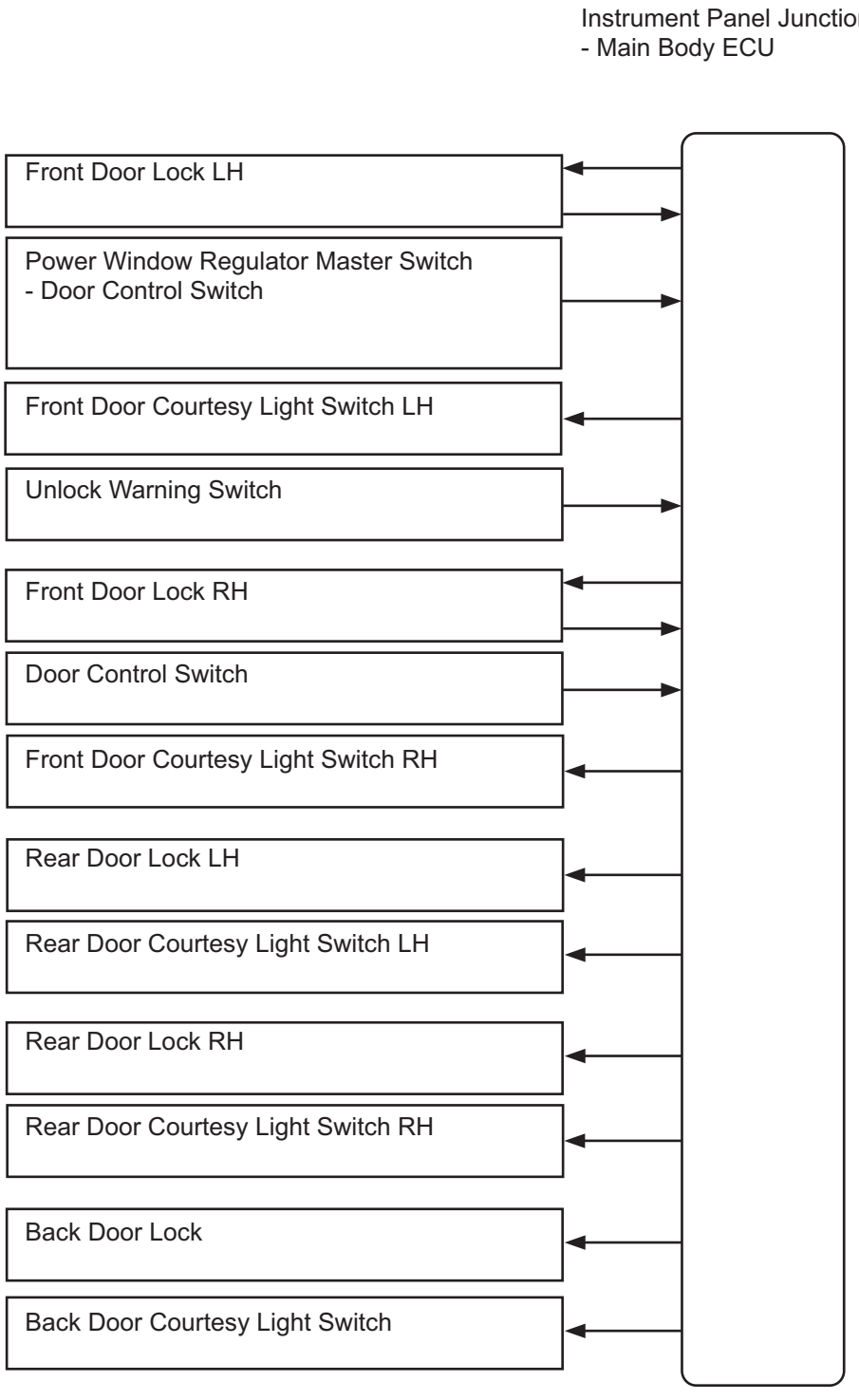

DL

SYSTEM DESCRIPTION

1. POWER DOOR LOCK SYSTEM DESCRIPTION

(a) The power door lock system locks / unlocks all doors with a one-touch operation.

- The door control switch of the power window regulator master switch or door control switch on passenger side sends lock / unlock request signals to the main body ECU. Then, the main body ECU sends these requests to the lock motors in each door to lock / unlock all the doors simultaneously.
- Operating the driver side door lock using a key sends lock / unlock request signals to the main body ECU.

2. COMPONENTS

Components	Function
Door control switch on power window regulator master switch	Locks / unlocks all doors
Door control switch	Locks / unlocks all doors
Door courtesy switch	• Placed on each door. • Detects door status (open or closed) and outputs data to main body ECU. • Turns on when door is open and off when door is closed.
Driver door lock	• Built-in motor locks / unlocks door. • Built-in door control switch (key-linked) detects door key operation's door status (locked or unlocked) and outputs data to main body ECU. • Built-in position switch detects door status (locked or unlocked) and outputs data to main body ECU. This switch turns off when door is locked and on when door is unlocked.
• Front passenger door lock • Rear door lock LH • Rear door lock RH • Back door lock	Built-in motor locks / unlocks door.

3. FUNCTIONS

This system is controlled by the main body ECU. The main body ECU outputs signals to each door lock motor. The door lock control system in the vehicle has the following functions:

Functions	Outlines
Key-linked lock and unlock function	Linked with key cylinder. Locks / unlocks all doors when lock / unlock operation is possible.
Key lock-in prevention function	When key is inserted in ignition key cylinder and door lock operation is performed, all doors are unlocked.
Manual unlock prohibition function	Performing door lock operation with transmitter or key disables unlock operation by door control switch.
2-step unlock function	Unlocks only driver door by turning key cylinder once and unlocks other doors by turning it twice.

HOW TO PROCEED WITH TROUBLESHOOTING

HINT:

- Use the procedure to troubleshoot the power door lock control system.
- *: Use the Intelligent tester.

1 **VEHICLE BROUGHT TO WORKSHOP**

NEXT

2 **INSPECT BATTERY VOLTAGE**

Standard voltage:
11 to 14 V

If the voltage is below 11 V, recharge or replace the battery before proceeding.

NEXT

3 **PROBLEM SYMPTOMS TABLE**

Result

Result	Proceed to
Fault is not listed in problem symptoms table	A
Fault is listed on problem symptoms table	B

B → **Go to step 5**

A

4 **OVERALL ANALYSIS AND TROUBLESHOOTING***

(a) Operation Check (see page DL-6).
(b) Terminals of ECU (see page DL-8).
(c) DATA LIST / ACTIVE TEST (see page DL-12).

NEXT

5 **ADJUST, REPAIR OR REPLACE**

NEXT

6	**CONFIRMATION TEST**

NEXT

END

OPERATION CHECK

1. CHECK ELECTRICAL DOOR LOCK OPERATION

(a) Check the basic function.

(1) Check that all doors lock when the door control switch (for manual operation) is turned to LOCK and all doors unlock when turned to UNLOCK.

(2) Check that all doors lock when the driver side door lock key cylinder is turned to LOCK using the key.

(3) Check that only the driver side door unlocks when the driver side door lock key cylinder is turned to UNLOCK and all doors unlock when turned to UNLOCK once again within 3 seconds using the key (2-step unlocking function).

(b) Check the key lock-in prevention.

NOTICE:

In order to prevent the key from being actually locked-in, the inspection should be made with the driver side door window open.

(1) Have the key inserted into the ignition key cylinder.

(2) With the driver side door open, check that all doors unlock immediately after the door lock knob for the driver side door is turned to LOCK.

(3) With the driver side door open, check that all doors unlock immediately after the door control switch (for manual operation) is turned to LOCK.

(4) With the driver side door open, turn the driver side door lock knob to LOCK and hold it for 2 seconds or more, and then close the driver side door. Then check that all doors unlock.

CUSTOMIZE PARAMETERS

1. CUSTOMIZING FUNCTION WITH INTELLIGENT TESTER (REFERENCE)

HINT:

The following item can be customized.

NOTICE:

- **When the customer requests a change in a function, first make sure that the function can be customized.**
- **Make a note of the current settings before customizing.**
- **When troubleshooting a function, first make sure that the function is set to the default setting.**

Power door lock control system:

Display (Item)	Default	Function	Setting
UNLK/KEY TWICE	ON	Unlocks only driver side door when driver side door key cylinder turned to unlock once, and unlocks all doors when turned to unlock twice. For OFF setting, turning it once unlocks all doors.	ON/OFF

PROBLEM SYMPTOMS TABLE

HINT:
Use the table below to help determine the cause of the problem symptom. The potential causes of the symptoms are listed in order of probability in the "Suspected Area" column of the table. Check each symptom by checking the suspected areas in the order they are listed. Replace parts as necessary.

Power door lock control system

Symptom	Suspected area	See page
All Doors cannot be Locked / Unlocked Simultaneously	1. Front door lock LH	DL-14
	2. Door control switch on power window regulator master switch	
	3. Door control switch	
	4. Wire harness	
	5. Main body ECU	
Only Driver Door LOCK / UNLOCK Functions do not Operate	1. Front door lock LH	DL-22
	2. Wire harness	
	3. Main body ECU	
Only Passenger Door LOCK / UNLOCK Functions do not Operate	1. Front door lock RH	DL-25
	2. Wire harness	
	3. Main body ECU	
Only Rear Door LH LOCK / UNLOCK Functions do not Operate	1. Rear door lock LH	DL-28
	2. Wire harness	
	3. Main body ECU	
Only Rear Door RH LOCK / UNLOCK Functions do not Operate	1. Rear door lock RH	DL-30
	2. Wire harness	
	3. Main body ECU	
Only Back Door LOCK / UNLOCK Functions do not Operate	1. Back door lock	DL-32
	2. Wire harness	
	3. Main body ECU	
Key Lock-in Prevention Function does not Work Properly	1. Front door courtesy light switch LH	DL-34
	2. Unlock warning switch	
	3. Wire harness	
	4. Main body ECU	

TERMINALS OF ECU

1. CHECK INSTRUMENT PANEL JUNCTION BLOCK (MAIN BODY ECU)

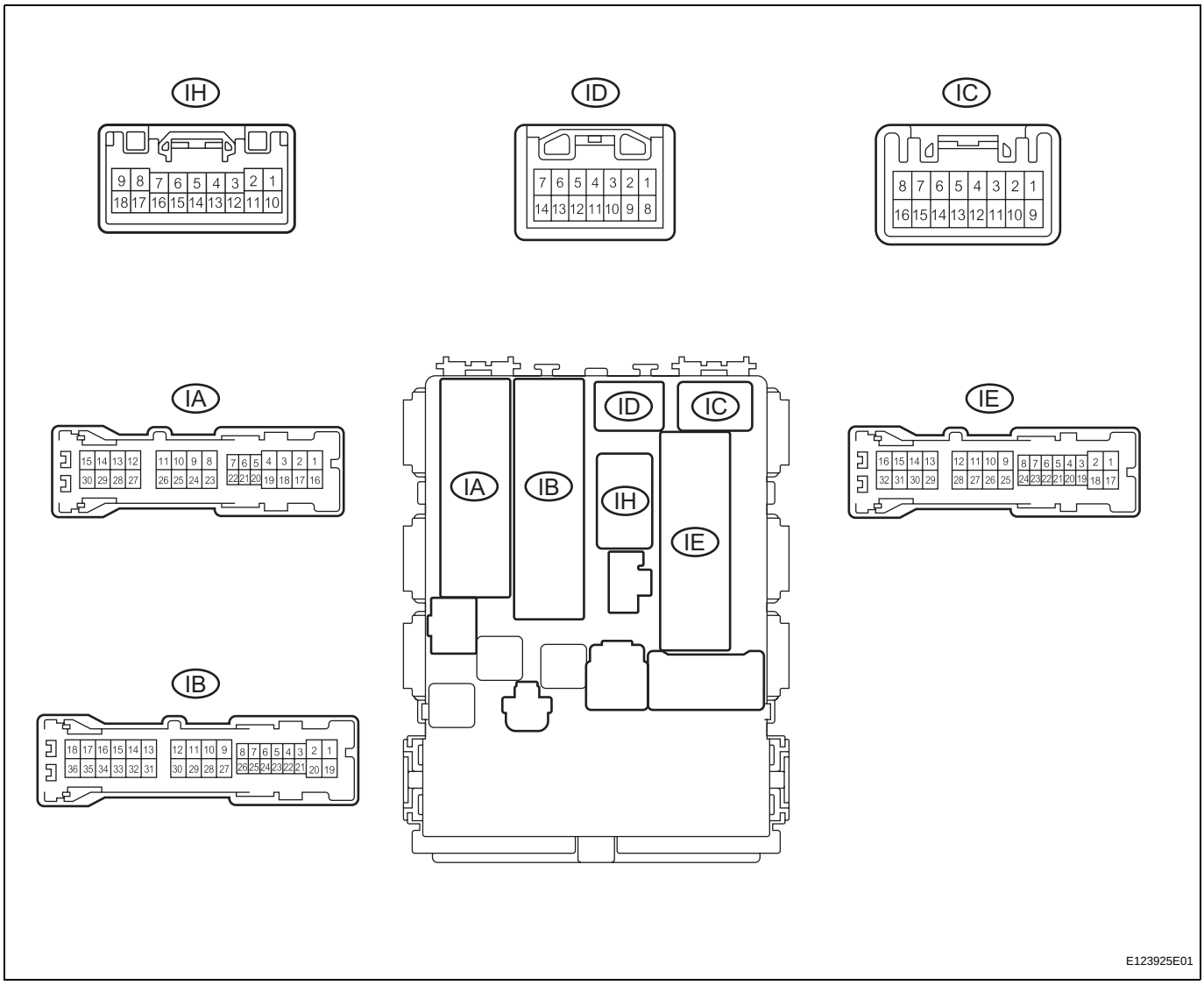

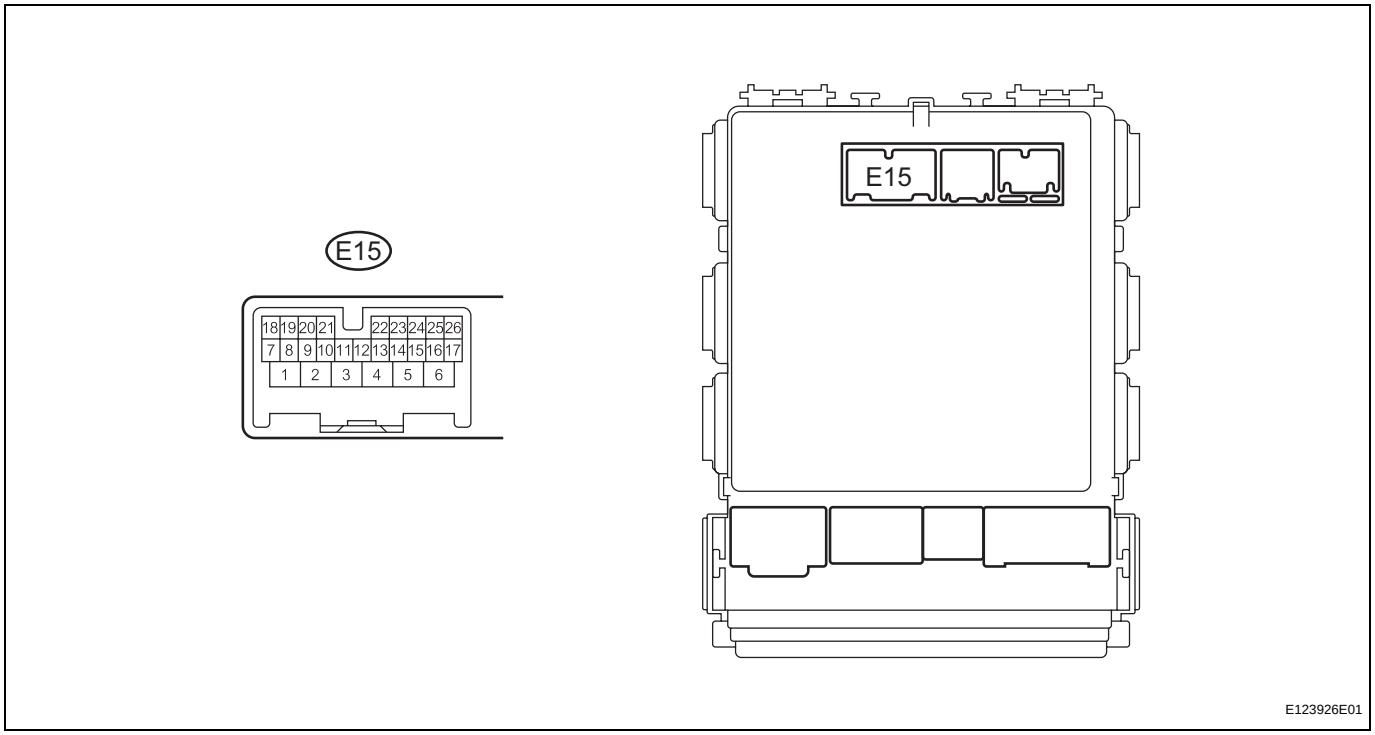

(a) Disconnect the IB and IE junction block connectors.
(b) Measure the voltage and resistance of the wire harness side connectors.

Symbols (Terminal No.)	Wiring Color	Terminal Description	Condition	Specified Condition
BECU (IB-30) - GND1 (IE-17)	R - W-B	Battery (power supply)	Always	10 to 14 V
GND1 (IE-17) - Body ground	W-B - Body ground	Ground	Always	Below 1 Ω

(c) Reconnect the IB and IE junction block connector.
(d) Measure the voltage of the wire harness side connectors.

Symbols (Terminal No.)	Wiring Color	Terminal Description	Condition	Specified Condition
ACT+ (IA-3) - Body ground	R - Body ground	Door lock motor drive lock output	Driver side door control switch or passenger side door control switch or driver side door key cylinder OFF	Below 1 V
ACT+ (IA-3) - Body ground	R - Body ground	Door lock motor drive lock output	Driver side door control switch or passenger side door control switch or driver side door key cylinder ON (LOCK)	10 to 14 V → Below 1 V
ACT+ (IH-8) - Body ground	R - Body ground	Door lock motor drive lock output	Driver side door control switch or passenger side door control switch or driver side door key cylinder OFF	Below 1 V
ACT+ (IH-8) - Body ground	R - Body ground	Door lock motor drive lock output	Driver side door control switch or passenger side door control switch or driver side door key cylinder ON (LOCK)	10 to 14 V → Below 1 V

Symbols (Terminal No.)	Wiring Color	Terminal Description	Condition	Specified Condition
ACT+ (IH-17) - Body ground	R - Body ground	Door lock motor drive lock output	Driver side door control switch or passenger side door control switch or driver side door key cylinder OFF	Below 1 V
ACT+ (IH-17) - Body ground	R - Body ground	Door lock motor drive lock output	Driver side door control switch or passenger side door control switch or driver side door key cylinder ON (LOCK)	10 to 14 V → Below 1 V
ACT- (IA-4) - Body ground	BR- Body ground	Door lock motor drive unlock output	Driver side door control switch or passenger side door control switch or driver side door key cylinder OFF	Below 1 V
ACT- (IA-4) - Body ground	BR - Body ground	Door lock motor drive unlock output	Driver side door control switch or passenger side door control switch or driver side door key cylinder ON (UNLOCK)	10 to 14 V → Below 1 V
ACT- (IH-18) - Body ground	B - Body ground	Door lock motor drive unlock output	Driver side door control switch or passenger side door control switch or driver side door key cylinder OFF	Below 1 V
ACT- (IH-18) - Body ground	B - Body ground	Door lock motor drive unlock output	Driver side door control switch or passenger side door control switch or driver side door key cylinder ON (UNLOCK)	10 to 14 V → Below 1 V
KSW (IE-26) - Body ground	L- Body ground	Key unlock warning switch input	Key is inserted in ignition key cylinder	Below 1 V
KSW (IE-26) - Body ground	L- Body ground	Key unlock warning switch input	No key is in ignition key cylinder	10 to 14 V
UL1 (IH-5) - Body ground	B - Body ground	Driver side manual unlock switch input	Driver side door control switch OFF	Below 1 V
UL1 (IH-5) - Body ground	B - Body ground	Driver side manual unlock switch input	Driver side door control switch ON (UNLOCK)	10 to 14 V → Below 1 V
UL1 (IH-14) - Body ground	O - Body ground	Passenger side manual unlock switch input	Passenger side door control switch OFF	Below 1 V
UL1 (IH-14) - Body ground	O - Body ground	Passenger side manual unlock switch input	Passenger side door control switch ON (UNLOCK)	10 to 14 V → Below 1 V
L1 (IH-4) - Body ground	P - Body ground	Driver side manual lock switch input	Driver side door control switch OFF	Below 1 V
L1 (IH-4) - Body ground	P - Body ground	Driver side manual lock switch input	Driver side door control switch ON (LOCK)	10 to 14 V → Below 1 V
L1 (IH-13) - Body ground	V - Body ground	Passenger side manual lock switch input	Passenger side door control switch OFF	Below 1 V
L1 (IH-13) - Body ground	V - Body ground	Passenger side manual lock switch input	Passenger side door control switch ON (LOCK)	10 to 14 V → Below 1 V
L2 (IH-7) - Body ground	SB - Body ground	Driver side Key-linked operated lock switch input	Driver side door key cylinder OFF	Below 1 V
L2 (IH-7) - Body ground	SB - Body ground	Driver side Key-linked operated lock switch input	Driver side door key cylinder ON (LOCK)	10 to 14 V → Below 1 V
PCTY (IC-14) - Body ground	BR - Body ground	Passenger door courtesy switch input	Passenger side door closed	10 to 14 V
PCTY (IC-14) - Body ground	BR - Body ground	Passenger door courtesy switch input	Passenger side door open	Below 1 V
RRCY (ID-7) - Body ground	LC - Body ground	Rear door courtesy switch LH input	Rear RH door closed	10 to 14 V

Symbols (Terminal No.)	Wiring Color	Terminal Description	Condition	Specified Condition
RRCY (ID-7) - Body ground	LC - Body ground	Rear door courtesy switch LH input	Rear RH door open	Below 1 V
BCTY (IA-7) - Body ground	LG - Body ground	Back door courtesy switch input	Back door closed	10 to 14 V
BCTY (IA-7) - Body ground	LG - Body ground	Back door courtesy switch input	Back door open	Below 1 V
DCTY (IA-21) - Body ground	W - Body ground	Driver side door courtesy switch input	Driver side door open	10 to 14 V
DCTY (IA-21) - Body ground	W - Body ground	Driver side door courtesy switch input	Driver side door closed	Below 1 V
DCTY (IC-6) - Body ground	BR - Body ground	Driver side door courtesy switch input	Driver side door open	10 to 14 V
DCTY (IC-6) - Body ground	BR - Body ground	Driver side door courtesy switch input	Driver side door closed	Below 1 V
ACTD (E15-5) - Body ground	B - Body ground	Driver side door unlock motor drive	Driver side door control switch or door control switch or driver side door key cylinder OFF	Below 1 V
ACTD (E15-5) - Body ground	B - Body ground	Driver side door unlock motor drive	Driver side door control switch or door control switch or driver side door key cylinder ON (UNLOCK)	10 to 14 V → Below 1 V
LSWP (E15-10) - Body ground	Y - Body ground	Passenger side door lock position switch input	Passenger side door UNLOCK	10 to 14 V
LSWP (E15-10) - Body ground	Y - Body ground	Passenger side door lock position switch input	Passenger side door LOCK	Below 1 V
UL3 (E15-9) - Body ground	LG - Body ground	Driver side door key-linked operated door unlock switch input	Driver side door key cylinder OFF	Below 1 V
UL3 (E15-9) - Body ground	LG - Body ground	Driver side door key-linked operated door unlock switch input	Driver side door key cylinder ON (LOCK)	10 to 14 V → Below 1 V

DIAGNOSIS SYSTEM

1. DESCRIPTION

Power door lock control system data can be read in the Data Link Connector 3 (DLC3) of the vehicle. When the system seems to be malfunctioning, use the intelligent tester to check for malfunctions and perform repairs.

2. CHECK DLC3

(a) The ECU uses ISO 15765-4 for communication. The terminal arrangement of the DLC3 complies with ISO 15031-3 and matches the ISO 15765-4 format.

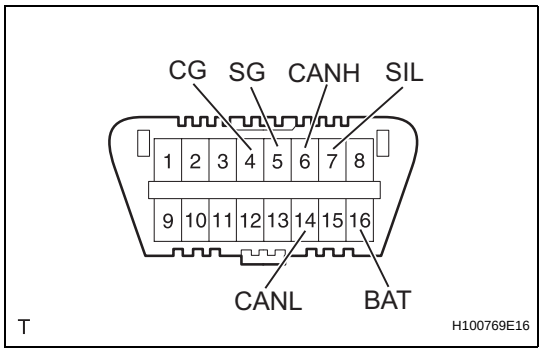

Symbols (Terminal No.)	Terminal Description	Condition	Specified Condition
SIL (7) - SG (5)	Bus '+' line	During transmission	Pulse generation
CG (4) - Body ground	Chassis ground	Always	Below 1 Ω
SG (5) - Body ground	Signal ground	Always	Below 1 Ω
BAT (16) - Body ground	Battery positive	Always	10 to 14 V
CANH (6) - CANL (14)	HIGH-level CAN bus line	Ignition switch OFF*	54 to 69 Ω
CANH (6) - CG (4)	HIGH-level CAN bus line	Ignition switch OFF*	1 kΩ or more
CANL (14) - CG (4)	HIGH-level CAN bus line	Ignition switch OFF*	1 kΩ or more
CANH (6) - BAT (16)	LOW-level CAN bus line	Ignition switch OFF*	1 MΩ or more
CANL (14) - BAT (16)	LOW-level CAN bus line	Ignition switch OFF*	1 MΩ or more

NOTICE:

***: Before measuring the resistance, leave the vehicle for at least 1 minute and do not operate the ignition switch, any switches or doors.**

If the result is not as specified, the DLC3 may have a malfunction. Repair or replace the harness and connector.

HINT:

Connect the cable of the intelligent tester to the DLC3, turn the ignition switch ON and attempt to use the tester. If the display indicates that a communication error has occurred, there is a problem either with the vehicle or with the tester.

- If communication is normal when the tester is connected to another vehicle, inspect the DLC3 of the original vehicle.
- If communication is still not possible when the tester is connected to another vehicle, the problem may be in the tester itself. Consult the Service Department listed in the tester's instruction manual.

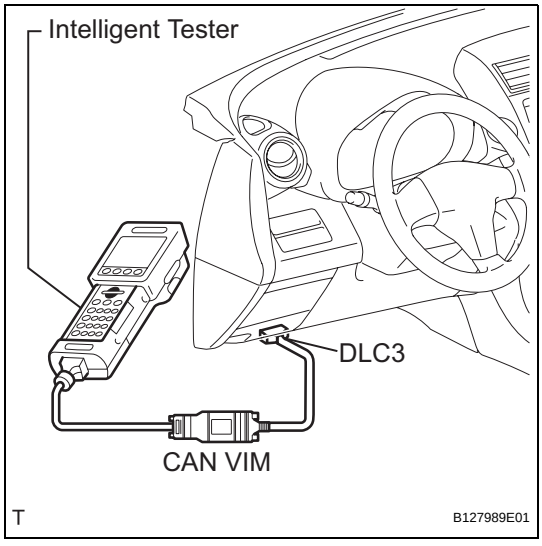

DATA LIST / ACTIVE TEST

1. READ DATA LIST

HINT:

Using the intelligent tester's DATA LIST allows switch, sensor, actuator and other item values to be read without removing any parts. Reading the DATA LIST early in troubleshooting is one way to save time.

(a) Connect the intelligent tester (with CAN VIM) to the DLC3.

(b) Turn the ignition switch ON.

(c) Read the DATA LIST on the tester's screen.

Main body ECU

Item	Measurement Item / Display (Range)	Normal Condition	Diagnostic Note
D DOR CTY SW	Driver side door courtesy light switch signal / ON or OFF	ON: Driver side door is open OFF: Driver side door is closed	-
D LOCK POS SW	Driver side door lock position switch signal / ON or OFF	ON: Driver side door is unlocked OFF: Driver side door is locked	-
D/L SW-LOCK	Door manual lock switch signal ON or OFF	ON: Door control switch on power window regulator master switch is pushed to lock position OFF: Door control switch on power window regulator master switch is not pushed	-
D/L SW UNLOCK	Door manual unlock switch signal / ON or OFF	ON: Door control switch on power window regulator master switch is pushed to unlock position OFF: Door control switch on power window regulator master switch is not pushed	-
DOR KEY SW-LOCK	Door key linked lock switch signal / ON or OFF	ON: Driver side door key cylinder is turned to lock position OFF: Driver side door key cylinder is not turned	-
D DOR KEY SW-UL	Door key linked lock switch signal / ON or OFF	ON: Driver side door key cylinder is turned to unlock position OFF: Driver side door key cylinder is not turned	-
P DOR CTY SW	Passenger side door courtesy light signal / ON or OFF	ON: Passenger side door is open OFF: Passenger side door is closed	-
P LOCK POS SW	Passenger side door lock position switch signal / ON or OFF	ON: Passenger side door is unlocked OFF: Passenger side door is locked	-
RR DOR CTY SW	Rear door RH courtesy light switch signal / ON or OFF	ON: Rear door RH is open OFF: Rear door RH is closed	-
RL DOR CTY SW	Rear door LH courtesy light switch signal / ON or OFF	ON: Rear door LH is open OFF: Rear door LH is closed	-
BK DOR CTY SW	Back door courtesy light switch signal / ON or OFF	ON: Back door is open OFF: Back door is closed	-
KEY UNLK WRN SW	Unlock warning switch signal / ON or OFF	ON: Key is in ignition key cylinder OFF: No key is in ignition key cylinder	-

2. PERFORM ACTIVE TEST

HINT:

Performing the intelligent tester's ACTIVE TEST allows relay, VSV, actuator and other items to be operated without removing any parts. Performing the ACTIVE TEST early in troubleshooting is one way to save time. The DATA LIST can be displayed during the ACTIVE TEST.

(a) Connect the intelligent tester (with CAN VIM) to the DLC3.
(b) Turn the ignition switch ON.
(c) Perform the ACTIVE TEST according to the display on the tester.

Main body ECU

Item	Test Details	Diagnostic Note
DOOR LOCK	Operate door lock motor LOCK/UNLOCK	-
D DOOR UNLOCK	Operate driver side door unlock ON / OFF	-

All Doors cannot be Locked / Unlocked Simultaneously

DESCRIPTION

The main body ECU receives switch signals from the door control switch on the power window regulator master switch, door control switch and driver side door key cylinder, and activates the door lock motor on each door accordingly.

WIRING DIAGRAM

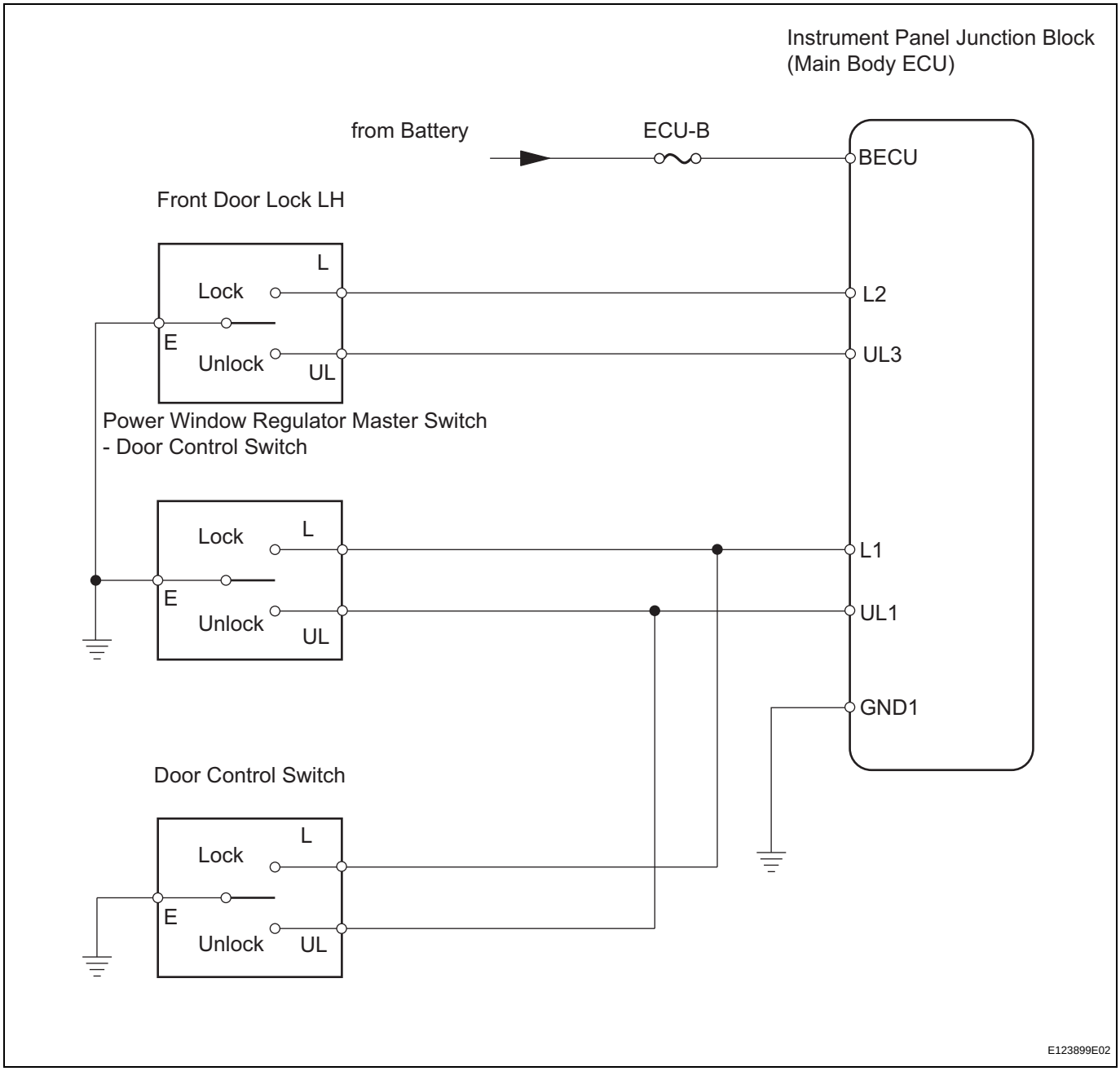

INSPECTION PROCEDURE

1	PERFORM ACTIVE TEST BY INTELLIGENT TESTER (DOOR LOCK)

(a) Select the ACTIVE TEST, use the intelligent tester to generate a control command, and then check that the doors lock / unlock.

Main body ECU

Item	Test Details	Diagnostic Note
DOOR LOCK	Operate door lock motor LOCK / UNLOCK	-

OK:
Doors can lock / unlock.

OK → **Go to step 4**

NG

2	INSPECT FUSE (ECU-B)

(a) Remove the ECU-B fuse from the engine room No. 2 relay block.
(b) Measure the resistance.
Standard resistance:
Below 1 Ω

NG → **REPLACE FUSE**

OK

3	CHECK WIRE HARNESS (ECU - BATTERY AND BODY GROUND)

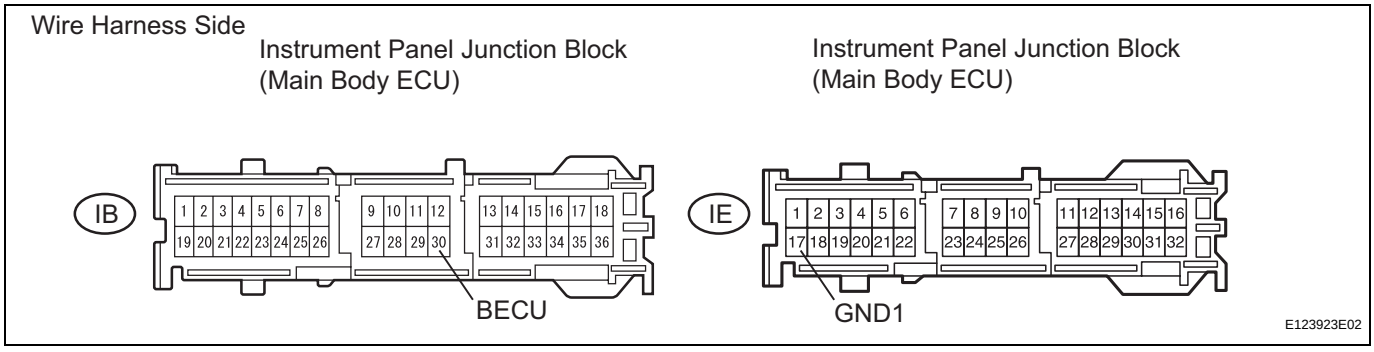

(a) Disconnect the IH and IE junction block connectors.
(b) Measure the voltage of the wire harness side connector.
Standard voltage

Tester Connection	Specified Condition
IB-30 (BECU) - Body ground	10 to 14 V

(c) Measure the resistance of the wire harness side connector.

DL

Standard resistance

Tester Connection	Specified Condition
IE-17 (GND1) - Body ground	Below 1 Ω

NG → **REPAIR OR REPLACE HARNESS AND CONNECTOR**

OK

REPLACE INSTRUMENT PANEL JUNCTION BLOCK (MAIN BODY ECU)

4 INSPECT ALL DOORS LOCK / UNLOCK OPERATION

(a) All doors can be locked/unlocked at once using the following:
- Door control switch on the master switch (switch operation)
- Door control switch on the front passenger side (switch operation).
- Door key cylinder linked with door lock on the driver side (key operation)

(b) Proceed to the next step according to the symptom if all the doors cannot be locked / unlocked at once.

Symptom	Proceed to
All doors cannot be locked / unlocked at once using door control switch on master switch or door key cylinder on driver side	A
All doors cannot be locked / unlocked at once using door control switch on front passenger side	B

B → **Go to step 12**

A

5 INSPECT DRIVER SIDE DOOR LOCK / UNLOCK OPERATION

(a) Proceed to the next step according to the symptom listed in the table below.

Symptom	Proceed to
All doors cannot be locked / unlocked at once using door control switch on power window regulator master switch	A
All doors cannot be locked / unlocked at once using door key cylinder on driver side	B
All doors cannot be locked / unlocked at once using both door control switch on master switch and door key cylinder on driver side	C

B → **Go to step 9**

C → **REPLACE INSTRUMENT PANEL JUNCTION BLOCK (MAIN BODY ECU)**

A

6	READ VALUE OF INTELLIGENT TESTER (DOOR CONTROL SWITCH ON MASTER SWITCH)

(a) Use the DATA LIST to check if the door control switch is functioning properly.

Main body ECU

Item	Measurement / Display (Range)	Normal Condition	Diagnostic Note
D/L SW-LOCK	Door manual lock switch signal / ON or OFF	ON: Door control switch on power window regulator master switch is pushed to lock position OFF: Door control switch on power window regulator master switch is not pushed	-
D/L SW-UNLOCK	Door manual unlock switch signal / ON or OFF	ON: Door control switch on power window regulator master switch is pushed to unlock position OFF: Door control switch on power window regulator master switch is not pushed	-

OK:
When the switch is operating, the intelligent tester should display as shown in the table.

OK → **REPLACE INSTRUMENT PANEL JUNCTION BLOCK (MAIN BODY ECU)**

NG

7	INSPECT POWER WINDOW REGULATOR MASTER SWITCH ASSEMBLY (DOOR CONTROL SWITCH)

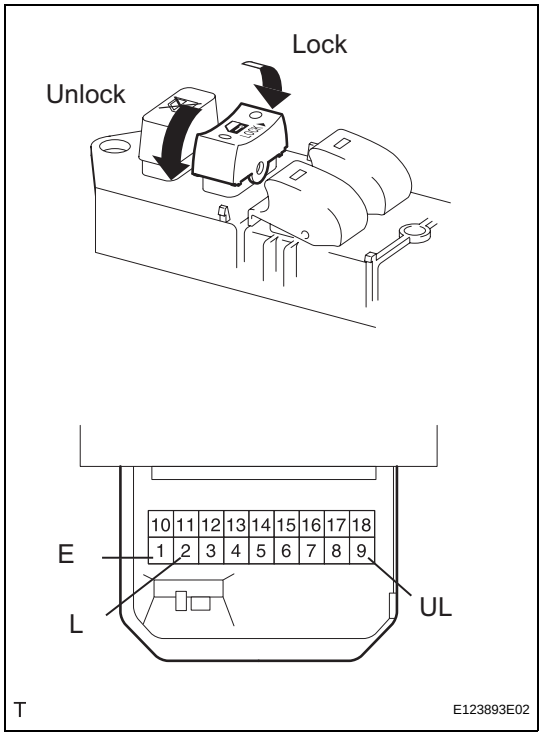

(a) Remove the master switch.
(b) Measure the resistance of the door control switch.
Standard resistance

Tester Connection	Switch Condition	Specified Condition
2 (L) - 1 (E)	Lock	Below 80 Ω
2 (L) - 1 (E)	OFF	10 kΩ or higher
9 (UL) -1 (E)	Unlock	Below 80 Ω
9 (UL) - 1 (E)	OFF	10 kΩ or higher

NG → **REPLACE POWER WINDOW REGULATOR MASTER SWITCH ASSEMBLY**

DL

OK

8 CHECK WIRE HARNESS (MASTER SWITCH - ECU AND BODY GROUND)

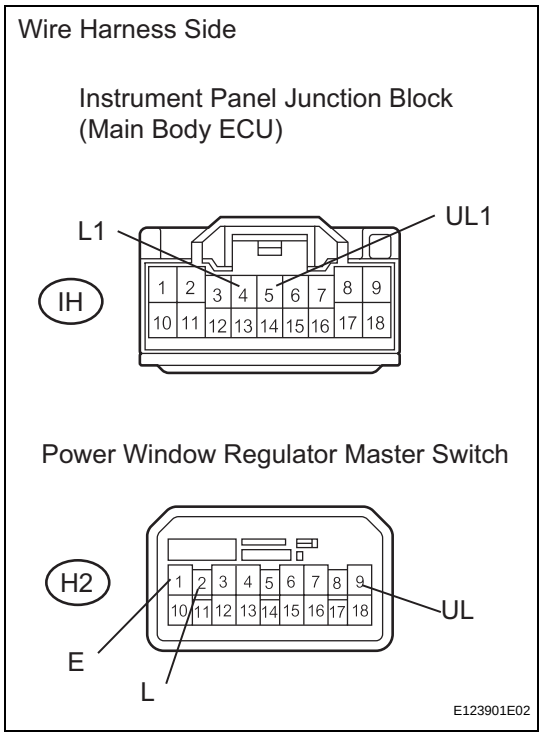

(a) Disconnect the H2 master switch connector.
(b) Disconnect the IH junction block connector.
(c) Measure the resistance of the wire harness side connectors.

Standard resistance

Tester Connection	Specified Condition
H2-2 (L) - IH-4 (L1)	Below 1 Ω
H2-2 (L) - Body ground	10 kΩ or higher
IH-4 (L1) - Body ground	10 kΩ or higher
H2-9 (UL) -IH-5 (UL1)	Below 1 Ω
H2-9 (UL) - Body ground	10 kΩ or higher
IH-5 (UL1) - Body ground	10 kΩ or higher
H2-1 (E) - Body ground	Below 1 Ω

NG → **REPAIR OR REPLACE HARNESS AND CONNECTOR**

OK

REPLACE INSTRUMENT PANEL JUNCTION BLOCK (MAIN BODY ECU)

9 READ VALUE OF INTELLIGENT TESTER (DOOR KEY SWITCH)

(a) Use the DATA LIST to check if the door key is functioning properly.

Main body ECU

Item	Measurement / Display (Range)	Normal Condition	Diagnostic Note
DOR KEY SW-LOCK	Door key linked lock switch signal / ON or OFF	ON: Driver side door key cylinder is turned to lock position OFF: Driver side door key cylinder is not turned	-
D DOR KEY SW-UL	Door key linked lock switch signal / ON or OFF	ON: Driver side door key cylinder is turned to unlock position OFF: Driver side door key cylinder is not turned	-

OK:

When the door key is operating, the intelligent tester should display as shown in the table.

OK → **REPLACE INSTRUMENT PANEL JUNCTION BLOCK (MAIN BODY ECU)**

DL

NG

10 INSPECT FRONT DOOR WITH MOTOR LOCK ASSEMBLY LH

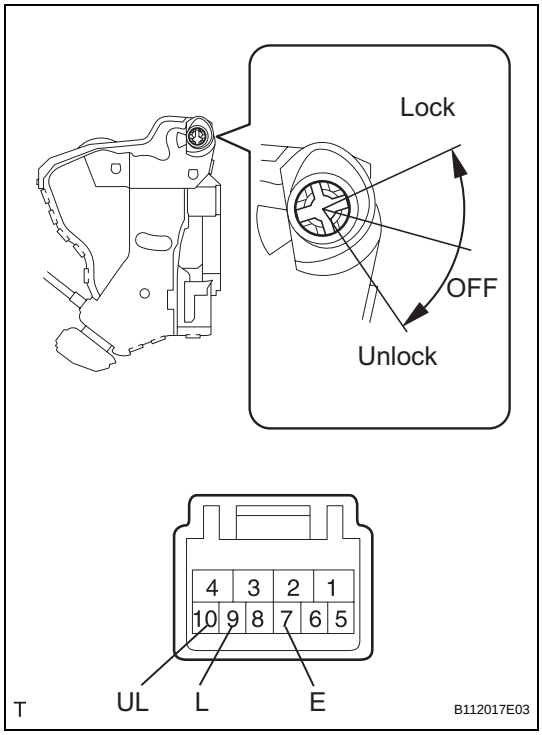

(a) Remove the front door lock.
(b) Measure the resistance of the door lock and unlock switch.

Standard resistance

Tester Condition	Switch Condition	Specified Condition
9 (L) -7 (E)	Lock	Below 1 Ω
9 (L) -7 (E)	OFF	10 kΩ or higher
10 (UL) - 7 (E)	Unlock	Below 1 Ω
10 (UL) - 7 (E)	OFF	10 kΩ or higher

NG → **REPLACE FRONT DOOR WITH MOTOR LOCK ASSEMBLY LH**

OK

11 CHECK WIRE HARNESS (MOTOR - ECU AND BODY GROUND)

Wire Harness Side

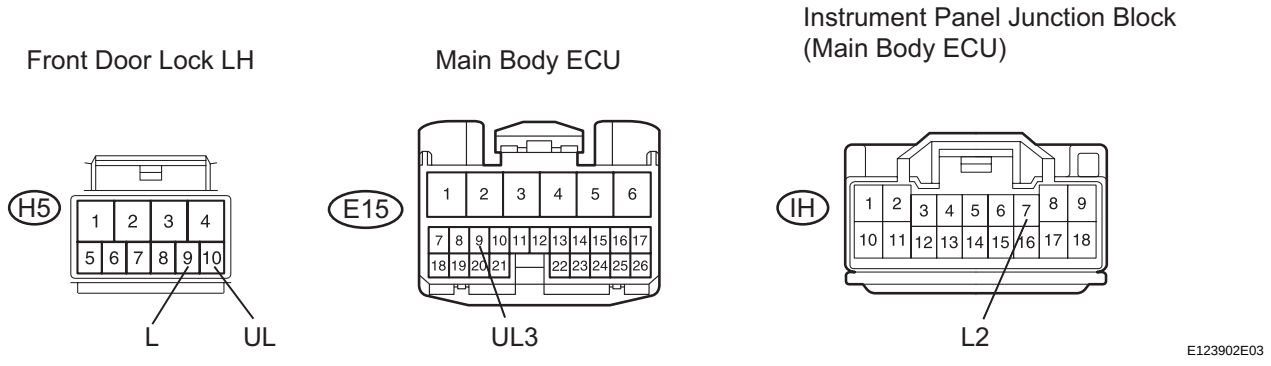

(a) Disconnect the H5 door lock motor connector.
(b) Disconnect the E15 ECU connector.
(c) Disconnect the IH junction block connector.
(d) Measure the resistance of the wire harness side connectors.

DL

Standard resistance

Tester Connection	Specified Condition
H5-9 (L) - IH-7 (L2)	Below 1 Ω
H5-9 (L) - Body ground	10 kΩ or higher
IH-7 (L2) - Body ground	10 kΩ or higher
H5-10 (UL) - E15-9 (UL3)	Below 1 Ω
H5-10 (UL) - Body ground	10 kΩ or higher
E15-9 (UL3) - Body ground	10 kΩ or higher

NG → **REPAIR OR REPLACE HARNESS AND CONNECTOR**

OK

REPLACE INSTRUMENT PANEL JUNCTION BLOCK (MAIN BODY ECU)

12 INSPECT DOOR CONTROL SWITCH ASSEMBLY

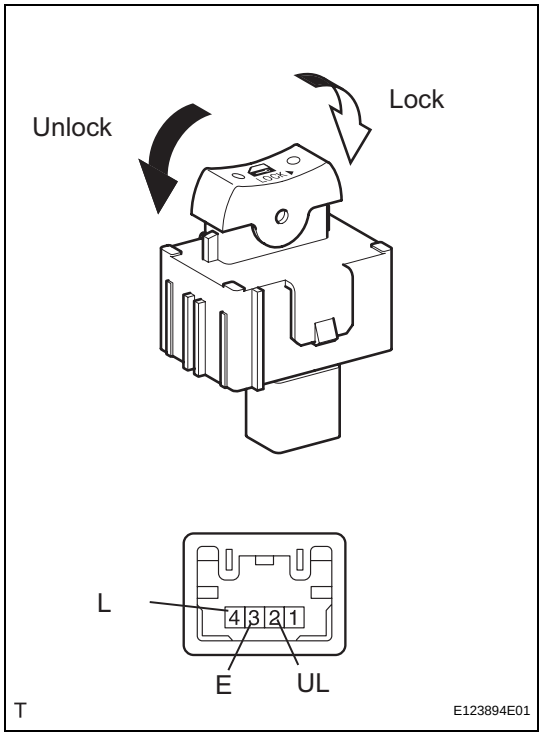

(a) Remove the control switch.
(b) Measure the resistance of the door control switch.
Standard resistance

Tester Connection	Switch Condition	Specified Condition
4 (L) - 3 (E)	Lock	Below 200 Ω
4 (L) - 3 (E)	OFF	10 kΩ or higher
2 (UL) - 3 (E)	Unlock	Below 200 Ω
2 (UL) - 3 (E)	OFF	10 kΩ or higher

NG → **REPLACE DOOR CONTROL SWITCH ASSEMBLY**

OK

DL

13	CHECK WIRE HARNESS (SWITCH - ECU AND BODY GROUND)

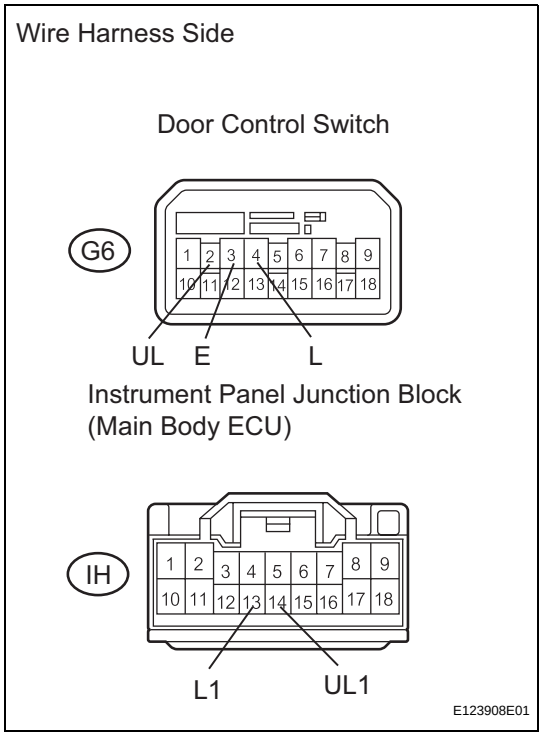

(a) Disconnect the G6 switch connector.
(b) Disconnect the IH junction block connector.
(c) Measure the resistance of the wire harness side connectors.

Standard resistance

Tester Connection	Specified Condition
G6-4 (L) - IH-13 (L1)	Below 1 Ω
G6-4 (L) - Body ground	10 kΩ or higher
IH-13 (L1) - Body ground	10 kΩ or higher
G6-2 (UL) -IH-14 (UL1)	Below 1 Ω
G6-2 (UL) - Body ground	10 kΩ or higher
IH-14 (UL1) - Body ground	10 kΩ or higher
G6-3 (E) - Body ground	Below 1 Ω

NG → **REPAIR OR REPLACE HARNESS AND CONNECTOR**

OK

REPLACE INSTRUMENT PANEL JUNCTION BLOCK (MAIN BODY ECU)

Only Driver Door LOCK / UNLOCK Functions do not Operate

DESCRIPTION

The main body ECU receives lock / unlock switch signals and activates the door lock motor accordingly.

WIRING DIAGRAM

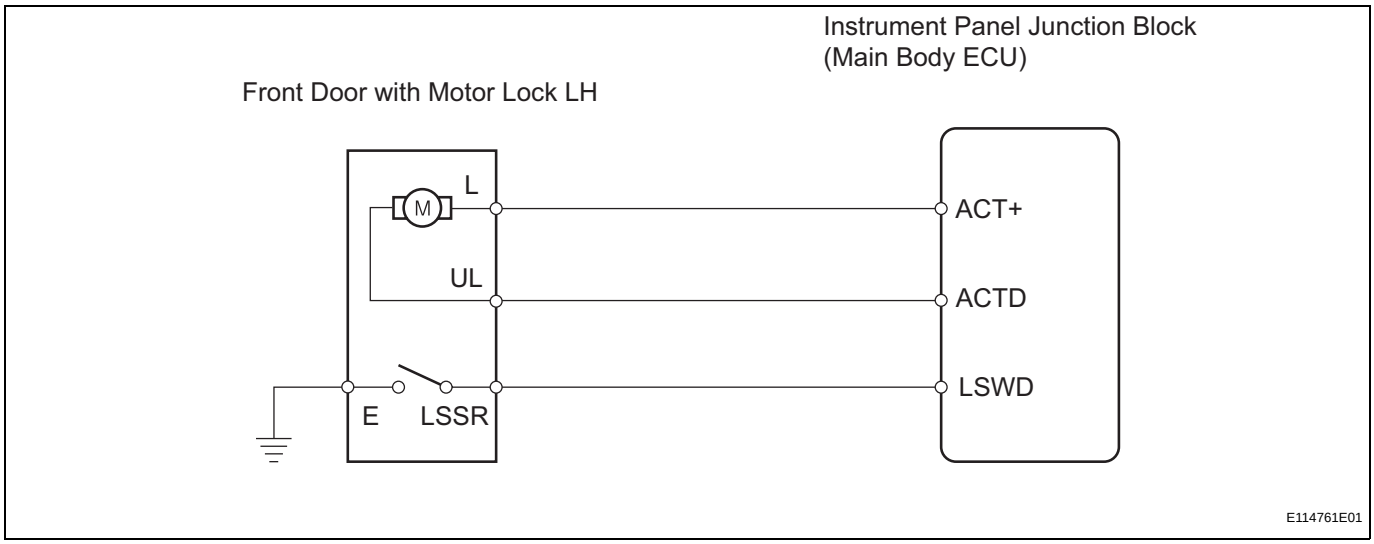

INSPECTION PROCEDURE

1	PERFORM ACTIVE TEST BY INTELLIGENT TESTER (DOOR LOCK)

(a) Select the ACTIVE TEST, use the intelligent tester to generate a control command, and then check that the doors lock / unlock.

Main body ECU

Item	Test Details	Diagnostic Note
D DOOR UNLOCK	Operate driver side door unlock ON / OFF	-

OK:

Doors can lock / unlock.

OK → **REPLACE INSTRUMENT PANEL JUNCTION BLOCK (MAIN BODY ECU)**

NG

2	READ VALUE OF INTELLIGENT TESTER (LOCK POSITION SWITCH)

(a) Use the DATA LIST to check if the door lock is functioning properly.

Main body ECU

Item	Measurement Item / Display (Range)	Normal Condition	Diagnostic Note
D LOCK POS SW	Driver side door lock position switch signal ON / OFF	ON: Driver side door is unlocked OFF: Driver side door is locked	-

DL

OK:

When the door lock is operating, the intelligent tester should display as shown in the table.

OK → **REPLACE INSTRUMENT PANEL JUNCTION BLOCK (MAIN BODY ECU)**

NG

3 INSPECT FRONT DOOR WITH MOTOR LOCK ASSEMBLY LH

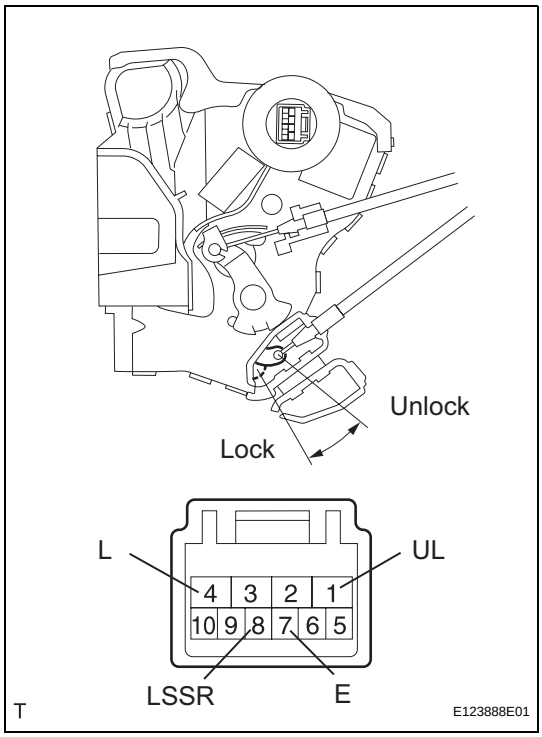

(a) Apply the battery voltage to the motor terminals and check the operation of the door lock motor.

OK

Measurement Condition	Specified Condition
Battery positive (+) → 4 (L) Battery negative (-) → 1 (UL)	Lock
Battery positive (+) → 1 (UL) Battery negative (-) → 4 (L)	Unlock

(b) Measure the resistance of the door lock position switch.

Standard resistance

Tester Connection	Switch Condition	Specified Condition
8 (LSSR) - 7 (E)	Lock	10 kΩ or higher
8 (LSSR) - 7 (E)	Unlock	Below 1 Ω

NG → **REPLACE FRONT DOOR WITH MOTOR LOCK ASSEMBLY LH**

OK

4 CHECK WIRE HARNESS (DOOR LOCK - ECU)

Wire Harness Side

DL

Front Door with Motor Lock LH

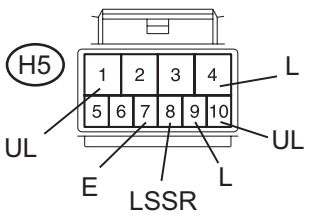

Main Body ECU

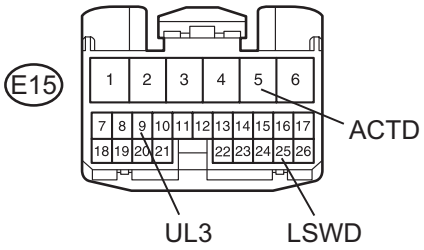

Instrument Panel Junction Block (Main Body ECU)

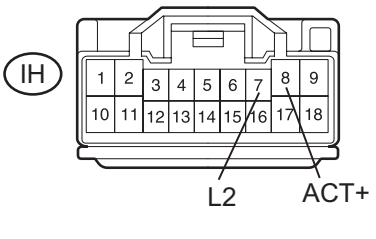

E123902E02

(a) Disconnect the H5 door lock connector.
(b) Disconnect the E15 ECU connector.
(c) Disconnect the IH junction block connector.
(d) Measure the resistance of the wire harness side connectors.

Standard resistance

Tester Connection	Specified Condition
H5-1 (UL) - E15-5 (ACTD)	Below 1 Ω
H5-4 (L) - IH-8 (ACT+)	Below 1 Ω
H5-8 (LSSR) - E15-25 (LSWD)	Below 1 Ω
H5-9 (L) - IH-7 (L2)	Below 1 Ω
H5-10 (UL) - E15-9 (UL3)	Below 1 Ω
H5-7 (E) - Body ground	Below 1 Ω

NG → **REPAIR OR REPLACE HARNESS AND CONNECTOR**

OK

REPLACE INSTRUMENT PANEL JUNCTION BLOCK (MAIN BODY ECU)

Only Passenger Door LOCK / UNLOCK Functions do not Operate

DESCRIPTION

The main body ECU receives lock / unlock switch signals and activates the door lock motor accordingly.

WIRING DIAGRAM

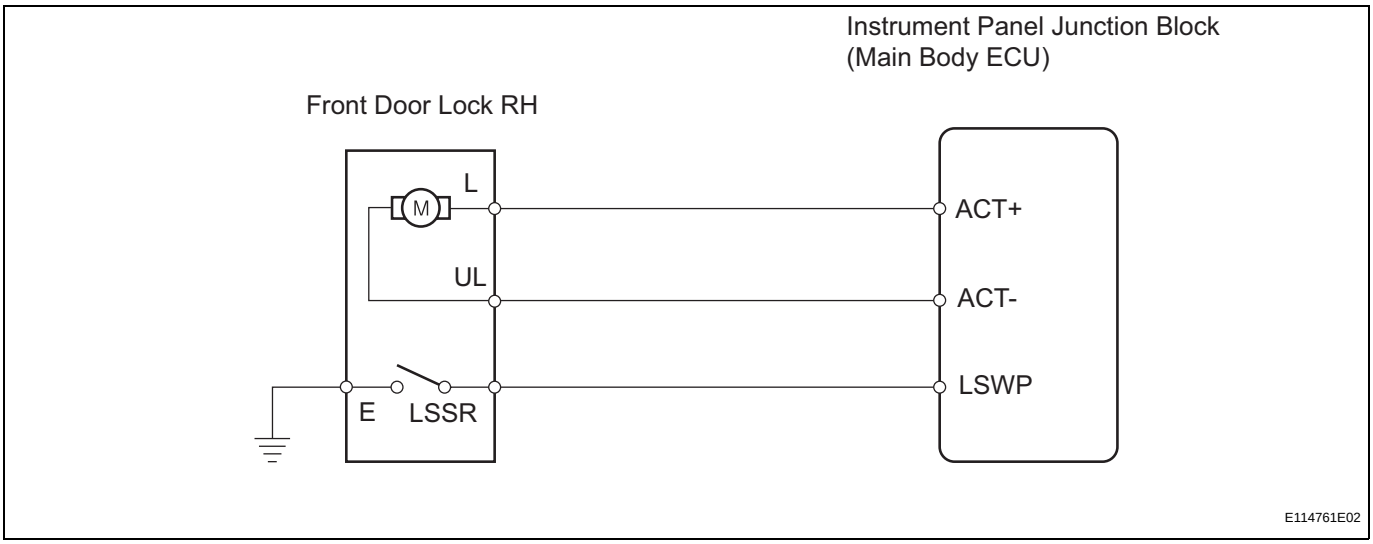

INSPECTION PROCEDURE

1	READ VALUE OF INTELLIGENT TESTER (LOCK POSITION SWITCH)

(a) Use the DATA LIST to check if the door lock is functioning properly.

Main body ECU

Item	Measurement Item / Display (Range)	Normal Condition	Diagnostic Note
P LOCK POS SW	Passenger side door lock position switch signal / ON or OFF	ON: Passenger side door is unlocked OFF: Passenger side door is locked	-

OK:

When the door lock is operating, the intelligent tester should display as shown in the table.

OK → **REPLACE INSTRUMENT PANEL JUNCTION BLOCK (MAIN BODY ECU)**

NG

DL

2 INSPECT FRONT DOOR WITH MOTOR LOCK ASSEMBLY RH

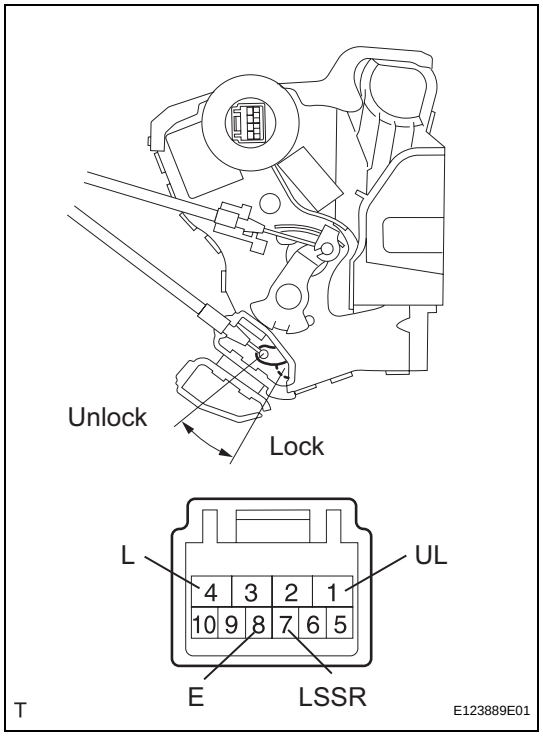

(a) Apply the battery voltage to the door lock motor and check the operation of the door lock motor.
OK

Measurement Condition	Specified Condition
Battery positive (+) → 4 (L) Battery negative (-) → 1 (UL)	Lock
Battery positive (+) → 1 (UL) Battery negative (-) → 4 (L)	Unlock

(b) Measure the resistance of the door lock position switch.
Standard resistance

Tester Connection	Switch Condition	Specified Condition
7 (LSSR) - 8 (E)	Lock	10 kΩ or higher
7 (LSSR) - 8 (E)	Unlock	Below 1 Ω

NG → **REPLACE FRONT DOOR WITH MOTOR LOCK ASSEMBLY RH**

OK

3 CHECK WIRE HARNESS (DOOR LOCK - ECU)

Wire Harness Side

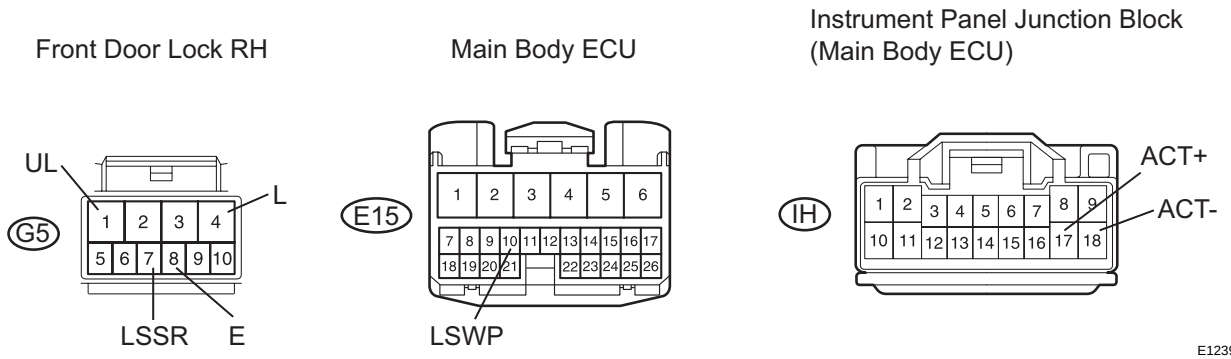

(a) Disconnect the G5 door lock connector.
(b) Disconnect the E15 ECU connector.
(c) Disconnect the IH junction block connector.
(d) Measure the resistance of the wire harness side connectors.

DL

Standard resistance

Tester Connection	Specified Condition
G5-1 (UL) - IH-18 (ACT-)	Below 1 Ω
G5-4 (L) - IH-17 (ACT+)	Below 1 Ω
G5-7 (LSSR) - E15-10 (LSWP)	Below 1 Ω
G5-8 (E) - Body ground	Below 1 Ω

NG → **REPAIR OR REPLACE HARNESS AND CONNECTOR**

OK

REPLACE INSTRUMENT PANEL JUNCTION BLOCK (MAIN BODY ECU)

Only Rear Door LH LOCK / UNLOCK Functions do not Operate

DESCRIPTION

The main body ECU receives lock / unlock switch signals and activates the door lock motor accordingly.

WIRING DIAGRAM

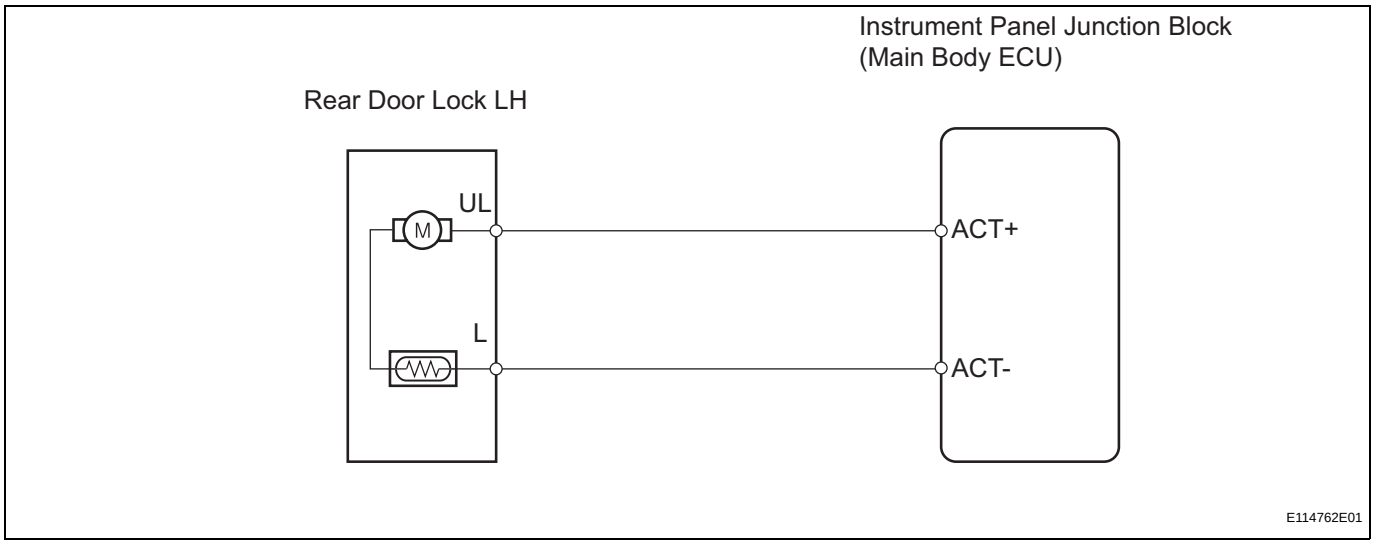

INSPECTION PROCEDURE

1	INSPECT REAR DOOR WITH MOTOR LOCK ASSEMBLY LH

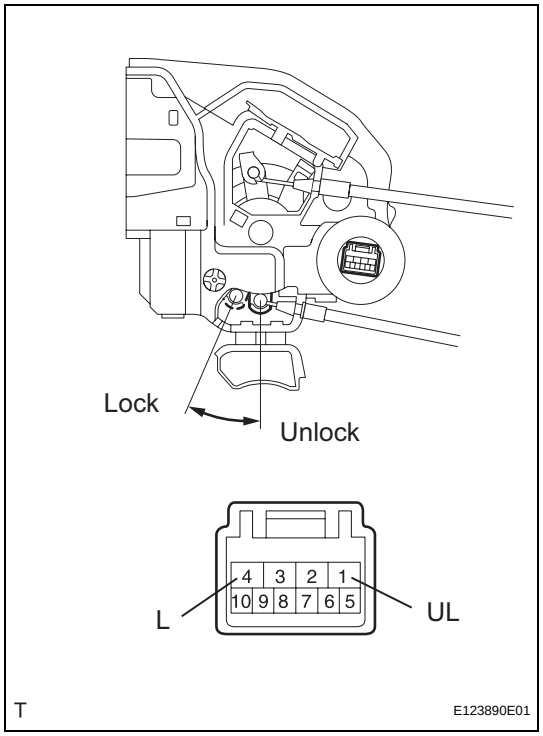

(a) Apply the battery voltage to the door lock motor and check the operation of the door lock motor.
OK

Measurement Condition	Specified Condition
Battery positive (+) → 4 (L) Battery negative (-) → 1 (UL)	Lock
Battery positive (+) → 1 (UL) Battery negative (-) → 4 (L)	Unlock

NG → **REPLACE REAR DOOR WITH MOTOR LOCK ASSEMBLY LH**

OK

DL

2	CHECK WIRE HARNESS (DOOR LOCK - ECU)

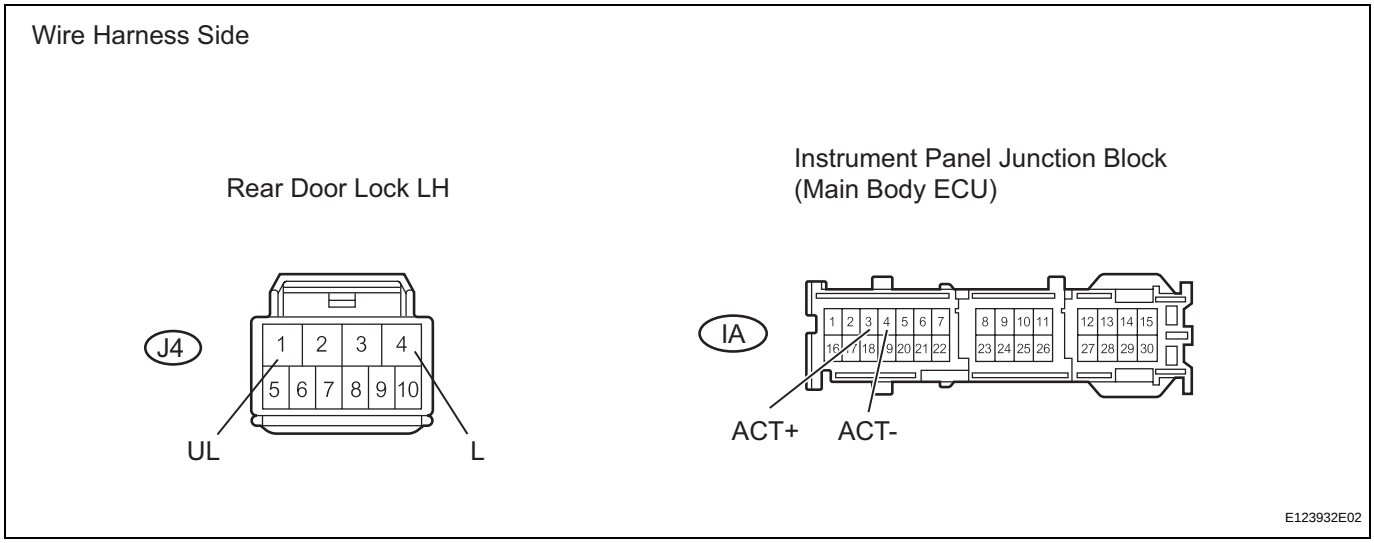

(a) Disconnect the J4 door lock connector.
(b) Disconnect the IA junction block connector.
(c) Measure the resistance of the wire harness side connectors.

Standard resistance

Tester Connection	Specified Condition
J4-1 (UL) - IA-4 (ACT-)	Below 1 Ω
J4-4 (L) - IA-3 (ACT+)	Below 1 Ω

NG → **REPAIR OR REPLACE HARNESS AND CONNECTOR**

OK

REPLACE INSTRUMENT PANEL JUNCTION BLOCK (MAIN BODY ECU)

Only Rear Door RH LOCK / UNLOCK Functions do not Operate

DESCRIPTION

The main body ECU receives lock / unlock switch signals and activates the door lock motor accordingly.

WIRING DIAGRAM

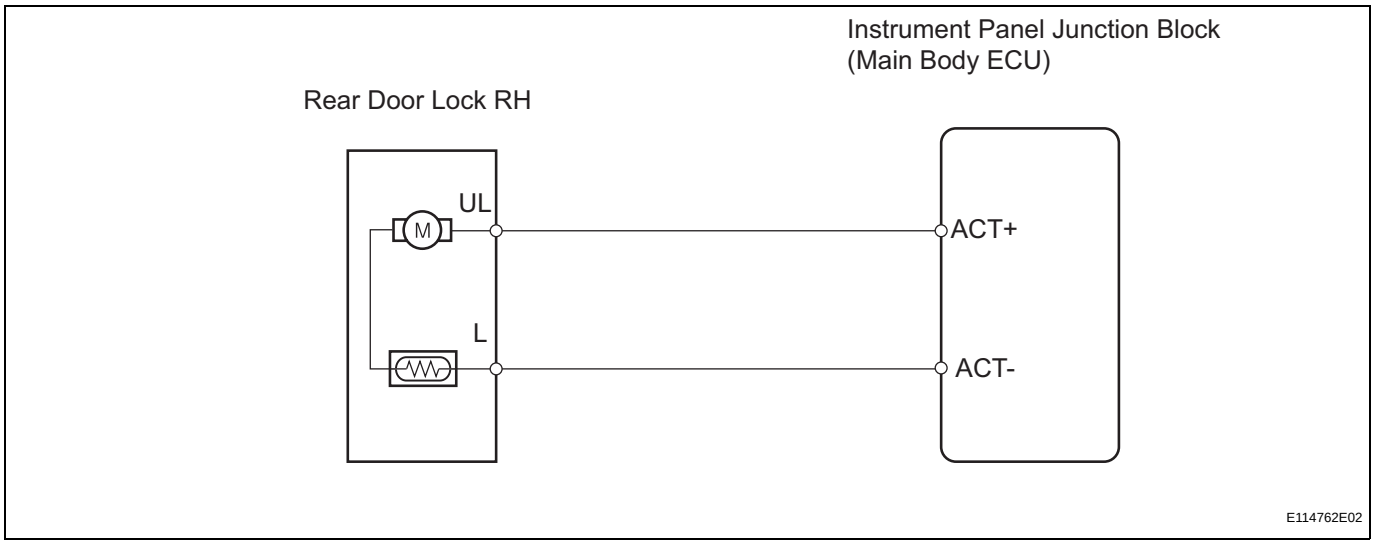

INSPECTION PROCEDURE

1	INSPECT REAR DOOR WITH MOTOR LOCK ASSEMBLY RH

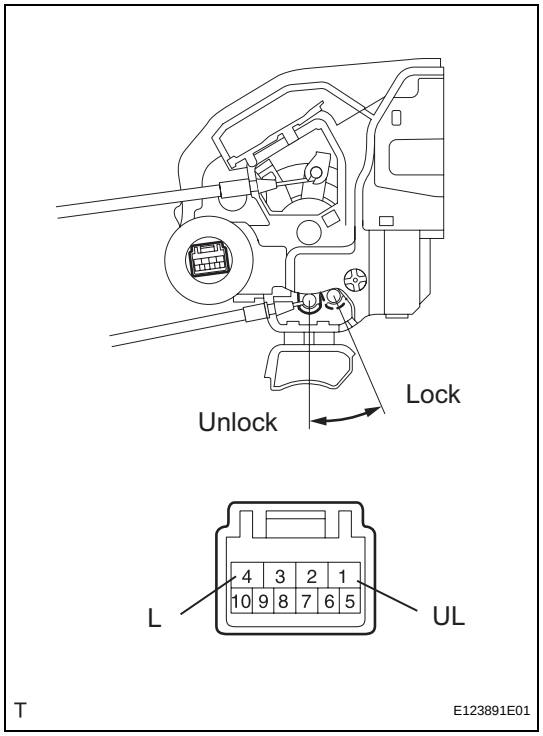

(a) Apply the battery voltage to the door lock motor and check the operation of the door lock motor.
OK

Measurement Condition	Specified Condition
Battery positive (+) → 4 (L) Battery negative (-) → 1 (UL)	**Lock**
Battery positive (+) → 1 (UL) Battery negative (-) → 4 (L)	**Unlock**

NG → **REPLACE REAR DOOR WITH MOTOR LOCK ASSEMBLY RH**

OK

DL

2	CHECK WIRE HARNESS (DOOR LOCK - ECU)

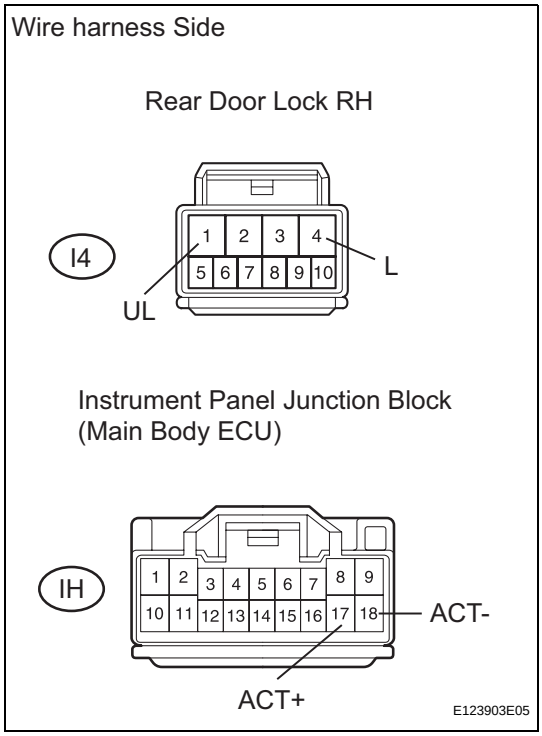

(a) Disconnect the I4 door lock connector.
(b) Disconnect the IH junction block connector.
(c) Measure the resistance of the wire harness side connectors.

Standard resistance

Tester Connection	Specified Condition
I4-1 (UL) - IH-18 (ACT-)	Below 1 Ω
I4-4 (L) - IH-17 (ACT+)	Below 1 Ω

NG → **REPAIR OR REPLACE HARNESS AND CONNECTOR (MAIN BODY ECU)**

OK

REPLACE INSTRUMENT PANEL JUNCTION BLOCK (MAIN BODY ECU)

Only Back Door LOCK / UNLOCK Functions do not Operate

DESCRIPTION

The main body ECU receives lock / unlock switch signals and activates the door lock motor accordingly.

WIRING DIAGRAM

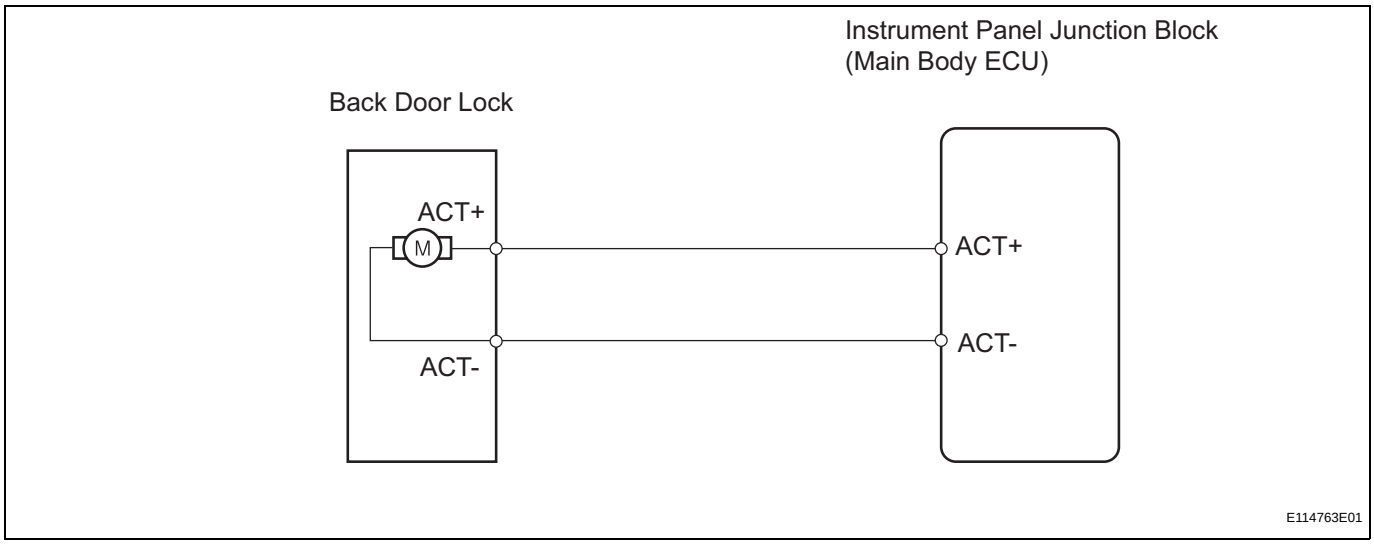

INSPECTION PROCEDURE

1	INSPECT BACK DOOR WITH MOTOR LOCK ASSEMBLY

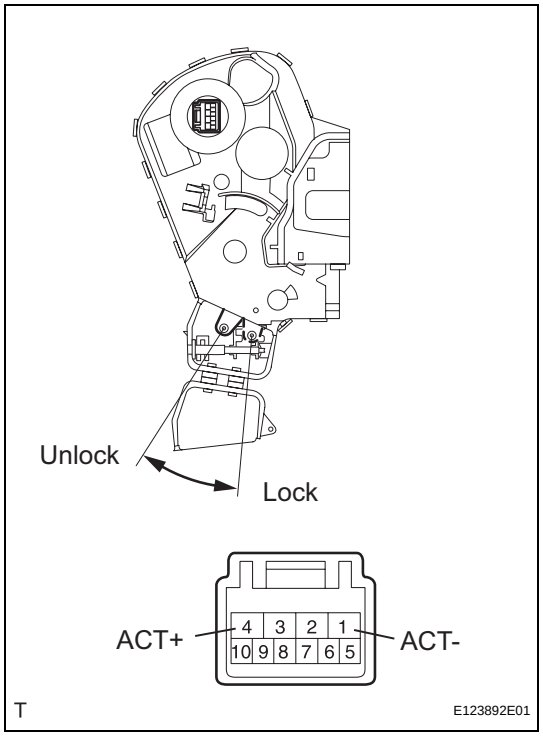

(a) Apply the battery voltage to the door lock motor and check the operation of the door lock motor.
OK

Measurement Condition	Specified Condition
Battery positive (+) → 4 (ACT+) Battery negative (-) → 1 (ACT-)	Lock
Battery positive (+) → 1 (ACT-) Battery negative (-) → 4 (ACT+)	Unlock

NG → **REPLACE BACK DOOR WITH MOTOR LOCK ASSEMBLY**

OK

DL

2	CHECK WIRE HARNESS (DOOR LOCK - ECU)

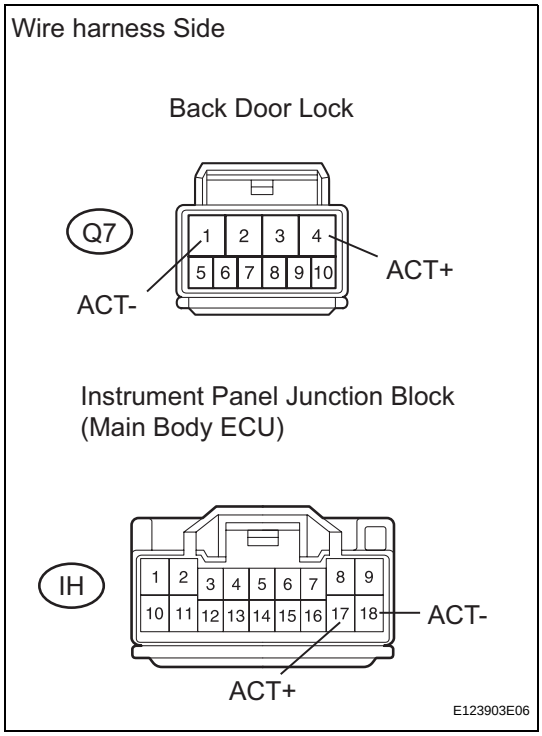

(a) Disconnect the Q7 door lock connector.
(b) Disconnect the IH junction block connector.
(c) Measure the resistance of the wire harness side connectors.

Standard resistance

Tester Connection	Specified Condition
Q7-1 (ACT-) - IH-18 (ACT-)	Below 1 Ω
Q7-4 (ACT+) - IH-17 (ACT+)	Below 1 Ω

NG → **REPAIR OR REPLACE HARNESS AND CONNECTOR**

OK

REPLACE INSTRUMENT PANEL JUNCTION BLOCK (MAIN BODY ECU)

Key Lock-in Prevention Function does not Work Properly

DESCRIPTION

When the key is in the ignition key cylinder or the door courtesy light ON signal is output to the main body ECU, performing the door lock operation with the lock switch does not lock the door.

WIRING DIAGRAM

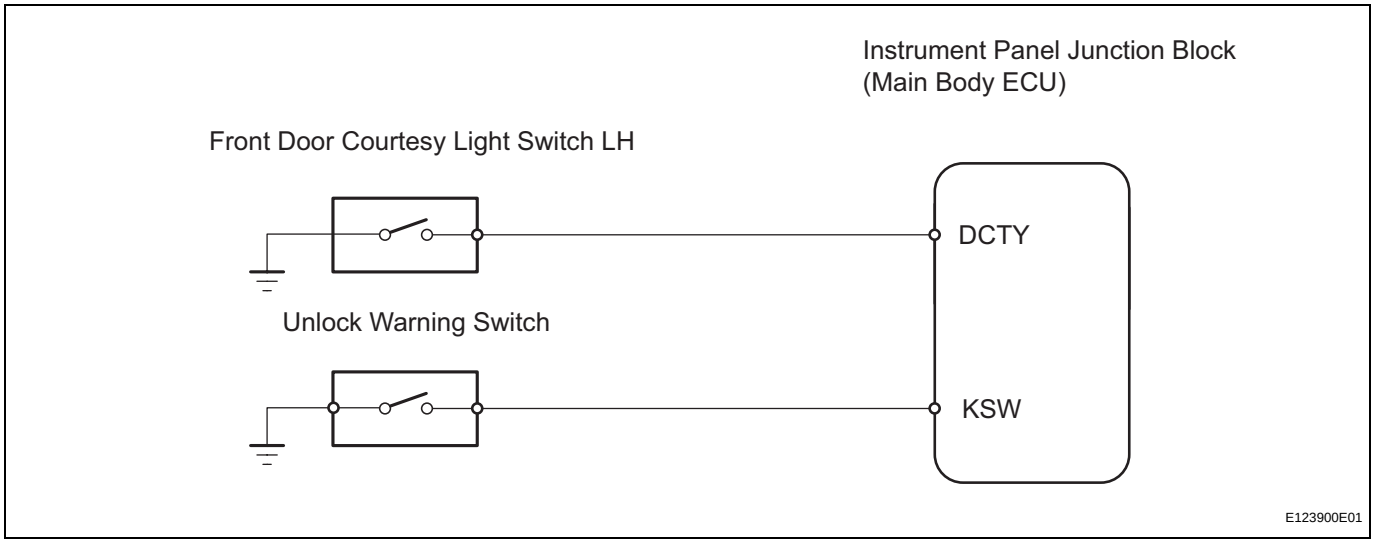

INSPECTION PROCEDURE

1	READ VALUE OF INTELLIGENT TESTER (UNLOCK WARNING SWITCH)

(a) Use the DATA LIST to check if the unlock warning switch is functioning properly.

Main body ECU

Item	Measurement Item / Display (Range)	Normal Condition	Diagnostic Note
KEY UNLK WRN SW	Unlock warning switch signal / ON or OFF	ON: Key is in ignition key cylinder OFF: No key is in ignition key cylinder	-

OK:

When the switch is operating, the intelligent tester should display as shown in the table.

NG → **Go to step 5**

OK

DL

2	READ VALUE OF INTELLIGENT TESTER (DRIVER SIDE DOOR COURTESY LIGHT SWITCH)

(a) Use the DATA LIST to check if the door courtesy light switch is functioning properly.

Main body ECU

Item	Measurement Item / Display (Range)	Normal Condition	Diagnostic Note
D DOR CTY SW	Driver side door courtesy light switch signal / ON or OFF	ON: Driver side door is open OFF: Driver side door is closed	-

OK:

When the switch is operating, the intelligent tester should display as shown in the table.

OK → **REPLACE INSTRUMENT PANEL JUNCTION BLOCK (MAIN BODY ECU)**

NG

3	INSPECT FRONT DOOR COURTESY LIGHT SWITCH ASSEMBLY LH

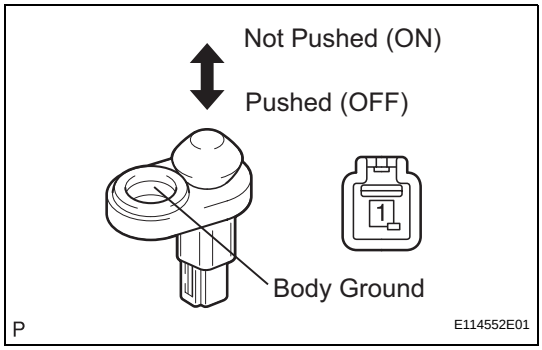

(a) Remove the front door courtesy light switch.
(b) Measure the resistance of the switch.

Standard resistance

Tester Connection	Switch Condition	Specified Condition
1 - Body ground	Not pushed (ON)	Below 1 Ω
1 - Body ground	Pushed (OFF)	10 kΩ or higher

NG → **REPLACE FRONT DOOR COURTESY LIGHT SWITCH ASSEMBLY LH**

OK

4 CHECK WIRE HARNESS (ECU - SWITCH)

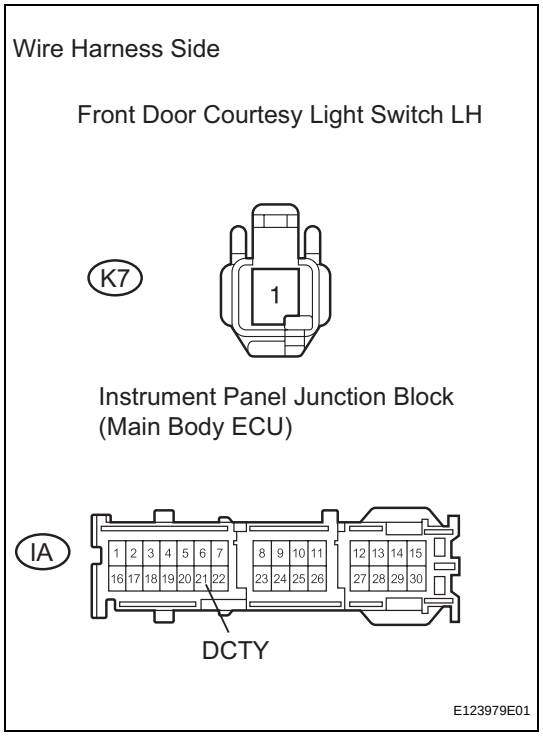

(a) Disconnect the K7 switch connector.
(b) Disconnect the IA junction block connector.
(c) Measure the resistance of the wire harness side connectors.

Standard resistance

Tester Connection	Specified Condition
K7-1 - IA-21 (DCTY)	Below 1 Ω

NG → **REPAIR OR REPLACE HARNESS AND CONNECTOR**

OK

REPLACE INSTRUMENT PANEL JUNCTION BLOCK (MAIN BODY ECU)

5 INSPECT UNLOCK WARNING SWITCH ASSEMBLY

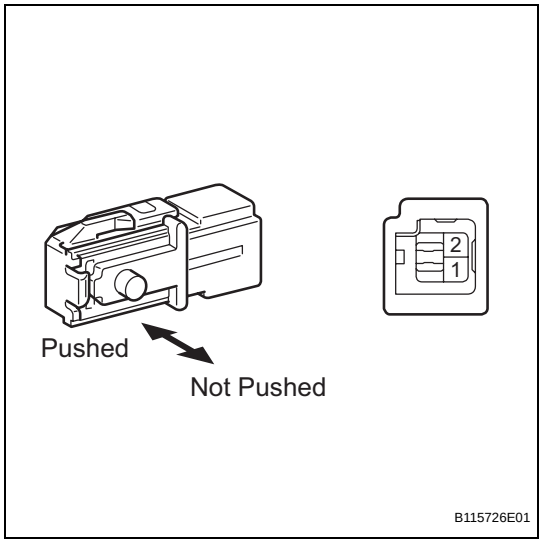

(a) Remove the unlock warning switch.
(b) Measure the resistance of the switch.

Standard resistance

Tester Connection	Switch Condition	Specified Condition
1- 2	Not pushed	10 kΩ or higher
1- 2	Pushed	Below 1 Ω

NG → **REPLACE UNLOCK WARNING SWITCH ASSEMBLY**

OK

DL

6	CHECK WIRE HARNESS (SWITCH - ECU)

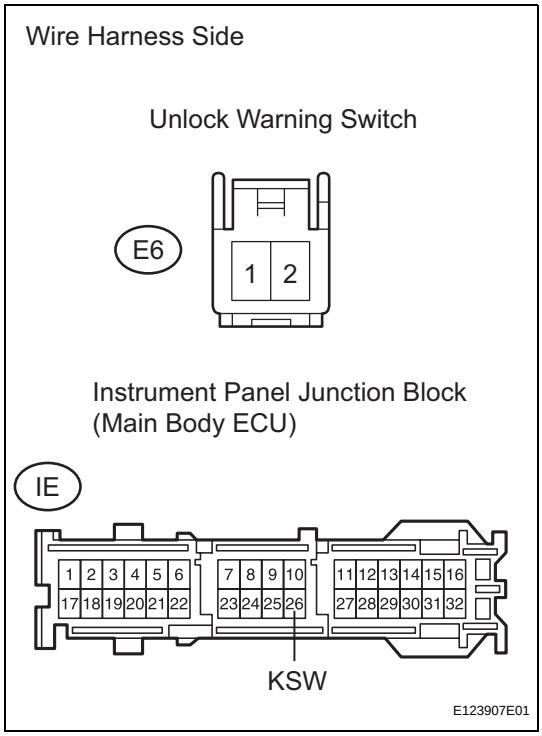

(a) Disconnect the E6 switch connector.
(b) Disconnect the IE junction block connector.
(c) Measure the resistance of the wire harness side connectors.

Standard resistance

Tester Connection	Specified Condition
E6-1 - Body ground	Below 1 Ω
E6-1 - IE26 (KSW)	Below 1 Ω

NG → **REPAIR OR REPLACE HARNESS AND CONNECTOR**

OK

REPLACE INSTRUMENT PANEL JUNCTION BLOCK (MAIN BODY ECU)

POWER DOOR LOCK CONTROL SYSTEM

PARTS LOCATION

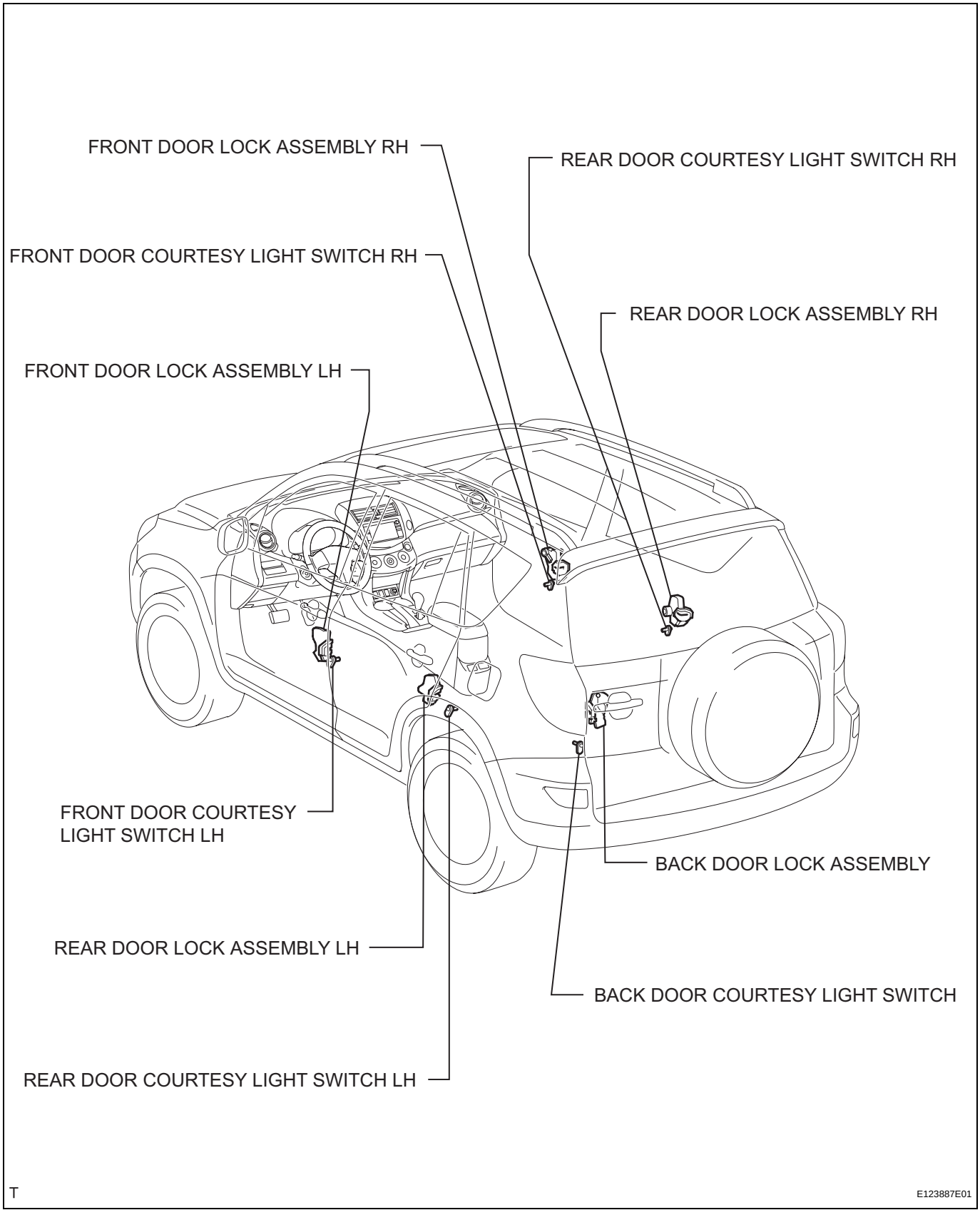

DL

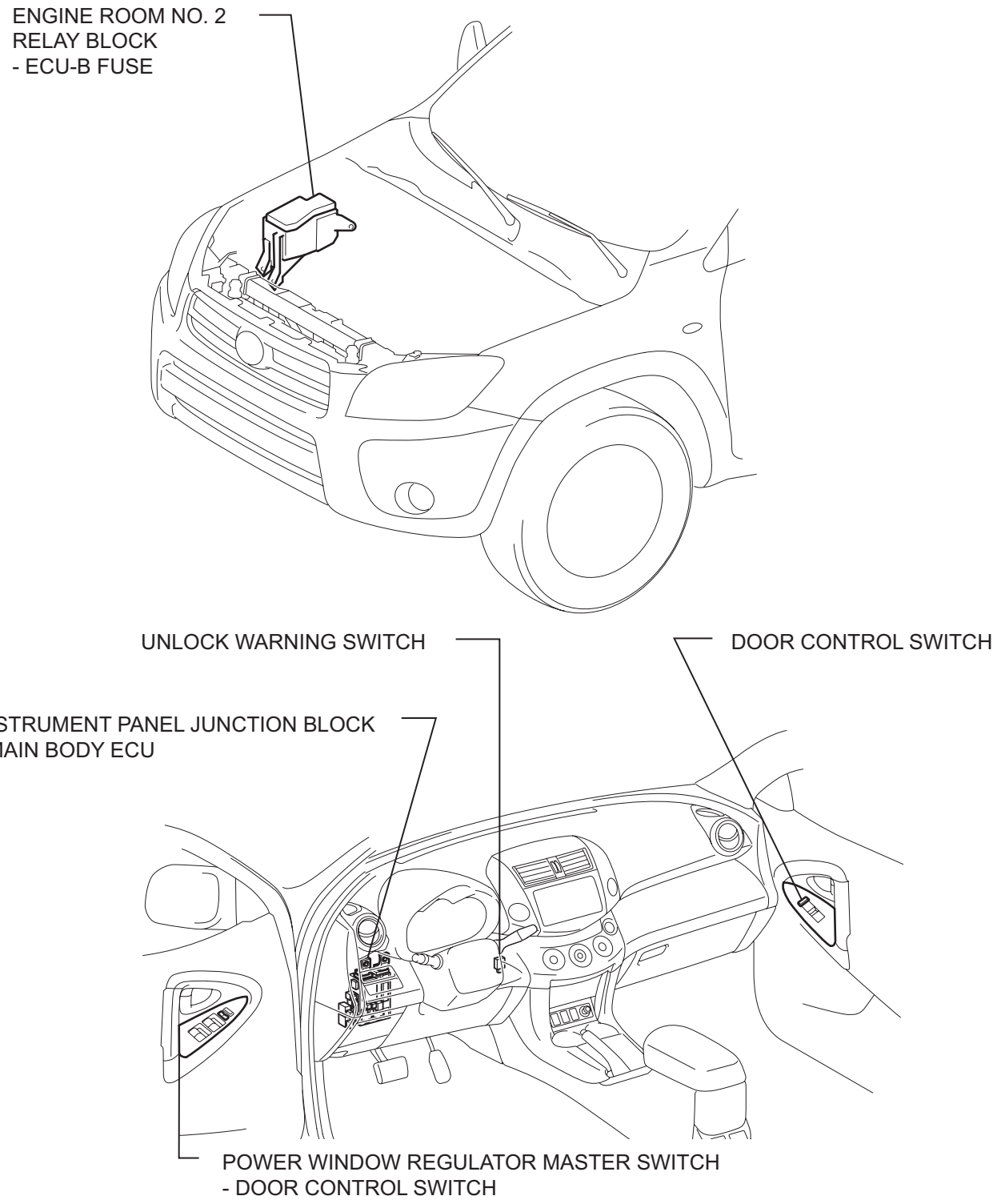

T

E114764E01

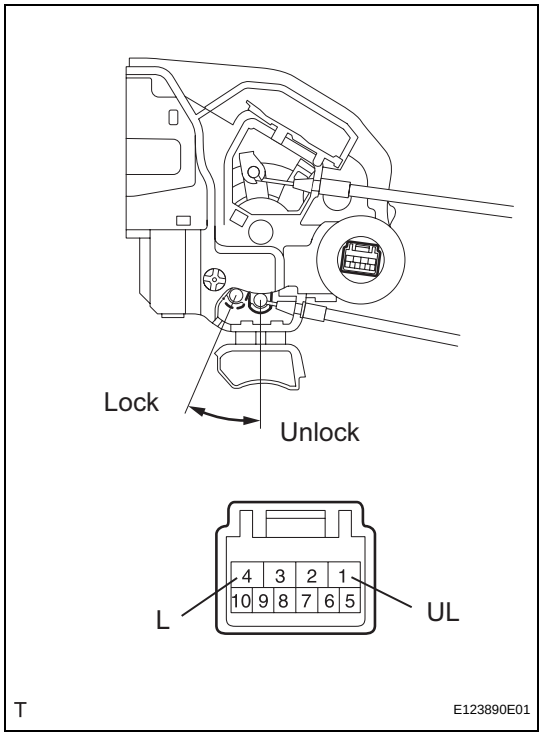

REAR DOOR LOCK

INSPECTION

1. INSPECT REAR DOOR WITH MOTOR LOCK ASSEMBLY LH

(a) Apply the battery voltage to the door lock motor and check the operation of the door lock motor.
OK

Measurement Condition	Specified Condition
Battery positive (+) → 4 (L) Battery negative (-) → 1 (UL)	Lock
Battery positive (+) → 1 (UL) Battery negative (-) → 4 (L)	Unlock

If the result is not as specified, replace the door lock assembly.

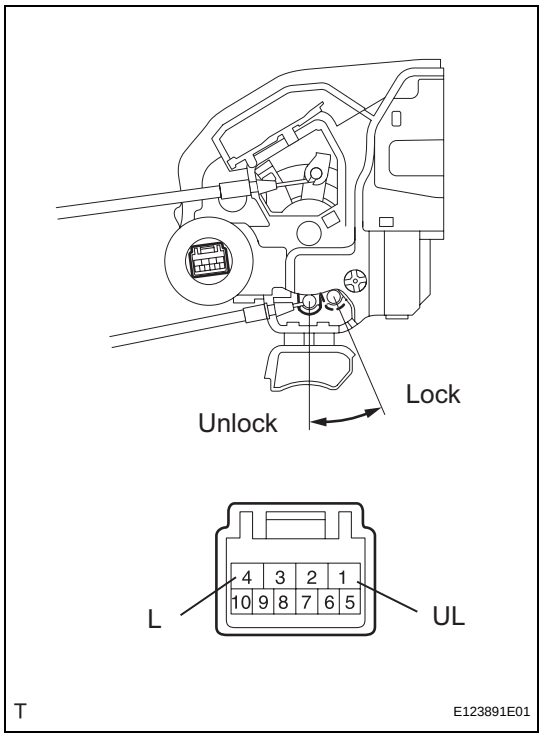

2. INSPECT REAR DOOR WITH MOTOR LOCK ASSEMBLY RH

(a) Apply the battery voltage to the door lock motor and check the operation of the door lock motor.
OK

Measurement Condition	Specified Condition
Battery positive (+) → 4 (L) Battery negative (-) → 1 (UL)	Lock
Battery positive (+) → 1 (UL) Battery negative (-) → 4 (L)	Unlock

If the result is not as specified, replace the door lock assembly.

INSTALLATION

1. INSTALL TRANSMITTER BATTERY

NOTICE:

Take extra care when handling these precision electronic components.

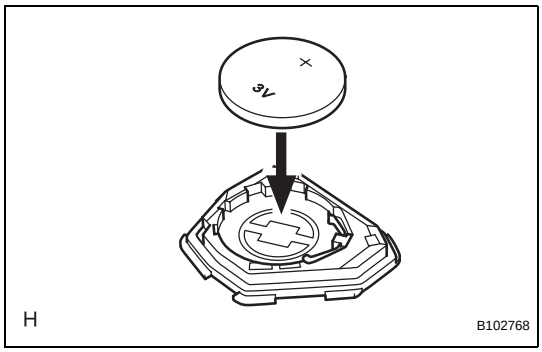

(a) Install a battery (lithium battery: CR2016) with the positive (+) side facing upward, as shown in the illustration.

NOTICE:

- **Be careful not to bend the transmitter battery electrode during insertion.**
- **Keep the transmitter cover interior free of dust and oil.**

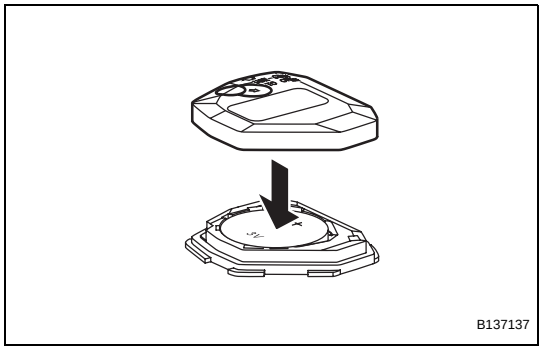

(b) Install the cover.

2. INSTALL DOOR CONTROL TRANSMITTER MODULE

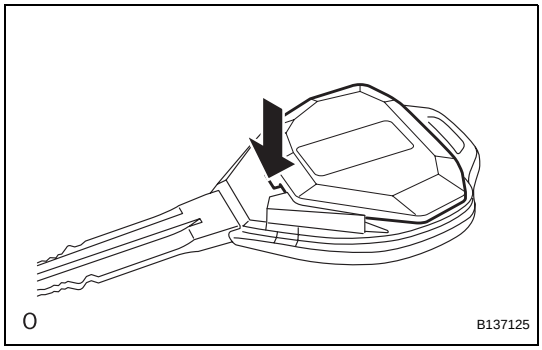

3. INSTALL TRANSMITTER HOUSING COVER

(a) Install the transmitter housing cover to the transmitter housing case.

(b) Check that the transmitter's LED illuminates 3 times when the switch is pressed 3 times.

OK:

Transmitter's LED illuminates 3 times when switch is pressed 3 times.

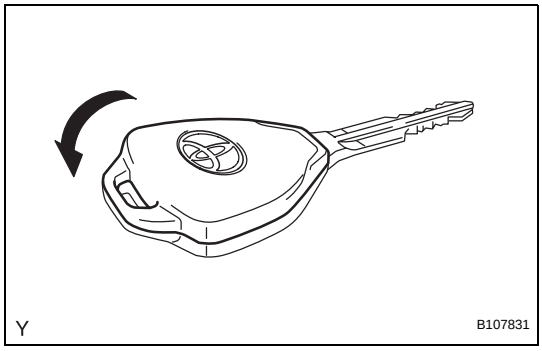

DL

TRANSMITTER BATTERY

COMPONENTS

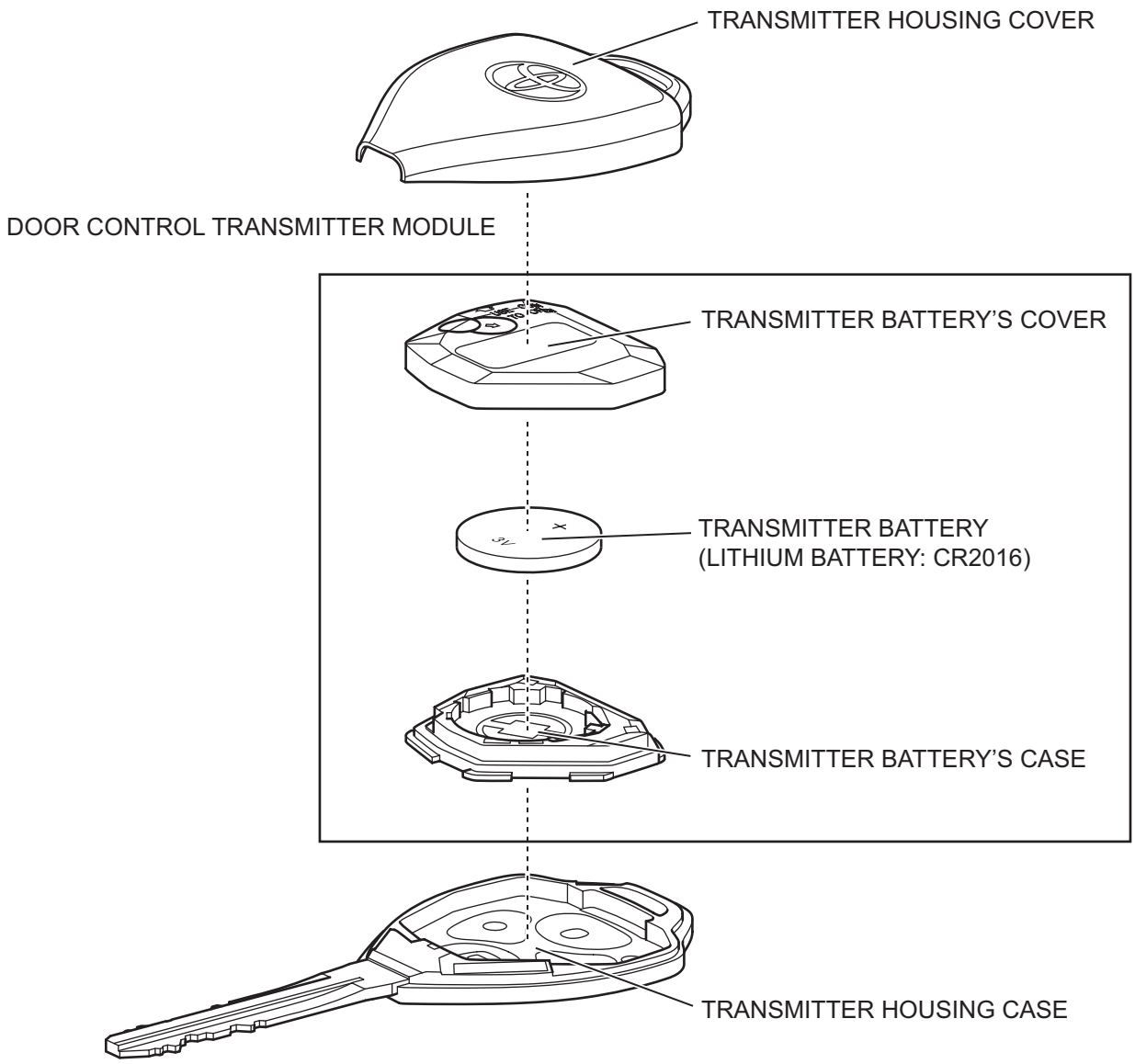

DL

H

B137121E01

REMOVAL

1. REMOVE TRANSMITTER HOUSING COVER

NOTICE:

Take extra care when handling these precision electronic components.

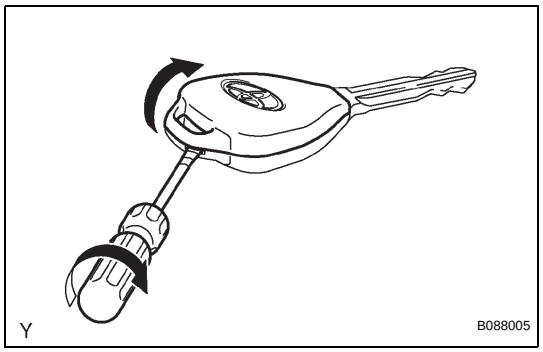

(a) Twist the screwdriver in the direction of the arrow mark in the illustration, and open the transmitter housing cover.

NOTICE:

Do not forcibly pry the cover.

HINT:

Tape the screwdriver tip before use.

2. REMOVE DOOR CONTROL TRANSMITTER MODULE

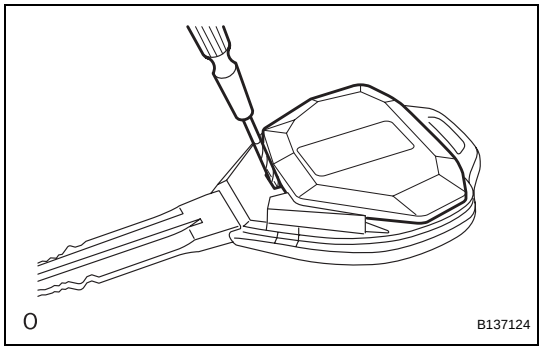

3. REMOVE TRANSMITTER BATTERY

(a) Twist the coin in the direction of the arrow mark in illustration, and remove the transmitter battery's cover.

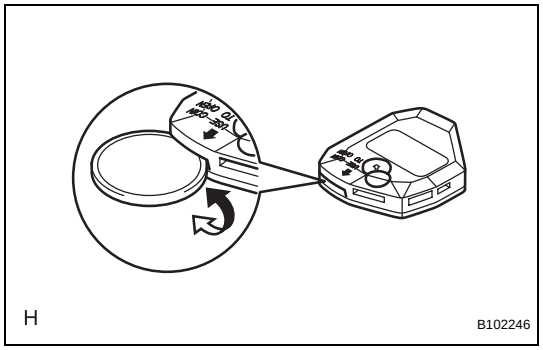

(b) Remove the battery (lithium battery: CR2016).

NOTICE:

- **Do not push the terminals with your finger.**
- **Do not forcibly pry up the battery. The terminals may become damaged.**
- **Do not touch the battery with wet hands. Water may cause rust.**
- **Do not touch or move any components inside the transmitter. It may cease to work.**

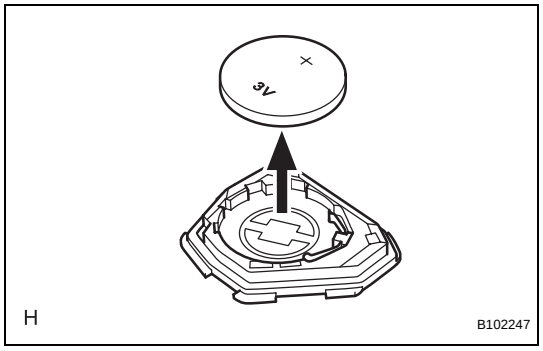

DL

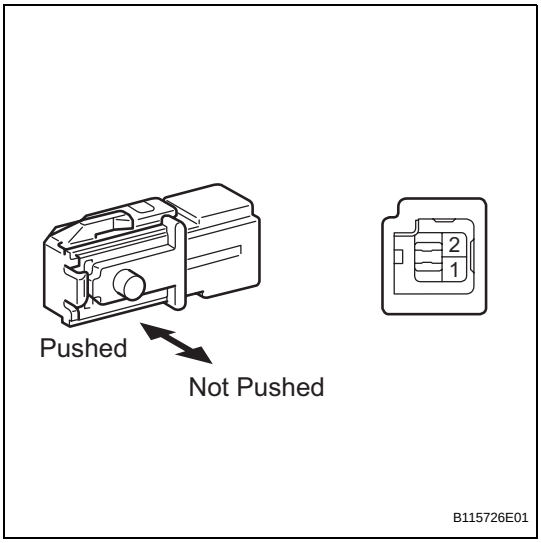

UNLOCK WARNING SWITCH

INSPECTION

1. INSPECT UNLOCK WARNING SWITCH ASSEMBLY

(a) Measure the resistance of the switch.

Standard resistance

Tester Connection	Switch Condition	Specified Condition
1 - 2	Not pushed	10 kΩ higher
1 - 2	Pushed	Below 1 Ω

If the result is not as specified, replace the unlock warning switch assembly.

SYSTEM DIAGRAM

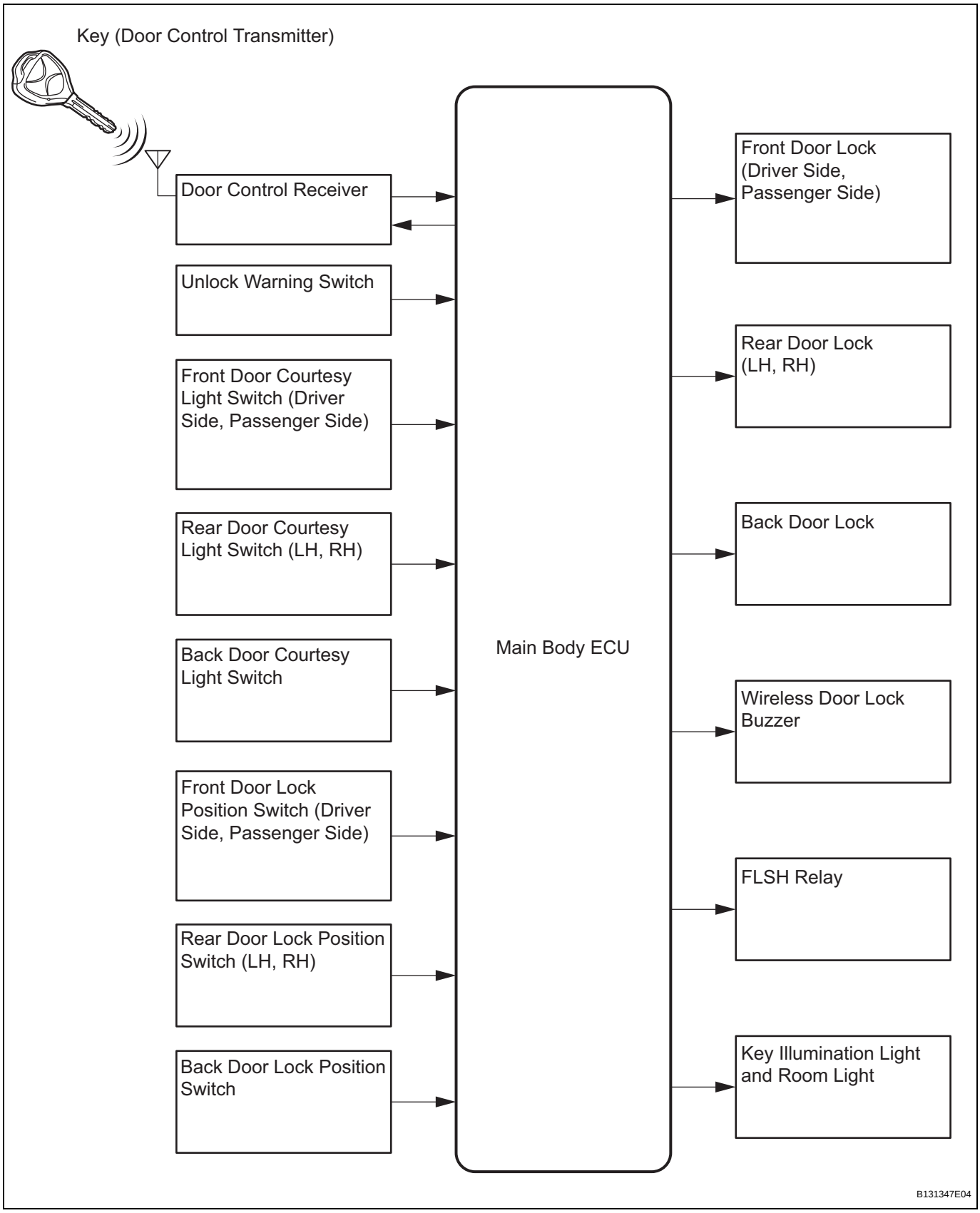

SYSTEM DESCRIPTION

1. WIRELESS DOOR CONTROL SYSTEM DESCRIPTION

(a) This system locks and unlocks the vehicle's doors remotely. The wireless control system has the following features:

- The door control receiver performs the code identification procedure and the main body ECU operates the door lock control. A serial data link is provided for communication between the receiver and main body ECU.
- A key-integrated type transmitter is used and it contains the following 3 switches: the door lock switch, door unlock switch and panic alarm switch.
- An LED is built into the transmitter so that the battery status can be checked.

2. FUNCTION OF MAIN COMPONENTS

Components	Functions
Door control transmitter	• Contains LOCK, UNLOCK and PANIC switches • Transmits faint electric waves (recognition codes and function codes) to door control receiver • Illuminates indicator light (LED) during transmission
Door control receiver	Receives weak electric waves (recognition codes and function codes) from door control transmitter, and changes waves to code data
Door lock (door lock position switch)	Transmits door lock conditions of each door to main body ECU
Unlock warning switch	Detects if key is in ignition key cylinder
Door courtesy light switch	Turns ON when door is open and turns OFF when door is closed. Outputs door status (open or closed) to main body ECU.

3. SYSTEM FUNCTION

(a) Door lock / unlock function:
With no key in the ignition key cylinder (unlock warning switch is OFF) and all door courtesy light switches OFF, pressing the door control transmitter's LOCK / UNLOCK switch causes the transmitter to output faint electric waves. The transmitter sends a faint electrical wave to the door control receiver. The high frequency circuit built into the door control receiver demodulates the wave into code data, computes the data, and compares the data with previously registered ID codes. If the data is verified, a door lock / unlock request signal is output to the main body ECU. When the request signal is received, the main body ECU outputs a door lock / unlock control signal to each door lock. Each door lock then locks / unlocks its respective door and turns ON / OFF its door lock position switch in accordance with the signal.

(b) Answer-back function:
The main body ECU receives the door unlock detection switch's ON / OFF signals and uses these signals to confirm if the door control operation has been completed. The main body ECU then outputs the hazard warning light control signals to flash the hazard warning lights as an answer-back indication and wireless door lock buzzer signals to cause the wireless door buzzer to sound as an answer-back.

(c) Panic function:
When the door control transmitter's PANIC switch is pressed, the main body ECU receives the code data (recognition codes and function codes) from the door control transmitter in the same way as when the LOCK / UNLOCK switch is pressed. Upon receiving a theft deterrent alarm control signal, the ECU sends a signal to sound the security horn, and transmits several kinds of warning control signals (hazard warning light control signal, vehicle horn warning control signal, and room light control signal) in order to output a theft deterrent alarm.

(d) The wireless door lock control system has the following functions.

Function	Outline
All door lock function	Pressing LOCK switch locks all doors
All door unlock operation (2 step unlock operation) function	Pressing UNLOCK switch twice within 3 seconds unlocks all doors after driver side door is unlocked
Answer-back function	• Hazard warning lights flash once when doors are locked, and flash twice when doors are unlocked to indicate that operation has been completed • Wireless door lock buzzer sounds once when doors are locked and sounds twice when doors are unlocked to inform that operation has been completed
Automatic locking function	If no doors are opened within 30 seconds after being unlocked by wireless transmitter, all doors are locked again automatically
Door ajar warning function	If any door is open or ajar, pressing LOCK switch will cause wireless door lock buzzer to sound for about 10 seconds
Illuminated entry function	If locked doors are unlocked through wireless operation, ignition key cylinder light and room light illuminate. If one of following situations occurs, lights fade out: • Within 15 seconds, doors are not opened and doors are locked through wireless operation • Within 15 seconds, key is inserted into ignition key cylinder and ignition switch is turned ON • No operations or actions are performed within 15 seconds
Panic function	Pressing PANIC switch for more than 1 second sounds horn
Security function	Sends signal as rolling code
Transmitter recognition code registration function	Enables 4 modes for registering (writing and storing) transmitter recognition codes in EEPROM, built into door control receiver

HOW TO PROCEED WITH TROUBLESHOOTING

HINT:

- The wireless door lock control system troubleshooting procedures are based on the premise that the power door lock system is operating normally. Check the power door lock system first before troubleshooting the wireless door lock control system (see page DL-7).
- Use these procedures to troubleshoot the wireless door lock control system.
- *: Use the intelligent tester.

1 **VEHICLE BROUGHT TO WORKSHOP**

NEXT

2 **INSPECT BATTERY VOLTAGE**

Standard voltage:
11 to 14 V

If the voltage is below 11 V, recharge or replace the battery before proceeding.

NEXT

3 **PROBLEM SYMPTOMS TABLE**

Result:

Result	Proceed to
Fault is not listed in problem symptoms table	A
Fault is listed in problem symptoms table	B

B → **Go to step 5**

A

4 **OVERALL ANALYSIS AND TROUBLESHOOTING***

(a) Operation Check (see page DL-44)
(b) DATA LIST / ACTIVE TEST (see page DL-59)
(c) Terminals of ECU (see page DL-54)

NEXT

DL

5	**REPAIR OR REPLACE**

NEXT

6	**CONFIRMATION TEST**

NEXT

END

OPERATION CHECK

1. NOTICES WHEN CHECKING

(a) Wireless door LOCK / UNLOCK function:
This function operates only when the vehicle is in its initial condition (the following 3 conditions are met).
- No key is inserted into the ignition key cylinder.
- All the doors are closed.
- The power door lock system is functioning normally.

HINT:
- The UNLOCK function operates even when one of the doors is open.
- The UNLOCK function operates even when the key is inserted into the ignition key cylinder. However, the ignition switch must be OFF.

(b) The operating range differs depending on the situation.
- The operating range differs depending on the user, the way the transmitter is held and the location.
- In certain areas, the operating range will be reduced due to the vehicle body shape and the influence of the surrounding environment.
- The transmitter's faint electric waves may be affected if the area has strong electric waves or noise. The transmitter's operating range may be reduced or the transmitter may not function.
- When the battery weakens, the operating range is reduced or the transmitter may not function.

HINT:
If the transmitter has had prolonged exposure to direct sunlight, such as being left on the instrument panel, the battery may weaken or other problems may occur.

2. CHECK WIRELESS DOOR LOCK CONTROL FUNCTIONS

HINT:
- The switches described below transmit signals and are built into the door control transmitter.
- The transmitter's operating range must be taken into account while checks are being made.

(a) Make sure the vehicle is in a condition in which the wireless control functions can be operated (see above).

(b) Check the basic functions:
- Check that the transmitter's LED illuminates 3 times when each switch is pressed 3 times.

HINT:
If the LED does not illuminate when the switch has been pressed 3 times or more, the battery may be depleted.

(c) Check the chattering prevention function:
- When a switch is pressed, check that the corresponding operation occurs only once. When the switch is held down, check that the corresponding operation occurs only once and does not repeatedly activate. Lastly, when the switch is pressed at 1 second intervals, check that the corresponding operation activates once for each press of the switch.

(d) Check the automatic locking function:
- When all doors are unlocked with the UNLOCK switch and none of the doors are opened or locked within 30 seconds, check that the doors are relocked automatically.

(e) Check the switch operation fail-safe function:
- If the key is in the ignition key cylinder, check that the doors cannot be locked by the LOCK switch. However, this does not apply when the system is in recognition code registration mode.

(f) Check the door ajar warning function:
- If a door is open or not completely closed, check that the doors cannot be locked by the LOCK switch and that the wireless door lock buzzer sounds for 10 seconds.

(g) Check the answer-back function:
- When the LOCK switch is pressed, confirm the simultaneous occurrence of all the hazard warning lights flashing once, the buzzer sounding once and all the doors locking.
- When the UNLOCK switch is pressed, confirm the simultaneous occurrence of all the hazard warning lights flashing twice, the buzzer sounding twice and the driver side door unlocking.
- When UNLOCK switch is pressed again within 3 seconds, conform the simultaneous occurrence of all the hazard warning lights flashing twice, the buzzer sounding twice and all the doors unlocking.

(h) Check the illuminated entry function:
- When all the doors are locked, pressing the UNLOCK switch causes the room light (when the light switch is in the DOOR position) to illuminate simultaneously with the unlock operation.
- Check that the room light turns off in approximately 15 seconds if doors have not been opened.

(i) Check the panic function:
- Check that if PANIC switch is held down for 0.8 seconds or more, the theft deterrent alarm function sounds the horn and flashes the headlights and taillights for 60 seconds. And, with the theft alarm function active, check if pressing any switch on the transmitter causes the horn to stop sounding and the headlights and taillights to stop flashing.

(j) All door unlock operation function (2 step unlock function).
- Pressing the UNLOCK switch twice within 3 seconds unlocks all the doors after the driver side door is unlocked.

REGISTRATION

1. DESCRIPTION OF CODE REGISTRATION

HINT:

- Recognition code registration is necessary when replacing the door control transmitter and/or the door control receiver.
- Add mode is used to register new recognition codes while still retaining codes already registered. This mode is used when a new transmitter is added. If the number of registered codes exceeds 5, the previously registered codes will be erased in order, starting from the first registered code.
- Rewrite mode is used to erase all the previously registered recognition codes in order to register new recognition codes. This mode is used when the transmitter or the door control receiver is exchanged for a new one.
- Confirmation mode is used to confirm how many recognition codes have already been registered before registering any additional recognition codes.
- Prohibition mode is used to erase all the registered codes and disables the wireless door lock function. This mode is used when the transmitter is lost.
- All of the following registration procedures must be performed in order and in a continuous sequence.

2. REGISTER RECOGNITION CODE (USING INTELLIGENT TESTER)

HINT:

For detailed procedures, refer to the prompts on the tester screen. The number of currently registered codes can be checked out on the first screen of the WIRELESS REGIST.

(a) Turn the ignition switch ON.

(b) Select the menu on the intelligent tester.

HINT:

After the following operations, proceed to the succeeding operations according to the prompts on the tester screen.

(1) Select "RAV4" from the menu.

(2) Select "MAIN BODY".

(3) Select "WIRELESS REGIST".

(c) Press both LOCK and UNLOCK switches between 1 to 1.5 seconds.

(d) Press either switch for more than 1 second within 3 seconds.

(e) Check the response to the registration completion.

Response to registration completion:

Main body ECU automatically performs power door LOCK-UNLOCK operation to show whether registration has been completed correctly or not.

LOCK-UNLOCK Occurs Once	LOCK-UNLOCK Occurs Twice
Registration of recognition code has been completed.	Registration of recognition code has failed.

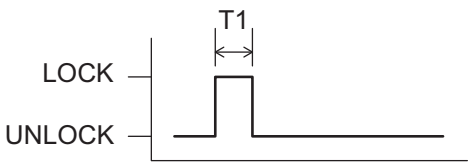

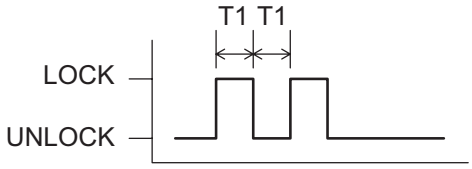

T1: Approx. 1 second

B111915E05

HINT:
- If the LOCK-UNLOCK operation occurs twice, the registration of recognition code has failed. Perform the registration procedures again from the beginning.
- If registering another transmitter, repeat the procedures after the tester operation. All 4 recognition codes can be registered consecutively.

(f) Perform either of the following to complete the registration of recognition codes:
- Use the intelligent tester to send completion command.
- Disconnect the intelligent tester.

3. REGISTER RECOGNITION CODE (USING SWITCH OPERATION)

(a) The following conditions should be met.
- No key in the ignition key cylinder.
- The driver side door is open (the other doors are closed).
- The driver side door is unlocked.

(b) Insert and remove the key into / from the ignition key cylinder twice (Insert → Remove →Insert → Remove) within 5 seconds.
HINT:
The procedure should end with the key removed.

(c) Perform the following operations within 40 seconds.
(1) Close and open the driver side door twice (Close → Open → Close → Open).
HINT:
The procedure should end with the door open.

DL

(2) Insert and remove the key into / from the ignition key cylinder (Insert → Remove).
HINT:
The procedure should end with the key removed.

(3) Close and open the driver side door twice (Close → Open → Close → Open).
HINT:
The procedure should end with the door open.

(4) Insert the key into the ignition key cylinder and close all doors.

(d) Perform the following operations within 40 seconds.

(1) Turn the ignition switch from ON to OFF at approximately 1 second intervals, operate the ignition switch according to the number of times shown below.

Number of ON - OFF operations of ignition switch:

Add Mode — ON - OFF operation: Once

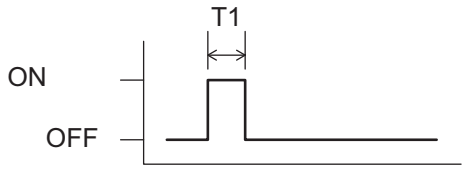

Rewrite Mode — ON - OFF operation: Twice

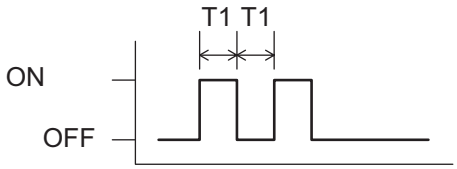

Confirmation Mode — ON - OFF operation: 3 times

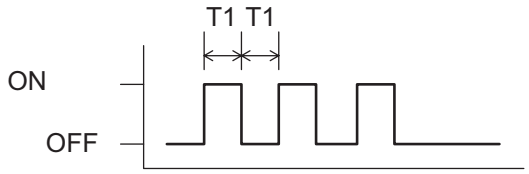

Prohibition Mode — ON - OFF operation: 5 times

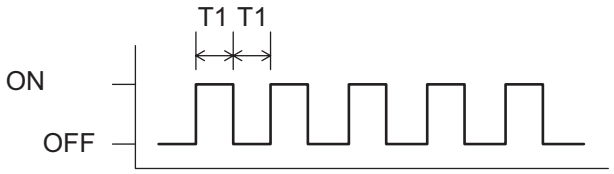

T1: Approx. 1 second

B111914E07

HINT:
If the number of ignition switch ON - OFF operations is 0, 4, 6 or more, there will be no response (the power door lock and unlock operation) to show which mode has been selected.

(2) Remove the key from the ignition key cylinder.

(e) Check the response of the selected mode within 5 seconds.

Response to selected mode (power door lock operation):

Main body ECU automatically performs power door LOCK-UNLOCK operations to indicate which mode has been selected.

Add Mode — LOCK-UNLOCK operation: Once

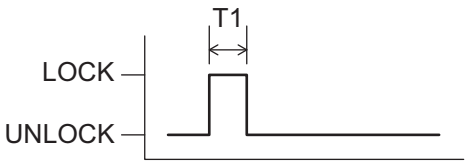

Rewrite Mode — LOCK-UNLOCK operation: Twice

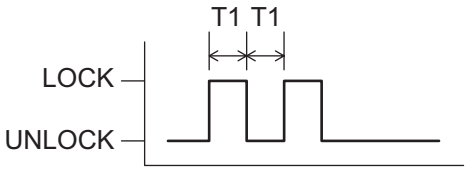

Confirmation Mode — LOCK-UNLOCK operation: The number of registered codes (1 to 5 times)

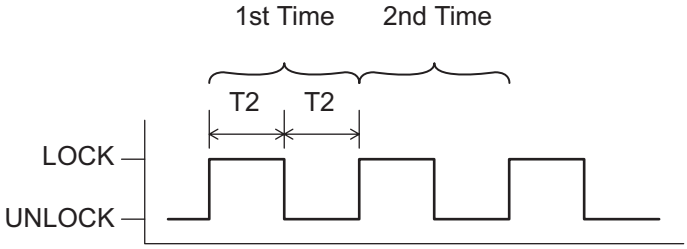

T1: Approx. 1 second
T2: Approx. 2 seconds

Prohibition Mode — LOCK-UNLOCK operation: 5 times

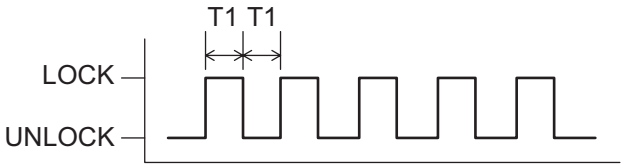

B111913E04

NOTICE:
After the system has been set to the prohibition mode, enter the confirmation mode and check that the number of registered keys is 0.

HINT:

- In the confirmation mode, LOCK-UNLOCK operation will occur once for each recognition code that has been registered. For example, if 2 recognition codes have been registered, LOCK-UNLOCK operation will occur twice.
- In the confirmation mode, if no recognition codes have been registered, LOCK-UNLOCK operation will occur 5 times.
- If confirmation mode or prohibition mode is selected, the operation ends after the response to the selected mode completes.

(f) Within 40 seconds of completing the confirmation mode operation, press the LOCK and UNLOCK switches on the transmitter simultaneously.

(g) After completing the above step, press a single switch (LOCK or UNLOCK) within 5 seconds.

(h) After completing the above step, check the response to the registration completion within 3 seconds.

Response to registration completion:

Main body ECU automatically performs power door LOCK-UNLOCK operation to show whether registration has been completed correctly or not.

LOCK-UNLOCK Occurs Once	LOCK-UNLOCK Occurs Twice
Registration of recognition code has been completed.	Registration of recognition code has failed.

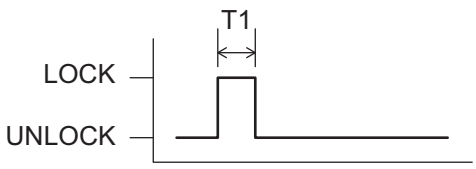

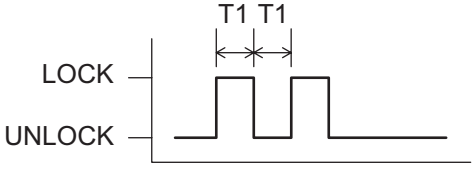

T1: Approx. 1 second

B111915E06

HINT:

- If the LOCK-UNLOCK operation occurs twice, the registration of recognition code has failed. Perform registration procedures again from the beginning.

DL

- If registering another transmitter, repeat the procedures after the response to the selected mode confirmation. All 4 recognition codes can be registered consecutively.

(i) Perform either of the following to complete the registration of recognition codes:
- Open the door.
- Insert the key into the ignition key cylinder.

CUSTOMIZE PARAMETERS

1. CUSTOMIZING FUNCTION WITH INTELLIGENT TESTER (REFERENCE)

HINT:

The following items can be customized.

NOTICE:

- **When the customer requests a change in a function, first make sure that the function can be customized.**
- **Record the current settings before customizing.**
- **When troubleshooting a function, first make sure that the function is set to the default setting.**

Wireless door lock control system:

Display (Item)	Default	Contents	Setting
HAZARD ANS BACK	ON	When LOCK switch on transmitter pressed, all hazard warning lights illuminate once. When UNLOCK switch pressed, all hazard warning lights illuminate twice	ON / OFF
WIRLS BUZZ OPER	ON	Function that makes wireless buzzer sound for answer-back when transmitter LOCK / UNLOCK switch pressed	ON / OFF
OPEN DOOR WARN	ON	If door is not completely closed and transmitter LOCK switch is pressed, this function sounds a buzzer for 10 seconds	ON / OFF
WIRELESS OPER	ON	ON / OFF of wireless door lock function	ON / OFF
ALARM FUNCTION	ON	Operates security alarm when PANIC switch on transmitter continuously pressed for 1 second	ON / OFF
UNLOCK / 2 OPER	ON	Function that unlocks driver side door when unlock switch on transmitter is pressed once, and unlocks all doors when pressed twice. If setting is OFF, pressing unlock switch once makes all doors unlock.	ON / OFF
AUTO LOCK DELAY	30s	This function controls amount of time from unlocking doors to automatic re-locking function	30s / 60s

PROBLEM SYMPTOMS TABLE

HINT:

- Use the table below to help determine the cause of the problem symptom. The potential causes of the symptoms are listed in order of probability in the "Suspected Are" column of the table. Check each symptom by checking the suspected areas in the order they are listed. Replace parts as necessary.
- Inspect the fuses and relays related to this system before inspecting the suspected areas below.

Wireless door lock control system:

Symptom	Suspected area	See page
Only wireless control function is inoperative	1. Door control transmitter module	DL-64
	2. Transmitter battery	DL-64
	3. Lighting system	DL-64
	4. Instrument panel junction block (main body ECU)	DL-64
	5. Door control receiver	DL-64
	6. Unlock warning switch	DL-64
	7. Wire harness	DL-64
No answer-back	1. Instrument panel junction block (main body ECU)	DL-73
	2. Lighting system	DL-73
	3. Wireless door lock buzzer	DL-73
	4. Wire harness	DL-73

TERMINALS OF ECU

1. CHECK INSTRUMENT PANEL JUNCTION BLOCK (MAIN BODY ECU)

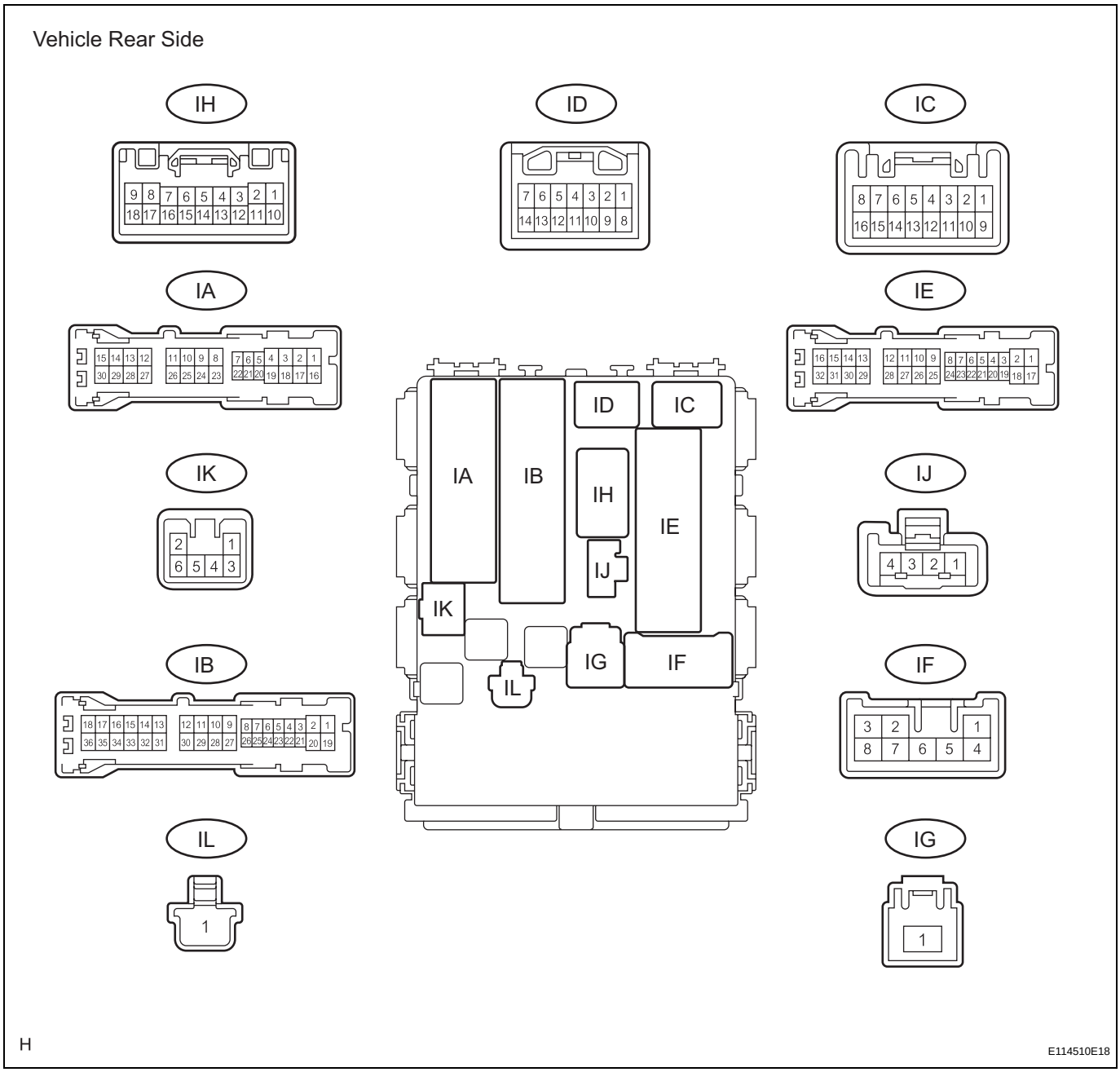

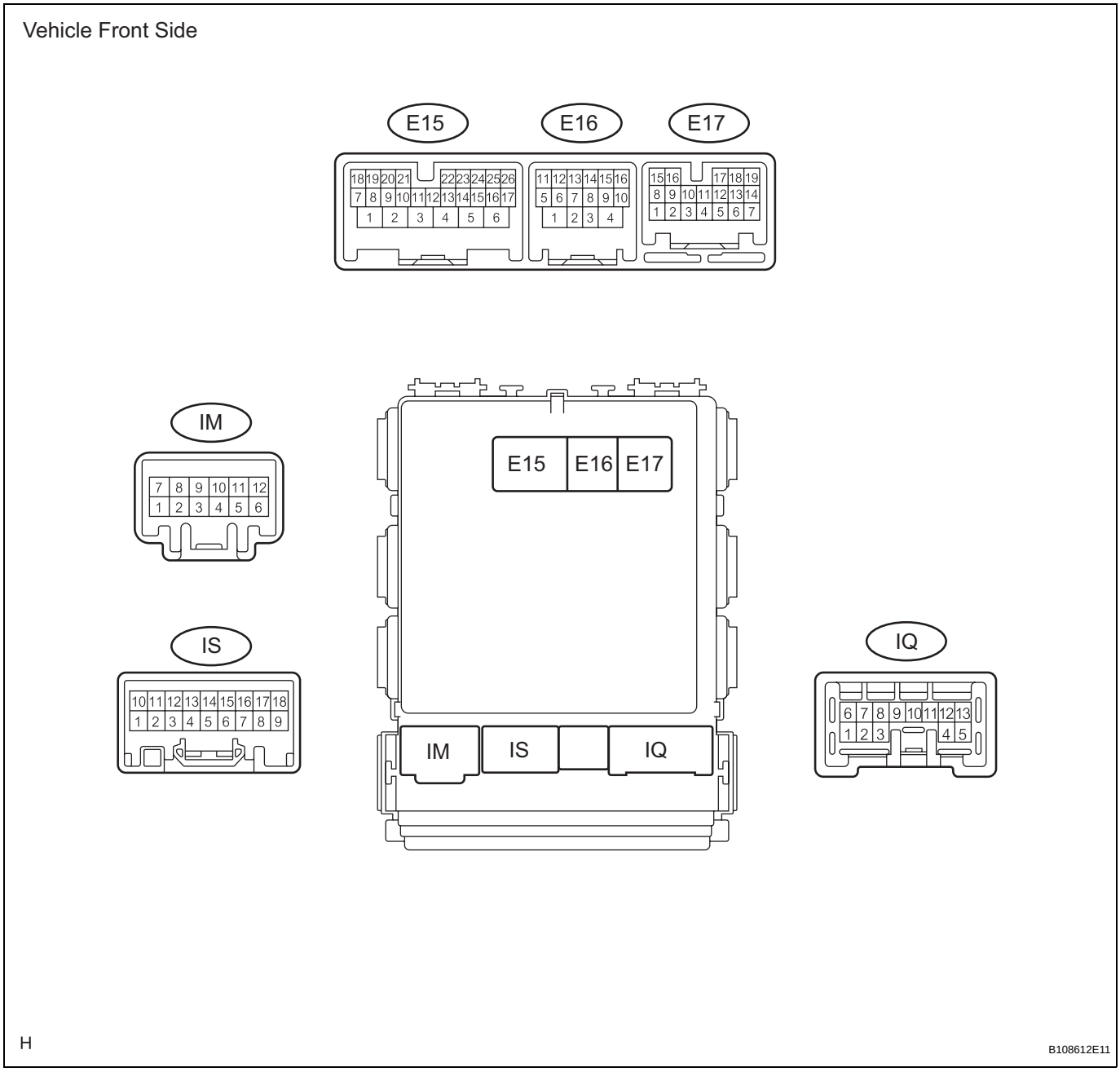

(a) Disconnect the IB and IE junction block connectors.
(b) Measure the resistance and voltage of the wire harness side connectors.

Symbols (Terminal No.)	Wiring Color	Terminal Description	Condition	Specified Condition
GND1 (IE-17) - Body ground	W-B - Body ground	Ground	Always	Below 1 Ω
BECU (IB-30) - GND1 (IE-17)	R - W-B	Battery (power supply)	Always	10 to 14 V

If the result is not as specified, there may be a malfunction in the wire harness.
(c) Reconnect the IB and IE junction block connectors.

DL

(d) Measure the voltage of the wire harness side connectors.

Symbols (Terminal No.)	Wiring Color	Terminal Description	Condition	Specified Condition
KSW (IE-26) - GND1 (IE-17)	L - W-B	Key unlock warning switch input	Key inserted	10 to 14 V
			No key in ignition key cylinder	Below 1 V
DCTY (IA-21) - Body ground	W - Body ground	Driver side door courtesy switch input	Driver side door closed	10 to 14 V
			Driver side door open	Below 1 V
PCTY (IC-14) - Body ground	BR - Body ground	Passenger side door courtesy switch input	Passenger side door closed	10 to 14 V
			Passenger side door open	Below 1 V
RRCY (ID-7) - Body ground	LG - Body ground	Rear RH door courtesy switch input	Rear RH door closed	10 to 14 V
			Rear RH door open	Below 1 V
LCTY (E15-8) - Body ground	SB - Body ground	Rear LH door courtesy switch input	Rear LH door closed	10 to 14 V
			Rear LH door open	Below 1 V
BCTY (IA-7) - Body ground	LG - Body ground	Back door courtesy switch input	Back side door closed	10 to 14 V
			Back side door open	Below 1 V
L1 (IH-4) - Body ground	P - Body ground	Door lock motor LOCK drive output	Master switch (door control switch) OFF	Below 1 V
			Master switch (door control switch) ON (LOCK)	10 to 14 V → Below 1 V
UL1 (IH-5) - Body ground	B - Body ground	Door lock motor UNLOCK drive output	Master switch (door control switch) OFF	Below 1 V
			Master switch (door control switch) ON (UNLOCK)	10 to 14 V → Below 1 V
ACTD (E15-5) - Body ground	B - Body ground	Door lock motor UNLOCK drive output	Master switch (door control switch) or driver side door key cylinder OFF	Below 1 V
			Master switch (door control switch) or driver side door key cylinder ON (UNLOCK)	10 to 14 V → Below 1 V
ACT+ (IH-8) - Body ground	R - Body ground	Door lock motor LOCK drive output	Master switch (door control switch) or driver side door key cylinder OFF	Below 1 V
			Master switch (door control switch) or driver side door key cylinder ON (LOCK)	10 to 14 V → Below 1 V
ACT- (IH-18) - Body ground	B - Body ground	Door lock motor UNLOCK drive output	Master switch (door control switch) or driver side door key cylinder OFF	Below 1 V
			Master switch (door control switch) or driver side door key cylinder ON (UNLOCK)	10 to 14 V → Below 1 V
LSWD (E15-25) - Body ground	Y - Body ground	Driver side door lock position switch input	Driver side door UNLOCK	Below 1 V
			Driver side door LOCK	10 to 14 V
LSWP (E15-10) - Body ground	Y - Body ground	Passenger side door lock position switch input	Passenger side door UNLOCK	Below 1 V
			Passenger side door LOCK	10 to 14 V
UL3 (E15-9) - Body ground	LG - Body ground	Door lock motor UNLOCK drive output	Driver side door key cylinder OFF	Below 1 V
			Driver side door key cylinder ON (UNLOCK)	10 to 14 V → Below 1 V

Symbols (Terminal No.)	Wiring Color	Terminal Description	Condition	Specified Condition
L2 (IH-7) - Body ground	SB - Body ground	Door lock motor LOCK drive output	Master switch or driver side door key cylinder OFF	Below 1 V
			Master switch or driver side door key cylinder ON (LOCK)	10 to 14 V → Below 1 V
PRG (E17-6) - Body ground	Y - Body ground	Door control receiver output	Transmitter switch ON → OFF (No key in ignition key cylinder, all doors closed)	6 to 7 V → Below 1 V → 6 to 7 V
RDA (E17-5) - Body ground	G - Body ground	Door control receiver input	Transmitter switch ON → OFF (No key in ignition key cylinder, all doors closed)	Below 1 V → 6 to 7 V → Below 1 V
HAZ (IS-17) - Body ground	GR- Body ground	Hazard warning light signal	Answer-back ON	Pulse generation
			Answer-back OFF	Below 1 V
BZR (E17-2) - Body ground	L- Body ground	Wireless door lock buzzer signal	Answer-back ON	Pulse generation
			Answer-back OFF	Below 1 V

If the result is not as specified, the junction block (ECU) may have a malfunction.

DIAGNOSIS SYSTEM

1. DESCRIPTION

(a) Wireless door lock control system data and Diagnostic Trouble Codes (DTCs) can be read through the Data Link Connector 3 (DLC3) of the vehicle. When the system seems to be malfunctioning, use the intelligent tester to check for malfunctions and perform repairs.

2. CHECK DLC3

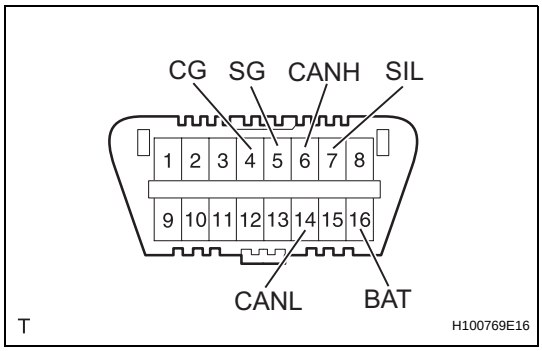

The vehicle's ECU uses the ISO 15765-4 communication protocol. The terminal arrangement of the DLC3 complies with SAE J1962 and matches the ISO 15765-4 format.

If the result is not as specified, the DLC3 may have a malfunction. Repair or replace the harness and connector.

Symbols (Terminal No.)	Terminal Description	Condition	Specified Condition
SIL (7) - SG (5)	Bus "+" line	During transmission	Pulse generation
CG (4) - Body ground	Chassis ground	Always	Below 1 Ω
SG (5) - Body ground	Signal ground	Always	Below 1 Ω
BAT (16) - Body ground	Battery positive	Always	11 to 14 V
CANH (6) - CANL (14)	HIGH-level CAN bus line	Ignition switch off*	54 to 69 Ω
CANH (6) - Battery positive	HIGH-level CAN bus line	Ignition switch off*	1 kΩ or higher
CANH (6) - CG (4)	HIGH-level CAN bus line	Ignition switch off*	1 kΩ or higher
CANL (14) - Battery positive	LOW-level CAN bus line	Ignition switch off*	1 MΩ or higher
CANL (14) - CG (4)	LOW-level CAN bus line	Ignition switch off*	1 MΩ or higher

NOTICE:

***: Before measuring the resistance, leave the vehicle as is for at least 1 minute and do not operate the ignition switch, other switches or doors.**

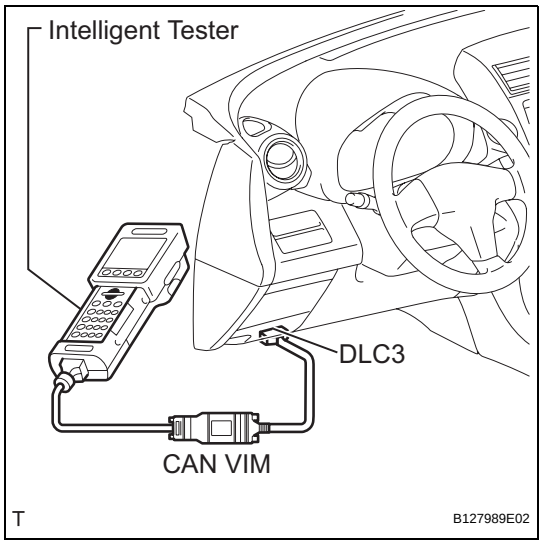

HINT:

Connect the cable of the intelligent tester (with CAN VIM) to the DLC3, turn the ignition switch ON and attempt to use the intelligent tester. If the screen displays UNABLE TO CONNECT TO VEHICLE, a problem exists in the vehicle side or the tester side.

If the communication is normal when the tester is connected to another vehicle, inspect the DLC3 on the original vehicle.

If the communication is still not possible when the tester is connected to another vehicle, the problem is probably in the tester itself. Consult the Service Department listed in the tester's instruction manual.

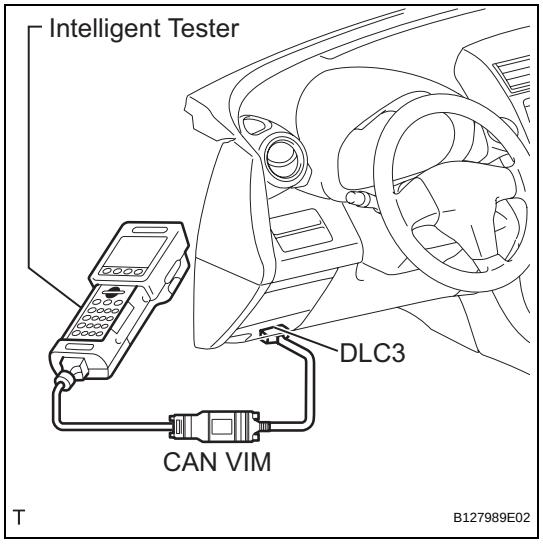

DTC CHECK / CLEAR

1. CHECK DTC

(a) Connect the intelligent tester (with CAN VIM) to the DLC3.

(b) Turn the ignition switch ON and turn the intelligent tester ON.

(c) Select the following menu items: DIAGNOSIS / OBD/MOBD / MAIN BODY / DTC INFO / CURRENT CODES.

(d) Check DTCs and then write them down.
HINT:
Refer to the intelligent tester operator's manual for further details.

(e) Confirm the details of the DTCs (see page DL-60).

2. CLEAR DTC

(a) Connect the intelligent tester (with CAN VIM) to the DLC3.

(b) Turn the ignition switch ON (do not start the engine) and turn the intelligent tester ON.

(c) Select the following menu items: DIAGNOSIS / OBD/MOBD / MAIN BODY / DTC INFO / CLEAR CODES.
HINT:
Refer to the intelligent tester operator's manual for further details.

(d) Erase DTCs by pressing the YES button on the tester.
HINT:
Refer to the intelligent tester operator's manual for further details.

DATA LIST / ACTIVE TEST

1. READ DATA LIST

HINT:

Using the intelligent tester's DATA LIST allows switch, sensor, actuator and other item values to be read without removing any parts. Reading the DATA LIST early in troubleshooting is one way to save time.

(a) Connect the intelligent tester (with CAN VIM) to the DLC3.

(b) Turn the ignition switch ON.

(c) Select the following menu items: DIAGNOSIS / OBD/MOBD / MAIN BODY / DATA LIST.

(d) Check the results by referring to the table below.

Main body ECU:

Tester Display	Measurement Item/Range	Normal Condition	Diagnostic Note
D DOR CTY SW	Driver side door courtesy light switch signal / ON or OFF	ON: Driver side door is open OFF: Driver side door is closed	-
D LOCK POS SW	Driver side door lock position switch signal / ON or OFF	ON: Driver side door is unlocked OFF: Driver side door is locked	-
D/L SW-LOCK	Door manual lock switch signal / ON or OFF	ON: Door control switch (for front driver door side) is turned to lock position OFF: Door control switch (for front driver door side) is turned to unlock position	-
D/L SW-UNLOCK	Door manual unlock switch signal / ON or OFF	ON: Door control switch (for front driver door side) is turned to unlock position OFF: Door control switch (for front driver door side) is turned to lock position	-
DOR KEY SW-LOCK	Door key linked lock switch signal / ON or OFF	ON: Driver side door key cylinder is turned to lock position OFF: Driver side door key cylinder is turned to unlock position	-
D DOR KEY SW-UL	Driver side door key linked unlock switch signal / ON or OFF	ON: Driver side door key cylinder is turned to unlock position OFF: Driver side door key cylinder is turned to lock position	-
P DOR CTY SW	Passenger side door courtesy light switch signal / ON or OFF	ON: Passenger side door is open OFF: Passenger side door is closed	-
P LOCK POS SW	Passenger side door lock position switch signal / ON or OFF	ON: Passenger side door is unlocked ON: Passenger side door is locked	-
RR DOR CTY SW	Rear door RH courtesy light switch signal / ON or OFF	ON: Rear door RH is open OFF: Rear door RH is closed	-
RL DOR CTY SW	Rear door LH courtesy light switch signal / ON or OFF	ON: Rear door LH is open OFF: Rear door LH is closed	-
BK DOR CTY SW	Back door courtesy light switch signal / ON or OFF	ON: Back door is open OFF: Back door is closed	-
KEY UNLK WRN SW	Unlock warning switch / ON or OFF	ON: Ignition key is inserted OFF: Ignition key is not inserted	-

2. PERFORM ACTIVE TEST

HINT:

Performing the intelligent tester's ACTIVE TEST allows relays, VSV, actuators and other items to be operated without removing any parts. Performing the ACTIVE TEST early in troubleshooting is one way to save time. The DATA LIST can be displayed during the ACTIVE TEST.

(a) Connect the intelligent tester (with CAN VIM) to the DLC3.
(b) Turn the ignition switch ON.
(c) Select the following menu items: DIAGNOSIS / OBD/MOBD / MAIN BODY / ACTIVE TEST.
(d) Perform the ACTIVE TEST by referring to the table below.

Main body ECU:

Tester Display	Test Part	Control Range
DOOR LOCK	Operate door lock motor LOCK / UNLOCK	-
D DOOR UNLOCK	Operate driver door lock motor unlock side ON / OFF	-
VEHICLE HORN	Sounds vehicle horn ON / OFF	-
HAZARD	Turns FLSH relay ON / OFF	-

DIAGNOSTIC TROUBLE CODE CHART

DTC No.	Detection Item	Trouble Area	See page
B1242	Wireless Door Lock Tuner Circuit Malfunction	- Wire harness - Door control receiver - Instrument panel junction block (main body ECU)	DL-61

DTC	B1242	Wireless Door Lock Tuner Circuit Malfunction

DESCRIPTION

The door control receiver receives signals from the transmitter and sends these signals to the main body ECU. This DTC is output when the applicable RDA signal cannot be received within 1 second of PRG signal being output from the main body ECU.

DTC No.	DTC Detection Condition	Trouble Area
B1242	In diagnostic mode, applicable RDA signal cannot be received within 1 second of PRG signal being output from main body ECU	• Wire harness • Door control receiver • Instrument panel junction block (main body ECU)

WIRING DIAGRAM

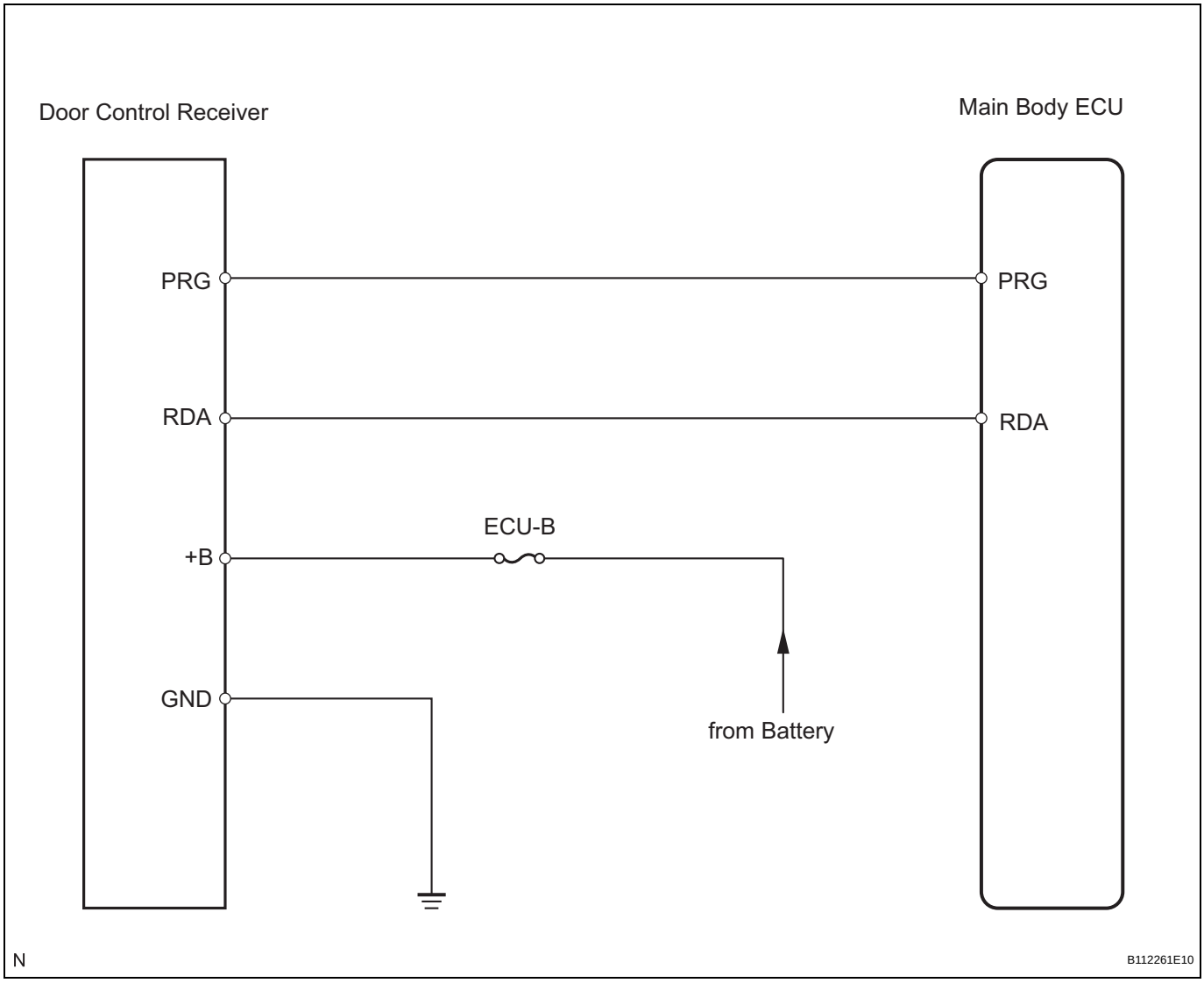

DL

INSPECTION PROCEDURE

1 CHECK WIRE HARNESS (MAIN BODY ECU - DOOR CONTROL RECEIVER)

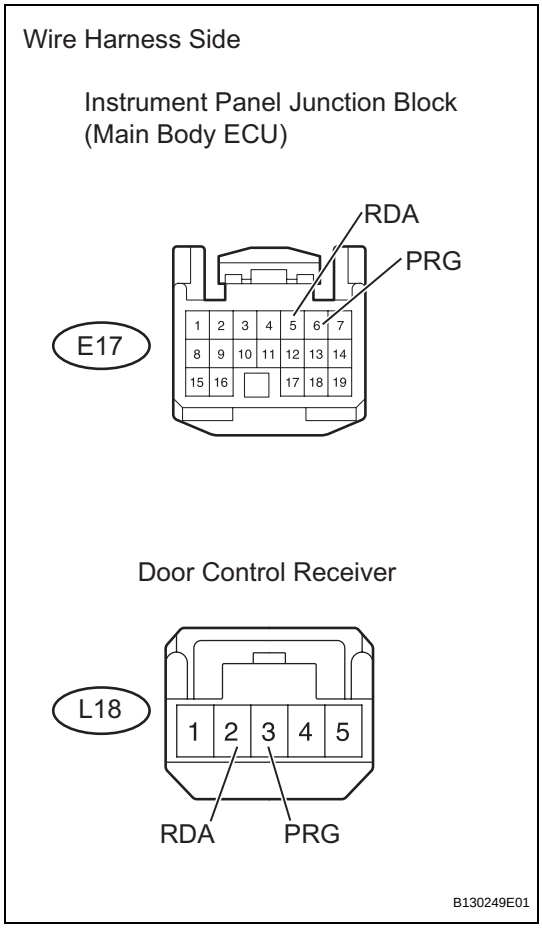

(a) Disconnect the E17 ECU connector.
(b) Disconnect the L18 receiver connector.
(c) Measure the resistance of the wire harness side connectors.

Standard resistance

Tester Connection	Specified Condition
E17-5 (RDA) - L18-2 (RDA)	Below 1 Ω
E17-6 (PRG) - L18-3 (PRG)	
E17-5 (RDA) or L18-2 (RDA) - Body ground	10 kΩ or higher
E17-6 (PRG) or L18-3 (PRG) - Body ground	

NG → **REPAIR OR REPLACE HARNESS AND CONNECTOR**

OK

2 CHECK WIRE HARNESS (DOOR CONTROL RECEIVER - BATTERY AND BODY GROUND)

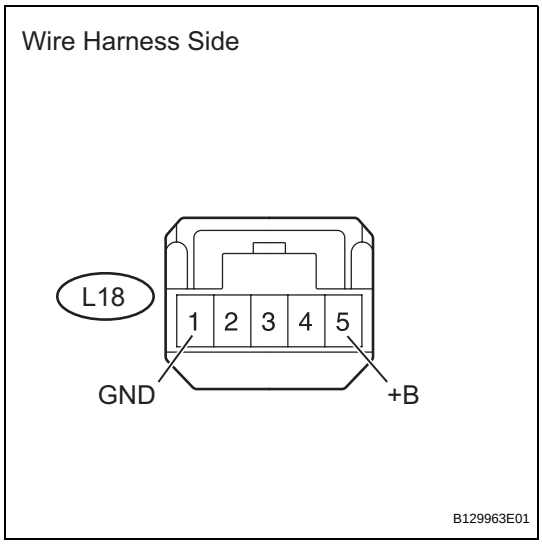

(a) Disconnect the L18 receiver connector.
(b) Measure the resistance and voltage of the wire harness side connector.

Standard resistance

Tester Connection	Specified Condition
L18-1 (GND) - Body ground	Below 1 Ω

Standard voltage

Tester Connection	Specified Condition
L18-5 (+B) - Body ground	10 to 14 V

NG → **REPAIR OR REPLACE HARNESS AND CONNECTOR**

DL

OK

3	REPLACE DOOR CONTROL RECEIVER

(a) Temporarily replace the door control receiver with a new or normally functioning one.
(b) Perform the REGISTRATION procedures (see page DL-46).

NEXT

4	CHECK FOR DTC

(a) Clear the DTC (see page DL-58).
(b) Recheck for DTC.
OK:
DTC B1242 is not output.

NG → **REPLACE INSTRUMENT PANEL JUNCTION BLOCK (MAIN BODY ECU)**

OK

END (DOOR CONTROL RECEIVER IS DEFECTIVE)

Only Wireless Control Function is Inoperative

DESCRIPTION

The door control receiver receives signals from the transmitter and sends these signals to the main body ECU. The main body ECU then controls all doors by sending lock / unlock signals to each door, and sends hazard flasher relay signals to the turn signal flasher relay (hazard warning lights).

WIRING DIAGRAM

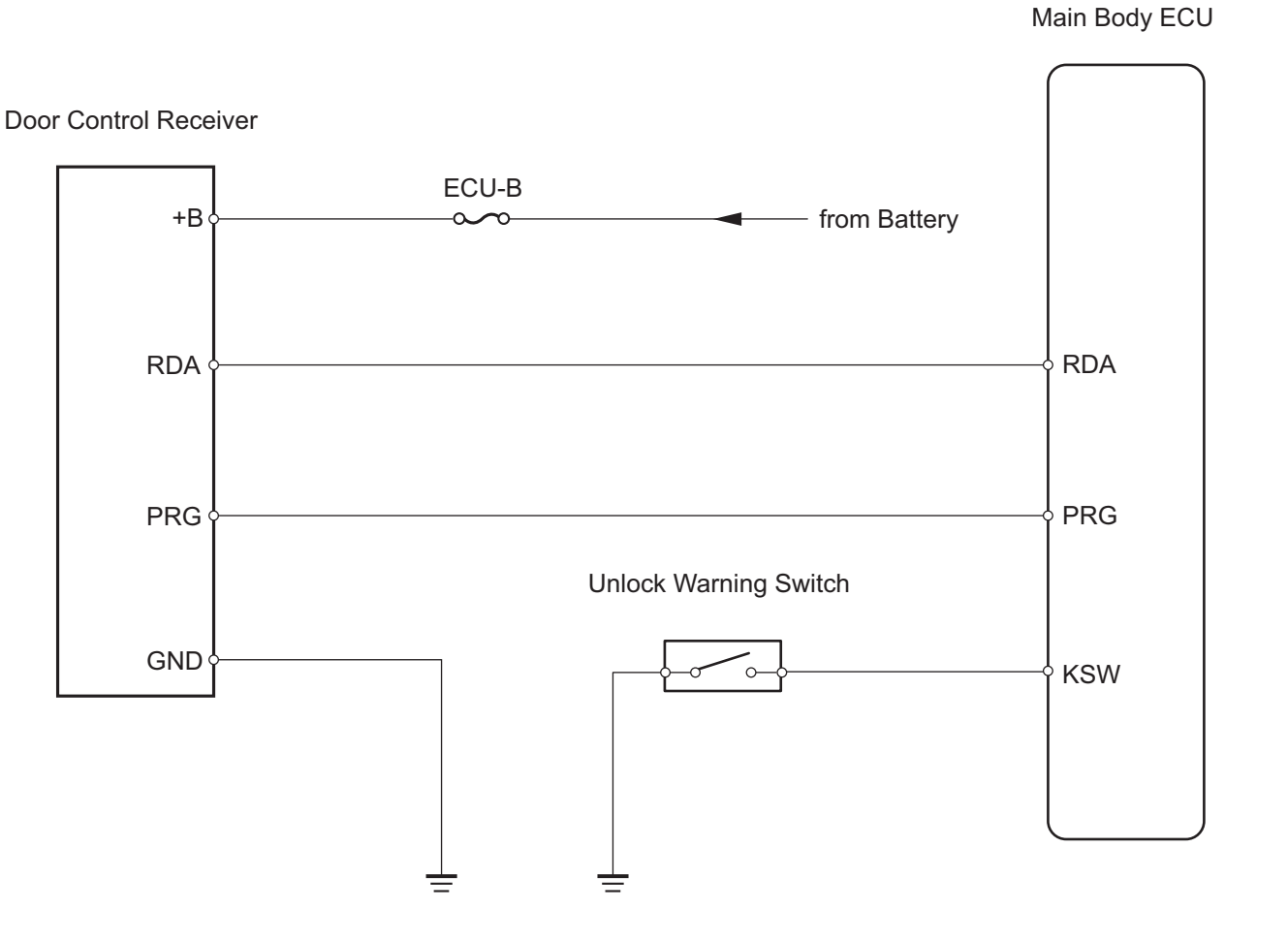

DL

INSPECTION PROCEDURE

1	CHECK WIRELESS DOOR LOCK CONTROL FUNCTIONS

(a) Check the wireless door lock control functions (see page DL-44).

OK:

Each function of wireless door lock control system operates normally using transmitter switch.

OK → END

NG

2	CHECK TRANSMITTER LED ILLUMINATION

(a) Check that the transmitter's LED illuminates 3 times when the switch is pressed 3 times.
OK:
Transmitter's LED illuminates 3 times when switch is pressed 3 times.

NG → Go to step 4

OK

3	CHECK WIRELESS DOOR LOCK CONTROL FUNCTIONS (STANDARD OPERATION FUNCTION)

HINT:
Use the following standard test procedure to check the transmitter again.
(a) Hold the transmitter approximately 1 m (3.28 ft.) from the driver side door outside handle. The transmitter must be held parallel to the ground and perpendicular to the side of the vehicle.
(b) Press and hold either the LOCK or UNLOCK transmitter switch for 1 second, and check that the doors are locked or unlocked accordingly.
OK:
Doors can be locked and unlocked with transmitter switches.

NG → Go to step 5

OK

4	CHECK TRANSMITTER BATTERY (OPERATION)

(a) Temporarily replace the transmitter battery with a new or normally functioning one. (see page DL-89)
(b) Check that the doors can be locked and unlocked using the transmitter switches.
OK:
Doors can be locked and unlocked with transmitter.

NG → REPLACE DOOR CONTROL TRANSMITTER MODULE

OK

END (TRANSMITTER BATTERY IS DEFECTIVE)

5	CHECK ROOM LIGHT (WIRELESS DOOR LOCK BUZZER)

(a) Check that the room light illumination operates normally.
(b) Inspect the wireless door lock buzzer (see page DL-79).

Result:

Result	Proceed to
Room light and wireless door lock buzzer is normally	A
Room light is malfunction	B
Wireless door lock buzzer is malfunction	C

B → **Go to LIGHTING SYSTEM**

C → **REPLACE WIRELESS DOOR LOCK BUZZER**

A

6	SWITCH TO SELF-DIAGNOSTIC MODE

(a) Switch to self-diagnostic mode by operating the ignition key cylinder.
   (1) Make sure the vehicle is in its initial condition. Then insert the key into the ignition key cylinder and remove it.
   (2) Within 5 seconds of removing the key, insert the key into the ignition key cylinder (ignition switch OFF). Then turn the ignition switch ON and OFF.
   (3) Within 30 seconds of turning the ignition switch OFF, perform the following operation 9 times: turn the ignition switch ON and OFF.

NOTICE:

If the system cannot enter self-diagnostic mode, the system returns to normal mode.

HINT:

- Turning the ignition switch ON after the above operations have been completed ends self-diagnostic mode.
- Do not lock or unlock doors during self-diagnostic mode.

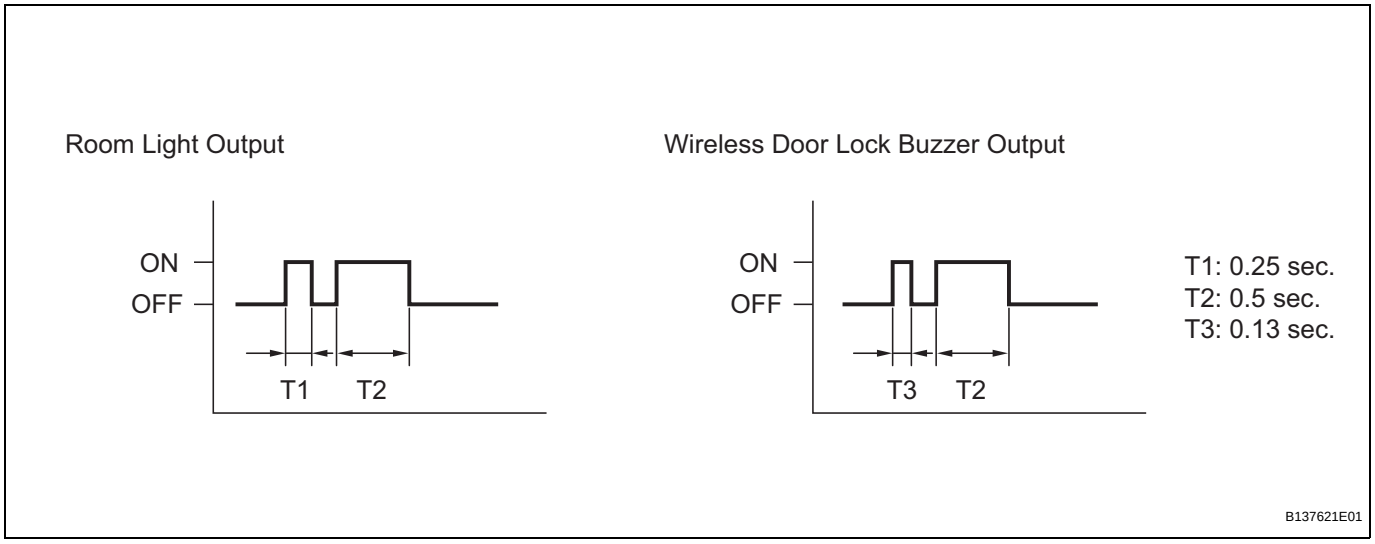

(b) Check that the system has switched to self-diagnostic mode by checking the room light flash (wireless door lock buzzer sound) pattern.
OK:
Flash (sound) pattern is same as illustration.

NG → **Go to step 11**

OK

7	CHECK BY SELF DIAGNOSTIC MODE

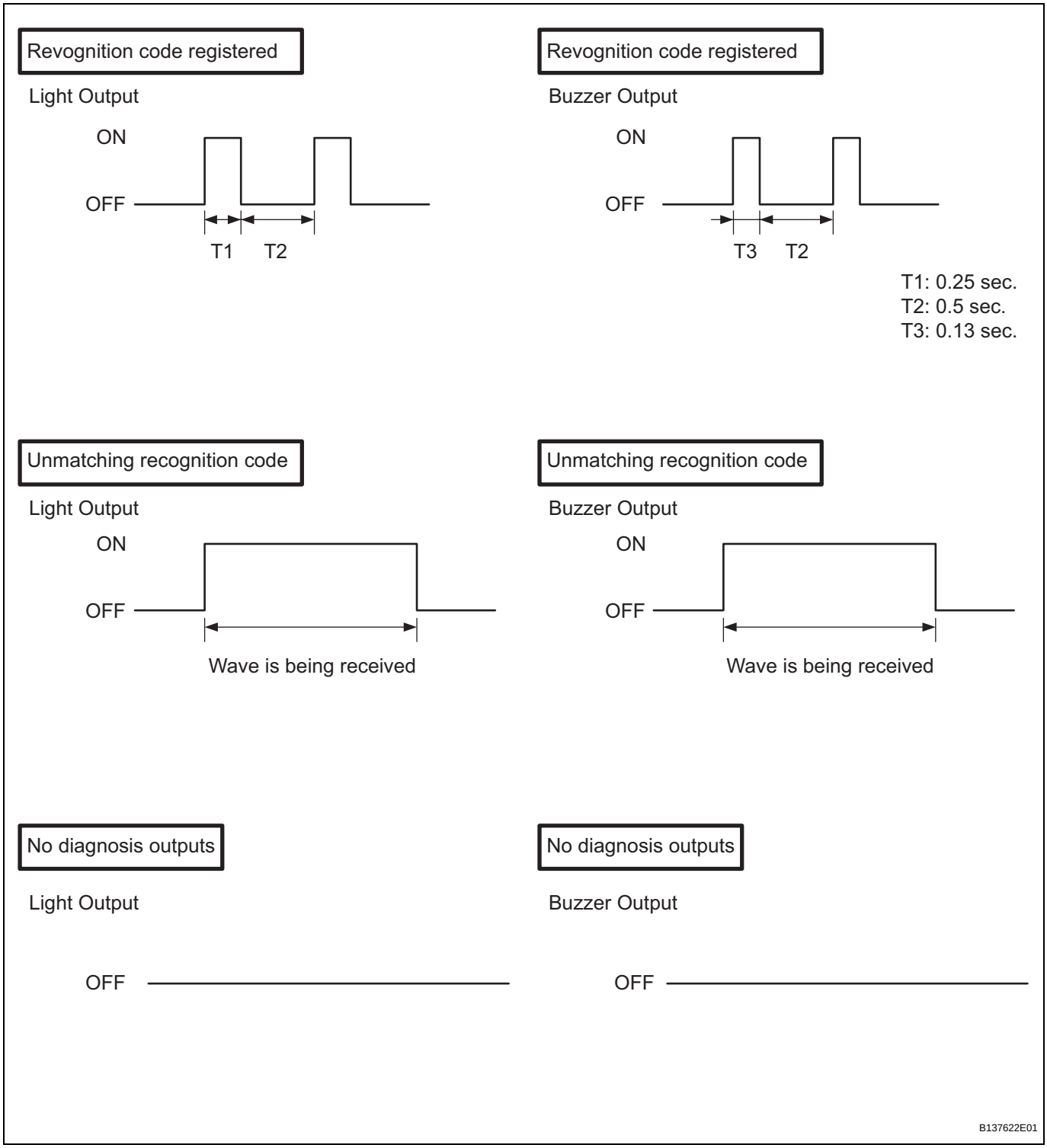

(a) Inspect the diagnosis outputs when the door control transmitter switch is held down. The diagnosis outputs can be checked by the flash patterns of the room light (wireless door lock buzzer).

Result:

Result	Proceed to
Unmatching recognition code is output	A

DL

Result	Proceed to
Normal waves (light flash or buzzer sound patterns) is output	B
No diagnosis outputs	C

B → **REPLACE INSTRUMENT PANEL JUNCTION BLOCK (MAIN BODY ECU)**

C → **Go to step 9**

A

8 REGISTER RECOGNITION CODE

(a) Check that the system can be switched to rewrite mode or add mode, and that a recognition code can be registered (see page DL-46).
OK:
Recognition code can be registered.

NG → **Go to step 15**

OK

END

9 CHECK DOOR CONTROL RECEIVER (RESPONSE)

(a) Temporarily replace the door lock control transmitter with a new or normally functioning one (see page DL-105).
(b) Held down the door control transmitter's switch.
(c) Check that an unmatching recognition code is output.
OK:
Unmatching recognition code is output.

OK → **REPLACE DOOR CONTROL TRANSMITTER MODULE**

NG

10 CHECK DOOR CONTROL RECEIVER (OPERATION)

(a) Temporarily replace the door lock control receiver with a new or normally functioning one (see page DL-105).
(b) Check that the doors can be locked and unlocked by using the transmitter LOCK and UNLOCK switches.
OK:
Doors can be locked and unlocked with transmitter.

NG → **REPLACE INSTRUMENT PANEL JUNCTION BLOCK (MAIN BODY ECU)**

OK

END (DOOR CONTROL RECEIVER IS DEFECTIVE)

11 CONFIRM PROCEDURES TO ENTER SELF-DIAGNOSTIC MODE

Result:

Result	Proceed to
Self-diagnostic mode entry successful	A
Self-diagnostic mode entry unsuccessful	B

B → **Go to step 6**

A

12 INSPECT UNLOCK WARNING SWITCH ASSEMBLY

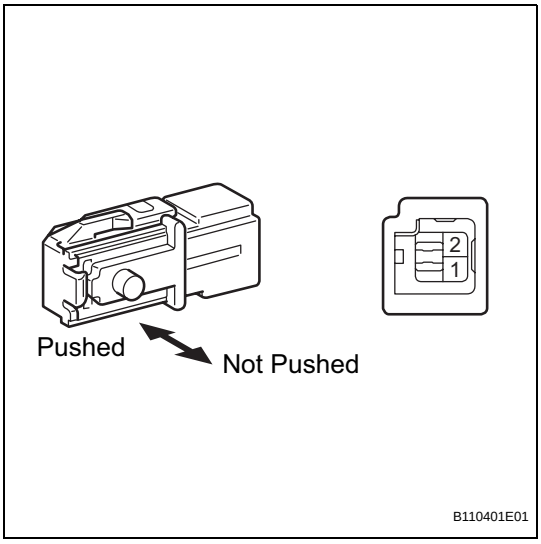

(a) Remove the switch.
(b) Measure the resistance of the switch.
Standard resistance

Tester Connection	Condition	Specified Condition
1 - 2	Not pushed	10 kΩ or higher
	Pushed	Below 1 Ω

NG → **REPLACE UNLOCK WARNING SWITCH ASSEMBLY**

OK

13 CHECK WIRE HARNESS (UNLOCK WARNING SWITCH - MAIN BODY ECU AND BODY GROUND)

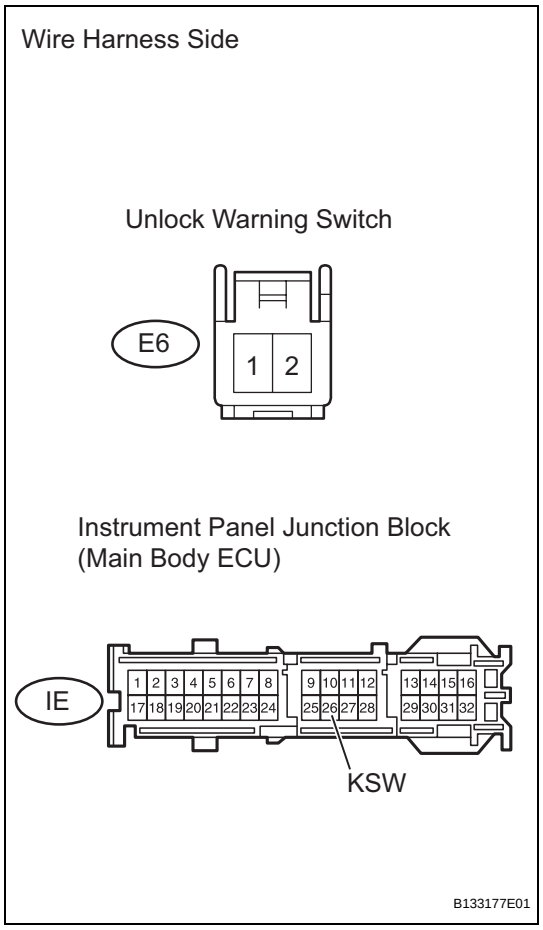

(a) Disconnect the E6 receiver connector.
(b) Disconnect the IE junction block connector.
(c) Measure the resistance of the wire harness side connectors.

Standard resistance

Tester Connection	Specified Condition
IE-26 (KSW) - E6-1	Below 1 Ω
E6-2 - Body ground	
IE-26 (KSW) or E6-1 - Body ground	10 kΩ or higher

NG → **REPAIR OR REPLACE HARNESS AND CONNECTOR**

OK

14 CHECK DOOR CONTROL RECEIVER (OUTPUT)

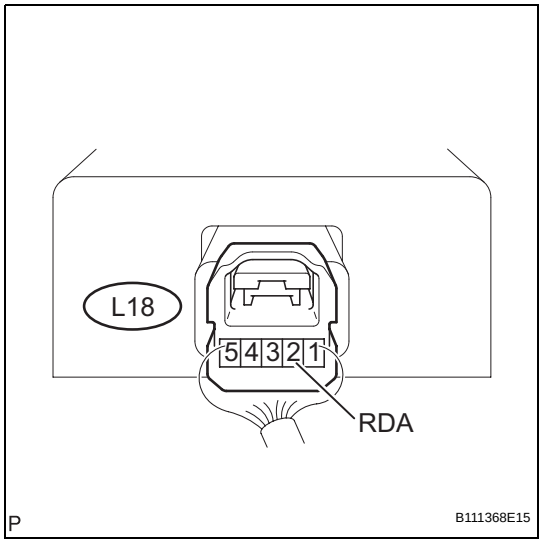

(a) Reconnect the L18 receiver connector.
(b) Measure the voltage of the connector.

Standard voltage

Tester Connection	Condition	Specified Condition
L18-2 (RDA) - Body ground	Transmitter switch ON → OFF (No key in ignition key cylinder, all doors closed)	Below 1 V → 6 to 7 V → Below 1 V

OK → **REPLACE INSTRUMENT PANEL JUNCTION BLOCK (MAIN BODY ECU)**

DL

NG

15	CHECK DOOR CONTROL TRANSMITTER MODULE

(a) Temporarily replace the door control transmitter module with a new or normally functioning one (see page DL-92).

(b) Check that the doors can be locked and unlocked by using the transmitter LOCK and UNLOCK switches.

OK:

Doors can be locked and unlocked with transmitter.

NG → **REPLACE DOOR CONTROL RECEIVER**

OK

END (DOOR CONTROL TRANSMITTER MODULE IS DEFECTIVE)

No Answer-Back

DESCRIPTION

In some cases, wireless door lock control functions are normal but the hazard warning lights and / or wireless door lock buzzer answer-back function(s) is not operate. In such cases, the main body ECU's hazard warning lights and wireless door lock buzzer signal outputs may be malfunctioning.

NOTICE:

Troubleshooting should be started after confirming that the customize status of the answer-back function has been switched ON.

WIRING DIAGRAM

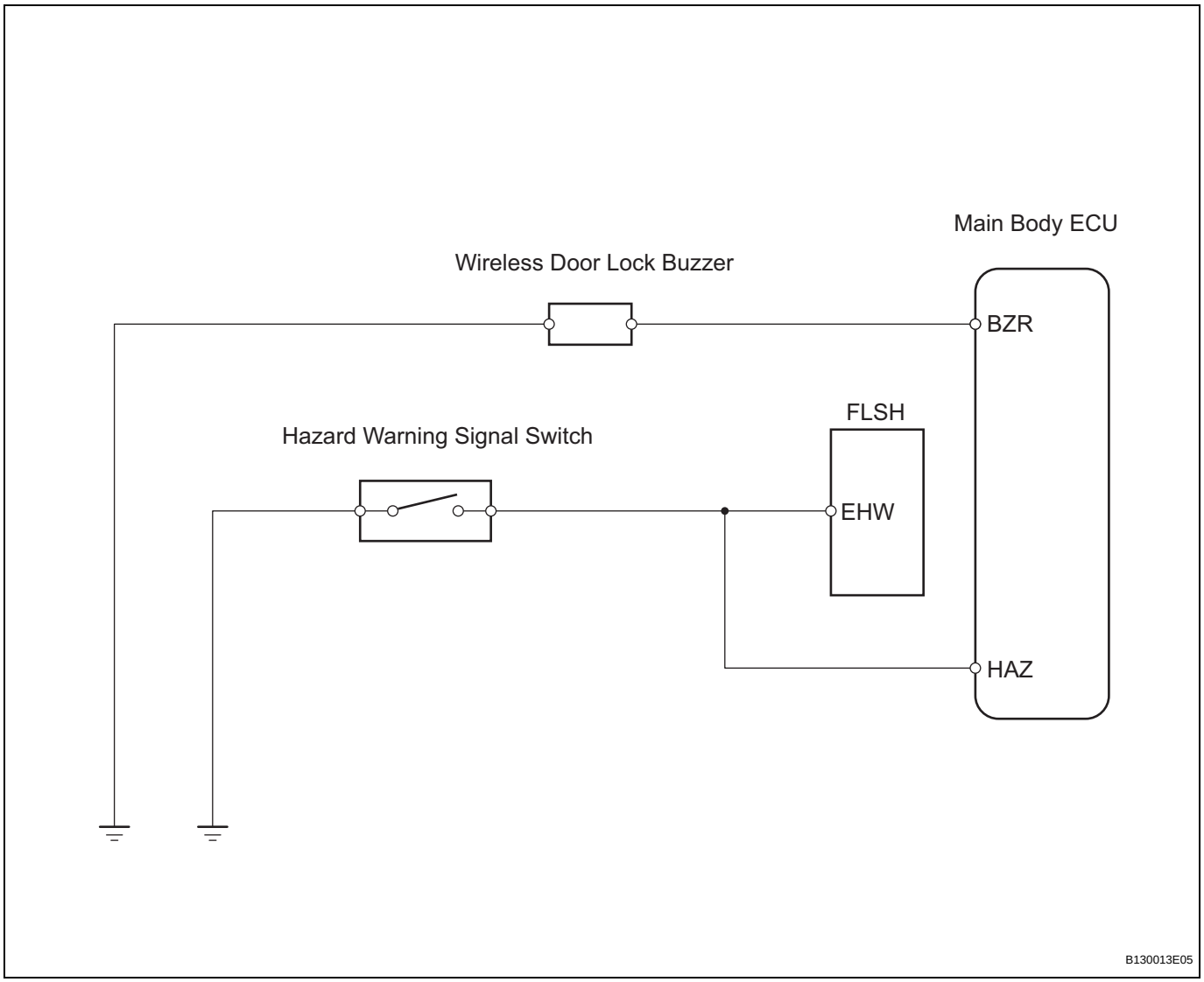

INSPECTION PROCEDURE

1 CHECK WIRELESS DOOR LOCK CONTROL FUNCTION

(a) Check the wireless door lock control functions by operating the transmitter switch.

Result:

Result	Proceed to
Wireless door lock functions are normal but hazard warning lights answer-back does not occur	A
Wireless door lock functions are normal but wireless door lock buzzer answer-back does not occur	B
Doors cannot be locked and unlocked with transmitter	C

B → **Go to step 4**

C → **Go to FLOWCHART**

A

2 PERFORM ACTIVE TEST BY INTELLIGENT TESTER (FLSH RELAY)

(a) Select the ACTIVE TEST, use the intelligent tester to generate a control command, and then check that the hazard warning lights flash.

Main body ECU:

Item	Test Details	Diagnostic Note
HAZARD	Turns FLSH relay ON / OFF	-

OK:

Hazard warning lights are turned ON / OFF.

OK → **REPLACE INSTRUMENT PANEL JUNCTION BLOCK (MAIN BODY ECU)**

NG

3 CHECK HAZARD WARNING LIGHT

(a) Check that the hazard warning lights flash continuously when the hazard warning signal switch is pressed.

OK:

Hazard warning lights flash continuously.

NG → **Go to LIGHTING SYSTEM**

OK

REPLACE INSTRUMENT PANEL JUNCTION BLOCK (MAIN BODY ECU)

4	INSPECT WIRELESS DOOR LOCK BUZZER

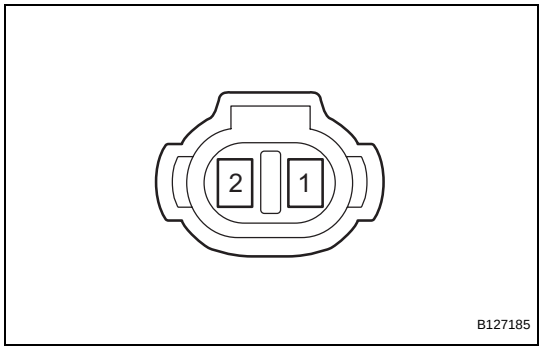

(a) Measure the resistance between terminals 1 and 2 of the buzzer.
Standard resistance:
Approximately 1 kΩ
NOTICE:
- **The buzzer circuit is built into the body ECU, not into the buzzer itself.**
- **When battery voltage is directly applied to the buzzer, the buzzer does not sound.**

NG → **REPLACE WIRELESS DOOR LOCK BUZZER**

OK

5	CHECK WIRE HARNESS (WIRELESS DOOR LOCK BUZZER - MAIN BODY ECU AND BODY GROUND)

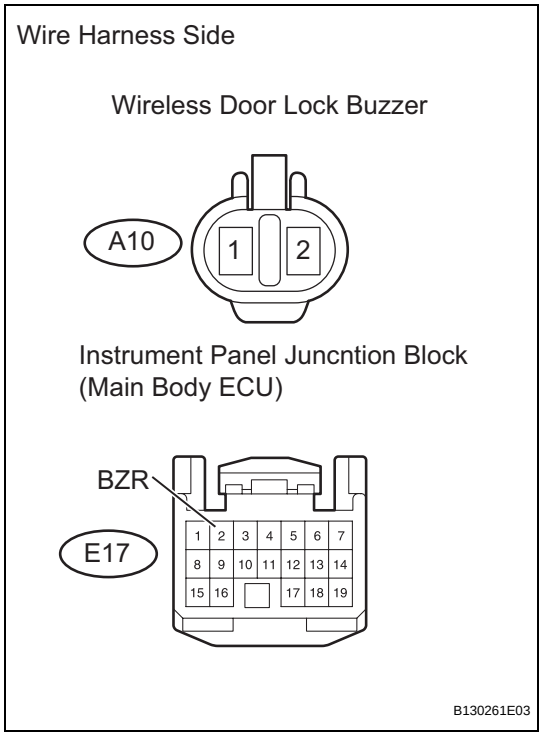

(a) Disconnect the A10 buzzer connector.
(b) Disconnect the E17 ECU connector.
(c) Measure the resistance of the wire harness side connectors.
Standard resistance

Tester Connection	Specified Condition
A10-1 - E17-2 (BZR)	Below 1 Ω
A10-2 - Body ground	
A10-1 or E17-2 (BZR) - Body ground	10 kΩ or higher

NG → **REPAIR OR REPLACE HARNESS AND CONNECTOR**

OK

REPLACE INSTRUMENT PANEL JUNCTION BLOCK (MAIN BODY ECU)

DL

WIRELESS DOOR LOCK CONTROL SYSTEM

PARTS LOCATION

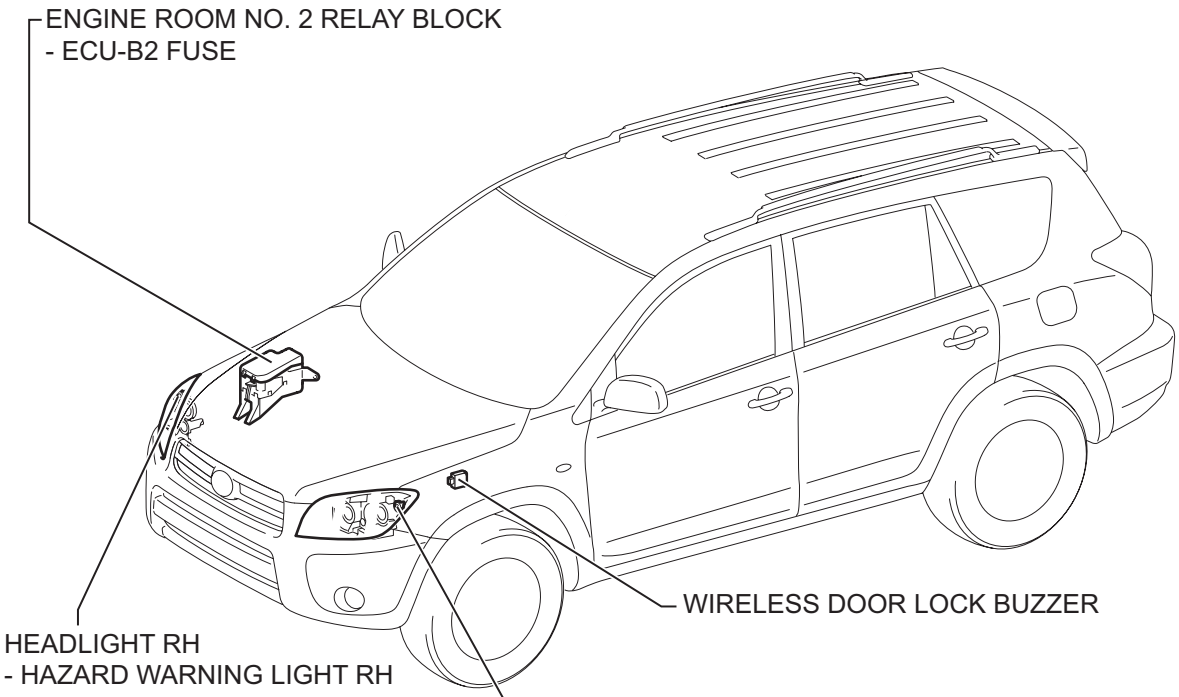

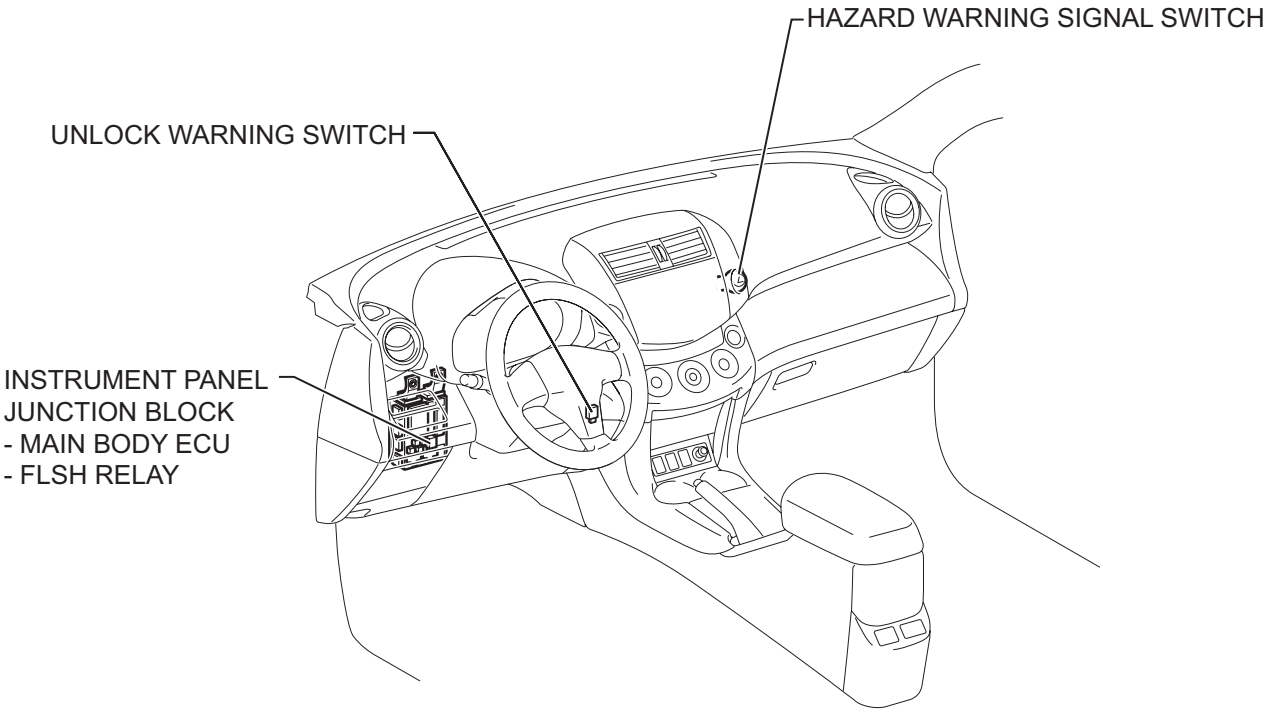

DL

T

B135632E01

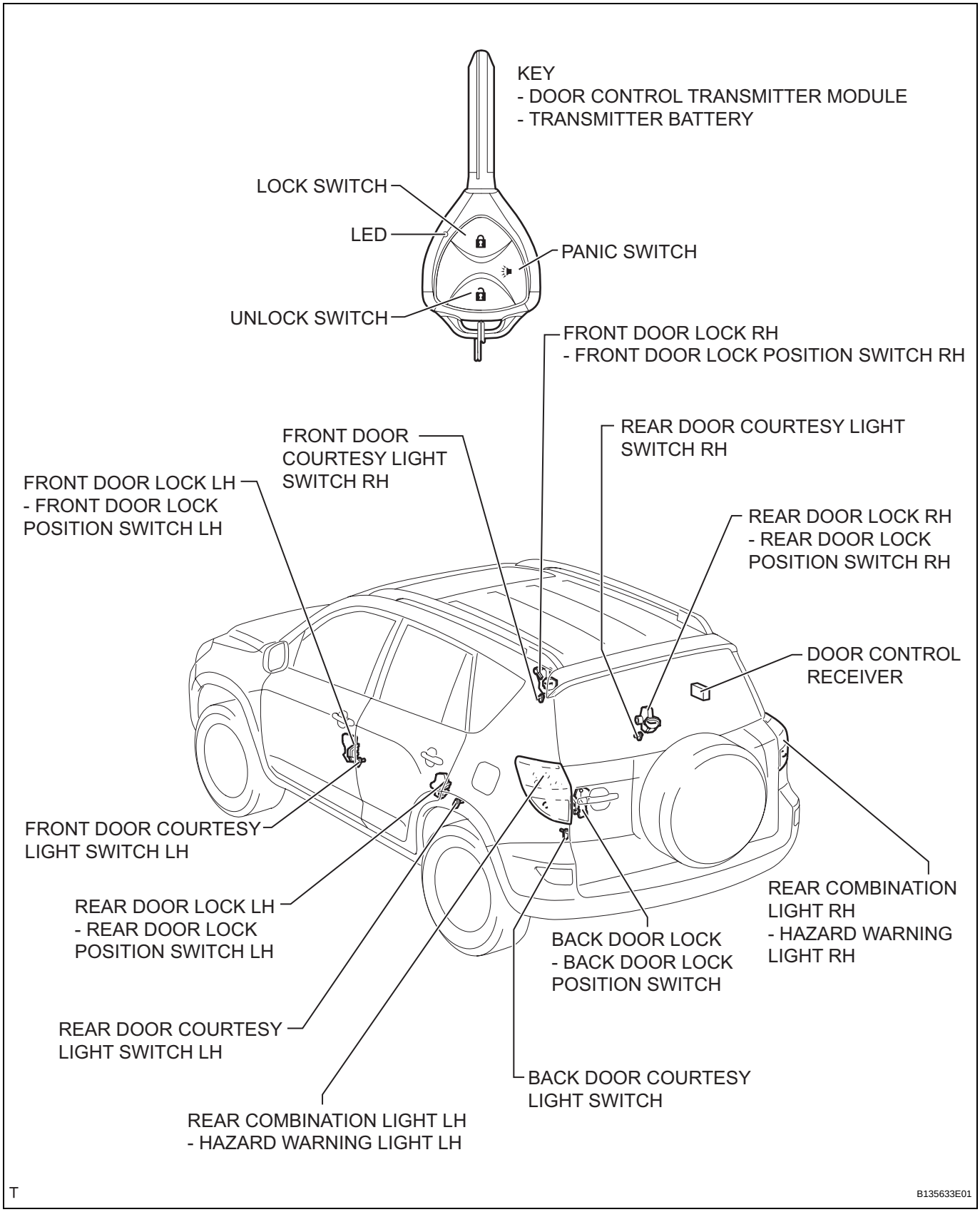
KEY
- DOOR CONTROL TRANSMITTER MODULE
- TRANSMITTER BATTERY
LOCK SWITCH
LED
PANIC SWITCH
UNLOCK SWITCH
FRONT DOOR LOCK RH
- FRONT DOOR LOCK POSITION SWITCH RH
FRONT DOOR COURTESY LIGHT SWITCH RH
REAR DOOR COURTESY LIGHT SWITCH RH
FRONT DOOR LOCK LH
- FRONT DOOR LOCK POSITION SWITCH LH
REAR DOOR LOCK RH
- REAR DOOR LOCK POSITION SWITCH RH
DOOR CONTROL RECEIVER
FRONT DOOR COURTESY LIGHT SWITCH LH
REAR DOOR LOCK LH
- REAR DOOR LOCK POSITION SWITCH LH
REAR COMBINATION LIGHT RH
- HAZARD WARNING LIGHT RH
BACK DOOR LOCK
- BACK DOOR LOCK POSITION SWITCH
REAR DOOR COURTESY LIGHT SWITCH LH
BACK DOOR COURTESY LIGHT SWITCH
REAR COMBINATION LIGHT LH
- HAZARD WARNING LIGHT LH
T
B135633E01

DL

DRIVE SHAFT SYSTEM

PROBLEM SYMPTOMS TABLE

(2005/11-2006/01)
HINT:
Use the table below to help determine the cause of the problem symptom. The potential causes of the symptoms are listed in order of probability in the "Suspected area" column of the table. Check each symptom by checking the suspected areas in the order they are listed. Replace parts as necessary.

Drive shaft system

Symptom	Suspected area	See page
Front wheel shimmy	1. Front drive shaft for 2WD (worn)	DS-7
	2. Front drive shaft for 4WD (worn)	DS-40
Rear wheel shimmy	1. Rear drive shaft (worn)	DS-69

PROBLEM SYMPTOMS TABLE

(2006/01-)
HINT:
Use the table below to help determine the cause of the problem symptom. The potential causes of the symptoms are listed in order of probability in the "Suspected area" column of the table. Check each symptom by checking the suspected areas in the order they are listed. Replace parts as necessary.

Drive shaft system

Symptom	Suspected Area	See page
Front wheel shimmy	1. Front drive shaft for 2WD (worn)	DS-8
	2. Front drive shaft for 4WD (worn)	DS-41
Rear wheel shimmy	1. Rear drive shaft (worn)	DS-69

COMPONENTS

(2006/01-)

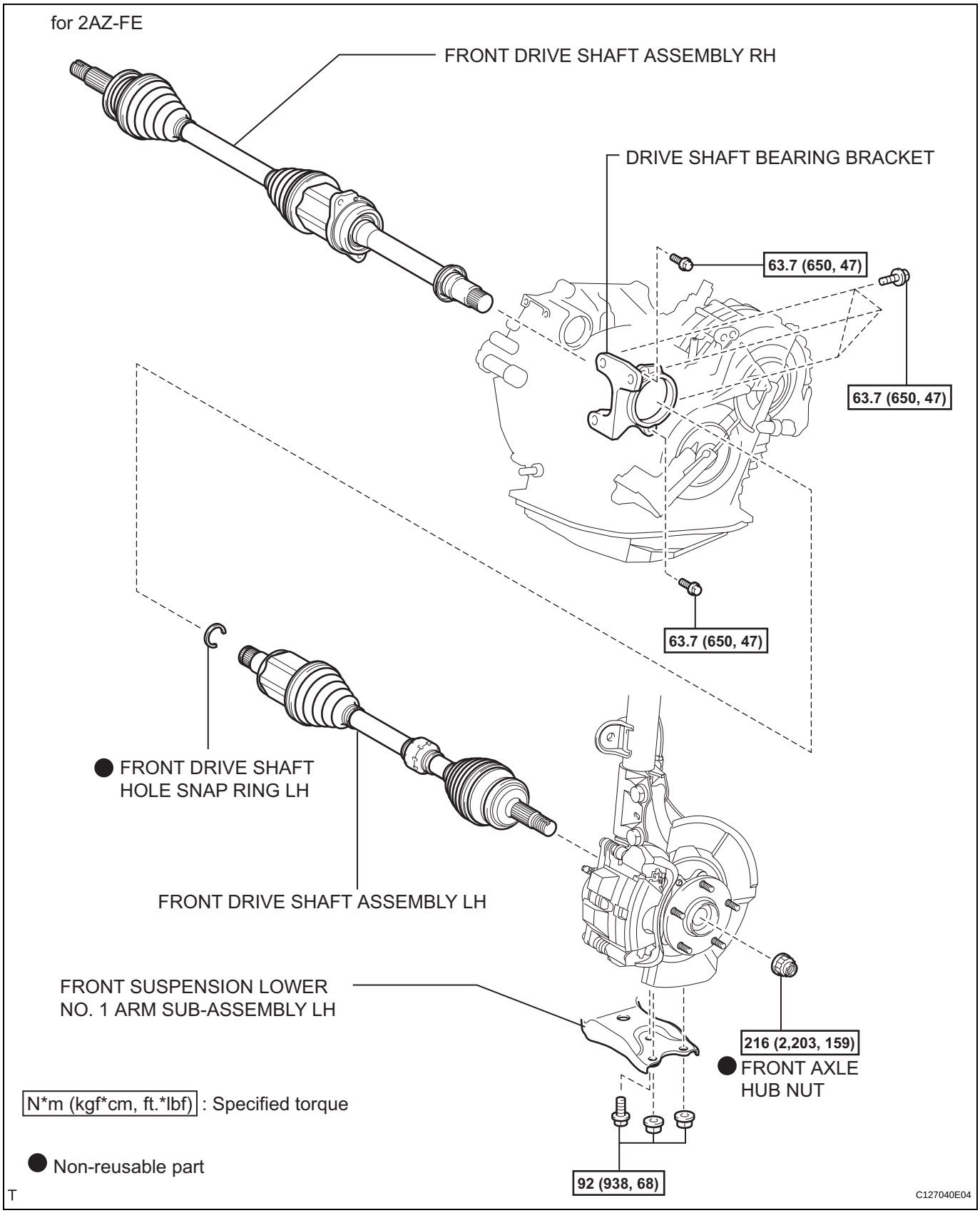

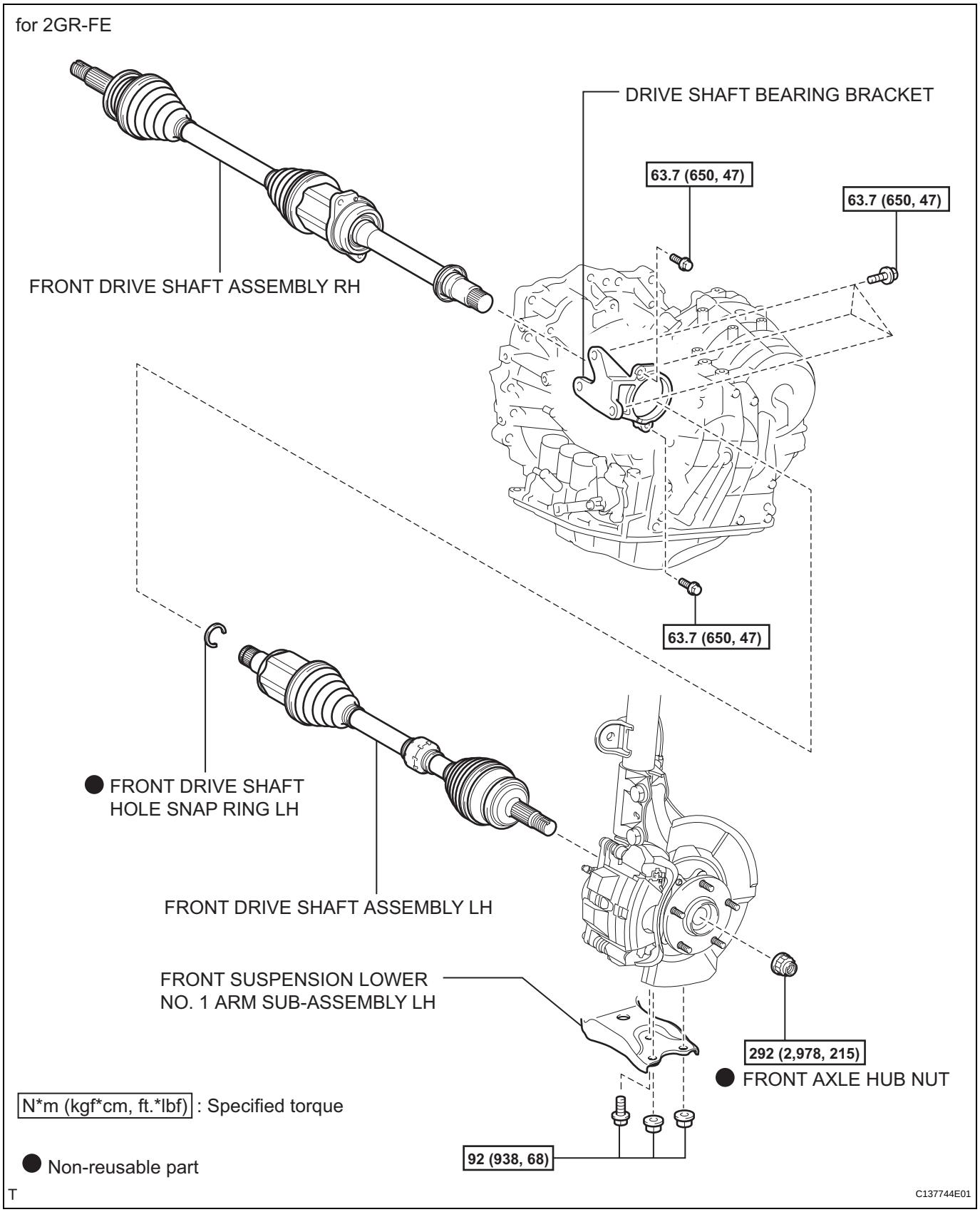
for 2GR-FE
DRIVE SHAFT BEARING BRACKET
63.7 (650, 47)
63.7 (650, 47)
FRONT DRIVE SHAFT ASSEMBLY RH
63.7 (650, 47)
● FRONT DRIVE SHAFT HOLE SNAP RING LH
FRONT DRIVE SHAFT ASSEMBLY LH
FRONT SUSPENSION LOWER NO. 1 ARM SUB-ASSEMBLY LH
292 (2,978, 215)
● FRONT AXLE HUB NUT
92 (938, 68)
N*m (kgf*cm, ft.*lbf) : Specified torque
● Non-reusable part
T
C137744E01

DS

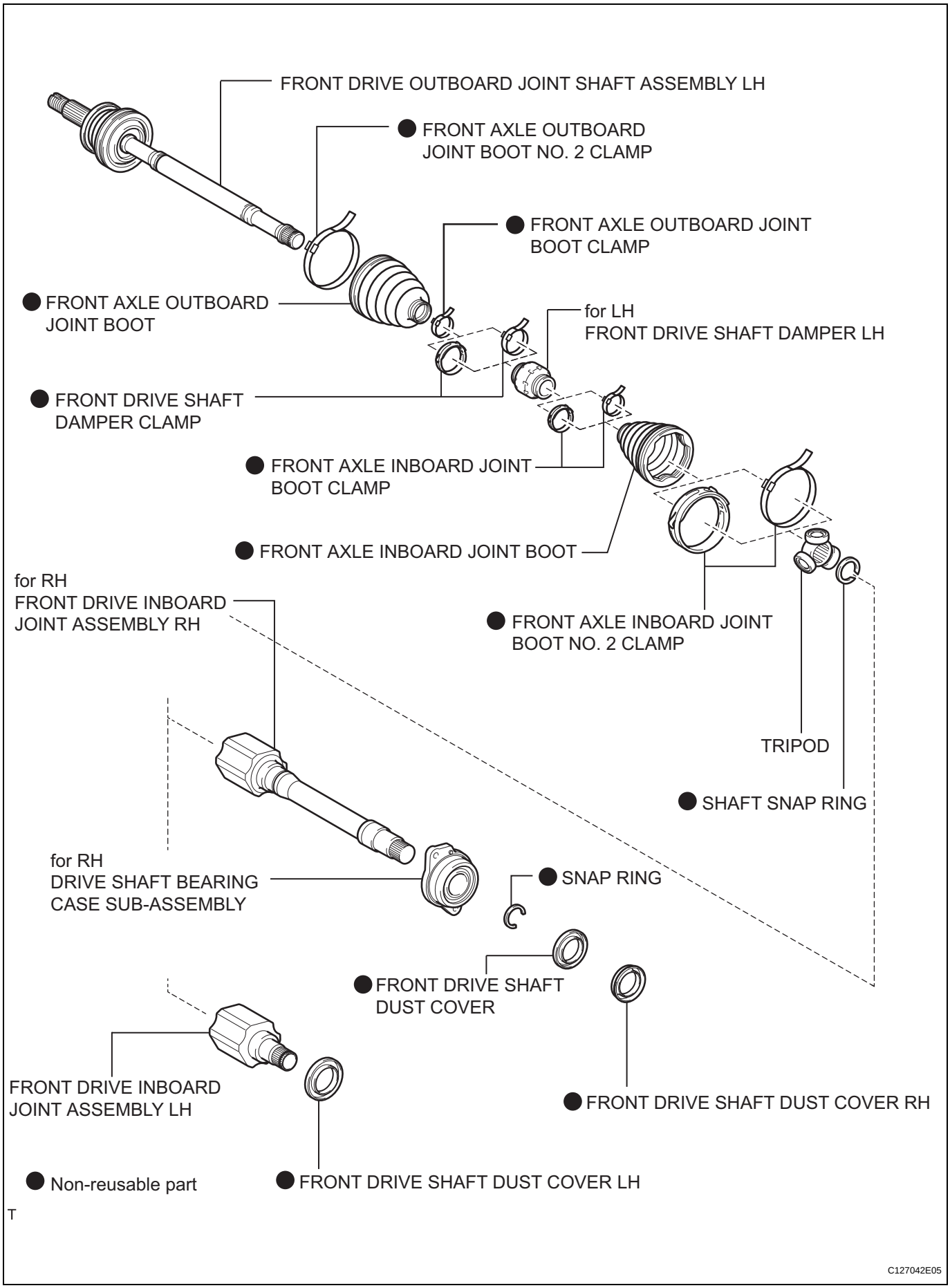
FRONT DRIVE OUTBOARD JOINT SHAFT ASSEMBLY LH
● FRONT AXLE OUTBOARD JOINT BOOT NO. 2 CLAMP
● FRONT AXLE OUTBOARD JOINT BOOT CLAMP
● FRONT AXLE OUTBOARD JOINT BOOT
for LH
FRONT DRIVE SHAFT DAMPER LH
● FRONT DRIVE SHAFT DAMPER CLAMP
● FRONT AXLE INBOARD JOINT BOOT CLAMP
● FRONT AXLE INBOARD JOINT BOOT
for RH
FRONT DRIVE INBOARD JOINT ASSEMBLY RH
● FRONT AXLE INBOARD JOINT BOOT NO. 2 CLAMP
TRIPOD
● SHAFT SNAP RING
for RH
DRIVE SHAFT BEARING CASE SUB-ASSEMBLY
● SNAP RING
● FRONT DRIVE SHAFT DUST COVER
FRONT DRIVE INBOARD JOINT ASSEMBLY LH
● FRONT DRIVE SHAFT DUST COVER RH
● Non-reusable part
● FRONT DRIVE SHAFT DUST COVER LH
C127042E05

REMOVAL

(2005/11-2006/01)

1. **REMOVE FRONT WHEEL**
2. **DRAIN AUTOMATIC TRANSAXLE FLUID**
   (a) Drain the automatic transaxle fluid for U140F (see page AX-147).
   (b) Drain the automatic transaxle fluid for U241E (see page AX-146).
3. **REMOVE FRONT AXLE HUB NUT (See page AH-6)**
4. **DISCONNECT FRONT SPEED SENSOR LH**
   (a) Disconnect the speed sensor (see page BC-191).
5. **DISCONNECT FRONT SPEED SENSOR RH**
   HINT:
   Use the same procedures described for the LH side.
6. **DISCONNECT FRONT DISC BRAKE CYLINDER ASSEMBLY LH (See page BR-40)**
7. **DISCONNECT FRONT DISC BRAKE CALIPER ASSEMBLY RH**
   HINT:
   Use the same procedures described for the LH side.
8. **REMOVE FRONT STABILIZER LINK ASSEMBLY LH (See page SP-30)**
9. **REMOVE FRONT STABILIZER LINK ASSEMBLY RH**
   HINT:
   Use the same procedures described for the LH side.
10. **DISCONNECT FRONT SUSPENSION LOWER NO. 1 ARM SUB-ASSEMBLY LH (See page AH-7)**
11. **DISCONNECT FRONT SUSPENSION LOWER NO. 1 ARM SUB-ASSEMBLY RH**
    HINT:
    Use the same procedures described for the LH side.
12. **DISCONNECT STEERING KNUCKLE WITH AXLE HUB LH**
    (a) Put matchmarks on the drive shaft and axle hub.
    NOTICE:
    Do not punch the marks.
    (b) Using a plastic-faced hammer, disconnect the steering knuckle with axle hub.
    NOTICE:
    Be careful not to damage the boot and speed sensor rotor.
    Do not excessively push out the drive shaft from the axle assembly.
13. **DISCONNECT STEERING KNUCKLE WITH AXLE HUB RH**
    HINT:
    Use the same procedures described for the LH side.

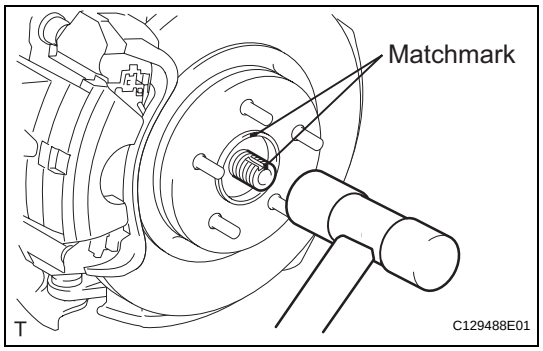

14. DISCONNECT TIE ROD END SUB-ASSEMBLY LH
(See page PS-42)

15. DISCONNECT TIE ROD END SUB-ASSEMBLY RH
HINT:
Use the same procedures described for the LH side.

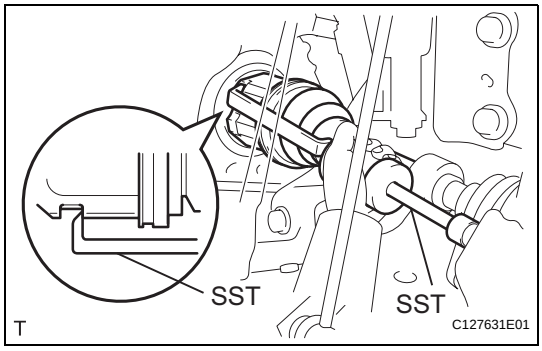

16. REMOVE FRONT DRIVE SHAFT ASSEMBLY LH
(a) Using SST, remove the front drive shaft.
SST 09520-01010, 09520-24010 (09520-32040)
NOTICE:
- **Be careful not to damage the transaxle case oil seal, inboard joint boot and drive shaft dust cover.**
- **Be careful not to drop the drive shaft.**

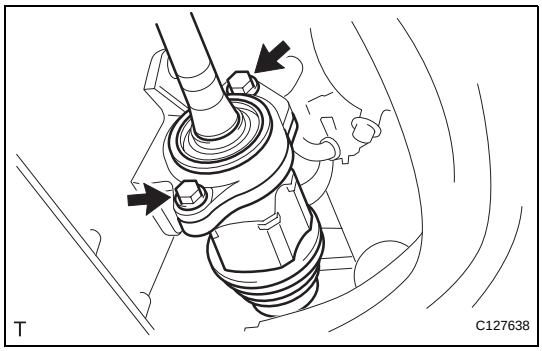

17. REMOVE FRONT DRIVE SHAFT ASSEMBLY RH
(a) Remove the 2 bolts and pull out the drive shaft together with the drive shaft bearing case.
(b) Remove the drive shaft from the transaxle.
NOTICE:
- **Be careful not to damage the inboard joint boot and drive shaft dust cover.**
- **Be careful not to drop the drive shaft.**

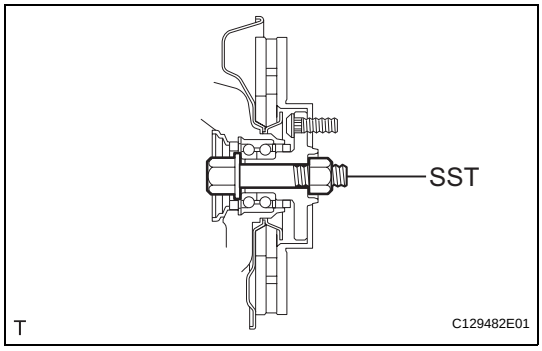

18. FIX FRONT AXLE ASSEMBLY
NOTICE:
The hub bearing could be damaged if it is subjected to the vehicle weight, such as when moving the vehicle with the drive shaft removed. Therefore, if it is absolutely necessary to place the vehicle weight on the hub bearing, first support it with SST.
SST 09608-16042 (09608-02021, 09608-02041)

DS

REMOVAL

(2006/01-)

1. **REMOVE FRONT WHEEL**
2. **DRAIN AUTOMATIC TRANSAXLE FLUID**
   (a) Drain the automatic transaxle fluid for U140F (see page AX-147).
   (b) Drain the automatic transaxle fluid for U241E (see page AX-146).
   (c) Drain the automatic transaxle fluid for U151E (see page AX-172).
3. **REMOVE FRONT AXLE HUB NUT (See page AH-8)**
4. **DISCONNECT FRONT SPEED SENSOR LH**
   (a) Disconnect the speed sensor (see page BC-191).
5. **REMOVE FRONT SPEED SENSOR RH**
   HINT:
   Use the same procedures described for the LH side.
6. **DISCONNECT FRONT DISC BRAKE CYLINDER ASSEMBLY LH (See page BR-40)**
7. **DISCONNECT FRONT DISC BRAKE CYLINDER ASSEMBLY RH**
   HINT:
   Use the same procedures described for the LH side.
8. **REMOVE FRONT STABILIZER LINK ASSEMBLY LH (See page SP-30)**
9. **REMOVE FRONT STABILIZER LINK ASSEMBLY RH**
   HINT:
   Use the same procedures described for the LH side.
10. **DISCONNECT FRONT SUSPENSION LOWER NO. 1 ARM SUB-ASSEMBLY LH (See page SP-21)**
11. **DISCONNECT FRONT SUSPENSION LOWER NO. 1 ARM SUB-ASSEMBLY RH**
    HINT:
    Use the same procedures described for the LH side.
12. **DISCONNECT STEERING KNUCKLE WITH AXLE HUB LH**
    (a) Put matchmarks on the drive shaft and axle hub.
    NOTICE:
    Do not punch the marks.
    (b) Using a plastic-faced hammer, disconnect the steering knuckle with axle hub.
    NOTICE:
    Be careful not to damage the boot and speed sensor rotor.
    Do not excessively push out the drive shaft from the axle assembly.

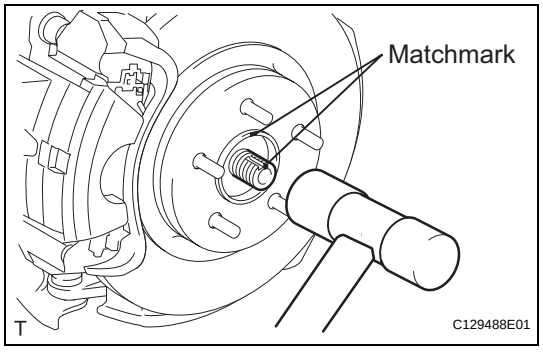

13. DISCONNECT STEERING KNUCKLE WITH AXLE HUB RH

HINT:

Use the same procedures described for the LH side.

14. DISCONNECT TIE ROD END SUB-ASSEMBLY LH (See page PS-42)

15. DISCONNECT TIE ROD END SUB-ASSEMBLY RH

HINT:

Use the same procedures described for the LH side.

16. REMOVE FRONT DRIVE SHAFT ASSEMBLY LH

(a) Using SST, remove the front drive shaft.

SST 09520-01010, 09520-24010 (09520-32040)

NOTICE:

- **Be careful not to damage the transaxle case oil seal, inboard joint boot and drive shaft dust cover.**
- **Be careful not to drop the drive shaft.**

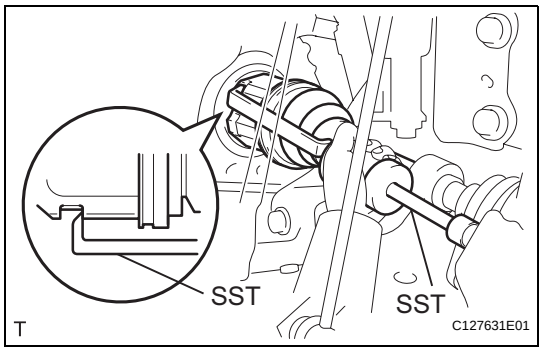

17. REMOVE FRONT DRIVE SHAFT ASSEMBLY RH

(a) Remove the 2 bolts and pull out the drive shaft together with the drive shaft bearing case.

(b) Remove the drive shaft from the transaxle.

NOTICE:

- **Be careful not to damage the transaxle case oil seal, inboard joint boot and drive shaft dust cover.**
- **Be careful not to drop the drive shaft.**

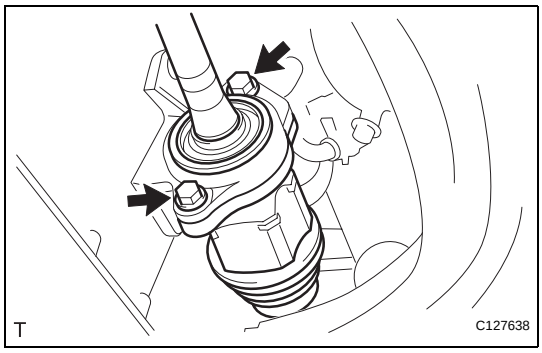

18. FIX FRONT AXLE ASSEMBLY

NOTICE:

The hub bearing could be damaged if it is subjected to the vehicle weight, such as when moving the vehicle with the drive shaft removed. Therefore, if it is absolutely necessary to place the vehicle weight on the hub bearing, first support it with SST.

SST 09608-16042 (09608-02021, 09608-02041)

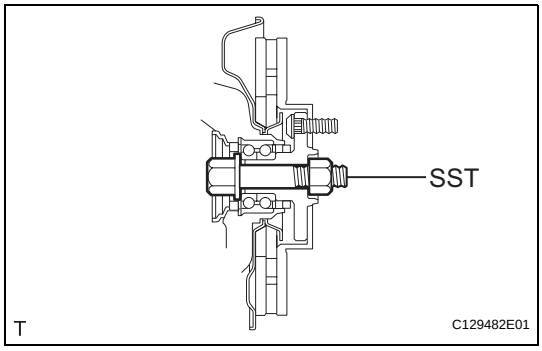

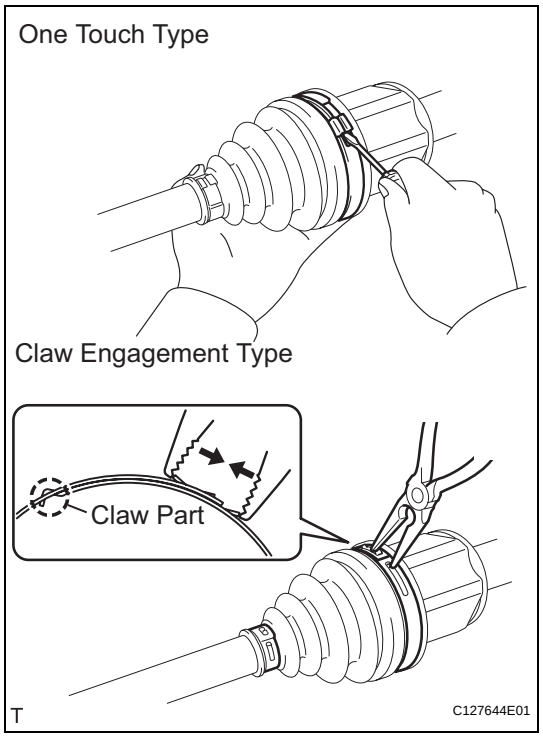

DISASSEMBLY

(2005/11-2006/01)

1. REMOVE FRONT AXLE INBOARD JOINT BOOT NO. 2 CLAMP LH

(a) One touch type:
  (1) Using a screwdriver, remove the inboard joint boot clamp, as shown in the illustration.

(b) Claw engagement type:
  (1) Using needle-nose pliers, remove the inboard joint boot clamp, as shown in the illustration.

2. REMOVE FRONT AXLE INBOARD JOINT BOOT NO. 2 CLAMP RH

HINT:

Use the same procedures described for the LH side.

DS

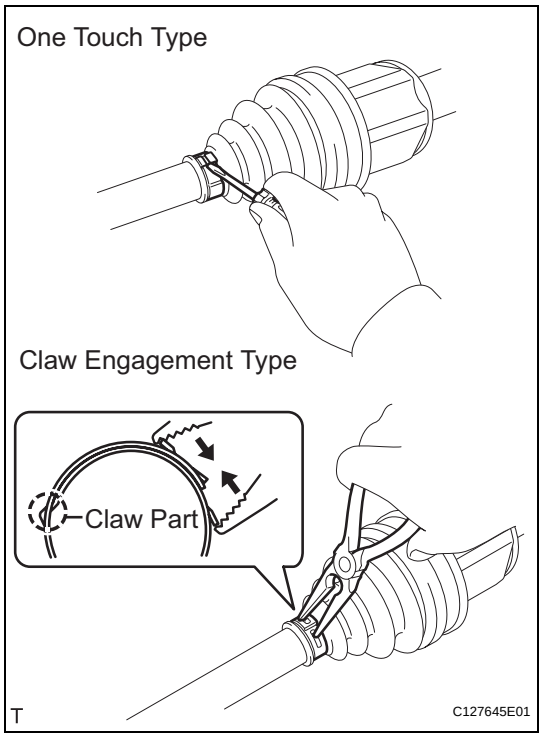

3. REMOVE FRONT AXLE INBOARD JOINT BOOT CLAMP LH

(a) One touch type:
  (1) Using a screwdriver, remove the inboard joint boot clamp, as shown in the illustration.

(b) Claw engagement type:
  (1) Using needle-nose pliers, remove the inboard joint boot clamp, as shown in the illustration.

4. REMOVE FRONT AXLE INBOARD JOINT BOOT CLAMP RH

HINT:

Use the same procedures described for the LH side.

5. REMOVE FRONT AXLE INBOARD JOINT BOOT

(a) Remove the boot from the inboard joint.

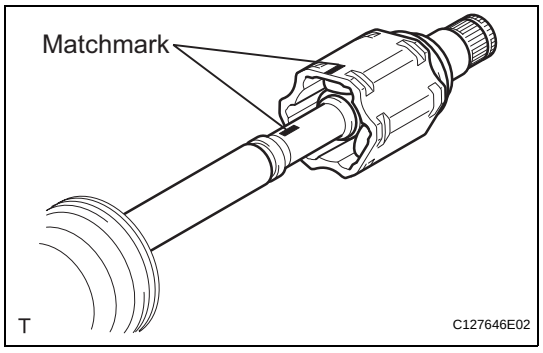

6. REMOVE FRONT DRIVE INBOARD JOINT ASSEMBLY LH

(a) Remove any old grease from the inboard joint.

(b) Put matchmarks on the inboard joint and outboard joint shaft.

NOTICE:

Do not punch the marks.

(c) Remove the inboard joint from the outboard joint shaft.

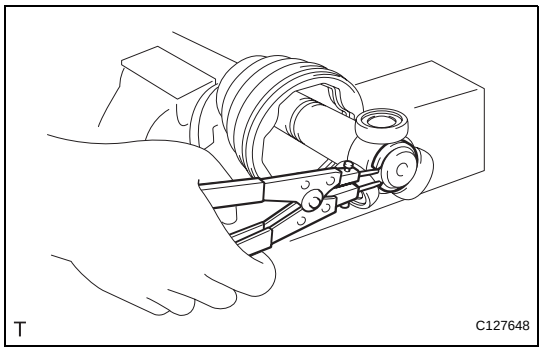

(d) Using a snap ring expander, remove the shaft snap ring.

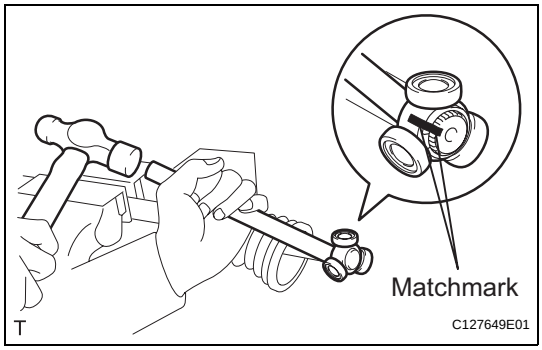

(e) Put matchmarks on the outboard joint shaft and tripod joint.
NOTICE:
Do not punch the marks.
(f) Using a brass bar and hammer, tap out the tripod joint from the outboard joint shaft.
NOTICE:
Do not tap the rollers.
(g) Remove the inboard joint boot.

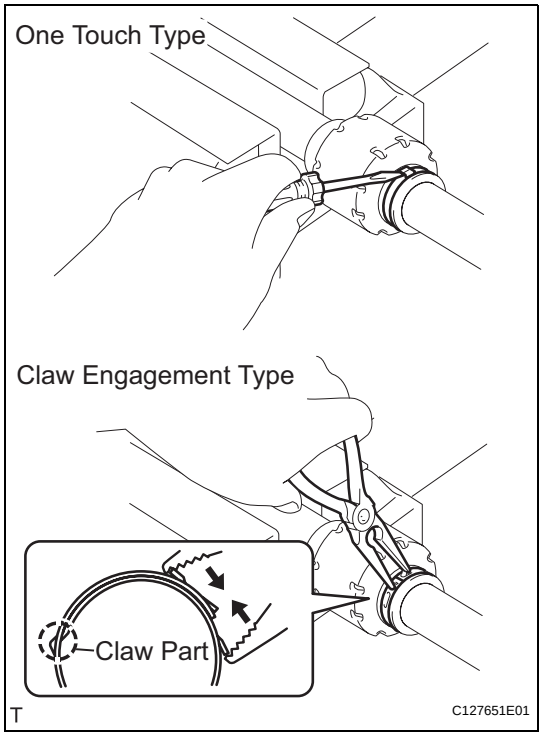

7. REMOVE FRONT DRIVE SHAFT DAMPER CLAMP LH
(a) One touch type:
(1) Using a screwdriver, remove the drive shaft damper clamp, as shown in the illustration.
(b) Claw engagement type:
(1) Using needle-nose pliers, remove the drive shaft damper clamp, as shown in the illustration.

8. REMOVE FRONT DRIVE SHAFT DAMPER LH
(a) Remove the front drive shaft damper from the outboard joint shaft.

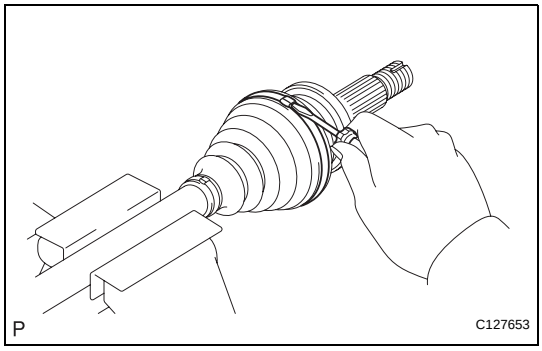

9. REMOVE FRONT AXLE OUTBOARD JOINT BOOT NO. 2 CLAMP LH
(a) Using a screwdriver, remove the outboard joint boot clamp, as shown in the illustration.

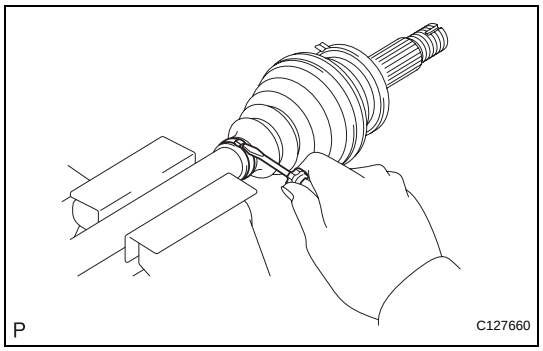

10. REMOVE FRONT AXLE OUTBOARD JOINT BOOT CLAMP LH

(a) Using a screwdriver, remove the outboard joint boot clamp, as shown in the illustration.

11. REMOVE FRONT AXLE OUTBOARD JOINT BOOT

(a) Remove the outboard joint boot from the outboard joint shaft.

(b) Remove any old grease from the outboard joint.

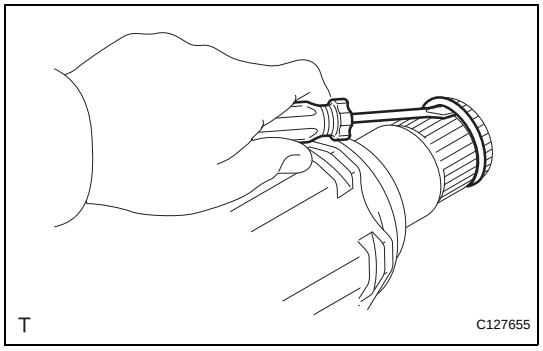

12. REMOVE FRONT DRIVE SHAFT HOLE SNAP RING LH

(a) Using a screwdriver, remove the hole snap ring.

DS

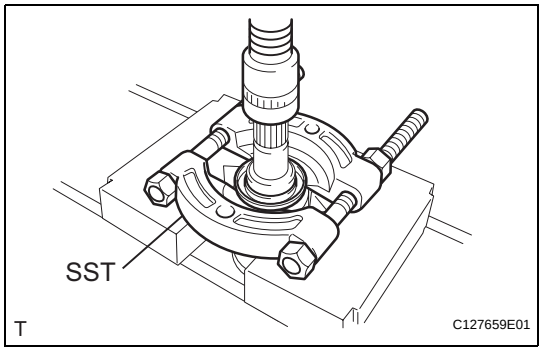

13. REMOVE FRONT DRIVE SHAFT DUST COVER LH

(a) Using SST and a press, press out the shaft dust cover.

SST 09950-00020

NOTICE:

Be careful not to drop the inboard joint

14. REMOVE FRONT DRIVE SHAFT DUST COVER RH

HINT:

Use the same procedures described for the LH side.

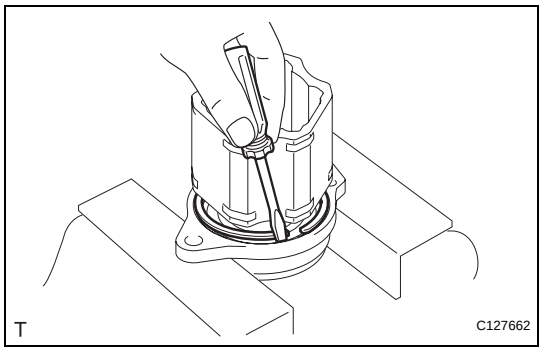

15. REMOVE DRIVE SHAFT BEARING CASE

(a) Using a screwdriver, remove the bearing case snap ring.

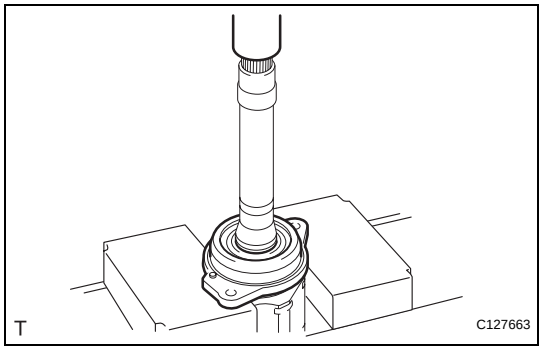

(b) Using a press, press out the drive shaft bearing case.

HINT:

Be careful not to drop the inboard joint

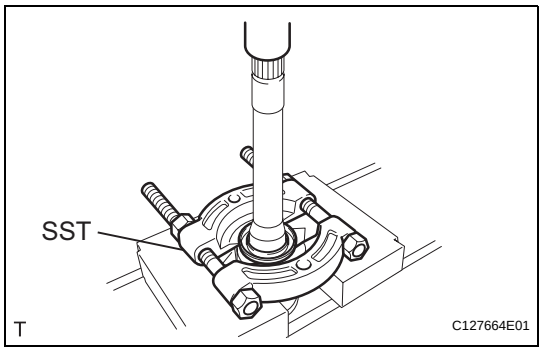

16. REMOVE FRONT DRIVE SHAFT DUST COVER

(a) Using SST and a press, press out the drive shaft dust cover.
SST 09950-00020
HINT:
Be careful not to drop the inboard joint

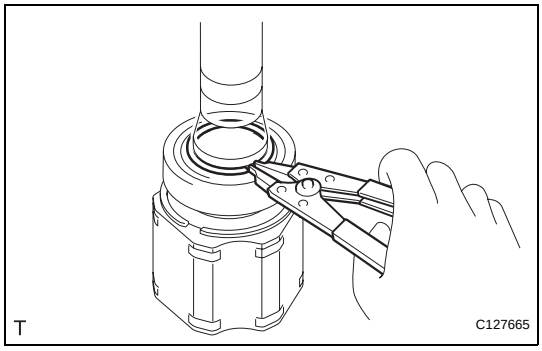

17. REMOVE FRONT DRIVE SHAFT BEARING

(a) Using a snap ring expander, remove the snap ring.

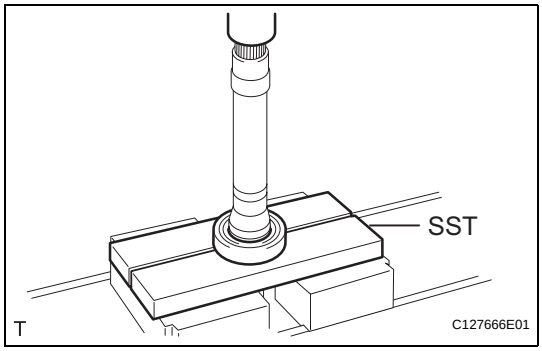

(b) Using SST and a press, press out the drive shaft bearing.
SST 09527-10011

(c) Remove the snap ring.

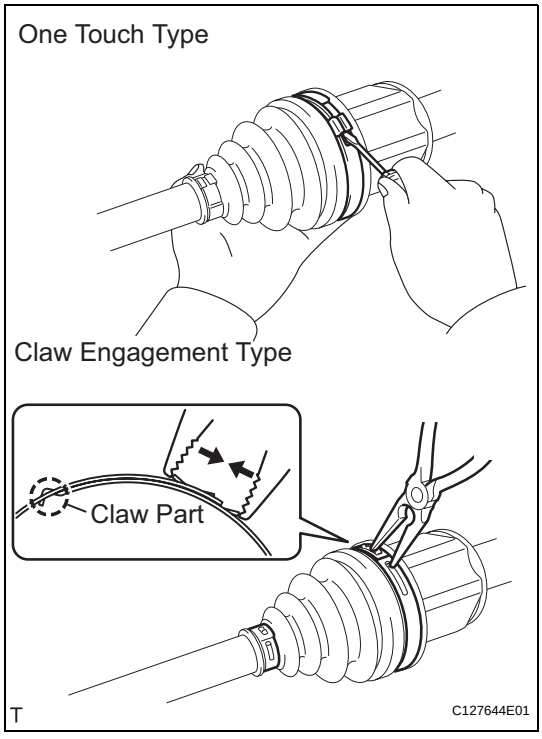

DISASSEMBLY

(2006/01-)

1. REMOVE FRONT AXLE INBOARD JOINT BOOT NO. 2 CLAMP

(a) One touch type:
Using a screwdriver, remove the inboard joint boot clamp, as shown in the illustration.

(b) Claw engagement type:
Using needle-nose pliers, remove the inboard joint boot clamp, as shown in the illustration.

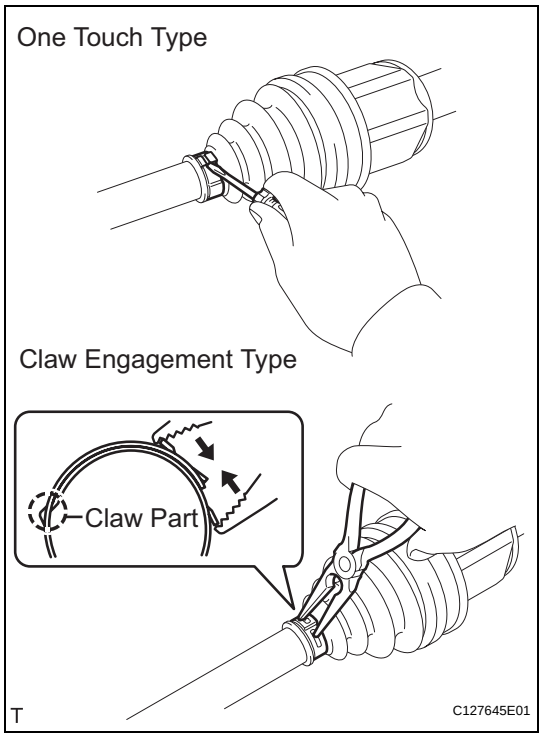

2. REMOVE FRONT AXLE INBOARD JOINT BOOT CLAMP

(a) One touch type:
Using a screwdriver, remove the inboard joint boot clamp, as shown in the illustration.

(b) Claw engagement type:
Using needle-nose pliers, remove the inboard joint boot clamp, as shown in the illustration.

3. REMOVE FRONT AXLE INBOARD JOINT BOOT

(a) Remove the boot from the inboard joint.

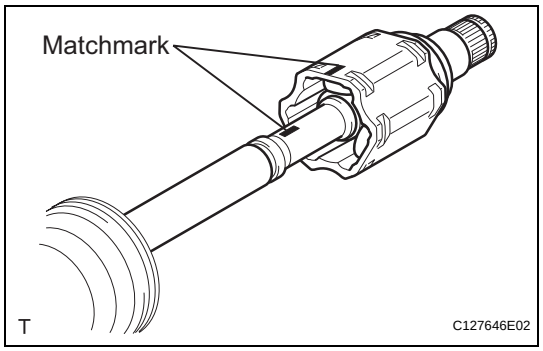

4. REMOVE FRONT DRIVE INBOARD JOINT ASSEMBLY LH

(a) Remove any old grease from the inboard joint.

(b) Put matchmarks on the inboard joint and outboard joint shaft.
NOTICE:
Do not punch the marks.

(c) Remove the inboard joint from the outboard joint shaft.

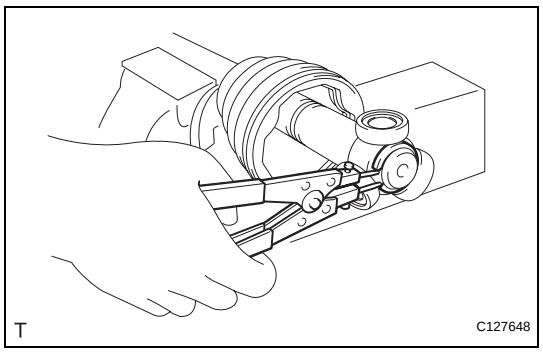

(d) Using a snap ring expander, remove the shaft snap ring.

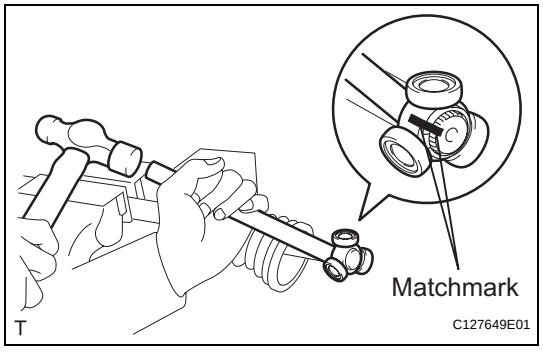

(e) Put matchmarks on the outboard joint shaft and tripod joint.
NOTICE:
Do not punch the marks.

(f) Using a brass bar and hammer, tap out the tripod joint from the outboard joint shaft.
NOTICE:
Do not tap the rollers.

(g) Remove the inboard joint boot.

5. REMOVE FRONT DRIVE INBOARD JOINT ASSEMBLY RH

HINT:

Use the same procedures described for the LH side.

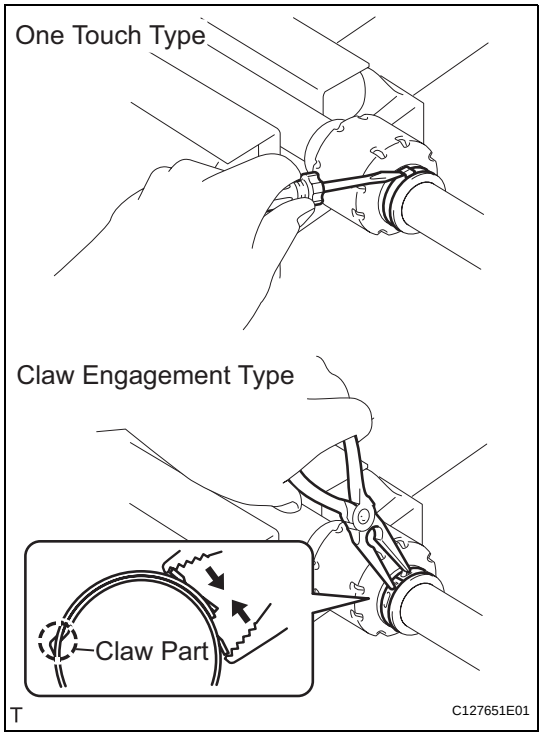

6. REMOVE FRONT DRIVE SHAFT DAMPER CLAMP LH

(a) One touch type:
Using a screwdriver, remove the drive shaft damper clamp, as shown in the illustration.

(b) Claw engagement type:
Using needle-nose pliers, remove the drive shaft damper clamp, as shown in the illustration.

7. REMOVE FRONT DRIVE SHAFT DAMPER LH

(a) Remove the front drive shaft damper from the outboard joint shaft.

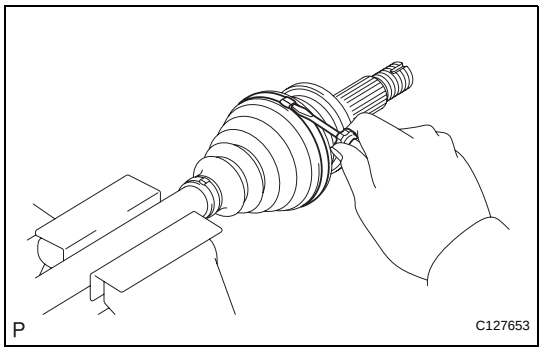

8. REMOVE FRONT AXLE OUTBOARD JOINT BOOT NO. 2 CLAMP

(a) Using a screwdriver, remove the outboard joint boot clamp, as shown in the illustration.

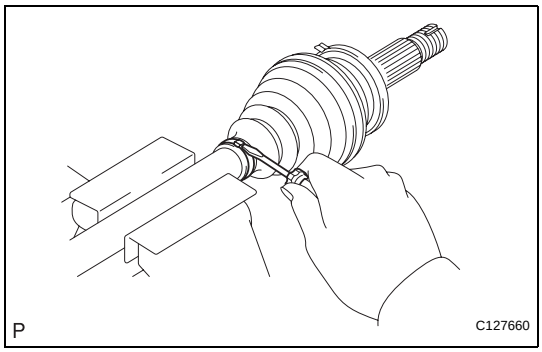

9. REMOVE FRONT AXLE OUTBOARD JOINT BOOT CLAMP

(a) Using a screwdriver, remove the outboard joint boot clamp, as shown in the illustration.

10. REMOVE FRONT AXLE OUTBOARD JOINT BOOT

(a) Remove the outboard joint boot from the outboard joint shaft.

(b) Remove any old grease from the outboard joint.

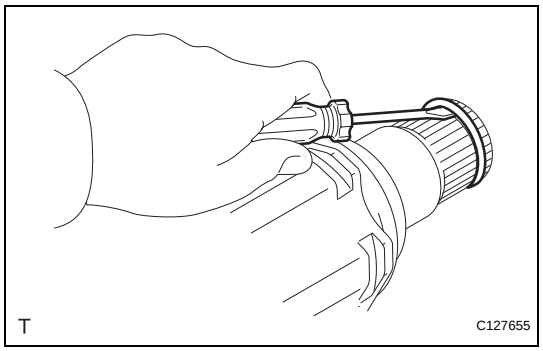

11. REMOVE FRONT DRIVE SHAFT HOLE SNAP RING LH

(a) Using a screwdriver, remove the hole snap ring.

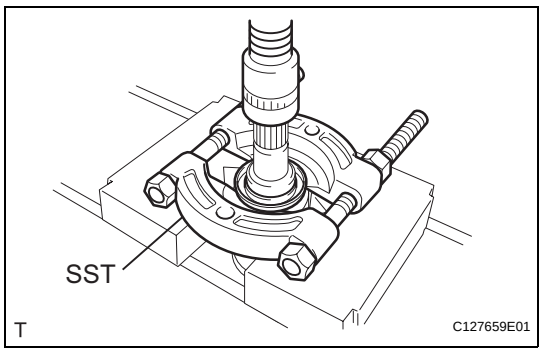

12. REMOVE FRONT DRIVE SHAFT DUST COVER LH

(a) Using SST and a press, press out the shaft dust cover.
SST 09950-00020
NOTICE:
Be careful not to drop the inboard joint.

13. REMOVE FRONT DRIVE SHAFT DUST COVER RH

HINT:
Use the same procedures described for the LH side.

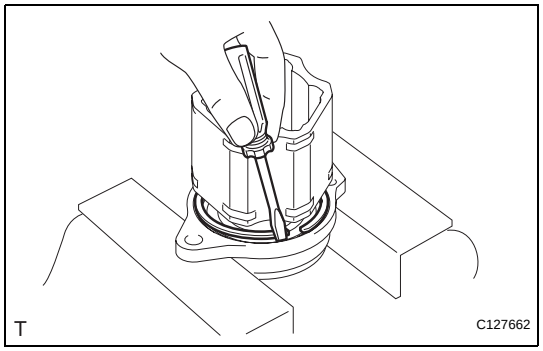

14. REMOVE DRIVE SHAFT BEARING CASE (for RH)

(a) Using a screwdriver, remove the bearing case snap ring.

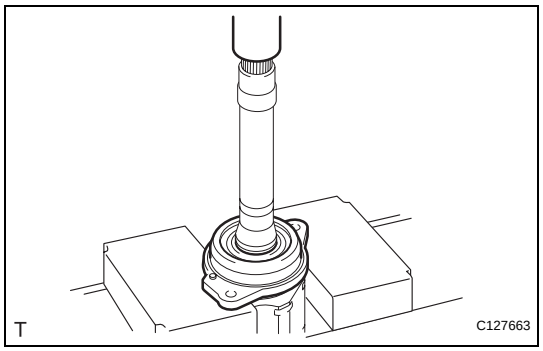

(b) Using a press, press out the drive shaft bearing case.
HINT:
Be careful not to drop the inboard joint.

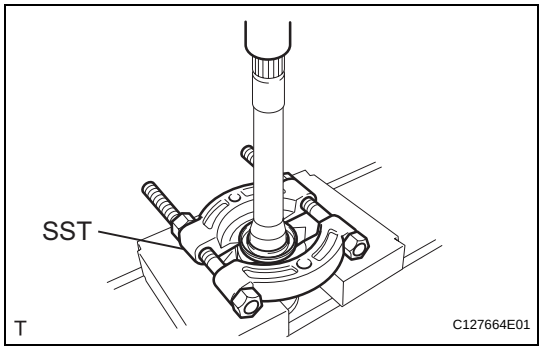

15. REMOVE FRONT DRIVE SHAFT DUST COVER (for RH)

(a) Using SST and a press, press out the drive shaft dust cover.
SST 09950-00020
NOTICE:
Be careful not to drop the inboard joint.

DS

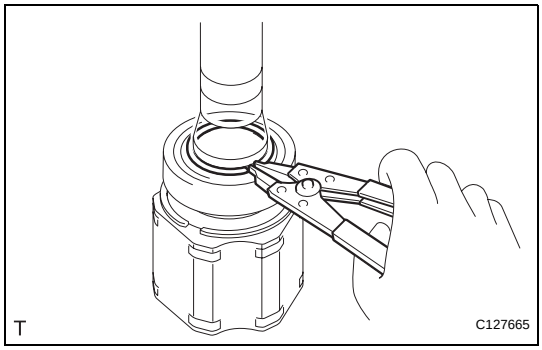

16. REMOVE FRONT DRIVE SHAFT BEARING

(a) Using a snap ring expander, remove the snap ring.

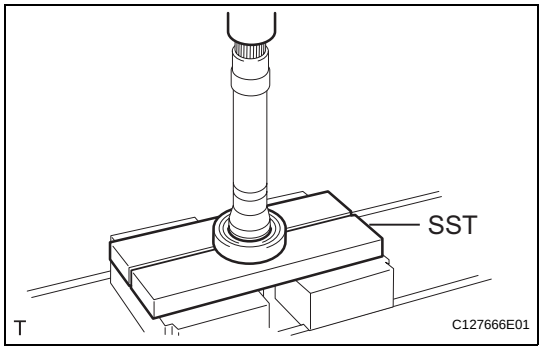

(b) Using SST and a press, press out the drive shaft bearing.
SST 09527-10011

(c) Remove the bearing case snap ring.

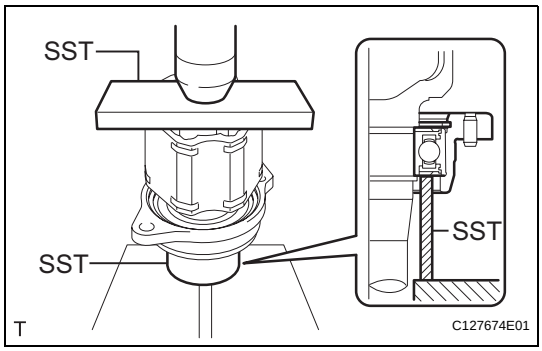

REASSEMBLY

(2005/11-2006/01)

1. INSTALL DRIVE SHAFT BEARING CASE SUB-ASSEMBLY

(a) Using SST and a press, press in the drive shaft bearing case to the inboard joint RH.
SST 09527-10011, 09710-04081
NOTICE:
The bearing should be installed completely.

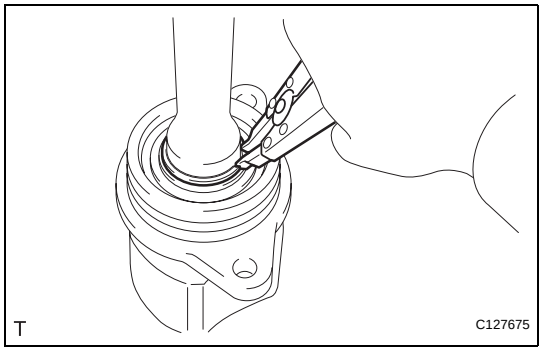

(b) Using a snap ring expander, install a new drive shaft hole snap ring.

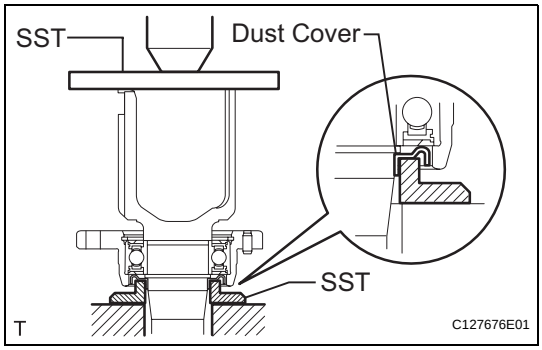

2. INSTALL FRONT DRIVE SHAFT DUST COVER

(a) Using SST and a press, press in a new drive shaft dust cover.
SST 09726-40010, 09527-10011
NOTICE:
Be careful not to damage the dust cover.

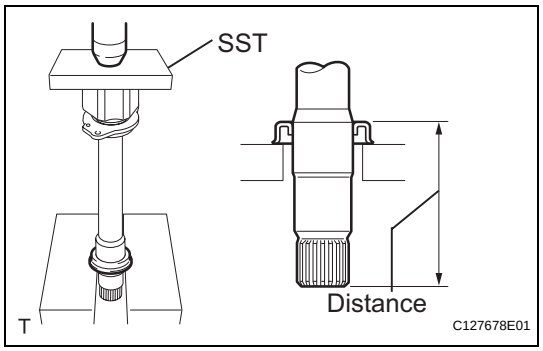

3. INSTALL FRONT DRIVE SHAFT DUST COVER RH

(a) Using SST and a press, press in a new drive shaft dust cover until the distance from the tip of the center drive shaft to the drive shaft dust cover reaches the specification, as shown in the illustration.

SST 09527-10011

Standard distance:

91.0 to 92.0 mm (3.583 to 3.622 in.)

NOTICE:

- **The dust cover should be installed completely.**
- **Be careful not to damage the dust cover.**

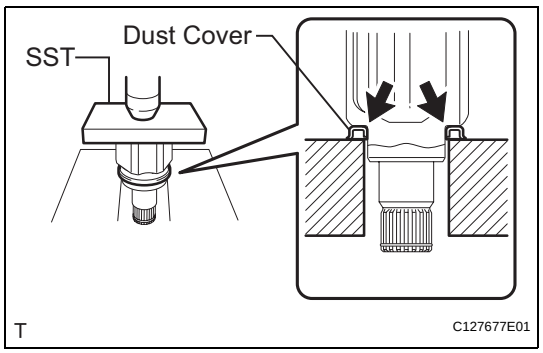

4. INSTALL FRONT DRIVE SHAFT DUST COVER LH

(a) Using SST and a press, press in a new drive shaft dust cover.

SST 09527-10011

NOTICE:

- **The dust cover should be installed completely.**
- **Be careful not to damage the dust cover.**

5. INSTALL FRONT DRIVE SHAFT LH HOLE SNAP RING

(a) Install a new hole snap ring.

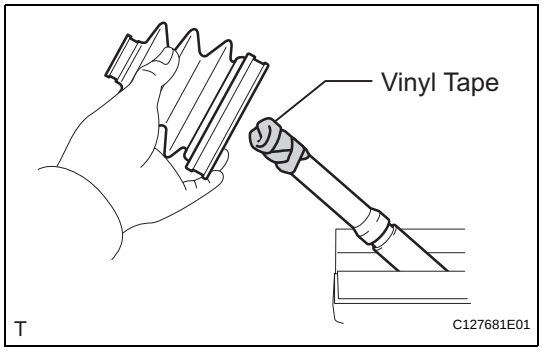

6. INSTALL FRONT AXLE OUTBOARD JOINT BOOT

HINT:

Before installing the boots, wrap the spline of the drive shaft with vinyl tape to prevent the boots from being damaged.

(a) Install new parts to the outboard joint shaft in the following order.
  (1) No. 2 outboard joint boot clamp
  (2) Outboard joint boot
  (3) Outboard joint boot clamp

(b) Pack the outboard joint shaft and boot with grease from the boot kit.

Standard grease capacity:

190 to 200 g (6.7 to 7.1 oz.)

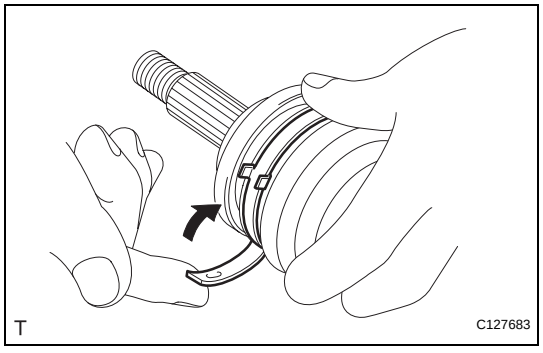

7. INSTALL FRONT AXLE OUTBOARD JOINT BOOT NO. 2 CLAMP LH

CAUTION:

Wear protective gloves while performing the operation and be careful to avoid cutting your hands or other body parts.

(a) Install a new boot clamp to the outboard joint boot and temporarily bend the lever.

NOTICE:

- **When temporarily bending the lever, make sure not to deform the band and lever.**
- **Set the clamp correctly in the guide groove and align it with the interior of the vehicle as much as possible.**

DS

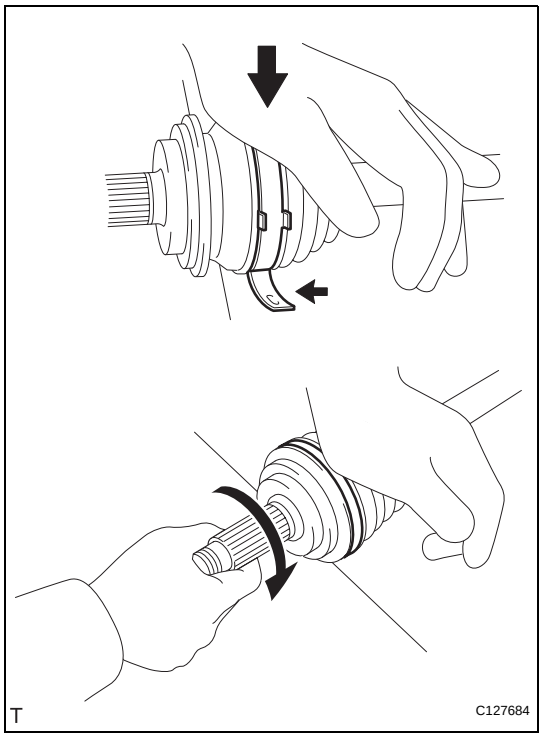

(b) With the joint on the working surface, use your body weight to press down on the joint with one hand. Then, roll the joint forward, as shown in the illustration, and press the lever in until a "click" sound is heard.
NOTICE:
- **Do not damage the deflector.**
- **Make sure the joint is in full contact with the joint surface at all times.**

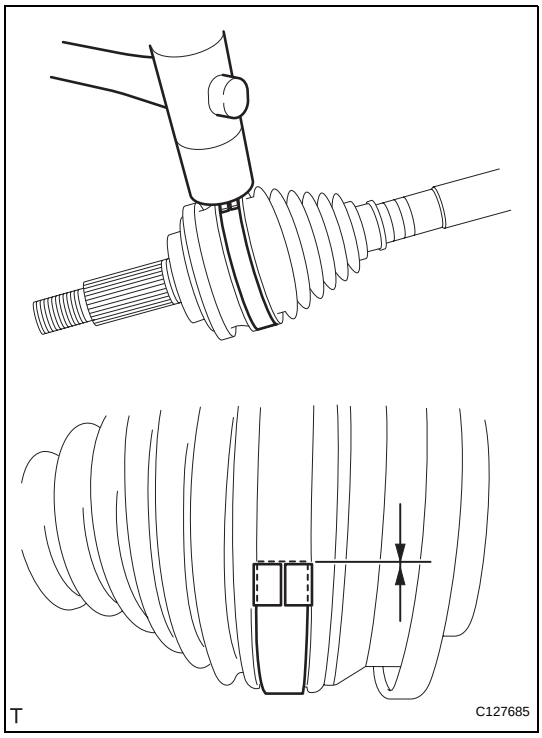

(c) Using a plastic-faced hammer, fix the buckle into place by tapping it. At the same time, use the plastic-faced hammer to adjust the lift of the lever so that the gaps between the buckle flange and lever end flange become even.
NOTICE:
Do not damage the boot.

8. INSTALL FRONT AXLE OUTBOARD JOINT BOOT NO. 2 CLAMP RH
HINT:
Use the same procedures described for the LH side.

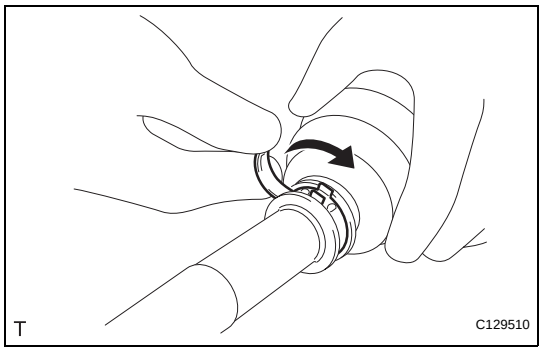

9. INSTALL FRONT AXLE OUTBOARD JOINT BOOT CLAMP LH
CAUTION:
Wear protective gloves while performing the operation and be careful to avoid cutting your hands or other body parts.

(a) Install a new boot clamp to the outboard joint boot and temporarily bend the lever.
NOTICE:
When temporarily bending the lever, make sure not to deform the band and lever.

(b) Using water pump pliers, temporarily lock the boot clamp by clamping it down until a "click" sound is heard.

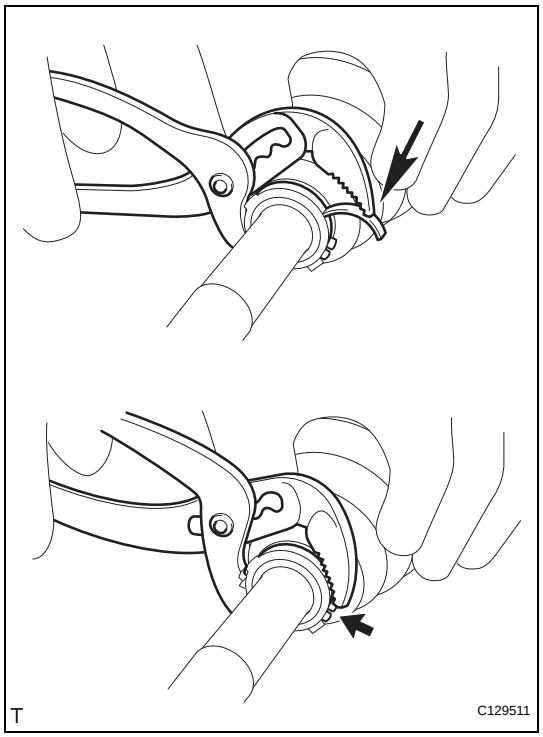

(c) Using a plastic-faced hammer, fix the buckle into place by tapping it. At the same time, use the plastic-faced hammer to adjust the lift of the lever so that the gaps between the buckle flange and lever end flange become even.
NOTICE:
Do not strike the drive shaft forcefully with the plastic-faced hammer.

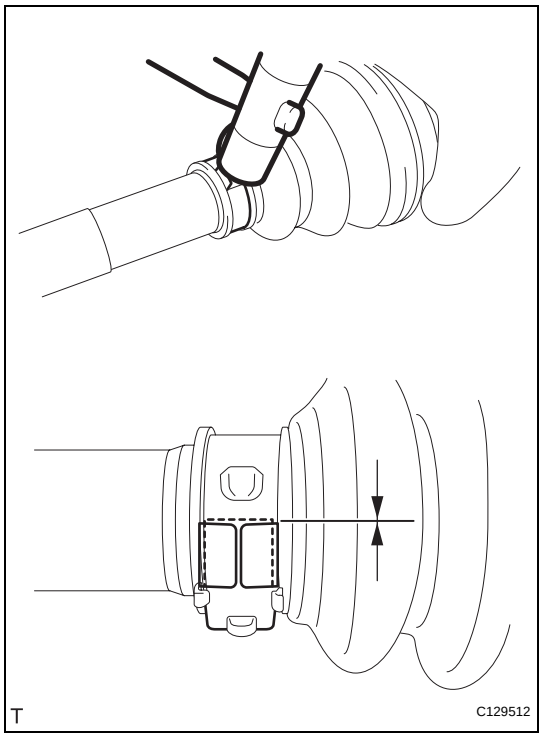

10. INSTALL FRONT AXLE OUTBOARD JOINT BOOT RH CLAMP

HINT:
Use the same procedures described for the LH side.

DS

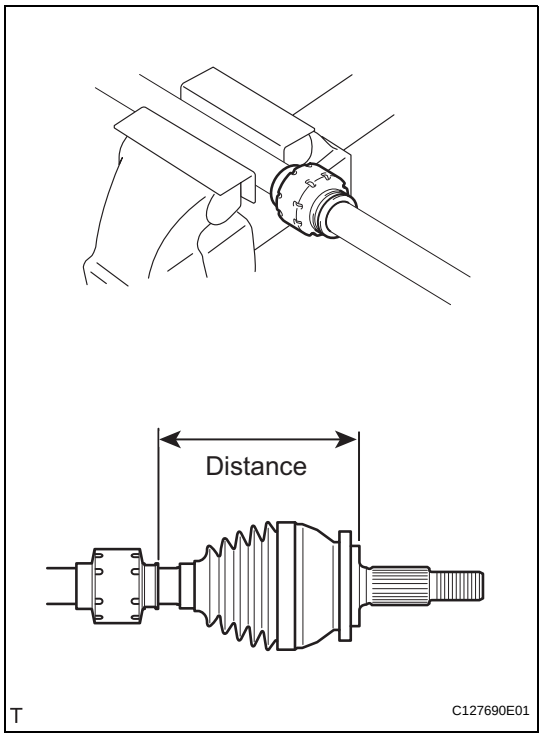

11. INSTALL FRONT DRIVE SHAFT DAMPER LH

HINT:

Install the damper clamp to outboard joint side.

(a) Install a new drive shaft damper clamp and the drive shaft damper to the drive shaft.

(b) Make sure that the damper is on the shaft groove.

(c) Set the distance, as described below.

Standard distance:

161 to 165 mm (6.339 to 6.496 in.)

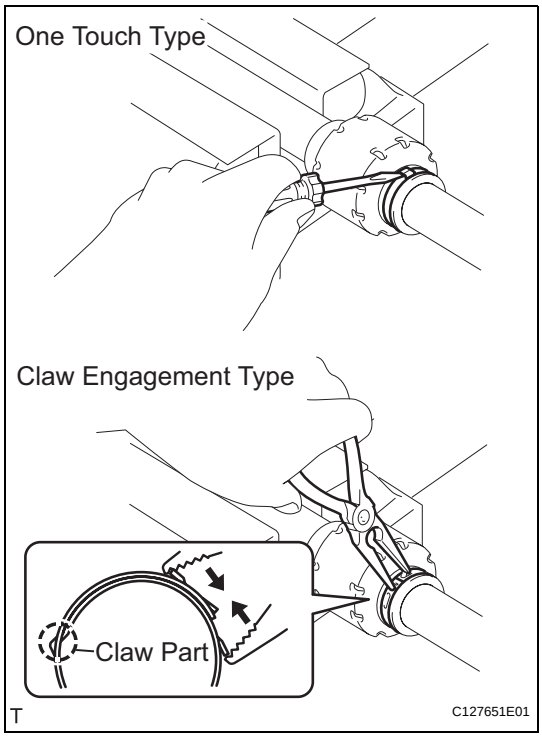

12. INSTALL FRONT DRIVE SHAFT DAMPER CLAMP LH

(a) Hold the front drive shaft lightly in a soft vise.

(b) Install the drive shaft damper clamp to the damper.

NOTICE:

Be sure to install the clamp in the correct position.

(c) One touch type:

(1) Using a screwdriver, install the drive shaft damper clamp, as shown in the illustration.

(d) Claw engagement type:

(1) Using needle-nose pliers, install the drive shaft damper clamp, as shown in the illustration.

13. INSTALL FRONT DRIVE INBOARD JOINT ASSEMBLY LH

(a) Wrap the spline of the outboard joint shaft with vinyl tape to prevent the boots from being damaged.

(b) Install new parts to the outboard joint shaft in the following order.

(1) Inboard joint boot clamp

(2) No. 2 inboard joint boot clamp

(3) Inboard joint boot

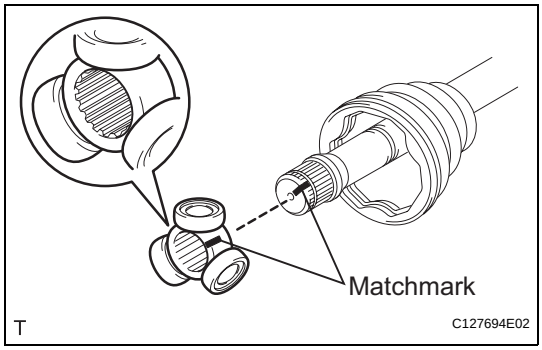

(c) Place the beveled side of the tripod axial spline toward the outboard joint.

(d) Align the matchmarks placed before removal.

(e) Using a brass bar and hammer, tap the tripod joint onto the drive shaft.

NOTICE:

- **Do not tap the rollers.**
- **Be sure to install the tripod joint in the correct direction.**

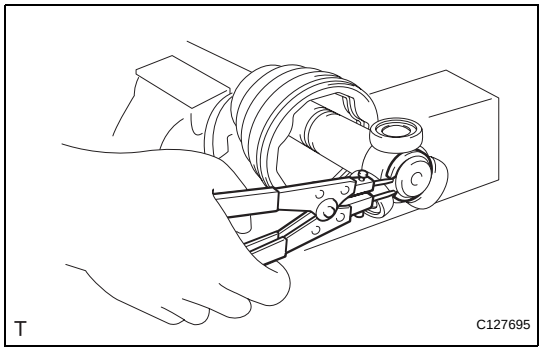

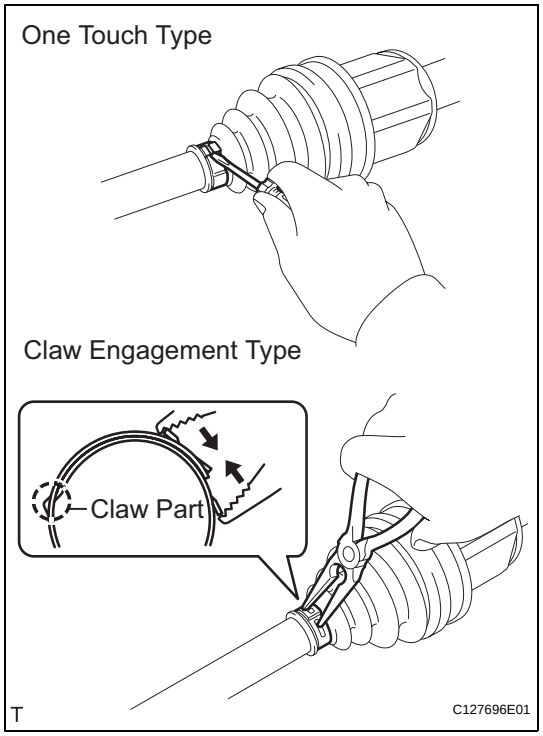

(f) Pack the inboard joint shaft and boot with grease from the boot kit.
Standard grease capacity:
175 to 185 g (6.2 to 6.5 oz.)

(g) Using a snap ring expander, install a new shaft snap ring.

(h) Align the matchmarks, and install the inboard joint to the outboard joint shaft.

14. INSTALL FRONT DRIVE INBOARD JOINT ASSEMBLY RH

HINT:
Use the same procedures described for the LH side.

15. INSTALL FRONT AXLE INBOARD JOINT BOOT

(a) Install the inboard joint boot to the inboard joint.

16. INSTALL FRONT AXLE INBOARD JOINT BOOT CLAMP LH

(a) One touch type:
(1) Using a screwdriver, install the inboard joint boot clamp, as shown in the illustration.
NOTICE:
Be careful not to damage the boot.

(b) Claw engagement type:
(1) Using needle-nose pliers, install the inboard joint boot clamp, as shown in the illustration.
NOTICE:
Be careful not to damage the boot.

17. INSTALL FRONT AXLE INBOARD JOINT BOOT CLAMP RH

HINT:
Use the same procedures described for the LH side.

DS

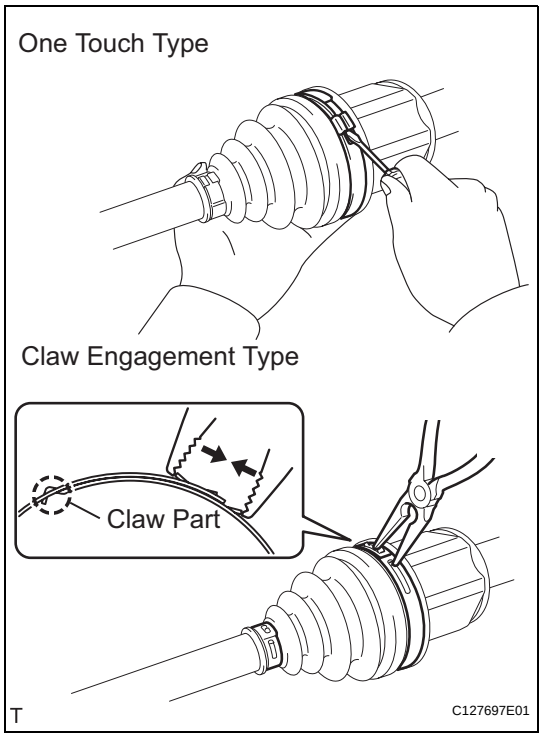

18. INSTALL FRONT AXLE INBOARD JOINT BOOT NO. 2 CLAMP LH

(a) One touch type:

(1) Using a screwdriver, install the No. 2 inboard joint boot clamp, as shown in the illustration.

NOTICE:

Be careful not to damage the boot.

(b) Claw engagement type:

(1) Using needle-nose pliers, install the No. 2 inboard joint boot clamp, as shown in the illustration.

NOTICE:

Be careful not to damage the boot.

19. INSTALL FRONT AXLE INBOARD JOINT BOOT NO. 2 CLAMP RH

HINT:

Use the same procedures described for the LH side.

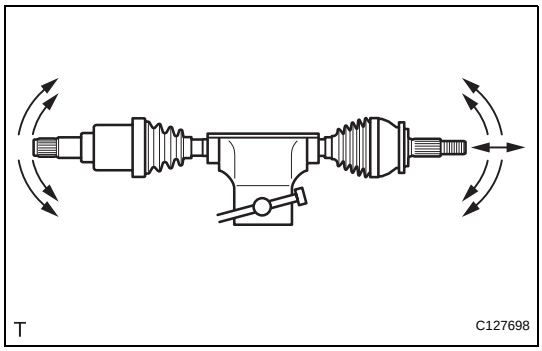

20. INSPECT FRONT DRIVE SHAFT

(a) Check that there is no severe play in the radial direction of the outboard joint.

(b) Check that the inboard joint slides smoothly in the thrust direction.

(c) Check that there is no severe play in the radial direction of the inboard joint.

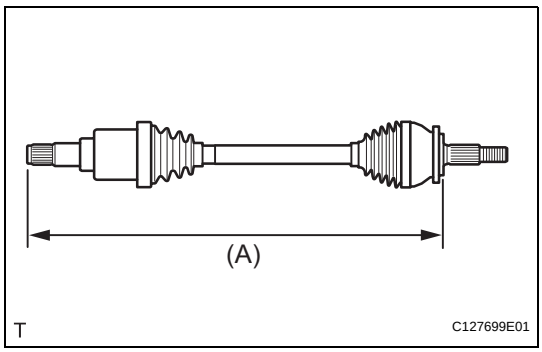

(d) Check the boots for damage.

NOTICE:

Keep the drive shaft assembly level during inspection.

HINT:

For dimension (A), refer to the following values.

Reference value:

585.2 mm (23.039 in.) for LH side

902 mm (35.512 in.) for RH side

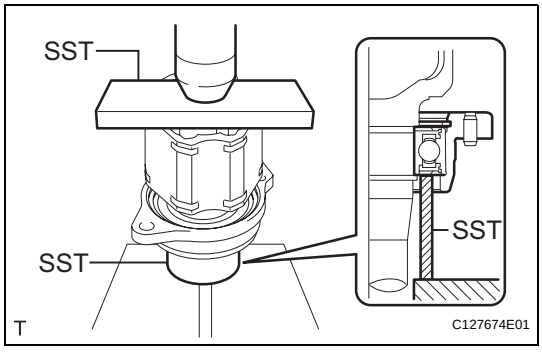

REASSEMBLY

(2006/01-)

1. INSTALL DRIVE SHAFT BEARING CASE SUB-ASSEMBLY (for RH)

(a) Install the bearing snap ring.

(b) Using SST and a press, press in the drive shaft bearing case to the inboard joint RH.

SST 09527-10011, 09710-04081

NOTICE:

The bearing should be installed completely.

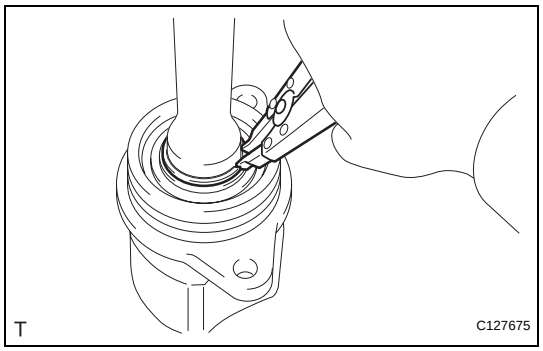

(c) Using a snap ring expander, install a new snap ring.

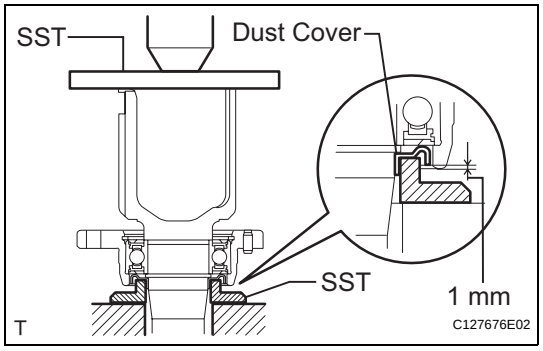

2. INSTALL FRONT DRIVE SHAFT DUST COVER (for RH)

(a) Using SST and a press, press in a new drive shaft dust cover.

SST 09726-40010, 09527-10011

Standard dust cover depth::

1 mm (0.04 in.)

NOTICE:

Be careful not to damage the dust cover.

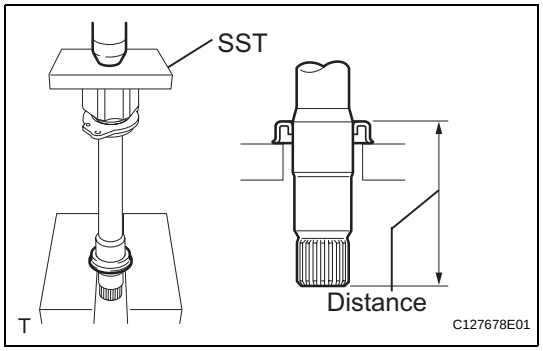

3. INSTALL FRONT DRIVE SHAFT DUST COVER RH

(a) Using SST and a press, press in a new drive shaft dust cover until the distance from the tip of the center drive shaft to the drive shaft dust cover reaches the specification, as shown in the illustration.

SST 09527-10011

Standard distance

Item	Distance
2AZ-FE	91.0 to 92.0 mm (3.583 to 3.622 in.)
2GR-FE	110 to 111 mm (4.330 to 4.370 in.)

NOTICE:

Be careful not to damage the dust cover.

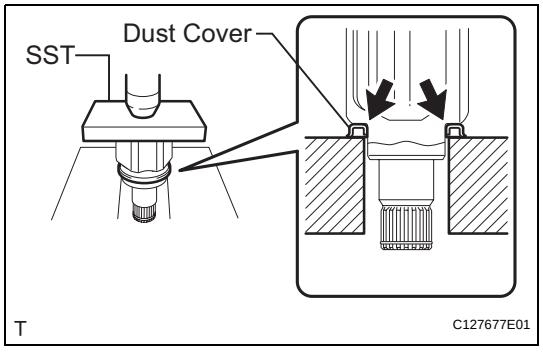

4. INSTALL FRONT DRIVE SHAFT DUST COVER LH

(a) Using SST and a press, press in a new drive shaft dust cover.

SST 09527-10011

NOTICE:

- **The dust cover should be installed so that the drive shaft contacts the dust cover at the location indicated by the arrows in the illustration.**
- **Be careful not to damage the dust cover.**

5. INSTALL FRONT DRIVE SHAFT HOLE SNAP RING LH

(a) Install a new hole snap ring.

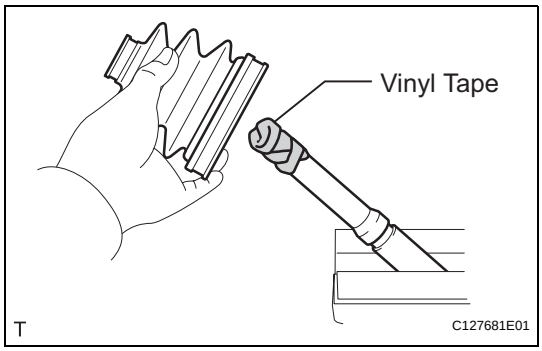

6. INSTALL FRONT AXLE OUTBOARD JOINT BOOT

HINT:

Before installing the boots, wrap the spline of the drive shaft with vinyl tape to prevent the boots from being damaged.

(a) Install new parts to the outboard joint shaft in the following order.
   (1) Outboard joint boot No. 2 clamp
   (2) Outboard joint boot
   (3) Outboard joint boot clamp

(b) Pack the outboard joint shaft and boot with grease from the boot kit.

Standard grease capacity

Item	Grease capacity
2AZ-FE	190 to 200 g (6.7 to 7.1 oz.)
2GR-FE	205 to 215 g (7.2 to 7.6 oz.)

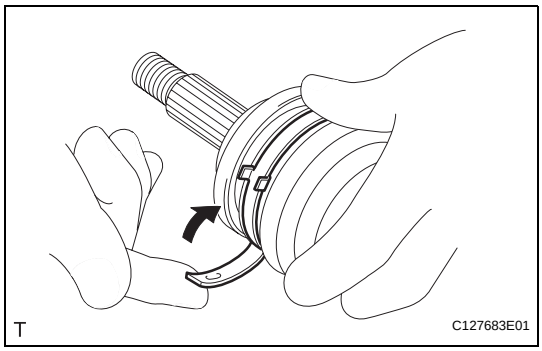

7. INSTALL FRONT AXLE OUTBOARD JOINT BOOT NO. 2 CLAMP

CAUTION:

Wear protective gloves while performing the operation and be careful to avoid cutting your hands or other body parts.

(a) Install a new boot clamp to the outboard joint boot and temporarily bend the lever.

NOTICE:

- **When temporarily bending the lever, make sure not to deform the band and lever.**
- **Set the clamp correctly in the guide groove and align it with the interior of the vehicle as much as possible.**

(b) With the joint on the working surface, use your body weight to press down on the joint with one hand. Then, roll the joint forward, as shown in the illustration, and press the lever in until a "click" sound is heard.

NOTICE:

- **Do not damage the deflector.**
- **Make sure the joint is in full contact with the joint surface at all times.**

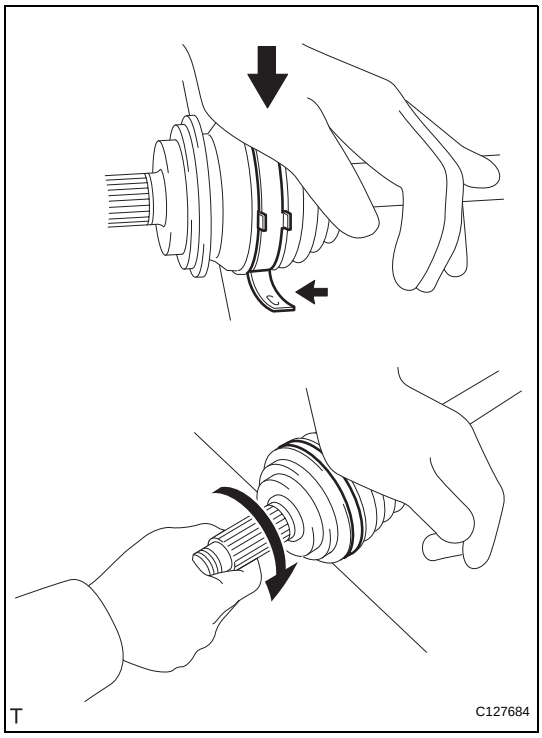

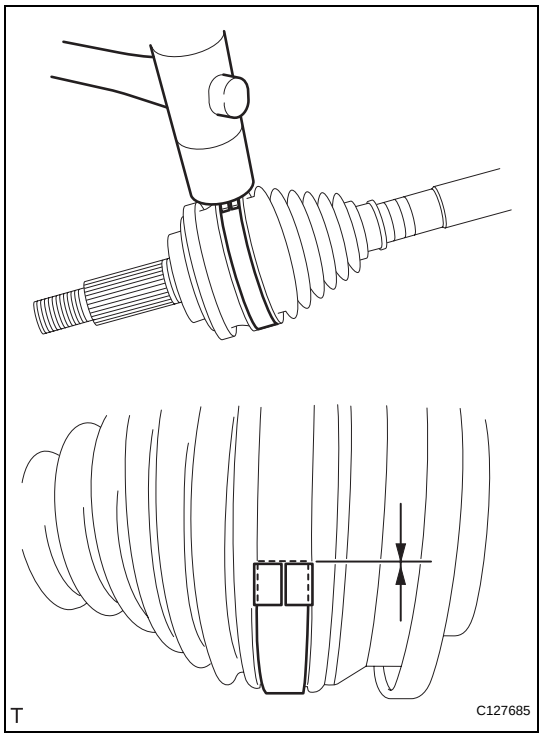

(c) Using a plastic-faced hammer, fix the buckle into place by tapping it. At the same time, use the plastic-faced hammer to adjust the lift of the lever so that the gaps between the buckle flange and lever end flange become even.
NOTICE:
Do not damage the boot.

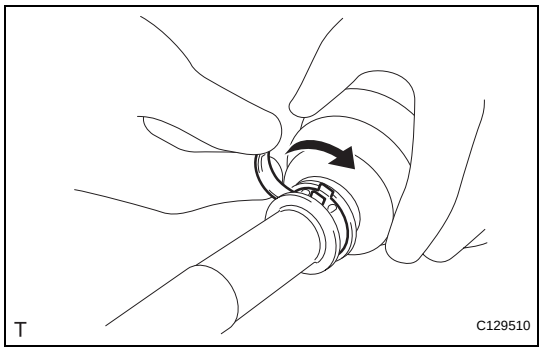

8. INSTALL FRONT AXLE OUTBOARD JOINT BOOT CLAMP
CAUTION:
Wear protective gloves while performing the operation and be careful to avoid cutting your hands or other body parts.
(a) Install a new boot clamp to the outboard joint boot and temporarily bend the lever.
NOTICE:
When temporarily bending the lever, make sure not to deform the band and lever.

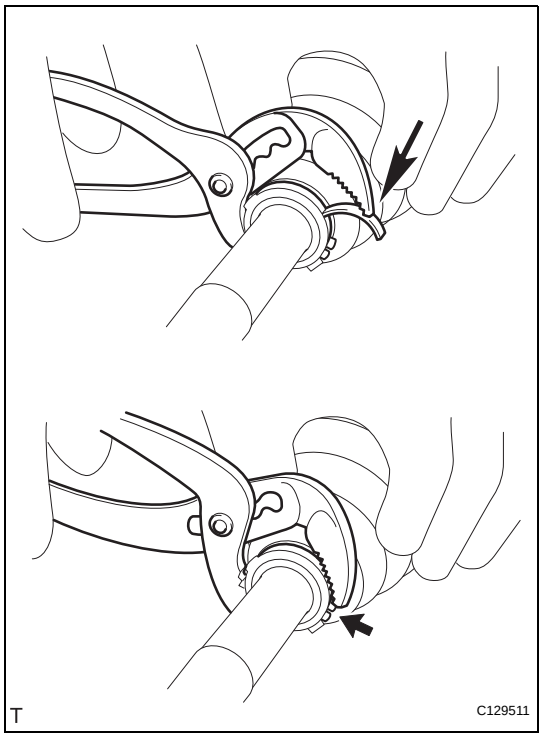

(b) Using water pump pliers, temporarily lock the boot clamp by clamping it down until a "click" sound is heard.

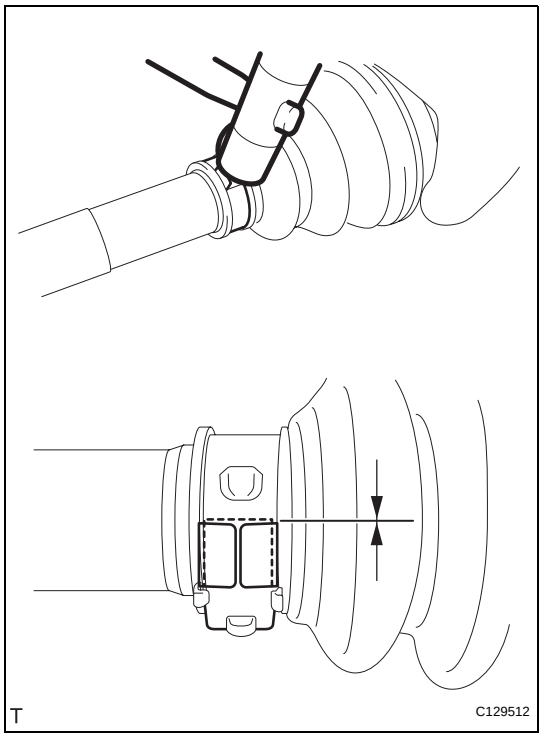

(c) Using a plastic-faced hammer, fix the buckle into place by tapping it. At the same time, use the plastic-faced hammer to adjust the lift of the lever so that the gaps between the buckle flange and lever end flange become even.
NOTICE:
Do not strike the drive shaft forcefully with the plastic-faced hammer.

DS

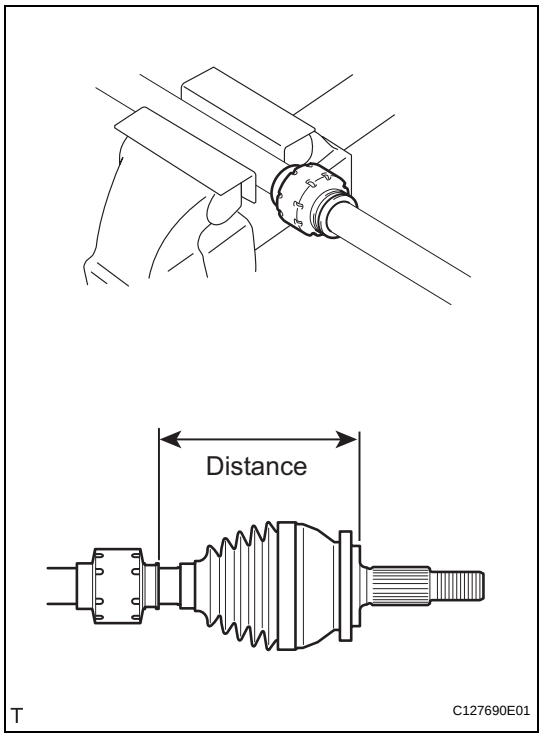

9. INSTALL FRONT DRIVE SHAFT DAMPER LH (for LH)

(a) Install a new drive shaft damper clamp and the drive shaft damper to the drive shaft.
HINT:
Install the damper clamp to outboard joint side.

(b) Set the distance, as described below.
Standard distance:
161 to 165 mm (6.339 to 6.496 in.)

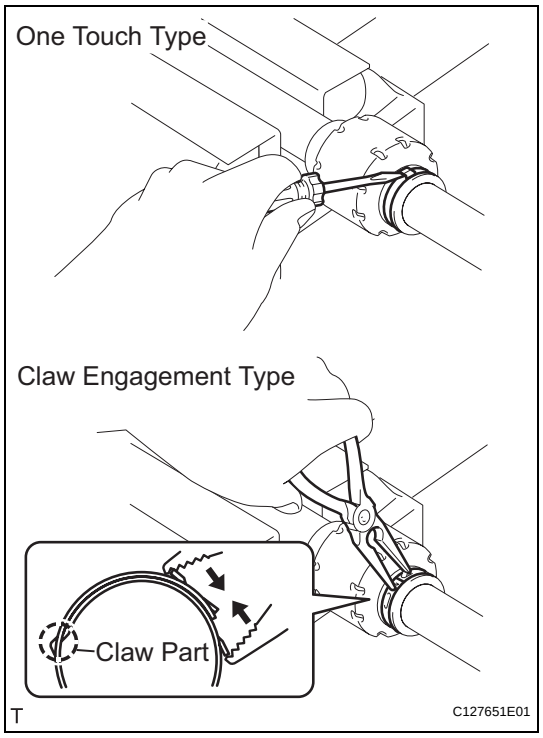

10. INSTALL FRONT DRIVE SHAFT DAMPER CLAMP LH (for LH)

(a) Hold the front drive shaft lightly in a soft vise.

(b) Install the drive shaft damper clamp to the damper.
NOTICE:
Be sure to install the clamp in the correct position.

(c) One touch type:
Using a screwdriver, install the drive shaft damper clamp, as shown in the illustration.

(d) Claw engagement type:
Using needle-nose pliers, install the drive shaft damper clamp, as shown in the illustration.

11. INSTALL FRONT DRIVE INBOARD JOINT ASSEMBLY LH

(a) Wrap the spline of the outboard joint shaft with vinyl tape to prevent the boots from being damaged.

(b) Install new parts to the outboard joint shaft in the following order.
(1) Inboard joint boot clamp
(2) Inboard joint boot No. 2 clamp
(3) Inboard joint boot

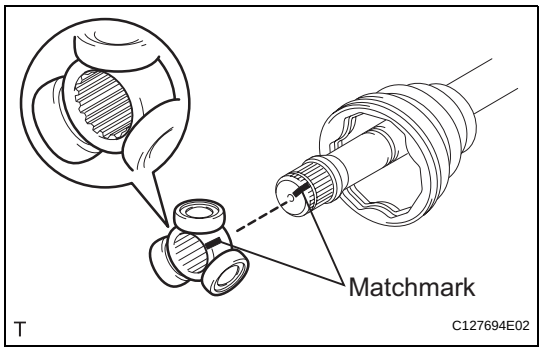

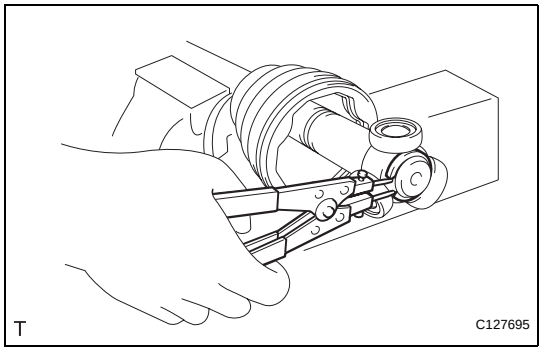

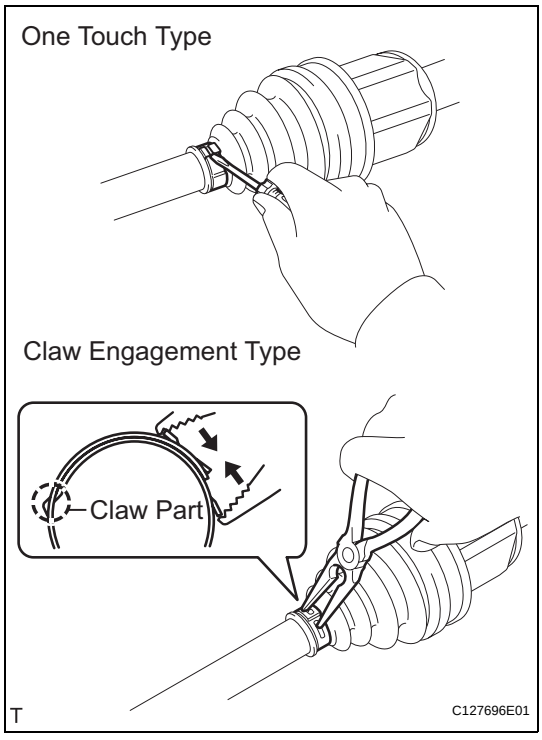

(c) Place the beveled side of the tripod axial spline toward the outboard joint.
(d) Align the matchmarks placed before removal.
(e) Using a brass bar and hammer, tap the tripod joint onto the drive shaft.
NOTICE:
- **Do not tap the rollers.**
- **Be sure to install the tripod joint in the correct direction.**

(f) Pack the inboard joint shaft and boot with grease from the boot kit.
Standard grease capacity:
175 to 185 g (6.2 to 6.5 oz.)

(g) Using a snap ring expander, install a new shaft snap ring.
(h) Align the matchmarks, and install the inboard joint to the outboard joint shaft.

12. INSTALL FRONT DRIVE INBOARD JOINT ASSEMBLY RH
HINT:
Use the same procedures described for the LH side.

13. INSTALL FRONT AXLE INBOARD JOINT BOOT
(a) Install the inboard joint boot to the inboard joint.

14. INSTALL FRONT AXLE INBOARD JOINT BOOT CLAMP
(a) One touch type:
Using a screwdriver, install the inboard joint boot clamp, as shown in the illustration.
NOTICE:
Be careful not to damage the boot.
(b) Claw engagement type:
Using needle-nose pliers, install the inboard joint boot clamp, as shown in the illustration.
NOTICE:
Be careful not to damage the boot.

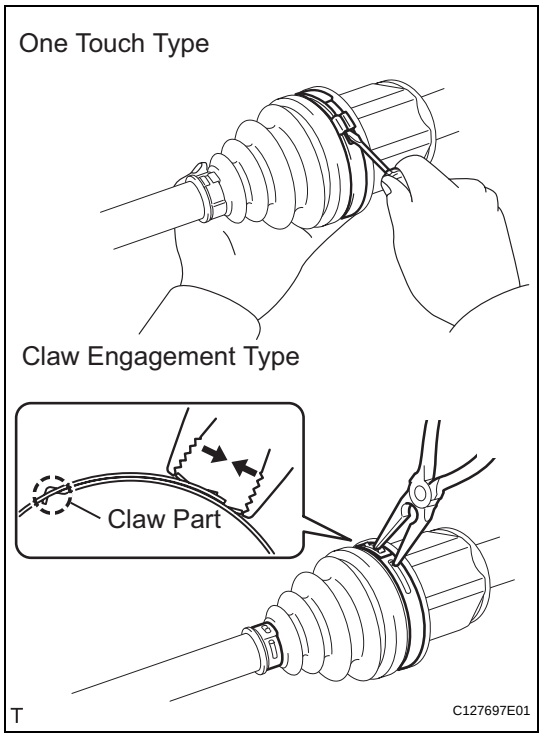

15. INSTALL FRONT AXLE INBOARD JOINT BOOT NO. 2 CLAMP

(a) One touch type:
Using a screwdriver, install the No. 2 inboard joint boot clamp, as shown in the illustration.
NOTICE:
Be careful not to damage the boot.

(b) Claw engagement type:
Using needle-nose pliers, install the No. 2 inboard joint boot clamp, as shown in the illustration.
NOTICE:
Be careful not to damage the boot.

DS

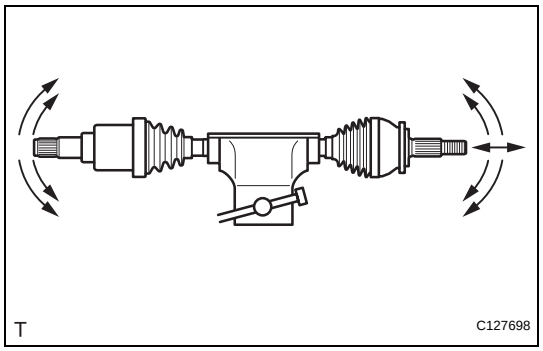

16. INSPECT FRONT DRIVE SHAFT

(a) Check that there is no severe play in the radial direction of the outboard joint.

(b) Check that the inboard joint slides smoothly in the thrust direction.

(c) Check that there is no severe play in the radial direction of the inboard joint.

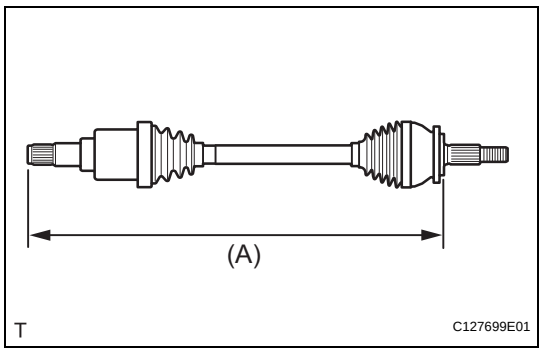

(d) Check the boots for damage.
NOTICE:
Keep the drive shaft assembly level during inspection.
HINT:
For dimension (A), refer to the following values.
Standard reference value

Item	Drive shaft LH (Dimension)	Drive shaft RH (Dimension)
2AZ-FE	585.2 mm (23.039 in.)	902.0 mm (35.512 in.)
2GR-FE	570.9 mm (22.476 in.)	914.4 mm (36.000 in.)

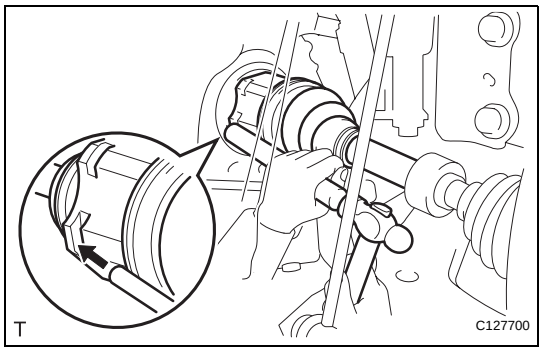

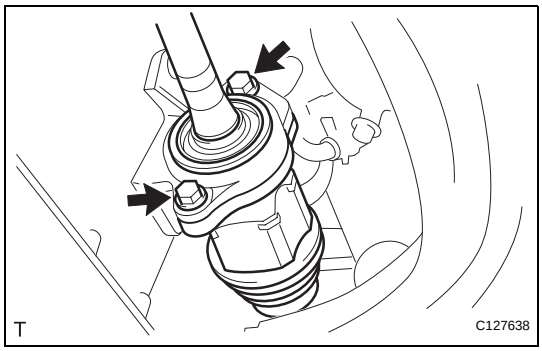

INSTALLATION

(2005/11-2006/01)

1. **INSTALL FRONT DRIVE SHAFT ASSEMBLY LH**
   (a) Coat the spline of the inboard joint shaft with gear oil.
   (b) Using a brass bar and hammer, align the shaft splines in the drive shaft.
   NOTICE:
   - **Set the snap ring with the opening side facing downwards.**
   - **Be careful not to damage the oil seal, boot and dust cover.**

2. **INSTALL FRONT DRIVE SHAFT ASSEMBLY RH**
   (a) Coat the spline of the inboard joint shaft with gear oil.
   (b) Align the shaft spline and install the drive shaft with 2 bolts.
   Torque: 63.7 N*m (650 kgf*cm, 47 ft.*lbf)
   NOTICE:
   Do not damage the oil seal, boot and dust cover.

3. **CONNECT STEERING KNUCKLE WITH AXLE HUB LH**
   (a) Align the shaft splines in the drive shaft to the steering knuckle with axle hub.

4. **CONNECT STEERING KNUCKLE WITH AXLE HUB RH**
   HINT:
   Use the same procedures described for the LH side.

5. **CONNECT FRONT SUSPENSION NO. 1 LOWER ARM SUB-ASSEMBLY LH (See page AH-10)**

6. **CONNECT FRONT SUSPENSION NO. 1 LOWER ARM SUB-ASSEMBLY RH**
   HINT:
   Use the same procedures described for the LH side.

7. **INSTALL FRONT STABILIZER LINK ASSEMBLY LH (See page SP-31)**

8. **INSTALL FRONT STABILIZER LINK ASSEMBLY RH**
   HINT:
   Use the same procedures described for the LH side.

9. **CONNECT TIE ROD END SUB-ASSEMBLY LH (See page PS-45)**

10. **CONNECT TIE ROD END SUB-ASSEMBLY RH**
    HINT:
    Use the same procedures described for the LH side.

11. **CONNECT FRONT SPEED SENSOR LH**
    (a) Connect the speed sensor (see page BC-191).

12. CONNECT FRONT SPEED SENSOR RH
HINT:
Use the same procedures described for the LH side.

13. INSTALL FRONT AXLE HUB NUT (See page AH-10)

14. INSTALL FRONT WHEEL
Torque: 103 N*m (1,050 kgf*cm, 76 ft.*lbf)

15. ADD AUTOMATIC TRANSAXLE FLUID
(a) Add automatic transaxle fluid for U140F (see page AX-152).
(b) Add automatic transaxle fluid for U241E (see page AX-151).

16. CHECK FOR AUTOMATIC TRANSAXLE OIL LEAKAGE

17. INSPECT AND ADJUST FRONT WHEEL ALIGNMENT
(a) Inspect and adjust the front wheel alignment (see page SP-3).

INSTALLATION

(2006/01-)

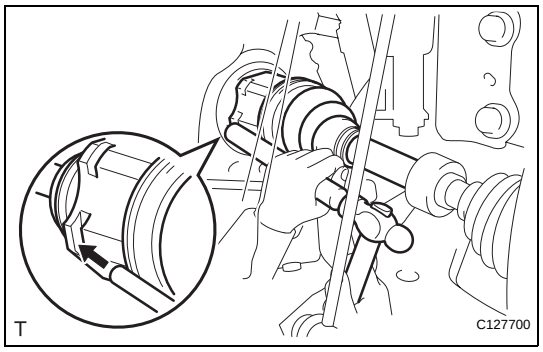

1. INSTALL FRONT DRIVE SHAFT ASSEMBLY LH
(a) Coat the spline of the inboard joint shaft with gear oil.
(b) Align the shaft splines and tap in the drive shaft with a brass bar and hammer.
NOTICE:
- **Set the snap ring with the opening side facing downwards.**
- **Be careful not to damage the oil seal, boot and dust cover.**

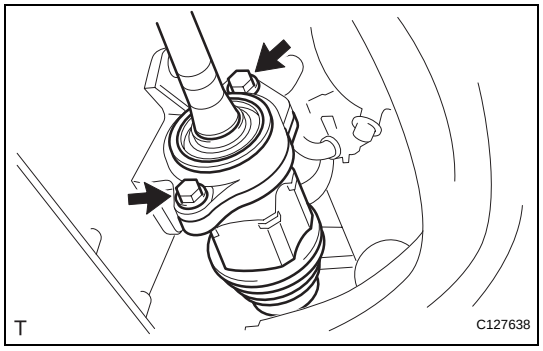

2. INSTALL FRONT DRIVE SHAFT ASSEMBLY RH
(a) Coat the spline of the inboard joint shaft with gear oil.
(b) Align the shaft splines and securely insert the drive shaft.
(c) Install the 2 bearing bracket bolts.
Torque: 63.7 N*m (650 kgf*cm, 47 ft.*lbf)
NOTICE:
Do not damage the oil seal, boot and dust cover.

DS

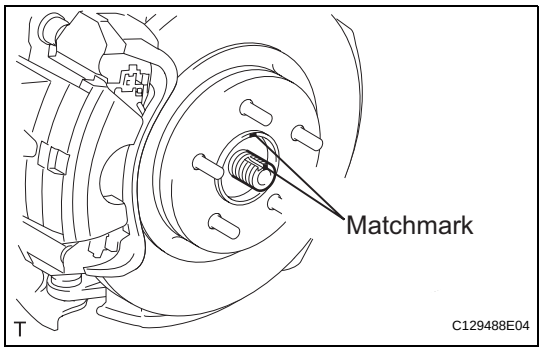

3. **CONNECT STEERING KNUCKLE WITH AXLE HUB LH**
   (a) Align the shaft splines in the drive shaft to the steering knuckle with axle hub, and connect the steering knuckle with axle hub.

4. **CONNECT STEERING KNUCKLE WITH AXLE HUB RH**
   HINT:
   Use the same procedures described for the LH side.

5. **CONNECT FRONT SUSPENSION NO. 1 LOWER ARM SUB-ASSEMBLY LH (See page SP-24)**

6. **CONNECT FRONT SUSPENSION NO. 1 LOWER ARM SUB-ASSEMBLY RH**
   HINT:
   Use the same procedures described for the LH side.

7. **INSTALL FRONT STABILIZER LINK ASSEMBLY LH (See page SP-31)**

8. **INSTALL FRONT STABILIZER LINK ASSEMBLY RH**
   HINT:
   Use the same procedures described for the LH side.

9. **CONNECT TIE ROD END SUB-ASSEMBLY LH (See page PS-45)**

10. **CONNECT TIE ROD END SUB-ASSEMBLY RH**
    HINT:
    Use the same procedures described for the LH side.

11. **CONNECT FRONT SPEED SENSOR LH**
    (a) Connect the speed sensor (see page BC-193).

12. **INSTALL FRONT SPEED SENSOR RH**
    HINT:
    Use the same procedures described for the LH side.

13. **INSTALL FRONT AXLE HUB NUT (See page AH-11)**

14. **INSTALL FRONT WHEEL**
    Torque: 103 N*m (1,050 kgf*cm, 76 ft.*lbf)

15. **ADD AUTOMATIC TRANSAXLE FLUID**
    (a) Add automatic transaxle fluid for U140F (see page AX-152).
    (b) Add automatic transaxle fluid for U241E (see page AX-151).
    (c) Add automatic transaxle fluid for U151E (see page AX-177).

16. **CHECK FOR AUTOMATIC TRANSAXLE OIL LEAKAGE**

17. **INSPECT AND ADJUST FRONT WHEEL ALIGNMENT**
    (a) Inspect and adjust the front wheel alignment (see page SP-3).

FRONT DRIVE SHAFT ASSEMBLY (for 2WD)

COMPONENTS

(2005/11-2006/01)

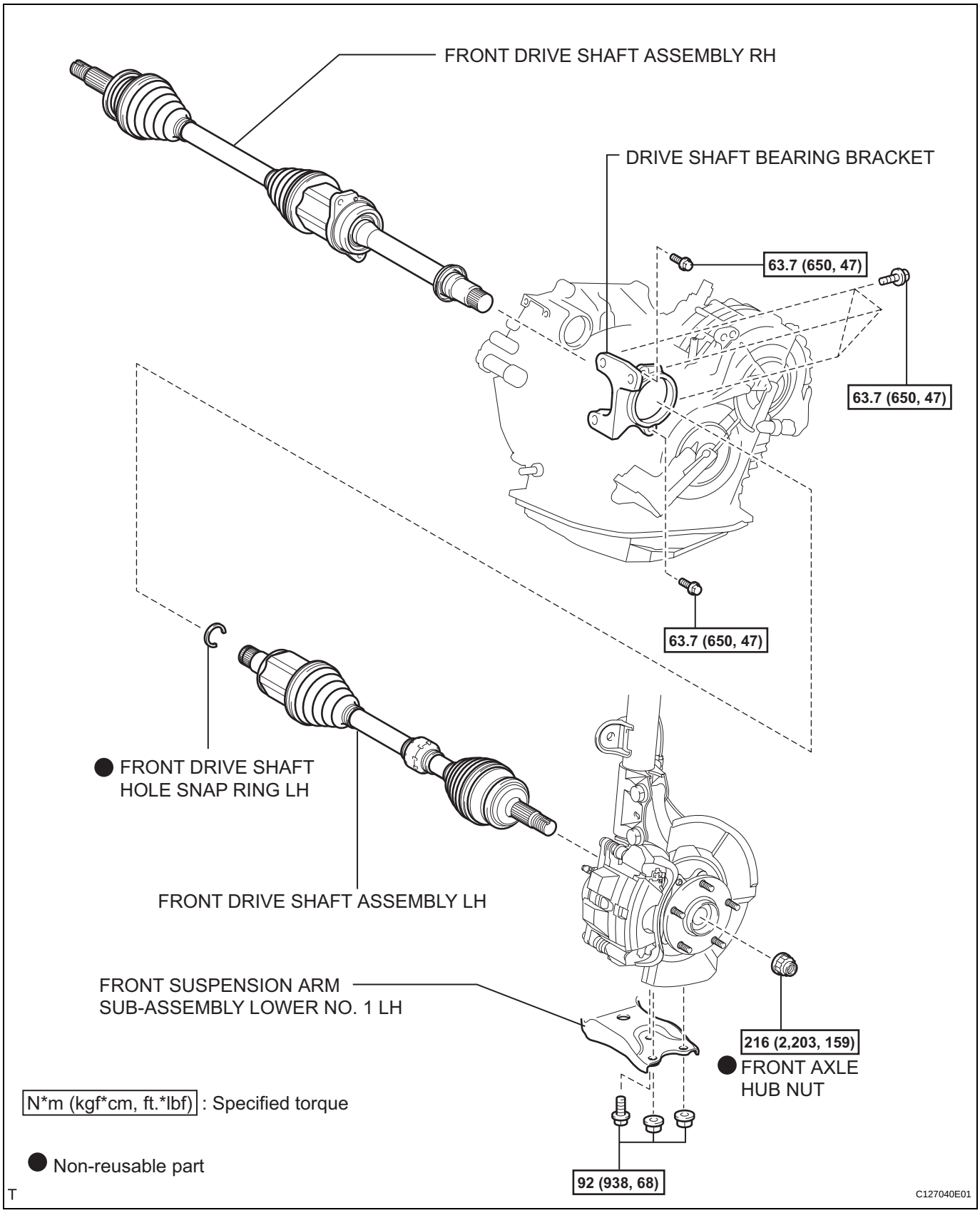

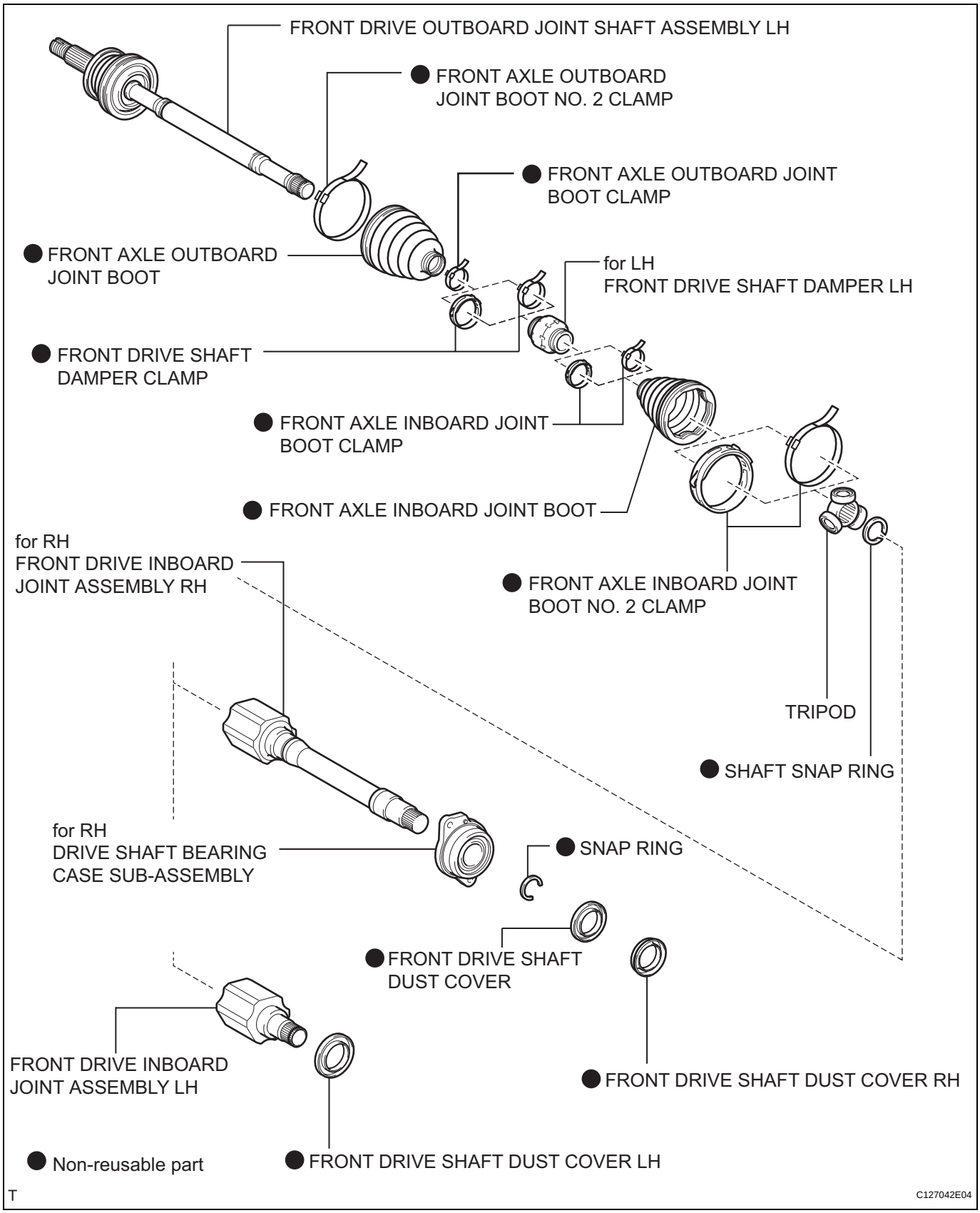
FRONT DRIVE OUTBOARD JOINT SHAFT ASSEMBLY LH
● FRONT AXLE OUTBOARD JOINT BOOT NO. 2 CLAMP
● FRONT AXLE OUTBOARD JOINT BOOT CLAMP
● FRONT AXLE OUTBOARD JOINT BOOT
for LH
FRONT DRIVE SHAFT DAMPER LH
● FRONT DRIVE SHAFT DAMPER CLAMP
● FRONT AXLE INBOARD JOINT BOOT CLAMP
● FRONT AXLE INBOARD JOINT BOOT
for RH
FRONT DRIVE INBOARD JOINT ASSEMBLY RH
● FRONT AXLE INBOARD JOINT BOOT NO. 2 CLAMP
TRIPOD
● SHAFT SNAP RING
for RH
DRIVE SHAFT BEARING CASE SUB-ASSEMBLY
● SNAP RING
● FRONT DRIVE SHAFT DUST COVER
FRONT DRIVE INBOARD JOINT ASSEMBLY LH
● FRONT DRIVE SHAFT DUST COVER RH
● Non-reusable part
● FRONT DRIVE SHAFT DUST COVER LH
T
C127042E04

COMPONENTS

(2006/01-)

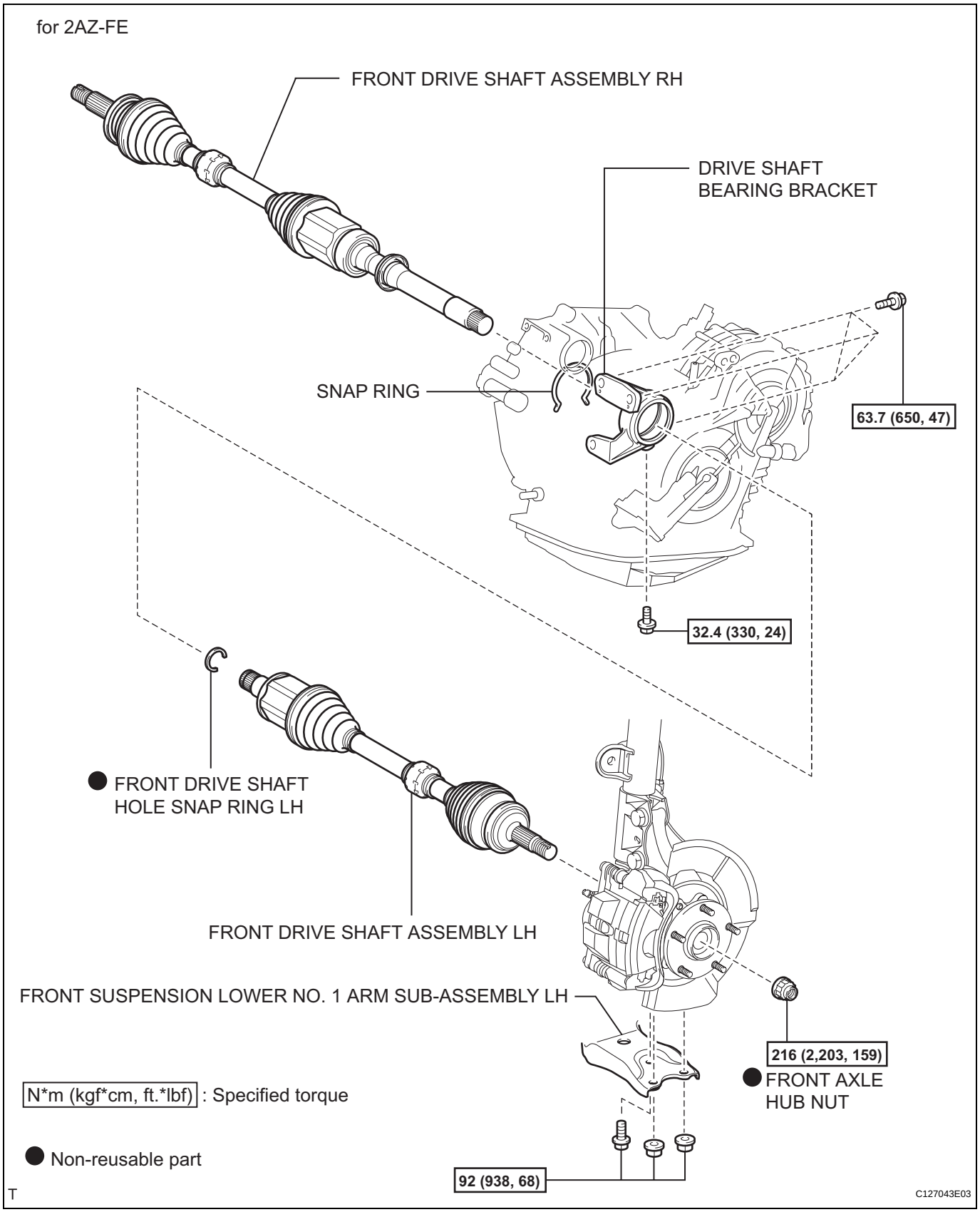

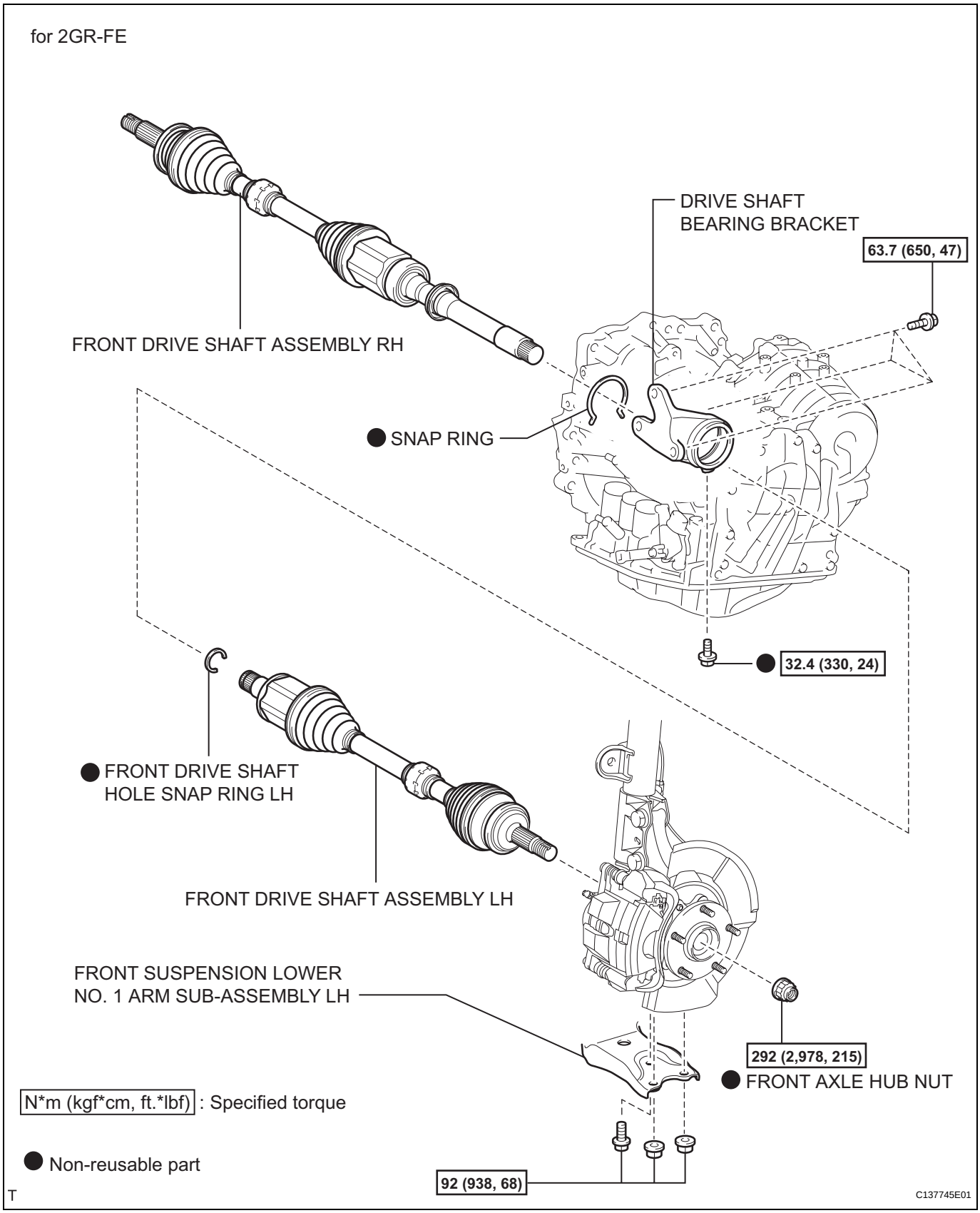
for 2GR-FE
DRIVE SHAFT
BEARING BRACKET
63.7 (650, 47)
FRONT DRIVE SHAFT ASSEMBLY RH
SNAP RING
32.4 (330, 24)
FRONT DRIVE SHAFT
HOLE SNAP RING LH
FRONT DRIVE SHAFT ASSEMBLY LH
FRONT SUSPENSION LOWER
NO. 1 ARM SUB-ASSEMBLY LH
292 (2,978, 215)
FRONT AXLE HUB NUT
92 (938, 68)
N*m (kgf*cm, ft.*lbf) : Specified torque
Non-reusable part
T
C137745E01

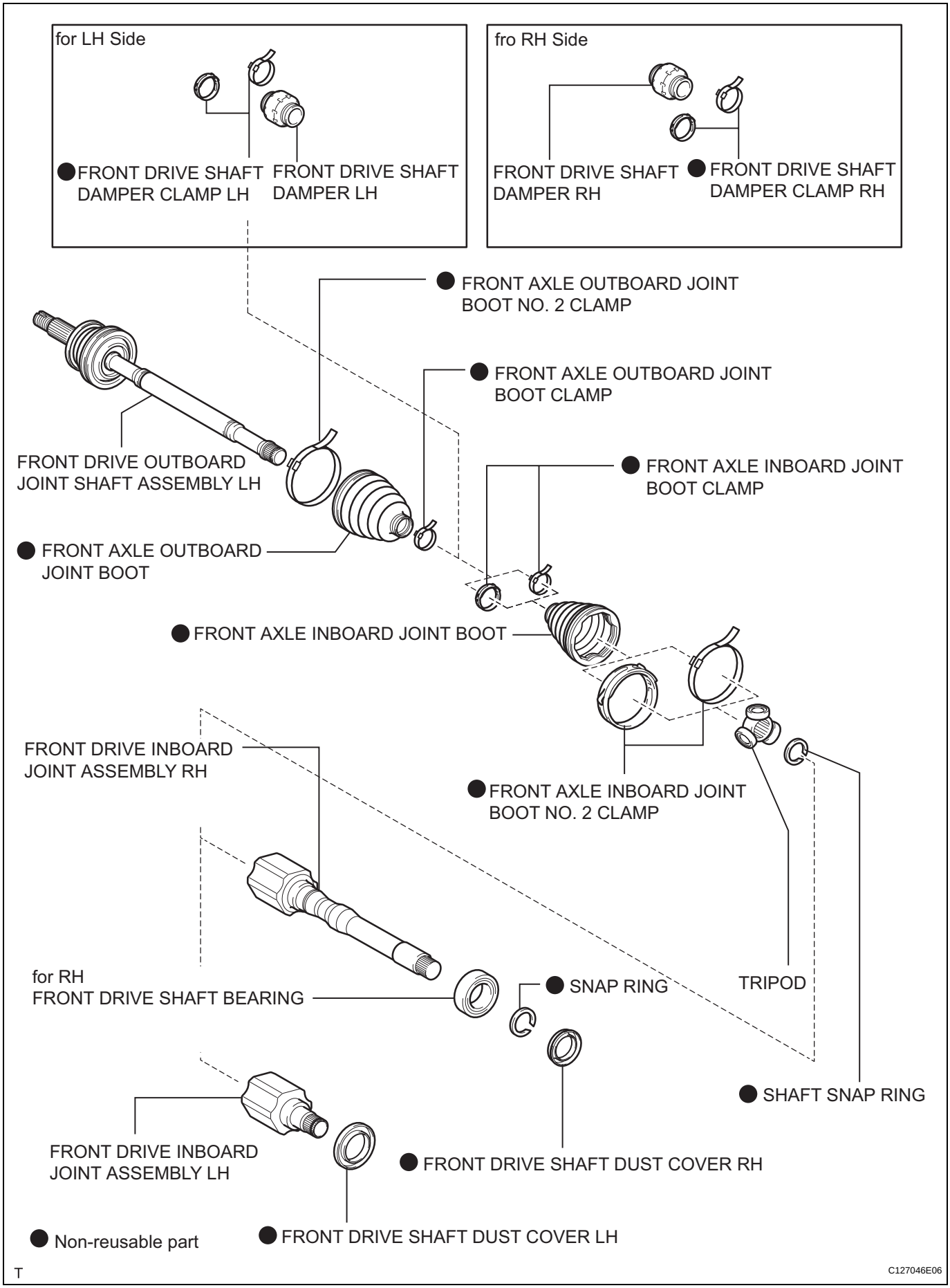
for LH Side
FRONT DRIVE SHAFT DAMPER CLAMP LH
FRONT DRIVE SHAFT DAMPER LH
fro RH Side
FRONT DRIVE SHAFT DAMPER RH
FRONT DRIVE SHAFT DAMPER CLAMP RH
FRONT AXLE OUTBOARD JOINT BOOT NO. 2 CLAMP
FRONT AXLE OUTBOARD JOINT BOOT CLAMP
FRONT DRIVE OUTBOARD JOINT SHAFT ASSEMBLY LH
FRONT AXLE INBOARD JOINT BOOT CLAMP
FRONT AXLE OUTBOARD JOINT BOOT
FRONT AXLE INBOARD JOINT BOOT
FRONT DRIVE INBOARD JOINT ASSEMBLY RH
FRONT AXLE INBOARD JOINT BOOT NO. 2 CLAMP
for RH FRONT DRIVE SHAFT BEARING
SNAP RING
TRIPOD
SHAFT SNAP RING
FRONT DRIVE INBOARD JOINT ASSEMBLY LH
FRONT DRIVE SHAFT DUST COVER RH
Non-reusable part
FRONT DRIVE SHAFT DUST COVER LH
T
C127046E06

DS

DS

REMOVAL

(2005/11-2006/01)

1. **REMOVE FRONT WHEEL**
2. **DRAIN AUTOMATIC TRANSAXLE FLUID**
   (a) Drain the automatic transaxle fluid for U140F (see page AX-147).
   (b) Drain the automatic transaxle fluid for U241E (see page AX-146).
3. **REMOVE FRONT AXLE HUB NUT (See page AH-6)**
4. **DISCONNECT FRONT SPEED SENSOR LH (See page BC-191)**
5. **DISCONNECT FRONT SPEED SENSOR RH**
   HINT:
   Use the same procedures described for the LH side.
6. **DISCONNECT FRONT DISC BRAKE CYLINDER ASSEMBLY LH (See page BR-40)**
7. **DISCONNECT FRONT DISC BRAKE CYLINDER ASSEMBLY RH**
   HINT:
   Use the same procedures described for the LH side.
8. **DISCONNECT FRONT STABILIZER LINK ASSEMBLY LH (See page SP-9)**
9. **DISCONNECT FRONT STABILIZER LINK ASSEMBLY RH**
   HINT:
   Use the same procedures described for the LH side.
10. **DISCONNECT FRONT SUSPENSION LOWER NO. 1 ARM SUB-ASSEMBLY LH (See page AH-7)**
11. **DISCONNECT FRONT SUSPENSION LOWER NO. 1 ARM SUB-ASSEMBLY RH**
    HINT:
    Use the same procedures described for the LH side.
12. **DISCONNECT STEERING KNUCKLE WITH AXLE HUB LH**
    (a) Put matchmarks on the drive shaft and axle hub.
    NOTICE:
    Do not punch the marks.
    (b) Using a plastic-faced hammer, disconnect the steering knuckle with axle hub.
    NOTICE:
    Be careful not to damage the boot and speed sensor rotor.
    Do not excessively push out the drive shaft from the axle assembly.
13. **DISCONNECT STEERING KNUCKLE WITH AXLE HUB RH**
    HINT:
    Use the same procedures described for the LH side.

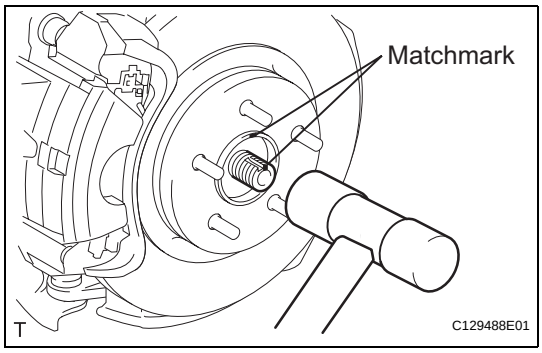

14. DISCONNECT TIE ROD END SUB-ASSEMBLY LH
(See page PS-42)

15. DISCONNECT TIE ROD END SUB-ASSEMBLY RH
HINT:
Use the same procedures described for the LH side.

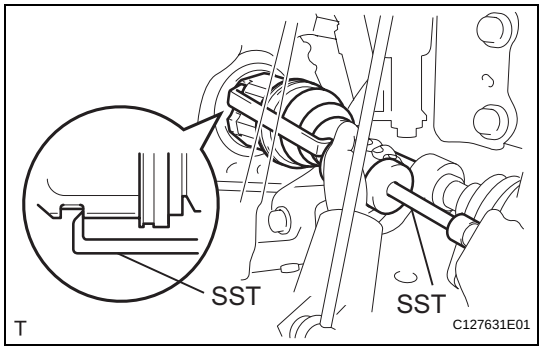

16. REMOVE FRONT DRIVE SHAFT ASSEMBLY LH
(a) Using SST, remove the front drive shaft.
SST 09520-01010, 09520-24010 (09520-32040)
NOTICE:
- **Be careful not to damage the transaxle case oil seal, inboard joint boot and drive shaft dust cover.**
- **Be careful not to drop the drive shaft.**

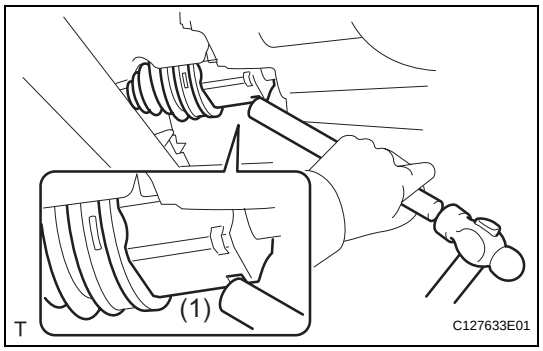

17. REMOVE FRONT DRIVE SHAFT ASSEMBLY RH
(a) Using a brass bar and hammer, set the brass bar against position (1) as shown in the illustration and remove the drive shaft.
NOTICE:
- **Do not damage the oil seal.**
- **Do not damage the drive shaft boot.**
- **Do not allow the drive shaft to fall off.**

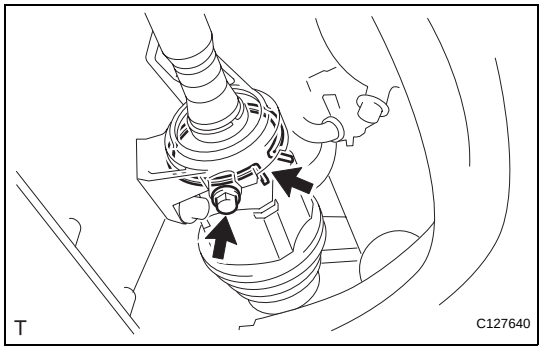

(b) Squeeze the ends of the snap ring, and remove the snap ring from the bearing bracket.
(c) Remove the bearing bracket bolt and remove the front drive shaft from the bearing bracket.
NOTICE:
- **Do not damage the oil seal.**
- **Do not damage the boot.**
- **Do not allow the drive shaft to fall off.**

HINT:
If the connection is stiff, use a brass bar and hammer to lightly tap the edge of the inboard joint RH and remove it.

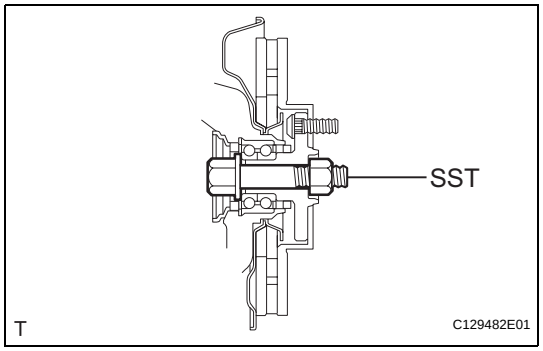

18. FIX FRONT AXLE ASSEMBLY
NOTICE:
The hub bearing could be damaged if it is subjected to the vehicle weight, such as when moving the vehicle with the drive shaft removed. Therefore, if it is absolutely necessary to place the vehicle weight on the hub bearing, first support it with SST.
SST 09608-16042 (09608-02021, 09608-02041)

DS

REMOVAL

(2006/01-)

1. **REMOVE FRONT WHEEL**
2. **DRAIN AUTOMATIC TRANSAXLE FLUID**
   (a) Drain the automatic transaxle fluid for U140F (see page AX-147).
   (b) Drain the automatic transaxle fluid for U241E (see page AX-146).
   (c) Drain the automatic transaxle fluid for U151F (see page AX-173).
3. **REMOVE FRONT AXLE HUB NUT (See page AH-8)**
4. **DISCONNECT FRONT SPEED SENSOR LH (See page BC-191)**
5. **DISCONNECT FRONT SPEED SENSOR RH**
   HINT:
   Use the same procedures described for the LH side.
6. **DISCONNECT FRONT DISC BRAKE CYLINDER ASSEMBLY LH (See page BR-40)**
7. **DISCONNECT FRONT DISC BRAKE CYLINDER ASSEMBLY RH**
   HINT:
   Use the same procedures described for the LH side.
8. **DISCONNECT FRONT STABILIZER LINK ASSEMBLY LH (See page SP-30)**
9. **DISCONNECT FRONT STABILIZER LINK ASSEMBLY RH**
10. **DISCONNECT FRONT SUSPENSION LOWER NO. 1 ARM SUB-ASSEMBLY LH (See page SP-22)**
11. **DISCONNECT FRONT SUSPENSION LOWER NO. 1 ARM SUB-ASSEMBLY RH**
    HINT:
    Use the same procedures described for the LH side.
12. **DISCONNECT STEERING KNUCKLE WITH AXLE HUB LH**
    (a) Put matchmarks on the drive shaft and axle hub.
    NOTICE:
    Do not punch the marks.
    (b) Using a plastic-faced hammer, disconnect the steering knuckle with axle hub.
    NOTICE:
    Be careful not to damage the boot and speed sensor rotor.
    Do not excessively push out the drive shaft from the axle assembly.

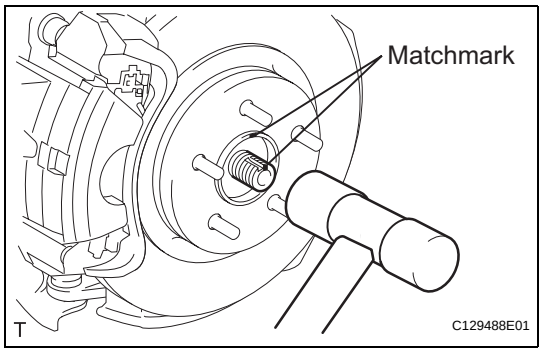

13. **DISCONNECT STEERING KNUCKLE WITH AXLE HUB RH**
    HINT:
    Use the same procedures described for the LH side.

14. DISCONNECT TIE ROD END SUB-ASSEMBLY LH
(See page PS-42)

15. DISCONNECT TIE ROD END SUB-ASSEMBLY RH
HINT:
Use the same procedures described for the LH side.

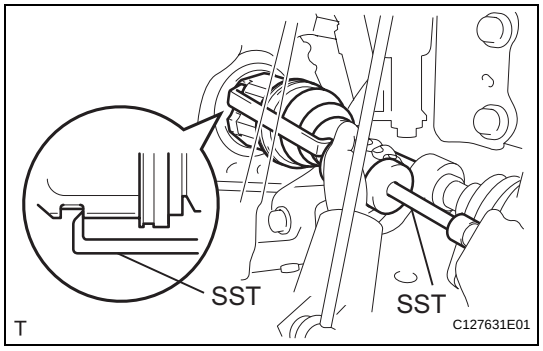

16. REMOVE FRONT DRIVE SHAFT ASSEMBLY LH
(a) Using SST, remove the front drive shaft.
SST 09520-01010, 09520-24010 (09520-32040)
NOTICE:
- **Be careful not to damage the transaxle case oil seal, inboard joint boot and drive shaft dust cover.**
- **Be careful not to drop the drive shaft.**

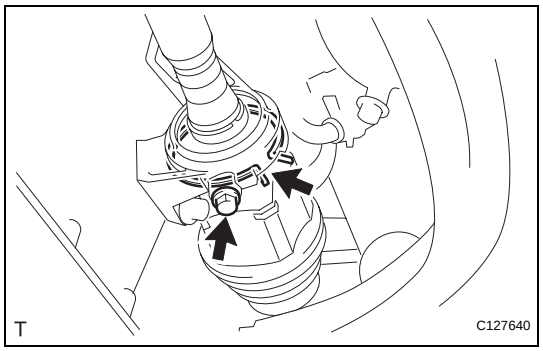

17. REMOVE FRONT DRIVE SHAFT ASSEMBLY RH
(a) Squeeze the ends of the snap ring, and remove the snap ring from the bearing bracket.
(b) Remove the bearing bracket bolt and remove the front drive shaft from the bearing bracket.
NOTICE:
- **Do not damage the oil seal.**
- **Do not damage the boot.**
- **Do not allow the drive shaft to fall off.**

HINT:
If the connection is stiff, use a brass bar and hammer to lightly tap the edge of the inboard joint RH and remove it.

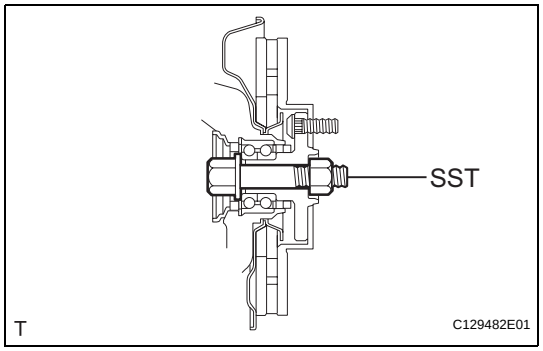

18. FIX FRONT AXLE ASSEMBLY
NOTICE:
The hub bearing could be damaged if it is subjected to the vehicle weight, such as when moving the vehicle with the drive shaft removed. Therefore, if it is absolutely necessary to place the vehicle weight on the hub bearing, first support it with SST.
SST 09608-16042 (09608-02021, 09608-02041)

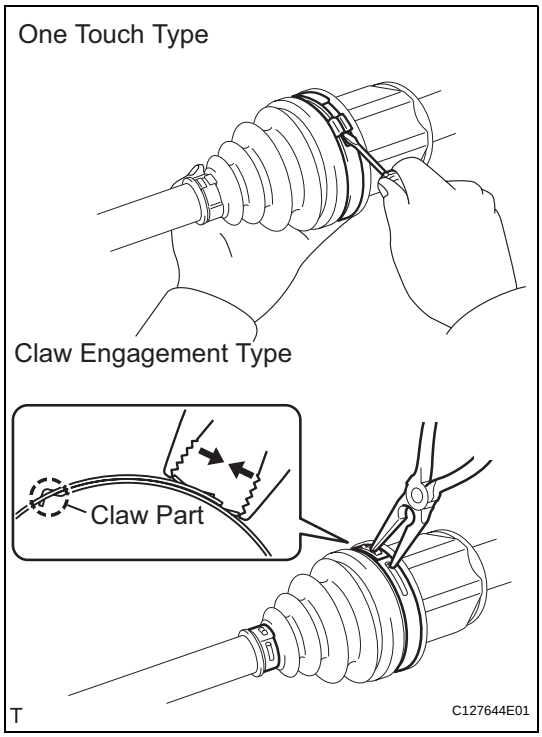

DISASSEMBLY

(2005/11-2006/01)

1. REMOVE FRONT AXLE INBOARD JOINT BOOT NO. 2 CLAMP LH

(a) One touch type:
  (1) Using a screwdriver, remove the No. 2 inboard joint boot clamp, as shown in the illustration.

(b) Claw engagement type:
  (1) Using needle-nose pliers, remove the No. 2 inboard joint boot clamp, as shown in the illustration.

2. REMOVE FRONT AXLE INBOARD JOINT BOOT NO. 2 CLAMP RH

HINT:
Using needle-nose pliers, remove the No. 2 inboard joint boot clamp, as shown in the illustration.

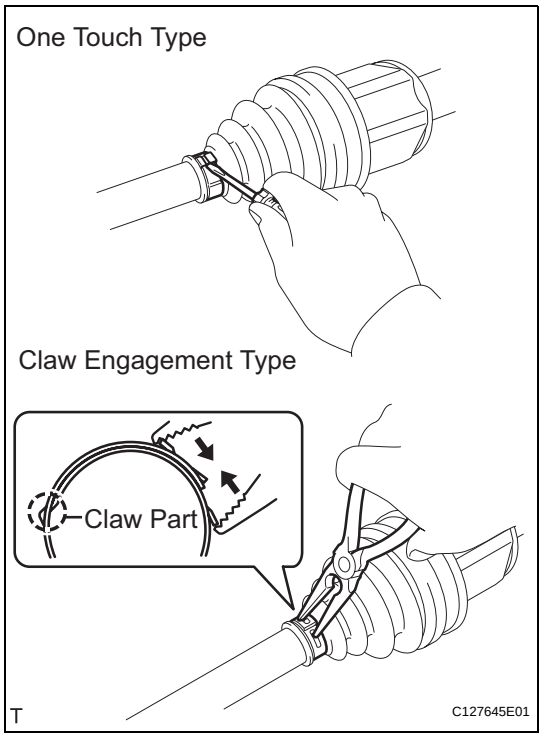

3. REMOVE FRONT AXLE INBOARD JOINT BOOT CLAMP LH

(a) One touch type:
  (1) Using a screwdriver, remove the inboard joint boot clamp, as shown in the illustration.

(b) Claw engagement type:
  (1) Using needle-nose pliers, remove the inboard joint boot clamp, as shown in the illustration.

4. REMOVE FRONT AXLE INBOARD JOINT BOOT CLAMP RH

HINT:
Use the same procedures described for the LH side.

5. REMOVE FRONT AXLE INBOARD JOINT BOOT

(a) Remove the boot from the inboard joint.

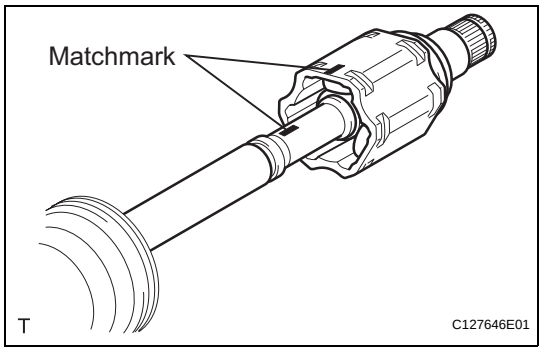

6. REMOVE FRONT DRIVE INBOARD JOINT ASSEMBLY LH

(a) Remove any old grease from the inboard joint.

(b) Put matchmarks on the inboard joint and outboard joint shaft.
NOTICE:
Do not punch the marks.

(c) Remove the inboard joint from the outboard joint shaft.

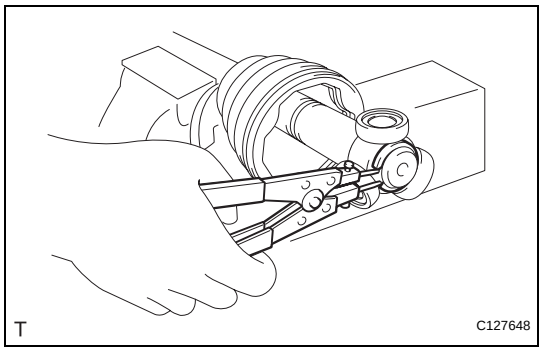

(d) Using a snap ring expander, remove the shaft snap ring.

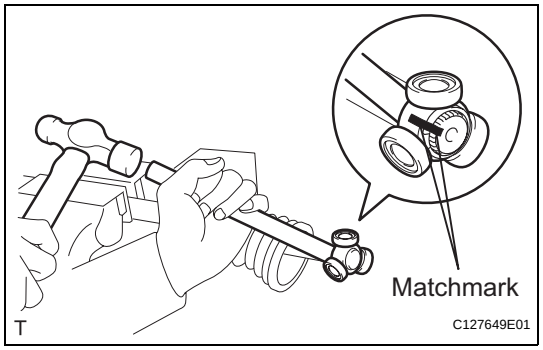

(e) Put matchmarks on the outboard joint shaft and tripod joint.
NOTICE:
Do not punch the marks.
(f) Using a brass bar and hammer, tap out the tripod joint from the outboard joint shaft.
NOTICE:
Do not tap the rollers.
(g) Remove the inboard joint boot.

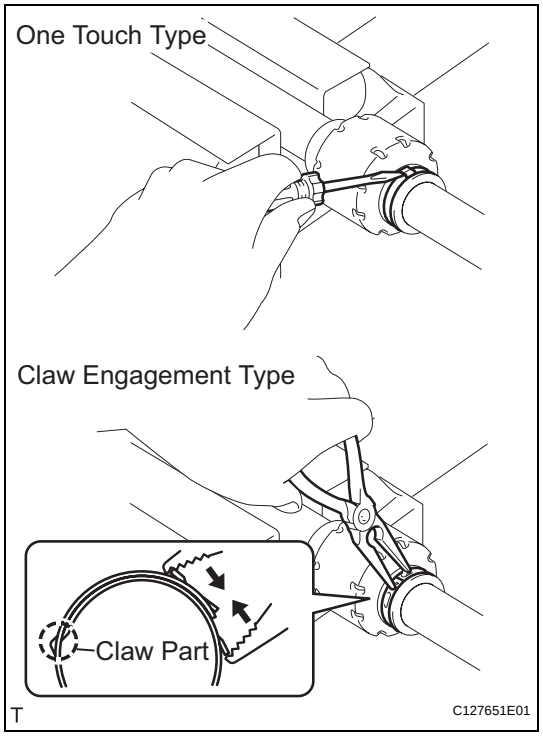

7. REMOVE FRONT DRIVE SHAFT DAMPER CLAMP LH
(a) One touch type:
(1) Using a screwdriver, remove the drive shaft damper clamp, as shown in the illustration.
(b) Claw engagement type:
(1) Using needle-nose pliers, remove the drive shaft damper clamp, as shown in the illustration.

8. REMOVE FRONT DRIVE SHAFT DAMPER LH
(a) Remove the front drive shaft damper.

9. REMOVE FRONT DRIVE SHAFT DAMPER CLAMP RH
HINT:
Use the same procedures described for the LH side.

10. REMOVE FRONT DRIVE SHAFT DAMPER RH
HINT:
Use the same procedures described for the LH side.

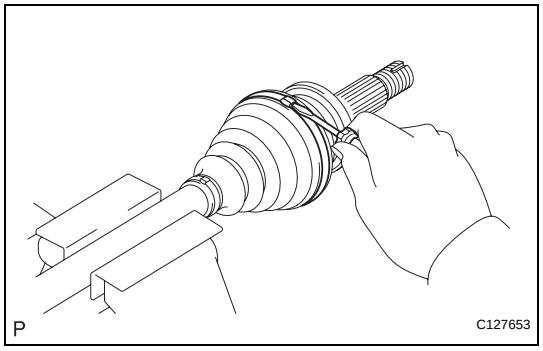

11. REMOVE FRONT AXLE OUTBOARD JOINT BOOT NO. 2 CLAMP LH
(a) Using a screwdriver, remove the No. 2 outboard joint boot clamp, as shown in the illustration.

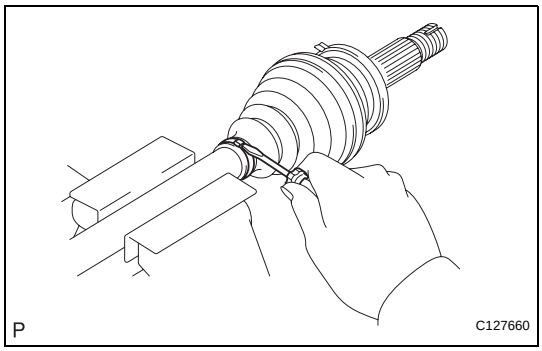

12. REMOVE FRONT AXLE OUTBOARD JOINT BOOT CLAMP LH

(a) Using a screwdriver, remove the outboard joint boot clamp, as shown in the illustration.

13. REMOVE FRONT AXLE OUTBOARD JOINT BOOT

(a) Remove the outboard joint boot from the outboard joint shaft.

(b) Remove any old grease from the outboard joint.

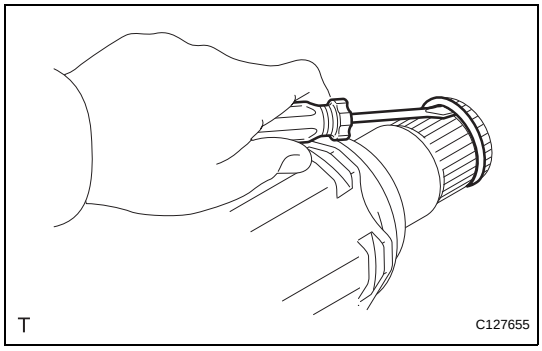

14. REMOVE FRONT DRIVE SHAFT HOLE SNAP RING LH

(a) Using a screwdriver, remove the hole snap ring.

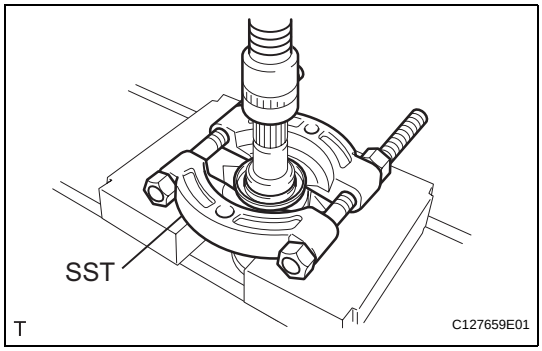

15. REMOVE FRONT DRIVE SHAFT DUST COVER LH

(a) Using SST and a press, press out the front drive shaft dust cover.

SST 09950-00020

NOTICE:

Be careful not to drop the inboard joint

16. REMOVE FRONT DRIVE SHAFT DUST COVER RH

(a) Using a press, press out the drive shaft dust cover.

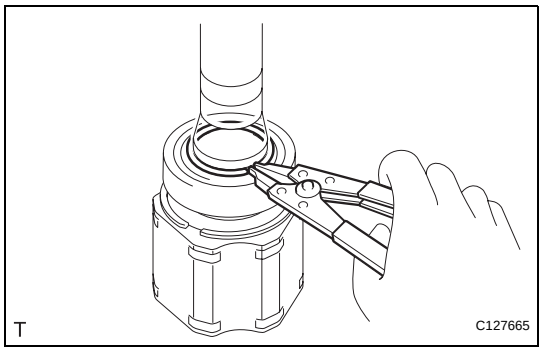

17. REMOVE FRONT DRIVE SHAFT BEARING

(a) Using a snap ring expander, remove the drive shaft hole snap ring.

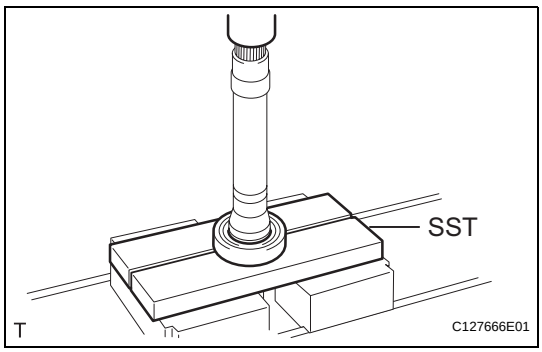

(b) Using SST and a press, press out the drive shaft bearing.

SST 09527-10011

(c) Remove the snap ring.

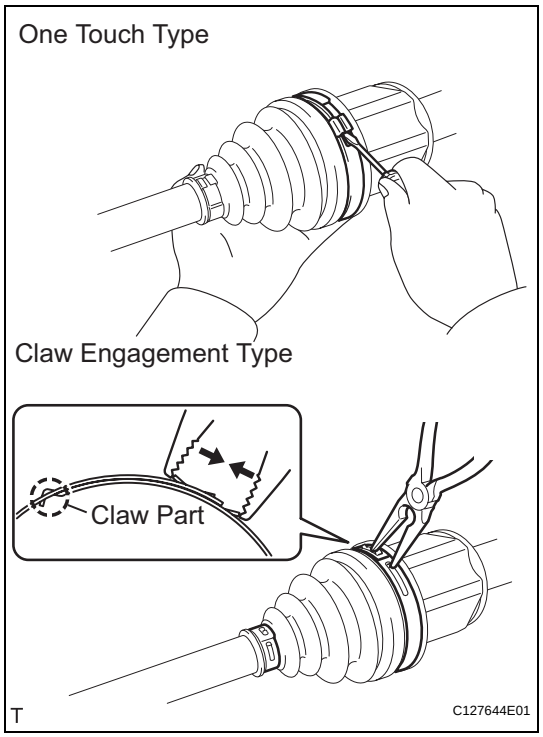

DISASSEMBLY

(2006/01-)

1. REMOVE FRONT AXLE INBOARD JOINT BOOT NO. 2 CLAMP

(a) One touch type:
Using a screwdriver, remove the No. 2 inboard joint boot clamp, as shown in the illustration.

(b) Claw engagement type:
Using needle-nose pliers, remove the No. 2 inboard joint boot clamp, as shown in the illustration.

DS

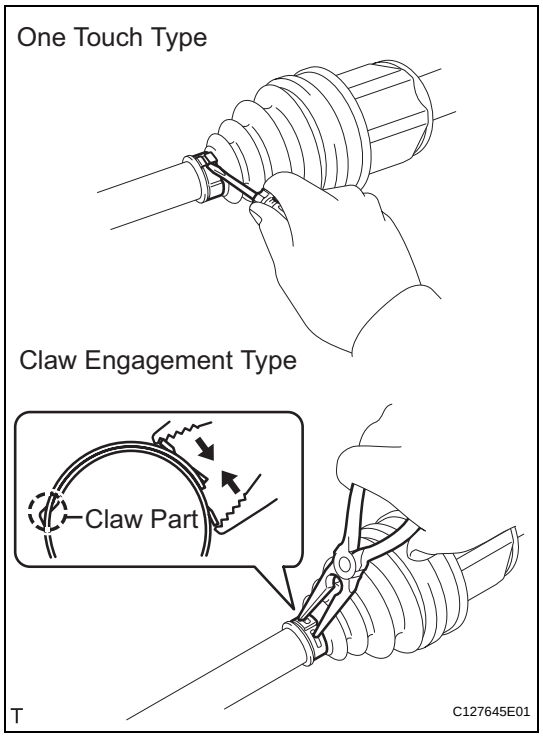

2. REMOVE FRONT AXLE INBOARD JOINT BOOT CLAMP

(a) One touch type:
Using a screwdriver, remove the inboard joint boot clamp, as shown in the illustration.

(b) Claw engagement type:
Using needle-nose pliers, remove the inboard joint boot clamp, as shown in the illustration.

3. REMOVE FRONT AXLE INBOARD JOINT BOOT

(a) Remove the boot from the inboard joint.

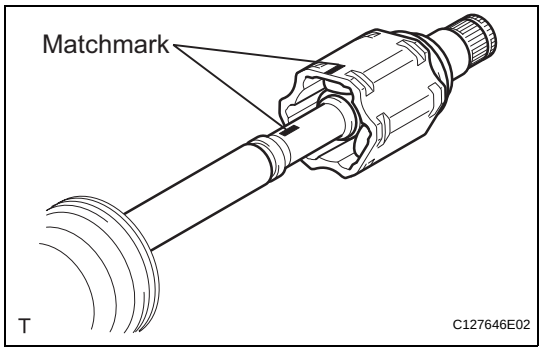

4. REMOVE FRONT DRIVE INBOARD JOINT ASSEMBLY LH

(a) Remove any old grease from the inboard joint.

(b) Put matchmarks on the inboard joint and outboard joint shaft.
NOTICE:
Do not punch the marks.

(c) Remove the inboard joint from the outboard joint shaft.

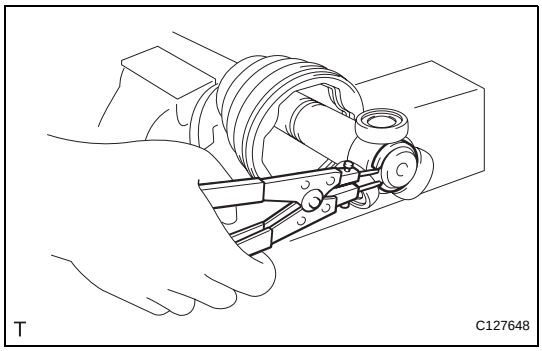

(d) Using a snap ring expander, remove the shaft snap ring.

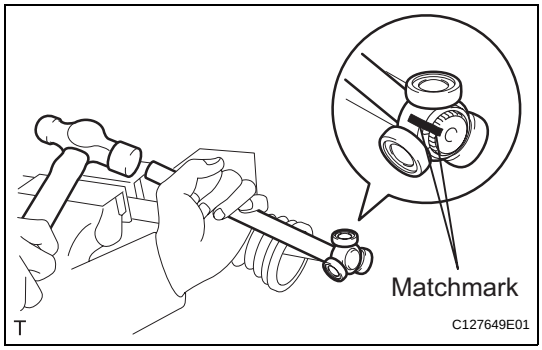

(e) Put matchmarks on the outboard joint shaft and tripod joint.
NOTICE:
Do not punch the marks.
(f) Using a brass bar and hammer, tap out the tripod joint from the outboard joint shaft.
NOTICE:
Do not tap the rollers.
(g) Remove the inboard joint boot.

5. REMOVE FRONT DRIVE SHAFT INBOARD JOINT ASSEMBLY RH
HINT:
Use the same procedures described for the LH side.

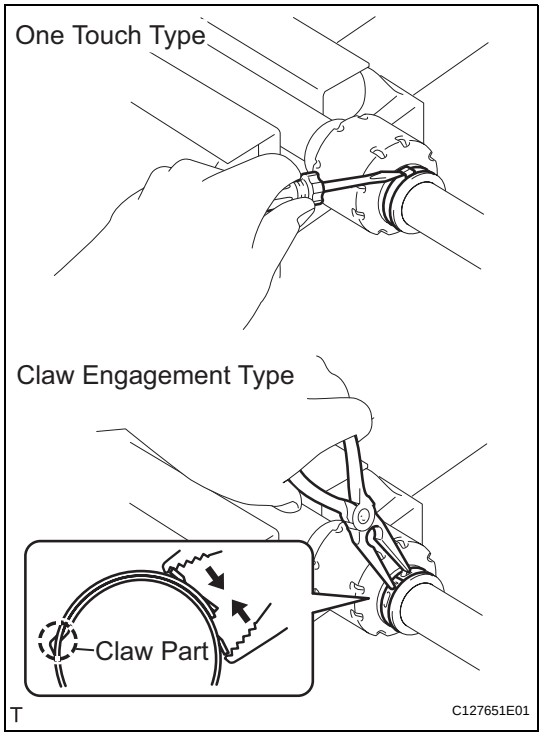

6. REMOVE FRONT DRIVE SHAFT DAMPER CLAMP LH
(a) One touch type:
Using a screwdriver, remove the drive shaft damper clamp, as shown in the illustration.
(b) Claw engagement type:
Using needle-nose pliers, remove the drive shaft damper clamp, as shown in the illustration.

7. REMOVE FRONT DRIVE SHAFT DAMPER LH
(a) Remove the front drive shaft damper.

8. REMOVE FRONT DRIVE SHAFT DAMPER CLAMP RH
HINT:
Use the same procedures described for the LH side.

9. REMOVE FRONT DRIVE SHAFT DAMPER RH
HINT:
Use the same procedures described for the LH side.

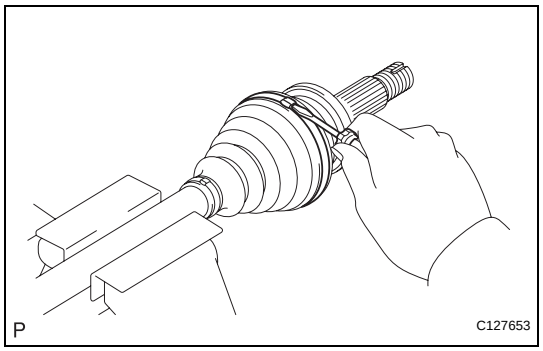

10. REMOVE FRONT AXLE OUTBOARD JOINT BOOT NO. 2 CLAMP

(a) Using a screwdriver, remove the No. 2 outboard joint boot clamp, as shown in the illustration.

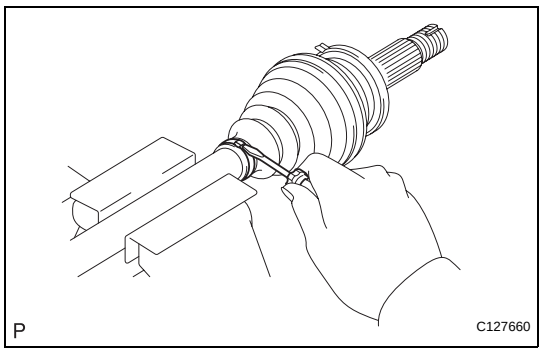

11. REMOVE FRONT AXLE OUTBOARD JOINT BOOT CLAMP

(a) Using a screwdriver, remove the outboard joint boot clamp, as shown in the illustration.

12. REMOVE FRONT AXLE OUTBOARD JOINT BOOT

(a) Remove the outboard joint boot from the outboard joint shaft.

(b) Remove any old grease from the outboard joint.

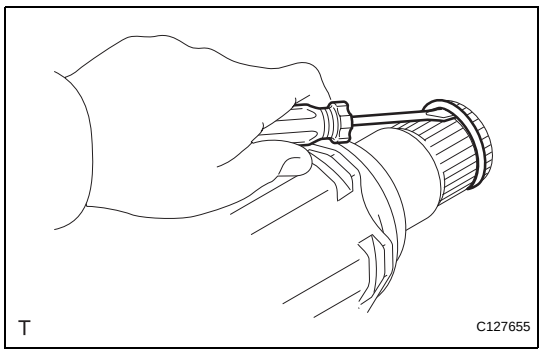

13. REMOVE FRONT DRIVE SHAFT HOLE SNAP RING LH

(a) Using a screwdriver, remove the hole snap ring.

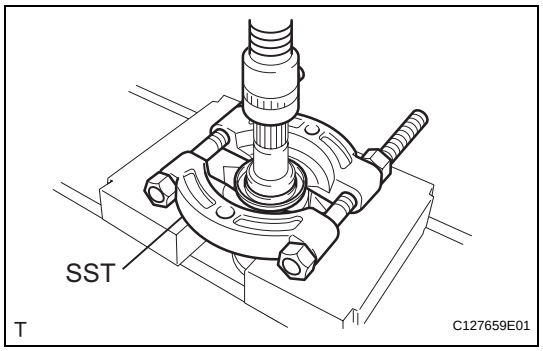

14. REMOVE FRONT DRIVE SHAFT DUST COVER LH

(a) Using SST and a press, press out the front drive shaft dust cover.

SST 09950-00020

NOTICE:

Be careful not to drop the inboard joint.

15. REMOVE FRONT DRIVE SHAFT DUST COVER RH

HINT:

Use the same procedures described for the LH side.

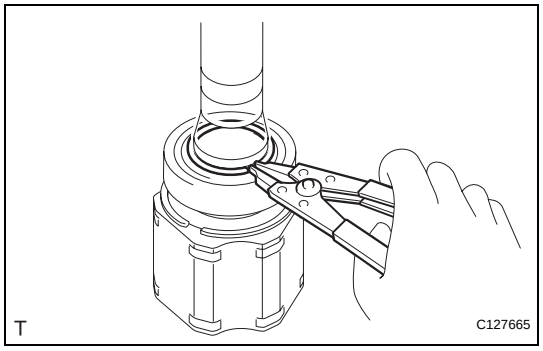

16. REMOVE FRONT DRIVE SHAFT BEARING (for RH)

(a) Using a snap ring expander, remove the drive shaft hole snap ring.

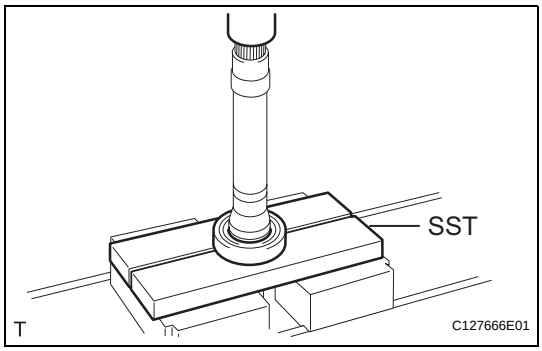

(b) Using SST and a press, press out the drive shaft bearing.
SST 09527-10011

(c) Remove the bearing bracket snap ring.

REASSEMBLY

(2005/11-2006/01)

1. INSTALL FRONT DRIVE SHAFT BEARING

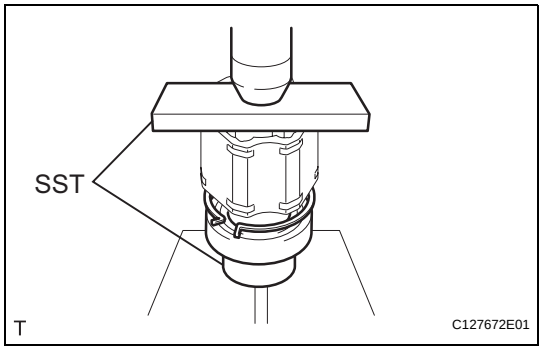

(a) Using SST and a press, press in the drive shaft bearing to the inboard joint RH.
SST 09527-10011, 09710-04081
NOTICE:
The bearing should be installed completely.

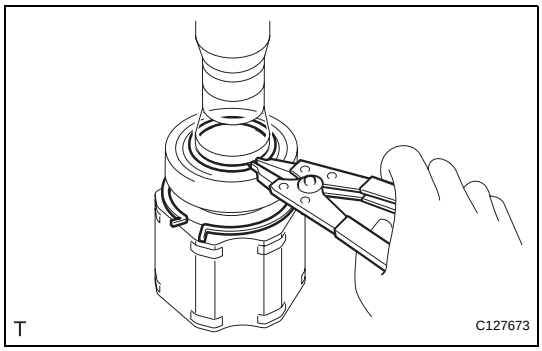

(b) Using a snap ring expander, install a new drive shaft hole snap ring.

2. REMOVE FRONT DRIVE SHAFT DUST COVER RH

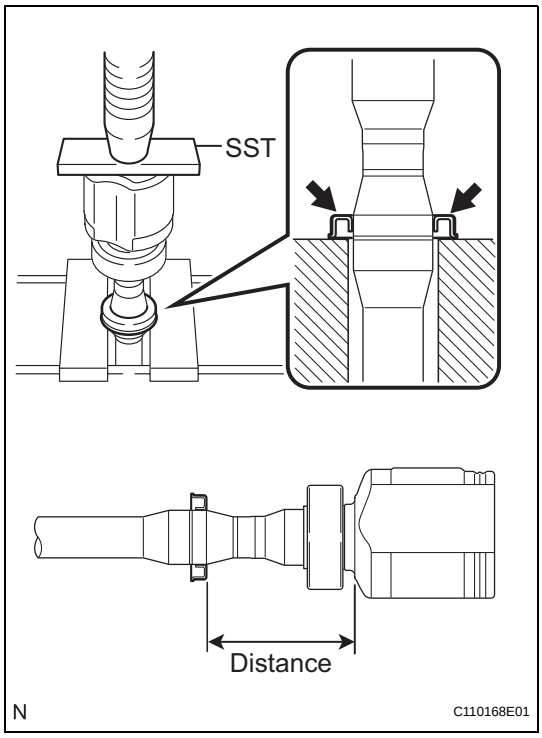

(a) Using SST and a press, press in a new drive shaft dust cover until the distance from the tip of the center drive shaft to the drive shaft dust cover reaches the specification, as shown in the illustration.
SST 09527-10011
Standard distance:
104 +-0.5 mm (4.09 +-0.02 in.)
NOTICE:
- **The dust cover should be installed completely.**
- **Be careful not to damage the dust cover.**

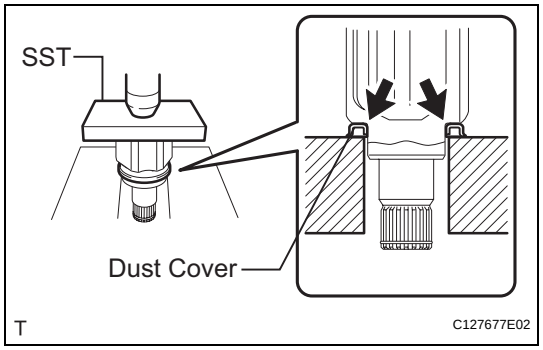

3. INSTALL FRONT DRIVE SHAFT DUST COVER LH

(a) Using SST and a press, press in a new drive shaft dust cover.

SST 09527-10011

NOTICE:

- **The dust cover should be installed completely.**
- **Be careful not to damage the dust cover.**

4. INSTALL FRONT DRIVE SHAFT HOLE SNAP RING LH

(a) Install a new hole snap ring.

5. INSPECT FRONT DRIVE SHAFT

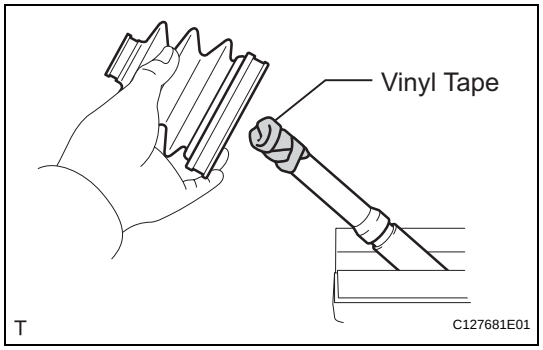

6. INSTALL FRONT AXLE OUTBOARD JOINT BOOT

HINT:

Before installing the boots, wrap the spline of the drive shaft with vinyl tape to prevent the boots from being damaged.

(a) Install new parts to the outboard joint shaft in the following order.
  (1) No. 2 outboard joint boot clamp
  (2) Outboard joint boot
  (3) Outboard joint boot clamp

(b) Pack the outboard joint shaft and boot with grease from the boot kit.

Standard grease capacity:
190 to 200 g (6.7 to 7.1 oz.)

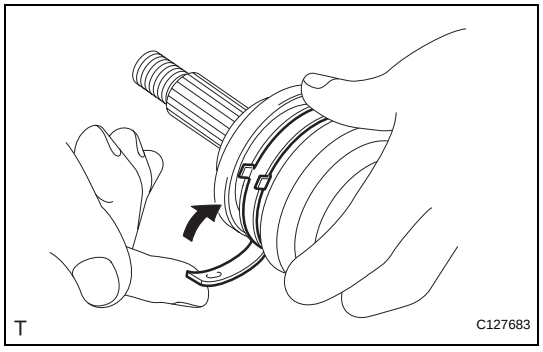

7. INSTALL FRONT AXLE OUTBOARD JOINT BOOT LH NO.2 CLAMP

CAUTION:

Wear protective gloves while performing the operation and be careful to avoid cutting your hands or other body parts.

(a) Install a new boot clamp to the outboard joint boot and temporarily bend the lever.

NOTICE:

- **When temporarily bending the lever, make sure not to deform the band and lever.**
- **Set the clamp correctly in the guide groove and align it with the interior of the vehicle as much as possible.**

DS

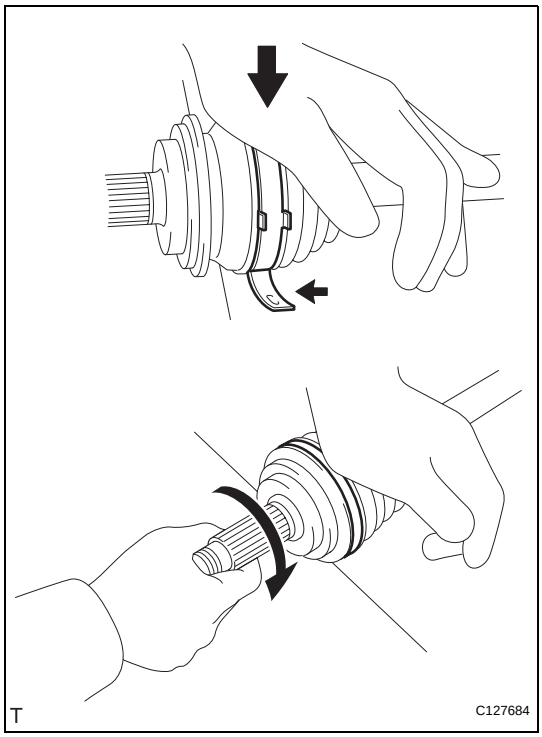

(b) With the joint on the working surface, use your body weight to press down on the joint with one hand. Then, roll the joint forward, as shown in the illustration, and press the lever in until a "click" sound is heard.
NOTICE:
- **Do not damage the deflector.**
- **Make sure the joint is in full contact with the joint surface at all times.**

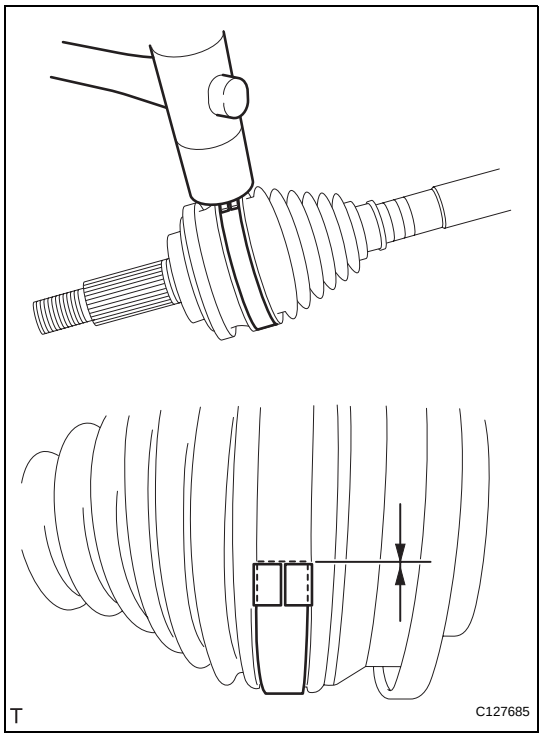

(c) Using a plastic-faced hammer, fix the buckle into place by tapping it. At the same time, use the plastic-faced hammer to adjust the lift of the lever so that the gaps between the buckle flange and lever end flange become even.

8. INSTALL FRONT AXLE OUTBOARD JOINT BOOT NO. 2 CLAMP RH
HINT:
Use the same procedures described for the LH side.

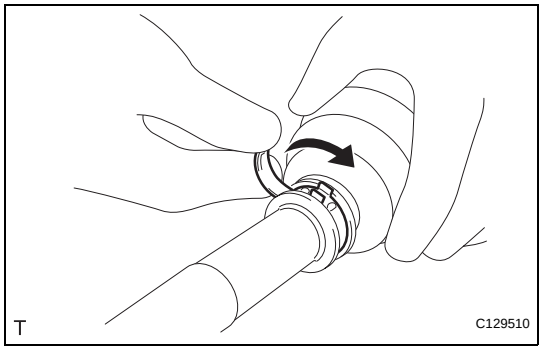

9. INSTALL FRONT AXLE OUTBOARD JOINT BOOT CLAMP LH
CAUTION:
Wear protective gloves while performing the operation and be careful to avoid cutting your hands or other body parts.

(a) Install a new boot clamp to the outboard joint boot and temporarily bend the lever.
NOTICE:
When temporarily bending the lever, make sure not to deform the band and lever.

(b) Using water pump pliers, temporarily lock the boot clamp by clamping it down until a "click" sound is heard.

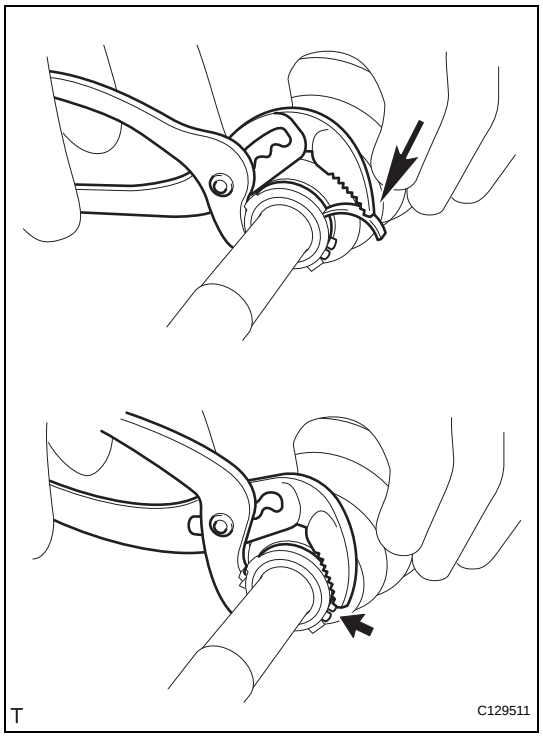

(c) Using a plastic-faced hammer, fix the buckle into place by tapping it. At the same time, use the plastic-faced hammer to adjust the lift of the lever so that the gaps between the buckle flange and lever end flange become even.
NOTICE:
Do not strike the drive shaft forcefully with the plastic-faced hammer.

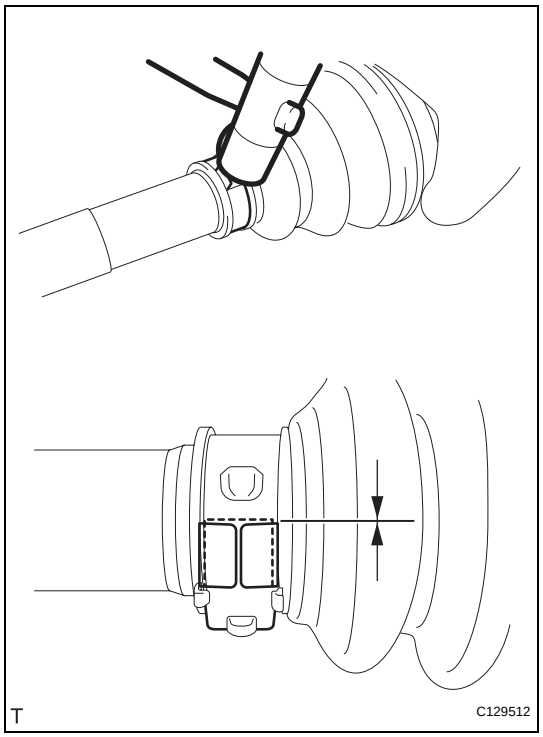

10. INSTALL FRONT AXLE OUTBOARD JOINT BOOT CLAMP RH

HINT:
Use the same procedures described for the LH side.

DS

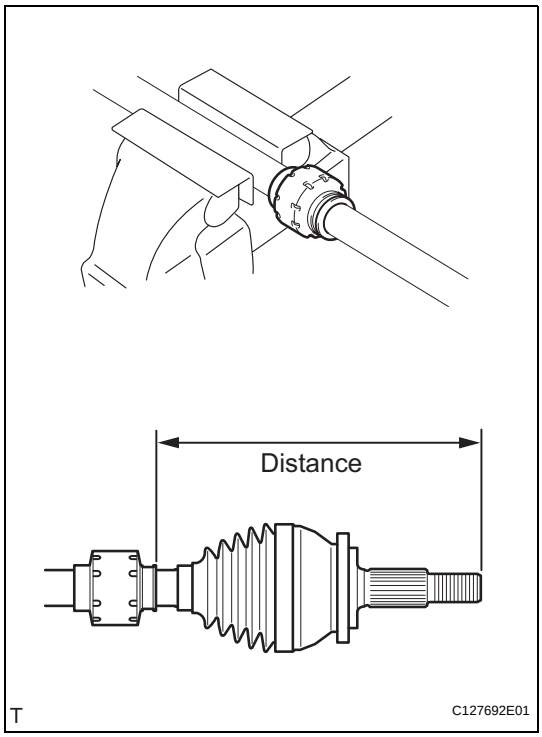

11. INSTALL FRONT DRIVE SHAFT DAMPER LH

HINT:

Install the damper clamp to the outboard joint side.

(a) Install a new drive shaft damper clamp and the drive shaft damper to the drive shaft.

(b) Make sure that the damper is on the shaft groove.

(c) Set the distance, as described below.

Standard distance:

161 to 165 mm (6.339 to 6.496 in.)

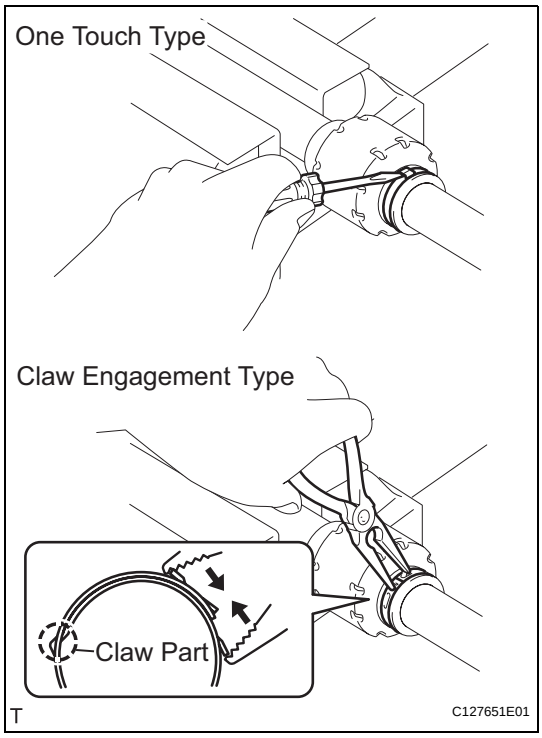

12. INSTALL FRONT DRIVE SHAFT DAMPER CLAMP LH

(a) Hold the front drive shaft lightly in a soft vise.

(b) Install the drive shaft damper clamp to the damper.

NOTICE:

Be sure to install the clamp in the correct position.

(c) One touch type:

(1) Using a screwdriver, install the drive shaft damper clamp, as shown in the illustration.

(d) Claw engagement type:

(1) Using needle-nose pliers, install the drive shaft damper clamp, as shown in the illustration.

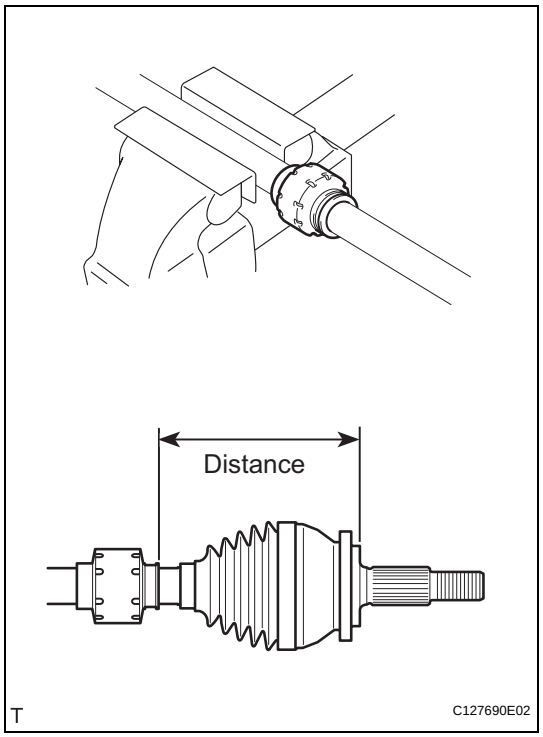

13. INSTALL FRONT DRIVE SHAFT DAMPER RH

HINT:

Install the damper clamp to outboard joint side.

(a) Install a new drive shaft damper clamp and the drive shaft damper to the drive shaft.

(b) Make sure that the damper is on the shaft groove.

(c) Set the distance, as described below.

Standard distance:

161 to 165 mm (6.339 to 6.496 in.)

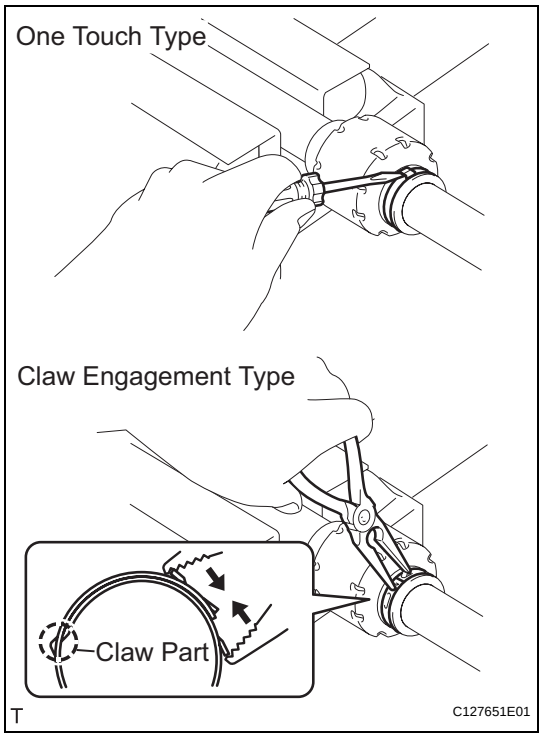

14. INSTALL FRONT DRIVE SHAFT DAMPER CLAMP RH

(a) Hold the front drive shaft lightly in a soft vise.

(b) Install the drive shaft damper clamp to the damper.

NOTICE:

Be sure to install the clamp in the correct position.

(c) One touch type:

(1) Using a screwdriver, install the drive shaft damper clamp, as shown in the illustration.

(d) Claw engagement type:

(1) Using needle-nose pliers, install the drive shaft damper clamp, as shown in the illustration.

15. INSTALL FRONT DRIVE INBOARD JOINT ASSEMBLY LH

(a) Wrap the spline of the outboard joint shaft with vinyl tape to prevent the boots from being damaged.

(b) Install new parts to the outboard joint shaft in the following order.

(1) Inboard joint boot clamp

(2) No. 2 inboard joint boot clamp

(3) Inboard joint boot

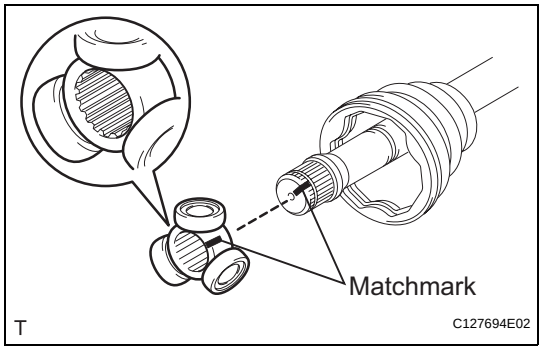

(c) Place the beveled side of the tripod axial spline toward the outboard joint.

(d) Align the matchmarks placed before removal.

(e) Using a brass bar and hammer, tap the tripod joint onto the drive shaft.

NOTICE:

- **Do not tap the rollers.**
- **Be sure to install the tripod joint in the correct direction**

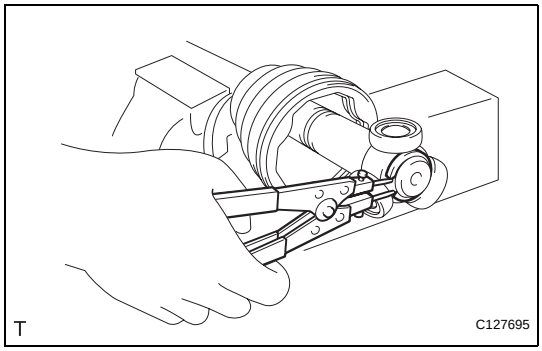

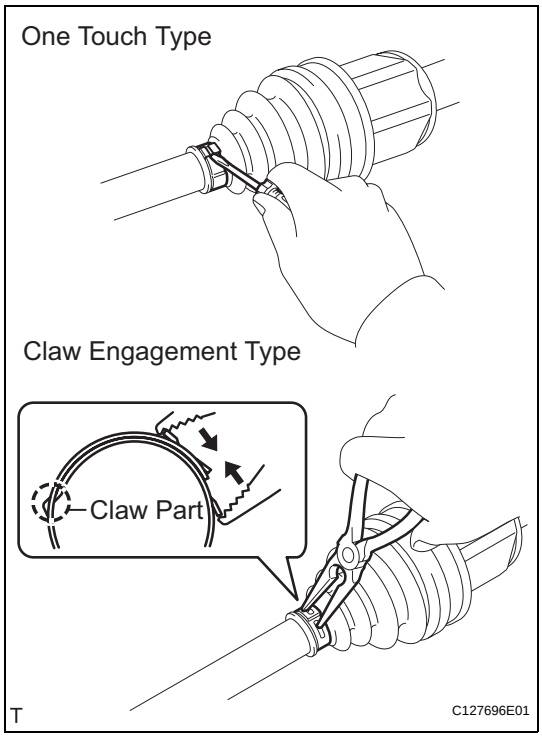

(f) Pack the inboard joint shaft and boot with grease from the boot kit.
Standard grease capacity:
175 to 185 g (6.2 to 6.5 oz.)

(g) Using a snap ring expander, install a new shaft snap ring.

(h) Align the matchmarks, and install the inboard joint to the outboard joint shaft.

16. INSTALL FRONT DRIVE INBOARD JOINT ASSEMBLY RH

HINT:
Use the same procedures described for the LH side.

17. INSTALL FRONT AXLE INBOARD JOINT BOOT

(a) Install the inboard joint boot to the inboard joint.

18. INSTALL FRONT AXLE INBOARD JOINT BOOT CLAMP LH

(a) One touch type:
(1) Using a screwdriver, install the inboard joint boot clamp, as shown in the illustration.
NOTICE:
Be careful not to damage the boot.

(b) Claw engagement type:
(1) Using needle-nose pliers, install the inboard joint boot clamp, as shown in the illustration.
NOTICE:
Be careful not to damage the boot.

19. INSTALL FRONT AXLE INBOARD JOINT BOOT CLAMP RH

HINT:
Use the same procedures described for the LH side.

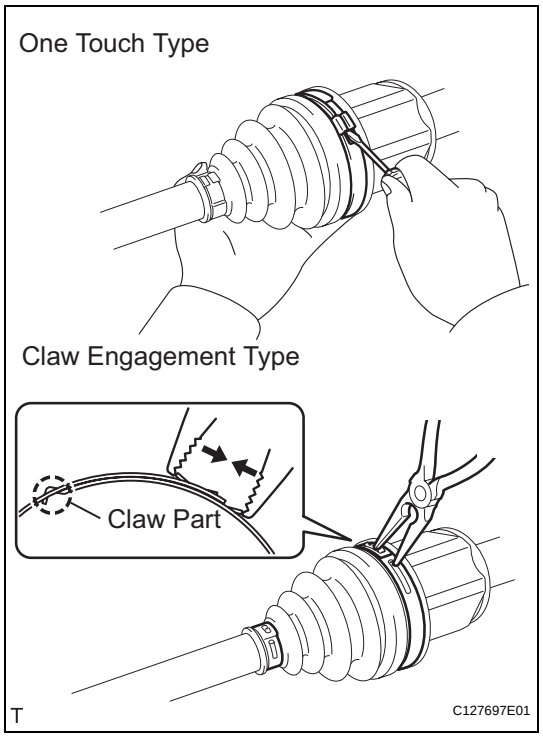

20. INSTALL FRONT AXLE INBOARD JOINT BOOT NO. 2 CLAMP LH

(a) One touch type:

(1) Using a screwdriver, install the No. 2 inboard joint boot clamp, as shown in the illustration.

NOTICE:

Be careful not to damage the boot.

(b) Claw engagement type:

(1) Using needle-nose pliers, install the No. 2 inboard joint boot clamp, as shown in the illustration.

NOTICE:

Be careful not to damage the boot.

21. INSTALL FRONT AXLE INBOARD JOINT BOOT NO. 2 CLAMP RH

HINT:

Use the same procedures described for the LH side.

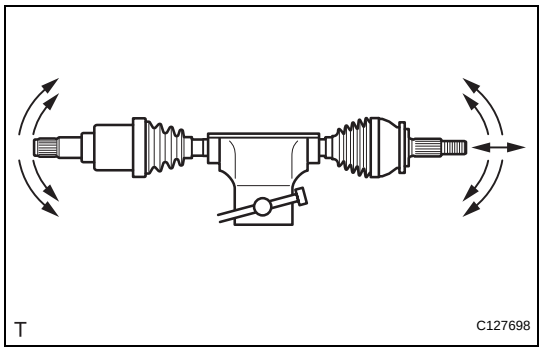

22. INSPECT FRONT DRIVE SHAFT

(a) Check that there is no severe play in the radial direction of the outboard joint.

(b) Check that the inboard joint slides smoothly in the thrust direction.

(c) Check that there is no severe play in the radial direction of the inboard joint.

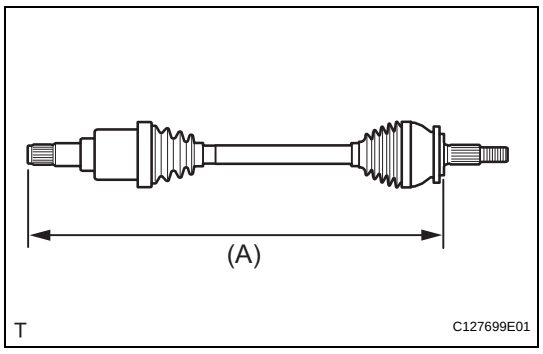

(d) Check the boots for damage.

NOTICE:

Keep the drive shaft assembly level during inspection.

HINT:

For dimension (A), refer to the following values.

Reference value:

572.5 mm (22.539 in.) for LH side

918 mm (36.142 in.) for RH side

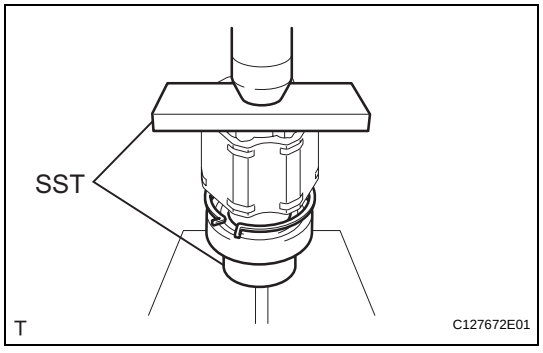

REASSEMBLY

(2006/01-)

1. INSTALL FRONT DRIVE SHAFT BEARING (for RH)

(a) Install the bearing bracket snap ring to the inboard shaft.

(b) Using SST and a press, press in the drive shaft bearing to the inboard joint RH.

SST 09527-10011, 09710-04081

NOTICE:

The bearing should be installed completely.

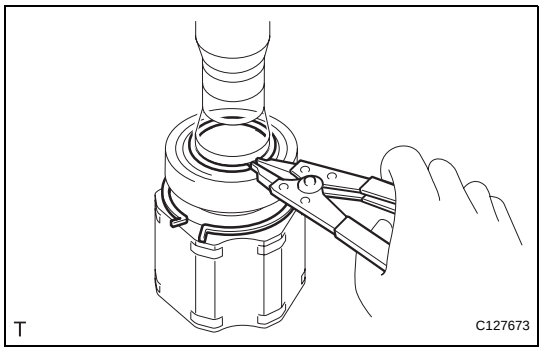

(c) Using a snap ring expander, install a new drive shaft hole snap ring.

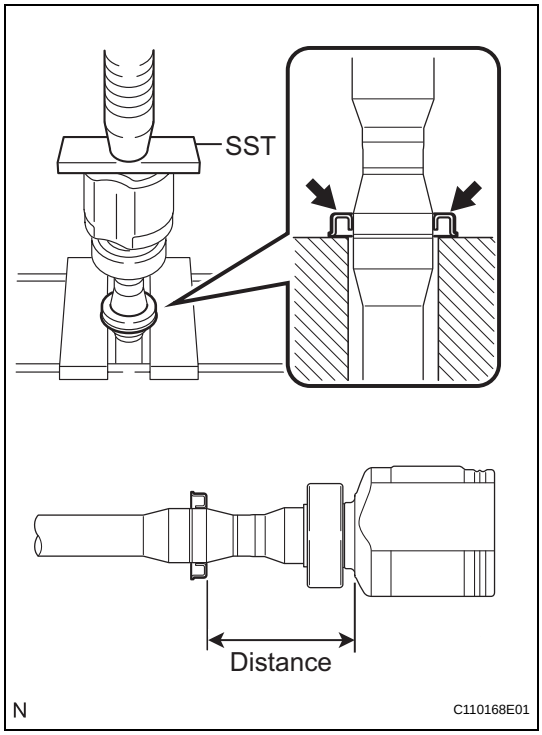

2. REMOVE FRONT DRIVE SHAFT DUST COVER RH

(a) Using SST and a press, press in a new drive shaft dust cover until the distance from the tip of the center drive shaft to the drive shaft dust cover reaches the specification, as shown in the illustration.

SST 09527-10011

Standard distance:

104 +-0.5 mm (4.09 +-0.02 in.)

NOTICE:

Be careful not to damage the dust cover.

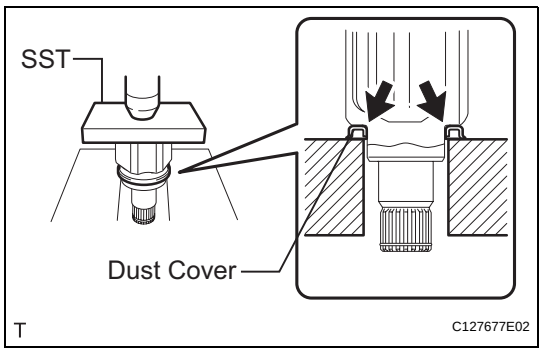

3. INSTALL FRONT DRIVE SHAFT DUST COVER LH

(a) Using SST and a press, press in a new drive shaft dust cover.

SST 09527-10011

NOTICE:

- **The dust cover should be installed so that the drive shaft contacts the dust cover at the location indicated by the arrows in the illustration.**
- **Be careful not to damage the dust cover.**

4. INSTALL FRONT DRIVE SHAFT HOLE SNAP RING LH

(a) Install a new hole snap ring.

5. INSPECT FRONT DRIVE SHAFT

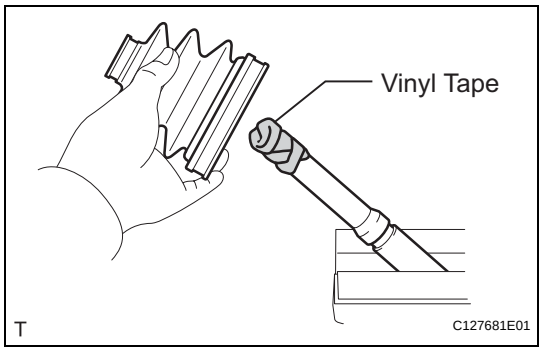

6. INSTALL FRONT AXLE OUTBOARD JOINT BOOT

HINT:

Before installing the boots, wrap the spline of the drive shaft with vinyl tape to prevent the boots from being damaged.

(a) Install new parts to the outboard joint shaft in the following order.
  (1) Outboard joint boot No. 2 clamp
  (2) Outboard joint boot
  (3) Outboard joint boot clamp

(b) Pack the outboard joint shaft and boot with grease from the boot kit.

Standard grease capacity

Item	Grease capacity
2AZ-FE	190 to 200 g (6.7 to 7.1 oz.)
2GR-FE	205 to 215 g (7.2 to 7.6 oz.)

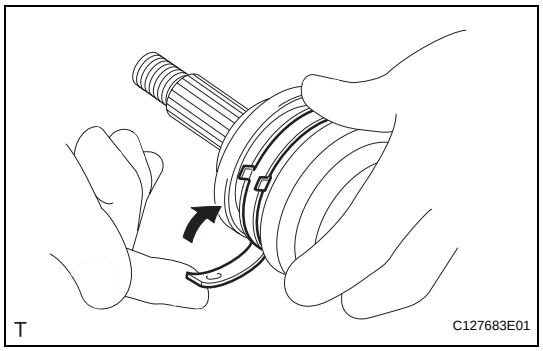

7. INSTALL FRONT AXLE OUTBOARD JOINT BOOT NO. 2 CLAMP

CAUTION:

Wear protective gloves while performing the operation and be careful to avoid cutting your hands or other body parts.

(a) Install a new boot clamp to the outboard joint boot and temporarily bend the lever.

NOTICE:

- **When temporarily bending the lever, make sure not to deform the band and lever.**
- **Set the clamp correctly in the guide groove and align it with the interior of the vehicle as much as possible.**

(b) With the joint on the working surface, use your body weight to press down on the joint with one hand. Then, roll the joint forward, as shown in the illustration, and press the lever in until a "click" sound is heard.

NOTICE:

- **Do not damage the deflector.**
- **Make sure the joint is in full contact with the joint surface at all times.**

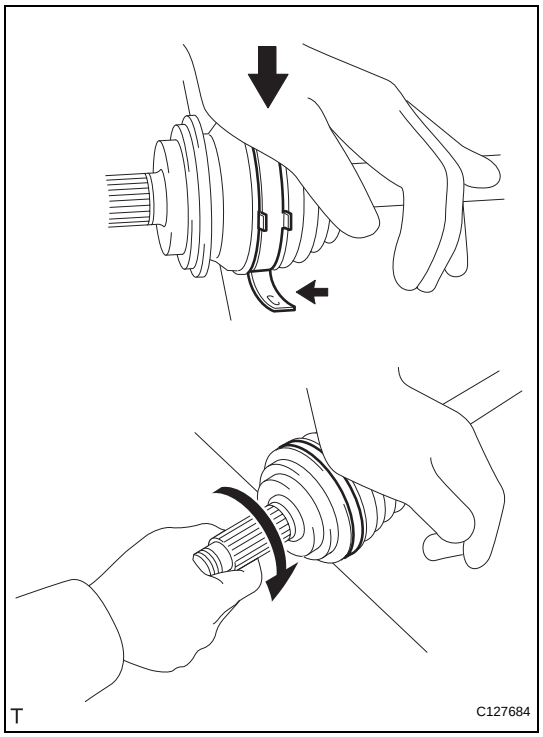

DS

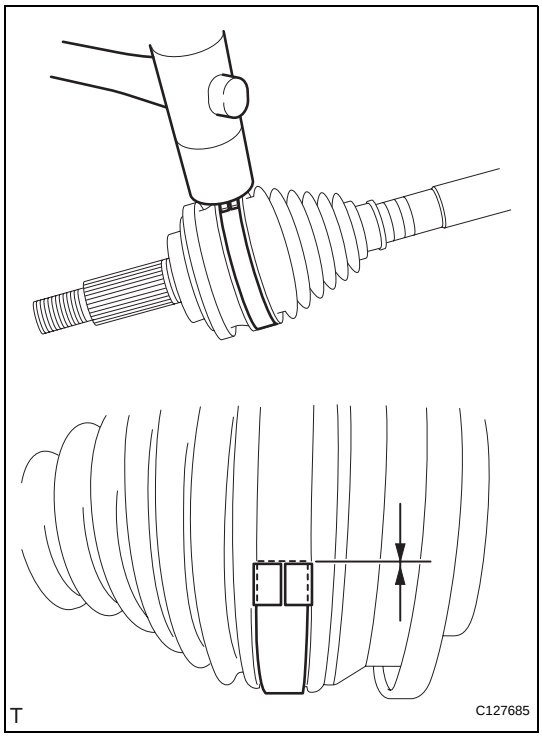

(c) Using a plastic-faced hammer, fix the buckle into place by tapping it. At the same time, use the plastic-faced hammer to adjust the lift of the lever so that the gaps between the buckle flange and lever end flange become even.

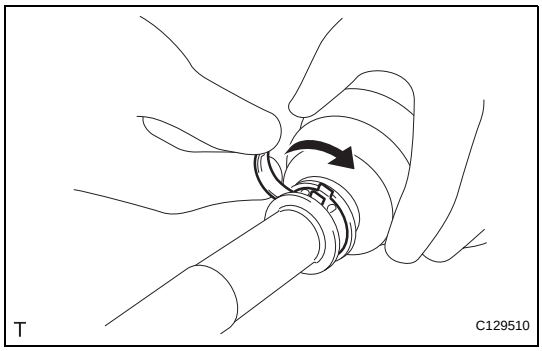

8. INSTALL FRONT AXLE OUTBOARD JOINT BOOT CLAMP

CAUTION:
Wear protective gloves while performing the operation and be careful to avoid cutting your hands or other body parts.

(a) Install a new boot clamp to the outboard joint boot and temporarily bend the lever.

NOTICE:
When temporarily bending the lever, make sure not to deform the band and lever.

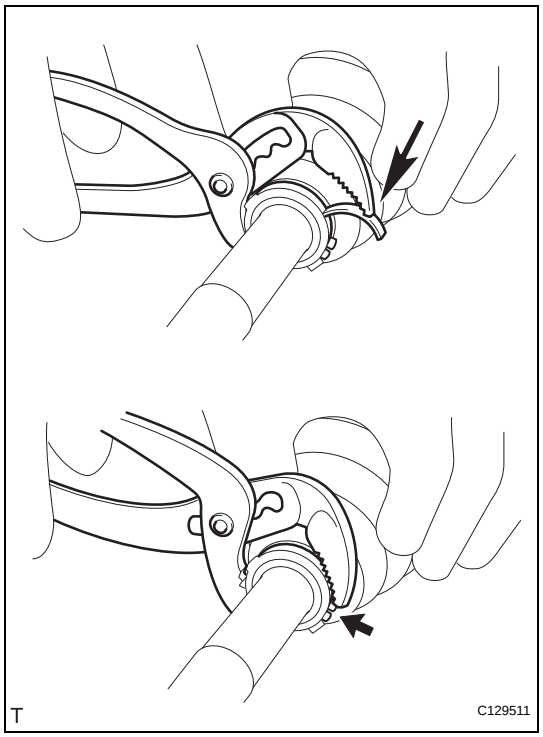

(b) Using water pump pliers, temporarily lock the boot clamp by clamping it down until a "click" sound is heard.

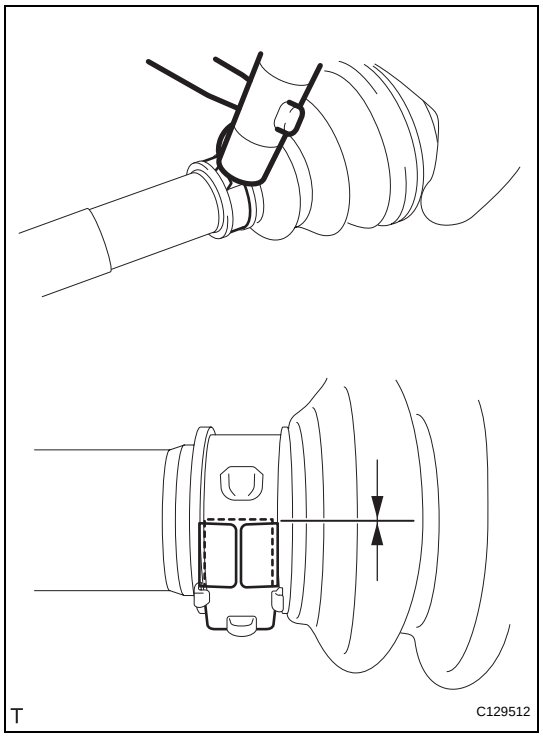

(c) Using a plastic-faced hammer, fix the buckle into place by tapping it. At the same time, use the plastic-faced hammer to adjust the lift of the lever so that the gaps between the buckle flange and lever end flange become even.
NOTICE:
Do not strike the drive shaft forcefully with the plastic-faced hammer.

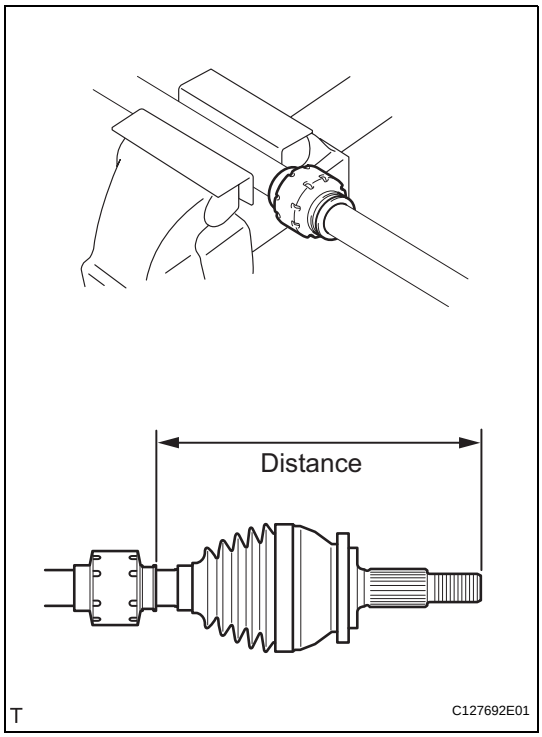

9. INSTALL FRONT DRIVE SHAFT DAMPER LH

(a) Install a new drive shaft damper clamp and the drive shaft damper to the drive shaft.
HINT:
Install the damper clamp to the outboard joint side.

(b) Set the distance, as described below.
Standard distance:
161 to 165 mm (6.339 to 6.496 in.)

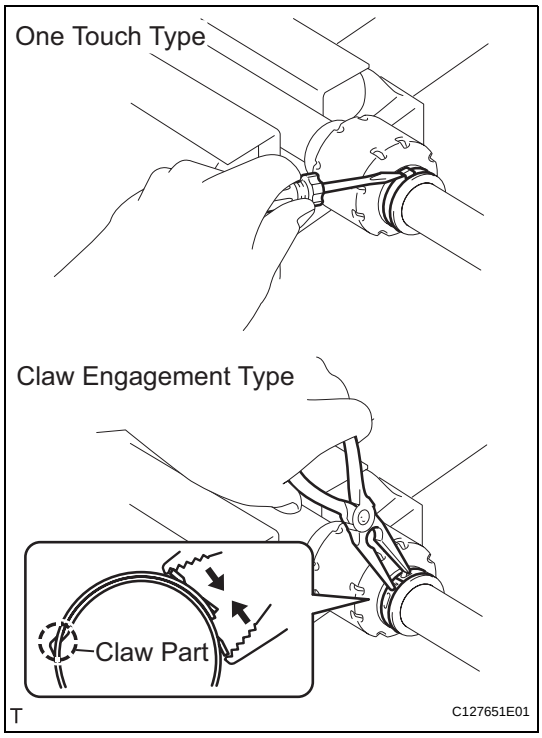

10. INSTALL FRONT DRIVE SHAFT DAMPER CLAMP LH

(a) Hold the front drive shaft lightly in a soft vise.

(b) Install the drive shaft damper clamp to the damper.
NOTICE:
Be sure to install the clamp in the correct position.

(c) One touch type:
Using a screwdriver, install the drive shaft damper clamp, as shown in the illustration.

(d) Claw engagement type:
Using needle-nose pliers, install the drive shaft damper clamp, as shown in the illustration.

11. INSTALL FRONT DRIVE SHAFT DAMPER RH

HINT:
Use the same procedures described for the LH side.

12. INSTALL FRONT DRIVE SHAFT DAMPER CLAMP RH

HINT:
Use the same procedures described for the LH side.

13. INSTALL FRONT DRIVE INBOARD JOINT ASSEMBLY LH

(a) Wrap the spline of the outboard joint shaft with vinyl tape to prevent the boots from being damaged.

(b) Install new parts to the outboard joint shaft in the following order.
(1) Inboard joint boot clamp
(2) Inboard joint boot No. 2 clamp
(3) Inboard joint boot

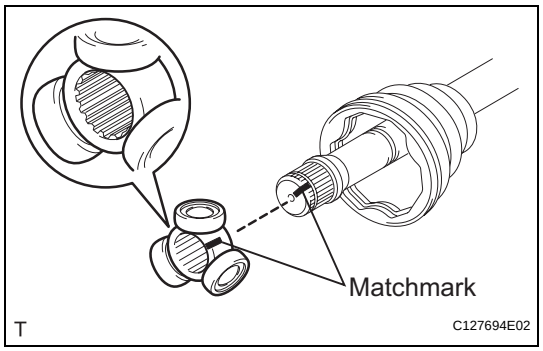

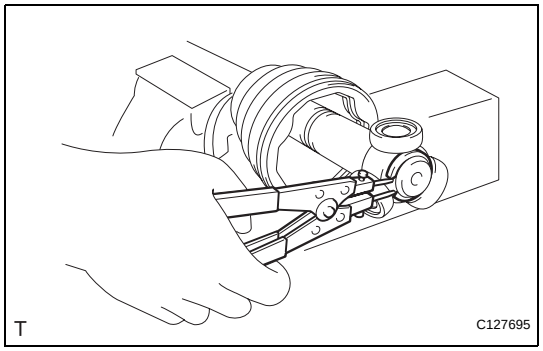

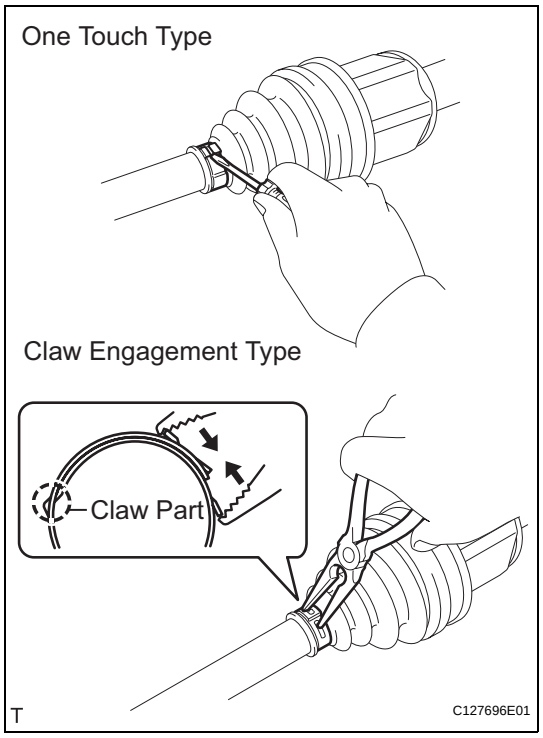

(c) Place the beveled side of the tripod axial spline toward the outboard joint.
(d) Align the matchmarks placed before removal.
(e) Using a brass bar and hammer, tap the tripod joint onto the drive shaft.
NOTICE:
- **Do not tap the rollers.**
- **Be sure to install the tripod joint in the correct direction.**

(f) Pack the inboard joint shaft and boot with grease from the boot kit.
Standard grease capacity:
175 to 185 g (6.2 to 6.5 oz.)

(g) Using a snap ring expander, install a new shaft snap ring.
(h) Align the matchmarks, and install the inboard joint to the outboard joint shaft.

14. INSTALL FRONT DRIVE INBOARD JOINT ASSEMBLY RH
HINT:
Use the same procedures described for the LH side.

15. INSTALL FRONT AXLE INBOARD JOINT BOOT
(a) Install the inboard joint boot to the inboard joint.

16. INSTALL FRONT AXLE INBOARD JOINT BOOT CLAMP
(a) One touch type:
Using a screwdriver, install the inboard joint boot clamp, as shown in the illustration.
NOTICE:
Be careful not to damage the boot.
(b) Claw engagement type:
Using needle-nose pliers, install the inboard joint boot clamp, as shown in the illustration.
NOTICE:
Be careful not to damage the boot.

DS

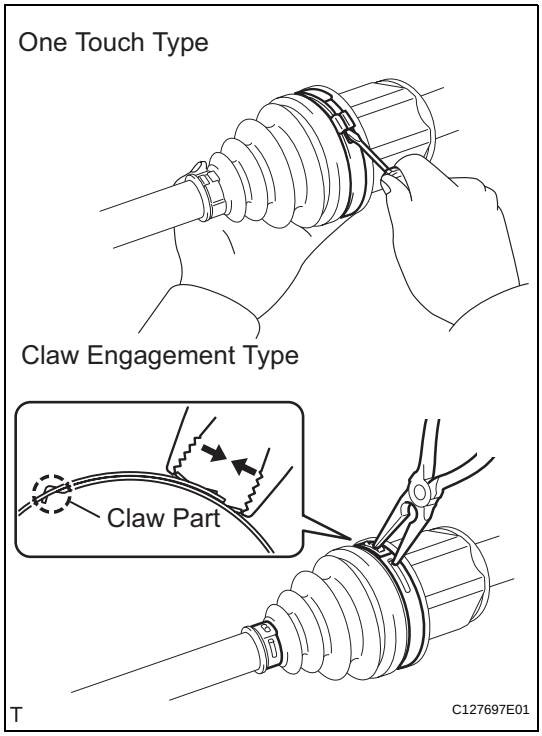

17. INSTALL FRONT AXLE INBOARD JOINT BOOT NO. 2 CLAMP

(a) One touch type:
Using a screwdriver, install the No. 2 inboard joint boot clamp, as shown in the illustration.
NOTICE:
Be careful not to damage the boot.

(b) Claw engagement type:
Using needle-nose pliers, install the No. 2 inboard joint boot clamp, as shown in the illustration.
NOTICE:
Be careful not to damage the boot.

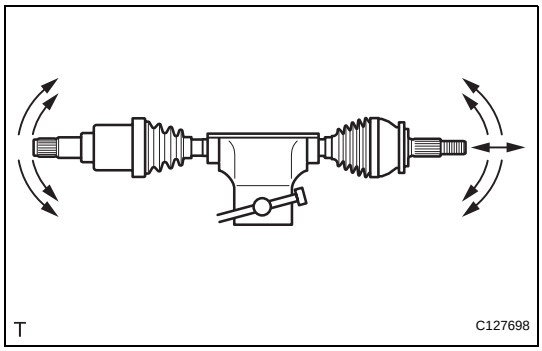

18. INSPECT FRONT DRIVE SHAFT

(a) Check that there is no severe play in the radial direction of the outboard joint.

(b) Check that the inboard joint slides smoothly in the thrust direction.

(c) Check that there is no severe play in the radial direction of the inboard joint.

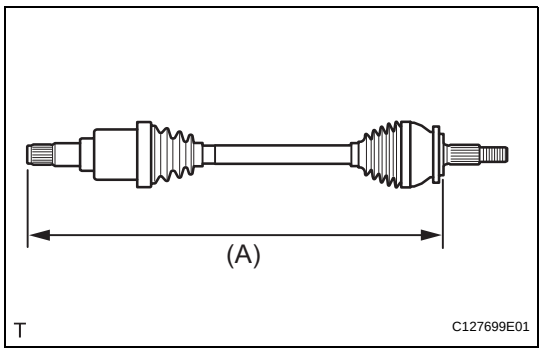

(d) Check the boots for damage.
NOTICE:
Keep the drive shaft assembly level during inspection.
HINT:
For dimension (A), refer to the following values.
Standard reference value

Item	Drive shaft LH (Dimension)	Drive shaft RH (Dimension)
2AZ-FE	585.2 mm (23.039 in.)	893.9 mm (35.193 in.)
2GR-FE	570.9 mm (22.476 in.)	922.4 mm (36.315 in.)

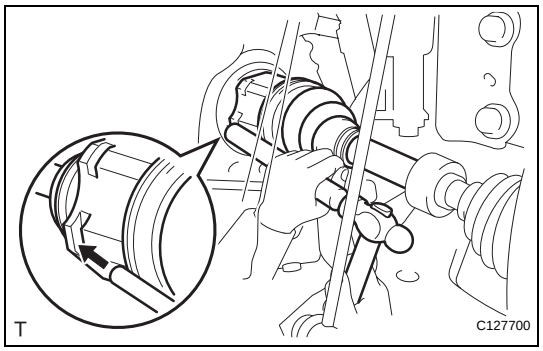

INSTALLATION

(2005/11-2006/01)

1. **INSTALL FRONT DRIVE SHAFT ASSEMBLY LH**
   (a) Coat the spline of the inboard joint shaft with gear oil.
   (b) Using a brass bar and hammer, align the shaft splines in the drive shaft.
   NOTICE:
   - **Set the snap ring with the opening side facing downwards.**
   - **Be careful not to damage the oil seal, boot and dust cover.**

2. **INSTALL FRONT DRIVE SHAFT ASSEMBLY RH**
   (a) Coat the spline of the inboard joint shaft with gear oil.
   (b) Align the shaft splines and securely insert the drive shaft.
   NOTICE:
   Do not damage the oil seal.

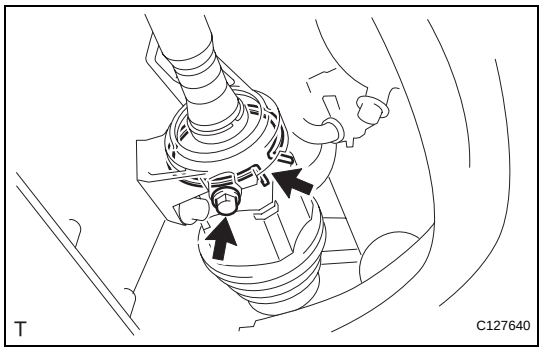

   (c) Squeeze the ends of the bracket hole snap ring and install it to the bearing bracket.
   (d) Install the bearing bracket bolt
   Torque: 32.4 N*m (330 kgf*cm, 24 ft.*lbf)

3. **CONNECT STEERING KNUCKLE WITH AXLE HUB LH**
   (a) Align the shaft splines in the drive shaft to the steering knuckle with axle hub.

4. **CONNECT STEERING KNUCKLE WITH AXLE HUB RH**
   HINT:
   Use the same procedures described for LH side.

5. **CONNECT FRONT SUSPENSION LOWER NO. 1 ARM SUB-ASSEMBLY LH (See page AH-10)**

6. **CONNECT FRONT SUSPENSION LOWER NO. 1 ARM SUB-ASSEMBLY RH**
   HINT:
   Use the same procedures described for LH side.

7. **INSTALL FRONT STABILIZER LINK ASSEMBLY LH (See page SP-31)**

8. **INSTALL FRONT STABILIZER LINK ASSEMBLY RH**
   HINT:
   Use the same procedures described for LH side.

9. **INSTALL TIE ROD END SUB-ASSEMBLY LH (See page PS-45)**

10. **INSTALL TIE ROD END SUB-ASSEMBLY RH**
    HINT:
    Use the same procedures described for LH side.

11. **CONNECT FRONT SPEED SENSOR LH**
    (a) Connect the speed sensor (see page BC-193).

DS

12. CONNECT FRONT SPEED SENSOR RH
HINT:
Use the same procedures described for the LH side.

13. INSTALL FRONT AXLE HUB NUT (See page AH-10)

14. INSTALL FRONT WHEEL
Torque: 103 N*m (1,050 kgf*cm, 76 ft.*lbf)

15. ADD AUTOMATIC TRANSAXLE FLUID
(a) Add automatic transaxle fluid for U140F (see page AX-152).
(b) Add automatic transaxle fluid for U241E (see page AX-151).

16. CHECK FOR AUTOMATIC TRANSAXLE FLUID LEAKAGE

17. INSPECT AND ADJUST FRONT WHEEL ALIGNMENT
(a) Inspect and adjust front wheel alignment (see page SP-3).

INSTALLATION

(2006/01-)

1. INSTALL FRONT DRIVE SHAFT ASSEMBLY LH
(a) Coat the spline of the inboard joint shaft with gear oil.
(b) Align the shaft splines and tap in the drive shaft with a brass bar and hammer.
NOTICE:
- **Set the snap ring with the opening side facing downwards.**
- **Be careful not to damage the oil seal, boot and dust cover.**

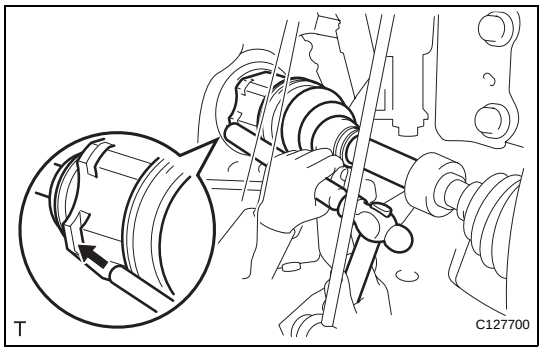

2. INSTALL FRONT DRIVE SHAFT ASSEMBLY RH
(a) Coat the spline of the inboard joint shaft with gear oil.
(b) Align the shaft splines and securely insert the drive shaft.
NOTICE:
Do not damage the oil seal.
(c) Squeeze the ends of the bracket hole snap ring and install it to the bearing bracket.
(d) Install the bearing bracket bolt.
Torque: 32.4 N*m (330 kgf*cm, 24 ft.*lbf)

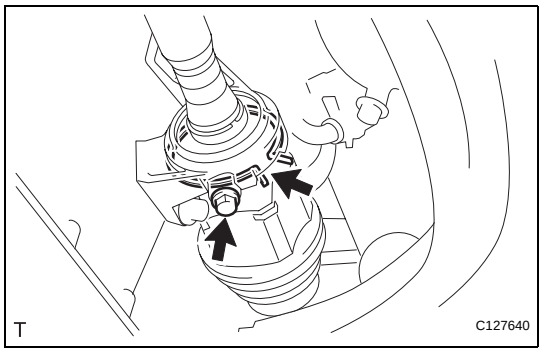

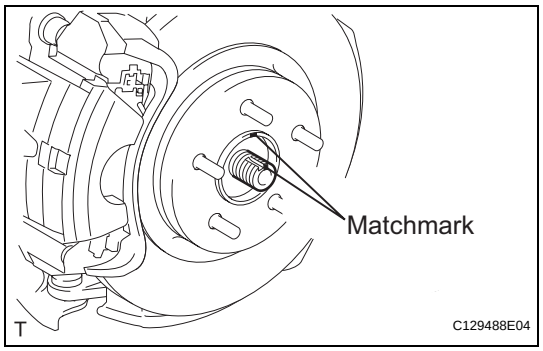

3. **CONNECT STEERING KNUCKLE WITH AXLE HUB LH**
   (a) Align the shaft splines in the drive shaft to the steering knuckle with axle hub, and connect the steering knuckle with axle hub.

4. **CONNECT STEERING KNUCKLE WITH AXLE HUB RH**
   HINT:
   Use the same procedures described for the LH side.

5. **CONNECT FRONT SUSPENSION LOWER NO. 1 ARM SUB-ASSEMBLY LH (See page SP-24)**

6. **CONNECT FRONT SUSPENSION LOWER NO. 1 ARM SUB-ASSEMBLY RH**
   HINT:
   Use the same procedures described for the LH side.

7. **INSTALL FRONT STABILIZER LINK ASSEMBLY LH (See page SP-31)**

8. **INSTALL FRONT STABILIZER LINK ASSEMBLY RH**
   HINT:
   Use the same procedures described for the LH side.

9. **INSTALL TIE ROD END SUB-ASSEMBLY LH (See page PS-45)**

10. **INSTALL TIE ROD END SUB-ASSEMBLY RH**
    HINT:
    Use the same procedures described for the LH side.

11. **CONNECT FRONT SPEED SENSOR LH**
    (a) Connect the speed sensor (see page BC-193).

12. **CONNECT FRONT SPEED SENSOR RH**
    HINT:
    Use the same procedures described for the LH side.

13. **INSTALL FRONT AXLE HUB NUT (See page AH-11)**

14. **INSTALL FRONT WHEEL**
    Torque: 103 N*m (1,050 kgf*cm, 76 ft.*lbf)

15. **ADD AUTOMATIC TRANSAXLE FLUID**
    (a) Add automatic transaxle fluid for U140F (see page AX-152).
    (b) Add automatic transaxle fluid for U241E (see page AX-151).
    (c) Add automatic transaxle fluid for U151F (see page AX-178).

16. **CHECK FOR AUTOMATIC TRANSAXLE FLUID LEAKAGE**

17. **INSPECT AND ADJUST FRONT WHEEL ALIGNMENT**
    (a) Inspect and adjust the front wheel alignment (see page SP-3).

FRONT DRIVE SHAFT ASSEMBLY (for 4WD)

COMPONENTS

(2005/11-2006/01)

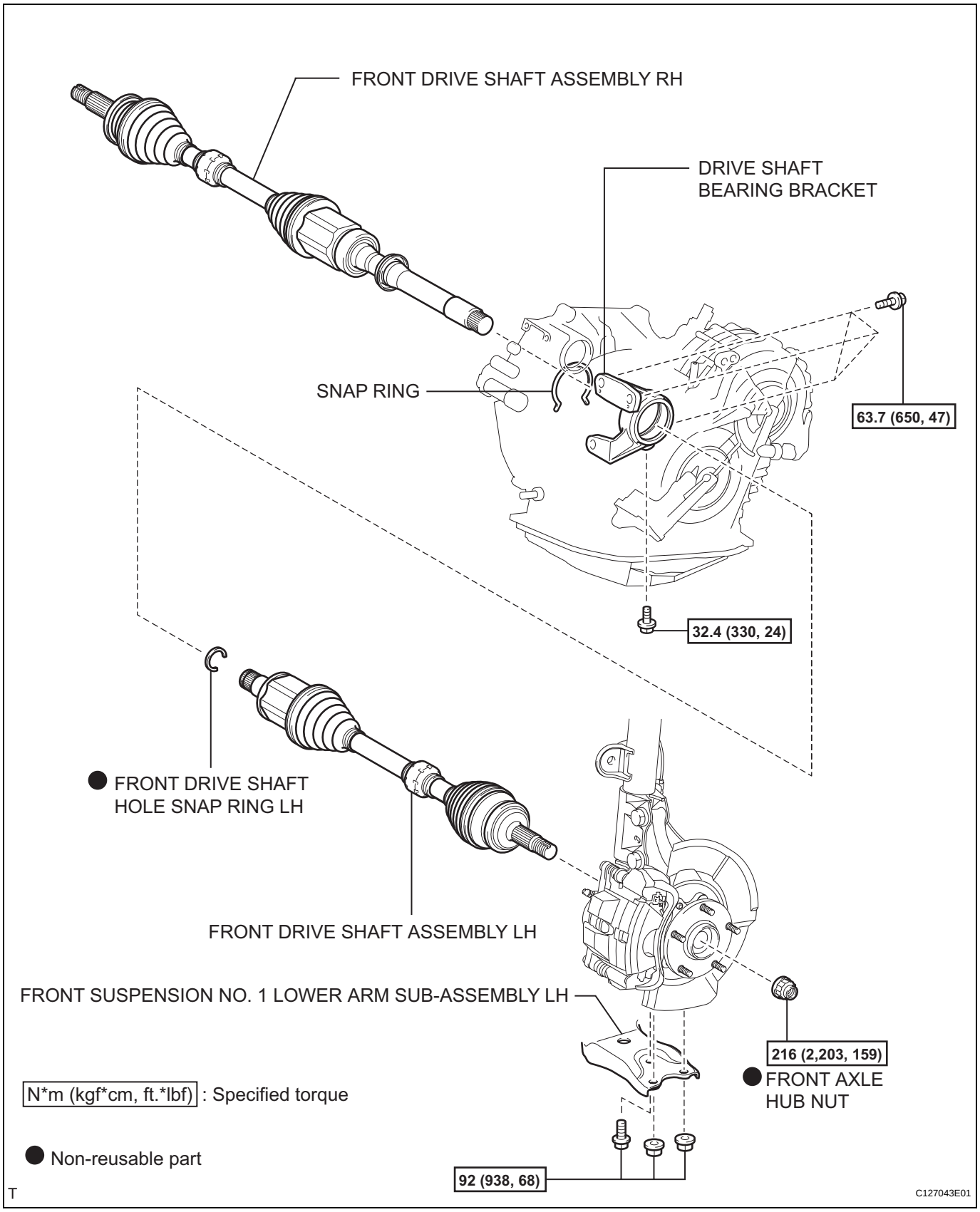

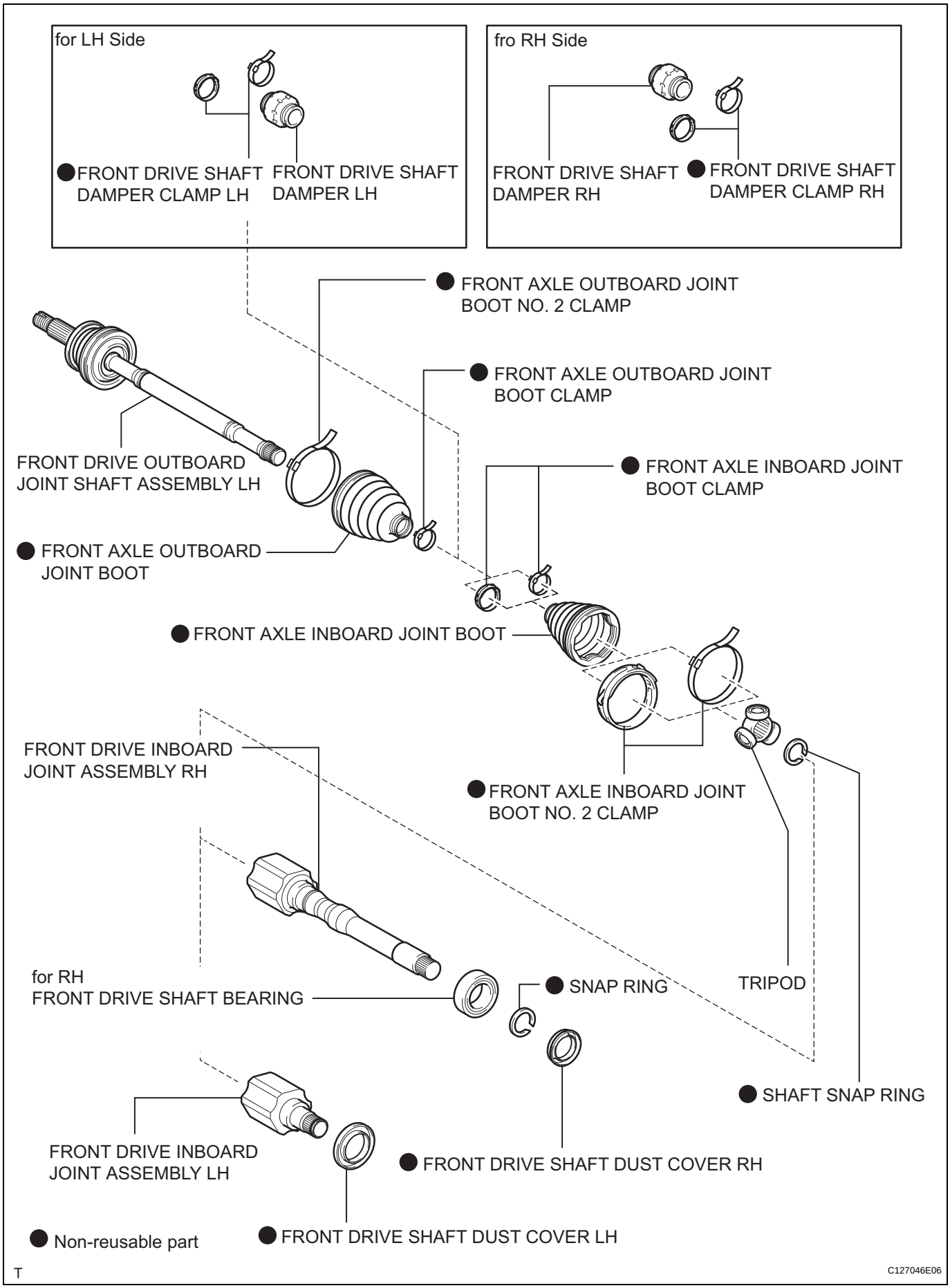
for LH Side
● FRONT DRIVE SHAFT DAMPER CLAMP LH
FRONT DRIVE SHAFT DAMPER LH
fro RH Side
FRONT DRIVE SHAFT DAMPER RH
● FRONT DRIVE SHAFT DAMPER CLAMP RH
● FRONT AXLE OUTBOARD JOINT BOOT NO. 2 CLAMP
● FRONT AXLE OUTBOARD JOINT BOOT CLAMP
FRONT DRIVE OUTBOARD JOINT SHAFT ASSEMBLY LH
● FRONT AXLE INBOARD JOINT BOOT CLAMP
● FRONT AXLE OUTBOARD JOINT BOOT
● FRONT AXLE INBOARD JOINT BOOT
FRONT DRIVE INBOARD JOINT ASSEMBLY RH
● FRONT AXLE INBOARD JOINT BOOT NO. 2 CLAMP
for RH FRONT DRIVE SHAFT BEARING
● SNAP RING
TRIPOD
● SHAFT SNAP RING
FRONT DRIVE INBOARD JOINT ASSEMBLY LH
● FRONT DRIVE SHAFT DUST COVER RH
● Non-reusable part
● FRONT DRIVE SHAFT DUST COVER LH
T
C127046E06

DISASSEMBLY

HINT:

- Use the same procedures for the RH side and LH side.
- The procedures listed below are for the LH side.

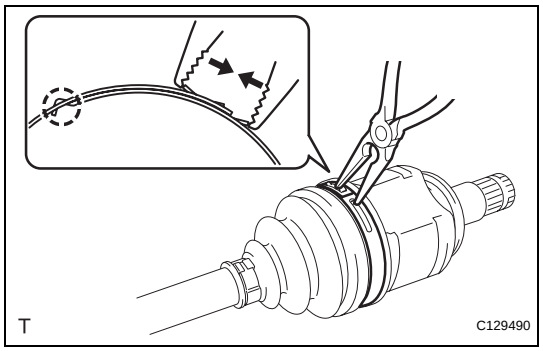

1. REMOVE REAR DRIVE SHAFT INBOARD JOINT BOOT NO. 2 CLAMP LH

(a) Using needle-nose pliers, remove the inboard joint boot clamp, as shown in the illustration.

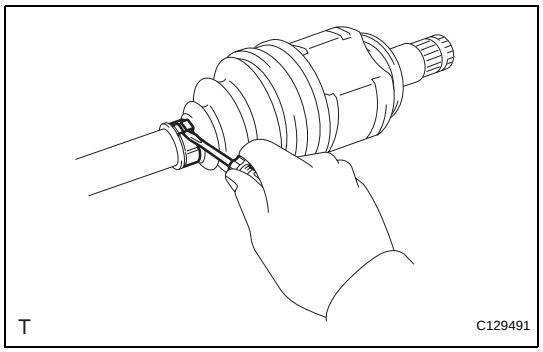

2. REMOVE REAR DRIVE SHAFT INBOARD JOINT BOOT CLAMP LH

(a) Using needle-nose pliers, remove the inboard joint boot clamp, as shown in the illustration.

3. REMOVE REAR AXLE INBOARD JOINT BOOT

(a) Remove the boot from the inboard joint.

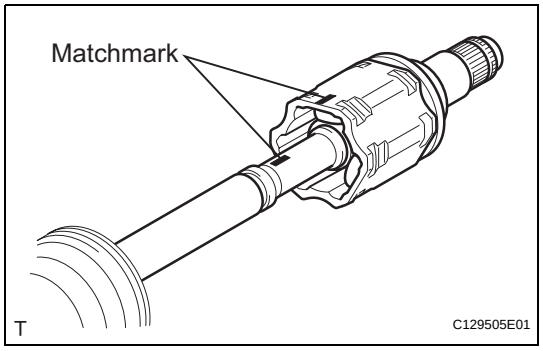

4. REMOVE REAR DRIVE SHAFT INBOARD JOINT ASSEMBLY LH

(a) Remove any old grease from the inboard joint.

(b) Put matchmarks on the inboard joint and outboard joint shaft.

NOTICE:

Do not punch the marks.

(c) Remove the inboard joint from the outboard joint shaft.

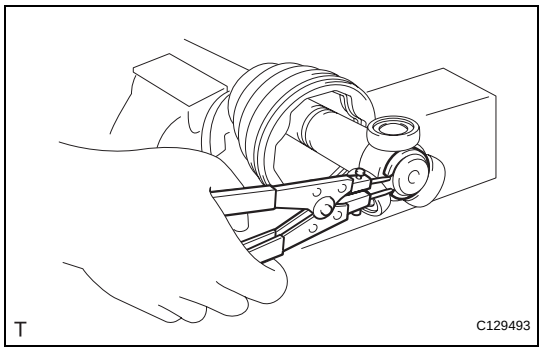

(d) Using a snap ring expander, remove the shaft snap ring.

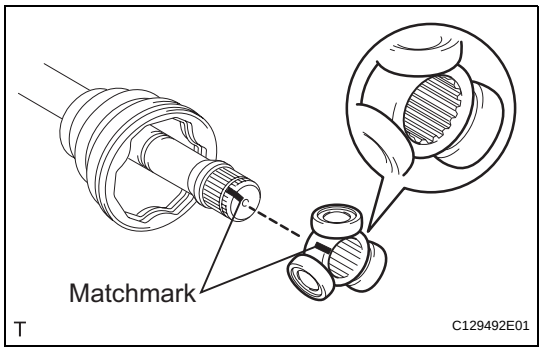

(e) Put matchmarks on the outboard joint shaft and tripod joint.
NOTICE:
Do not punch the marks.
(f) Using a brass bar and hammer, tap out the tripod joint from the outboard joint shaft.
NOTICE:
Do not tap the rollers.
(g) Remove the inboard joint boot.

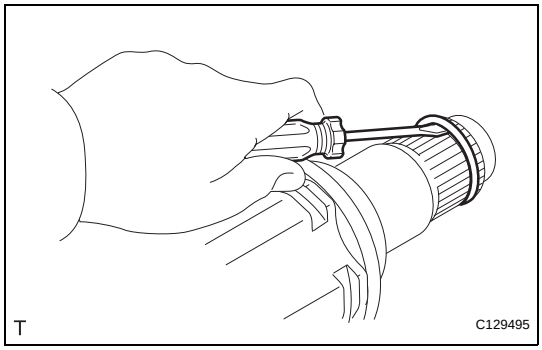

5. REMOVE REAR DRIVE SHAFT INBOARD JOINT LH SHAFT SNAP RING
(a) Using a screwdriver, remove the hole snap ring.

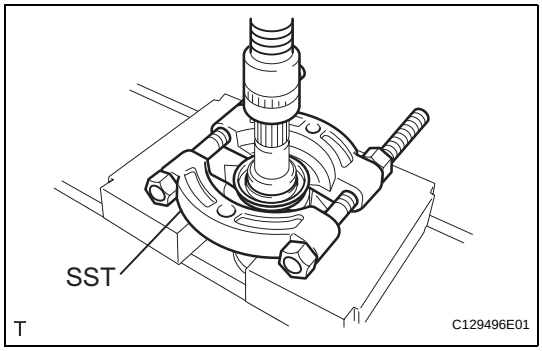

6. REMOVE REAR DRIVE SHAFT DUST COVER LH
(a) Using SST and a press, press out the shaft dust cover.
SST 09950-00020
NOTICE:
Be careful not to drop the inboard joint.

REASSEMBLY

HINT:
- Use the same procedures for the RH side and LH side.
- The procedures listed below are for the LH side.

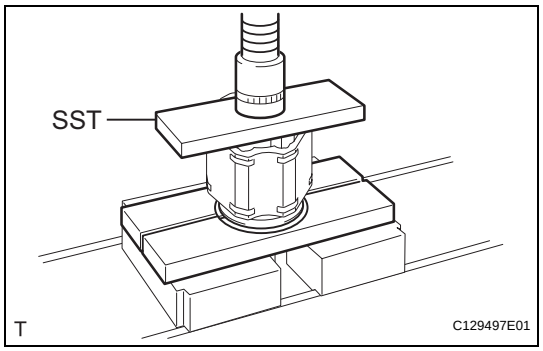

1. INSTALL REAR DRIVE SHAFT DUST COVER LH

(a) Using SST and a press, press in a new drive shaft dust cover.
SST 09527-10011
NOTICE:
- **The dust cover should be installed completely.**
- **Be careful not to damage the dust cover.**

2. INSTALL REAR DRIVE SHAFT INBOARD JOINT SHAFT SNAP RING LH

(a) Install a new hole snap ring.

3. INSTALL REAR DRIVE SHAFT INBOARD JOINT ASSEMBLY LH

(a) Wrap the spline of the outboard joint shaft with vinyl tape to prevent the boots from being damaged.

(b) Install new parts to the outboard joint shaft in the following order.
(1) Inboard joint boot clamp
(2) No. 2 inboard joint boot clamp
(3) Inboard joint boot

(c) Place the beveled side of the tripod axial spline toward the outboard joint.

(d) Align the matchmarks placed before removal.

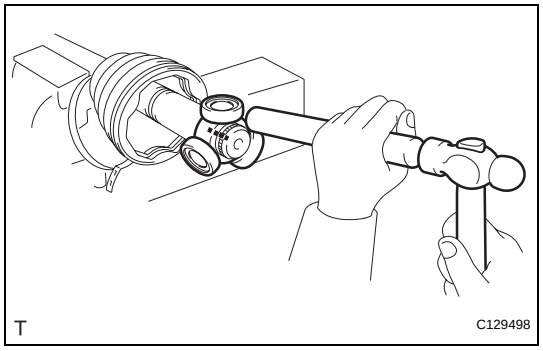

(e) Using a brass bar and hammer, tap the tripod joint onto the drive shaft.
NOTICE:
- **Do not tap the rollers.**
- **Be sure to install the tripod joint in the correct direction.**

(f) Pack the inboard joint shaft and boot with grease from the boot kit.
Standard grease capacity:
86 to 96 g (3.0 to 3.4 oz.)

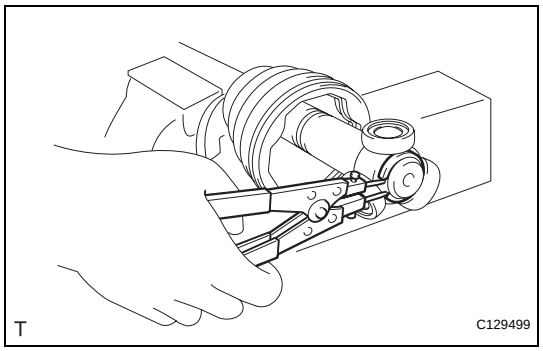

(g) Using a snap ring expander, install a new shaft snap ring.

(h) Align the matchmarks, and install the inboard joint to the outboard joint shaft.

4. INSTALL REAR AXLE INBOARD JOINT BOOT

(a) Install the inboard joint boot to the inboard joint.

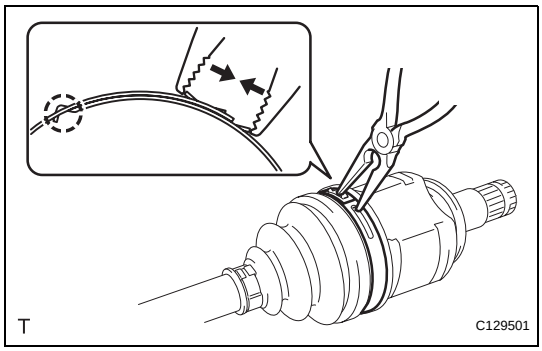

5. INSTALL REAR DRIVE SHAFT INBOARD JOINT BOOT NO. 2 CLAMP LH

(a) Using needle-nose pliers, install the No. 2 inboard joint boot clamp, as shown in the illustration.

NOTICE:

Be careful not to damage the boot.

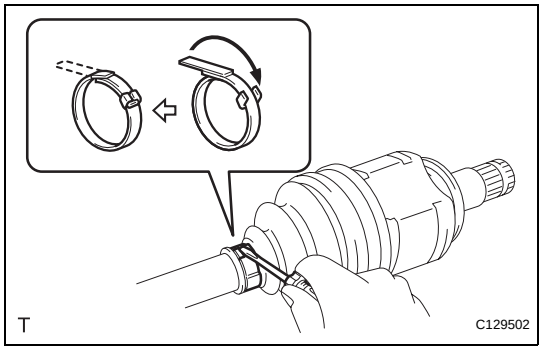

6. INSTALL REAR DRIVE SHAFT INBOARD JOINT BOOT CLAMP LH

(a) Using a screwdriver, install the inboard joint boot clamp, as shown in the illustration.

NOTICE:

Be careful not to damage the boot.

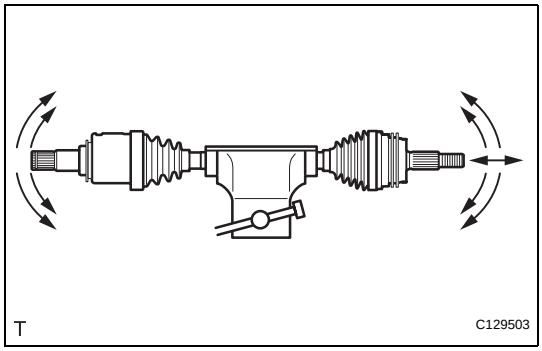

7. INSPECT REAR DRIVE SHAFT

(a) Check that there is no severe play in the radial direction of the outboard joint.

(b) Check that the inboard joint slides smoothly in the thrust direction.

(c) Check that there is no severe play in the radial direction of the inboard joint.

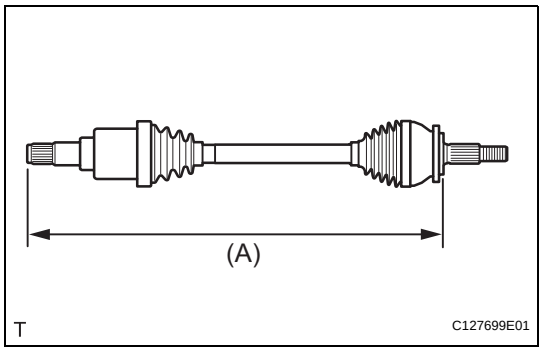

(d) Check the boots for damage.

NOTICE:

Keep the drive shaft assembly level during inspection.

HINT:

For dimension (A), refer to the following values.

Reference value:

733.8 mm (28.890 in.)

INSTALLATION

HINT:

- Use the same procedures for the RH side and LH side.
- The procedures listed below are for the LH side.

1. INSTALL REAR DRIVE SHAFT ASSEMBLY LH

(a) Align the splines of the rear drive shaft outboard joints and, install the left and right rear drive shafts to the axle hub.

2. INSTALL DIFFERENTIAL CARRIER ASSEMBLY

(a) Apply hypoid gear oil to the splines of the left and right rear drive shaft inboard joints.

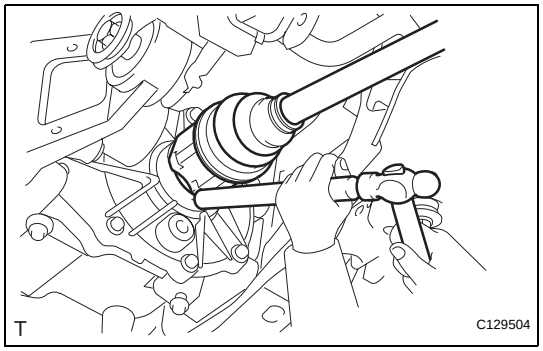

(b) Align the splines of the rear drive shaft inboard joints and, using a brass bar and hammer, tap in the left and right rear drive shafts.

NOTICE:

- **Face the cutout section of the snap ring downward.**
- **Do not damage the oil seal during the insertion.**
- **Do not strike the tip of the outboard joint with the hammer.**

HINT:

Determine whether or not the rear drive shaft is completely tapped in by checking for changes in sound or the reaction force of the brass bar

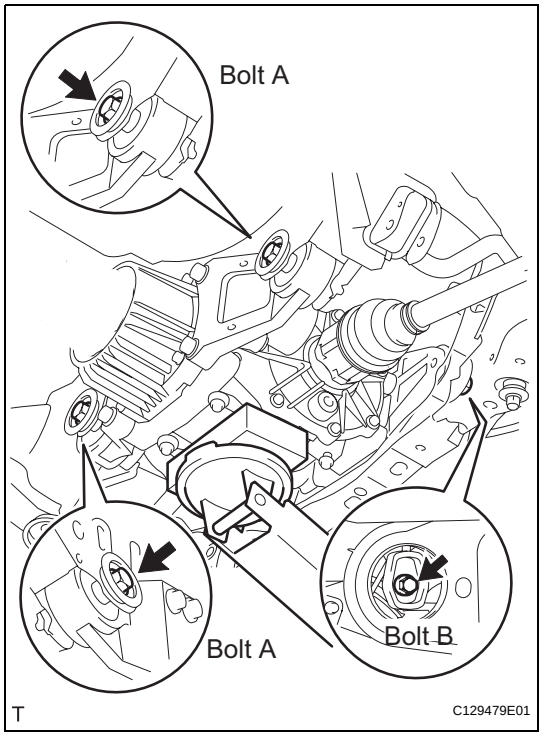

(c) Slowly raise the transmission jack, fix the nuts in place and install the 3 bolts.

Torque: 86 N*m (877 kgf*cm, 63 ft.*lbf) for bolt A
140 N*m (1,428 kgf*cm, 103 ft.*lbf) for bolt B

NOTICE:

Tighten the bolts, not the nuts.

3. INSTALL SKID CONTROL SENSOR WIRE (for 2WD) (See page BC-201)

4. INSTALL REAR SPEED SENSOR LH (for 4WD) (See page BC-206)

5. INSTALL REAR AXLE SHAFT NUT (See page AH-18)

6. TEMPORARILY INSTALL PROPELLER WITH CENTER BEARING SHAFT ASSEMBLY (See page PR-5)

7. TIGHTEN PROPELLER WITH CENTER BEARING SHAFT ASSEMBLY (See page PR-6)

8. INSPECT AND ADJUST JOINT ANGLE (See page PR-4)

9. INSTALL CENTER EXHAUST PIPE ASSEMBLY (See page EX-5)

10. INSTALL TAILPIPE ASSEMBLY (See page EX-6)

DS

11. INSTALL REAR WHEEL
Torque: 103 N*m (1,050 kgf*cm, 76 ft.*lbf)

12. ADD DIFFERENTIAL OIL (See page DF-3)

13. CONNECT CABLE TO NEGATIVE BATTERY TERMINAL
NOTICE:
When the warning light is illuminated or the battery has been disconnected and reconnected, turning the power switch may not start the system on the first try. If so, turn the power switch again.

14. CHECK FOR DIFFERENTIAL OIL LEAKAGE

15. CHECK FOR EXHAUST GAS LEAKAGE
If gas is leaking, tighten the areas necessary to stop the leak. Replace damaged parts as necessary.

16. INSPECT REAR WHEEL ALIGNMENT
(a) Inspect the rear wheel alignment (see page SP-7).

REAR DRIVE SHAFT ASSEMBLY

COMPONENTS

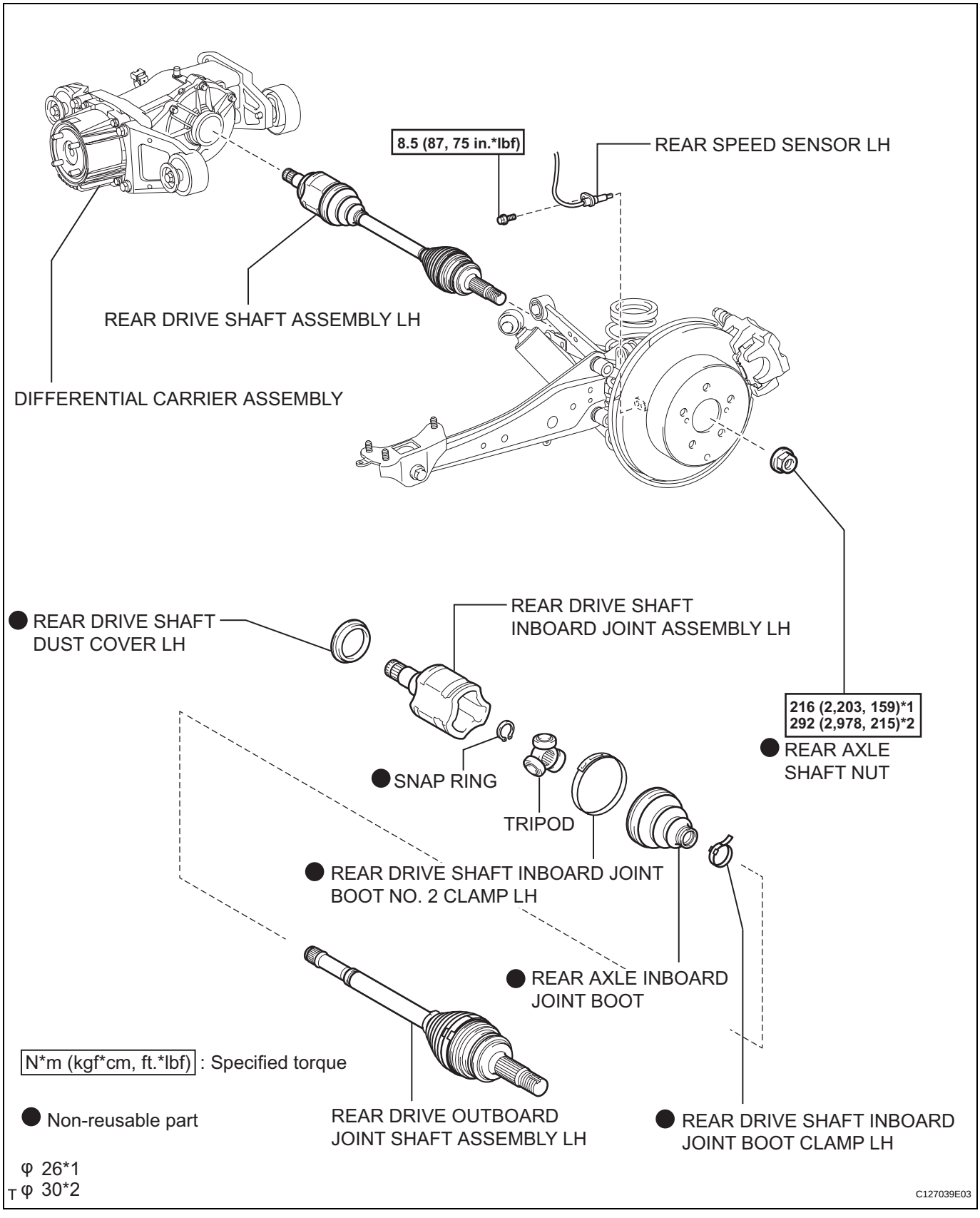

REMOVAL

HINT:

- Use the same procedures for the RH side and LH side.
- The procedures listed below are for the LH side.

1. **DISCONNECT CABLE FROM NEGATIVE BATTERY TERMINAL**
   CAUTION:
   Wait at least 90 seconds after disconnecting the cable from the negative (-) battery terminal to prevent airbag and seat belt pretensioner activation.
2. **DRAIN DIFFERENTIAL OIL (See page DF-10)**
3. **REMOVE REAR WHEEL**
4. **REMOVE TAILPIPE ASSEMBLY (See page EX-2)**
5. **REMOVE CENTER EXHAUST PIPE ASSEMBLY (See page EX-2)**
6. **REMOVE PROPELLER WITH CENTER BEARING SHAFT ASSEMBLY (See page PR-3)**
7. **REMOVE REAR AXLE SHAFT NUT (See page AH-17)**
8. **DISCONNECT DIFFERENTIAL CARRIER ASSEMBLY**
   (a) Support the rear differential carrier with a transmission jack or equivalent.
   (b) Fix the nuts in place and remove bolt A, bolt B and bolt C.
   NOTICE:
   Do not loosen the nuts. Loosen the bolts.

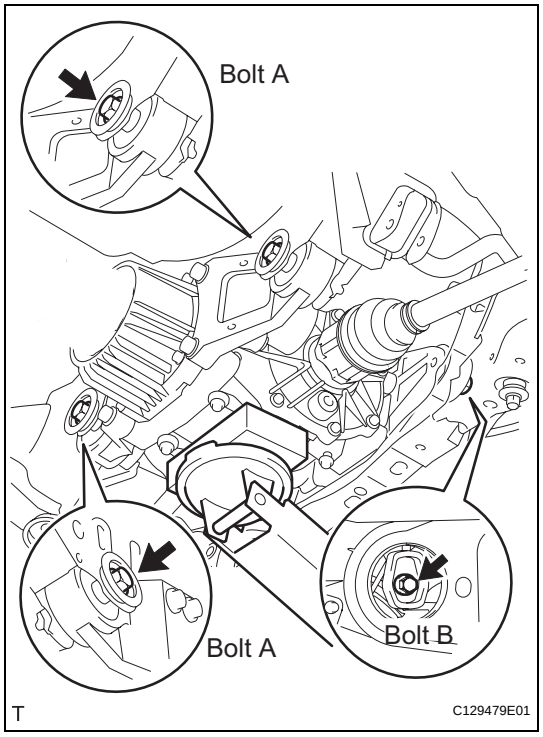

   (c) Slowly lower the jack and then tilt the rear differential carrier as shown in the illustration.

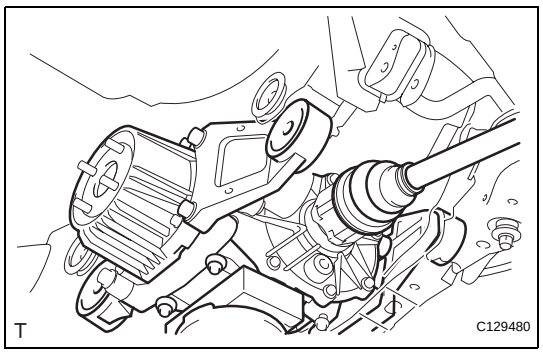

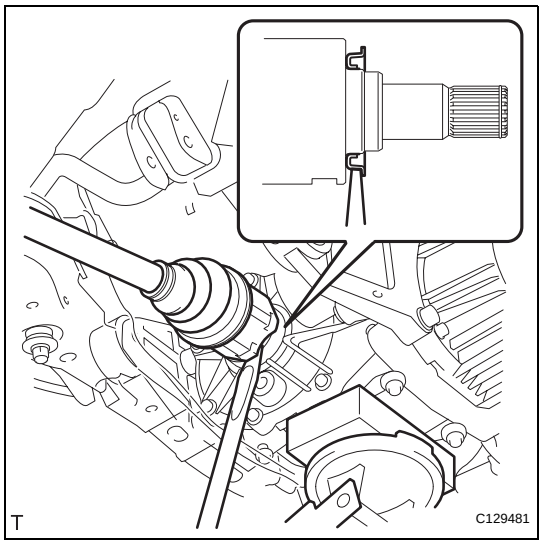

(d) Set the tip of the tire lever to the position on the rear drive shaft inboard joint shown in the illustration. Then, using the ribbed part of the rear differential carrier as a fulcrum, disconnect the left and right rear drive shafts.
NOTICE:
Do not scratch the rear drive shaft dust cover.

9. DISCONNECT SKID CONTROL SENSOR WIRE (for 2WD) (See page BC-198)

10. DISCONNECT REAR SPEED SENSOR LH (for 4WD) (See page BC-205)

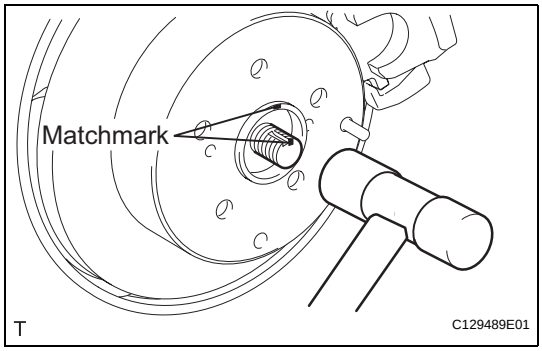

11. REMOVE REAR DRIVE SHAFT ASSEMBLY LH

(a) Put matchmarks on the drive shaft and the axle hub.
NOTICE:
Do not punch the marks.

(b) Using a plastic-faced hammer, separate the drive shaft from the axle hub.
NOTICE:
Be careful not to damage the boot and speed sensor rotor. Do not excessively push out the drive shaft from the axle.

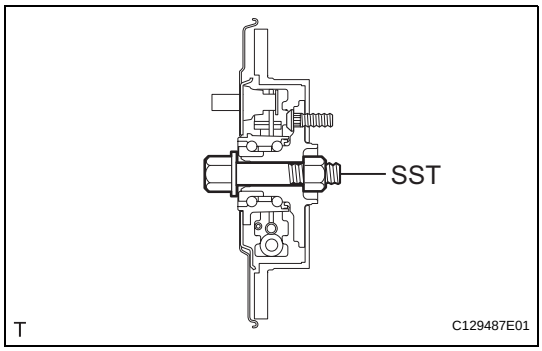

12. FIX REAR DRIVE SHAFT ASSEMBLY
NOTICE:
The hub bearing could be damaged if it is subjected to the vehicle weight, such as when moving the vehicle with the drive shaft removed. Therefore, if it is absolutely necessary to place the vehicle weight on the hub bearing, first support it with SST.
SST 09608-16042 (09608-02021, 09608-02041)

SYSTEM DESCRIPTION

1. ENGINE IMMOBILISER SYSTEM DESCRIPTION

The engine immobiliser system is designed to prevent the vehicle from being stolen. This system uses a transponder key ECU that stores the key codes of authorized ignition keys. If an attempt is made to start the engine using an unauthorized key, the ECU sends a signal to the ECM to prohibit fuel delivery and ignition, effectively disabling the engine.

2. FUNCTION OF MAIN COMPONENT

Component	Outline
Transponder key coil/amplifier	When key is inserted into ignition key cylinder, key coil receives key code. Then amplifier amplifies ID code and outputs it to transponder key ECU.
Unlock warning switch assembly	Detects whether key is in ignition key cylinder and outputs results to transponder key ECU
ECM	Through SFI communication, ECM receives ID verification results from transponder key ECU. ECM also verifies ECUs. Then ECM judges whether or not to immobilize engine.
Security indicator light	Depending on operation of transponder key ECU, interior security indicator light comes on or starts blinking

3. SYSTEM FUNCTION

- When the transponder key ECU detects that the unlock warning switch is ON, the ECU provides current to the transponder key coil and produces a faint electric wave. A transponder chip in the key grip receives the wave and outputs a key ID code signal. The transponder key coil receives this signal, the transponder key amplifier amplifies it, and then the signal is transmitted to the ECU. The ECU matches the key's ID code with the vehicle's ID code, which was previously registered in the ECU and then communicates the results to the ECM using SFI communication.
- After the identification results show that the key's ID code matches the vehicle's ID code and the ECU has confirmed their match: 1) the engine immobiliser system is canceled and the engine starting controls (fuel injection control and ignition control) enter standby mode; and 2) the ECU receives a security indicator light signal, and turns the security indicator light OFF.

HOW TO PROCEED WITH TROUBLESHOOTING

HINT:
Use these procedures to troubleshoot the engine immobiliser system.
*: Use the intelligent tester.

1 VEHICLE BROUGHT TO WORKSHOP

NEXT

2 INSPECT BATTERY VOLTAGE

Standard voltage:
11 to 14 V
If the voltage is below 11 V, recharge or replace the battery before proceeding.

NEXT

3 CRANK ENGINE FOR MORE THAN 10 SECONDS

NEXT

4 CHECK FOR DTC*

(a) Check for DTCs and make a note of any codes that are output (see page EI-18).
(b) Clear the DTC.
(c) Recheck for DTCs. Based on the DTC output above, try to cause the output of the same SFI system DTC or engine immobiliser system DTC by simulating the original activity indicated by the DTC.
Result:

Result	Proceed to
DTC output does not reoccur	A
SFI system DTC output reoccurs	B
Engine immobiliser system DTC output reoccurs	C

B → **Go to SFI SYSTEM**

D → **Go to step 7**

A

EI

5 **PROBLEM SYMPTOMS TABLE**

Result:

Result	Proceed to
Fault is not listed in problem symptoms table	A
Fault is listed in problem symptoms table	B

B → **Go to step 7**

A

6 **OVERALL ANALYSIS AND TROUBLESHOOTING***

(a) DATA LIST / ACTIVE TEST (see page EI-19)
(b) Terminals of ECU (see page EI-13)
(c) Inspection (see page EI-43)

NEXT

7 **ADJUST, REPAIR OR REPLACE**

NEXT

8 **CONFIRMATION TEST**

NEXT

END

REGISTRATION

HINT:
The key has 2 codes: the key code (immobiliser code) and the wireless code (recognition code). Both of these codes need to be registered. For wireless code registration procedures, refer to the following procedures (see page DL-46). For key code registration procedures, refer to the procedures below.

1. DESCRIPTION OF CODE REGISTRATION

(a) When adding master keys and sub-keys (additional registration).
(1) Register the key codes in the transponder key ECU.

Target ECU	See Procedure
Transponder key ECU	Procedure "A"

(b) After replacing the transponder key ECU (new key code registration).
(1) Register the key codes (immobiliser code) in the new transponder key ECU.

Target ECU	See Procedure
Transponder key ECU	Procedure "B"

(2) Register the ECU COMMUNICATION ID between the ECM and the new transponder key ECU.

Target ECU	See Procedure
ECM	Procedure "C"

(c) After replacing the ECM.
(1) Reregister the ECU COMMUNICATION ID between the new ECM and the transponder key ECU.

Target ECU	See Procedure
Transponder key ECU	Procedure "C"

(d) After replacing the transponder key ECU and ECM.
(1) Register the ECU COMMUNICATION ID between the new ECM and the new transponder key ECU.

Target ECU	See Procedure
Transponder key ECU	Procedure "C"

(e) Erasure of key codes.
(1) Erase the key code(s) of the lost key(s).

Target ECU	See Procedure
Transponder key ECU	Procedure "D"

2. NEW KEY CODE REGISTRATION (PROCEDURE "B")

(a) New key code registration
Condition:
No key codes are registered in the transponder key ECU.

EI

HINT:

- In this mode, a maximum of 3 key codes for 2 master keys and 1 sub-key can be registered. The master keys and sub-key can be registered in any order because the transponder key ECU can distinguish between different types of keys.
- New key codes must be registered with the battery connected. The ignition switch can be either ON or OFF.
- When a new transponder key ECU is installed, key codes must be registered in the transponder key ECU.

Procedure	Security Indicator Light Condition
1. START	- HINT: Until first key is inserted
2. Insert key into the ignition key cylinder	BLINKING
3. Select following items on the tester: (1) IMMOBILISER (2) ID UTILITY (3) IMMOB CODE REG HINT: After above operation, proceed to next step in accordance with prompts on tester screen	ON HINT: Within 2 minutes
	OFF for 1 second and then ON
4. Remove the key and then push NEXT button on tester	ON
5. Insert master key or sub-key to be registered	OFF for 1 second and then ON
6. Remove key and then push NEXT button on tester	ON
7. Insert a master key or sub-key to be registered	OFF for 1 second and then ON
	OFF HINT: 0.5 seconds after turning ON
8. Remove key	BLINKING
9. END	

HINT:

- The new key code registration mode can be deliberately ended by following procedure A or B below when the battery is connected, and at least 1 key code for the master key has been registered.
  (a) Insert the key into the ignition key cylinder and turn the intelligent tester on.
  (b) Follow the instructions on the intelligent tester screen to end the new key code registration mode.
  (c) New key code registration mode ends.
- When the engine immobiliser system is operating normally and the key is pulled out, the security indicator light blinks continuously.
- If the new key code registration fails, code 2-1 is output by the security indicator light. Trying to re-register an already registered key causes code 2-2 to be output when the key is inserted. If the number of registered key codes exceeds the limit, code 2-3 is output by the security indicator light. The output details are shown below.

Security Indicator Light:

Normal (Engine immobiliser system is operating normally)

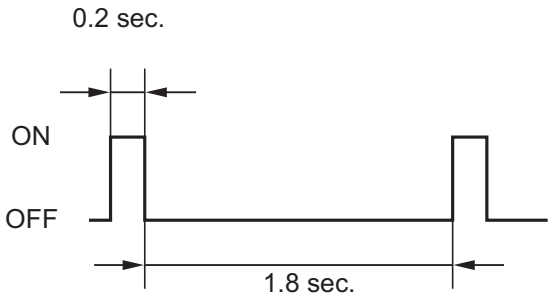

Code 2-1

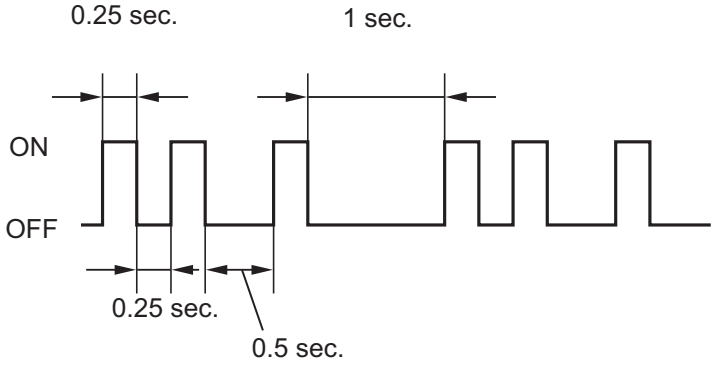

Code 2-2

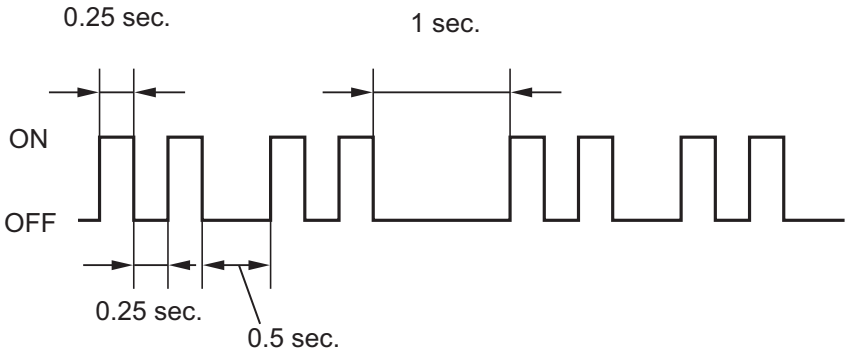

Code 2-3

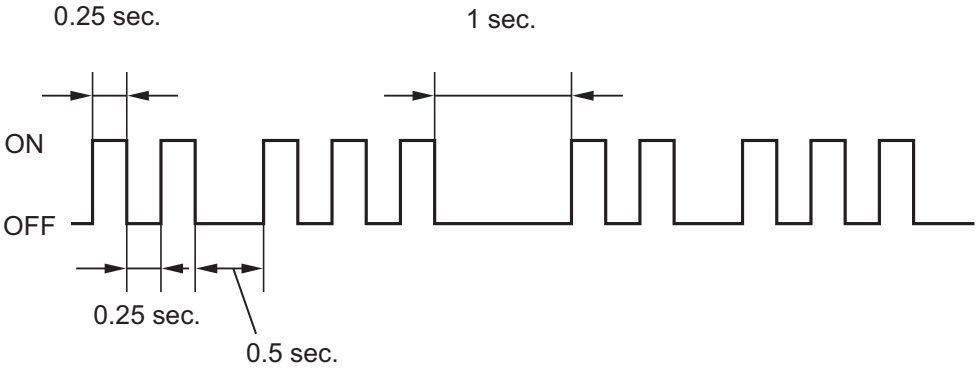

N

B111593E13

EI

3. REGISTRATION OF ADDITIONAL KEY (PROCEDURE "A")

HINT:

- A maximum of 5 master key codes and 3 sub-key codes can be registered.
- Additional key code registration mode ends if each step is not completed within the specified time.
- When proceeding to the next step while the timer is running, the timer is reset and begins the countdown for the next step.
- When the ignition key cylinder or the ignition key cylinder set is replaced, remove the transmitter module from the original master key. Then install this transmitter module to a new key and use the new key as the master key. If necessary, use this master key to register other keys.

NOTICE:

When the ignition key cylinder has been replaced, locking and unlocking doors are possible with the new master key once the transmitter module from the original master key has been transferred to it. However, the new master key will not be able to lock and unlock doors through the door key cylinder. Keep the original master key. If the new master key's transmitter module battery fails, the original master key can be used to lock and unlock doors through the door key cylinder.

(a) Additional key code registration

Condition:

At least one key code must be registered in the transponder key ECU.

Procedure	Time (Operation completion time)	Security Indicator Light Condition
1. START	-	BLINKING HINT: Until first key is inserted
2. Insert previously registered master key into ignition key cylinder, turn ignition switch to ON position, and turn intelligent tester on	-	OFF
3. Select the following items on the tester: (1) IMMOBILISER (2) ID UTILITY (3) IMMOB CODE REG		ON
4. Remove master key and then push NEXT button on tester. Immediately after above operation, insert previously registered master key into ignition key cylinder, turn ignition switch to ON position, and then push NEXT button on tester.	Within 120 seconds	BLINKING → ON
5. Remove master key and then push NEXT button on tester	Within 20 seconds HINT: After the tester instruction.	ON
6. Insert key to be registered into ignition key cylinder	Within 10 seconds.	BLINKING

EI

Procedure	Time (Operation completion time)	Security Indicator Light Condition
7. After 60 seconds, key is registered HINT: Security indicator light goes off	-	OFF
8. Remove key and then push NEXT button on tester		BLINKING
9. Tester screen displays number of registered key		
10. END		

HINT:

- If the key is removed within 60 seconds in step 6, the additional key code registration mode is canceled.
- A brief outline of the procedures for key code registration is shown above. For more detailed information, refer to the intelligent tester screen's instructions.
- When the engine immobiliser system is operating normally and the key is pulled out, the security indicator light blinks continuously.
- If the additional key code registration fails, code 2-1 is output by the security indicator light. Trying to reregister a previously registered key causes code 2-2 to be output when the key is inserted. If the number of registered key codes exceeds the limit, code 2-3 is output by the security indicator light. The output details are shown in procedure "B".

4. ERASURE OF KEY CODE (PROCEDURE "D")

HINT:

All key codes are erased except for the master key, which is used for erasing the key codes. In order to use a key whose code has been erased, a new key code must be registered.

(a) Erasure of key code

Condition:

At least two key codes must be registered in the transponder key ECU.

EI

Procedure	Time (Operation completion time)	Security Indicator Light Condition
1. START	-	BLINKING HINT: Until first key is inserted
2. Insert previously registered master key into ignition key cylinder, turn ignition switch to ON position, and turn intelligent tester on	-	OFF
3. Select following items on tester: (1) IMMOBILISER (2) ID UTILITY (3) IMMOB CODE ERS		OFF
4. Remove key and then push NEXT button on tester. Immediately after above operation, insert previously registered master key into ignition key cylinder, turn ignition switch to ON position, and then push NEXT button on tester.	Within 120 seconds	BLINKING → ON for 1 second then OFF

Procedure	Time (Operation completion time)	Security Indicator Light Condition
5. Remove master key	Within 10 seconds HINT: After tester instruction	BLINKING
6. END		

HINT:

- To cancel erasure mode after the erasure request is sent from the tester to the ECU, leave the master key inserted until the timer times out.
- A brief outline of the procedures for key code erasure is shown above. For more detailed information, refer to the intelligent tester screen's instructions.
- When the engine immobiliser system is operating normally and the key is pulled out, the security indicator light blinks continuously.

5. ECU - ECM COMMUNICATION ID REGISTRATION (PROCEDURE "C")

NOTICE:

- **The ECU communication ID should be registered when the transponder key ECU and / or ECM is replaced in order to match the ECU - ECM communication ID.**
- **The engine cannot be started unless the ECU - ECM communication ID matches.**
- **Do not disconnect the battery while the ECU - ECM communication ID is being set.**
- **Do not turn the ignition switch from ON to OFF 20 times or more before setting the ECU - ECM communication ID. If this operation is likely to be performed 20 times or more, disconnect the negative battery terminal cable in order to avoid engine start disablement. Failure to do so will result in the engine not starting unless the transponder key ECU is replaced with a new one.**

(a) After replacing the transponder key ECU

(1) Register the key code(s) by following the new key code registration procedure (procedure "B").

(2) Using SST, connect the TC and CG terminals of the DLC3 before inserting the key into the key cylinder.

SST 09843-18040

EI

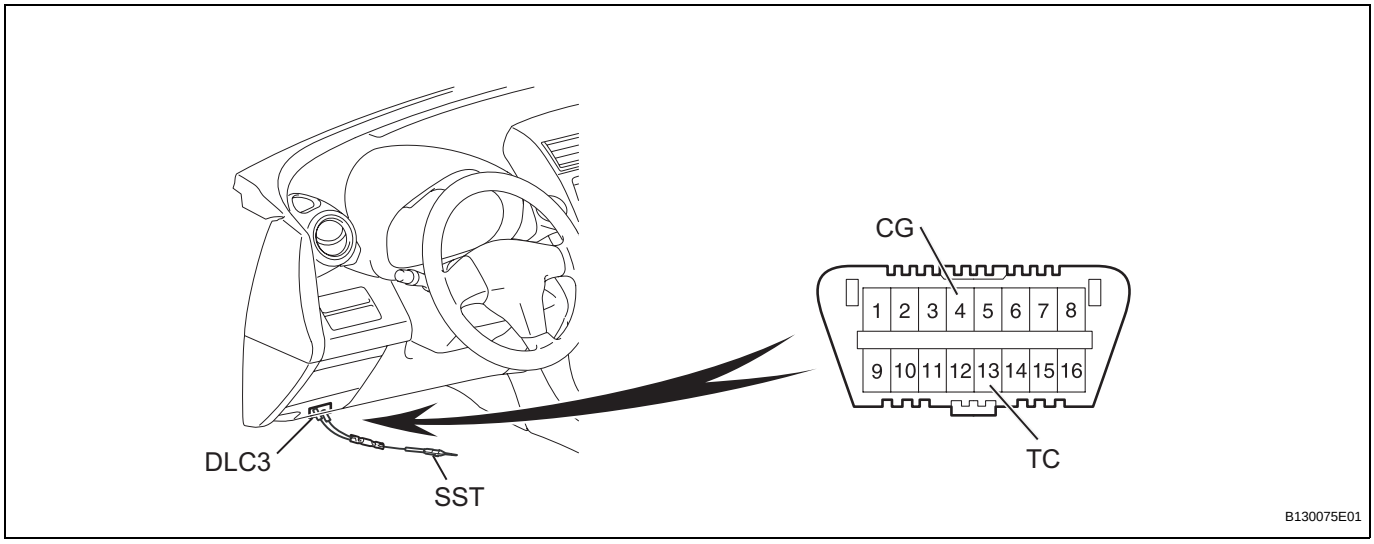

(3) Insert a previously registered key into the ignition key cylinder, turn the ignition switch ON (do not start the engine), and leave it as is for 30 minutes.
(4) Turn the ignition switch OFF and disconnect terminals TC and CG.
(5) Start the engine.
(6) Check that the engine starts and stays on for more then 3 seconds. The registration is complete.

(b) After replacing the ECM.
(1) Register the ECU - ECM communication ID

Procedure	Security Indicator Light Condition
1. Insert previously registered key into ignition key cylinder	OFF
2. Start engine	
3. Check that engine starts and stays on for more than 3 seconds. Registration is complete.	

(c) After replacing the transponder key ECU and ECM
(1) Register the key code(s) by following the new key code registration procedure (procedure "B").
(2) Register the ECU - ECM communication ID

Procedure	Security Indicator Light Condition
1. Insert previously registered key into ignition key cylinder	OFF
2. Start engine	
3. Check that engine starts and stays on for more than 3 seconds. Registration is complete.	

EI

PROBLEM SYMPTOMS TABLE

HINT:

- Use the table below to help determine the cause of the problem symptom. The potential causes of the symptoms are listed in order of probability in the "Suspected area" column of the table. Check each symptom by checking the suspected areas in the order they are listed. Replace parts as necessary.
- Inspect the fuses and relays related to this system before inspecting the suspected areas below.

Engine immobiliser system:

Symptom	Suspected area	See page
Engine does not start	1. ECU power source circuit	EI-41
	2. SFI system	ES-24
Security indicator light malfunction	1. Clock sub-assembly*1	EI-38
	2. Heater control panel*2	EI-38
	3. Transponder key ECU	EI-38

HINT:

*1: for Manual air conditioning system

*2: for Automatic air conditioning system

TERMINALS OF ECU

1. CHECK TRANSPONDER KEY AMPLIFIER

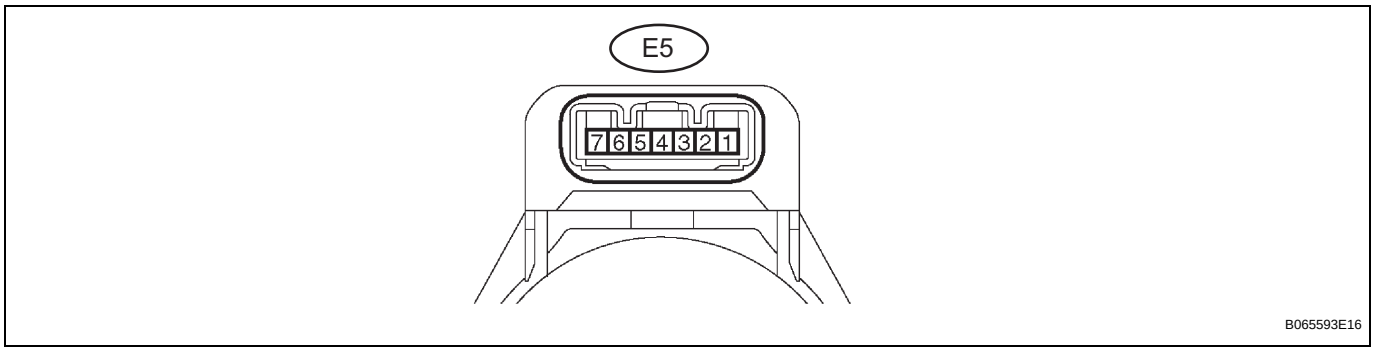

(a) Disconnect the E5 amplifier connector.
(b) Measure the resistance of the wire harness side connector.

Symbols (Terminal No.)	Wiring Color	Terminal Description	Condition	Specified Condition
AGND (E5-7) - Body ground	R - Body ground	Ground	Always	Below 1 Ω

If the result is not as specified, there may be a malfunction in the wire harness.

(c) Reconnect the E5 amplifier connector.
(d) Measure the resistance and voltage of the connector.

Symbols (Terminal No.)	Wiring Color	Terminal Description	Condition	Specified Condition
AGND (E5-7) - Body ground	R - Body ground	Ground	Always	Below 1 Ω
VC5 (E5-1) - AGND (E5-7)	B - R	Power source	No key is in ignition key cylinder	Below 1 V
			Key inserted	4.6 to 5.4 V
CODE (E5-4) - AGND (E5-7)	P - R	Demodulated signal of key code data	No key is in ignition key cylinder	Below 1 V
			Key inserted	Pulse generation (see waveform 1)
TXCT (E5-5) - AGND (E5-7)	G - R	Key code output signal	No key is in ignition key cylinder	Below 1 V
			Key inserted	Pulse generation (see waveform 2)

If the result is not as specified, there may be a malfunction in the amplifier.

(e) Using an oscilloscope, check the waveform 1.
Waveform 1 (Reference):

Item	Content
Symbols (Terminal No.)	CODE (E5-4) - AGND (E5-7)
Tool Setting	5 V/DIV., 20 msec./DIV.
Condition	Key inserted

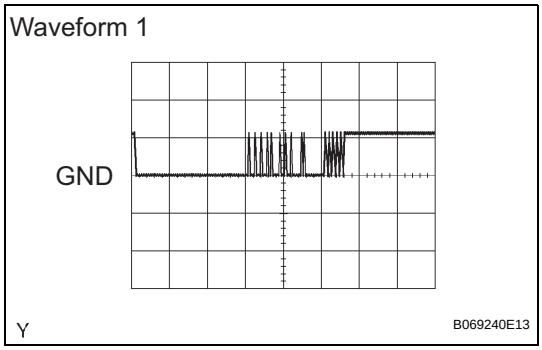

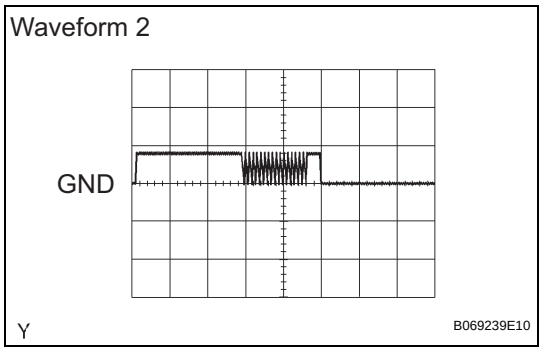

(f) Using an oscilloscope, check the waveform 2.
Waveform 2 (Reference):

Item	Content
Symbols (Terminal No.)	TXCT (E5-5) - AGND (E5-7)
Tool Setting	5 V/DIV., 20 msec./DIV.
Condition	Key inserted

2. CHECK TRANSPONDER KEY ECU

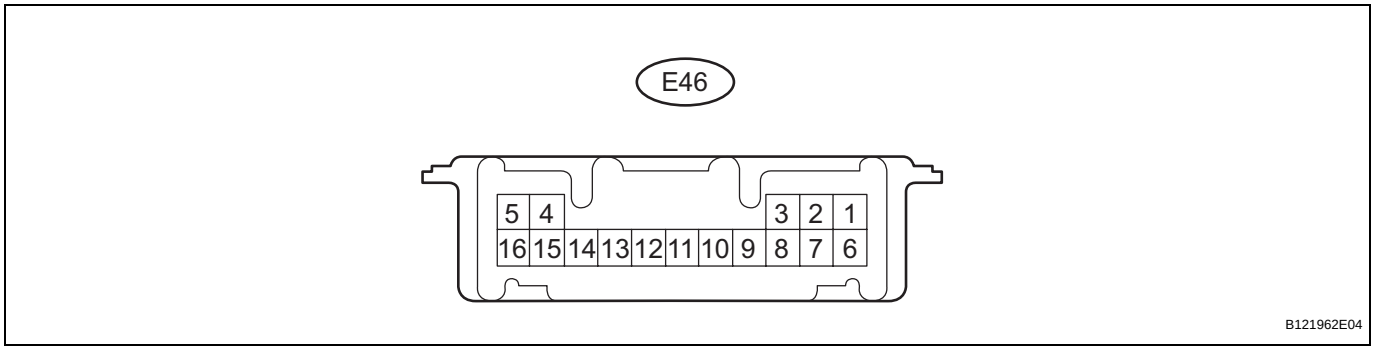

(a) Disconnect the E46 ECU connector.
(b) Measure the resistance and voltage of the wire harness side connector.

Symbols (Terminal No.)	Wiring Color	Terminal Description	Condition	Specified Condition
GND (E46-16) - Body ground	W-B - Body ground	Ground	Always	Below 1 Ω
+B (E46-1) - GND (E46-16)	R - W-B	Battery	Always	10 to 14 V
IG (E46-2) - GND (E46-16)	B - W-B	Ignition switch	Ignition switch OFF	Below 1 V
			Ignition switch ON	10 to 14 V

If the result is not as specified, there may be a malfunction on the wire harness side.
(c) Reconnect the E46 ECU connector.
(d) Measure the resistance and voltage of the connector.

Symbols (Terminal No.)	Wiring Color	Terminal Description	Condition	Specified Condition
AGND (E46-5) - GND (E46-16)	R - W-B	Amplifier ground circuit	Always	Below 1 Ω
EGND (E46-11) - GND (E46-16)	V - W-B	ECM ground circuit	Always	Below 1 Ω
KSW (E46-3) - GND (E46-16)	L - W-B	Unlock warning switch	No key is in ignition key cylinder	10 to 14 V
			Key inserted	Below 1 V
VC5 (E46-14) - AGND (E46-5)	B - R	Power source	No key is in ignition key cylinder	Below 1 V
			Key inserted	4.6 to 5.4 V
TXCT (E46-4) - AGND (E46-5)	G - R	Transponder key amplifier communication signal	No key is in ignition key cylinder	Below 1 V
			Key inserted	Pulse generation (see waveform 1)

EI

Symbols (Terminal No.)	Wiring Color	Terminal Description	Condition	Specified Condition
CODE (E46-15) - AGND (E46-5)	P - R	Transponder key amplifier communication signal	No key is in ignition key cylinder	Below 1 V
			Key inserted	Pulse generation (see waveform 2)
EFIO (E46-13) - EGND (E46-11)	P - V	ECM output signal	Ignition switch OFF	Below 1 V
			Ignition switch ON	Pulse generation (see waveform 3)
EFII (E46-12) - EGND (E46-11)	LG - V	ECM input signal	Ignition switch OFF	Below 1 V
			Ignition switch OFF	Pulse generation (see waveform 3)
IND (E46-8)- GND (E46-16)	Y - W-B	Security indicator light signal	Engine immobiliser system SET	3 to 5 V
			Engine immobiliser system UNSET	Below 1 V
D (E46-9) - GND (E46-16)	W - W-B	Diagnosis tester communication	Ignition switch ON	Pulse generation

If the result is not as specified, there may be a malfunction in the ECU.

(e) Using an oscilloscope, check the waveform 1.
Waveform 1 (Reference):

Item	Content
Symbols (Terminal No.)	TXCT (E46-4) - AGND (E46-5)
Tool Setting	5 V/DIV., 20 msec./DIV.
Condition	Key inserted

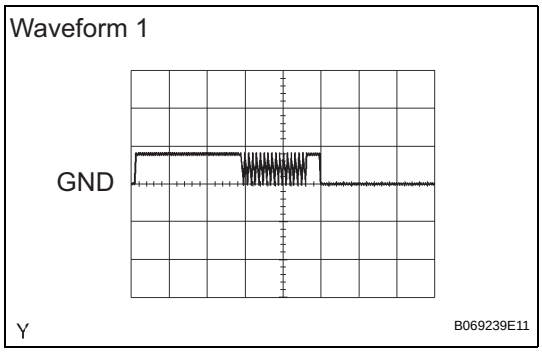

(f) Using an oscilloscope, check the waveform 2.
Waveform 2 (Reference):

Item	Content
Symbols (Terminal No.)	CODE (E46-15) - AGND (E46-5)
Tool Setting	5 V/DIV., 20 msec./DIV.
Condition	Key inserted

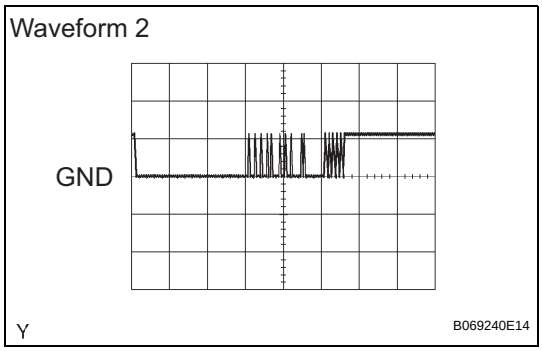

(g) Using an oscilloscope, check the waveform 3.
Waveform 3 (Reference):

Item	Content
Symbols (Terminal No.)	EFIO (E46-13) - EGND (E46-11)
Tool Setting	10 V/DIV., 500 msec./DIV.
Condition	Ignition switch ON

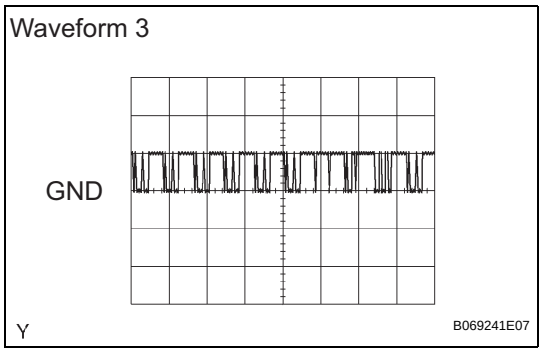

EI

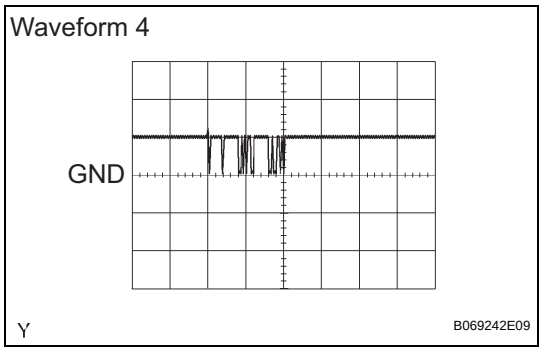

(h) Using an oscilloscope, check the waveform 4.
Waveform 4 (Reference):

Item	Content
Symbols (Terminal No.)	EFII (E46-12) - EGND (E46-11)
Tool Setting	10 V/DIV., 500 msec./DIV.
Condition	Ignition switch ON

3. CHECK ECM

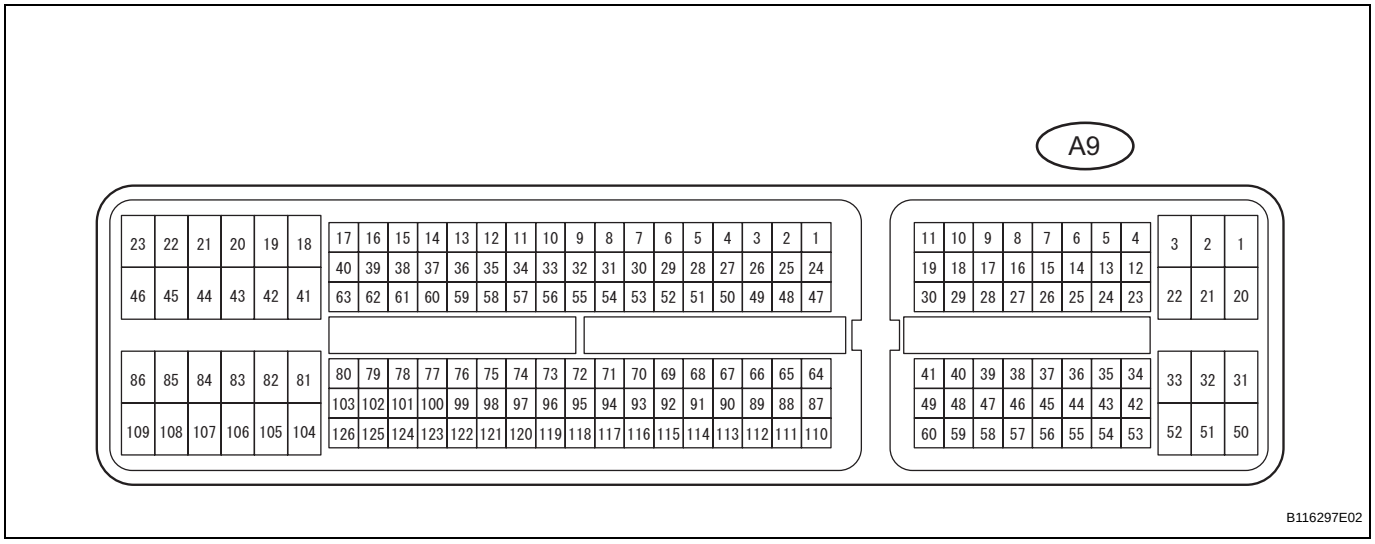

(a) Measure the resistance and voltage of the wire harness side connector.

Symbols (Terminal No.)	Wiring Color	Terminal Description	Condition	Specified Condition
EOM (A9-9) - Body ground	V - Body ground	Ground	Always	Below 1 Ω
IMI (A9-11) - EOM (A9-9)	P - V	Transponder key ECU input signal	Ignition switch OFF	Below 1 V
			Ignition switch ON	Pulse generation (see waveform 1)
IMO (A9-10) - EOM (A9-9)	LG - V	Transponder key ECU output signal	Ignition switch OFF	Below 1 V
			Ignition switch ON	Pulse generation (see waveform 2)

If the result is not as specified, there may be a malfunction in the wire harness.

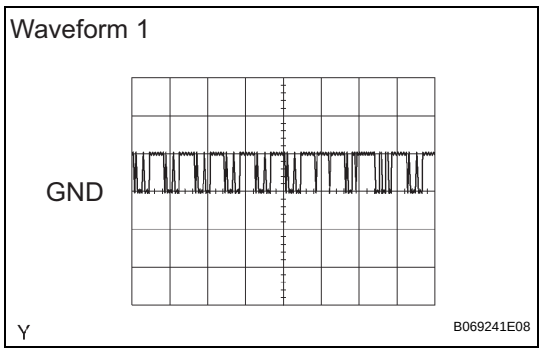

(b) Using an oscilloscope, check the waveform 1.
Waveform 1 (Reference):

Item	Content
Symbols (Terminal No.)	IMI (A9-11) - EOM (A9-9)
Tool Setting	10 V/DIV., 500 msec./DIV.
Condition	Ignition switch ON

EI

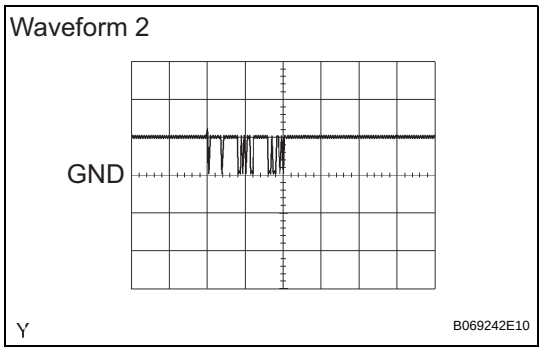

(c) Using an oscilloscope, check the waveform 2.
Waveform 2 (Reference):

Item	Content
Symbols (Terminal No.)	IMO (A9-10) - EOM (A9-9)
Tool Setting	10 V/DIV., 500 msec./DIV.
Condition	Ignition switch ON

DIAGNOSIS SYSTEM

1. DESCRIPTION

(a) Engine immobiliser system data and Diagnostic Trouble Codes (DTCs) can be read through the vehicle's Data Link Connector 3 (DLC3). In some cases, a malfunction may be occurring in the engine immobiliser system even though the security indicator light is not illuminated. When the system seems to be malfunctioning, use the intelligent tester to check for malfunctions and perform repairs.

2. CHECK DLC3

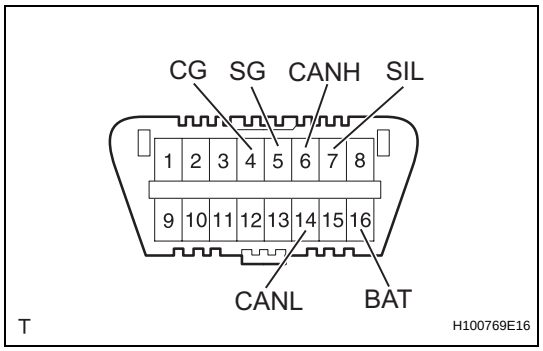

The vehicle's ECU uses the ISO 15765-4 communication protocol. The terminal arrangement of the DLC3 complies with SAE J1962 and matches the ISO 15765-4 format.

Symbols (Terminal No.)	Terminal Description	Condition	Specified Condition
SIL (7) - SG (5)	Bus "+" line	During transmission	Pulse generation
CG (4) - Body ground	Chassis ground	Always	Below 1 Ω
SG (5) - Body ground	Signal ground	Always	Below 1 Ω
BAT (16) - Body ground	Battery positive	Always	11 to 14 V
CANH (6) - CANL (14)	HIGH-level CAN bus line	Ignition switch off*	54 to 69 Ω
CANH (6) - Battery positive	HIGH-level CAN bus line	Ignition switch off*	1 kΩ or higher
CANH (6) - CG (4)	HIGH-level CAN bus line	Ignition switch off*	1 kΩ or higher
CANL (14) - Battery positive	LOW-level CAN bus line	Ignition switch off*	1 MΩ or higher
CANL (14) - CG (4)	LOW-level CAN bus line	Ignition switch off*	1 MΩ or higher

NOTICE:

***: Before measuring the resistance, leave the vehicle as is for at least 1 minute and do not operate the ignition switch, other switches or doors.**

If the result is not as specified, the DLC3 may have a malfunction. Repair or replace the harness and connector.

EI

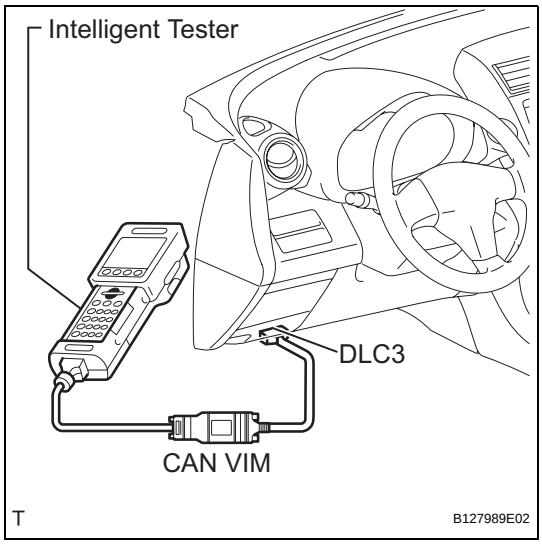

HINT:
Connect the cable of the intelligent tester (with CAN VIM) to the DLC3, turn the ignition switch ON and attempt to use the intelligent tester. If the screen displays UNABLE TO CONNECT TO VEHICLE, a problem exists in the vehicle side or the tester side.
If the communication is normal when the tester is connected to another vehicle, inspect the DLC3 on the original vehicle.
If the communication is still not possible when the tester is connected to another vehicle, the problem is probably in the tester itself. Consult the Service Department listed in the tester's instruction manual.

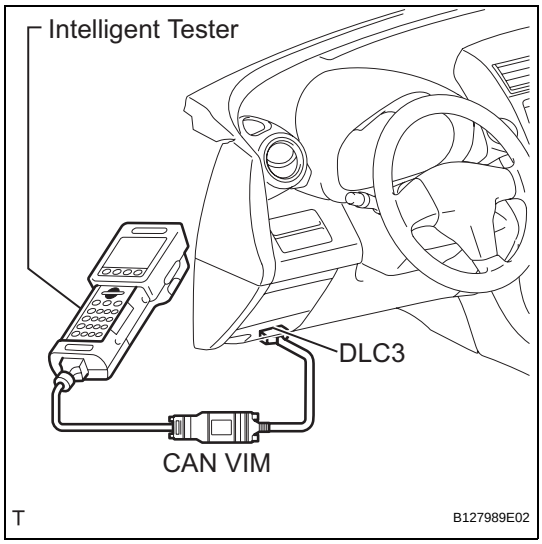

DTC CHECK / CLEAR

1. CHECK DTC

(a) Connect the intelligent tester (with CAN VIM) to the DLC3.
(b) Turn the ignition switch ON and turn the intelligent tester ON.
(c) Select the following menu items: DIAGNOSIS / OBD/MOBD / IMMOBILISER / DTC INFO / CURRENT CODES.
(d) Check DTCs and then write them down.
HINT:
Refer to the intelligent tester operator's manual for further details.
(e) Confirm the details of the DTCs (see page EI-20).

2. CLEAR DTC

(a) Connect the intelligent tester (with CAN VIM) to the DLC3.
(b) Turn the ignition switch ON (do not start the engine) and turn the intelligent tester ON.
(c) Select the following menu items: DIAGNOSIS / OBD/MOBD / IMMOBILISER / DTC INFO / CLEAR CODES.
HINT:
Refer to the intelligent tester operator's manual for further details.
(d) Erase DTCs by pressing the YES button on the tester.
HINT:
Refer to the intelligent tester operator's manual for further details.

DATA LIST / ACTIVE TEST

1. READ DATA LIST

HINT:

Using the intelligent tester's DATA LIST allows switch, sensor, actuator and other item values to be read without removing any parts. Reading the DATA LIST early in troubleshooting is one way to save time.

(a) Connect the intelligent tester (with CAN VIM) to the DLC3.

(b) Turn the ignition switch ON and turn the tester ON.

(c) Select the following menu items: DIAGNOSIS / OBD/MOBD / IMMOBILISER / DATA LIST.

(d) Check the results by referring to the table below.

Transponder key ECU:

Item	Measurement Item / Display (Range)	Normal Condition	Diagnostic Note
KEY SW	Unlock warning switch signal / ON or OFF	ON: Key is in ignition key cylinder OFF: No key is in ignition key cylinder	-
IG SW	Ignition switch signal / ON or OFF	ON: Ignition switch ON (IG or ACC) OFF: Ignition switch OFF	-
IMMOBILISER	Immobiliser system status / SET or UNSET	SET: No key is in ignition key cylinder UNSET: Key is in ignition key cylinder	-
PERMIT (START)	Engine starting control / OK or NG	OK: Engine start is permitted NG: Engine start is not permitted	-
RESPONSE	Transponder chip data / NG or OK	NG: Data error OK: Data OK	-
FRAME ERROR	Transponder chip data / NG or OK	NG: Data error OK: Data OK	-
SERIAL NUMBER	Transponder chip data / NG or OK	NG: Data error OK: Data OK	-
ENCRYPT CODE	Transponder chip data / NG or OK	NG: Data error OK: Data OK	-
STATUS	Transponder chip data / NG or OK	NG: Data error OK: Data OK	-
BCC	Transponder chip signal / NG or OK	NG: Incorrect data sent OK: Correct data sent	-
SUB KEY	Sub-key code signal / MATCH or NOMATCH	MATCH: Registered sub-key code is sent NOMATCH: Unmatched sub-key code is sent	-
MASTER KEY	Master key code signal / MATCH or NOMATCH	MATCH: Registered master key code is sent NOMATCH: Unmatched master key code is sent	-
REGIST SUB CODE	Number of registered sub-keys / min.: 0, max.: 15	Number of registered sub-keys	-
REGIST MAS CODE	Number of registered master keys / min.: 0, max.: 15	Number of registered master keys	-
REG CODE SPACE	Key registration code memory space full / NOTFULL or FULL	NOTFULL: Possible to register more key codes FULL: Cannot register any more key codes	-

Item	Measurement Item / Display (Range)	Normal Condition	Diagnostic Note
+B	+B judgment / NORMAL or BREAK	NORMAL: Battery supply is normal BREAK: Battery supply is malfunctioning	-
ANTENNA COIL	Transponder key coil condition / NORMAL or FAIL	NORMAL: Transponder key coil is normal FAIL: Transponder key coil is malfunctioning	-

2. PERFORM ACTIVE TEST

HINT:

Performing the intelligent tester's ACTIVE TEST allows relay, VSV, actuator and other items to be operated without removing any parts. Performing the ACTIVE TEST early in troubleshooting is one way to save time. The DATA LIST can be displayed during the ACTIVE TEST.

(a) Connect the intelligent tester (with CAN VIM) to the DLC3.
(b) Turn the ignition switch ON and turn the tester ON.
(c) Select the following menu items: DIAGNOSIS / OBD/MOBD / IMMOBILISER / ACTIVE TEST.
(d) Perform the ACTIVE TEST by referring to the table below.

Transponder key ECU:

Item	Test Details	Diagnostic Note
SECURITY INDIC	Turns security indicator light / ON or OFF	-

DIAGNOSTIC TROUBLE CODE CHART

Transponder key ECU:

DTC No.	Detection Item	Trouble Area	See page
B2780	Push Switch / Key Unlock Warning Switch Malfunction	- Transponder key ECU - Unlock warning switch - Wire harness	EI-21
B2784	Antenna Coil Open / Short	- Transponder key ECU - Transponder key amplifier - Wire harness	EI-24
B2793	Transponder Chip Malfunction	Key	EI-26
B2794	Unmatched Encryption Code	Key	EI-27
B2795	Unmatched Key Code	Key	EI-28
B2796	No Communication in Immobiliser System	- Transponder key ECU - Key - Wire harness - Transponder key amplifier	EI-29
B2797	Communication Malfunction No. 1	- Key - Wire harness - Transponder key ECU - Transponder key amplifier	EI-32
B2798	Communication Malfunction No. 2	Key	EI-29

ECM:

DTC No.	Detection Item	Trouble Area	See page
B2799	Engine Immobiliser System	- Wire harness - Transponder key ECU - ECM	EI-36

DTC	B2780	Push Switch / Key Unlock Warning Switch Malfunction

DESCRIPTION

This DTC is output if the transponder key ECU does not detect that the unlock warning switch is ON even when the ignition switch is ON. Under normal conditions, the unlock warning switch is ON when the ignition switch is ON.

DTC No.	DTC Detection Condition	Trouble Area
B2780	Unlock warning switch ON is not detected when ignition switch is ON	• Transponder key ECU • Unlock warning switch • Wire harness

WIRING DIAGRAM

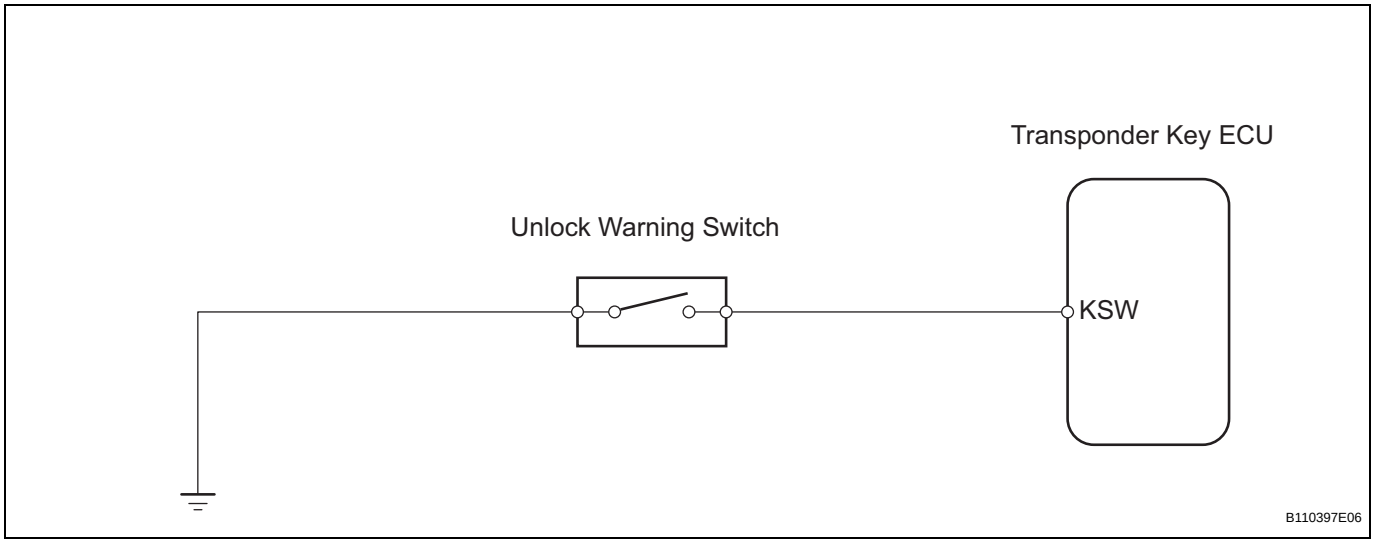

INSPECTION PROCEDURE

EI

1	READ VALUE OF INTELLIGENT TESTER (UNLOCK WARNING SWITCH)

(a) Connect the intelligent tester (with CAN VIM) to the DLC3.
(b) Turn the ignition switch ON with a key that cannot start the engine.
(c) On the intelligent tester, enter the following menus: DIAGNOSIS / OBD/MOBD / IMMOBILISER / DATA LIST / KEY SW. Read the result.

Transponder key ECU:

Item	Measurement Item / Display (Range)	Normal Condition	Diagnostic Note
KEY SW	Unlock warning switch signal / ON or OFF	ON: Key is in ignition key cylinder OFF: No key is in ignition key cylinder	-

OK:

ON (key is in ignition key cylinder) appears on the screen.

OK → REPLACE TRANSPONDER KEY ECU

NG

2 INSPECT UNLOCK WARNING SWITCH ASSEMBLY

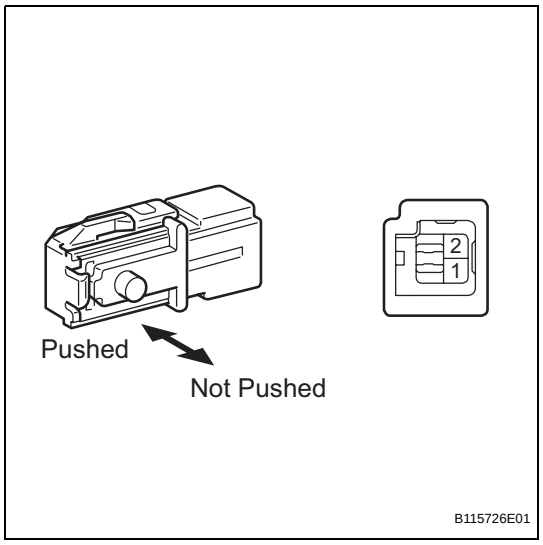

(a) Remove the unlock warning switch.
(b) Measure the resistance of the switch.
Standard resistance

Tester Connection	Condition	Specified Condition
1 - 2	Pushed	Below 1 Ω
	Not pushed	10 kΩ or higher

NG → REPLACE UNLOCK WARNING SWITCH ASSEMBLY

OK

3 CHECK WIRE HARNESS (UNLOCK WARNING SWITCH - BODY GROUND)

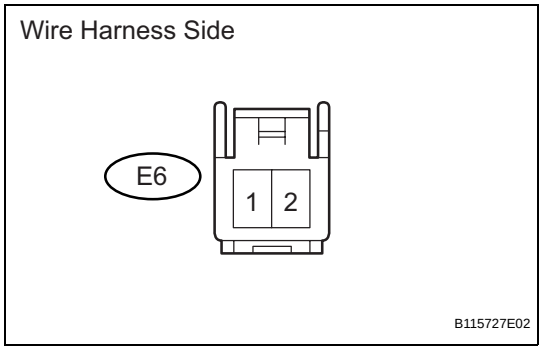

(a) Disconnect the E6 switch connector.
(b) Measure the resistance of the wire harness side connector.
Standard resistance

Tester Connection	Specified Condition
E6-2 - Body ground	Below 1 Ω

NG → REPAIR OR REPLACE HARNESS AND CONNECTOR

OK

4	CHECK WIRE HARNESS (UNLOCK WARNING SWITCH - TRANSPONDER KEY ECU)

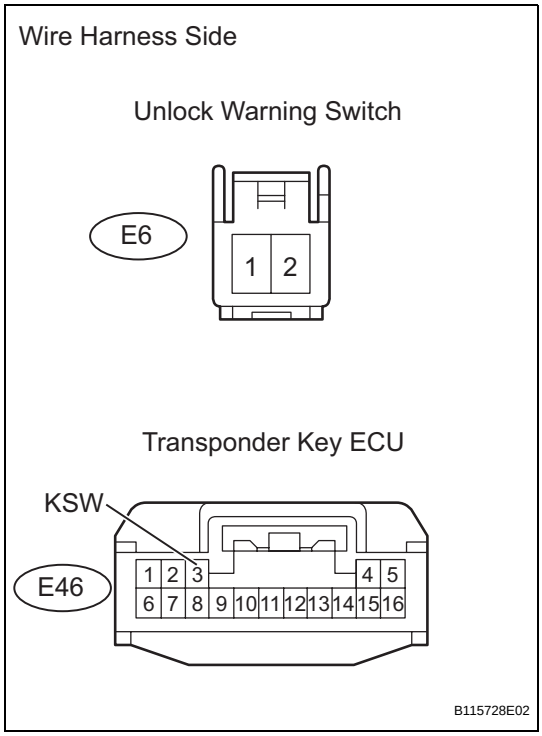

(a) Disconnect the E6 switch connector.
(b) Disconnect the E46 ECU connector.
(c) Measure the resistance of the wire harness side connectors.

Standard resistance

Tester Connection	Specified Condition
E6-1 - E46-3 (KSW)	Below 1 Ω
E6-1 or E46-3 (KSW) - Body ground	10 kΩ or higher

NG → **REPAIR OR REPLACE HARNESS AND CONNECTOR**

OK

REPLACE TRANSPONDER KEY ECU

DTC	B2784	Antenna Coil Open / Short

DESCRIPTION

The transponder key coil receives key code signals from the transponder chip in the key grip. The coil built into the transponder key amplifier amplifies the key code signals and outputs the signal to the transponder key ECU.

DTC No.	DTC Detection Condition	Trouble Area
B2784	When transponder key coil is open or short	• Transponder key ECU • Transponder key amplifier • Wire harness

WIRING DIAGRAM

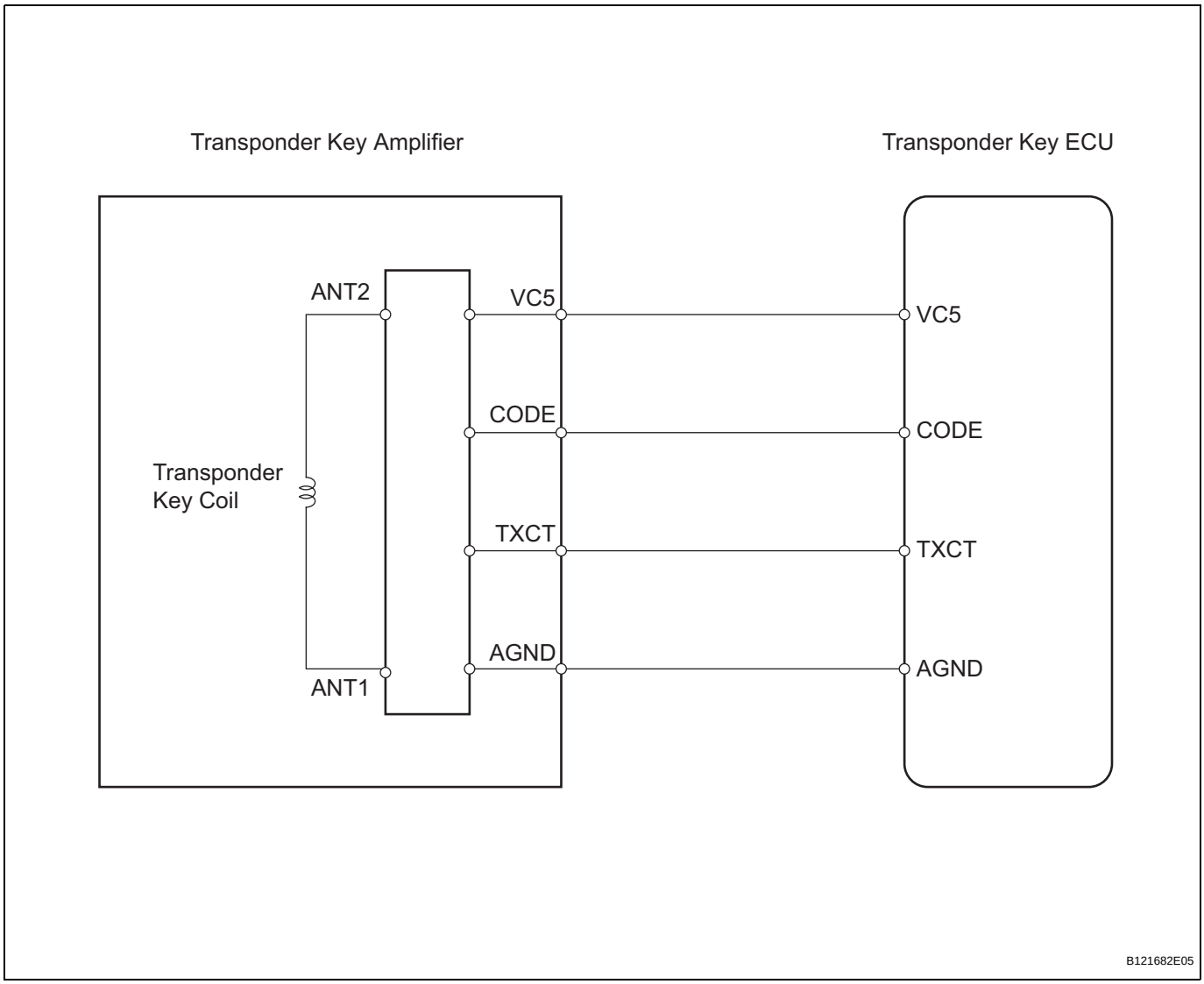

INSPECTION PROCEDURE

1	READ VALUE OF INTELLIGENT TESTER (TRANSPONDER KEY COIL)

(a) Connect the intelligent tester (with CAN VIM) to the DLC3.

(b) Turn the ignition switch ON with a key that cannot start the engine.
(c) On the intelligent tester, enter the following menus: DIAGNOSIS / OBD/MOBD / IMMOBILISER / DATA LIST / ANTENNA COIL. Read the result.

Transponder key ECU:

Item	Measurement Item / Display (Range)	Normal Condition	Diagnostic Note
ANTENNA COIL	Transponder key coil condition / NORMAL or FAIL	NORMAL: Transponder key coil is normal FAIL: Transponder key coil is malfunctioning	-

OK:
NORMAL (Transponder key coil is normal) appears on the screen.

OK → **REPLACE TRANSPONDER KEY ECU**

NG

2 CHECK WIRE HARNESS (TRANSPONDER KEY ECU - TRANSPONDER KEY AMPLIFIER)

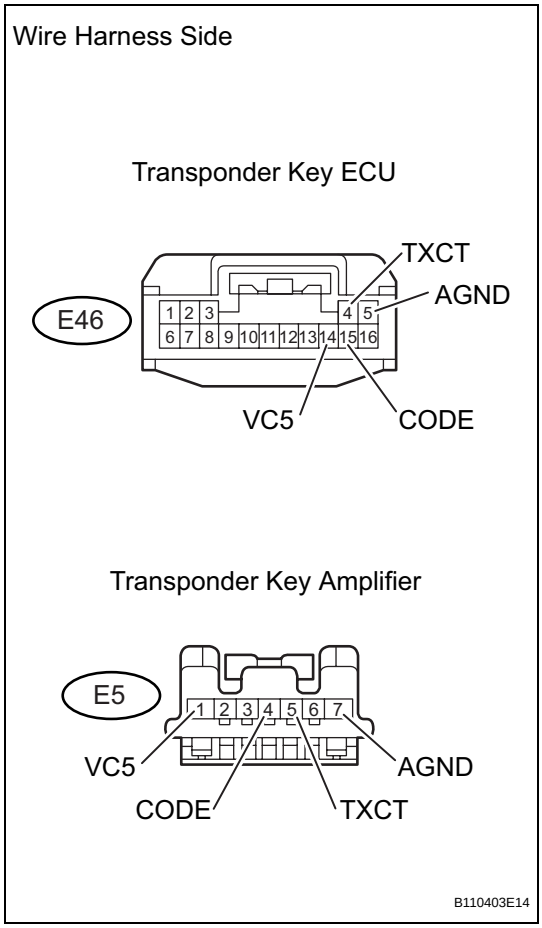

(a) Disconnect the E46 ECU connector.
(b) Disconnect the E5 amplifier connector.
(c) Measure the resistance of the wire harness side connectors.

Standard resistance

Tester Connection	Specified Condition
E46-14 (VC5) - E5-1 (VC5)	Below 1 Ω
E46-15 (CODE) - E5-4 (CODE)	
E46-4 (TXCT) - E5-5 (TXCT)	
E46-5 (AGND) - E5-7 (AGND)	
E46-14 (VC5) or E5-1 (VC5) - Body ground	10 kΩ or higher
E46-15 (CODE) or E5-4 (CODE) - Body ground	
E46-4 (TXCT) or E5-5 (TXCT) - Body ground	
E46-5 (AGND) or E5-7 (AGND) - Body ground	

NG → **REPAIR OR REPLACE HARNESS AND CONNECTOR**

OK

REPLACE TRANSPONDER KEY AMPLIFIER

DTC	B2793	Transponder Chip Malfunction

DESCRIPTION

This DTC is output when: 1) during key code registration, a key malfunction occurs; 2) the key code was unable to be registered properly.

DTC No.	DTC Detection Condition	Trouble Area
B2793	Transponder chip malfunction	Key

INSPECTION PROCEDURE

1	REREGISTER KEY

(a) Clear the DTC (see page EI-18).
(b) Reregister the key code with the transponder key ECU (see page EI-5)
(c) Check that the engine starts with the key.
OK:
Engine starts.

NG → **REPLACE KEY**

OK

END

DTC	B2794	Unmatched Encryption Code

DESCRIPTION

This DTC is output when a key with an incomplete key code is inserted into the ignition key cylinder.

DTC No.	DTC Detection Condition	Trouble Area
B2794	Key with incomplete key code is inserted	Key

INSPECTION PROCEDURE

1	REREGISTER KEY

(a) Clear the DTC (see page EI-18).
(b) Reregister the key code with the transponder key ECU (see page EI-5)
(c) Check that the engine starts with the key.
OK:
Engine starts.

NG → **REPLACE KEY**

OK ↓

END

DTC	B2795	Unmatched Key Code

DESCRIPTION

This DTC is output when a key code that has not been registered in the transponder key ECU is inserted into the ignition key cylinder.

DTC No.	DTC Detection Condition	Trouble Area
B2795	Key with unregistered key code is inserted	Key

INSPECTION PROCEDURE

1	REREGISTER KEY

(a) Clear the DTC (see page EI-18).
(b) Reregister the key code with the transponder key ECU (see page EI-5)
(c) Check that the engine starts with the key.
OK:
Engine starts.

NG → **REPLACE KEY**

OK

END

DTC	B2796	No Communication in Immobiliser System

DTC	B2798	Communication Malfunction No. 2

DESCRIPTION

When a key is inserted into the ignition key cylinder but no communication occurs between the key and transponder key ECU, DTC B2796 is output. When a key is inserted into the ignition key cylinder but a communication error occurs between the key and transponder key ECU, DTC B2798 is output.

DTC No.	DTC Detection Condition	Trouble Area
B2796	No communication	• Transponder key ECU • Key • Wire harness • Transponder key amplifier
B2798	Communication error	Key

WIRING DIAGRAM

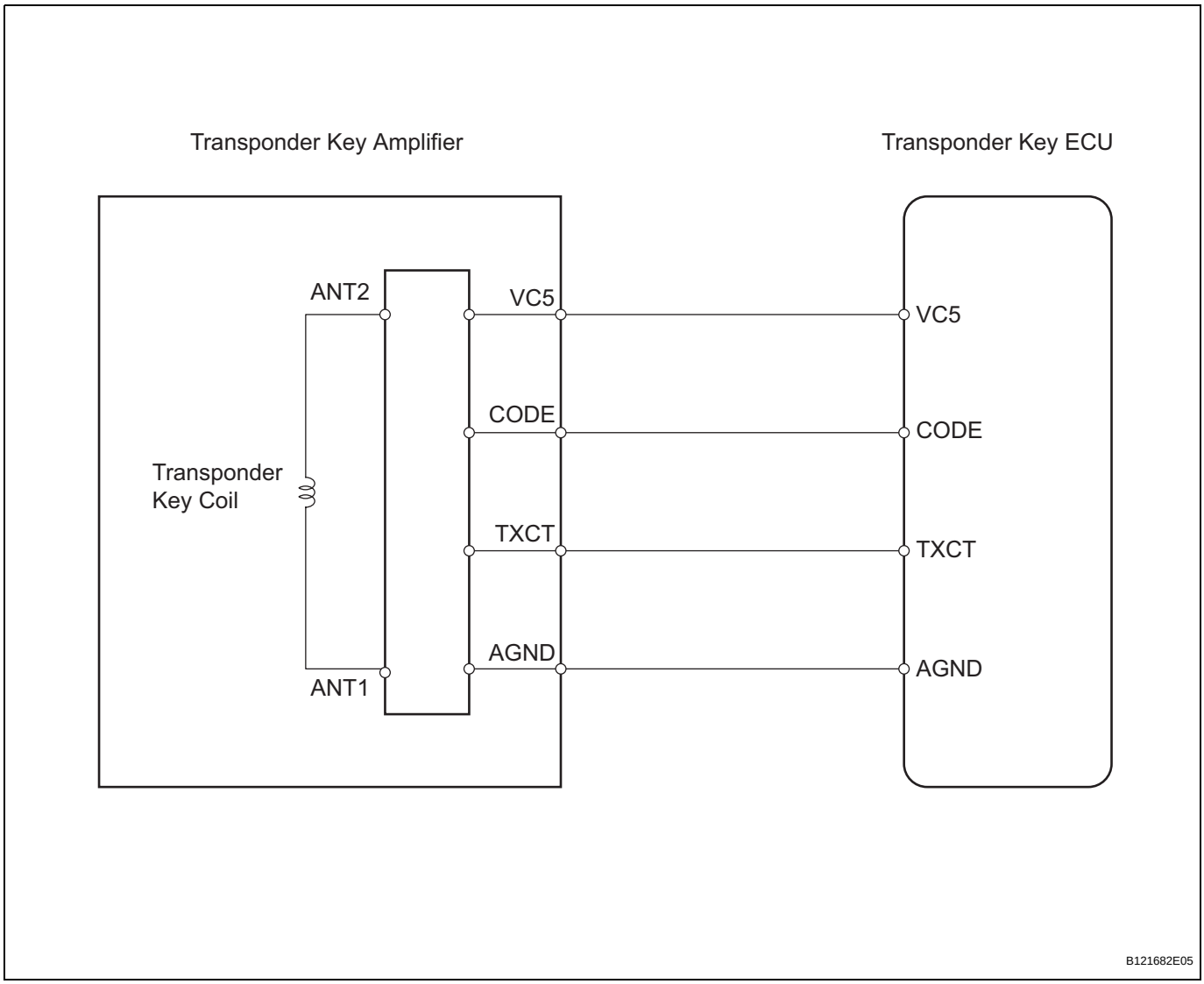

EI

INSPECTION PROCEDURE

1	READ VALUE OF INTELLIGENT TESTER (ENGINE IMMOBILISER SYSTEM)

(a) Connect the intelligent tester (with CAN VIM) to the DLC3.
(b) Turn the ignition switch ON with a key that cannot start the engine.
(c) On the intelligent tester, enter the following menus: DIAGNOSIS / OBD/MOBD / IMMOBILISER / DATA LIST / IMMOBILISER. Read the result.

Transponder key ECU:

Item	Measurement Item / Display (Range)	Normal Condition	Diagnostic Note
IMMOBILISER	Immobiliser system status / SET or UNSET	SET: No key is in ignition key cylinder UNSET: Key is in ignition key cylinder	-

OK:
UNSET (key is in ignition key cylinder) appears on the screen.

OK → **REPLACE TRANSPONDER KEY ECU**

NG

2	CHECK WHETHER ENGINE STARTS WITH OTHER KEY

(a) Check whether the engine starts with the vehicle's other keys.
OK:
Engine starts.

NG → **REREGISTER OR REPLACE KEY THAT CANNOT START ENGINE**

OK

3	READ VALUE OF INTELLIGENT TESTER (TRANSPONDER KEY COIL)

(a) Connect the intelligent tester (with CAN VIM) to the DLC3.
(b) Turn the ignition switch ON with a key that cannot start the engine.
(c) On the intelligent tester, enter the following menus: DIAGNOSIS / OBD/MOBD / IMMOBILISER / DATA LIST / ANTENNA COIL. Read the result.

Transponder key ECU:

Item	Measurement Item / Display (Range)	Normal Condition	Diagnostic Note
ANTENNA COIL	Transponder key coil condition/ NORMAL or FAIL	NORMAL: Transponder key coil is normal FAIL: Transponder key coil is malfunctioning	-

EI

OK:
NORMAL (Transponder key coil is normal) appears on the screen.

OK → **REPLACE TRANSPONDER KEY ECU**

NG

4 CHECK WIRE HARNESS (TRANSPONDER KEY ECU - TRANSPONDER KEY AMPLIFIER)

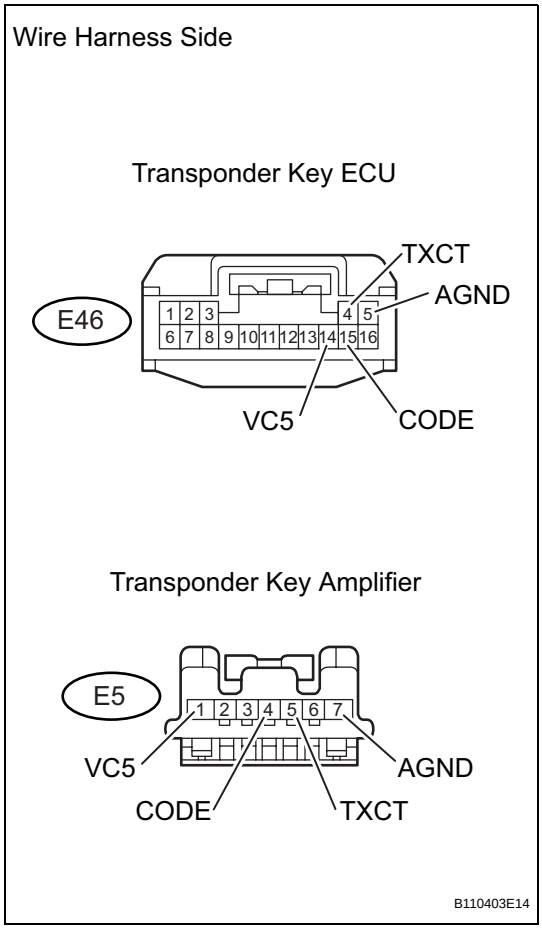

(a) Disconnect the E46 ECU connector.
(b) Disconnect the E5 amplifier connector.
(c) Measure the resistance of the wire harness side connectors.

Standard resistance

Tester Connection	Specified Condition
E46-14 (VC5) - E5-1 (VC5)	Below 1 Ω
E46-15 (CODE) - E5-4 (CODE)	
E46-4 (TXCT) - E5-5 (TXCT)	
E46-5 (AGND) - E5-7 (AGND)	
E46-14 (VC5) or E5-1 (VC5) - Body ground	10 kΩ or higher
E46-15 (CODE) or E5-4 (CODE) - Body ground	
E46-4 (TXCT) or E5-5 (TXCT) - Body ground	
E46-5 (AGND) or E5-7 (AGND) - Body ground	

NG → **REPAIR OR REPLACE HARNESS AND CONNECTOR**

EI

OK

5 CHECK TRANSPONDER KEY AMPLIFIER (OPERATION)

(a) Temporarily replace the transponder key amplifier with a new or normally functioning one..
(b) Check that the engine starts normally.

OK:
Engine starts normally.

NG → **REPLACE TRANSPONDER KEY ECU**

OK

END (TRANSPONDER KEY AMPLIFIER IS DEFECTIVE)

DTC	B2797	Communication Malfunction No. 1

DESCRIPTION

This DTC is output when a communication error occurs between the transponder key amplifier and transponder key ECU. Some possible reasons for the communication error are: 1) 2 or more ignition keys are positioned too close together, or 2) noise is occurring in the communication line.

DTC No.	DTC Detection Condition	Trouble Area
B2797	Keys are positioned too close to each other, or noise occurred in communication line	• Key • Wire harness • Transponder key amplifier • Transponder key ECU

WIRING DIAGRAM



EI

INSPECTION PROCEDURE

1	CHECK KEY

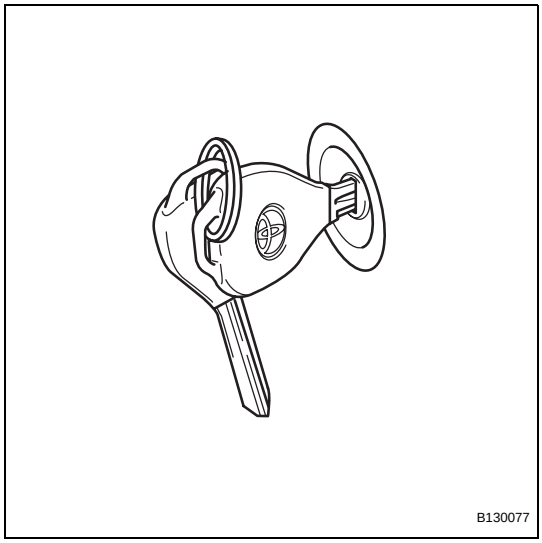

(a) Check if the ignition key being used is near other ignition keys. Also, check if the key ring is in contact with the key grip.

Result:

Result	Proceed to
Key is near other keys and/or key ring is in contact with key grip	A
Key is not near other keys and/or key ring is not in contact with key grip	B

B → **Go to step 3**

A

2	CHECK FOR DTC

(a) Separate the keys from each other and / or remove the key ring.
(b) Clear the DTC (see page EI-18).
(c) Insert a key into the ignition key cylinder. Remove it. Repeat for all other keys.
(d) Check that no DTC is output.
OK:
No DTC is output.

OK → **END**

NG

EI

3	CHECK TRANSPONDER KEY ECU (NOISE)

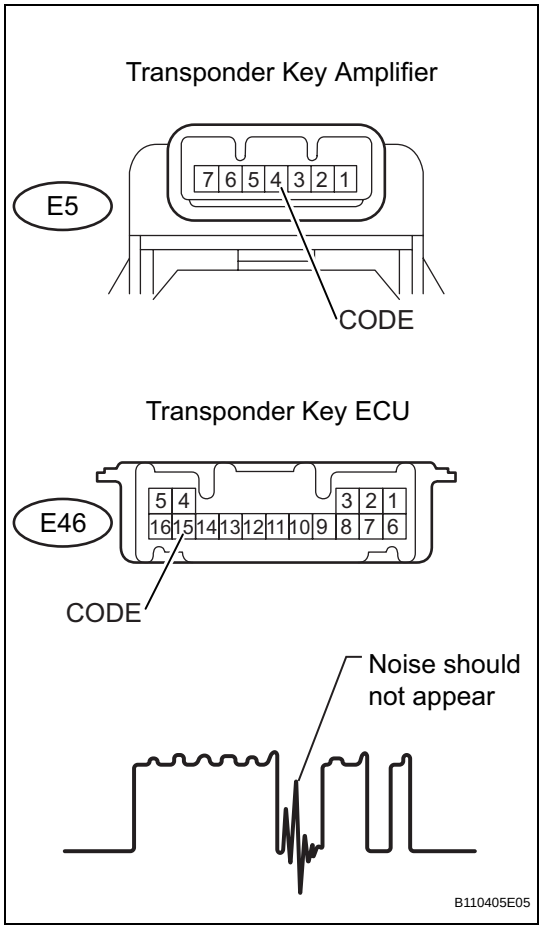

(a) Using an oscilloscope or the intelligent tester, check for noise in the waveform between the terminals of the E5 amplifier connector and E46 ECU connector.
OK:
No noise is present (see illustration).

Tester Connection	Tool Setting	Tool Setting	Specified Condition
E46-15 (CODE) - E5-4 (CODE)	5 V/DIV., 20 msec./DIV.	Key inserted	No noise is present

NG → **FIND CAUSE OF NOISE AND REMOVE IT**

OK

EI

4	CHECK WIRE HARNESS (TRANSPONDER KEY ECU - TRANSPONDER KEY AMPLIFIER)

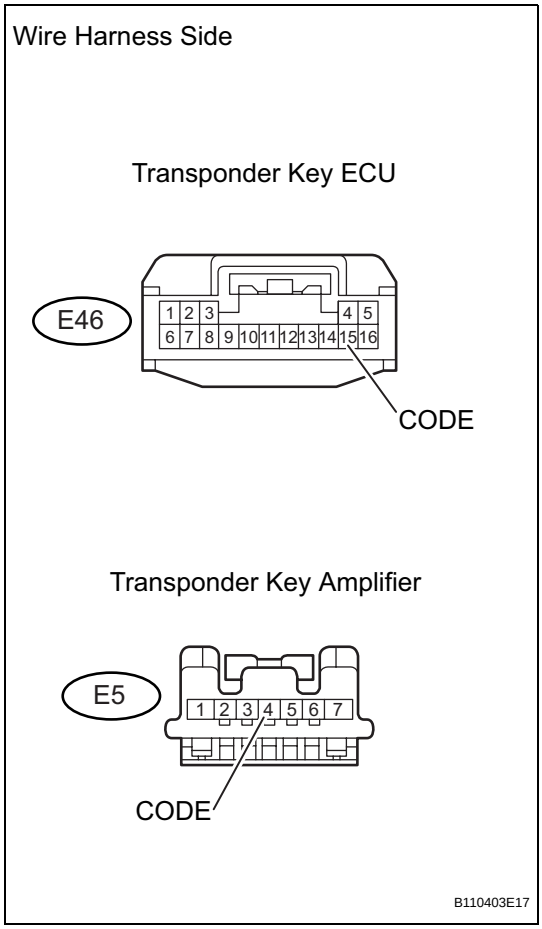

(a) Disconnect the E46 ECU connector.
(b) Disconnect the E5 amplifier connector.
(c) Measure the resistance of the wire harness side connectors.

Standard resistance

Tester Connection	Specified Condition
E46-15 (CODE) - E5-4 (CODE)	Below 1 Ω
E46-15 (CODE) or E5-4 (CODE) - Body ground	10 kΩ or higher

NG → **REPAIR OR REPLACE HARNESS AND CONNECTOR**

OK

5	CHECK TRANSPONDER KEY AMPLIFIER (OPERATION)

EI

(a) Temporarily replacing the transponder key amplifier with a new or normally functioning one.
(b) Check that the engine starts normally.

OK:

Engine starts.

NG → **REPLACE TRANSPONDER KEY ECU**

OK

END (TRANSPONDER KEY AMPLIFIER IS DEFECTIVE)

DTC	B2799	Engine Immobiliser System Malfunction

DESCRIPTION

This DTC is output when one of the following occurs: 1) the ECM detects errors in its own communications with the transponder key ECU; 2) the ECM detects errors in the communication lines; or 3) the ECU communication ID between the transponder key ECU and ECM is different and an engine start is attempted. Before troubleshooting for this DTC, make sure no transponder key ECU DTCs are present. If present, troubleshoot the transponder key ECU DTCs first.

DTC No.	DTC Detection Condition	Trouble Area
B2799	One of following conditions is met: • Error in communication between ECM and transponder key ECU • Error in communication lines • Communication ID is different during communication with transponder key ECU	• Wire harness • Transponder key ECU • ECM

WIRING DIAGRAM

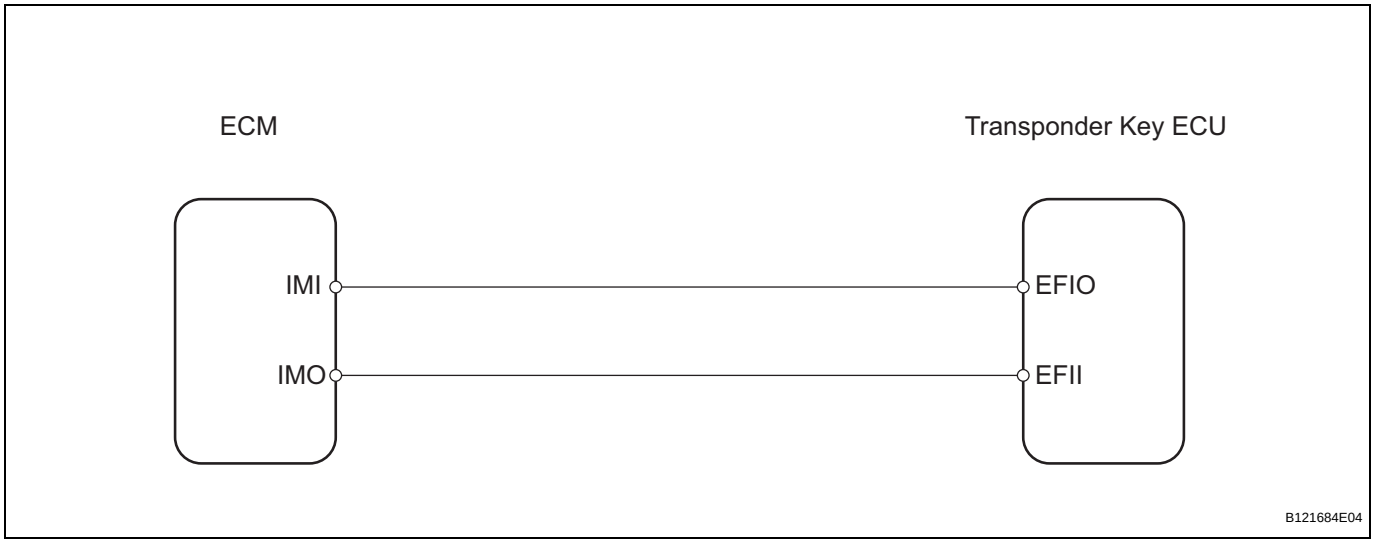

INSPECTION PROCEDURE

1	CHECK FOR DTC

(a) Delete the DTC (see page EI-18).
(b) Recheck for DTC.
OK:
B2799 output does not reoccur.

OK → **NORMAL**

NG

2 CHECK WIRE HARNESS (TRANSPONDER KEY ECU - ECM)

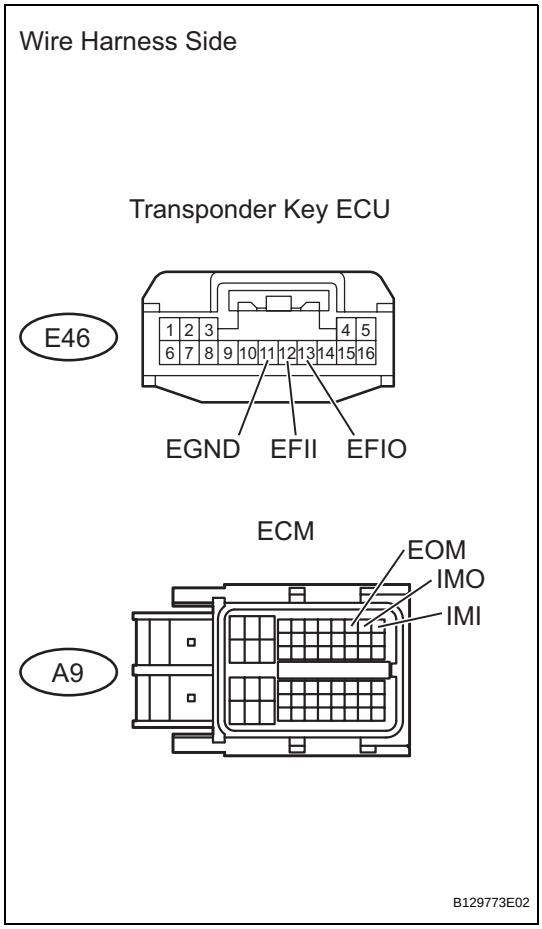

(a) Disconnect the E46 ECU connector.
(b) Disconnect the A9 ECM connector.
(c) Measure the resistance of the wire harness side connectors.

Standard resistance

Tester Connection	Specified Condition
E46-13 (EFIO) - A9-11 (IMI)	Below 1 Ω
E46-12 (EFII) - A9-10 (IMO)	
E46-11 (EGND) - A9-9 (EOM)	
E46-13 (EFIO) or A9-11 (IMI) - Body ground	10 kΩ or higher
E46-12 (EFII) or A9-10 (IMO) - Body ground	

NG → **REPAIR OR REPLACE HARNESS AND CONNECTOR**

OK

3 CHECK TRANSPONDER KEY ECU (OPERATION)

(a) Temporarily replace the transponder key ECU with a new or normally functioning one.
(b) Check that then engine starts normally.

OK:

Engine starts normally.

NG → **REPLACE ECM**

OK

END (TRANSPONDER KEY ECU IS DEFECTIVE)

Security Indicator Light Circuit

DESCRIPTION

When the transponder key is registered, the transponder key ECU indicates the key registration condition by lighting up, blinking or turning off the security indicator.

WIRING DIAGRAM

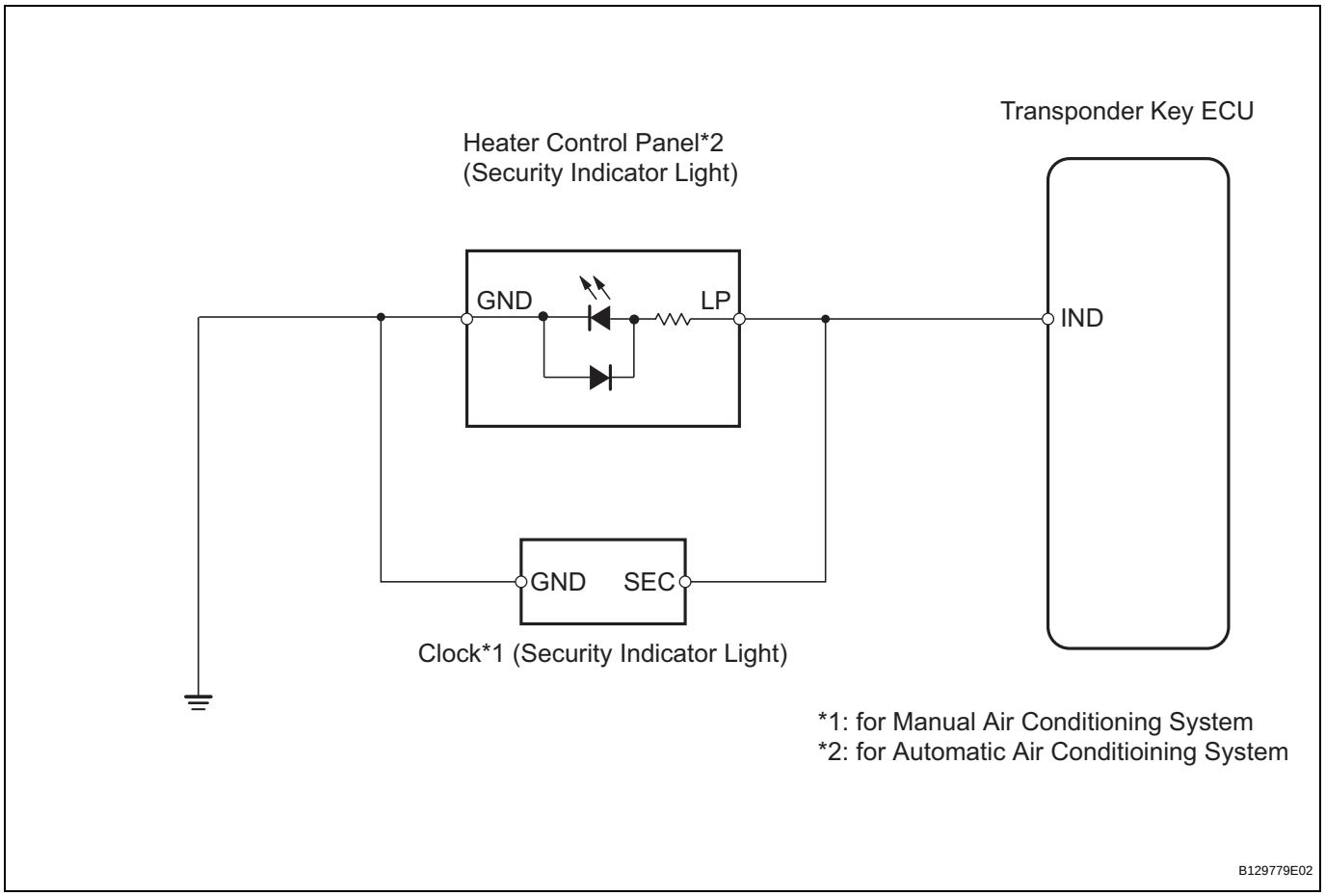

EI

INSPECTION PROCEDURE

1	PERFORM ACTIVE TEST BY INTELLIGENT TESTER (SECURITY INDICATOR LIGHT)

(a) Select the ACTIVE TEST, use the intelligent tester (with CAN VIM) to generate a command, and then check that the security indicator light operation is normal.

Transponder key ECU:

Item	Normal Condition	Diagnostic Note
SECURITY INDIC	Security indicator light turns ON / OFF	-

OK:

Security indicator light turns ON / OFF.

OK → **Go to step 3**

NG

2	CHECK WIRE HARNESS (TRANSPONDER KEY ECU - SECURITY INDICATOR LIGHT)

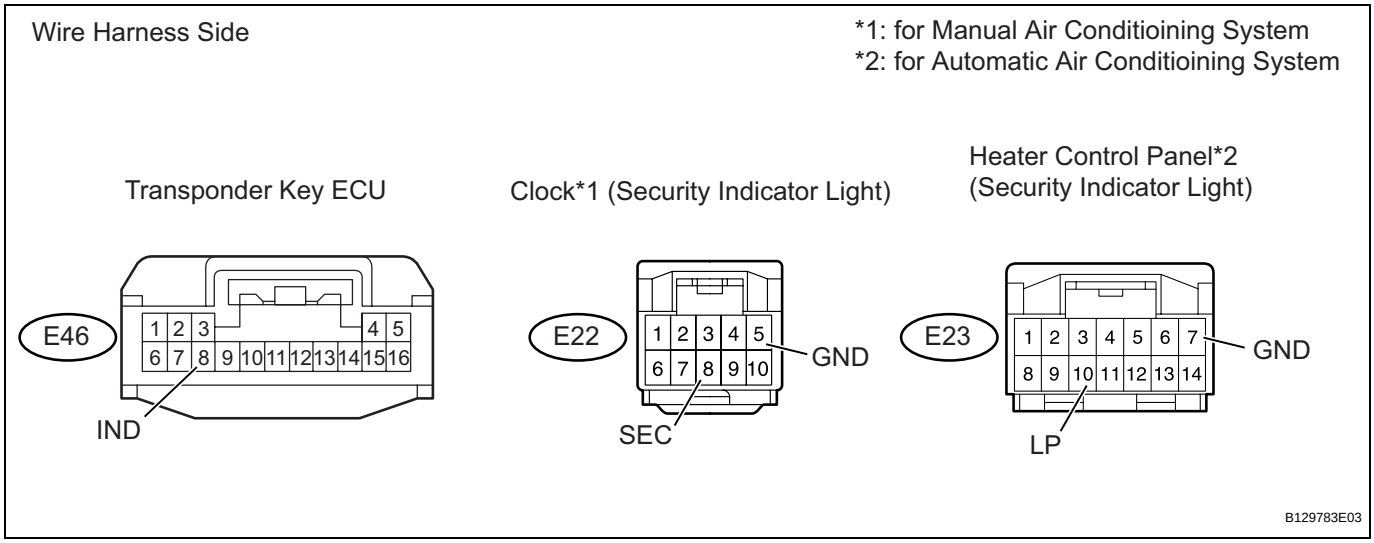

(a) Disconnect the E46 ECU connector.
(b) Disconnect the E22*1 or E23*2 light connector.
(c) Measure the resistance of the wire harness side connectors.
HINT:
*1: for Manual air conditioning system
*2: for Automatic air conditioning system
Standard resistance:
for Manual Air Conditioning System

Tester Connection	Specified Condition
E46-8 (IND) - E22-8 (SEC)	Below 1 Ω
E22-5 (GND) - Body ground	
E46-8 (IND) or E22-8 (SEC) - Body ground	10 kΩ or higher

for Automatic Air Conditioning System

Tester Connection	Specified Condition
E46-8 (IND) - E23-10 (LP)	Below 1 Ω
E23-7 (GND) - Body ground	
E46-8 (IND) or E23-10 (LP) - Body ground	10 kΩ or higher

EI

NG → **REPAIR OR REPLACE HARNESS AND CONNECTOR**

OK

3	INSPECT TRANSPONDER KEY ECU (OUTPUT)

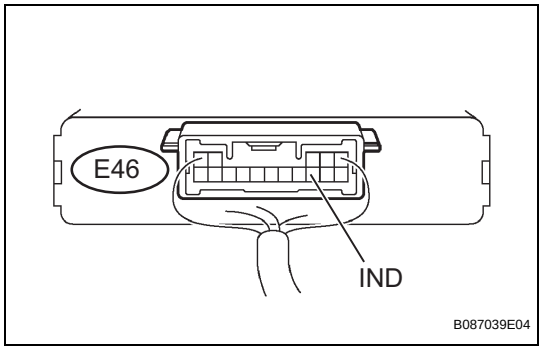

(a) Remove the transponder key ECU with its connectors still connected.
(b) Measure the voltage of the ECU.
Standard voltage

Tester Condition	Condition	Specified Condition
E46-8 (IND) - Body ground	Engine immobiliser system is set	10 to 14 V and below 1 V output alternately

NG → **REPLACE TRANSPONDER KEY ECU**

OK

REPLACE CLOCK SUB-ASSEMBLY (for MANUAL AIR CONDITIONING SYSTEM), HEATER CONTROL PANEL (for AUTOMATIC AIR CONDITIONING SYSTEM)

ECU Power Source Circuit

DESCRIPTION

This circuit provides power to operate the transponder key ECU.

WIRING DIAGRAM

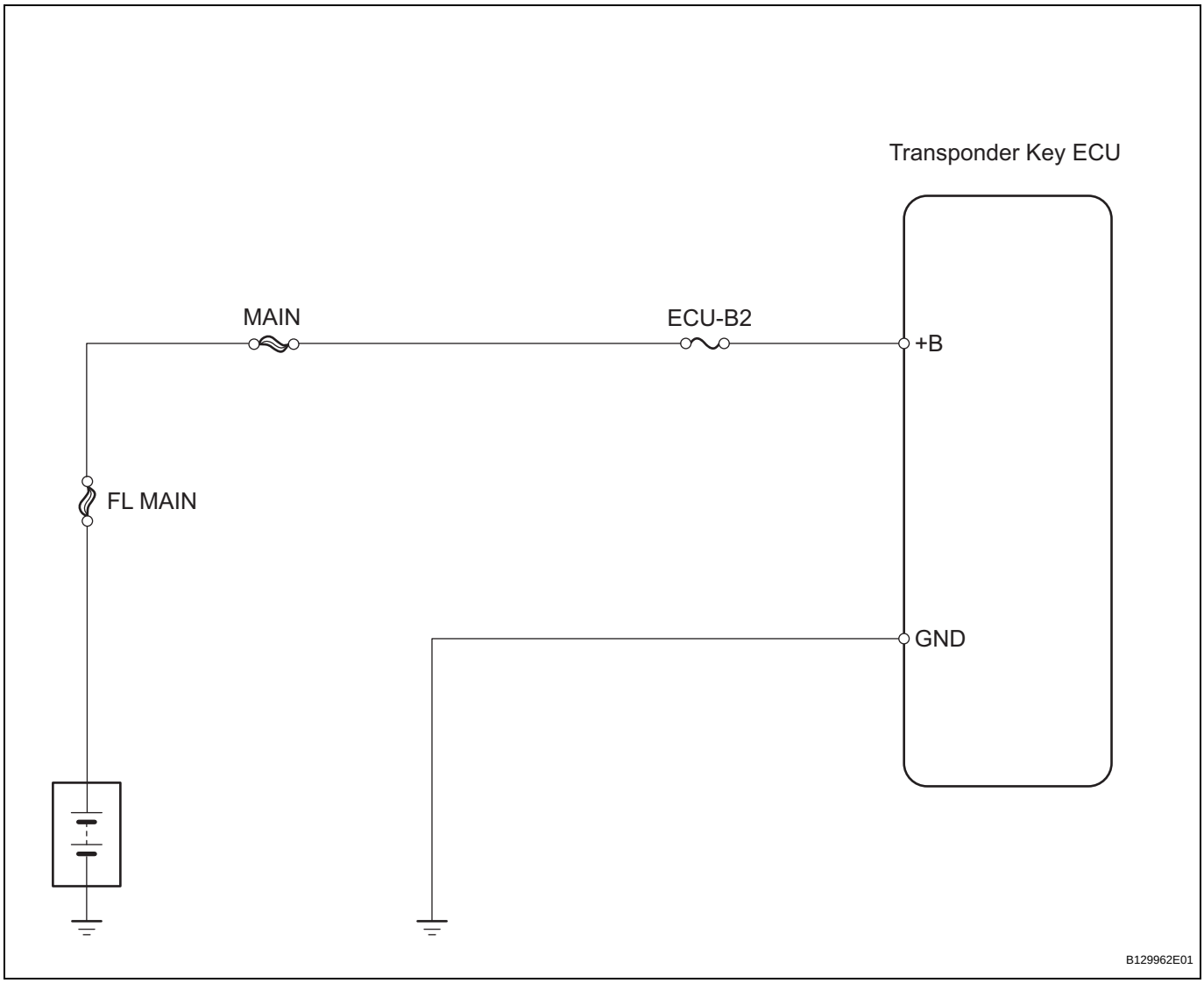

INSPECTION PROCEDURE

1	**INSPECT FUSE (ECU-B2)**

(a) Remove the ECU-B2 fuse from the engine room No. 2 relay block.
(b) Measure the resistance of the fuse.
Standard resistance:
Below 1 Ω

NG	**REPLACE FUSE**

OK

2	CHECK WIRE HARNESS (TRANSPONDER KEY ECU - BATTERY AND BODY GROUND)

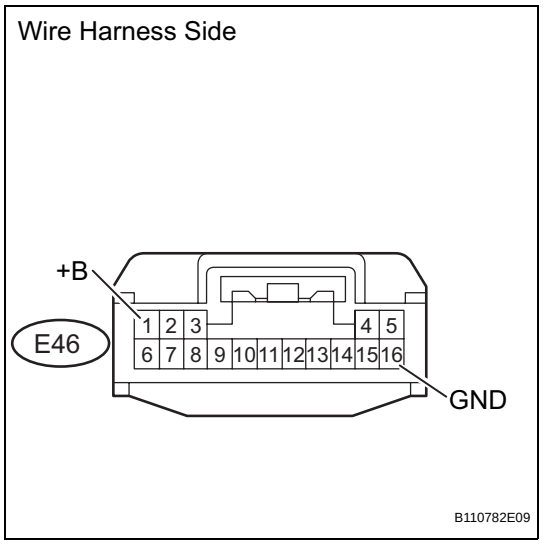

(a) Disconnect the E46 ECU connector.
(b) Measure the resistance and voltage of the wire harness side connector.

Standard resistance

Tester Connection	Specified Condition
E46-16 (GND) - Body ground	Below 1 Ω

Standard voltage

Tester Connection	Specified Condition
E46-1 (+B) - Body ground	10 to 14 V

NG → **REPAIR OR REPLACE HARNESS AND CONNECTOR**

OK

PROCEED TO NEXT CIRCUIT INSPECTION SHOWN IN PROBLEM SYMPTOMS TABLE

EI

ENGINE IMMOBILISER SYSTEM

PARTS LOCATION

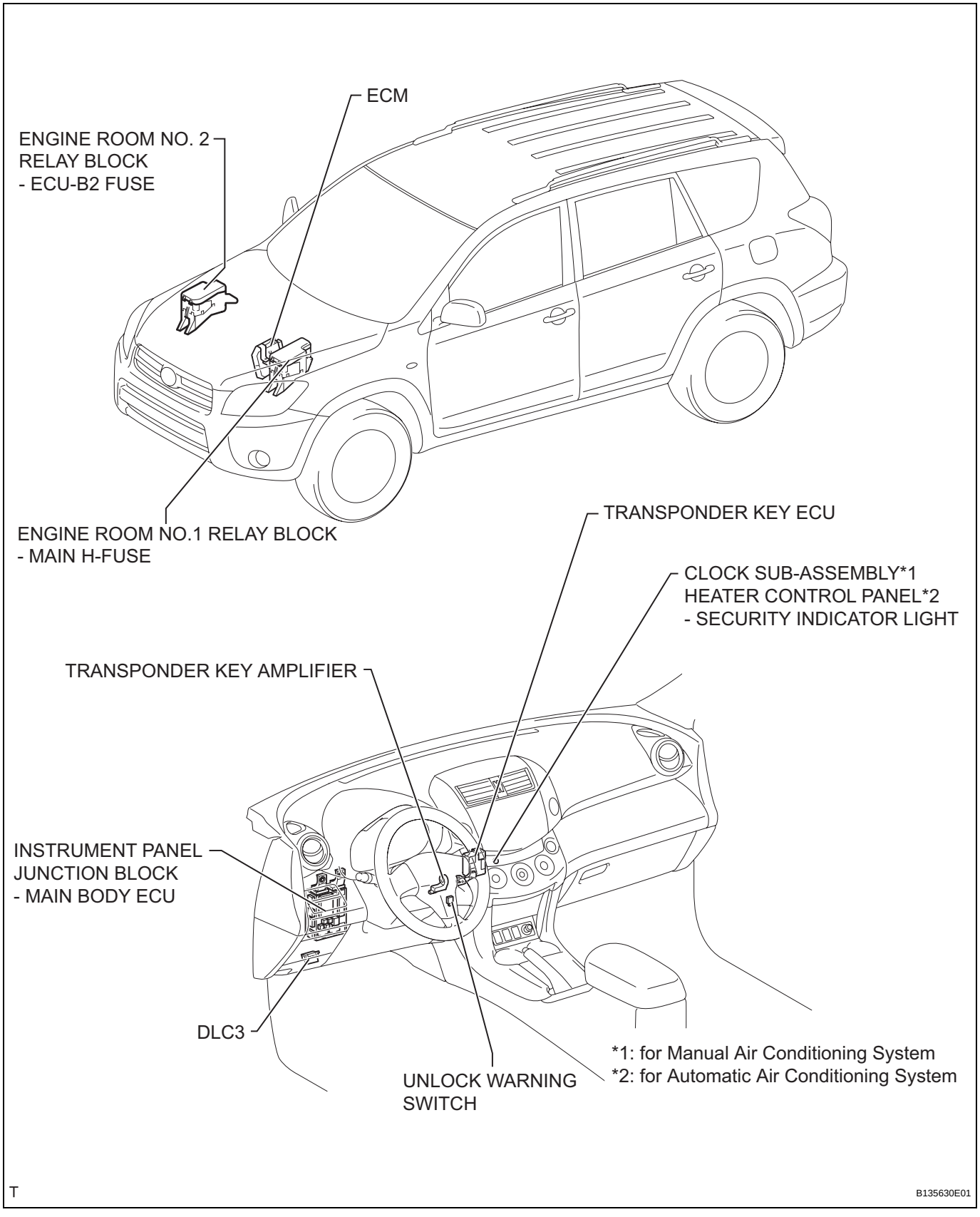

EI

SYSTEM DIAGRAM

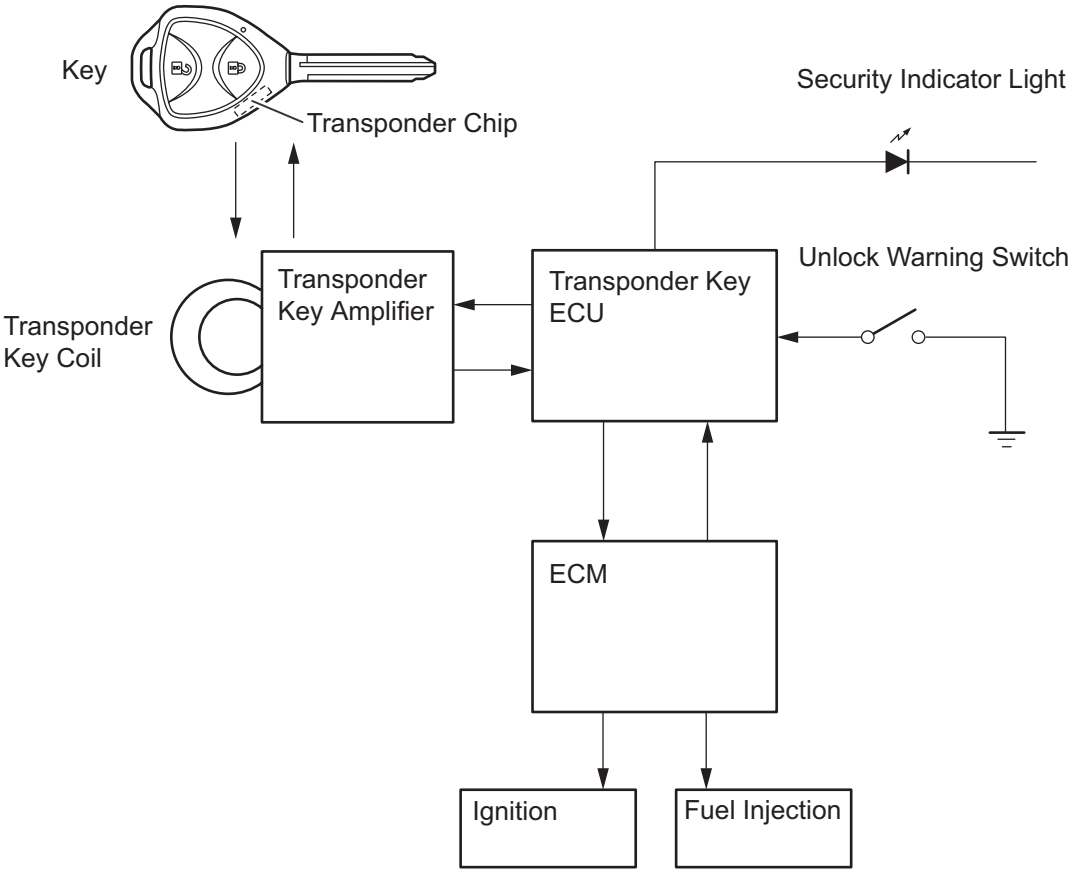

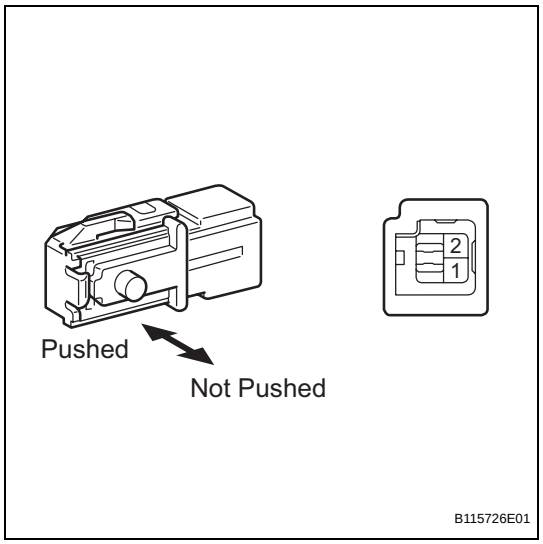

UNLOCK WARNING SWITCH

INSPECTION

1. INSPECT UNLOCK WARNING SWITCH ASSEMBLY

(a) Measure the resistance of the switch.

Standard resistance

Tester Connection	Condition	Specified Condition
1 - 2	Pushed	Below 1 Ω
	Not pushed	10 kΩ or higher

If the result is not as specified, replace the switch assembly.

BACK DOOR OUTSIDE GARNISH

COMPONENTS

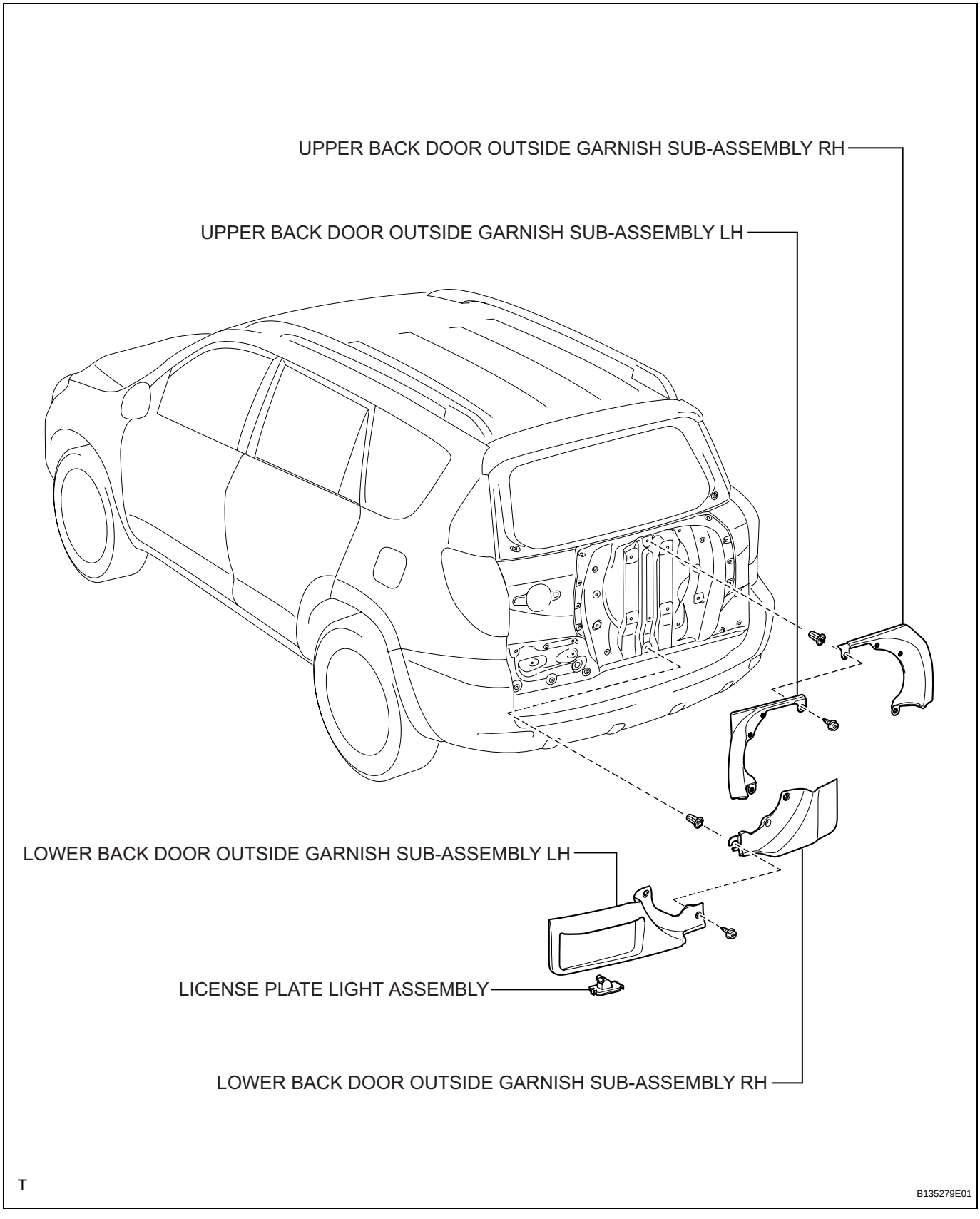

ET

ET

REMOVAL

1. **DISCONNECT CABLE FROM NEGATIVE BATTERY TERMINAL**
   CAUTION:
   Wait at least 90 seconds after disconnecting the cable from the negative (-) battery terminal to prevent airbag and seat belt pretensioner activation.
2. **REMOVE BACK DOOR CENTER GARNISH (See page ED-59)**
3. **REMOVE BACK DOOR SIDE GARNISH LH (See page ED-59)**
4. **REMOVE BACK DOOR SIDE GARNISH RH (See page ED-59)**
5. **REMOVE BACK DOOR COURTESY LIGHT SWITCH ASSEMBLY (See page LI-122)**
6. **REMOVE BACK DOOR TRIM BOARD (See page ED-59)**
7. **REMOVE LOWER BACK DOOR OUTSIDE GARNISH SUB-ASSEMBLY LH**
   (a) Remove the screw and the 7 clips.
   (b) Remove the back door outside garnish and disconnect the connector.
   (c) Remove the license plate light (see page LI-110).

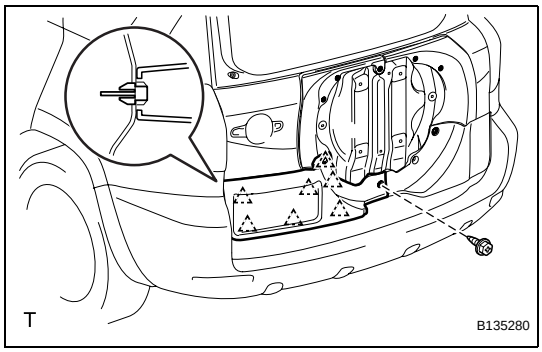

8. **REMOVE UPPER BACK DOOR OUTSIDE GARNISH SUB-ASSEMBLY LH**
   (a) Remove the screw and the 6 clips.
   (b) Remove the back door outside garnish.

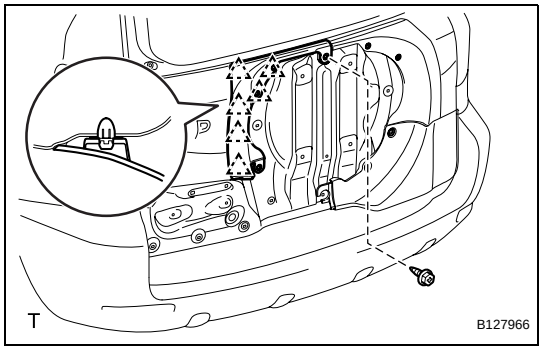

9. **REMOVE LOWER BACK DOOR OUTSIDE GARNISH SUB-ASSEMBLY RH**
   (a) Remove the 5 clips and detach the claw.
   (b) Remove the back door outside garnish.

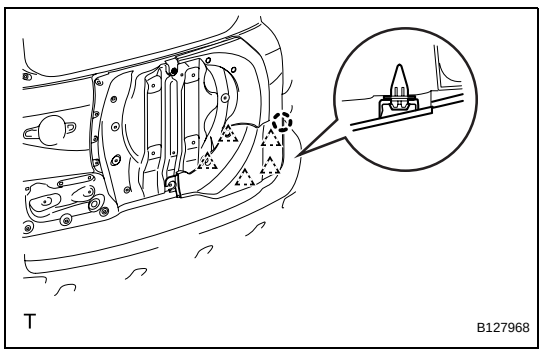

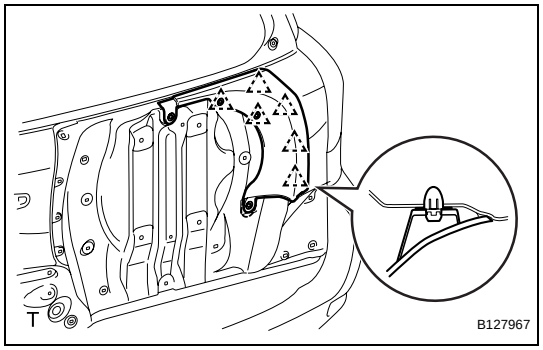

10. **REMOVE UPPER BACK DOOR OUTSIDE GARNISH SUB-ASSEMBLY RH**
    (a) Remove the 6 clips and back door outside garnish.

INSTALLATION

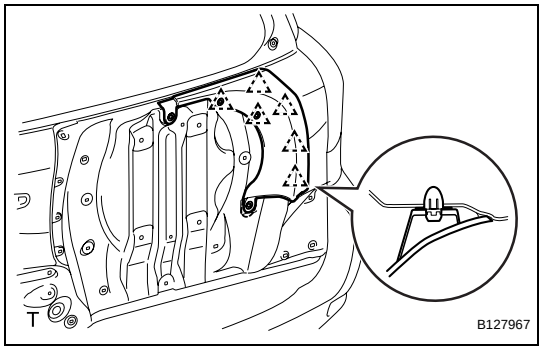

1. **INSTALL UPPER BACK DOOR OUTSIDE GARNISH SUB-ASSEMBLY RH**
    (a) Attach the 6 clips to install the back door outside garnish.

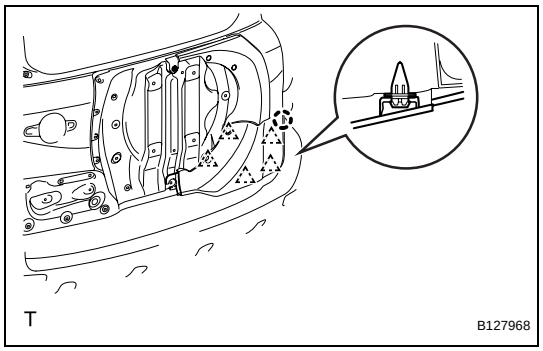

2. **INSTALL LOWER BACK DOOR OUTSIDE GARNISH SUB-ASSEMBLY RH**
    (a) Install the back door outside garnish.
    (b) Attach the claw and 5 clips.

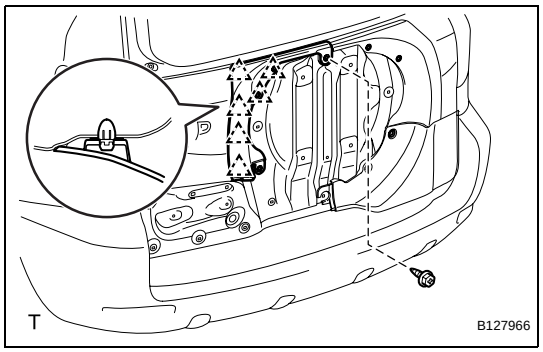

3. **INSTALL UPPER BACK DOOR OUTSIDE GARNISH SUB-ASSEMBLY LH**
    (a) Attach the 6 clips to install the back door outside garnish.
    (b) Install the screw.

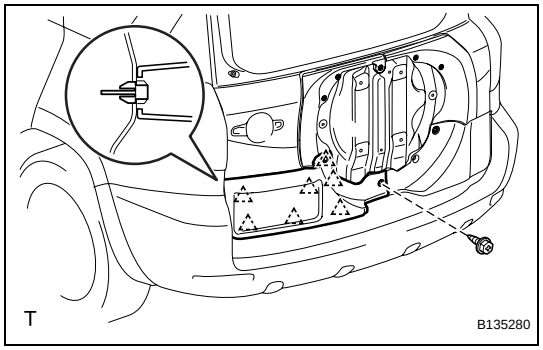

4. **INSTALL LOWER BACK DOOR OUTSIDE GARNISH SUB-ASSEMBLY LH**
    (a) Install the license plate light (see page LI-111).
    (b) Connect the connector.
    (c) Attach the 7 clips to install the back door outside garnish.
    (d) Install the screw.

5. **INSTALL BACK DOOR TRIM BOARD (See page ED-66)**

ET

6. **INSTALL BACK DOOR COURTESY LIGHT SWITCH ASSEMBLY (See page LI-123)**
7. **INSTALL BACK DOOR SIDE GARNISH LH (See page ED-67)**
8. **INSTALL BACK DOOR SIDE GARNISH RH (See page ED-67)**
9. **INSTALL BACK DOOR GARNISH CENTER (See page ED-67)**
10. **CONNECT CABLE TO NEGATIVE BATTERY TERMINAL**

REMOVAL

1. DISCONNECT CABLE FROM NEGATIVE BATTERY TERMINAL

CAUTION:

Wait at least 90 seconds after disconnecting the cable from the negative (-) battery terminal to prevent airbag and seat belt pretensioner activation.

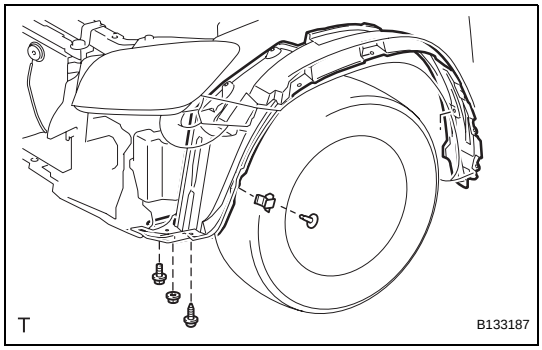

2. REMOVE FRONT FENDER LINER LH

(a) Using a screwdriver, remove the fender liner retainer.

(b) Remove the screw, nut and bolt.

(c) w/ Splash Shield:
Remove the front fender splash shield LH.

(d) Partially remove the fender liner.
HINT:
It is not necessary to fully remove the fender liner. Partially remove it so that the bumper cover can be removed later.

3. REMOVE FRONT FENDER LINER RH

HINT:
Use the same procedures described for the LH side.

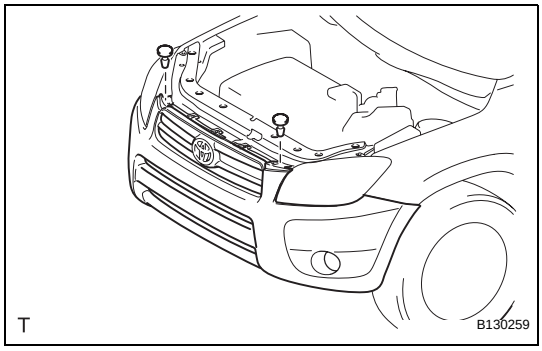

4. REMOVE RADIATOR SUPPORT OPENING COVER

(a) Remove the 2 clips.

(b) Partially remove the radiator support opening cover.
HINT:
It is not necessary to fully remove the radiator support opening cover. Partially remove it so that the bumper cover can be removed later.

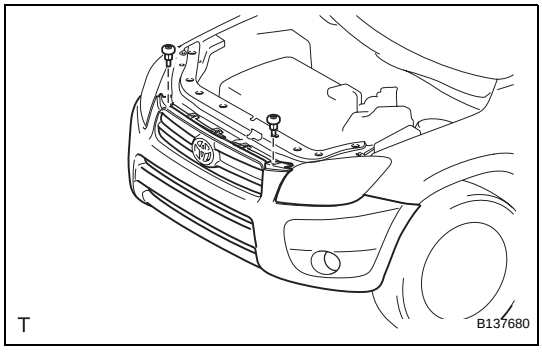

5. REMOVE RADIATOR GRILLE PROTECTOR

(a) Remove the 2 radiator grille protectors.

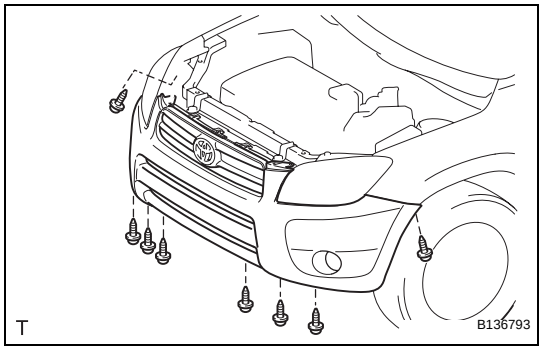

6. REMOVE FRONT BUMPER COVER

(a) Remove the 8 screws.

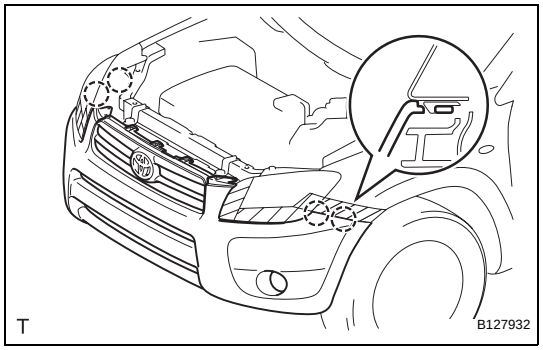

(b) Apply protective tape under the front fender and headlight.

(c) Using a screwdriver, detach the 4 claws.
HINT:
Tape the screwdriver tip before use.

(d) w/ Fog Light:
Disconnect the 2 fog light connectors.

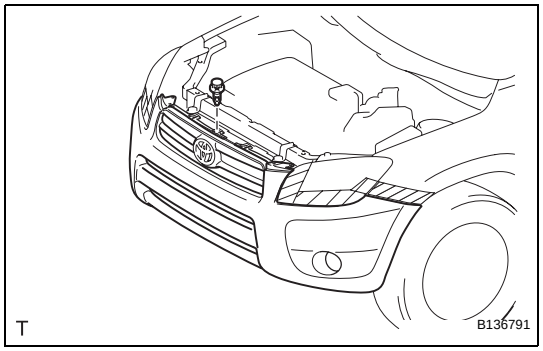

(e) Using a clip remover, remove the hood cushion center.

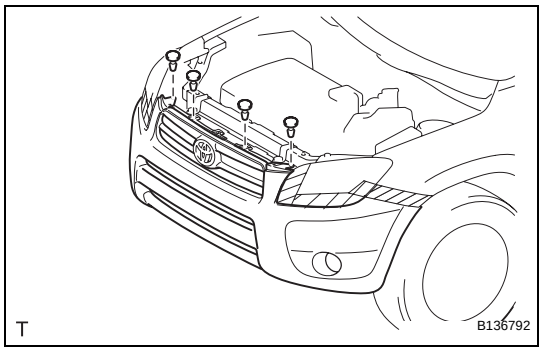

(f) Using a clip remover, remove the 4 clips and remove the front bumper cover.

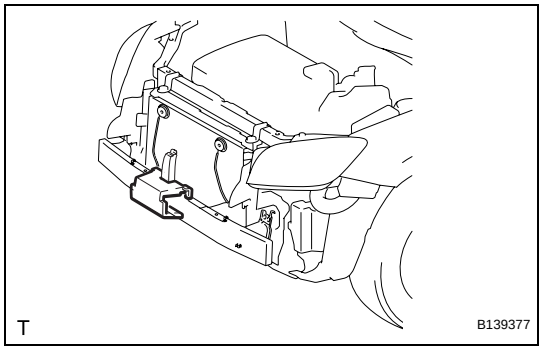

7. REMOVE NO. 2 FRONT BUMPER ENERGY ABSORBER

(a) Remove the absorber.

ET

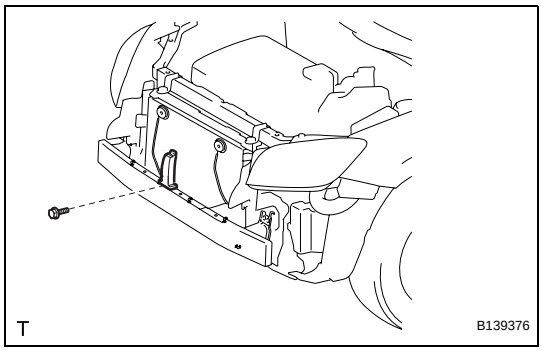

8. REMOVE FRONT BUMPER RETAINER

(a) Remove the bolt and retainer.

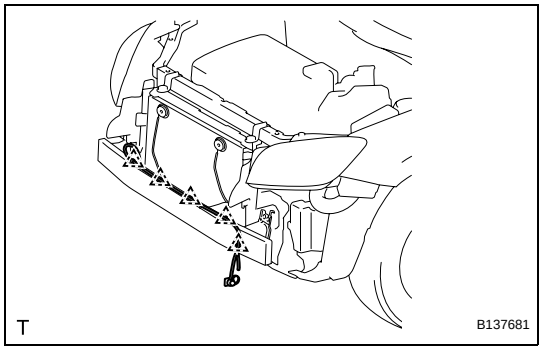

9. REMOVE FRONT BUMPER REINFORCEMENT SUB-ASSEMBLY

(a) Detach 5 clamps and remove the wire harness.

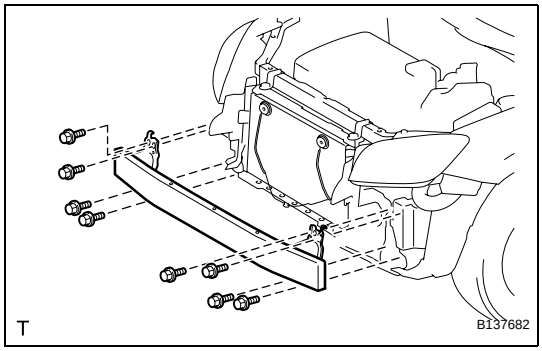

(b) Remove the 8 bolts and reinforcement.

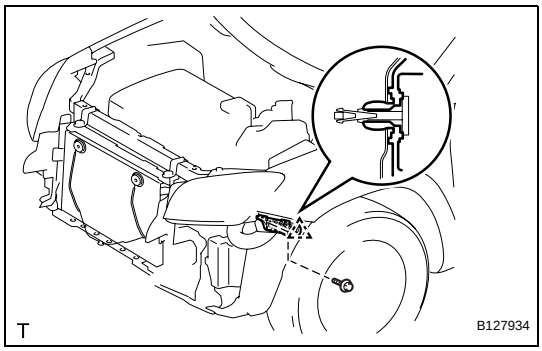

10. REMOVE FRONT BUMPER SIDE RETAINER LH

(a) Remove the bolt.

(b) Using a screwdriver, detach the clip and remove the bumper side retainer.
HINT:
Tape the screwdriver tip before use.

11. REMOVE FRONT BUMPER SIDE RETAINER RH

HINT:
Use the same procedures described for the LH side.

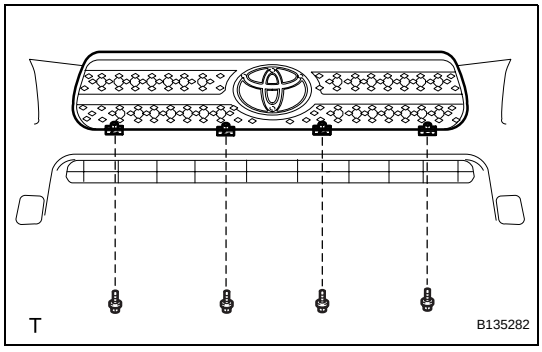

DISASSEMBLY

1. REMOVE RADIATOR GRILLE SUB-ASSEMBLY

(a) Remove the 4 bolts and 4 nuts.

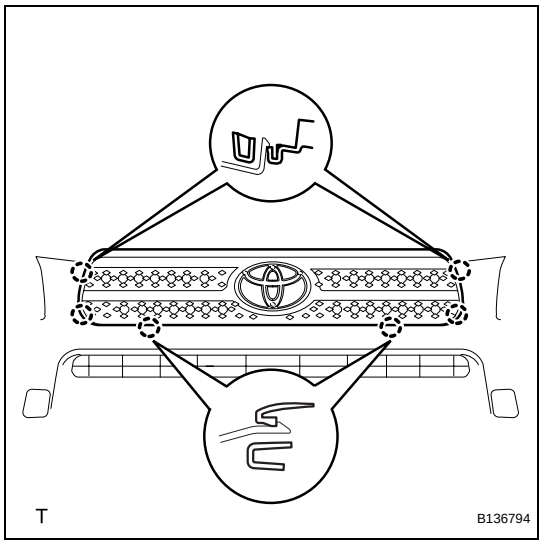

(b) Detach the 6 claws and remove the radiator grille.

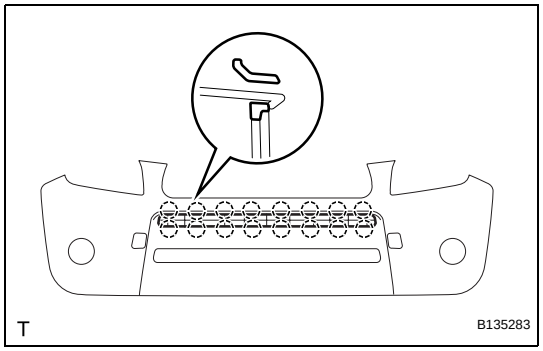

2. REMOVE NO. 1 RADIATOR GRILLE LOWER

(a) Detach the 18 claws and remove the radiator grille.

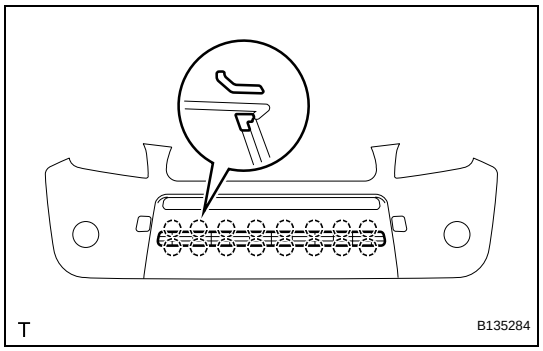

3. REMOVE NO. 2 RADIATOR GRILLE LOWER

(a) Detach the 16 claws and remove the radiator grille.

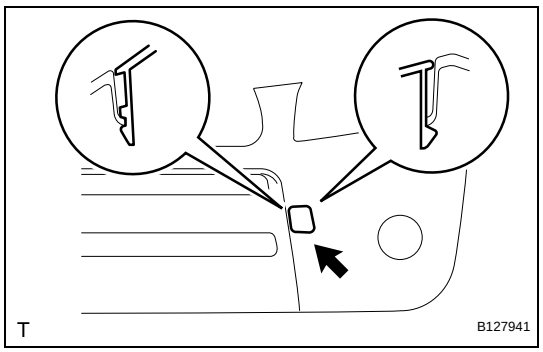

4. REMOVE FRONT BUMPER ARM HOLE COVER LH

(a) Detach the 2 claws and disconnect the arm hole cover.

(b) Remove the hook and bumper arm hole cover.

5. REMOVE FRONT BUMPER ARM HOLE COVER RH

(a) Use the same procedures described for the LH side.

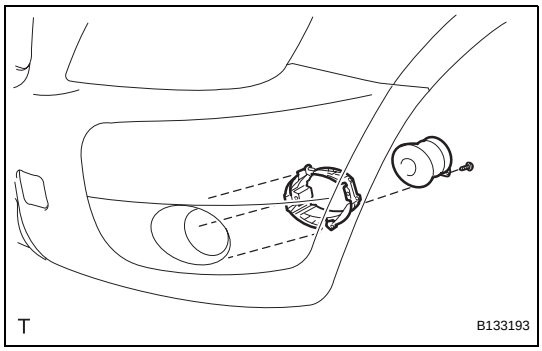

6. REMOVE FOG LIGHT ASSEMBLY LH
(a) Remove the screw and fog light.
(b) Remove the 3 bolts and fog light mounting bracket.

7. REMOVE FOG LIGHT ASSEMBLY RH
HINT:
Use the same procedures described for the LH side.

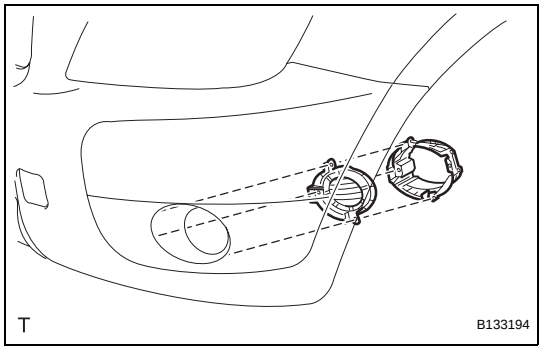

8. REMOVE FRONT BUMPER HOLE COVER LH (w/o Fog Light)
(a) Remove the 3 bolts, bumper hole cover and fog light mounting bracket.

9. REMOVE FRONT BUMPER HOLE COVER RH (w/o Fog Light)
HINT:
Use the same procedures described for the LH side.

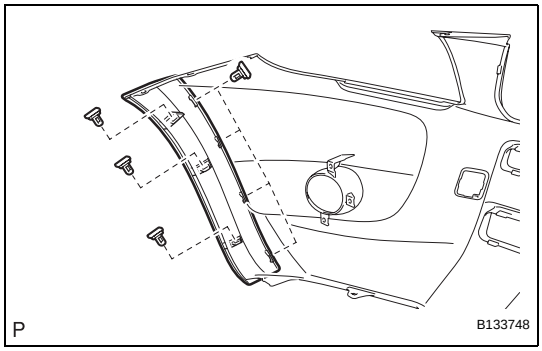

10. REMOVE FRONT BUMPER EXTENSION LH (for Wide Body)
(a) Detach the 7 outside moulding retainers and remove the extension LH.
NOTICE:
- **If reusing the extension, take care not to damage the extension.**
- **Be careful not to damage the vehicle body.**

11. REMOVE FRONT BUMPER EXTENSION RH (for Wide Body)
HINT:
Use the same procedures described for the LH side.

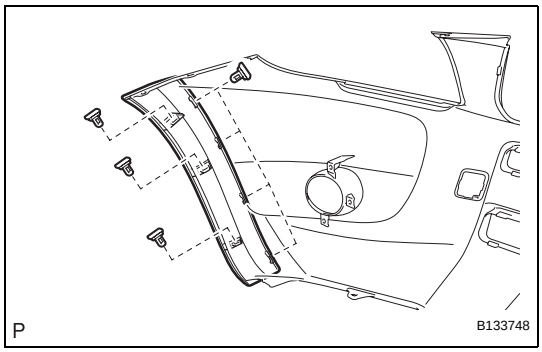

REASSEMBLY

1. INSTALL FRONT BUMPER EXTENSION LH (for Wide Body)
(a) Attach the 7 outside moulding retainers to install the extension.

2. INSTALL FRONT BUMPER EXTENSION RH (for Wide Body)
HINT:
Use the same procedures described for the LH side.

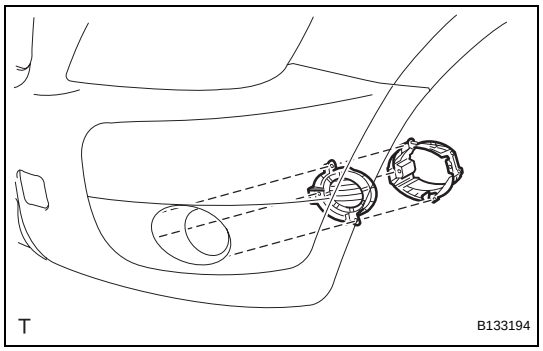

3. INSTALL FRONT BUMPER HOLE COVER LH (w/o Fog Light)

(a) Install the bumper hole cover with the fog light mounting bracket and 3 bolts.

4. INSTALL FRONT BUMPER HOLE COVER RH (w/o Fog Light)

HINT:

Use the same procedures described for the LH side.

5. INSTALL FOG LIGHT ASSEMBLY LH

(a) Install the fog light mounting bracket with the 3 bolts.

(b) Install the fog light with the screw.

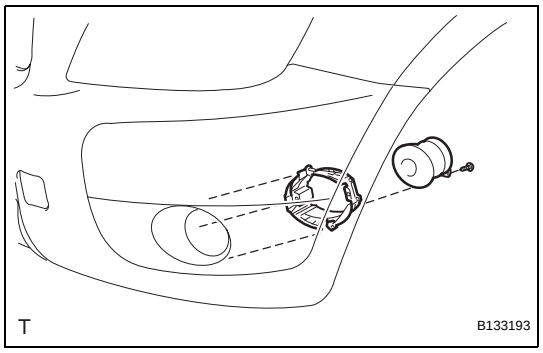

6. INSTALL FOG LIGHT ASSEMBLY RH

HINT:

Use the same procedures described for the LH side.

7. INSTALL FRONT BUMPER ARM HOLE COVER LH

(a) Install the hook.

(b) Attach the 2 claws and install the hole cover.

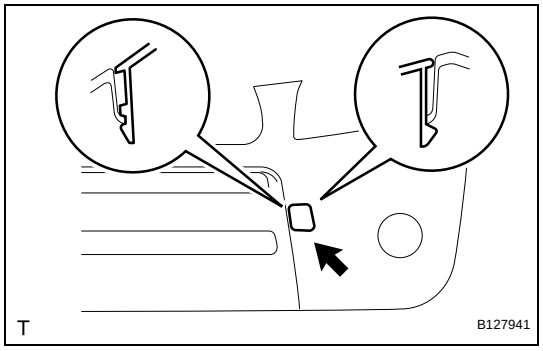

8. INSTALL FRONT BUMPER ARM HOLE COVER RH

HINT:

Use the same procedures described for the LH side.

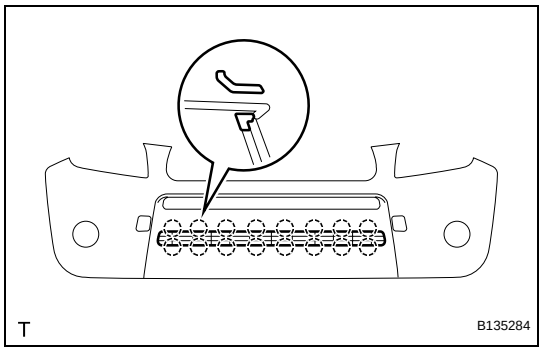

9. INSTALL NO. 2 RADIATOR GRILLE LOWER

(a) Install the radiator grille and attach the 16 claws.

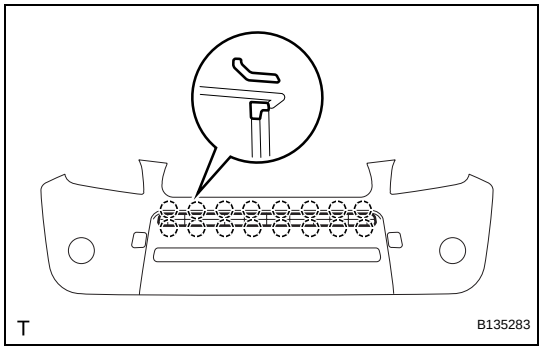

10. INSTALL NO. 1 RADIATOR GRILLE LOWER

(a) Install the radiator grille and attach the 18 claws.

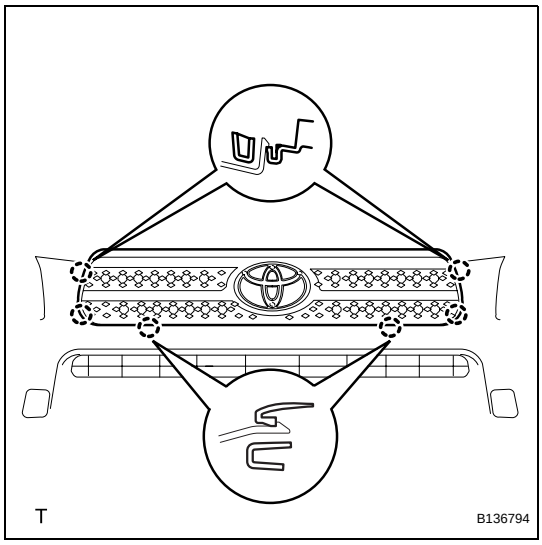

11. INSTALL RADIATOR GRILLE SUB-ASSEMBLY

(a) Install the radiator grille with the 6 claws.

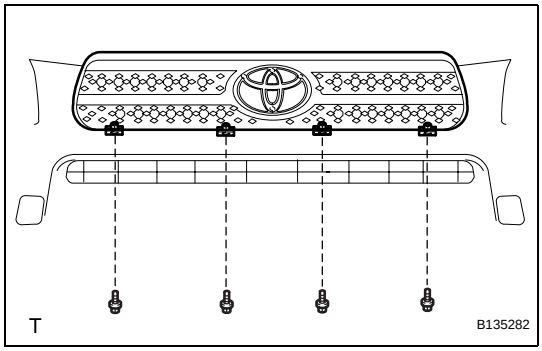

(b) Install the 4 bolts and 4 nuts.

INSTALLATION

1. INSTALL FRONT BUMPER SIDE RETAINER LH

(a) Install the clip and bumper side retainer.

(b) Install the bolt.
Torque: 6.0 N*m (61 kgf*cm, 53 in.*lbf)

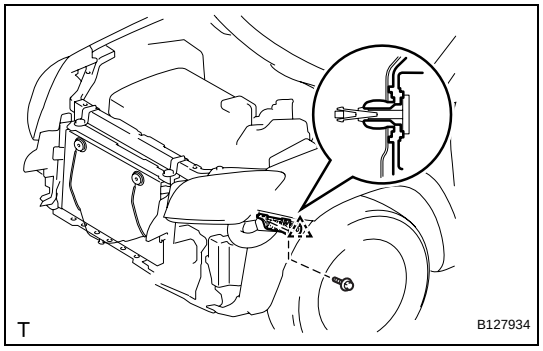

2. INSTALL FRONT BUMPER SIDE RETAINER RH

HINT:
Use the same procedures described for the LH side.

3. INSTALL FRONT BUMPER REINFORCEMENT

(a) Install the reinforcement with the 8 bolts.
Torque: 70 N*m (713 kgf*cm, 51 ft.*lbf)

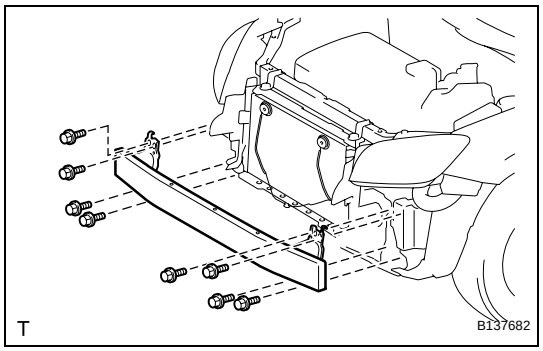

(b) Install the wire harness and attach the 5 claws.

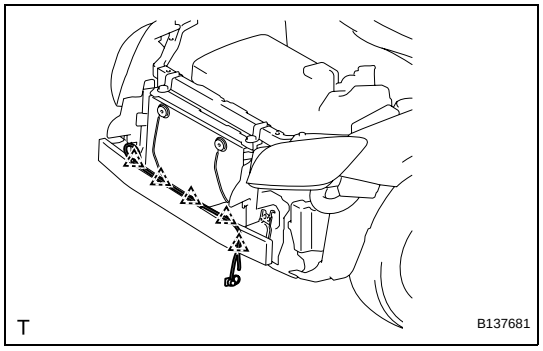

4. INSTALL FRONT BUMPER RETAINER

(a) Install the bolt with the retainer.

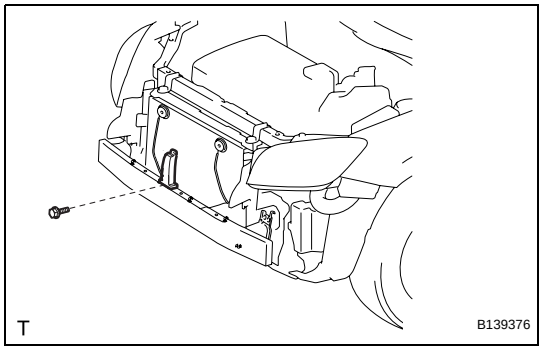

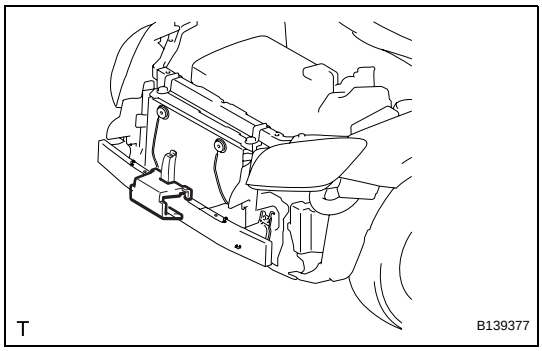

5. INSTALL NO. 2 FRONT BUMPER ENERGY ABSORBER

(a) Install the absorber.

6. INSTALL FRONT BUMPER COVER

(a) Put protective tape under the front fender and headlight.

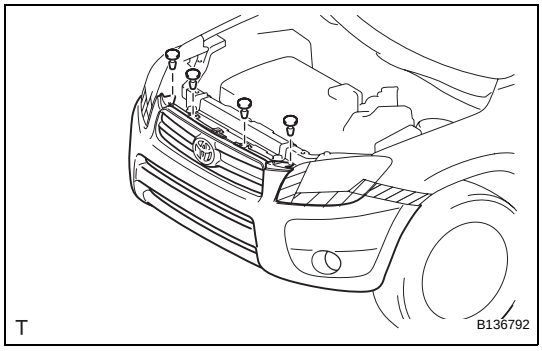

(b) Install the 4 clips.

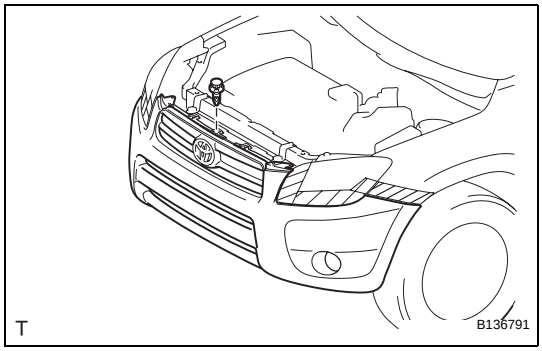

(c) Install the hood cushion center.

(d) w/ Fog Light:
Connect the 2 fog light connectors.

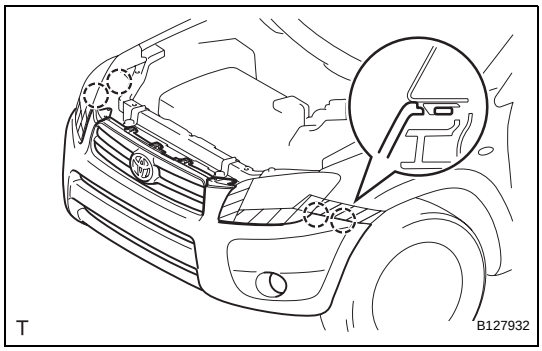

(e) Attach the 4 claws to install the bumper cover.

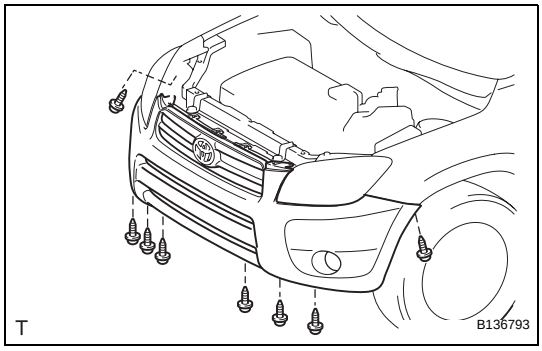

(f) Install the 8 screws.

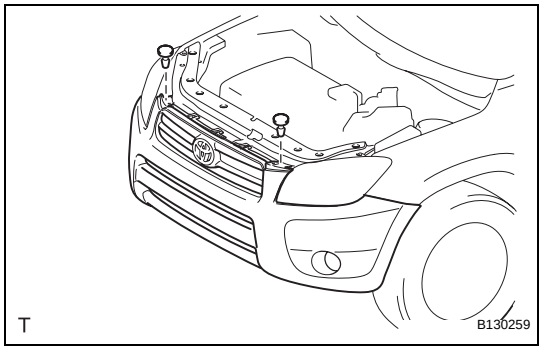

7. INSTALL RADIATOR SUPPORT OPENING COVER

(a) Install the 2 clips.

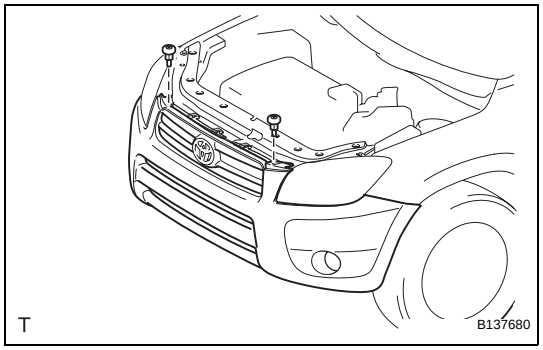

8. INSTALL RADIATOR GRILLE PROTECTOR

(a) Install the 2 radiator grille protectors.

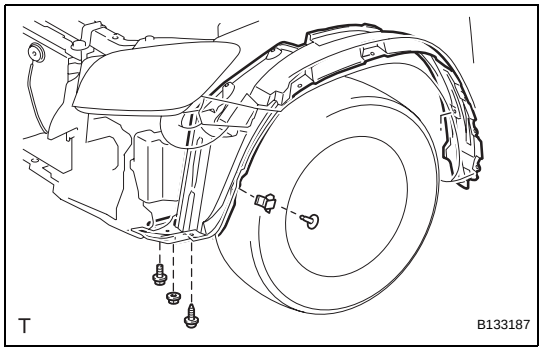

9. INSTALL FRONT FENDER LINER LH

(a) Install the fender liner with the fender liner retainer.

(b) w/ Splash Shield:
Install the front fender splash shield LH.

(c) Install the screw, nut and bolt.

10. INSTALL FRONT FENDER LINER RH

HINT:
Use the same procedures described for the LH side.

11. CONNECT CABLE TO NEGATIVE BATTERY TERMINAL

FRONT BUMPER

COMPONENTS

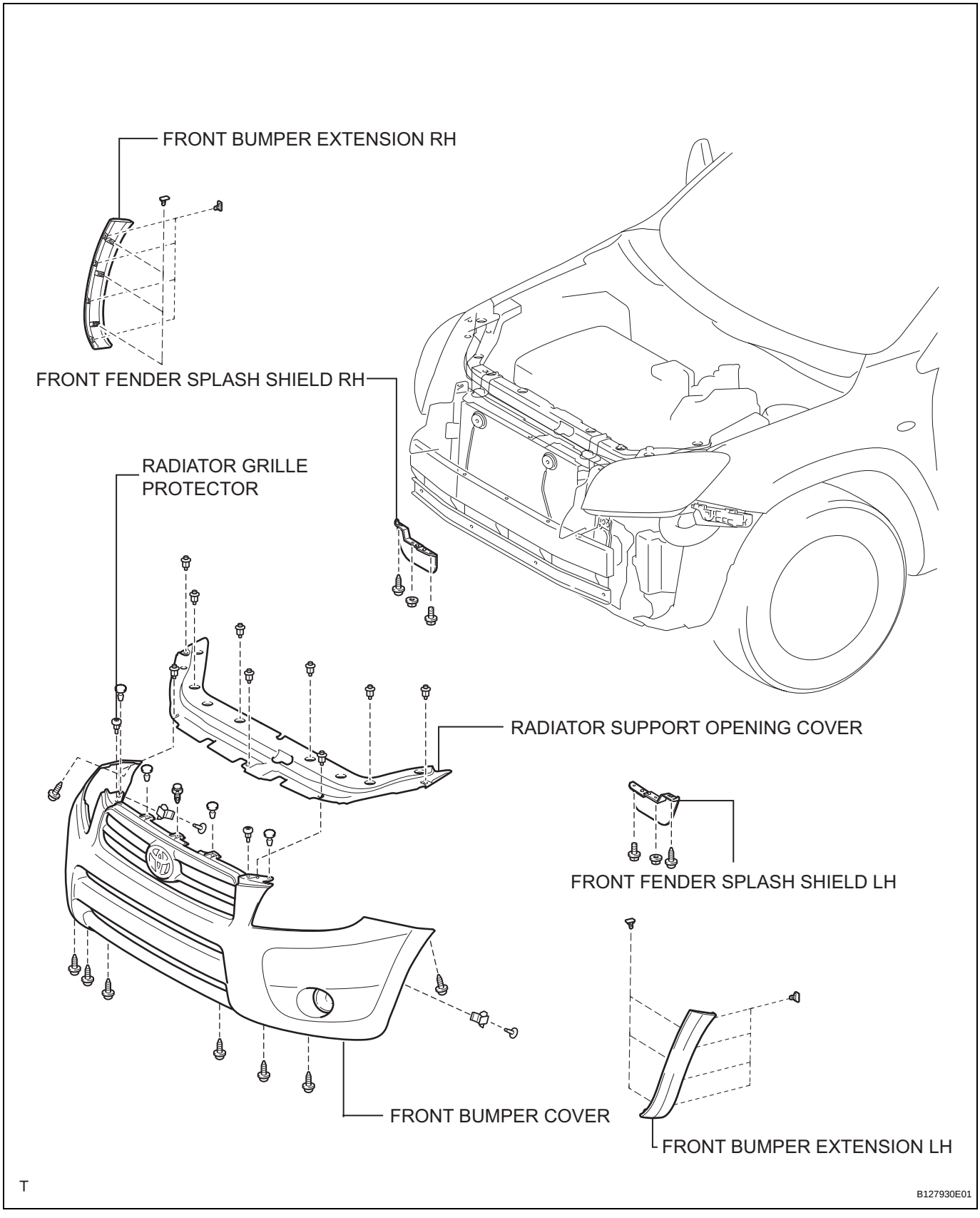

ET

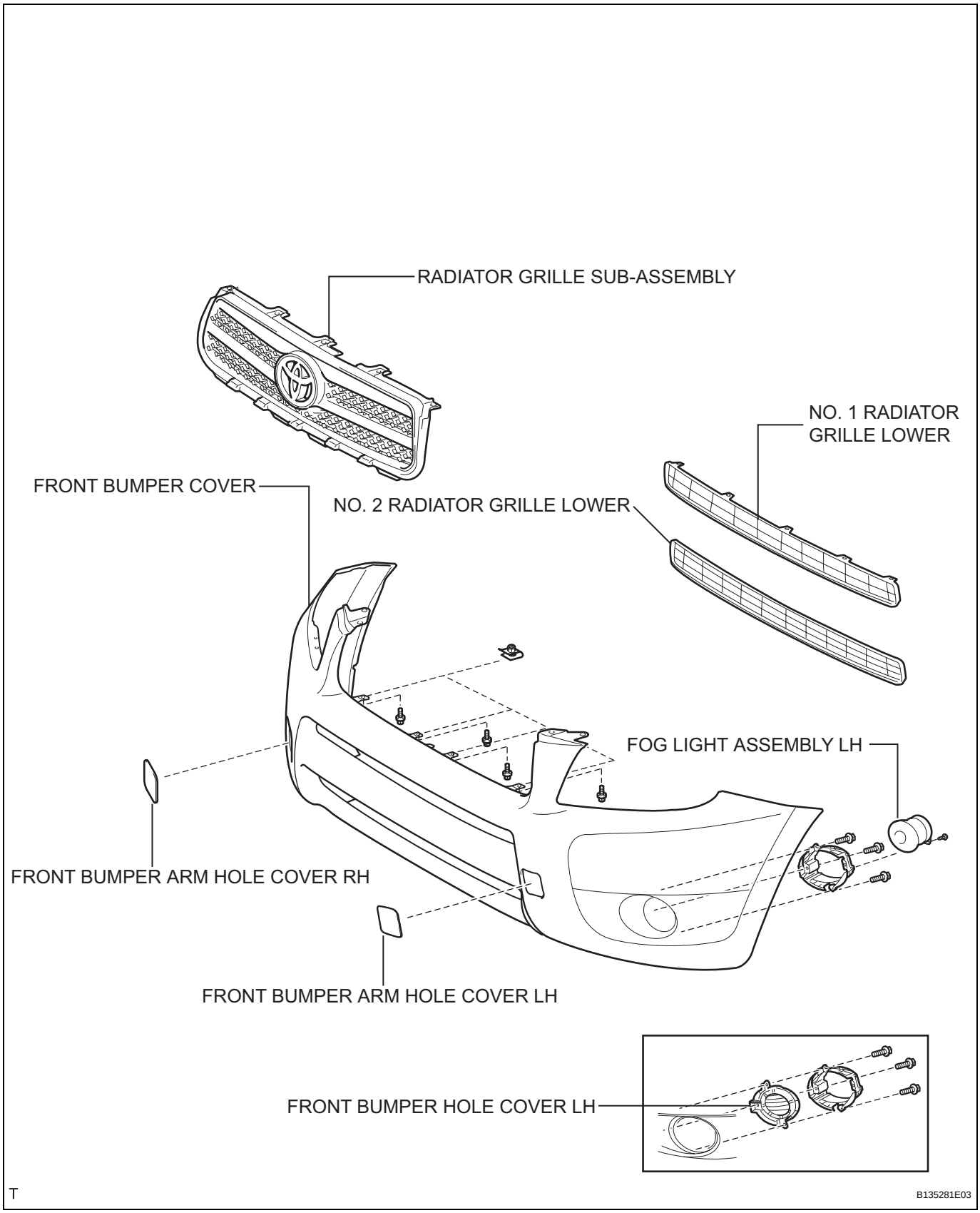
RADIATOR GRILLE SUB-ASSEMBLY
NO. 1 RADIATOR GRILLE LOWER
FRONT BUMPER COVER
NO. 2 RADIATOR GRILLE LOWER
FOG LIGHT ASSEMBLY LH
FRONT BUMPER ARM HOLE COVER RH
FRONT BUMPER ARM HOLE COVER LH
FRONT BUMPER HOLE COVER LH
T
B135281E03

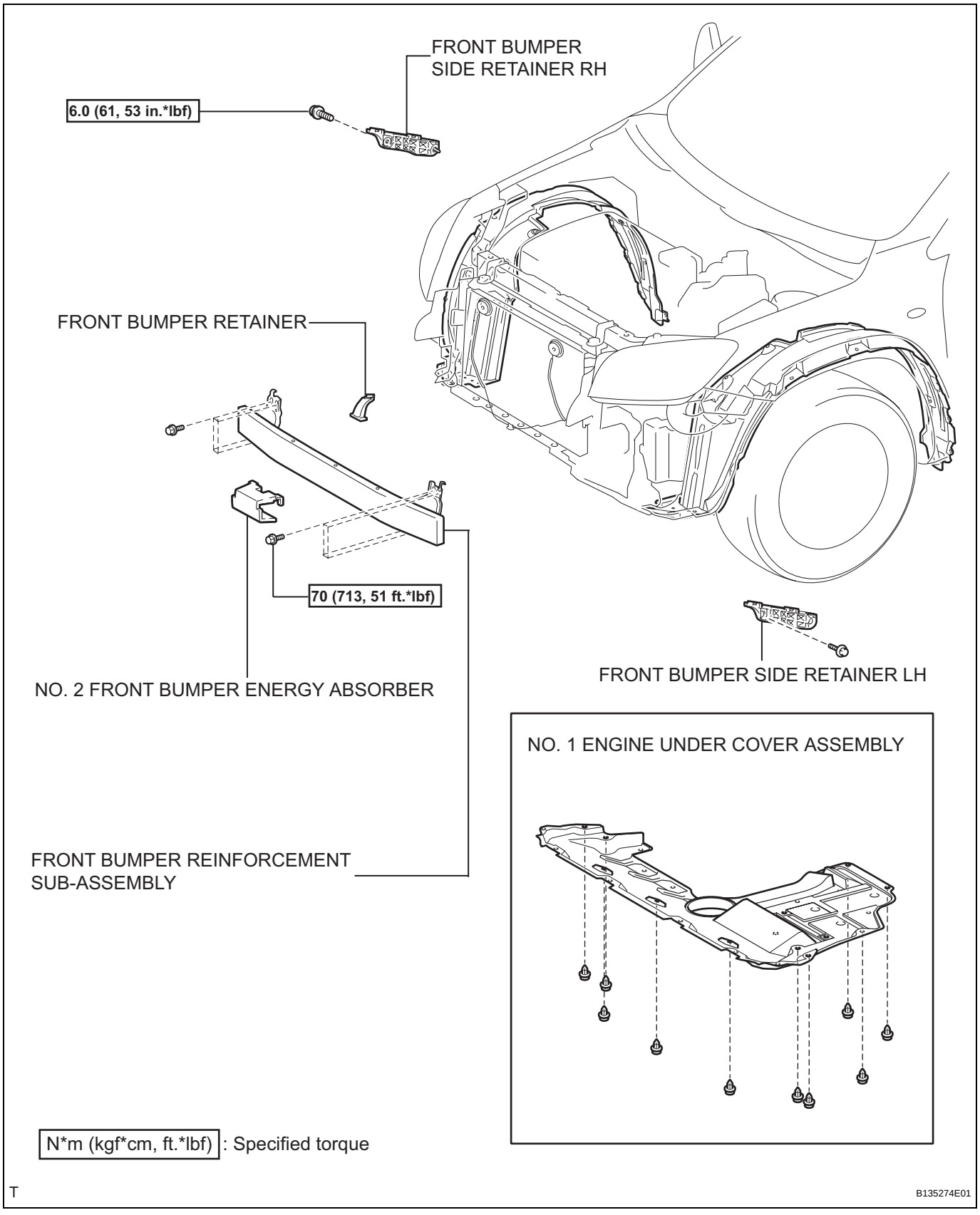
FRONT BUMPER
SIDE RETAINER RH
6.0 (61, 53 in.*lbf)
FRONT BUMPER RETAINER
70 (713, 51 ft.*lbf)
NO. 2 FRONT BUMPER ENERGY ABSORBER
FRONT BUMPER REINFORCEMENT
SUB-ASSEMBLY
FRONT BUMPER SIDE RETAINER LH
NO. 1 ENGINE UNDER COVER ASSEMBLY
N*m (kgf*cm, ft.*lbf) : Specified torque
T
B135274E01

ET

INSTALLATION

HINT:

- Use the same procedures for the RH side and LH side.
- The procedures listed below are for the LH side.

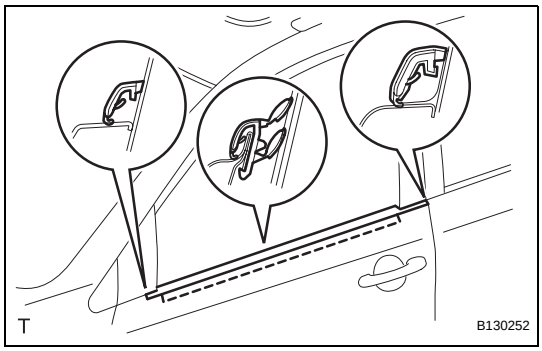

1. **INSTALL FRONT DOOR BELT MOULDING ASSEMBLY LH**
   (a) Attach the claws to install the belt moulding.
   HINT:
   Confirm that the moulding is firmly installed.
2. **INSTALL OUTER REAR VIEW MIRROR ASSEMBLY LH (See page MI-12)**
3. **INSTALL FRONT DOOR TRIM BOARD SUB-ASSEMBLY LH (See page ED-33)**
4. **INSTALL FRONT ARMREST BASE PANEL UPPER LH (See page ED-34)**
5. **INSTALL FRONT DOOR LOWER FRAME BRACKET GARNISH LH (See page ED-35)**
6. **CONNECT CABLE TO NEGATIVE BATTERY TERMINAL**

FRONT DOOR BELT MOULDING

COMPONENTS

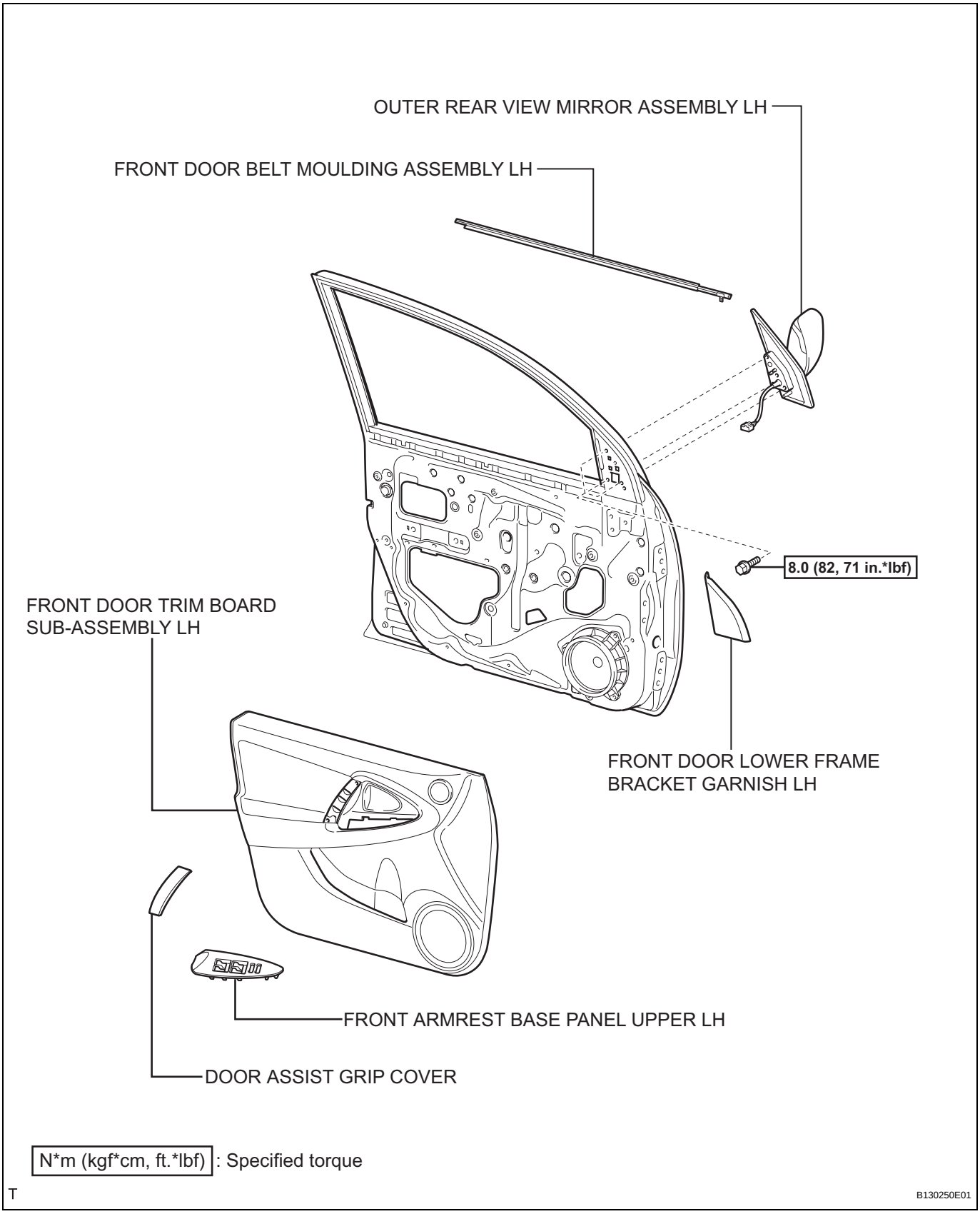

N*m (kgf*cm, ft.*lbf) : Specified torque

T

B130250E01

REMOVAL

HINT:

- Use the same procedures for the RH side and LH side.
- The procedures listed below are for the LH side.

1. **DISCONNECT CABLE FROM NEGATIVE BATTERY TERMINAL**
   NOTICE:
   Wait at least 90 seconds after disconnecting the cable from the negative (-) battery terminal to prevent airbag and seat belt pretensioner activation.
2. **REMOVE FRONT DOOR LOWER FRAME BRACKET GARNISH LH (See page ED-19)**
3. **REMOVE FRONT ARMREST BASE PANEL UPPER LH (See page ED-19)**
4. **REMOVE FRONT DOOR TRIM BOARD SUB-ASSEMBLY LH (See page ED-20)**
5. **REMOVE OUTER REAR VIEW MIRROR ASSEMBLY LH (See page MI-8)**
6. **REMOVE FRONT DOOR BELT MOULDING ASSEMBLY LH**
   (a) Put protective tape under the belt moulding.
   (b) Using a moulding remover, detach the claws to remove the belt moulding as shown in the illustration.
   HINT:
   Tape the remover tip before use.
   NOTICE:
   Be careful when removing the belt moulding as there are claws attached to the front and rear ends of the belt moulding.

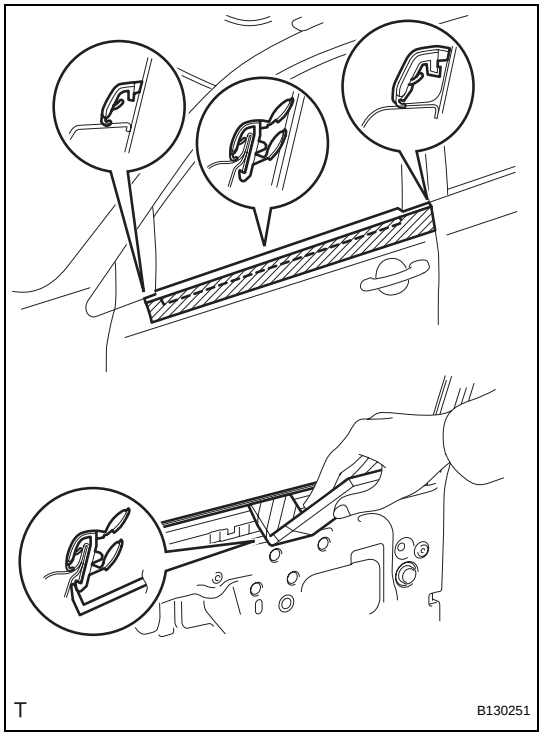

ET

INSTALLATION

HINT:

- Use the same procedures for the RH side and LH side.
- The procedures listed below are for the LH side.

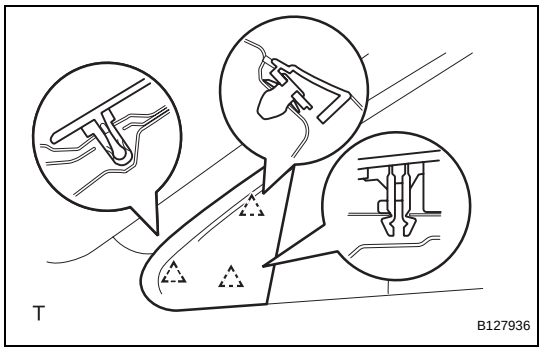

1. INSTALL FRONT PILLAR COVER SUB-ASSEMBLY UPPER LH

(a) Attach the 3 clips to install the pillar cover.

FRONT PILLAR UPPER COVER

COMPONENTS

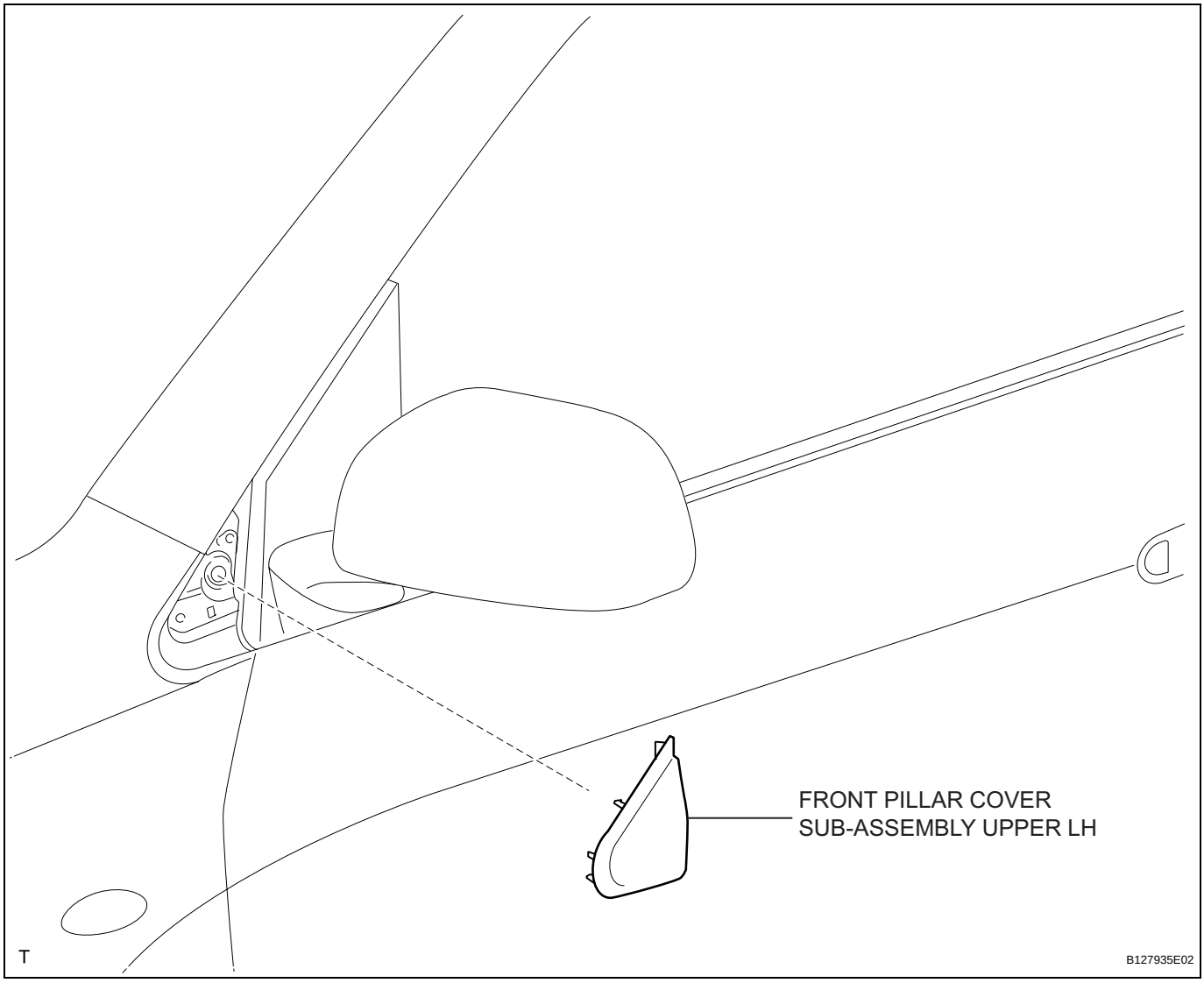

REMOVAL

HINT:

- Use the same procedures for the RH side and LH side.
- The procedures listed below are for the LH side.

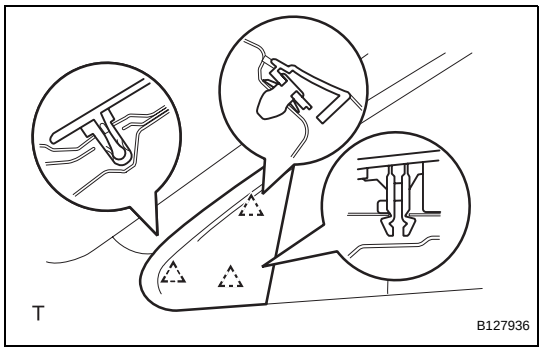

1. REMOVE FRONT PILLAR COVER SUB-ASSEMBLY UPPER LH

(a) Using a moulding remover, detach the 3 clips and remove the pillar cover.

REMOVAL

NOTICE:
Do not heat the vehicle body, emblem and name plate excessively.
HINT:
When removing the emblem and name plate, heat the vehicle body, emblem and name plate using a heat light.
Standard heating temperature

Item	Specified Condition
Vehicle body	40 to 60°C (104 to 140°F)
Name plate	20 to 30°C (68 to 86°F)

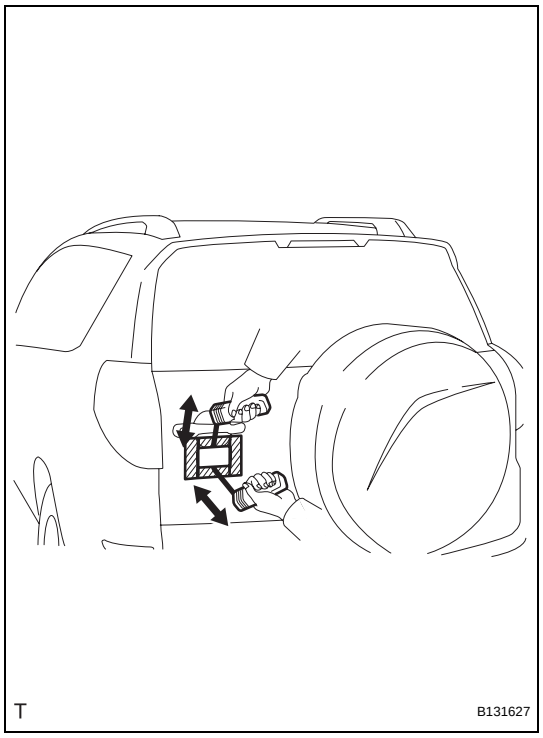

1. REMOVE NO. 1 BACK DOOR EMBLEM ASSEMBLY

(a) Put protective tape around the emblem.
(b) Insert a piano wire between the vehicle body and emblem.
(c) Tie objects that can serve as handles (for example, wooden blocks) to both wire ends.
(d) Pull the piano wire and scrape off the double-sided tape that holds the emblem to the vehicle body.
NOTICE:
- **If reusing the emblem, take care not to damage the emblem.**
- **Be careful not to damage the vehicle body.**

ET



2. REMOVE BACK DOOR NAME PLATE

(a) Put protective tape around the name plate.
(b) Insert a piano wire between the vehicle body and name plate.
(c) Tie objects that can serve as handles (for example, wooden blocks) to both wire ends.
(d) Pull the piano wire and scrape off the double-sided tape that holds the name plate to the vehicle body.

NOTICE:

- **If reusing the name plate, take care not to damage the name plate.**
- **Be careful not to damage the vehicle body.**

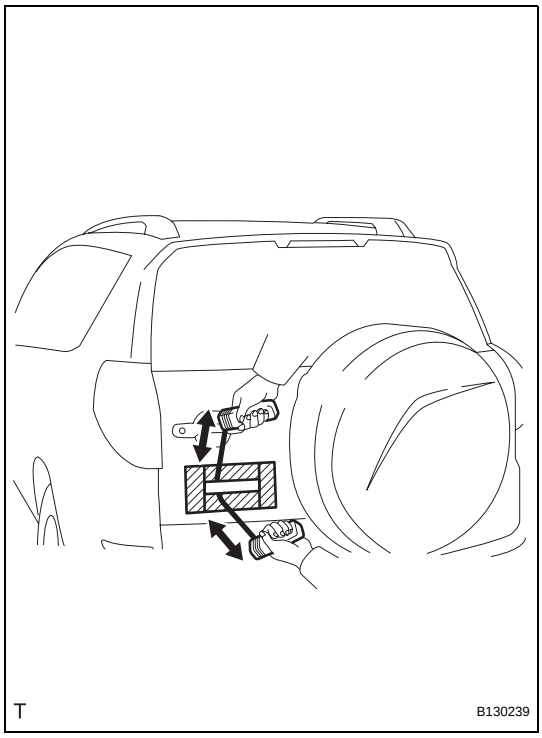

3. REMOVE NO. 1 BACK DOOR EMBLEM

(a) Put protective tape around the emblem.
(b) Insert a piano wire between the vehicle body and emblem.
(c) Tie objects that can serve as handles (for example, wooden blocks) to both wire ends.
(d) Pull the piano wire and scrape off the double-sided tape that holds the emblem to the vehicle body.

NOTICE:

- **If reusing the emblem, take care not to damage the emblem.**
- **Be careful not to damage the vehicle body.**

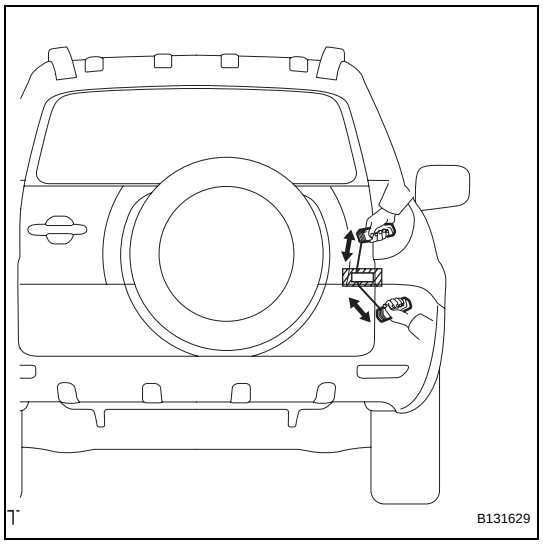

4. REMOVE NO. 4 BACK DOOR NAME PLATE (for 4WD)

(a) Put protective tape around the name plate.

(b) Insert a piano wire between the vehicle body and name plate.

(c) Tie objects that can serve as handles (for example, wooden blocks) to both wire ends.

(d) Pull the piano wire and scrape off the double-sided tape that holds the name plate to the vehicle body.

NOTICE:

- **If reusing the name plate, take care not to damage the name plate.**
- **Be careful not to damage the vehicle body.**

INSTALLATION

NOTICE:
Do not heat the vehicle body, emblem and name plate excessively.
HINT:
When installing the emblem and name plate, heat the vehicle body, emblem and name plate using a heat light.
Standard heating temperature

Item	Specified Condition
Vehicle body	40 to 60°C (104 to 140°F)
Name plate	20 to 30°C (68 to 86°F)

1. INSTALL NO. 4 BACK DOOR NAME PLATE (for 4WD)

(a) Clean the vehicle body surface.
  (1) Using a heat light, heat the vehicle body surface.
  (2) Remove the double-sided tape from the vehicle body.
  (3) Wipe off any tape adhesive residue with cleaner.

(b) If reusing the name plate:
Clean the name plate.
  (1) Using a heat light, heat the name plate.
  (2) Remove the double-sided tape from the name plate.
  (3) Wipe off any tape adhesive residue with cleaner.
  (4) Apply new double-sided tape to the name plate.

(c) Install the name plate.
  (1) Using a heat light, heat the vehicle body and name plate.
  (2) Remove the peeling paper from the face of the name plate.
  HINT:
  After removing the peeling paper, keep the exposed adhesive free from foreign matter.
  (3) Install the name plate.
  NOTICE:
  Install the name plate exactly according to the specifications below.

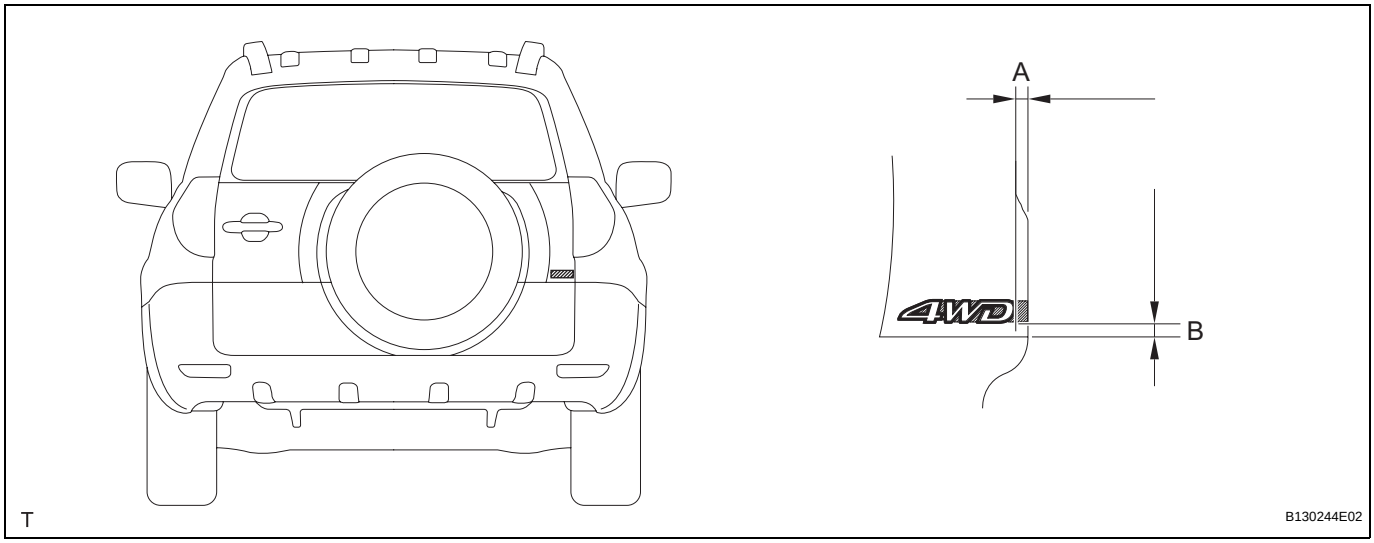

Standard measurement

Area	Specified Condition
A	8 mm (0.314 in.)
B	8.6 mm (0.338 in.)

2. INSTALL NO. 1 BACK DOOR EMBLEM

3. INSTALL BACK DOOR NAME PLATE

4. INSTALL NO. 1 BACK DOOR EMBLEM ASSEMBLY

(a) Clean the vehicle body surface.
  (1) Using a heat light, heat the vehicle body surface.
  (2) Remove the double-sided tape from the vehicle body.
  (3) Wipe off any tape adhesive residue with cleaner.

(b) If reusing the name plate and emblem:
Clean the name plate and emblem.
  (1) Using a heat light, heat the name plate and emblem.
  (2) Remove the double-sided tape from the name plate and emblem.
  (3) Wipe off any tape adhesive residue with cleaner.
  (4) Apply new double-sided tape to the name plate and emblem.

(c) Install the name plate and emblem.
  (1) Using a heat light, heat the vehicle body, name plate and emblem.
  (2) Remove the peeling paper from the face of the name plate and emblem.
  HINT:
  After removing the peeling paper, keep the exposed adhesive free from foreign matter.
  (3) Install the name plate and emblem.
  NOTICE:
  Install the name plate and emblem exactly according to the specifications below.

ET

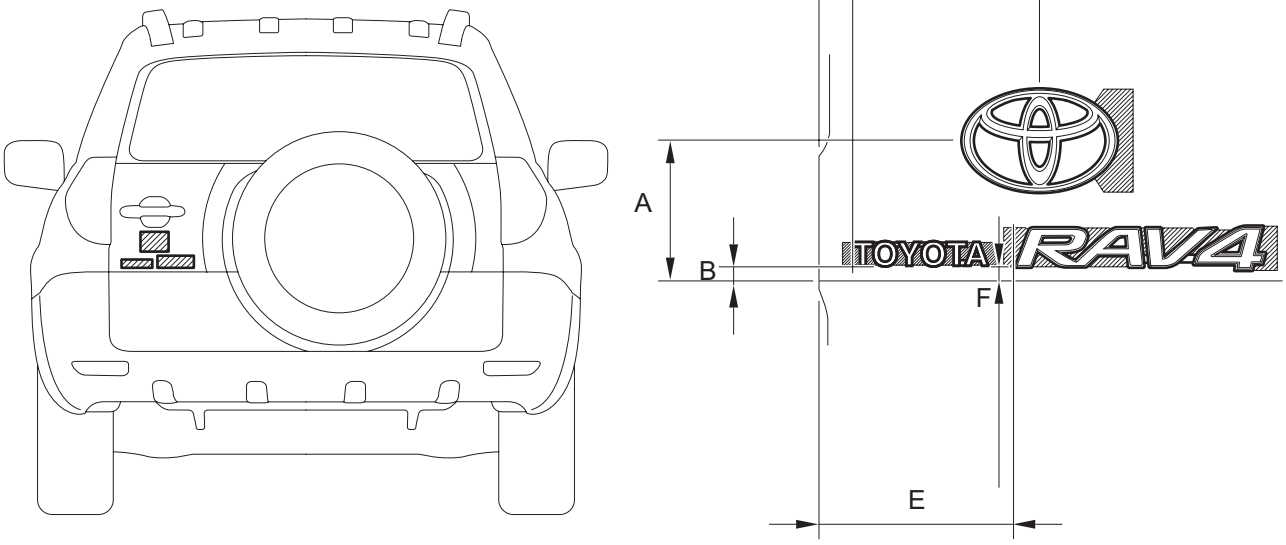

T

B130240E01

Standard measurement

Area	Specified Condition
A	92.8 mm (3.653 in.)
B	9.3 mm (0.366 in.)
C	157.5 mm (6.200 in.)
D	25.3 mm (0.996 in.)
E	138.0 mm (5.433 in.)
F	8.2 mm (0.322 in.)

NAME PLATE

COMPONENTS

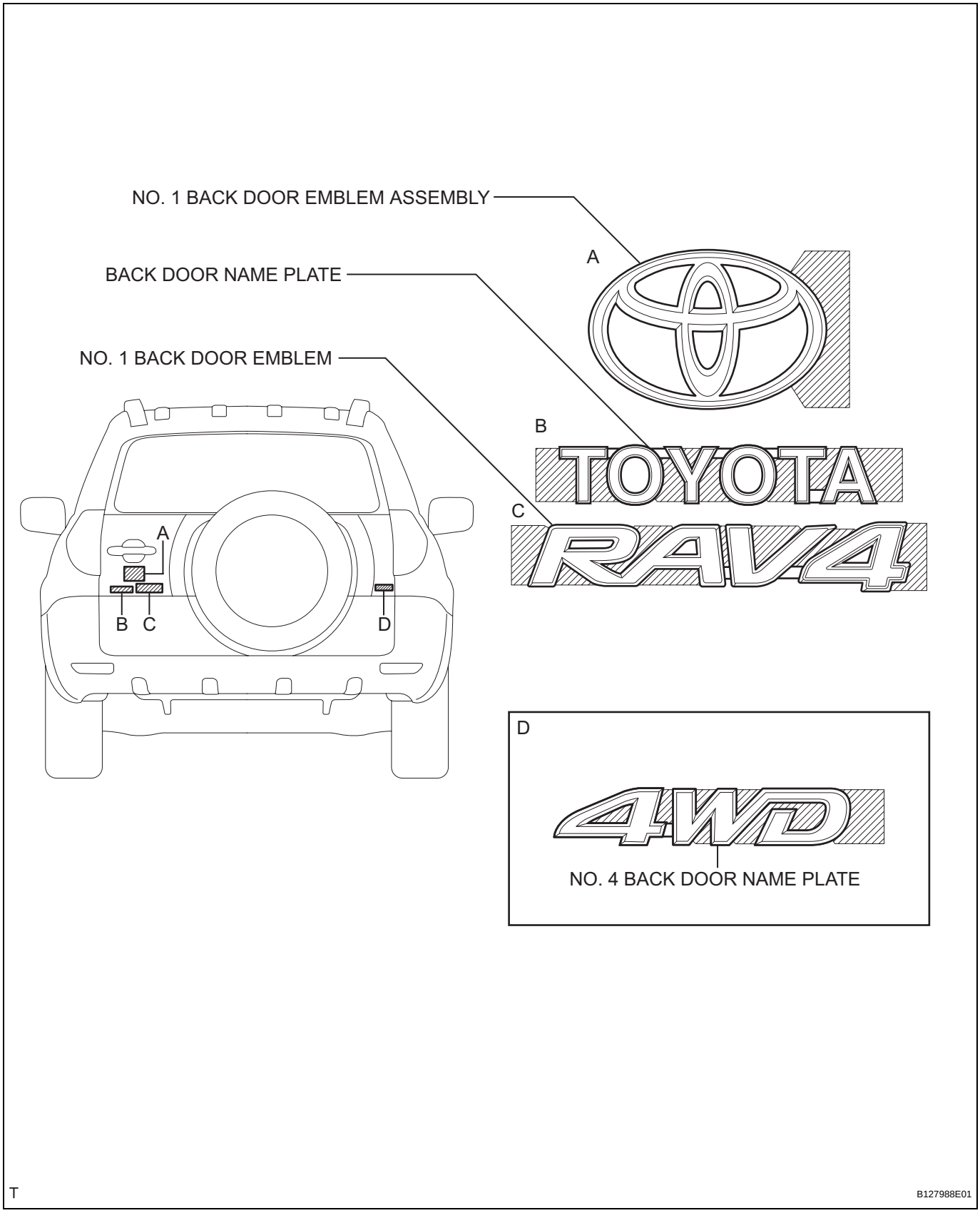

ET

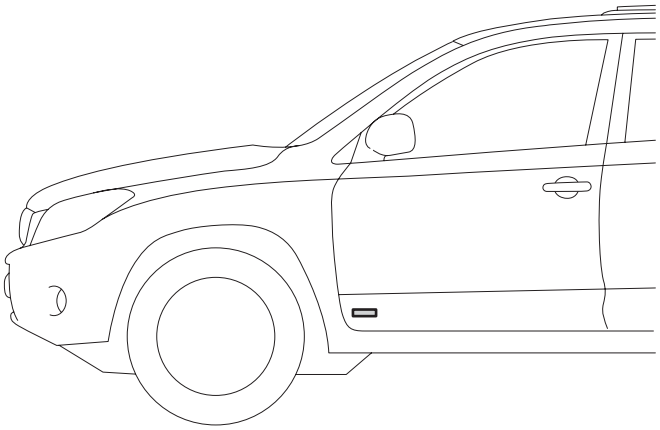

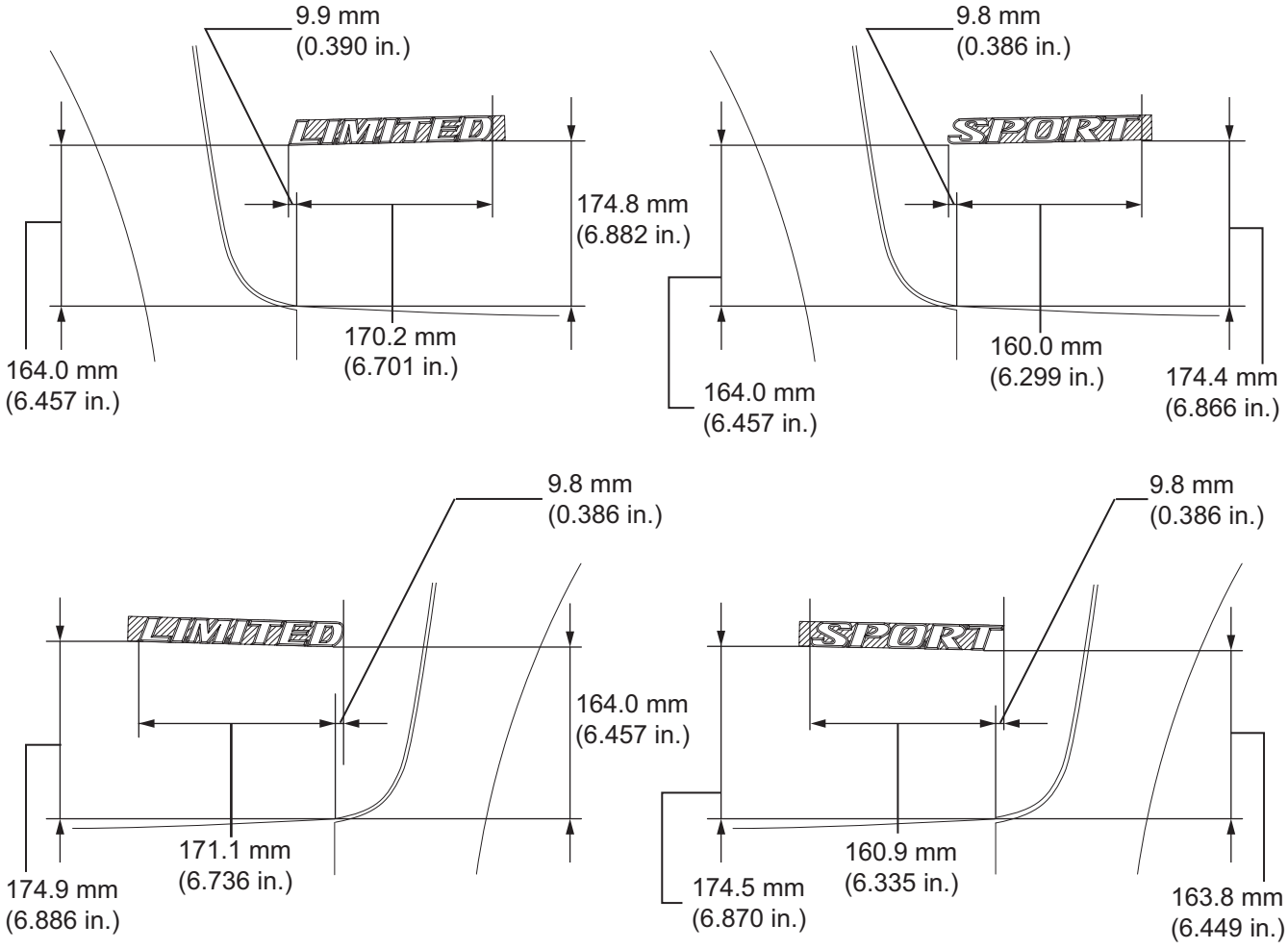

T

B130256E03

INSTALLATION

HINT:

- Use the same procedures for the RH side and LH side.
- The procedures listed below are for the LH side.
- When installing the moulding, heat the vehicle body and moulding using a heat light.

Standard heating temperature

Item	Specified Condition
Vehicle body	40 to 60°C (104 to 140°F)
Moulding	20 to 30°C (68 to 86°F)

NOTICE:
Do not heat the vehicle body and moulding excessively.

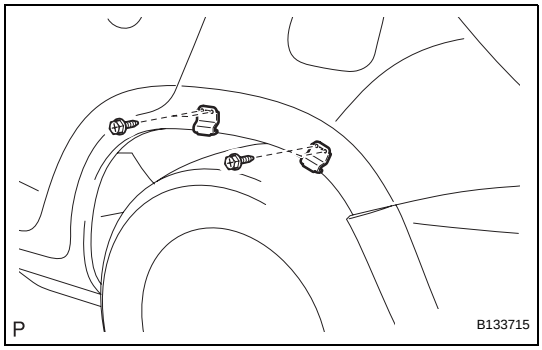

1. INSTALL NO. 1 ROCKER PANEL MOULDING RETAINER LH

(a) Install the 2 retainers with the 4 screws.

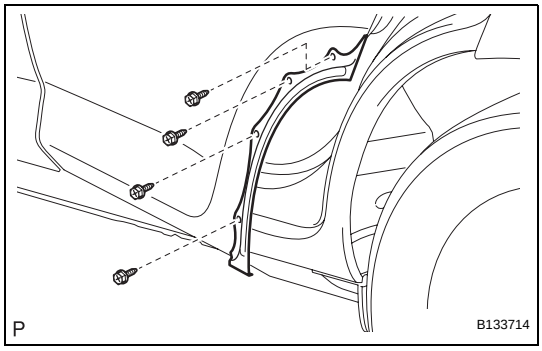

2. INSTALL QUARTER OPENING RETAINER LH

(a) Install the retainer with the 4 screws.

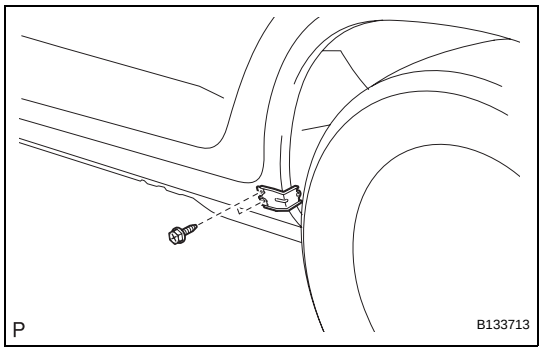

3. INSTALL NO. 2 ROCKER PANEL MOULDING RETAINER LH

(a) Install the retainer with the 2 screws.

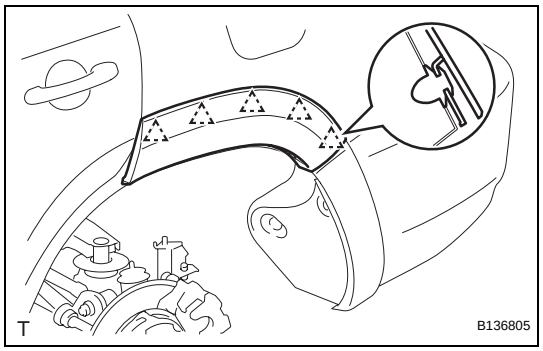

4. INSTALL REAR QUARTER OUTSIDE MOULDING LH

(a) Attach the 5 clips to install the moulding.

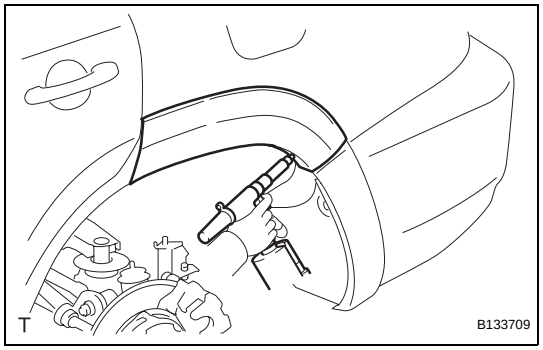

(b) Using an air riveter or hand riveter with a nose piece, strike 2 rivets to the vehicle to install the rear quarter outside moulding to the vehicle.

NOTICE:

- **If the rivet is not positioned perpendicularly, it will bend the mandrel.**

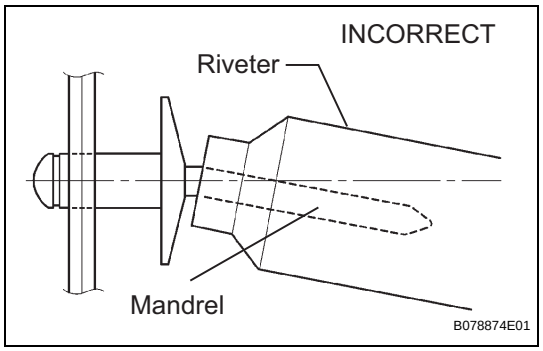

- **Do not pry the rivet with the riveter, as this will cause damage to the riveter and mandrel.**

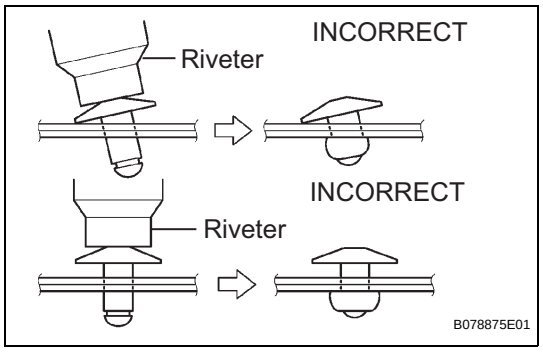

- **Confirm that the rivets are seated properly against the moulding. Do not tilt the riveter when installing the rivet to the moulding. Do not leave any space between the rivet head and moulding.**

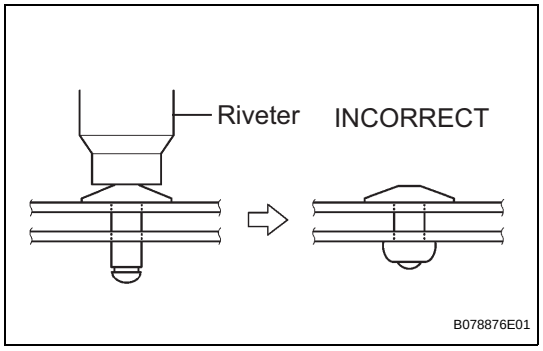

- **Do not leave any space between the moulding and door panel. Firmly hold together the 2 items while installing the rivet.**

ET

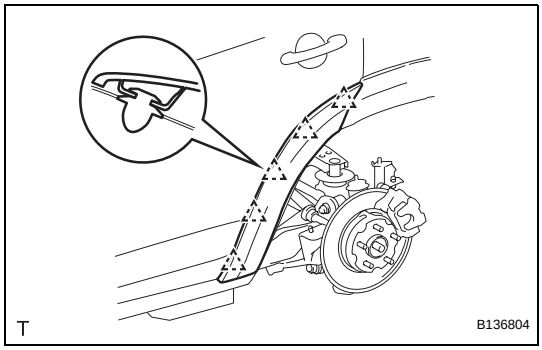

5. INSTALL NO. 1 REAR WHEEL OPENING EXTENSION LH

(a) Attach the 5 clips to install the extension.
Using an air riveter or hand riveter with a nose piece, strike 2 rivets to the vehicle to install the rear wheel opening extension to the vehicle.

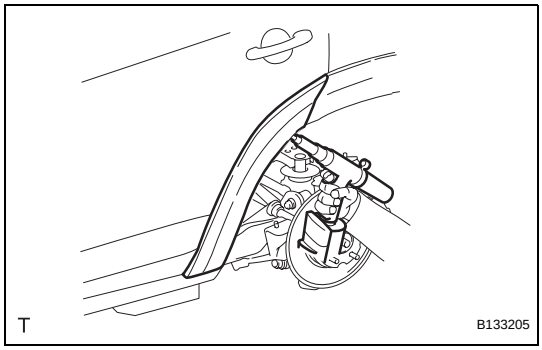

NOTICE:

- **If the rivet is not positioned perpendicularly, it will bend the mandrel.**

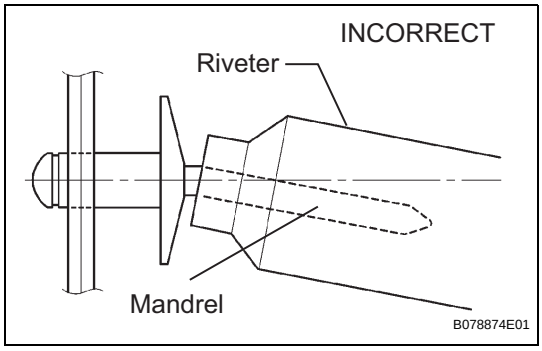

- **Do not pry the rivet with the riveter, as this will cause damage to the riveter and mandrel.**

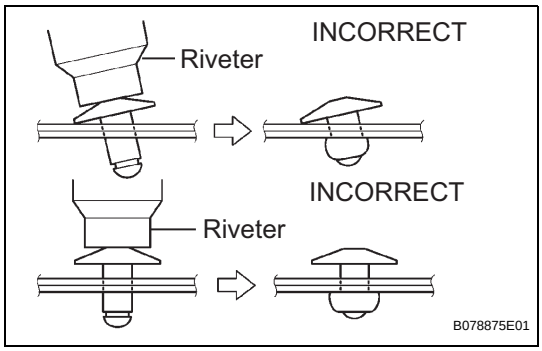

- **Confirm that the rivets are seated properly against the moulding. Do not tilt the riveter when installing the rivet to the moulding. Do not leave any space between the rivet head and moulding.**

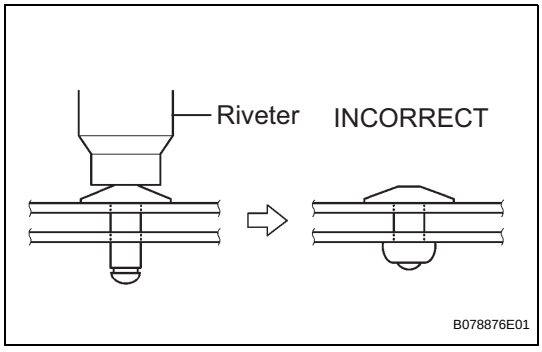

- **Do not leave any space between the moulding and door panel. Firmly hold together the 2 items while installing the rivet.**

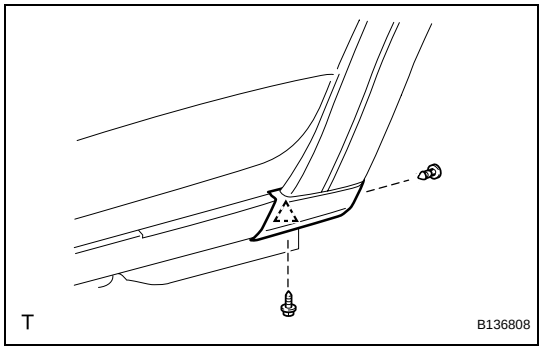

6. INSTALL NO. 2 REAR WHEEL OPENING EXTENSION LH

(a) Attach the clip to install the extension.
Install the screw and clip.

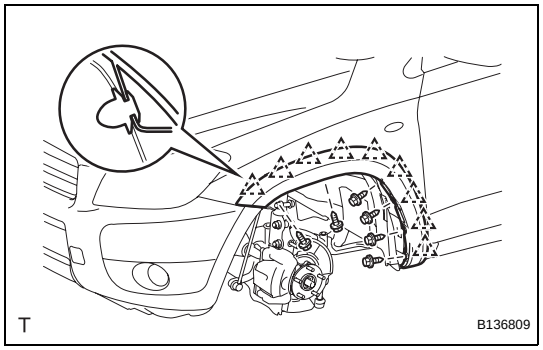

7. INSTALL FRONT FENDER MOULDING SUB-ASSEMBLY LH

(a) Attach the 9 clips to install the extension
(b) Install the 4 screws and 2 clips.

ET

OUTSIDE MOULDING

COMPONENTS

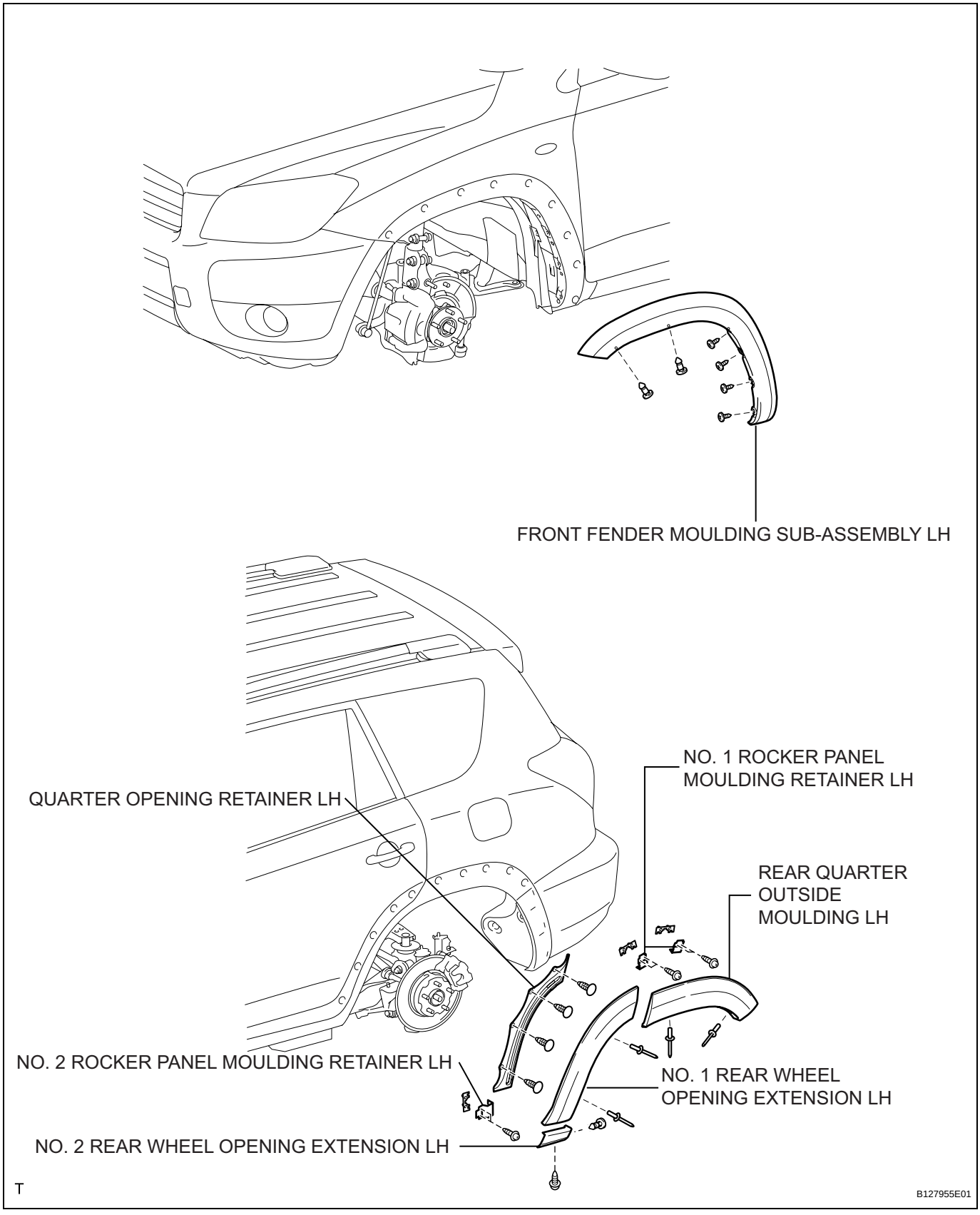

REMOVAL

HINT:
- Use the same procedures for the RH side and LH side.
- The procedures listed below are for the LH side.
- When removing the moulding, heat the vehicle body and moulding using a heat light.

Standard heating temperature

Item	Specified Condition
Vehicle body	40 to 60°C (104 to 140°F)
Clip	20 to 30°C (68 to 86°F)

NOTICE:
Do not heat the vehicle body and moulding excessively.

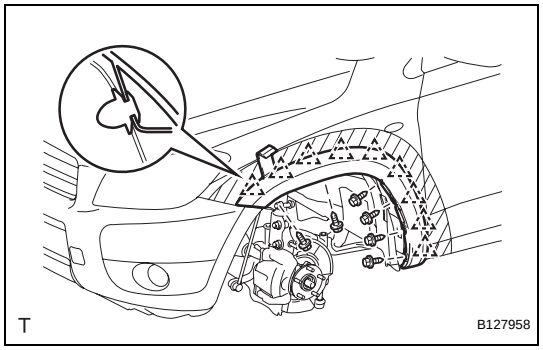

1. REMOVE FRONT FENDER MOULDING SUB-ASSEMBLY LH

(a) Put protective tape around the moulding.
(b) Remove the 4 screws and detach the 2 clips.
(c) Using a moulding remover, detach the 9 clips and remove the moulding.

NOTICE:
- **If reusing the moulding, take care not to damage the moulding.**
- **Be careful not to damage the vehicle body.**

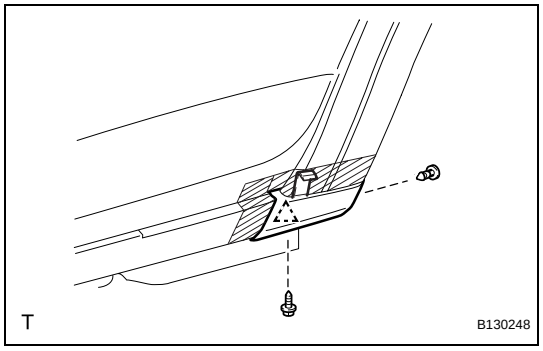

2. REMOVE NO. 2 REAR WHEEL OPENING EXTENSION LH

(a) Put protective tape around the moulding.
(b) Remove the screw.
(c) Using a clip remover, detach the 2 clips and remove the extension.

NOTICE:
- **If reusing the extension, take care not to damage the extension.**
- **Be careful not to damage the vehicle body.**

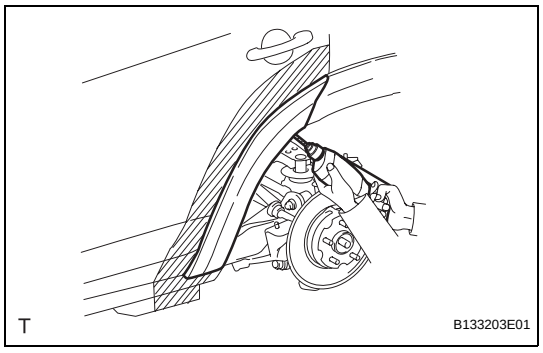

3. REMOVE NO. 1 REAR WHEEL OPENING EXTENSION LH

(a) Put protective tape around the extension.
(b) Using a drill bit of less than ϕ 4 mm (0.16 in.), drill out the 3 rivet flanges.

HINT:
Wind tape around the drill bit approximately 5 mm (0.20 in.) from the tip of the drill.

NOTICE:
- **Do not drill the rivet at an angle as this will cause damage to the drill and drill hole. Line up the drill and rivet, and carefully drill out the rivet head.**
- **Be careful as the cut rivet will be very hot.**

(c) Continue drilling and push out the remaining rivet fragments using the drill.
(d) Using a vacuum cleaner, remove the rivet fragments and shavings from the drilled areas.

(e) Using a heat light, heat the extension and vehicle body.

(f) Cut the double-sided tape that holds the moulding to the vehicle body with a knife.

NOTICE:

- **If reusing the extension, take care not to damage the extension.**
- **Be careful not to damage the vehicle body.**

(g) Using a moulding remover, detach the 5 clips and remove the extension.

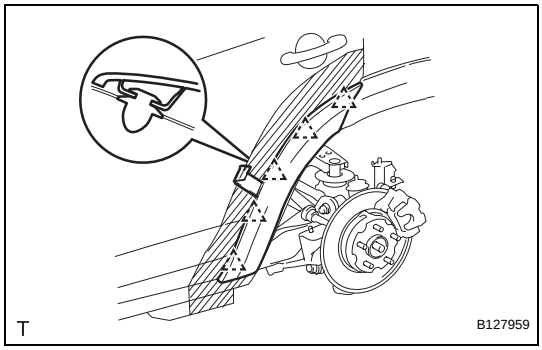

4. REMOVE REAR QUARTER OUTSIDE MOULDING LH

(a) Put protective tape around the moulding.

(b) Using a drill bit of less than ϕ 4 mm (0.16 in.), drill out the 3 rivet flanges.

HINT:

Wind tape around the drill bit approximately 5 mm (0.20 in.) from the tip of the drill.

NOTICE:

- **Do not drill the rivet at an angle as this will cause damage to the drill and drill hole. Line up the drill and rivet, and carefully drill out the rivet head.**
- **Be careful as the cut rivet will be very hot.**

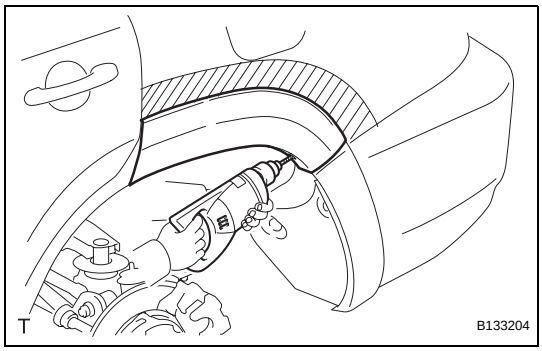

(c) Continue drilling and push out the remaining rivet fragments using the drill.

(d) Using a vacuum cleaner, remove the rivet fragments and shavings from the drilled areas.

(e) Using a heat light, heat the moulding and vehicle body.

(f) Using a moulding remover, detach the 5 clips and remove the moulding.

NOTICE:

- **If reusing the moulding, take care not to damage the moulding.**
- **Be careful not to damage the vehicle body.**

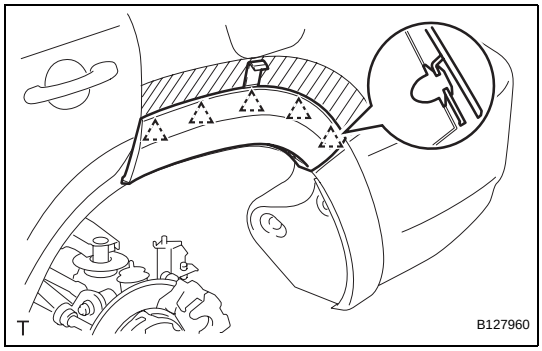

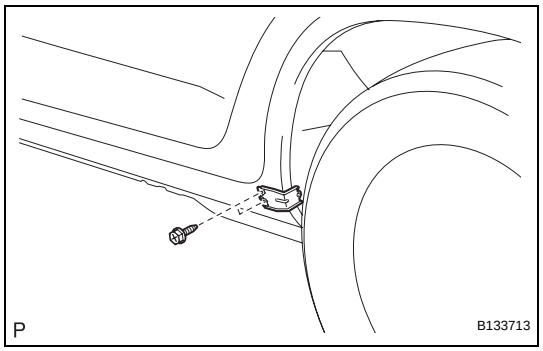

5. REMOVE NO. 2 ROCKER PANEL MOULDING RETAINER LH

(a) Remove the 2 screws and retainer.

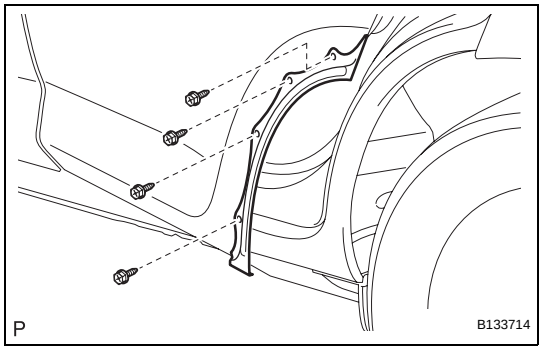

6. REMOVE QUARTER OPENING RETAINER LH

(a) Remove the 4 screws and retainer.

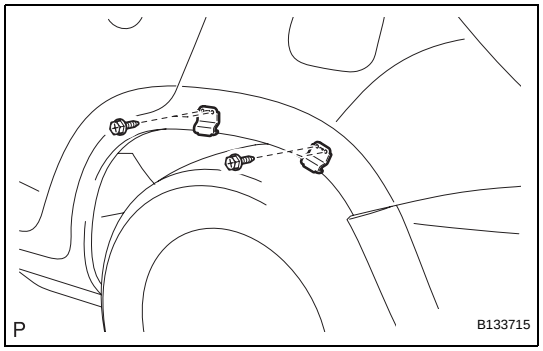

7. REMOVE NO. 1 ROCKER PANEL MOULDING RETAINER LH

(a) Remove the 4 screws and 2 retainers.

REASSEMBLY

HINT:
When installing the ornament plate and emblem, heat the radiator grille, ornament plate and emblem using a heat light.
Standard heating temperature

Item	Specified Condition
Emblem base, emblem	20 to 30°C (68 to 86°F)

NOTICE:
Do not heat the emblem base and emblem excessively.

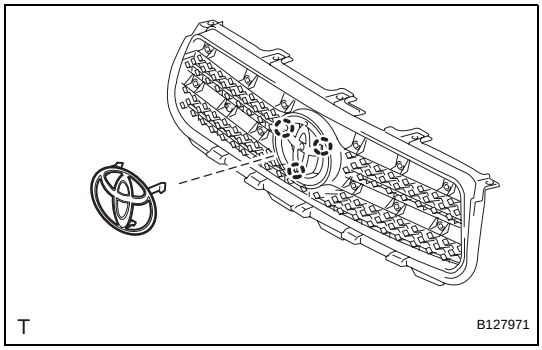

1. INSTALL RADIATOR GRILLE EMBLEM
(a) Attach the 4 claws to install the radiator grille.

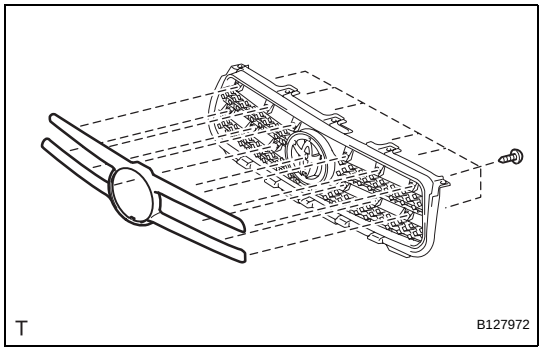

2. INSTALL RADIATOR GRILLE ORNAMENT PLATE (for Separate Type)
(a) Install the ornament plate with the 12 screws.

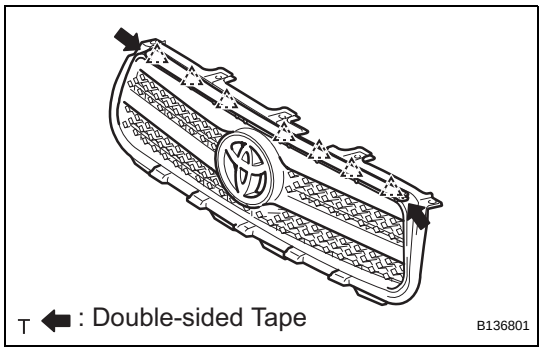

3. INSTALL HOOD TO RADIATOR GRILLE SEAL
(a) Install the new double-side tape.
(b) Attach the 7 clips and install the hood to radiator grille seal.

INSTALLATION

1. **INSTALL NO. 2 RADIATOR GRILLE LOWER (See page ET-9)**
2. **INSTALL NO. 1 RADIATOR GRILLE LOWER (See page ET-9)**
3. **INSTALL RADIATOR GRILLE (See page ET-10)**

DISASSEMBLY

HINT:
When removing the ornament plate and emblem, heat the radiator grille, ornament plate and emblem using a heat light.
Standard heating temperature

Item	Specified Condition
Radiator grille, ornament plate, emblem	20 to 30°C (68 to 86°F)

NOTICE:
Do not heat the radiator grille, ornament plate and emblem excessively.

ET

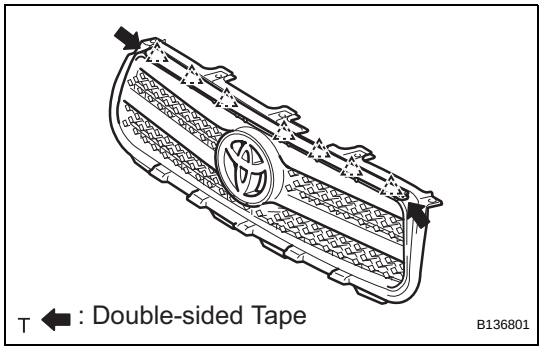

1. REMOVE HOOD TO RADIATOR GRILLE SEAL
(a) Remove the double-sided tape.
(b) Detach the 7 clips and remove the hood to radiator grille seal.

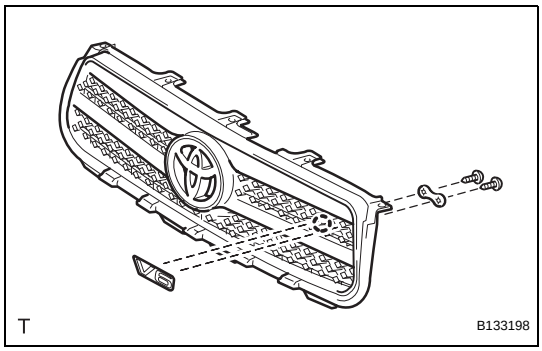

2. REMOVE NO. 2 RADIATOR GRILLE EMBLEM
(a) Remove the 2 screws.
(b) Detach the claw and remove the emblem.

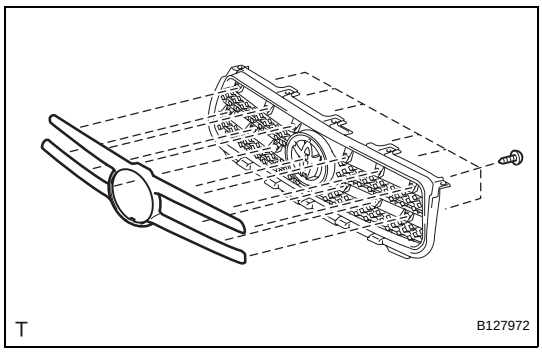

3. REMOVE RADIATOR GRILLE ORNAMENT PLATE (for Separate Type)
(a) Remove the 12 screws and ornament plate.

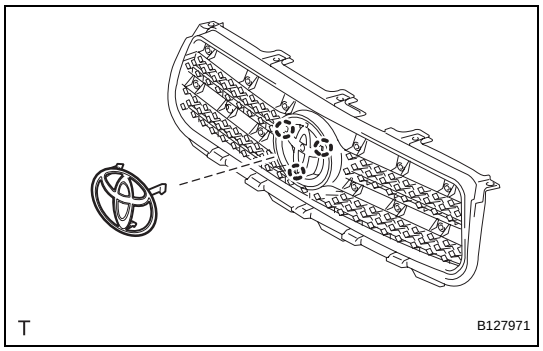

4. REMOVE RADIATOR GRILLE EMBLEM

(a) Using a screwdriver, detach the 3 claws and remove the emblem from the radiator grille.
HINT:
Tape the screwdriver tip before use.
NOTICE:
- **If reusing the emblem, take care not to damage the emblem.**
- **Be careful not to damage the emblem base.**

REASSEMBLY

HINT:
When installing the ornament plate and emblem, heat the radiator grille, ornament plate and emblem using a heat light.
Standard heating temperature

Item	Specified Condition
Radiator grille, Ornament plate, emblem	20 to 30°C (68 to 86°F)

NOTICE:
Do not heat the radiator grille, ornament plate and emblem excessively.

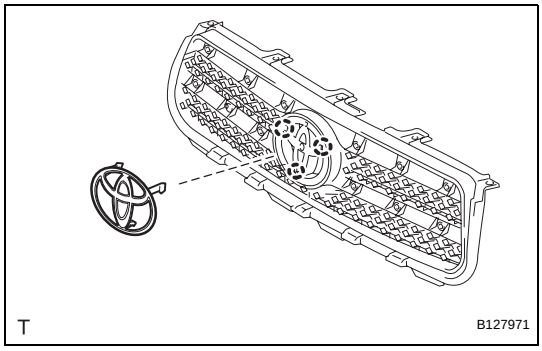

1. INSTALL RADIATOR GRILLE EMBLEM
(a) Attach the 3 claws to install the emblem.

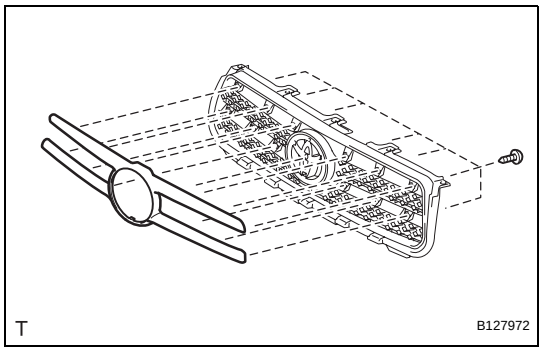

2. INSTALL RADIATOR GRILLE ORNAMENT PLATE (for Separate Type)
(a) Install the ornament plate with the 12 screws.

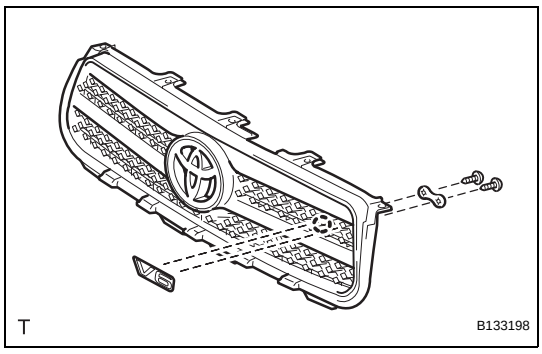

3. INSTALL NO. 2 RADIATOR GRILLE EMBLEM
(a) Attach the claw to install the emblem.
(b) Install the 2 screws.

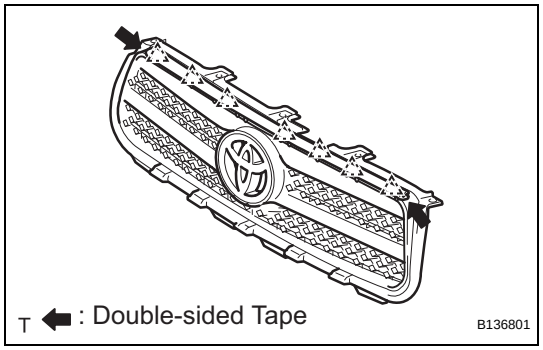

4. INSTALL HOOD TO RADIATOR GRILLE SEAL

(a) Install new double-sided tape.

(b) Attach the 7 clips and install the hood to radiator grille seal.

INSTALLATION

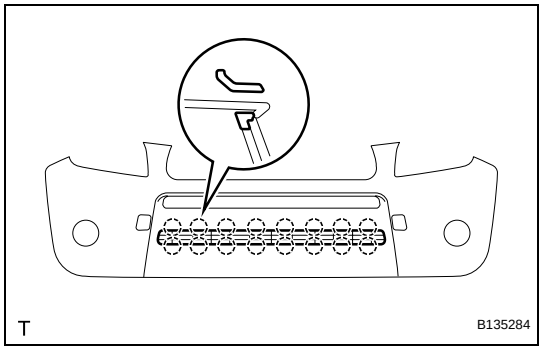

1. INSTALL NO. 2 RADIATOR GRILLE LOWER

(a) Install the radiator grille and attach the 16 claws.

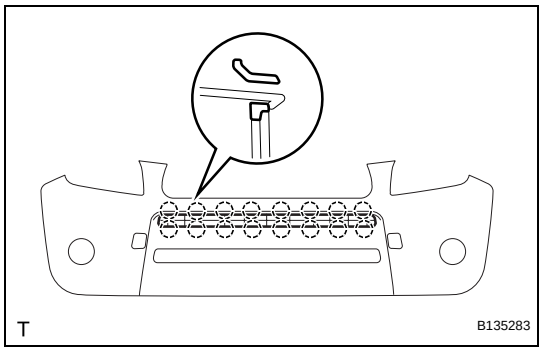

2. INSTALL NO. 1 RADIATOR GRILLE LOWER

(a) Install the radiator grille and attach the 16 claws.

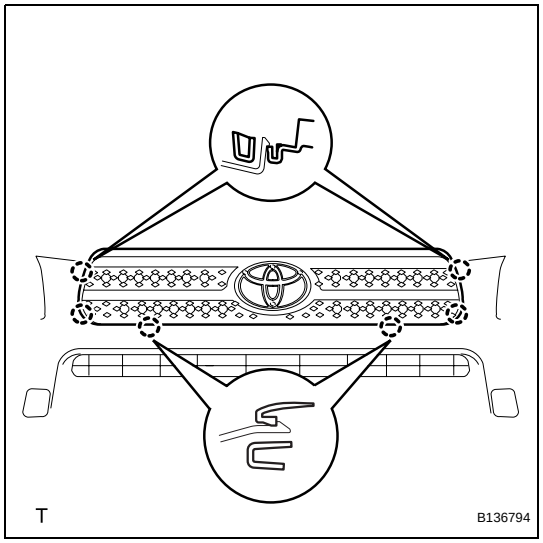

3. INSTALL RADIATOR GRILLE

(a) Install the radiator grille with the 6 claws.

ET

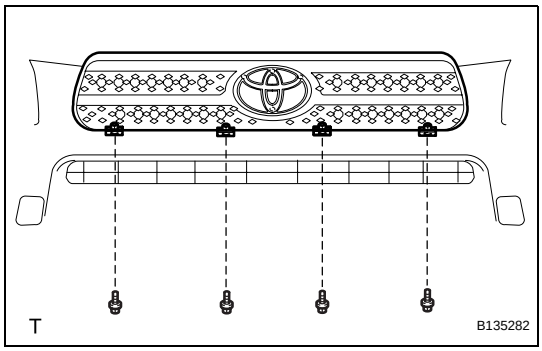

(b) Install the 4 bolts and 4 nuts.

RADIATOR GRILLE

COMPONENTS

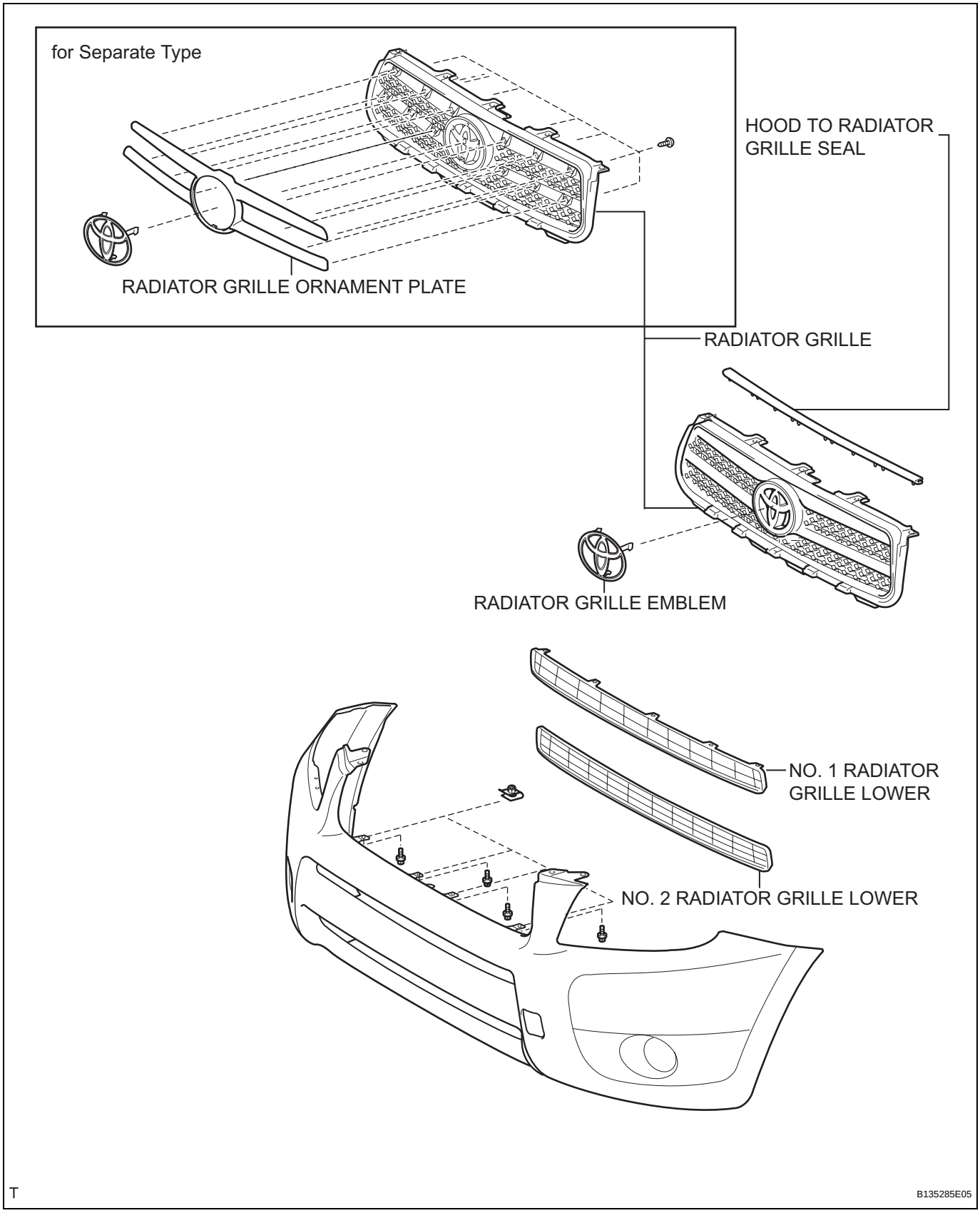

REMOVAL

1. **REMOVE RADIATOR GRILLE (See page ET-6)**
2. **REMOVE NO. 1 RADIATOR GRILLE LOWER (See page ET-7)**
3. **REMOVE NO. 2 RADIATOR GRILLE LOWER (See page ET-7)**

DISASSEMBLY

HINT:
When removing the ornament plate and emblem, heat the radiator grille, ornament plate and emblem using a heat light.
Standard heating temperature

Item	Specified Condition
Radiator grille, ornament plate, emblem	20 to 30°C (68 to 86°F)

NOTICE:
Do not heat the emblem base and emblem excessively.

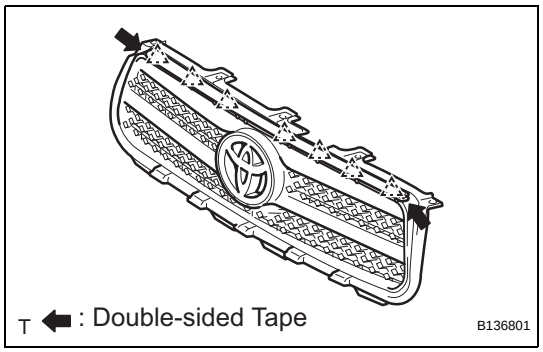

1. REMOVE HOOD TO RADIATOR GRILLE SEAL
(a) Remove the double-side tape.
(b) Detach the 7 clips and remove the hood to radiator grille seal.

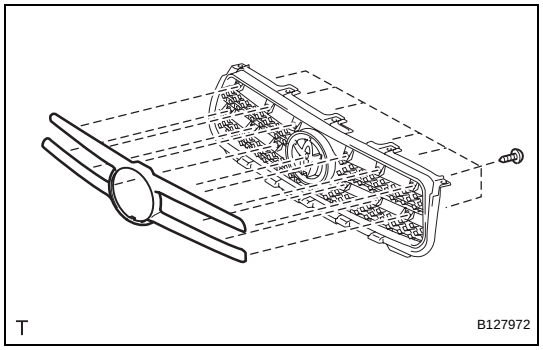

2. REMOVE RADIATOR GRILLE ORNAMENT PLATE (for Separate Type)
(a) Remove the 12 screws and ornament plate.

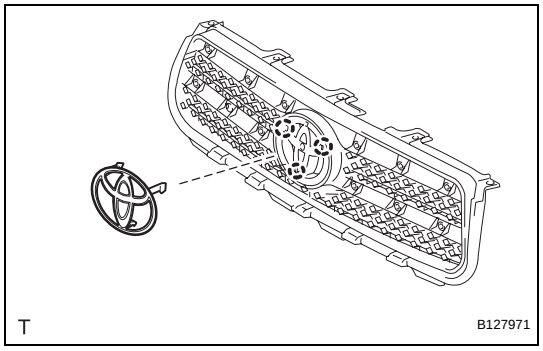

3. REMOVE RADIATOR GRILLE EMBLEM
(a) Using a screwdriver, detach the 4 claws and remove the emblem from the radiator grille.
HINT:
Tape the screwdriver tip before use.
NOTICE:
- **If reusing the emblem, take care not to damage the emblem.**
- **Be careful not to damage the emblem base.**

RADIATOR GRILLE (for 2GR-FE)

COMPONENTS

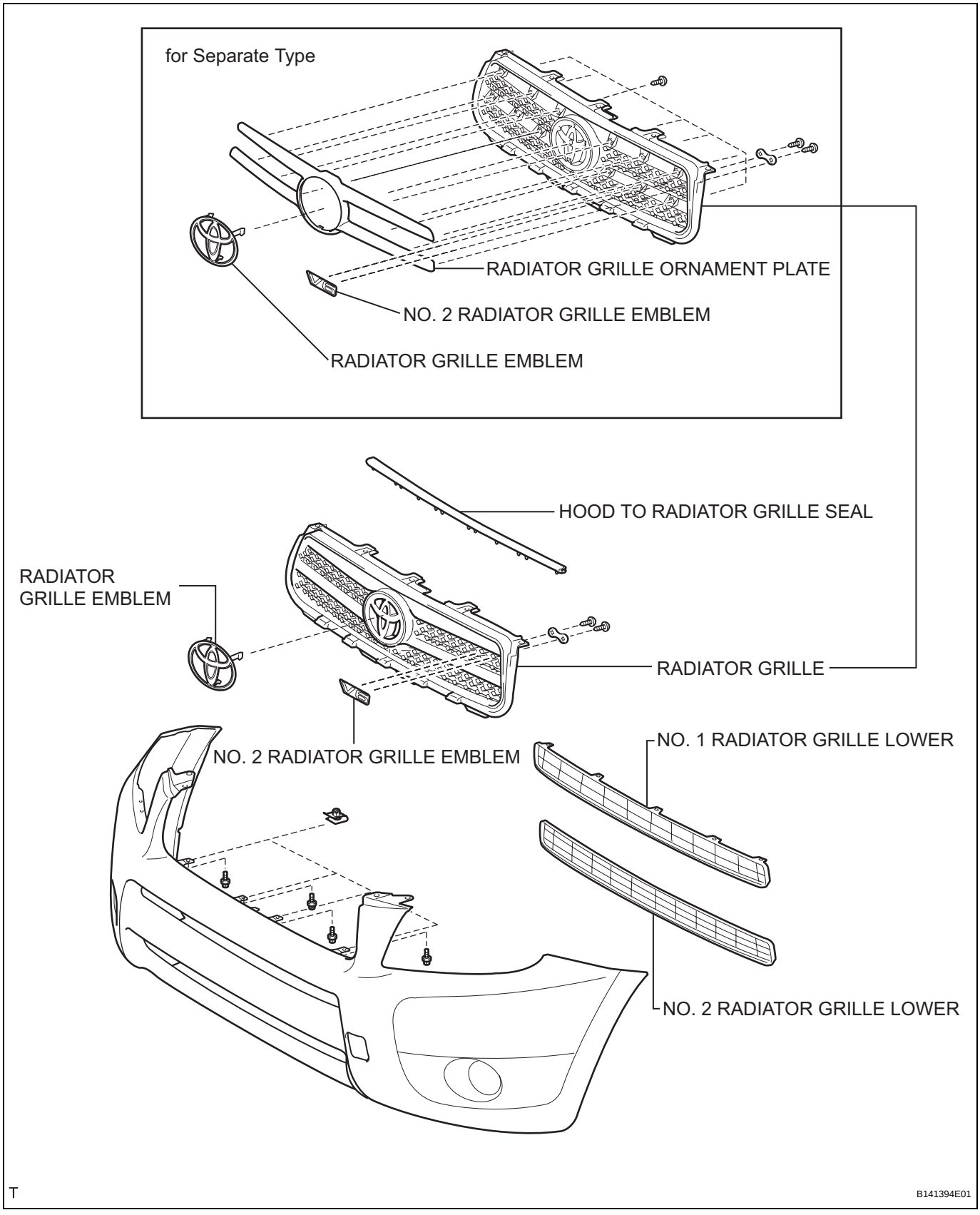

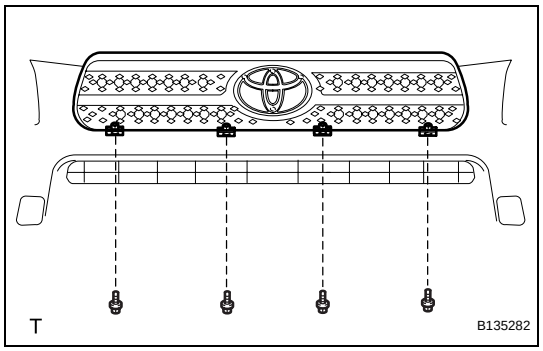

REMOVAL

1. REMOVE RADIATOR GRILLE SUB-ASSEMBLY

(a) Remove the 4 bolts and 4 nuts.

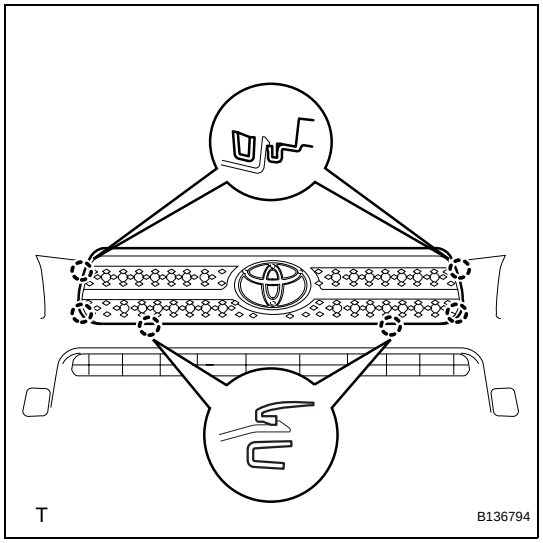

(b) Detach the 6 claws and remove the radiator grille.

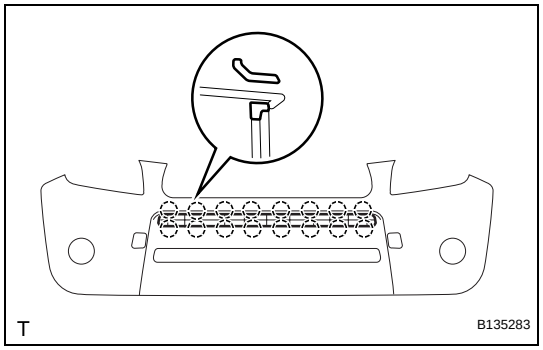

2. REMOVE NO. 1 RADIATOR GRILLE LOWER

(a) Detach the 16 claws and remove the radiator grille.

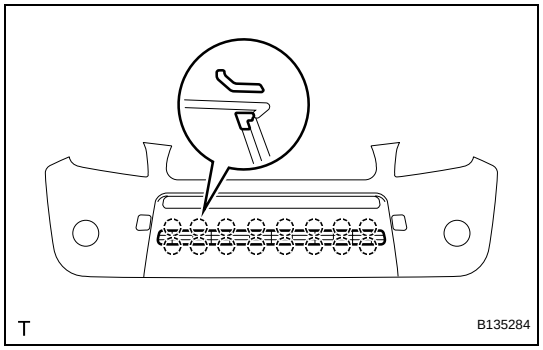

3. REMOVE NO. 2 RADIATOR GRILLE LOWER

(a) Detach the 16 claws and remove the radiator grille.

DISASSEMBLY

HINT:
When removing the ornament plate and emblem, heat the radiator grille, ornament plate and emblem using a heat light.
Standard heating temperature

Item	Specified Condition
Radiator grille, ornament plate, emblem	20 to 30°C (68 to 86°F)

NOTICE:
Do not heat the radiator grille, ornament plate and emblem excessively.

ET

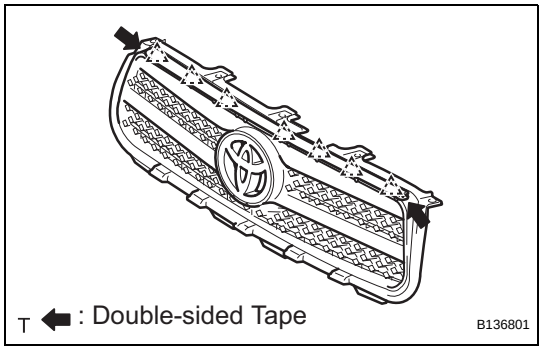

1. REMOVE HOOD TO RADIATOR GRILLE SEAL
(a) Remove the double-sided tape.
(b) Detach the 7 clips and remove the hood to radiator grille seal.

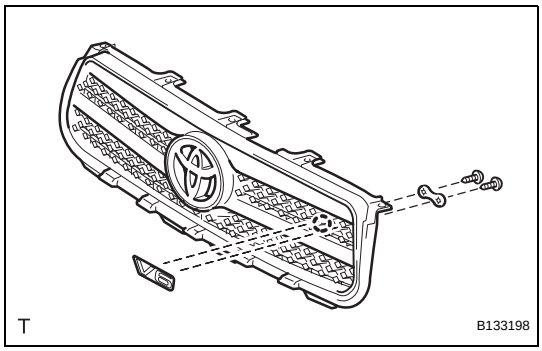

2. REMOVE NO. 2 RADIATOR GRILLE EMBLEM
(a) Remove the 2 screws.
(b) Detach the claw and remove the emblem.

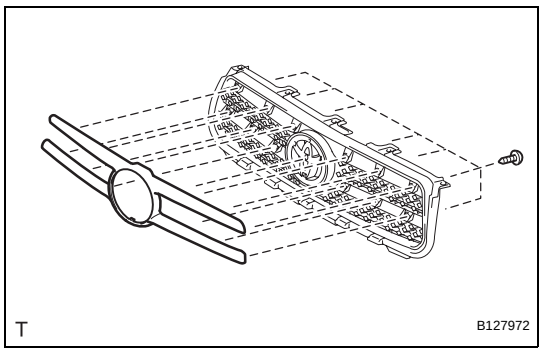

3. REMOVE RADIATOR GRILLE ORNAMENT PLATE (for Separate Type)
(a) Remove the 12 screws and ornament plate.

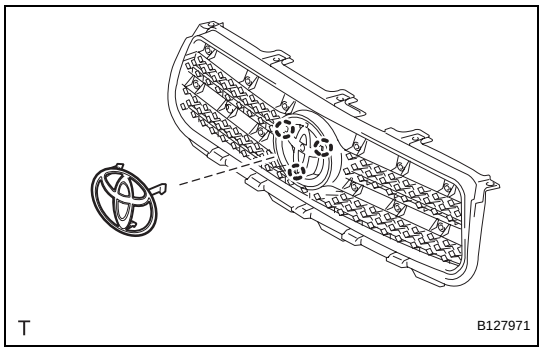

4. REMOVE RADIATOR GRILLE EMBLEM

(a) Using a screwdriver, detach the 3 claws and remove the emblem from the radiator grille.
HINT:
Tape the screwdriver tip before use.
NOTICE:
- **If reusing the emblem, take care not to damage the emblem.**
- **Be careful not to damage the emblem base.**

REASSEMBLY

HINT:
When installing the ornament plate and emblem, heat the radiator grille, ornament plate and emblem using a heat light.
Standard heating temperature

Item	Specified Condition
Radiator grille, Ornament plate, emblem	20 to 30°C (68 to 86°F)

NOTICE:
Do not heat the radiator grille, ornament plate and emblem excessively.

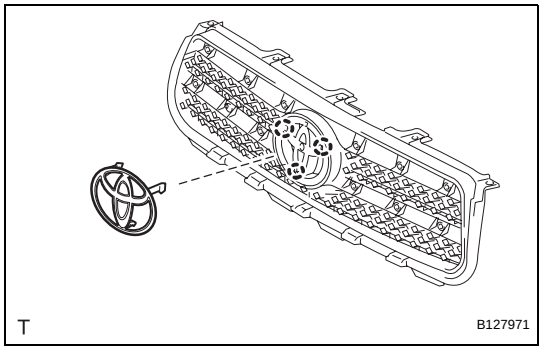

1. INSTALL RADIATOR GRILLE EMBLEM
(a) Attach the 3 claws to install the emblem.

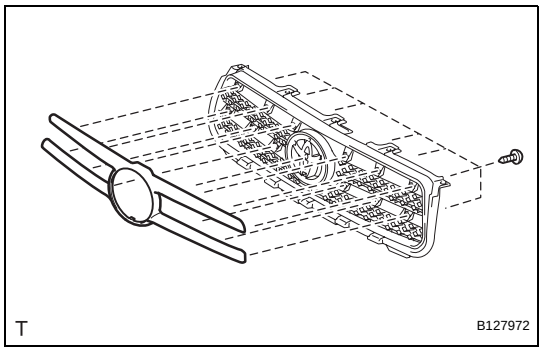

2. INSTALL RADIATOR GRILLE ORNAMENT PLATE (for Separate Type)
(a) Install the ornament plate with the 12 screws.

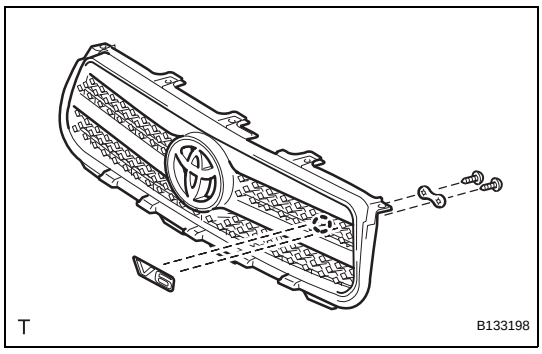

3. INSTALL NO. 2 RADIATOR GRILLE EMBLEM
(a) Attach the claw to install the emblem.
(b) Install the 2 screws.

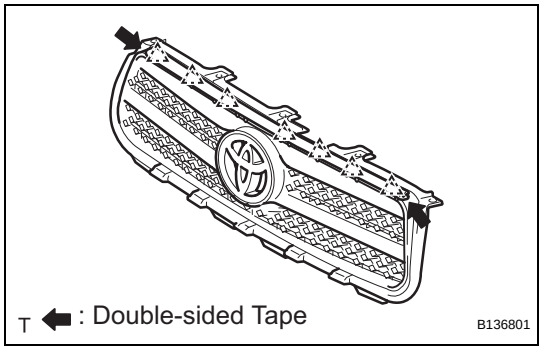

4. INSTALL HOOD TO RADIATOR GRILLE SEAL

(a) Install new double-sided tape.

(b) Attach the 7 clips and install the hood to radiator grille seal.

INSTALLATION

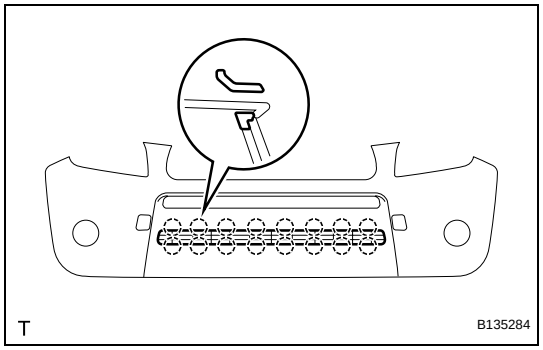

1. INSTALL NO. 2 RADIATOR GRILLE LOWER

(a) Install the radiator grille and attach the 16 claws.

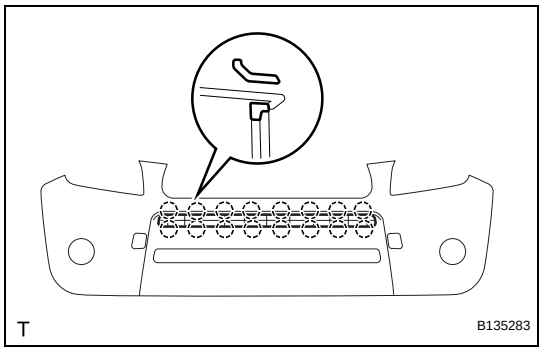

2. INSTALL NO. 1 RADIATOR GRILLE LOWER

(a) Install the radiator grille and attach the 16 claws.

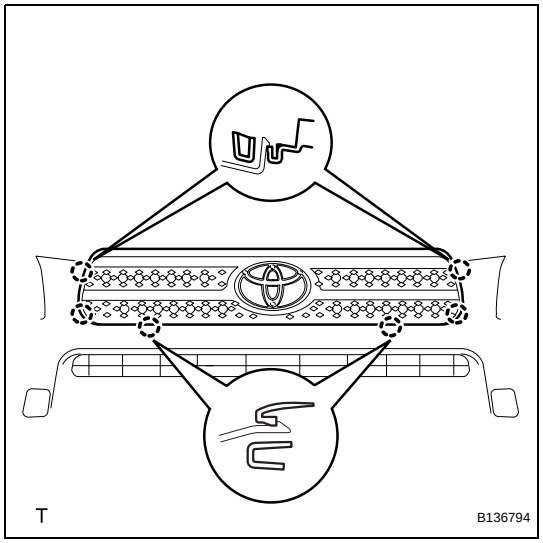

3. INSTALL RADIATOR GRILLE

(a) Install the radiator grille with the 6 claws.

ET

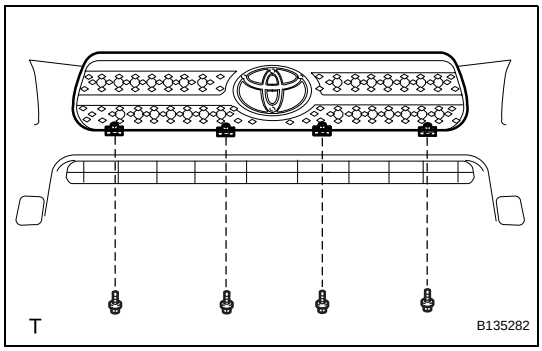

(b) Install the 4 bolts and 4 nuts.

RADIATOR GRILLE (for 2GR-FE)

COMPONENTS

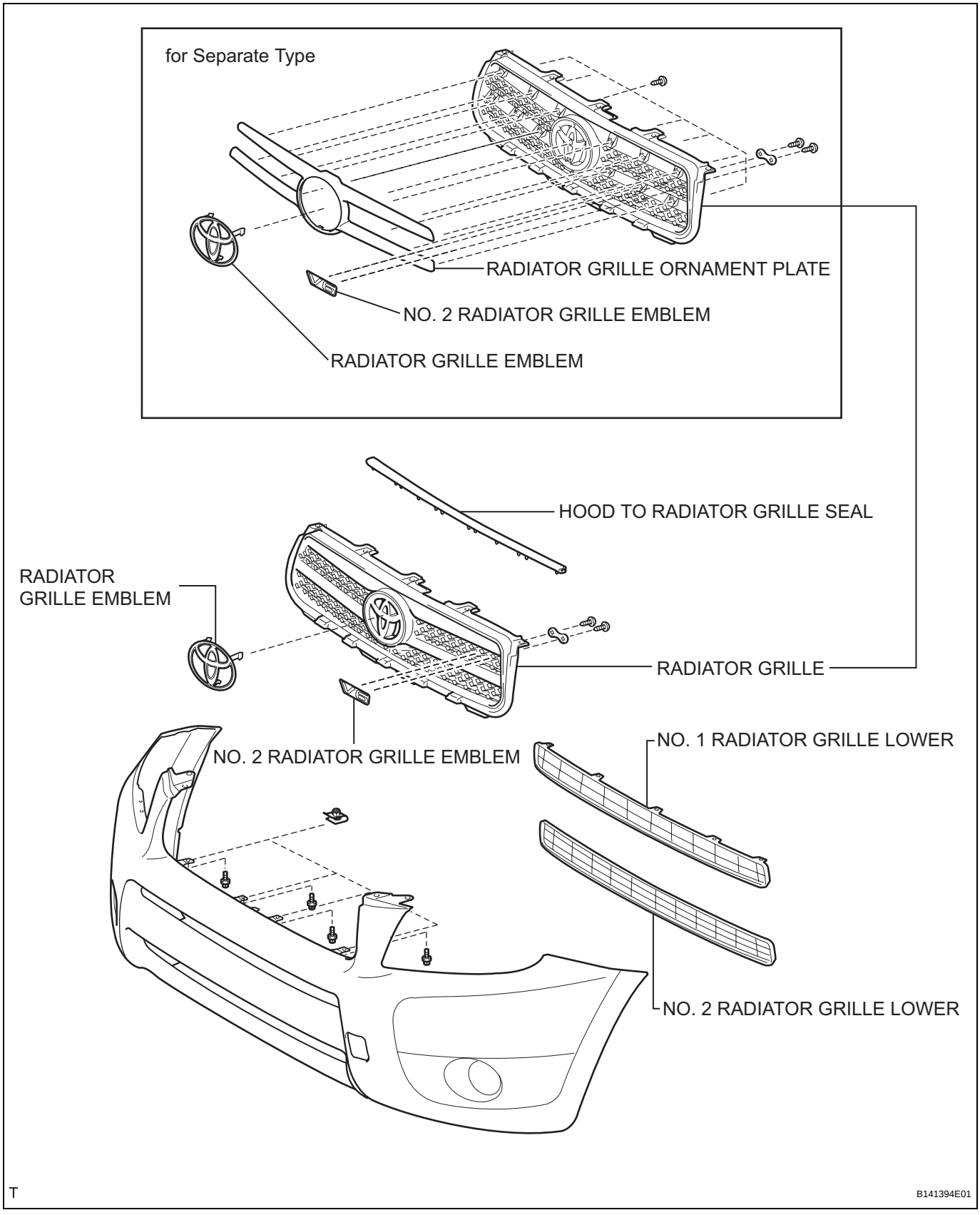

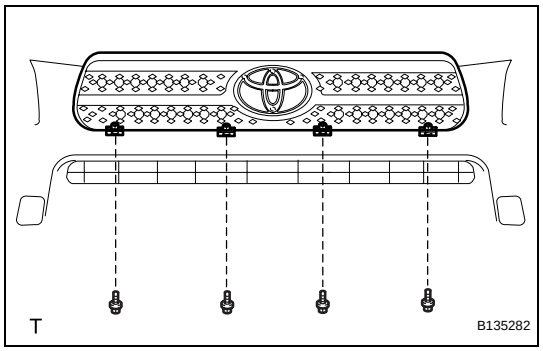

REMOVAL

1. REMOVE RADIATOR GRILLE SUB-ASSEMBLY

(a) Remove the 4 bolts and 4 nuts.

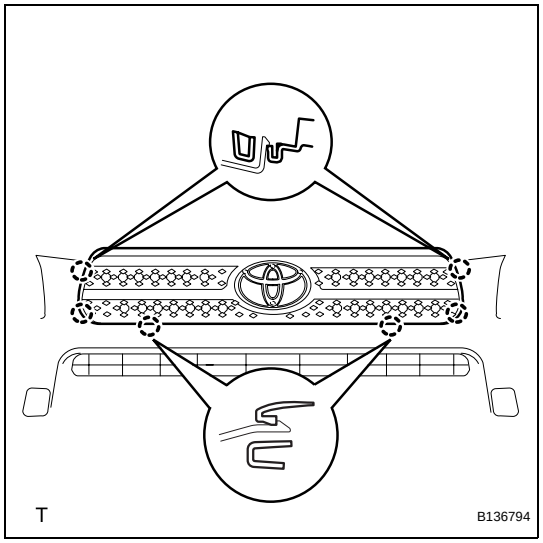

(b) Detach the 6 claws and remove the radiator grille.

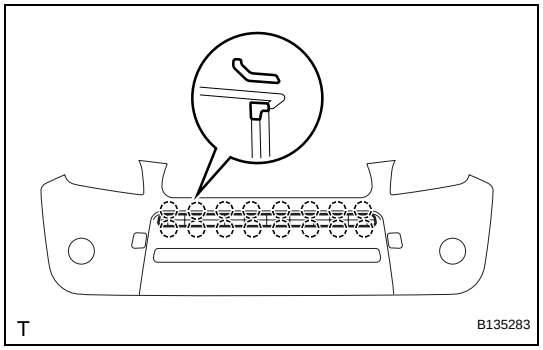

2. REMOVE NO. 1 RADIATOR GRILLE LOWER

(a) Detach the 16 claws and remove the radiator grille.

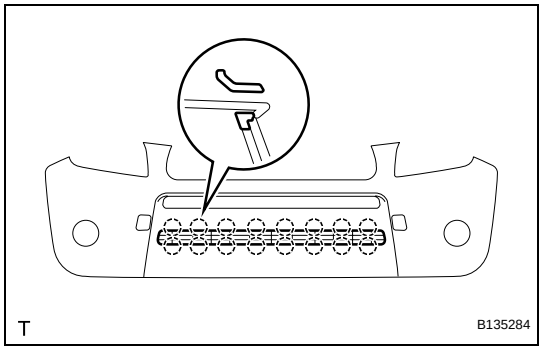

3. REMOVE NO. 2 RADIATOR GRILLE LOWER

(a) Detach the 16 claws and remove the radiator grille.

REAR BUMPER

COMPONENTS

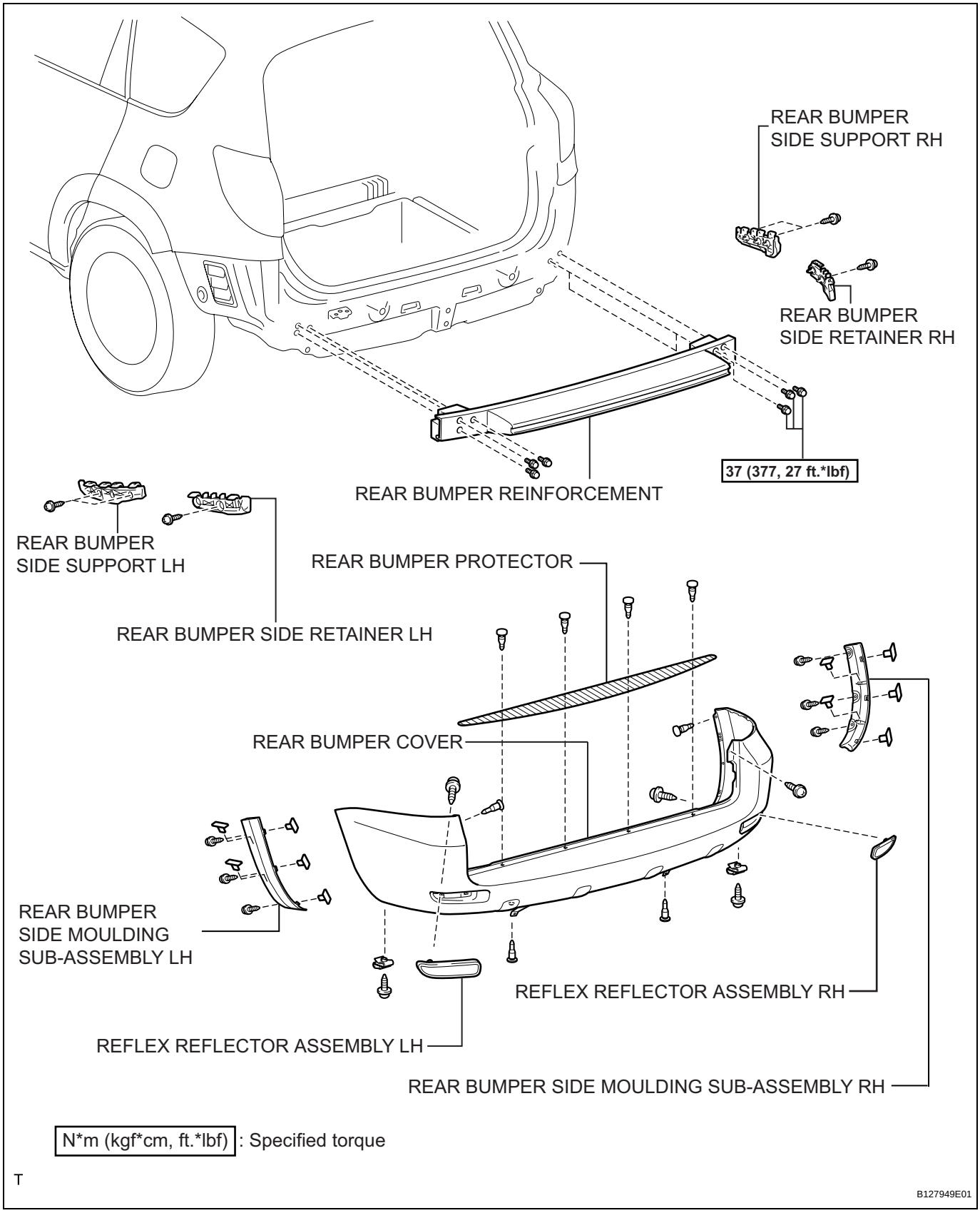

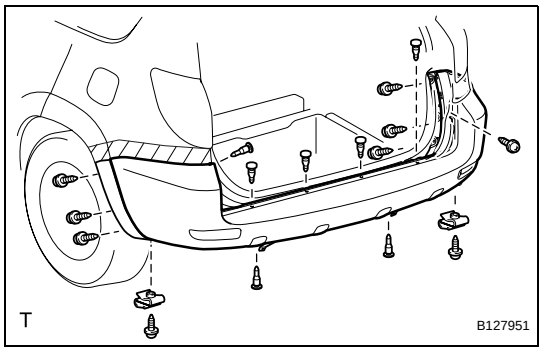

REMOVAL

1. REMOVE REAR BUMPER COVER

(a) Remove the 9 screws and 7 clips.

(b) Put protective tape under the quarter panel.

(c) Detach the 12 claws and remove the bumper cover.

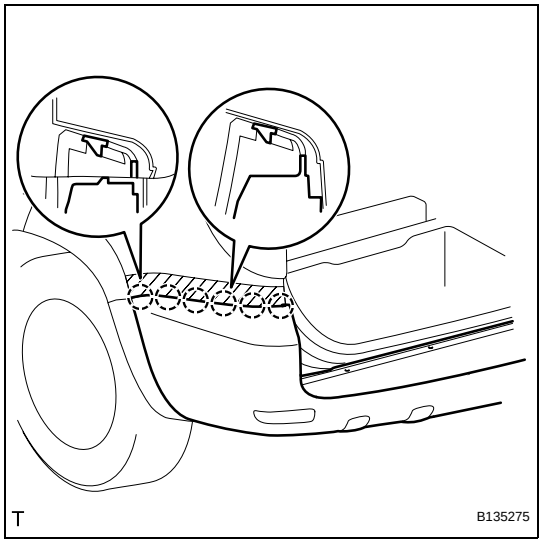

2. REMOVE REAR BUMPER PROTECTOR

HINT:

When removing the bumper protector, heat the bumper protector.

Standard heating temperature

Item	Specified Condition
bumper protector	40 to 60°C (104 to 140°F)

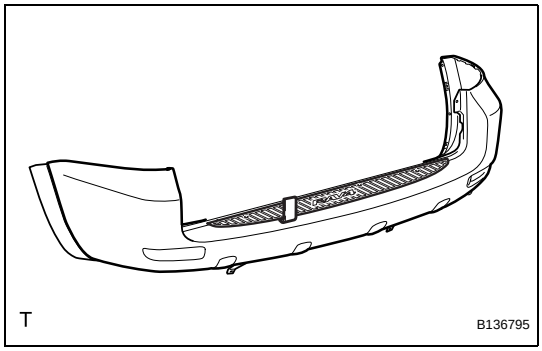

(a) Using a moulding remover, remove the bumper protector.

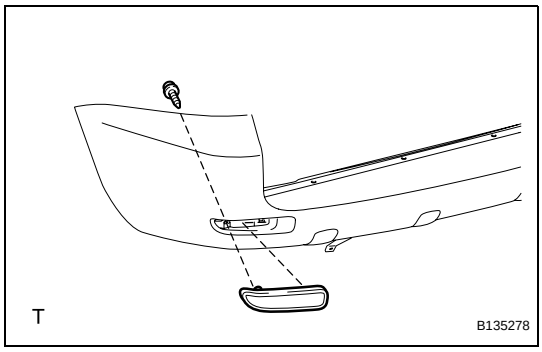

3. REMOVE REFLEX REFLECTOR ASSEMBLY LH

(a) Remove the screw and reflex reflector.

4. REMOVE REFLEX REFLECTOR ASSEMBLY RH

HINT:

Use the same procedures described for the LH side.

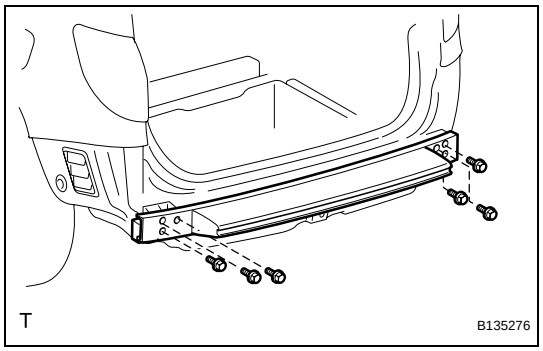

5. REMOVE REAR BUMPER REINFORCEMENT

(a) Remove the 6 bolts and reinforcement.

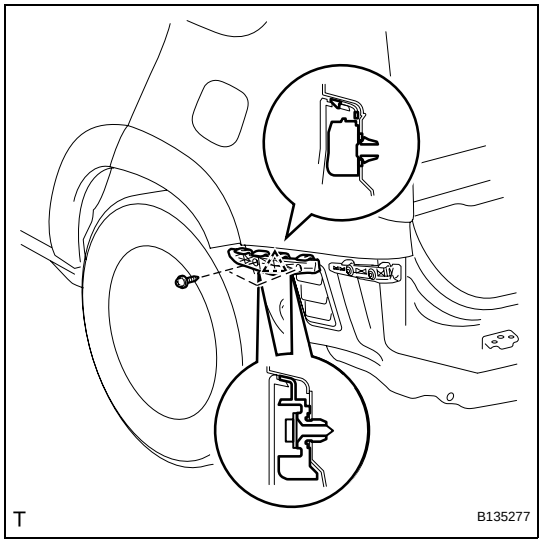

6. REMOVE REAR BUMPER SIDE SUPPORT LH

(a) Remove the 2 screws.

(b) Using a screwdriver, detach the claw and remove the bumper side support.
HINT:
Tape the screwdriver tip before use.

7. REMOVE REAR BUMPER SIDE SUPPORT RH

HINT:
Use the same procedures described for the LH side.

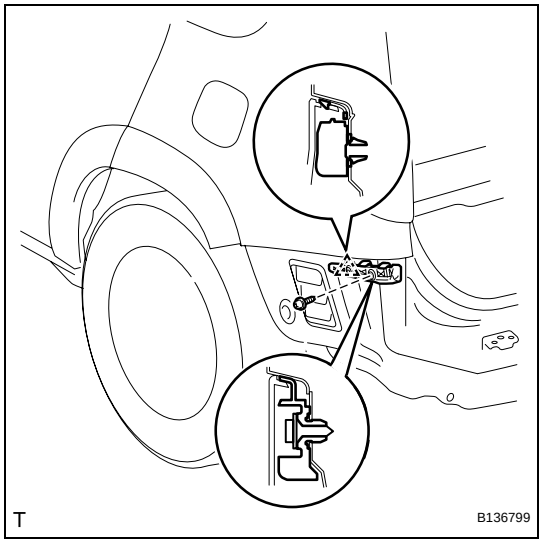

8. REMOVE REAR BUMPER SIDE RETAINER LH

(a) Remove the screw.

(b) Using a screwdriver, detach the claw and remove the side retainer.
HINT:
Tape the screwdriver tip before use.

9. REMOVE REAR BUMPER SIDE RETAINER RH

HINT:
Use the same procedures described for the LH side.

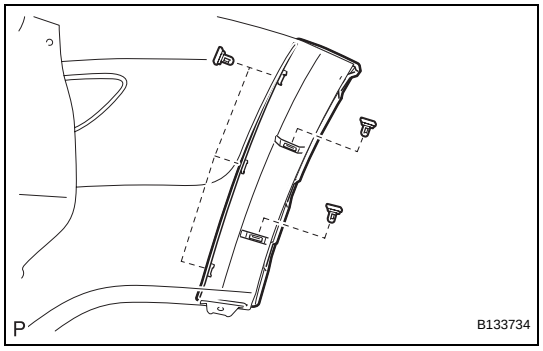

10. REMOVE REAR BUMPER SIDE MOULDING SUB-ASSEMBLY LH (for Wide Body)

(a) Detach the 5 outside moulding retainers and remove the moulding.
NOTICE:
- **If reusing the extension, take care not to damage the moulding.**
- **Be careful not to damage the vehicle body.**

11. REMOVE REAR BUMPER SIDE MOULDING SUB-ASSEMBLY RH (for Wide Body)

HINT:

Use the same procedures described for the LH side.

INSTALLATION

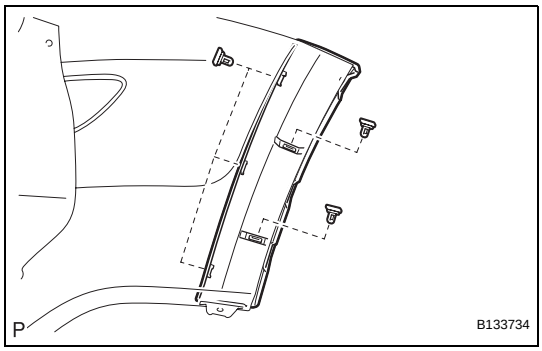

1. INSTALL REAR BUMPER SIDE MOULDING SUB-ASSEMBLY LH (for Wide Body)

(a) Attach the 5 outside moulding retainers to install the moulding.

2. INSTALL REAR BUMPER SIDE MOULDING SUB-ASSEMBLY RH (for Wide Body)

HINT:

Use the same procedures described for the LH side.

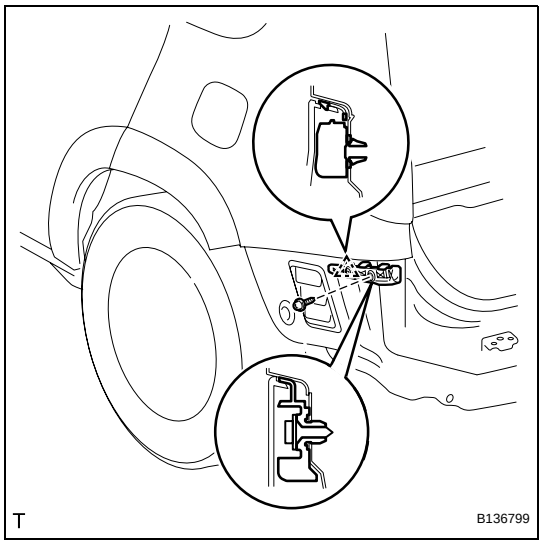

3. INSTALL REAR BUMPER SIDE RETAINER LH

(a) Attach the claw to install the side retainer.

(b) Install the screw.

4. INSTALL REAR BUMPER SIDE RETAINER RH

HINT:

Use the same procedures described for the LH side.

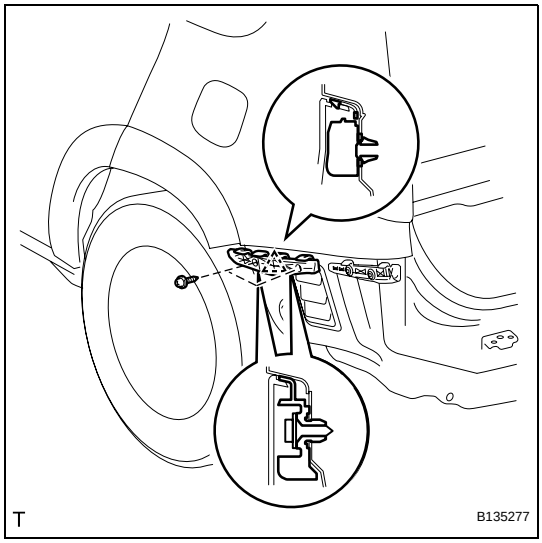

5. INSTALL REAR BUMPER SIDE SUPPORT LH

(a) Attach the claw to install the bumper side support.

(b) Install the 2 screws.

6. INSTALL REAR BUMPER SIDE SUPPORT RH

HINT:

Use the same procedures described for the LH side.

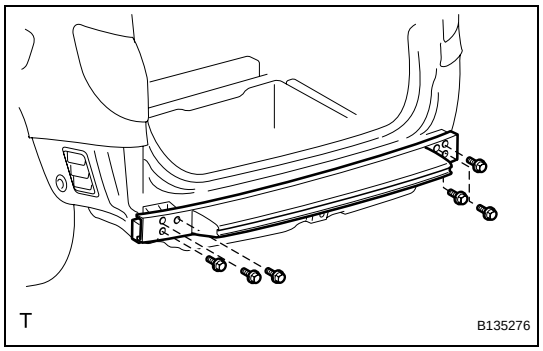

7. INSTALL REAR BUMPER REINFORCEMENT

(a) Install the bumper reinforcement with the 6 bolts.
Torque: 37 N*m (377 kgf*cm, 27 ft.*lbf)

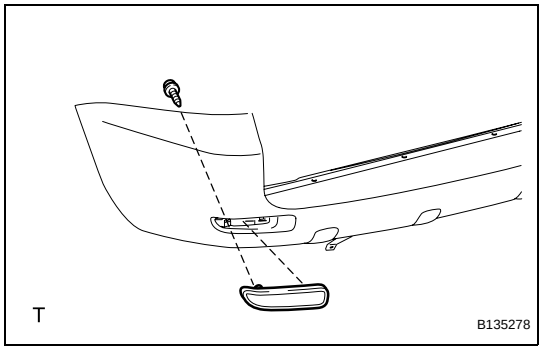

8. INSTALL REFLEX REFLECTOR ASSEMBLY LH

(a) Install the reflex reflector with the screw.

9. INSTALL REFLEX REFLECTOR ASSEMBLY RH

HINT:
Use the same procedures described for the LH side.

10. INSTALL REAR BUMPER PROTECTOR

HINT:
When removing the double-side tape, heat the rear bumper.

Standard heating temperature

Item	Specified Condition
Rear bumper	40 to 60°C (104 to 140°F)

(a) Clean the bumper surface.
  (1) Using a heat light, heat the bumper surface.
  (2) Remove the double-sided tape from the bumper.
  (3) Wipe off any tape adhesive residue with cleaner.

(b) Install the new bumper protector.

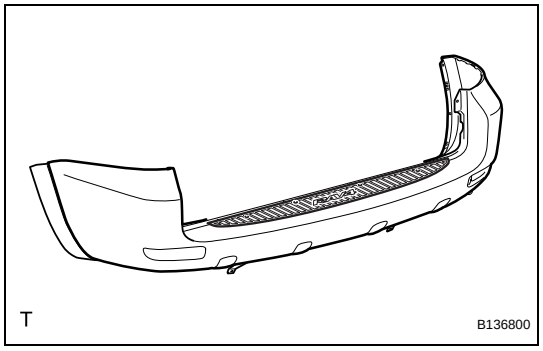

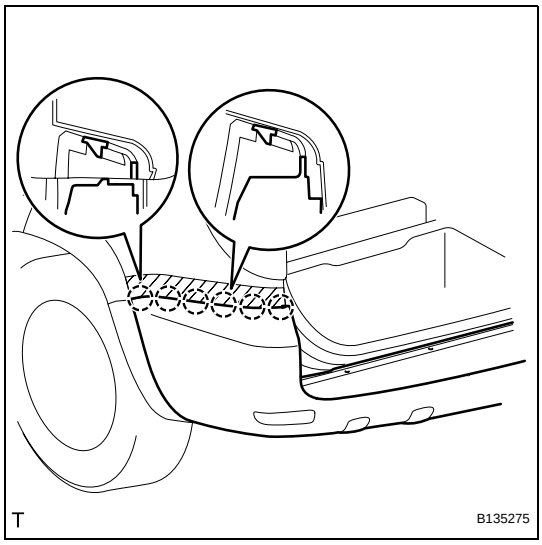

11. INSTALL REAR BUMPER COVER

(a) Put protective tape under the quarter panel.

(b) Attach the 12 claws to install the bumper cover.

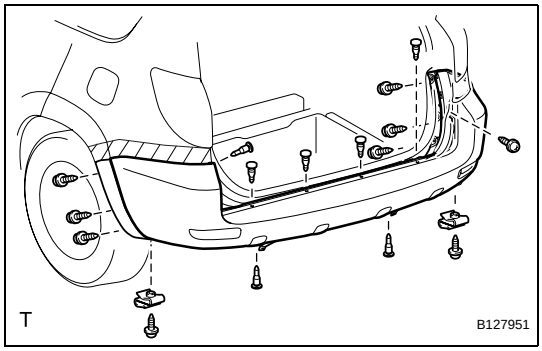

(c) Install the 9 screws and 7 clips.

INSTALLATION

HINT:

- Use the same procedures for the RH side and LH side.
- The procedures listed below are for the LH side.

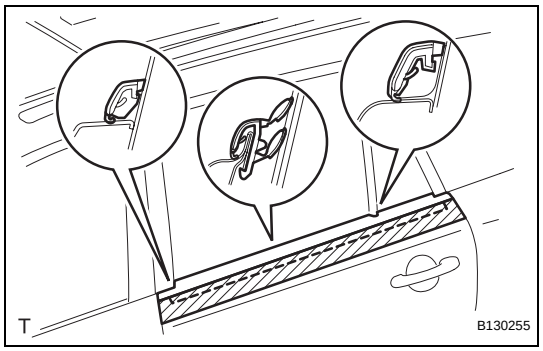

1. **INSTALL REAR DOOR BELT MOULDING ASSEMBLY LH**
   (a) Attach the claws to install the moulding.
   HINT:
   Confirm that the moulding is firmly installed.
2. **INSTALL REAR DOOR TRIM BOARD SUB-ASSEMBLY LH (See page ED-53)**
3. **INSTALL REAR DOOR ARMREST BASE PANEL UPPER LH (See page ED-54)**
4. **CONNECT CABLE TO NEGATIVE BATTERY TERMINAL**

REAR DOOR BELT MOULDING

COMPONENTS

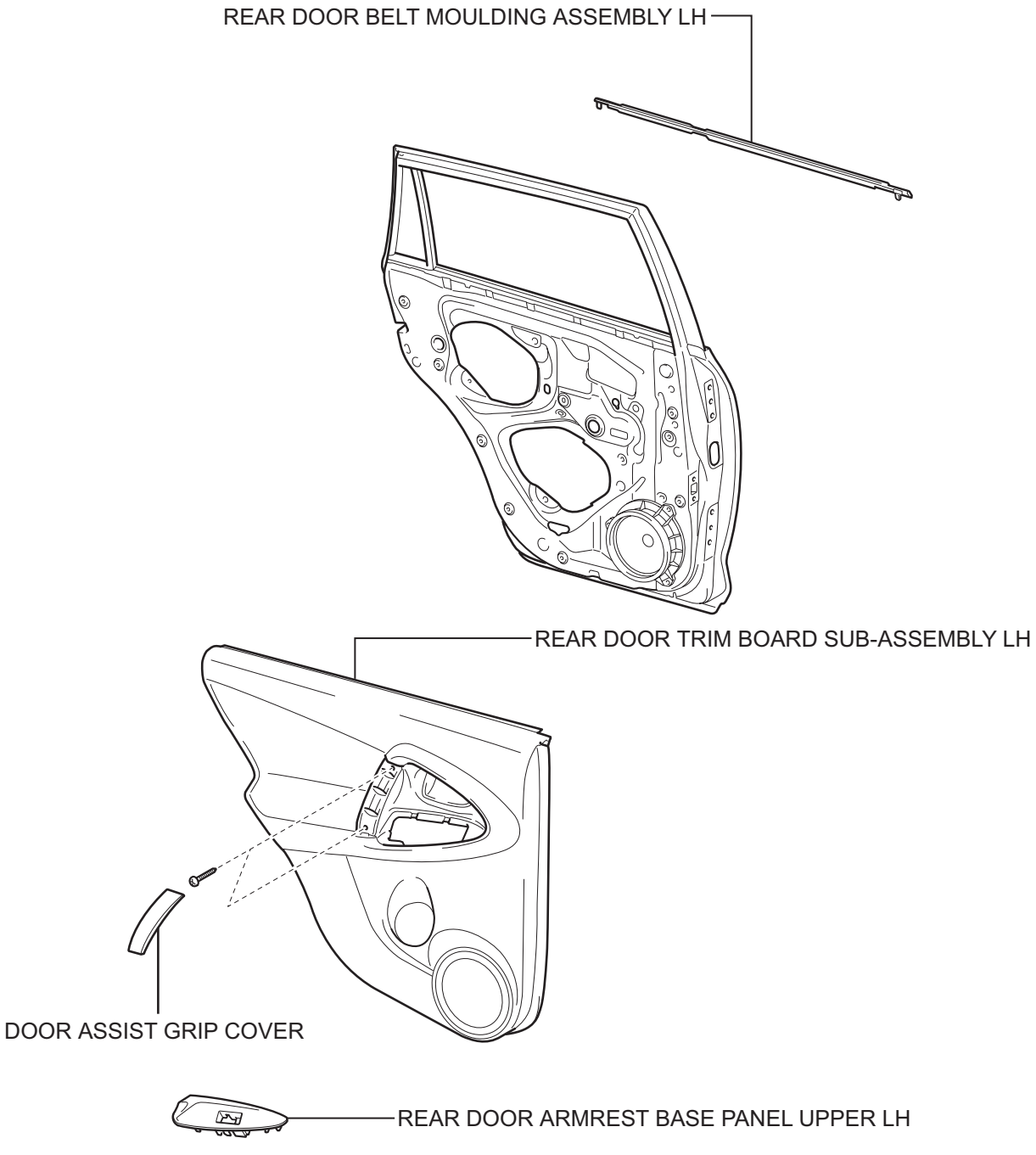

T

B130253E01

ET

REMOVAL

HINT:

- Use the same procedures for the RH side and LH side.
- The procedures listed below are for the LH side.

1. DISCONNECT CABLE FROM NEGATIVE BATTERY TERMINAL

CAUTION:

Wait at least 90 seconds after disconnecting the cable from the negative (-) battery terminal to prevent airbag and seat belt pretensioner activation.

2. REMOVE REAR DOOR ARMREST BASE PANEL UPPER LH (See page ED-40)

3. REMOVE REAR DOOR TRIM BOARD SUB-ASSEMBLY LH (See page ED-40)

4. REMOVE REAR DOOR BELT MOULDING ASSEMBLY LH

(a) Put protective tape under the belt moulding.

(b) Using a moulding remover, detach the claws to remove the belt moulding as shown in the illustration.

HINT:

Tape the remover tip before use.

NOTICE:

Be careful when removing the belt moulding as there are claws attached to the front and rear ends of the belt moulding.

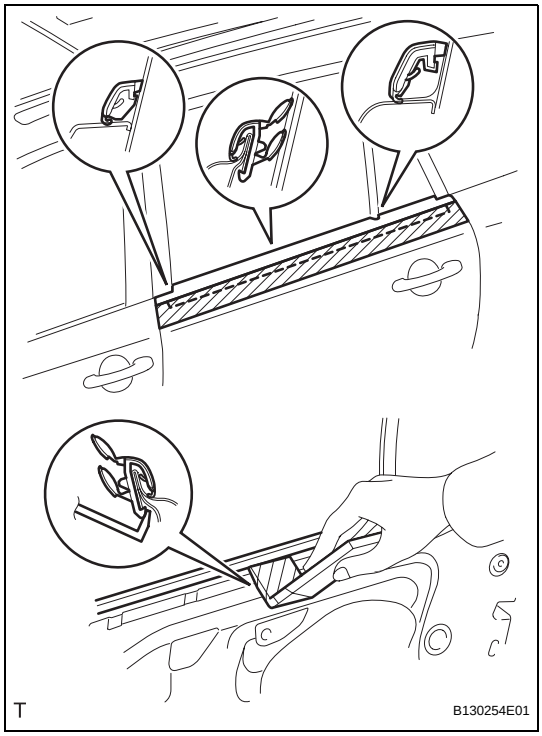

INSTALLATION

HINT:

- When installing the spoiler, heat the vehicle body and spoiler using a heat light.

Standard heating temperature

Item	Specified Condition
Vehicle body	40 to 60°C (104 to 140°F)
Spoiler	20 to 30°C (68 to 86°F)

NOTICE:
Do not heat the body and spoiler excessively.

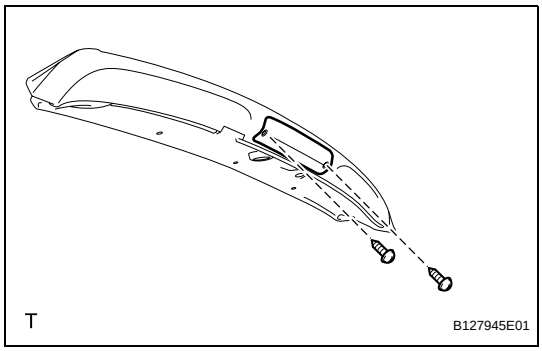

1. INSTALL CENTER STOP LIGHT

(a) Install the center stop light with the 2 screws.

2. INSTALL REAR SPOILER

(a) Clean the vehicle body surface.
  (1) Using a heat light, heat the vehicle body surface.

(b) If reusing the spoiler:
Clean the spoiler.
  (1) Using a heat light, heat the spoiler.

(c) Connect the center stop light connector.

(d) Install the spoiler with 3 clips.

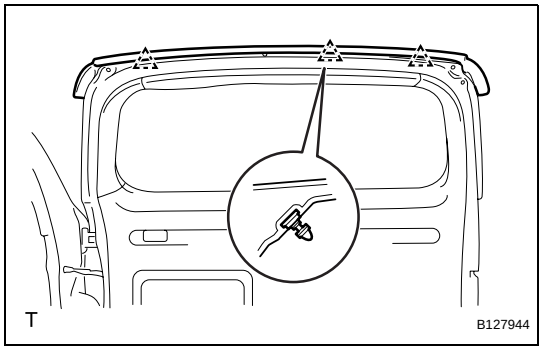

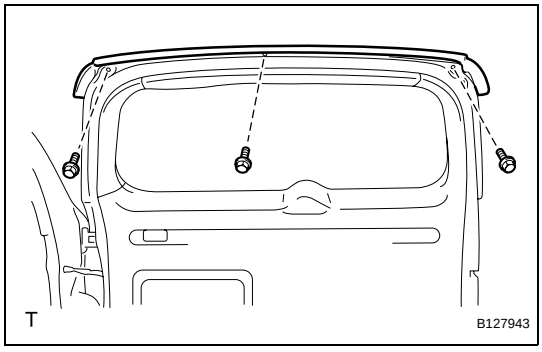

(e) Install the 3 bolts.
Torque: 7.5 N*m (76 kgf*cm, 66 in.*lbf)

3. INSTALL BACK DOOR CENTER GARNISH (See page ED-67)

4. CONNECT CABLE TO NEGATIVE BATTERY TERMINAL

REAR SPOILER

COMPONENTS

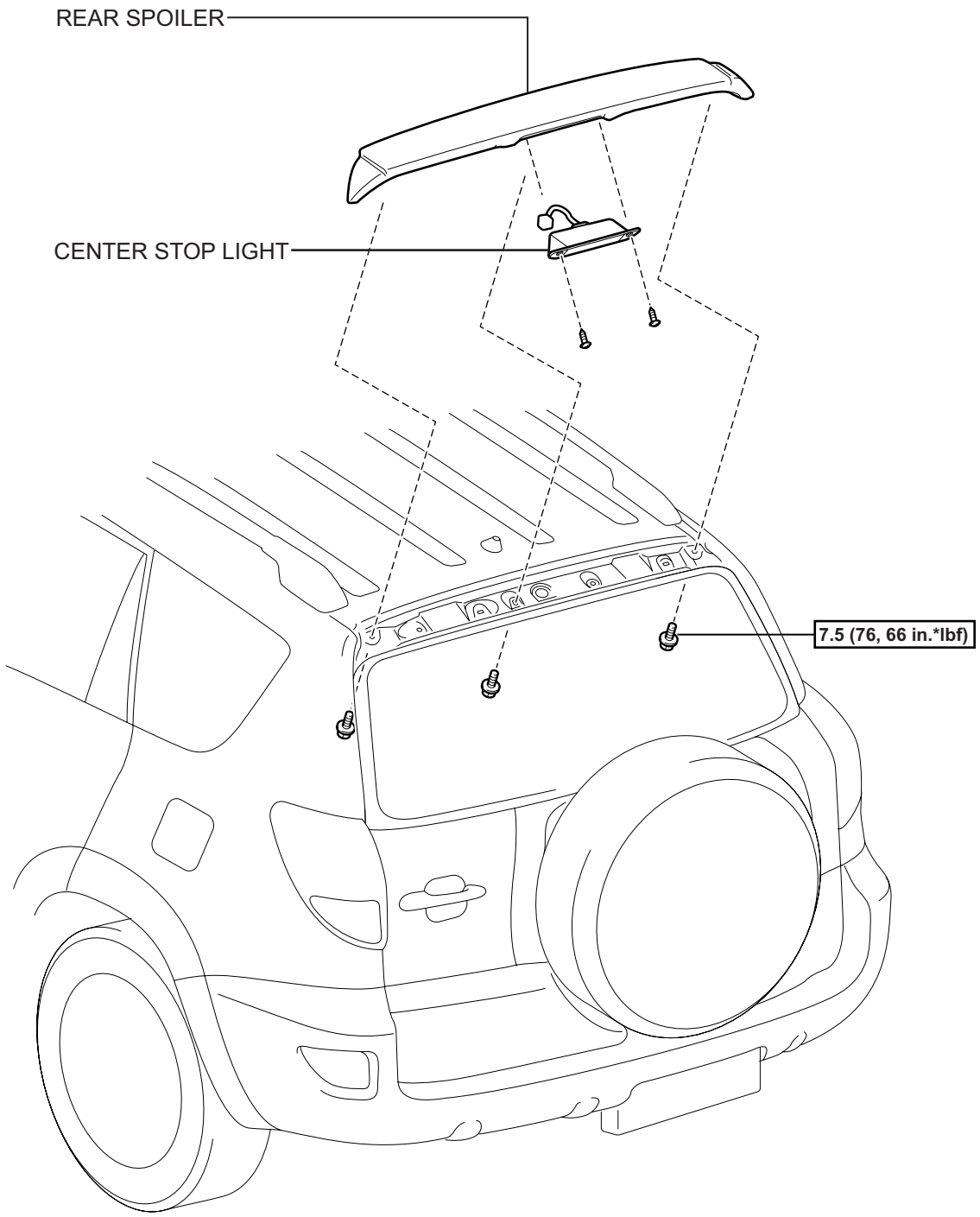

N*m (kgf*cm, ft.*lbf) : Specified torque

T

B127942E04

REMOVAL

HINT:
When removing the spoiler, heat the vehicle body and spoiler using a heat light.

Standard heating temperature

Item	Specified Condition
Vehicle body	40 to 60°C (104 to 140°F)
Spoiler	20 to 30°C (68 to 86°F)

NOTICE:
Do not heat the vehicle body and spoiler excessively.

1. **DISCONNECT CABLE FROM NEGATIVE BATTERY TERMINAL**
   CAUTION:
   Wait at least 90 seconds after disconnecting the cable from the negative (-) battery terminal to prevent airbag and seat belt pretensioner activation.
2. **REMOVE BACK DOOR CENTER GARNISH (See page ED-59)**
3. **REMOVE REAR SPOILER**
   (a) Remove the 3 bolts.

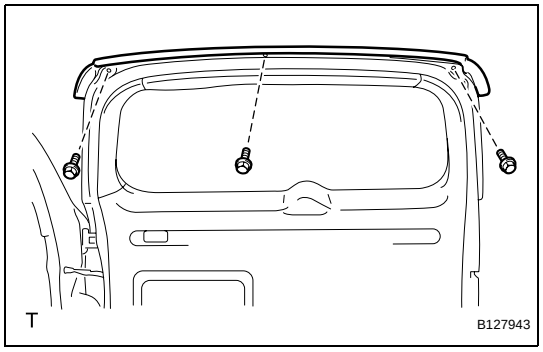

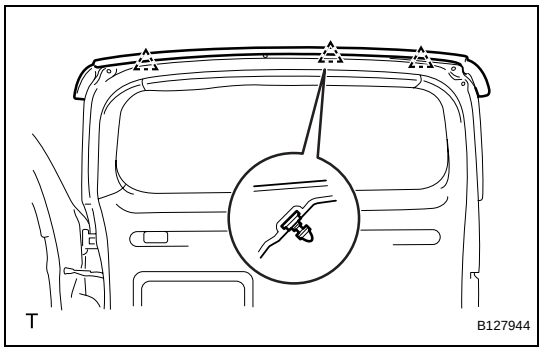

   (b) Remove the 3 clips and spoiler.
   (c) Disconnect the center stop light connector and remove the rear spoiler.
4. **REMOVE CENTER STOP LIGHT**
   (a) Remove the 2 screws and center stop light.

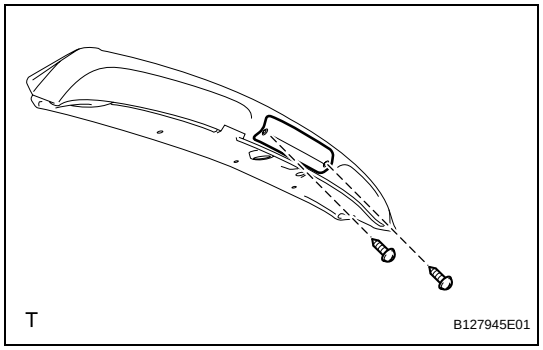

INSTALLATION

HINT:

- Use the same procedures for the RH side and LH side.
- The procedures listed below are for the LH side.
- When replacing the clip, heat the clip and body using a heat light.

Standard heating temperature

Item	Specified Condition
Vehicle body	40 to 60°C (104 to 140°F)
Clip	20 to 30°C (68 to 86°F)

NOTICE:
Do not heat the clip and vehicle body excessively.

1. REPLACE ROOF DRIP SIDE FINISH MOULDING CLIP

HINT:

Use the procedures below to replace damaged or accidentally removed clips. If this step is not necessary, go to the next step.

NOTICE:
After press-fitting the clips, wait 30 minutes or more before installing the moulding.

HINT:

- Minimum hardening time: 30 minutes
- Time needed for complete hardening: 24 hours

(a) Remove the double-sided tape that remains on the surfaces of the moulding and vehicle body, and then clean the surface with white gasoline.

(b) Using a heat light, heat the clip installation surface of the vehicle body and installation part of the clips.

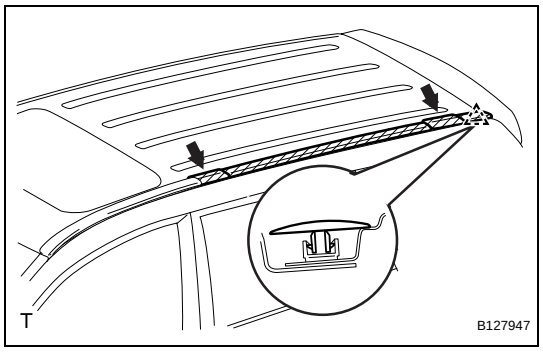

2. INSTALL ROOF DRIP SIDE FINISH MOULDING LH

(a) Install the No. 2 center roof drip side finish moulding and roof drip side finish moulding.

(b) Install the 2 roof drip moulding joint covers to the vehicle body.

ROOF DRIP SIDE FINISH MOULDING

COMPONENTS

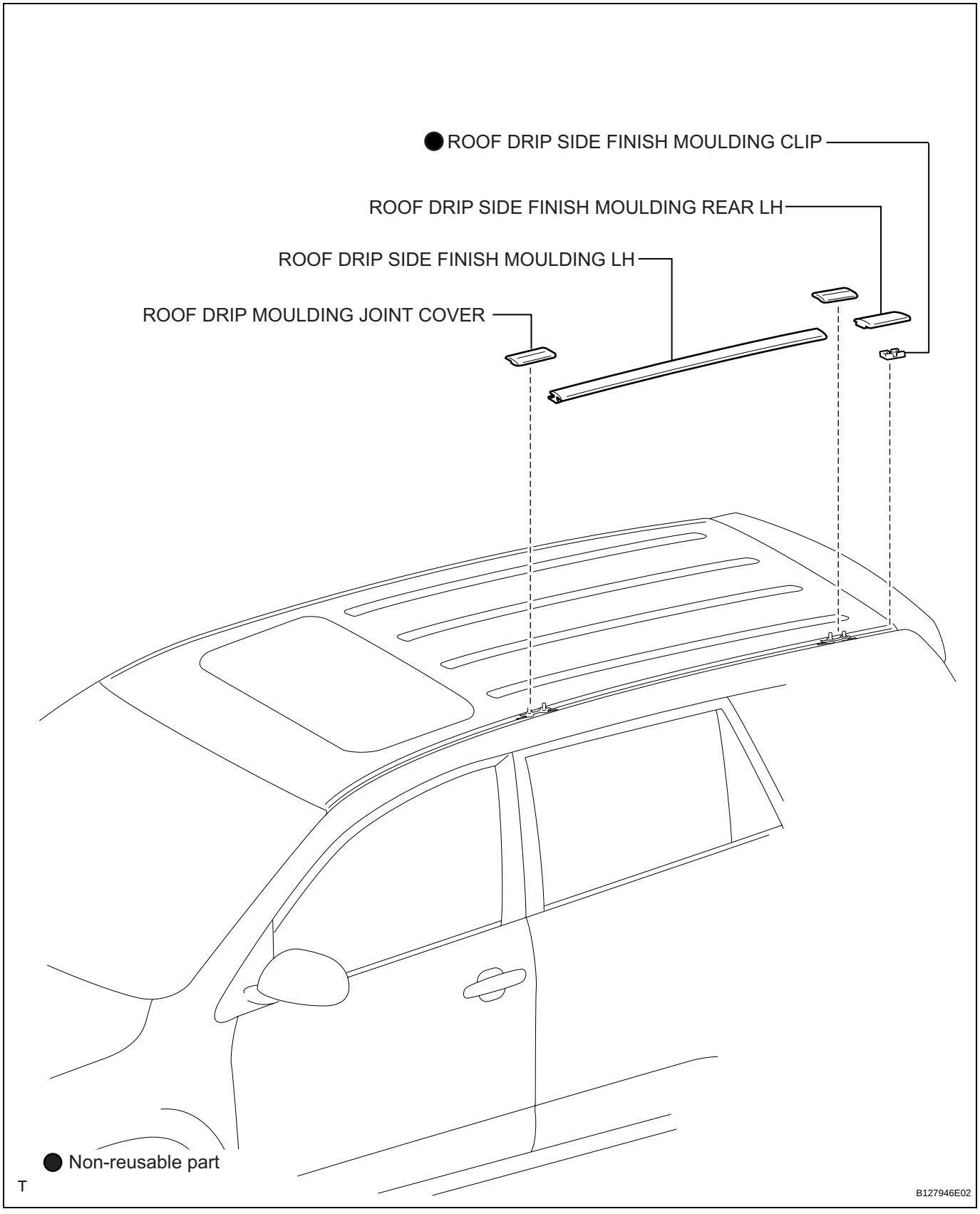

ET

REMOVAL

HINT:

- Use the same procedures for the RH side and LH side.
- The procedures listed below are for the LH side.

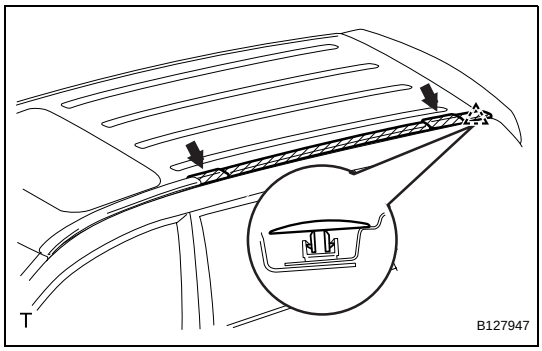

1. REMOVE ROOF DRIP SIDE FINISH MOULDING LH

(a) Remove the 2 roof drip moulding joint covers from the vehicle body.

(b) Remove the roof drip side finish moulding and No. 2 center roof drip side finish moulding.

NOTICE:

- **Do not remove the clips from the vehicle body.**
- **If the clips are damaged or removed accidentally, replace them.**

ET

REMOVAL

HINT:
- Use the same procedures for the RH side and LH side.
- The procedures listed below are for the LH side.

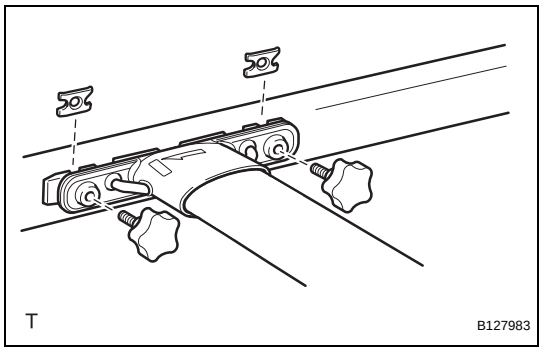

1. REMOVE ROOF RACK SUPPORT SUB-ASSEMBLY CENTER

(a) Remove the 4 roof carrier caps and roof rack support center.

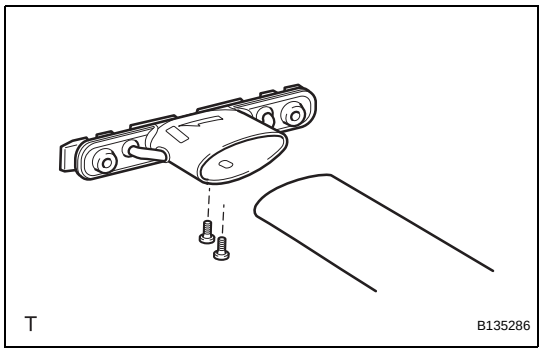

2. REMOVE ROOF RACK BAR FRONT

(a) Remove the 4 screws and roof rack bar.

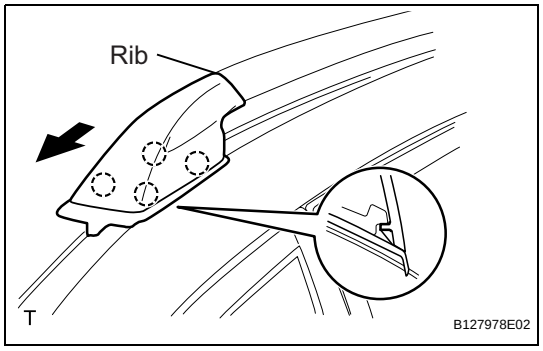

3. REMOVE ROOF RACK LEG COVER FRONT LH

(a) Remove the leg cover.
  (1) Using a screwdriver, detach the 4 claws.
  HINT:
  Tape the screwdriver tip before use.
  (2) Detach the rib from the bar.

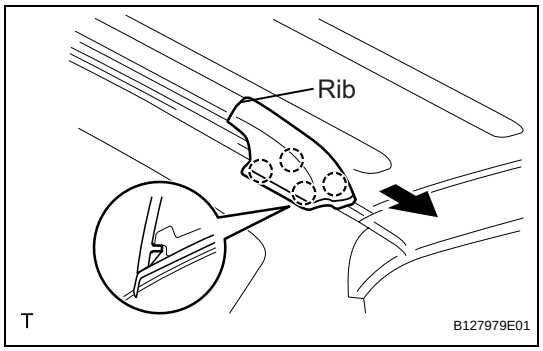

4. REMOVE ROOF RACK LEG COVER REAR LH

(a) Remove the leg cover.
  (1) Using a screwdriver, detach the 4 claws.
  HINT:
  Tape the screwdriver tip before use.
  (2) Detach the rib from the bar.

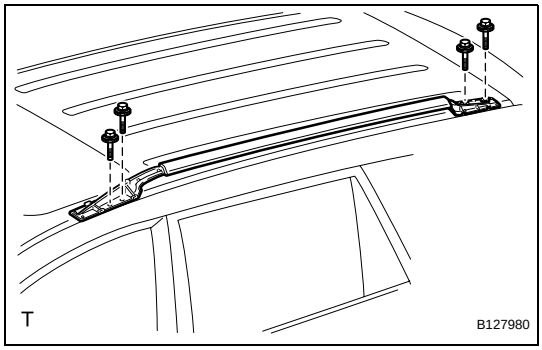

5. REMOVE ROOF RACK ASSEMBLY LH
Remove the 4 bolts and the roof rack.

6. REMOVE ROOF RACK LEG FRONT LH
(a) Remove the 2 screws and roof rack leg front.
(b) Remove the leg cushion front.

7. REMOVE ROOF RACK LEG REAR LH
(a) Remove the 2 screws and roof rack leg rear.
(b) Remove the leg cushion rear.

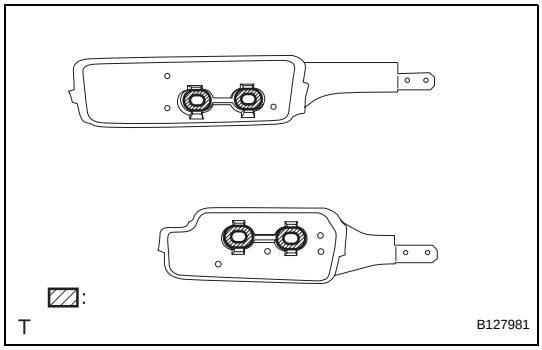

INSTALLATION

1. REPLACE ROOF CARRIER SEAL
(a) Remove the seals.
(b) Install new seals as shown in the illustration.

2. INSTALL ROOF RACK LEG FRONT LH
(a) Install the leg cushion front.
(b) Install the roof rack leg front with the 2 screws.
Torque: 2.8 to 5.0 N*m (29 to 51 kgf*cm, 25 to 44 in.*lbf)

3. INSTALL ROOF RACK LEG REAR LH
(a) Install the leg cushion rear.
(b) Install the roof rack leg rear with the 2 screws.
Torque: 2.8 to 5.0 N*m (29 to 51 kgf*cm, 25 to 44 in.*lbf)

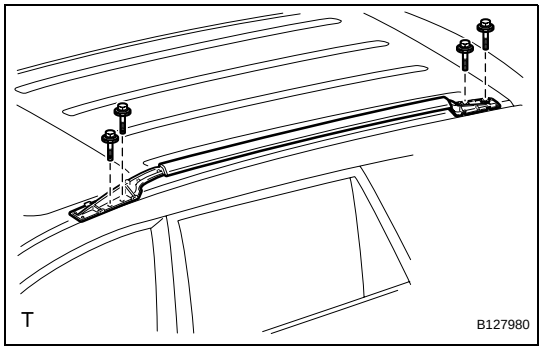

4. INSTALL ROOF RACK ASSEMBLY LH
(a) Install the roof rack with the 4 bolts.
Torque: 38 N*m (387 kgf*cm, 28 ft.*lbf)

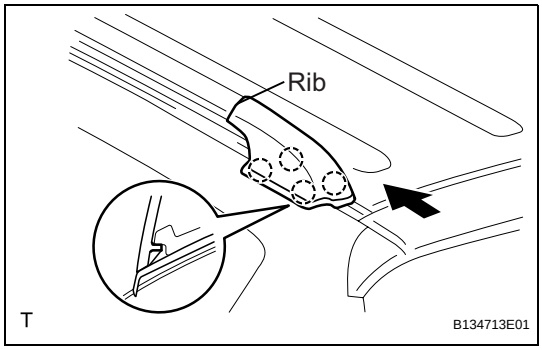

5. INSTALL ROOF RACK LEG COVER REAR LH
(a) Install the leg cover.
(1) Attach the rib to the bar.
(2) Attach the 4 claws.

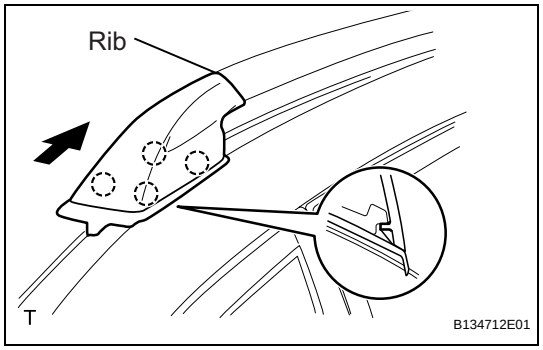

6. INSTALL ROOF RACK LEG COVER FRONT LH

(a) Install the leg cover.
  (1) Attach the rib to the bar.
  (2) Attach the 4 claws.

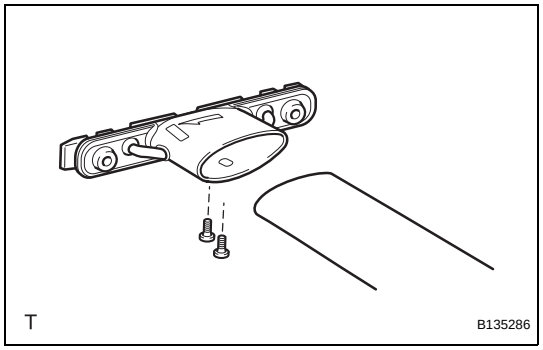

7. INSTALL ROOF RACK BAR FRONT

(a) Install the roof rack bar with the 4 screws.
  Torque: 1.96 to 2.94 N*m (20 to 30 kgf*cm, 17 to 26 in.*lbf)

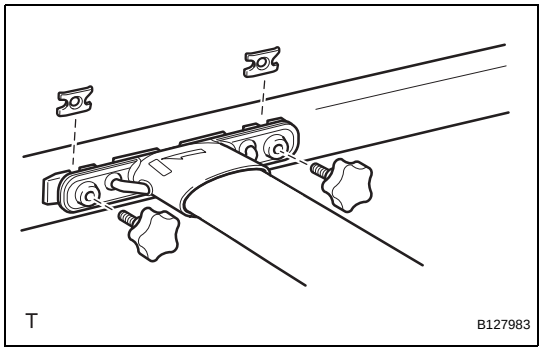

8. INSTALL ROOF RACK SUPPORT SUB-ASSEMBLY CENTER

(a) Install the roof rack support center with the 4 roof carrier caps.

ET

ROOF RACK

COMPONENTS

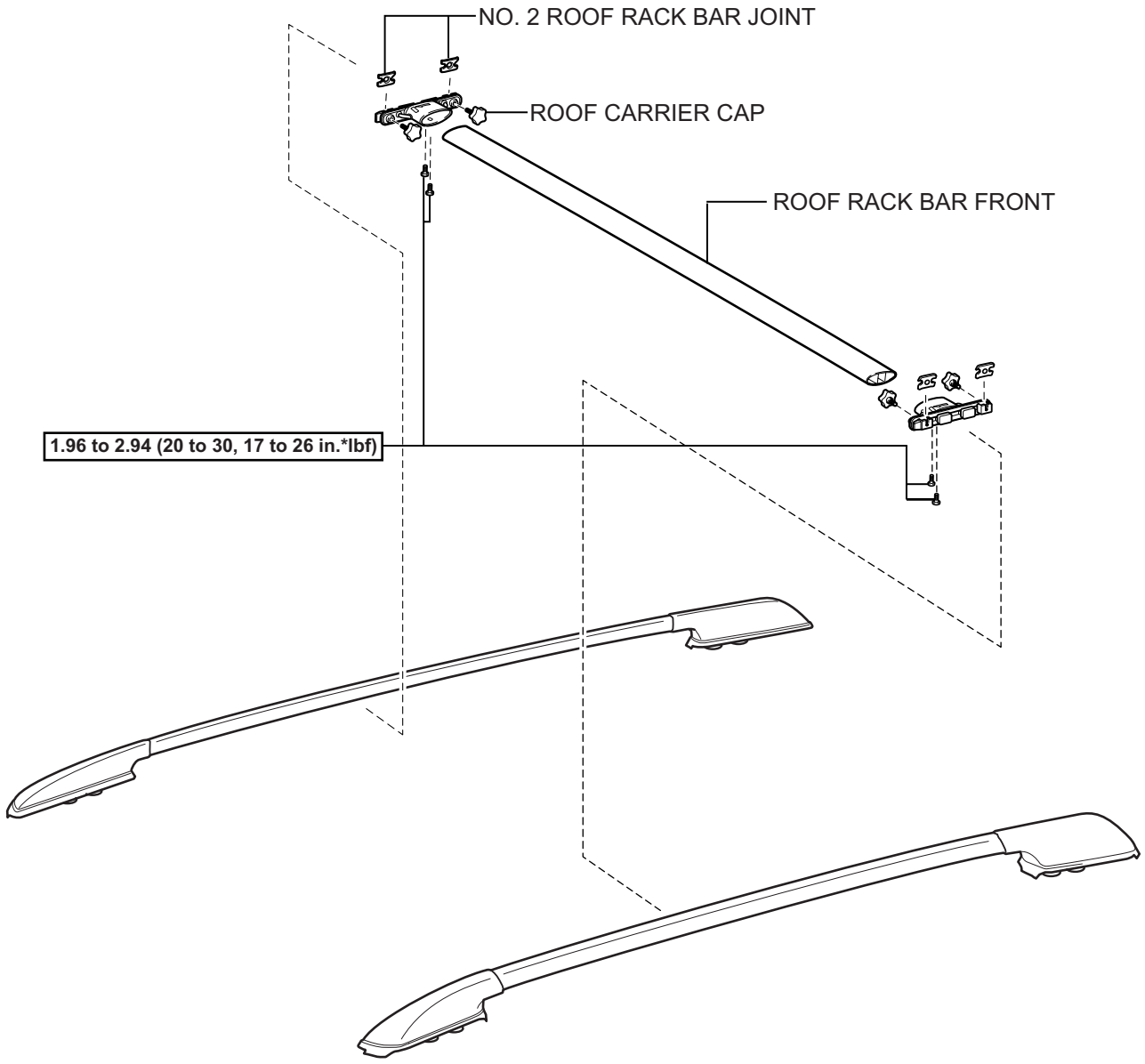

N*m (kgf*cm, ft.*lbf) : Specified torque

T

B127982E02

ET

ET

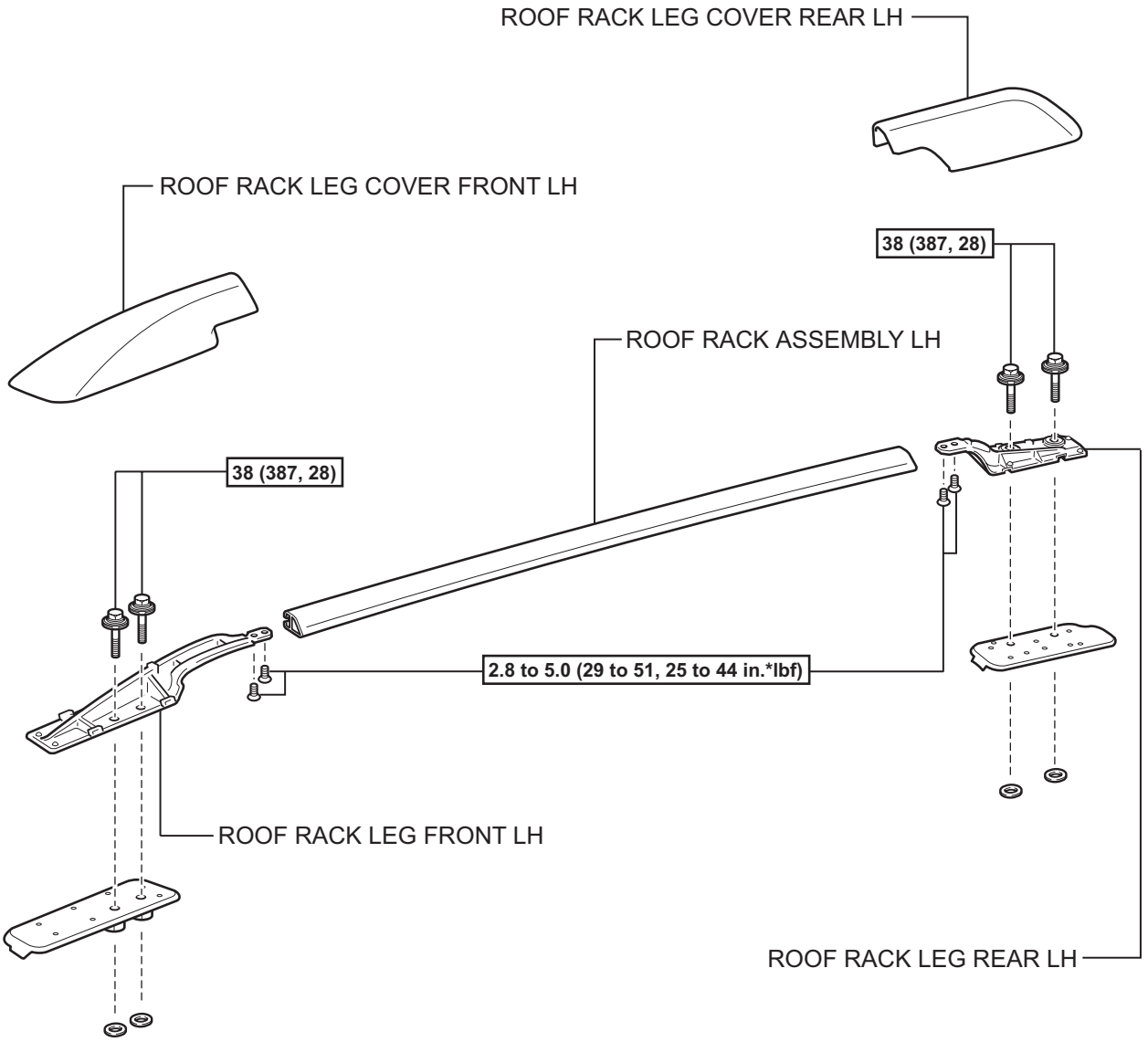

N*m (kgf*cm, ft.*lbf) : Specified torque

T

B127977E01

4WD CONTROL ECU

COMPONENTS

TF

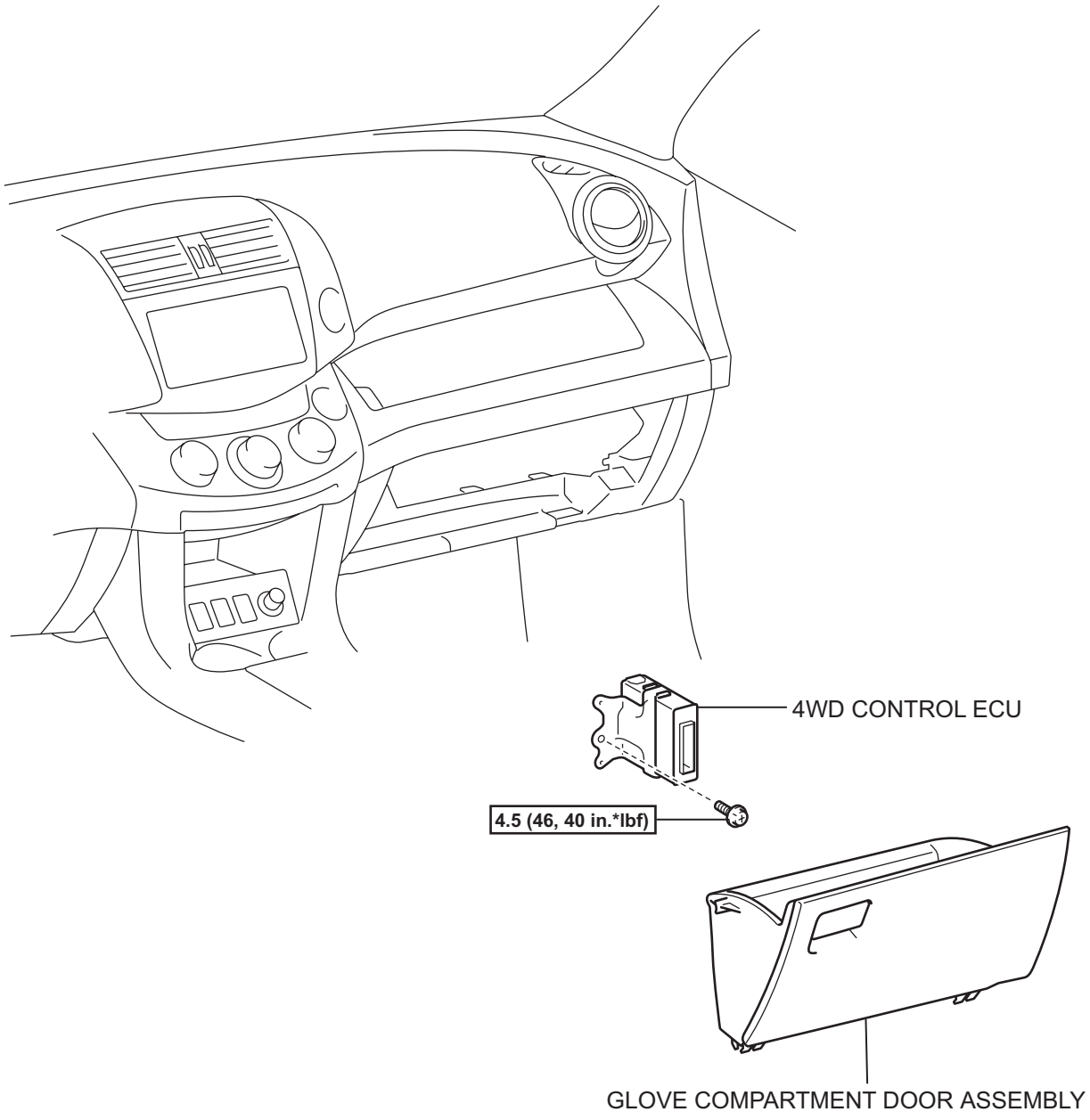

N*m (kgf*cm, ft.*lbf) : Specified torque

C129214E05

REMOVAL

1. **DISCONNECT CABLE FROM NEGATIVE BATTERY TERMINAL**
   CAUTION:
   Wait at least 90 seconds after disconnecting the cable from the negative (-) battery terminal to prevent airbag and seat belt pretensioner activation.
2. **REMOVE GLOVE COMPARTMENT DOOR ASSEMBLY (See page IP-20)**
3. **REMOVE 4WD CONTROL ECU**
   (a) Disconnect the connector.
   (b) Remove the bolt and ECU.

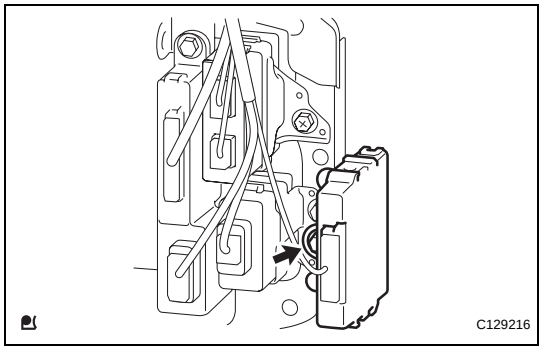

INSTALLATION

1. **INSTALL 4WD CONTROL ECU**
   (a) Install the ECU with the bolt.
   Torque: 4.5 N*m (46 kgf*cm, 40 in.*lbf)
   (b) Connect the connector.
2. **INSTALL GLOVE COMPARTMENT DOOR ASSEMBLY (See page IP-25)**
3. **CONNECT CABLE TO NEGATIVE BATTERY TERMINAL**

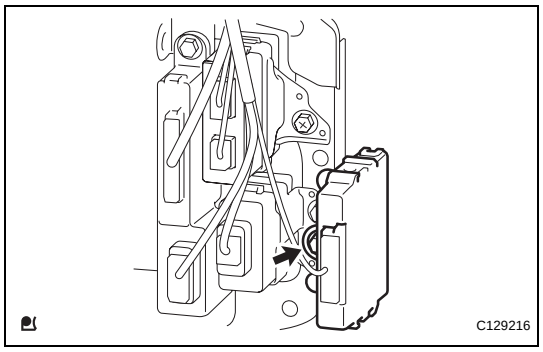

SYSTEM DIAGRAM

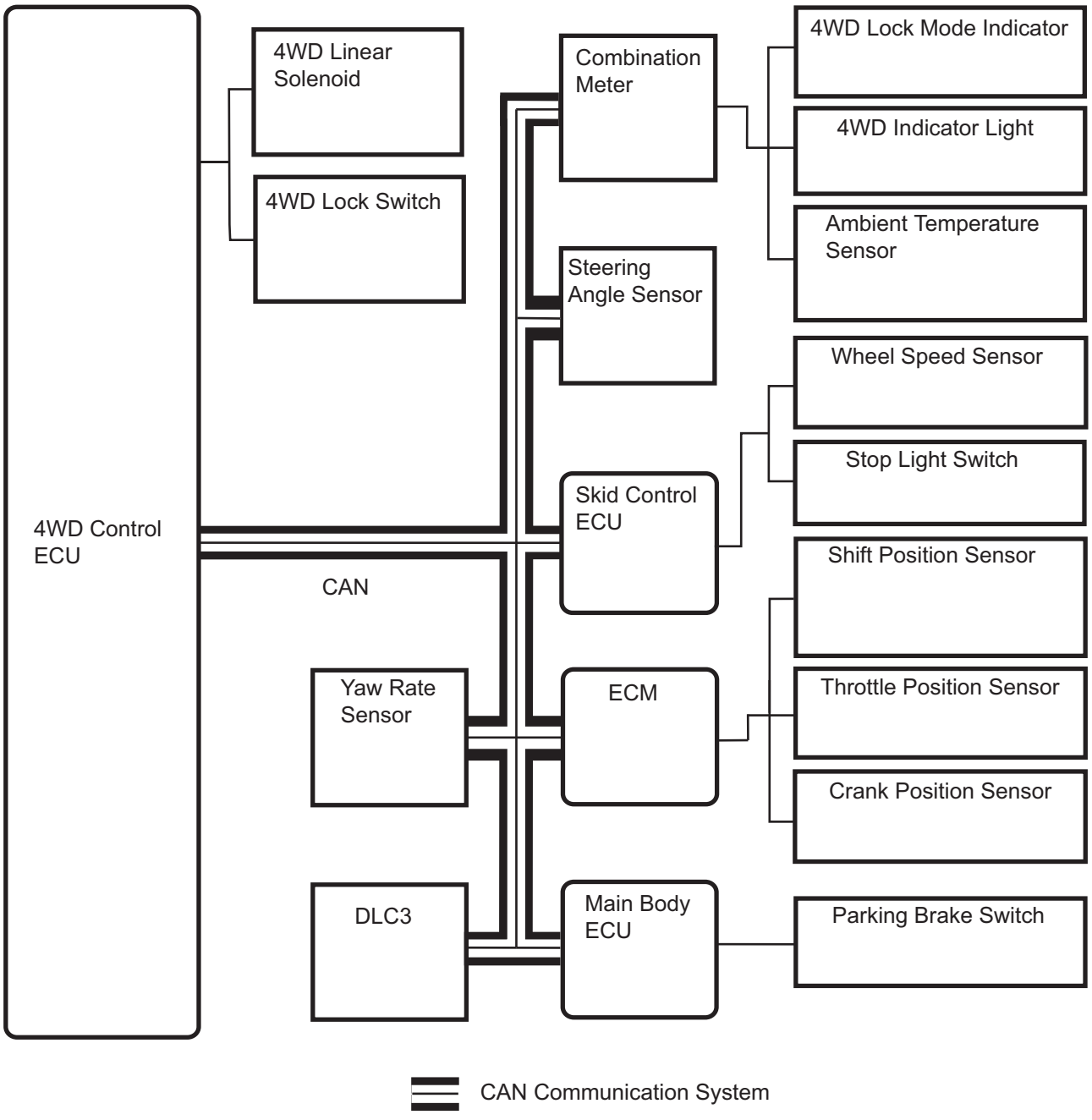

SYSTEM DESCRIPTION

1. GENERAL DESCRIPTION

(a) The active torque control 4WD system detects the driving conditions based on signals from each ECU, each switch, the steering angle sensor, the wheel speed sensor, and the yaw rate sensor. The system controls the electronic current passing through the linear solenoid of the electromagnetic coupling, and performs electronic control to distribute the optimum torque to the rear wheels.

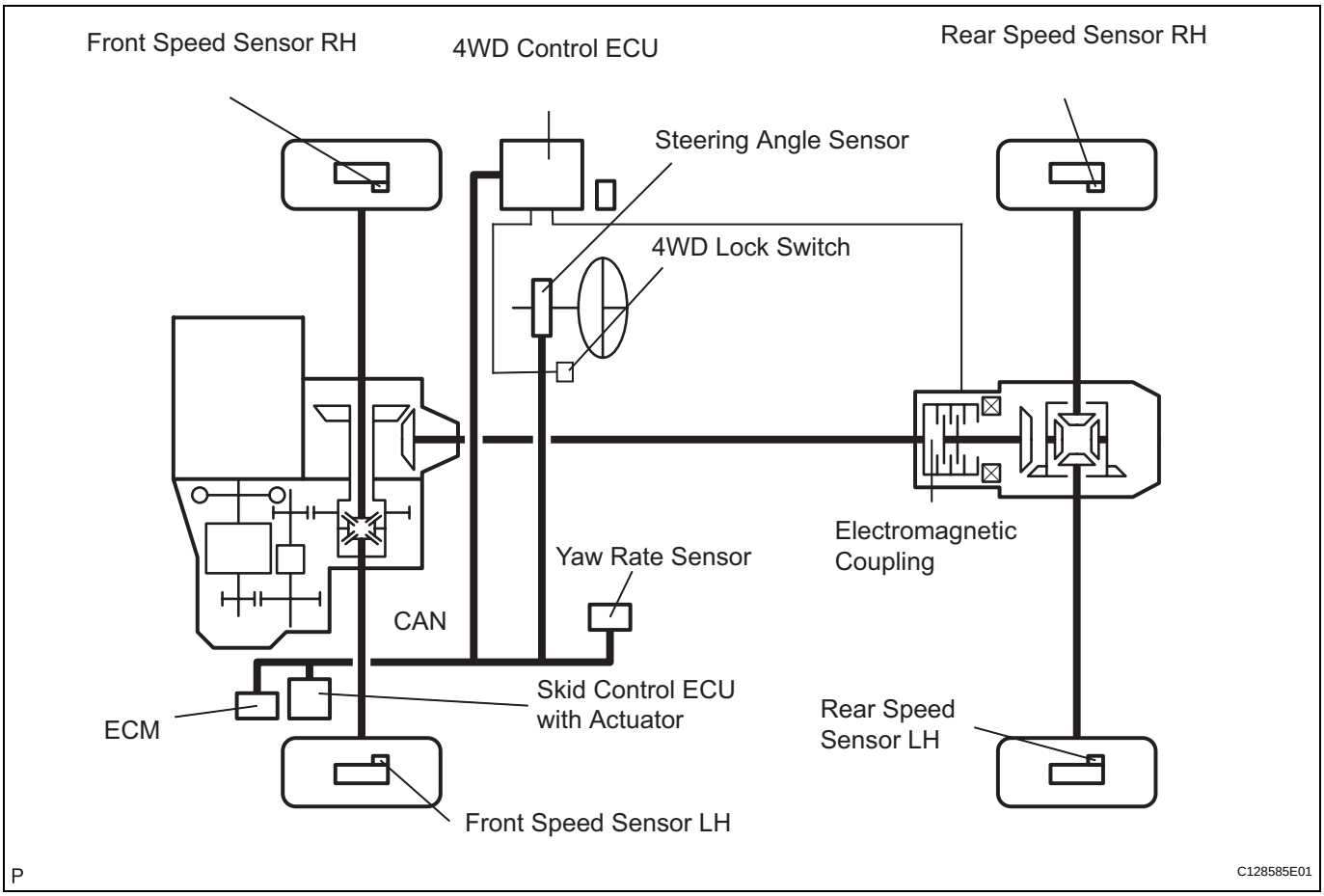

(b) Main components and their functions.

Component	Function
4WD Indicator Light	Displays warning to driver when system malfunctions
Stop Light Switch	Detects brake operation
Throttle Position Sensor	Detects opening angle of throttle
Park/Neutral Position Switch	Detects "P" position
Steering Angle Sensor	Detects turning of steering wheel
4WD Linear Solenoid	Detects electronic control limiting clutch operation using signals from 4WD control ECU
Skid Control ECU with Actuator	Detects signals from each sensor and outputs them to 4WD control ECU
4WD Control ECU	Detects signals from each sensor via skid control ECU to operate linear solenoid and control system
Crankshaft Position Sensor	Detects engine rpm and inputs it into ECM
Yaw Rate Sensor	Detects forward and rearward acceleration of vehicle, and inputs it into skid control ECU

Component	Function
Ambient Temperature	Detects external ambient temperature and inputs it into body ECU
Electromagnetic Coupling	Based on amount of current sent from 4WD control ECU, torque is distributed to rear wheels
4WD Lock Switch	Change of side auto mode for lock mode
4WD Lock Mode Indicator Light	Lock mode control status is communicated to driver through indicator light illumination When lock mode is turned ON, indicator light blinks twice and then remains illuminated. When lock mode is turned OFF, indicator light turns OFF.

2. DRIVING FUNCTION

Vehicle Condition	Status
Control at Vehicle Startup	This controls the amount of sideway sliding that occurs at rear of vehicles when accelerating from stop to improve acceleration and hill climbing capacity
Slip Control at Vehicle Startup	This helps prevent vehicle from sliding sideways. When accelerating a stopped vehicle with the steering wheel turned, it ensures steering stability
Slip Control	This ensures high turning performance and that stability is not affected by road surface conditions during mid and high speed running
Control During Acceleration	This controls straight-line running when accelerating during mid and high speeds to ensure straight-line stability of the vehicle

3. REFERENCE MECHANISM

(a) Electromagnetic coupling

(1) The outer part of the main clutch is attached together with the front housing. The inner part of the main clutch is attached together with the shaft. The control clutch is attached together with the control cam. The activation energy from the transfer is transferred from the propeller shaft to the front housing. However, when the linear solenoid is not operating, the main clutch and control clutch are in a free state, and the activation energy from the transfer is not transferred to the rear wheels.

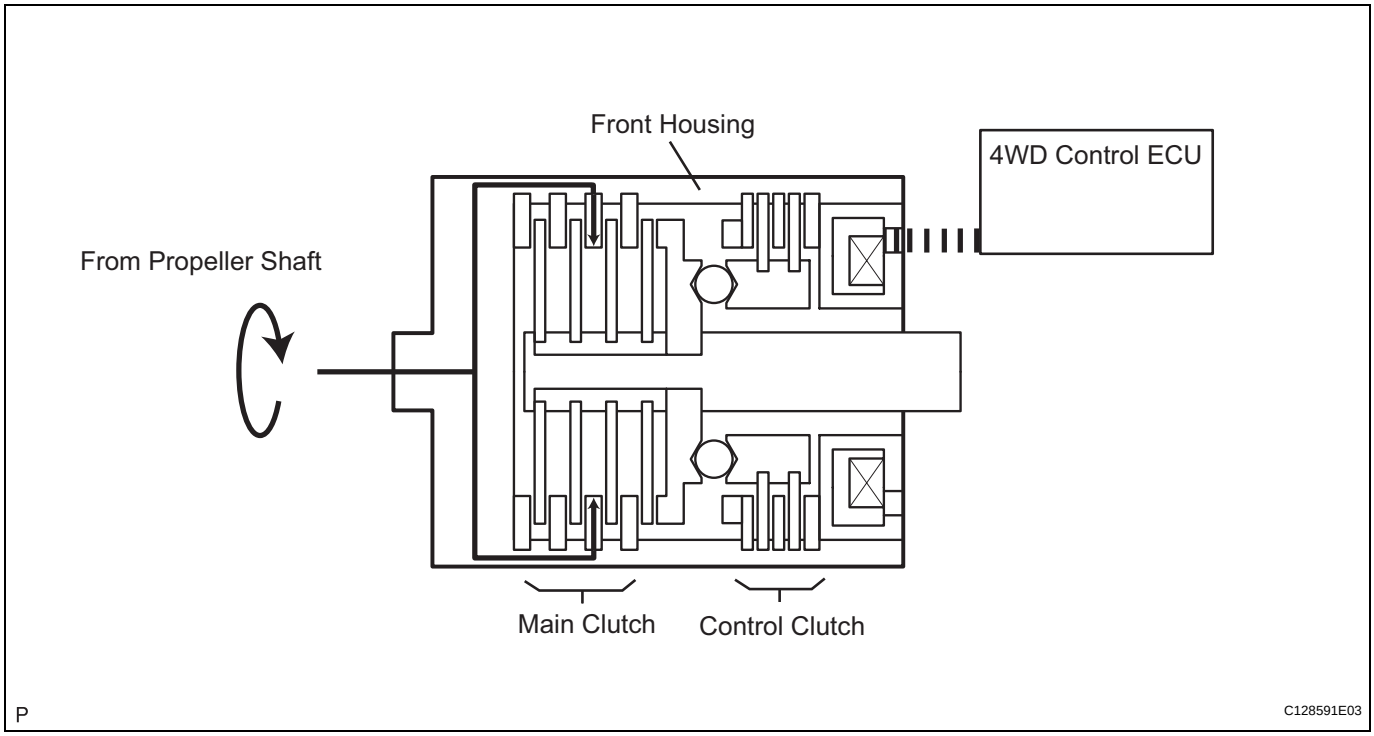

(2) If current is applied to the linear solenoid, the solenoid magnetizes, and the electromagnet pull force causes the armature to attach to the control clutch side. Or, if there is a difference between the rotation speed of the front and rear wheels and the control clutch attaches, a difference occurs in the rotation of the main cam attached to the shaft and the control cam attached to the front housing. As a result, each ball pushes its cam, and the main clutch attaches. The activation energy from the front housing passes through main clutch to the shaft, and then to the rear differential. Then the activation energy is transferred to the rear wheels.

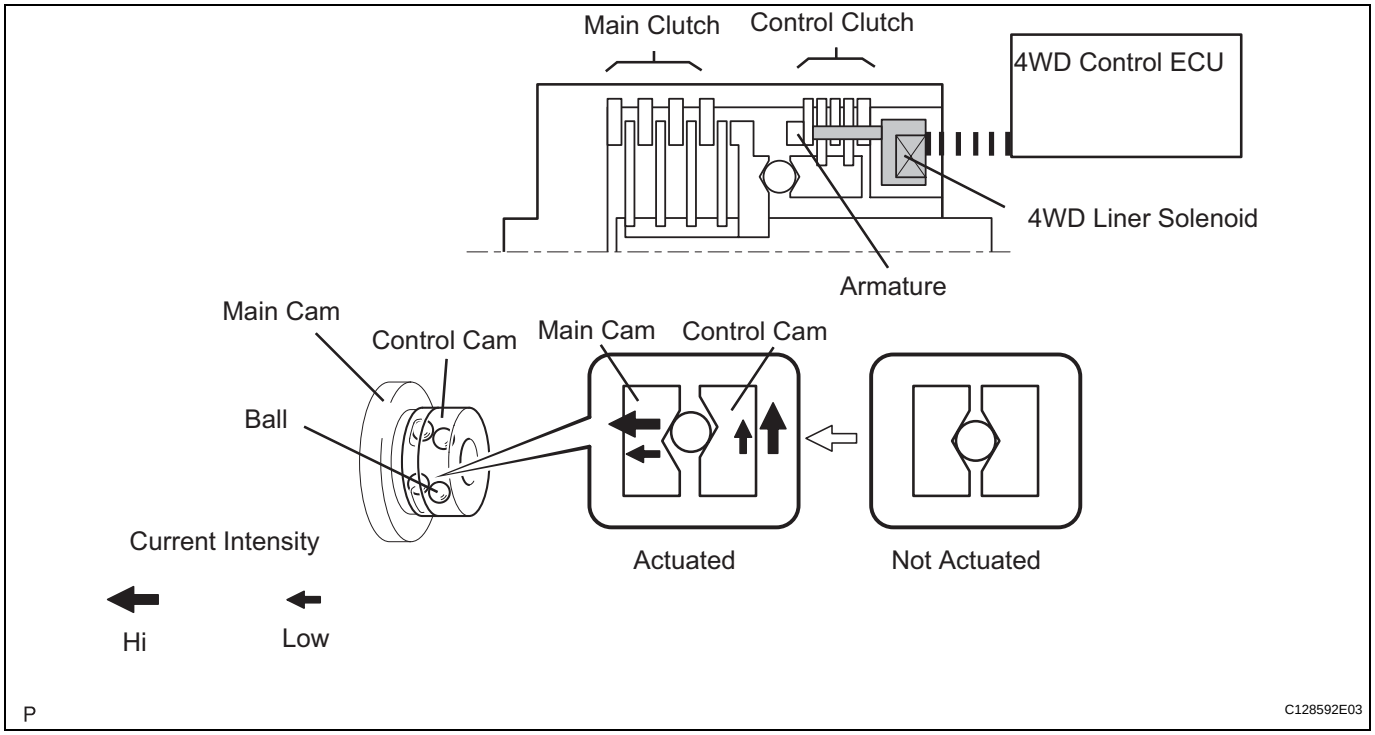

(3) Depending on the rotation difference between the front and rear wheels, the system controls the current flowing to the linear solenoid. Then the activation energy applied to the rear wheels is smoothly controlled. Depending on the amount of current, the restraint energy of the outer and inner side of the main clutch changes, and the activation energy from the propeller shaft is smoothly controlled from a limited condition to condition that is nearly a direct-link 4WD condition.

TF

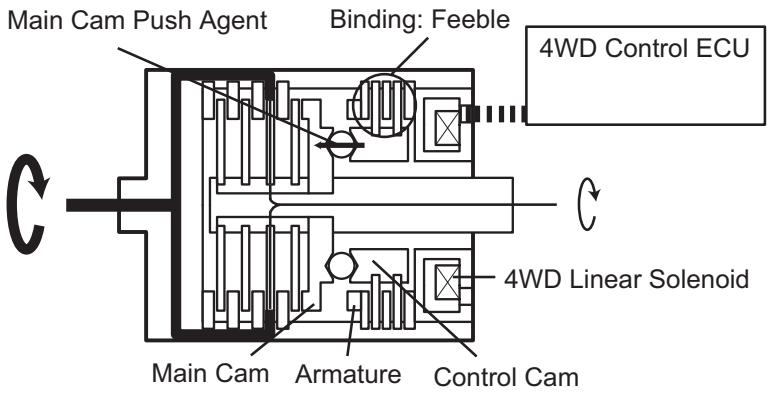

Current Intensity Lo

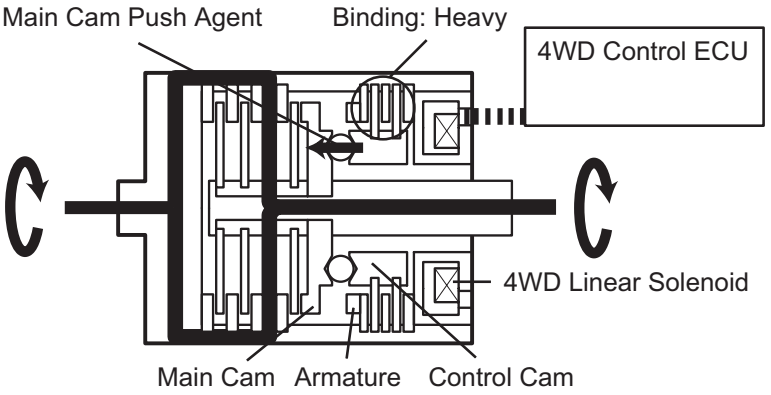

Current Intensity Hi

P

C128594E02

HOW TO PROCEED WITH TROUBLESHOOTING

HINT:

- Use these procedures to troubleshoot the active torque control 4WD system.
- *: Use the intelligent tester (with CAN VIM).

1 **VEHICLE BROUGHT TO WORKSHOP**

NEXT

2 **INSPECT BATTERY VOLTAGE**

Standard voltage:
11 to 14 V

If the voltage is below 11 V, recharge or replace the battery before proceeding.

NEXT

3 **CHECK COMMUNICATION FUNCTION OF CAN COMMUNICATION SYSTEM***

(a) Use the intelligent tester (with CAN VIM) to check if the CAN communication system is functioning normally.

Result

Result	Proceed to
CAN DTC is not output	A
CAN DTC is output	B

B → **Go to CAN COMMUNICATION SYSTEM**

A

4 **CHECK INDICATOR LIGHT**

NEXT

5 **CHECK DTC***

(a) Check for DTCs (see page TF-16).
(b) Clear the DTCs.
(c) Recheck for DTCs.

Result

Result	Proceed to
DTC dose not reoccur	A
DTC dose reoccur	B

B → **GO TO STEP 8**

A

6	PROBLEM SYMPTOMS TABLE

Result

Result	Proceed to
Fault not listed in problem symptoms table	A
Fault listed in problem symptoms table	B

B → **Go to step 8**

A

7	OVERALL ANALYSIS AND TROUBLESHOOTING*

(a) Terminals of ECU (see page TF-14).
(b) DATA LIST / ACTIVE TEST (see page TF-18).

NEXT

8	REPAIR OR REPLACE

NEXT

9	CONFIRMATION TEST

NEXT

END

TEST MODE PROCEDURE

1. DESCRIPTION

HINT:

When using a chassis dynamometer, brake tester, etc. to perform a vehicle test, activate test mode to avoid a "different tire diameter installed" incorrect judgment.

Test mode does not have a 4WD parameter. Test mode is activated because it will prohibit a different tire diameter judgment.

Control Status	4WD Control Status
During test mode	Different tire diameter malfunction judgment (detection that tire diameter of 4 wheels are not same) is not performed. Other than above item, normal control is performed. - 4WD lock switch OFF (4WD auto mode status) - 4WD lock switch ON (4WD lock mode status)

2. ACTIVATE TEST MODE

HINT:

Activate test mode before using a chassis dynamometer, brake tester, etc. to perform a vehicle test.

(a) Check that the ignition switch is OFF.

(b) Use either of the following methods to change the 4WD ECU to test mode.

(1) Test mode activation through intelligent tester (with CAM VIM).

- Connect the intelligent tester (with CAM VIM) to the DLC3 connector and turn the ignition switch ON. Using the test mode activation function (mode 10), activate test mode.

(2) Test mode activation by shorting TS terminal

- With the ignition switch OFF, short-circuit the TS and CG terminals of the DLC3 connector. Then turn the ignition switch ON to activate test mode.

NOTICE:

When the ignition switch is turned from OFF to ON, the 4WD indicator light will illuminate for 4 seconds. Then it will turn off.

4WD Lock Mode indicator

4WD Lock Switch OFF	Illuminates for 4 seconds, then turns OFF
4WD Lock Switch ON	Remains illuminated

HINT:

When the ignition switch is ON and the 4WD lock switch is turned from OFF to ON, the 4WD lock mode indicator blinks twice and then illuminates.

If the indicator does not illuminate, check the bulb for burnout. Also, inspect the wire harness between the 4WD ECU and combination meter.

NOTICE:
If a part of the 4WD system has a defect, the 4WD indicator light will illuminate.

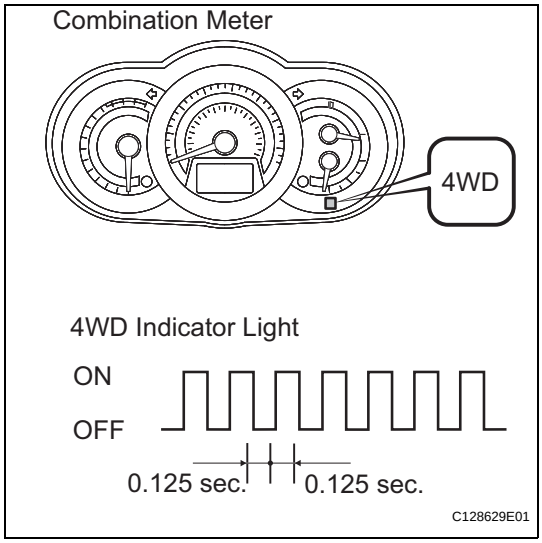

(c) Check if the 4WD indicator light has changed to the test mode display.
(d) Start the engine.

3. CONFIRM MODE CHANGE

HINT:
Operate the 4WD lock switch, and check that the 4WD control mode changes.

4WD Lock Switch Status	4WD Lock Mode Indicator Status	4WD Control Status
OFF	Turns off	4WD auto mode
ON	Illuminates	4WD lock mode
Switch changed from OFF to ON	Blinks twice, then illuminates	At moment of illumination, changes to 4WD lock mode

PROBLEM SYMPTOMS TABLE

HINT:

- Use the table below to help determine the cause of the problem symptom. The potential causes of the symptoms are listed in order of probability in the "Suspected area" column of the table. Check each symptom by checking the suspected areas in the order they are listed. Replace parts as necessary.
- Inspect the fuses and relays related to this system before inspecting the suspected areas below.

Active torque control 4WD system

Symptom	Suspected area	See page
Phenomenon of tight-corner braking*	1.Steering angle sensor circuit	TF-27
	2.Linear solenoid circuit	TF-30
	3.4WD control ECU	
4WD indicator light remains ON	4WD indicator light circuit	TF-36
4WD indicator light does not come ON	4WD indicator light circuit	TF-40
The system is in the DTC output mode although terminals TC and CG of the DLC3 are not short circuited	1.TC and CG terminal circuit	TF-42
	2.4WD indicator light circuit	
The system is not in the DTC output mode although terminals TC and CG of the DLC3 are not short circuited	1.TC and CG terminal circuit	TF-42
	2.4WD indicator light circuit	

HINT:

*:When driving 4WD mode, the vehicle is hard to turn, as if the brakes were applied, due to the rotational difference between the front and rear tires while turning.

TERMINALS OF ECU

1. CHECK 4WD CONTROL ECU

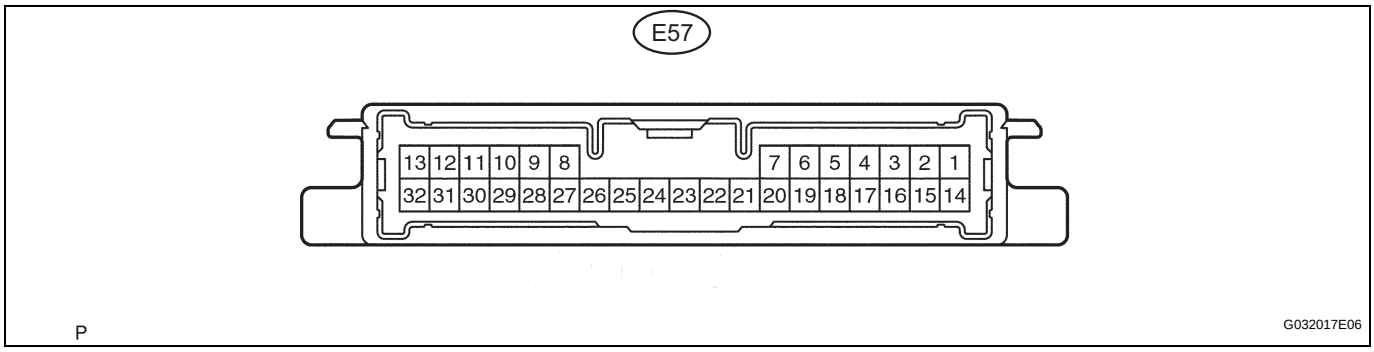

(a) Measure the voltage and resistance of the connector.

Symbols (Terminal No.)	Wiring Color	Terminal Description	Condition	Specified Condition
CANH (E57-14) - CANL (E57-16)	P - W	CAN communication	Ignition switch OFF	54 to 69 Ω
GND (E57-23) - Body ground	W-B - Body ground	Ground	Always	Below 1 Ω
4WDL (E57-7) - Body ground	R - W-B	Ground	4WD lock mode switch ON	Below 1 Ω
IG1 (E57-11) - GND (E57-23)	L - W-B	Power source voltage	Ignition switch ON	10 to 14 V
SLC+ (E57-13) - SLC- (E57-32)	W - B	4WD linear solenoid signal	Ignition switch ON	Pulse generation (See waveform 1)
BSLC (E57-9) - GND (E57-23)	R - W-B	Power source voltage	Ignition switch ON	10 to 14 V

If the result is not as specified, the 4WD control ECU may have a malfunction.

(b) Using an oscilloscope, check the waveform 1.

Waveform 1 (Reference)

Symbols (Terminal No.)	Content
Tool setting	5 V/DIV., 2 msec. / DIV.
Vehicle condition	Engine stop, ignition switch ON

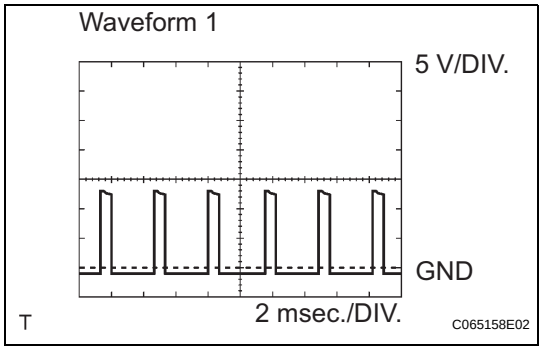

DIAGNOSIS SYSTEM

1. DESCRIPTION

Active torque control 4WD system data can be read in the Data Link Connector 3 (DLC3) of the vehicle. When the system seems to be malfunctioning, use the intelligent tester (with CAN VIM) to check for malfunctions and perform repairs. Therefore when there seems to be a problem with the active torque control 4WD, use the intelligent tester (with CAN VIM) or SST to check and troubleshoot it.

SST 09843-18040

2. CHECK DLC3

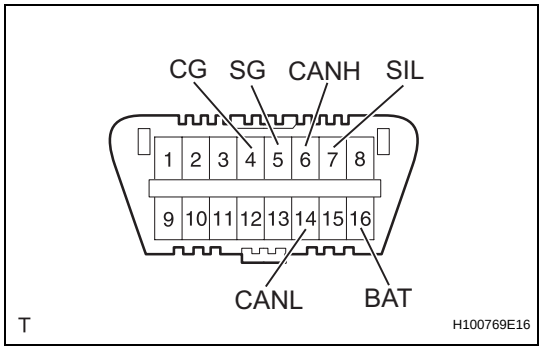

(a) The ECU uses CAN (ISO11898-1) and ISO9141-2 for communication protocol. The terminal arrangement of the DLC3 complies with SAE J1962 and matches the ISO9141-2 format.
Verify the conditions listed in the table below.

Symbols (Terminal No.)	Terminal Description	Condition	Specified Condition
SIL (7) - SG (5)	Bus + line	During transmission	Pulse generation
CG (4) - Body Ground	Chassis ground	Always	Below 1Ω
SG (5) - Body Ground	Signal ground	Always	Below 1Ω
BAT (16) - Body Ground	Battery positive	Always	11 to 14 V
CANH (6) - CANL (14)	HIGH-level CAN bus line	Ignition switch OFF*	54 to 69 Ω
CANH (6) - BAT (16)	HIGH-level CAN bus line	Ignition switch OFF*	1 MΩ or higher
CANH (6) - CG (4)	HIGH-level CAN bus line	Ignition switch OFF*	200 Ω or higher
CANL (14) - BAT (16)	LOW-level CAN bus line	Ignition switch OFF*	1 MΩ or higher
CANL (14) -CG (4)	LOW-level CAN bus line	Ignition switch OFF*	200 Ω or higher

NOTICE:

***: Before measuring the resistance, leave the vehicle as is for at least 1 minute and do not operate the ignition switch, other switches or the doors.**

If the result is not as specified, the DLC3 may have a malfunction. Repair or replace the harness and connector.

HINT:

Connect the cable of the intelligent tester (with CAN VIM) to the DLC3, turn the ignition switch ON and attempt to use the tester. If the display indicates that a communication error has occurred, there is a problem either with the vehicle or with the tester.

- If communication is normal when the tester is connected to another vehicle, inspect the DLC3 of the original vehicle.

- If communication is still not possible when the tester is connected to another vehicle, the problem may be in the tester itself. Consult the Service Department listed in the tester's instruction manual.

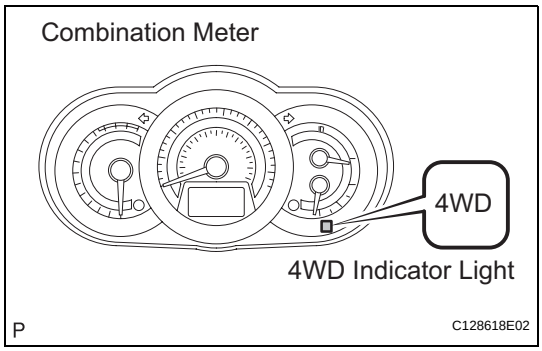

3. INDICATOR LIGHT

(a) When a problem occurs in the active torque control 4WD system, the 4WD indicator light on the combination meter comes ON to inform the driver of the problem.

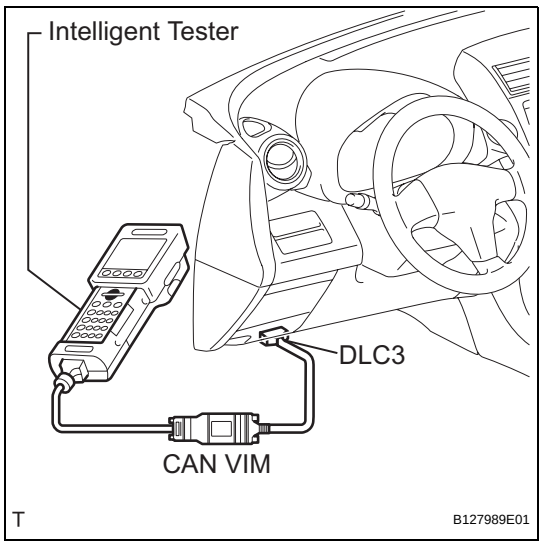

DTC CHECK / CLEAR

1. CHECK DTC (When Using Intelligent Tester)

(a) Check the DTCs.
  (1) Connect the intelligent tester (with CAN VIM) to the DLC3.
  (2) Turn the ignition switch ON.
  (3) Read the DTCs by following the prompts on the tester screen.
  HINT:
  Refer to the intelligent tester (with CAN VIM) operator's manual for further details.

2. CLEAR DTC (When Using Intelligent Tester)

(a) Connect the intelligent tester (with CAN VIM) to the DLC3.
(b) Turn the ignition switch ON.
(c) Operate the intelligent tester (with CAN VIM) to clear the codes.
  HINT:
  Refer to the intelligent tester (with CAN VIM) operator's manual for further details.

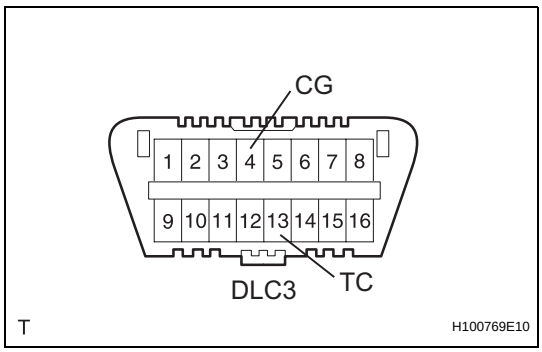

3. CHECK DTC (When not Using Intelligent Tester)

(a) Check the DTCs.
  (1) Using the SST, connect terminals TC (13) and CG (4) of the DLC3
  SST 09843-18040
  (2) Turn the ignition switch ON.

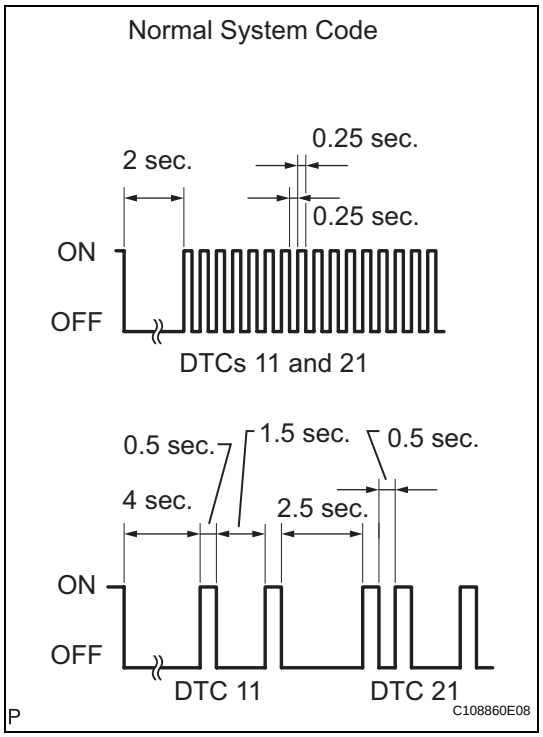

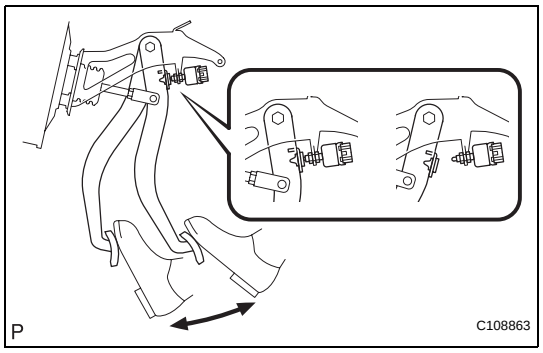

(3) Read DTCs from the 4WD indicator light ON the combination meter.
HINT:
- If the 4WD indicator light does not blink, perform relevant troubleshooting procedures. The relevant troubleshooting procedures are in the sections listed in the table below.
- If more than 1 DTC is detected at the same time, the DTCs will be displayed in numerical order.
- As an example, the blinking patterns of the normal system code and DTCs 11 and 21 are shown below.
- DTCs are explained in "DIAGNOSTIC TROUBLE CODE CHART" (see page TF-19).

Section Title	See Procedure
4WD Indicator Light does not Come ON	TF-40
TC and CG Terminal Circuit	TF-42

4. CLEAR DTC (When not Using Intelligent Tester)

(a) Using SST, connect terminals 13 (TC) and 4 (CG) of the DLC3.
SST 09843-18040

(b) Turn the ignition switch ON.

(c) Clear the DTCs stored in the 4WD control ECU by depressing the brake pedal 8 times or more within 5 seconds.

(d) Check that the warning light blinks in the normal system code pattern.

(e) Remove SST from the terminals of the DLC3.

(f) Turn the ignition switch OFF.
HINT:
DTCs cannot be cleared by disconnecting the cable from the negative (-) battery terminal or removing the ECU-IG1 fuse.

TF

FAIL-SAFE CHART

1. FAIL-SAFE FUNCTION

- If following malfunctions occur, the 4WD control ECU will stop the function of 4WD control system or partly change the function to control the system.
- If a malfunction occurs in the sensor signal or actuator, the flow of electricity to the linear solenoid of the electrical coupling is prohibited. As a result, the system enters front wheel drive condition.
- When a component of the system malfunctions and the fail-safe function activates, the component operation is prohibited. However, if the system is controlling the component and the fail-safe function activates, the system operation is gradually stopped to prevent sudden changes in the vehicle condition.
- When system control is not possible, the warning light is illuminated to stop operation of the system operation.

DATA LIST / ACTIVE TEST

1. READ DATA LIST

HINT:

Using the intelligent tester's (with CAN VIM) DATA LIST allows switch, sensor and other item values to be read without removing any parts. Reading the DATA LIST early in troubleshooting is one way to save time.

(a) Connect the intelligent tester (with CAN VIM) to the DLC3.

(b) Turn the ignition switch ON.

(c) Read the DATA LIST according to the display on the tester.

4WD control ECU

Item	Measurement Item/Range (Display)	Normal Condition	Diagnostic Note
4WD WARN LAMP	4WD indicator light /OFF or ON	OFF: 4WD indicator light OFF ON: 4WD indicator light ON	-
SLIP INDI LAMP	Slip indicator light /OFF or ON	OFF: SLIP indicator light OFF ON: SLIP indicator light ON	-
STOP LAMP SW	Stop light switch /OFF or ON	OFF: Brake pedal released ON: Brake pedal depressed	-
STEERING ANGLE	Steering angle value / Min.: -3276.8 deg Max.: 3276.7 deg	Min.: -3276.8 deg Max.: 3276.7 deg	-
FR WHEEL SPD	FR wheel speed / Min.: 0 km/h (0 mph) Reading : Max.: 326.4 km/h (202.8 mph)	Actual wheel speed	Almost no difference from the speedometer
FL WHEEL SPD	FL wheel speed / Min.: 0 km/h (0 mph) Reading : Max.: 326.4 km/h (202.8 mph)	Actual wheel speed	Almost no difference from the speedometer
RR WHEEL SPD	RR wheel speed / Min.: 0 km/h (0 mph) Reading : Max.: 326.4 km/h (202.8 mph)	Actual wheel speed	Almost no difference from the speedometer
RLWHEEL SPD	RL wheel speed / Min.: 0 km/h (0 mph) Reading : Max.: 326.4 km/h (202.8 mph)	Actual wheel speed	Almost no difference from the speedometer
AMBI TEMP	Ambient temperature / Min.: -128 °C (198.4 °F) Max.: 127 °C (260.6 °F)	Min.: -128 (198.4 °F) Max.: 127 (260.6 °F)	-
COOLANT TEMP	Engine coolant temperature / Min.: 0 °C (32 °F) Max.: 127.5 °C (261.5 °F)	Min.: 0 °C (32 °F) Max.: 127.5 °C (261.5 °F)	-
LOCK SW	4WD lock switch / OFF or ON	OFF: 4WD lock switch off ON: 4WD lock switch on	-
SLC CUR	SLC solenoid (4WD linear solenoid) current / Min.: 0 A Max.: 3 A	Min.: 0 A Max.: 3 A	-

2. PERFORM ACTIVE TEST

HINT:

Performing the intelligent tester's (with CAN VIM) ACTIVE TEST allows switch and other items to be operated without removing any parts. Performing the ACTIVE TEST early in troubleshooting is one way to save time. The DATA LIST can be displayed during the ACTIVE TEST.

(a) Connect the intelligent tester (with CAM VIN) to the DLC3.

(b) Turn the ignition switch ON.

(c) Perform the ACTIVE TEST according to the display on the tester.

4WD control ECU

Item	Test Details	Diagnostic Note
4WD WARN LAMP	4WD indicator light ON / OFF ON: 4WD indicator light ON OFF: 4WD indicator light OFF	Observe combination meter
LOCK LAMP	4WD lock light / ON / OFF OFF: 4WD lock switch OFF ON: 4WD lock switch ON	Observe combination meter

Skid control ECU

Item	Test Details	Diagnostic Note
SLIP INDI LAMP	SLIP indicator Light / ON / OFF ON: SLIP indicator light ON OFF: SLIP indicator light OFF	Observe combination meter

DIAGNOSTIC TROUBLE CODE CHART

DTC No.	Detection Item	Trouble Area	See page
C1241/94	Low Power Supply Voltage	-Battery -generator -ECU-IG1 -Wire harness -4WD control ECU	TF-21
C1280/82	Engine Circuit Malfunction	-Throttle position sensor -Throttle position sensor wire harness and connector -CAN communication system	TF-24
C1296/96	ABS Malfunction	-Wire harness -4WD control ECU -Skid control ECU -Speed sensor -Yaw rate sensor -CAN communication system	TF-25
C1297/97	Steering Angle Sensor	-Steering angle sensor -CAN communication system -Wire harness -4WD control ECU	TF-27
C1298/98	Linear Solenoid Circuit	-Wire harness -Electromagnetic coupling -4WD control ECU	TF-30
C1299/99	Cancellation of 4WD Control	-Tire size -Electromagnetic coupling -4WD control ECU	TF-32
U0073/86	Control Module Communication Bus OFF	-Wire harness (CANH, CANL circuit) -4WD control ECU	TF-34
U0100/85	Lost Communication with ECM / PCM "A"	-Wire harness (CANH, CANL circuit) -4WD control ECU -ECM	TF-34
U0126/84	Lost Communication with Steering Angle Sensor Module	-Wire harness (CANH, CANL circuit) -4WD control ECU -Steering angle sensor	TF-34
U0129/83	Lost Communication with Brake System Control Module	-Wire harness (CANH, CANL circuit) -4WD control ECU -Skid control ECU	TF-34

DTC	C1241/94	Low Power Supply Voltage

DESCRIPTION

If a malfunction in the power source circuit occurs, or a malfunction in communication with the skid control ECU or in a speed sensor occurs, the 4WD control ECU will prohibit operations by the fail-safe function.

DTC No.	DTC Detection Condition	Trouble Area
C1241/94	When one of following conditions is met: 1. When following continues for 10 seconds or more: - At a vehicle speed of 3 km/h (2 mph) or more, voltage of IG1 terminal is 9.5 V or less. 2. When both of following continue for 60 seconds or more: - With the voltage of IG1 terminal 9.5 V or less, communication with the skid control ECU cannot be performed. - A malfunction in communication with skid control ECU. 3. When following continue for 3 seconds or more: - With the voltage of IG1 terminal 9.5 V or more, communication with the skid control ECU cannot be performed.	• Battery • Generator • ECU-IG1 • Wire harness (IG1 circuit, GND circuit) • 4WD control ECU

TF

WIRING DIAGRAM

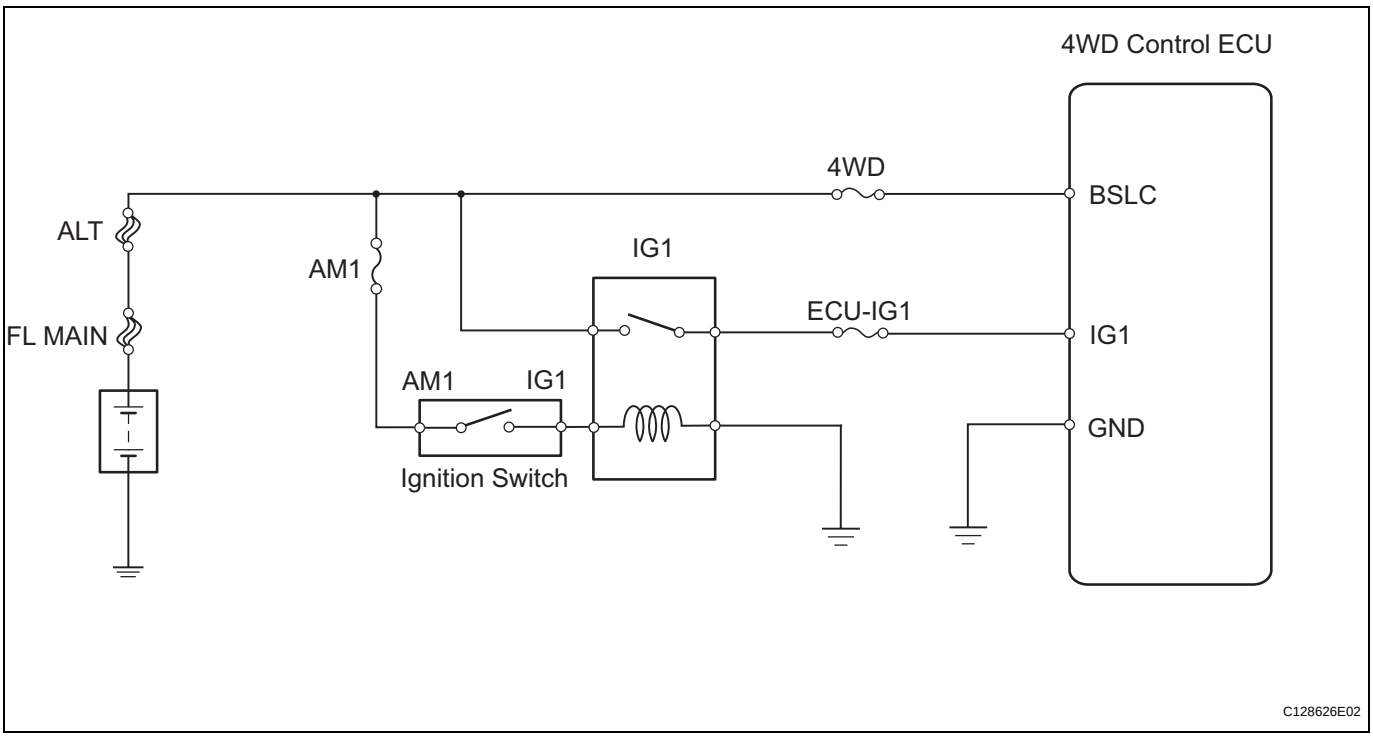

INSPECTION PROCEDURE

HINT:

Check the condition of each related circuit connector before troubleshooting (see page IN-37).

1	CHECK FOR DTC

(a) Clear the DTC (see page TF-16).
(b) Turn the ignition switch ON and check that no CAN communication system DTC is output.
(c) Start the engine.
(d) Drive the vehicle, accelerate to a speed of 3 km/h (2 mph) or more, and check that no speed sensor DTC (brake control system DTC) is output (see page BC-57).

TF

Result

Result	Proceed to
Neither CAN communication system DTC nor speed sensor DTC (Brake control system DTC) is output	A
CAN communication system DTC is output	B
Speed Sensor DTC (Brake control system DTC) is output	C

B → **REPAIR CIRCUIT INDICATOR BY OUTPUT CODE (CAN COMMUNICATION SYSTEM)**

C → **REPAIR CIRCUIT INDICATOR BY OUTPUT CODE (BRAKE CONTROL SYSTEM)**

A

2	INSPECT FUSE (ECU-IG)

(a) Remove the ECU-IG1 fuse from the instrument junction block
(b) Measure the resistance of the fuse.
Standard resistance:
Below 1Ω
HINT:
Check for short circuits in all harnesses and connector connected to the ECU-IG1 fuse (see page IN-5).

NG → **REPLACE FUSE**

OK

3	CHECK WIRE HARNESS (4WD CONTROL ECU - BATTERY)

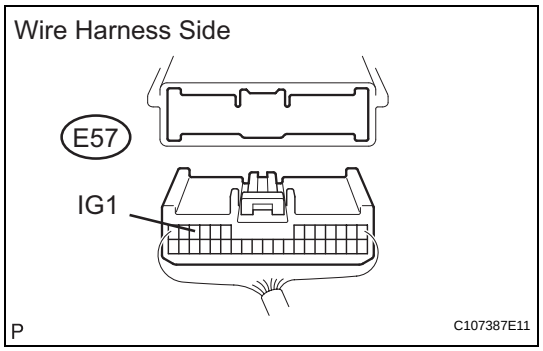

(a) Disconnect the E57 ECU connector.
(b) Measure the voltage of the wire harness side connector.
Standard voltage

Tester Connection	Condition	Specified Condition
E57-11 (IG1) - Body Ground	Ignition switch ON	10 to 14 V

NG → **REPAIR OR REPLACE HARNESS AND CONNECTOR**

OK

4	CHECK WIRE HARNESS (4WD CONTROL ECU - BODY GROUND)

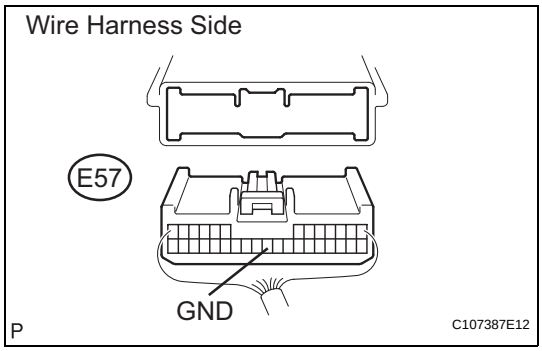

(a) Disconnect the E57 ECU connector.
(b) Measure the resistance of the wire harness side connector.

Standard resistance

Tester Connection	Specified Condition
E57-23 (GND) - Body Ground	Below 1 Ω

NG → **REPAIR OR REPLACE HARNESS AND CONNECTOR**

OK

5	RECONFIRM DTC

(a) Clear the DTC (see page TF-16).
(b) Start the engine.
(c) Drive the vehicle, accelerate to a speed of 3 km/h (2 mph or more, and check if the same DTC is output.

Result

Result	Proceed to
DTC is output	A
DTC is not output	B

HINT:
Reinstall the sensor, connectors, etc. and restore the vehicle to its prior condition before rechecking DTCs.

B → **END**

A

REPLACE 4WD CONTROL ECU

DTC	C1280/82	Engine Circuit Malfunction

DESCRIPTION

If a malfunction in the engine control ECU circuit occurs, the 4WD control ECU will output this DTC.

DTC No.	DTC Detection Condition	Trouble Area
C1280/82	When the following continues for 5 seconds or more: - Communication with engine control ECU is operating normally, but throttle position sensor is malfunctioning.	• Throttle position sensor • Throttle position sensor wire harness and connector • CAN communication system

INSPECTION PROCEDURE

HINT:

Check the condition of each related circuit connector before troubleshooting (see page IN-37).

1	CHECK FOR DTC

(a) Clear the DTC (see page TF-16).

(b) Turn the ignition switch OFF.

(c) Turn the ignition switch ON and check that can communication system DTC is not output.

Result

Result	Proceed to
CAN communication system DTC is output	A
Engine control DTC is output	B

B → **GO TO ENGINE CONTROL SYSTEM**

A

GO TO CAN COMMUNICATION SYSTEM

DTC	C1296/96	ABS Malfunction

DESCRIPTION

If a malfunction in the speed sensor signal circuit yaw rate sensor circuit occurs, the 4WD control ECU will output this DTC.

DTC No.	DTC Detection Condition	Trouble Area
C1296/96	When either condition below is met: 1. Wheel speed sensor malfunction is received from skid control ECU 2. Deceleration sensor malfunction us received from skid control ECU	• CAN communication line • Skid control ECU • Speed sensor • 4WD control ECU • Yaw rate sensor • Wire harness

INSPECTION PROCEDURE

HINT:
Check the condition of each related circuit connector before troubleshooting (see page IN-37).

1	CHECK FOR DTC

(a) Clear the DTC (see page TF-16).
(b) Turn the ignition switch OFF.
(c) Turn the ignition switch ON again and check that CAN communication system DTC(s) is not output.
(d) Drive the vehicle, accelerate to a speed of 20 km/h (12 mph) or more, and check if the speed sensor DTC (brake control system DTC) is output (see page BC-57).

Result

Result	Proceed to
Neither CAN communication system DTC nor brake control system DTC is out put	A
CAN communication system DTC is output	B
Brake control system DTC (speed sensor DTC) is output	C

HINT:
When DTCs indicating a CAN communication system malfunction are output, repair the CAN communication system before repairing each corresponding sensor.

B → **REPAIR CIRCUIT INDICATOR BY OUTPUT CODE (CAN COMMUNICATION SYSTEM)**

C → **REPAIR CIRCUIT INDICATOR BY OUTPUT CODE (BRAKE CONTROL SYSTEM)**

A

2	CHECK OPERATION OF 4WD CONTROL ECU

(a) Replace the 4WD control ECU with a normally functioning or new one.
(b) Reconfirm DTC.

OK:
DTC is output.

OK → **REPLACE 4WD CONTROL ECU**

NG

GO TO BRAKE CONTROL SYSTEM (ANTI-LOCK BRAKE SYSTEM OR VEHICLE STABILITY CONTROL SYSTEM)

DTC	C1297/97	Steering Angle Sensor

DESCRIPTION

- The 4WD control ECU determines that the vehicle is turning based on the signals sent from the steering angle sensor.
- The steering angle sensor signal is sent to the 4WD control ECU via the CAN communication system.
- The 4WD control ECU detects the amount of steering wheel movement and performs "slip control at vehicle start up", according to the amount of movement, and "slip control" to secure high turning performance.

DTC No.	DTC Detection Condition	Trouble Area
C1297/97	When voltage of 4WD control ECU IG1 terminal is 9.5 V or more, and steering angle sensor malfunction signal is received.	• Steering angle sensor • CAN communication • 4WD control ECU • Wire harness

WIRING DIAGRAM

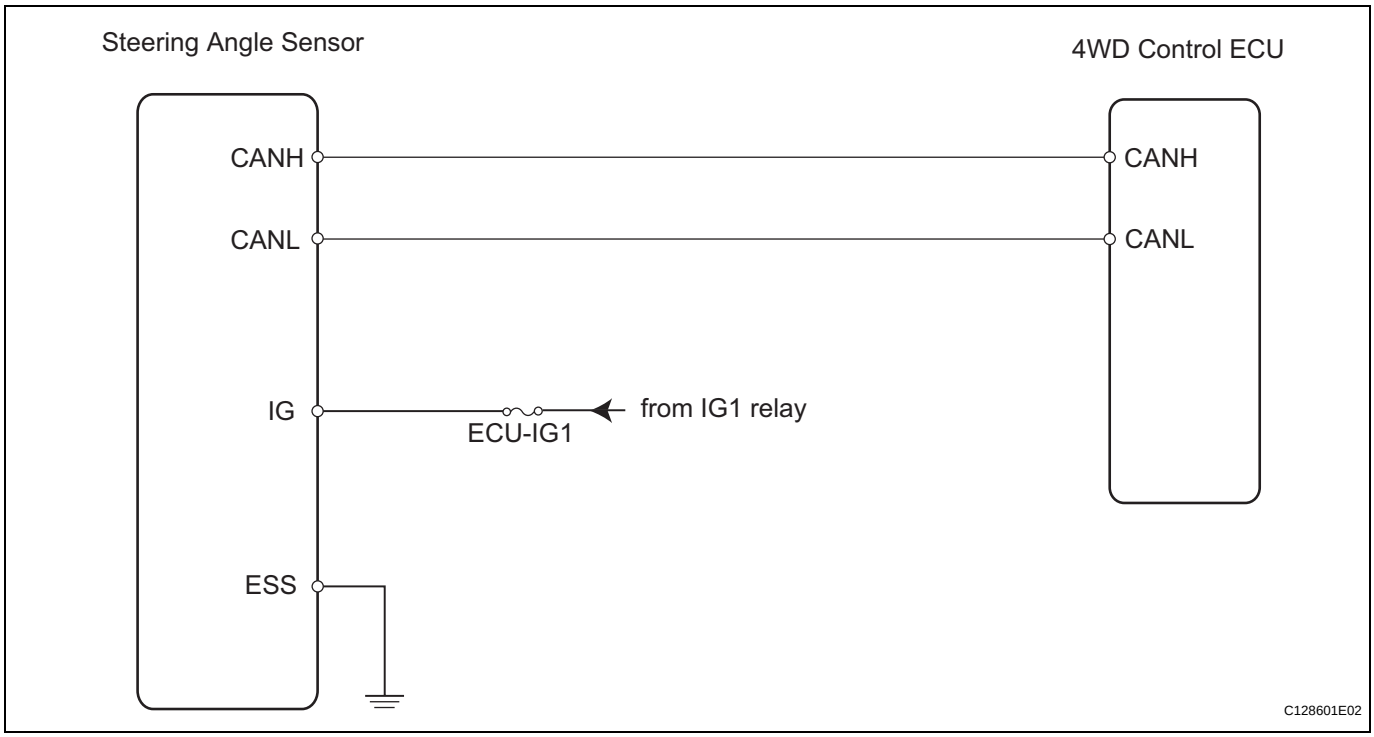

INSPECTION PROCEDURE

HINT:
Check the condition of each related circuit connector before troubleshooting (see page IN-37).

1	CHECK FOR DTC

(a) Clear the DTC (see page TF-16).
(b) Turn the ignition switch OFF.
(c) Turn the ignition switch ON again and check that no CAN communication system DTC(s) is output.
(d) Start the engine.

(e) Drive the vehicle and turn the steering wheel to the right and left at a speed of 35 km/h (24 mph) and check that no brake control system (steering angle sensor) DTC (C1231/31) is output (see page BC-57).

Result

Result	Proceed to
Neither CAN communication system DTC nor brake control system DTC is out put	A
CAN communication system DTC is output	B
Brake control system (steering angle sensor) DTC (C1231/31) is output	C

TF

HINT:
When DTCs indicating a CAN communication system malfunction are output, repair the CAN communication system before repairing each corresponding sensor.

B → **REPAIR CIRCUIT INDICATOR OUTPUT CODE (CAN COMMUNICATION SYSTEM)**

C → **REPAIR OR REPLACE CIRCUIT INDICATOR OUTPUT CODE (STEERING ANGLE SENSOR CIRCUIT)**

A

2 CHECK WIRE HARNESS (STEERING ANGLE SENSOR - BATTERY)

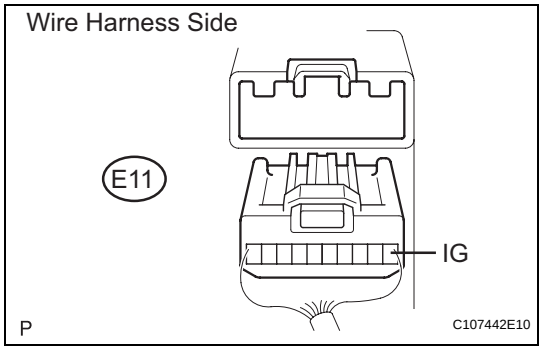

(a) Disconnect the E11 sensor connector.
(b) Measure the voltage of the wire harness side connector.

Standard voltage

Tester Condition	Condition	Specified Condition
E11-1 (IG) - Body ground	Ignition switch ON	10 to 14 V

NG → **REPAIR OR REPLACE HARNESS AND CONNECTOR**

OK

3 CHECK WIRE HARNESS (STEERING ANGLE SENSOR - BODY GROUND)

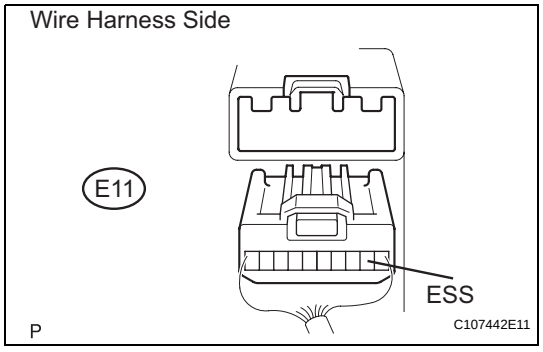

(a) Disconnect the E11 sensor connector.
(b) Measure the resistance of the wire harness side connector.

Standard resistance

Tester Condition	Specified Condition
E11-2 (ESS) - Body ground	Below 1 Ω

Result

Result	Proceed to
OK (When troubleshooting according to PROBLEM SYMPTOMS TABLE)	A
OK (When troubleshooting according to DTC chart)	B
NG	C

B → PROCEED TO NEXT CIRCUIT INSPECTION SHOWN IN PROBLEM SYMPTOMS TABLE

C → REPAIR OR REPLACE HARNESS AND CONNECTOR

A

REPLACE STEERING ANGLE SENSOR

DTC	C1298/98	Linear Solenoid Circuit

DESCRIPTION

The 4WD control ECU receives signals from each sensor to control clutch fluid pressure for limiting the center differential operation, which distributes torque according to the driving conditions.

DTC No.	DTC Detection Condition	Trouble Area
C1298/98	1. When the following continues for 1 second or more: - With the current of the 0.8 A or more, an open or short in the linear solenoid circuit occurs.	• Wire harness • Electromagnetic coupling • 4WD control ECU

TF

WIRING DIAGRAM

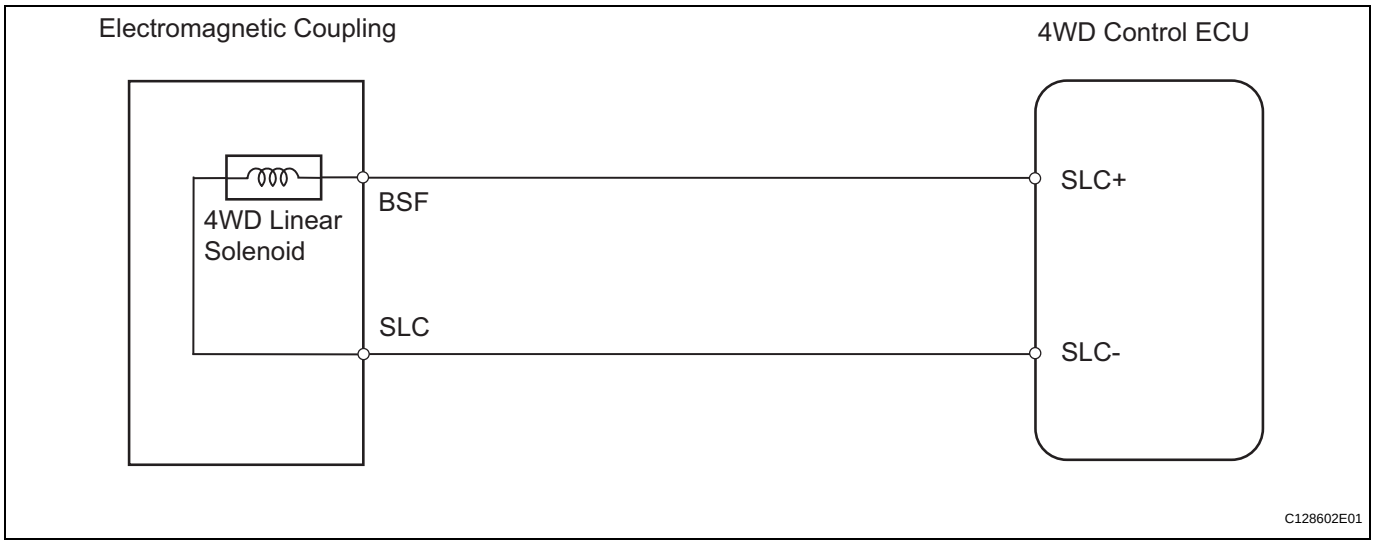

INSPECTION PROCEDURE

1	INSPECT ELECTROMAGNETIC COUPLING (4WD LINEAR SOLENOID)

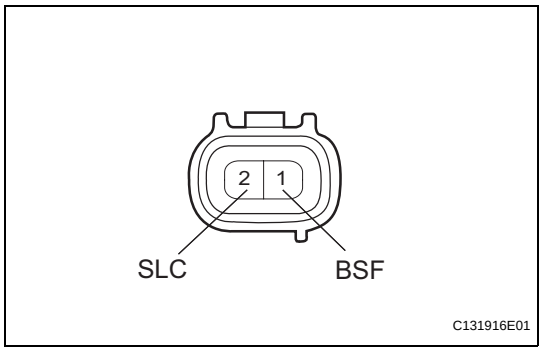

(a) Remove the coupling connector.
(b) Measure the resistance of the solenoid.

Standard resistance

Tester Connection	Specified Condition
1 (BSF) - 2 (SLC)	2.2 to 2.6 Ω
1 (BSF) - Body ground	10 kΩ or higher
2 (SLC) - Body ground	10 kΩ or higher

NG → REPLACE ELECTROMAGNETIC COUPLING

OK

2	CHECK WIRE HARNESS (COUPLING - 4WD CONTROL ECU)

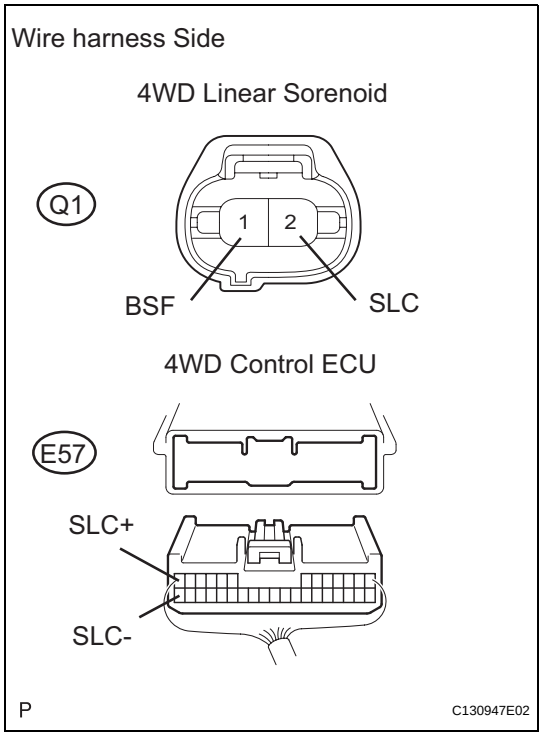

(a) Disconnect the E57 ECU connector.
(b) Measure the resistance of the wire harness side connector.

Standard resistance

Tester Connection	Specified Condition
E57-13 (SLC+) - Q1-1 (BSF)	Below 1 Ω
E57-32 (SLC-) - Q1-2 (SLC)	Below 1 Ω
E57-13 (SLC+) - Body ground	10 kΩ or higher
E57-32 (SLC-) - Body ground	10 kΩ or higher

NG → **REPAIR OR REPLACE HARNESS AND CONNECTOR**

OK

REPLACE 4WD CONTROL ECU

DTC	C1299/99	Cancellation of 4WD Control

DESCRIPTION

- If wheel slip continues, differential control will be disabled when the torque-distribution ratio of the differential clutch exceeds the set value and a malfunction in the output of the wheel speed sensors, etc. occurs.
- If a difference in diameter between the front and rear wheels is determined, differential control will be disabled.

DTC No.	DTC Detection Condition	Trouble Area
C12299/99	When one of following following conditions is met: - Control coupling lock is detected 4 more times. - Condition that controls coupling calorific value is predefined value or more. - Condition that transfer oil temperature is predefined value or more. - Vehicle is driven and energy load tire radius difference between front tires and rear tires is more than 3%	• Electromagnetic coupling • Tire size • 4WD control ECU

INSPECTION PROCEDURE

HINT:
Check the condition of each related circuit connector before troubleshooting (see page IN-37).

1	CHECK TIRE CONDITION

(a) Check the size and condition of all 4 tires (see page TW-1).

HINT:
This DTC is output when tire deformation or a difference in tire size is detected.

OK:

The diameter and air pressure of all 4 tires are the same.

NG → **REPLACE TIRE SO THAT ALL 4 TIRES ARE THE SAME IN SIZE**

OK

2	RECONFIRM DTC

(a) Clear the DTC (see page TF-16).
(b) Start the engine.
(c) Drive the vehicle at the speed of 20 km/h (12 mph) or more and check that same DTC is output.

Result

Result	Proceed to
DTC is output	A
DTC is not output	B

B → **REPLACE ELECTROMAGNETIC COUPLING**

A

REPLACE 4WD CONTROL ECU

DTC	U0073/86	Control Module Communication Bus OFF

DTC	U0100/85	Lost Communication with ECM / PCM "A"

DTC	U0126/84	Lost Communication with Steering Angle Sensor Module

DTC	U0129/83	Lost Communication with Brake System Control Module

DESCRIPTION

- The 4WD control ECU inputs the signals sent from the ECM, skid control ECU, and steering angle sensor via the CAN communication system.
- When DTCs indicating a CAN communication system malfunction are output, repair the CAN communication system before repairing each corresponding sensor.

DTC No.	DTC Detection Condition	Trouble Aria
U0073/86	1. When the following continues for 5 seconds or more: - Signals from the 4WD control ECU are not received. 2. When the following occurs 10 times consecutively: - A communication malfunction (bus off) occurs one or more times within 0.1 second.	• Wire harness (CANL, CANH circuit) • 4WD control ECU
U0100/85	1. When both of the following continue for 2 seconds or more: - The voltage of the IG1 terminal is 10 V or more. - At a vehicle speed of 60 km/h (38 mph) or more, communication with the ECM cannot be performed	• Wire harness (CANL, CANH circuit) • 4WD control ECU • ECM
U0126/84	1. When both of the following continue for 1 second or more: - The voltage of the IG1 terminal is 10 V or more. - Communication with the steering angle sensor cannot be performed. 2. When all of the following occur 10 times consecutively: - The condition that communication with the steering angle sensor cannot be performed occurs once within 5 seconds - The voltage of the IG1 terminal is 10 V or more. - Occurs 10 times or more within 60 seconds.	• Wire harness (CANL, CANH circuit) • 4WD control ECU • Steering angle sensor
U0129/83	1. When the following continues for 3 seconds or more: - The voltage of the IG1 terminal is 10 V or more. - Communication with the skid control ECU cannot be performed.	• Wire harness (CANL, CANH circuit) • 4WD control ECU • Skid control ECU

INSPECTION PROCEDURE

1	CHECK FOR DTC

(a) Check for DTC (see page TF-16).
(b) Record the output DTC (4WD control system).

HINT:
When DTCs indicating a CAN communication system malfunction are output, repair the CAN communication system before repairing each corresponding sensor.

NEXT

GO TO CAN COMMUNICATION SYSTEM

4WD Indicator Light Remains ON

DESCRIPTION

The 4WD control ECU is connected to the combination meter via the CAN communication system.
If the 4WD control ECU stores any DTCs which are related to the active torque control 4WD system, the 4WD indicator light comes on in the combination meter.

WIRING DIAGRAM

w/ Entry and Start System

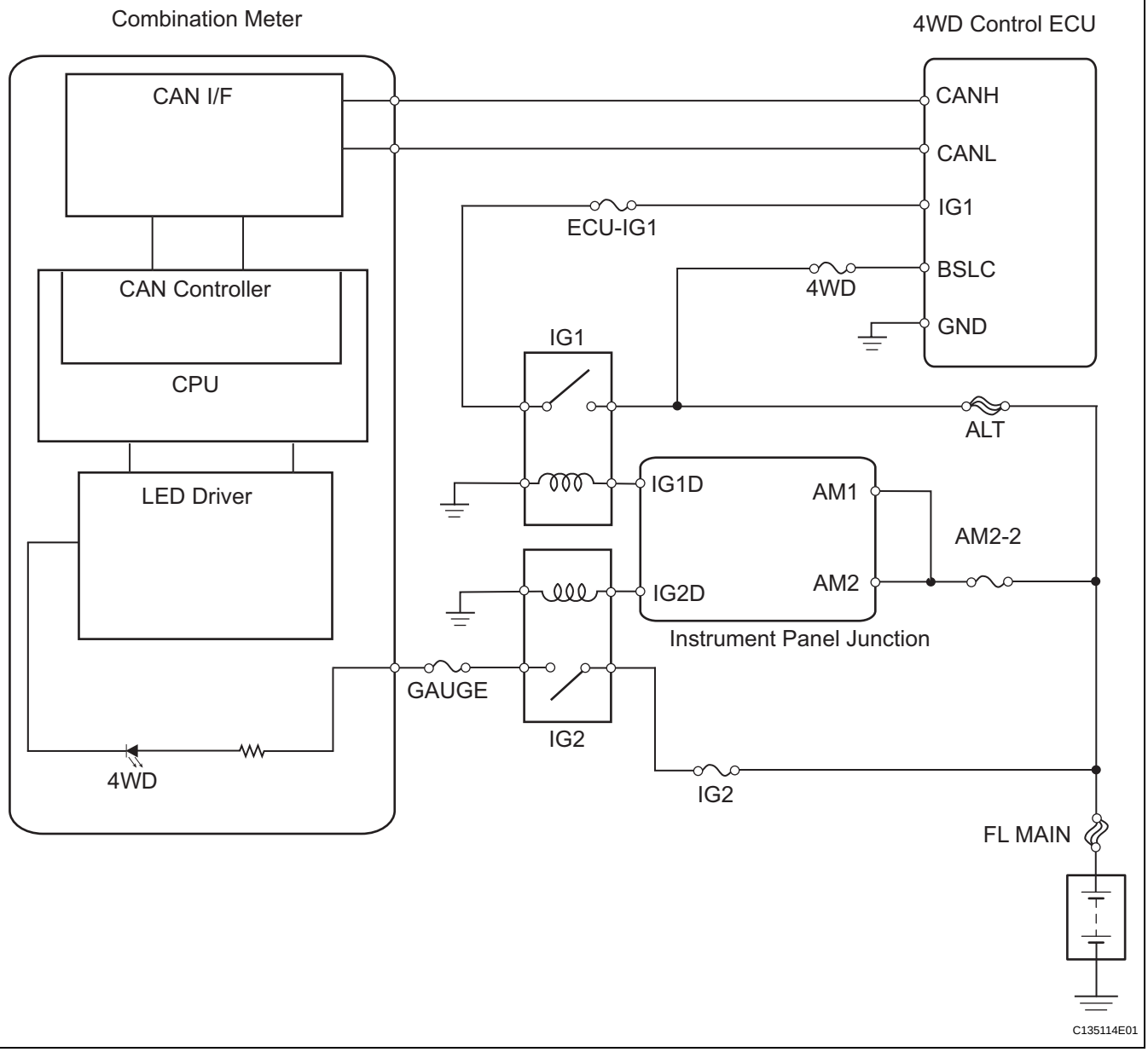

w/o Entry and Start System

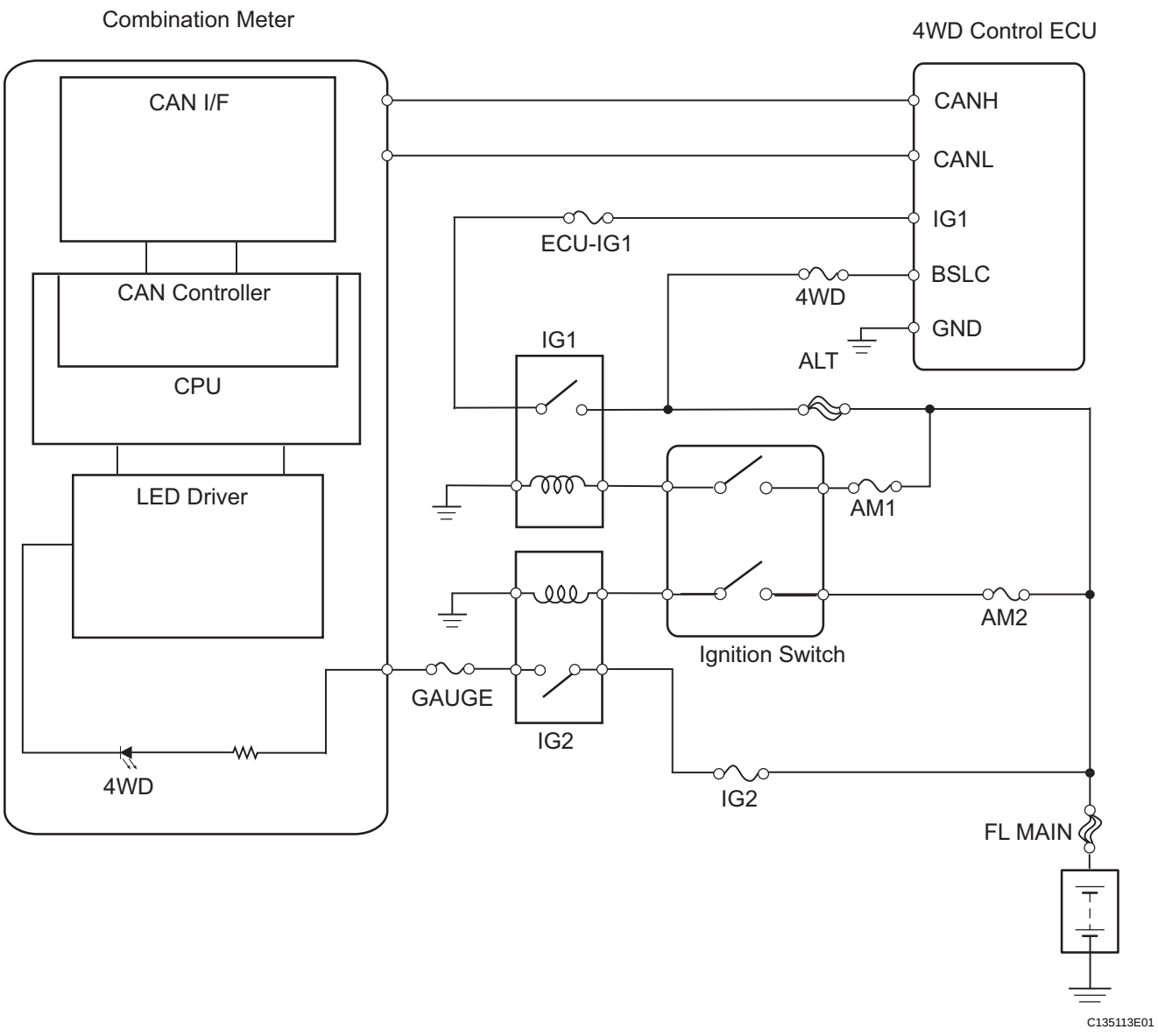

INSPECTION PROCEDURE

HINT:

Check the condition of each related circuit connector before troubleshooting (see page IN-37).

1	CHECK FOR DTC

(a) Check the output DTC (see page TF-16).

Result

Result	Proceed to
Neither CAN communication system DTC nor 4WD control system DTC is output	A
CAN communication DTC is output	B
4WD control system DTC is output	C

HINT:
When DTCs indicating a CAN communication system malfunction are output, repair the CAN communication system before repairing each corresponding sensor.

B → **REPAIR CIRCUIT INDICATOR BY OUTPUT CODE (CAN COMMUNICATION SYSTEM)**

C → **REPAIR CIRCUIT INDICATOR BY OUTPUT CODE (4WD CONTROL SYSTEM)**

A

2 PERFORM ACTIVE TEST BY INTELLIGENT TESTER (4WD INDICATOR LIGHT)

(a) Using the intelligent tester's (with CAN VIM) ACTIVE TEST, generate a control command, and then check that the 4WD indicator light operates.

Combination Meter

Item	Vehicle Condition / Test Details	Diagnostic Note
4WD Indicator Light	4WD indicator light OFF	Observer combination meter

OK:
The 4WD indicator light turns OFF

OK → **REPLACE 4WD CONTROL ECU**

NG

3 CHECK WIRE HARNESS (4WD CONTROL ECU - BATTERY)

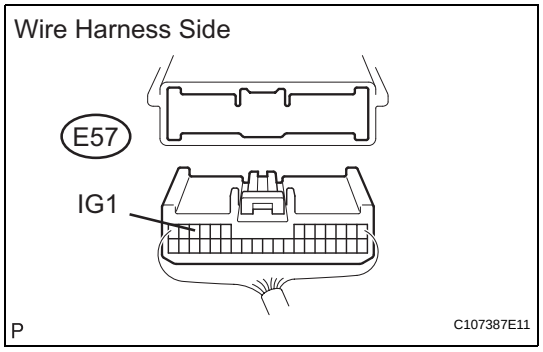

(a) Disconnect the E57 ECU connector.
(b) Measure the voltage of the wire harness side connector.

Voltage

Tester Connection	Condition	Specified Condition
E57-11 (IG1) - Body Ground	Ignition switch ON	10 to 14 V

NG → **REPAIR OR REPLACE HARNESS AND CONNECTOR**

OK

4 CHECK COMBINATION METER

(a) Check the combination meter system.
Result:
The combination meter system is normal.

NG → **REPLACE COMBINATION METER**

OK

REPLACE 4WD CONTROL ECU

4WD Indicator Light does not Come ON

DESCRIPTION

Refer to "4WD Indicator Light Remains ON" (see page TF-36).

WIRING DIAGRAM

Refer to "4WD Indicator Light Remains ON" (see page TF-36).

INSPECTION PROCEDURE

HINT:
Check the condition of each related circuit connector before troubleshooting (see page IN-37).

1	CHECK CAN COMMUNICATION SYSTEM

(a) Check if the CAN communication system DTC is output.
Result

Result	Proceed to
DTC is not output	A
DTC is output	B

HINT:
When DTCs indicating a CAN communication system malfunction are output, repair the CAN communication system before repairing each corresponding sensor.

B → REPAIR CAN COMMUNICATION SYSTEM

A

2	PERFORM ACTIVE TEST BY INTELLIGENT TESTER (4WD INDICATOR LIGHT)

(a) Using the intelligent tester's (with CAN VIM) ACTIVE TEST, generate a control command, and then check that the 4WD indicator light operates.

4WD control ECU

Item	Test Details	Diagnostic Note
4WD Indicator light	4WD indicator light ON / OFF	Observe combination meter

OK:
The 4WD indicator light turns ON and OFF.

OK → REPLACE 4WD CONTROL ECU

NG

3	CHECK COMBINATION METER

(a) Inspect the combination meter (see page ME-31).
Result:
The combination meter assembly system is normal.

NG → **REPLACE COMBINATION METER**

OK

REPLACE 4WD CONTROL ECU

TC and CG Terminal Circuit

DESCRIPTION

Connecting terminals TC and CG of the DLC3 causes the 4WD control ECU to display 2-digit DTCs by flashing the 4WD indicator light.

WIRING DIAGRAM

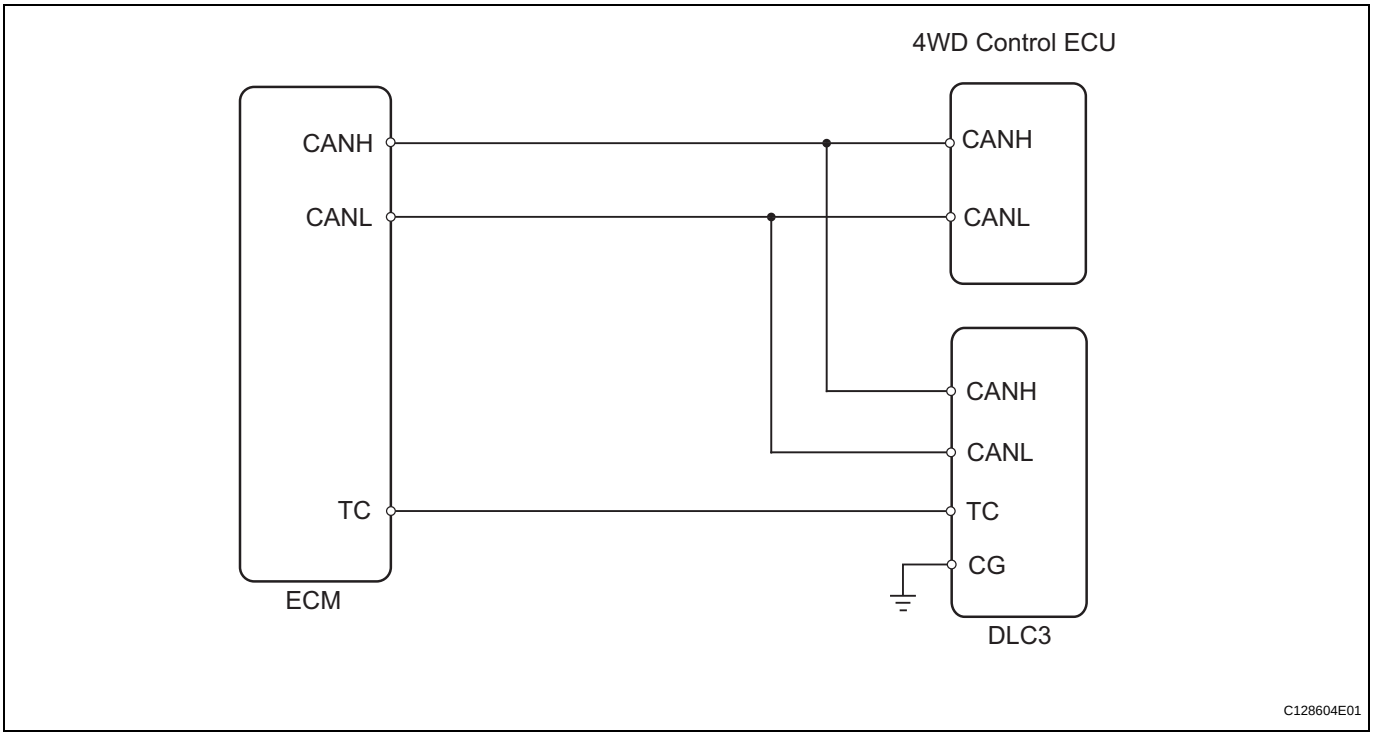

INSPECTION PROCEDURE

HINT:

Check the condition of each related circuit connector before troubleshooting (see page IN-37).

1	CHECK DLC3 (TC VOLTAGE)

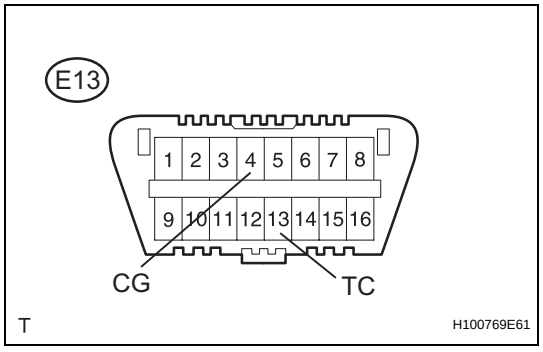

(a) Turn the ignition switch ON.

(b) Measure the voltage of the DLC3.

Standard voltage

Tester Connection	Specified Condition
E13-13 (TC) - E13- 4 (CG)	10 to 14 V

NG → **Go to step 3**

OK

2	CHECK CAN COMMUNICATION SYSTEM

(a) Check if the CAN communication DTC is output (see page CA-10).

Result

Result	Proceed to
DTC is not output	A
DTC is output	B

B → **REPAIR CIRCUIT INDICATED BY OUTPUT DTC**

A

REPLACE 4WD CONTROL ECU

3	CHECK WIRE HARNESS (DLC3 - ECM AND BODY GROUND)

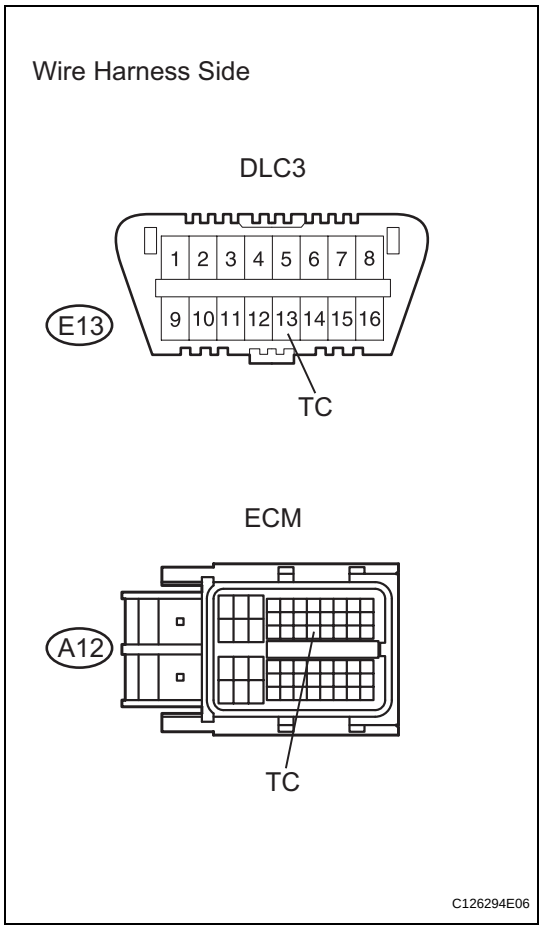

(a) Turn the ignition switch OFF.
(b) Disconnect the A12 ECM connector.
(c) Measure the resistance of the wire harness side connectors.

Standard resistance

Tester Connection	Specified Condition
E13-13 (TC) - A12-27 (TC)	Below 1Ω
E13-13 (TC) - Body Ground	10kΩ or higher

NG → **REPAIR OR REPLACE HARNESS AND CONNECTOR**

OK

4	CHECK WIRE HARNESS (DLC3 - BODY GROUND)

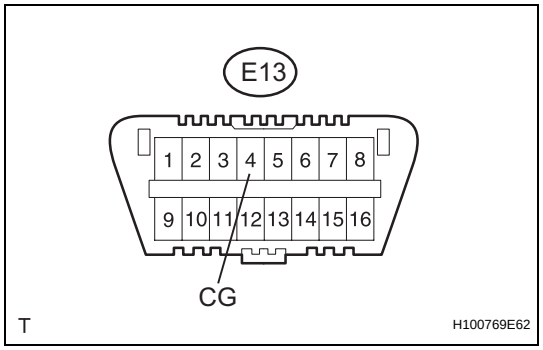

(a) Measure the resistance of the DLC3.
Standard resistance

Tester Connection	Specified Condition
E13-4 (CG) - Body ground	Below 1 Ω

B → **REPAIR OR REPLACE HARNESS AND CONNECTOR**

A

5	CHECK CAN COMMUNICATION SYSTEM

(a) Check if the CAN communication DTC is output (see page CA-10).
Result

Result	Proceed to
DTC is not output	A
DTC is output	B

B → **REPAIR CIRCUIT INDICATED BY OUTPUT DTC**

A

REPLACE 4WD CONTROL ECU

TF

ACTIVE TORQUE CONTROL 4WD SYSTEM

PRECAUTION

1. TROUBLESHOOTING PRECAUTION

NOTICE:

- **Since the Active torque control system (4WD control system) may be influenced by a malfunction in other systems, be sure to check for DTCs in the other systems.**
- **When removing and installing the 4WD control ECU and each sensor, be sure to check that the normal display is output in test mode inspection and in DTC output inspection after installing all the parts.**
- **If the DTC of the CAN communication line is output, repair the malfunction in the communication line and troubleshoot the 4WD control system.**
- **Since the CAN communication line has its own length and route, it cannot be repaired temporarily with a bypass wire, etc.**

PARTS LOCATION

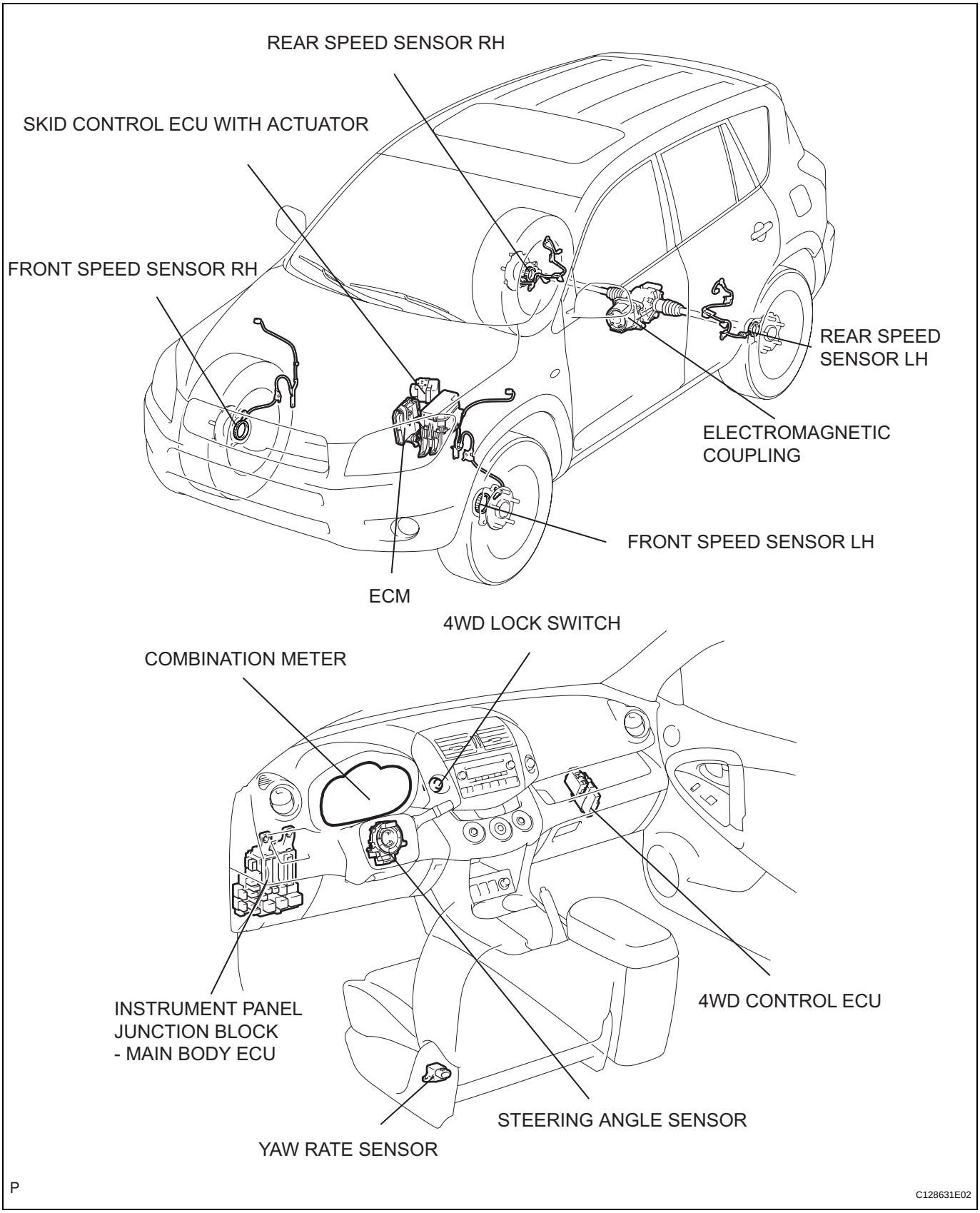

COMPONENTS

(2006/01-)

for 2AZ-FE

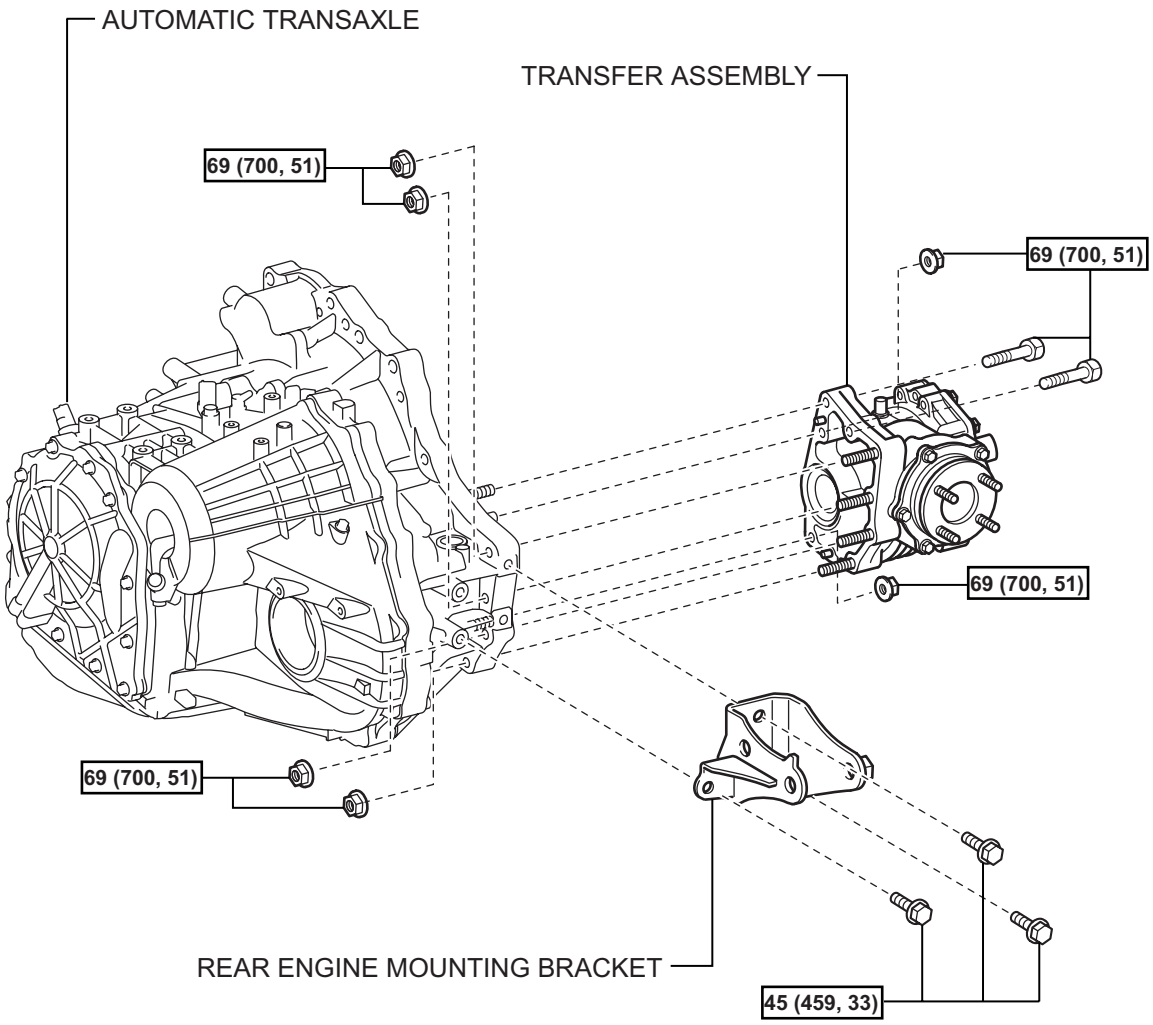

N*m (kgf*cm, ft.*lbf) : Specified torque

H

C132112E05

for 2GR-FE

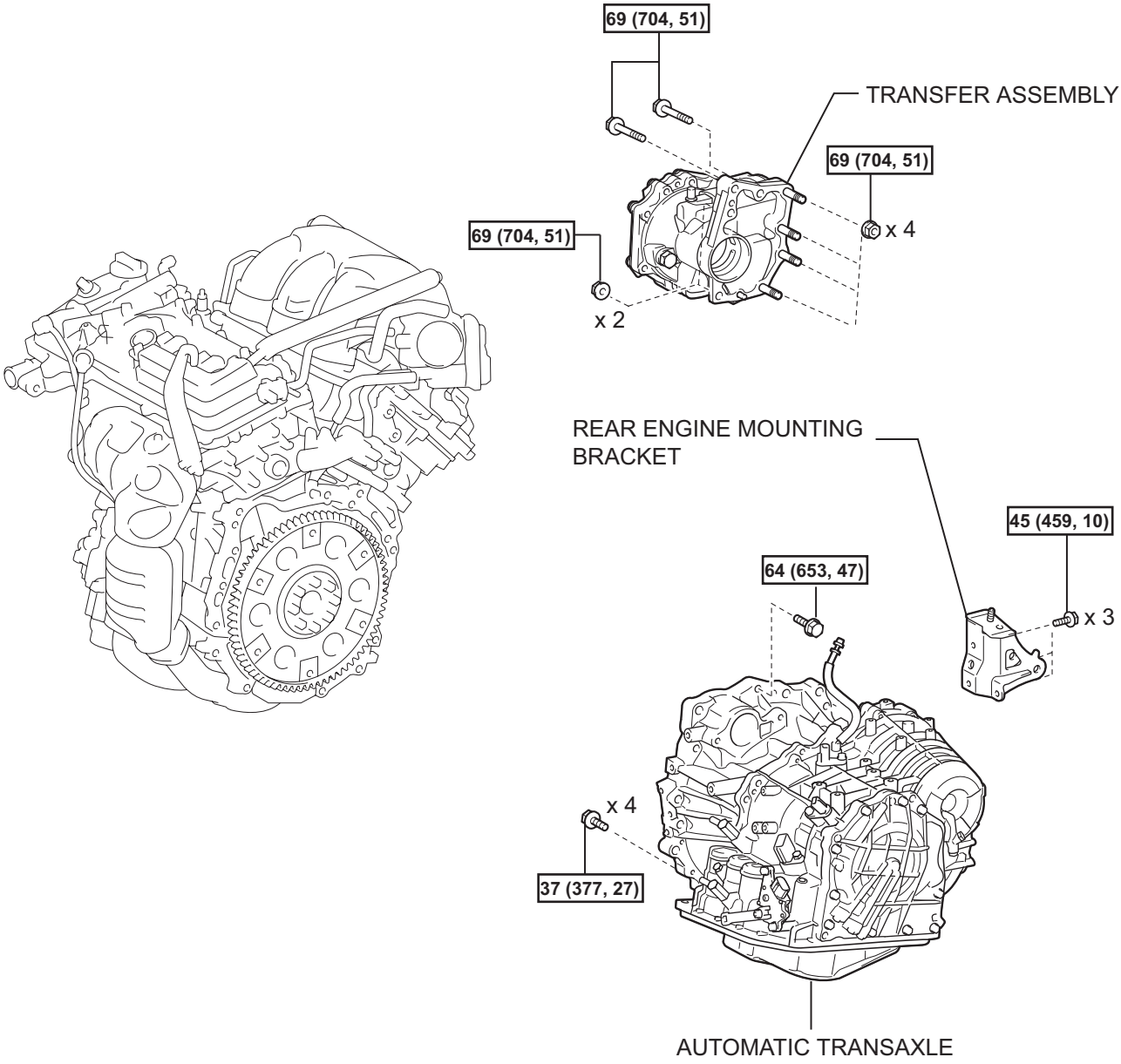

C139770E01

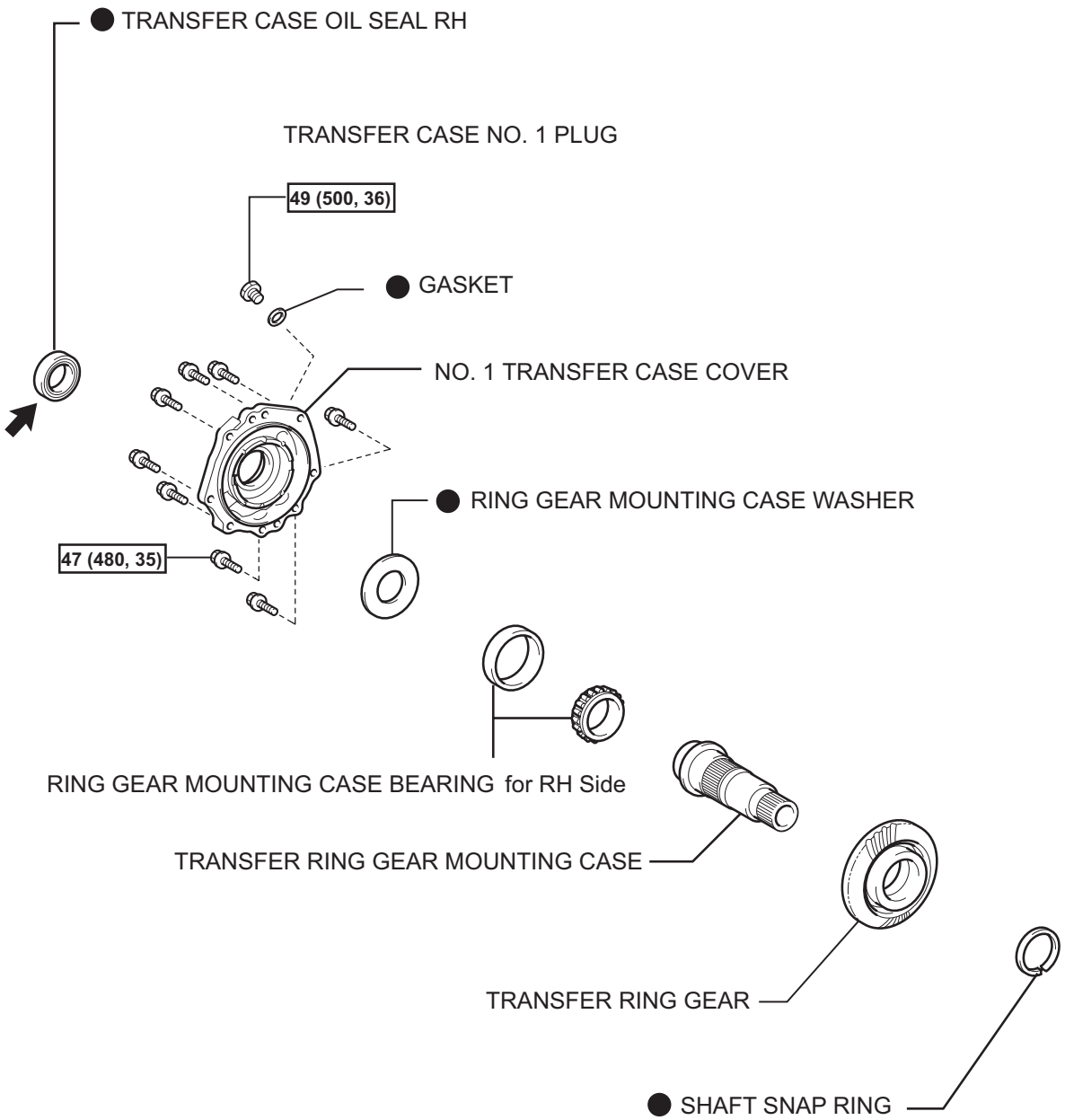

N*m (kgf*cm, ft.*lbf) : Specified torque

● Non-reusable part

Apply MP grease

T

C130882E05

TF

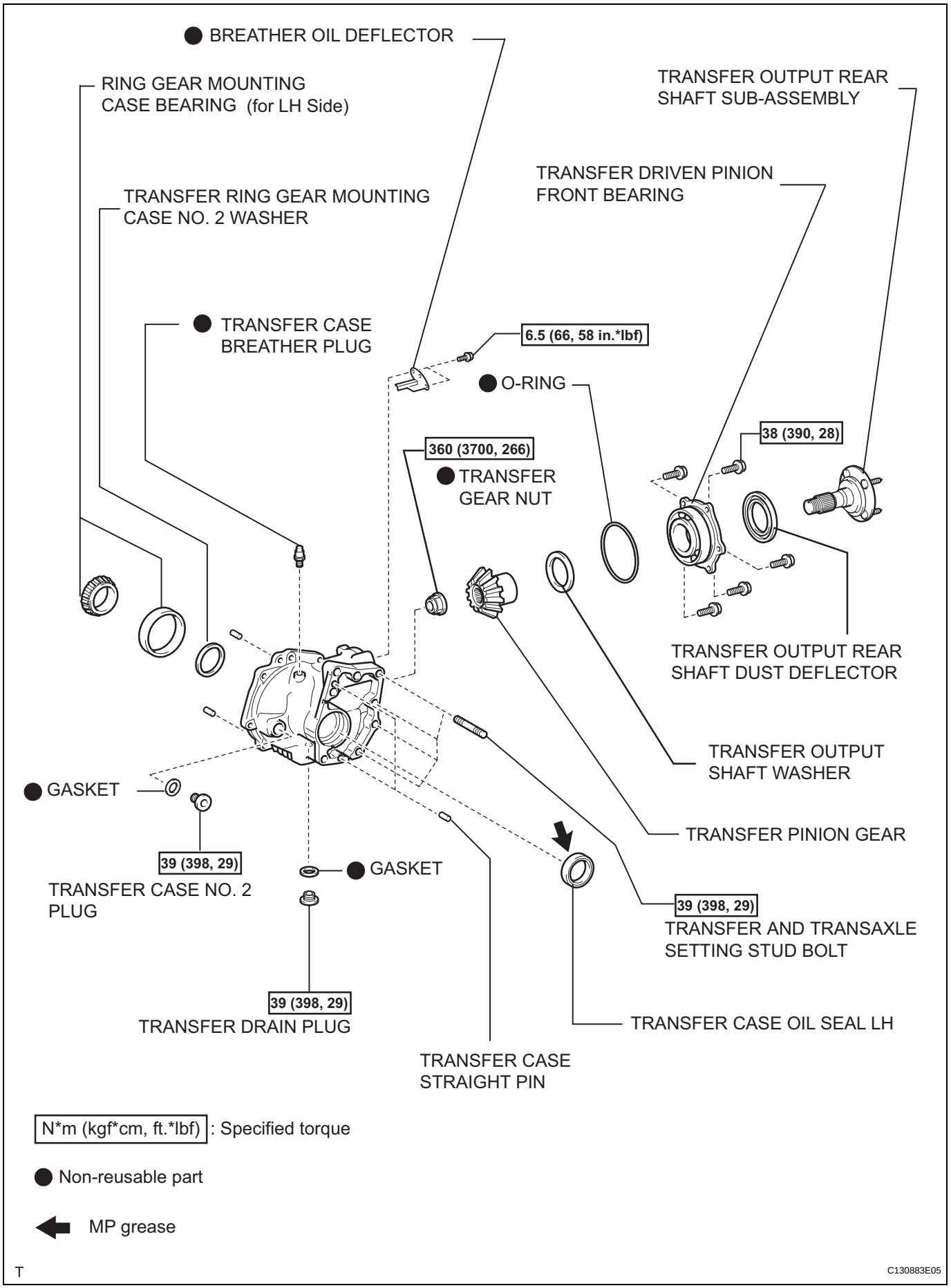
BREATHER OIL DEFLECTOR
RING GEAR MOUNTING CASE BEARING (for LH Side)
TRANSFER OUTPUT REAR SHAFT SUB-ASSEMBLY
TRANSFER DRIVEN PINION FRONT BEARING
TRANSFER RING GEAR MOUNTING CASE NO. 2 WASHER
TRANSFER CASE BREATHER PLUG
6.5 (66, 58 in.*lbf)
O-RING
38 (390, 28)
360 (3700, 266)
TRANSFER GEAR NUT
TRANSFER OUTPUT REAR SHAFT DUST DEFLECTOR
TRANSFER OUTPUT SHAFT WASHER
TRANSFER PINION GEAR
GASKET
39 (398, 29)
TRANSFER CASE NO. 2 PLUG
GASKET
39 (398, 29)
TRANSFER AND TRANSAXLE SETTING STUD BOLT
39 (398, 29)
TRANSFER DRAIN PLUG
TRANSFER CASE OIL SEAL LH
TRANSFER CASE STRAIGHT PIN
N*m (kgf*cm, ft.*lbf) : Specified torque
Non-reusable part
MP grease
T
C130883E05

REMOVAL

(2005/11-2006/01)

1. **DISCONNECT CABLE FROM NEGATIVE BATTERY TERMINAL**
   CAUTION:
   Wait at least 90 seconds after disconnecting the cable from the negative (-) battery terminal to prevent airbag and seat belt pretensioner activation.
2. **REMOVE ENGINE ASSEMBLY WITH AUTOMATIC TRANSAXLE**
   (a) Remove the engine with automatic transaxle (see page EM-98).
3. **REMOVE REAR ENGINE MOUNTING BRACKET (See page AX-147)**
4. **REMOVE TRANSFER ASSEMBLY**
   (a) Remove the 6 nuts, 2 bolts and transfer from the transaxle.

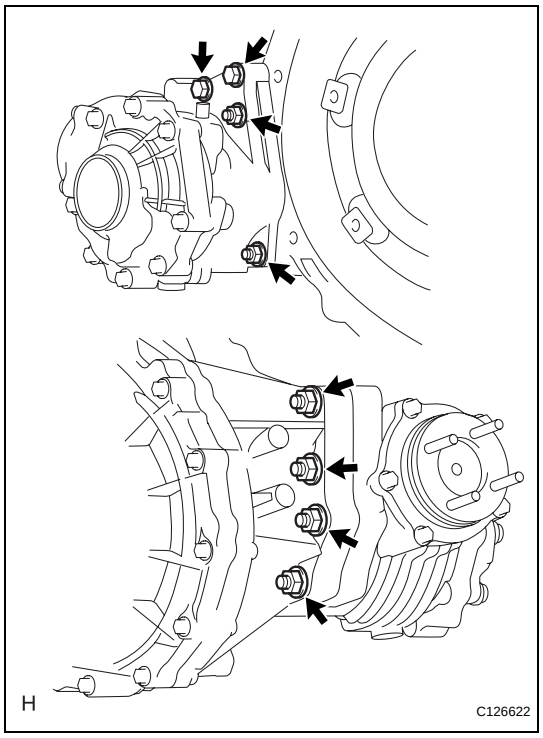

TF

REMOVAL

(2006/01-)

1. **DISCONNECT CABLE FROM NEGATIVE BATTERY TERMINAL**
   CAUTION:
   Wait at least 90 seconds after disconnecting the cable from the negative (-) battery terminal to prevent airbag and seat belt pretensioner activation.
2. **REMOVE ENGINE ASSEMBLY WITH AUTOMATIC TRANSAXLE**
   (a) for 2AZ-FE:
   Remove the engine with automatic transaxle (see page EM-98).
   (b) for 2GR-FE:
   Remove the engine with automatic transaxle (see page EM-21)
3. **REMOVE REAR ENGINE MOUNTING BRACKET (for 2GR-FE) (See page AX-173)**
4. **REMOVE REAR ENGINE MOUNTING BRACKET (for 2AZ-FE) (See page AX-147)**
5. **REMOVE TRANSFER ASSEMBLY**
   (a) Remove the 6 nuts, 2 bolts and transfer from the transaxle.

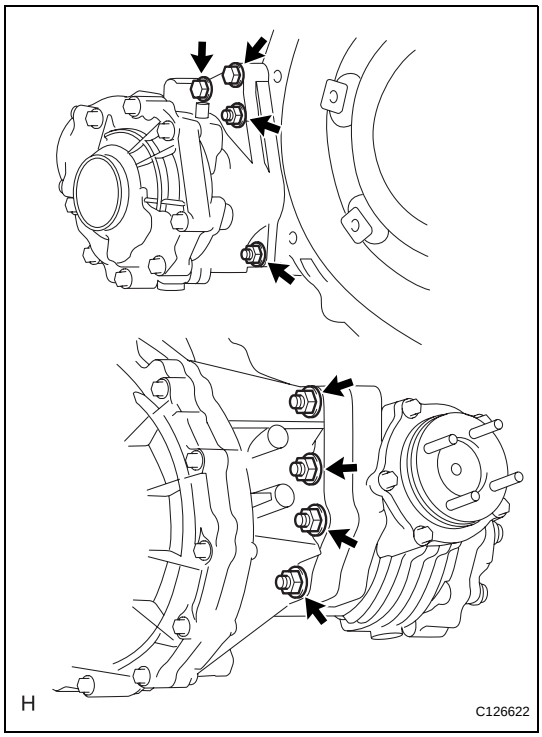

DISASSEMBLY

1. **REMOVE TRANSFER AND TRANSAXLE SETTING STUD BOLT**
   (a) Remove the stud bolt.

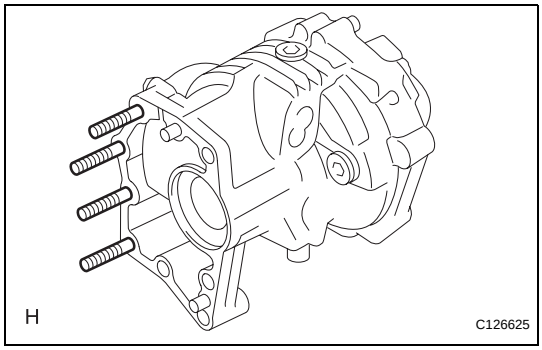

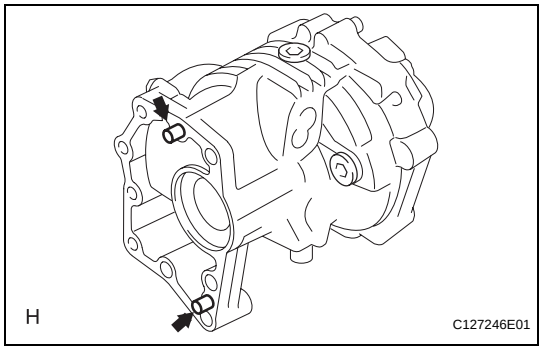

2. REMOVE TRANSFER CASE STRAIGHT PIN

(a) Remove the 2 straight pins.

3. REMOVE TRANSFER CASE NO. 1 PLUG

(a) Remove the No. 1 plug.

(b) Remove the gasket from the No. 1 plug.

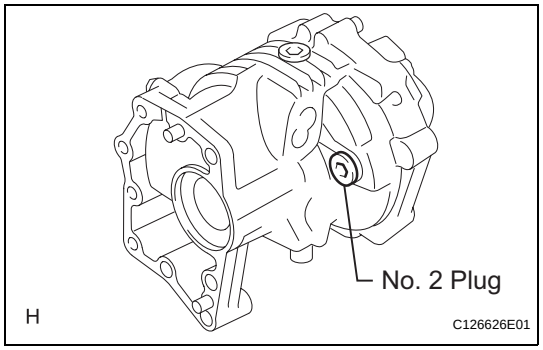

4. REMOVE TRANSFER CASE NO. 2 PLUG

(a) Remove the No. 2 plug.

(b) Remove the gasket from the No. 2 plug.

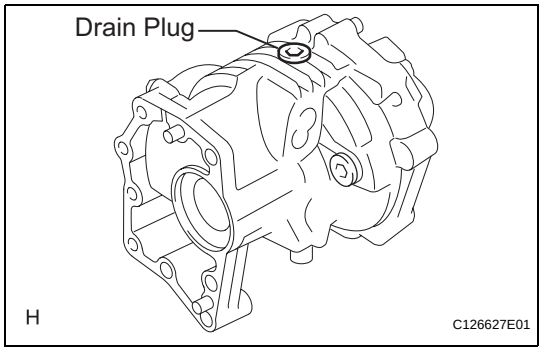

5. REMOVE TRANSFER DRAIN PLUG

(a) Remove the drain plug.

(b) Remove the gasket from the drain plug.

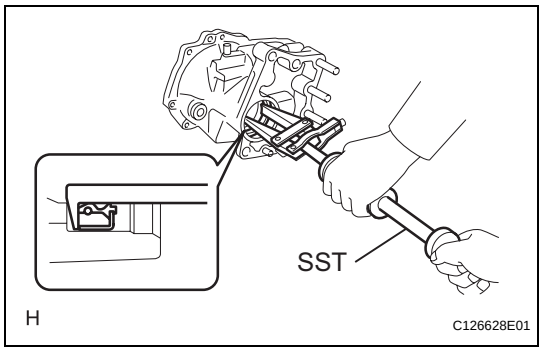

6. REMOVE TRANSFER CASE OIL SEAL LH

(a) Using SST, tap out the oil seal from the case.

SST 09308-00010

NOTICE:

Do not damage the oil seal lip.

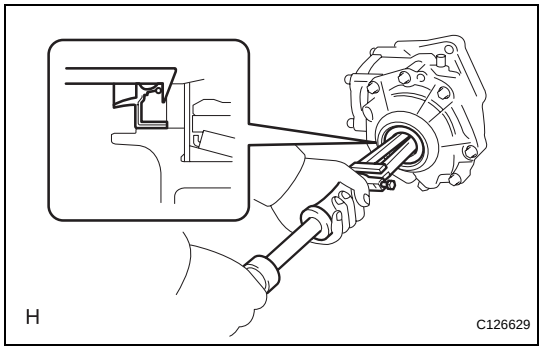

7. REMOVE TRANSFER CASE OIL SEAL RH

(a) Using SST, tap out the oil seal from the case.

SST 09308-00010

NOTICE:

Do not damage the oil seal lip.

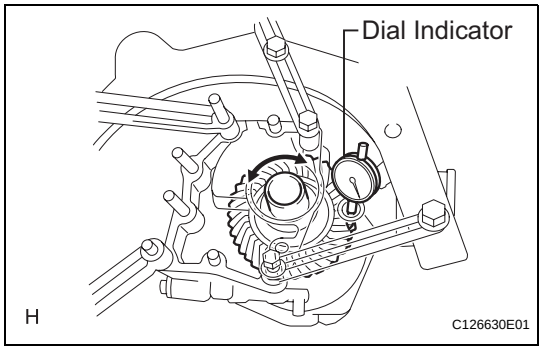

8. INSPECT RING GEAR BACKLASH

(a) Using a dial indicator, measure the backlash of the ring gear at 3 points.

Standard backlash:

0.10 to 0.20 mm (0.0039 to 0.0079 in.)

If the backlash is not within the specified range, adjust the backlash or repair as necessary.

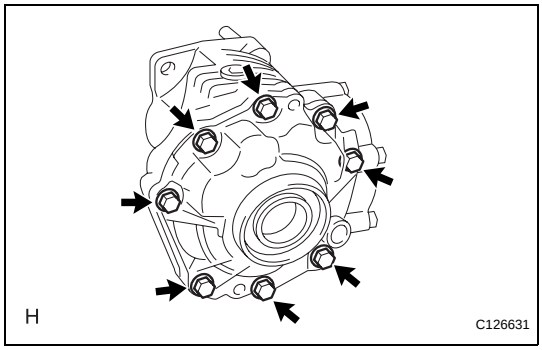

9. REMOVE NO. 1 TRANSFER CASE COVER

(a) Remove the 8 bolts.

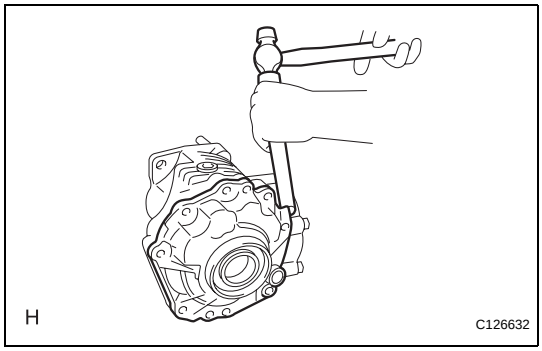

(b) Using a brass bar and hammer, tap out the cover from the case.

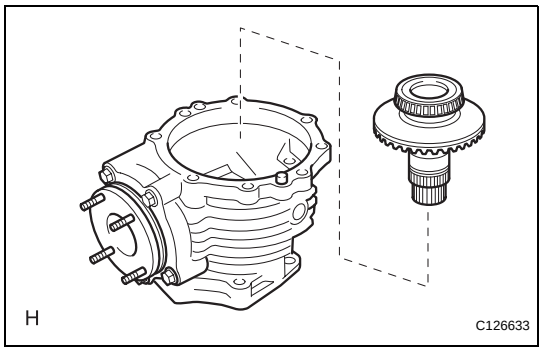

10. REMOVE TRANSFER RING GEAR

(a) Remove the ring gear from the transfer case.

11. REMOVE TRANSFER CASE STRAIGHT PIN

(a) Remove the 2 straight pins from the transfer case.

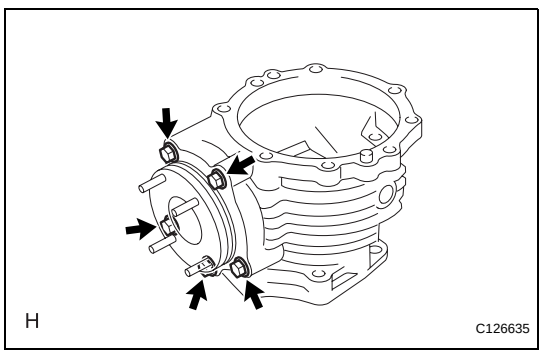

12. REMOVE TRANSFER OUTPUT SHAFT

(a) Remove the 5 bolts and output shaft.

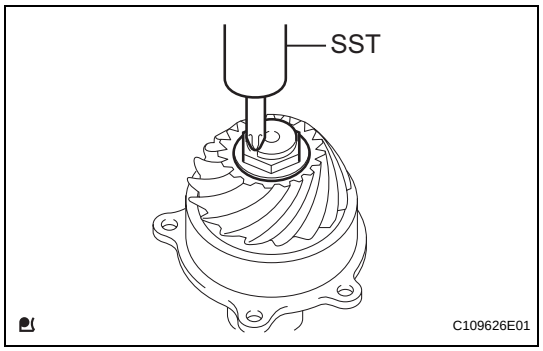

(b) Using SST and a hammer, unstake the lock nut.
SST 09930-00010
(c) Remove the lock nut.

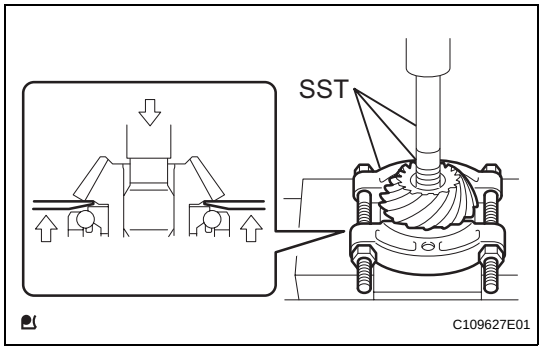

13. REMOVE TRANSFER OUTPUT REAR SHAFT SUB-ASSEMBLY
(a) Using SST and a press, press out the shaft from the driven pinion.
SST 09950-00020, 09950-60010 (09951-00220), 09950-70010 (09951-07100)

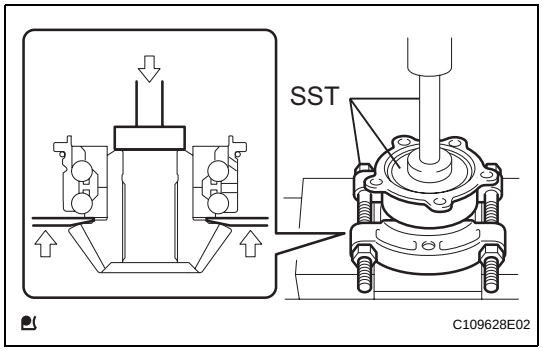

14. REMOVE TRANSFER DRIVEN PINION FRONT BEARING
(a) Using SST and a press, press out the driven pinion from the bearing.
SST 09950-00020, 09950-60010 (09951-00220), 09950-70010 (09951-07100)

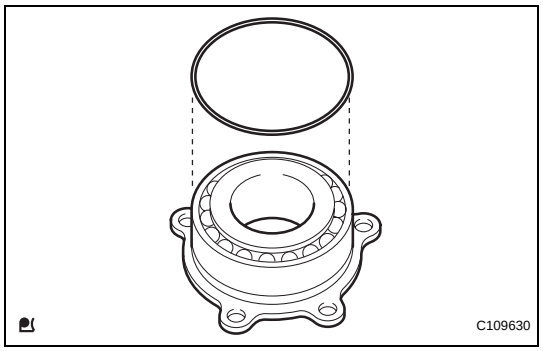

(b) Remove the O-ring from the bearing.

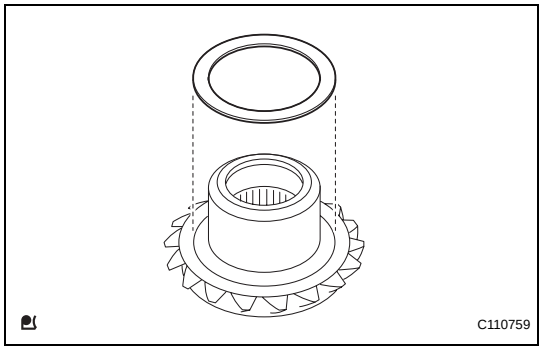

15. REMOVE TRANSFER OUTPUT SHAFT WASHER
(a) Remove the washer from the transfer pinion gear.

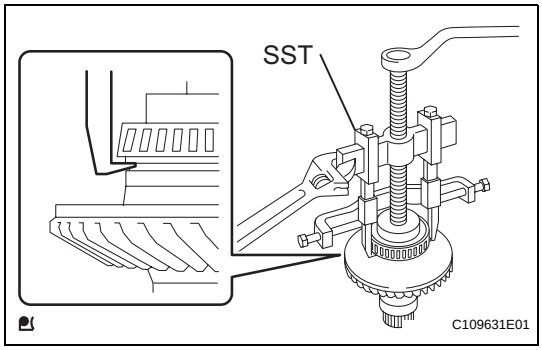

16. REMOVE RING GEAR MOUNTING CASE BEARING (for LH side)

(a) Using SST, remove the bearing from the mounting case.

SST 09950-40011 (09951-04010, 09952-04010, 09953-04030, 09954-04010, 09955-04061, 09957-04010, 09958-04011), 09950-60010 (09951-00540)

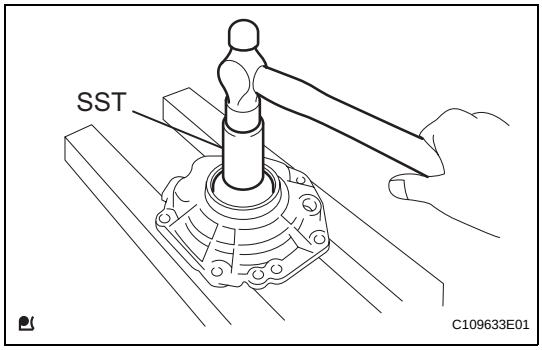

(b) Using SST and a hammer, tap out the bearing.

SST 09310-35010

17. REMOVE RING GEAR MOUNTING CASE WASHER

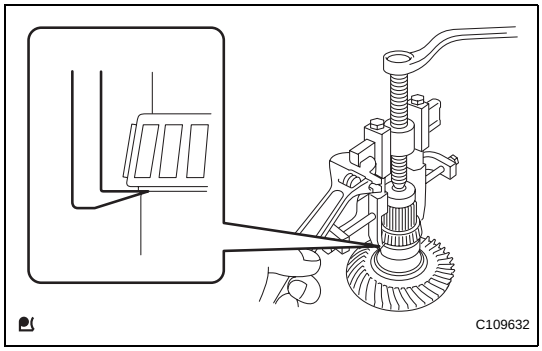

18. REMOVE RING GEAR MOUNTING CASE BEARING (for RH side)

(a) Using SST, remove the bearing from the mounting case.

SST 09950-40011 (09951-04010, 09952-04010, 09953-04020, 09954-04010, 09955-04061, 09957-04010, 09958-04011), 09950-60010 (09951-00540)

(b) Using SST and a hammer, tap out the bearing (race) from the cover.

SST 09636-20010

19. REMOVE TRANSFER RING GEAR MOUNTING CASE NO. 2 WASHER

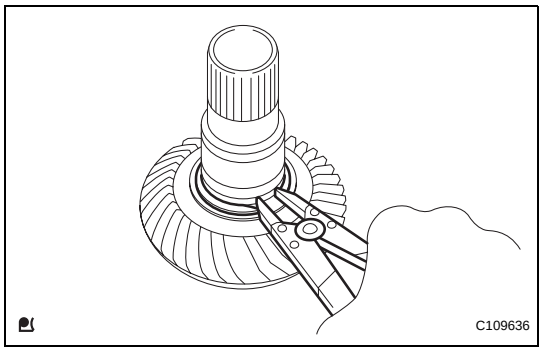

20. REMOVE SHAFT SNAP RING

(a) Using a snap ring expander, remove the snap ring.

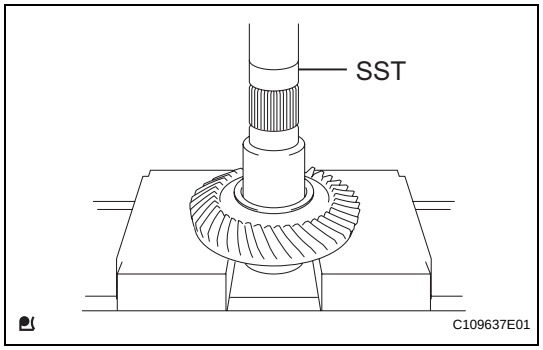

21. REMOVE TRANSFER RING GEAR MOUNTING CASE

(a) Using SST and a press, press out the ring gear from the mounting case.

SST 09950-60010 (09951-00400)

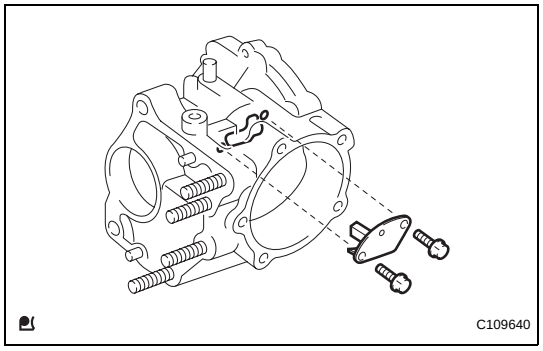

22. REMOVE BREATHER OIL DEFLECTOR

(a) Remove the 2 bolts and oil deflector.

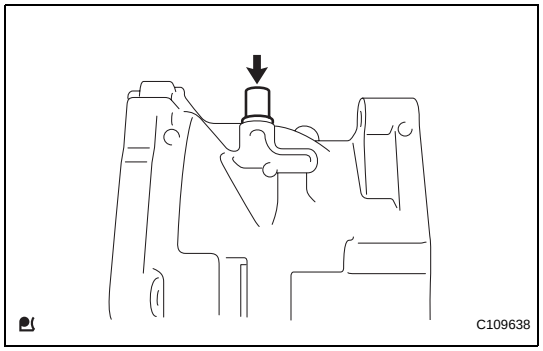

23. REMOVE TRANSFER CASE BREATHER PLUG

(a) Remove the breather plug from the transfer case.

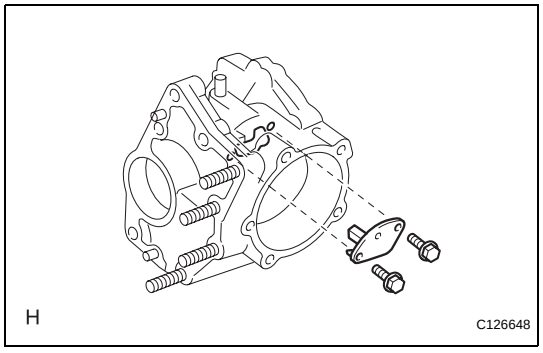

REASSEMBLY

1. INSTALL BREATHER OIL DEFLECTOR

(a) Install the deflector with the 2 bolts.

Torque: 6.5 N*m (66 kgf*cm, 58 in.*lbf)

2. INSTALL RING GEAR MOUNTING CASE PLATE WASHER

(a) Install a new washer to the transfer case.

HINT:

Install a washer of the same thickness as before.

3. INSTALL TRANSFER RING GEAR MOUNTING CASE NO. 2 WASHER

(a) Install a new washer to the cover.

HINT:

Install a washer of the same thickness as before.

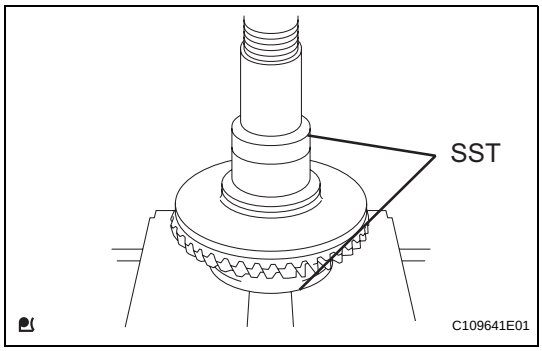

4. INSTALL TRANSFER RING GEAR MOUNTING CASE

(a) Using SST and a press, press in the mounting case to the ring gear.

SST 09316-12010, 09950-60010 (09951-00560)

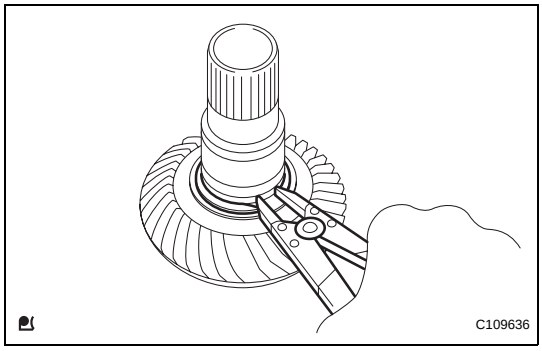

5. INSTALL SHAFT SNAP RING

(a) Using SST, install a new snap ring.

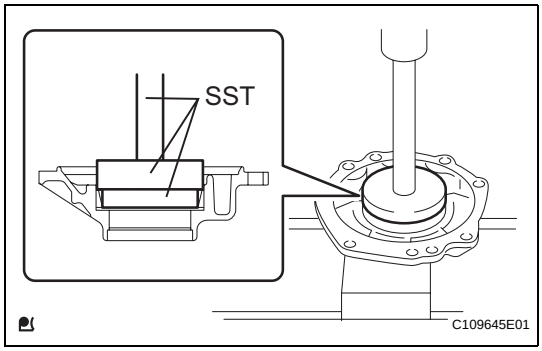

6. INSTALL RING GEAR MOUNTING CASE BEARING (for RH side)

(a) Using SST and a press, press in the bearing (race) to the cover.

SST 09950-60020 (09951-00750, 09952-06010), 09950-70010 (09951-07150)

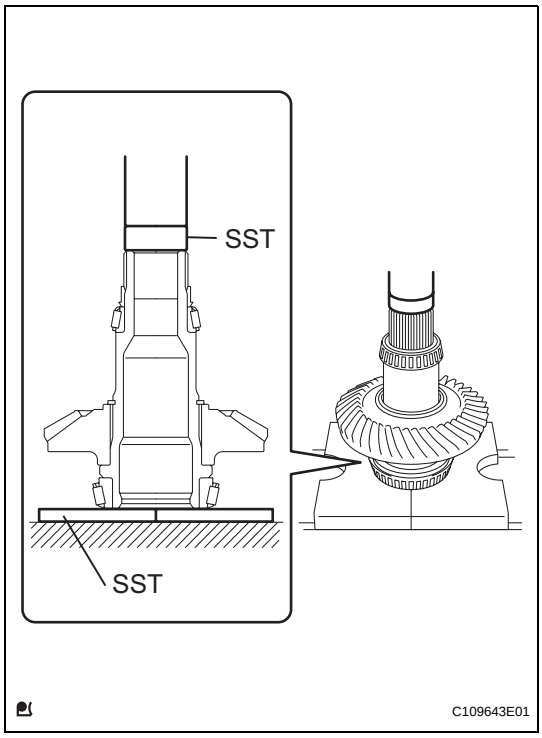

(b) Using SST and a press, press in the bearing to the mounting case.

SST 09336-16010, 09950-60010 (09951-00400)

(c) Apply gear oil to the bearing.

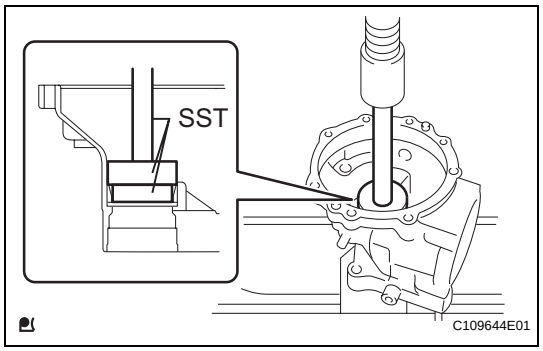

7. INSTALL RING GEAR MOUNTING CASE BEARING (for LH side)

(a) Using SST and a press, press in the bearing (race) to the case.

SST 09950-60010 (09951-00540, 09951-00620, 09952-06010), 09950-70010 (09951-07150)

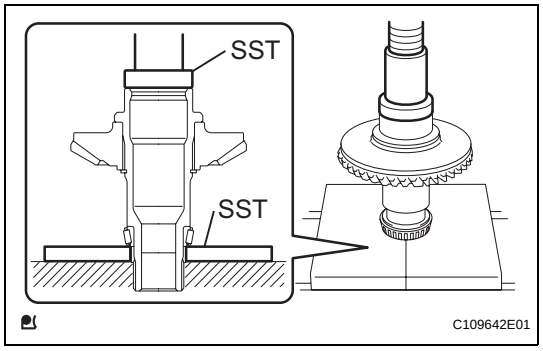

(b) Using SST and a press, press in the bearing to the mounting case.

SST 09336-16010, 09950-60010 (09951-00560)

(c) Apply gear oil to the mounting case bearing.

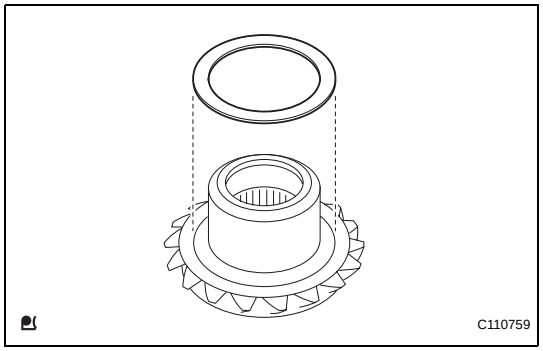

8. INSTALL TRANSFER OUTPUT WASHER

(a) Install the washer to the driven pinion.

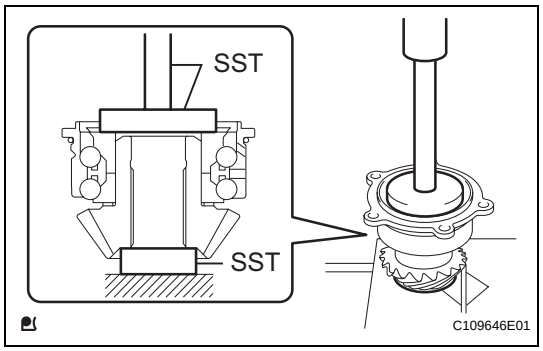

9. INSTALL TRANSFER DRIVEN PINION FRONT BEARING

(a) Using SST and a press, press in the bearing to the driven pinion.

SST 09950-60010 (09951-00440), 09950-60020 (09951-00750), 09950-70010 (09951-07150)

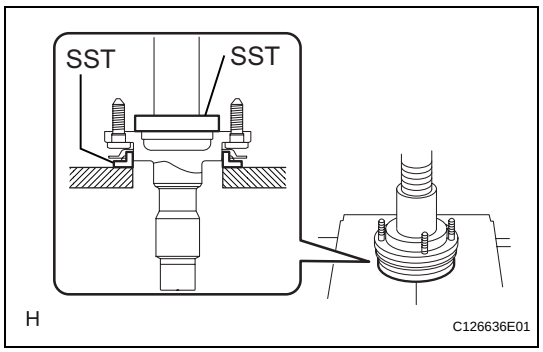

10. INSTALL TRANSFER OUTPUT REAR SHAFT DUST DEFLECTOR

(a) Using SST and a press, press in the dust deflector to the out put shaft.

SST 09316-12010

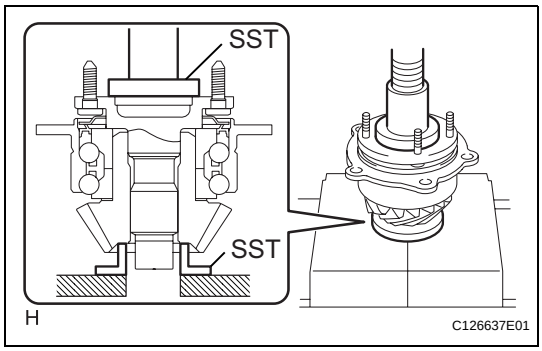

11. INSTALL TRANSFER OUTPUT REAR SHAFT SUB-ASSEMBLY

(a) Using SST and a press, press in the output rear shaft to the driven pinion.
SST 09316-12010

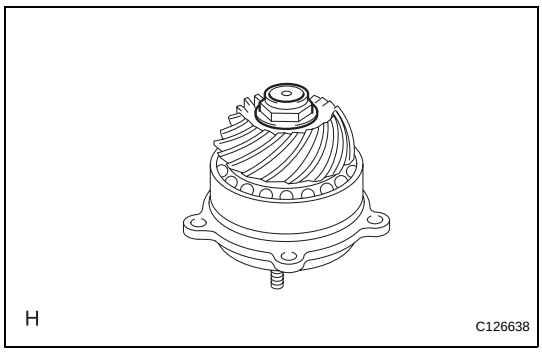

(b) Install a new nut to the output shaft.
Torque: 360 N*m (3700 kgf*cm, 266 ft.*lbf)

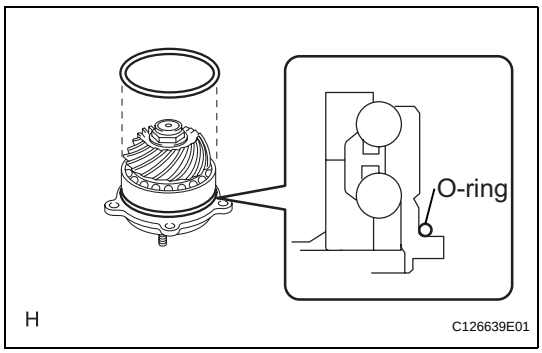

12. INSTALL TRANSFER SHAFT

(a) Install a new O-ring to the driven pinion.

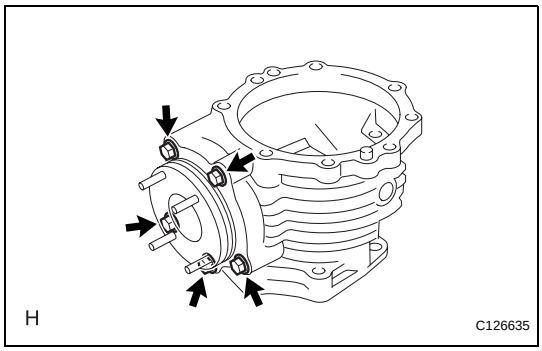

(b) Install the driven pinion to the case with the 5 bolts.
Torque: 38 N*m (390 kgf*cm, 28 ft.*lbf)

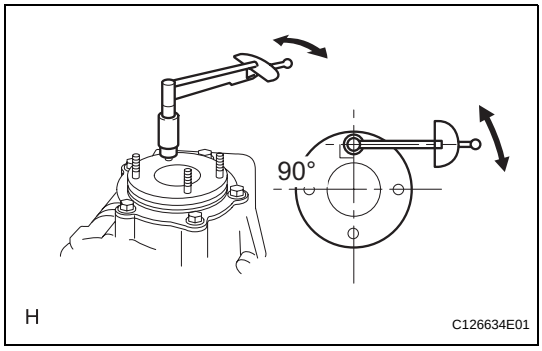

13. INSPECT DRIVEN PINION PRELOAD

(a) Using a torque wrench, measure the preload.
Standard preload (turning):
0.17 to 1.86 N*m (1.7 to 19.0 kgf*cm, 1.5 to 16.5 in.*lbf)

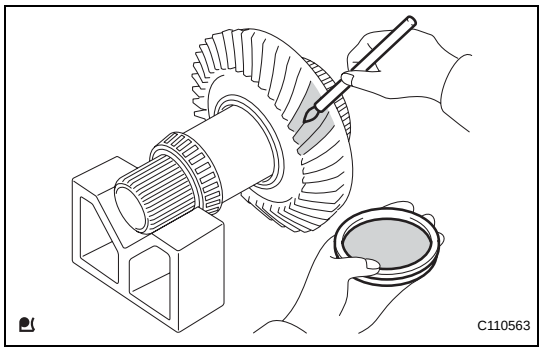

14. INSTALL TRANSFER RING GEAR

(a) Coat 3 or 4 teeth at the 4 different positions on the ring gear with Prussian blue.

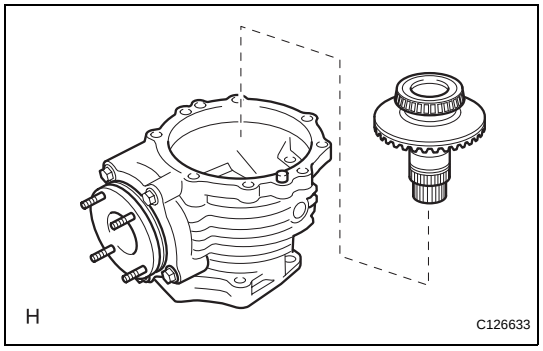

(b) Install the mounting case to the transfer case.

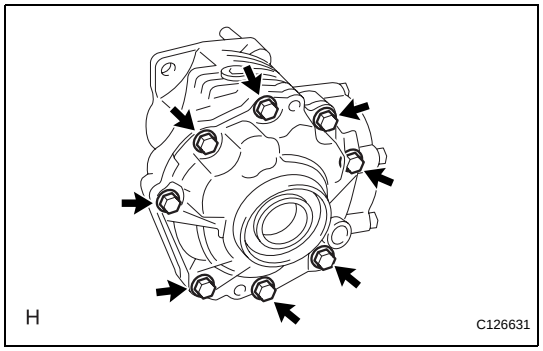

15. INSTALL NO. 1 TRANSFER CASE COVER

(a) Install the transfer cover with the 8 bolts.
Torque: 47 N*m (480 kgf*cm, 35 ft.*lbf)

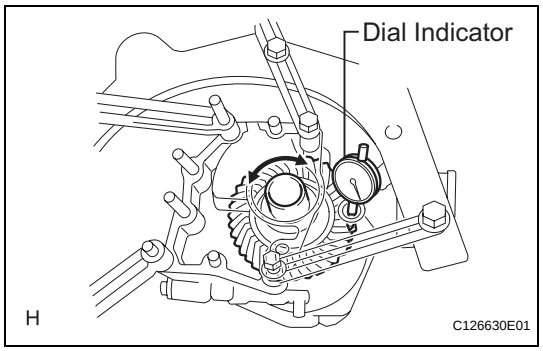

16. ADJUST RING GEAR BACKLASH

(a) Using a dial indicator, measure the backlash of the ring gear at 3 positions at least.
Standard backlash:
0.10 to 0.20 mm (0.0039 to 0.0079 in.)
HINT:
The measure values should be used as reference when selecting washer, so take a note of the values. If the backlash is not within the specification, replace the washer on the ring gear side with one of a different thickness using the following procedure.
Standard washer thickness

Mark	Thickness	Mark	Thickness
A0	1.97 mm (0.0776 in.)	C0	2.37 mm (0.0933 in.)
A1	1.99 mm (0.0783 in.)	C1	2.39 mm (0.0941 in.)
A2	2.01 mm (0.0791 in.)	C2	2.41 mm (0.0949 in.)
A3	2.03 mm (0.0799 in.)	C3	2.43 mm (0.957 in.)

TF

Mark	Thickness	Mark	Thickness
A4	2.05 mm (0.0807 in.)	C4	2.45 mm (0.0965 in.)
A5	2.07 mm (0.0815 in.)	C5	2.47 mm (0.0972 in.)
A6	2.09 mm (0.0823 in.)	C6	2.49 mm (0.098 in.)
A7	2.11 mm (0.0831 in.)	C7	2.51 mm (0.0988 in.)
A8	2.13 mm (0.0839 in.)	C8	2.53 mm (0.0996 in.)
A9	2.15 mm (0.0846 in.)	C9	2.55 mm (0.1004 in.)
B0	2.17 mm (0.0854 in.)	D0	2.57 mm (0.1012 in.)
B1	2.19 mm (0.0862 in.)	D1	2.59 mm (0.102 in.)
B2	2.21 mm (0.087 in.)	D2	2.61 mm (0.1028 in.)
B3	2.23 mm (0.0878 in.)	D3	2.63 mm (0.1035 in.)
B4	2.25 mm (0.0886 in.)	D4	2.65 mm (0.1043 in.)
B5	2.27 mm (0.0894 in.)	D5	2.67 mm (0.1051 in.)
B6	2.29 mm (0.0902 in.)	D6	2.39 mm (0.0941 in.)
B7	2.31 mm (0.0909 in.)	D7	2.71 mm (0.1067 in.)
B8	2.33 mm (0.0917 in.)	D8	2.73 mm (0.1075 in.)
B9	2.35 mm (0.0925 in.)	D9	2.75 mm (0.1083 in.)

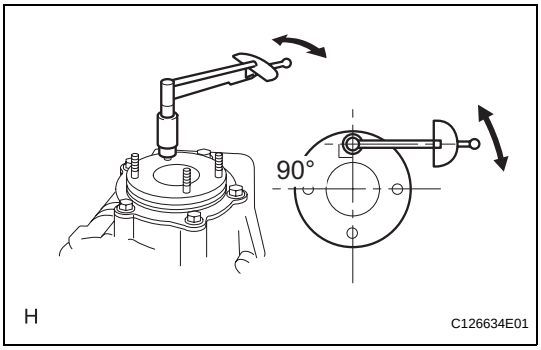

17. ADJUST TOTAL PRELOAD

(a) Using a torque wrench, measure the total preload.

Driven pinion preload:

0.28 to 0.79 N*m (2.86 to 8.06 kgf*cm, 2.48 to 7.0 in.*lbf)

HINT:

Turn the driven pinion counterclockwise and clockwise several times.

If the preload is not as standard, select a proper washer again.

Standard washer thickness

Mark	Thickness	Mark	Thickness
A0	1.18 mm (0.0465 in.)	C2	1.62 mm (0.0638 in.)
A1	1.20 mm (0.0472 in.)	C3	1.64 mm (0.0646 in.)
A2	1.22 mm (0.048 in.)	C4	1.66 mm (0.0654 in.)
A3	1.24 mm (0.0488 in.)	C5	1.68 mm (0.0661 in.)
A4	1.26 mm (0.0496 in.)	C6	1.70 mm (0.067 in.)
A5	1.28 mm (0.0504 in.)	C7	1.72 mm (0.0677 in.)

Mark	Thickness	Mark	Thickness
A6	1.30 mm (0.0512 in.)	C8	1.74 mm (0.0685 in.)
A7	1.32 mm (0.052 in.)	C9	1.76 mm (0.0693 in.)
A8	1.34 mm (0.0528 in.)	D0	1.78 mm (0.0701 in.)
A9	1.36 mm (0.535 in.)	D1	1.80 mm (0.0709 in.)
B0	1.38 mm (0.0543 in.)	D2	1.82 mm (0.0717 in.)
B1	1.40 mm (0.0551 in.)	D3	1.84 mm (0.0724 in.)
B2	1.42 mm (0.0559 in.)	D4	1.86 mm (0.0732 in.)
B3	1.44 mm (0.0567 in.)	D5	1.88 mm (0.074 in.)
B4	1.46 mm (0.0575 in.)	D6	1.90 mm (0.0748 in.)
B5	1.48 mm (0.0583 in.)	D7	1.92 mm (0.0756 in.)
B6	1.50 mm (0.0591 in.)	D8	1.94 mm (0.0764 in.)
B7	1.52 mm (0.0598 in.)	D9	1.96 mm (0.0772 in.)
B8	1.54 mm (0.0606 in.)	E0	1.98 mm (0.0781 in.)
B9	1.56 mm (0.0614 in.)	E1	2.00 mm (0.0787 in.)
C0	1.58 mm (0.0622 in.)	E2	2.02 mm (0.0795 in.)
C1	1.60 mm (0.063 in.)	-	-

18. INSPECT TOOTH CONTACT BETWEEN RING GEAR AND DRIVE PINION

(a) Rotate the ring gear several times.

(b) Peer into the service filler hole or remove the ring gear to check the tooth contact pattern.

NOTICE:

- **Check the tooth contact pattern at 4 or more positions around the circumference of the ring gear.**
- **When replacing washers (backlash adjustment, preload adjustment or tooth contact adjustment), reapply Prussian blue.**

HINT:

The Prussian blue pattern indicates the tooth contact points.

(c) If the teeth are not contacting properly, select a driven pinion bearing front (outer race) side washer from the chart and install the washer.

NOTICE:

If a washer (for tooth contact adjustment) is replaced with one of a different thickness, the backlash will also change. Therefore, it is necessary to adjust the backlash.

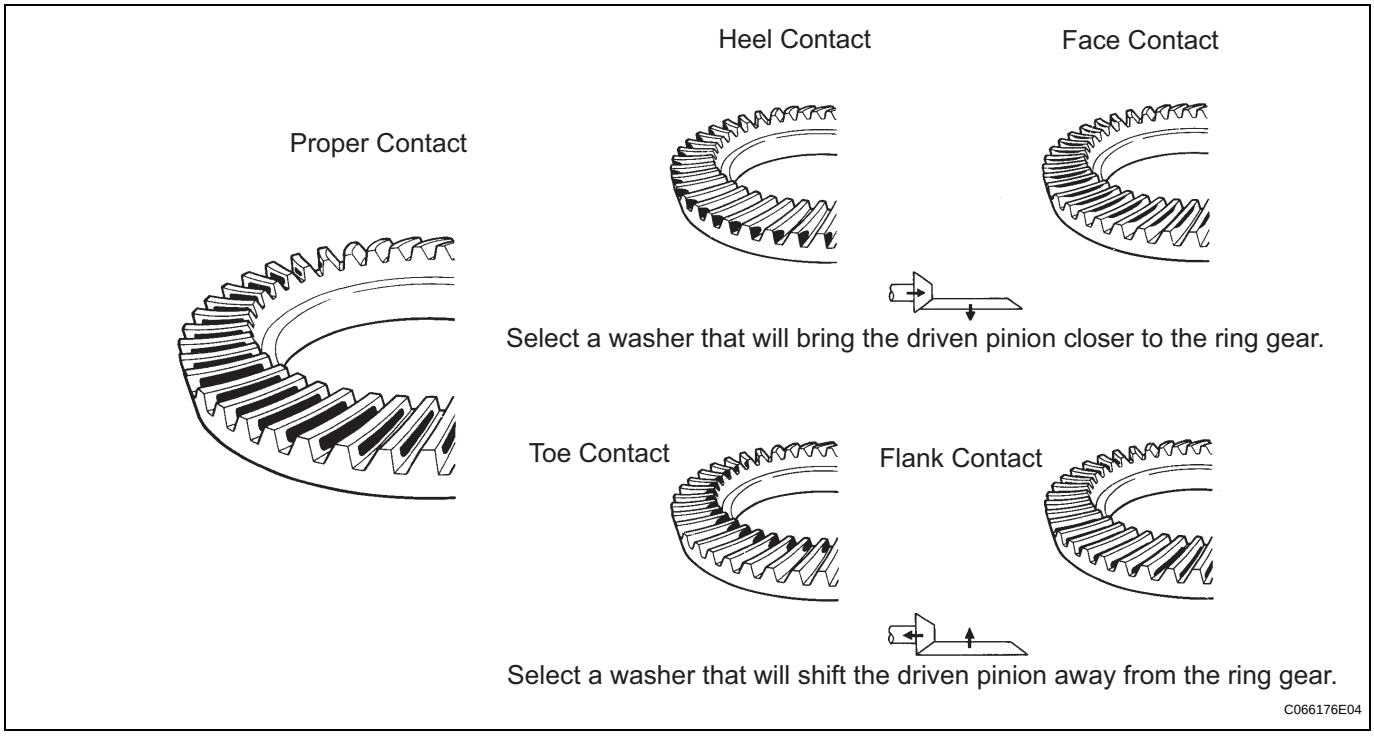

(d) Perform the following procedures for face or flank contact.
  (1) Use the backlash adjustment washer (ring gear mounting case washer) to move and adjust the ring gear. (*1)
  (2) Perform the ring gear and driven pinion tooth contact inspection again.
  HINT:
  If the tooth contact is incorrect, repeat step *1.
  (3) Perform the ring gear and driven pinion backlash inspection. If the ring gear and driven pinion backlash is not within the standard range, replace the ring gear and driven pinion with new ones.

(e) Perform the following procedures for heel or toe contact.
  (1) Select a transfer driven pinion bearing front (outer race) side washer (transfer output shaft washer) from the chart and install the washer.
  NOTICE:
  Do not reuse a transfer pinion bearing spacer.
  Standard washer thickness

Mark	Thickness	Mark	Thickness
01	1.02 mm (0.0402 in.)	15	1.30 mm (0.0512 in.)
02	1.04 mm (0.0409 in.)	16	1.32 mm (0.0520 in.)
03	1.06 mm (0.0417 in.)	17	1.34 mm (0.0528 in.)
04	1.08 mm (0.0425 in.)	18	1.36 mm (0.0535 in.)

Mark	Thickness	Mark	Thickness
05	1.10 mm (0.0433 in.)	19	1.38 mm (0.0543 in.)
06	1.12 mm (0.0441 in.)	20	1.40 mm (0.0551 in.)
07	1.14 mm (0.0449 in.)	21	1.42 mm (0.0559 in.)
08	1.16 mm (0.0457 in.)	22	1.44 mm (0.0567 in.)
09	1.18 mm (0.0465 in.)	23	1.46 mm (0.0575 in.)
10	1.20 mm (0.0472 in.)	24	1.48 mm (0.0583 in.)
11	1.22 mm (0.0480 in.)	25	1.50 mm (0.0591 in.)
12	1.24 mm (0.0488 in.)	26	1.52 mm (0.0598 in.)
13	1.26 mm (0.0496 in.)	27	1.54 mm (0.0606 in.)
14	1.28 mm (0.0504 in.)	28	1.56 mm (0.0614 in.)

19. COMPLETELY INSTALL TRANSFER SHAFT

(a) Using a screwdriver and hammer, unstake the pinion gear nut.

(b) Install the 5 bolts with the transfer shaft to the case.
Torque: 38 N*m (390 kgf*cm, 28 ft.*lbf)

(c) Install the No. 1 transfer case cover.

(1) Using white gasoline, clean the contact surfaces of the housing and cover.

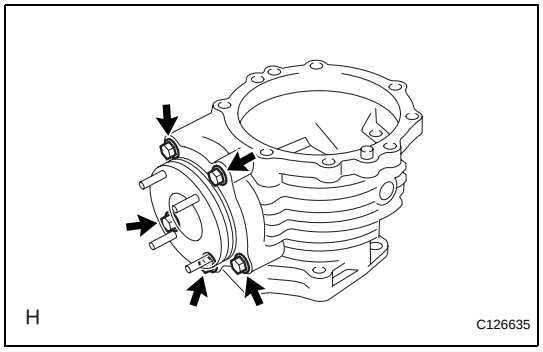

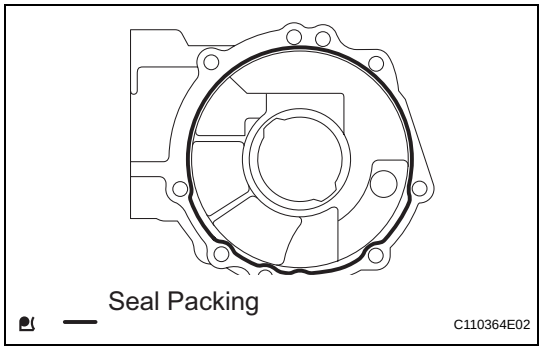

(2) Apply seal packing to the cover as shown in the illustration.
Seal packing:
Toyota Genuine Seal Packing Black, Three Bond 1207B or Equivalent

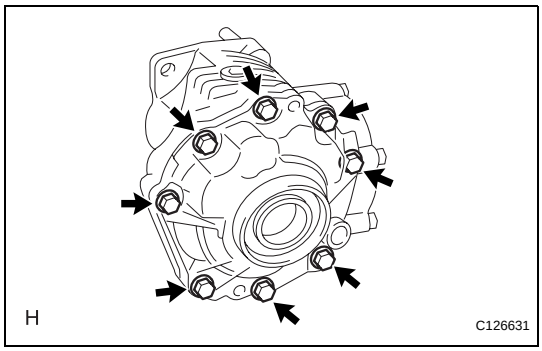

(3) Install the 8 bolts with the cover to the case.
Torque: 47 N*m (480 kgf*cm, 35 ft.*lbf)

20. INSTALL TRANSFER CASE OIL SEAL LH (See page TF-48)

21. INSTALL TRANSFER CASE OIL SEAL RH (See page TF-51)

22. INSTALL TRANSFER CASE STRAIGHT PIN

(a) Using a plastic-faced hammer, install the straight pin as shown in the straight pin.

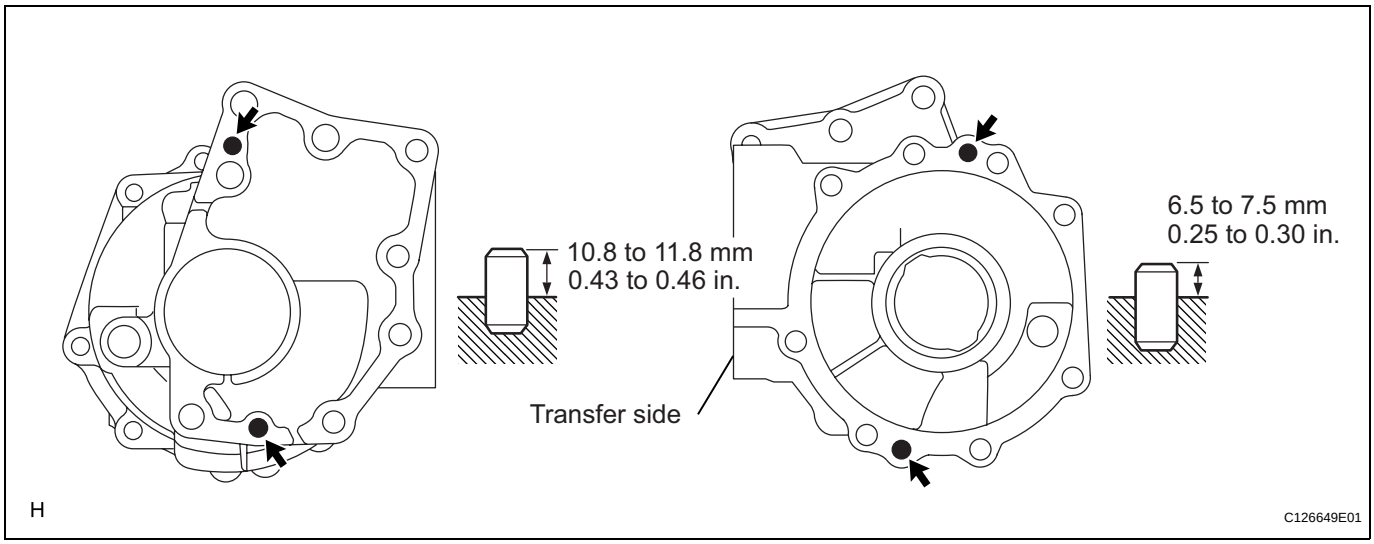

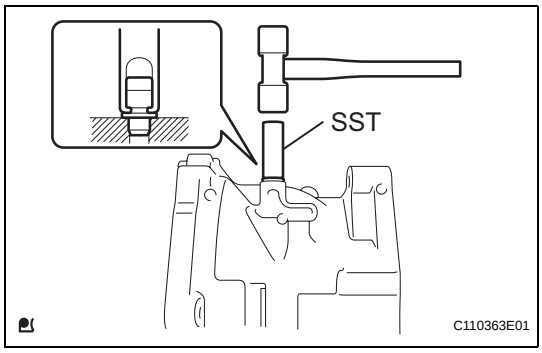

23. INSTALL TRANSFER CASE BREATHER PLUG

(a) Using SST and a hammer, tap in a new breather plug.
SST 09612-10093 (09612-10061)

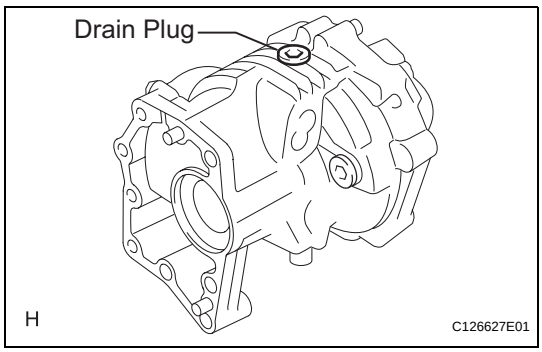

24. INSTALL TRANSFER DRAIN PLUG

(a) Install a new gasket and the plug to the transfer case.
Torque: 39 N*m (398 kgf*cm, 29 ft.*lbf)

25. INSTALL TRANSFER CASE NO. 1 PLUG

(a) Install a new gasket and the plug to the transfer case.
Torque: 39 N*m (398 kgf*cm, 29 ft.*lbf)

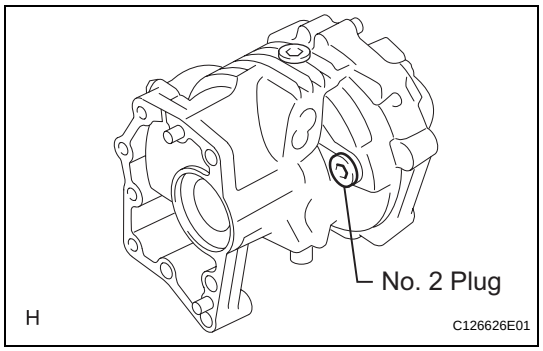

26. INSTALL TRANSFER CASE NO. 2 PLUG

(a) Install a new gasket and the plug to the transfer case.
Torque: 39 N*m (398 kgf*cm, 29 ft.*lbf)

27. INSTALL TRANSFER AND TRANSAXLE SETTING STUD BOLT

(a) Apply sealer to stud bolts.
(b) Install the stud bolts.
Torque: 39 N*m (398 kgf*cm, 29 ft.*lbf)
HINT:
Install the transfer side of the stud bolt (see illustration below) to the case.

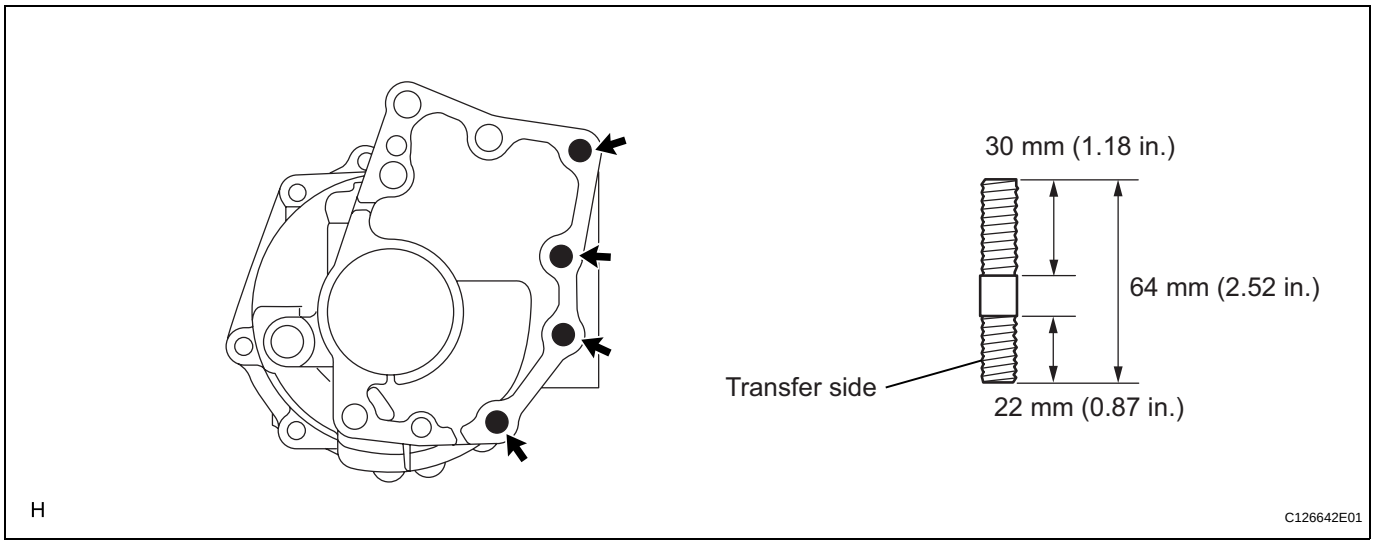

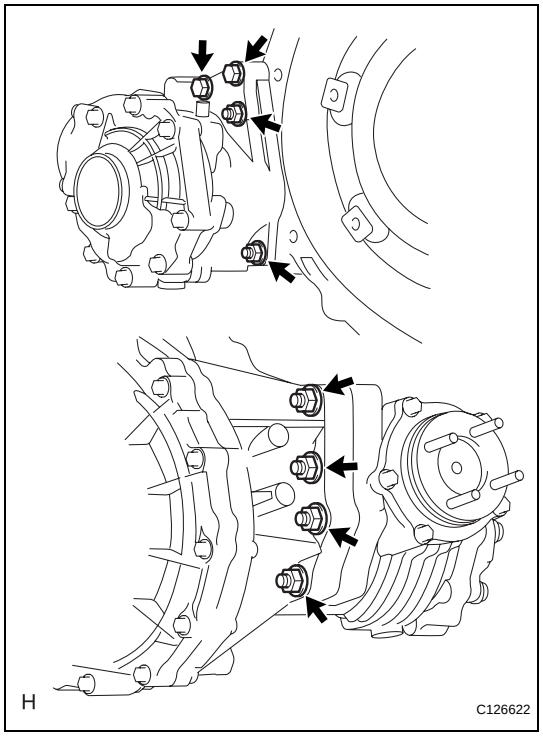

INSTALLATION

(2005/11-2006/01)

1. INSTALL TRANSFER ASSEMBLY

(a) Install the transfer to the transaxle with the 6 nuts and 2 bolts.
Torque: 69 N*m (700 kgf*cm, 51 ft.*lbf)

2. INSTALL REAR ENGINE MOUNTING BRACKET (See page AX-151)

3. INSTALL ENGINE ASSEMBLY WITH AUTOMATIC TRANSAXLE

(a) Install the engine with automatic transaxle (see page EM-105).

4. CONNECT CABLE TO NEGATIVE BATTERY TERMINAL

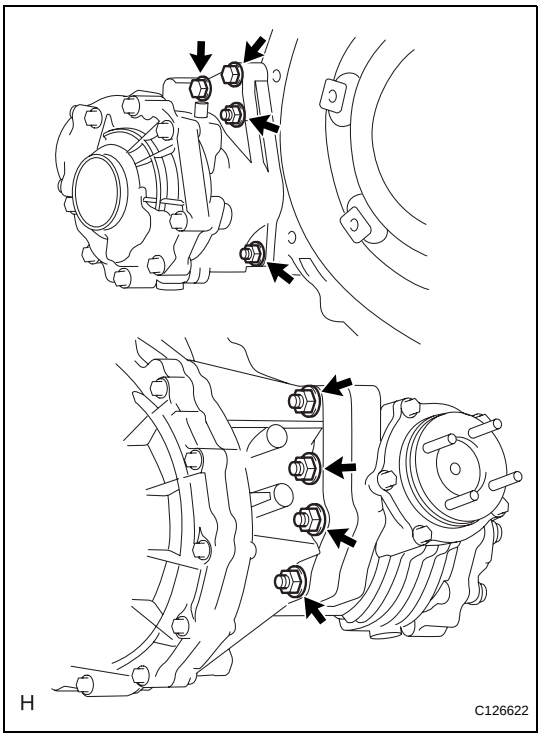

INSTALLATION

(2006/01-)

1. **INSTALL TRANSFER ASSEMBLY**
   (a) Install the transfer to the transaxle with the 6 nuts and 2 bolts.
   Torque: 69 N*m (700 kgf*cm, 51 ft.*lbf)

2. **REMOVE REAR ENGINE MOUNTING BRACKET (for 2GR-FE) (See page AX-174)**

3. **INSTALL REAR ENGINE MOUNTING BRACKET (for 2AZ-FE) (See page AX-151)**

4. **INSTALL ENGINE ASSEMBLY WITH AUTOMATIC TRANSAXLE**
   (a) for 2GR-FE:
   Install the engine with automatic transaxle (see page EM-21).
   (b) for 2AZ-FE:
   Install the engine with automatic transaxle (see page EM-105).

5. **CONNECT CABLE TO NEGATIVE BATTERY TERMINAL**

TRANSFER ASSEMBLY

COMPONENTS

(2005/11-2006/01)

TF

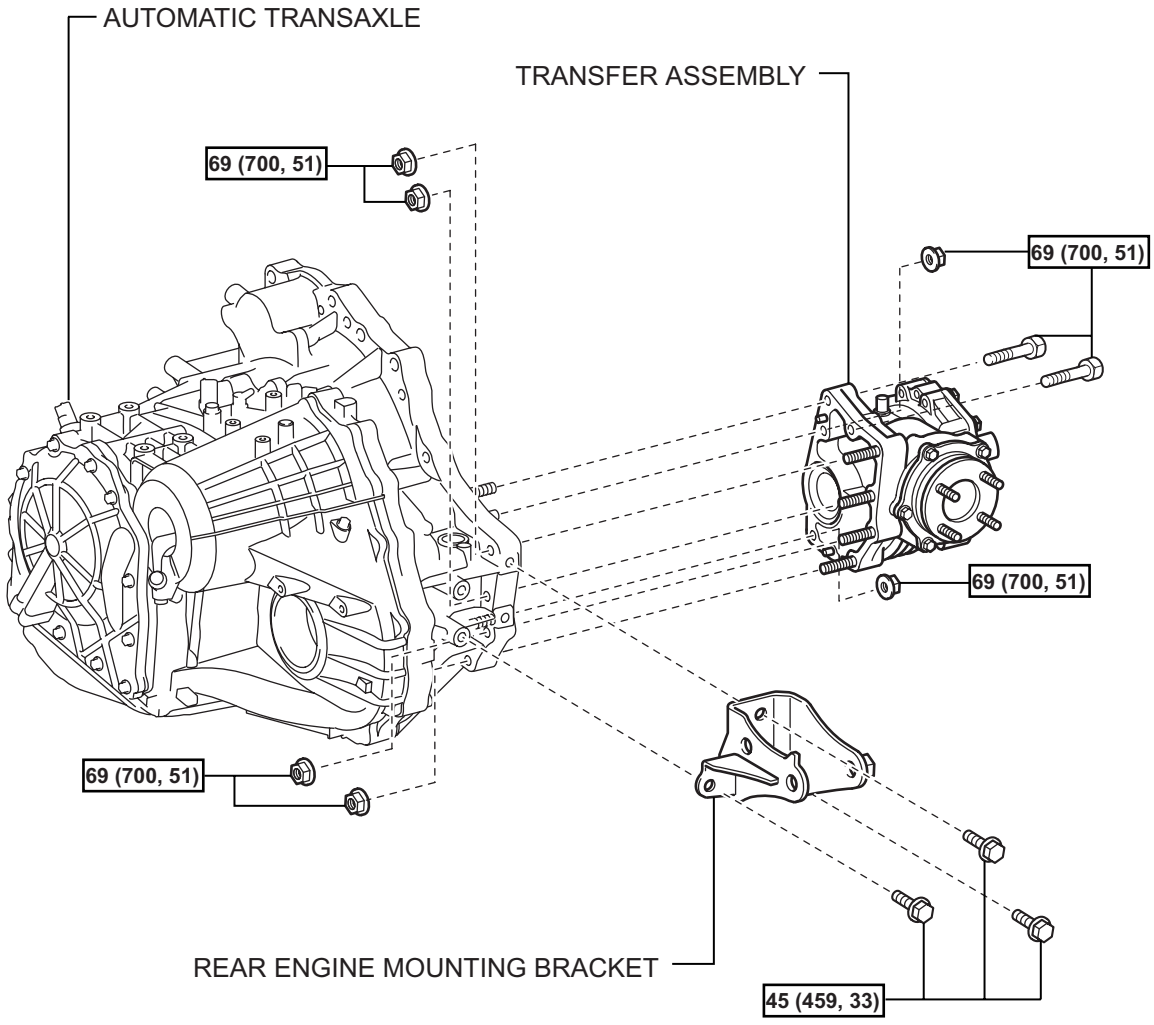

N*m (kgf*cm, ft.*lbf) : Specified torque

H

C132112E04

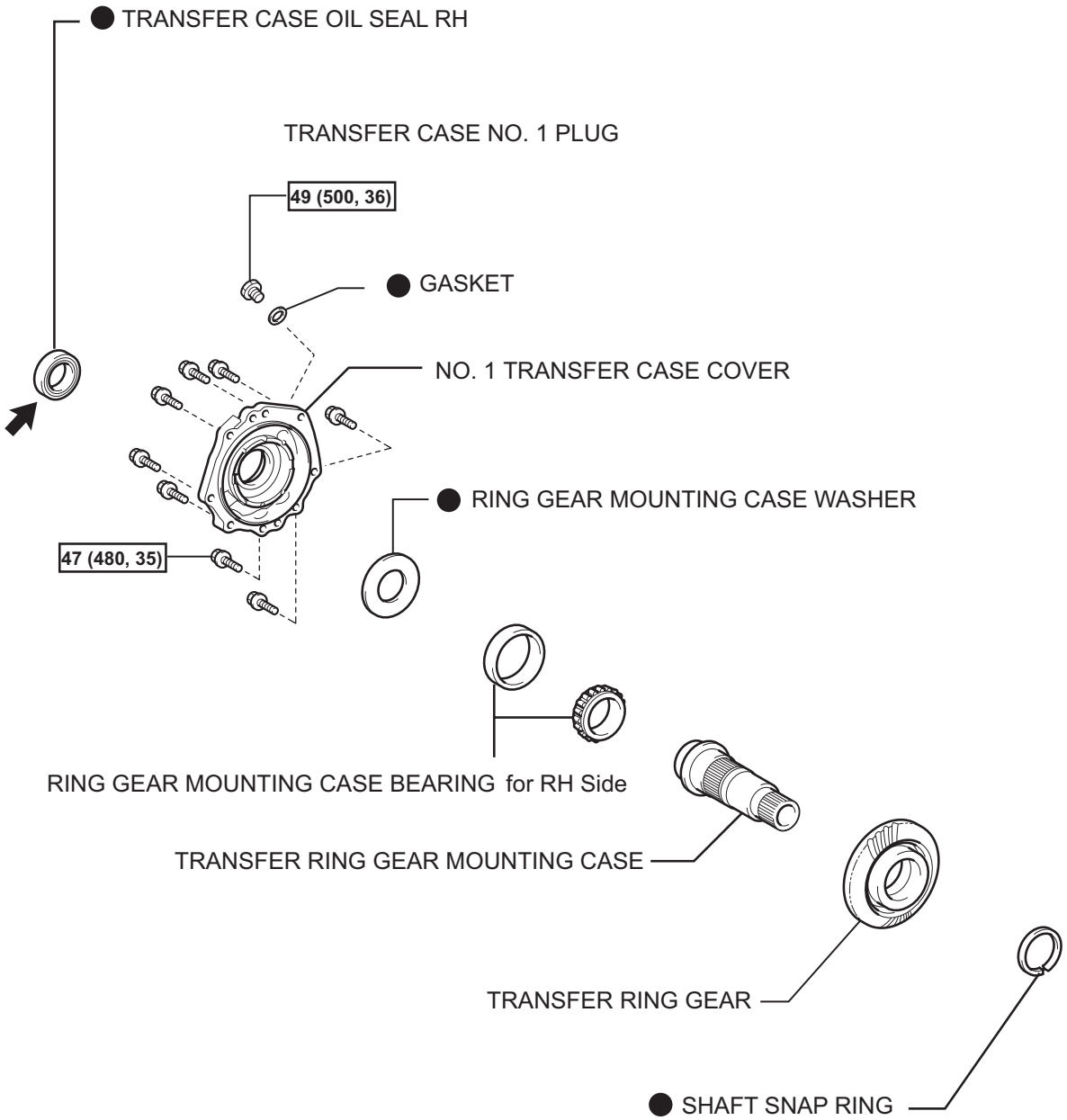

N*m (kgf*cm, ft.*lbf) : Specified torque

● Non-reusable part

Apply MP grease

T

C130882E04

TF

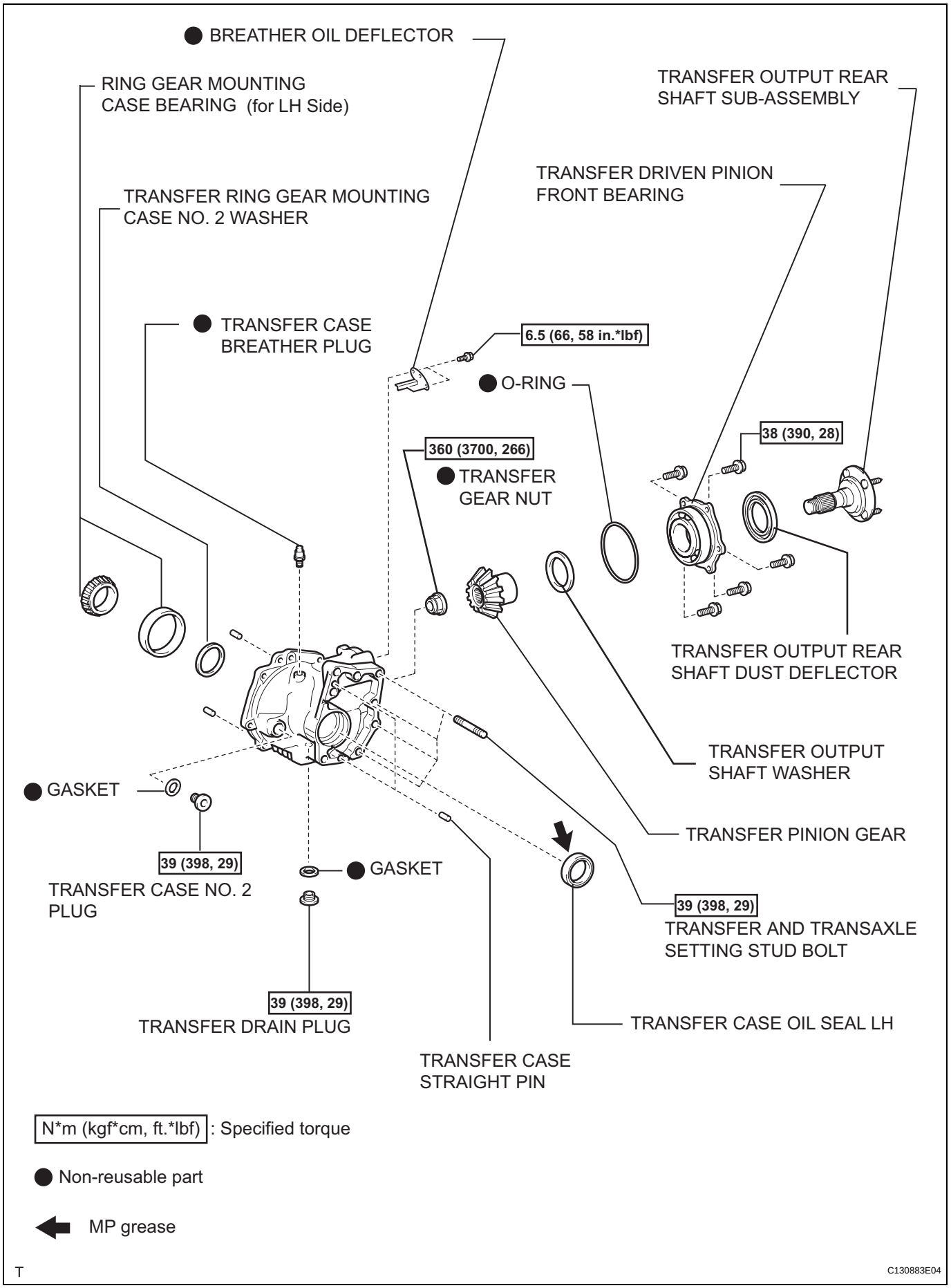
BREATHER OIL DEFLECTOR
RING GEAR MOUNTING CASE BEARING (for LH Side)
TRANSFER OUTPUT REAR SHAFT SUB-ASSEMBLY
TRANSFER DRIVEN PINION FRONT BEARING
TRANSFER RING GEAR MOUNTING CASE NO. 2 WASHER
TRANSFER CASE BREATHER PLUG
6.5 (66, 58 in.*lbf)
O-RING
38 (390, 28)
360 (3700, 266)
TRANSFER GEAR NUT
TRANSFER OUTPUT REAR SHAFT DUST DEFLECTOR
TRANSFER OUTPUT SHAFT WASHER
GASKET
TRANSFER PINION GEAR
39 (398, 29)
TRANSFER CASE NO. 2 PLUG
GASKET
39 (398, 29)
TRANSFER AND TRANSAXLE SETTING STUD BOLT
39 (398, 29)
TRANSFER DRAIN PLUG
TRANSFER CASE OIL SEAL LH
TRANSFER CASE STRAIGHT PIN
N*m (kgf*cm, ft.*lbf) : Specified torque
Non-reusable part
MP grease
T
C130883E04

TRANSFER CASE OIL SEAL (for LH Side)

COMPONENTS

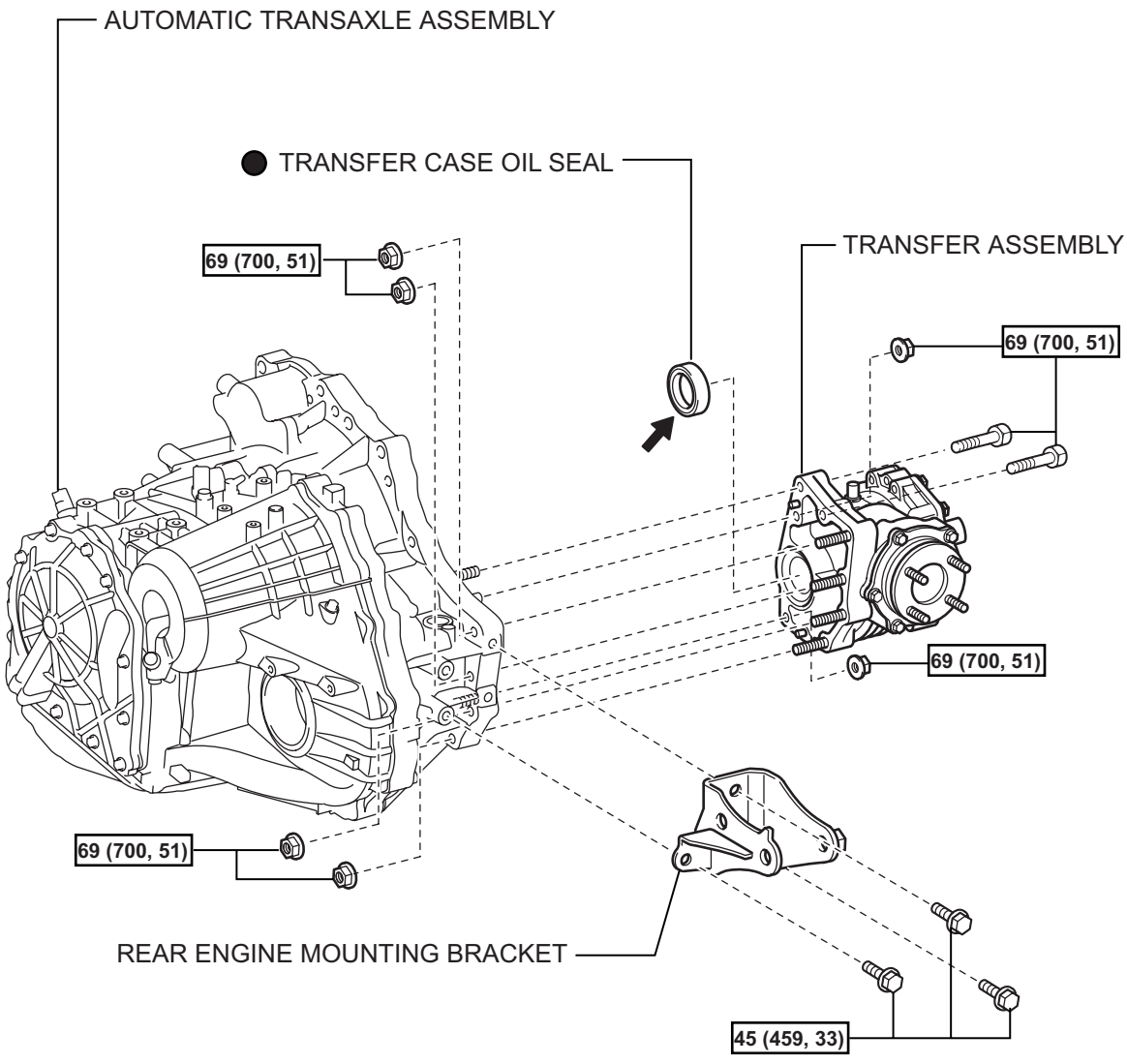

N*m (kgf*cm, ft.*lbf) : Specified torque

● Non-reusable part

← Apply MP grease

C126557E04

REPLACEMENT

1. **DISCONNECT CABLE FROM NEGATIVE BATTERY TERMINAL**
   CAUTION:
   Wait at least 90 seconds after disconnecting the cable from the negative (-) battery terminal to prevent airbag and seat belt pretensioner activation.

2. **DRAIN AUTOMATIC TRANSAXLE FLUID**
   (a) Remove the drain plug and gasket, and drain ATF.
   (b) Install a new gasket and drain plug.
   Torque: 47 N*m (479 kgf*cm, 35 ft.*lbf)

3. **DRAIN TRANSAXLE OIL**
   (a) Remove the filler plug and gasket.
   (b) Remove the drain plug and gasket, and drain the oil.
   (c) Install a new gasket and the drain plug.
   Torque: 39 N*m (398 kgf*cm, 28 ft.*lbf)

4. **DRAIN TRANSFER OIL**
   (a) Remove the drain plug and gasket, and drain the oil.
   (b) Install a new gasket and drain plug.
   Torque: 39 N*m (398 kgf*cm, 28 ft.*lbf)

5. **REMOVE PROPELLER WITH CENTER BEARING SHAFT ASSEMBLY (See page PR-3)**

6. **REMOVE REAR ENGINE MOUNTING BRACKET**
   (a) Remove the 3 bolts and mounting bracket.

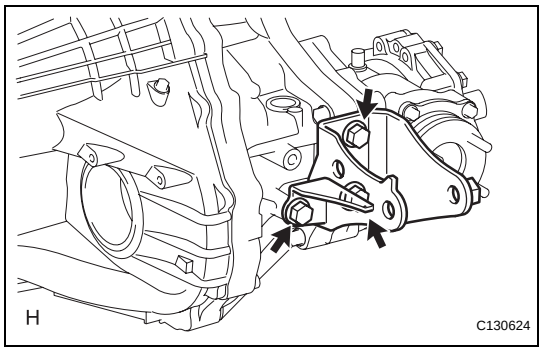

7. **REMOVE AUTOMATIC TRANSAXLE ASSEMBLY**
   (a) Remove the automatic transaxle (see page EM-98).

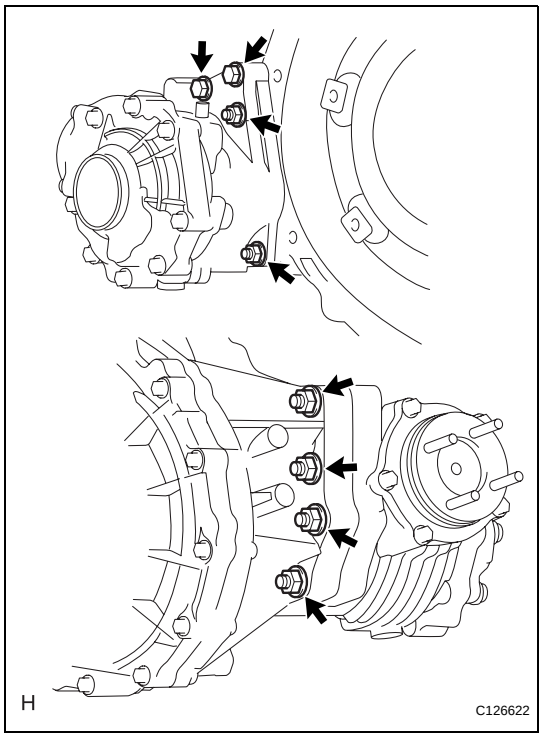

8. REMOVE TRANSFER ASSEMBLY

(a) Remove the 2 bolts, 6 nuts and transfer from the manual transaxle.

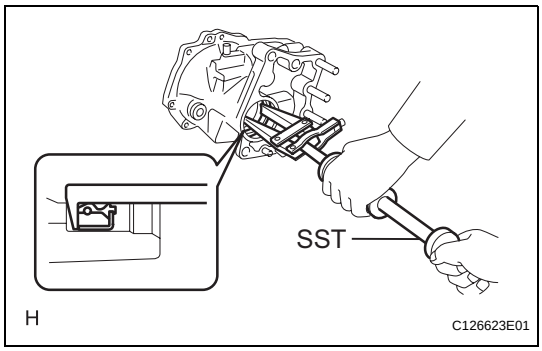

9. REMOVE TRANSFER CASE OIL SEAL

(a) Using SST, tap out the transfer case oil seal.
SST 09308-00010

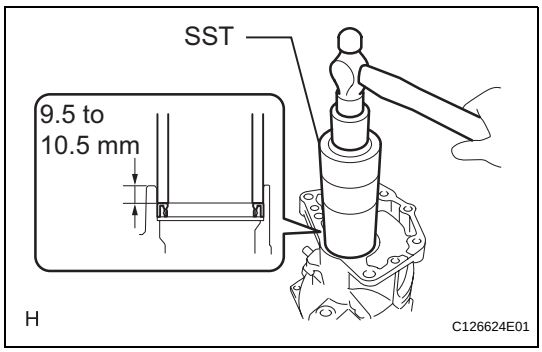

10. INSTALL TRANSFER CASE OIL SEAL

(a) Coat a new oil seal lip with MP grease.

(b) Using SST and a hammer, tap in the transfer case oil seal.
SST 09316-60011 (09316-00011)
Standard depth:
9.5 to 10.5 mm (0.37 to 0.41 in.)
NOTICE:
Do not damage the oil seal lip.

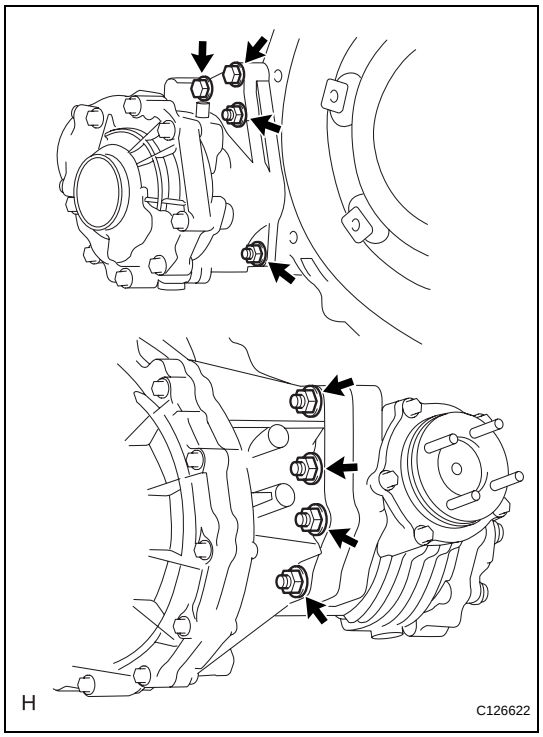

11. **INSTALL TRANSFER ASSEMBLY**
    (a) Install the transfer with the 6 nuts and 2 bolts.
    Torque: 69 N*m (700 kgf*cm, 51 ft.*lbf)

12. **INSTALL AUTOMATIC TRANSAXLE ASSEMBLY**
    (a) Install automatic transaxle (see page EM-105).

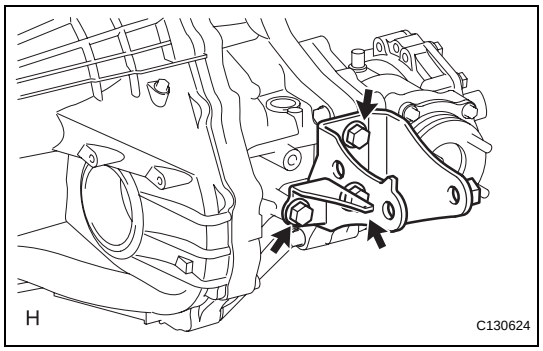

13. **INSTALL REAR ENGINE MOUNTING BRACKET**
    (a) Install the mounting bracket with the 3 bolts.
    Torque: 45 N*m (459 kgf*cm, 33 ft.*lbf)

14. **INSTALL PROPELLER WITH CENTER BEARING SHAFT ASSEMBLY (See page PR-5)**

15. **ADD AUTOMATIC TRANSAXLE FLUID**

16. **INSPECT AUTOMATIC TRANSAXLE FLUID (See page AX-102)**

17. **ADD TRANSFER OIL**

18. **INSPECT TRANSFER OIL (See page TF-45)**

19. **CONNECT CABLE TO NEGATIVE BATTERY TERMINAL**

20. **INSPECT SRS WARNING LIGHT**
    (a) Check the SRS warning light (see page RS-37).

TRANSFER CASE OIL SEAL (for RH Side)

COMPONENTS

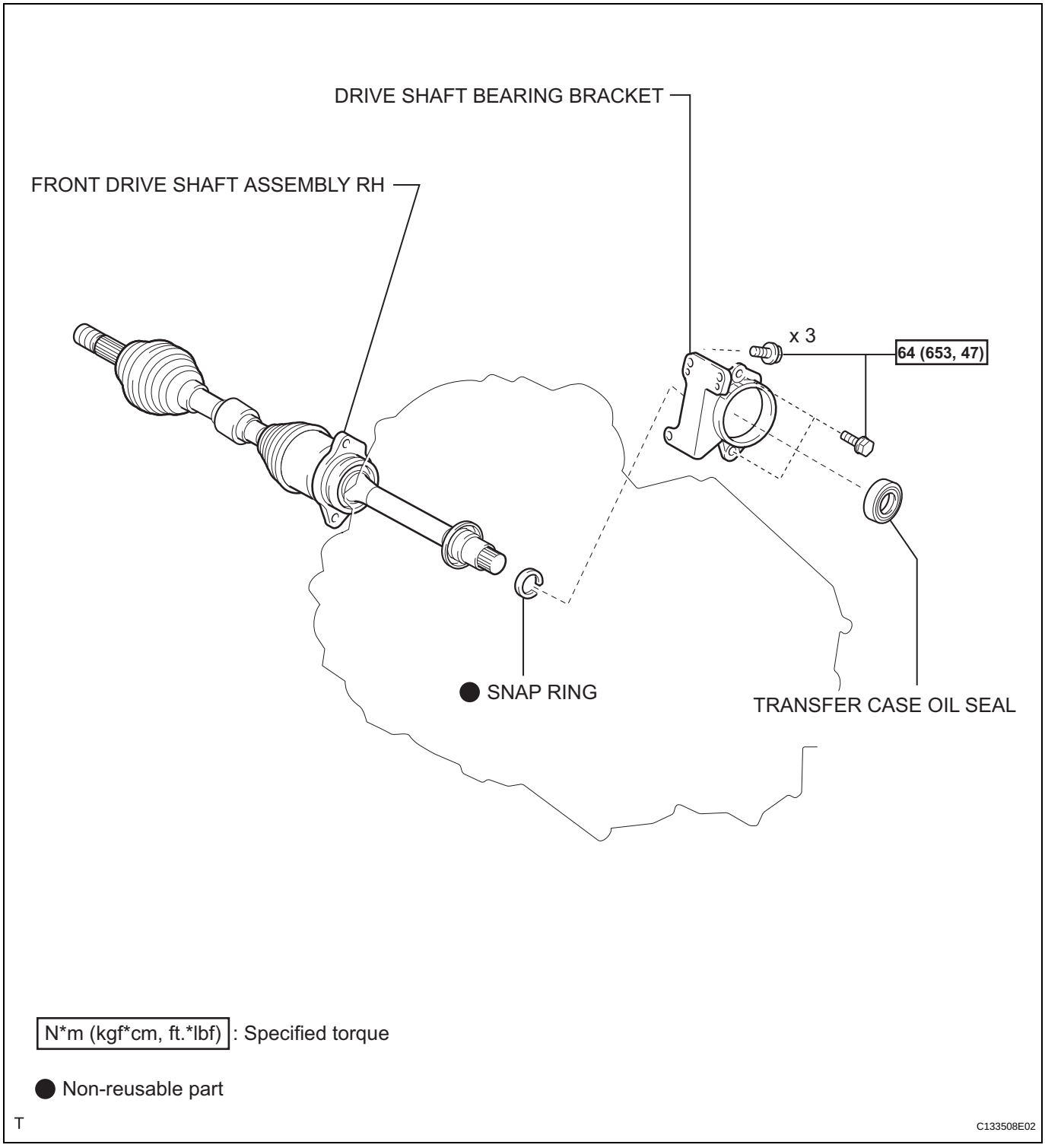

REPLACEMENT

1. **DISCONNECT CABLE FROM NEGATIVE BATTERY TERMINAL**
   NOTICE:
   Wait at least 90 seconds after disconnecting the cable from the negative (-) battery terminal to prevent airbag and seat belt pretensioner activation.

2. **DRAIN TRANSFER OIL**
   (a) Remove the drain plug and gasket, and drain the oil.
   (b) Install a new gasket and the drain plug.
   Torque: 39 N*m (398 kgf*cm, 29 ft.*lbf)

3. **REMOVE FRONT DRIVE SHAFT ASSEMBLY RH (See page DS-41)**

4. **REMOVE DRIVE SHAFT BEARING BRACKET**
   (a) Remove the 3 bolts and bracket from the transaxle.

5. **REMOVE TRANSFER CASE OIL SEAL (for RH Side)**
   (a) Using SST, tap out the oil seal from the transfer.
   SST 09308-00010

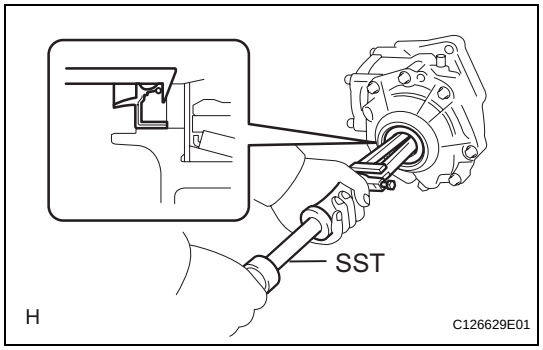

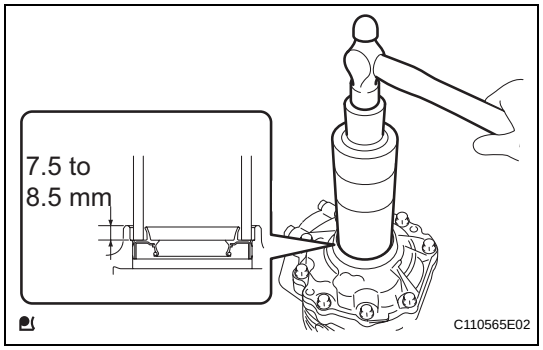

6. **INSTALL TRANSFER CASE OIL SEAL (for RH Side)**
   (a) Coat a new oil seal lip with MP grease.
   (b) Using SST and a hammer, tap in the oil seal.
   SST 09316-60011 (09316-00011)
   Standard depth:
   7.5 to 8.5 mm (0.30 to 0.33 in.)
   NOTICE:
   Do not damage the oil seal lip.

7. **INSTALL DRIVE SHAFT BEARING BRACKET**
   (a) Install the bracket to the transaxle with the 3 bolt.
   Torque: 64 N*m (653 kgf*cm, 47 ft.*lbf)

8. **INSTALL FRONT DRIVE SHAFT ASSEMBLY RH (See page DS-65)**

9. **ADD TRANSFER OIL**

10. **INSPECT TRANSFER OIL (See page TF-45)**

11. **CONNECT CABLE TO NEGATIVE BATTERY TERMINAL**

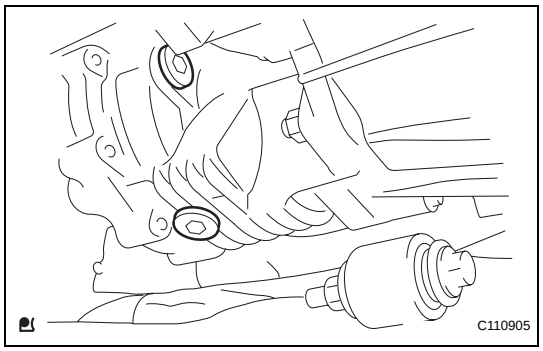

TRANSFER OIL

ON-VEHICLE INSPECTION

1. CHECK TRANSFER OIL

(a) Remove the transfer case plug No. 2 (for filler) and gasket.

(b) Check that the oil level is between 0 to 5.0 mm (0 to 0.20 in.) from the bottom lip of the case plug (for filler) hole.

If the result is not as specified, add transfer oil.

Oil grade:
GL-5
Viscosity:
SAE 80W-90
Standard capacity:
0.45 liter (0.48 US qts, 0.40 Imp. qts)
NOTICE:
- **When adding oil, pour it slowly.**
- **Too much or too little oil will lead to transfer problems.**

(c) When the oil level is too low, check for oil leakage.

(d) Install a new gasket into the case plug (for filler) and then tighten the plug.

Torque: 39 N*m (398 kgf*cm, 28 ft.*lbf)

2. ADD TRANSFER OIL

(a) Remove the case plug (for filler) and gasket.

(b) Pour oil so that the oil level is between 0 to 5.0 mm (0 to 0.197 in.) from the bottom lip of the case plug (for filler) hole.

NOTICE:
- **When adding oil, pour it slowly.**
- **Add oil a little at a time, waiting several minutes between each addition of oil.**

(c) Wait approximately 5 minutes and check that the oil level has not changed.

(d) Install a new gasket and the case plug (for filler).

Torque: 39 N*m (398 kgf*cm, 28 ft.*lbf)

PROBLEM SYMPTOMS TABLE

(2006/01-)

HINT:

Use the table below to help determine the cause of the problem symptom. The potential causes of the symptoms are listed in order of probability in the "Suspected area" column of the table. Check each symptom by checking the suspected areas in the order they are listed. Replace parts as necessary.

Transfer system

Symptom	Suspected Area	See page
Noise	1. Oil (level low)	TF-45
	2. Oil (wrong)	TF-45
	3. Transfer (faulty)	TF-60
Oil leakage	1. Oil (level too high)	TF-45
	2. Gasket (damaged)	TF-55
	3. Oil seal (worn or damaged)	TF-55
	4. O-ring (worn or damaged)	TF-55

TRANSFER SYSTEM

PRECAUTION

1. **Before disassembling the transfer assembly, thoroughly clean it by removing any foreign matter. This will help prevent contamination during disassembly and reassembly.**
2. **When removing the transfer cover or any other light alloy parts, do not pry them off with a screwdriver or other tool that may cause damage. Instead, tap the parts with a plastic-faced hammer.**
3. **Always arrange removed parts in the order they were removed and protect them from foreign matter.**
4. **Before installation of each part, thoroughly clean and dry it. Then apply hypoid gear oil to it. Do not use alkaline chemicals to clean aluminum parts, rubber parts or ring gear set bolts. Also, do not use white gasoline or other cleaning oils to clean O-rings, oil seals or rubber parts.**
5. **Coat any sliding surface or rotating parts with hypoid gear oil.**
6. **Do not directly fix a part in a vise. Place aluminum plates between the part and vise.**
7. **Replace any damaged or deformed snap rings with new ones.**
8. **Do not allow the case's mating surface to be scratched. Scratches may lead to oil leakage.**
9. **Using a razor blade and gasket scraper, remove old Toyota Genuine Seal Packing Black, Three Bond 1207B or Equivalent from the seal surface.**
10. **Clean all parts to remove excess Toyota Genuine Seal Packing Black, Three Bond 1207B or Equivalent completely.**
11. **Clean the sealing surface with solvent so that no residue remains on the seal surface.**
12. **Apply Toyota Genuine Seal Packing Black, Three Bond 1207B or Equivalent in a continuous line of approximately 1.2 mm (0.047 in.) in diameter along the sealing surface.**
13. **Be sure to assemble parts within 10 minutes of Toyota Genuine Seal Packing Black, Three Bond 1207B or Equivalent application. Otherwise, the Toyota Genuine Seal Packing Black, Three Bond 1207B or Equivalent must be removed and reapplied.**
14. **After sealing parts, do not allow oil to contact the seal for at least 1 hour.**
15. **Do not allow scratches on a part's contact surface with an oil seal or gasket. Scratches may lead to oil leakage.**
16. **When press-fitting an oil seal, be careful not to damage the lip of the oil seal and its periphery.**

PROBLEM SYMPTOMS TABLE

(2005/11-2006/01)

HINT:

Use the table below to help determine the cause of the problem symptom. The potential causes of the symptoms are listed in order of probability in the "Suspected area" column of the table. Check each symptom by checking the suspected areas in the order they are listed. Replace parts as necessary.

Transfer system

Symptom	Suspected Area	See page
Noise	1. Oil (level low)	TF-45
	2. Oil (wrong)	TF-45
	3. Transfer (faulty)	TF-60
Oil leakage	1. Oil (level too high)	TF-45
	2. Gasket (damaged)	TF-52
	3. Oil seal (worn or damaged)	TF-52
	4. O-ring (worn or damaged)	TF-52

HIGH PITCHED HORN

COMPONENTS

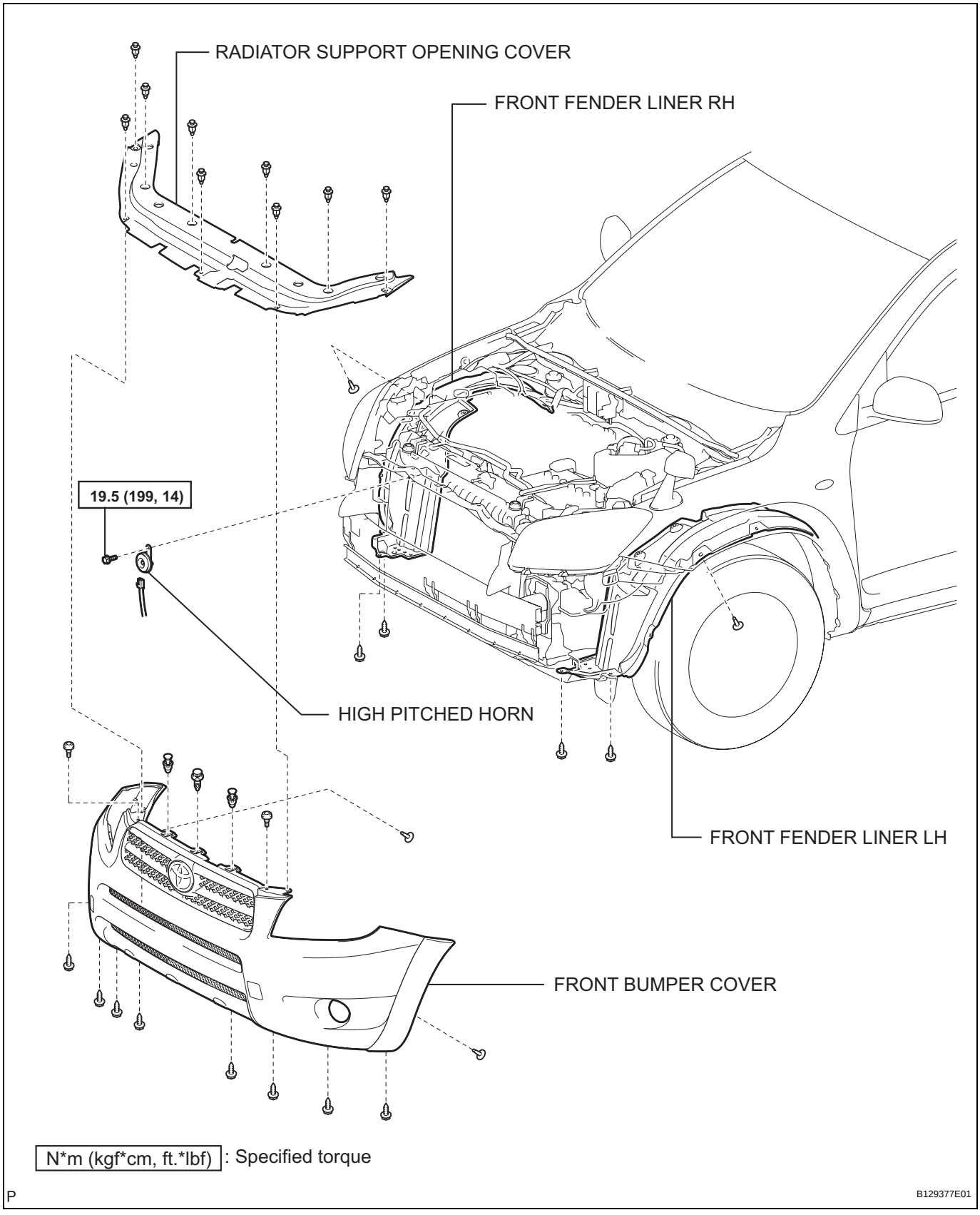

REMOVAL

1. **REMOVE RADIATOR SUPPORT OPENING COVER (See page ET-4)**
2. **REMOVE FRONT FENDER LINER LH (See page ET-4)**
3. **REMOVE FRONT FENDER LINER RH (See page ET-4)**
4. **REMOVE FRONT BUMPER COVER (See page ET-5)**
5. **REMOVE HIGH PITCHED HORN**
   (a) Disconnect the horn connector.
   (b) Remove the bolt and horn.

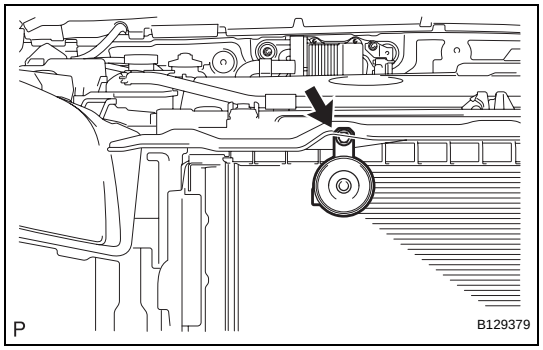

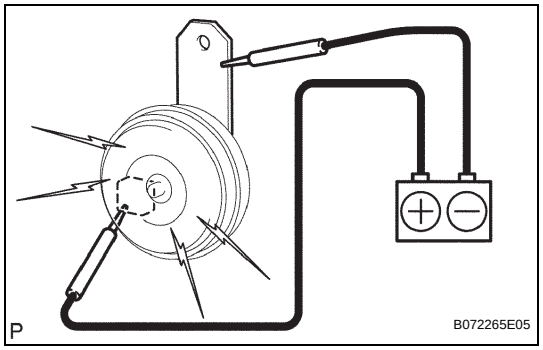

INSPECTION

1. **INSPECT HIGH PITCHED HORN**
   (a) Apply battery voltage to the horn and check the operation of the horn.
   OK

Measurement Condition	Specified Condition
Battery positive (+) → Terminal 1	Horn sounds
Battery negative (-) → Horn bracket	

If the result is not as specified, replace the horn.

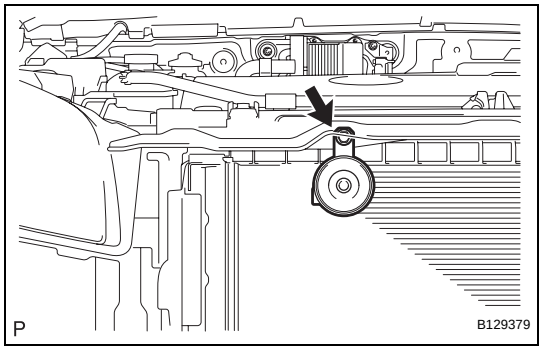

INSTALLATION

1. **INSTALL HIGH PITCHED HORN**
   (a) Place the stay onto the baffle part of the radiator support upper, and then install the horn with the bolt.
   Torque: 19.5 N*m (199 kgf*cm, 14 ft.*lbf)
   (b) Connect the horn connector.
2. **INSTALL FRONT BUMPER COVER (See page ET-11)**
3. **INSTALL FRONT FENDER LINER RH (See page ET-12)**
4. **REMOVE FRONT FENDER LINER LH (See page ET-12)**
5. **REMOVE RADIATOR SUPPORT OPENING COVER (See page ET-12)**

HORN RELAY

ON-VEHICLE INSPECTION

1. REMOVE ENGINE ROOM NO. 1 RELAY BLOCK COVER

2. INSPECT INTEGRATION RELAY (UNIT A: HORN RELAY)

(a) Using a screwdriver, detach the 2 claws and disconnect the integration relay from the engine room junction block.
HINT:
Tape the screwdriver tip before use.

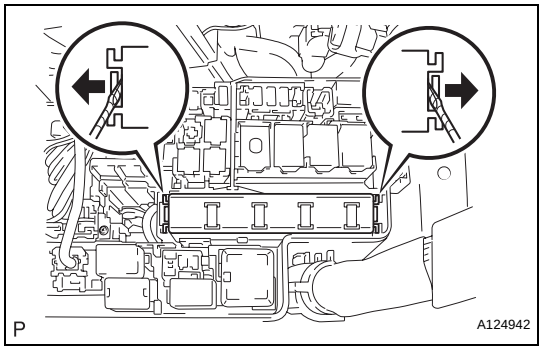

(b) Measure the resistance of the integration relay.
Standard voltage

Tester Connection	Specified Condition
1A-8 - 1C-1	10 kΩ or higher
1A-8 - 1A-5	
1A-8 - 1C-1	Below 1 Ω (when battery voltage is applied to terminals 1A-7 and 1A-6)
1A-8 - 1A-5	

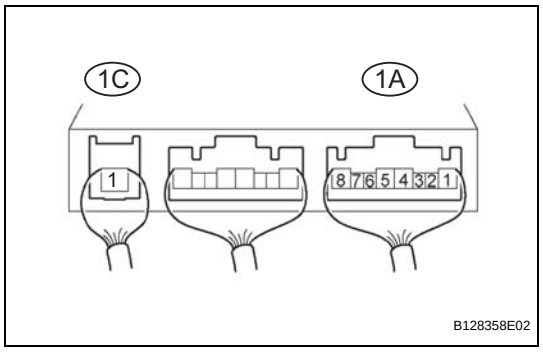

If the result is not as specified, replace the integration relay.

3. INSTALL ENGINE ROOM NO. 1 RELAY BLOCK COVER

SYSTEM DIAGRAM

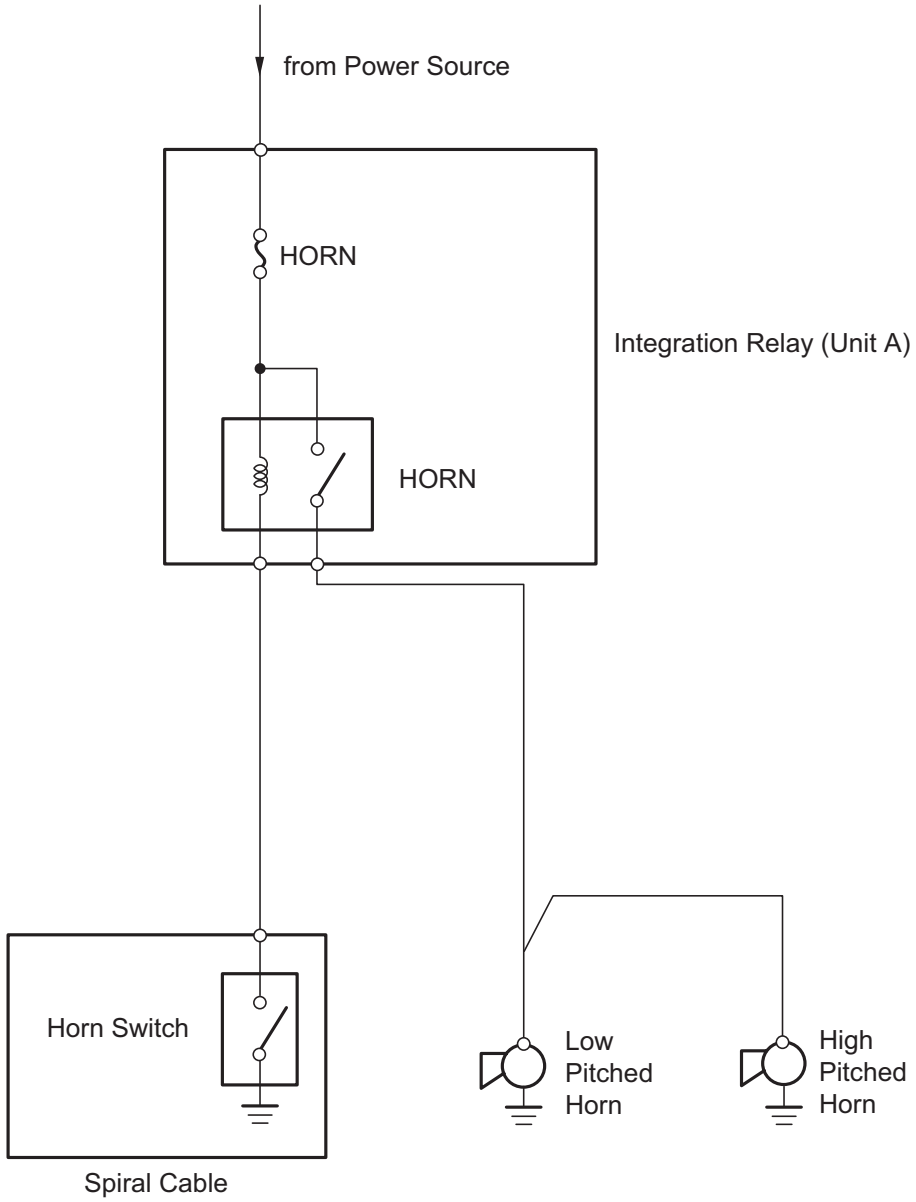

Y

B129383E03

PROBLEM SYMPTOMS TABLE

HINT:
Use the table below to help determine the cause of the problem symptom. The potential causes of the symptoms are listed in order of probability in the "Suspected area" column of the table. Check each symptom by checking the suspected areas in the order they are listed. Replace parts as necessary.

Horn system

Symptom	Suspected area	See page
Horn does not sound	1. HORN fuse	HO-1
	2. Integration relay (HORN relay)	HO-5
	3. High pitched horn	HO-9
	4. Low pitched horn	HO-7
	5. Spiral cable (horn switch)	-
	6. Wire harness	-

HORN SYSTEM

PARTS LOCATION

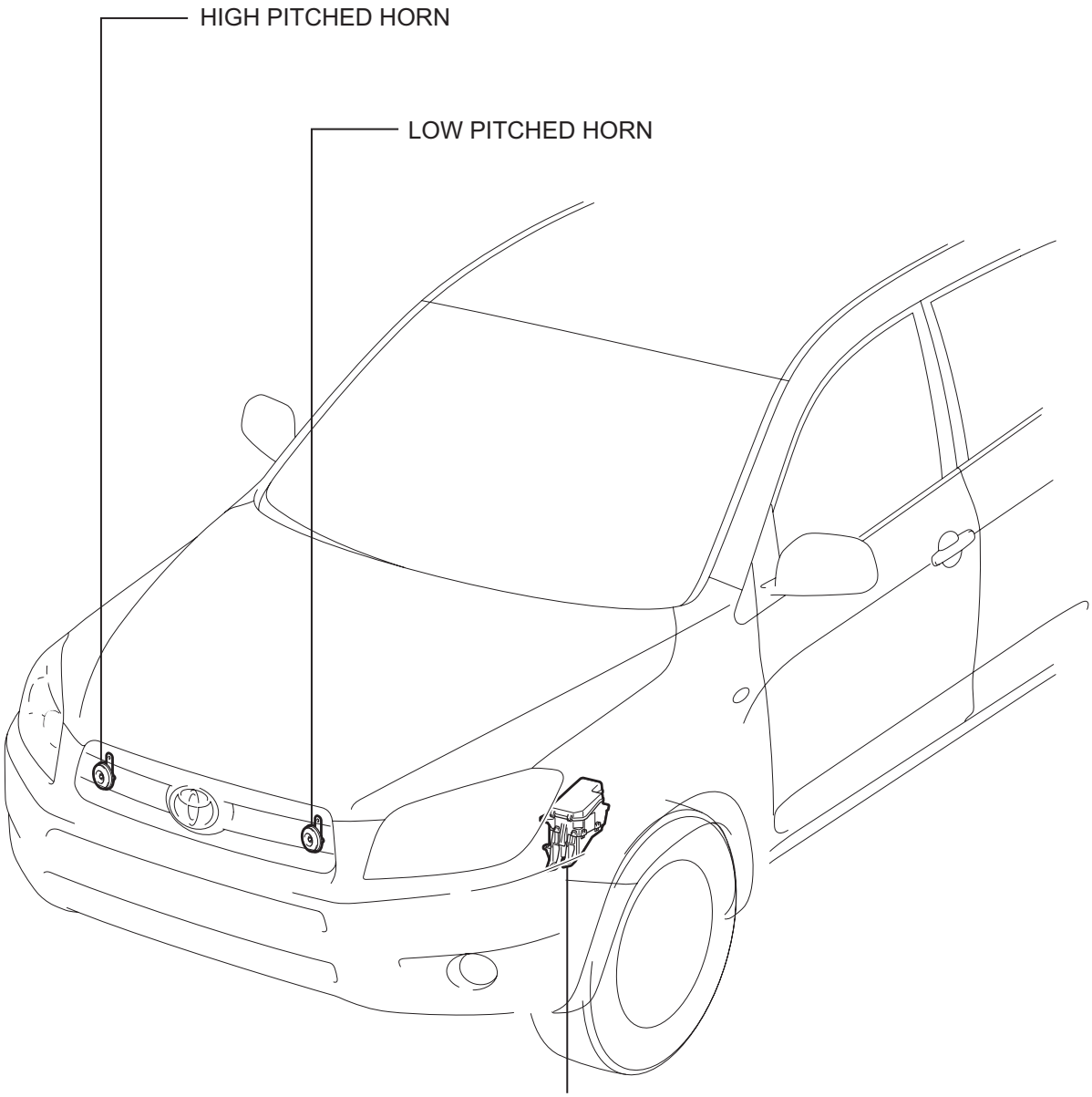

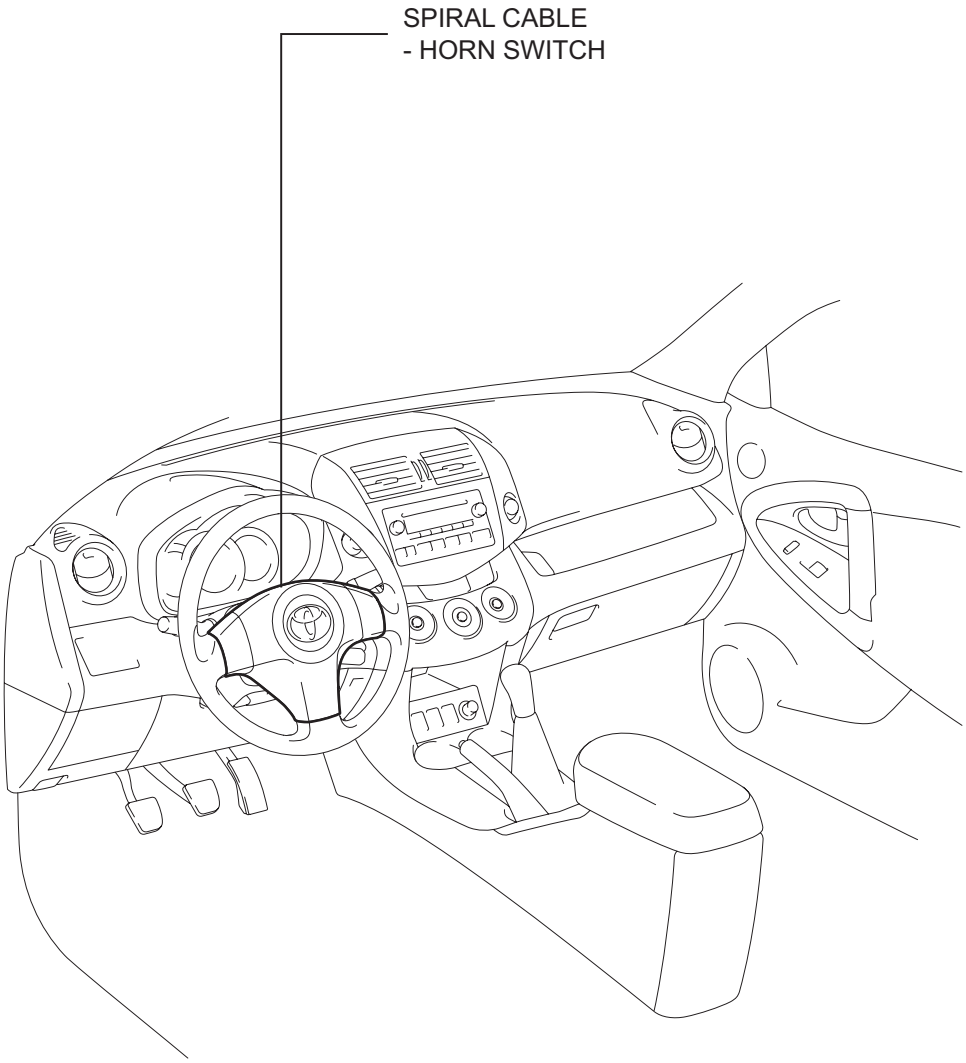
SPIRAL CABLE
- HORN SWITCH

LOW PITCHED HORN

COMPONENTS

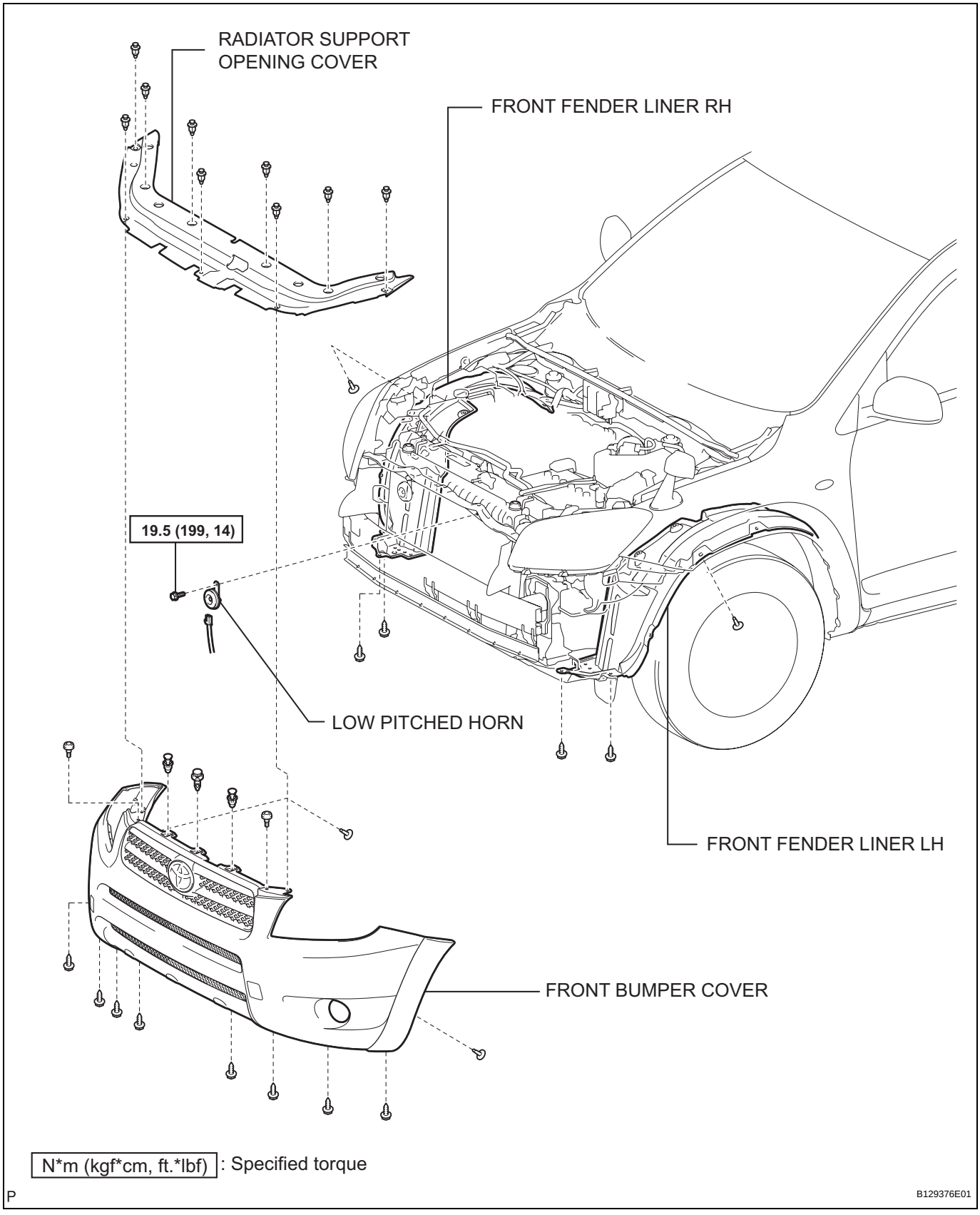

N*m (kgf*cm, ft.*lbf) : Specified torque

P

B129376E01

REMOVAL

1. **REMOVE RADIATOR SUPPORT OPENING COVER (See page ET-4)**
2. **REMOVE FRONT FENDER LINER LH (See page ET-4)**
3. **REMOVE FRONT FENDER LINER RH (See page ET-4)**
4. **REMOVE FRONT BUMPER COVER (See page ET-5)**
5. **REMOVE LOW PITCHED HORN**
   (a) Disconnect the horn connector.
   (b) Remove the bolt and horn.

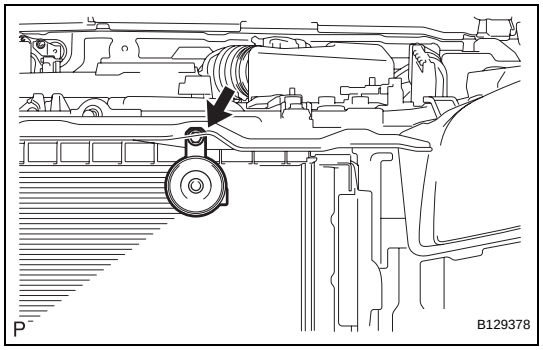

INSPECTION

1. **INSPECT LOW PITCHED HORN**
   (a) Apply battery voltage to the horn and check the operation of the horn.
   OK

Measurement Condition	Specified Condition
Battery positive (+) → Terminal 1	Horn sounds
Battery negative (-) → Horn bracket	

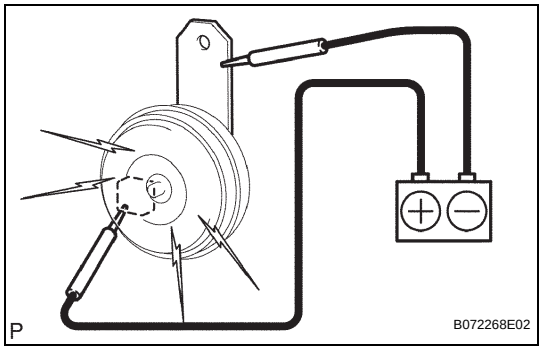

If the result is not as specified, replace the horn.

INSTALLATION

1. **INSTALL LOW PITCHED HORN**
   (a) Place the stay onto the baffle part of the radiator support upper, and then install the horn with the bolt.
   Torque: 19.5 N*m (199 kgf*cm, 14 ft.*lbf)
   (b) Connect the horn connector.
2. **INSTALL FRONT BUMPER COVER (See page ET-11)**
3. **INSTALL FRONT FENDER LINER RH (See page ET-12)**
4. **INSTALL FRONT FENDER LINER LH (See page ET-12)**
5. **INSTALL RADIATOR SUPPORT OPENING COVER (See page ET-12)**

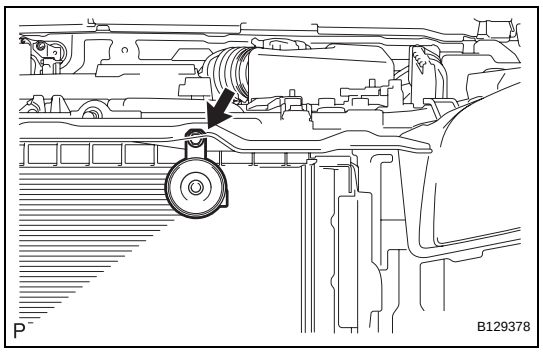

REMOVAL

1. TABLE OF BOLT, SCREW AND NUT

HINT:

All bolts, screws and nuts relevant to installing and removing the instrument panel are shown along with their alphabet codes in the table below.

mm (in.) (L=Length)

Code	Shape	Code	Shape	Code	Shape
A	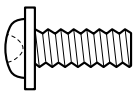 φ=5 (0.20) L=14 (0.55)	B	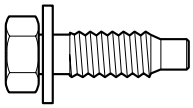 φ=6 (0.24) L=14 (0.55)	C	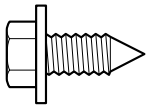 φ=5 (0.20) L=16 (0.63)
D	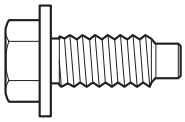 φ=6 (0.24) L=20 (0.79)	E	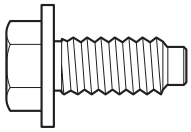 φ=7 (0.28) L=20 (0.79)	F	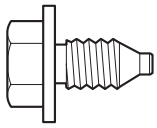 φ=6 (0.24) L=22 (0.87)

G

B129999E01

2. DISCONNECT CABLE FROM NEGATIVE BATTERY TERMINAL

CAUTION:

Wait at least 90 seconds after disconnecting the cable from the negative (-) battery terminal to prevent airbag and seat belt pretensioner activation.

3. REMOVE INSTRUMENT PANEL SUB-ASSEMBLY

(a) Remove the instrument panel (see page IP-4).

4. REMOVE STEERING PAD ASSEMBLY (See page RS-336)

5. REMOVE STEERING WHEEL ASSEMBLY (See page SR-12)

6. REMOVE STEERING COLUMN COVER (See page SR-12)

7. REMOVE SPIRAL CABLE SUB-ASSEMBLY (See page RS-346)

8. REMOVE HEADLIGHT DIMMER SWITCH ASSEMBLY

9. REMOVE WINDSHIELD WIPER SWITCH ASSEMBLY

10. REMOVE HEATER CONTROL SUB-ASSEMBLY (for Automatic Air Conditioning System) (See page AC-241)

11. REMOVE HEATER CONTROL SUB-ASSEMBLY (for Manual Air Conditioning System) (See page AC-243)

IP

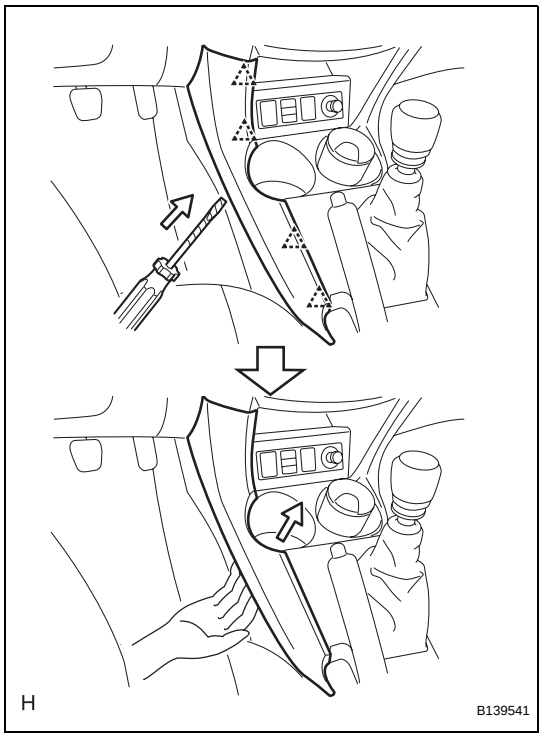

12. REMOVE NO. 1 CONSOLE UPPER PANEL GARNISH

(a) Using a screwdriver, detach the 4 clips and upper panel garnish.
HINT:
Tape the screwdriver tip before use.

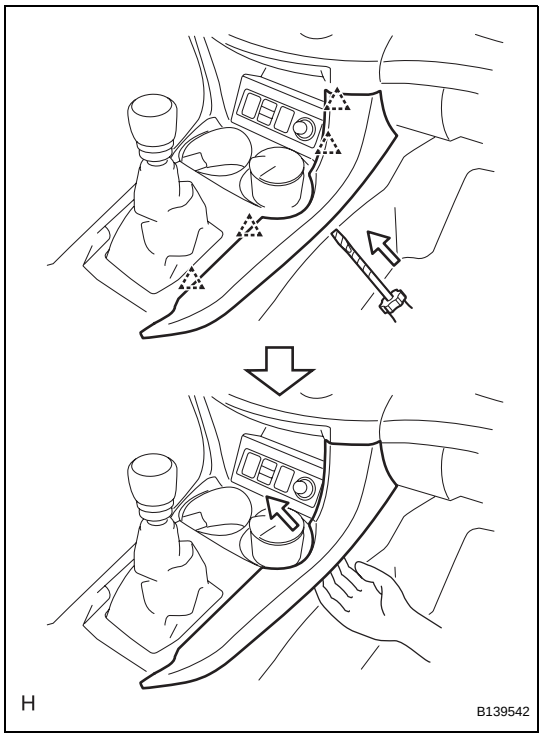

13. REMOVE NO. 2 CONSOLE UPPER PANEL GARNISH

(a) Using a screwdriver, detach the 4 clips and upper panel garnish.
HINT:
Tape the screwdriver tip before use.

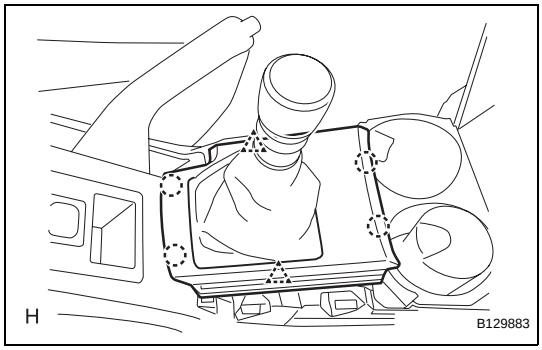

14. REMOVE UPPER CONSOLE PANEL SUB-ASSEMBLY

(a) Remove the shift lever knob.
(b) Using a screwdriver, detach the 2 clips, 4 claws and remove the upper console panel then disconnect the connector.
HINT:
Tape the screwdriver tip before use.

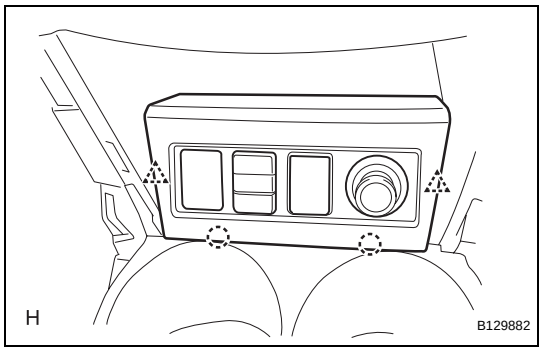

15. REMOVE SWITCH BASE

(a) Detach the 2 clips and 2 claws.

(b) Disconnect the connectors and remove the switch base.

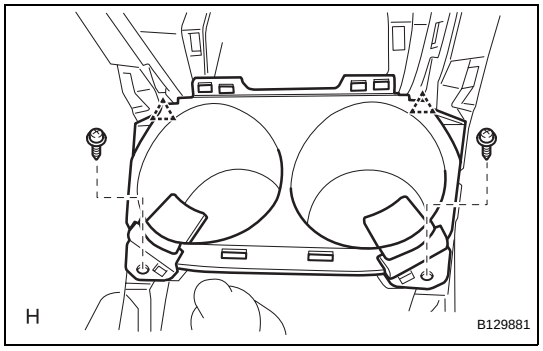

16. REMOVE CONSOLE CUP HOLDER BOX

(a) Remove the 2 screws.

(b) Detach the 2 clips and remove the cup holder box.

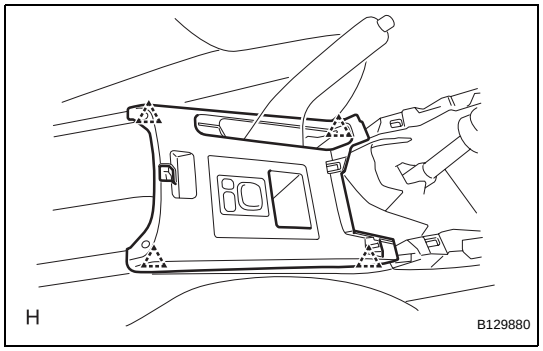

17. REMOVE UPPER REAR CONSOLE PANEL SUB-ASSEMBLY

(a) Using a screwdriver, detach the 4 claws and 2 clips.
HINT:
Tape the screwdriver tip before use.

(b) Disconnect the connector and remove the upper rear console panel.

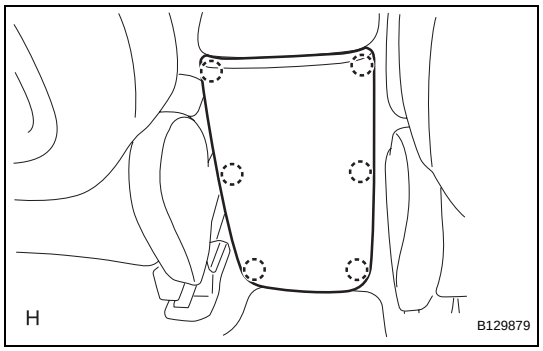

18. REMOVE CONSOLE REAR END PANEL

(a) Using a screwdriver, detach the 6 claws and remove the console rear end panel.
HINT:
Tape the screwdriver tip before use.

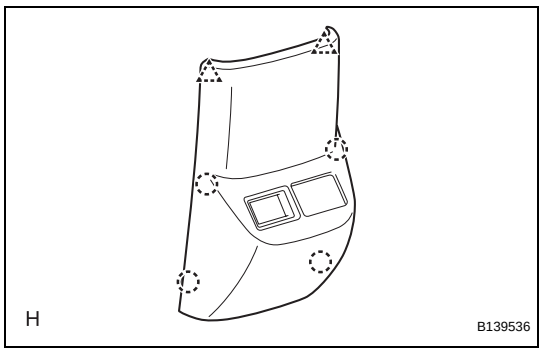

19. REMOVE CONSOLE REAR END PANEL (RSE Type)

(a) Using a screwdriver, detach the 4claws, 2 clips and remove the console rear end panel then disconnect the connectors.
HINT:
Tape the screwdriver tip before use.

IP

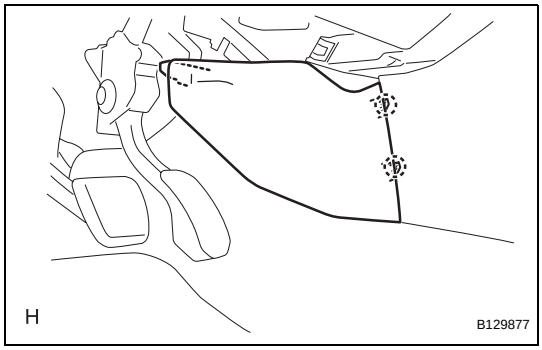

20. REMOVE NO. 1 INSTRUMENT PANEL BRACKET COVER INNER LH

(a) Detach the 2 claws and remove the instrument panel bracket cover.

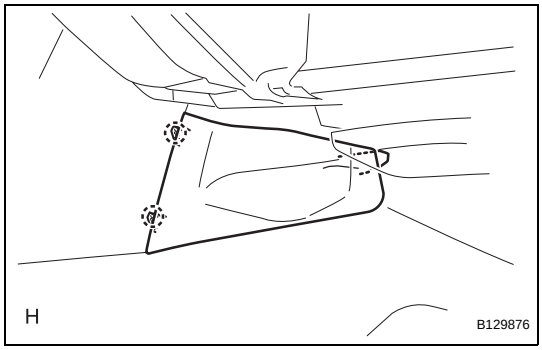

21. REMOVE NO. 1 INSTRUMENT PANEL BRACKET COVER INNER RH

(a) Detach the 2 claws and remove the instrument panel bracket cover.

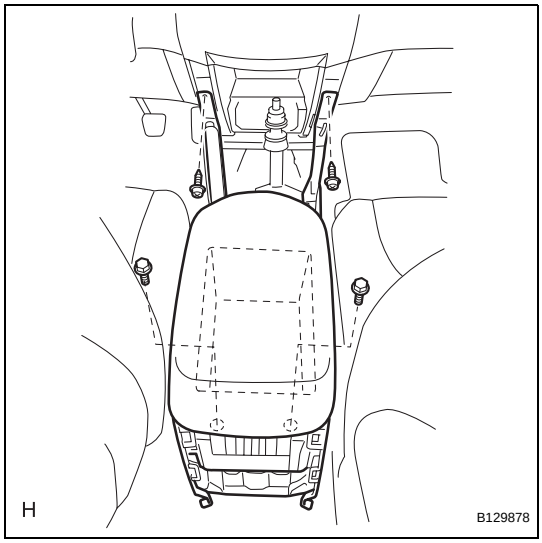

22. REMOVE REAR CONSOLE BOX SUB-ASSEMBLY

(a) Remove the console box carpet.
(b) Remove the 2 bolts and 2 screws.
(c) Disconnect the connector and remove the rear console box.

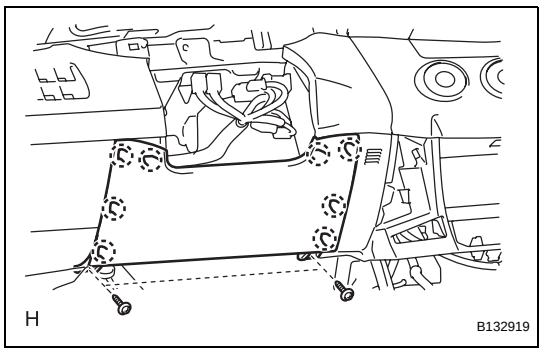

23. REMOVE LOWER INSTRUMENT PANEL FINISH PANEL

(a) Remove the 2 screws.
(b) Using a screwdriver detach the 8 claws and remove the lower instrument panel finish panel.
HINT:
Tape the screwdriver tip before use.

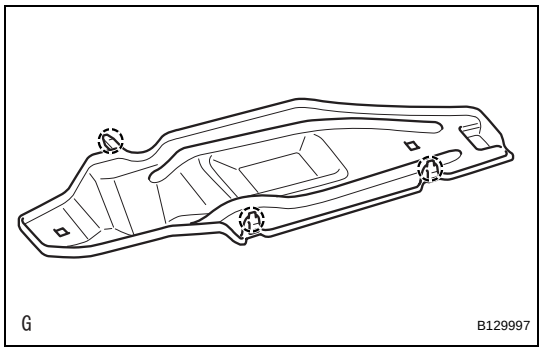

24. REMOVE NO. 2 INSTRUMENT PANEL UNDER COVER SUB-ASSEMBLY

(a) Detach the 2 claws and remove the instrument panel under cover.

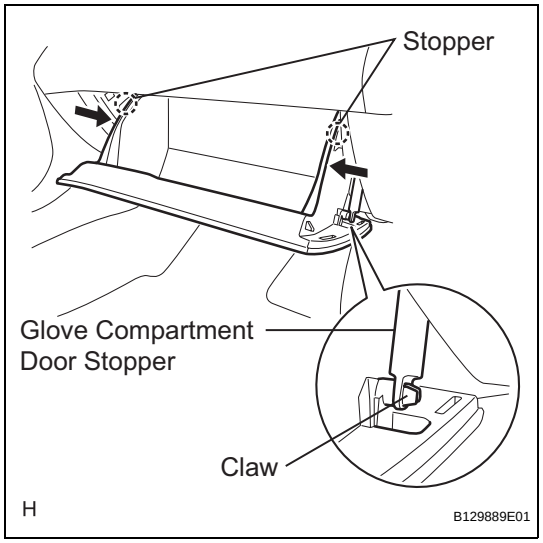

25. REMOVE GLOVE COMPARTMENT DOOR ASSEMBLY

(a) Open the glove compartment door.

(b) Detach the claw from the glove compartment door stopper.

(c) While pushing in the sides of the glove compartment door as indicated by the arrows in the illustration, open the door to release it from the 2 stoppers.

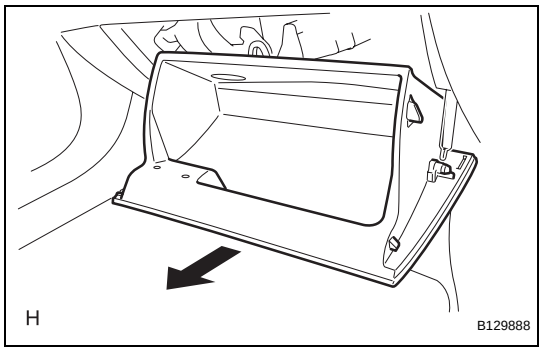

(d) Open the door until it is horizontal.

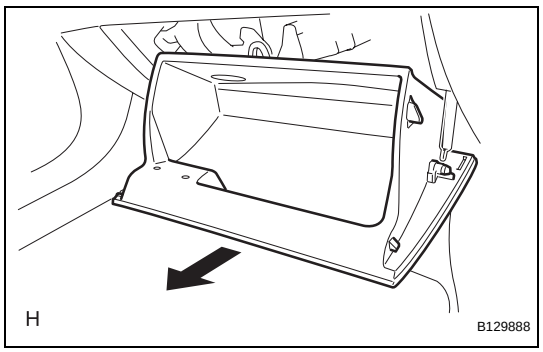

(e) Pull the glove compartment door toward the rear of the vehicle to detach the 2 hinges and remove the glove compartment door.

IP

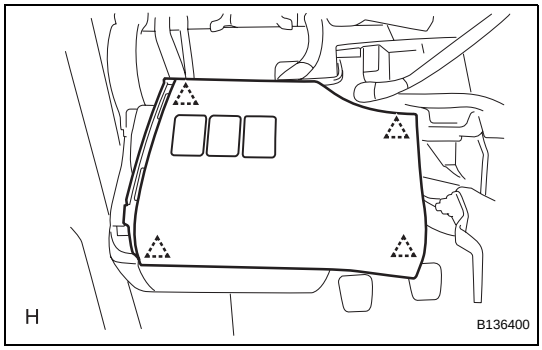

26. REMOVE NO. 1 SWITCH HOLE BASE

(a) Using a screwdriver, detach the 4 clips.
(b) Disconnect the connectors and remove the switch hole base.

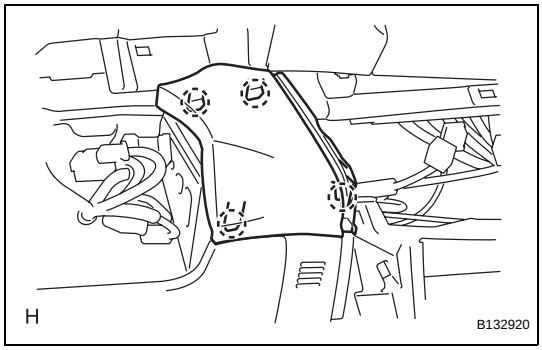

27. REMOVE INSTRUMENT PANEL SAFETY PAD COVER

(a) Using a screwdriver, detach the 4 claws and remove the instrument panel safety pad cover.
HINT:
Tape the screwdriver tip before use.

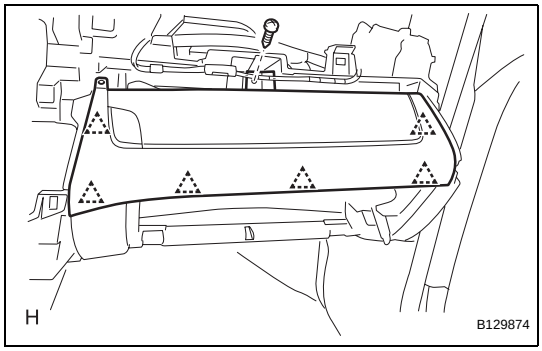

28. REMOVE INSTRUMENT PANEL BOX

(a) Remove the screw.
(b) Using a screwdriver, detach the 6 clips and remove the instrument panel box.
HINT:
Tape the screwdriver tip before use.

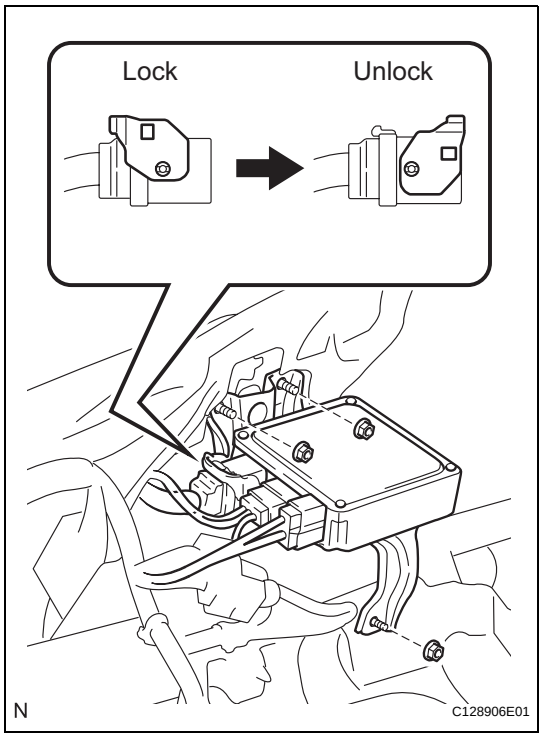

29. REMOVE POWER STEERING ECU ASSEMBLY

(a) Disconnect the connectors.
(b) Remove the 3 nuts and ECU.

30. REMOVE LOWER INSTRUMENT PANEL

(a) Remove the 2 bolts, 3 screws and 2 clips.
(b) Disconnect the connectors and clamps and remove the lower instrument panel.

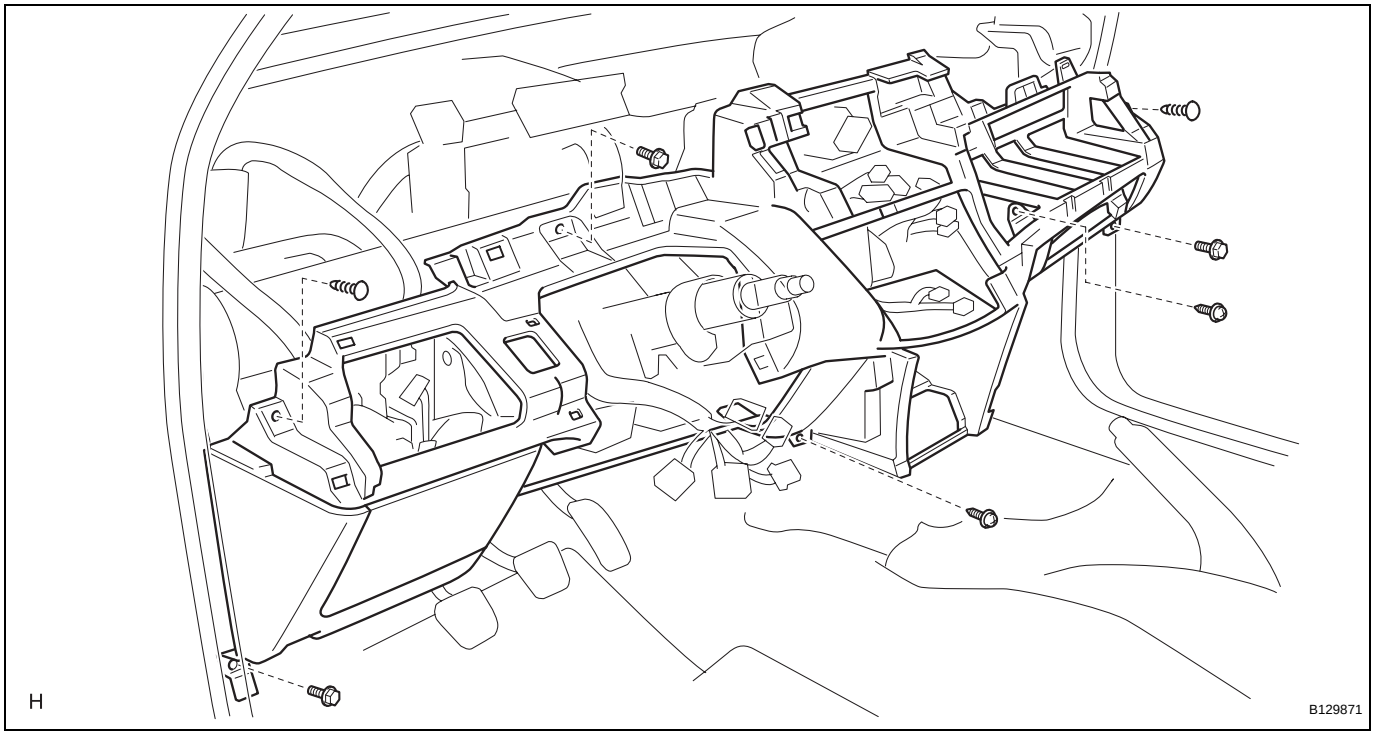
H
B129871

IP

DISASSEMBLY

1. REMOVE GLOVE COMPARTMENT DOOR STOPPER SUB-ASSEMBLY

2. REMOVE STEREO JACK ADAPTER ASSEMBLY

(a) Detach the 2 claws and remove the stereo jack adapter.

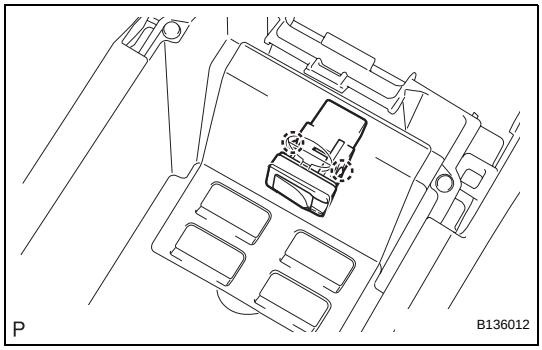

REASSEMBLY

1. INSTALL STEREO JACK ADAPTER ASSEMBLY

(a) Attach the 2 claws to install the stereo jack adapter.

2. INSTALL GLOVE COMPARTMENT DOOR STOPPER SUB-ASSEMBLY

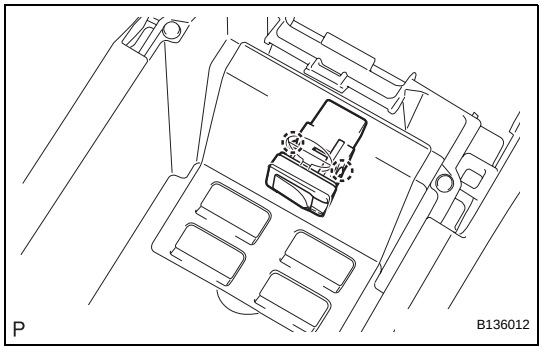

INSTALLATION

1. INSTALL LOWER INSTRUMENT PANEL

(a) Connect the connectors and clamps and install the lower instrument panel.

(b) Install the 2 bolts, 3 screws and 2 clips.

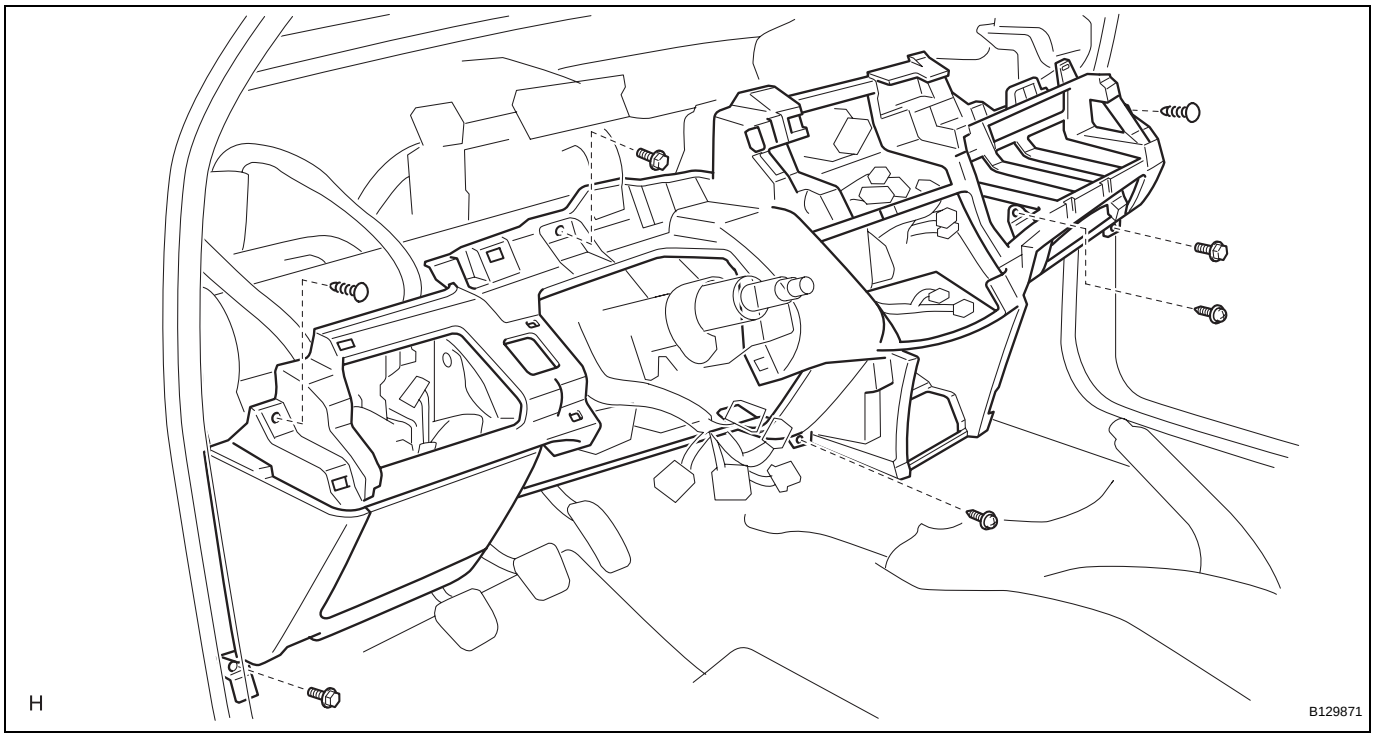

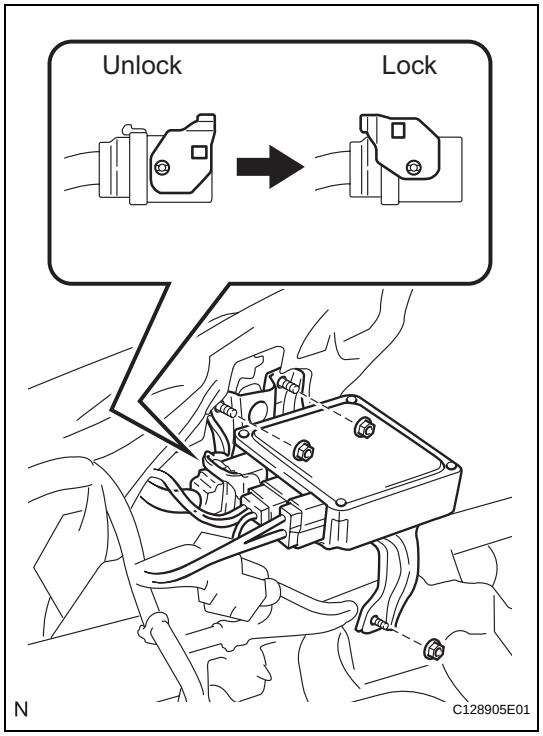

2. INSTALL POWER STEERING ECU ASSEMBLY

(a) Install the ECU with the 3 nuts.

(b) Connect the connectors.

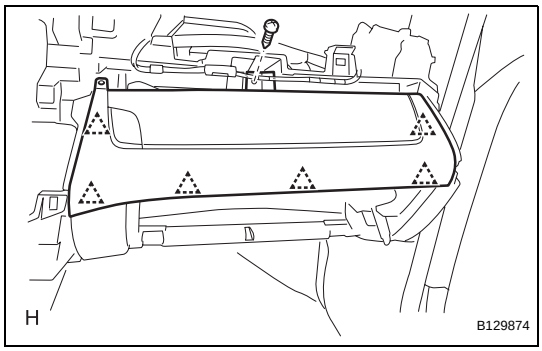

3. INSTALL INSTRUMENT PANEL BOX

(a) Attach the 6 clips to install the instrument panel box.
(b) Install the screw.

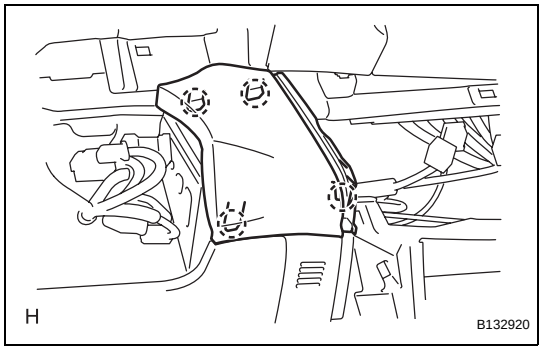

4. INSTALL INSTRUMENT PANEL SAFETY PAD COVER

(a) Attach the 4 claws to install the instrument panel safety pad cover.

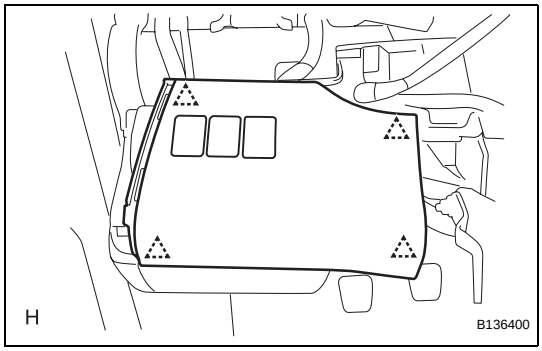

5. INSTALL NO. 1 SWITCH HOLE BASE

(a) Connect the connectors.
(b) Attach the 4 clips to install the switch hole base.

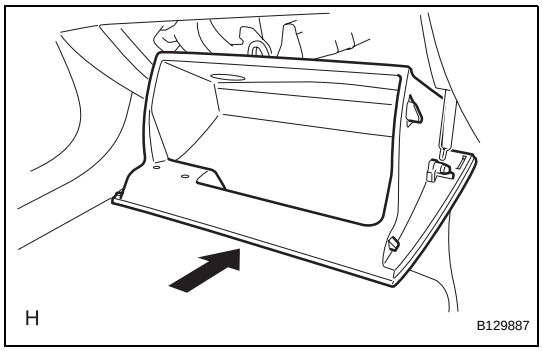

6. INSTALL GLOVE COMPARTMENT DOOR ASSEMBLY

(a) Attach the 2 hinges to install the door.

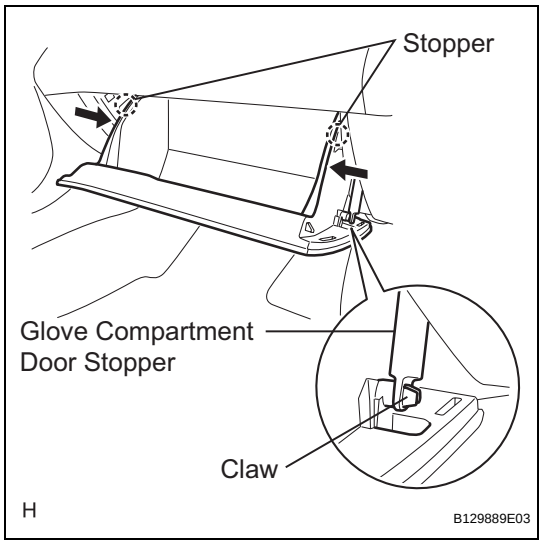

(b) Attach the claw to the glove compartment door stopper.
(c) While pushing in the sides of the glove compartment door as indicated by the arrows in the illustration, close the door to engage it to the 2 stoppers.

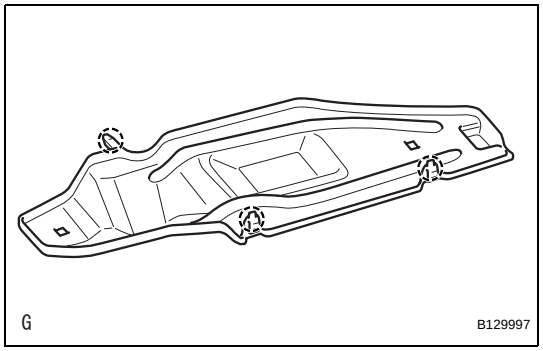

7. INSTALL NO. 2 INSTRUMENT PANEL UNDER COVER SUB-ASSEMBLY

(a) Attach the 2 claws to install the instrument panel under cover.

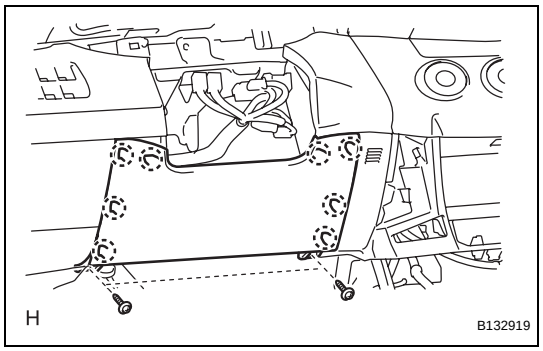

8. INSTALL LOWER INSTRUMENT PANEL FINISH PANEL

(a) Attach the 8 claws to install the lower instrument panel finish panel.
(b) Install the 2 screws.

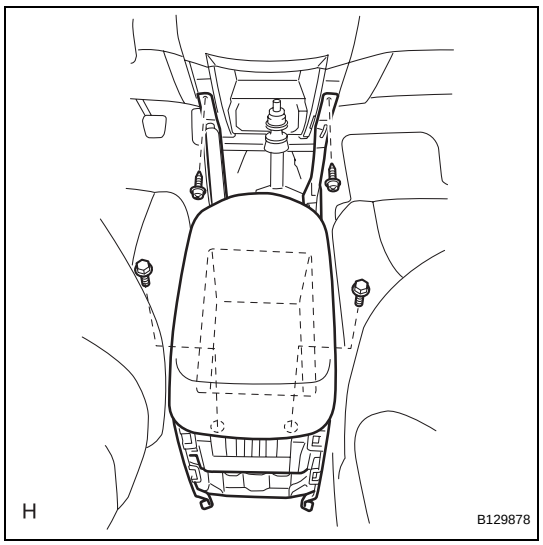

9. INSTALL REAR CONSOLE BOX SUB-ASSEMBLY

(a) Connect the connector.
(b) Install the rear console box with the 2 bolts and 2 screws.
(c) Install the console box carpet.

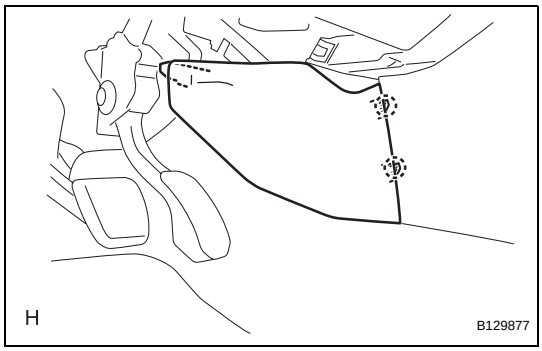

10. INSTALL NO. 1 INSTRUMENT PANEL BRACKET COVER INNER LH

(a) Attach the 2 claws to install the instrument panel bracket cover.

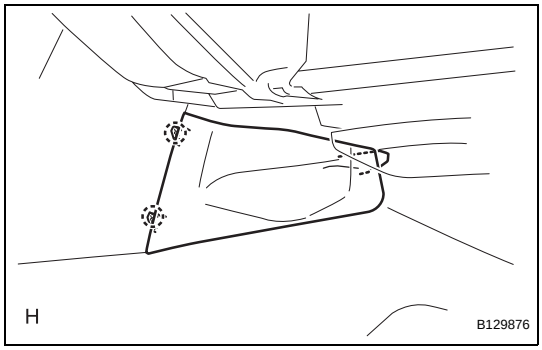

11. INSTALL NO. 1 INSTRUMENT PANEL BRACKET COVER INNER RH

(a) Attach the 2 claws to install the instrument panel bracket cover.

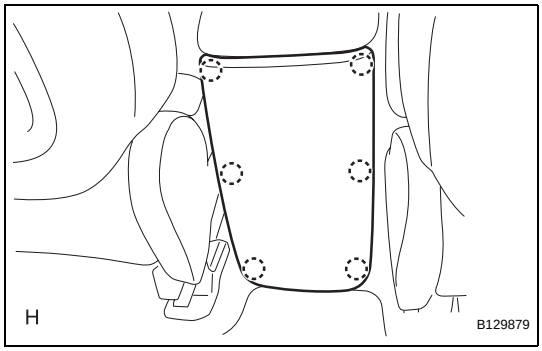

12. INSTALL CONSOLE REAR END PANEL

(a) Attach the 6 claws to install the console rear end panel.

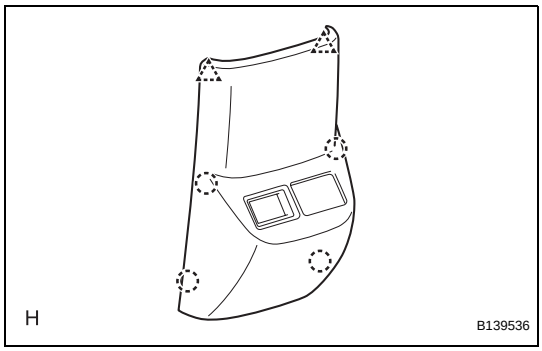

13. INSTALL CONSOLE REAR END PANEL (RSE Type)

(a) Attach the 2 clips and 4 claws to install the console rear end panel.

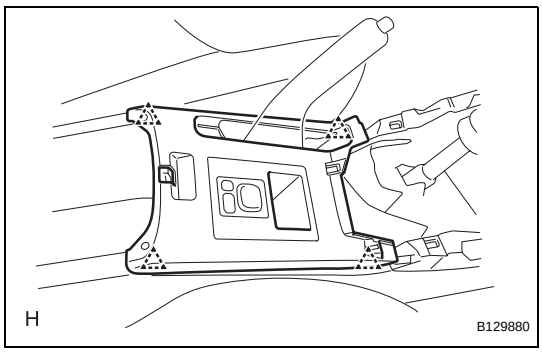

14. INSTALL UPPER REAR CONSOLE PANEL SUB-ASSEMBLY

(a) Connect the connector.

(b) Attach the 4 clips to install the upper rear console panel.

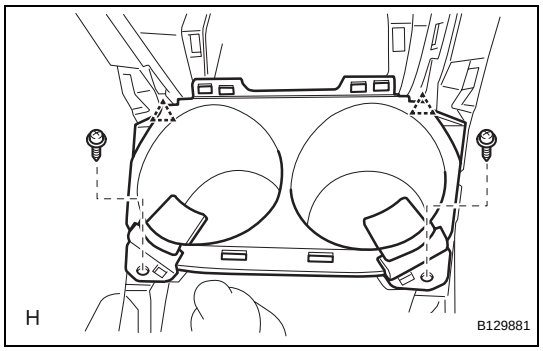

15. INSTALL CONSOLE CUP HOLDER BOX

(a) Attach the 2 clips to install the cup holder box.
(b) Install the 2 screws.

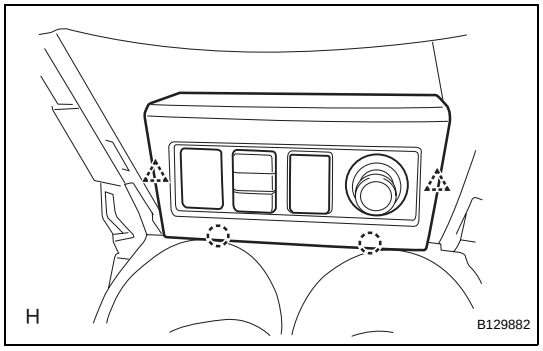

16. INSTALL SWITCH BASE

(a) Connect the connectors.
(b) Attach the 2 clips and 2 claws to install the switch base.

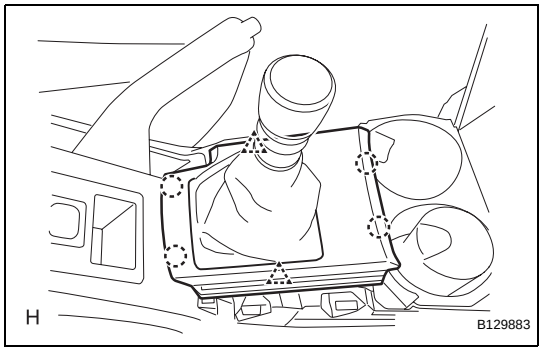

17. INSTALL UPPER CONSOLE PANEL SUB-ASSEMBLY

(a) Connect the connector.
(b) Attach the 2 clips and 4 claws to install the upper console panel.
(c) Install the shift lever knob.

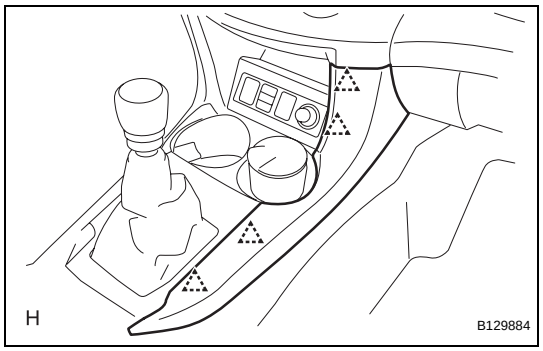

18. INSTALL NO. 2 CONSOLE UPPER PANEL GARNISH

(a) Attach the 4 clips to install the upper panel garnish.

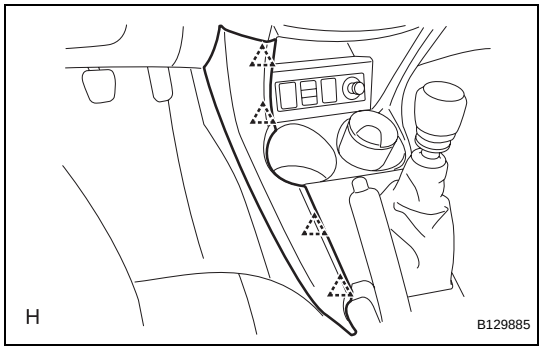

19. INSTALL NO. 1 CONSOLE UPPER PANEL GARNISH

(a) Attach the 4 clips to install the upper panel garnish.

20. INSTALL HEATER CONTROL SUB-ASSEMBLY (for Automatic Air Conditioning System) (See page AC-241)

21. INSTALL HEATER CONTROL SUB-ASSEMBLY (for Manual Air Conditioning System) (See page AC-244)

22. INSTALL WINDSHIELD WIPER SWITCH ASSEMBLY

23. INSTALL HEADLIGHT DIMMER SWITCH ASSEMBLY

24. **INSTALL SPIRAL CABLE SUB-ASSEMBLY (See page RS-347)**

25. **INSTALL STEERING COLUMN COVER (See page SR-20)**

26. **INSTALL STEERING WHEEL ASSEMBLY (See page SR-21)**

27. **INSTALL STEERING PAD ASSEMBLY (See page RS-336)**

28. **INSTALL INSTRUMENT PANEL SUB-ASSEMBLY**
    (a) Install the instrument panel (see page IP-9).

29. **CONNECT CABLE TO NEGATIVE BATTERY TERMINAL**

30. **CHECK SRS WARNING LIGHT**
    (a) Check the SRS warning light (see page RS-37).

LOWER INSTRUMENT PANEL

PRECAUTION

1. PRECAUTION FOR VEHICLE WITH SRS AIRBAG AND SEAT BELT PRETENSIONER

(a) Some operations in this section may affect the SRS airbags and seat belt pretensioner. Prior to performing the corresponding operations, read the SRS airbag NOTICE (see page RS-1).

COMPONENTS

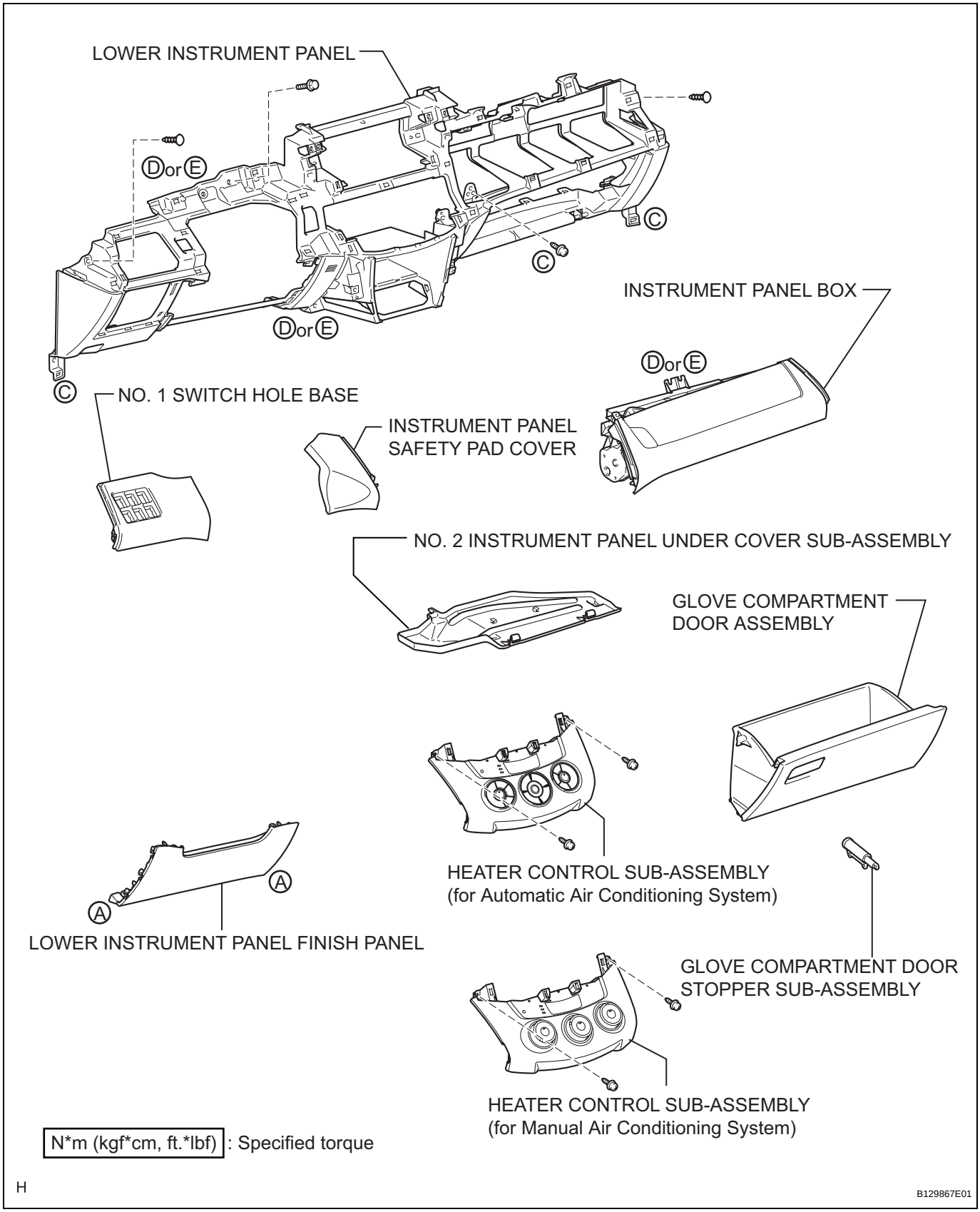
LOWER INSTRUMENT PANEL
Ⓓor Ⓔ
Ⓒ
Ⓓor Ⓔ
Ⓒ
Ⓒ
INSTRUMENT PANEL BOX
Ⓓor Ⓔ
NO. 1 SWITCH HOLE BASE
INSTRUMENT PANEL SAFETY PAD COVER
NO. 2 INSTRUMENT PANEL UNDER COVER SUB-ASSEMBLY
GLOVE COMPARTMENT DOOR ASSEMBLY
HEATER CONTROL SUB-ASSEMBLY (for Automatic Air Conditioning System)
Ⓐ
Ⓐ
LOWER INSTRUMENT PANEL FINISH PANEL
GLOVE COMPARTMENT DOOR STOPPER SUB-ASSEMBLY
HEATER CONTROL SUB-ASSEMBLY (for Manual Air Conditioning System)
N*m (kgf*cm, ft.*lbf) : Specified torque
H
B129867E01

IP

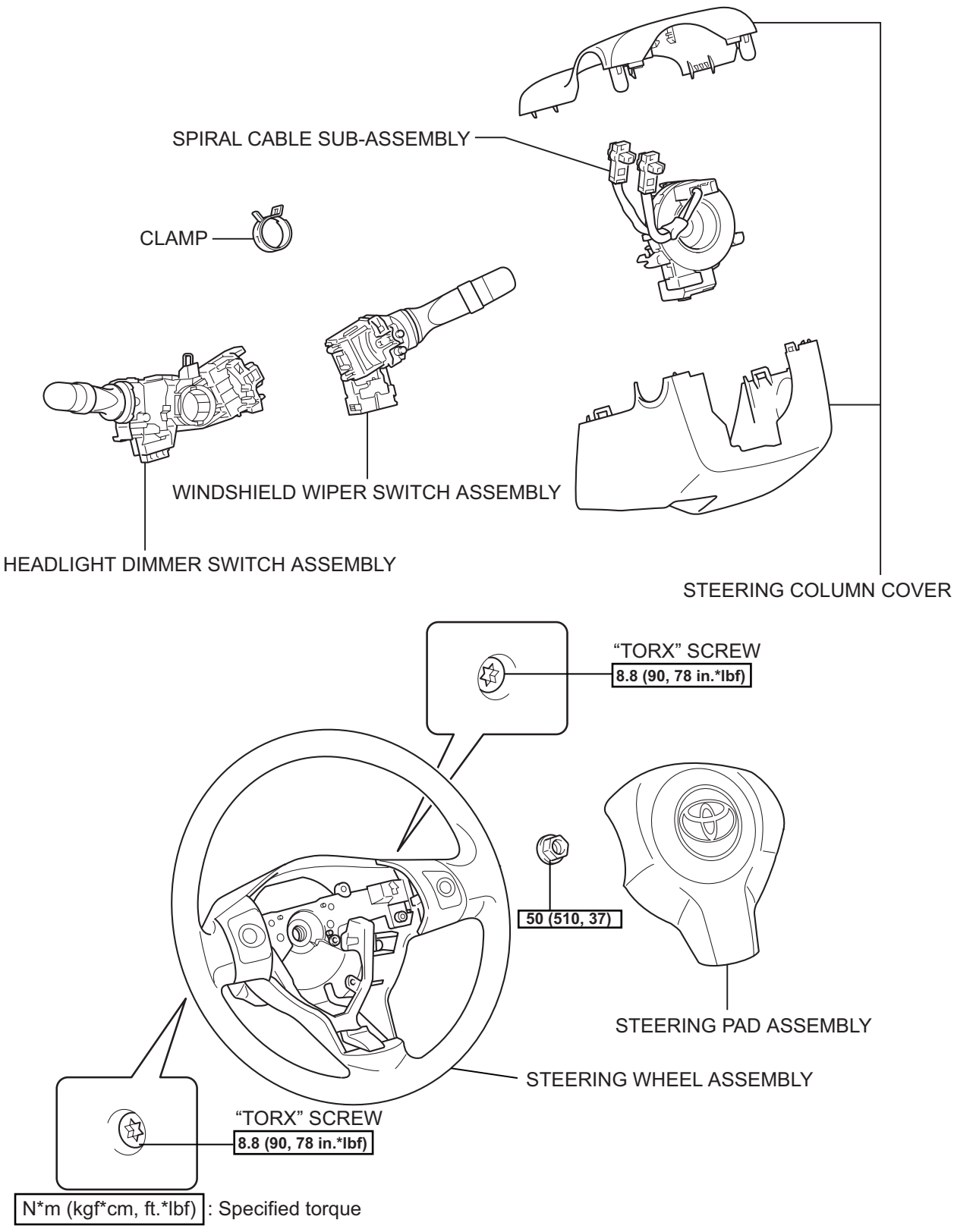

H

B132907E02

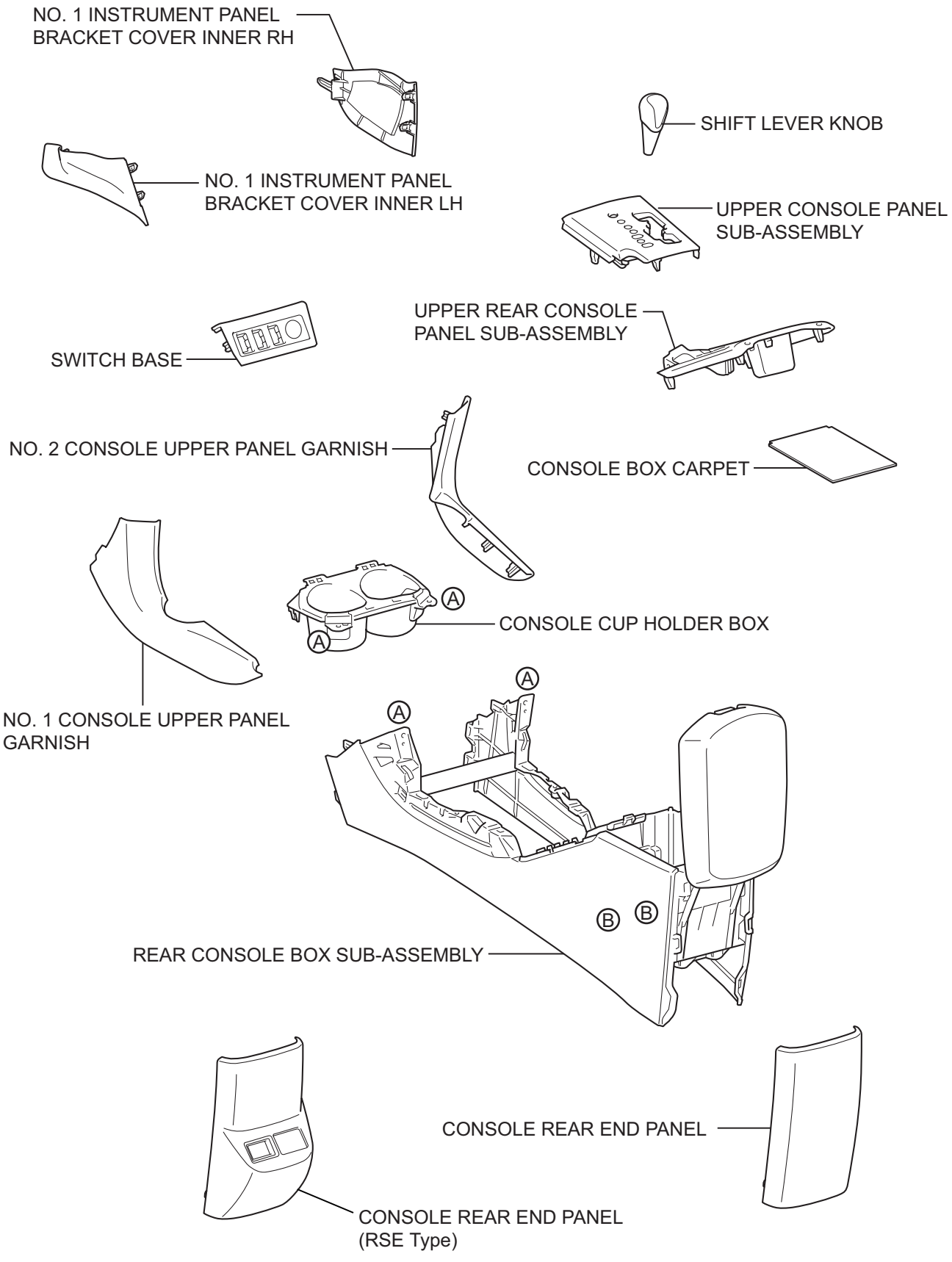
NO. 1 INSTRUMENT PANEL BRACKET COVER INNER RH
SHIFT LEVER KNOB
NO. 1 INSTRUMENT PANEL BRACKET COVER INNER LH
UPPER CONSOLE PANEL SUB-ASSEMBLY
SWITCH BASE
UPPER REAR CONSOLE PANEL SUB-ASSEMBLY
NO. 2 CONSOLE UPPER PANEL GARNISH
CONSOLE BOX CARPET
A
A
CONSOLE CUP HOLDER BOX
NO. 1 CONSOLE UPPER PANEL GARNISH
A
A
B
B
REAR CONSOLE BOX SUB-ASSEMBLY
CONSOLE REAR END PANEL
CONSOLE REAR END PANEL (RSE Type)
H
B129868E01

IP

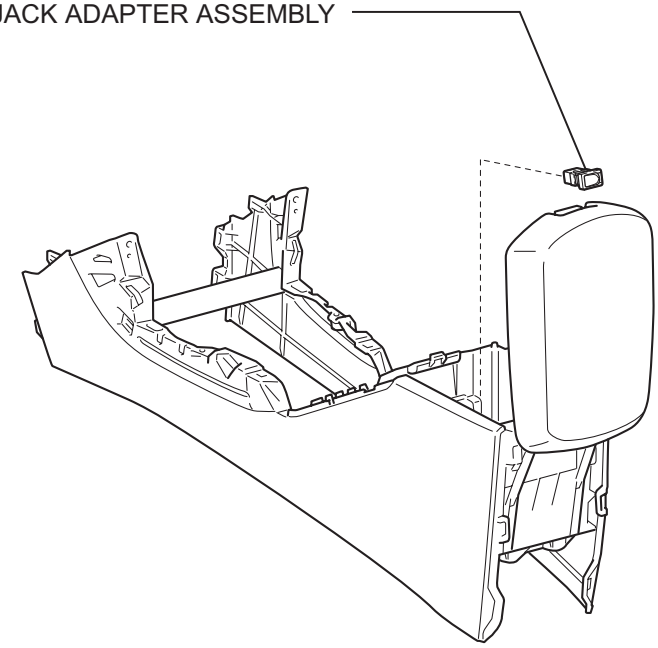

B136011E01

REMOVAL

1. TABLE OF BOLT, SCREW AND NUT

HINT:

All bolts, screws and nuts relevant to installing and removing the instrument panel are shown along with their alphabet codes in the table below.

IP

mm (in.) (L=Length)

Code	Shape	Code	Shape	Code	Shape
A	φ=5 (0.20) L=14 (0.55)	B	φ=8 (0.31) L=15 (0.59)	C	φ=6 (0.24) L=16 (0.63)

G

B129998E05

2. DISCONNECT CABLE FROM NEGATIVE BATTERY TERMINAL

CAUTION:

Wait at least 90 seconds after disconnecting the cable from the negative (-) battery terminal to prevent airbag and seat belt pretensioner activation.

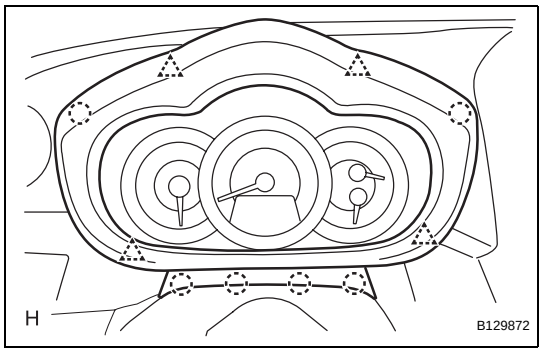

3. REMOVE INSTRUMENT CLUSTER FINISH PANEL SUB-ASSEMBLY

(a) Using a screwdriver, detach the 4 clips, 6 claws and remove the instrument cluster finish panel.

HINT:

Tape the screwdriver tip before use.

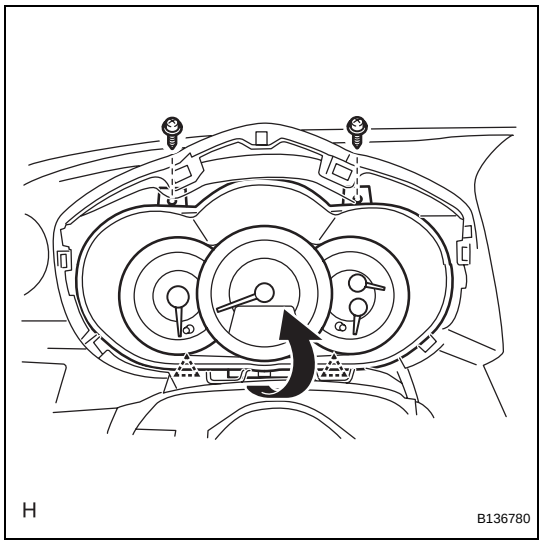

4. REMOVE COMBINATION METER ASSEMBLY

(a) Remove the 2 screws.

(b) Pull the combination meter as indicated by the arrow in the illustration to detach the 2 clips.

(c) Disconnect the connector and remove the combination meter.

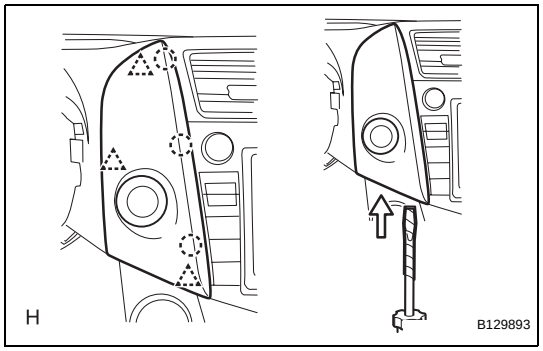

5. REMOVE NO. 2 INSTRUMENT CLUSTER FINISH PANEL CENTER

(a) Using a screwdriver, detach the 3 clips, 3claws and remove the cluster finish panel, then disconnect the connector.

HINT:

Tape the screwdriver tip before use.

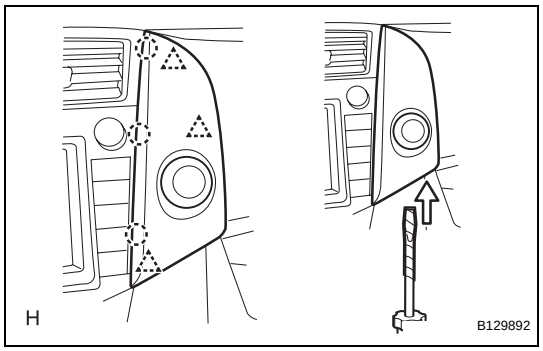

6. REMOVE NO. 1 INSTRUMENT CLUSTER FINISH PANEL CENTER

(a) Using a screwdriver, detach the 3 clips, 3claws and remove the cluster finish panel, then disconnect the connector.

HINT:

Tape the screwdriver tip before use.

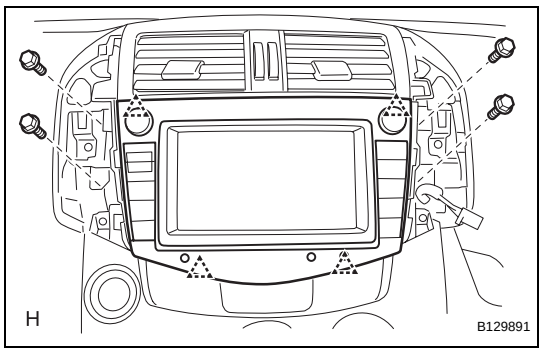

7. REMOVE RADIO RECEIVER

(a) Remove the 4 bolts.

(b) Detach the 4 clips, remove the radio receiver and then disconnect the connectors.

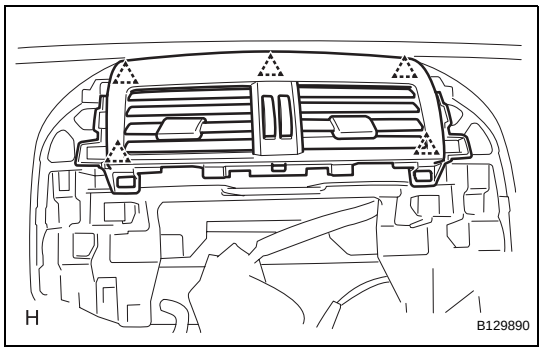

8. REMOVE INSTRUMENT PANEL REGISTER ASSEMBLY CENTER

(a) Using a screwdriver, detach the 5 clips and remove the instrument panel register.
HINT:
Tape the screwdriver tip before use.

9. REMOVE GLOVE COMPARTMENT DOOR ASSEMBLY (See page IP-20)

10. REMOVE FRONT PILLAR GARNISH LH (See page IR-27)

11. REMOVE FRONT PILLAR GARNISH RH (See page IR-28)

12. REMOVE UPPER INSTRUMENT PANEL

(a) Remove the 2 bolts from the passenger airbag.
(b) Disconnect the passenger airbag connector.
(c) Remove the 2 bolts and 2 screws.
(d) Disconnect the connectors and clamps.
(e) Detach the 6 clips and 5 claws and remove the instrument panel.

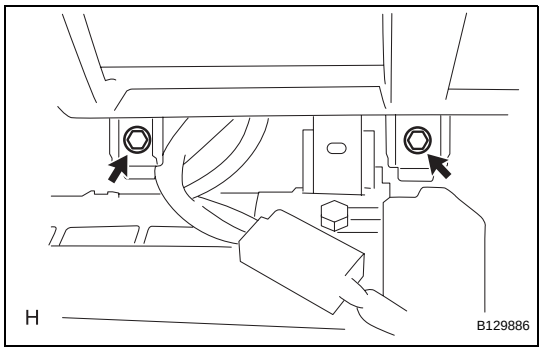

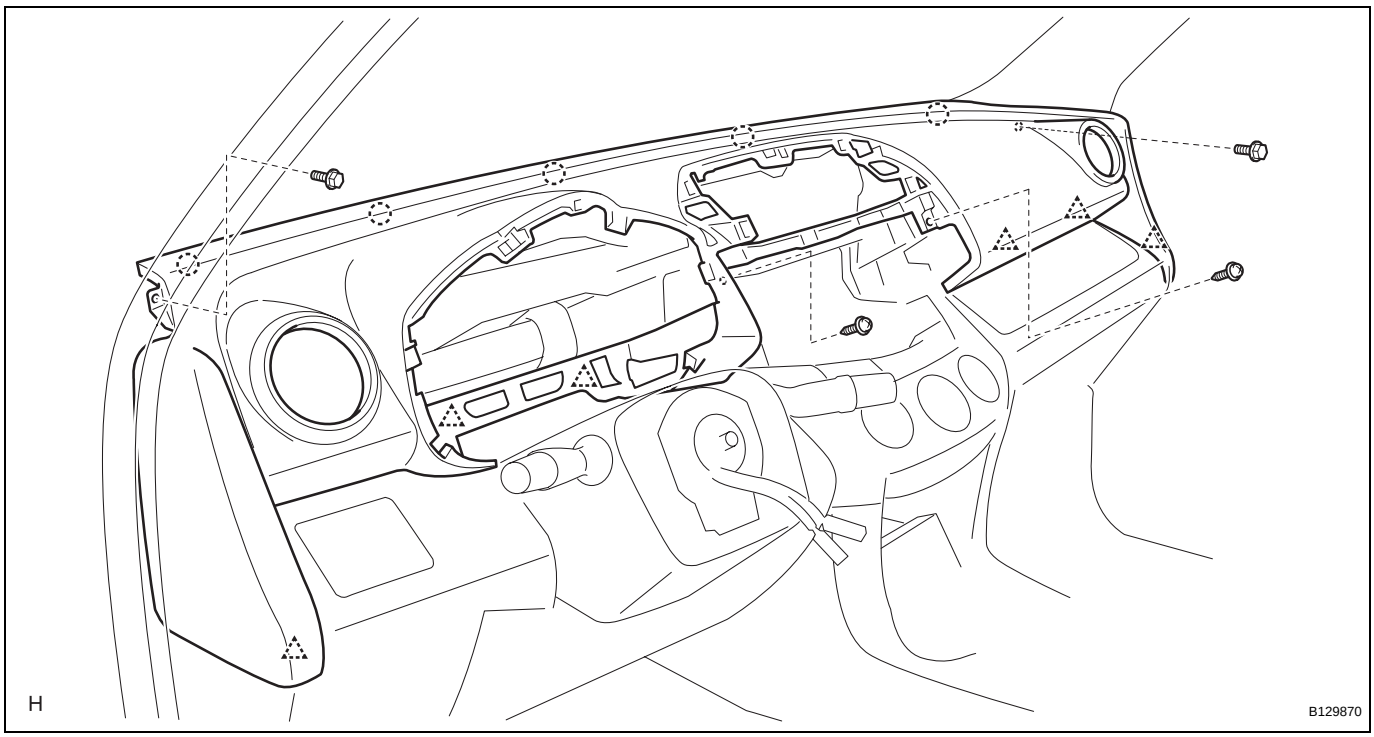

DISASSEMBLY

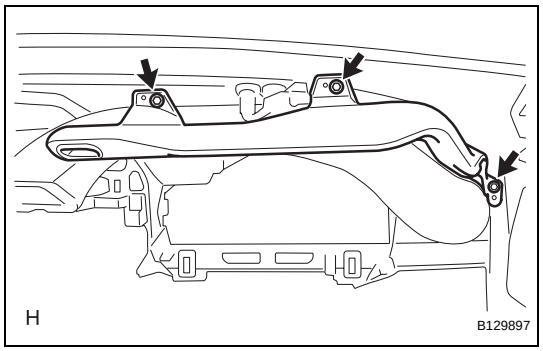

1. REMOVE NO. 1 SIDE DEFROSTER NOZZLE DUCT
(a) Remove the 3 screws and duct.

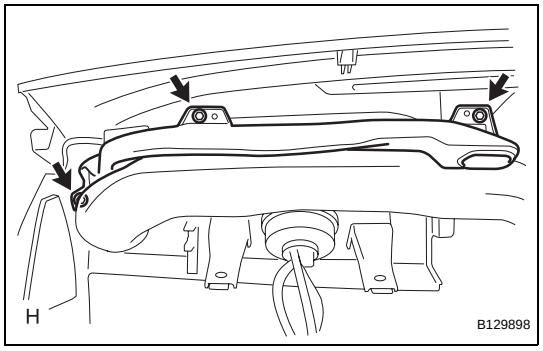

2. REMOVE NO. 2 SIDE DEFROSTER NOZZLE DUCT
(a) Remove the 3 screws and duct.

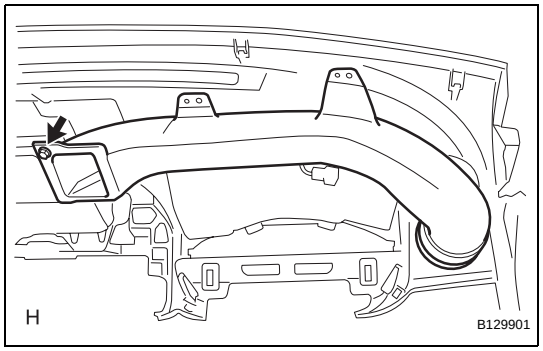

3. REMOVE NO. 1 HEATER TO REGISTER DUCT
(a) Remove the screw and duct.

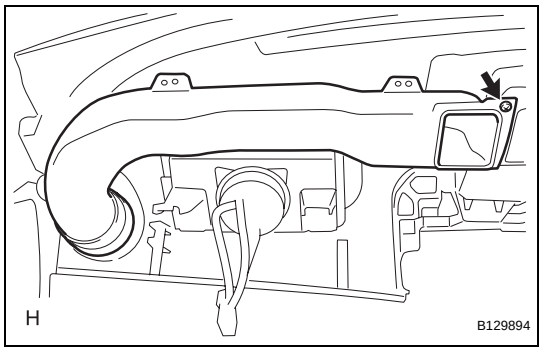

4. REMOVE NO. 2 HEATER TO REGISTER DUCT
(a) Remove the screw and duct.

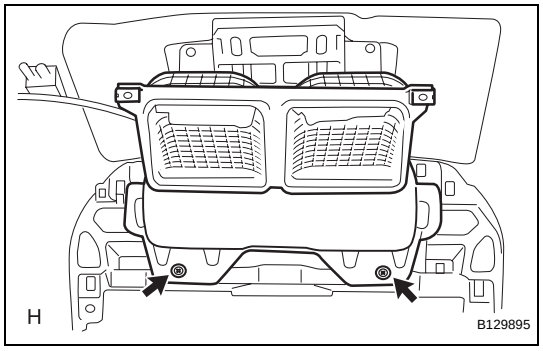

5. REMOVE NO. 3 HEATER TO REGISTER DUCT
(a) Remove the 2 screws and duct.

6. REMOVE NO. 1 INSTRUMENT PANEL REGISTER ASSEMBLY

7. REMOVE NO. 2 INSTRUMENT PANEL REGISTER ASSEMBLY

8. REMOVE FRONT PASSENGER AIRBAG ASSEMBLY
(See page RS-350)

9. REMOVE AUTOMATIC LIGHT CONTROL SENSOR (for Automatic Light Control System)

10. REMOVE COOLER (SOLAR SENSOR) THERMISTOR (for Automatic Air Conditioning System)

REASSEMBLY

1. **INSTALL COOLER (SOLAR SENSOR) THERMISTOR (for Automatic Air Conditioning System)**
2. **INSTALL AUTOMATIC LIGHT CONTROL SENSOR (for Automatic Light Control System)**
3. **INSTALL FRONT PASSENGER AIRBAG ASSEMBLY (See page RS-351)**
4. **INSTALL NO. 2 INSTRUMENT PANEL REGISTER ASSEMBLY**
5. **INSTALL NO. 1 INSTRUMENT PANEL REGISTER ASSEMBLY**
6. **INSTALL NO. 3 HEATER TO REGISTER DUCT**
   (a) Install the duct with the 2 screws.

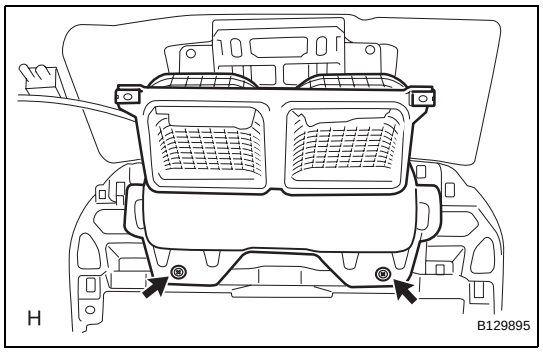

7. **INSTALL NO. 2 HEATER TO REGISTER DUCT**
   (a) Install the duct with the screw.

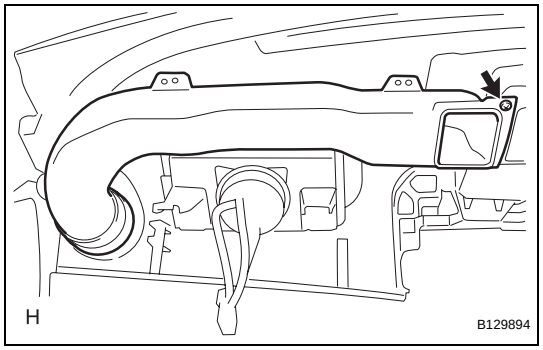

8. **INSTALL NO. 1 HEATER TO REGISTER DUCT**
   (a) Install the duct with the screw.

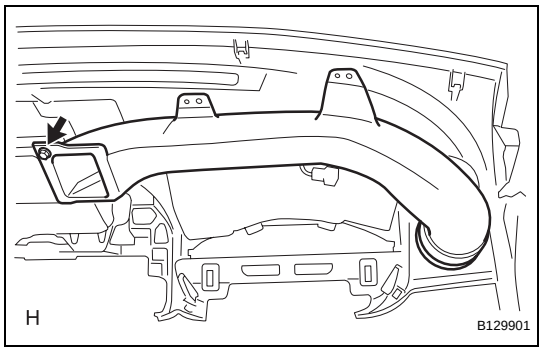

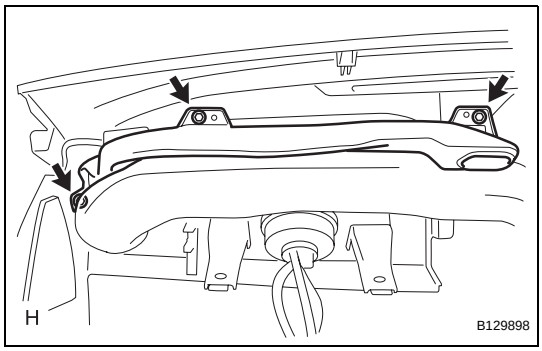

9. INSTALL NO. 2 SIDE DEFROSTER NOZZLE DUCT

(a) Install the duct with the 3 screws.

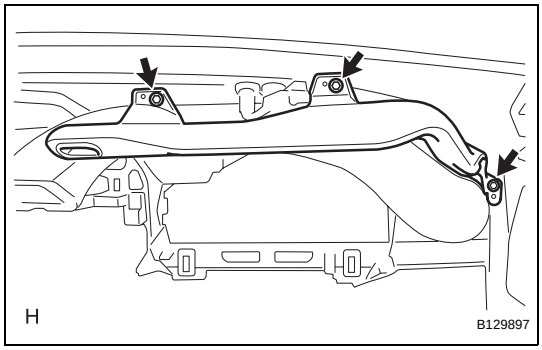

10. INSTALL NO. 1 SIDE DEFROSTER NOZZLE DUCT

(a) Install the duct with the 3 screws.

INSTALLATION

1. **INSTALL UPPER INSTRUMENT PANEL**
   (a) Attach the 6 clips and 5 claws to install the instrument panel.
   (b) Connect the connectors and clamps.
   (c) Install the 2 bolts and 2 screws.

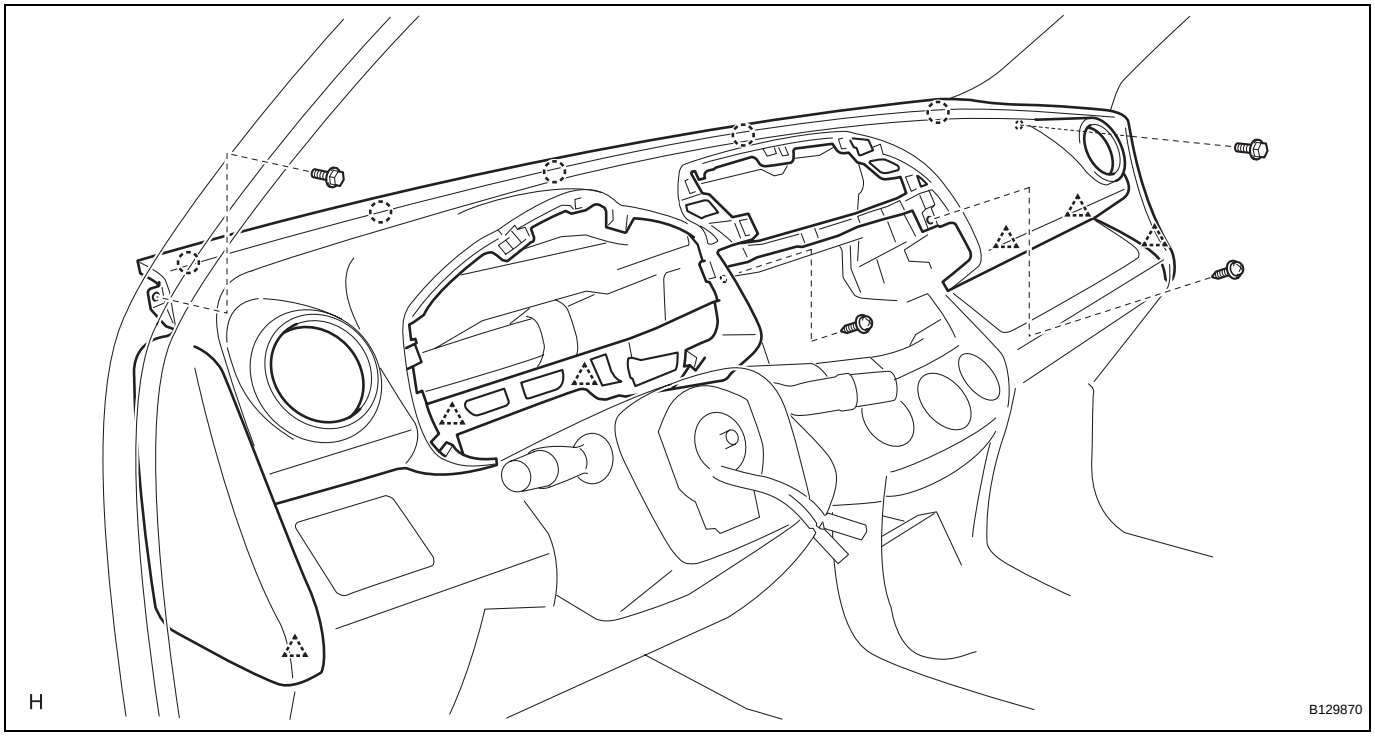

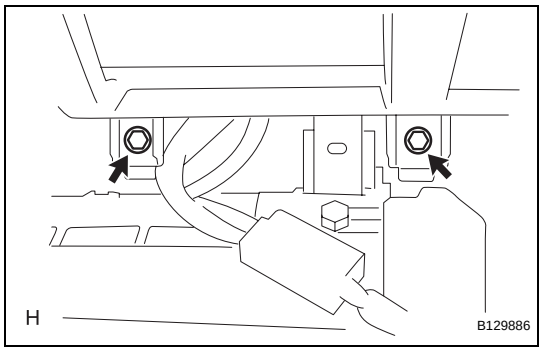

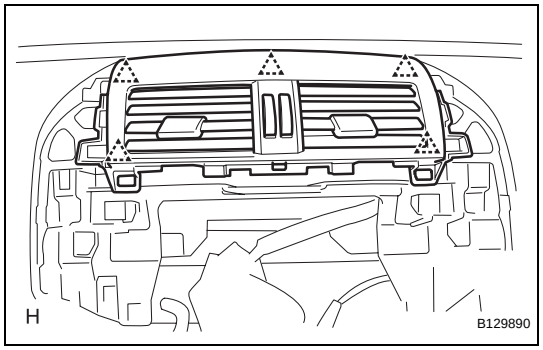

   (d) Connect the passenger airbag connector.
   (e) Install the 2 bolts to the passenger airbag.
   Torque: 20 N*m (204 kgf*cm, 15 ft.*lbf)

2. **INSTALL FRONT PILLAR GARNISH LH (See page IR-57)**

3. **INSTALL FRONT PILLAR GARNISH RH (See page IR-58)**

4. **INSTALL GLOVE COMPARTMENT DOOR ASSEMBLY (See page IP-25)**

5. **INSTALL INSTRUMENT PANEL REGISTER ASSEMBLY CENTER**
   (a) Attach the 5 clips to install the instrument panel register.

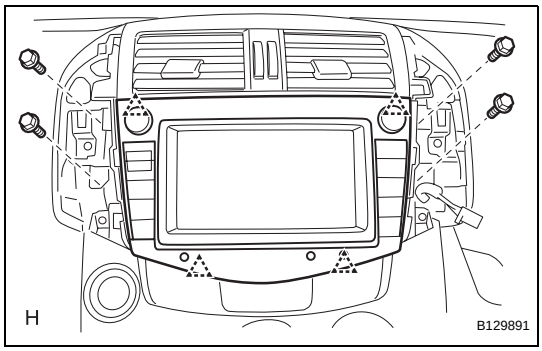

6. INSTALL RADIO RECEIVER

(a) Connect the connectors.
(b) Attach the 4 clips to install the radio receiver.
(c) Install the 4 bolts.

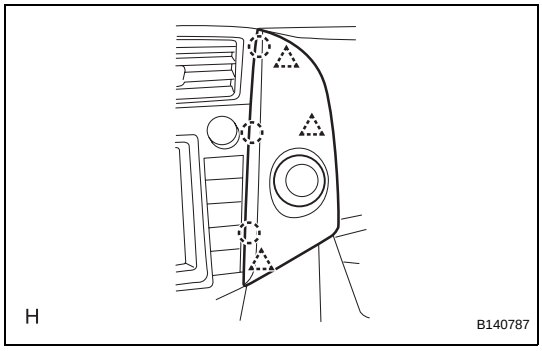

7. INSTALL NO. 1 INSTRUMENT CLUSTER FINISH PANEL CENTER

(a) Connect the connector.
(b) Attach the 3 clips and 3 claws to install the cluster finish panel.

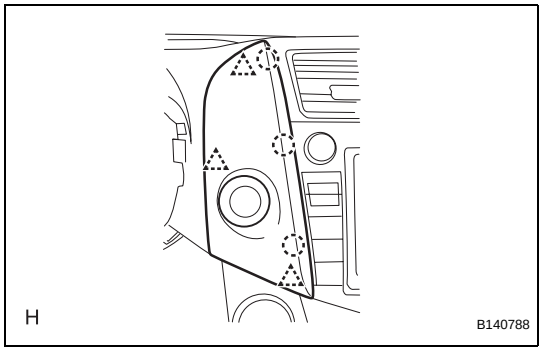

8. INSTALL NO. 2 INSTRUMENT CLUSTER FINISH PANEL CENTER

(a) Connect the connector.
(b) Attach the 3 clips and 3 claws to install the cluster finish panel.

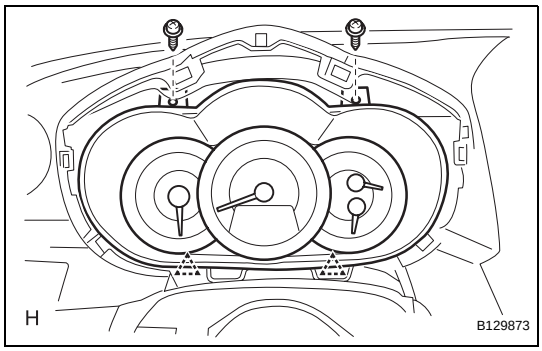

9. INSTALL COMBINATION METER ASSEMBLY

(a) Connect the connector.
(b) Attach the 2 clips to install the combination meter.
(c) Install the 2 screws.

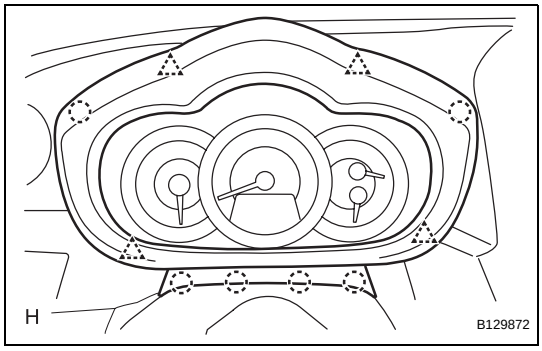

10. INSTALL INSTRUMENT CLUSTER FINISH PANEL SUB-ASSEMBLY

(a) Attach the 4 clips and 6 claws to install the instrument cluster finish panel.

11. CONNECT CABLE TO NEGATIVE BATTERY TERMINAL

12. CHECK SRS WARNING LIGHT

(a) Check the SRS warning light (see page RS-37).

UPPER INSTRUMENT PANEL

PRECAUTION

1. PRECAUTION FOR VEHICLE WITH SRS AIRBAG AND SEAT BELT PRETENSIONER

(a) Some operations in this section may affect the SRS airbags and seat belt pretensioner. Prior to performing the corresponding operations, read the SRS airbag NOTICE (see page RS-1).

COMPONENTS

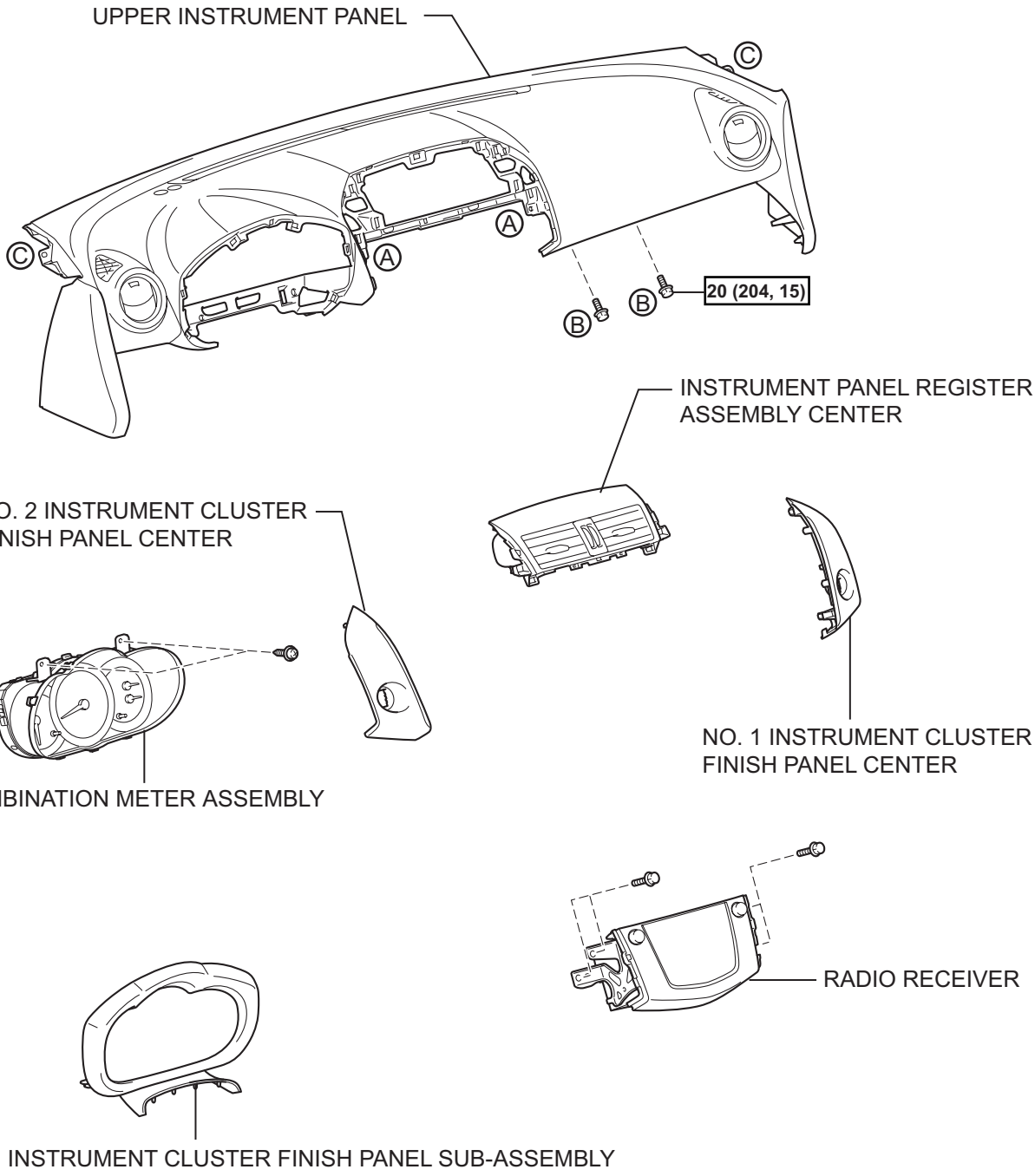

N*m (kgf*cm, ft.*lbf) : Specified torque

H

B129865E01

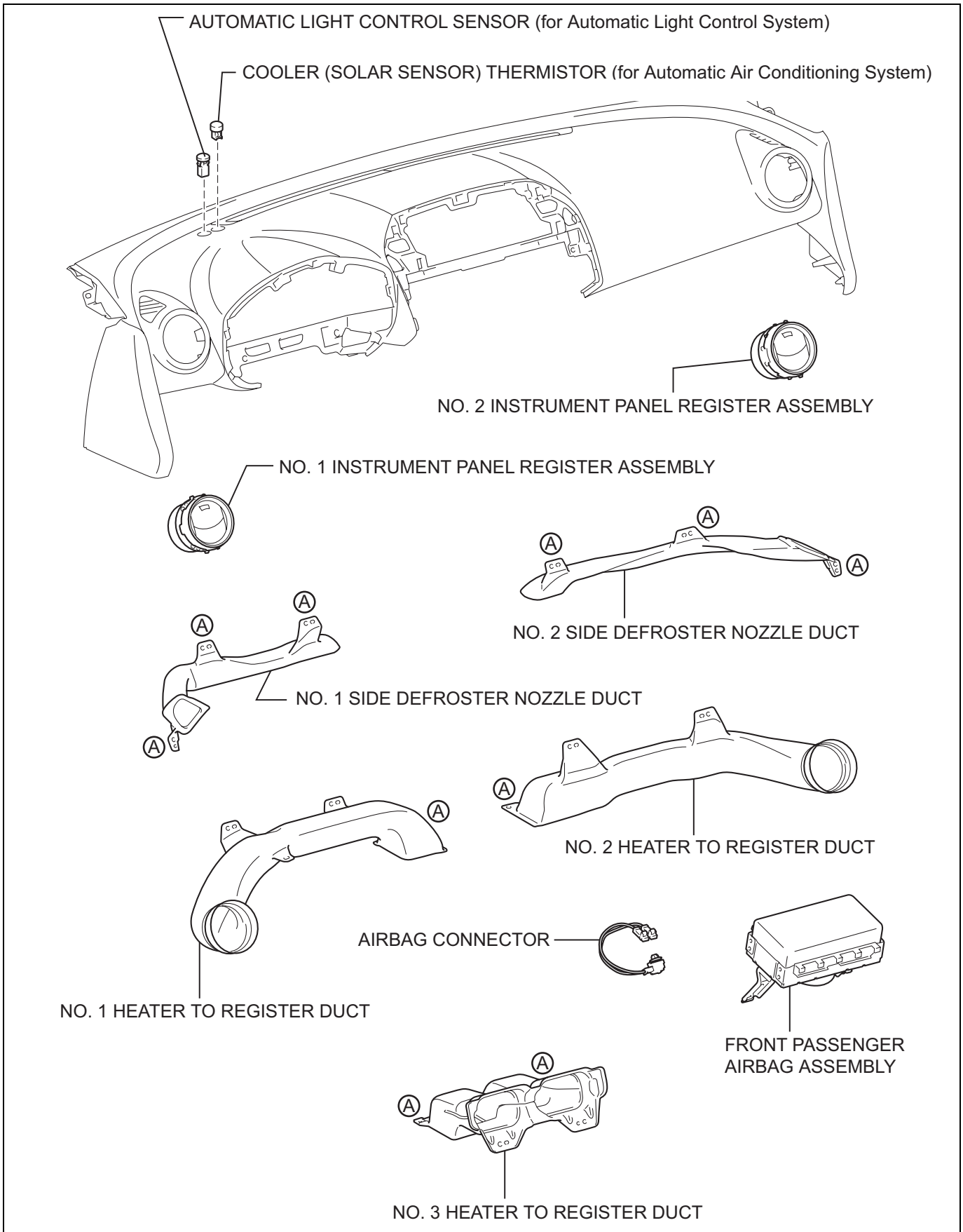

H

B129866E01

REMOVAL

1. **DISCONNECT CABLE FROM NEGATIVE BATTERY TERMINAL**
   CAUTION:
   Wait at least 90 seconds after disconnecting the cable from the negative (-) battery terminal to prevent airbag and seat belt pretensioner activation.
2. **REMOVE FRONT SEAT ASSEMBLY LH**
   (a) Remove the front seat.
   for Manual Seat (see page SE-11)
   for Power Seat (see page SE-27)
3. **REMOVE FRONT SEAT ASSEMBLY RH**
   (a) Remove the front seat.
   for Manual Seat (see page SE-11)
   for Power Seat (see page SE-27)
4. **REMOVE REAR NO. 1 SEAT ASSEMBLY LH**
   (a) Remove the rear No. 1 seat (see page SE-45).
5. **REMOVE REAR NO. 1 SEAT ASSEMBLY RH**
   (a) Remove the rear No. 1 seat (see page SE-80).
6. **REMOVE NO. 1 CONSOLE UPPER PANEL GARNISH (See page IP-17)**
7. **REMOVE NO. 2 CONSOLE UPPER PANEL GARNISH (See page IP-18)**
8. **REMOVE UPPER CONSOLE PANEL SUB-ASSEMBLY (See page IP-18)**
9. **REMOVE SWITCH BASE (See page IP-18)**
10. **REMOVE CONSOLE CUP HOLDER BOX (See page IP-18)**
11. **REMOVE UPPER REAR CONSOLE PANEL SUB-ASSEMBLY (See page IP-19)**
12. **REMOVE CONSOLE REAR END PANEL (See page IP-19)**
13. **REMOVE NO. 1 INSTRUMENT PANEL BRACKET COVER INNER LH (See page IP-19)**
14. **REMOVE NO. 1 INSTRUMENT PANEL BRACKET COVER INNER RH (See page IP-19)**
15. **REMOVE REAR CONSOLE BOX SUB-ASSEMBLY (See page IP-20)**
16. **REMOVE FRONT DOOR SCUFF PLATE LH (See page IR-26)**
17. **REMOVE FRONT DOOR SCUFF PLATE RH (See page IR-26)**
18. **REMOVE COWL SIDE TRIM BOARD LH (See page IR-26)**
19. **REMOVE COWL SIDE TRIM BOARD RH (See page IR-26)**

20. **REMOVE FRONT DOOR OPENING TRIM WEATHERSTRIP LH**
21. **REMOVE FRONT DOOR OPENING TRIM WEATHERSTRIP RH**
22. **REMOVE REAR DOOR SCUFF PLATE LH (See page IR-29)**
23. **REMOVE REAR DOOR SCUFF PLATE RH (See page IR-29)**
24. **REMOVE REAR DOOR OPENING TRIM WEATHERSTRIP LH**
25. **REMOVE REAR DOOR OPENING TRIM WEATHERSTRIP RH**
26. **REMOVE LOWER CENTER PILLAR GARNISH LH (See page IR-29)**
27. **REMOVE LOWER CENTER PILLAR GARNISH RH (See page IR-30)**
28. **REMOVE PACKAGE TRAY TRIM POCKET SUB-ASSEMBLY (w/o Rear No. 2 Seat)**
29. **REMOVE TONNEAU COVER ASSEMBLY (w/o Rear No. 2 Seat)**
30. **REMOVE REAR FLOOR NO. 1 BOARD (w/o Rear No. 2 Seat)**
31. **REMOVE DECK BOARD ASSEMBLY (w/o Rear No. 2 Seat)**
32. **REMOVE REAR NO. 2 SEAT ASSEMBLY LH (w/ Rear No. 2 Seat)**
    (a) Remove the rear No. 2 seat (see page SE-109).
33. **REMOVE REAR NO. 2 SEAT ASSEMBLY RH (w/ Rear No. 2 Seat)**
    (a) Remove the rear No. 2 seat (see page SE-109).
34. **REMOVE REAR FLOOR NO. 3 BOARD**
35. **REMOVE REAR FLOOR NO. 2 BOARD**
36. **REMOVE REAR FLOOR NO. 1 MAT SUPPORT SIDE PLATE (See page IR-31)**
37. **REMOVE BACK DOOR WEATHERSTRIP**
38. **REMOVE REAR FLOOR FINISH PLATE (See page IR-31)**
39. **REMOVE REAR DECK TRIM COVER LH (w/ Rear No. 2 Seat) (See page IR-31)**
40. **REMOVE REAR DECK TRIM COVER LH (w/ Rear No. 2 Seat) (See page IR-31)**
41. **REMOVE RECLINING REMOTE CONTROL LEVER BEZEL LH (w/o Rear No. 2 Seat) (See page SE-45)**

42. REMOVE RECLINING REMOTE CONTROL LEVER BEZEL RH (w/o Rear No. 2 Seat) (See page SE-80)

43. REMOVE TETHER ANCHOR BRACKET SUB-ASSEMBLY (w/o Rear No. 2 Seat) (See page IR-32)

44. REMOVE DECK TRIM SIDE PANEL ASSEMBLY LH (w/o Rear No. 2 Seat) (See page IR-32)

45. REMOVE DECK TRIM SIDE PANEL ASSEMBLY LH (w/ Rear No. 2 Seat) (See page IR-32)

46. REMOVE DECK TRIM SIDE PANEL ASSEMBLY RH (w/o Rear No. 2 Seat) (See page IR-33)

47. REMOVE DECK TRIM SIDE PANEL ASSEMBLY RH (w/ Rear No. 2 Seat) (See page IR-34)

48. REMOVE FRONT FLOOR CARPET ASSEMBLY

(a) Partially remove the floor carpet.
HINT:
It is not necessary to fully remove the floor carpet. Partially remove it so that the lock control cable can be removed in a later step.

49. REMOVE FUEL LID LOCK CONTROL CABLE SUB-ASSEMBLY

(a) Remove the bolt and fuel lid lock open lever.

(b) Remove the tape and cable from the clamps as shown in the illustration.

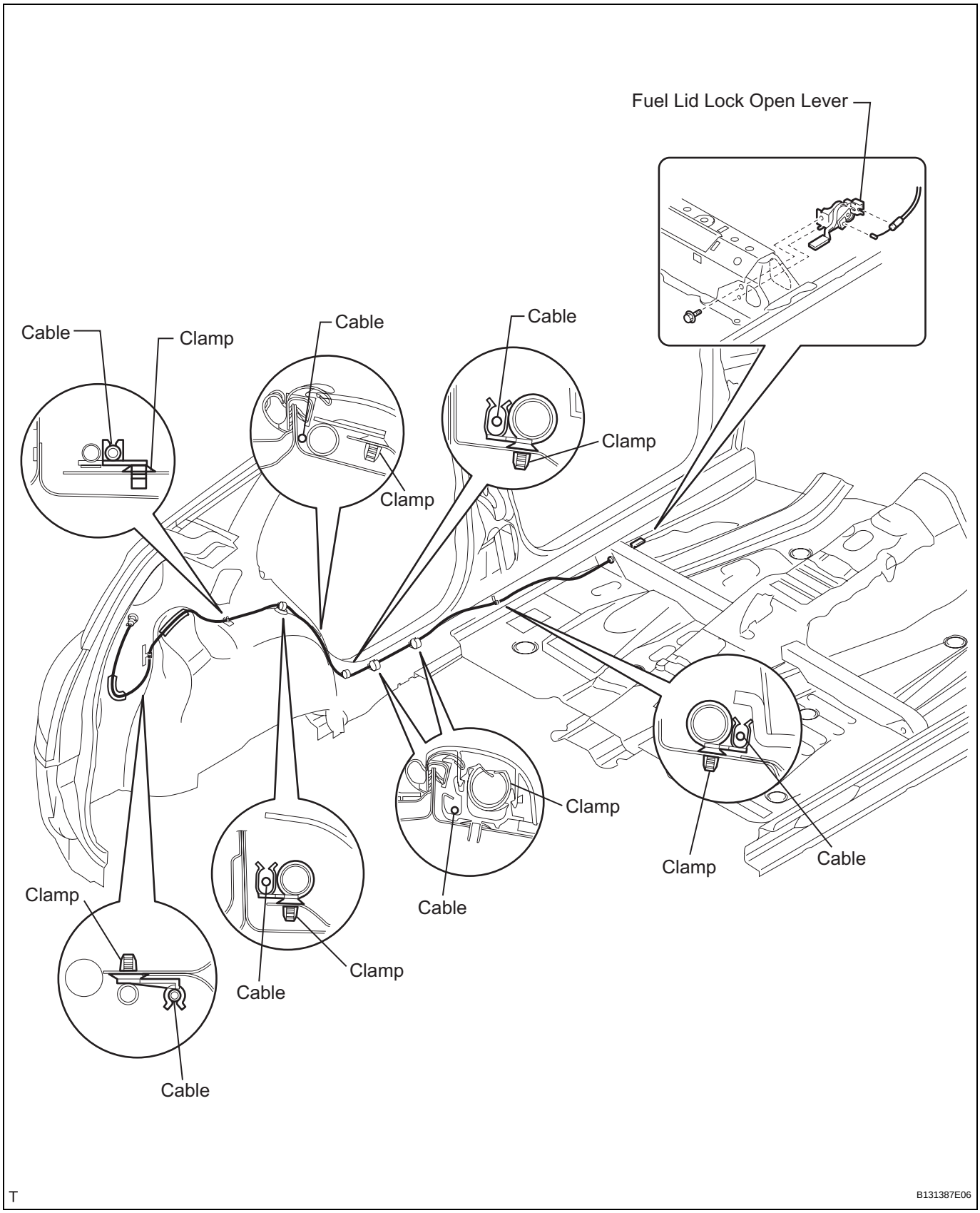

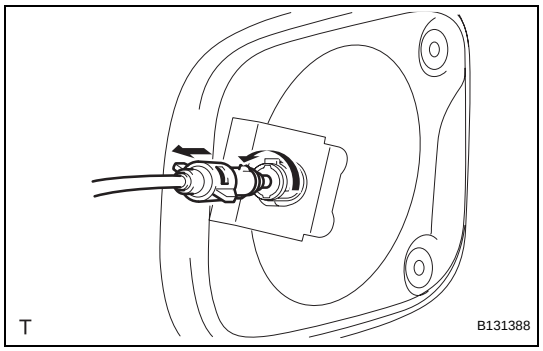

(c) Turn the lock retainer counterclockwise and remove the cable from the retainer.

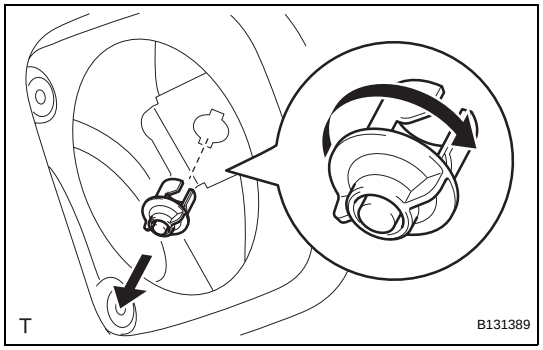

50. REMOVE FUEL FILLER OPENING LID LOCK RETAINER

(a) Turn the lock retainer clockwise and remove the lock retainer as shown in the illustration.

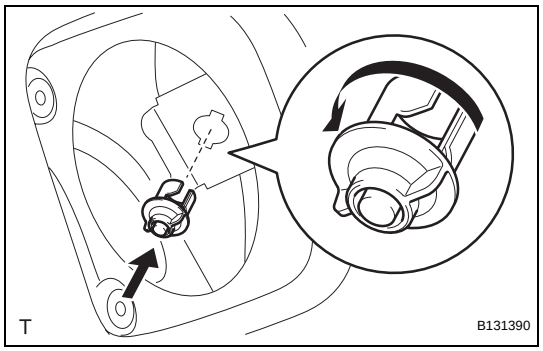

INSTALLATION

1. INSTALL FUEL FILLER OPENING LID LOCK RETAINER

(a) Install the lock retainer and turn it counterclockwise as shown in the illustration.

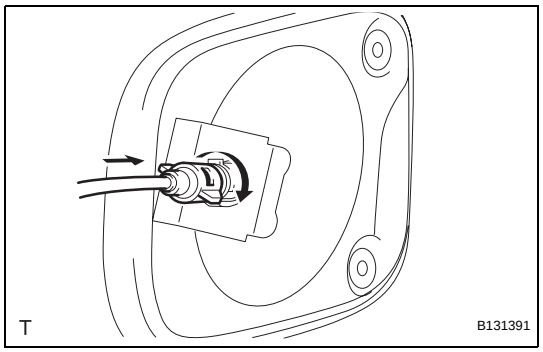

2. INSTALL FUEL LID LOCK CONTROL CABLE SUB-ASSEMBLY

(a) Install the cable and turn it clockwise as shown in the illustration.

(b) Install the fuel lid lock open lever with the bolt.
Torque: 8.0 N*m (82 kgf*cm, 71 in.*lbf)

(c) Install the cable to the clamps as shown in the illustration.

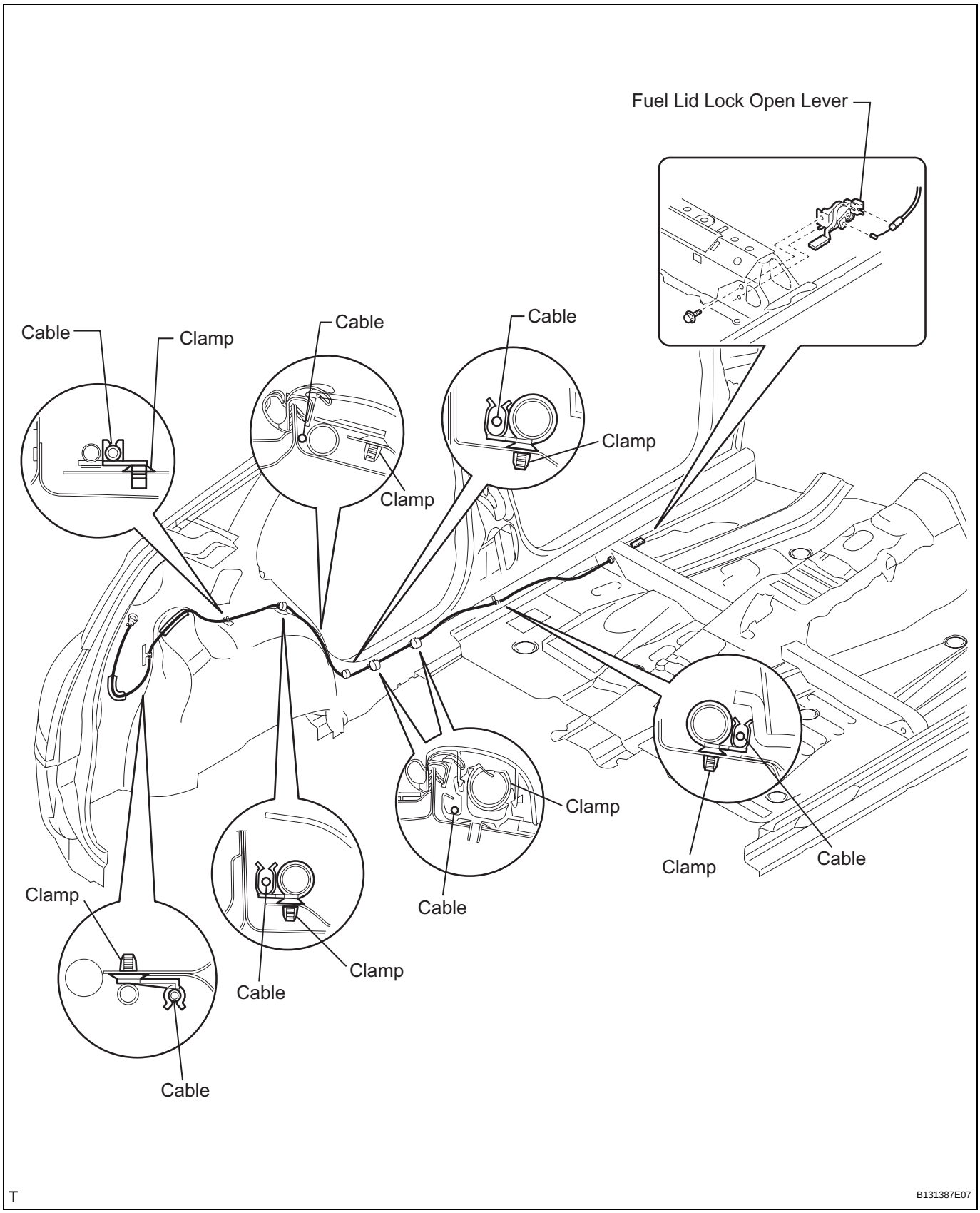

3. INSTALL FRONT FLOOR CARPET ASSEMBLY

4. **INSTALL DECK TRIM SIDE PANEL ASSEMBLY RH (w/ Rear No. 2 Seat) (See page IR-34)**
5. **INSTALL DECK TRIM SIDE PANEL ASSEMBLY RH (w/o Rear No. 2 Seat) (See page IR-53)**
6. **INSTALL DECK TRIM SIDE PANEL ASSEMBLY LH (w/ Rear No. 2 Seat) (See page IR-32)**
7. **INSTALL DECK TRIM SIDE PANEL ASSEMBLY LH (w/ o Rear No. 2 Seat) (See page IR-52)**
8. **INSTALL TETHER ANCHOR BRACKET SUB-ASSEMBLY (w/o Rear No. 2 Seat) (See page IR-54)**
9. **INSTALL RECLINING REMOTE CONTROL LEVER BEZEL RH (w/o Rear No. 2 Seat) (See page SE-105)**
10. **INSTALL RECLINING REMOTE CONTROL LEVER BEZEL LH (w/o Rear No. 2 Seat) (See page SE-73)**
11. **INSTALL REAR DECK TRIM COVER RH (w/ Rear No. 2 Seat) (See page IR-55)**
12. **INSTALL REAR DECK TRIM COVER LH (w/ Rear No. 2 Seat) (See page IR-55)**
13. **INSTALL REAR FLOOR FINISH PLATE (See page IR-55)**
14. **INSTALL BACK DOOR WEATHERSTRIP**
15. **INSTALL REAR FLOOR NO. 1 MAT SUPPORT SIDE PLATE (See page IR-55)**
16. **INSTALL REAR FLOOR NO. 2 BOARD**
17. **INSTALL REAR FLOOR NO. 3 BOARD**
18. **INSTALL REAR NO. 2 SEAT ASSEMBLY RH (w/ Rear No. 2 Seat)**
    (a) Install the rear No. 2 seat (see page SE-121).
19. **INSTALL REAR NO. 2 SEAT ASSEMBLY LH (w/ Rear No. 2 Seat)**
    (a) Install the rear No. 2 seat (see page SE-121).
20. **INSTALL DECK BOARD ASSEMBLY (w/o Rear No. 2 Seat)**
21. **INSTALL REAR FLOOR NO. 1 BOARD (w/o Rear No. 2 Seat)**
22. **INSTALL TONNEAU COVER ASSEMBLY (w/o Rear No. 2 Seat)**
23. **INSTALL PACKAGE TRAY TRIM POCKET SUB-ASSEMBLY (w/o Rear No. 2 Seat)**
24. **INSTALL LOWER CENTER PILLAR GARNISH RH (See page IR-56)**
25. **INSTALL LOWER CENTER PILLAR GARNISH LH (See page IR-56)**

26. INSTALL REAR DOOR OPENING TRIM WEATHERSTRIP RH

27. INSTALL REAR DOOR OPENING TRIM WEATHERSTRIP LH

28. INSTALL REAR DOOR SCUFF PLATE RH (See page IR-57)

29. INSTALL REAR DOOR SCUFF PLATE LH (See page IR-57)

30. INSTALL FRONT DOOR OPENING TRIM WEATHERSTRIP RH

31. INSTALL FRONT DOOR OPENING TRIM WEATHERSTRIP LH

32. INSTALL COWL SIDE TRIM BOARD RH (See page IR-59)

33. INSTALL COWL SIDE TRIM BOARD LH (See page IR-59)

34. INSTALL FRONT DOOR SCUFF PLATE RH (See page IR-59)

35. INSTALL FRONT DOOR SCUFF PLATE LH (See page IR-59)

36. INSTALL REAR CONSOLE BOX SUB-ASSEMBLY (See page IP-26)

37. INSTALL NO. 1 INSTRUMENT PANEL BRACKET COVER INNER RH (See page IP-26)

38. INSTALL NO. 1 INSTRUMENT PANEL BRACKET COVER INNER LH (See page IP-26)

39. INSTALL CONSOLE REAR END PANEL (See page IP-26)

40. INSTALL UPPER REAR CONSOLE PANEL SUB-ASSEMBLY (See page IP-27)

41. INSTALL CONSOLE CUP HOLDER BOX (See page IP-27)

42. INSTALL SWITCH BASE (See page IP-27)

43. INSTALL UPPER CONSOLE PANEL SUB-ASSEMBLY (See page IP-27)

44. INSTALL NO. 2 CONSOLE UPPER PANEL GARNISH (See page IP-28)

45. INSTALL NO. 1 CONSOLE UPPER PANEL GARNISH (See page IP-28)

46. INSTALL REAR NO. 1 SEAT ASSEMBLY LH

(a) Install the rear No. 1 seat (see page SE-64).

47. INSTALL REAR NO. 1 SEAT ASSEMBLY RH

(a) Install the rear No. 1 seat (see page SE-97).

48. INSTALL FRONT SEAT ASSEMBLY LH

(a) Install the front seat.
for Manual Seat (see page SE-22)
for Power Seat (see page SE-37).

49. INSTALL FRONT SEAT ASSEMBLY RH

(a) Install the front seat.
for Manual Seat (see page SE-22)
for Power Seat (see page SE-37)

50. CONNECT CABLE TO NEGATIVE BATTERY TERMINAL

51. CHECK SRS WARNING LIGHT

(a) Check the SRS warning light (see page RS-37).

FUEL LID LOCK CONTROL

COMPONENTS

for Power Seat Type

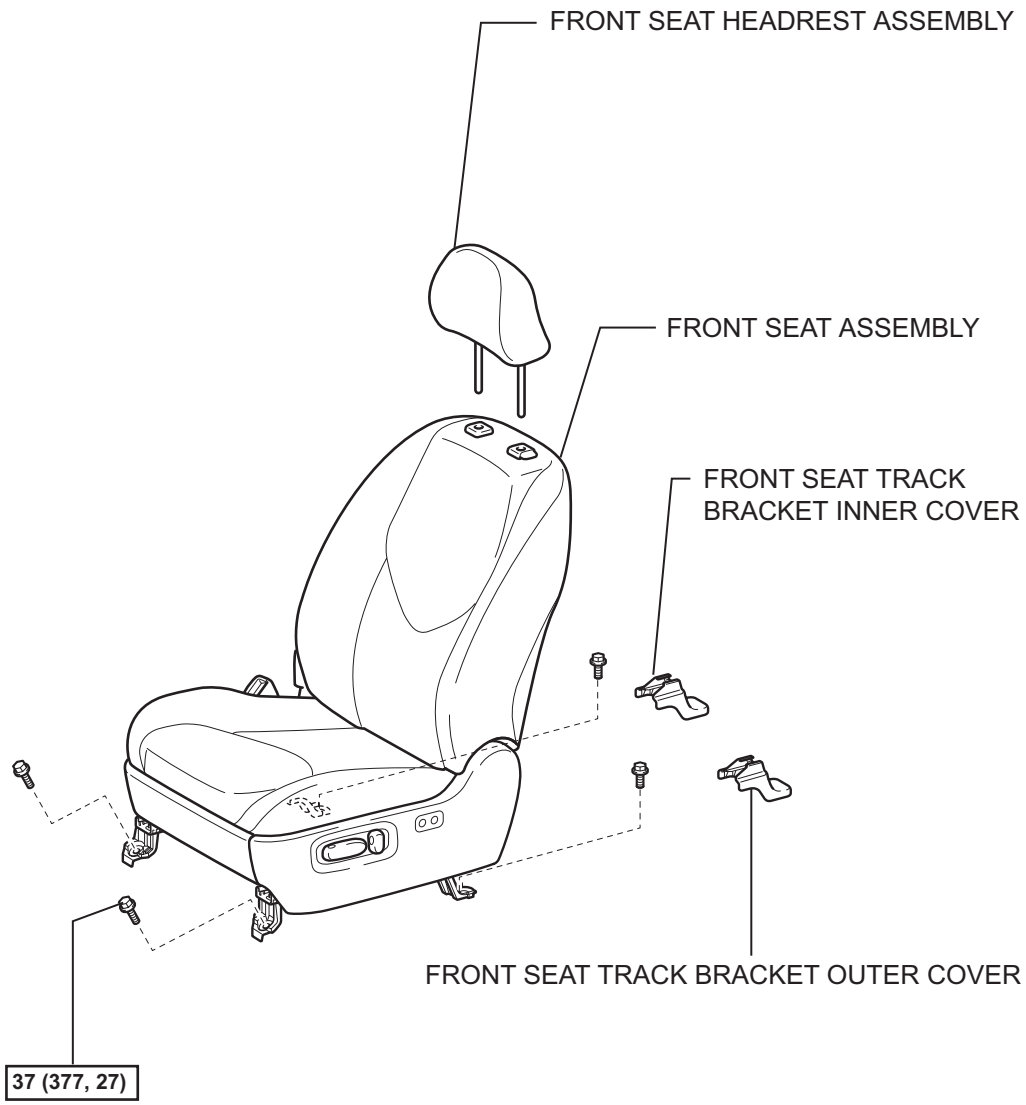

N*m (kgf*cm, ft.*lbf) : Specified torque

T

B131250E02

IR

for Manual Seat Type

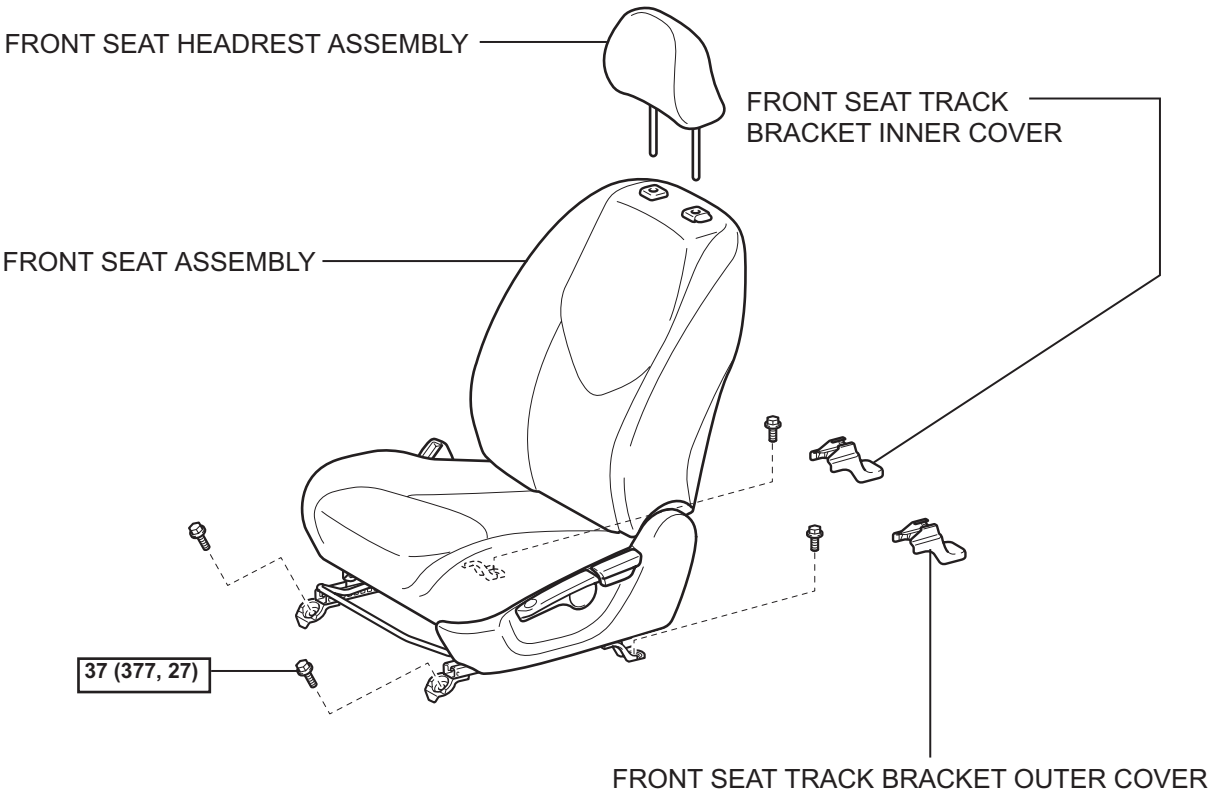

N*m (kgf*cm, ft.*lbf) : Specified torque

T

B130319E02

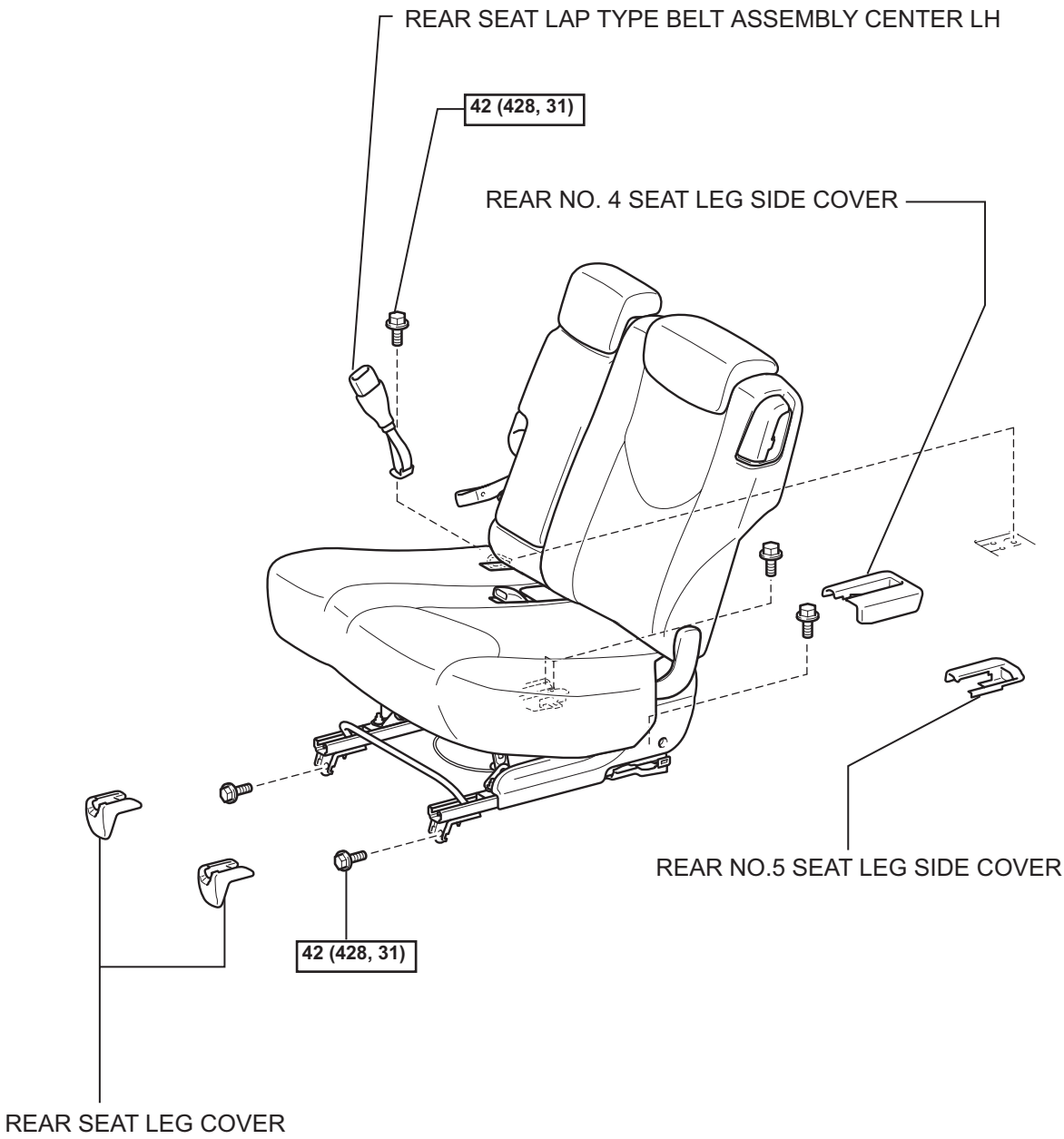

N*m (kgf*cm, ft.*lbf) : Specified torque

T

B132374E01

IR

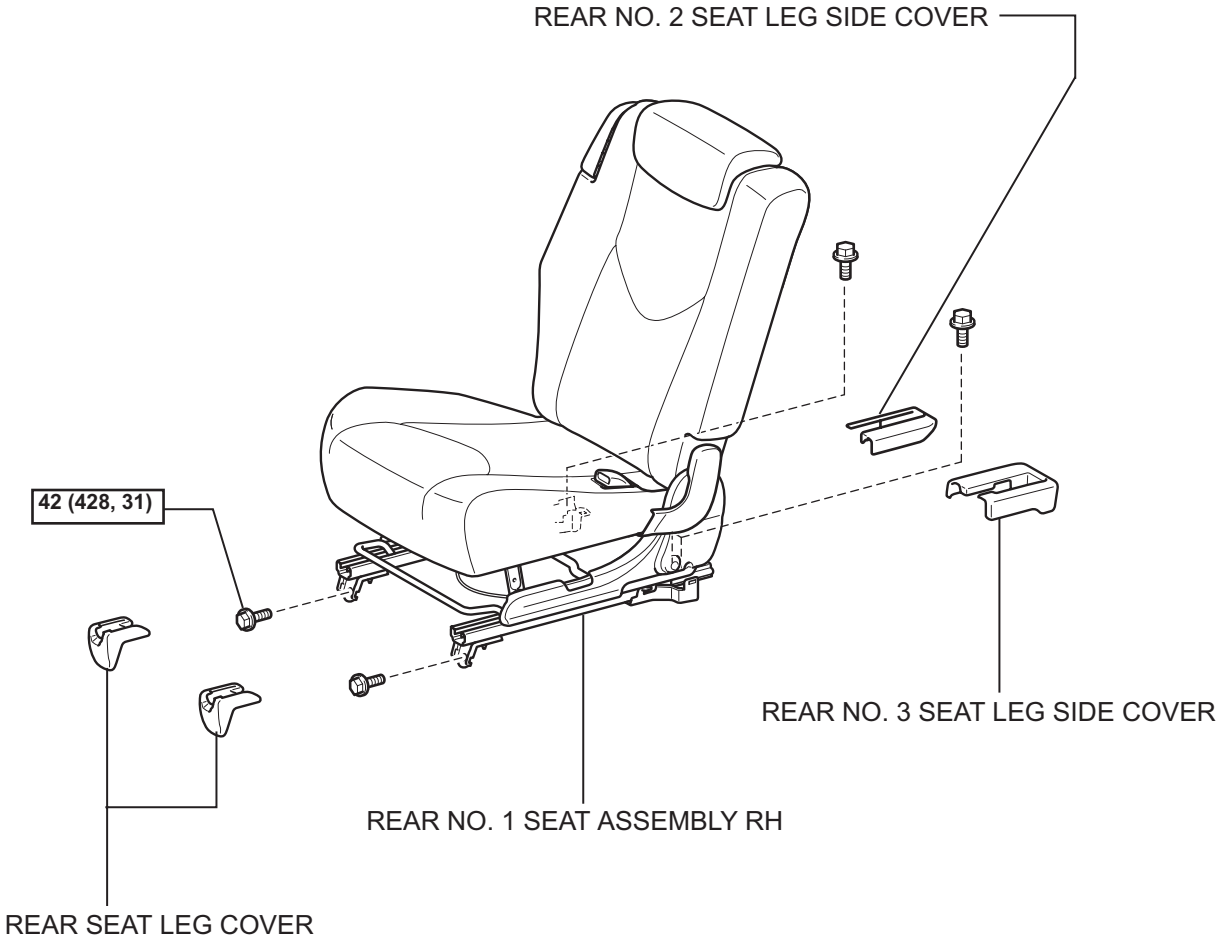

N*m (kgf*cm, ft.*lbf) : Specified torque

T

B131526E01

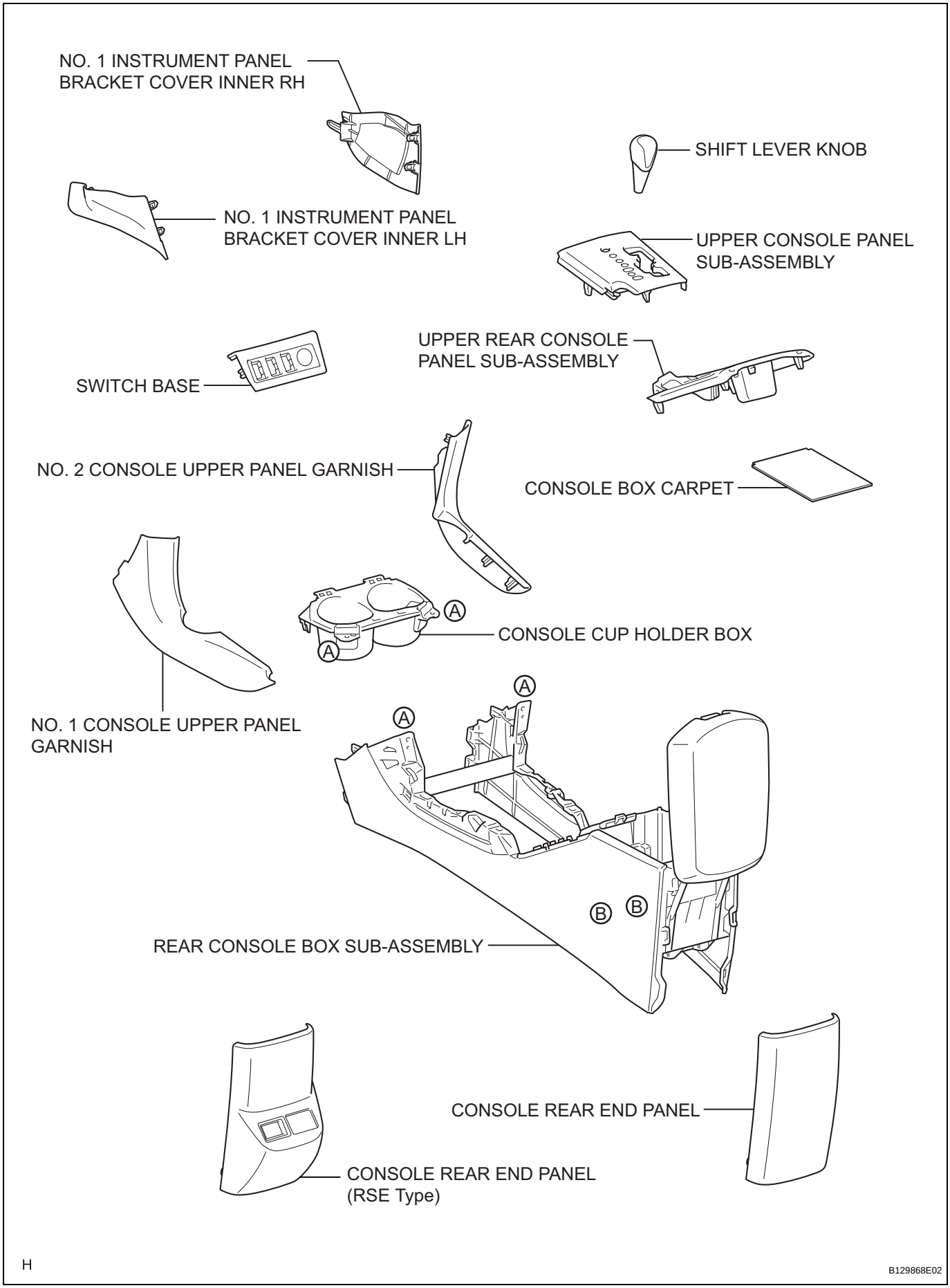
NO. 1 INSTRUMENT PANEL BRACKET COVER INNER RH
NO. 1 INSTRUMENT PANEL BRACKET COVER INNER LH
SHIFT LEVER KNOB
UPPER CONSOLE PANEL SUB-ASSEMBLY
SWITCH BASE
UPPER REAR CONSOLE PANEL SUB-ASSEMBLY
NO. 2 CONSOLE UPPER PANEL GARNISH
CONSOLE BOX CARPET
A
CONSOLE CUP HOLDER BOX
NO. 1 CONSOLE UPPER PANEL GARNISH
B
REAR CONSOLE BOX SUB-ASSEMBLY
CONSOLE REAR END PANEL
CONSOLE REAR END PANEL (RSE Type)
H
B129868E02

IR

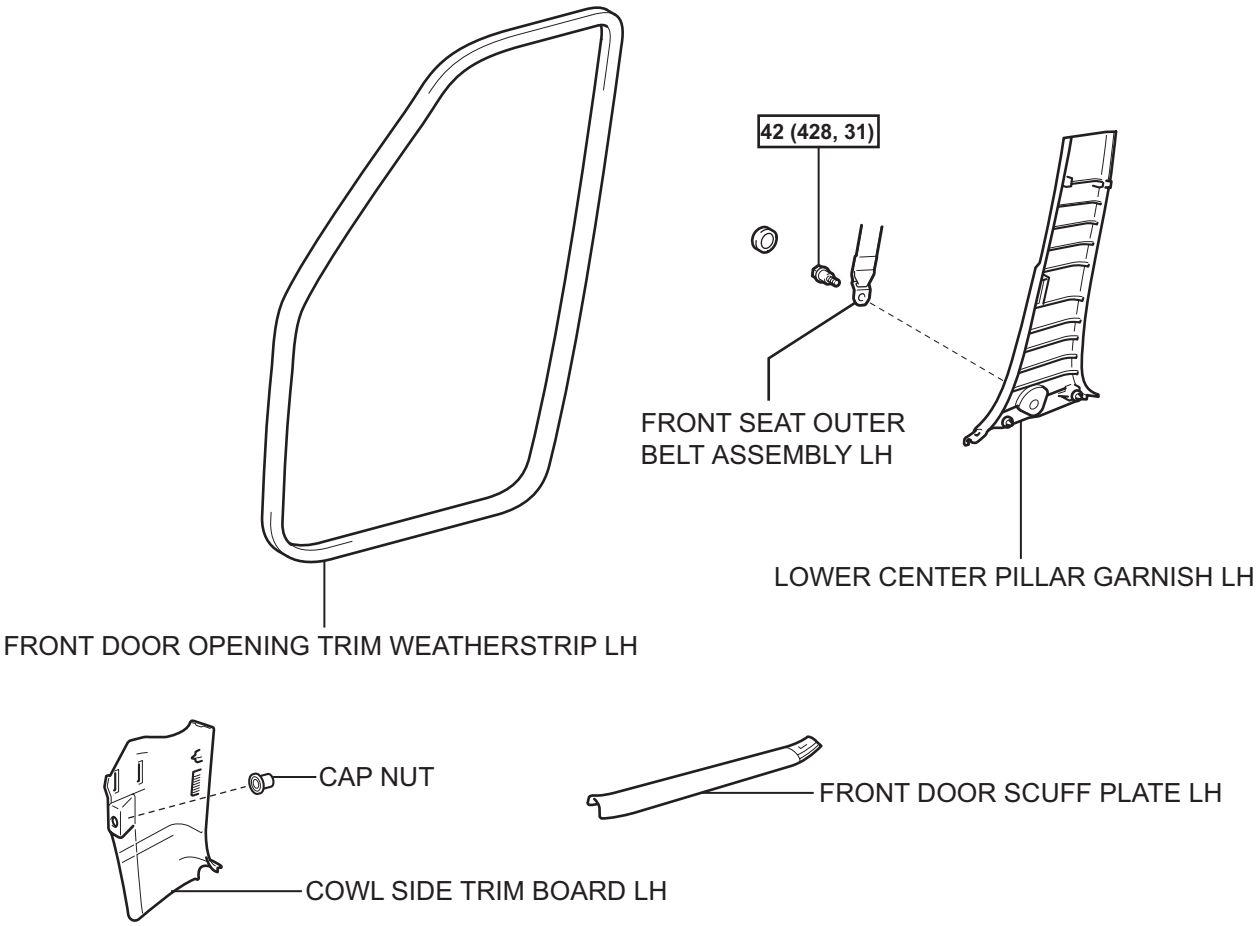

N*m (kgf*cm, ft.*lbf) : Specified torque

B131878E07

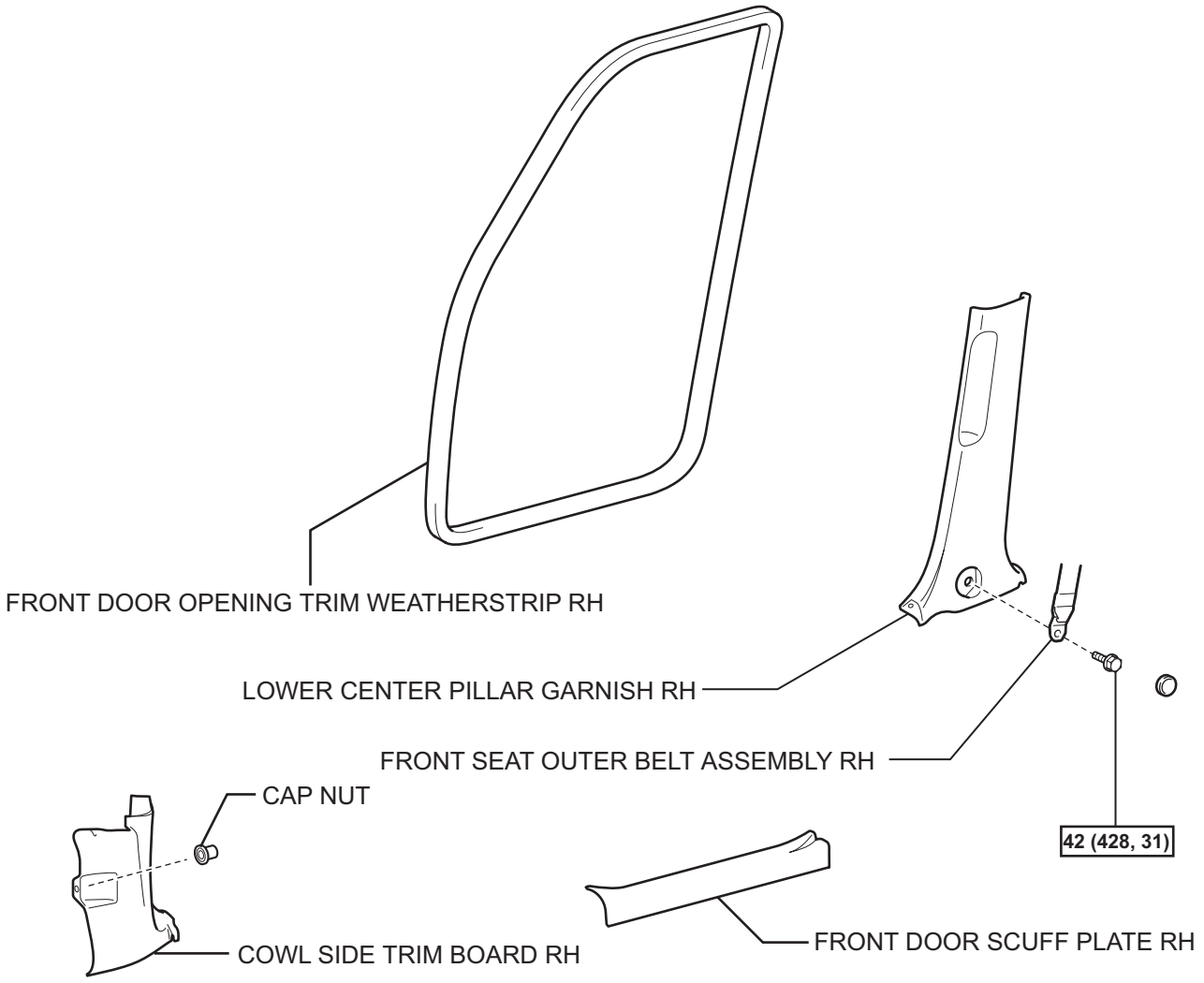

N*m (kgf*cm, ft.*lbf) : Specified torque

B131879E07

w/o Rear No. 2 Seat

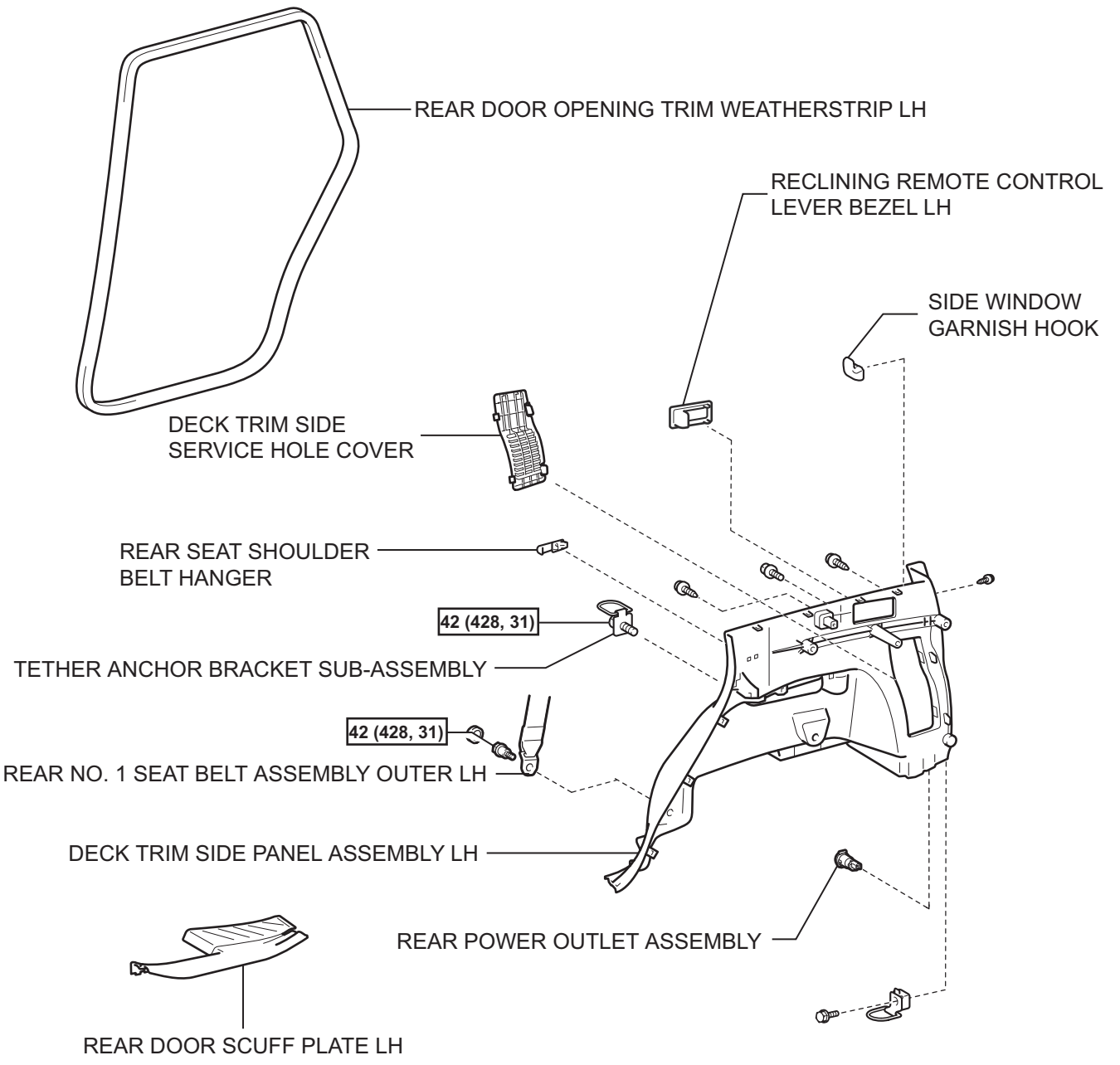

N*m (kgf*cm, ft.*lbf) : Specified torque

T

B131939E07

w/ Rear No. 2 Seat

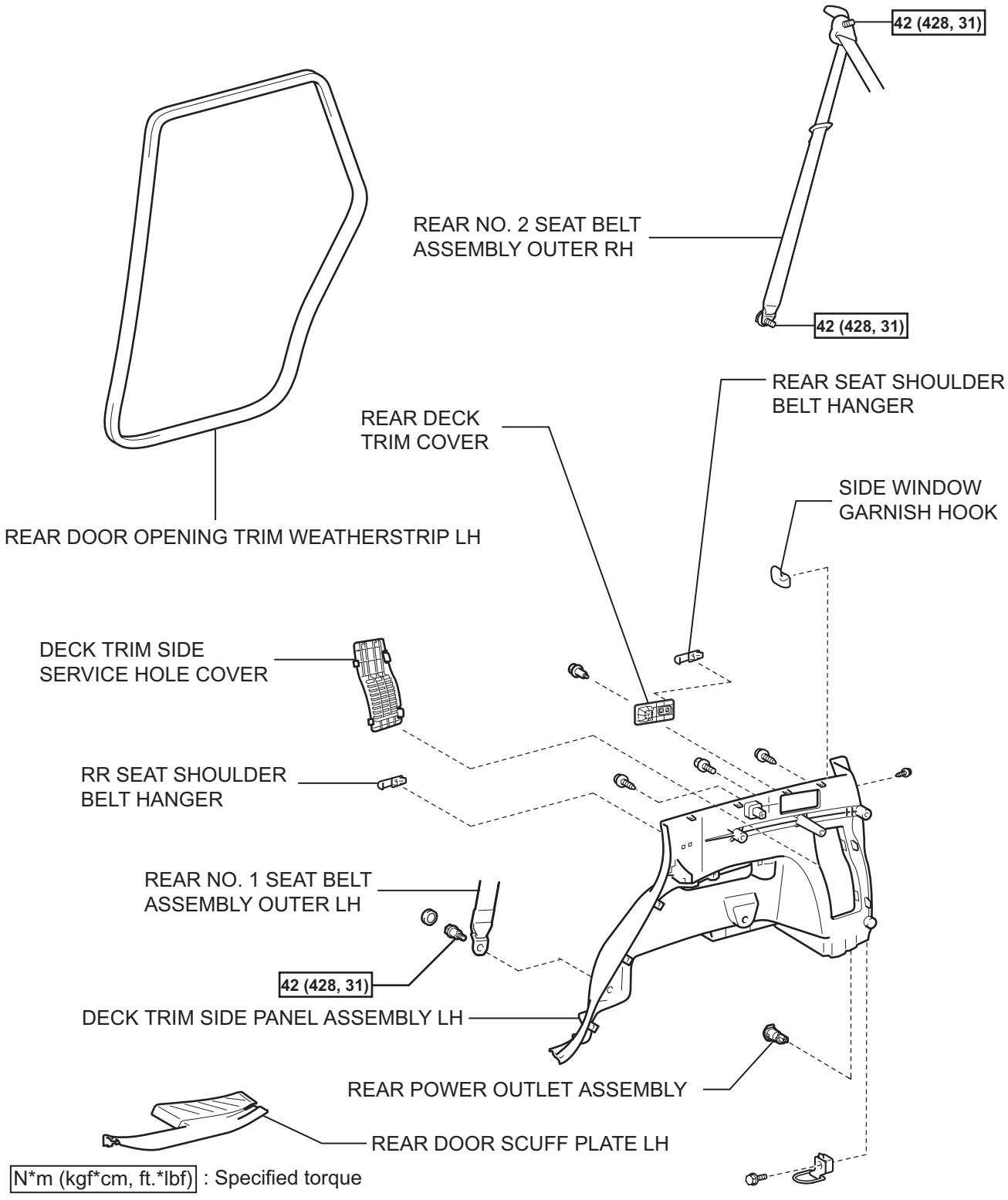

IR

w/o Rear No. 2 Seat

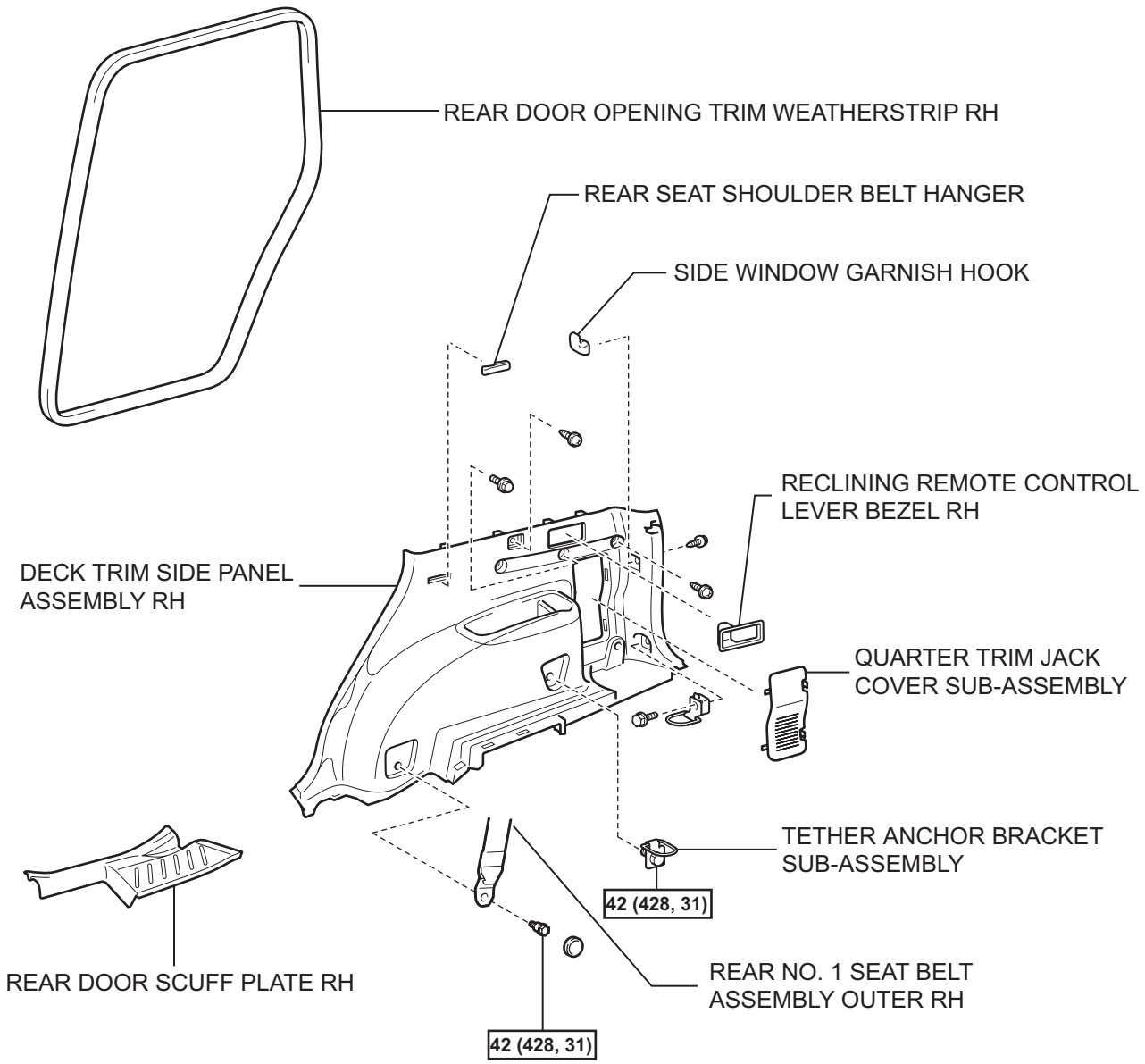

N*m (kgf*cm, ft.*lbf) : Specified torque

T

B131940E07

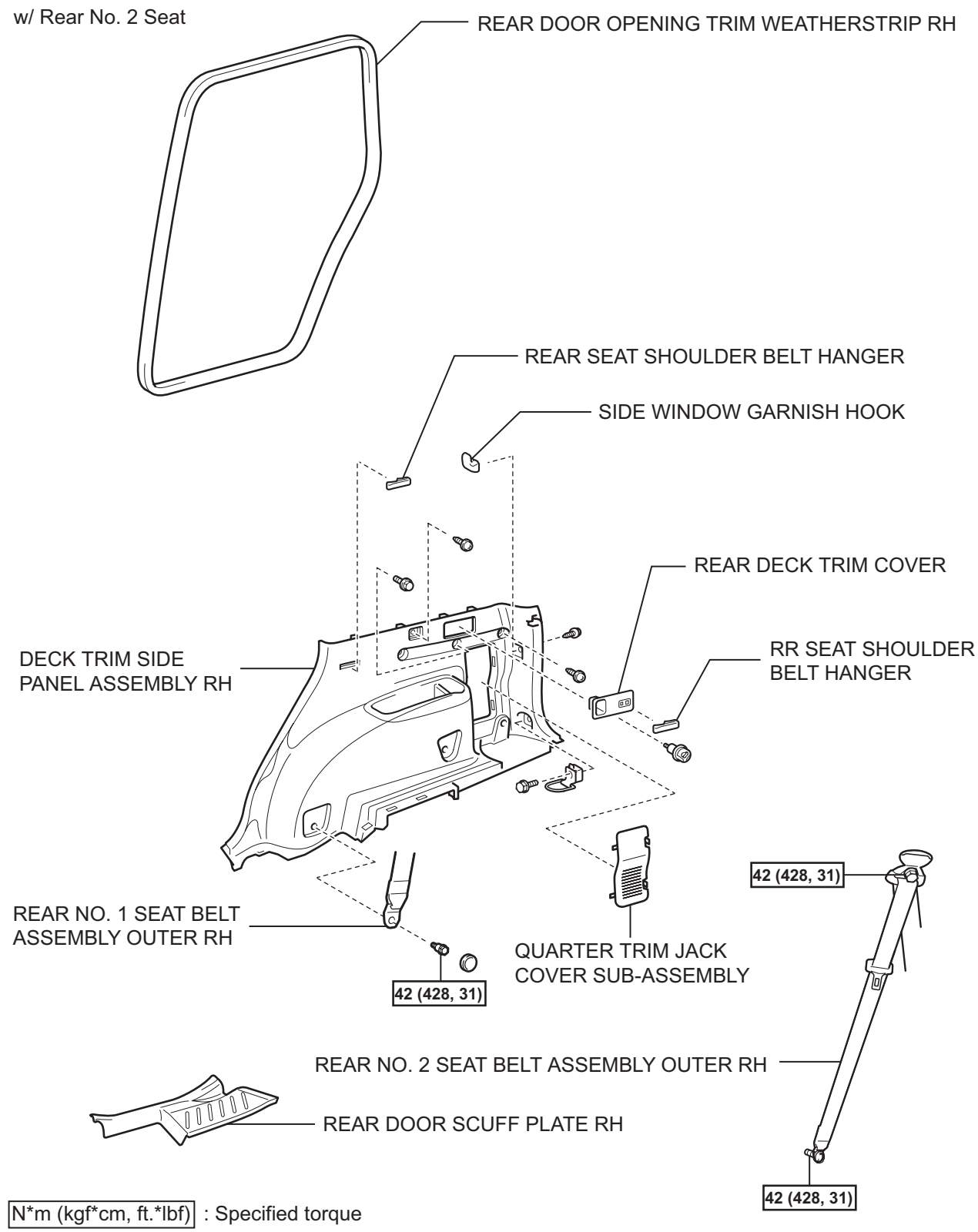
w/ Rear No. 2 Seat
REAR DOOR OPENING TRIM WEATHERSTRIP RH
REAR SEAT SHOULDER BELT HANGER
SIDE WINDOW GARNISH HOOK
REAR DECK TRIM COVER
DECK TRIM SIDE PANEL ASSEMBLY RH
RR SEAT SHOULDER BELT HANGER
REAR NO. 1 SEAT BELT ASSEMBLY OUTER RH
42 (428, 31)
QUARTER TRIM JACK COVER SUB-ASSEMBLY
42 (428, 31)
REAR NO. 2 SEAT BELT ASSEMBLY OUTER RH
REAR DOOR SCUFF PLATE RH
42 (428, 31)
N*m (kgf*cm, ft.*lbf) : Specified torque
T
B130109E03

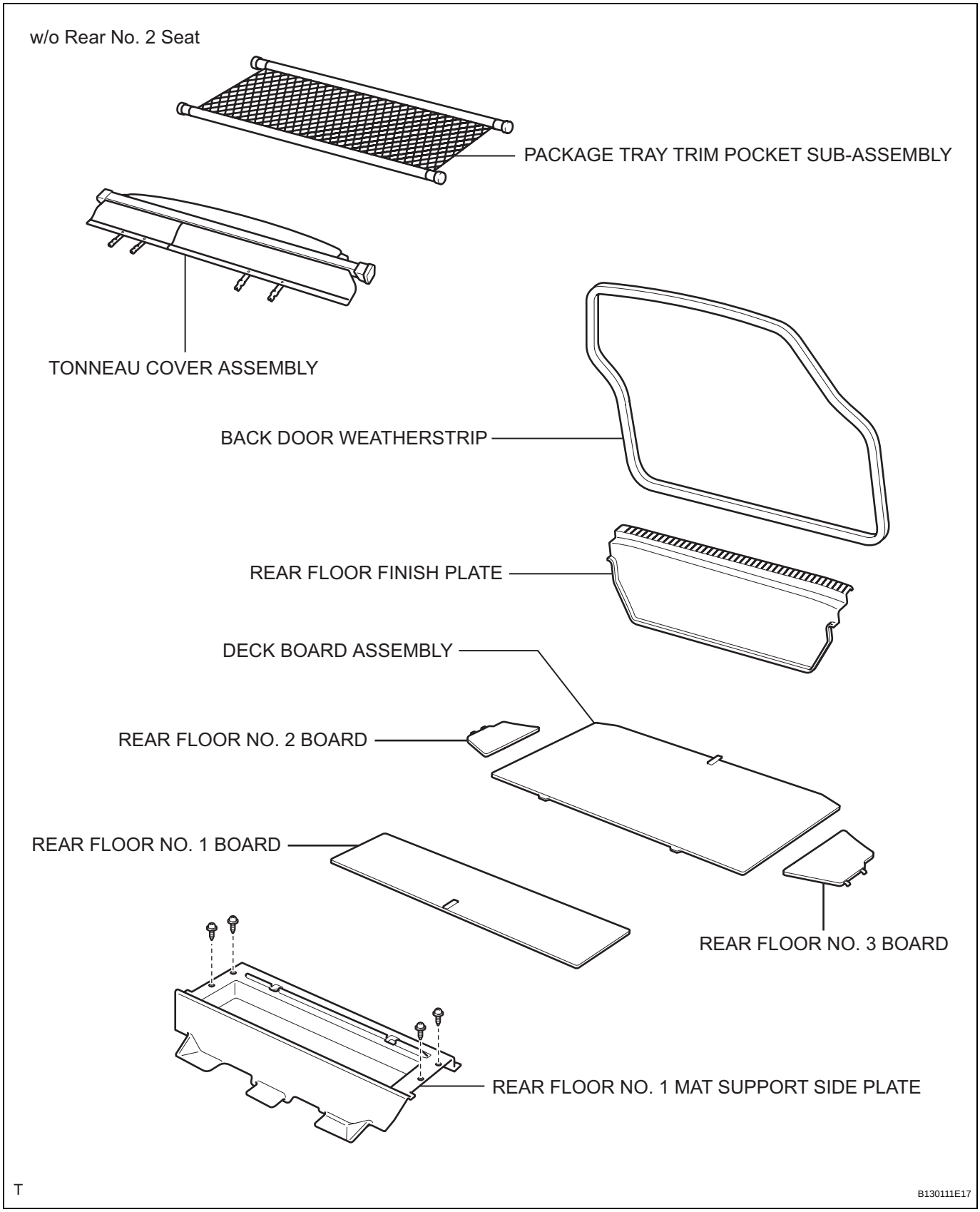
w/o Rear No. 2 Seat
PACKAGE TRAY TRIM POCKET SUB-ASSEMBLY
TONNEAU COVER ASSEMBLY
BACK DOOR WEATHERSTRIP
REAR FLOOR FINISH PLATE
DECK BOARD ASSEMBLY
REAR FLOOR NO. 2 BOARD
REAR FLOOR NO. 1 BOARD
REAR FLOOR NO. 3 BOARD
REAR FLOOR NO. 1 MAT SUPPORT SIDE PLATE
T
B130111E17

w/ Rear No. 2 Seat

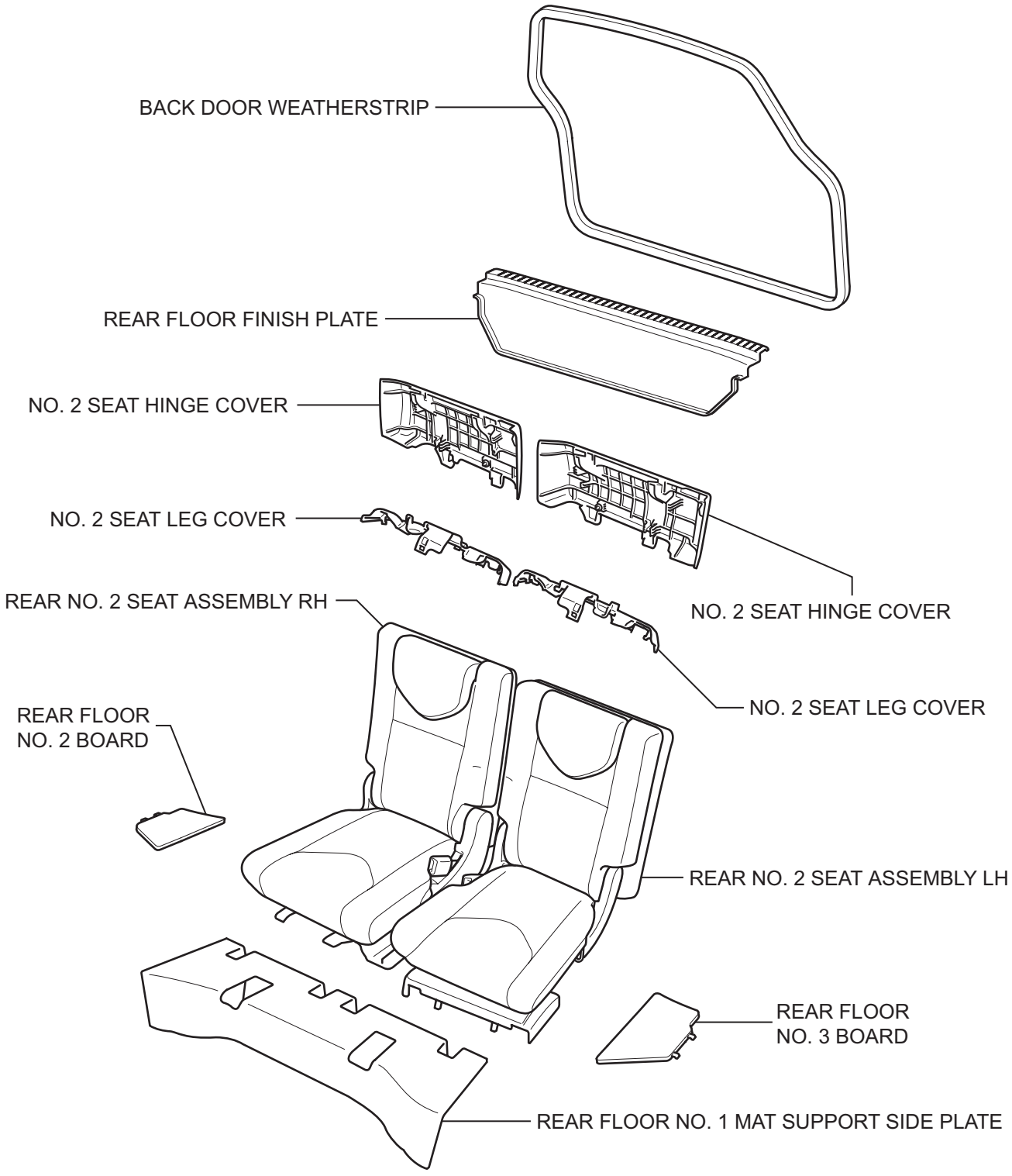

T

B130112E03

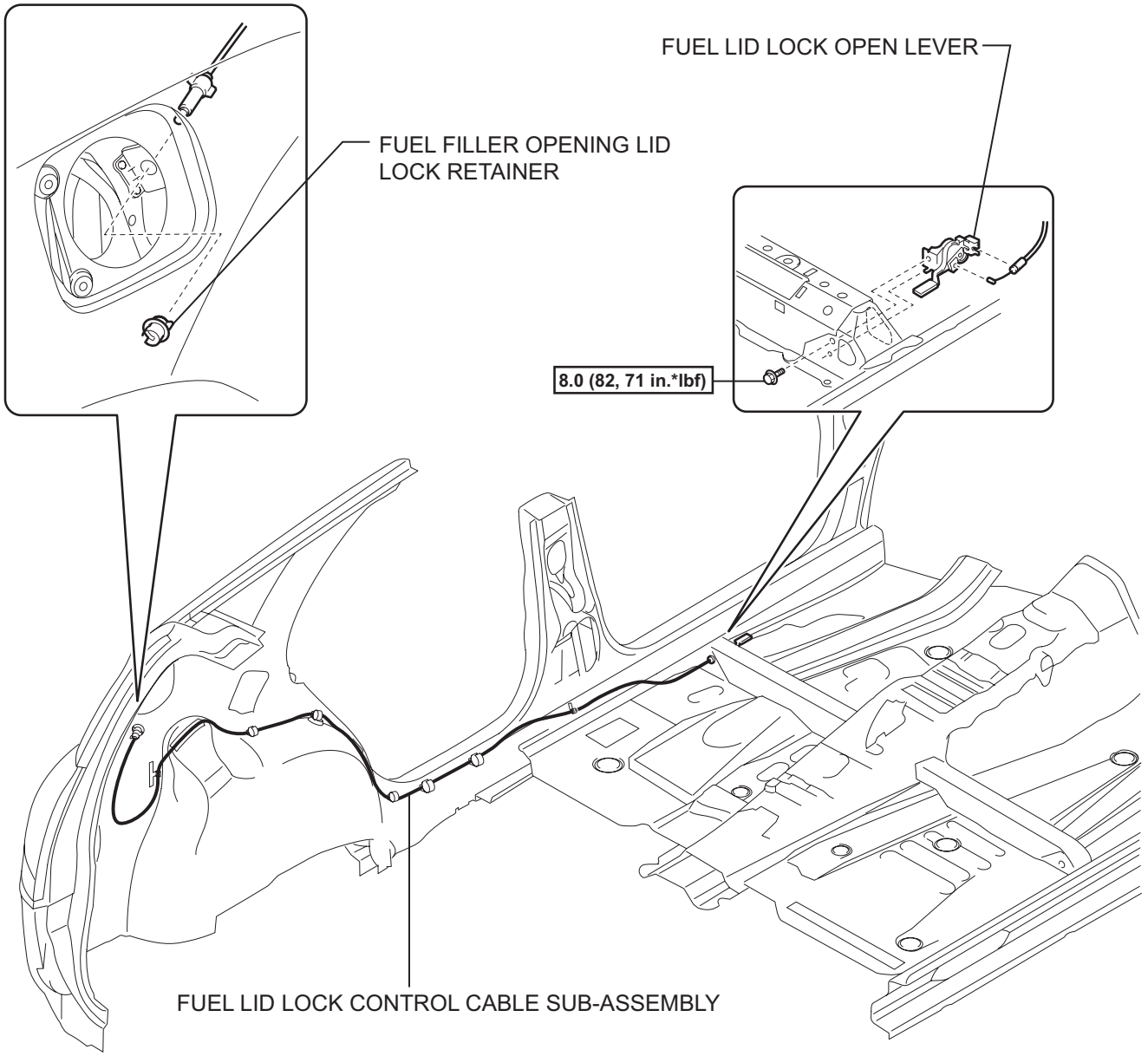

N*m (kgf*cm, ft.*lbf) : Specified torque

T

B131386E04

COMPONENTS

(2006/01-)

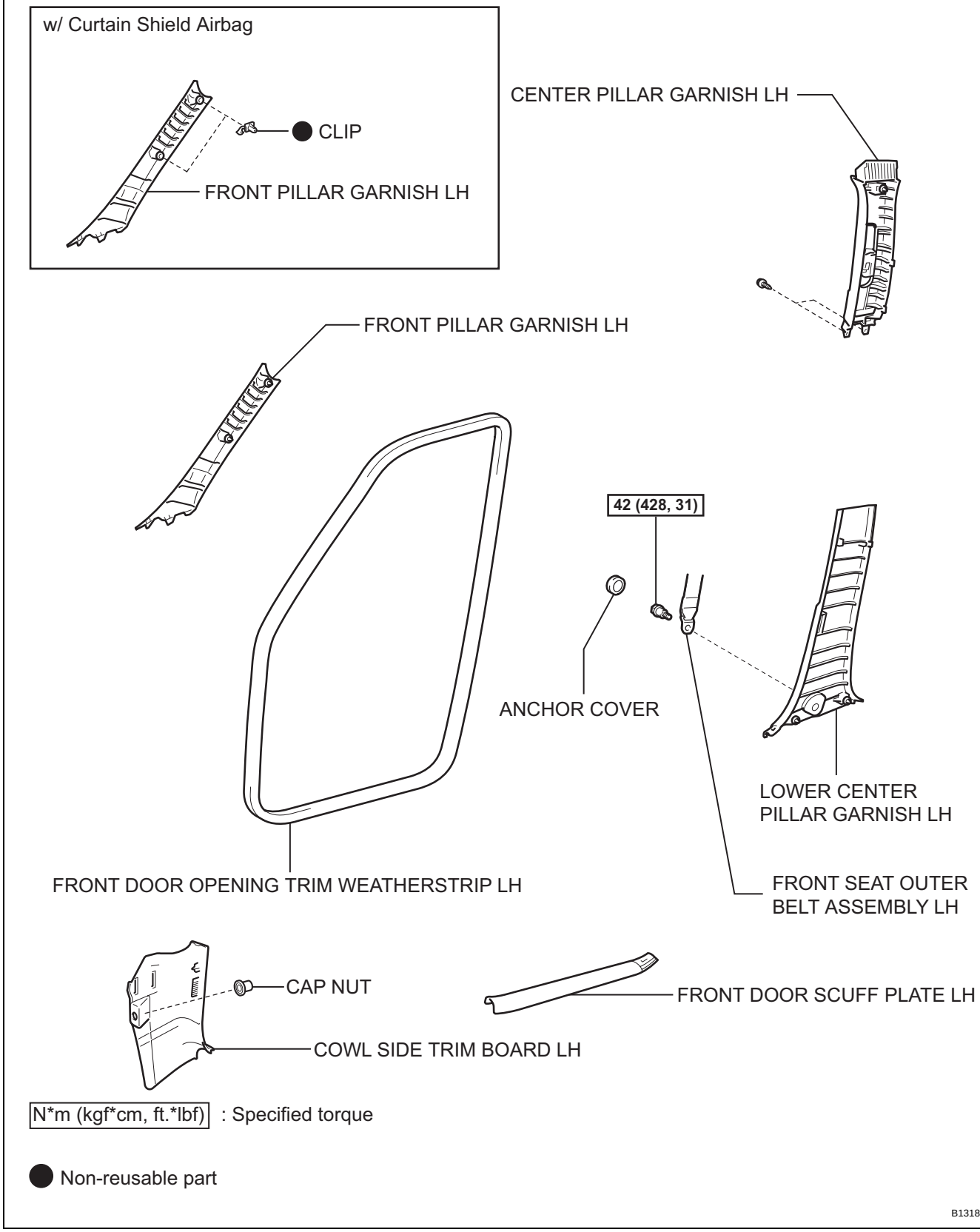

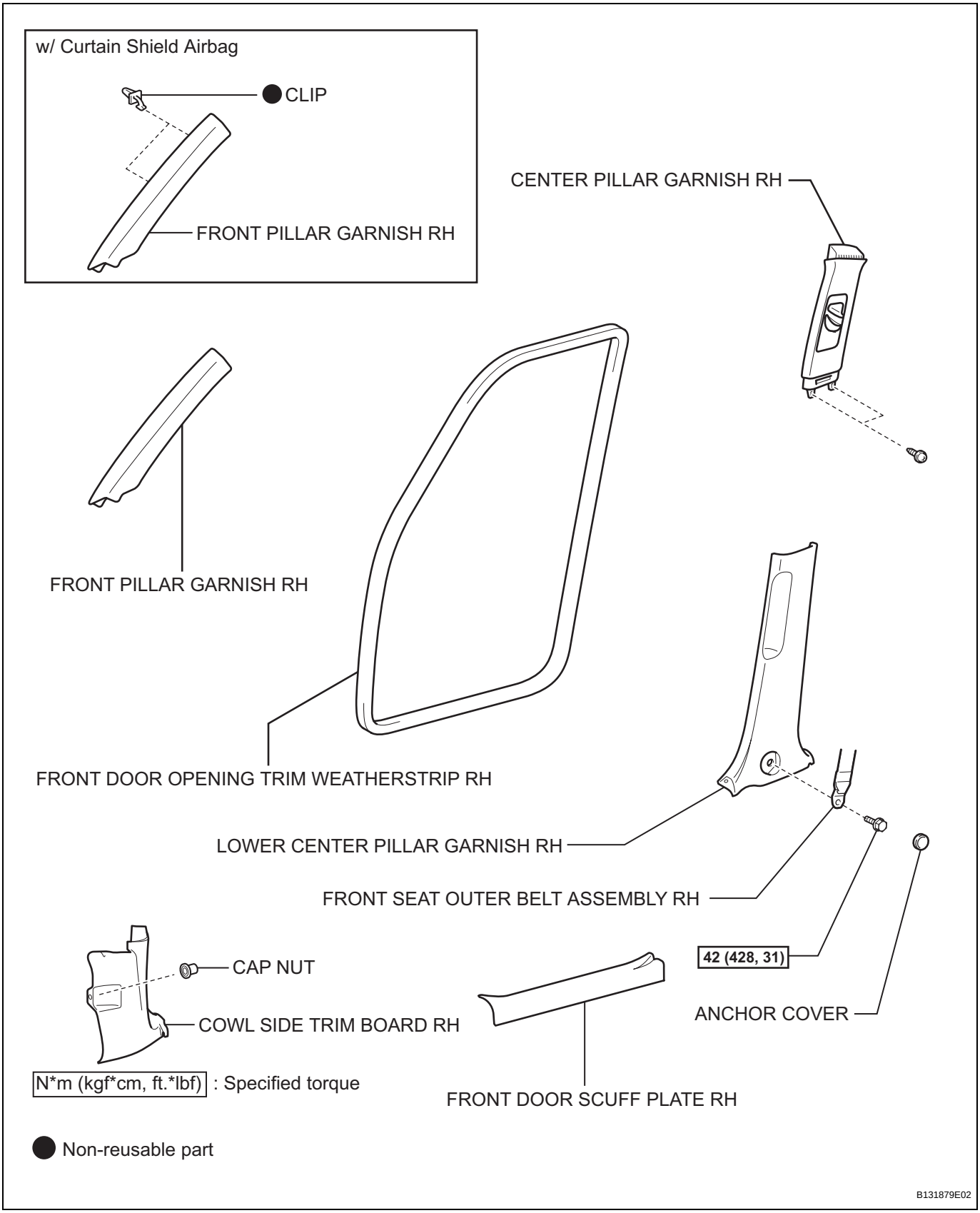
w/ Curtain Shield Airbag
CLIP
FRONT PILLAR GARNISH RH
CENTER PILLAR GARNISH RH
FRONT PILLAR GARNISH RH
FRONT DOOR OPENING TRIM WEATHERSTRIP RH
LOWER CENTER PILLAR GARNISH RH
FRONT SEAT OUTER BELT ASSEMBLY RH
42 (428, 31)
ANCHOR COVER
CAP NUT
COWL SIDE TRIM BOARD RH
FRONT DOOR SCUFF PLATE RH
N*m (kgf*cm, ft.*lbf) : Specified torque
Non-reusable part
B131879E02

w/o Rear No. 2 Seat

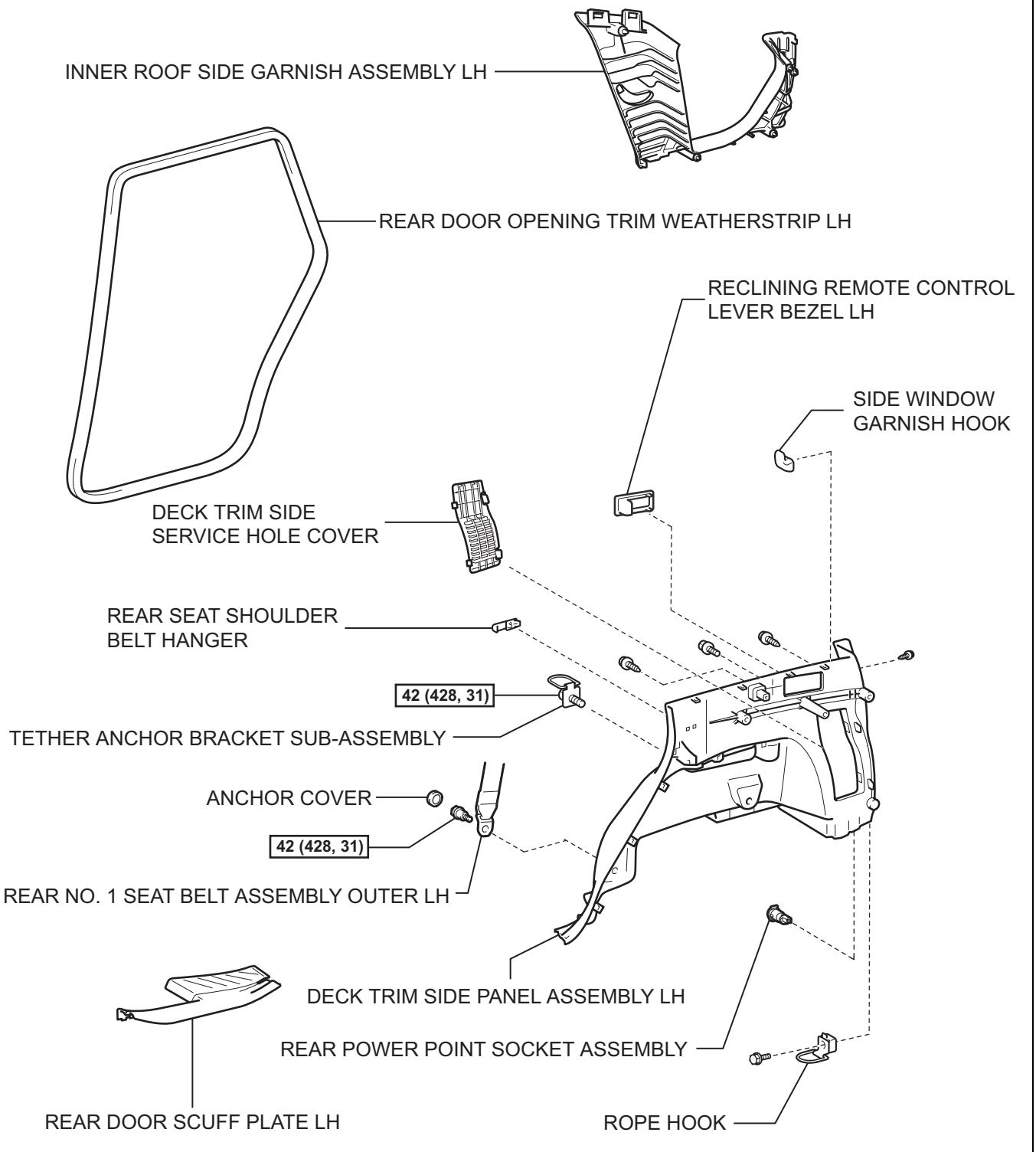

N*m (kgf*cm, ft.*lbf) : Specified torque

T

B131939E02

IR

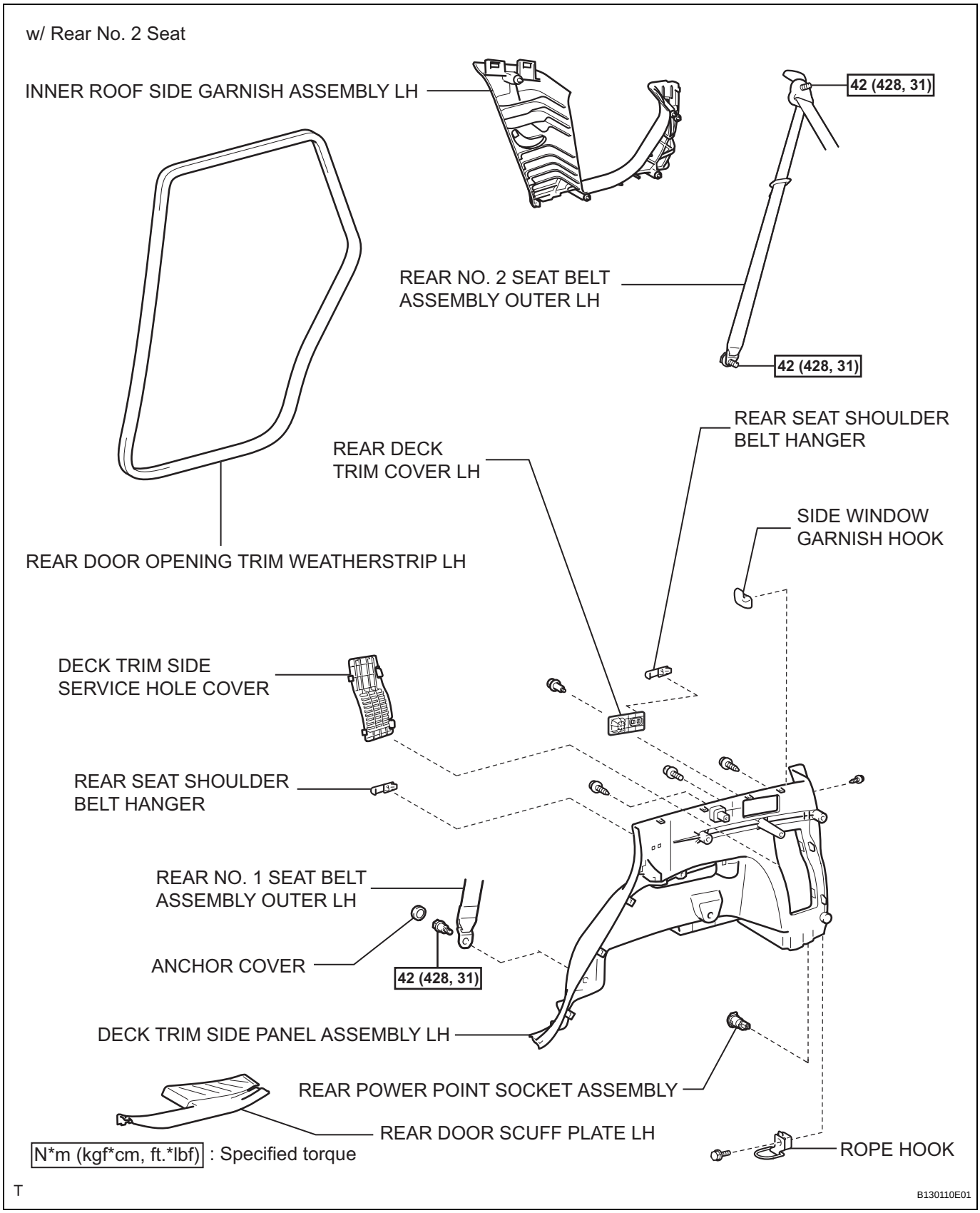
w/ Rear No. 2 Seat
INNER ROOF SIDE GARNISH ASSEMBLY LH
42 (428, 31)
REAR NO. 2 SEAT BELT ASSEMBLY OUTER LH
42 (428, 31)
REAR SEAT SHOULDER BELT HANGER
REAR DECK TRIM COVER LH
SIDE WINDOW GARNISH HOOK
REAR DOOR OPENING TRIM WEATHERSTRIP LH
DECK TRIM SIDE SERVICE HOLE COVER
REAR SEAT SHOULDER BELT HANGER
REAR NO. 1 SEAT BELT ASSEMBLY OUTER LH
ANCHOR COVER
42 (428, 31)
DECK TRIM SIDE PANEL ASSEMBLY LH
REAR POWER POINT SOCKET ASSEMBLY
REAR DOOR SCUFF PLATE LH
ROPE HOOK
N*m (kgf*cm, ft.*lbf) : Specified torque
T
B130110E01

w/o Rear No. 2 Seat

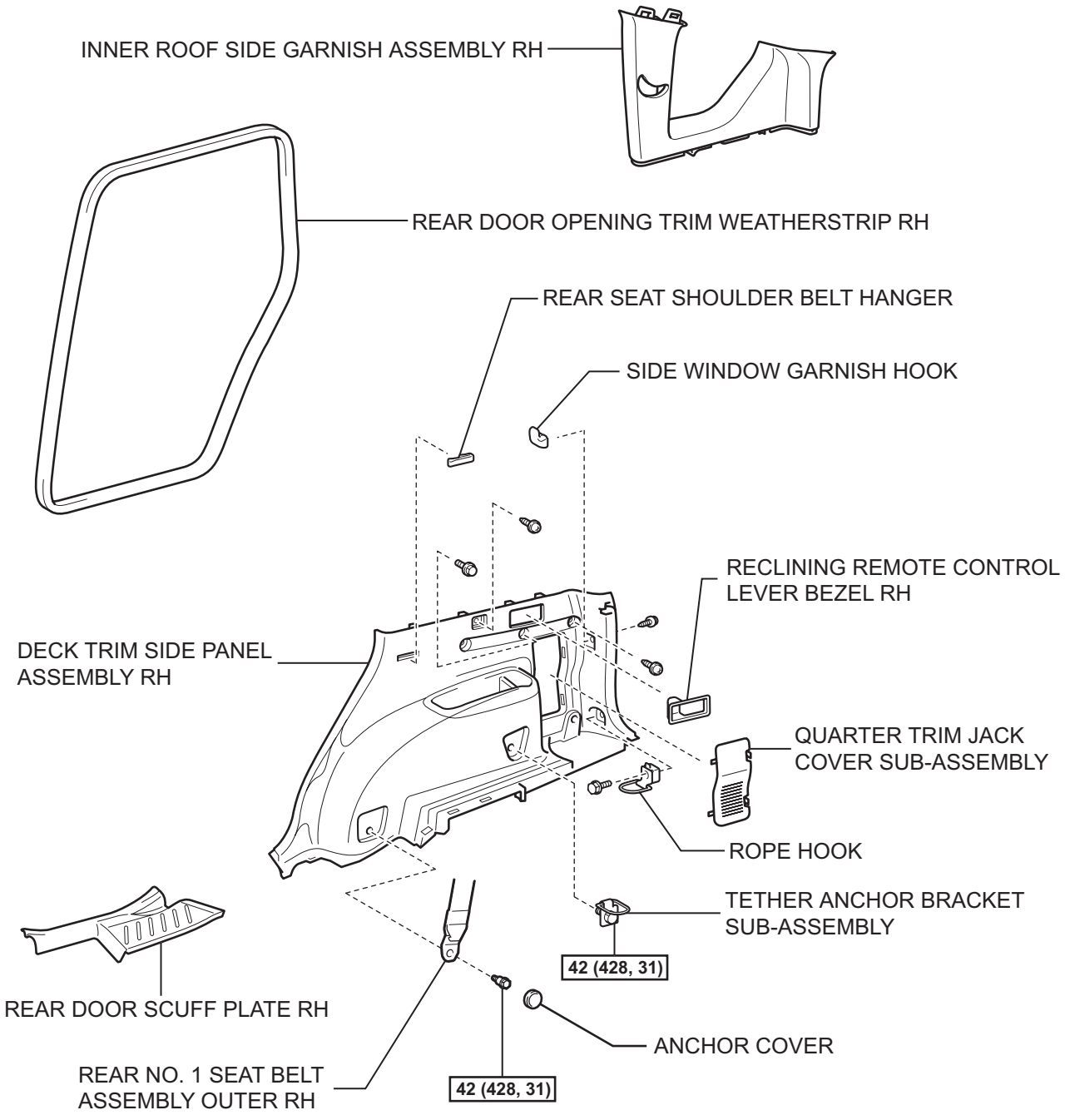

N*m (kgf*cm, ft.*lbf) : Specified torque

T

B131940E02

IR

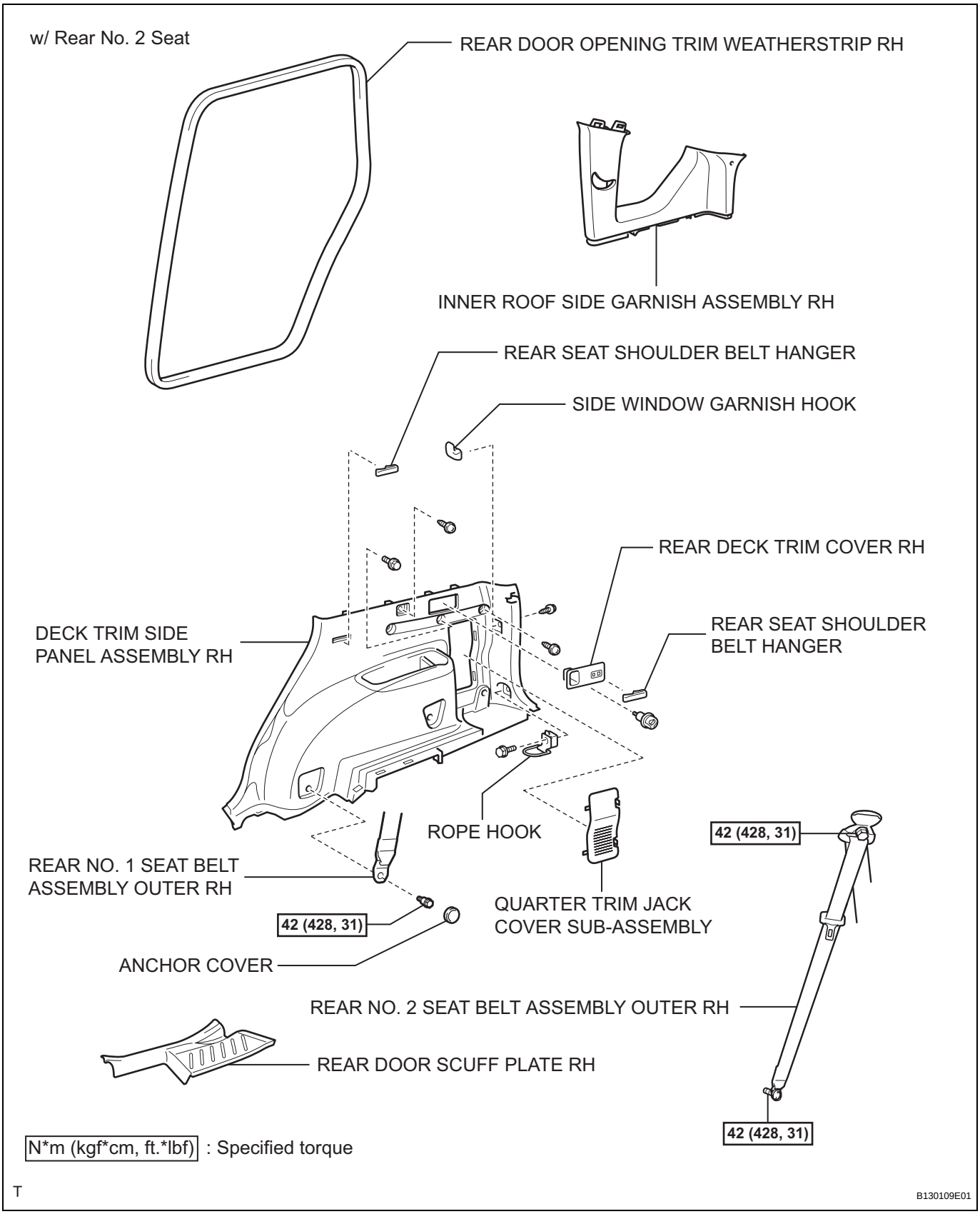
w/ Rear No. 2 Seat
REAR DOOR OPENING TRIM WEATHERSTRIP RH
INNER ROOF SIDE GARNISH ASSEMBLY RH
REAR SEAT SHOULDER BELT HANGER
SIDE WINDOW GARNISH HOOK
REAR DECK TRIM COVER RH
DECK TRIM SIDE PANEL ASSEMBLY RH
REAR SEAT SHOULDER BELT HANGER
ROPE HOOK
42 (428, 31)
REAR NO. 1 SEAT BELT ASSEMBLY OUTER RH
QUARTER TRIM JACK COVER SUB-ASSEMBLY
42 (428, 31)
ANCHOR COVER
REAR NO. 2 SEAT BELT ASSEMBLY OUTER RH
REAR DOOR SCUFF PLATE RH
42 (428, 31)
N*m (kgf*cm, ft.*lbf) : Specified torque
T
B130109E01

w/o Rear No. 2 Seat

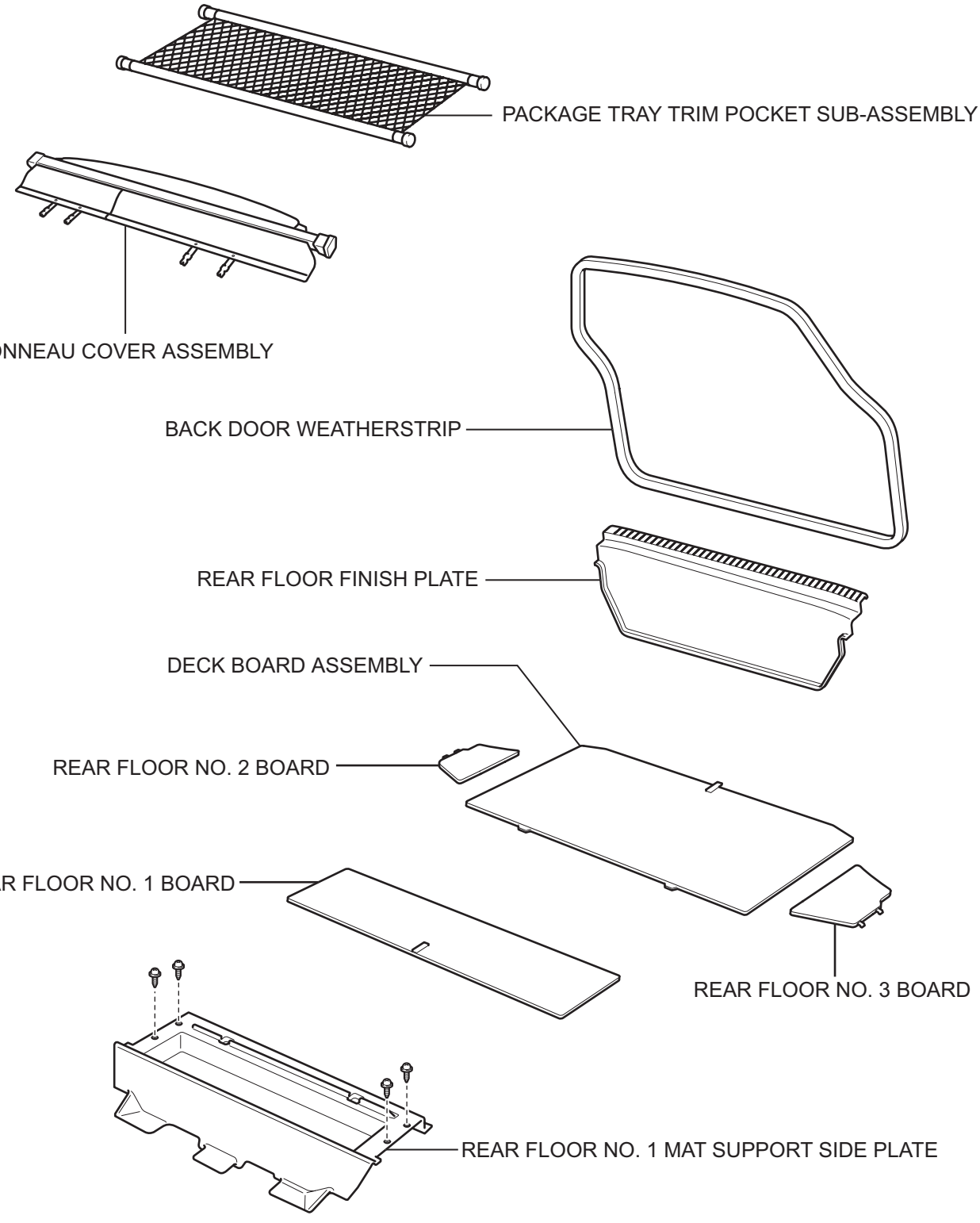

T

B130111E03

IR

IR

w/ Rear No. 2 Seat

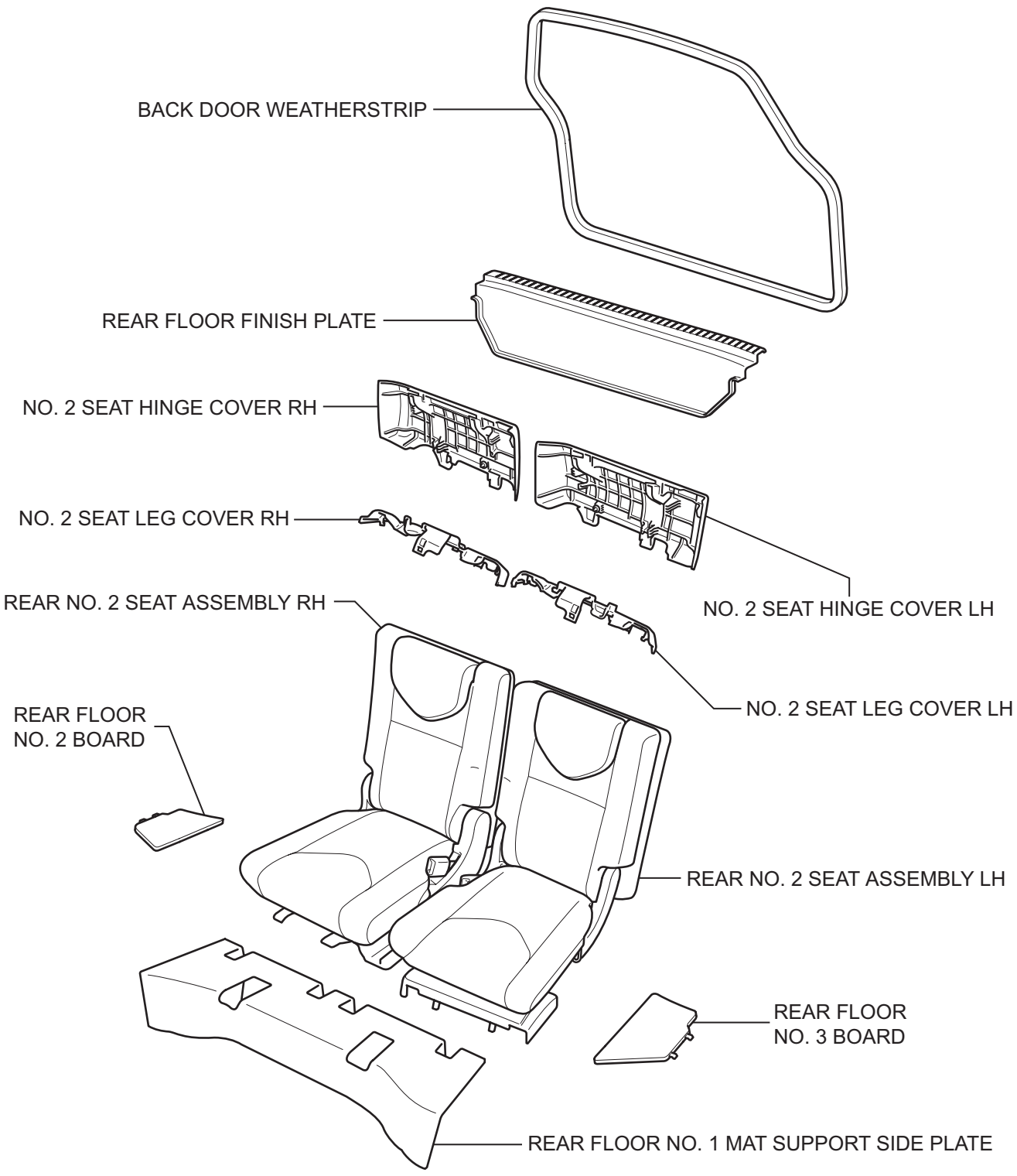

T

B130112E01

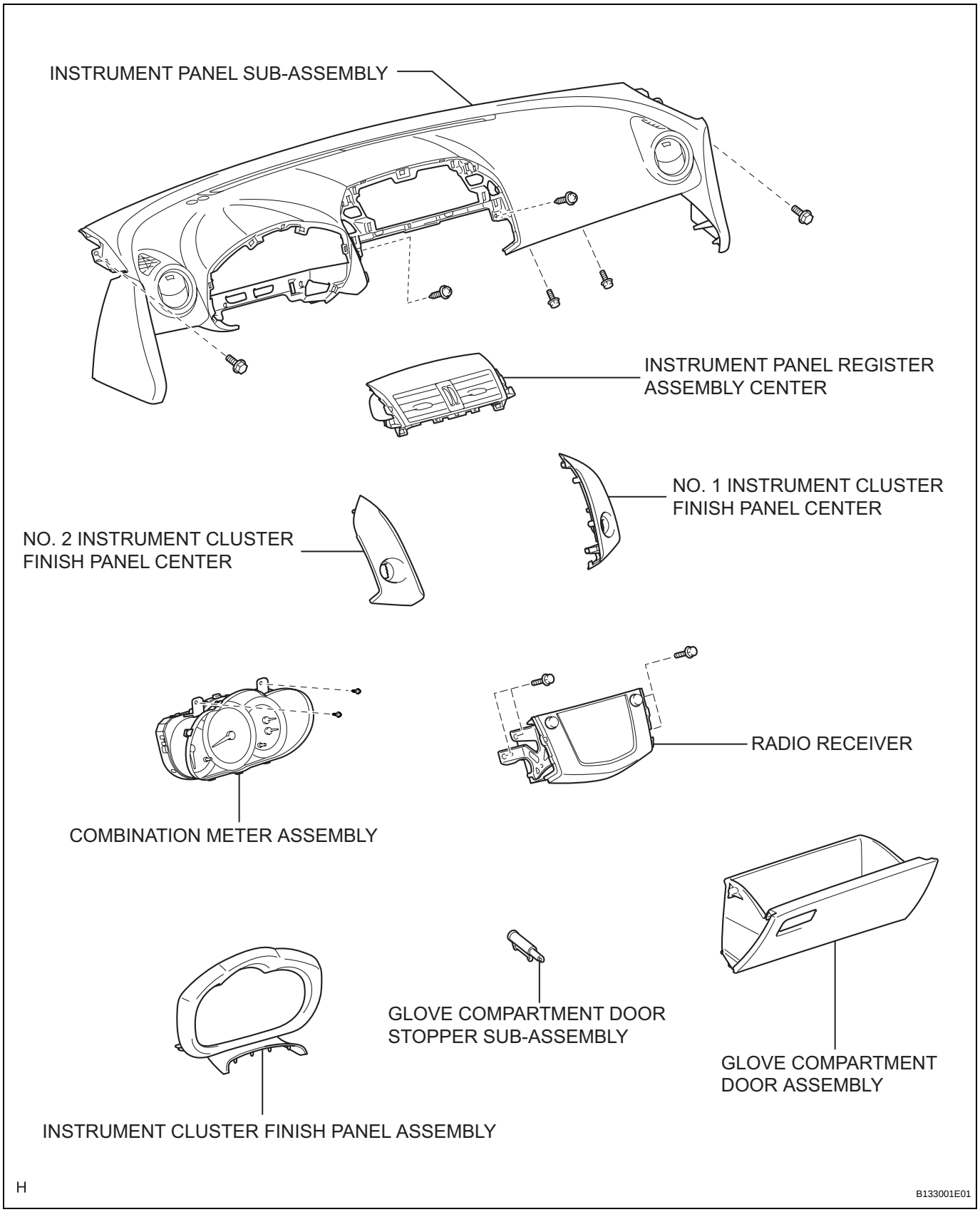
INSTRUMENT PANEL SUB-ASSEMBLY
INSTRUMENT PANEL REGISTER ASSEMBLY CENTER
NO. 1 INSTRUMENT CLUSTER FINISH PANEL CENTER
NO. 2 INSTRUMENT CLUSTER FINISH PANEL CENTER
RADIO RECEIVER
COMBINATION METER ASSEMBLY
GLOVE COMPARTMENT DOOR STOPPER SUB-ASSEMBLY
GLOVE COMPARTMENT DOOR ASSEMBLY
INSTRUMENT CLUSTER FINISH PANEL ASSEMBLY
H
B133001E01

IR

IR

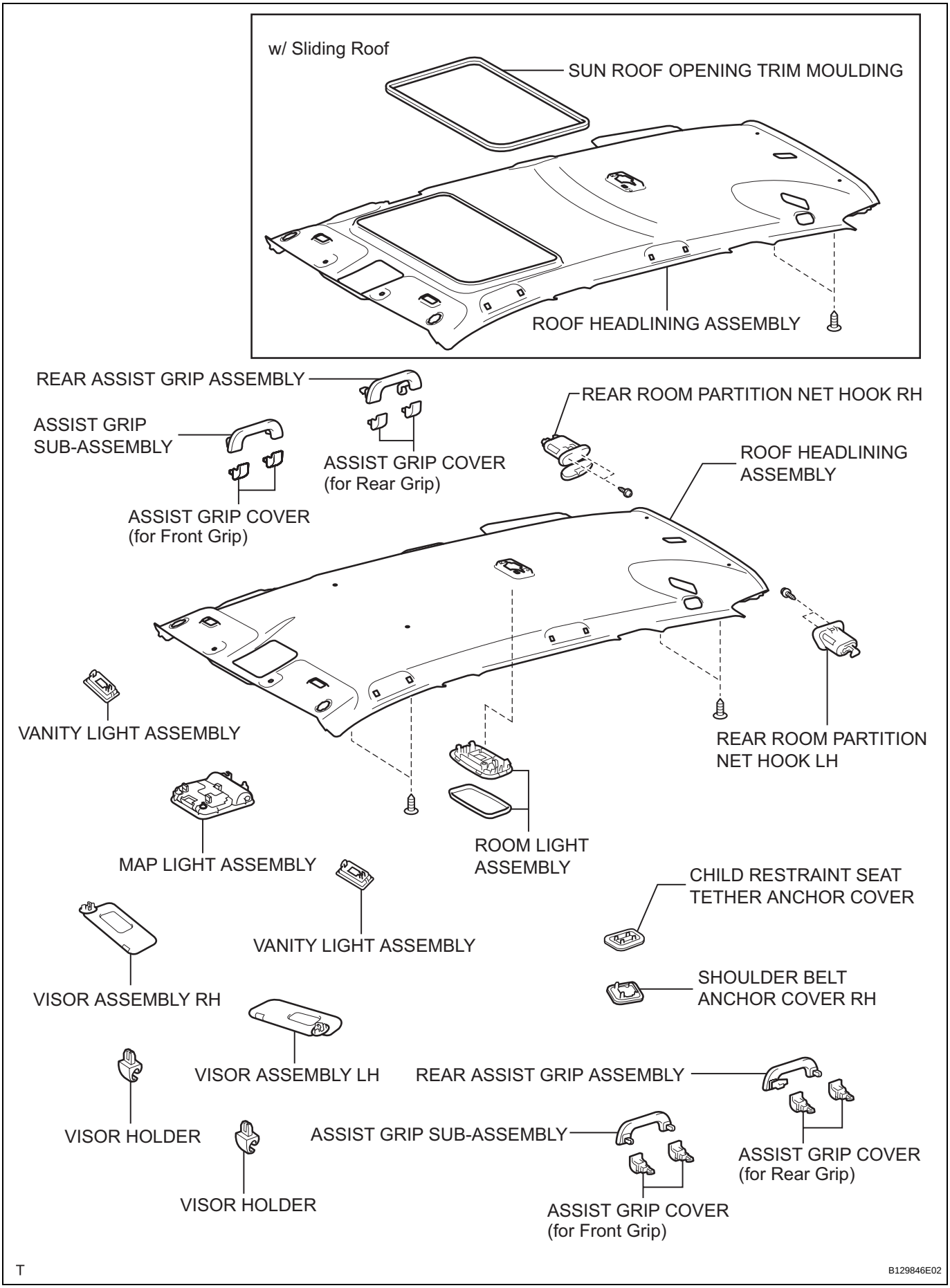
w/ Sliding Roof
SUN ROOF OPENING TRIM MOULDING
ROOF HEADLINING ASSEMBLY
REAR ASSIST GRIP ASSEMBLY
ASSIST GRIP SUB-ASSEMBLY
ASSIST GRIP COVER (for Rear Grip)
ASSIST GRIP COVER (for Front Grip)
REAR ROOM PARTITION NET HOOK RH
ROOF HEADLINING ASSEMBLY
VANITY LIGHT ASSEMBLY
REAR ROOM PARTITION NET HOOK LH
MAP LIGHT ASSEMBLY
ROOM LIGHT ASSEMBLY
VANITY LIGHT ASSEMBLY
CHILD RESTRAINT SEAT TETHER ANCHOR COVER
VISOR ASSEMBLY RH
SHOULDER BELT ANCHOR COVER RH
VISOR ASSEMBLY LH
REAR ASSIST GRIP ASSEMBLY
VISOR HOLDER
ASSIST GRIP SUB-ASSEMBLY
ASSIST GRIP COVER (for Rear Grip)
VISOR HOLDER
ASSIST GRIP COVER (for Front Grip)
T
B129846E02

w/ Television Display

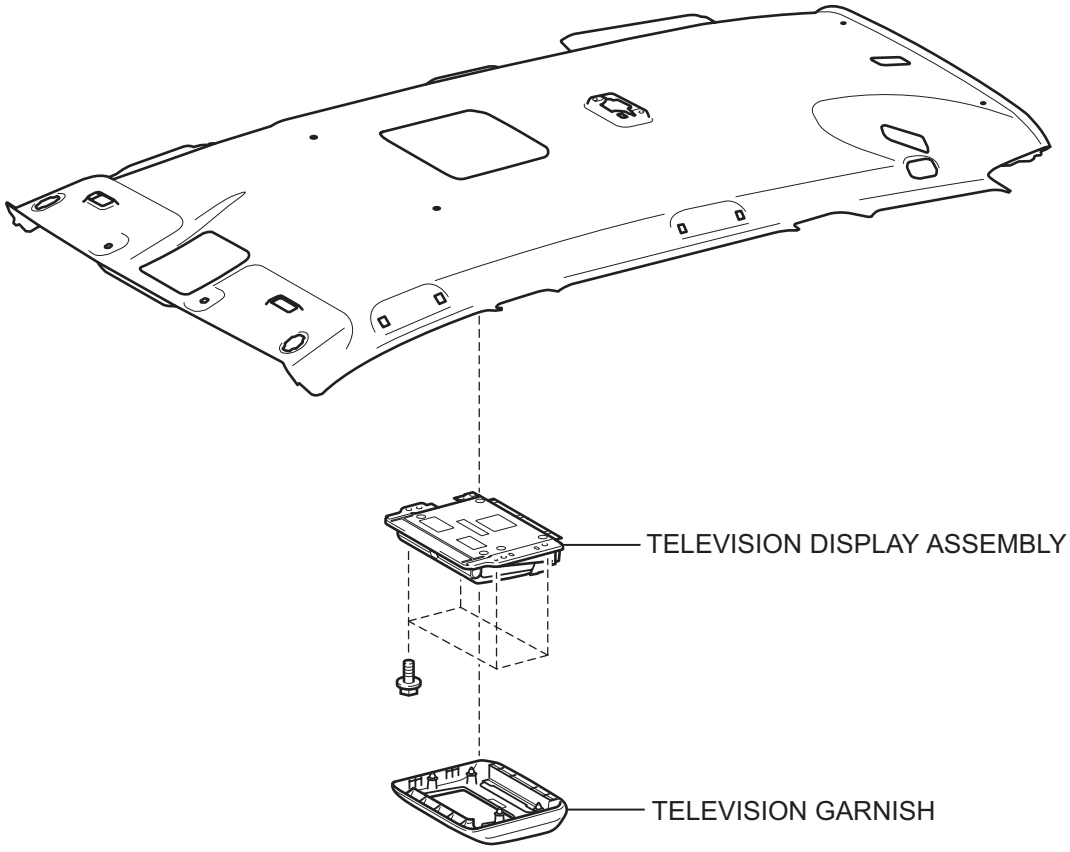

T

B140910E01

w/o Sliding Roof

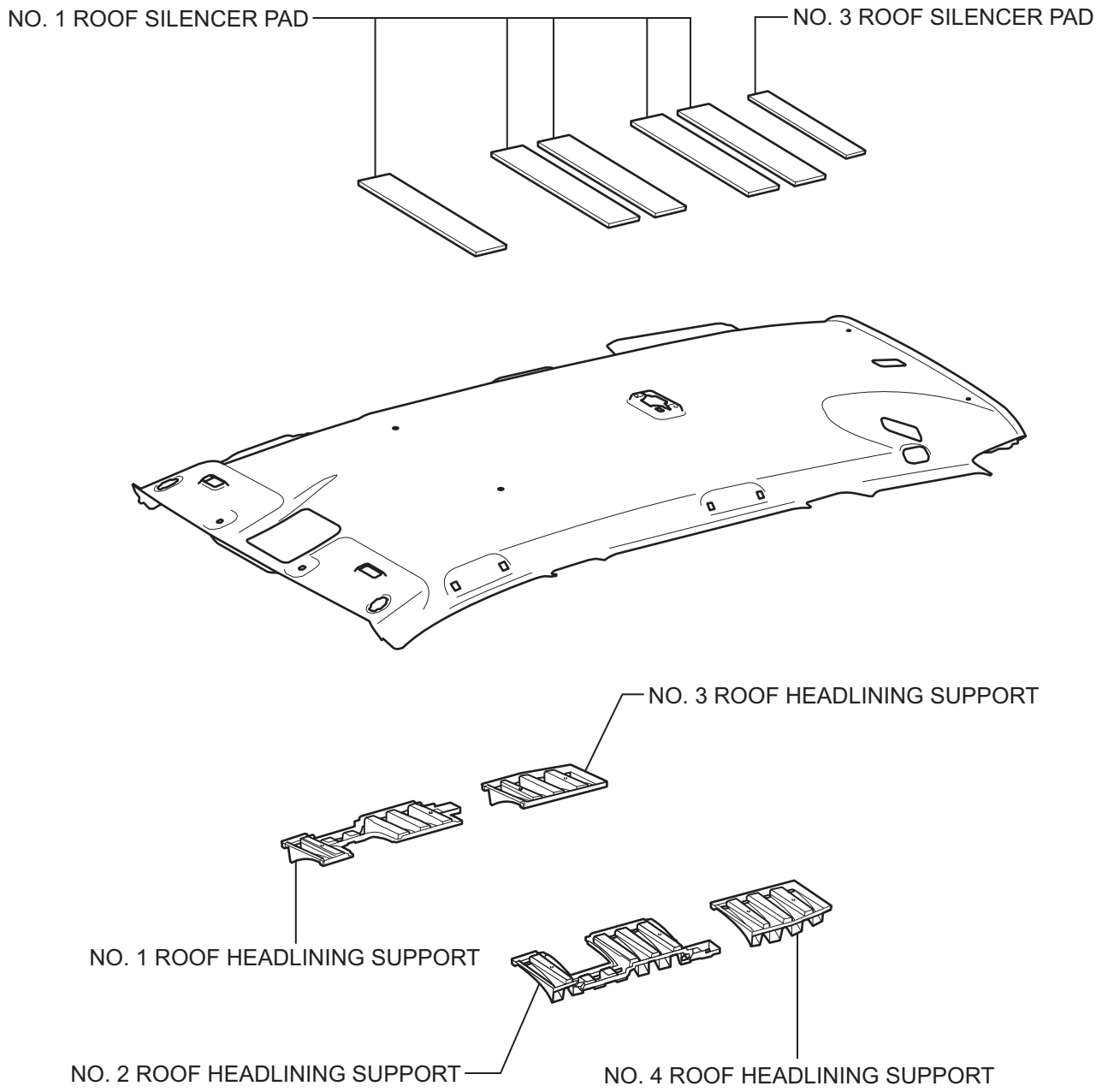

T

B129848E02

w/ Sliding Roof

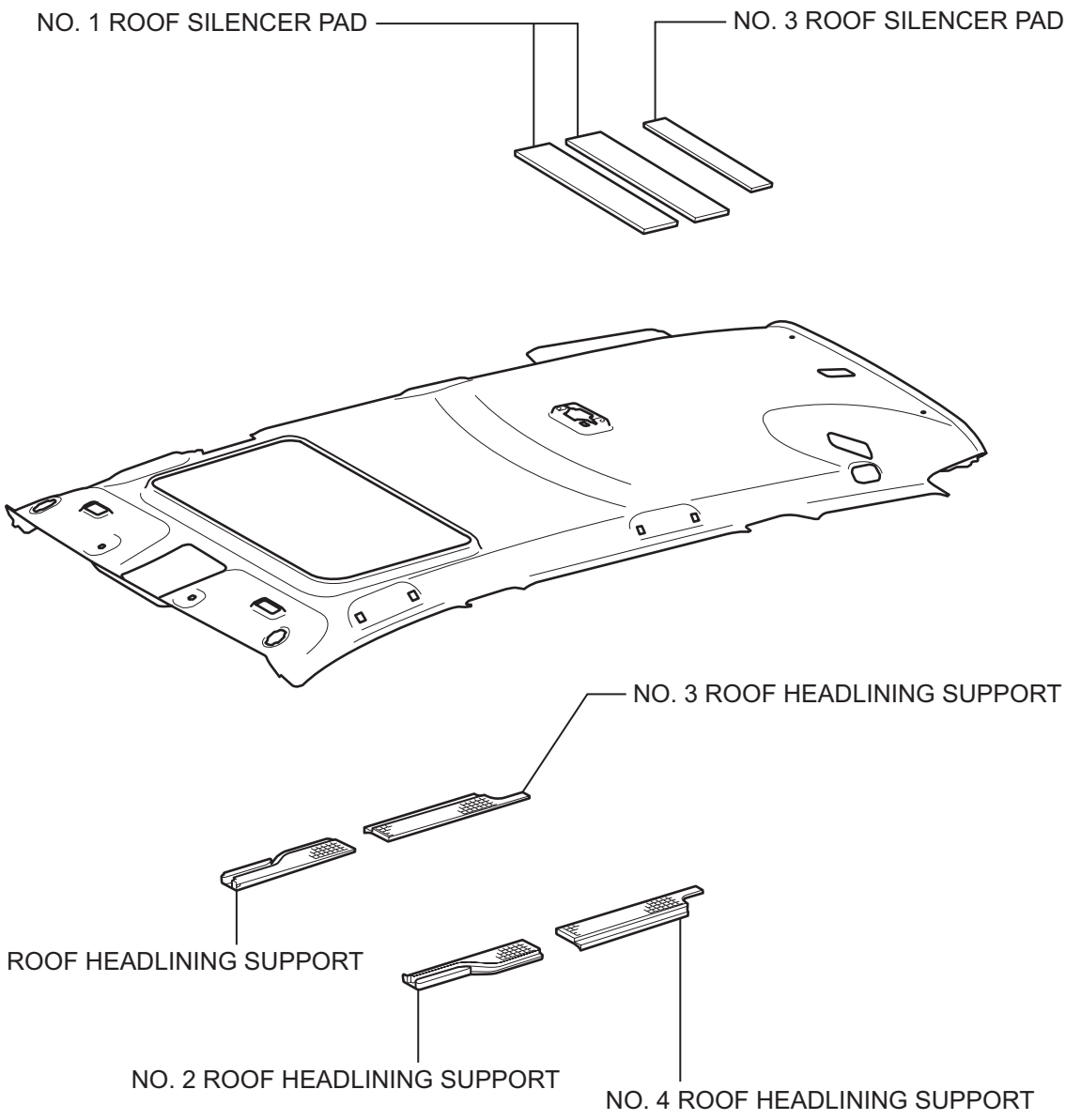

T

B129849E02

REMOVAL

(2005/11-2006/01)

1. **DISCONNECT CABLE FROM NEGATIVE BATTERY TERMINAL**
   CAUTION:
   Wait at least 90 seconds after disconnecting the cable from the negative (-) battery terminal to prevent airbag and seat belt pretensioner activation.

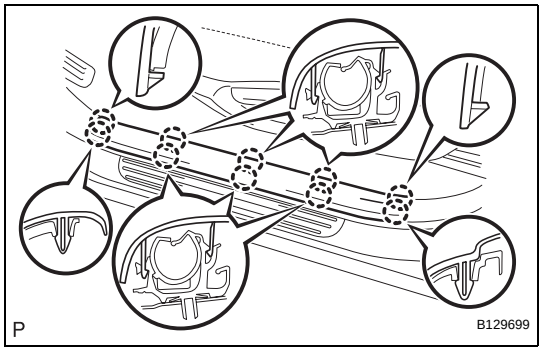

2. **REMOVE FRONT DOOR SCUFF PLATE LH**
   (a) Using a screwdriver, detach the 10 claws and remove the scuff plate.
   HINT:
   Tape the screwdriver tip before use.

3. **REMOVE FRONT DOOR SCUFF PLATE RH**
   HINT:
   Use the same procedures described for the LH side.

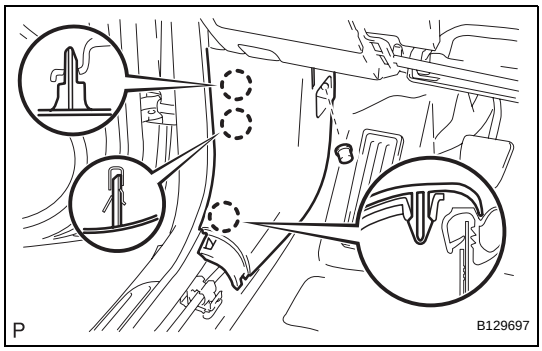

4. **REMOVE COWL SIDE TRIM BOARD LH**
   (a) Remove the cap nut.
   (b) Using a screwdriver, detach the 3 claws and remove the trim board.
   HINT:
   Tape the screwdriver tip before use.

5. **REMOVE COWL SIDE TRIM BOARD RH**
   HINT:
   Use the same procedures described for the LH side.

6. **REMOVE FRONT DOOR OPENING TRIM WEATHERSTRIP LH**

7. **REMOVE FRONT DOOR OPENING TRIM WEATHERSTRIP RH**

8. **REMOVE INSTRUMENT CLUSTER FINISH PANEL ASSEMBLY (See page IP-4)**

9. **REMOVE COMBINATION METER ASSEMBLY (See page IP-5)**

10. **REMOVE NO. 2 INSTRUMENT CLUSTER FINISH PANEL CENTER (See page IP-5)**

11. **REMOVE NO. 1 INSTRUMENT CLUSTER FINISH PANEL CENTER (See page IP-5)**

12. **REMOVE RADIO RECEIVER (See page IP-5)**

13. **REMOVE INSTRUMENT PANEL REGISTER ASSEMBLY CENTER (See page IP-6)**

14. **REMOVE GLOVE COMPARTMENT DOOR ASSEMBLY (See page IP-20)**

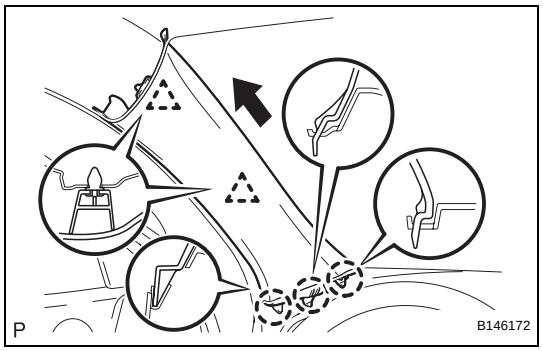

15. REMOVE FRONT PILLAR GARNISH LH

(a) w/o Curtain Shield Airbag:
  (1) Using a clip remover, detach the 2 clips.
  (2) Pull the garnish in the direction indicated by the arrow in the illustration to detach the 3 claws. Then remove the garnish.

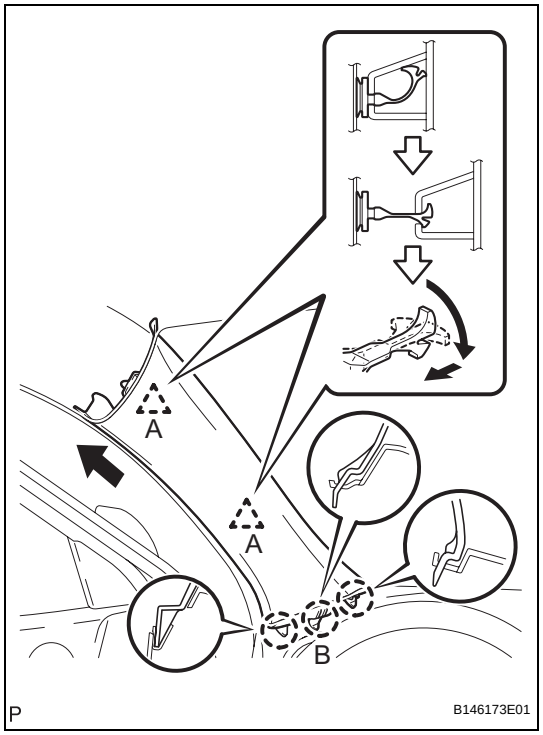

(b) w/ Curtain Shield Airbag:
  (1) Pull the pillar garnish so that the base of the 2 clips labeled A detach. Then pull until the tips of the 2 clips labeled A lock in the pillar garnish's holes.
  (2) Using needle-nose pliers, rotate the 2 clips labeled A 90°. Then pull the pillar garnish to release the tips of the 2 clips labeled A from the pillar garnish.
  (3) Pull the pillar garnish in the direction indicated by the arrow in the illustration to detach the 3 claws labeled B.
  (4) Remove the 2 clips labeled A from the vehicle body.

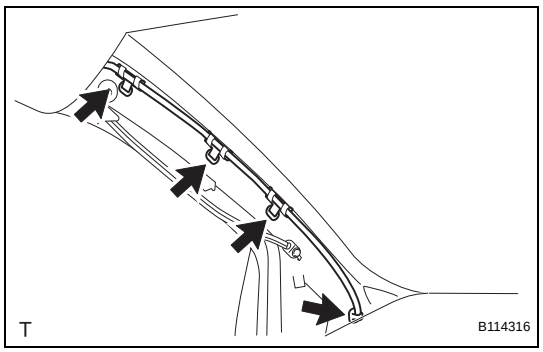

(c) Using a clip remover, remove the 4 wiring harness clamps.

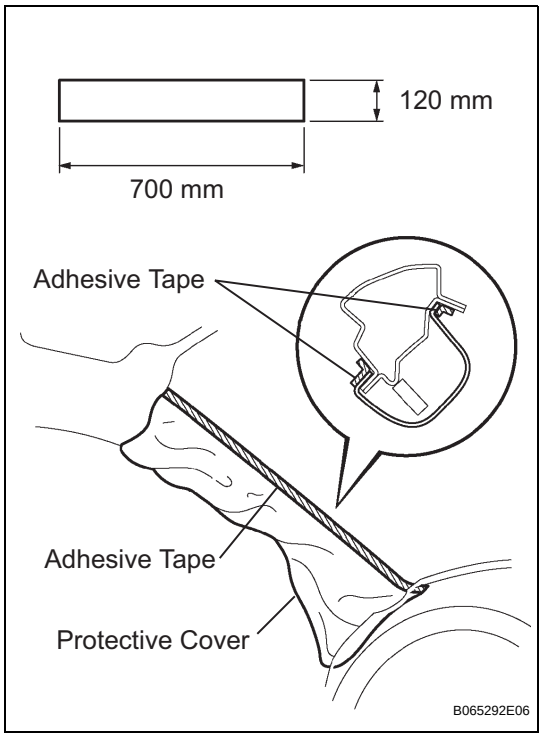

(d) w/ Curtain Shield Airbag:
(1) Thoroughly cover the airbag with cloth or nylon of 700 mm (27.56 in.) x 120 mm (4.72 in.) and fix the ends of the cover with adhesive tape, as shown in the illustration.
NOTICE:
Cover the curtain shield airbag with a protective cover as soon as the front pillar garnish is removed.

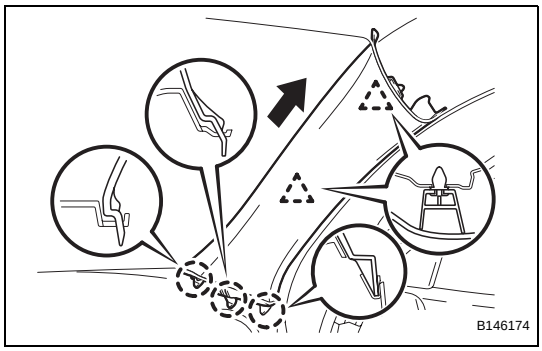

16. REMOVE FRONT PILLAR GARNISH RH
(a) w/o Curtain Shield Airbag:
(1) Using a clip remover, detach the 2 clips.
(2) Pull the garnish in the direction indicated by the arrow in the illustration to detach the 3 claws. Then remove the garnish.

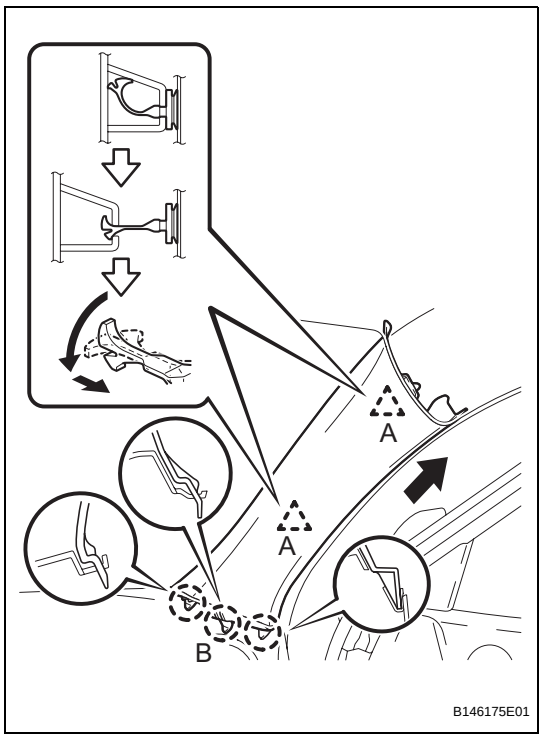

(b) w/ Curtain Shield Airbag:
(1) Pull the pillar garnish so that the base of the 2 clips labeled A detach. Then pull until the tips of the 2 clips labeled A lock in the pillar garnish's holes.
(2) Using needle-nose pliers, rotate the 2 clips labeled A 90°. Then pull the pillar garnish to release the tips of the 2 clips labeled A from the pillar garnish.
(3) Pull the pillar garnish in the direction indicated by the arrow in the illustration to detach the 3 claws labeled B.
(4) Remove the 2 clips labeled A from the vehicle body.

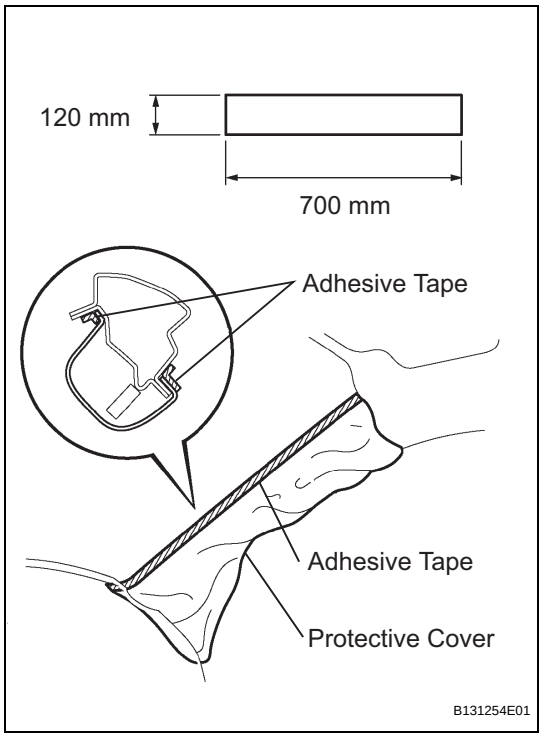

(5) Thoroughly cover the airbag with cloth or nylon of 700 mm (27.56 in.) x 120 mm (4.72 in.) and fix the ends of the cover with adhesive tape, as shown in the illustration.

NOTICE:
Cover the curtain shield airbag with a protective cover as soon as the front pillar garnish is removed.

17. REMOVE INSTRUMENT PANEL SUB-ASSEMBLY (See page IP-6)

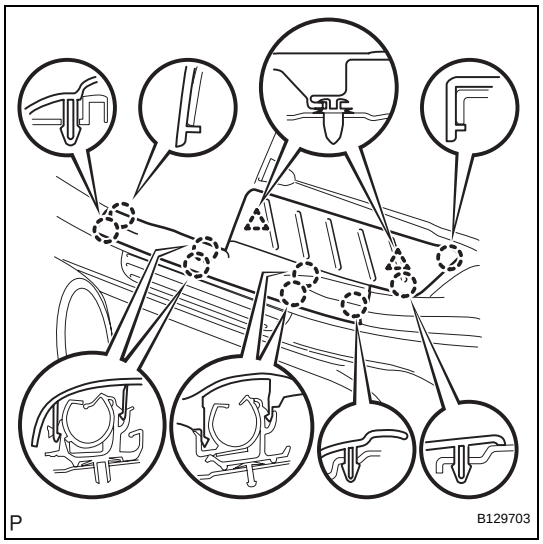

18. REMOVE REAR DOOR SCUFF PLATE LH

(a) Using a screwdriver, detach the 9 claws.
HINT:
Tape the screwdriver tip before use.

(b) Using a clip remover, detach the 2 clips and remove the garnish.

19. REMOVE REAR DOOR SCUFF PLATE RH

HINT:
Use the same procedures described for the LH side.

20. REMOVE REAR DOOR OPENING TRIM WEATHERSTRIP LH

21. REMOVE REAR DOOR OPENING TRIM WEATHERSTRIP RH

22. REMOVE LOWER CENTER PILLAR GARNISH LH

(a) Disconnect the front seat outer belt's floor anchor.

(1) Remove the anchor cover.

(2) Remove the bolt and disconnect the floor anchor.

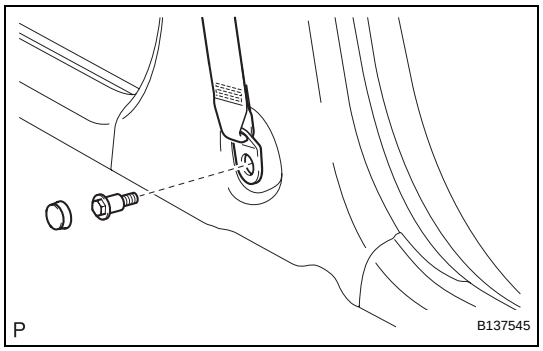

IR

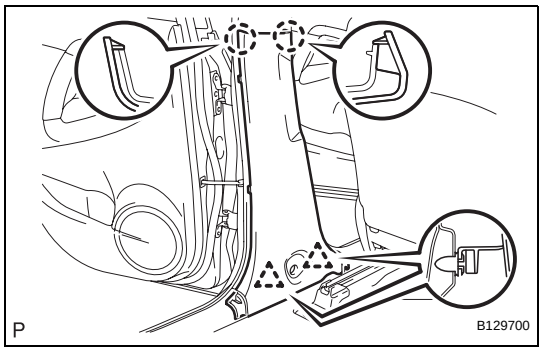

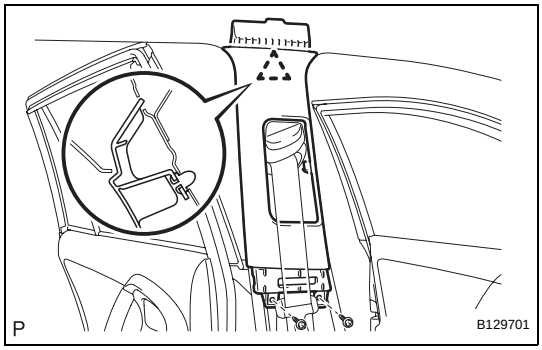

(b) Using a screwdriver, detach the 2 claws.
HINT:
Tape the screwdriver tip before use.
(c) Using a clip remover, detach the 2 clips and remove the garnish.

23. REMOVE LOWER CENTER PILLAR GARNISH RH
HINT:
Use the same procedures described for the LH side.

24. REMOVE CENTER PILLAR GARNISH LH
(a) Remove the 2 screws.
(b) Using a clip remover, detach the clip and remove the garnish.

25. REMOVE CENTER PILLAR GARNISH RH
HINT:
Use the same procedures described for the LH side.

26. REMOVE PACKAGE TRAY TRIM POCKET SUB-ASSEMBLY (w/o Rear No. 2 Seat)

27. REMOVE TONNEAU COVER ASSEMBLY (w/o Rear No. 2 Seat)

28. REMOVE REAR FLOOR NO. 1 BOARD (w/o Rear No. 2 Seat)

29. REMOVE DECK BOARD ASSEMBLY (w/o Rear No. 2 Seat)

30. REMOVE NO. 2 SEAT HINGE COVER LH (w/ Rear No. 2 Seat) (See page SE-109)

31. REMOVE NO. 2 SEAT HINGE COVER RH (w/ Rear No. 2 Seat)
HINT:
Use the same procedures described for the LH side.

32. REMOVE NO. 2 SEAT LEG COVER LH (w/ Rear No. 2 Seat) (See page SE-109)

33. REMOVE NO. 2 SEAT LEG COVER RH (w/ Rear No. 2 Seat)
HINT:
Use the same procedures described for the LH side.

34. REMOVE REAR NO. 2 SEAT ASSEMBLY LH (w/ Rear No. 2 Seat) (See page SE-110)

35. REMOVE REAR NO. 2 SEAT ASSEMBLY RH (w/ Rear No. 2 Seat)
HINT:
Use the same procedures described for the LH side.

36. REMOVE REAR FLOOR NO. 3 BOARD

37. REMOVE REAR FLOOR NO. 2 BOARD

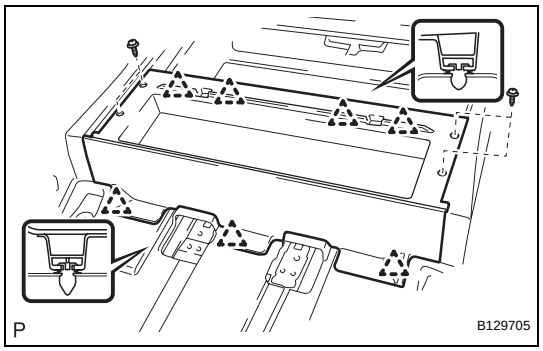

38. REMOVE REAR FLOOR NO. 1 MAT SUPPORT SIDE PLATE

(a) w/o Rear No. 2 Seat:
  (1) Remove the 4 screws.
  (2) Using a clip remover, detach the 7 clips and remove the plate.

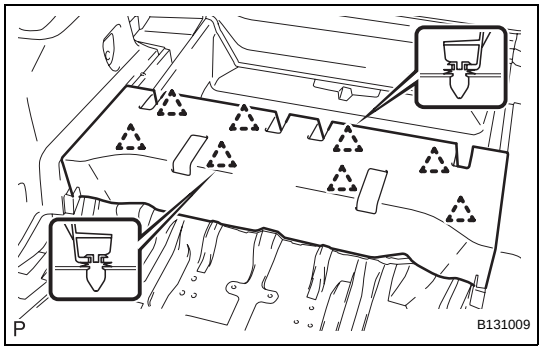

(b) w/ Rear No. 2 Seat:
  (1) Using a clip remover, detach the 8 clips and remove the plate.

39. REMOVE BACK DOOR WEATHERSTRIP

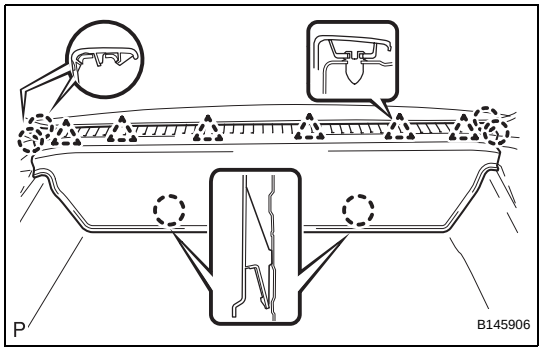

40. REMOVE REAR FLOOR FINISH PLATE

(a) Using a clip remover, detach the 6 clips.
(b) Detach the 6 claws and remove the finish plate.

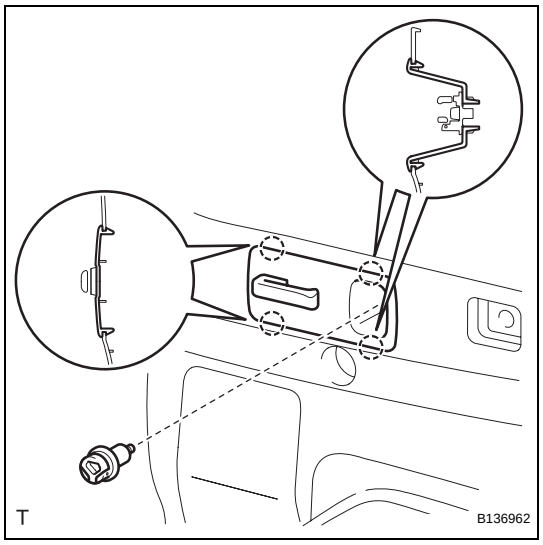

41. REMOVE REAR DECK TRIM COVER LH (w/ Rear No. 2 Seat)

(a) Remove the bolt.
(b) Using a screwdriver, detach the 4 claws and remove the trim cover.
  HINT:
  Tape the screwdriver tip before use.

42. REMOVE REAR DECK TRIM COVER RH (w/ Rear No. 2 Seat)

HINT:
Use the same procedures described for the LH side.

43. REMOVE RECLINING REMOTE CONTROL LEVER BEZEL LH (w/o Rear No. 2 Seat) (See page SE-45)

44. REMOVE RECLINING REMOTE CONTROL LEVER BEZEL RH (w/o Rear No. 2 Seat) (See page SE-80)

IR

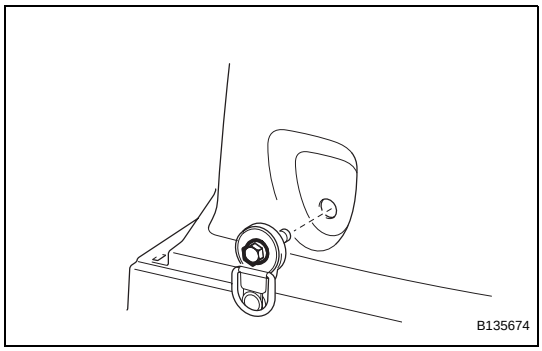

45. REMOVE TETHER ANCHOR BRACKET SUB-ASSEMBLY (w/o Rear No. 2 Seat)

(a) Remove the bolt and tether anchor bracket.

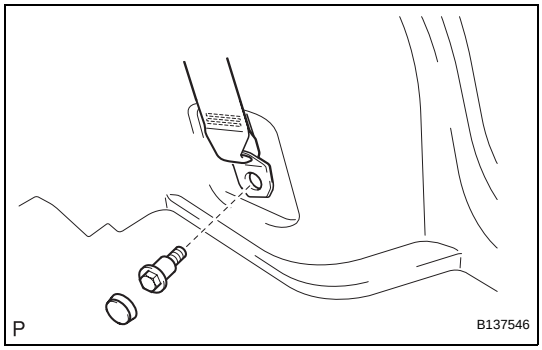

46. REMOVE DECK TRIM SIDE PANEL ASSEMBLY LH (w/o Rear No. 2 Seat)

(a) Disconnect the rear No. 1 seat outer belt's floor anchor.
  (1) Remove the anchor cover.
  (2) Remove the bolt and disconnect the floor anchor.

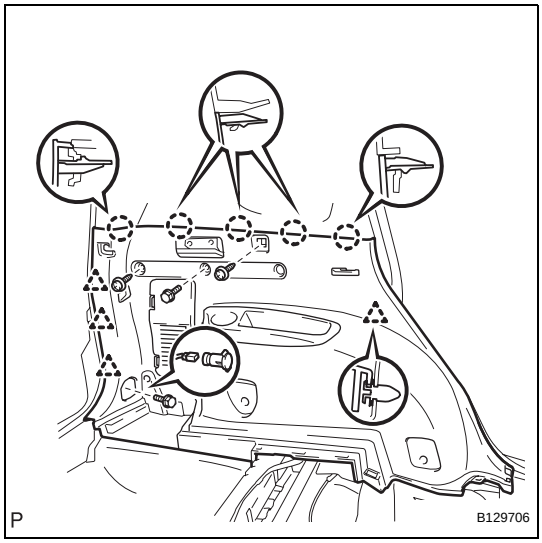

(b) Remove the 2 screws and 2 bolts.
(c) Using a screwdriver, detach the 5 claws.
HINT:
Tape the screwdriver tip before use.
(d) Using a clip remover, detach the 4 clips and remove the trim board.
(e) Disconnect the power outlet socket connector.
(f) Remove the belt hanger.

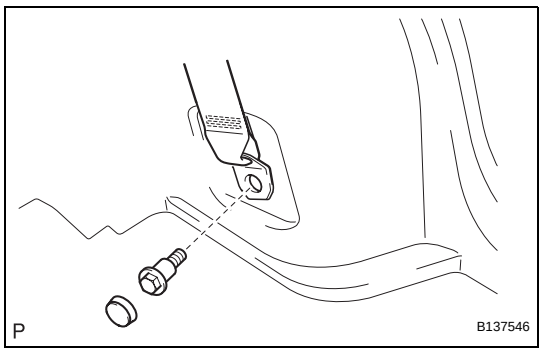

47. REMOVE DECK TRIM SIDE PANEL ASSEMBLY LH (w/ Rear No. 2 Seat)

(a) Disconnect the rear No. 1 seat outer belt's floor anchor.
  (1) Remove the anchor cover.
  (2) Remove the bolt and disconnect the floor anchor.

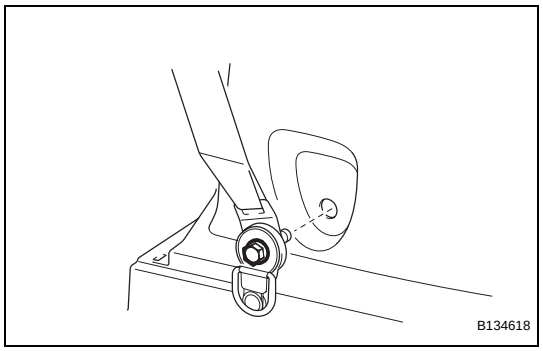

(b) Disconnect the rear No. 2 seat outer belt's floor anchor.
  (1) Remove the bolt and disconnect the floor anchor.

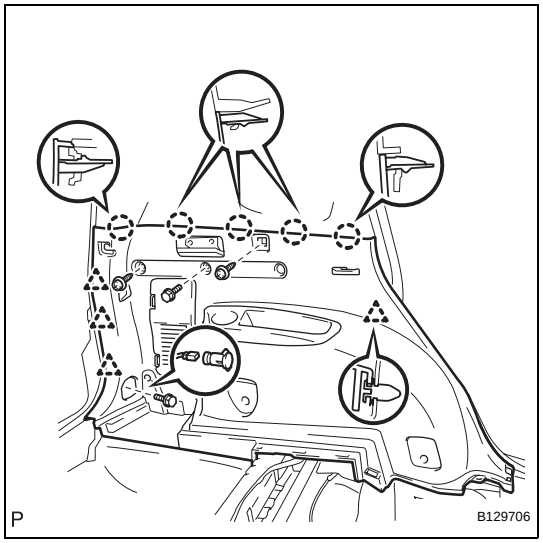

(c) Remove the 2 screws and 2 bolts.
(d) Using a screwdriver, detach the 5 claws.
HINT:
Tape the screwdriver tip before use.
(e) Using a clip remover, detach the 4 clips and remove the trim board.
(f) Disconnect the power outlet socket connector.
(g) Remove the belt hanger.

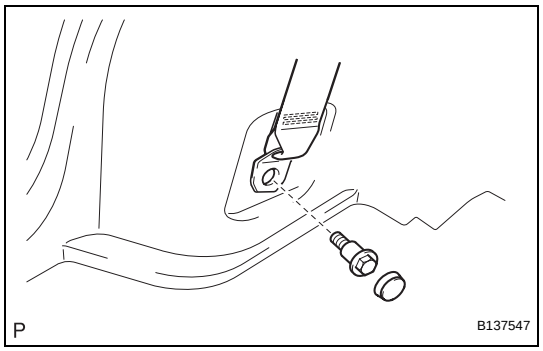

48. REMOVE DECK TRIM SIDE PANEL ASSEMBLY RH (w/o Rear No. 2 Seat)

(a) Disconnect the rear No. 1 seat outer belt's floor anchor.
  (1) Remove the anchor cover.
  (2) Remove the bolt and disconnect the floor anchor.

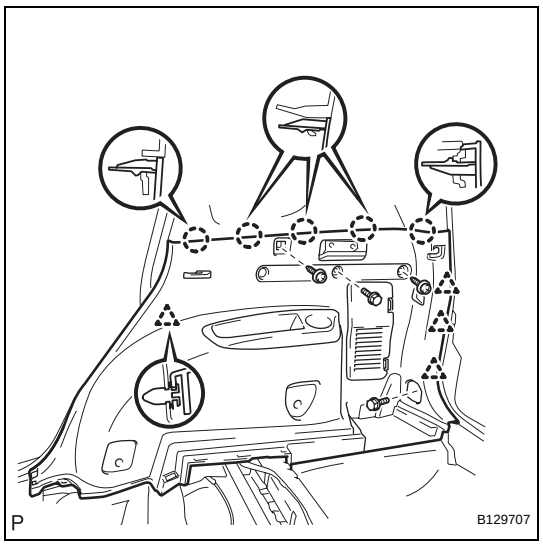

(b) Remove the 2 screws and 2 bolts.
(c) Using a screwdriver, detach the 5 claws.
HINT:
Tape the screwdriver tip before use.
(d) Using a clip remover, detach the 4 clips and remove the trim board.
(e) Remove the belt hanger.

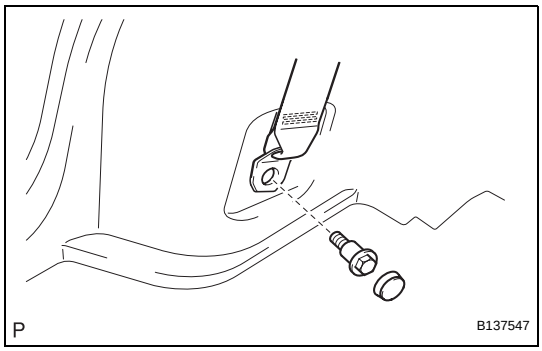

49. REMOVE DECK TRIM SIDE PANEL ASSEMBLY RH (w/ Rear No. 2 Seat)

(a) Disconnect the rear No. 1 seat outer belt's floor anchor.
  (1) Remove the anchor cover.
  (2) Remove the bolt and disconnect the floor anchor.

(b) Disconnect the rear No. 2 seat outer belt's floor anchor.
  (1) Remove the bolt and disconnect the floor anchor.

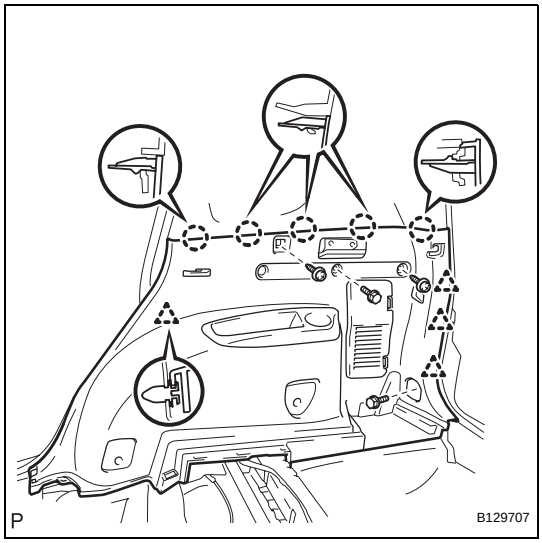

(c) Remove the 2 screws and 2 bolts.

(d) Using a screwdriver, detach the 5 claws.
HINT:
Tape the screwdriver tip before use.

(e) Using a clip remover, detach the 4 clips and remove the trim board.

(f) Remove the belt hanger.

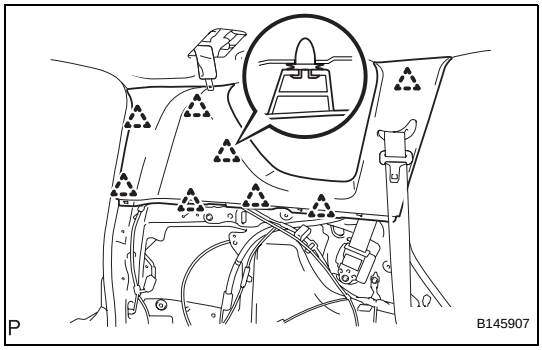

50. REMOVE INNER ROOF SIDE GARNISH ASSEMBLY LH (w/o Rear No. 2 Seat)

(a) Using a clip remover, detach the 8 clips and remove the garnish.

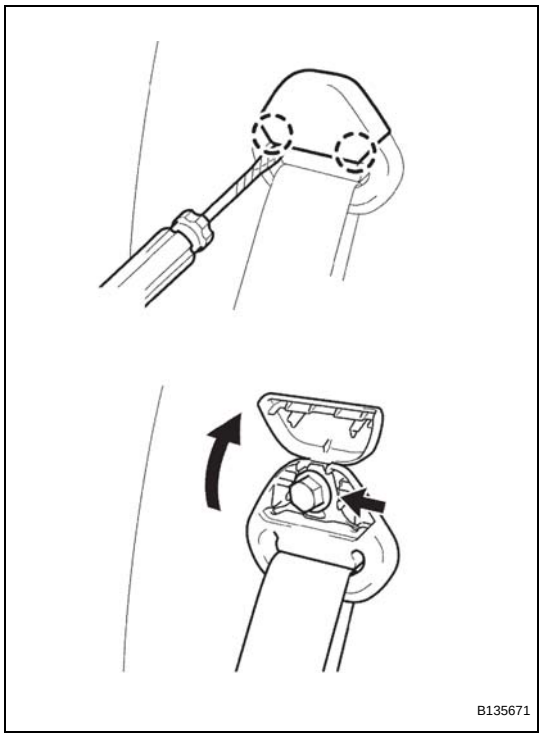

51. REMOVE INNER ROOF SIDE GARNISH ASSEMBLY LH (w/ Rear No. 2 Seat)

(a) Disconnect the rear No. 2 seat outer belt's shoulder anchor.
  (1) Using a screwdriver, detach the 2 claws and open the seat belt anchor cover.
  HINT:
  Tape the screwdriver tip before use.
  (2) Remove the bolt and disconnect the shoulder anchor.

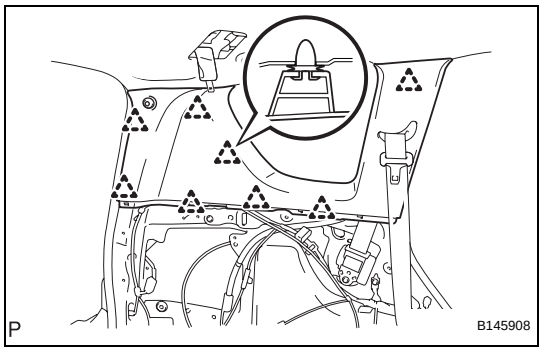

(b) Using a clip remover, detach the 8 clips and remove the garnish.

52. REMOVE INNER ROOF SIDE GARNISH ASSEMBLY RH

HINT:
Use the same procedures described for the LH side.

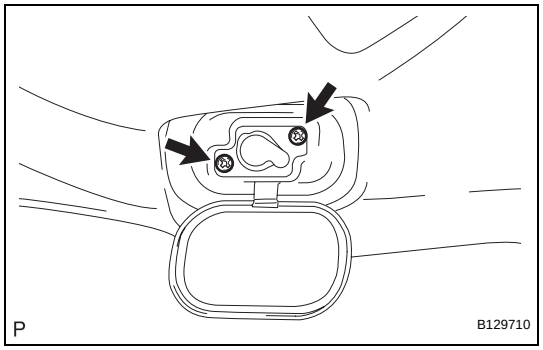

53. REMOVE REAR ROOM PARTITION NET HOOK LH

(a) Remove the 2 screws and net hook.

54. REMOVE REAR ROOM PARTITION NET HOOK RH

HINT:
Use the same procedures described for the LH side.

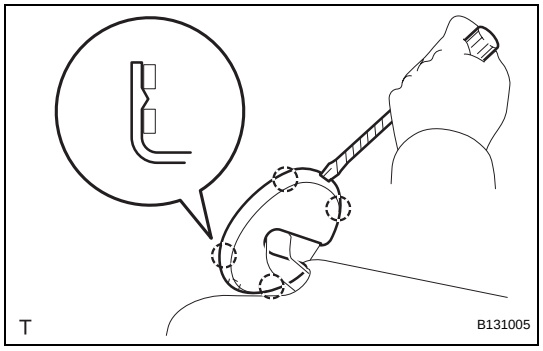

55. REMOVE VISOR ASSEMBLY LH

(a) Using a screwdriver, detach the 4 claws and remove the visor bracket cover.
  HINT:
  Tape the screwdriver tip before use.

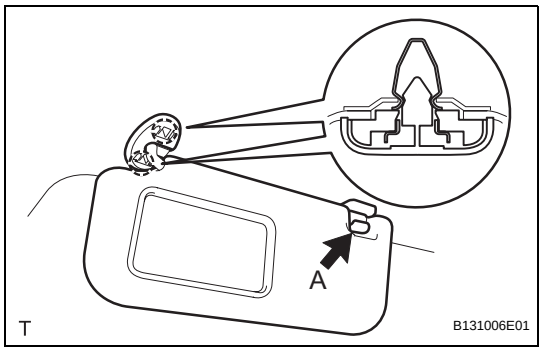

(b) Remove portion A from the visor holder.
(c) Detach the 2 claws and remove the visor.

56. REMOVE VISOR ASSEMBLY RH

HINT:
Use the same procedures described for the LH side.

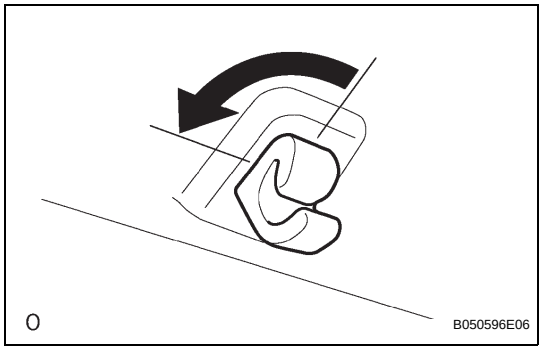

57. REMOVE VISOR HOLDER

(a) Remove the visor holder by turning it counterclockwise.

58. REMOVE VANITY LIGHT ASSEMBLY (See page LI-128)

59. REMOVE MAP LIGHT ASSEMBLY (See page LI-115)

60. REMOVE ROOM LIGHT ASSEMBLY (See page LI-118)

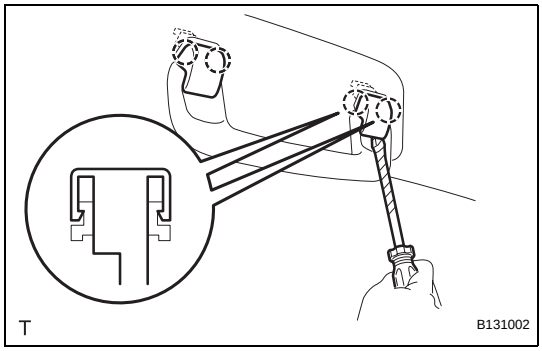

61. REMOVE ASSIST GRIP COVER (for Front Grip)

(a) Using a screwdriver, detach the 4 claws and remove the 2 assist grip covers.
HINT:
Tape the screwdriver tip before use.

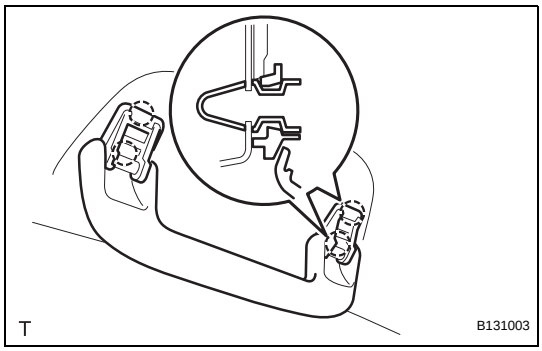

62. REMOVE ASSIST GRIP SUB-ASSEMBLY

(a) Detach the 4 claws and remove the assist grip.

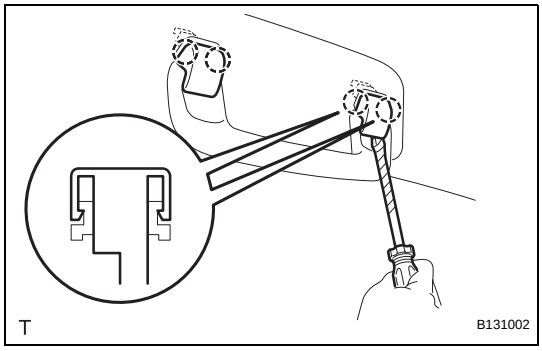

63. REMOVE ASSIST GRIP COVER (for Rear Grip)

(a) Using a screwdriver, detach the 4 claws and remove the 2 assist grip covers.
HINT:
Tape the screwdriver tip before use.

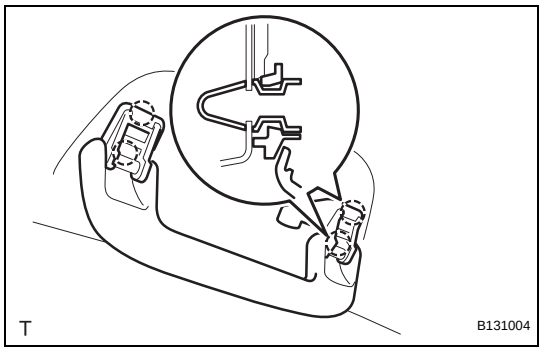

64. **REMOVE REAR ASSIST GRIP ASSEMBLY**
    (a) Detach the 4 claws and remove the assist grip.

65. **REMOVE CHILD RESTRAINT SEAT TETHER ANCHOR COVER (See page SB-77)**

66. **REMOVE SHOULDER BELT ANCHOR COVER RH (See page SB-64)**

67. **REMOVE SUN ROOF OPENING TRIM MOULDING**

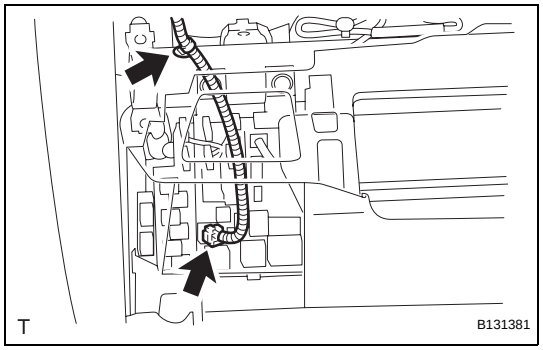

68. **REMOVE ROOF HEADLINING ASSEMBLY**
    (a) Using a screwdriver, remove the wire harness clamp.
    (b) Disconnect the roof wire connector.

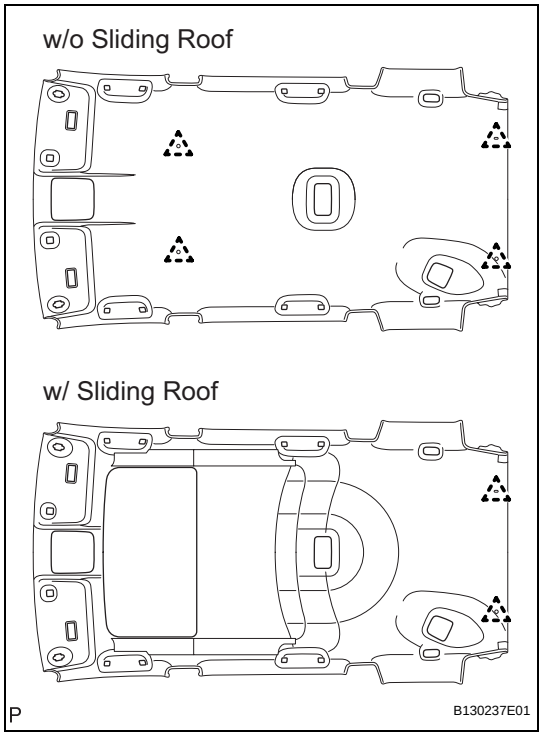

    (c) w/o Sliding Roof:
        (1) Using a clip remover, remove the 4 clips and headlining.
    (d) w/ Sliding Roof:
        (1) Disconnect the connector from the drive gear.
        (2) Using a clip remover, remove the 2 clips and headlining.

69. **REMOVE NO. 1 ROOF HEADLINING SUPPORT**

70. **REMOVE NO. 2 ROOF HEADLINING SUPPORT**

71. **REMOVE NO. 3 ROOF HEADLINING SUPPORT**

72. **REMOVE NO. 4 ROOF HEADLINING SUPPORT**

73. **REMOVE NO. 1 ROOF WIRE**
    (a) Only when replacing the roof headlining:
        (1) Remove the double-sided tape and roof wire.

74. **REMOVE NO. 1 ROOF SILENCER PAD**
    (a) w/o Sliding Roof:
        (1) Remove the 5 silencer pads.
    (b) w/ Sliding Roof:
        (1) Remove the 2 silencer pads.

75. **REMOVE NO. 3 ROOF SILENCER PAD**

REMOVAL

(2006/01-)

1. **DISCONNECT CABLE FROM NEGATIVE BATTERY TERMINAL**
   CAUTION:
   Wait at least 90 seconds after disconnecting the cable from the negative (-) battery terminal to prevent airbag and seat belt pretensioner activation.

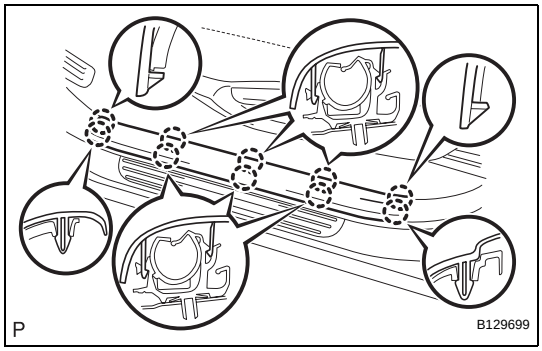

2. **REMOVE FRONT DOOR SCUFF PLATE LH**
   (a) Using a screwdriver, detach the 10 claws and remove the scuff plate.
   HINT:
   Tape the screwdriver tip before use.

3. **REMOVE FRONT DOOR SCUFF PLATE RH**
   HINT:
   Use the same procedures described for the LH side.

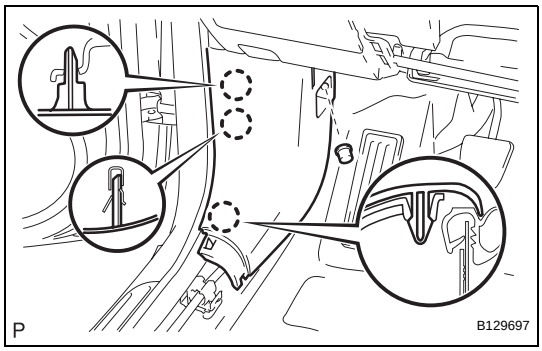

4. **REMOVE COWL SIDE TRIM BOARD LH**
   (a) Remove the cap nut.
   (b) Using a screwdriver, detach the 3 claws and remove the trim board.
   HINT:
   Tape the screwdriver tip before use.

5. **REMOVE COWL SIDE TRIM BOARD RH**
   HINT:
   Use the same procedures described for the LH side.

6. **REMOVE FRONT DOOR OPENING TRIM WEATHERSTRIP LH**

7. **REMOVE FRONT DOOR OPENING TRIM WEATHERSTRIP RH**

8. **REMOVE INSTRUMENT CLUSTER FINISH PANEL ASSEMBLY (See page IP-4)**

9. **REMOVE COMBINATION METER ASSEMBLY (See page IP-5)**

10. **REMOVE NO. 2 INSTRUMENT CLUSTER FINISH PANEL CENTER (See page IP-5)**

11. **REMOVE NO. 1 INSTRUMENT CLUSTER FINISH PANEL CENTER (See page IP-5)**

12. **REMOVE RADIO RECEIVER (See page IP-5)**

13. **REMOVE INSTRUMENT PANEL REGISTER ASSEMBLY CENTER (See page IP-6)**

14. **REMOVE GLOVE COMPARTMENT DOOR ASSEMBLY (See page IP-20)**

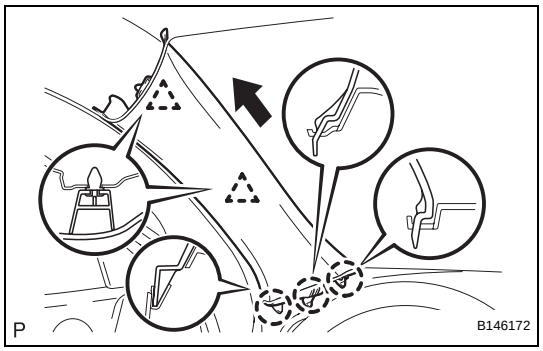

15. REMOVE FRONT PILLAR GARNISH LH

(a) w/o Curtain Shield Airbag:
  (1) Using a clip remover, detach the 2 clips.
  (2) Pull the garnish in the direction indicated by the arrow in the illustration to detach the 3 claws. Then remove the garnish.

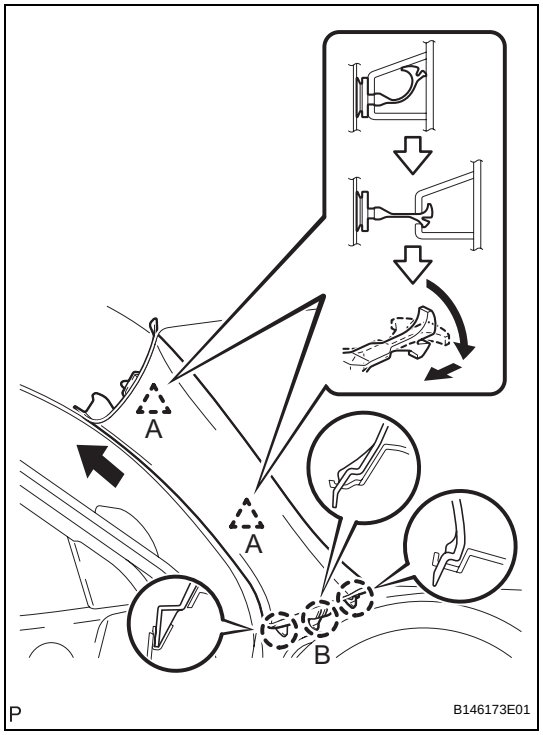

(b) w/ Curtain Shield Airbag:
  (1) Pull the pillar garnish so that the base of the 2 clips labeled A detach. Then pull until the tips of the 2 clips labeled A lock in the pillar garnish's holes.
  (2) Using needle-nose pliers, rotate the 2 clips labeled A 90°. Then pull the pillar garnish to release the tips of the 2 clips labeled A from the pillar garnish.
  (3) Pull the pillar garnish in the direction indicated by the arrow in the illustration to detach the 3 claws labeled B.
  (4) Remove the 2 clips labeled A from the vehicle body.

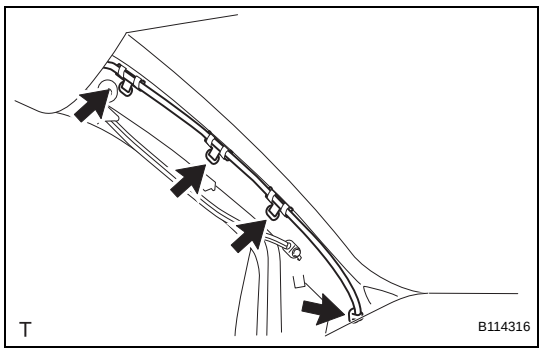

(c) Using a clip remover, remove the 4 wiring harness clamps.

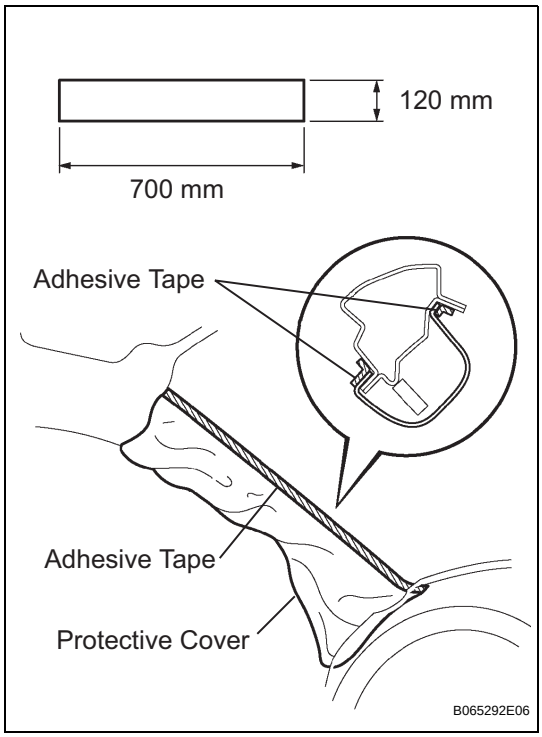

(d) w/ Curtain Shield Airbag:
(1) Thoroughly cover the airbag with cloth or nylon of 700 mm (27.56 in.) x 120 mm (4.72 in.) and fix the ends of the cover with adhesive tape, as shown in the illustration.
NOTICE:
Cover the curtain shield airbag with a protective cover as soon as the front pillar garnish is removed.

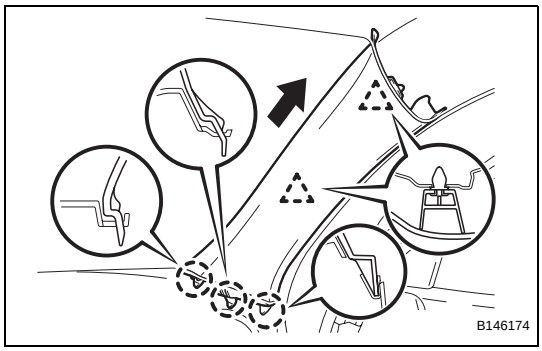

16. REMOVE FRONT PILLAR GARNISH RH

(a) w/o Curtain Shield Airbag:
(1) Using a clip remover, detach the 2 clips.
(2) Pull the garnish in the direction indicated by the arrow in the illustration to detach the 3 claws. Then remove the garnish.

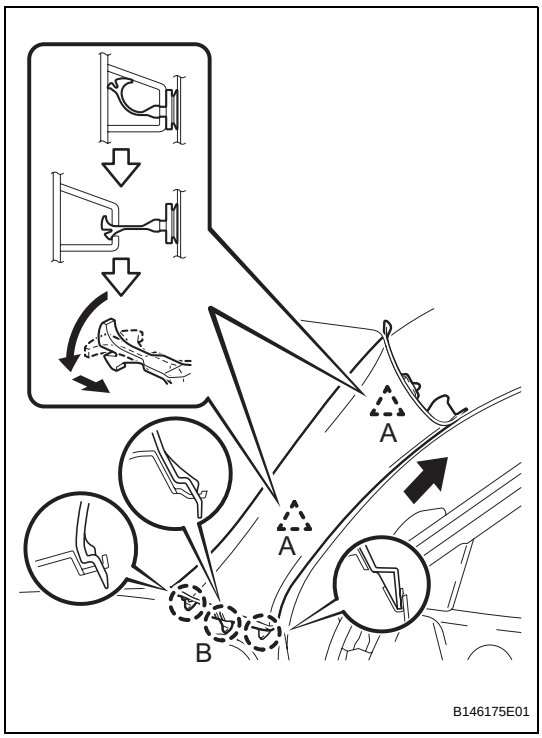

(b) w/ Curtain Shield Airbag:
(1) Pull the pillar garnish so that the base of the 2 clips labeled A detach. Then pull until the tips of the 2 clips labeled A lock in the pillar garnish's holes.
(2) Using needle-nose pliers, rotate the 2 clips labeled A 90°. Then pull the pillar garnish to release the tips of the 2 clips labeled A from the pillar garnish.
(3) Pull the pillar garnish in the direction indicated by the arrow in the illustration to detach the 3 claws labeled B.
(4) Remove the 2 clips labeled A from the vehicle body.

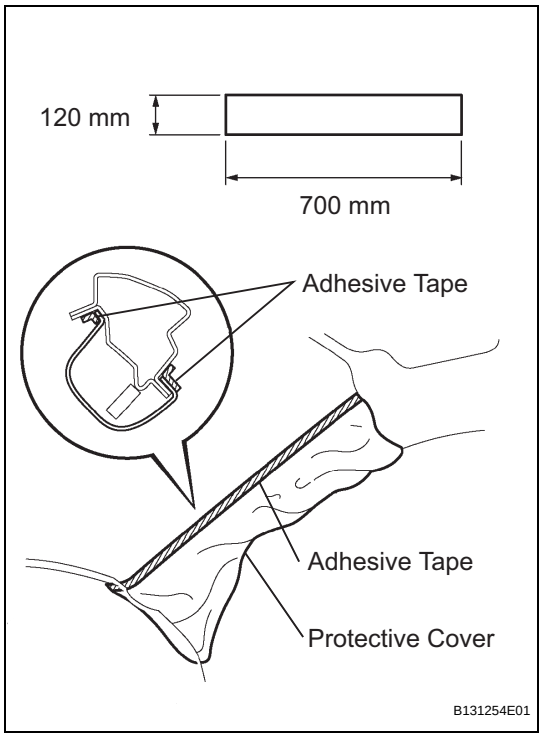

(5) Thoroughly cover the airbag with cloth or nylon of 700 mm (27.56 in.) x 120 mm (4.72 in.) and fix the ends of the cover with adhesive tape, as shown in the illustration.

NOTICE:
Cover the curtain shield airbag with a protective cover as soon as the front pillar garnish is removed.

17. REMOVE INSTRUMENT PANEL SUB-ASSEMBLY
(See page IP-6)

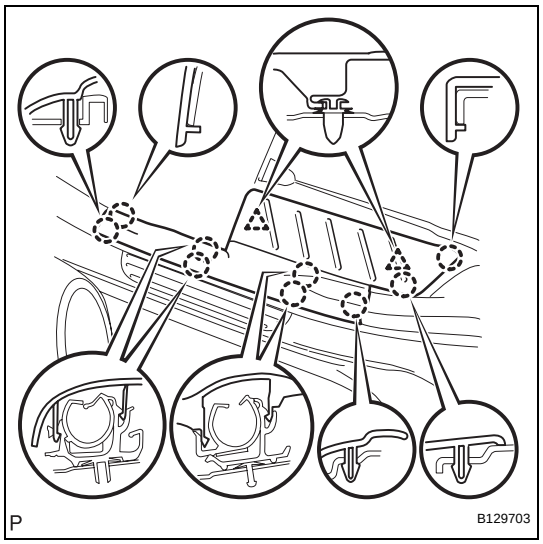

18. REMOVE REAR DOOR SCUFF PLATE LH
(a) Using a screwdriver, detach the 9 claws.
HINT:
Tape the screwdriver tip before use.
(b) Using a clip remover, detach the 2 clips and remove the garnish.

19. REMOVE REAR DOOR SCUFF PLATE RH
HINT:
Use the same procedures described for the LH side.

20. REMOVE REAR DOOR OPENING TRIM WEATHERSTRIP LH

21. REMOVE REAR DOOR OPENING TRIM WEATHERSTRIP RH

22. REMOVE LOWER CENTER PILLAR GARNISH LH
(a) Disconnect the front seat outer belt's floor anchor.
(1) Remove the anchor cover.
(2) Remove the bolt and disconnect the floor anchor.

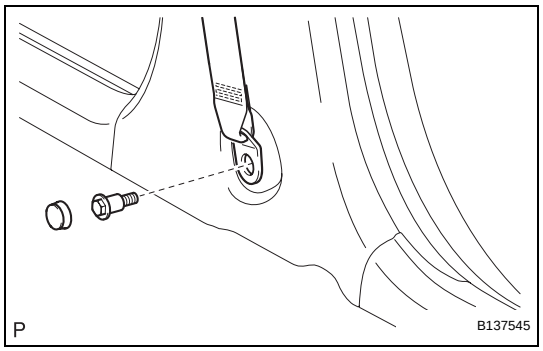

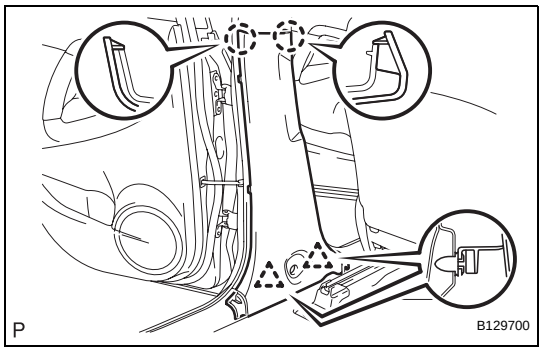

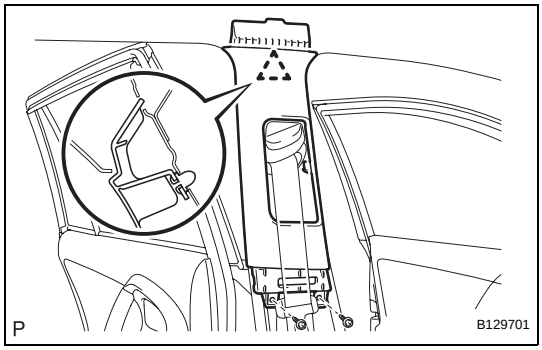

(b) Using a screwdriver, detach the 2 claws.
HINT:
Tape the screwdriver tip before use.
(c) Using a clip remover, detach the 2 clips and remove the garnish.

23. REMOVE LOWER CENTER PILLAR GARNISH RH
HINT:
Use the same procedures described for the LH side.

24. REMOVE CENTER PILLAR GARNISH LH
(a) Remove the 2 screws.
(b) Using a clip remover, detach the clip and remove the garnish.

25. REMOVE CENTER PILLAR GARNISH RH
HINT:
Use the same procedures described for the LH side.

26. REMOVE PACKAGE TRAY TRIM POCKET SUB-ASSEMBLY (w/o Rear No. 2 Seat)

27. REMOVE TONNEAU COVER ASSEMBLY (w/o Rear No. 2 Seat)

28. REMOVE REAR FLOOR NO. 1 BOARD (w/o Rear No. 2 Seat)

29. REMOVE DECK BOARD ASSEMBLY (w/o Rear No. 2 Seat)

30. REMOVE NO. 2 SEAT HINGE COVER LH (w/ Rear No. 2 Seat) (See page SE-109)

31. REMOVE NO. 2 SEAT HINGE COVER RH (w/ Rear No. 2 Seat)
HINT:
Use the same procedures described for the LH side.

32. REMOVE NO. 2 SEAT LEG COVER LH (w/ Rear No. 2 Seat) (See page SE-109)

33. REMOVE NO. 2 SEAT LEG COVER RH (w/ Rear No. 2 Seat)
HINT:
Use the same procedures described for the LH side.

34. REMOVE REAR NO. 2 SEAT ASSEMBLY LH (w/ Rear No. 2 Seat) (See page SE-110)

35. REMOVE REAR NO. 2 SEAT ASSEMBLY RH (w/ Rear No. 2 Seat)
HINT:
Use the same procedures described for the LH side.

36. REMOVE REAR FLOOR NO. 3 BOARD

37. REMOVE REAR FLOOR NO. 2 BOARD

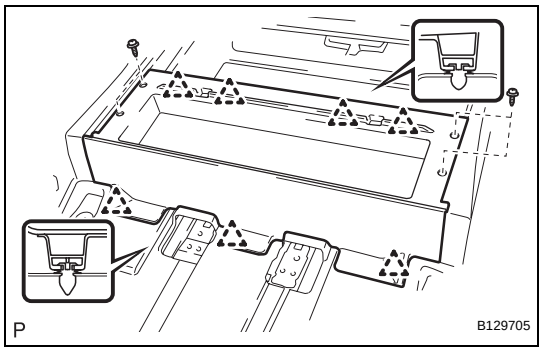

38. REMOVE REAR FLOOR NO. 1 MAT SUPPORT SIDE PLATE

(a) w/o Rear No. 2 Seat:
  (1) Remove the 4 screws.
  (2) Using a clip remover, detach the 7 clips and remove the plate.

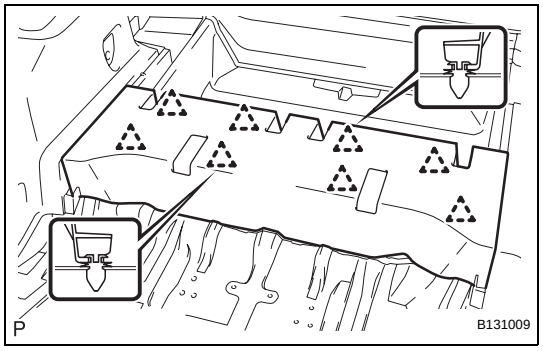

(b) w/ Rear No. 2 Seat:
  (1) Using a clip remover, detach the 8 clips and remove the plate.

39. REMOVE BACK DOOR WEATHERSTRIP

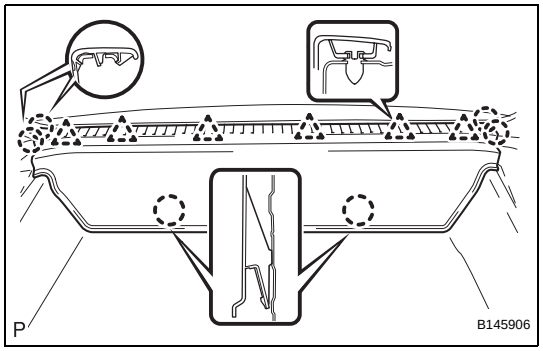

40. REMOVE REAR FLOOR FINISH PLATE

(a) Using a clip remover, detach the 6 clips.
(b) Detach the 6 claws and remove the finish plate.

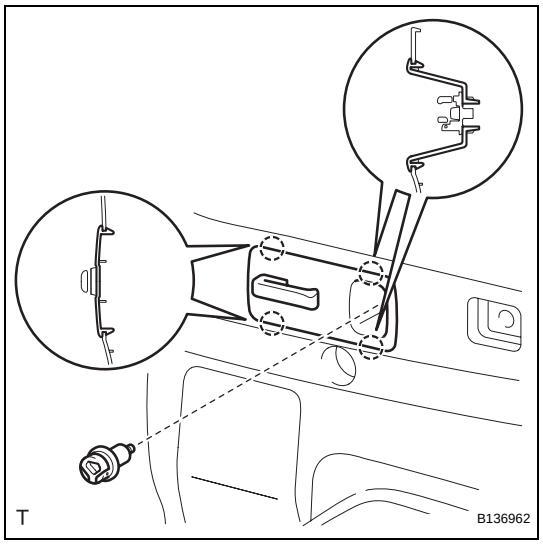

41. REMOVE REAR DECK TRIM COVER LH (w/ Rear No. 2 Seat)

(a) Remove the bolt.
(b) Using a screwdriver, detach the 4 claws and remove the trim cover.
  HINT:
  Tape the screwdriver tip before use.

42. REMOVE REAR DECK TRIM COVER RH (w/ Rear No. 2 Seat)

HINT:
Use the same procedures described for the LH side.

43. REMOVE RECLINING REMOTE CONTROL LEVER BEZEL LH (w/o Rear No. 2 Seat) (See page SE-45)

44. REMOVE RECLINING REMOTE CONTROL LEVER BEZEL RH (w/o Rear No. 2 Seat) (See page SE-80)

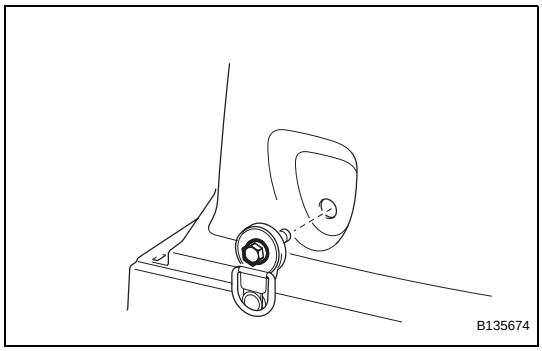

45. REMOVE TETHER ANCHOR BRACKET SUB-ASSEMBLY (w/o Rear No. 2 Seat)

(a) Remove the bolt and tether anchor bracket.

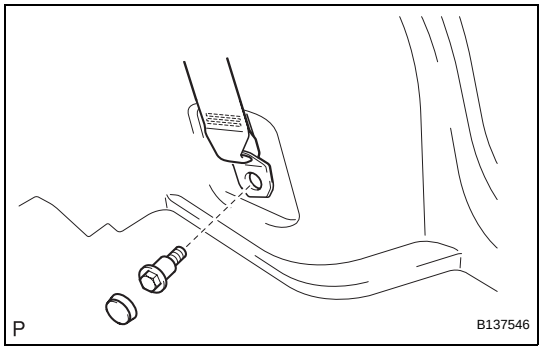

46. REMOVE DECK TRIM SIDE PANEL ASSEMBLY LH (w/o Rear No. 2 Seat)

(a) Disconnect the rear No. 1 seat outer belt's floor anchor.
  (1) Remove the anchor cover.
  (2) Remove the bolt and disconnect the floor anchor.

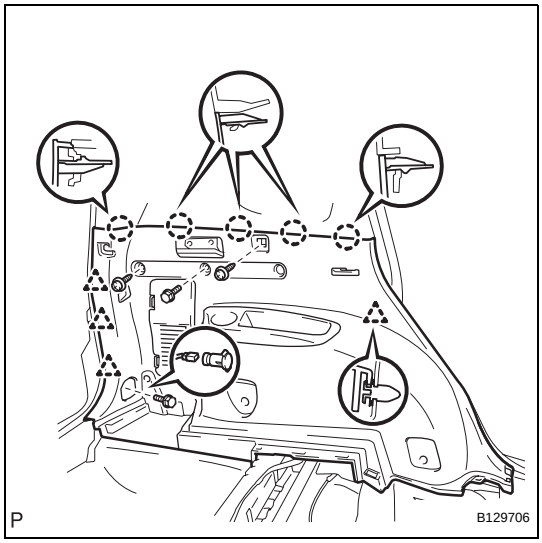

(b) Remove the 2 screws and 2 bolts.
(c) Using a screwdriver, detach the 5 claws.
HINT:
Tape the screwdriver tip before use.
(d) Using a clip remover, detach the 4 clips and remove the trim board.
(e) Disconnect the power outlet socket connector.
(f) Remove the belt hanger.

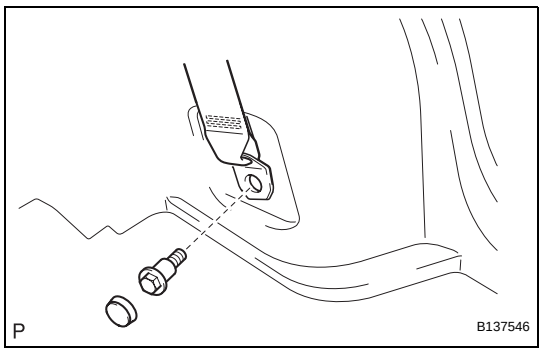

47. REMOVE DECK TRIM SIDE PANEL ASSEMBLY LH (w/ Rear No. 2 Seat)

(a) Disconnect the rear No. 1 seat outer belt's floor anchor.
  (1) Remove the anchor cover.
  (2) Remove the bolt and disconnect the floor anchor.

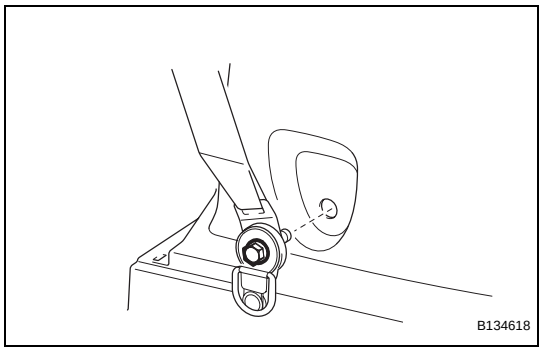

(b) Disconnect the rear No. 2 seat outer belt's floor anchor.
  (1) Remove the bolt and disconnect the floor anchor.

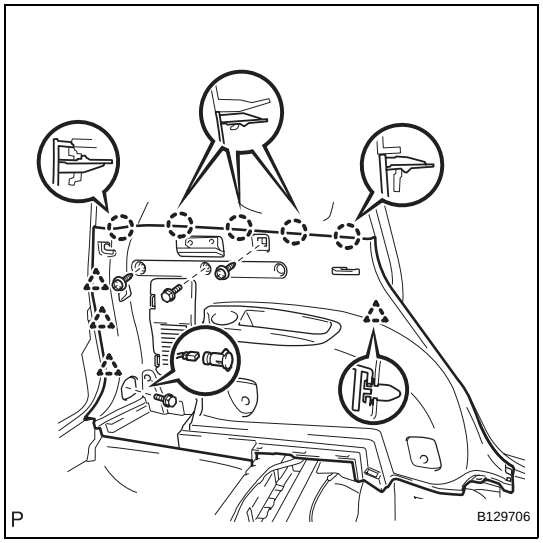

(c) Remove the 2 screws and 2 bolts.
(d) Using a screwdriver, detach the 5 claws.
HINT:
Tape the screwdriver tip before use.
(e) Using a clip remover, detach the 4 clips and remove the trim board.
(f) Disconnect the power outlet socket connector.
(g) Remove the belt hanger.

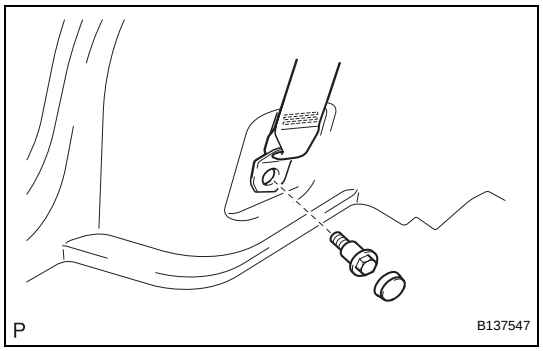

48. REMOVE DECK TRIM SIDE PANEL ASSEMBLY RH (w/o Rear No. 2 Seat)

(a) Disconnect the rear No. 1 seat outer belt's floor anchor.
  (1) Remove the anchor cover.
  (2) Remove the bolt and disconnect the floor anchor.

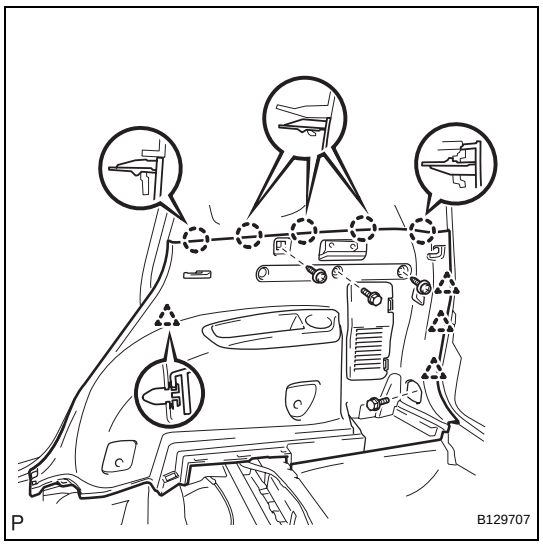

(b) Remove the 2 screws and 2 bolts.
(c) Using a screwdriver, detach the 5 claws.
HINT:
Tape the screwdriver tip before use.
(d) Using a clip remover, detach the 4 clips and remove the trim board.
(e) Remove the belt hanger.

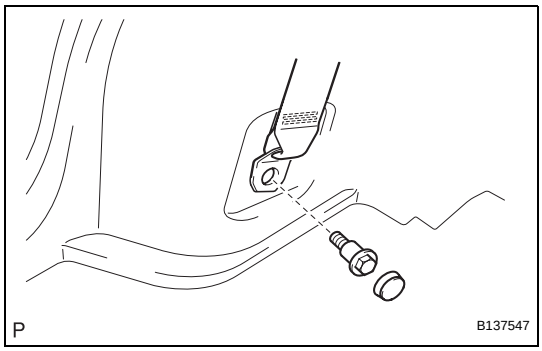

49. REMOVE DECK TRIM SIDE PANEL ASSEMBLY RH (w/ Rear No. 2 Seat)

(a) Disconnect the rear No. 1 seat outer belt's floor anchor.
  (1) Remove the anchor cover.
  (2) Remove the bolt and disconnect the floor anchor.

(b) Disconnect the rear No. 2 seat outer belt's floor anchor.
  (1) Remove the bolt and disconnect the floor anchor.

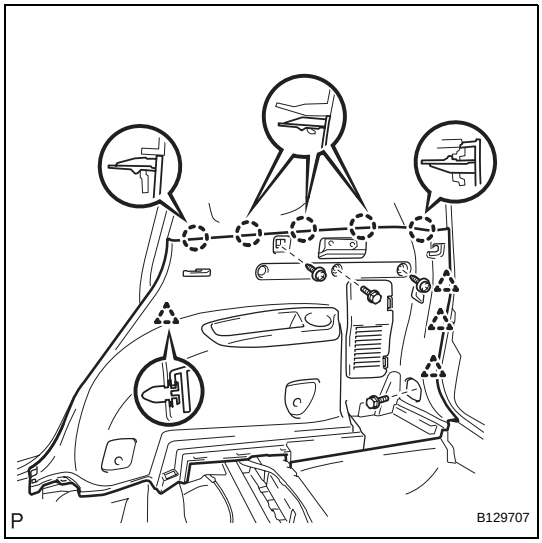

(c) Remove the 2 screws and 2 bolts.

(d) Using a screwdriver, detach the 5 claws.
HINT:
Tape the screwdriver tip before use.

(e) Using a clip remover, detach the 4 clips and remove the trim board.

(f) Remove the belt hanger.

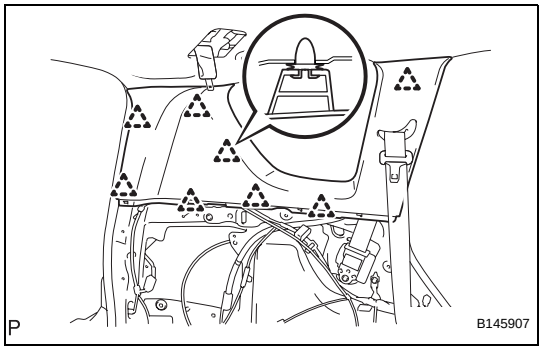

50. REMOVE INNER ROOF SIDE GARNISH ASSEMBLY LH (w/o Rear No. 2 Seat)

(a) Using a clip remover, detach the 8 clips and remove the garnish.

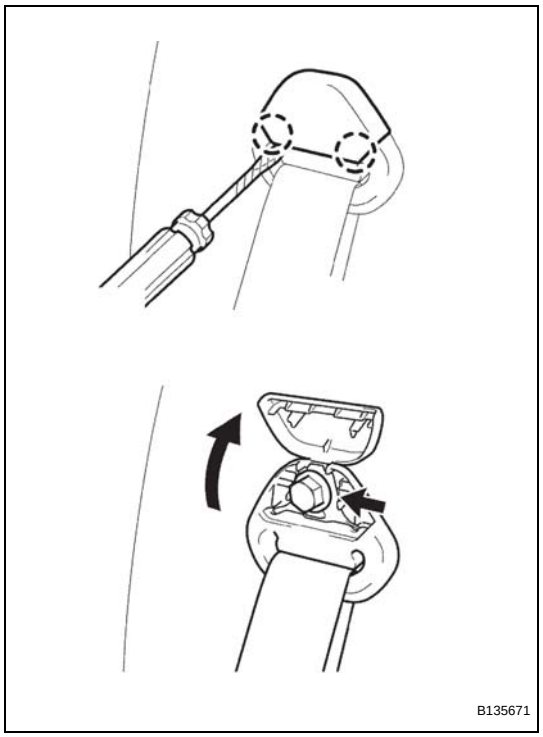

51. REMOVE INNER ROOF SIDE GARNISH ASSEMBLY LH (w/ Rear No. 2 Seat)

(a) Disconnect the rear No. 2 seat outer belt's shoulder anchor.
  (1) Using a screwdriver, detach the 2 claws and open the seat belt anchor cover.
  HINT:
  Tape the screwdriver tip before use.
  (2) Remove the bolt and disconnect the shoulder anchor.

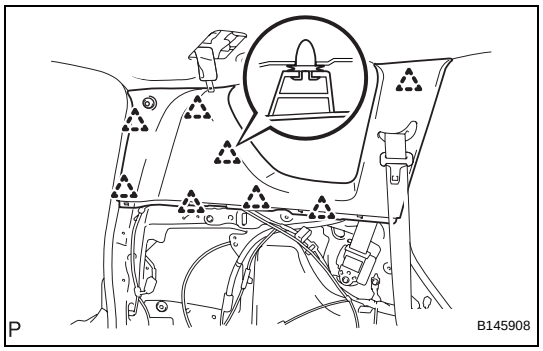

(b) Using a clip remover, detach the 8 clips and remove the garnish.

52. REMOVE INNER ROOF SIDE GARNISH ASSEMBLY RH

HINT:
Use the same procedures described for the LH side.

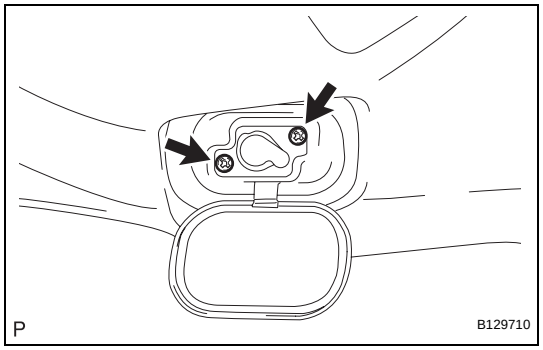

53. REMOVE REAR ROOM PARTITION NET HOOK LH

(a) Remove the 2 screws and net hook.

54. REMOVE REAR ROOM PARTITION NET HOOK RH

HINT:
Use the same procedures described for the LH side.

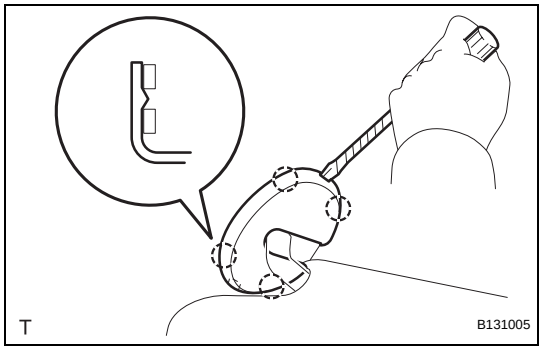

55. REMOVE VISOR ASSEMBLY LH

(a) Using a screwdriver, detach the 4 claws and remove the visor bracket cover.
  HINT:
  Tape the screwdriver tip before use.

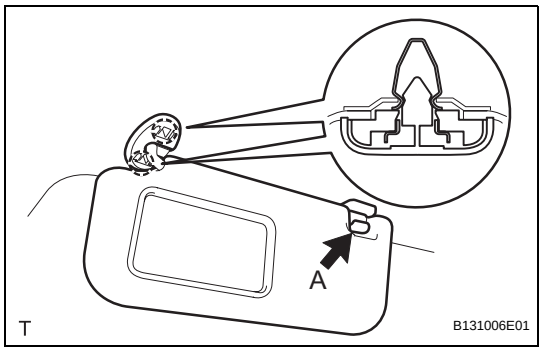

(b) Remove portion A from the visor holder.
(c) Detach the 2 claws and remove the visor.

56. REMOVE VISOR ASSEMBLY RH

HINT:
Use the same procedures described for the LH side.

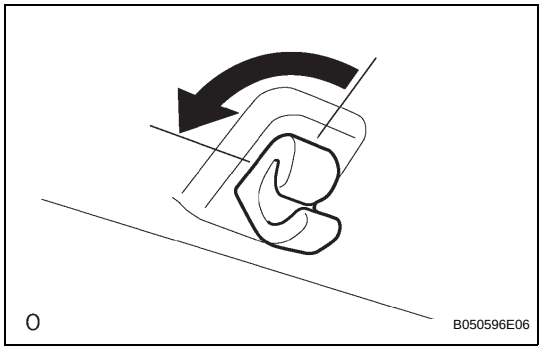

57. REMOVE VISOR HOLDER

(a) Remove the visor holder by turning it counterclockwise.

58. REMOVE VANITY LIGHT ASSEMBLY (See page LI-128)

59. REMOVE MAP LIGHT ASSEMBLY (See page LI-115)

60. REMOVE ROOM LIGHT ASSEMBLY (See page LI-118)

61. REMOVE TELEVISION GARNISH (w/ Television Display) (See page AV-165)

62. REMOVE TELEVISION DISPLAY ASSEMBLY (w/ Television Display) (See page AV-165)

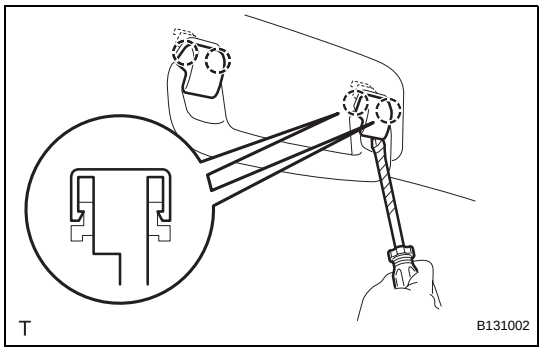

63. REMOVE ASSIST GRIP COVER (for Front Grip)

(a) Using a screwdriver, detach the 4 claws and remove the 2 assist grip covers.
HINT:
Tape the screwdriver tip before use.

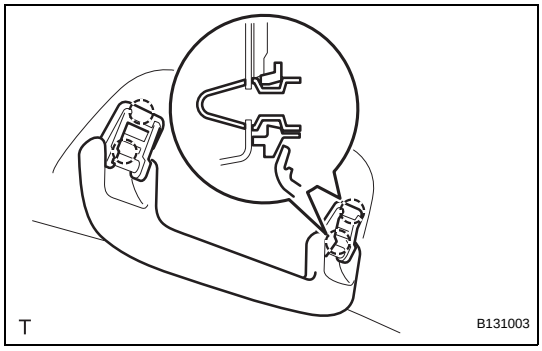

64. REMOVE ASSIST GRIP SUB-ASSEMBLY

(a) Detach the 4 claws and remove the assist grip.

IR

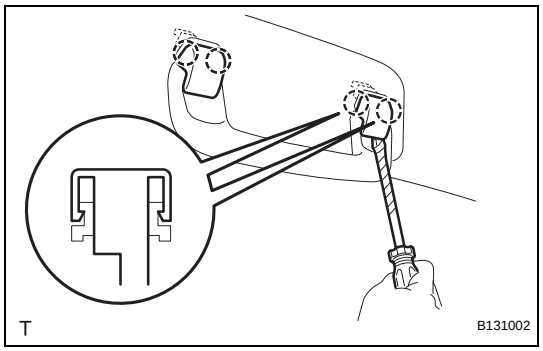

65. REMOVE ASSIST GRIP COVER (for Rear Grip)

(a) Using a screwdriver, detach the 4 claws and remove the 2 assist grip covers.
HINT:
Tape the screwdriver tip before use.

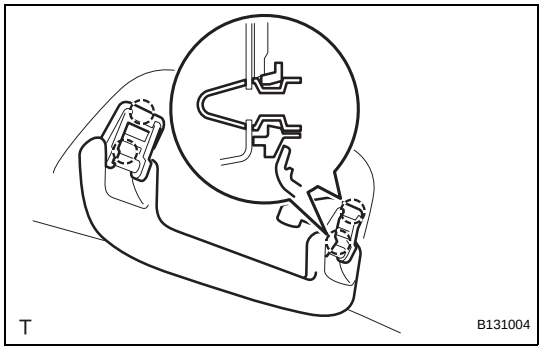

66. REMOVE REAR ASSIST GRIP ASSEMBLY

(a) Detach the 4 claws and remove the assist grip.

67. REMOVE CHILD RESTRAINT SEAT TETHER ANCHOR COVER (See page SB-77)

68. REMOVE SHOULDER BELT ANCHOR COVER RH (See page SB-64)

69. REMOVE SUN ROOF OPENING TRIM MOULDING

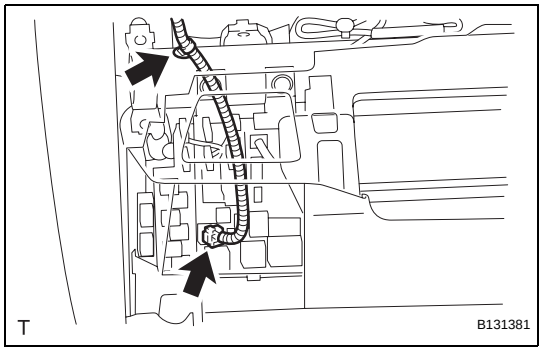

70. REMOVE ROOF HEADLINING ASSEMBLY

(a) Using a screwdriver, remove the wire harness clamp.

(b) Disconnect the roof wire connector.

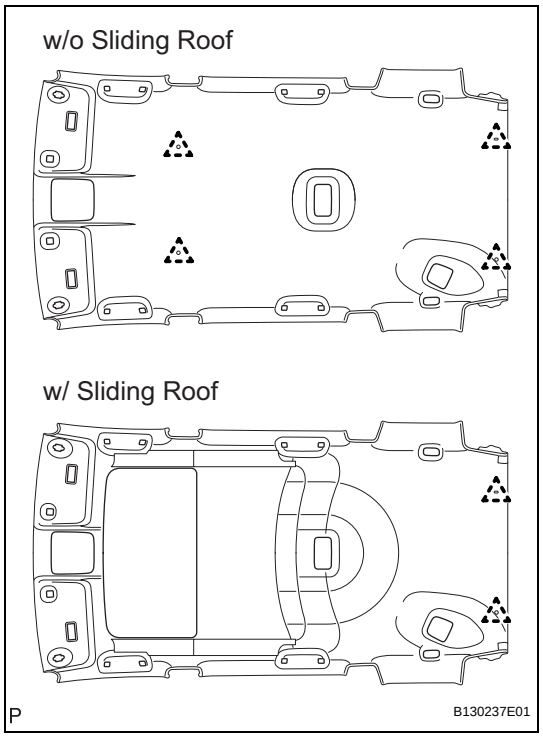

(c) w/o Sliding Roof:
(1) Using a clip remover, remove the 4 clips and headlining.

(d) w/ Sliding Roof:
(1) Disconnect the connector from the drive gear.
(2) Using a clip remover, remove the 2 clips and headlining.

71. REMOVE NO. 1 ROOF HEADLINING SUPPORT

72. REMOVE NO. 2 ROOF HEADLINING SUPPORT

73. REMOVE NO. 3 ROOF HEADLINING SUPPORT

74. REMOVE NO. 4 ROOF HEADLINING SUPPORT

75. REMOVE NO. 1 ROOF WIRE

(a) Only when replacing the roof headlining:
(1) Remove the double-sided tape and roof wire.

76. REMOVE NO. 1 ROOF SILENCER PAD

(a) w/o Sliding Roof:
(1) Remove the 5 silencer pads.

(b) w/ Sliding Roof:
(1) Remove the 2 silencer pads.

IR

77. REMOVE NO. 3 ROOF SILENCER PAD

INSTALLATION

(2005/11-2006/01)

1. INSTALL NO. 1 ROOF SILENCER PAD

(a) w/o Sliding Roof:
(1) Install the 5 silencer pads.

(b) w/ Sliding Roof:
(1) Install the 2 silencer pads.

2. INSTALL NO. 3 ROOF SILENCER PAD

3. INSTALL NO. 1 ROOF WIRE

(a) Only when replacing the roof headlining:
(1) Align the marking, and then install the wire harness with tape.
HINT:
Be careful that dirt or foreign objects do not stick to the adhesive part when peeling off the double-sided tape.
(2) Attach the roof wire harness along the adhesive part.
NOTICE:
The roof wire harness should be attached securely.

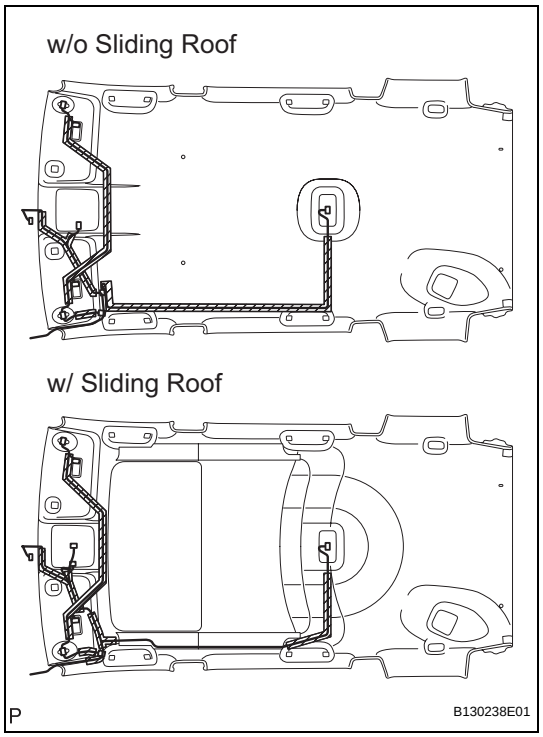

4. INSTALL NO. 1 ROOF HEADLINING SUPPORT

5. INSTALL NO. 2 ROOF HEADLINING SUPPORT

6. INSTALL NO. 3 ROOF HEADLINING SUPPORT

7. INSTALL NO. 4 ROOF HEADLINING SUPPORT

8. INSTALL ROOF HEADLINING ASSEMBLY

(a) w/o Sliding Roof:
(1) Install the headlining with the 4 clips.

(b) w/ Sliding Roof:
(1) Install the headlining with the 2 clips.
(2) Connect the connector to the sliding roof drive gear.

(c) Connect the connector to the roof wire.
(d) Attach the clamp of the roof wire.

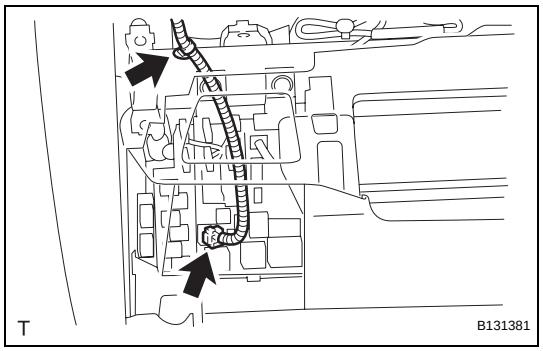

9. INSTALL SUN ROOF OPENING TRIM MOULDING

10. INSTALL SHOULDER BELT ANCHOR COVER RH (See page SB-65)

11. INSTALL CHILD RESTRAINT SEAT TETHER ANCHOR COVER (See page SB-77)

IR

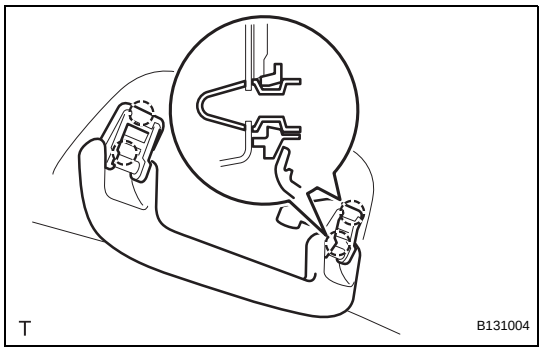

12. INSTALL REAR ASSIST GRIP ASSEMBLY
(a) Attach the 4 claws to install the assist grip.

13. INSTALL ASSIST GRIP COVER (for Rear Grip)
(a) Attach the 4 claws to install the 2 assist grip covers.

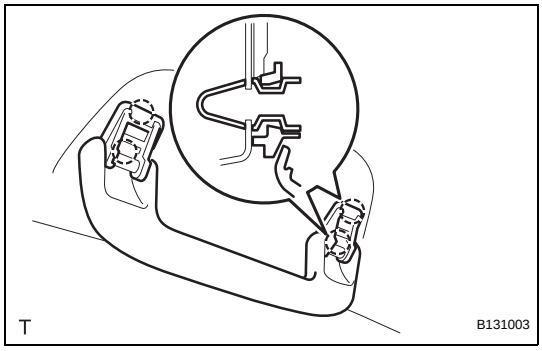

14. INSTALL ASSIST GRIP SUB-ASSEMBLY
(a) Attach the 4 claws to install the assist grip.

15. INSTALL ASSIST GRIP COVER (for Front Grip)
(a) Attach the 4 claws to install the 2 assist grip covers.

16. INSTALL ROOM LIGHT ASSEMBLY (See page LI-119)

17. INSTALL MAP LIGHT ASSEMBLY (See page LI-116)

18. INSTALL VANITY LIGHT ASSEMBLY (See page LI-129)

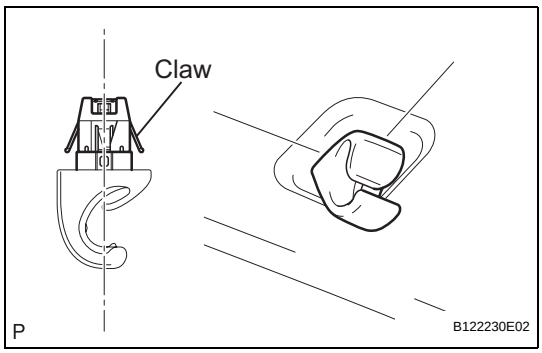

19. INSTALL VISOR HOLDER
(a) Set the claws of the visor holder as shown in the illustration.
(b) Insert the visor holder to install it.

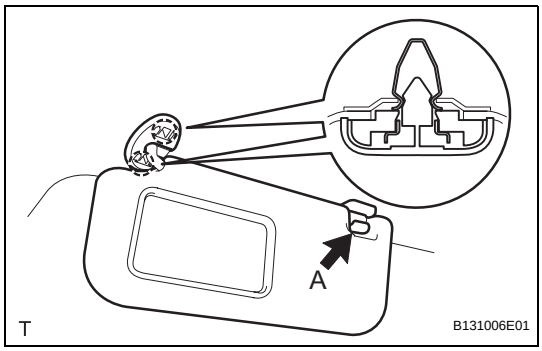

20. INSTALL VISOR ASSEMBLY LH
(a) Attach the 2 claws to install the visor.
(b) Install portion A of the visor onto the visor holder.
(c) Attach the 4 claws to install the visor bracket cover.

21. INSTALL VISOR ASSEMBLY RH
HINT:
Use the same procedures described for the LH side.

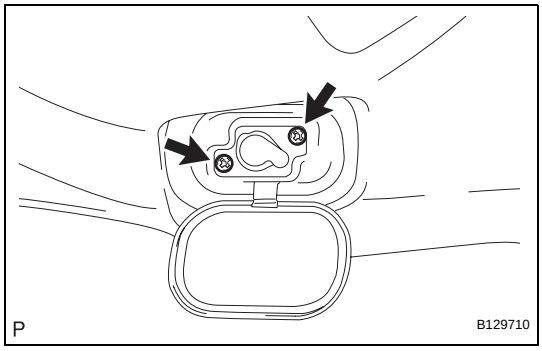

22. INSTALL REAR ROOM PARTITION NET HOOK LH
(a) Install the net hook with the 2 screws.

23. INSTALL REAR ROOM PARTITION NET HOOK RH
HINT:
Use the same procedures described for the LH side.

IR

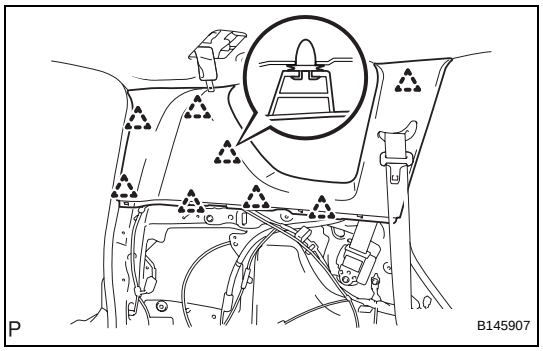

24. INSTALL INNER ROOF SIDE GARNISH ASSEMBLY LH (w/o Rear No. 2 Seat)

(a) Attach the 8 clips to install the garnish.

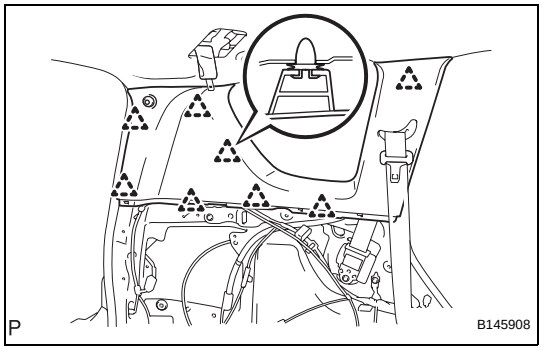

25. INSTALL INNER ROOF SIDE GARNISH ASSEMBLY LH (w/ Rear No. 2 Seat)

(a) Attach the 8 clips to install the garnish.

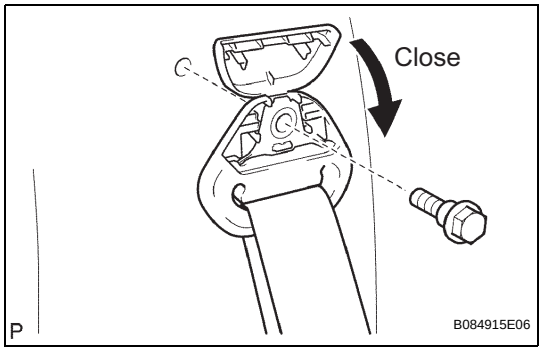

(b) Connect the rear No. 2 seat belt's shoulder anchor.
  (1) Connect the shoulder anchor with the bolt.
  Torque: 42 N*m (428 kgf*cm, 31 ft.*lbf)
  (2) Attach the 2 claws to close the seat belt anchor cover.

26. INSTALL INNER ROOF SIDE GARNISH ASSEMBLY RH

HINT:
Use the same procedures described for the LH side.

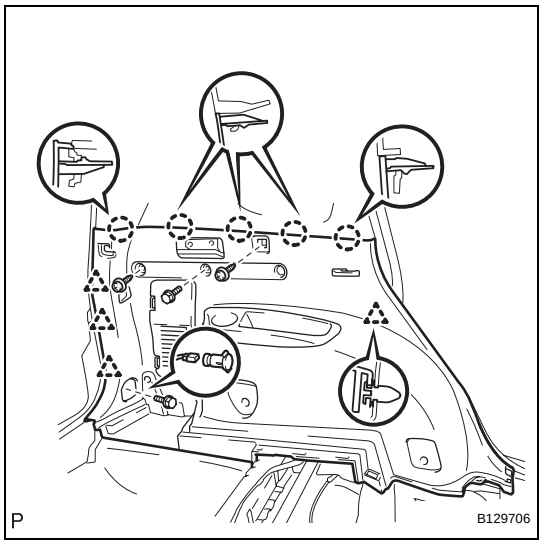

27. INSTALL DECK TRIM SIDE PANEL ASSEMBLY LH (w/ o Rear No. 2 Seat)

(a) Install the belt hanger to the trim board.
(b) Connect the power outlet socket connector.
(c) Attach the 4 clips and 5 claws to install the trim board.
(d) Install the 2 screws and 2 bolts.

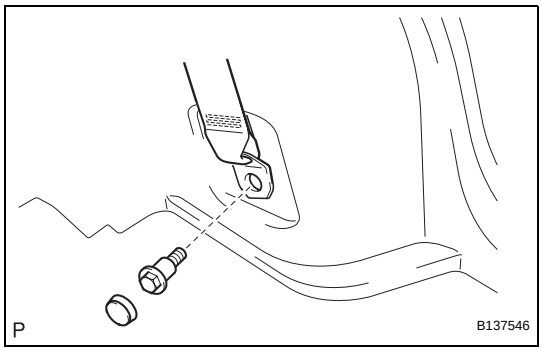

(e) Connect the rear No. 1 seat belt's floor anchor.
  (1) Connect the floor anchor with the bolt.
  Torque: 42 N*m (428 kgf*cm, 31 ft.*lbf)
  (2) Install the anchor cover.

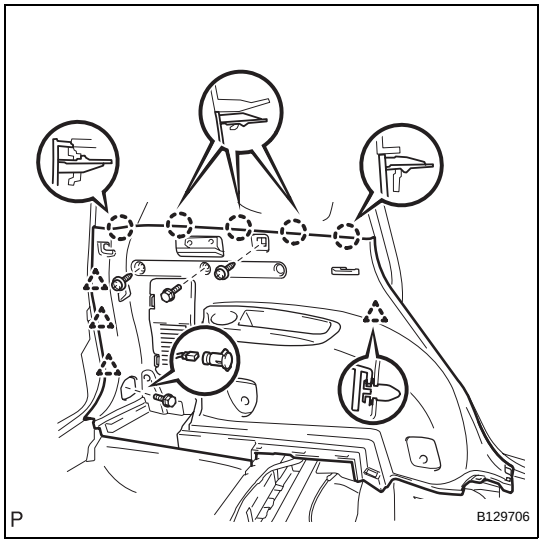

28. INSTALL DECK TRIM SIDE PANEL ASSEMBLY LH (w/ Rear No. 2 Seat)

(a) Install the belt hanger to the trim board.
(b) Connect the power outlet socket connector.
(c) Attach the 4 clips and 5 claws to install the trim board.
(d) Install the 2 screws and 2 bolts.

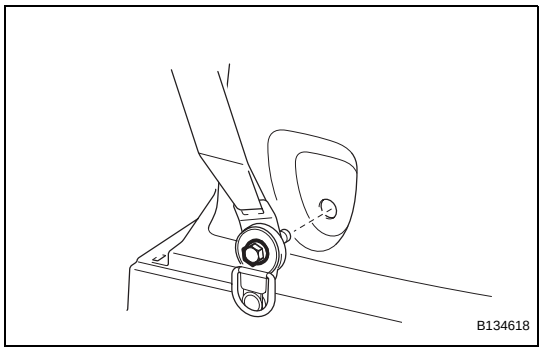

(e) Connect the rear No. 2 seat belt's floor anchor.
  (1) Connect the floor anchor with the bolt.
  Torque: 42 N*m (428 kgf*cm, 31 ft.*lbf)

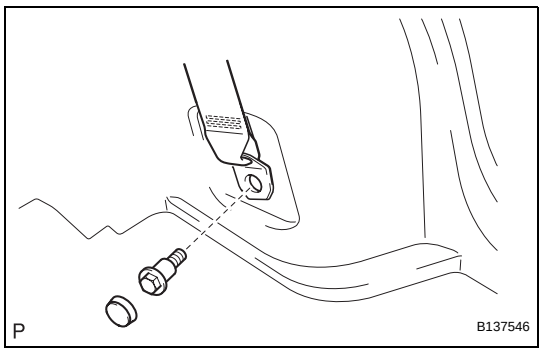

(f) Connect the rear No. 1 seat belt's floor anchor.
  (1) Connect the floor anchor with the bolt.
  Torque: 42 N*m (428 kgf*cm, 31 ft.*lbf)
  (2) Install the anchor cover.

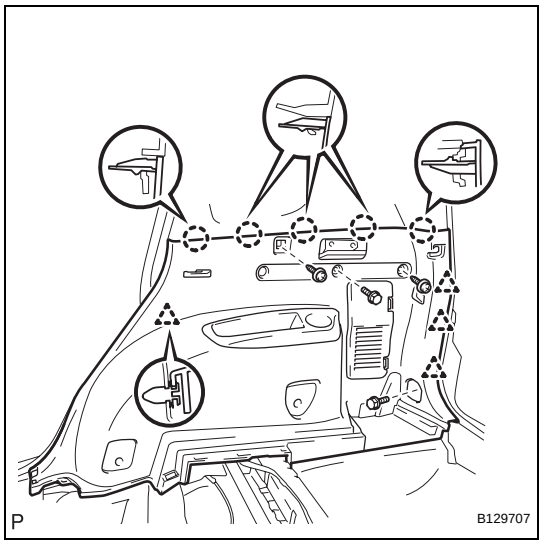

29. INSTALL DECK TRIM SIDE PANEL ASSEMBLY RH (w/o Rear No. 2 Seat)

(a) Install the belt hanger to the trim board.
(b) Attach the 4 clips and 5 claws to install the trim board.
(c) Install the 2 screws and 2 bolts.

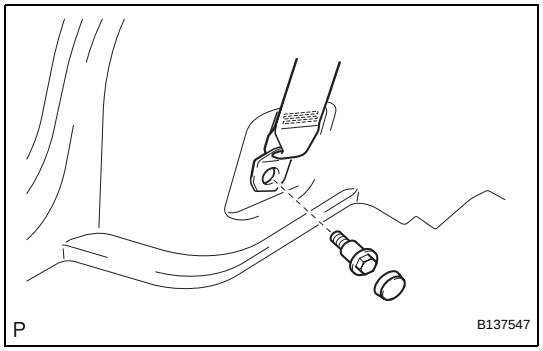

(d) Connect the rear No. 1 seat belt's floor anchor.
  (1) Connect the floor anchor with the bolt.
  Torque: 42 N*m (428 kgf*cm, 31 ft.*lbf)
  (2) Install the anchor cover.

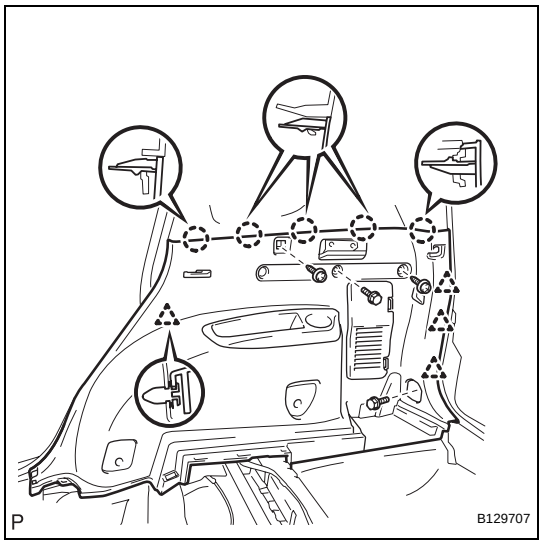

30. INSTALL DECK TRIM SIDE PANEL ASSEMBLY RH (w/ Rear No. 2 Seat)

(a) Install the belt hanger to the trim board.
(b) Attach the 4 clips and 5 claws to install the trim board.
(c) Install the 2 screws and 2 bolts.
(d) Connect the rear No. 2 seat belt's floor anchor.
  (1) Connect the floor anchor with the bolt.
  Torque: 42 N*m (428 kgf*cm, 31 ft.*lbf)

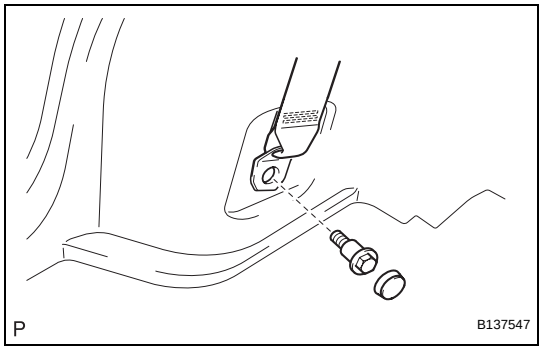

(e) Connect the rear No. 1 seat belt's floor anchor.
  (1) Connect the floor anchor with the bolt.
  Torque: 42 N*m (428 kgf*cm, 31 ft.*lbf)
  (2) Install the anchor cover.

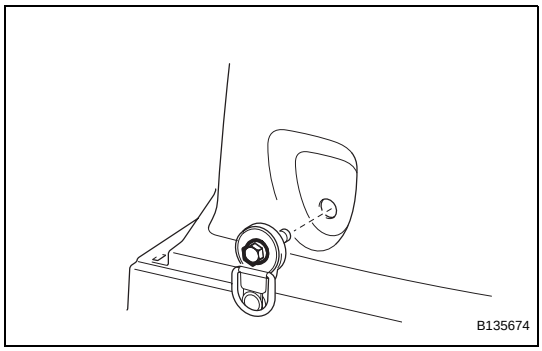

31. INSTALL TETHER ANCHOR BRACKET SUB-ASSEMBLY (w/o Rear No. 2 Seat)

(a) Install the tether anchor bracket with the bolt.
Torque: 42 N*m (428 kgf*cm, 31 ft.*lbf)

32. INSTALL RECLINING REMOTE CONTROL LEVER BEZEL LH (w/o Rear No. 2 Seat) (See page SE-73)

33. INSTALL RECLINING REMOTE CONTROL LEVER BEZEL RH (w/o Rear No. 2 Seat) (See page SE-105)

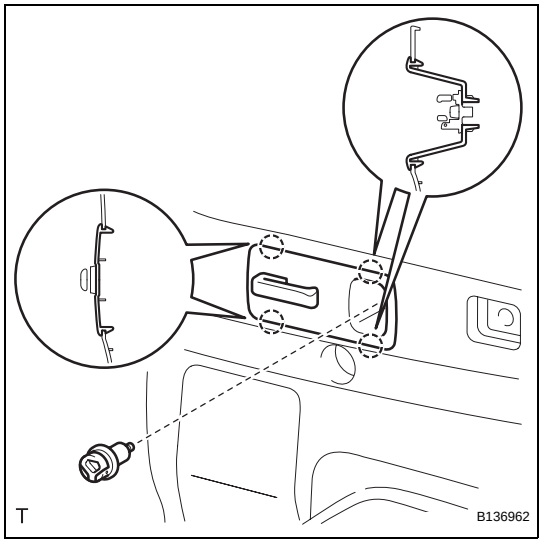

34. INSTALL REAR DECK TRIM COVER LH (w/ Rear No. 2 Seat)

(a) Attach the 4 claws to install the trim cover.
(b) Install the bolt.

35. INSTALL REAR DECK TRIM COVER RH (w/ Rear No. 2 Seat)

HINT:
Use the same procedures described for the LH side.

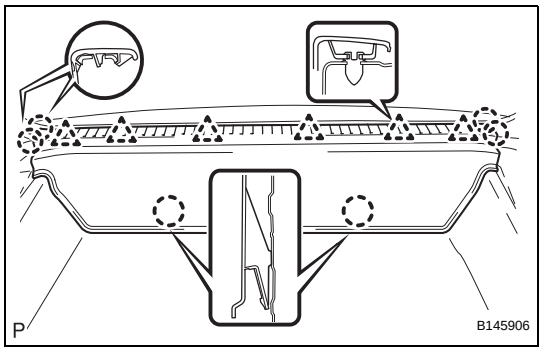

36. INSTALL REAR FLOOR FINISH PLATE

(a) Attach the 6 claws and 6 clips to install the finish plate.

37. INSTALL BACK DOOR WEATHERSTRIP

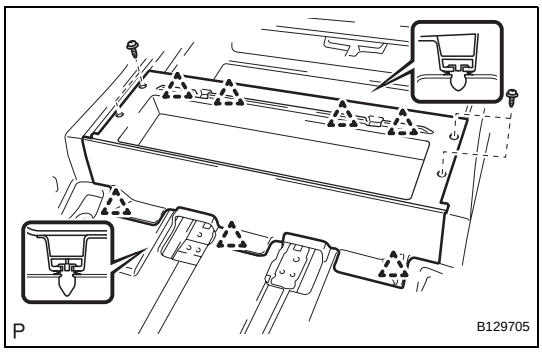

38. INSTALL REAR FLOOR NO. 1 MAT SUPPORT SIDE PLATE

(a) w/o Rear No. 2 Seat:
(1) Attach the 7 clips to install the side plate.
(2) Install the 4 screws.

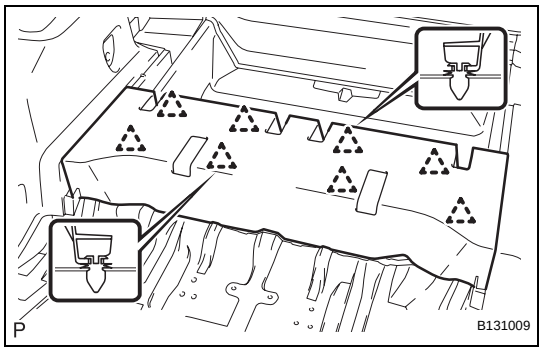

(b) w/ Rear No. 2 Seat:
(1) Attach the 8 clips to install the side plate.

39. **INSTALL REAR FLOOR NO. 3 BOARD**

40. **INSTALL REAR FLOOR NO. 2 BOARD**

41. **INSTALL REAR NO. 2 SEAT ASSEMBLY LH (w/ Rear No. 2 Seat) (See page SE-121)**

42. **INSTALL REAR NO. 2 SEAT ASSEMBLY RH (w/ Rear No. 2 Seat)**
HINT:
Use the same procedures described for the LH side.

43. **INSTALL NO. 2 SEAT LEG COVER LH (w/ Rear No. 2 Seat) (See page SE-123)**

44. **INSTALL NO. 2 SEAT LEG COVER RH (w/ Rear No. 2 Seat)**
HINT:
Use the same procedures described for the LH side.

45. **INSTALL NO. 2 SEAT HINGE COVER LH (w/ Rear No. 2 Seat) (See page SE-123)**

46. **INSTALL NO. 2 SEAT HINGE COVER RH (w/ Rear No. 2 Seat)**
HINT:
Use the same procedures described for the LH side.

47. **INSTALL DECK BOARD ASSEMBLY (w/o Rear No. 2 Seat)**

48. **INSTALL REAR FLOOR NO. 1 BOARD (w/o Rear No. 2 Seat)**

49. **INSTALL TONNEAU COVER ASSEMBLY (w/o Rear No. 2 Seat)**

50. **INSTALL PACKAGE TRAY TRIM POCKET SUB-ASSEMBLY (w/o Rear No. 2 Seat)**

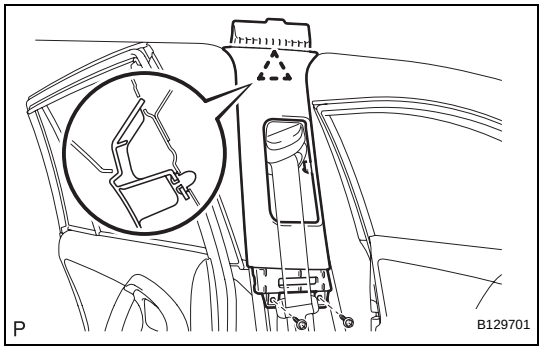

51. **INSTALL CENTER PILLAR GARNISH LH**
(a) Attach the clip to install the garnish.
(b) Install the 2 screws.

52. **INSTALL CENTER PILLAR GARNISH RH**
HINT:
Use the same procedures described for the LH side.

IR

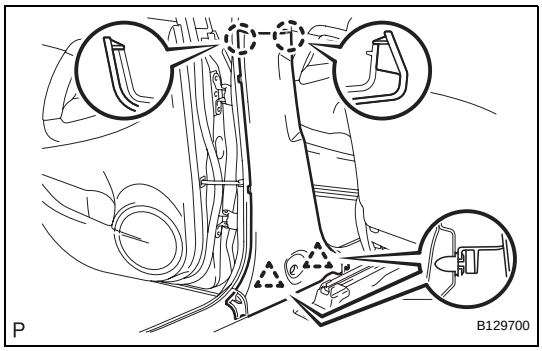

53. INSTALL LOWER CENTER PILLAR GARNISH LH

(a) Attach the 2 claws and 2 clips to install the garnish.

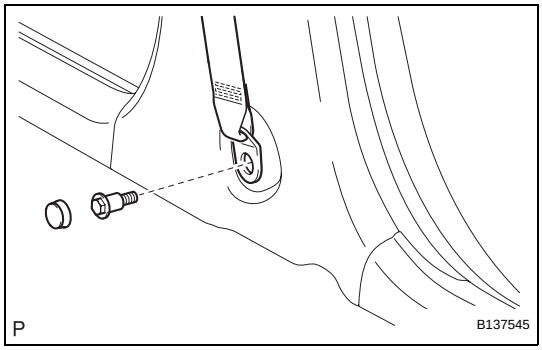

(b) Connect the front seat outer belt's floor anchor.
   (1) Connect the floor anchor with the bolt.
   Torque: 42 N*m (428 kgf*cm, 31 ft.*lbf)
   (2) Install the anchor cover.

54. INSTALL LOWER CENTER PILLAR GARNISH RH

HINT:
Use the same procedures described for the LH side.

55. INSTALL REAR DOOR OPENING TRIM WEATHERSTRIP LH

56. INSTALL REAR DOOR OPENING TRIM WEATHERSTRIP RH

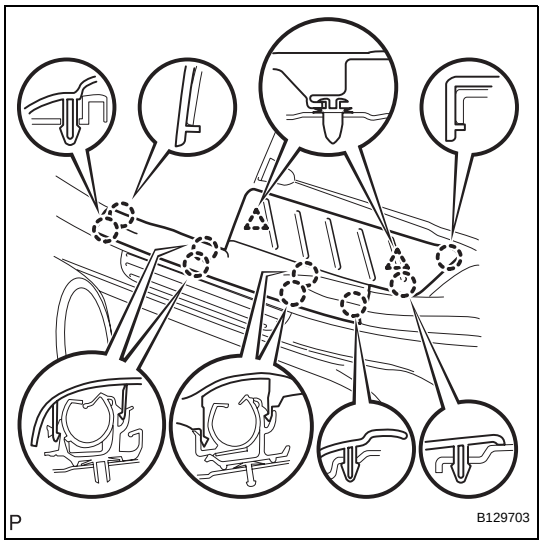

57. INSTALL REAR DOOR SCUFF PLATE LH

(a) Attach the 9 claws and 2 clips to install the scuff plate.

58. INSTALL REAR DOOR SCUFF PLATE RH

HINT:
Use the same procedures described for the LH side.

59. INSTALL INSTRUMENT PANEL SUB-ASSEMBLY (See page IP-9)

60. INSTALL FRONT PILLAR GARNISH LH

(a) w/ Curtain Shield Airbag:
   (1) Remove the piece of cloth or nylon.

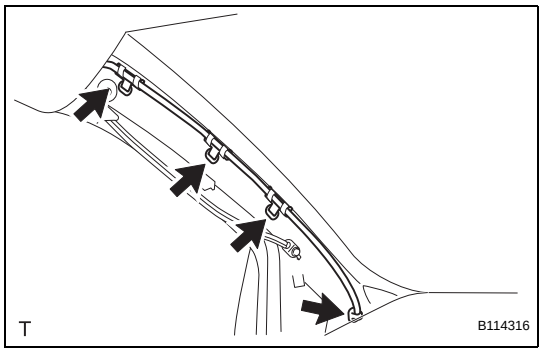

(b) Install the 4 wire harness clamps.

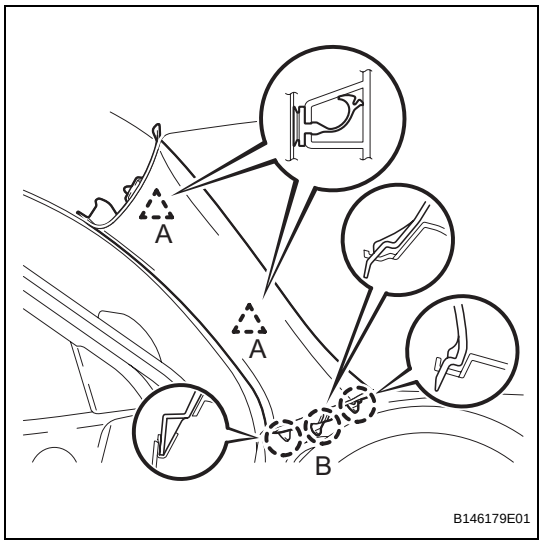

(c) w/ Curtain Shield Airbag:
(1) Install 2 new clips labeled A to the vehicle body.
(2) Set the 3 claws of the pillar garnish to the area labeled B.
(3) Insert the tips of the clips labeled A into the pillar garnish's holes.
(4) Using needle-nose pliers, rotate the tips of clips labeled A 90°. Then push the pillar garnish toward the vehicle body to attach the base of the 2 clips labeled A.

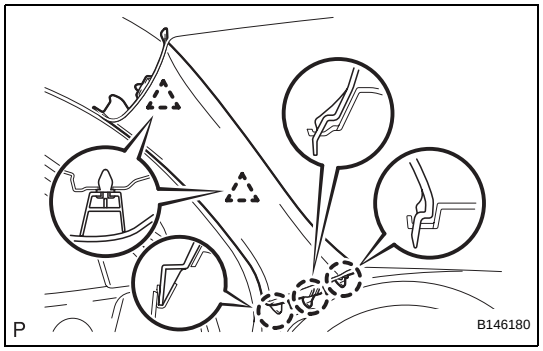

(d) w/o Curtain Shield Airbag:
(1) Attach the 2 clips and 3 claws to install the garnish.

61. INSTALL FRONT PILLAR GARNISH RH

(a) w/ Curtain Shield Airbag:
(1) Remove the piece of cloth or nylon.

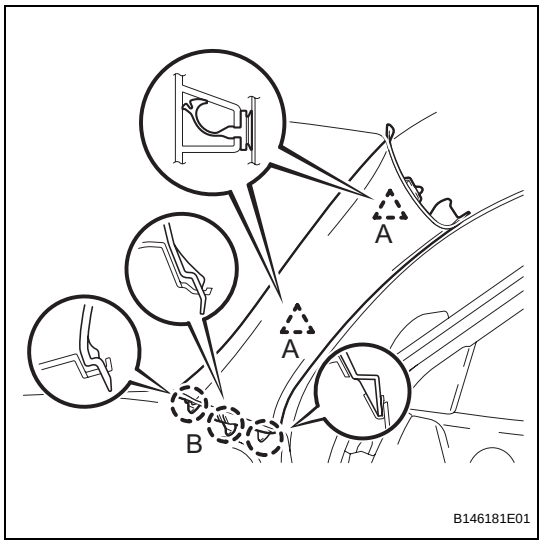

(b) w/ Curtain Shield Airbag:
(1) Install 2 new clips labeled A to the vehicle body.
(2) Set the 3 claws of the pillar garnish to the area labeled B.
(3) Insert the tips of the clips labeled A into the pillar garnish's holes.
(4) Using needle-nose pliers, rotate the tips of clips labeled A 90°. Then push the pillar garnish toward the vehicle body to attach the base of the 2 clips labeled A.

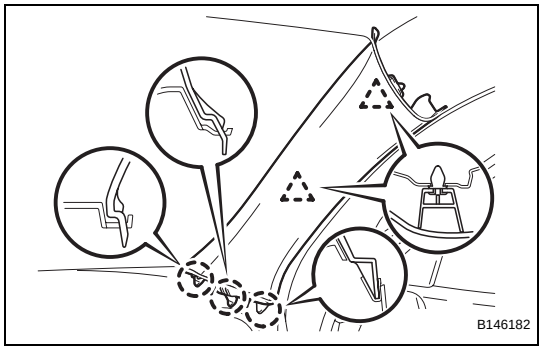

(c) w/o Curtain Shield Airbag:
(1) Attach the 2 clips and 3 claws to install the garnish.

62. INSTALL GLOVE COMPARTMENT DOOR ASSEMBLY (See page IP-25)

63. INSTALL INSTRUMENT PANEL REGISTER ASSEMBLY CENTER (See page IP-10)

64. INSTALL RADIO RECEIVER (See page IP-10)

IR

65. INSTALL NO. 2 INSTRUMENT CLUSTER FINISH PANEL CENTER (See page IP-10)

66. INSTALL NO. 1 INSTRUMENT CLUSTER FINISH PANEL CENTER (See page IP-10)

67. INSTALL COMBINATION METER ASSEMBLY (See page IP-11)

68. INSTALL INSTRUMENT CLUSTER FINISH PANEL ASSEMBLY (See page IP-11)

69. INSTALL FRONT DOOR OPENING TRIM WEATHERSTRIP LH

70. INSTALL FRONT DOOR OPENING TRIM WEATHERSTRIP RH

IR

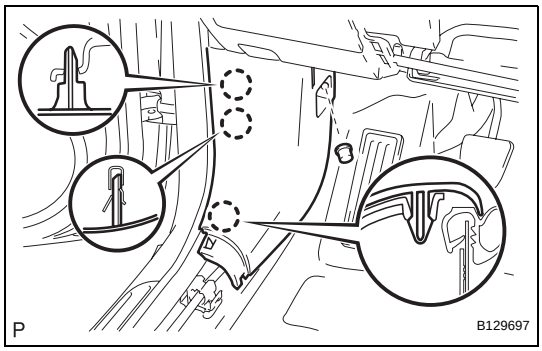

71. INSTALL COWL SIDE TRIM BOARD LH

(a) Attach the 3 claws to install the trim board.

(b) Install the cap nut.

72. INSTALL COWL SIDE TRIM BOARD RH

HINT:

Use the same procedures described for the LH side.

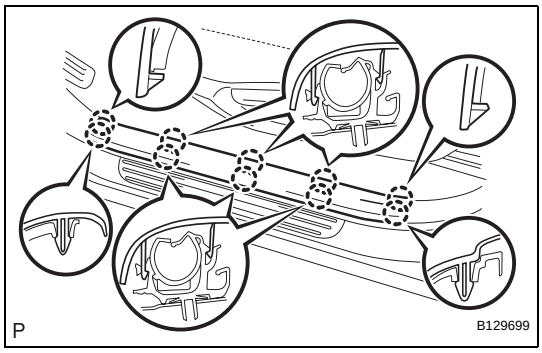

73. INSTALL FRONT DOOR SCUFF PLATE LH

(a) Attach the 10 claws to install the scuff plate.

74. INSTALL FRONT DOOR SCUFF PLATE RH

HINT:

Use the same procedures described for the LH side.

75. CONNECT CABLE TO NEGATIVE BATTERY TERMINAL

INSTALLATION

(2006/01-)

1. INSTALL NO. 1 ROOF SILENCER PAD

(a) w/o Sliding Roof:

(1) Install the 5 silencer pads.

(b) w/ Sliding Roof:

(1) Install the 2 silencer pads.

2. INSTALL NO. 3 ROOF SILENCER PAD

3. INSTALL NO. 1 ROOF WIRE

(a) Only when replacing the roof headlining:

(1) Align the marking, and then install the wire harness with tape.

HINT:

Be careful that dirt or foreign objects do not stick to the adhesive part when peeling off the double-sided tape.

(2) Attach the roof wire harness along the adhesive part.

NOTICE:

The roof wire harness should be attached securely.

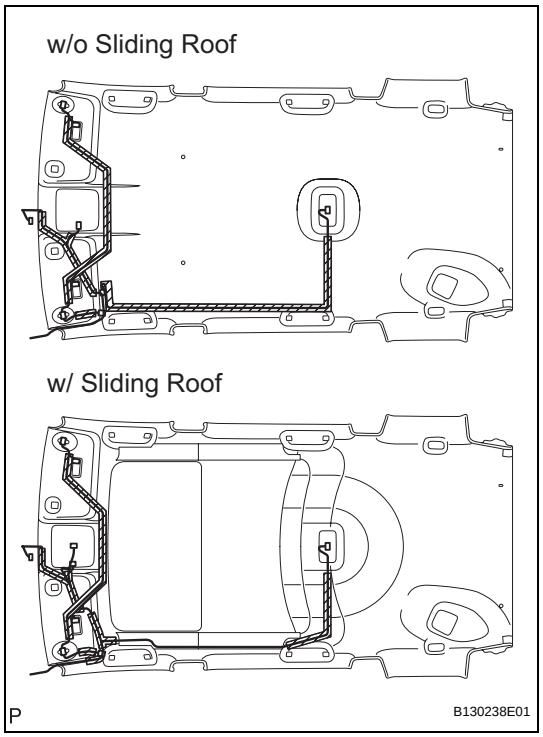

4. INSTALL NO. 1 ROOF HEADLINING SUPPORT

5. INSTALL NO. 2 ROOF HEADLINING SUPPORT

6. INSTALL NO. 3 ROOF HEADLINING SUPPORT

7. INSTALL NO. 4 ROOF HEADLINING SUPPORT

8. INSTALL ROOF HEADLINING ASSEMBLY

(a) w/o Sliding Roof:

(1) Install the headlining with the 4 clips.

(b) w/ Sliding Roof:

(1) Install the headlining with the 2 clips.

(2) Connect the connector to the sliding roof drive gear.

(c) Connect the connector to the roof wire.

(d) Attach the clamp of the roof wire.

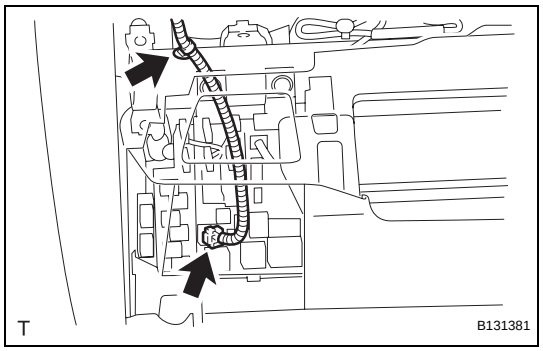

9. INSTALL SUN ROOF OPENING TRIM MOULDING

10. INSTALL SHOULDER BELT ANCHOR COVER RH (See page SB-65)

11. INSTALL CHILD RESTRAINT SEAT TETHER ANCHOR COVER (See page SB-77)

IR

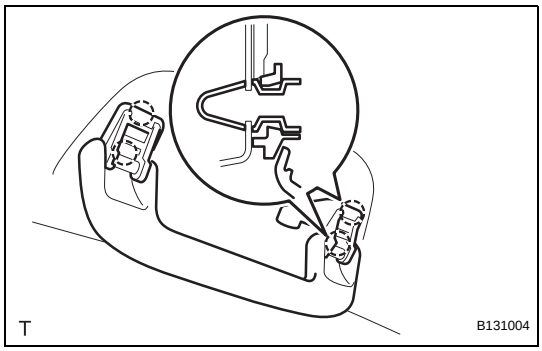

12. **INSTALL REAR ASSIST GRIP ASSEMBLY**
    (a) Attach the 4 claws to install the assist grip.
13. **INSTALL ASSIST GRIP COVER (for Rear Grip)**
    (a) Attach the 4 claws to install the 2 assist grip covers.

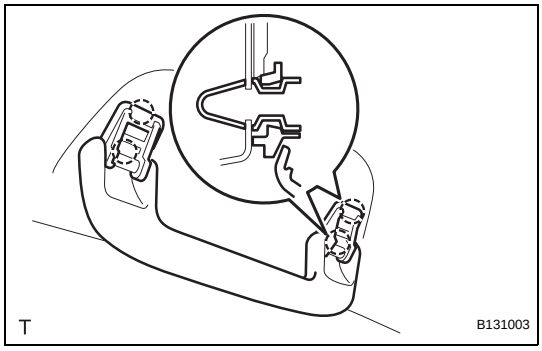

14. **INSTALL ASSIST GRIP SUB-ASSEMBLY**
    (a) Attach the 4 claws to install the assist grip.
15. **INSTALL ASSIST GRIP COVER (for Front Grip)**
    (a) Attach the 4 claws to install the 2 assist grip covers.
16. **INSTALL TELEVISION DISPLAY ASSEMBLY (w/ Television Display) (See page AV-166)**
17. **INSTALL TELEVISION GARNISH (w/ Television Display) (See page AV-166)**
18. **INSTALL ROOM LIGHT ASSEMBLY (See page LI-119)**
19. **INSTALL MAP LIGHT ASSEMBLY (See page LI-116)**
20. **INSTALL VANITY LIGHT ASSEMBLY (See page LI-129)**

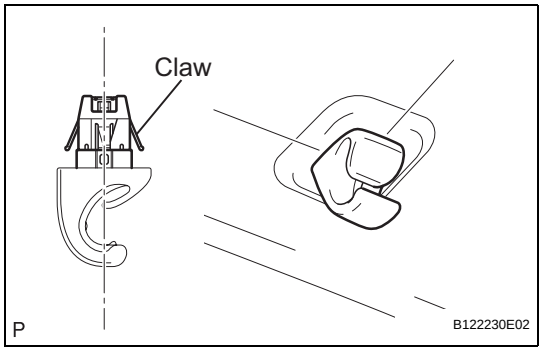

21. **INSTALL VISOR HOLDER**
    (a) Set the claws of the visor holder as shown in the illustration.
    (b) Insert the visor holder to install it.

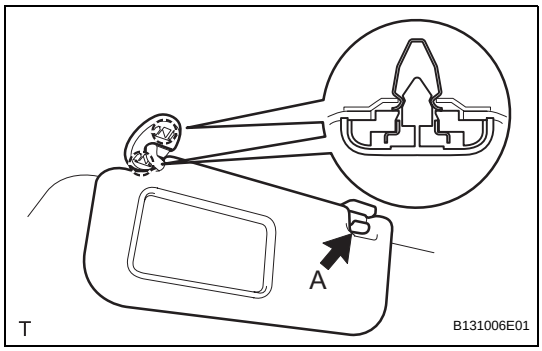

22. **INSTALL VISOR ASSEMBLY LH**
    (a) Attach the 2 claws to install the visor.
    (b) Install portion A of the visor onto the visor holder.
    (c) Attach the 4 claws to install the visor bracket cover.
23. **INSTALL VISOR ASSEMBLY RH**
    HINT:
    Use the same procedures described for the LH side.

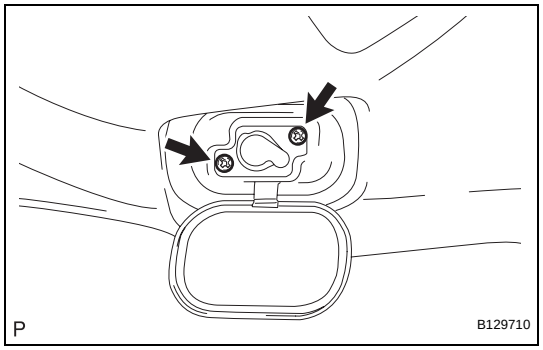

24. INSTALL REAR ROOM PARTITION NET HOOK LH

(a) Install the net hook with the 2 screws.

25. INSTALL REAR ROOM PARTITION NET HOOK RH

HINT:

Use the same procedures described for the LH side.

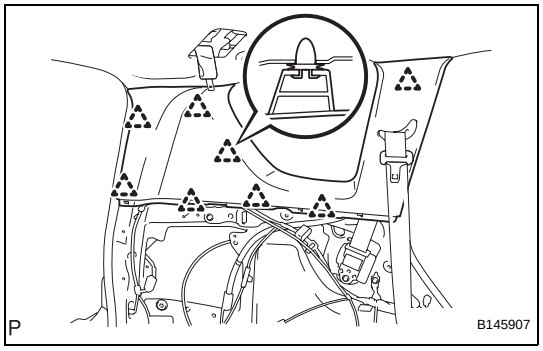

26. INSTALL INNER ROOF SIDE GARNISH ASSEMBLY LH (w/o Rear No. 2 Seat)

(a) Attach the 8 clips to install the garnish.

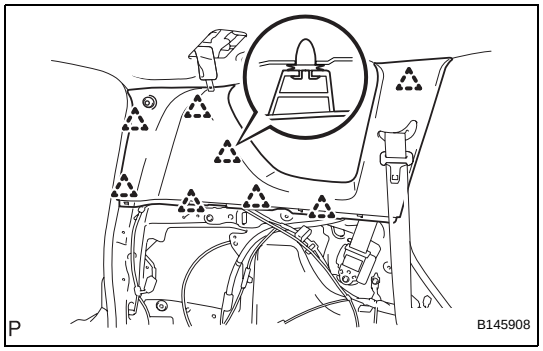

27. INSTALL INNER ROOF SIDE GARNISH ASSEMBLY LH (w/ Rear No. 2 Seat)

(a) Attach the 8 clips to install the garnish.

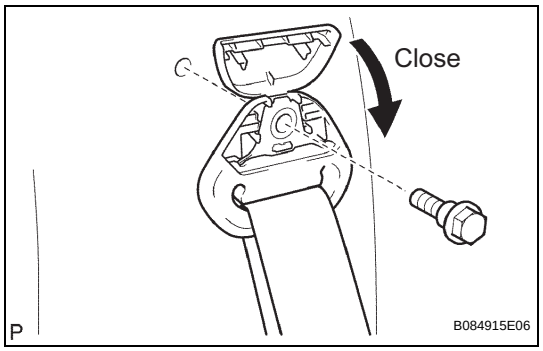

(b) Connect the rear No. 2 seat belt's shoulder anchor.

(1) Connect the shoulder anchor with the bolt.
Torque: 42 N*m (428 kgf*cm, 31 ft.*lbf)

(2) Attach the 2 claws to close the seat belt anchor cover.

28. INSTALL INNER ROOF SIDE GARNISH ASSEMBLY RH

HINT:

Use the same procedures described for the LH side.

IR

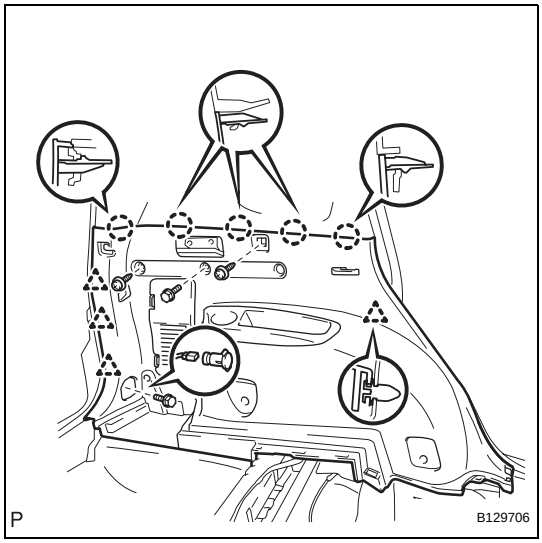

29. INSTALL DECK TRIM SIDE PANEL ASSEMBLY LH (w/ o Rear No. 2 Seat)

(a) Install the belt hanger to the trim board.
(b) Connect the power outlet socket connector.
(c) Attach the 4 clips and 5 claws to install the trim board.
(d) Install the 2 screws and 2 bolts.

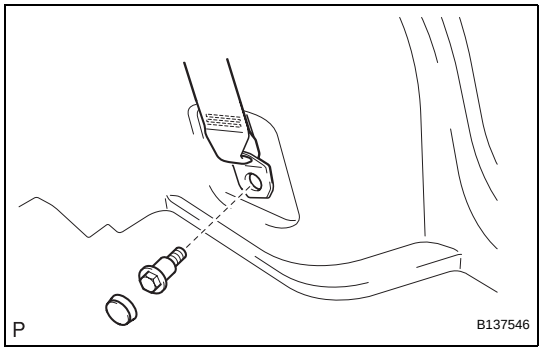

(e) Connect the rear No. 1 seat belt's floor anchor.
  (1) Connect the floor anchor with the bolt.
  Torque: 42 N*m (428 kgf*cm, 31 ft.*lbf)
  (2) Install the anchor cover.

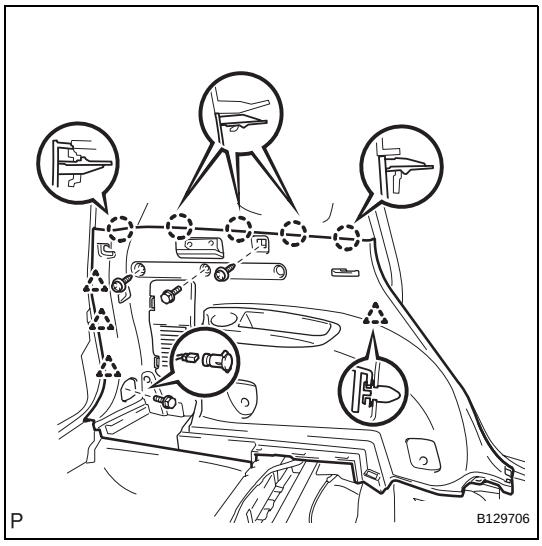

30. INSTALL DECK TRIM SIDE PANEL ASSEMBLY LH (w/ Rear No. 2 Seat)

(a) Install the belt hanger to the trim board.
(b) Connect the power outlet socket connector.
(c) Attach the 4 clips and 5 claws to install the trim board.
(d) Install the 2 screws and 2 bolts.

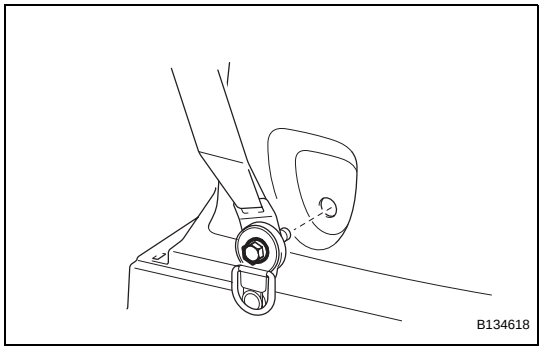

(e) Connect the rear No. 2 seat belt's floor anchor.
  (1) Connect the floor anchor with the bolt.
  Torque: 42 N*m (428 kgf*cm, 31 ft.*lbf)

IR

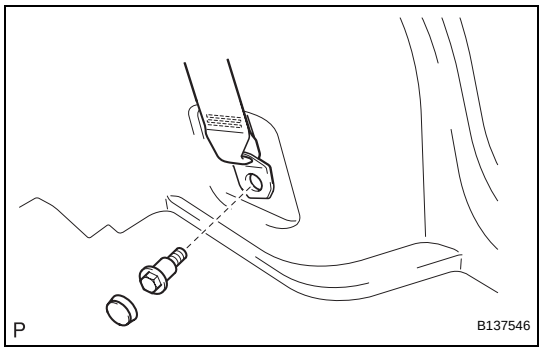

(f) Connect the rear No. 1 seat belt's floor anchor.
  (1) Connect the floor anchor with the bolt.
  Torque: 42 N*m (428 kgf*cm, 31 ft.*lbf)
  (2) Install the anchor cover.

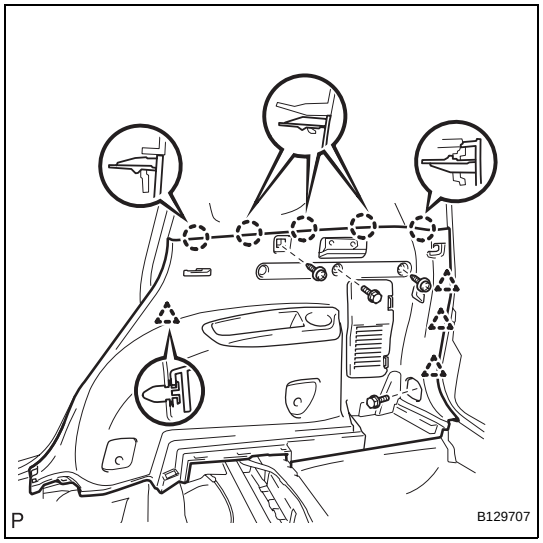

31. INSTALL DECK TRIM SIDE PANEL ASSEMBLY RH (w/o Rear No. 2 Seat)

(a) Install the belt hanger to the trim board.
(b) Attach the 4 clips and 5 claws to install the trim board.
(c) Install the 2 screws and 2 bolts.

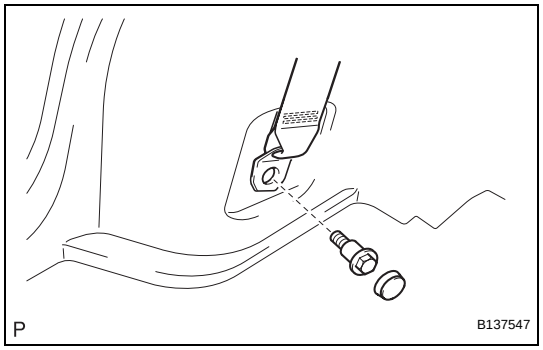

(d) Connect the rear No. 1 seat belt's floor anchor.
  (1) Connect the floor anchor with the bolt.
  Torque: 42 N*m (428 kgf*cm, 31 ft.*lbf)
  (2) Install the anchor cover.

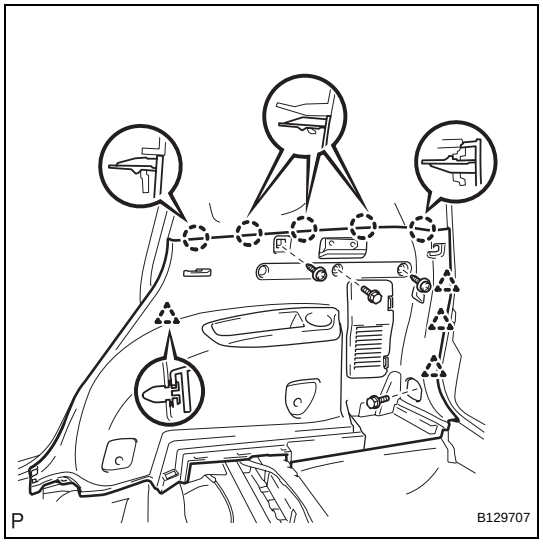

32. INSTALL DECK TRIM SIDE PANEL ASSEMBLY RH (w/ Rear No. 2 Seat)

(a) Install the belt hanger to the trim board.
(b) Attach the 4 clips and 5 claws to install the trim board.
(c) Install the 2 screws and 2 bolts.
(d) Connect the rear No. 2 seat belt's floor anchor.
  (1) Connect the floor anchor with the bolt.
  Torque: 42 N*m (428 kgf*cm, 31 ft.*lbf)

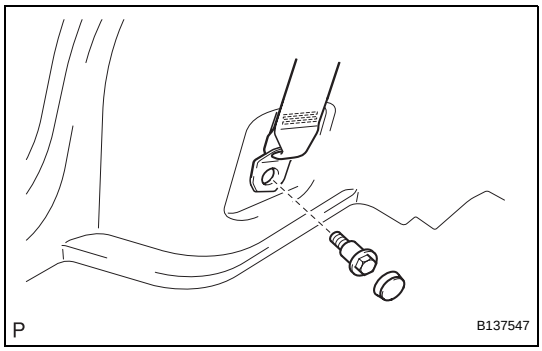

(e) Connect the rear No. 1 seat belt's floor anchor.
(1) Connect the floor anchor with the bolt.
Torque: 42 N*m (428 kgf*cm, 31 ft.*lbf)
(2) Install the anchor cover.

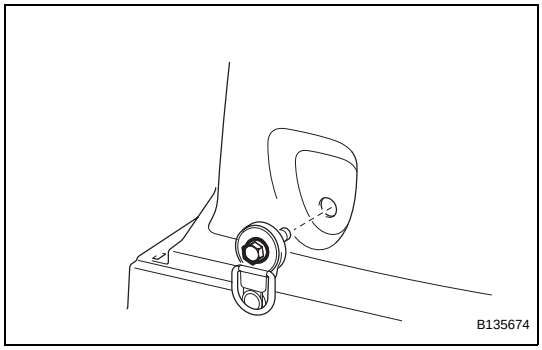

33. INSTALL TETHER ANCHOR BRACKET SUB-ASSEMBLY (w/o Rear No. 2 Seat)
(a) Install the tether anchor bracket with the bolt.
Torque: 42 N*m (428 kgf*cm, 31 ft.*lbf)

34. INSTALL RECLINING REMOTE CONTROL LEVER BEZEL LH (w/o Rear No. 2 Seat) (See page SE-73)

35. INSTALL RECLINING REMOTE CONTROL LEVER BEZEL RH (w/o Rear No. 2 Seat) (See page SE-105)

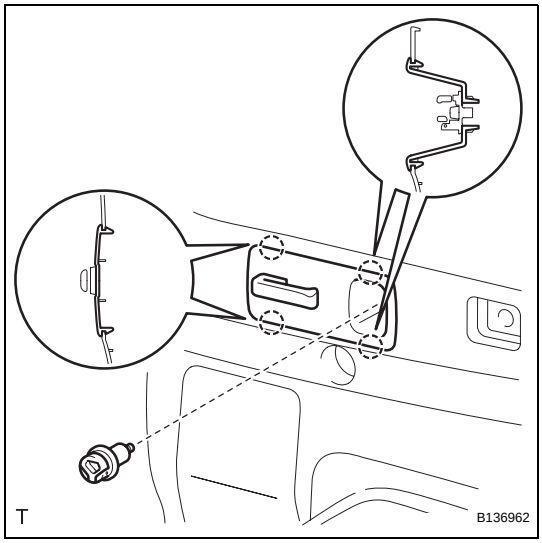

36. INSTALL REAR DECK TRIM COVER LH (w/ Rear No. 2 Seat)
(a) Attach the 4 claws to install the trim cover.
(b) Install the bolt.

37. INSTALL REAR DECK TRIM COVER RH (w/ Rear No. 2 Seat)
HINT:
Use the same procedures described for the LH side.

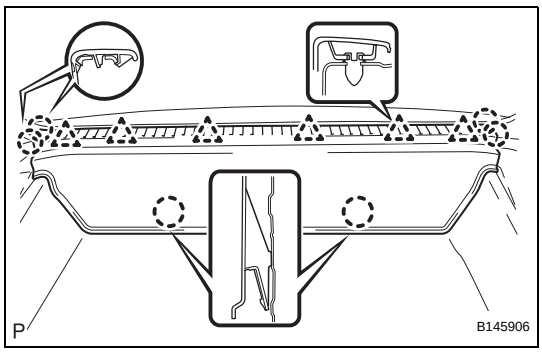

38. INSTALL REAR FLOOR FINISH PLATE
(a) Attach the 6 claws and 6 clips to install the finish plate.

39. INSTALL BACK DOOR WEATHERSTRIP

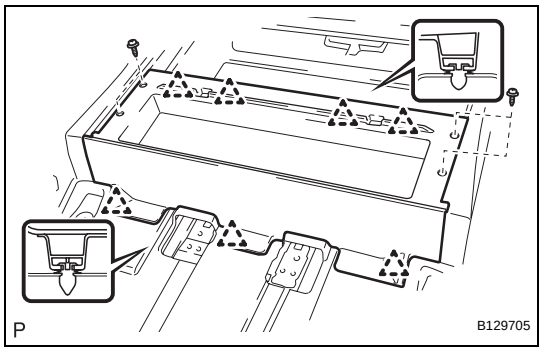

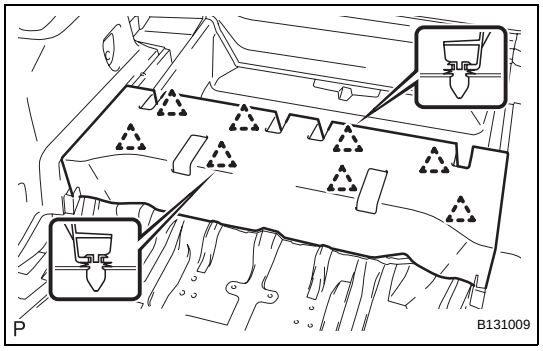

40. INSTALL REAR FLOOR NO. 1 MAT SUPPORT SIDE PLATE

(a) w/o Rear No. 2 Seat:
  (1) Attach the 7 clips to install the side plate.
  (2) Install the 4 screws.

(b) w/ Rear No. 2 Seat:
  (1) Attach the 8 clips to install the side plate.

41. INSTALL REAR FLOOR NO. 3 BOARD

42. INSTALL REAR FLOOR NO. 2 BOARD

43. INSTALL REAR NO. 2 SEAT ASSEMBLY LH (w/ Rear No. 2 Seat) (See page SE-121)

44. INSTALL REAR NO. 2 SEAT ASSEMBLY RH (w/ Rear No. 2 Seat)

HINT:
Use the same procedures described for the LH side.

45. INSTALL NO. 2 SEAT LEG COVER LH (w/ Rear No. 2 Seat) (See page SE-123)

46. INSTALL NO. 2 SEAT LEG COVER RH (w/ Rear No. 2 Seat)

HINT:
Use the same procedures described for the LH side.

47. INSTALL NO. 2 SEAT HINGE COVER LH (w/ Rear No. 2 Seat) (See page SE-123)

48. INSTALL NO. 2 SEAT HINGE COVER RH (w/ Rear No. 2 Seat)

HINT:
Use the same procedures described for the LH side.

49. INSTALL DECK BOARD ASSEMBLY (w/o Rear No. 2 Seat)

50. INSTALL REAR FLOOR NO. 1 BOARD (w/o Rear No. 2 Seat)

51. INSTALL TONNEAU COVER ASSEMBLY (w/o Rear No. 2 Seat)

52. INSTALL PACKAGE TRAY TRIM POCKET SUB-ASSEMBLY (w/o Rear No. 2 Seat)

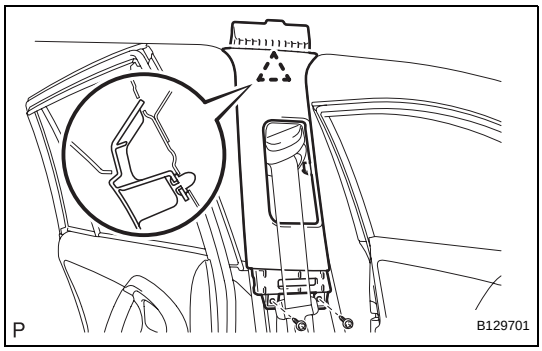

53. INSTALL CENTER PILLAR GARNISH LH
(a) Attach the clip to install the garnish.
(b) Install the 2 screws.

54. INSTALL CENTER PILLAR GARNISH RH
HINT:
Use the same procedures described for the LH side.

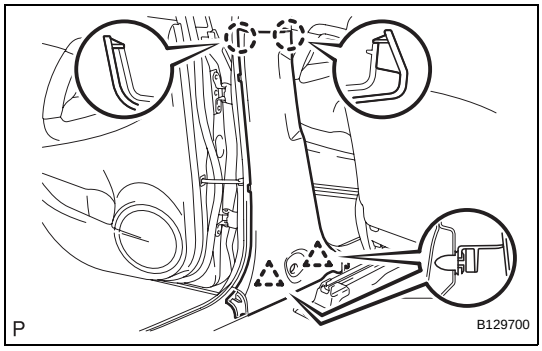

55. INSTALL LOWER CENTER PILLAR GARNISH LH
(a) Attach the 2 claws and 2 clips to install the garnish.

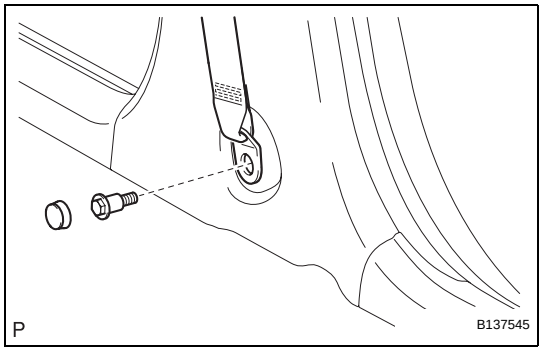

(b) Connect the front seat outer belt's floor anchor.
(1) Connect the floor anchor with the bolt.
Torque: 42 N*m (428 kgf*cm, 31 ft.*lbf)
(2) Install the anchor cover.

56. INSTALL LOWER CENTER PILLAR GARNISH RH
HINT:
Use the same procedures described for the LH side.

57. INSTALL REAR DOOR OPENING TRIM WEATHERSTRIP LH

58. INSTALL REAR DOOR OPENING TRIM WEATHERSTRIP RH

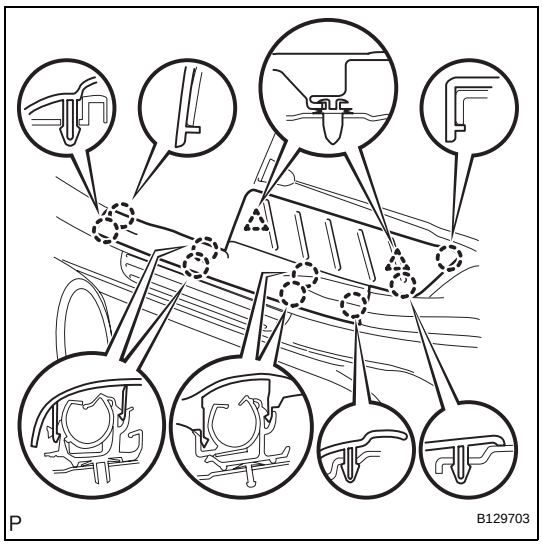

59. INSTALL REAR DOOR SCUFF PLATE LH
(a) Attach the 9 claws and 2 clips to install the scuff plate.

60. INSTALL REAR DOOR SCUFF PLATE RH
HINT:
Use the same procedures described for the LH side.

61. INSTALL INSTRUMENT PANEL SUB-ASSEMBLY (See page IP-9)

62. INSTALL FRONT PILLAR GARNISH LH
(a) w/ Curtain Shield Airbag:
(1) Remove the piece of cloth or nylon.

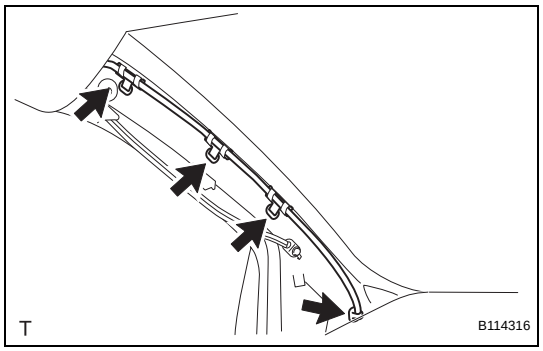

(b) Install the 4 wire harness clamps.

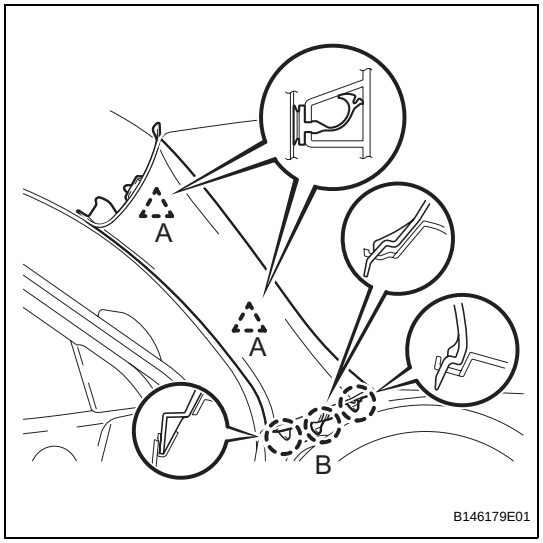

(c) w/ Curtain Shield Airbag:
(1) Install 2 new clips labeled A to the vehicle body.
(2) Set the 3 claws of the pillar garnish to the area labeled B.
(3) Insert the tips of the clips labeled A into the pillar garnish's holes.
(4) Using needle-nose pliers, rotate the tips of clips labeled A 90°. Then push the pillar garnish toward the vehicle body to attach the base of the 2 clips labeled A.

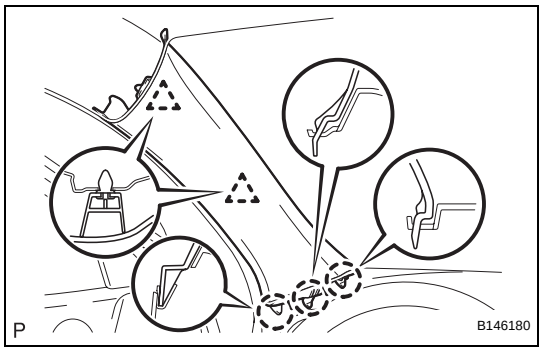

(d) w/o Curtain Shield Airbag:
(1) Attach the 2 clips and 3 claws to install the garnish.

63. INSTALL FRONT PILLAR GARNISH RH

(a) w/ Curtain Shield Airbag:
(1) Remove the piece of cloth or nylon.

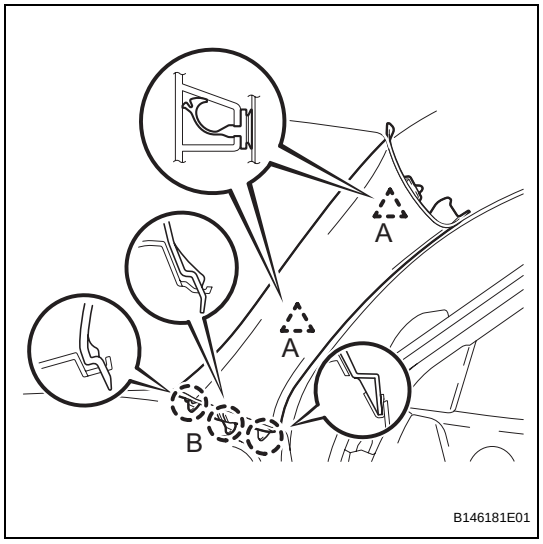

(b) w/ Curtain Shield Airbag:
(1) Install 2 new clips labeled A to the vehicle body.
(2) Set the 3 claws of the pillar garnish to the area labeled B.
(3) Insert the tips of the clips labeled A into the pillar garnish's holes.
(4) Using needle-nose pliers, rotate the tips of clips labeled A 90°. Then push the pillar garnish toward the vehicle body to attach the base of the 2 clips labeled A.

IR

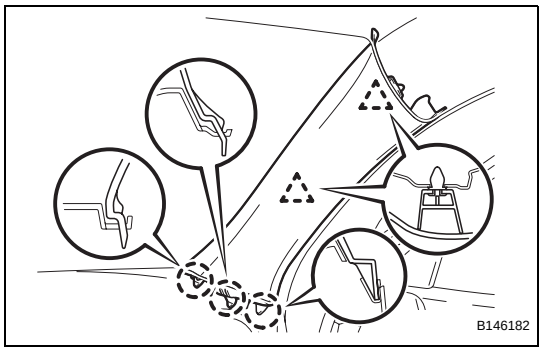

(c) w/o Curtain Shield Airbag:
(1) Attach the 2 clips and 3 claws to install the garnish.

64. INSTALL GLOVE COMPARTMENT DOOR ASSEMBLY (See page IP-25)

65. INSTALL INSTRUMENT PANEL REGISTER ASSEMBLY CENTER (See page IP-10)

66. INSTALL RADIO RECEIVER (See page IP-10)

67. INSTALL NO. 2 INSTRUMENT CLUSTER FINISH PANEL CENTER (See page IP-10)

68. INSTALL NO. 1 INSTRUMENT CLUSTER FINISH PANEL CENTER (See page IP-10)

IR

69. INSTALL COMBINATION METER ASSEMBLY (See page IP-11)

70. INSTALL INSTRUMENT CLUSTER FINISH PANEL ASSEMBLY (See page IP-11)

71. INSTALL FRONT DOOR OPENING TRIM WEATHERSTRIP LH

72. INSTALL FRONT DOOR OPENING TRIM WEATHERSTRIP RH

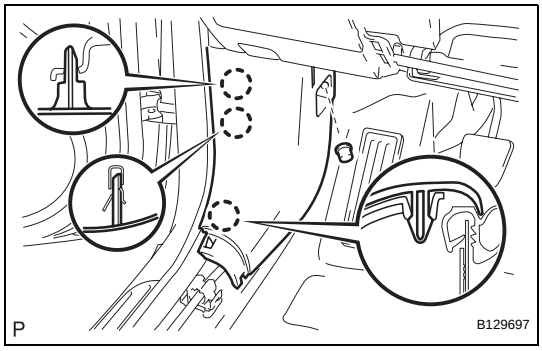

73. INSTALL COWL SIDE TRIM BOARD LH
(a) Attach the 3 claws to install the trim board.
(b) Install the cap nut.

74. INSTALL COWL SIDE TRIM BOARD RH
HINT:
Use the same procedures described for the LH side.

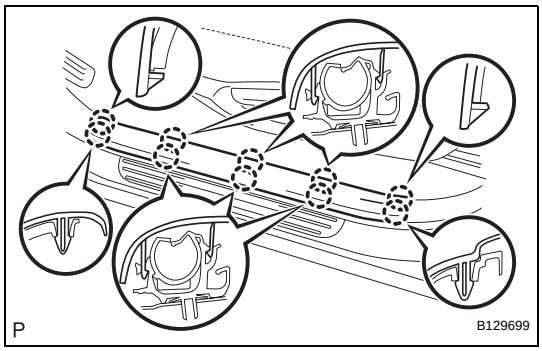

75. INSTALL FRONT DOOR SCUFF PLATE LH
(a) Attach the 10 claws to install the scuff plate.

76. INSTALL FRONT DOOR SCUFF PLATE RH
HINT:
Use the same procedures described for the LH side.

77. CONNECT CABLE TO NEGATIVE BATTERY TERMINAL

ROOF HEADLINING

COMPONENTS

(2005/11-2006/01)

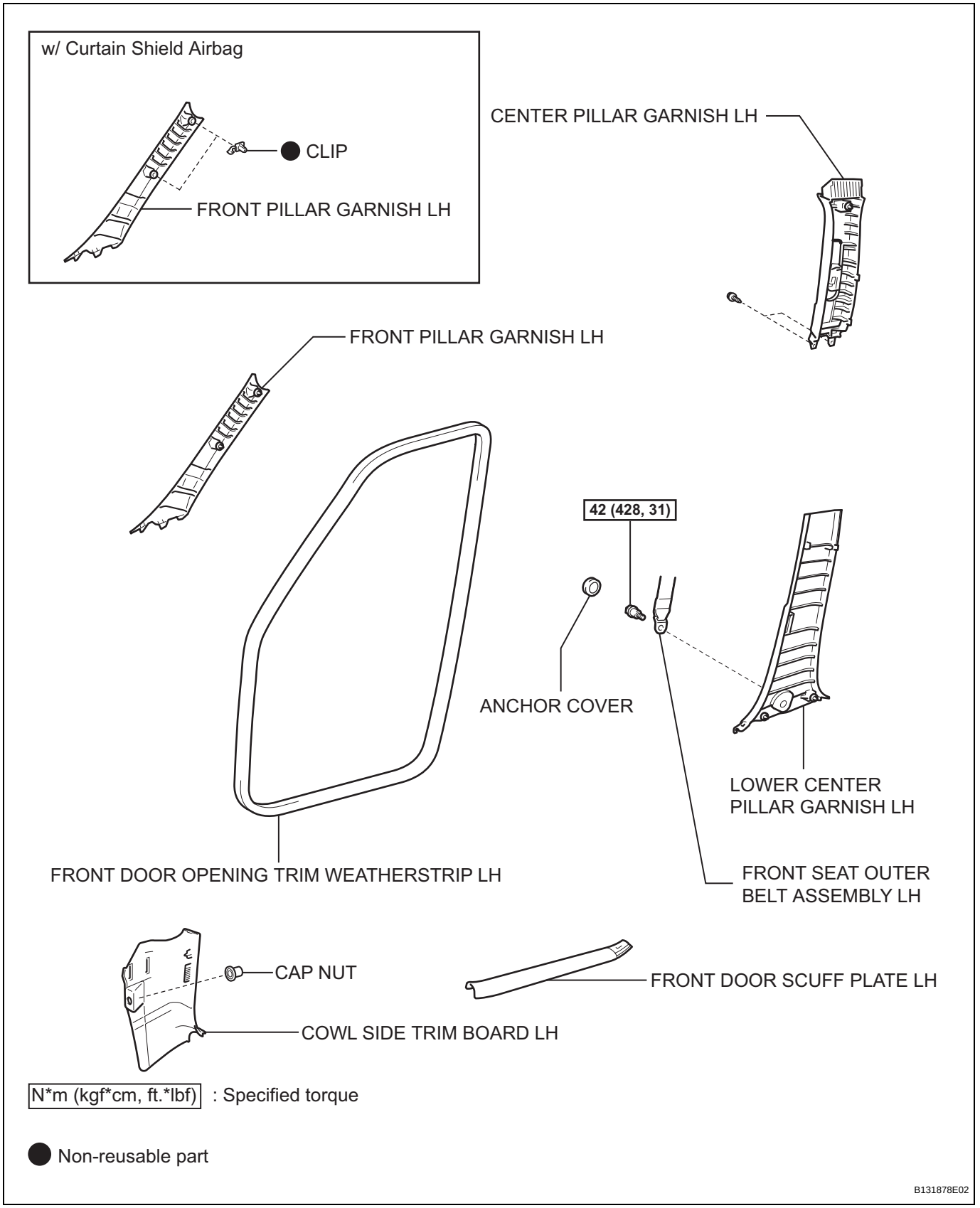

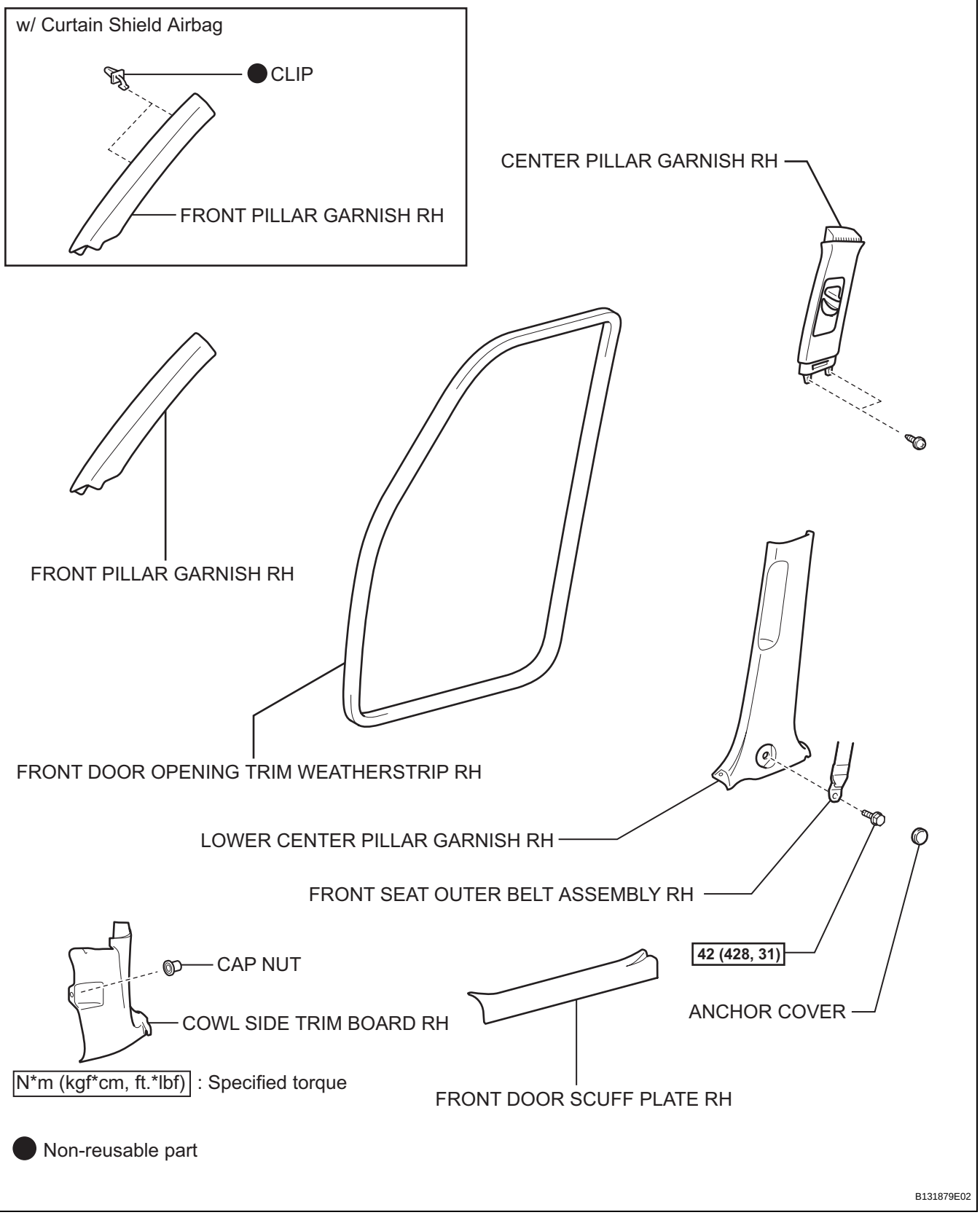
w/ Curtain Shield Airbag
CLIP
FRONT PILLAR GARNISH RH
CENTER PILLAR GARNISH RH
FRONT PILLAR GARNISH RH
FRONT DOOR OPENING TRIM WEATHERSTRIP RH
LOWER CENTER PILLAR GARNISH RH
FRONT SEAT OUTER BELT ASSEMBLY RH
42 (428, 31)
ANCHOR COVER
CAP NUT
COWL SIDE TRIM BOARD RH
FRONT DOOR SCUFF PLATE RH
N*m (kgf*cm, ft.*lbf) : Specified torque
Non-reusable part
B131879E02

w/o Rear No. 2 Seat

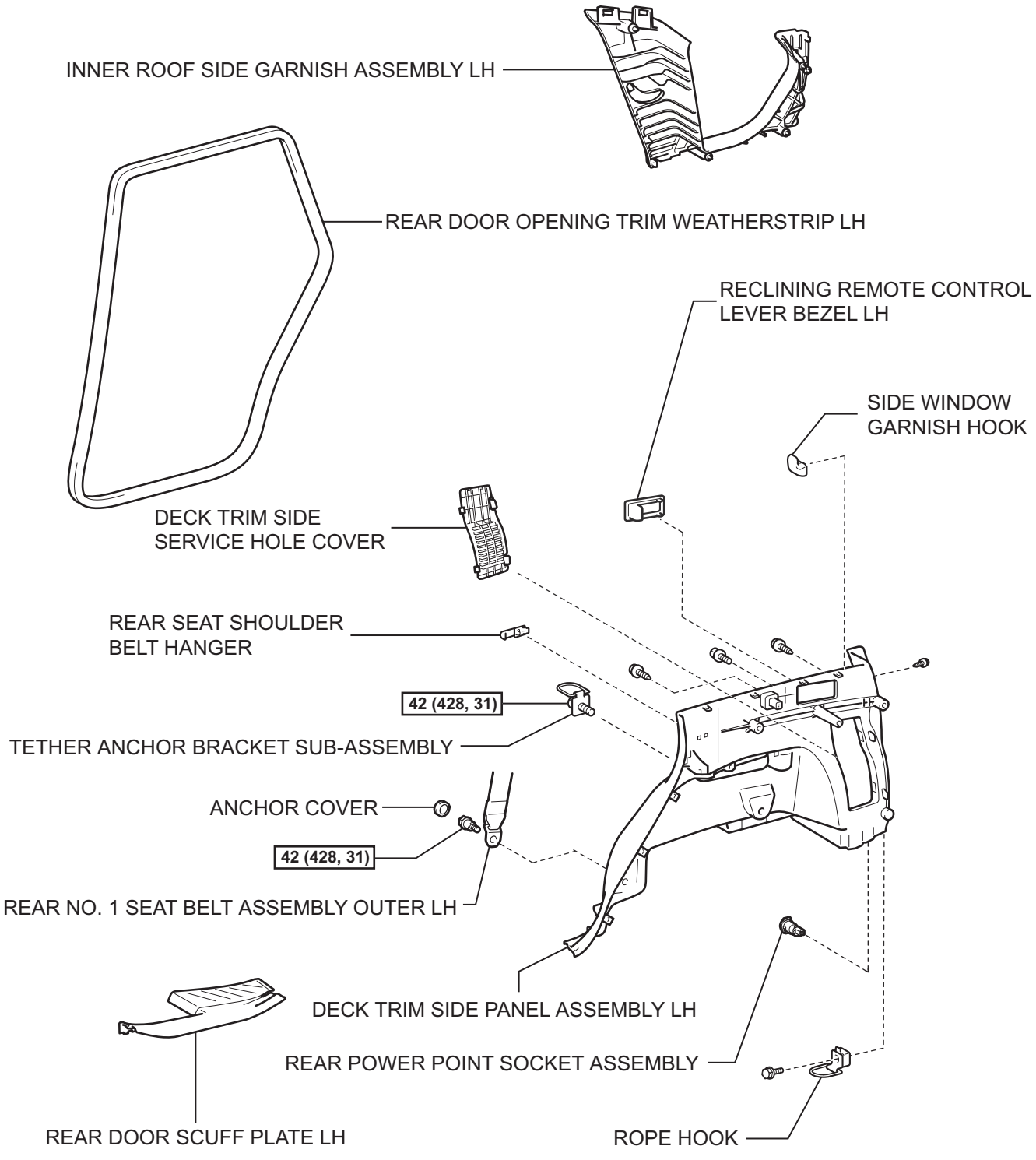

N*m (kgf*cm, ft.*lbf) : Specified torque

T

B131939E02

w/ Rear No. 2 Seat

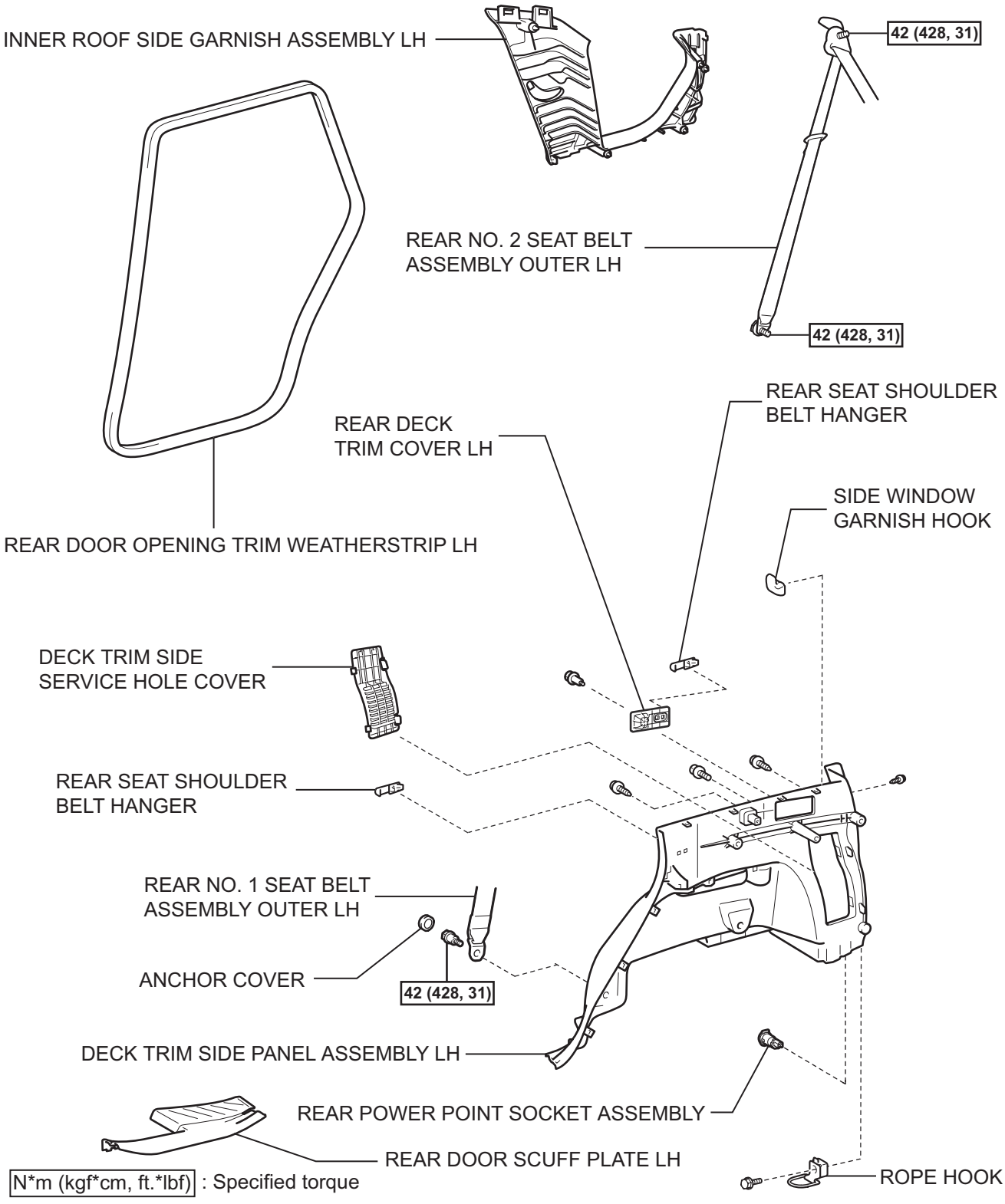

w/o Rear No. 2 Seat

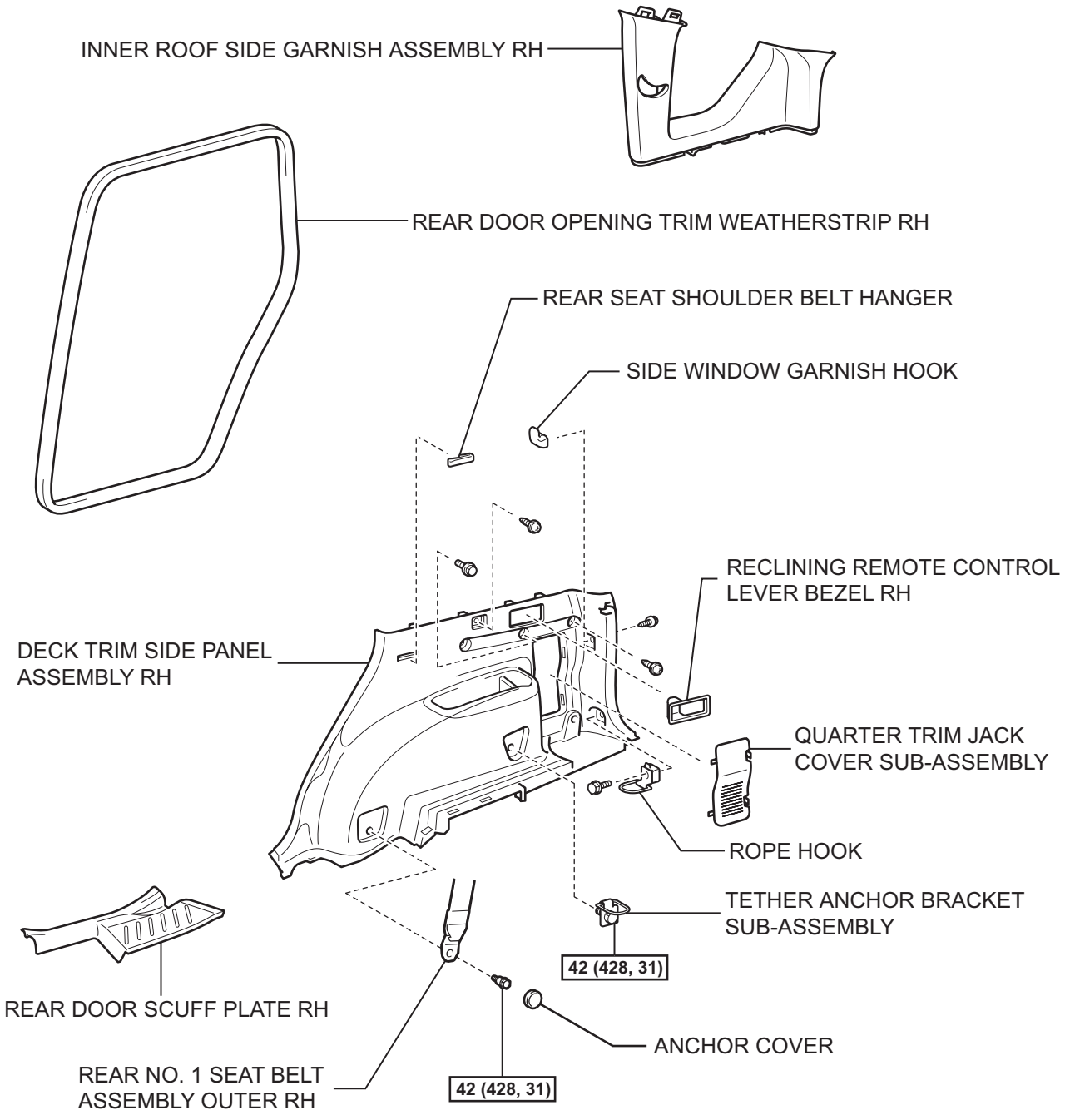

N*m (kgf*cm, ft.*lbf) : Specified torque

T

B131940E02

IR

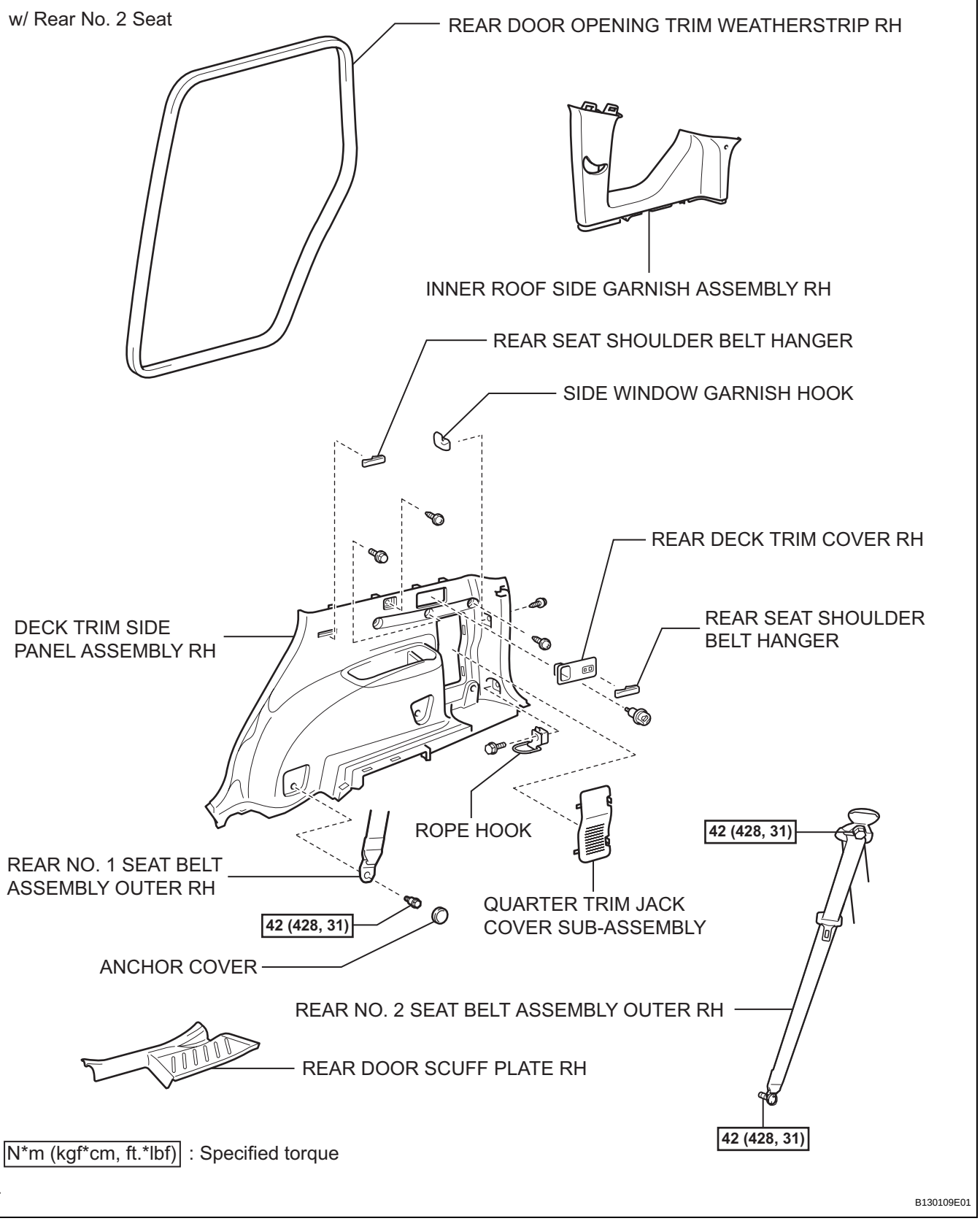
w/ Rear No. 2 Seat
REAR DOOR OPENING TRIM WEATHERSTRIP RH
INNER ROOF SIDE GARNISH ASSEMBLY RH
REAR SEAT SHOULDER BELT HANGER
SIDE WINDOW GARNISH HOOK
REAR DECK TRIM COVER RH
DECK TRIM SIDE PANEL ASSEMBLY RH
REAR SEAT SHOULDER BELT HANGER
ROPE HOOK
42 (428, 31)
REAR NO. 1 SEAT BELT ASSEMBLY OUTER RH
QUARTER TRIM JACK COVER SUB-ASSEMBLY
42 (428, 31)
ANCHOR COVER
REAR NO. 2 SEAT BELT ASSEMBLY OUTER RH
REAR DOOR SCUFF PLATE RH
42 (428, 31)
N*m (kgf*cm, ft.*lbf) : Specified torque
T
B130109E01

w/o Rear No. 2 Seat

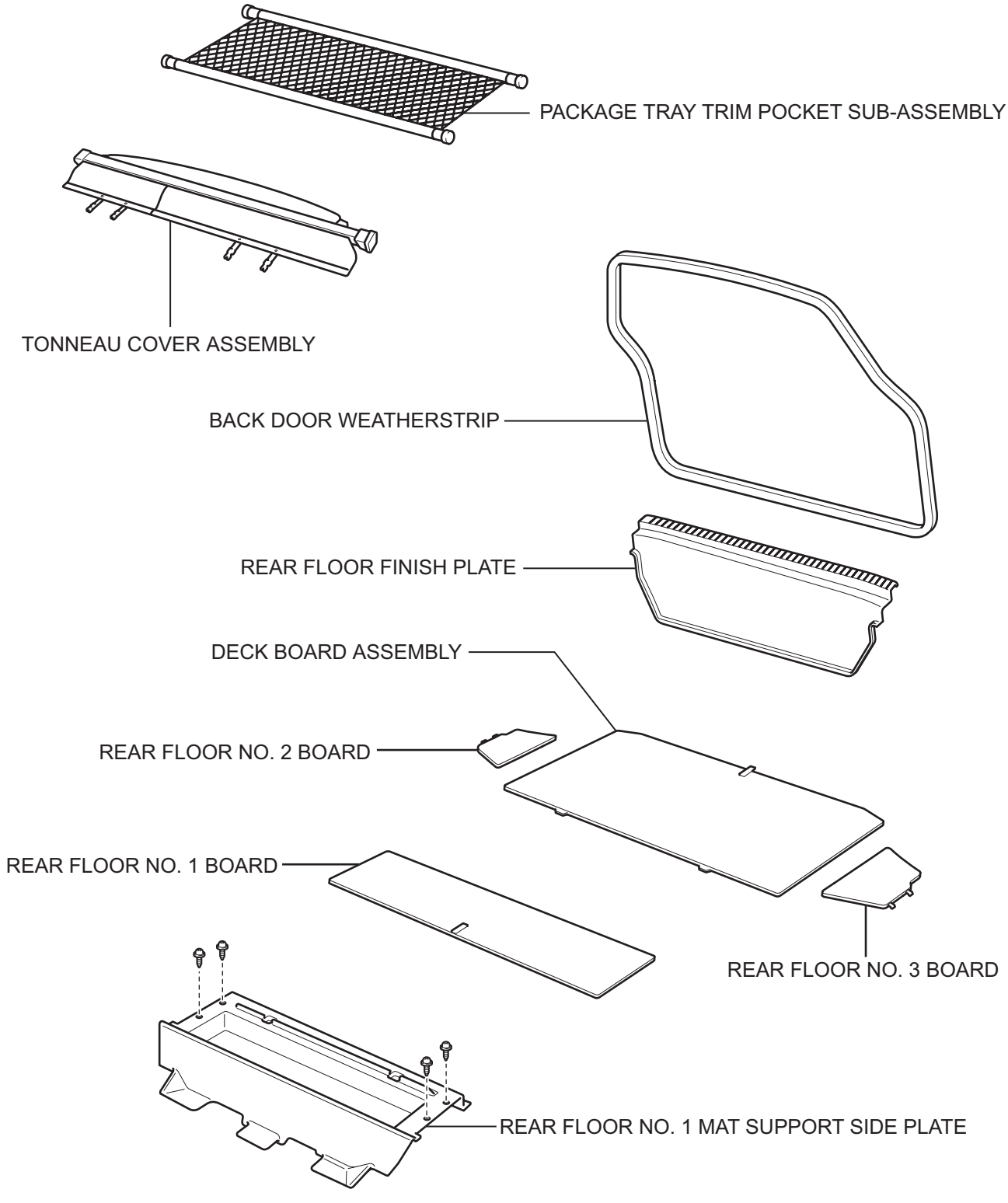

T

B130111E03

w/ Rear No. 2 Seat

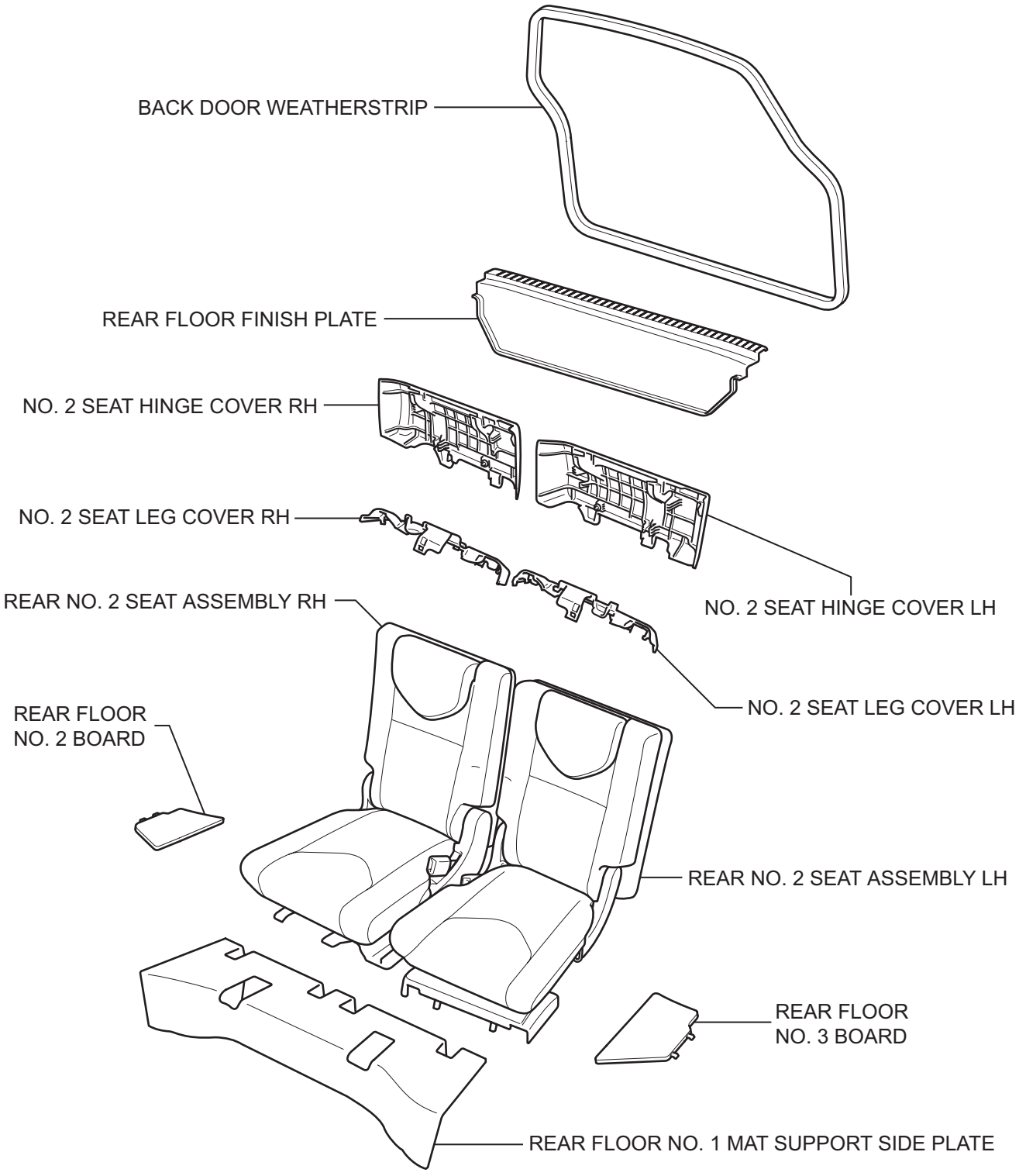

T

B130112E01

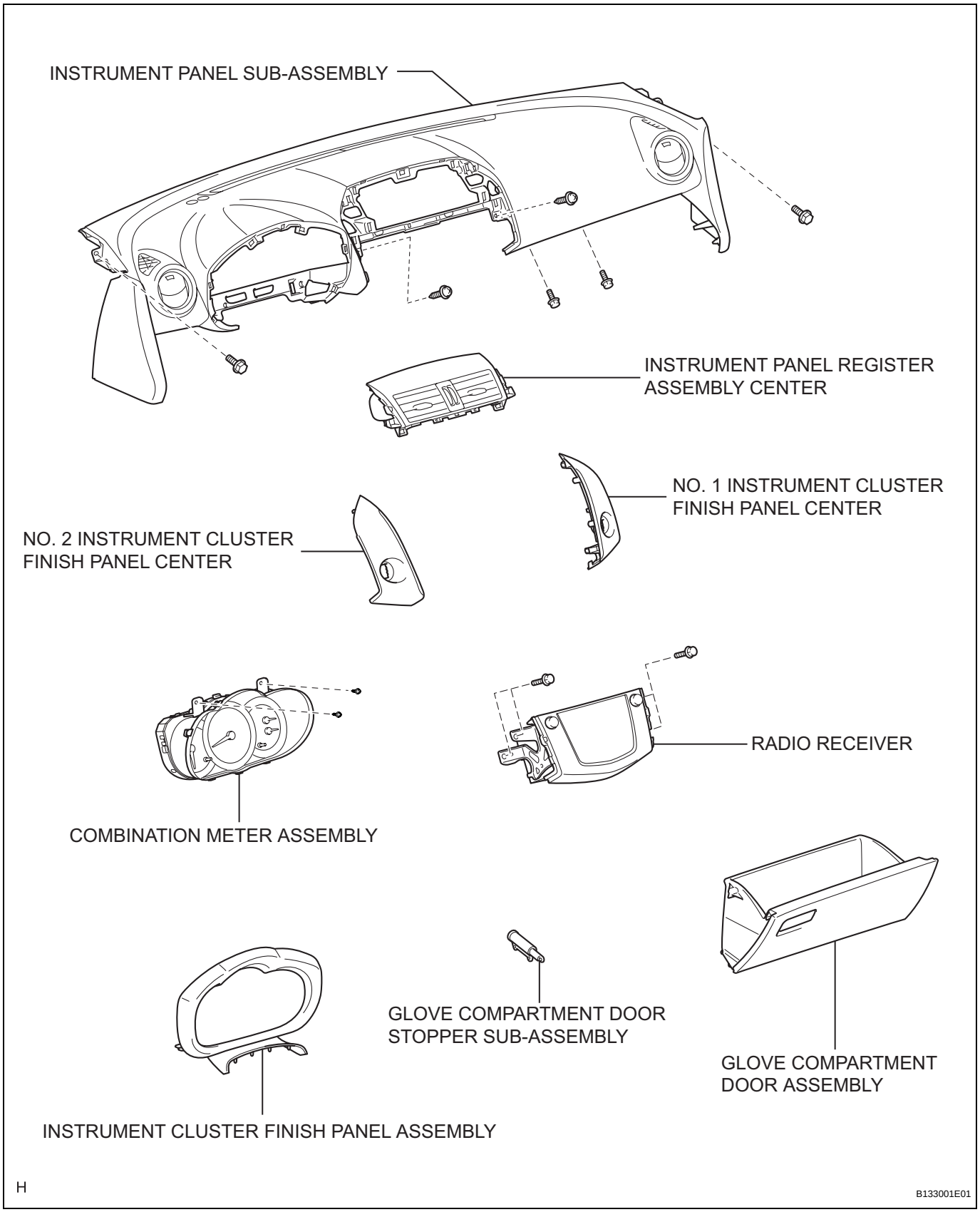
INSTRUMENT PANEL SUB-ASSEMBLY
INSTRUMENT PANEL REGISTER ASSEMBLY CENTER
NO. 1 INSTRUMENT CLUSTER FINISH PANEL CENTER
NO. 2 INSTRUMENT CLUSTER FINISH PANEL CENTER
RADIO RECEIVER
COMBINATION METER ASSEMBLY
GLOVE COMPARTMENT DOOR STOPPER SUB-ASSEMBLY
GLOVE COMPARTMENT DOOR ASSEMBLY
INSTRUMENT CLUSTER FINISH PANEL ASSEMBLY
H
B133001E01

IR

IR

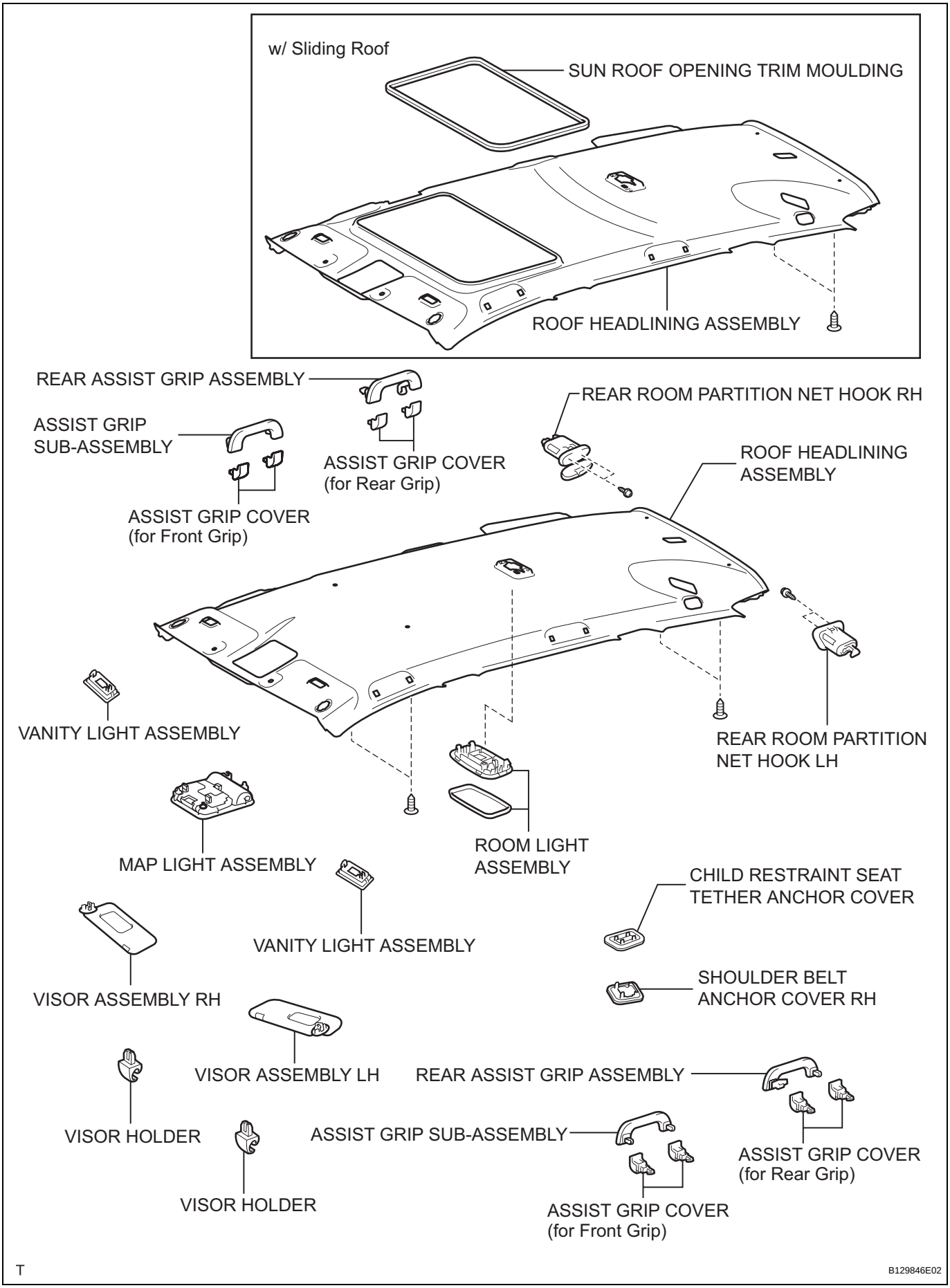
w/ Sliding Roof
SUN ROOF OPENING TRIM MOULDING
ROOF HEADLINING ASSEMBLY
REAR ASSIST GRIP ASSEMBLY
ASSIST GRIP SUB-ASSEMBLY
ASSIST GRIP COVER (for Rear Grip)
ASSIST GRIP COVER (for Front Grip)
REAR ROOM PARTITION NET HOOK RH
ROOF HEADLINING ASSEMBLY
VANITY LIGHT ASSEMBLY
REAR ROOM PARTITION NET HOOK LH
MAP LIGHT ASSEMBLY
ROOM LIGHT ASSEMBLY
VANITY LIGHT ASSEMBLY
CHILD RESTRAINT SEAT TETHER ANCHOR COVER
VISOR ASSEMBLY RH
SHOULDER BELT ANCHOR COVER RH
VISOR ASSEMBLY LH
REAR ASSIST GRIP ASSEMBLY
VISOR HOLDER
ASSIST GRIP SUB-ASSEMBLY
ASSIST GRIP COVER (for Rear Grip)
VISOR HOLDER
ASSIST GRIP COVER (for Front Grip)
T
B129846E02

w/o Sliding Roof

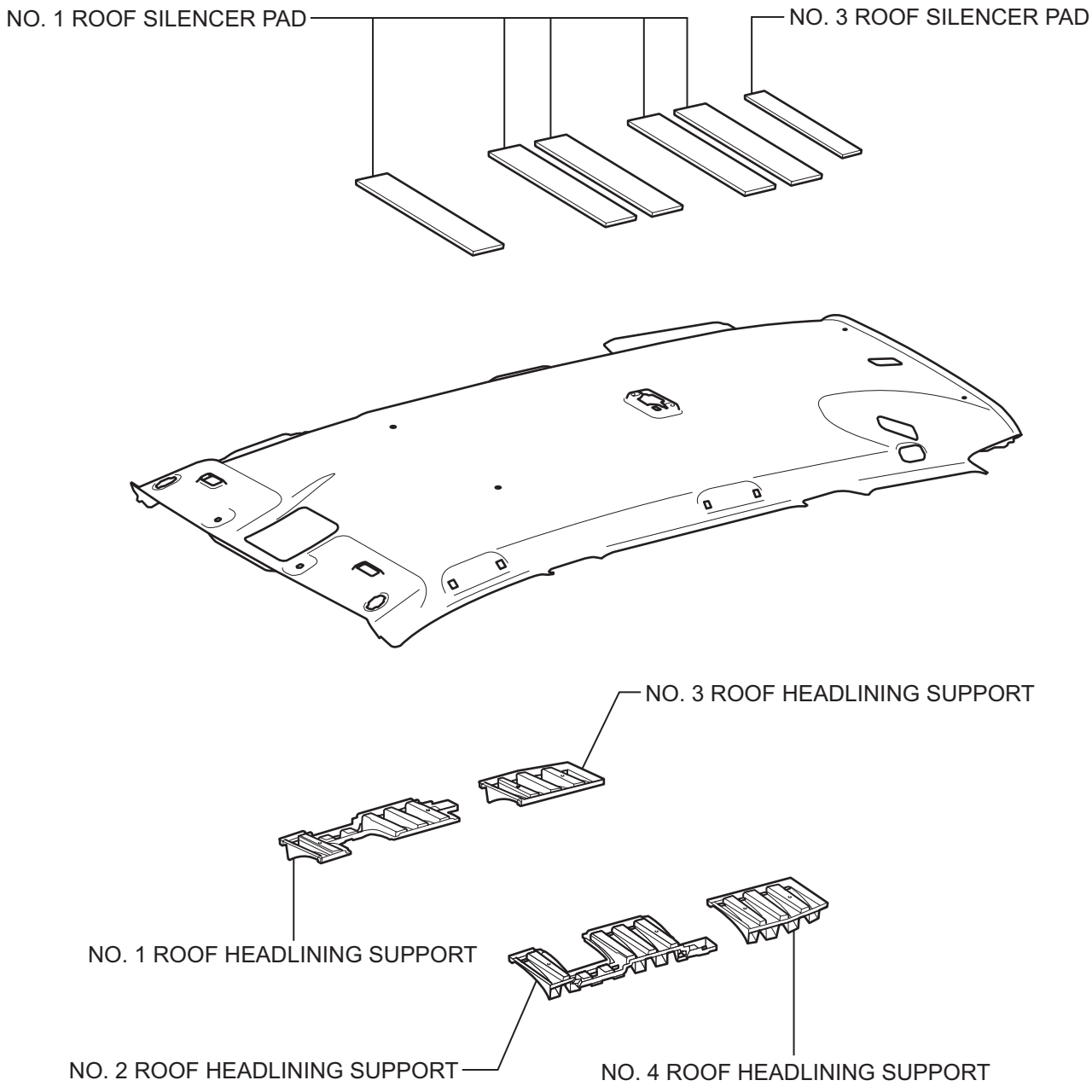

T

B129848E02

IR

w/ Sliding Roof

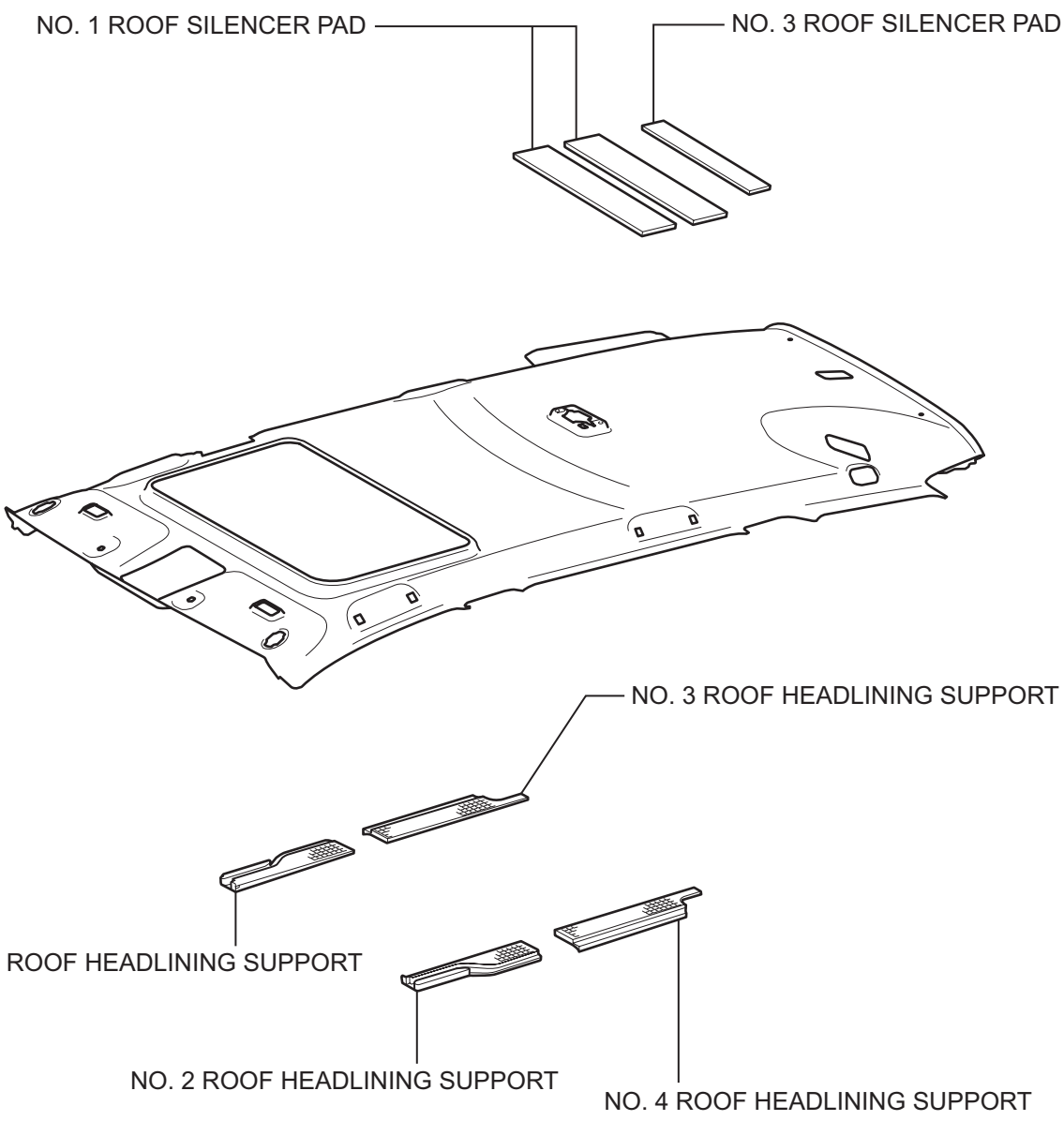

T

B129849E02

IN

ELECTRONIC CIRCUIT INSPECTION PROCEDURE

1. BASIC INSPECTION

(a) WHEN MEASURING RESISTANCE OF ELECTRONIC PARTS

(1) Unless otherwise stated, all resistance measurements should be made at an ambient temperature of 20°C (68°F). Resistance measurements may be inaccurate if measured at high temperatures, i.e. immediately after the vehicle has been running. Measurements should be made after the engine has cooled down.

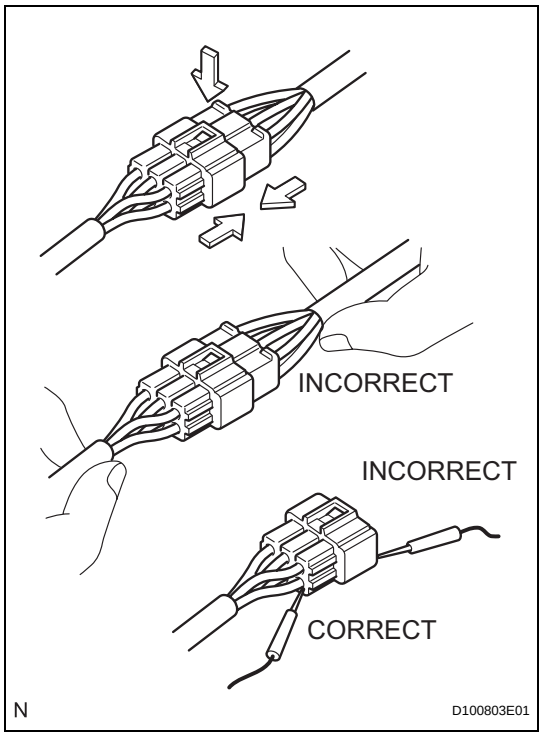

(b) HANDLING CONNECTORS

(1) When disconnecting a connector, first squeeze the mating halves tightly together to release the lock, and then press the lock claw and separate the connector.

(2) When disconnecting a connector, do not pull on the harnesses. Grasp the connector directly and separate it.

(3) Before connecting a connector, check that there are no deformed, damaged, loose or missing terminals.

(4) When connecting a connector, press firmly until it locks with a "click" sound.

(5) If checking a connector with a TOYOTA electrical tester, check the connector from the backside (harness side) using a mini test lead.
NOTICE:
- **As a waterproof connector cannot be checked from the backside, check it by connecting a sub-harness.**
- **Do not damage the terminals by moving the inserted tester needle.**

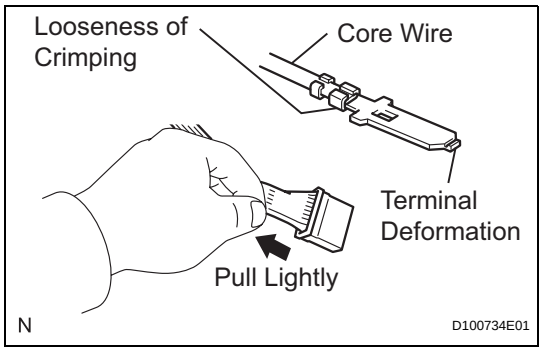

(c) CHECKING CONNECTORS

(1) Checking when a connector is connected: Squeeze the connector together to confirm that they are fully connected and locked.

(2) Checking when a connector is disconnected: Pull the wire harness lightly from the backside of the connector. Visually check for the following: 1) unlatched terminals, missing terminals, loose crimps and broken conductor wires; 2) corrosion, metallic matter, foreign matter and water; and 3) bent, rusted, overheated, contaminated and deformed terminals.

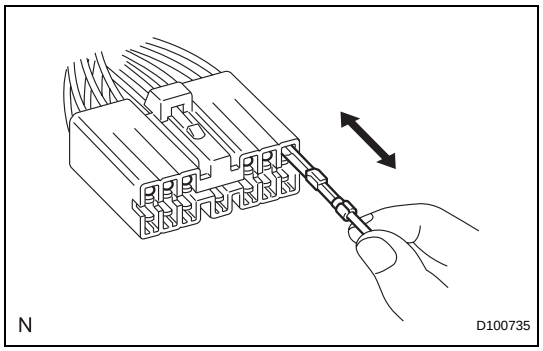

(3) Checking the contact pressure of the terminal:
Prepare a spare male terminal. Insert it into a female terminal, and check for ample tension when inserting and after full engagement.
NOTICE:
When testing a gold-plated female terminal, always use a gold-plated male terminal.

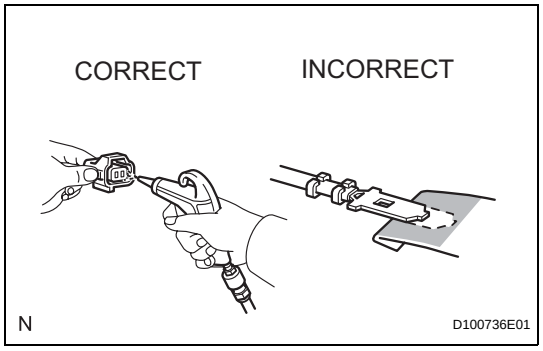

(d) REPAIR METHOD OF CONNECTOR TERMINAL
(1) If there is any foreign matter on the terminal, clean the contact point using an air gun or cloth. Never rub the contact point using sandpaper as the plating may come off.
(2) If there is abnormal contact pressure, replace the female terminal. If the male terminal is gold-plated (gold color), use a gold-plated female terminal; if it is silver-plated (silver color), use a silver-plated female terminal.
(3) Damaged, deformed, or corroded terminals should be replaced. If the terminal does not lock into the housing, the housing may have to be replaced.

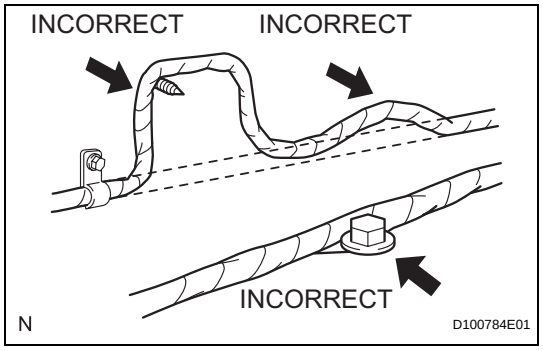

(e) HANDLING OF WIRE HARNESS
(1) If removing a wire harness, check the wiring and clamping before proceeding so that it can be restored in the same way.
(2) Never twist, pull or slacken the wire harness more than necessary.
(3) The wire harness should never come into contact with a high temperature part, or rotating, moving, vibrating or sharp-edged parts. Avoid contact with panel edges, screw tips and other sharp items.
(4) When installing parts, never pinch the wire harness.
(5) Never cut or break the cover of the wire harness. If it is cut or broken, repair the cover with vinyl tape or replace the wire harness.

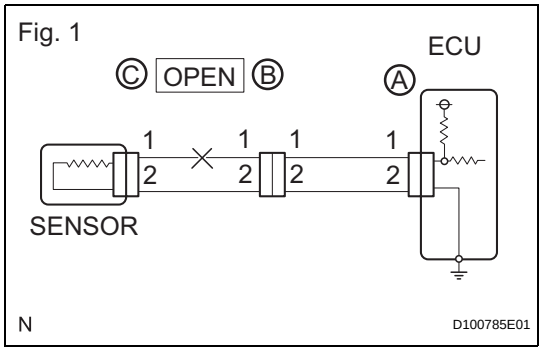

2. CHECK FOR OPEN CIRCUIT

(a) For an open circuit in the wire harness in Fig. 1, check the resistance or voltage, as described below.

Fig. 2

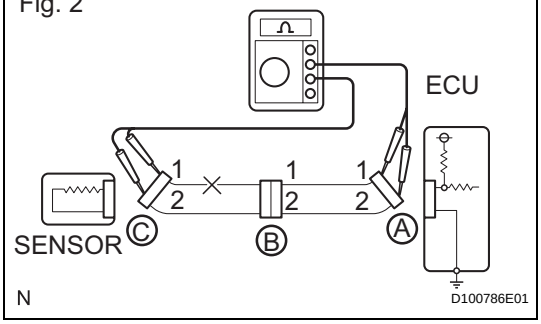

(b) Check the resistance.

(1) Disconnect connectors A and C, and measure the resistance between them.

Standard resistance (Fig. 2)

Tester Connection	Specified Condition
Connector A terminal 1 - Connector C terminal 1	10 kΩ or higher
Connector A terminal 2 - Connector C terminal 2	Below 1 Ω

HINT:

Measure the resistance while lightly shaking the wire harness vertically and horizontally.

If the results match the examples above, an open circuit exists between terminal 1 of connector A and terminal 1 of connector C.

Fig. 3

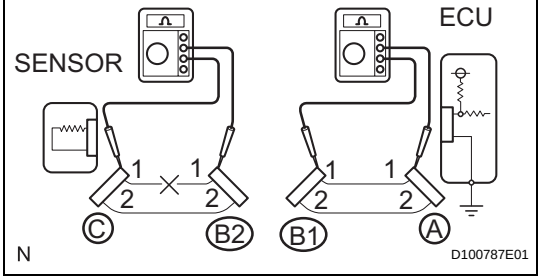

(2) Disconnect connector B and measure the resistance between the connectors.

Standard resistance (Fig. 3)

Tester Connection	Specified Condition
Connector A terminal 1 - Connector B1 terminal 1	Below 1 Ω
Connector B2 terminal 1 - Connector C terminal 1	10 kΩ or higher

If the results match the examples above, an open circuit exists between terminal 1 of connector B2 and terminal 1 of connector C.

Fig. 4

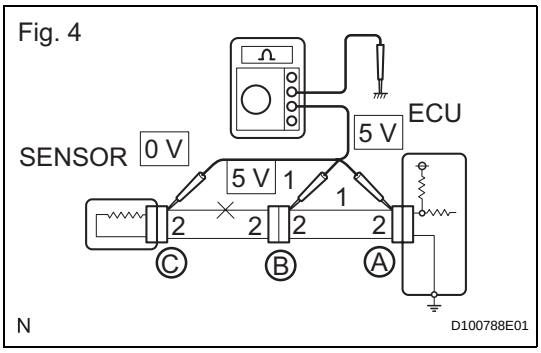

(c) Check the voltage.

(1) In a circuit in which voltage is applied to the ECU connector terminal, an open circuit can be checked by conducting a voltage check.

With each connector still connected, measure the voltage between the body ground and these terminals (in this order): 1) terminal 1 of connector A, 2) terminal 1 of connector B, and 3) terminal 1 of connector C.

Standard voltage (Fig. 4)

Tester Connection	Specified Condition
Connector A terminal 1 - Body ground	5 V
Connector B terminal 1 - Body ground	5 V
Connector C terminal 1 - Body ground	Below 1 V

If the results match the examples above, an open circuit exists in the wire harness between terminal 1 of connector B and terminal 1 of connector C.

Fig. 5

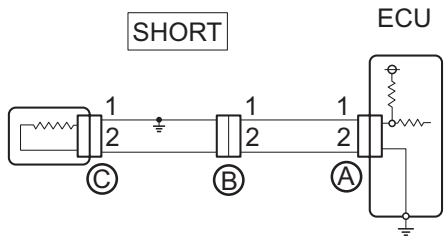

Fig. 6

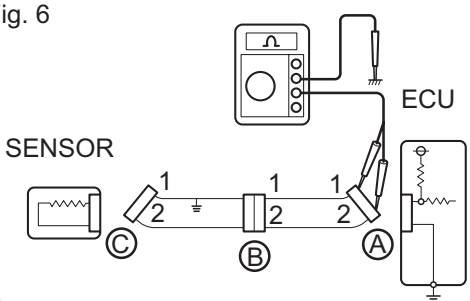

Fig. 7

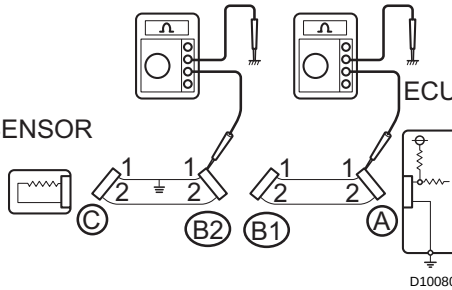

3. CHECK FOR SHORT CIRCUIT

(a) If the wire harness is ground shorted (Fig. 5), locate the section by conducting a resistance check with the body ground (below).

(b) Check the resistance with the body ground.

(1) Disconnect connectors A and C, and measure the resistance.

Standard resistance (Fig. 6)

Tester Connection	Specified Condition
Connector A terminal 1 - Body ground	Below 1 Ω
Connector A terminal 2 - Body ground	10 kΩ or higher

HINT:

Measure the resistance while lightly shaking the wire harness vertically and horizontally.

If the results match the examples above, a short circuit exists between terminal 1 of connector A and terminal 1 of connector C.

(2) Disconnect connector B and measure the resistance.

Standard resistance (Fig. 7)

Tester Connection	Specified Condition
Connector A terminal 1 - Body ground	10 kΩ or higher
Connector B2 terminal 1 - Body ground	Below 1 Ω

If the results match the examples above, a short circuit exists between terminal 1 of connector B2 and terminal 1 of connector C.

4. CHECK AND REPLACE ECU

NOTICE:

- **The connector should not be disconnected from the ECU. Perform the inspection from the backside of the connector on the wire harness side.**
- **When no measuring condition is specified, perform the inspection with the engine stopped and the ignition switch ON.**
- **Check that the connectors are fully seated. Check for loose, corroded or broken wires.**

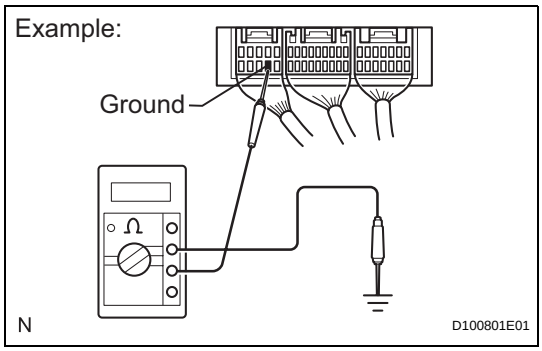

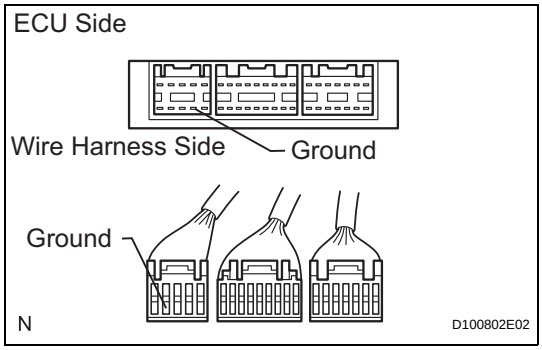

(a) First, check the ECU ground circuit. If it is faulty, repair it. If it is normal, the ECU could be faulty. Temporarily replace the ECU with a normally functioning one and check if the problem symptoms occur. If the problem symptoms disappear, replace the original ECU.

(1) Measure the resistance between the ECU ground terminal and body ground.
Standard resistance:
Below 1 Ω

(2) Disconnect the ECU connector. Check the ground terminal on the ECU side and wire harness side for bending, corrosion or foreign matter. Lastly, check the contact pressure of the female terminals.

IN

HOW TO TROUBLESHOOT ECU CONTROLLED SYSTEMS

GENERAL INFORMATION

A large number of ECU controlled systems are used in the RAV4. In general, ECU controlled systems are considered to be very intricate, requiring a high level of technical knowledge to troubleshoot. However, most problem checking procedures only involve inspecting the ECU controlled system's circuits one by one. An adequate understanding of the system and a basic knowledge of electricity is enough to perform effective troubleshooting, accurate diagnoses and necessary repairs.

FOR USING INTELLIGENT TESTER

Connect the cable of the intelligent tester to the DLC3, turn the ignition switch ON and attempt to use the tester. If the display indicates that a communication error has occurred, there is a problem either with the vehicle or with the tester.

* If communication is normal when the tester is connected to another vehicle, inspect the DLC3 of the original vehicle.
* If communication is still not possible when the tester is connected to another vehicle, the problem may be in the tester itself. Consult the Service Department listed in the tester's instruction manual.

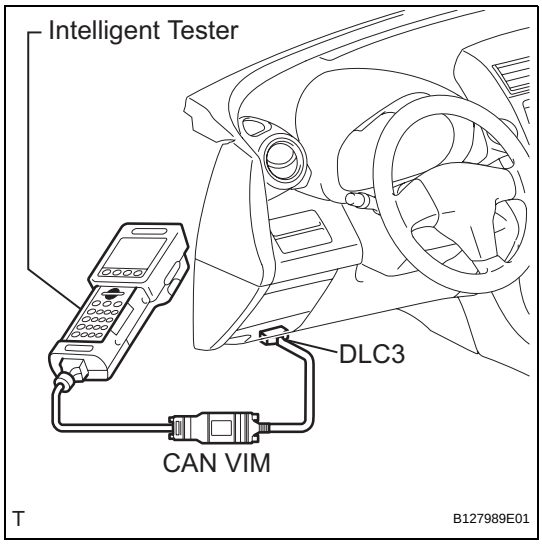

HOW TO PROCEED WITH TROUBLESHOOTING

1. OPERATION FLOW

HINT:
Perform troubleshooting in accordance with the procedures below. The following is an outline of basic troubleshooting procedures. Confirm the troubleshooting procedures for the circuit you are working on before beginning troubleshooting.

1	**VEHICLE BROUGHT TO WORKSHOP**

NEXT

2	**CUSTOMER PROBLEM ANALYSIS**

(a) Ask the customer about the conditions and environment when the problem occurred.

NEXT

3	**INSPECT BATTERY VOLTAGE**

Standard voltage:
11 to 14 V
If the voltage is below 11 V, recharge or replace the battery before proceeding.

NEXT

4	**SYMPTOM CONFIRMATION AND DTC (AND FREEZE FRAME DATA) CHECK**

(a) Visually check the wire harnesses, connectors and fuses for open and short circuits.
(b) Warm up the engine to the normal operating temperature.
(c) Confirm the problem symptoms and conditions, and check for DTCs.

Result

Result	Proceed to
DTC is output	A
DTC is not output	B

B → **Go to step 6**

A

5	DTC CHART

(a) Check the results obtained in the DTC check. Then find the output DTC in the DTC chart. Look at the "Trouble Area" column for a list of potentially malfunctioning circuits and / or parts.

NEXT → **Go to step 7**

6	PROBLEM SYMPTOMS TABLE

(a) Check the results obtained in the symptom confirmation. Then find the problem symptoms in the problem symptoms table. Look at the "Suspected Area" column for a list of potentially malfunctioning circuits and / or parts.

NEXT

7	CIRCUIT INSPECTION OR PARTS INSPECTION

(a) Confirm the malfunctioning circuit or part.

NEXT

8	ADJUST, REPAIR OR REPLACE

(a) Adjust, repair or replace the malfunctioning circuit or parts.

NEXT

9	CONFIRMATION TEST

(a) After the adjustment, repairs or replacement, confirm that the malfunction no longer exists. If the malfunction does not reoccur, perform a confirmation test under the same conditions and in the same environment as when the malfunction occurred the first time.

NEXT

END

2. CUSTOMER PROBLEM ANALYSIS

HINT:

- In troubleshooting, confirm that the problem symptoms have been accurately identified. Preconceptions should be discarded in order to make an accurate judgment. To clearly understand what the problem symptoms are, it is extremely important to ask the customer about the problem and the conditions at the time the malfunction occurred.
- Gather as much information as possible for reference. Past problems that seem unrelated may also help in some cases.
- The following 5 items are important points in the problem analysis:

What	Vehicle model, system name
When	Date, time, occurrence frequency
Where	Road conditions
Under what conditions?	Running conditions, driving conditions, weather conditions
How did it happen?	Problem symptoms

3. SYMPTOM CONFIRMATION AND DIAGNOSTIC TROUBLE CODE

HINT:

The diagnostic system in the RAV4 has various functions.

- The first function is the Diagnostic Trouble Code (DTC) check. A DTC is a code stored in the ECU memory whenever a malfunction in the signal circuits to the ECU occurs. In a DTC check, a previous malfunction's DTC can be checked by a technician during troubleshooting.
- Another function is the Input Signal Check, which checks if the signals from various switches are sent to the ECU correctly.

  By using these functions, the problem areas can be narrowed down and troubleshooting is more effective. Diagnostic functions are incorporated in the following system in the RAV4.

System	**DTC Check (Normal Mode)**	**DTC Check (Check Mode)**	**Freeze Frame Data**	**Sensor Check / Test Mode (Input Signal Check)**	**Data List**	**Active Test**	**Customize Parameter**
SFI System (2AZ-FE)	○	○	○		○	○	
SFI System (2GR-FE)	○	○	○		○	○	
Automatic Transaxle System (U241E)	○	○	○		○	○	
Automatic Transaxle System (U140F)	○	○	○		○	○	
Automatic Transaxle System (U151E)	○	○	○		○	○	

System	DTC Check (Normal Mode)	DTC Check (Check Mode)	Freeze Frame Data	Sensor Check / Test Mode (Input Signal Check)	Data List	Active Test	Customize Parameter
Automatic Transaxle System (U151F)	○	○	○		○	○	
Active Torque Control 4WD System	○			○	○	○	
Electronic Power Steering System	○			○			
Vehicle Stability Control System	○		○	○	○	○	
Tire Pressure Warning System	○				○	○	
Meter/ Gauge System	○				○	○	○
Air Conditioning (for Automatic Air Conditioning System)	○				○	○	○
Air Conditioning (for Manual Air Conditioning System)	○				○	○	
Airbag System	○	○		○			
Occupant Classification System	○			○			
Seat Belt Warning System					○	○	
Engine Immobiliser System	○				○	○	
Cruise Control System	○				○	○	
Wiper and Washer System					○	○	
Power Door Lock Control System	○				○	○	○
Wireless Door Lock Control System	○				○	○	○
Key Reminder Warning System					○		
Power Window Control System	○				○	○	
Lighting System					○	○	○
Sliding Roof System					○	○	

System	DTC Check (Normal Mode)	DTC Check (Check Mode)	Freeze Frame Data	Sensor Check / Test Mode (Input Signal Check)	Data List	Active Test	Customize Parameter
Audio and Visual System	○						
CAN Communication System	○	○			○		

- In the DTC check, it is very important to determine whether the problem indicated by the DTC is either: 1) still occurring, or 2) occurred in the past but has since returned to normal. In addition, the DTC should be compared to the problem symptom to see if they are related. For this reason, DTCs should be checked before and after confirmation of symptoms (i.e., whether or not problem symptoms exist) to determine current system conditions, as shown in the flowchart below.
- Never skip the DTC check. Failing to check DTCs may, depending on the case, result in unnecessary troubleshooting for systems operating normally or lead to repairs not related to the problem. Follow the procedures listed in the flowchart in the correct order.
- The following flowchart shows how to proceed with troubleshooting using the DTC check. Directions from the flowchart will indicate how to proceed either to DTC troubleshooting or to the troubleshooting of each problem symptom.

1 **DTC CHECK**

NEXT

2 **MAKE A NOTE OF DTCS DISPLAYED AND THEN CLEAR MEMORY**

NEXT

3 **SYMPTOM CONFIRMATION**

Result

Result	Proceed to
No symptoms exist	A
Symptoms exist	B

B → **Go to step 5**

A

4	SIMULATION TEST USING SYMPTOM SIMULATION METHODS

NEXT

IN

5	DTC CHECK

Result

Result	Proceed to
DTC is not output	A
DTC is output	B

B → **TROUBLESHOOTING OF PROBLEM INDICATED BY DTC**

A

6	SYMPTOM CONFIRMATION

Result

Result	Proceed to
Symptoms exist	A
No symptoms exist	B

If a DTC was displayed in the initial DTC check, the problem may have occurred in a wire harness or connector in that circuit in the past. Check the wire harness and connectors.

B → **SYSTEM NORMAL**

A

TROUBLESHOOTING OF EACH PROBLEM SYMPTOM

The problem is still occurring in a place other than the diagnostic circuit (the DTC displayed first is either for a past problem or a secondary problem).

4. SYMPTOM SIMULATION

HINT:

The most difficult case in troubleshooting is when no problem symptoms occur. In such a case, a thorough problem analysis must be carried out. A simulation of the same or similar conditions and environment in which the problem occurred in the customer's vehicle should be carried out. No matter how much skill or experience a technician has, troubleshooting without confirming the problem symptoms will lead to important repairs being overlooked and mistakes or delays.

For example:

With a problem that only occurs when the engine is cold or as a result of vibration caused by the road during driving, the problem can never be determined if the symptoms are being checked on a stationary vehicle or on a vehicle with a warmed-up engine. Vibration, heat or water penetration (moisture) is difficult to reproduce. The symptom simulation tests below are effective substitutes for the conditions and can be applied on a stationary vehicle.

Important points in the symptom simulation test:

In the symptom simulation test, the problem symptoms as well as the problem area or parts must be confirmed. First, narrow down the possible problem circuits according to the symptoms. Then, connect the tester and carry out the symptom simulation test, judging whether the circuit being tested is defective or normal. Also, confirm the problem symptoms at the same time. Refer to the problem symptoms table for each system to narrow down the possible causes.

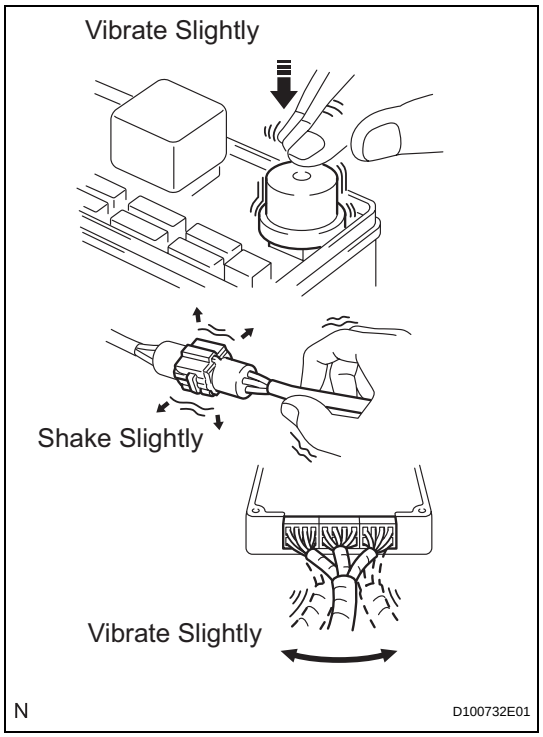

(a) VIBRATION METHOD:

When a malfunction seems to occur as a result of vibration.

(1) PART AND SENSOR

Apply slight vibration with a finger to the part of the sensor suspected to be the cause of the problem, and check whether or not the malfunction occurs.

NOTICE:

Applying strong vibration to relays may open them.

(2) CONNECTORS

Slightly shake the connector vertically and horizontally.

(3) WIRE HARNESS

Slightly shake the wire harness vertically and horizontally.

HINT:

The connector joint and fulcrum of the vibration are the major areas that should be checked thoroughly.

(b) HEAT METHOD:

When a malfunction seems to occur when the area in question is heated.

(1) Heat the component that is the possible cause of the malfunction with a hair dryer or similar device. Check if the malfunction occurs.

NOTICE:

- **Do not heat to more than 60°C (140°F). Exceeding this temperature may damage components.**

- **Do not apply heat directly to the parts in the ECU.**



(c) WATER SPRINKLING METHOD:
When a malfunction seems to occur on a rainy day or in high-humidity.
(1) Sprinkle water onto the vehicle and check if the malfunction occurs.
NOTICE:
- **Never sprinkle water directly into the engine compartment. Indirectly change the temperature and humidity by spraying water onto the front of the radiator.**
- **Never apply water directly onto the electronic components.**

HINT:
If the vehicle has or had a water leakage problem, the leakage may have damaged the ECU or connections. Look for evidence of corrosion or short circuits. Proceed with caution during water tests.

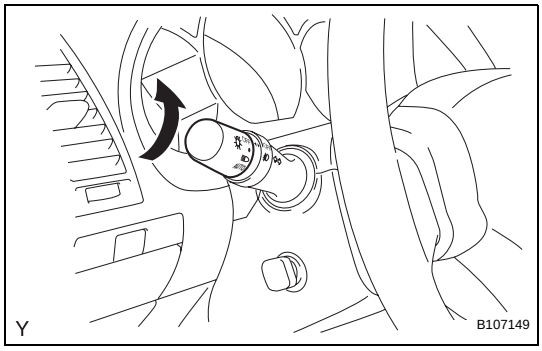

(d) HIGH ELECTRICAL LOAD METHOD:
When a malfunction seems to occur when the electrical load is excessive.
(1) Turn on the heater blower, headlight, rear window defogger and all other electrical loads. Check if the malfunction reoccurs.

5. DIAGNOSTIC TROUBLE CODE CHART

Look for output Diagnostic Trouble Codes (DTCs) (from the DTC checks) in the appropriate section's Diagnostic Trouble Code Chart. Use the chart to determine the trouble area and the proper inspection procedure. A description of each of the chart's columns are below.

Item	Description
DTC No.	Indicates the diagnostic trouble code
Detection Item	Indicates the system or details of the problem
Trouble Area	Indicates the suspected areas of the problem
See Page	Indicates the page where the inspection procedures for each circuit are to be found, or gives instruction for checking and repairs

6. PROBLEM SYMPTOMS TABLE

When a "Normal" code is output during a DTC check but the problem is still occurring, use the Problem Symptoms Table. The suspected areas (circuits or parts) for each problem symptom are in the table. The suspected areas are listed in order of probability. A description of each of the chart's columns is below.

HINT:
In some cases, the problem is not detected by the diagnostic system even though a problem symptom is present. It is possible that the problem is occurring outside the detection range of the diagnostic system, or that the problem is occurring in a completely different system.

Item	Description
Symptom	-
Suspected Area	Indicates the circuit or part which needs to be checked.
See Page	Indicates the page where the flowchart for each circuit is located.

7. CIRCUIT INSPECTION

A description of the main areas of each circuit inspection is below.

Item	Description
Description	The major role, operation of the circuit and its component parts are explained.
DTC No., DTC Detection Condition, Trouble Area	Indicates the diagnostic trouble codes, diagnostic trouble code detection conditions, and trouble areas of a problem.
Wiring Diagram	This shows a wiring diagram of the circuit. Use this diagram together with ELECTRICAL WIRING DIAGRAM to thoroughly understand the circuit.
Inspection Procedures	Use the inspection procedures to determine if the circuit is normal or abnormal. If abnormal, use the inspection procedures to determine whether the problem is located in the sensors, actuators, wire harnesses or ECU.
Inspection Procedure Connector Illustrations	• Connector being checked is connected: Connections of tester are indicated by (+) or (-) after the terminal name. • Connector being checked is disconnected: For illustrations of inspections between a connector and body ground, information about the body ground is not shown in the illustration.

HOW TO USE THIS MANUAL

GENERAL INFORMATION

1. GENERAL DESCRIPTION

(a) This manual is written in accordance with SAE J2008.
  (1) Diagnosis
  (2) Removing / Installing, Replacing, Disassembling / Reassembling, Checking and Adjusting
  (3) Final Inspection

(b) The following procedures are omitted from this manual. However, these procedures must be performed.
  (1) Use a jack or lift to perform operations.
  (2) Clean all removed parts.
  (3) Perform a visual check.

2. INDEX

(a) An alphabetical INDEX section is provided at the end of the manual as a reference to help you find the item to be repaired.

3. PREPARATION

(a) Use of Special Service Tools (SST) and Special Service Materials (SSM) may be required, depending on the repair procedure. Be sure to use SST and SSM when they are required and follow the working procedures properly. A list of SST and SSM is in the "Preparation" section of this manual.

4. REPAIR PROCEDURES

(a) A component illustration is placed under the title where necessary.

(b) Non-reusable parts, grease application areas, precoated parts and torque specifications are noted in the component illustrations.
The following illustration is an example.

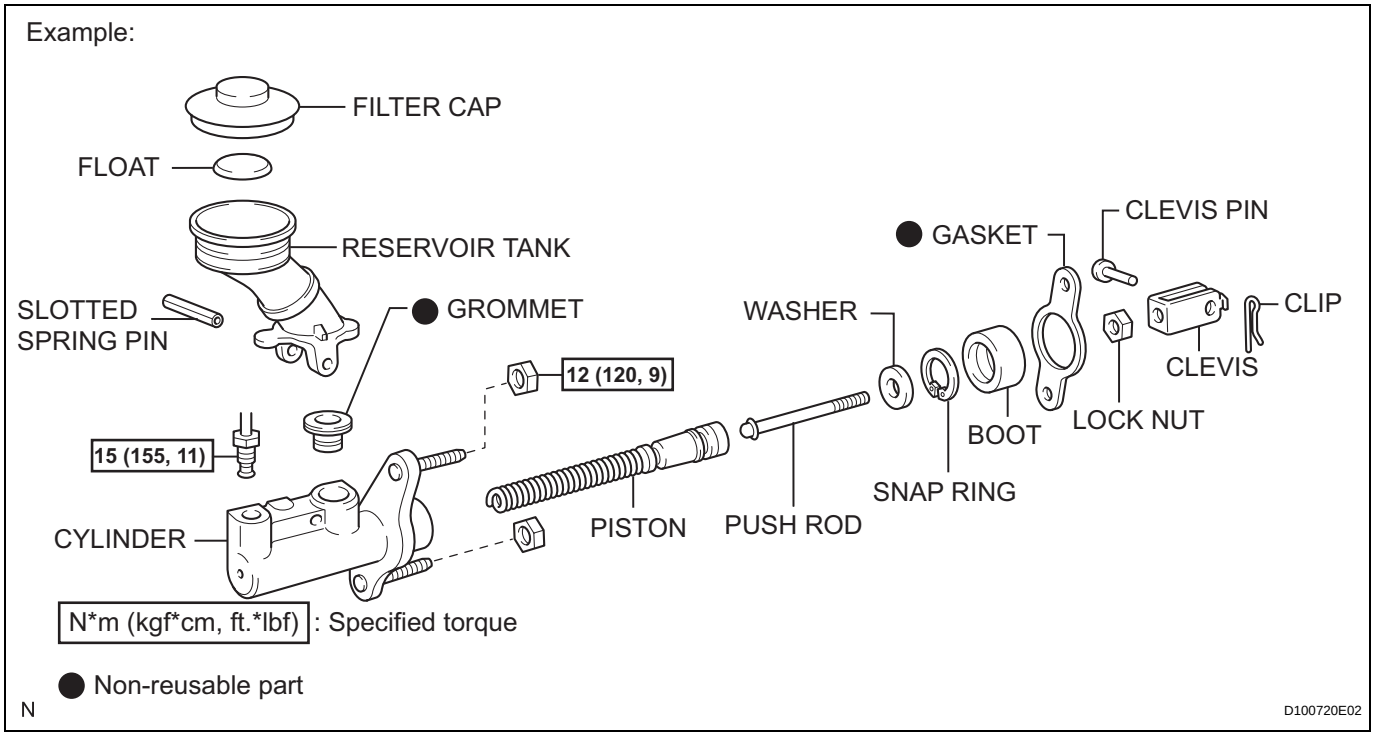

(c) Torque specifications, grease application areas and non-reusable parts are emphasized in the procedures.
HINT:
There are cases where such information can only be explained by using an illustration. In these cases, torque, oil and other information are described in the illustration.

(d) Only items with key points are described in the text. What to do and other details are explained using illustrations next to the text. Both the text and illustrations are accompanied by standard values and notices.

Illustration	What to do and where to do it
Task heading	What work will be performed
Explanation text	• How to perform the task • Information such as specifications and warnings, which are written in boldface text

(e) Illustrations of similar vehicle models are sometimes used. In these cases, minor details may be different from the actual vehicle.

(f) Procedures are presented in a step-by-step format.

5. SERVICE SPECIFICATIONS

(a) SPECIFICATIONS are presented in boldface text throughout the manual. The specifications are also found in the "Service Specifications" section for reference.

6. TERM DEFINITIONS

CAUTION	Possibility of injury to you or other people.
NOTICE	Possibility of damage to components being repaired.
HINT	Provides additional information to help you perform repairs.

7. INTERNATIONAL SYSTEM OF UNITS

(a) The units used in this manual comply with the International System of Units (SI) standard. Units from the metric system and English system are also provided.
Example:
Torque: 30 N*m (310 kgf*cm, 22 ft.*lbf)

IN

IDENTIFICATION INFORMATION

VEHICLE IDENTIFICATION AND SERIAL NUMBERS

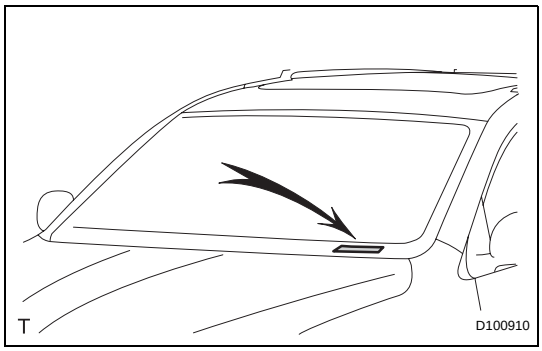

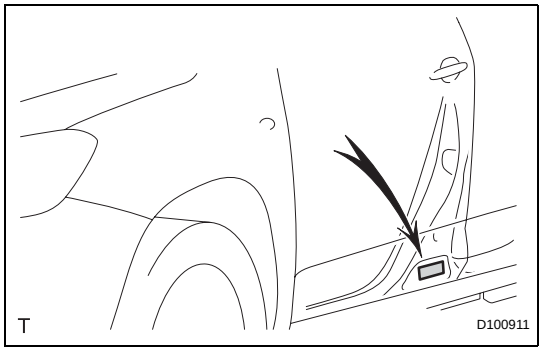

1. VEHICLE IDENTIFICATION NUMBER

(a) The vehicle identification number is stamped on the vehicle identification number plate and on the certification label, as shown in the illustrations.

(1) Vehicle Identification Number Plate

(2) Certification Label

2. ENGINE SERIAL NUMBER AND TRANSAXLE SERIAL NUMBER

(a) The engine serial number is stamped on the cylinder block of the engine and the transaxle serial number is stamped on the housing as shown in the illustrations.

(1) Engine Serial Number

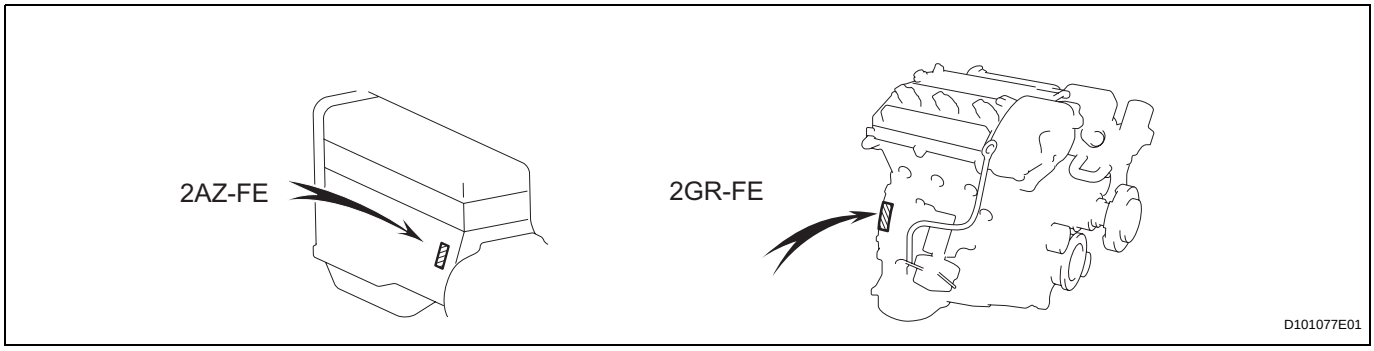

(2) Transaxle Serial Number

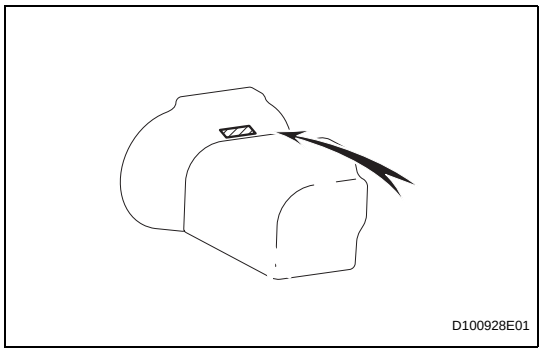

IN

VEHICLE LIFT AND SUPPORT LOCATIONS

1. NOTICE ABOUT VEHICLE CONDITION WHEN JACKING UP VEHICLE

(a) The vehicle must be unloaded before jacking up / lifting up the vehicle. Never jack up / lift up a heavily loaded vehicle.

(b) When removing heavy parts such as the engine and transmission, the center of gravity of the vehicle may shift. To stabilize the vehicle, place a balance weight in a location where it will not roll or shift, or use a mission jack to hold the jacking support.

2. NOTICE FOR USING 4 POST LIFT

(a) Follow the safety procedures outlined in the lift instruction manual.

(b) Use precautionary measures to prevent the free wheel beam from damaging tires or wheels.

(c) Use wheel chocks to secure the vehicle.

3. NOTICE FOR USING JACK AND SAFETY STAND

(a) Work on a level surface. Use wheel chocks at all times.

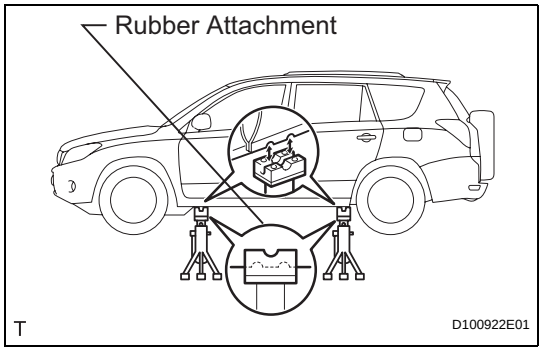

(b) Use safety stands with rubber attachments as shown in the illustration.

(c) Set the jack and safety stands to the specified locations of the vehicle accurately.

(d) When jacking up the vehicle, first release the parking brake and move the shift lever to N.

(e) When jacking up the entire vehicle:
- When jacking up the front wheels first, make sure wheel chocks are behind the rear wheels.
- When jacking up the rear wheels first, make sure wheel chocks are in front of the front wheels.

(f) When jacking up only the front or rear wheels of the vehicle:
- Before jacking up the front wheels, place wheel chocks on both sides of the rear wheels.
- Before jacking up the rear wheels, place wheel chocks on both sides of the front wheels.

(g) When lowering a vehicle that only has its front or rear wheels jacked up:
- Before lowering the front wheels, make sure wheel chocks are in front of the rear wheels.
- Before lowering the rear wheels, make sure wheel chocks are behind the front wheels.

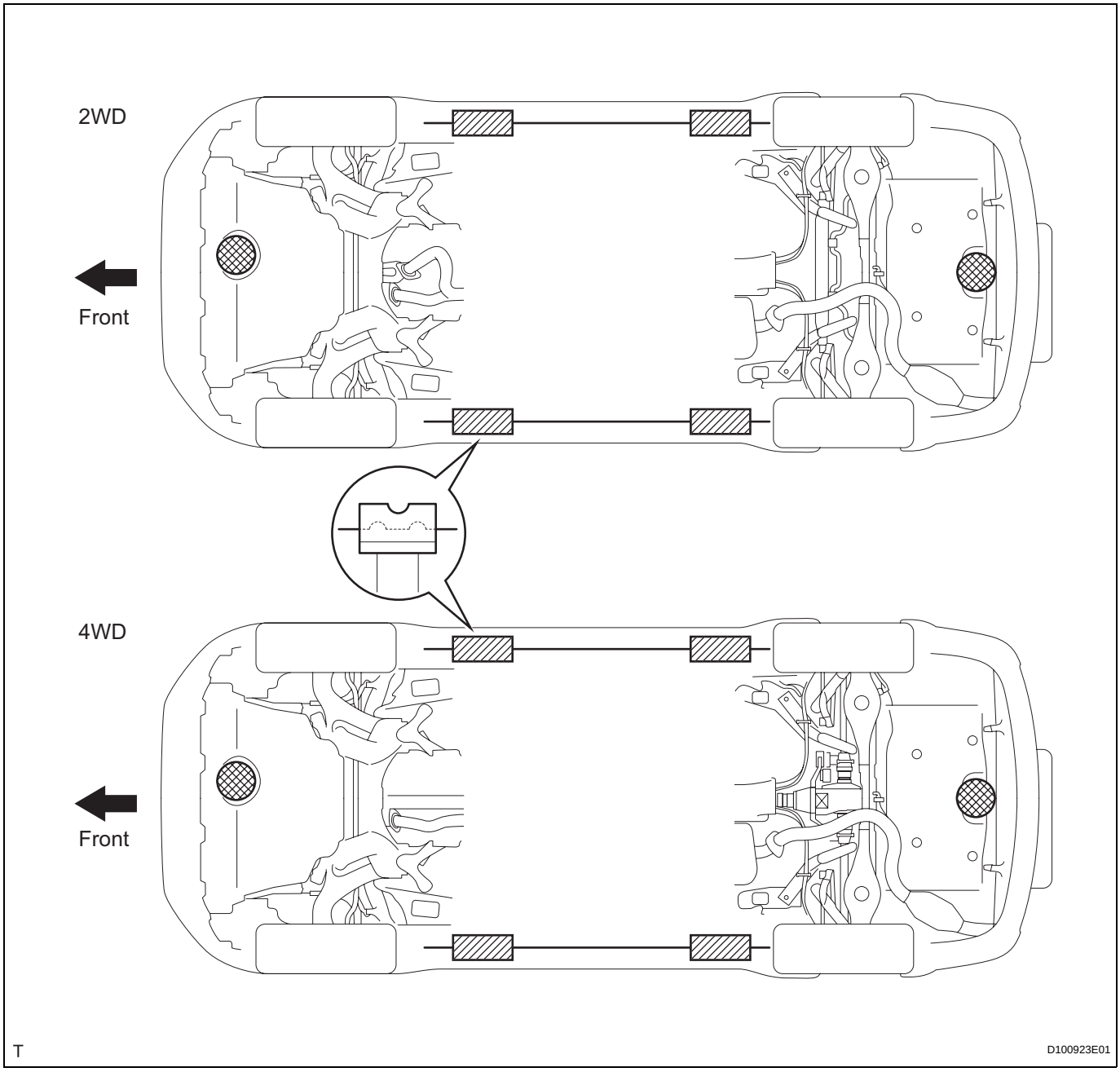

	JACK POSITION Front: Engine under cover Rear: Body lower back panel	**CAUTION:** **When jacking-up the vehicle, make sure the vehicle is not carrying any extra weight.**
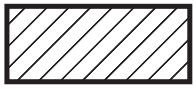	SUPPORT POSITION Safety stand and swing arm type lift	-

(h) It is extremely dangerous to perform any work on a vehicle raised on a jack alone, even for work that can be finished quickly. Safety stands must be used to support it.

IN

4. NOTICE FOR USING SWING ARM TYPE LIFT

(a) Follow safety procedures outlined in its instruction manual.

(b) Use a swing arm equipped with a rubber attachment, as shown in the illustration.

(c) When using the lift, make sure that the vehicle is stabilized so that it will not tilt while work is being performed. Stabilize the vehicle by adjusting the lift arm's length and vehicle's position.

(d) When using the lift, its center should be as close to the vehicle's center of gravity as possible (length of "L" in the illustration should be as short as possible).

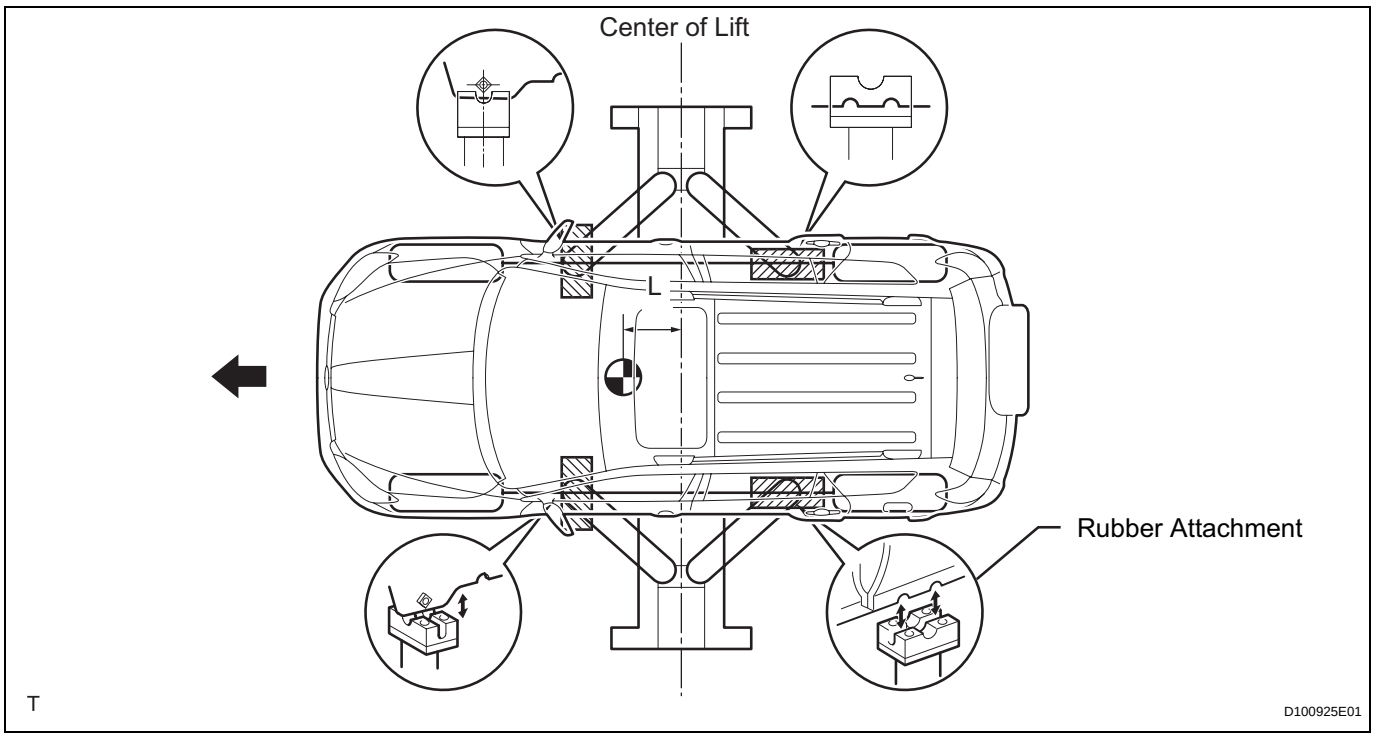

(e) Set the vehicle on the lift as level as possible. Then match the groove of the cradle to the rigid rack support location.

(f) Be sure to lock the swing arms before lifting and during work (if equipped with arm locks).

(g) Lift the vehicle up off the ground. Stand at a safe distance and shake the vehicle to check its stability.

5. NOTICE FOR USING PLATE TYPE LIFT

(a) Follow safety procedures outlined in its instruction manual.

(b) Use plate lift attachments (rubber lifting blocks) on top of the plate surface.

(c) Refer to the illustration below to determine how to properly set the vehicle.

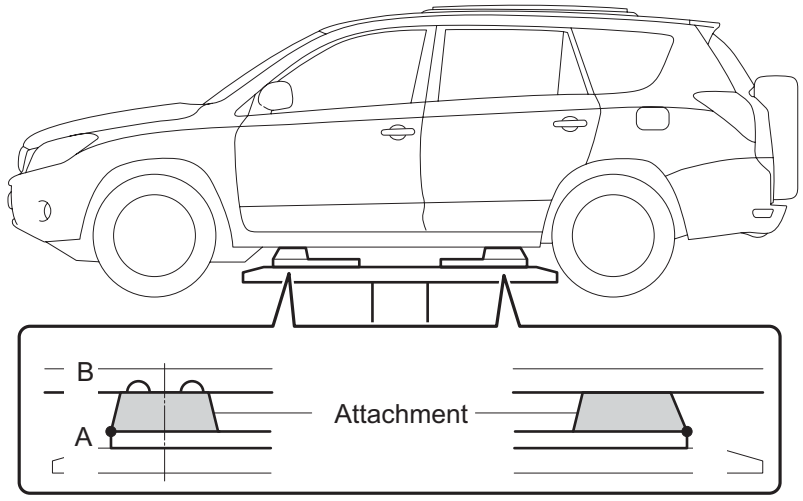

Attachment Dimensions

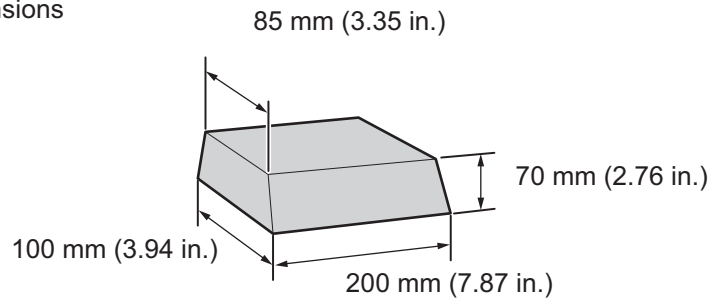

T

D100924E01

HINT:

Right and left set position	Place the vehicle over the center of the lift.
Front and rear set position	Place the attachments at the ends of the rubber plate surface, under the vehicle lift pad (A and C in the illustration). Raise the plate slightly and reposition the vehicle so the top of the attachment (B in the illustration) is aligned with the front side notch in the vehicle rocker flange.

(d) Use the lift to raise the vehicle up off the ground, and shake it to make sure that it is stable.

IN

CUSTOMIZE PARAMETERS

NOTICE:

- **When the customer requests a change in a function, first make sure that the function can be customized.**
- **Make a note of the current settings before customizing.**
- **When troubleshooting a function, first make sure that the function is set to the default setting.**

1. Combination meter

Display (Item)	Default	Function	Setting
SEAT BELT WARN	D/P ON	Seat belt warning buzzer ON / OFF setting	D/P ON: Driver and passenger buzzer ON D ON: Driver buzzer ON P ON: Passenger buzzer ON D/P OFF: Driver and passenger buzzer OFF

2. Air conditioning system

Display (Item)	Default	Contents	Setting
SET TEMP SHIFT (Set Temperature Shift)	NORMAL	To control with shifted temperature against display temperature	+2 C / +1 C / NORMAL / -1 C / -2 C
AIR INLET MODE (Air Inlet Mode)	AUTO	In case of turning A/C ON when you desire to make compartment cool down quickly, this is function to change mode automatically to RECIRCULATION mode	MANUAL / AUTO
COMPRESSOR MODE (Compressor Mode)	AUTO	Function to turn A/C ON automatically by pressing AUTO button when blower is ON and A/C is OFF	MANUAL / AUTO
COMPRS / DEF OPER (Compressor / Air Inlet DEF Operation)	LINK	Function to turn A/C ON automatically linked with FRONT DEF button when A/C is OFF	NORMAL / LINK
EVAP CTRL (Evaporator Control)	AUTO	Function to set evaporator control to AUTOMATIC position (AUTO) to save power, or to coldest position (MANUAL) to dehumidify air and to prevent windows from fogging up	MANUAL / AUTO
FOOT / DEF MODE (Foot / DEF auto mode)	ON	Function to turn airflow from FOOT / DEF ON automatically when AUTO MODE is ON	OFF / ON
AUTO BLOW UP (Foot / DEF automatic blower up function)	ON	Function to change blower level automatically when defroster is ON	OFF / ON

3. Power Door Lock Control System

Display (Item)	Default	Function	Setting
UNLK/KEY TWICE	ON	Unlocks only driver side door when driver side door key cylinder turned to unlock once, and unlocks all doors when turned to unlock twice. For OFF setting, turning it once unlocks all doors.	ON / OFF

4. Wireless Door Lock Control System

Display (Item)	Default	Contents	Setting
HAZARD ANS BACK	ON	When LOCK switch on transmitter pressed, all hazard warning lights illuminate once. When UNLOCK switch pressed, all hazard warning lights illuminate twice	ON / OFF

Display (Item)	Default	Contents	Setting
WIRLS BUZZ OPER	ON	Function that makes wireless buzzer sound for answer-back when transmitter LOCK / UNLOCK switch pressed	ON / OFF
OPEN DOOR WARN	ON	If door is not completely closed and transmitter LOCK switch is pressed, this function sounds a buzzer for 10 seconds	ON / OFF
WIRELESS OPER	ON	ON / OFF of wireless door lock function	ON / OFF
ALARM FUNCTION	ON	Operates security alarm when PANIC switch on transmitter continuously pressed for 1 second	ON / OFF
UNLOCK / 2 OPER	ON	Function that unlocks driver side door when unlock switch on transmitter is pressed once, and unlocks all doors when pressed twice. If setting is OFF, pressing unlock switch once makes all doors unlock.	ON / OFF
AUTO LOCK DELAY	30s	This function controls amount of time from unlocking doors to automatic re-locking function	30s / 60s

5. Lighting System

Display (Item)	Default	Contents	Setting
LIGHTING TIME (Lighting Time)	15 seconds	Changes illumination duration after door closure. (It will quickly fade out in case of turning ignition switch ON.)	7.5/15/30 (seconds)
I/L ON /ACC OFF (Room light illuminates when ignition switch turned OFF)	ON	Illuminates light when ignition switch turned to ACC. (Room light illuminated when interior light switch in DOOR position)	ON / OFF
I/L ON / UNLOCK (Room light illuminates when door key unlocked.)	ON	Function to light up room light when unlocking with door key cylinder. (Room light illuminated when interior light switch in DOOR position)	ON / OFF
LIGHT CONTROL	ON	Function to light up foot light when ignition switch is ON and shift position is not P.	ON / OFF

REPAIR INSTRUCTION

PRECAUTION

1. BASIC REPAIR HINT

(a) HINTS ON OPERATIONS

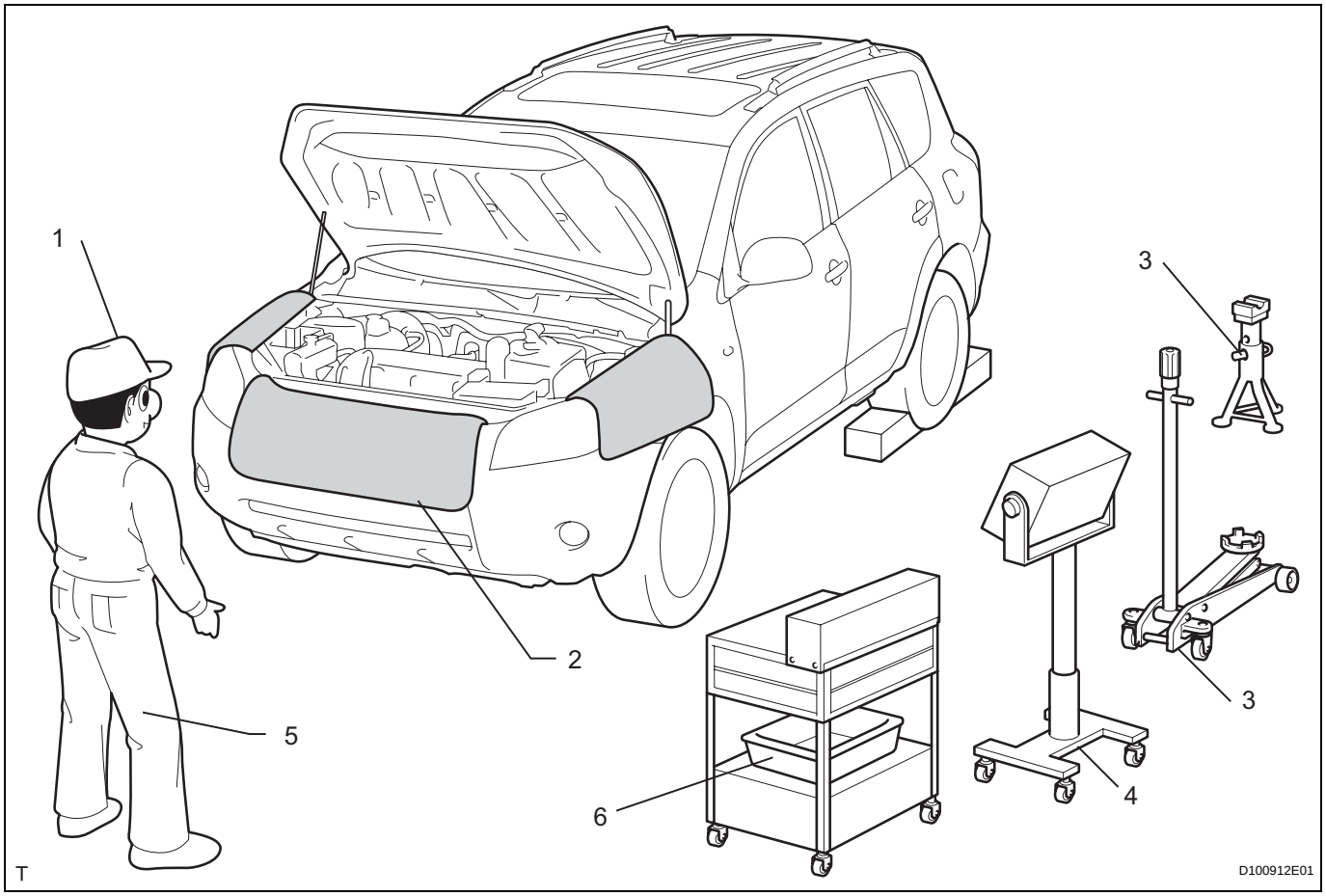

1	Attire	• Always wear a clean uniform. • A hat and safety shoes must be worn.
2	Vehicle protection	Prepare a grille cover, fender cover, seat cover and floor mat before starting the operation.
3	Safe operation	• When working with 2 or more persons, be sure to check safety for one another. • When working with the engine running, make sure to provide ventilation for exhaust fumes in the workshop. • If working on high temperature, high pressure, rotating, moving, or vibrating parts, wear appropriate safety equipment and take extra care not to injure yourself or others. • When jacking up the vehicle, be sure to support the specified location with a safety stand. • When lifting up the vehicle, use appropriate safety equipment.
4	Preparation of tools and measuring gauge	Before starting the operation, prepare a tool stand, SST, gauge, oil and parts for replacement.
5	Removal and installation, disassembly and assembly operations	• Diagnose with a thorough understanding of proper procedures and of the reported problem. • Before removing parts, check the general condition of the assembly and for deformation and damage. • When the assembly is complicated, take notes. For example, note the total number of electrical connections, bolts, or hoses removed. Add matchmarks to ensure reassembly of components to their original positions. Temporarily mark hoses and their fittings if needed. • Clean and wash the removed parts if necessary and assemble them after a thorough check.

6	Removed parts	• Place removed parts in a separate box to avoid mixing them up with new parts or contaminating new parts. • For non-reusable parts such as gaskets, O-rings, and self-locking nuts, replace them with new ones as instructed in this manual. • Retain the removed parts for customer inspection, if requested.

(b) JACKING UP AND SUPPORTING VEHICLE
(1) Care must be taken when jacking up and supporting the vehicle. Be sure to lift and support the vehicle at the proper locations.

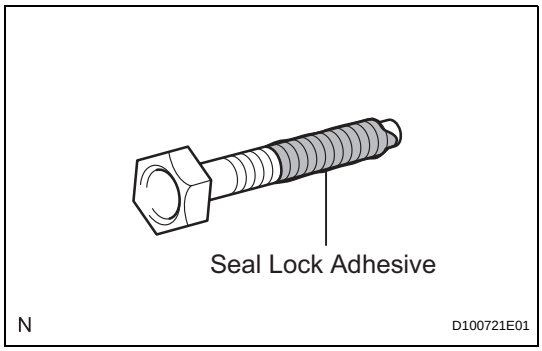

(c) PRECOATED PARTS
(1) Precoated parts are bolts and nuts that are coated with a seal lock adhesive at the factory.
(2) If a precoated part is retightened, loosened or moved in any way, it must be recoated with the specified adhesive.
(3) When reusing a precoated part, clean off the old adhesive and dry the part with compressed air. Then apply new seal lock adhesive appropriate to that part.
(4) Some seal lock agents harden slowly. You may have to wait for the seal lock adhesive to harden.

(d) GASKETS
(1) When necessary, use a sealer on gaskets to prevent leaks.

(e) BOLTS, NUTS AND SCREWS
(1) Carefully follow all the specifications for tightening torques. Always use a torque wrench.

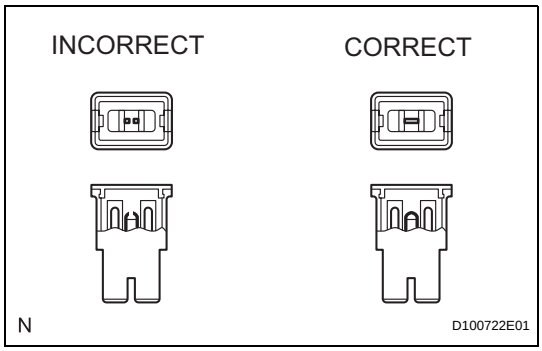

(f) FUSES
(1) When inspecting a fuse, check that the wire of the fuse is not broken.
(2) When replacing fuses, be sure that the new fuse has the correct amperage rating. Do not exceed the rating or use one with a lower rating.

Illustration	Symbol	Part Name	Abbreviation
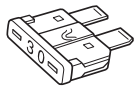 N	N	FUSE	FUSE
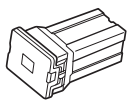 N	 N	MEDIUM CURRENT FUSE	M-FUSE

Illustration	Symbol	Part Name	Abbreviation
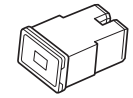 N	 N	HIGH CURRENT FUSE	H-FUSE
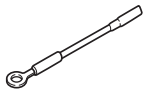 N	 N	FUSIBLE LINK	FL
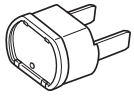 N	 N	CIRCUIT BREAKER	CB

(g) CLIPS

(1) The removal and installation methods of typical clips used for vehicle body parts are shown in the table below.

HINT:

If clips are damaged during a procedure, always replace the clips with new clips.

Shape (Example)	Illustration	Procedures
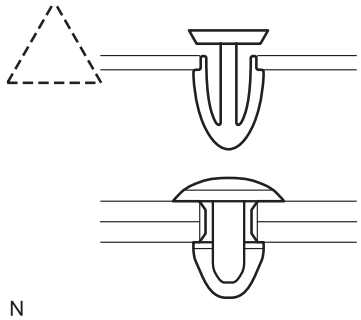 N	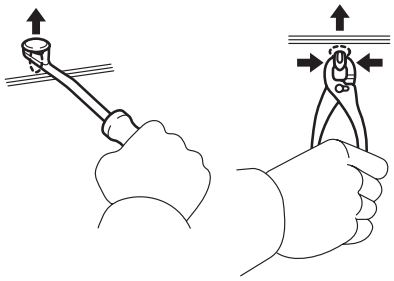 N	1. Remove clips with a clip remover or pliers.
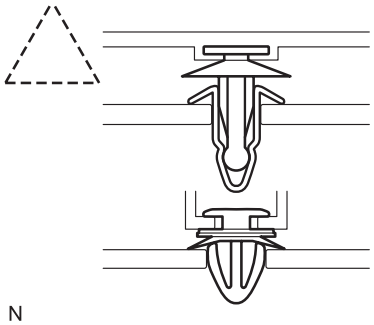 N	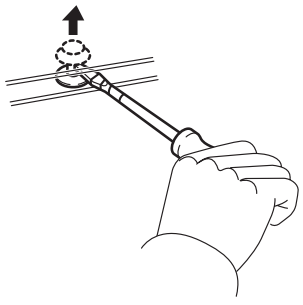 N	1. Remove clips with a clip remover or screwdriver.

IN

Shape (Example)	Illustration	Procedures
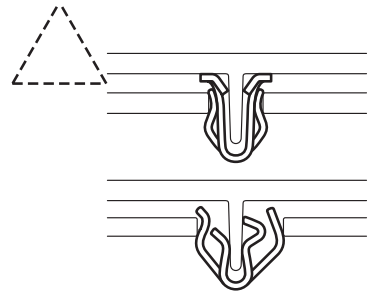 N	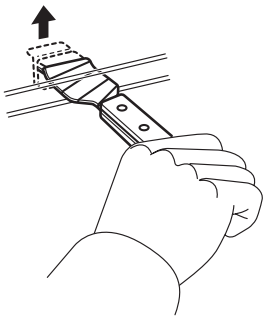 N	1. Remove clips with a wide scraper to prevent panel damage.
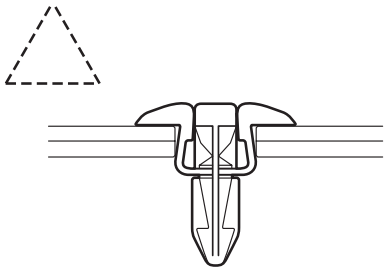 N	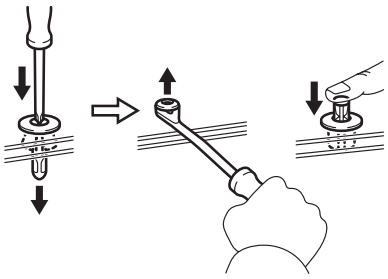 N	1. Remove clips by pushing the center pin through and prying out the shell.
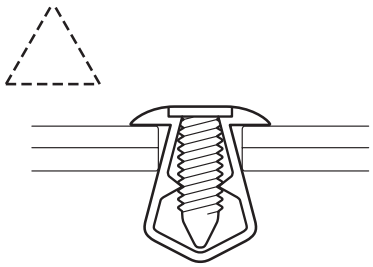 N	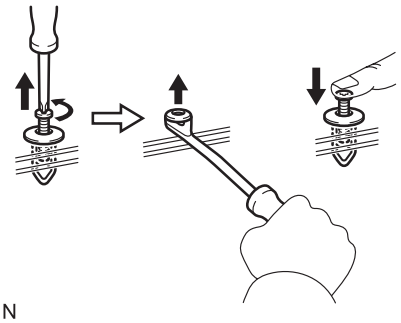 N	1. Remove clips by unscrewing the center pin and prying out the shell.
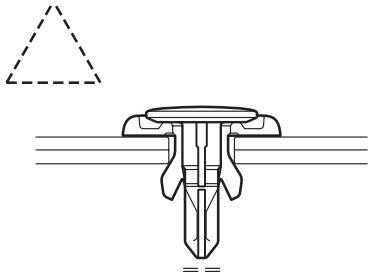 N	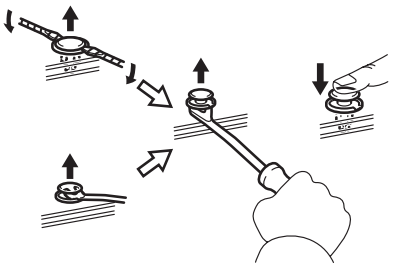 N	1. Remove the clip by prying out the pin and then prying out the shell.

(h) CLAWS

(1) The removal and installation methods of typical claws used for vehicle body parts are shown in the table below.

HINT:

If claws of caps or covers are damaged during a procedure, always replace the caps or covers with new ones.

Shape (Example)	Illustration	Procedures
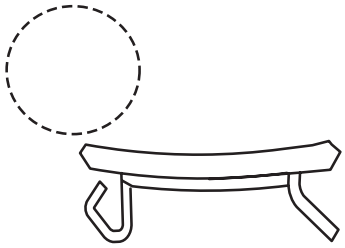	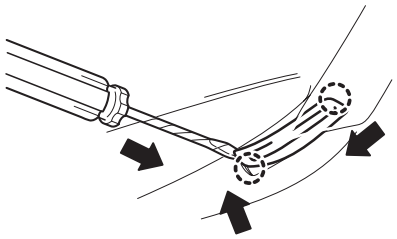	1. Using a screwdriver, detach the claws and remove the caps or cover.
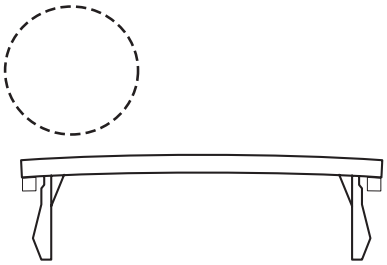	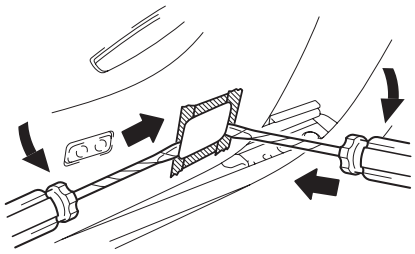	1. Using a screwdriver, detach the claws and remove the caps or cover.
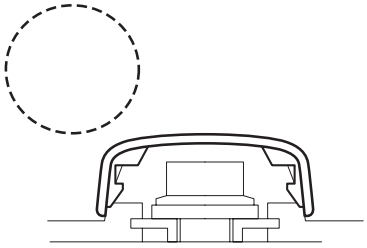	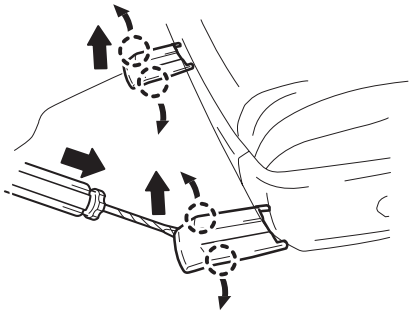	1. Using a screwdriver, detach the claws and remove the caps or cover.

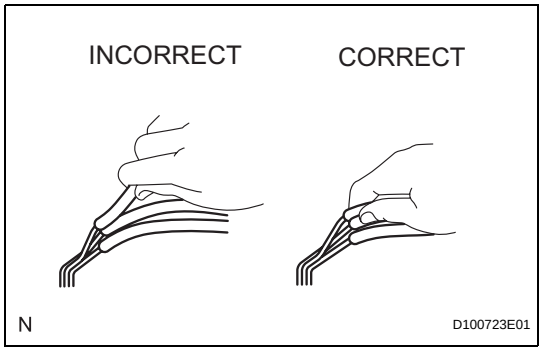

(i) REMOVAL AND INSTALLATION OF VACUUM HOSES

(1) To disconnect a vacuum hose, pull and twist from the end of the hose. Do not pull from the middle of the hose as this may cause damage.

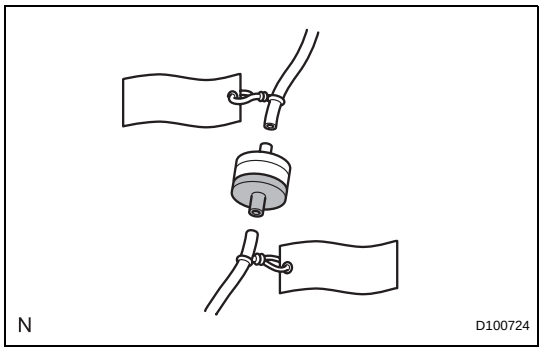

(2) When disconnecting vacuum hoses, use tags to identify where they should be reconnected.
(3) After completing any hose related repairs, double-check that the vacuum hoses are properly connected. The label under the hood shows the proper layout.
(4) When using a vacuum gauge, never force the hose onto a connector that is too large. If a hose has been stretched, it may leak air. Use a step-down adapter if necessary.

(j) TORQUE WHEN USING TORQUE WRENCH WITH EXTENSION TOOL

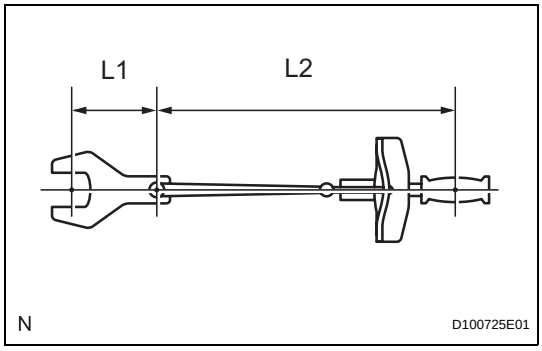

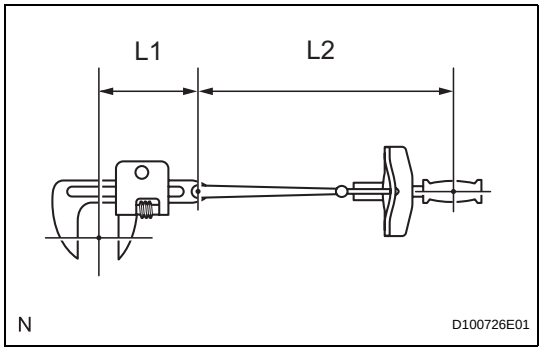

(1) Use the formula below to calculate special torque values for situations where SST or an extension tool is combined with a torque wrench.
Formula:
T' = L2 / (L1 + L2) * T

T'	**Reading of torque wrench {N*m (kgf*cm, ft.*lbf)}**
T	**Torque {N*m (kgf*cm, ft.*lbf)}**
L1	**Length of SST or extension tool {cm (in.)}**
L2	**Length of torque wrench {cm (in.)}**

NOTICE:
If an extension tool or SST is combined with a torque wrench and the wrench is used to tighten to a torque specification in this manual, the actual torque will be excessive and parts will be damaged.

2. FOR VEHICLES WITH SUPPLEMENTAL RESTRAINT SYSTEM

The RAV4 is equipped with a Supplemental Restraint System (SRS). The SRS of this vehicle consists of the following:

1. Steering pad
2. Front passenger airbag assembly
3. Front seat side airbag assembly
4. Front seat outer belt assembly with pretensioner
5. Curtain shield
6. Center airbag sensor
7. Front airbag sensor
8. Side airbag sensor
9. Rear airbag sensor
10. Occupant Classification ECU

CAUTION:

- **Failure to carry out service procedures in the correct sequence could cause SRS parts to unexpectedly deploy and possibly lead to serious injuries. Furthermore, if a mistake is made when servicing SRS parts, they may fail to operate when required. Before performing servicing (including installation/removal, inspection and replacement of parts), be sure to read the following precautions.**
- **Before starting work, wait at least 90 seconds after the ignition switch is turned OFF and after the cable of the negative (-) battery terminal is disconnected. (SRS parts are equipped with a backup power source. If work is started within 90 seconds of turning the ignition switch OFF and disconnecting the cable from the negative (-) battery terminal, SRS parts may deploy.)**
- **Do not expose SRS parts directly to hot air or flames.**

NOTICE:

- **Malfunction symptoms of SRS parts are difficult to confirm. DTCs are the most important source of information when troubleshooting. During troubleshooting, always confirm DTCs before disconnecting the cable from the negative (-) battery terminal.**
- **For minor collisions where SRS parts do not deploy, always inspect the SRS parts.**
- **Before performing repairs, remove airbag sensors as necessary if any kind of impact is likely to occur to an airbag sensor during repairs.**
- **Never use SRS parts from another vehicle. When replacing SRS parts, replace them with new ones.**
- **Never disassemble or attempt to repair SRS parts.**
- **If an SRS part has been dropped, or if there are any cracks, dents or other defects in the case, bracket or connector, replace the SRS part with a new one.**
- **Use an ohmmeter/voltmeter with high impedance (10 kΩ/V minimum) for troubleshooting the electrical circuits.**
- **Information labels are attached to the periphery of SRS parts. Follow the cautions and instructions on the labels.**
- **After work on SRS parts is completed, perform the SRS warning light check.**

- **When the cable is disconnected from the negative (-) battery terminal, the memory settings of each system will be cleared. Because of this, be sure to write down the settings of each system before starting work. When work is finished, reset the settings of each system as before. Never use a backup power supply from outside the vehicle to avoid erasing the memory in a system.**

(a) SPIRAL CABLE

(1) The steering wheel must be fitted correctly to the steering column with the spiral cable at the neutral position, as cable disconnection and other problems may occur. Refer to the information about correct installation of the steering wheel.

(b) AIRBAG ASSEMBLY

(1) Airbag assembly with pad:
Always place a removed or new airbag assembly with the pad surface facing upward. Placing the airbag assembly with the airbag inflation direction facing downward could cause a serious accident if the airbag inflates. Also, do not place anything on top of the airbag assembly.

(2) Never measure the resistance of the airbag squib. This may cause the airbag to inflate, which could cause a serious injury.

(3) Grease or detergents of any kind should not be applied to the airbag assembly.

(4) Store the airbag assembly in an area where the ambient temperature is below 93°C (200°F), the humidity is not high and there is no electrical noise.

(5) When using electric welding anywhere on the vehicle, disconnect the airbag ECU connectors. These connectors contain shorting springs. This feature reduces the possibility of the airbag deploying due to currents entering the squib wiring.

(6) When disposing of the vehicle or the airbag assembly by itself, the airbag should be deployed using SST before disposal. Activate the airbag in a safe place away from electrical noise.

(c) SEAT OUTER BELT ASSEMBLY WITH PRETENSIONER

(1) Never measure the resistance of the seat outer belt. This may cause the pretensioner of the seat outer belt to activate, which could cause a serious injury.

(2) Never install the seat outer belt on another vehicle.

(3) Store the seat outer belt in an area where the ambient temperature is below 80°C (176°F), the humidity is not high and there is no electrical noise.
(4) When using electric welding anywhere on the vehicle, disconnect the airbag ECU connectors (2 pins). These connectors contain shorting springs. This feature reduces the possibility of the pretensioner deploying due to currents entering the squib wiring.
(5) When disposing of a vehicle or the seat outer belt by itself, the pretensioner should be activated before disposal. Activate the pretensioner in a safe place away from electrical noise.
(6) As the seat outer belt is hot after the pretensioner is activated, allow some time for it to cool down sufficiently before disposal. Never apply water to try to cool down the seat outer belt.
(7) Grease, detergents, oil or water should not be applied to the seat outer belt.

(d) AIRBAG SENSOR ASSEMBLY
(1) Never reuse an airbag sensor assembly that has been involved in a collision where the SRS has deployed.
(2) The connectors to the airbag sensor assembly should be connected or disconnected with the sensor placed on the floor. If the connectors are connected or disconnected while the airbag sensor assembly is not placed on the floor, the SRS may activate.
(3) Work must be started at least 90 seconds after the ignition switch is turned OFF and the cable is disconnected from the negative (-) battery terminal, even if only loosening the set bolts of the airbag sensor assembly.

(e) WIRE HARNESS AND CONNECTOR
(1) The SRS wire harness is integrated with the instrument panel wire harness assembly. All the connectors in the system are yellow. If the SRS wire harness becomes disconnected or the connector becomes broken, repair or replace it.

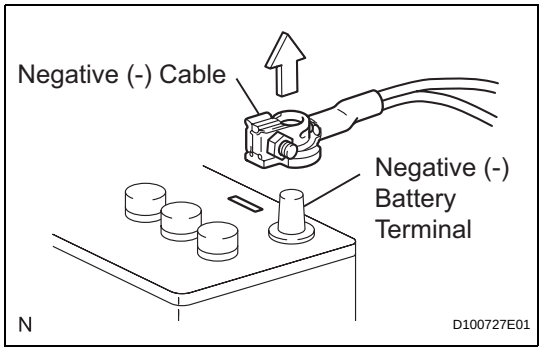

3. ELECTRONIC CONTROL

(a) REMOVAL AND INSTALLATION OF BATTERY TERMINAL

NOTICE:

Certain systems need to be initialized after disconnecting and reconnecting the cable from the negative (-) battery terminal.

(1) Before performing electronic work, disconnect the cable from the negative (-) battery terminal to prevent component and wire damage caused by accidental short circuits.

(2) When disconnecting the cable, turn the ignition switch OFF and headlight dimmer switch OFF and loosen the cable nut completely. Perform these operations without twisting or prying the cable. Then disconnect the cable.
(3) Clock settings, radio settings, audio system memory, DTCs and other data are erased when the cable is disconnected from the negative (-) battery terminal. Write down any necessary data before disconnecting the cable.

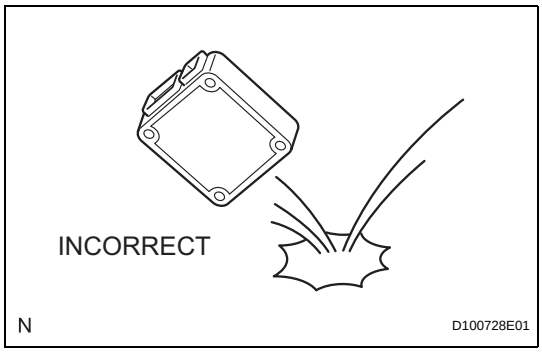

(b) HANDLING OF ELECTRONIC PARTS
(1) Do not open the cover or case of the ECU unless absolutely necessary. If the IC terminals are touched, the IC may be rendered inoperative by static electricity.
(2) Do not pull the wires when disconnecting electronic connectors. Pull the connector.
(3) Be careful not to drop electronic components, such as sensors or relays. If they are dropped on a hard surface, they should be replaced.
(4) When cleaning the engine with steam, protect the electronic components, air filter and emission-related components from water.
(5) Never use an impact wrench to remove or install temperature switches or temperature sensors.
(6) When measuring the resistance of a wire connector, insert the tester probe carefully to prevent terminals from bending.

4. REMOVAL AND INSTALLATION OF FUEL CONTROL PARTS

(a) PLACE FOR REMOVING AND INSTALLING FUEL SYSTEM PARTS
(1) Work in a location with good air ventilation that does not have welders, grinders, drills, electric motors, stoves, or any other ignition sources.
(2) Never work in a pit or near a pit as vaporized fuel will collect in those places.

(b) REMOVING AND INSTALLING FUEL SYSTEM PARTS
(1) Prepare a fire extinguisher before starting the operation.
(2) To prevent static electricity, install a ground wire to the fuel changer, vehicle and fuel tank, and do not spray the surrounding area with water. Be careful when performing work in this area, as the work surface will become slippery. Do not clean up gasoline spills with water, as this may cause the gasoline to spread, and possibly create a fire hazard.
(3) Avoid using electric motors, working lights and other electric equipment that can cause sparks or high temperatures.
(4) Avoid using iron hammers as they may create sparks.

(5) Dispose of fuel-contaminated cloth separately using a fire resistant container.

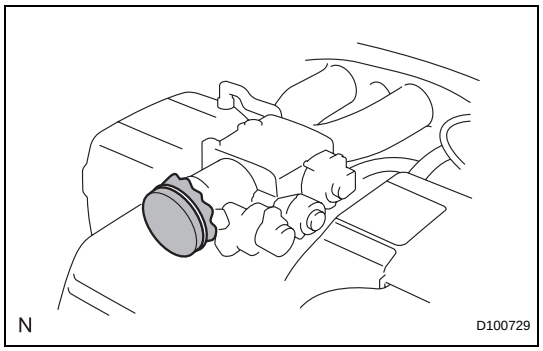

5. REMOVAL AND INSTALLATION OF ENGINE INTAKE PARTS

(a) If any metal particles enter inlet system parts, they may damage the engine.

(b) When removing and installing inlet system parts, cover the openings of the removed parts and engine openings. Use gummed tape or other suitable materials.

(c) When installing inlet system parts, check that no metal particles have entered the engine or the installed parts.

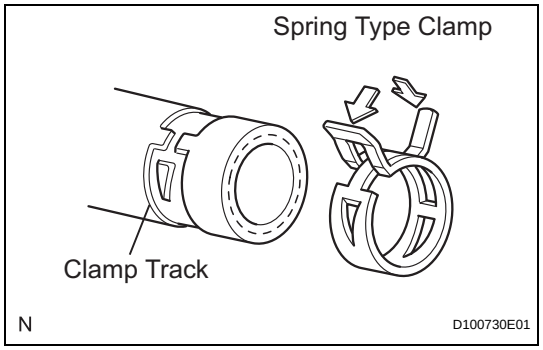

6. HANDLING OF HOSE CLAMPS

(a) Before removing the hose, check the clamp position so that it can be reinslalled in the same position.

(b) Replace any deformed or dented clamps with new ones.

(c) When reusing a hose, attach the clamp on the clamp track portion of the hose.

(d) For a spring type clamp, you may want to spread the tabs slightly after installation by pushing in the direction of the arrows as shown in the illustration.

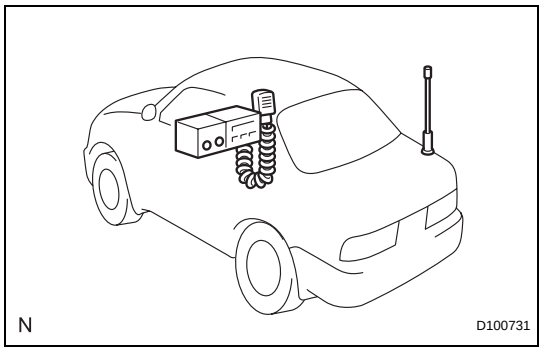

7. FOR VEHICLES EQUIPPED WITH MOBILE COMMUNICATION SYSTEMS

(a) Install the antenna as far away from the ECU and sensors of the vehicle electronic systems as possible.

(b) Install an antenna feeder at least 20 cm (7.87 in.) away from the ECU and sensors of the vehicle electronic systems. For details about ECU and sensor locations, refer to the section of the applicable components.

(c) Keep the antenna and feeder separate from other wiring as much as possible. This will prevent signals of the communication equipment from affecting vehicle equipment and vice versa.

(d) Check that the antenna and feeder are correctly adjusted.

(e) Do not install a high-powered mobile communication system.

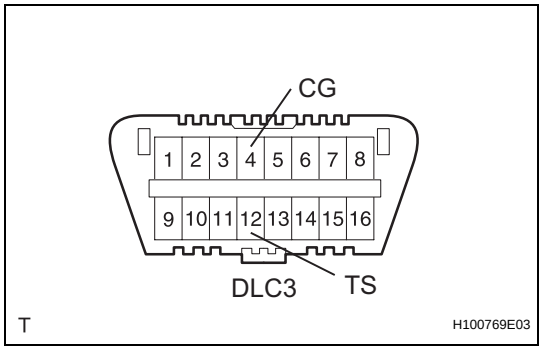

8. FOR VEHICLES EQUIPPED WITH VEHICLE STABILITY (VSC) SYSTEM

(a) NOTICES WHEN USING DRUM TESTER

(1) Before beginning testing, disable the VSC. To disable the VSC, turn the ignition switch OFF and connect SST to terminals 12 (TS) and 4 (CG) of the DLC3.

SST 09843-18040

NOTICE:

- **Confirm that the VSC warning light blinks.**

- **VSC system will be reset when the engine is started.**
- **For safety, secure the vehicle with restraint chains while using a wheel dynamometer.**

(b) NOTICES OF RELATED OPERATIONS TO VSC
(1) Do not carry out unnecessary installation and removal as it might affect the adjustment of VSC related parts.
(2) Be sure to follow the instructions for work preparation and final confirmation of proper operation of the VSC system.

9. WHEN SERVICING ACTIVE TORQUE CONTROL 4WD VEHICLES

(a) The active torque control 4WD RAV4 is equipped with the 4 wheel drive control system.
If incorrect preparations or test procedures are used, the test will not only be unsuccessful, but may be dangerous as well.
CAUTION:
- **Never accelerate or decelerate the vehicle suddenly.**
- **Observe the other cautions given for each individual test.**

NOTICE:
- **Sudden shifting, braking, acceleration or deceleration is not allowed.**
- **Do not use the parking brake while the vehicle's wheels are rotating.**
- **Do not perform the measurements continuously for a long period of time.**
- **Make sure to activate the Vehicle Stability Control (VSC) & Traction Control (TRAC) system to an operational condition after the test. Check that the VSC warning indicator light goes off when restarting the engine.**

Therefore, before beginning any such servicing or test, be sure to check the following items:
(1) Whether the tires are touching the ground or jacked up
(2) Transmission gear position
(3) Maximum testing vehicle speed
(4) Maximum testing time

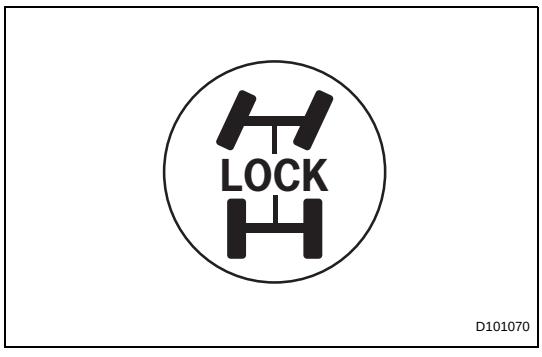

(b) When using a braking force tester (not free roller type):
When performing measurements using a low-speed type (Vehicle Speed: Below 0.5 km/h or 0.3 mph) brake tester, observe the following instructions.
(1) Press the 4WD LOCK-MODE SWITCH to OFF to disable the 4WD system.
(2) If the vehicle is equipped with the Vehicle Stability Control (VSC) & Traction Control (TRAC) system, prohibit the system from activating.

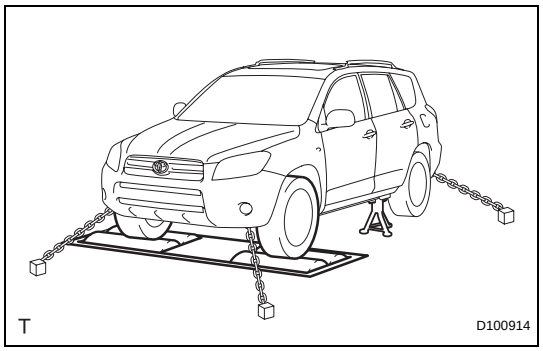

(3) Position the front wheels to be tested on the tester.
(4) Jack up the rear wheels.
(5) Ensure that the vehicle does not move using wires.
(6) Shift the transmission shift lever to the "N" position.
(7) Idle the engine, operate the brake booster and perform the test.
CAUTION:
The maximum driving time should be 1 minute.

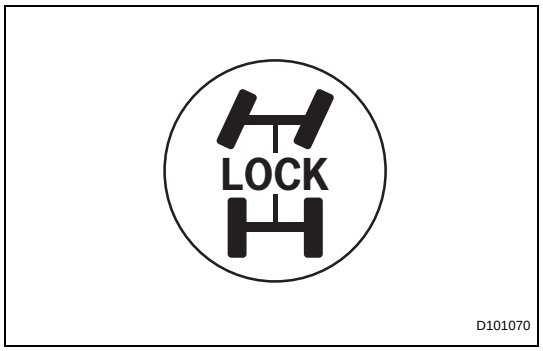

(c) When using a braking force tester (free roller type): When performing measurements using a low-speed type (Vehicle Speed: Below 0.5 km/h or 0.3 mph) brake tester, observe the following instructions.
(1) Press the 4WD LOCK-MODE SWITCH to turn it OFF and disable the 4WD system.
(2) If the vehicle is equipped with the Vehicle Stability Control (VSC) & Traction Control (TRAC) system, prohibit the system from activating.

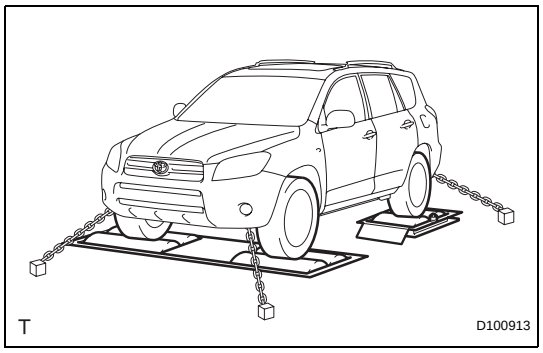

(3) Position the front wheels on the tester roller.
(4) Position the rear wheels on the free roller.
(5) Ensure that the vehicle does not move using wires.
(6) Shift the transmission shift lever to the "N" position.
(7) Idle the engine, operate the brake booster and perform the test.
CAUTION:
The maximum driving time should be 1 minute.

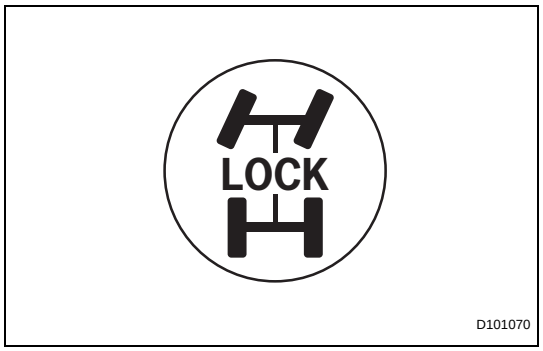

(d) When using a speedometer (not free roller type): Observe the following instructions and then measure with the rear wheels.
(1) Press the 4WD LOCK-MODE SWITCH to turn it OFF and disable the 4WD system.
(2) If the vehicle is equipped with the Vehicle Stability Control (VSC) & Traction Control (TRAC) system, prohibit the system from activating.

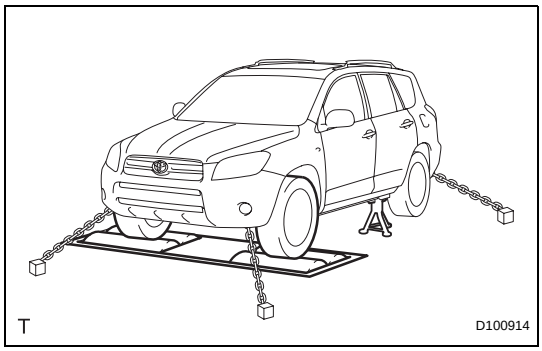

(3) Position the front wheels on the tester.
(4) Jack up the rear wheels.
(5) Ensure that the vehicle does not move using wires.
(6) Shift the transmission shift lever to the "D" position.
CAUTION:
- **The maximum speed should be less than 50 km/h (31 mph).**
- **If the measurement is required with over 50 km/h (31 mph), remove the propeller shaft.**

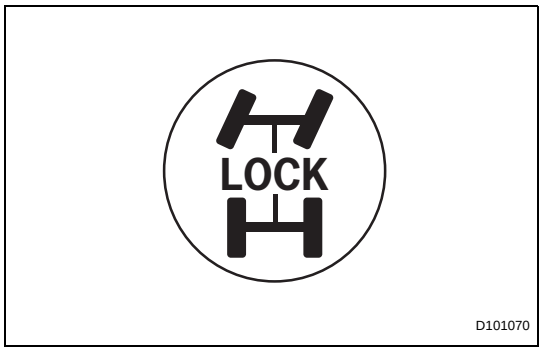

(e) When using a speedometer (free roller type):
Observe the following instructions and then measure with the rear wheels.
(1) Press the 4WD LOCK-MODE SWITCH to turn it OFF and disable the 4WD system.
(2) If the vehicle is equipped with the Vehicle Stability Control (VSC) & Traction Control (TRAC) system, prohibit the system from activating.

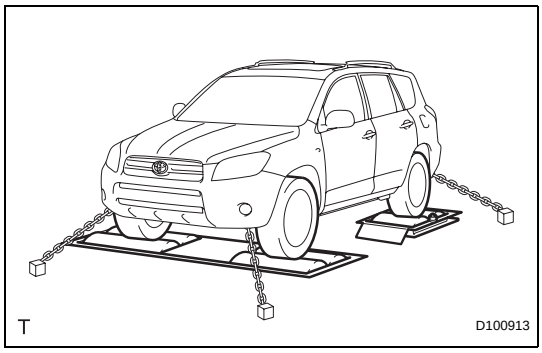

(3) Position the front wheels on the tester roller.
(4) Position the rear wheels on the free roller.
(5) Ensure that the vehicle does not move using wires.
(6) Shift the transmission shift lever to the "D" position.
CAUTION:
- **The maximum speed should be less than 50 km/h (31 mph).**
- **If the measurement is required with over 50 km/h (31 mph), remove the propeller shaft.**

(f) Using chassis dynamometer

Vehicle Condition	Chassis dynamometer Type	Note
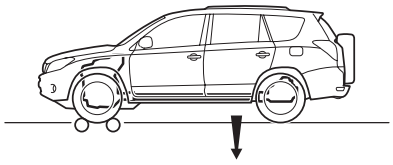 T	2-Wheel Chassis Dynamometer	• Remove the propeller shaft. • Remove the 4WD fuse from fuse box during the test. **NOTICE:** **After the test, reinstall the fuse, and then delete DTC C1298.**
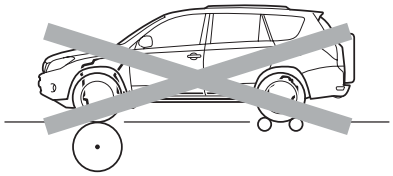 T	4 -Wheel Free Chassis Dynamometer	**CAUTION:** **Do not use a 4 wheel chassis dynamometer.**

Vehicle Condition	Chassis dynamometer Type	Note
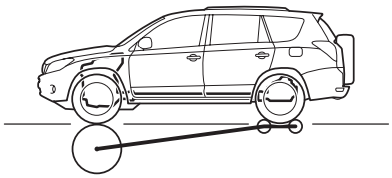 T	4-Wheel Driven Chassis Dynamometer	-

When performing high speed, high load measurements on a chassis dynamometer, observe the following instructions and then measure with the front wheels.

(1) If the vehicle is equipped with the Vehicle Stability Control (VSC) & Traction Control (TRAC) system, prohibit the system from activating.
(2) Ensure that the vehicle is securely fixed in place.
HINT:
- Sudden shifting, braking, acceleration or deceleration is not allowed.
- Make sure to activate the Vehicle Stability Control (VSC) & Traction Control (TRAC) system after the test. Check that the VSC warning indicator light goes off when restarting the engine.

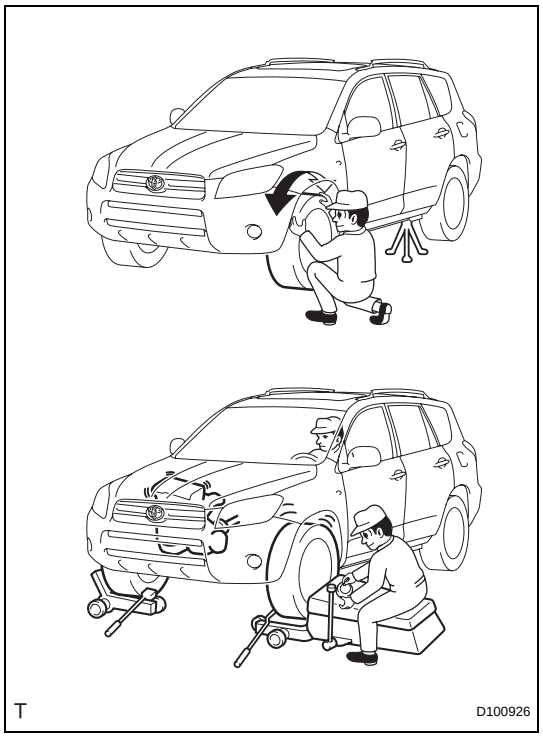

(g) On-Vehicle Wheel Balancing:
When performing on-vehicle wheel balancing on an active torque control 4WD vehicle, to prevent each wheel from being rotated at a different speed and in different directions, always be sure to observe the following precautions.

(1) All 4 wheels should be jacked up and lifted off of the ground completely.
(2) Press the 4WD LOCK-MODE SWITCH to turn it OFF and disable the 4WD system.
CAUTION:
Propeller shaft should be removed.
(3) If the vehicle is equipped with a Vehicle Stability Control (VSC) system, prohibit the system from activating (see previous step).
(4) The parking brake lever should be fully released.
(5) None of the brakes should be applied.
(6) The wheels should be driven on the wheel balancer with the engine running.
(7) Carry out the wheel balancing with the transmission in the D position.
HINT:
- When performing the wheel balancing, pay attention to the other wheels rotating at the same time.
- Sudden acceleration, deceleration or braking is not allowed.

- Do not forget to change the Vehicle Stability Control (VSC) system to an operational condition after the test. Check that the VSC warning indicator light goes off when restarting the engine.

10. WHEN TOWING ACTIVE TORQUE CONTROL 4WD VEHICLES

- Use one of the methods shown below to tow the vehicle.
- If the vehicle has trouble in the chassis and drivetrain, use method 1 (flat bed truck).

Towing Method	Parking Brake Condition
1. Flat Type Truck 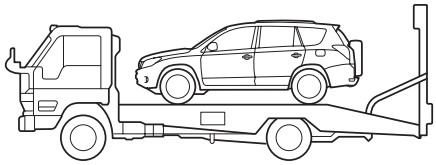	Applied
2. Wheel Lift Type Truck From Front 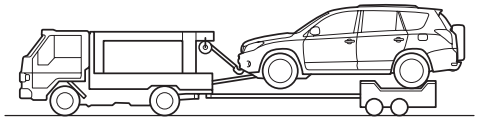 T	Applied

NOTICE:
Do not use any towing method other than those shown above.

- For example, the towing methods shown below are dangerous or damage the vehicle, so do not use them.

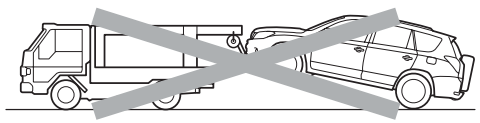 T	• Never tow the vehicle using a method where the lifted-up wheel cannot rotate. • If this towing method is used, either from the front or rear: (a) There is a danger of the drivetrain heating up and causing a breakdown, or of the wheels flying off the dolly. (b) In addition, if the vehicle is equipped with the Vehicle Stability Control (VSC) & Traction Control (TRAC) system, the system will apply the rotating wheel brake only when the engine is running.
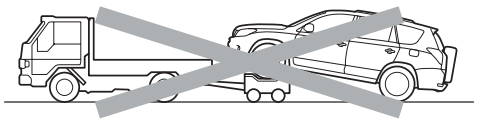 T	**CAUTION:** **Do not use the sling type method, either from the front or rear, as this method causes damage to the body.**
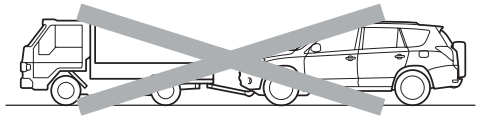 T	**CAUTION:** **Do not tow the vehicle with all of its wheels contacting the ground, as this causes damage to the transaxle.**

11. FOR VEHICLES EQUIPPED WITH CATALYTIC CONVERTER

CAUTION:

If a large amount of unburned gasoline or gasoline vapors flow into the converter, it may cause overheating and create a fire hazard. To prevent this, observe the following precautions.

(a) Use only unleaded gasoline.

(b) Avoid idling the engine for more than 20 minutes.

(c) Avoid performing unnecessary spark jump tests.

(1) Perform a spark jump test only when absolutely necessary. Perform this test as rapidly as possible.

(2) While testing, never race the engine.

(d) Avoid a prolonged engine compression measurement. Engine compression measurements must be performed as rapidly as possible.

(e) Do not run the engine when the fuel tank is nearly empty. This may cause the engine to misfire and create an extra load on the converter.

12. INSPECTION AND ADJUSTMENT OF JOINT ANGLE DURING REMOVAL AND INSTALLATION OF PROPELLER SHAFT (4WD)

(a) When performing operations which involve the removal and installation of the propeller shaft, always check the joint angle. Make adjustments if necessary (see page PR-4).

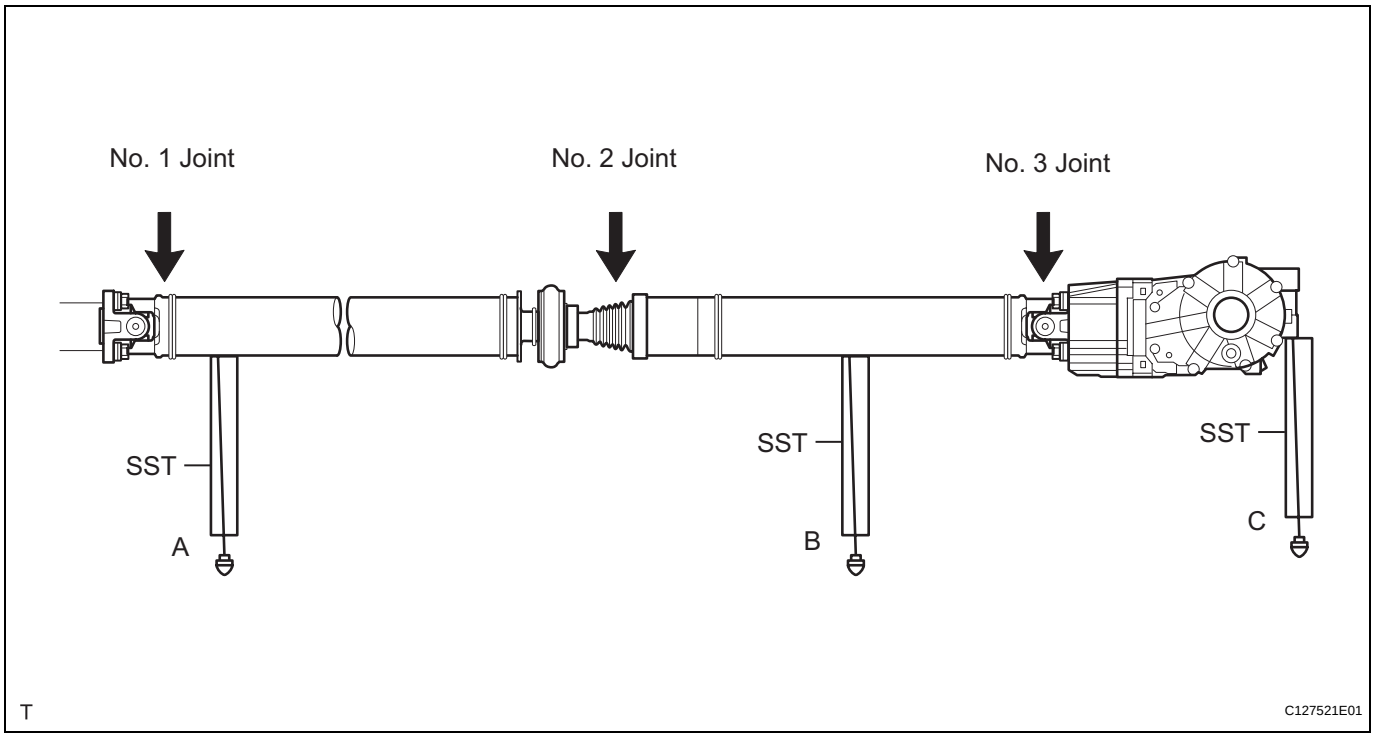

IN

GLOSSARY OF SAE AND TOYOTA TERMS

This glossary lists all SAE-J1930 terms and abbreviations used in this manual in compliance with SAE recommendations, as well as their TOYOTA equivalents.

SAE ABBREVIATIONS	SAE TERMS	TOYOTA TERMS ( )-ABBREVIATIONS
3GR	Third Gear	-
4GR	Fourth Gear	-
A/C	Air Conditioning	Air Conditioner
ACL	Air Cleaner	Air Cleaner, A/CL
AIR	Secondary Air Injection	Air Injection (AI)
AP	Accelerator Pedal	-
B+	Battery Positive Voltage	+B, Battery Voltage
BARO	Barometric Pressure	HAC
CAC	Charge Air Cooler	Intercooler
CARB	Carburetor	Carburetor
CFI	Continuous Fuel Injection	-
CKP	Crankshaft Position	Crank Angle
CL	Closed Loop	Closed Loop
CMP	Camshaft Position	Cam Angle
CPP	Clutch Pedal Position	-
CTOX	Continuous Trap Oxidizer	-
CTP	Closed Throttle Position	LL ON, Idle ON
DFI	Direct Fuel Injection	Direct Injection (DI/INJ)
DI	Distributor Ignition	-
DLC3	Data Link Connector 3	OBD II Diagnostic Connector
DTC	Diagnostic Trouble Code	Diagnostic Trouble Code
DTM	Diagnostic Test Mode	-
ECL	Engine Coolant Level	-
ECM	Engine Control Module	Engine Electronic Control Unit (ECU)
ECT	Engine Coolant Temperature	Coolant Temperature, Water Temperature (THW)
EEPROM	Electrically Erasable Programmable Read Only Memory	Electrically Erasable Programmable Read Only Memory (EEPROM)
EFE	Early Fuel Evaporation	Cold Mixture Heater (CMH), Heat Control Valve (HCV)
EGR	Exhaust Gas Recirculation	Exhaust Gas Recirculation (EGR)
EI	Electronic Ignition	Distributorless Ignition (DLI)
EM	Engine Modification	Engine Modification (EM)
EPROM	Erasable Programmable Read Only Memory	Programmable Read Only Memory (PROM)
EVAP	Evaporative Emission	Evaporative Emission Control (EVAP)
FC	Fan Control	-
FEEPROM	Flash Electrically Erasable Programmable Read Only Memory	-
FEPROM	Flash Erasable Programmable Read Only Memory	-
FF	Flexible Fuel	-
FP	Fuel Pump	Fuel Pump
GEN	Generator	Alternator
GND	Ground	Ground (GND)
HO2S	Heated Oxygen Sensor	Heated Oxygen Sensor (HO2S)
IAC	Idle Air Control	Idle Speed Control (ISC)

SAE ABBREVIATIONS	SAE TERMS	TOYOTA TERMS ( )-ABBREVIATIONS
IAT	Intake Air Temperature	Intake or Inlet Air Temperature
ICM	Ignition Control Module	-
IFI	Indirect Fuel Injection	Indirect Injection (IDL)
IFS	Inertia Fuel-Shutoff	-
ISC	Idle Speed Control	-
KS	Knock Sensor	Knock Sensor
MAF	Mass Airflow	Air Flow Meter
MAP	Manifold Absolute Pressure	Manifold Pressure Intake Vacuum
MC	Mixture Control	Electric Bleed Air Control Valve (EBCV) Mixture Control Valve (MCV) Electric Air Control Valve (EACV)
MDP	Manifold Differential Pressure	-
MFI	Multiport Fuel Injection	Electronic Fuel Injection (EFI)
MIL	Malfunction Indicator Lamp	Check Engine Lamp
MST	Manifold Surface Temperature	-
MVZ	Manifold Vacuum Zone	-
NVRAM	Non-Volatile Random Access Memory	-
O2S	Oxygen Sensor	Oxygen Sensor, O2 Sensor (O2S)
OBD	On-Board Diagnostic	On-Board Diagnostic System (OBD)
OC	Oxidation Catalytic Converter	Oxidation Catalyst Converter (OC), CCo
OL	Open Loop	Open Loop
PAIR	Pulsed Secondary Air Injection	Air Suction (AS)
PCM	Powertrain Control Module	-
PNP	Park/Neutral Position	-
PROM	Programmable Read Only Memory	-
PSP	Power Steering Pressure	-
PTOX	Periodic Trap Oxidizer	Diesel Particulate Filter (DPF) Diesel Particulate Trap (DPT)
RAM	Random Access Memory	Random Access Memory (RAM)
RM	Relay Module	-
ROM	Read Only Memory	Read Only Memory (ROM)
RPM	Engine Speed	Engine Speed
SC	Supercharger	Supercharger
SCB	Supercharger Bypass	E-ABV
SFI	Sequential Multiport Fuel Injection	Electronic Fuel Injection (EFI), Sequential Injection
SPL	Smoke Puff Limiter	-
SRI	Service Reminder Indicator	-
SRT	System Readiness Test	-
ST	Scan Tool	-
TB	Throttle Body	Throttle Body
TBI	Throttle Body Fuel Injection	Single Point Injection Central Fuel Injection (Ci)
TC	Turbocharger	Turbocharger
TCC	Torque Converter Clutch	Torque Converter
TCM	Transmission Control Module	Transmission ECU, ECT ECU
TP	Throttle Position	Throttle Position
TR	Transmission Range	-
TVV	Thermal Vacuum Valve	Bimetallic Vacuum Switching Valve (BVSV) Thermostatic Vacuum Switching Valve (TVSV)

SAE ABBREVIATIONS	SAE TERMS	TOYOTA TERMS ( )-ABBREVIATIONS
TWC	Three-Way Catalytic Converter	Three-Way Catalytic (TWC) Manifold Converter CCRO
TWC+OC	Three-Way + Oxidation Catalytic Converter	CCR + CCo
VAF	Volume Airflow	Air Flow Meter
VR	Voltage Regulator	Voltage Regulator
VSS	Vehicle Speed Sensor	Vehicle Speed Sensor
WOT	Wide Open Throttle	Full Throttle
WU-OC	Warm Up Oxidation Catalytic Converter	-
WU-TWC	Warm Up Three-Way Catalytic Converter	-

TERMS

ABBREVIATIONS USED IN MANUAL

ABBREVIATIONS	MEANING
1st	First
2nd	Second
2WD	Two Wheel Drive Vehicle (4 x 2)
3rd	Third
4th	Fourth
4WD	Four Wheel Drive Vehicle (4 x 4)
4WS	Four Wheel Steering System
5th	Fifth
A.D.D.	Automatic Disconnecting Differential
A/C	Air Conditioner
A/F	Air-Fuel Ratio
A/T, ATM	Automatic Transmission (Transaxle)
ABS	Anti-Lock Brake System
AC	Alternating Current
ACC	Accessory
ACIS	Acoustic Control Induction System
ACM	Active Control Engine Mount
ACSD	Automatic Cold Start Device
AFS	Adaptive Front-Lighting System
AHC	Active Height Control Suspension
AID	Air Injection Control Driver
ALR	Automatic Locking Retractor
ALT	Alternator
AMP	Amplifier
ANT	Antenna
APPROX.	Approximately
ASSB	Assembly Services Sdn. Bhd.
ASSY	Assembly
ATF	Automatic Transmission Fluid
AUTO	Automatic
AUX	Auxiliary
AVG	Average
AVS	Adaptive Variable Suspension
B/L	Bi-Level
B/S	Bore-Stroke Ratio
B+	Battery Voltage
BA	Brake Assist
BACS	Boost Altitude Compensation System
BAT	Battery
BDC	Bottom Dead Center
BTDC	Before Top Dead Center
BVSV	Bimetallic Vacuum Switching Valve
C/V	Check Valve
Calif.	California
CAN	Controller Area Network
CB	Circuit Breaker

ABBREVIATIONS	MEANING
CCo	Catalytic Converter For Oxidation
CCV	Canister Closed Valve
CD	Compact Disc
CF	Cornering Force
CG	Center Of Gravity
CH	Channel
CKD	Complete Knock Down
COMB.	Combination
CPE	Coupe
CPS	Combustion Pressure Sensor
CPU	Central Processing Unit
CRS	Child Restraint System
CTR	Center
CV	Control Valve
CW	Curb Weight
D/INJ	Direct Injection
DC	Direct Current
DEF	Defogger
DFL	Deflector
DIFF.	Differential
DIFF. LOCK	Differential Lock
DLC	Data Link Connector
DLI	Distributorless Ignition
DOHC	Double Overhead Camshaft
DP	Dash Pot
DS	Dead Soak
DSP	Digital Signal Processor
DTC	Diagnostic Trouble Code
DVD	Digital Versatile Disc
E/G	Engine
EBD	Electronic Brake Force Distribution
EC	Electrochromic
ECAM	Engine Control And Measurement System
ECD	Electronically Controlled Diesel
ECDY	Eddy Current Dynamometer
ECT	Electronic Controlled Automatic Transmission/Transaxle
ECU	Electronic Control Unit
ED	Electro-Deposited Coating
EDIC	Electronic Diesel Injection Control
EDU	Electronic Driving Unit
EFI	Electronic Fuel Injection
EGR	Exhaust Gas Recirculation
EGR-VM	EGR-Vacuum Modulator
ELR	Emergency Locking Retractor
EMPS	Electric Motor Power Steering
ENG	Engine
ES	Easy & Smooth
ESA	Electronic Spark Advance
ETCS-i	Electronic Throttle Control System-intelligent

ABBREVIATIONS	MEANING
EVAP	Evaporative Emission Control
EVP	Evaporator
E-VRV	Electric Vacuum Regulating Valve
EX	Exhaust
F/G	Fuel Gauge
F/P	Fuel Pump
F/W	Flywheel
FE	Fuel Economy
FF	Front-Engine Front-Wheel-Drive
FIPG	Formed In Place Gasket
FL	Fusible Link
FPU	Fuel Pressure Up
FR / Fr	Front
FW/D	Flywheel Damper
FWD	Front-Wheel-Drive
GAS	Gasoline
GND	Ground
GPS	Global Positioning System
GSA	Gear Shift Actuator
H/B	Hatchback
H-FUSE	High Current Fuse
HI	High
HID	High Intensity Discharge (Headlight)
HPU	Hydraulic Power Unit
HSG	Housing
HT	Hard Top
HV	Hybrid Vehicle
HWS	Heated Windshield System
I/P	Instrument Panel
IC	Integrated Circuit
IDI	Indirect Diesel Injection
IFS	Independent Front Suspension
IG	Ignition
IIA	Integrated Ignition Assembly
IN	Intake (Manifold, Valve)
INT	Intermittent
IRS	Independent Rear Suspension
ISC	Idle Speed Control
J/B	Junction Block
J/C	Junction Connector
KD	Kick-Down
L/H/W	Length, Height, Width
LAN	Local Area Network
LB	Liftback
LCD	Liquid Crystal Display
LED	Light Emitting Diode
LH	Left-Hand
LHD	Left-Hand Drive
LIN	Local Interconnect Network

ABBREVIATIONS	MEANING
LLC	Long-Life Coolant
LNG	Liquefied Natural Gas
LO	Low
LPG	Liquefied Petroleum Gas
LSD	Limited Slip Differential
LSP & BV	Load Sensing Proportioning and Bypass Valve
LSPV	Load Sensing Proportioning Valve
M/T, MTM	Manual Transmission (Transaxle)
MAP	Manifold Absolute Pressure
MAX.	Maximum
MG1	Motor Generator No. 1
MG2	Motor Generator No. 2
MIC	Microphone
MIL	Malfunction Indicator Lamp
MIN.	Minimum
MMT	Multi-mode Manual Transmission
MP	Multipurpose
MPI	Multipoint Electronic Injection
MPX	Multiplex Communication System
MT	Mount
MTG	Mounting
N	Neutral
NA	Natural Aspiration
NO. / No.	Number
O/D	Overdrive
O/S	Oversize
O2S	Oxygen Sensor
OC	Oxidation Catalyst
OCV	Oil Control Valve
OEM	Original Equipment Manufacturing
OHC	Overhead Camshaft
OHV	Overhead Valve
OPT	Option
ORVR	On-board Refueling Vapor Recovery
P & BV	Proportioning And Bypass Valve
P/W	Power Window
PBD	Power Back Door
PCS	Power Control System
PCV	Positive Crankcase Ventilation
PKB	Parking Brake
PPS	Progressive Power Steering
PROM	Programmable Read Only Memory
PS	Power Steering
PSD	Power Slide Door
PTC	Positive Temperature Coefficient
PTO	Power Take-Off
PZEV	Partial Zero Emission Vehicle
R & P	Rack and Pinion
R/B	Relay Block

ABBREVIATIONS	MEANING
R/F	Reinforcement
RAM	Random Access Memory
RBS	Recirculating Ball Type Steering
RFS	Rigid Front Suspension
RH	Right-Hand
RHD	Right-Hand Drive
RLY	Relay
ROM	Read Only Memory
RR / Rr	Rear
RRS	Rigid Rear Suspension
RSE	Rear Seat Entertainment
RWD	Rear-Wheel Drive
SC	Supercharger
SCV	Swirl Control Valve
SDN	Sedan
SEN	Sensor
SICS	Starting Injection Control System
SOC	State Of Charge
SOHC	Single Overhead Camshaft
SPEC	Specification
SPI	Single Point Injection
SRS	Supplemental Restraint System
SSM	Special Service Materials
SST	Special Service Tools
STD	Standard
STJ	Cold-Start Fuel Injection
SW	Switch
SYS	System
T/A	Transaxle
T/M	Transmission
TACH	Tachometer
TAM	P.T. TOYOTA-Astra Motor
TASA	TOYOTA Argentina S.A.
TAT	TOYOTA Motor Thailand Co. Ltd.
TAW	TOYOTA Auto Works Co. Ltd.
TBI	Throttle Body Electronic Fuel Injection
TC	Turbocharger
TCCS	TOYOTA Computer-Controlled System
TCV	Timing Control Valve
TDC	Top Dead Center
TDV	TOYOTA de Venezuela C.A.
TEMP.	Temperature
TEMS	TOYOTA Electronic Modulated Suspension
TFT	TOYOTA Free-Tronic
TIS	Total Information System For Vehicle Development
TKM	TOYOTA Kirloskar Motor Ltd.
TMC	TOYOTA Motor Corporation
TMMIN	P.T. TOYOTA Motor Manufacturing Indonesia
TMMK	TOYOTA Motor Manufacturing Kentucky, Inc.

ABBREVIATIONS	MEANING
TMP	TOYOTA Motor Philippines Corp.
TMT	TOYOTA Motor Thailand Co. Ltd.
TRAC	Traction Control System
TRC	Traction Control System
TSAM	TOYOTA South Africa Motors (Pty) Ltd.
TURBO	Turbocharge
TWC	Three-Way Catalyst
U/D	Underdrive
U/S	Undersize
VCV	Vacuum Control Valve
VDIM	Vehicle Dynamics Integrated Management
VENT	Ventilator
VGRS	Variable Gear Ratio Steering
VIM	Vehicle Interface Module
VIN	Vehicle Identification Number
VPS	Variable Power Steering
VSC	Vehicle Stability Control
VSV	Vacuum Switching Valve
VTV	Vacuum Transmitting Valve
VVT-i	Variable Valve Timing-intelligent
W/ / w/	With
W/H	Wire Harness
W/O / w/o	Without
WGN	Wagon

INSTALLATION

HINT:

- Use the same procedures for the RH and LH sides.
- The procedures listed below are for the LH side.
- A bolt without a torque specification is shown in the standard bolt chart (see page SS-2).

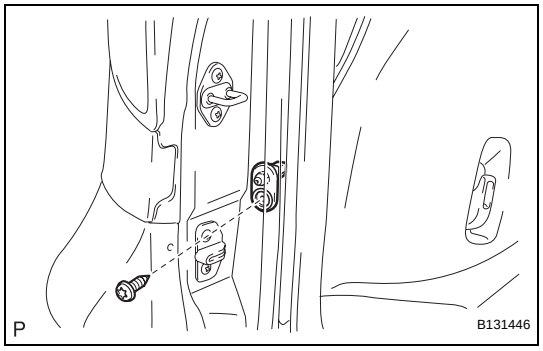

1. INSTALL BACK DOOR COURTESY LIGHT SWITCH ASSEMBLY

(a) Connect the connector.

(b) Install the switch with the bolt.

2. CONNECT CABLE TO NEGATIVE BATTERY TERMINAL

BACK DOOR COURTESY SWITCH

COMPONENTS

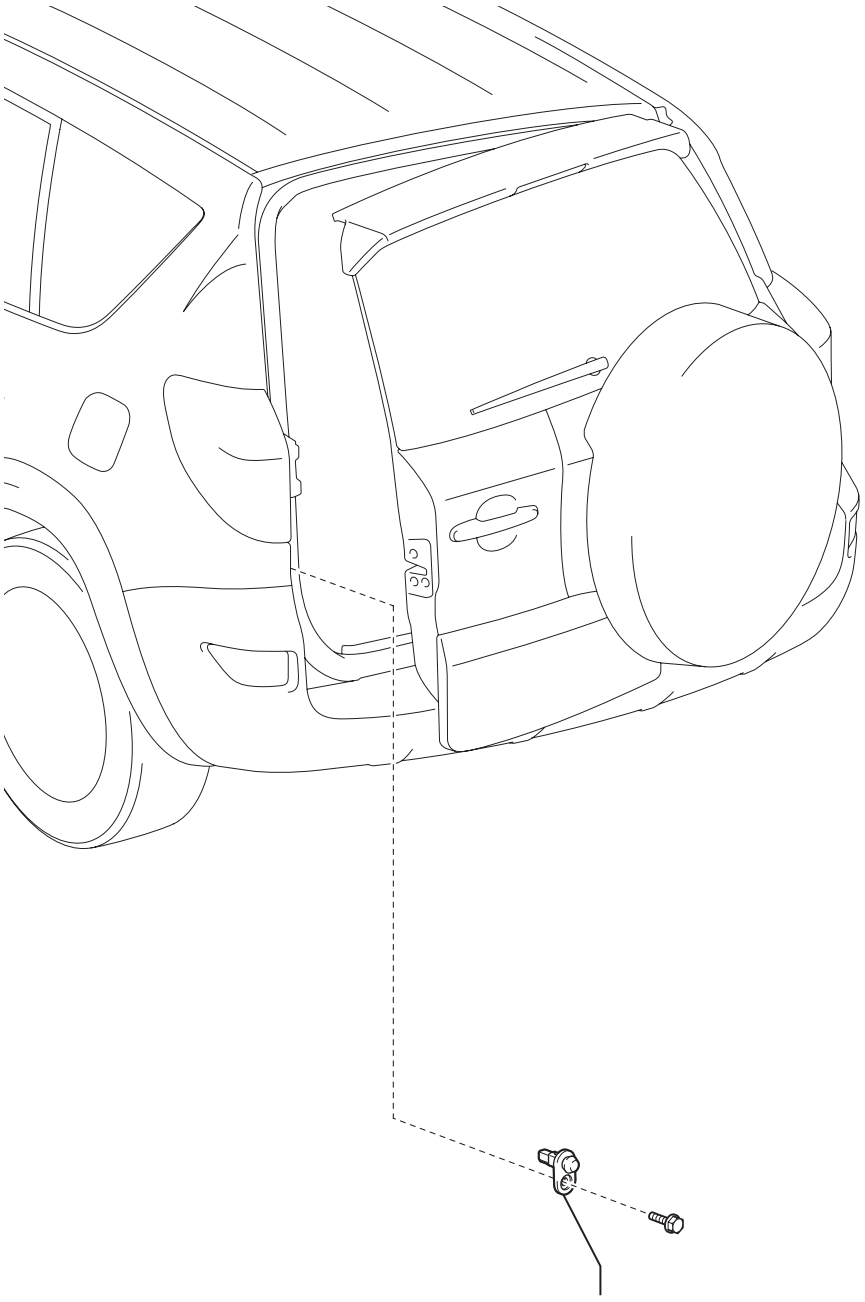

P

B136296E02

REMOVAL

1. DISCONNECT CABLE FROM NEGATIVE BATTERY TERMINAL

CAUTION:

Wait at least 90 seconds after disconnecting the cable from the negative (-) battery terminal to prevent airbag and seat belt pretensioner activation.

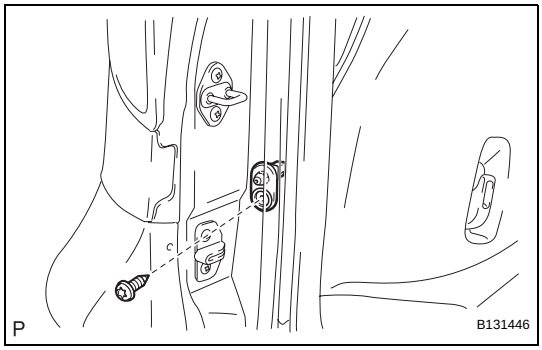

2. REMOVE BACK DOOR COURTESY LIGHT SWITCH ASSEMBLY

(a) Remove the bolt and switch.

(b) Disconnect the connector.

INSPECTION

1. INSPECT BACK DOOR COURTESY LIGHT SWITCH ASSEMBLY

(a) Measure the resistance of the switch.

Standard resistance

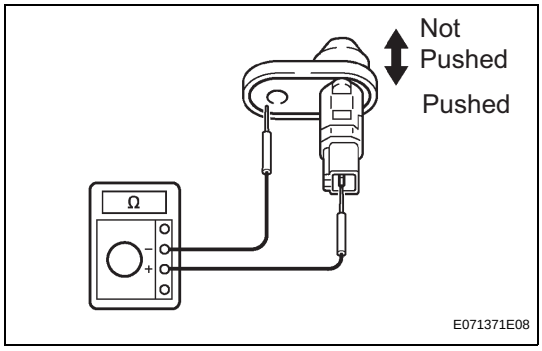

Tester Connection	Condition	Specified Condition
1 - Switch body	Pushed	10 kΩ or higher
1 - Switch body	Not pushed	Below 1 Ω

If the result is not as specified, replace the switch assembly.

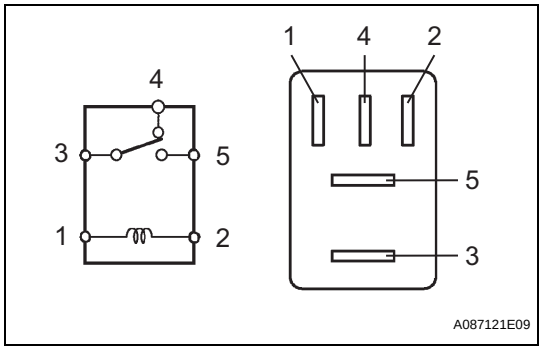

BRK RELAY

ON-VEHICLE INSPECTION

1. INSPECT BRK RELAY

(a) Remove the BRK relay from the engine room No. 1 relay block.

(b) Measure the resistance of the relay.

Standard resistance

Tester Connection	Specified Condition
3 - 4	Below 1 Ω
3 - 4	10 kΩ or higher (Battery voltage applied to terminals 1 and 2)
3 - 5	10 kΩ or higher
3 - 5	Below 1 Ω (Battery voltage applied to terminals 1 and 2)

If the result is not as specified, replace the relay.

DAYTIME RUNNING LIGHT RELAY

ON-VEHICLE INSPECTION

1. INSPECT DAY TIME RUNNING LIGHT RELAY

(a) Remove the No. 2 relay, No. 3 relay and No. 4 relay from the engine room No. 2 relay block.

(b) Measure the resistance of the relays.
Standard resistance:
No. 2, No. 4

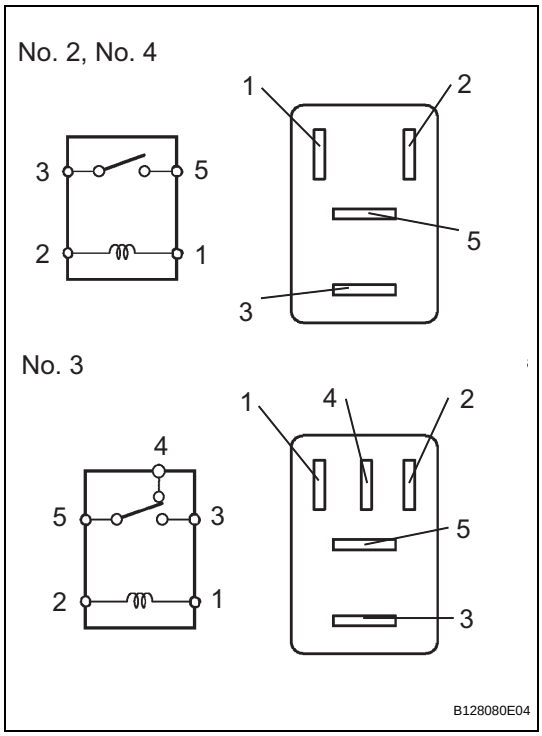

Tester Connection	Specified Condition
3 - 5	10 kΩ or higher
3 - 5	Below 1 Ω (Battery voltage applied to terminals 1 and 2)

No. 3

Tester Connection	Specified Condition
4 - 5	Below 1 Ω
4 - 5	10 kΩ or higher (Battery voltage applied to terminals 1 and 2)
3 - 5	Below 1 Ω
3 - 5	10 kΩ or higher (Battery voltage applied to terminals 1 and 2)

If the result is not as specified, replace the relay.

DISASSEMBLY

HINT:

- Use the same procedures for the RH side and LH sides.
- The procedures listed below are for the LH side.

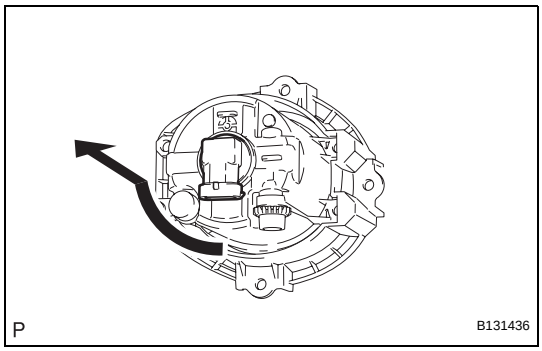

1. REMOVE FOG LIGHT BULB

(a) Turn the bulb in the direction indicated by the arrow and pull to remove it.

ADJUSTMENT

1. VEHICLE PREPARATION FOR FOG LIGHT AIM ADJUSTMENT

(a) Prepare the vehicle:
- Ensure that the vehicle has no damage or deformation around the fog lights.
- Fill up the fuel tank.
- Make sure that all of the different types of oil in the vehicle (engine oil, etc.) are filled to the specified levels.
- Make sure that the coolant is filled to the specified level.
- Inflate the tires to the appropriate pressure.
- Place the spare tire, tools, and jack in their original positions.
- Unload the vehicle.
- Have a person that weighs approximately 55 kg (121 lb) sit in the driver seat.

2. PREPARATION FOR FOG LIGHT AIMING (Using Screen)

(a) Prepare the vehicle according to the following conditions:
- Move the vehicle to a location that is sufficiently dark so that the fog light cutoff line can be visually checked. The cutoff line is an imaginary plane below which fog light light is projected and above which light is not projected.
- Move the vehicle to a level surface.
- Point the front of the vehicle at a wall. The wall must be perpendicular to the surface that the vehicle is on.
- Position the vehicle 10 m (32.8 ft.) from the wall.
- Push down on the vehicle several times to settle the suspension.

  HINT:

  A distance of 10 m (32.8 ft.) between the vehicle and the wall is necessary for proper aim adjustment. If unavailable, secure a distance of exactly 3 m (9.8 ft.). In the illustrations below, view the part of the illustration applicable to the distance from the vehicle to the wall.

  NOTICE:

  Be careful not to damage the suspension.

(b) Prepare a piece of thick white paper that is approximately 2 m (6.6 ft.) (height) x 4 m (13.1 ft.) (width) to use as a screen.

(c) Draw a vertical line down the center of the screen (V line).

(d) Set the screen as shown in the illustration.

HINT:
- Stand the screen perpendicular to the ground.

- Align the V line on the screen with the center of the vehicle.

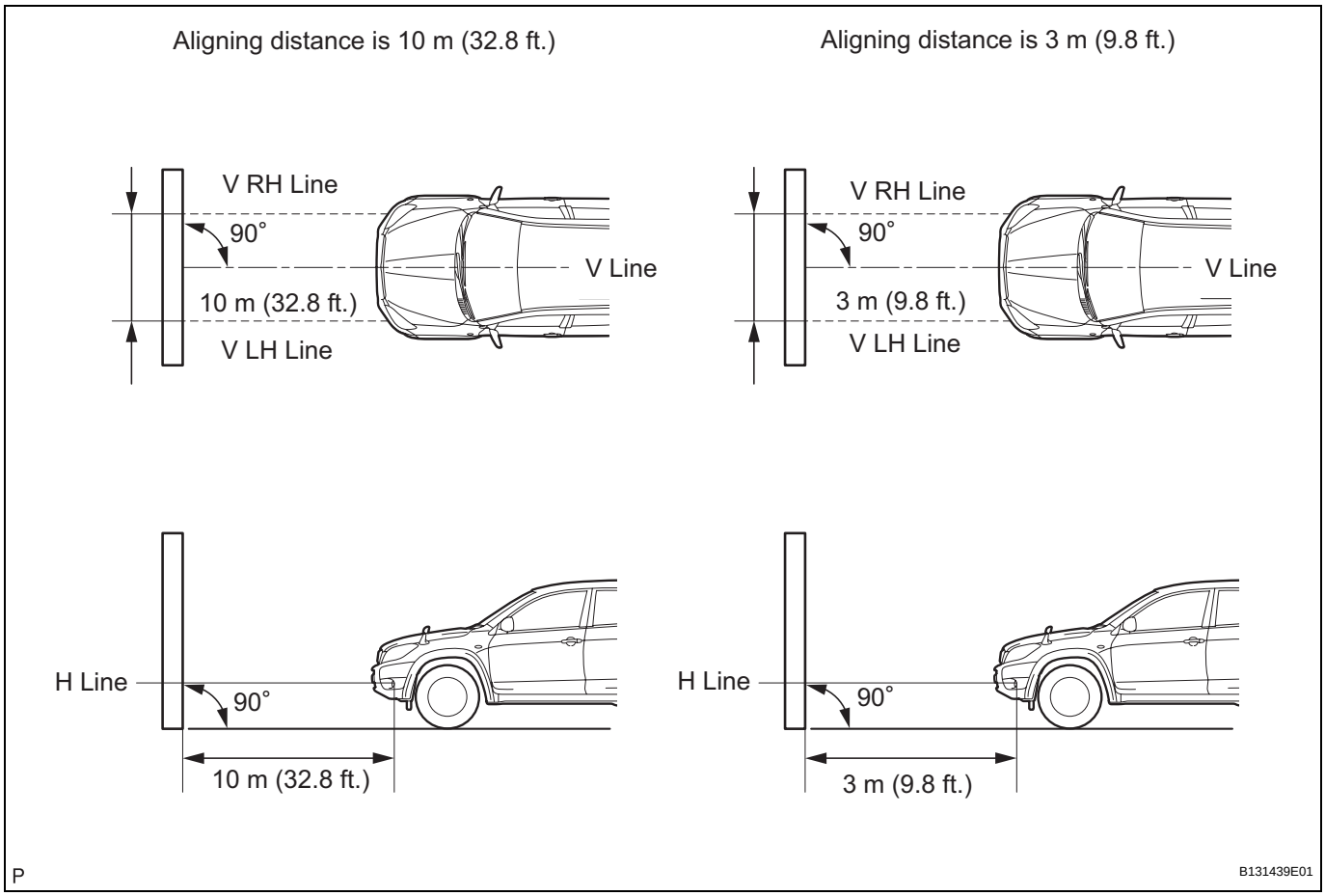

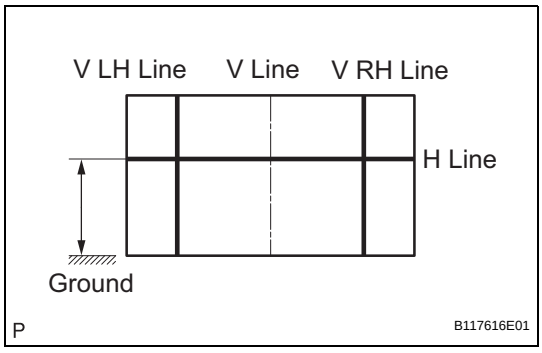

(e) Draw base lines (H line, V LH and V RH lines) on the screen as shown in the illustration.
   (1) H Line (fog light height):
   Draw a horizontal line across the screen so that it passes through the center marks. The H line should be at the same height as the bulb center marks of the fog lights.
   (2) V LH Line, V RH Line (center mark position of LH and RH fog lights):
   Draw 2 vertical lines so that they intersect the H line at each center mark.

3. INSPECT FOG LIGHT AIMING

(a) Choose a fog light to inspect first. Cover or disconnect the connector of the other fog light to prevent light from that fog light from affecting the fog light aiming inspection.

(b) Start the engine.
NOTICE:
Engine rpm must be 1,500 or more.

LI

(c) Turn on the fog lights and make sure that the cutoff line is within the specified area shown in the illustration.

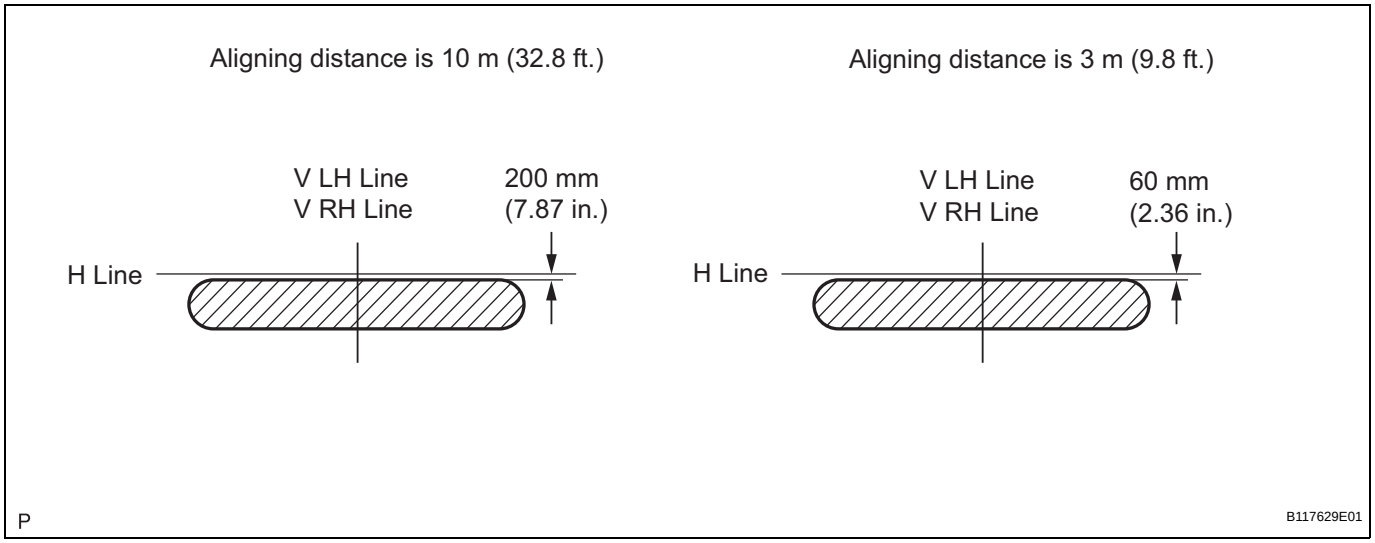

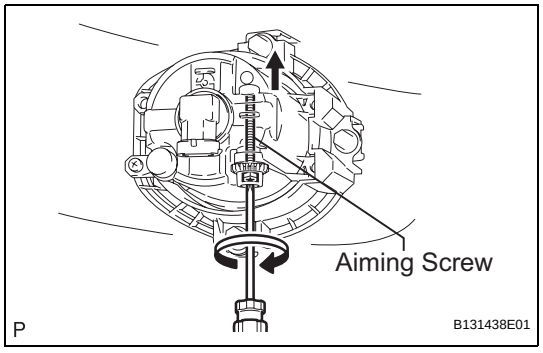

4. ADJUST FOG LIGHT AIMING

(a) Adjust the fog light aim into the specified range by turning the aiming screw with a screwdriver.

NOTICE:

If the screw is tightened too much, loosen it and then retighten it so that the final turn of the screw is in the clockwise direction.

REASSEMBLY

HINT:

- Use the same procedures for the RH side and LH sides.
- The procedures listed below are for the LH side.

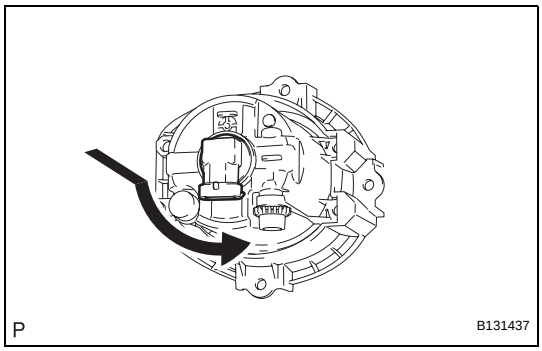

1. INSTALL FOG LIGHT BULB

(a) Turn the bulb in the direction indicated by the arrow to install it.

INSTALLATION

HINT:

- Use the same procedures for the RH and LH sides.
- The procedures listed below are for the LH side.

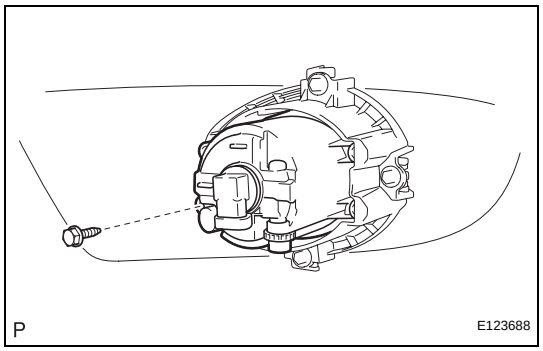

1. **INSTALL FOG LIGHT ASSEMBLY**
   (a) Install the fog light with the bolt.
   (b) Connect the connector.
2. **INSTALL FRONT BUMPER COVER (See page ET-11)**
3. **INSTALL RADIATOR SUPPORT OPENING COVER (See page ET-12)**
4. **INSTALL FRONT FENDER LINER RH (See page ET-12)**
5. **INSTALL FRONT FENDER LINER LH (See page ET-12)**
6. **INSTALL CABLE TO NEGATIVE BATTERY TERMINAL**

FOG LIGHT ASSEMBLY

COMPONENTS

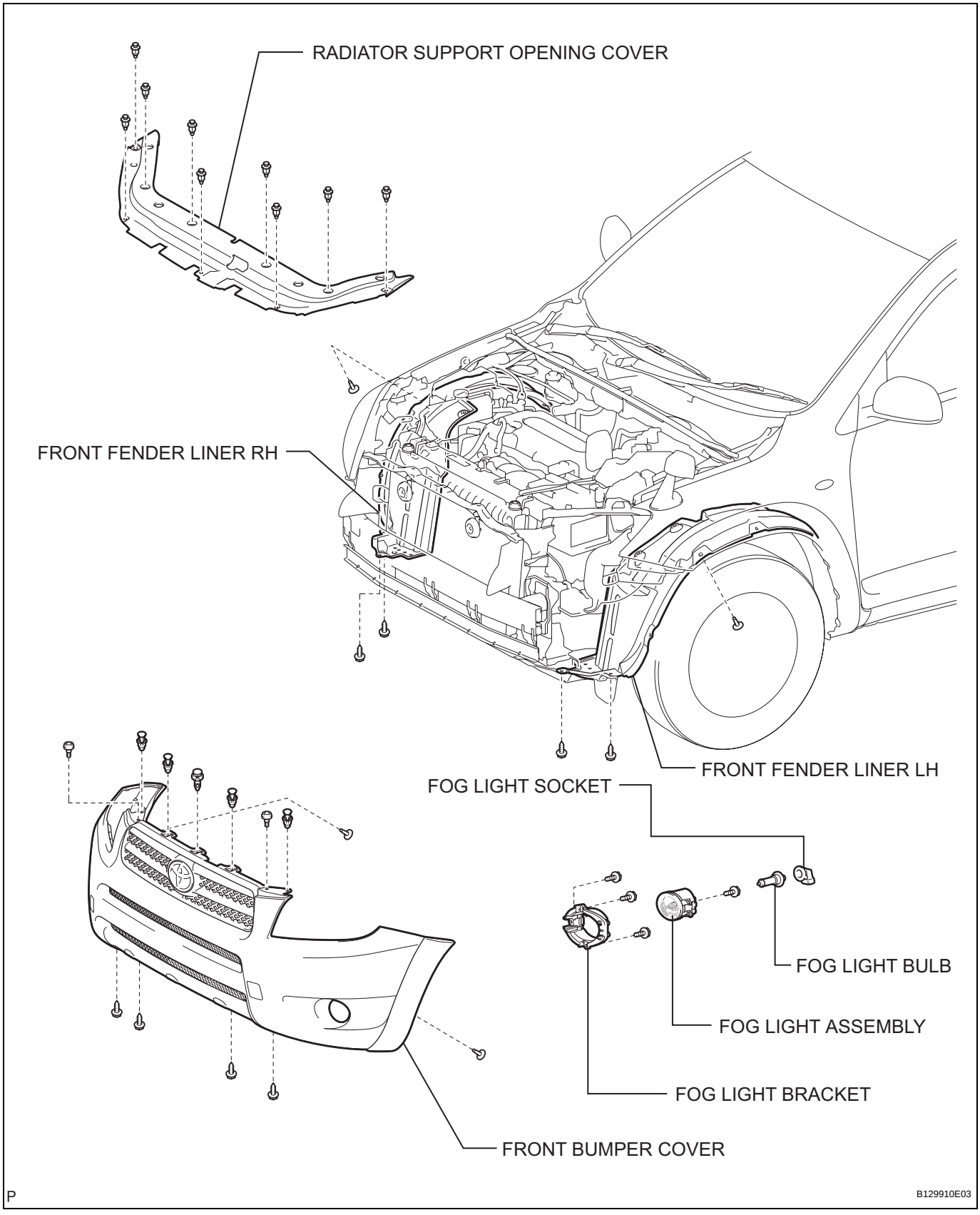

REMOVAL

HINT:

- Use the same procedures for the RH and LH sides.
- The procedures listed below are for the LH side.

1. **DISCONNECT CABLE FROM NEGATIVE BATTERY TERMINAL**
   CAUTION:
   Wait at least 90 seconds after disconnecting the cable from the negative (-) battery terminal to prevent airbag and seat belt pretensioner activation.
2. **REMOVE FRONT FENDER LINER LH (See page ET-6)**
3. **REMOVE FRONT FENDER LINER RH (See page ET-4)**
4. **REMOVE RADIATOR SUPPORT OPENING COVER (See page ET-4)**
5. **REMOVE FRONT BUMPER COVER (See page ET-5)**
6. **REMOVE FOG LIGHT ASSEMBLY**
   (a) Disconnect the connector.
   (b) Remove the bolt and fog light.

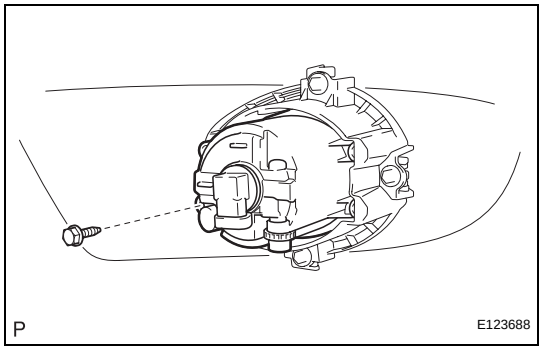

FOG LIGHT RELAY

ON-VEHICLE INSPECTION

1. INSPECT FRONT FOG LIGHT RELAY

(a) Remove the front fog relay from the No. 6 relay block.

(b) Measure the resistance of the relay.
Standard resistance

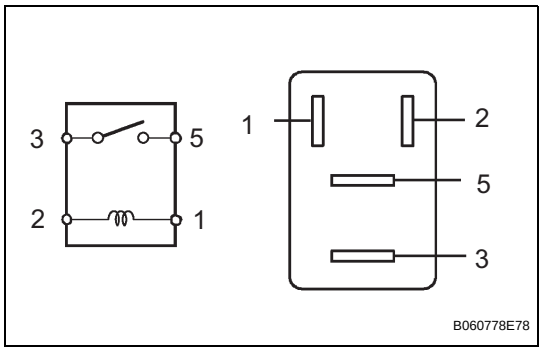

Tester Connection	Specified Condition
3 - 5	10 kΩ or higher
3 - 5	Below 1 Ω (Battery voltage applied to terminals 1 and 2)

If the result is not as specified, replace the relay.

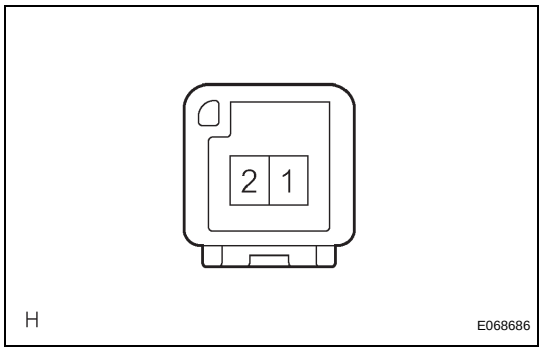

FOOTWELL LIGHT

ON-VEHICLE INSPECTION

1. INSPECT FOOTWELL LIGHT

(a) Connect the battery's positive (+) lead to terminal 2 and the negative (-) lead to terminal 1, then check that the light comes on.

OK:

Light comes on.

If the result is not as specified, replace the light.

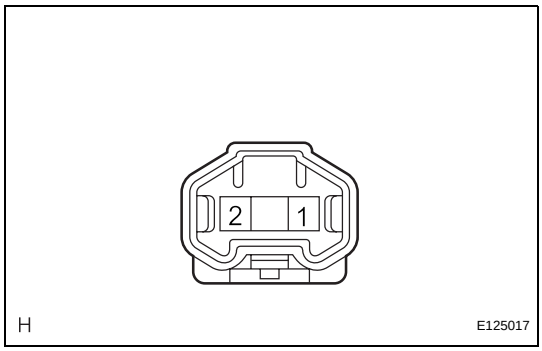

FRONT CONSOLE ILLUMINATION

ON-VEHICLE INSPECTION

1. INSPECT FRONT CONSOLE ILLUMINATION

(a) Connect the battery's positive (+) lead to terminal 1 and the negative (-) lead to terminal 2, then check that the light comes on.

OK:

Light comes on.

If the result is not as specified, replace the front console illumination.

INSTALLATION

HINT:

- Use the same procedures for the RH and LH sides.
- The procedures listed below are for the LH side.
- A bolt without a torque specification is shown in the standard bolt chart (see page SS-2).

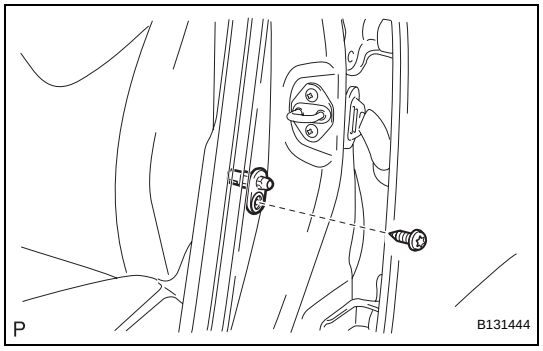

1. INSTALL FRONT DOOR COURTESY LIGHT SWITCH ASSEMBLY

(a) Connect the connector.

(b) Install the switch with the bolt.

2. CONNECT CABLE TO NEGATIVE BATTERY TERMINAL

FRONT DOOR COURTESY SWITCH

COMPONENTS

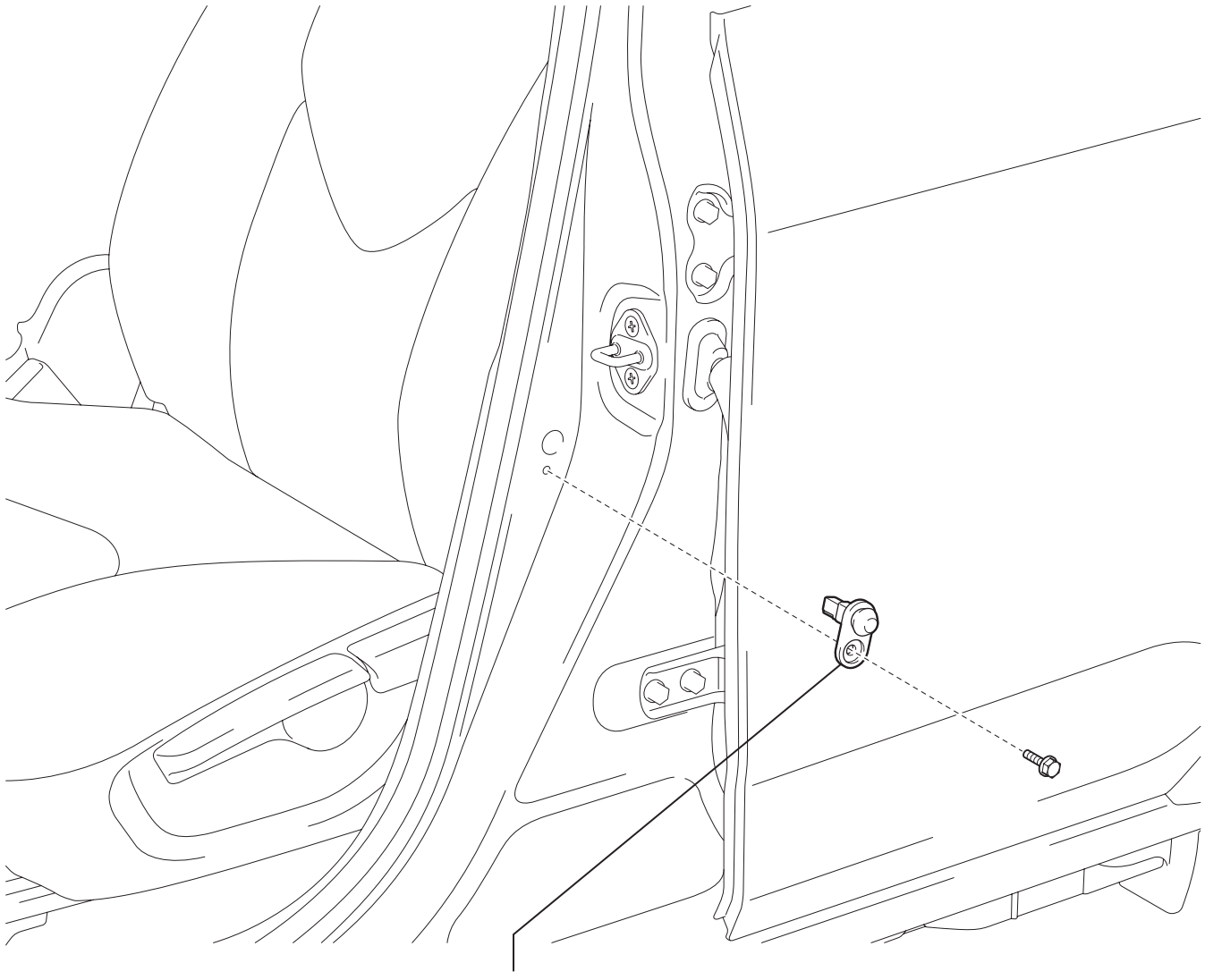

FRONT DOOR COURTESY LIGHT SWITCH ASSEMBLY

P

B129917E02

REMOVAL

HINT:

- Use the same procedures for the RH and LH sides.
- The procedures listed below are for the LH side.

1. DISCONNECT CABLE FROM NEGATIVE BATTERY TERMINAL

CAUTION:

Wait at least 90 seconds after disconnecting the cable from the negative (-) battery terminal to prevent airbag and seat belt pretensioner activation.

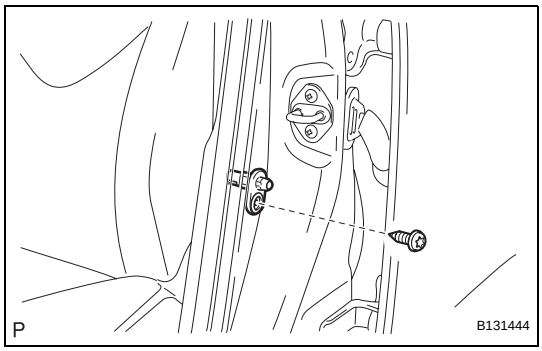

2. REMOVE FRONT DOOR COURTESY LIGHT SWITCH ASSEMBLY

(a) Remove the bolt and switch.

(b) Disconnect the connector.

INSPECTION

1. INSPECT FRONT DOOR COURTESY LIGHT SWITCH ASSEMBLY

(a) Measure the resistance of the switch.

Standard resistance

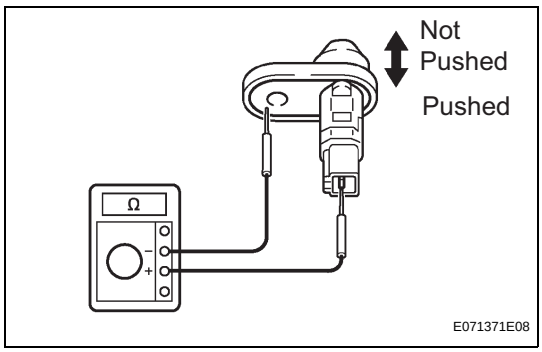

Tester Connection	Switch Condition	Specified Condition
1 - Switch body	Pushed	10 kΩ or higher
1 - Switch body	Not pushed	Below 1 Ω

If the result is not as specified, replace the switch assembly.

HAZARD WARNING SWITCH

COMPONENTS

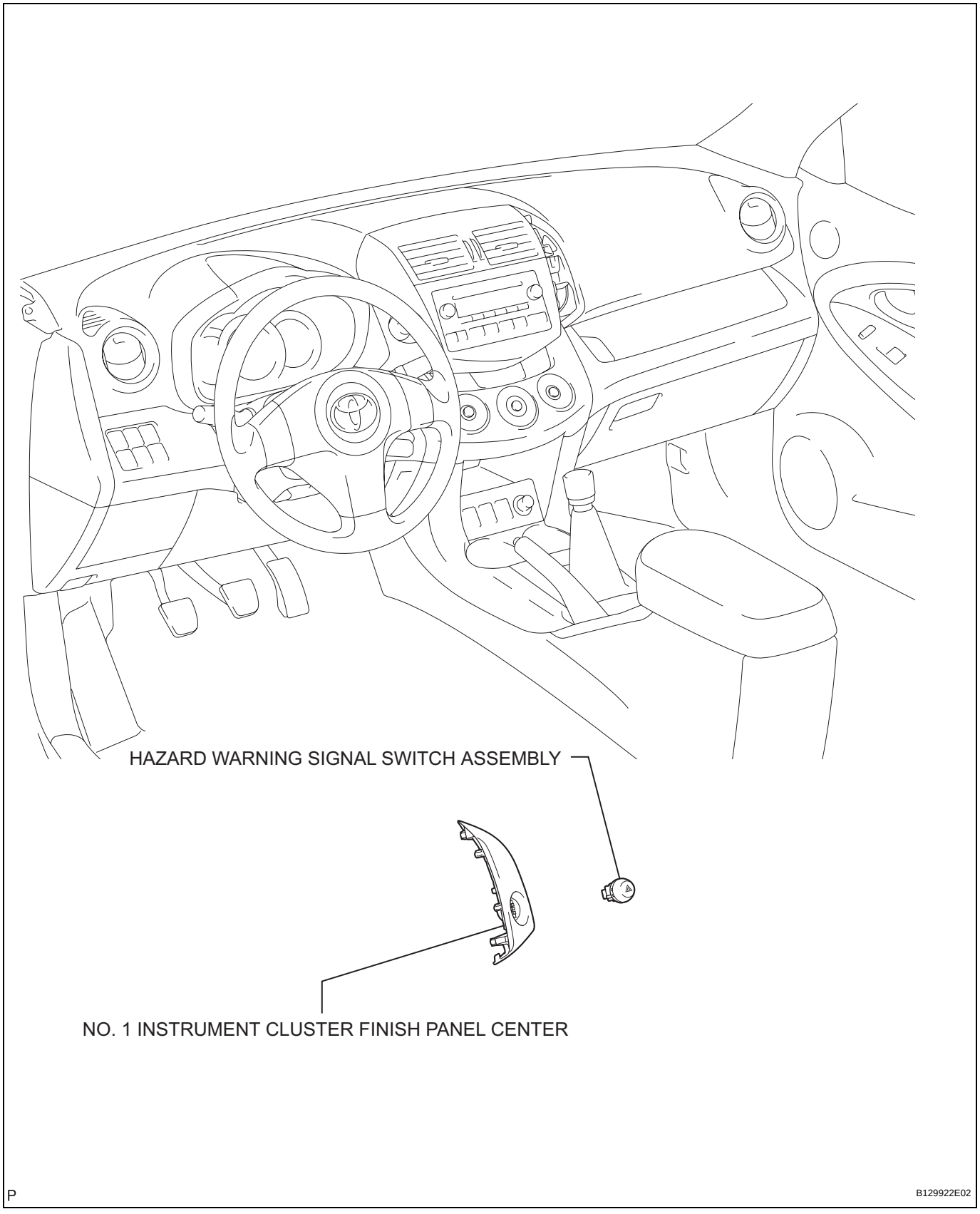

REMOVAL

1. **DISCONNECT CABLE FROM NEGATIVE BATTERY TERMINAL**
   CAUTION:
   Wait at least 90 seconds after disconnecting the cable from the negative (-) battery terminal to prevent airbag and seat belt pretensioner activation.
2. **REMOVE NO. 1 INSTRUMENT CLUSTER FINISH PANEL CENTER (See page IP-5)**
3. **REMOVE HAZARD WARNING SIGNAL SWITCH ASSEMBLY**
   (a) Detach the 2 claws and remove the switch.

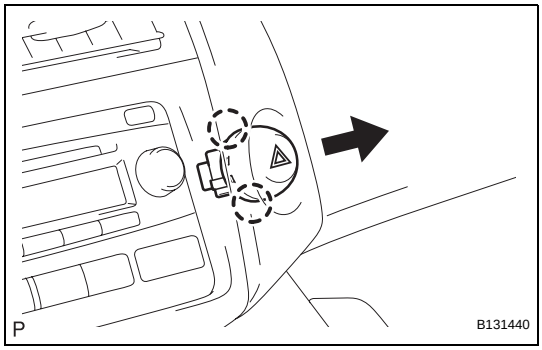

INSPECTION

1. **INSPECT HAZARD WARNING SIGNAL SWITCH ASSEMBLY**
   (a) Measure the resistance of the switch.
   Standard resistance

Tester Connection	Switch Condition	Specified Condition
4 (TB) - 1 (E)	OFF (Not pushed)	10 kΩ or higher
4 (TB) - 1 (E)	ON (Pushed)	Below 1 Ω

   If the result is not as specified, replace the switch assembly.
   (b) Inspect the switch illumination.
   (1) Connect the battery positive (+) lead to terminal 3 (ILL+) and the negative (-) lead to terminal 2 (ILL-), then check that the light comes on.
   OK:
   LED comes on.
   If the result is not as specified, replace the light.

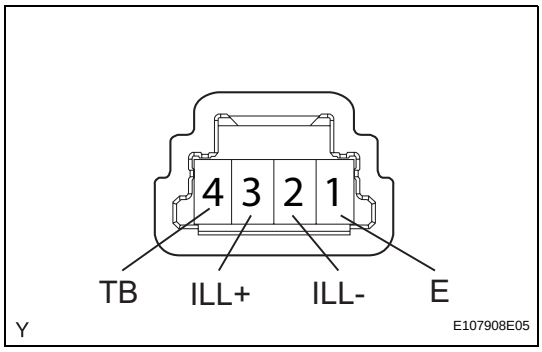

INSTALLATION

1. **INSTALL HAZARD WARNING SIGNAL SWITCH ASSEMBLY**
   (a) Attach the 2 claws to install the switch.
2. **INSTALL NO. 1 INSTRUMENT CLUSTER FINISH PANEL CENTER (See page IP-10)**
3. **CONNECT CABLE TO NEGATIVE BATTERY TERMINAL**

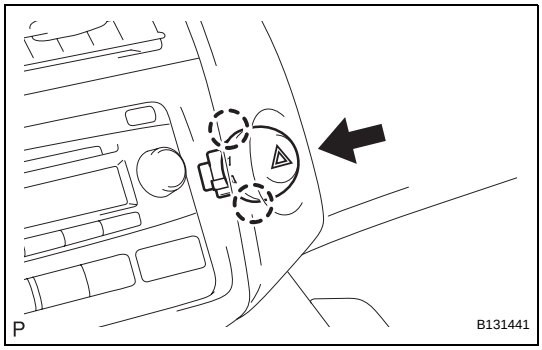

LI

REMOVAL

HINT:

- Use the same procedures for the RH and LH sides.
- The procedures listed below are for the LH side.

1. **DISCONNECT CABLE FROM NEGATIVE BATTERY TERMINAL**
2. **REMOVE FRONT FENDER LINER LH (See page ET-4)**
3. **REMOVE FRONT FENDER LINER RH (See page ET-4)**
4. **REMOVE RADIATOR SUPPORT OPENING COVER (See page ET-4)**
5. **REMOVE FRONT BUMPER COVER (See page ET-5)**
6. **REMOVE FRONT BUMPER REINFORCEMENT SUB-ASSEMBLY UPPER**
   (a) Disconnect the 2 horn connectors.
   (b) Remove the 2 bolts and reinforcement.
7. **REMOVE HEADLIGHT ASSEMBLY**
   (a) Remove the 3 screws and bolt.
   (b) Disconnect the connectors and remove the headlight.

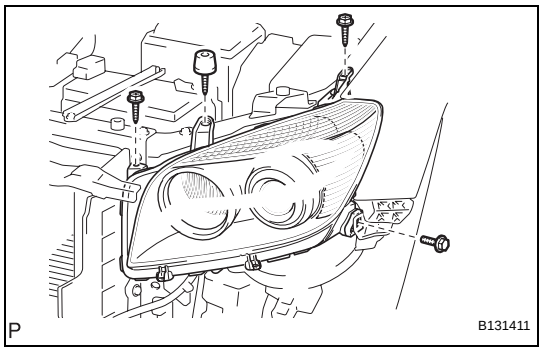

DISASSEMBLY

HINT:

- Use the same procedures for the RH and LH sides.
- The procedures listed below are for the LH side.

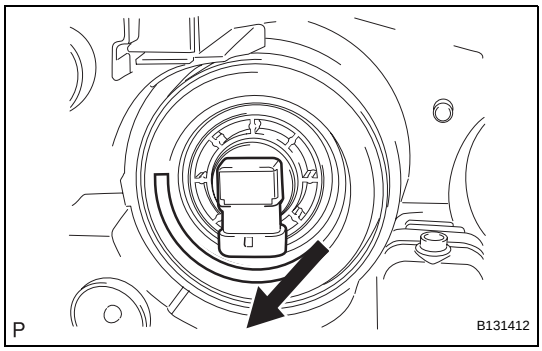

1. REMOVE NO. 1 HEADLIGHT BULB

(a) Turn the bulb in the direction indicated by the arrow and pull to remove it.

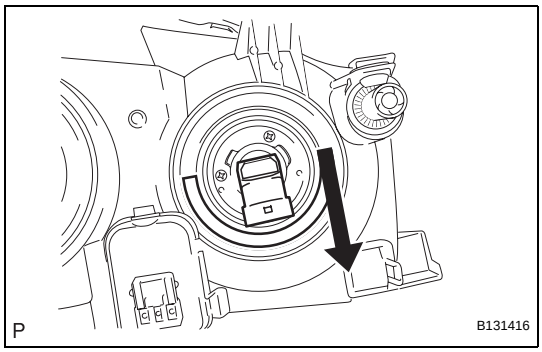

2. REMOVE NO. 2 HEADLIGHT BULB

(a) Turn the bulb in the direction indicated by the arrow and pull to remove it.

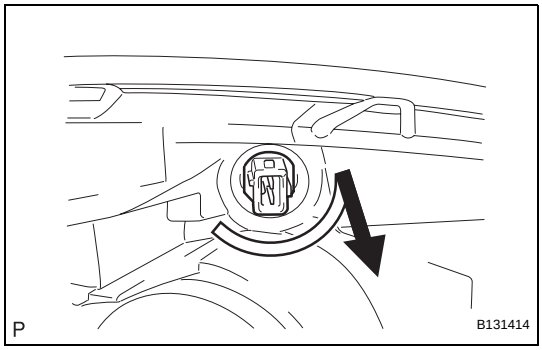

3. REMOVE CLEARANCE LIGHT BULB

(a) Turn the bulb in the direction indicated by the arrow and pull to remove it.

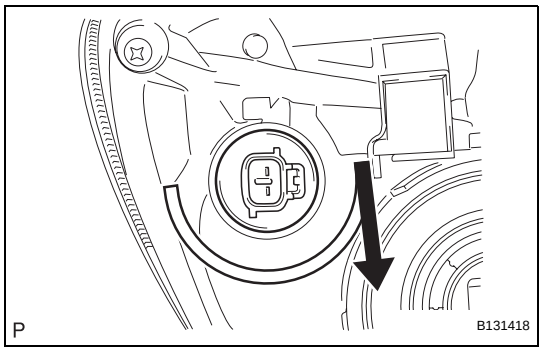

4. REMOVE FRONT TURN SIGNAL LIGHT BULB

(a) Turn the bulb/socket unit in the direction indicated by the arrow and pull to remove it.

(b) Remove the bulb from the socket.

ADJUSTMENT

1. VEHICLE PREPARATION FOR HEADLIGHT AIM ADJUSTMENT

(a) Prepare the vehicle:
- Ensure that the vehicle has no damage or deformation around the headlights.
- Fill up the fuel tank.
- Make sure that all of the different types of oil in the vehicle (engine oil, etc.) are filled to the specified levels.
- Make sure that the coolant is filled to the specified level.
- Inflate the tires to the appropriate pressure.
- Place the spare tire, tools, and jack in their original positions.
- Unload the vehicle.
- Have a person that weighs approximately 55 kg (121 lb) sit in the driver seat.

2. PREPARATION FOR HEADLIGHT AIMING (Using a Screen)

(a) Prepare the vehicle according to the following conditions:
- Move the vehicle to a location that is sufficiently dark so that the headlight cutoff line can be visually checked. The cutoff line is an imaginary plane below which headlight light is projected and above which light is not projected.
- Move the vehicle to a level surface.
- Point the front of the vehicle at a wall. The wall must be perpendicular to the surface that the vehicle is on.
- Position the vehicle 10 m (32.8 ft.) from the wall.
- Push down on the vehicle several times to settle the suspension. Do not damage the suspension.

HINT:
A distance of 10 m (32.8 ft.) between the vehicle and the wall is necessary for proper aim adjustment. If unavailable, secure a distance of exactly 3 m (9.8 ft.). In the illustrations below, view the part of the illustration applicable to the distance from the vehicle to the wall.

NOTICE:
Be careful not to damage the suspension.

(b) Prepare a piece of thick white paper that is approximately 2 m (6.6 ft.) (height) x 4 m (13.1 ft.) (width) to use as a screen.

(c) Draw a vertical line down the center of the screen (V line).

(d) Set the screen as shown in the illustration.
HINT:
- Stand the screen perpendicular to the ground.

- Align the V line on the screen with the center of the vehicle.

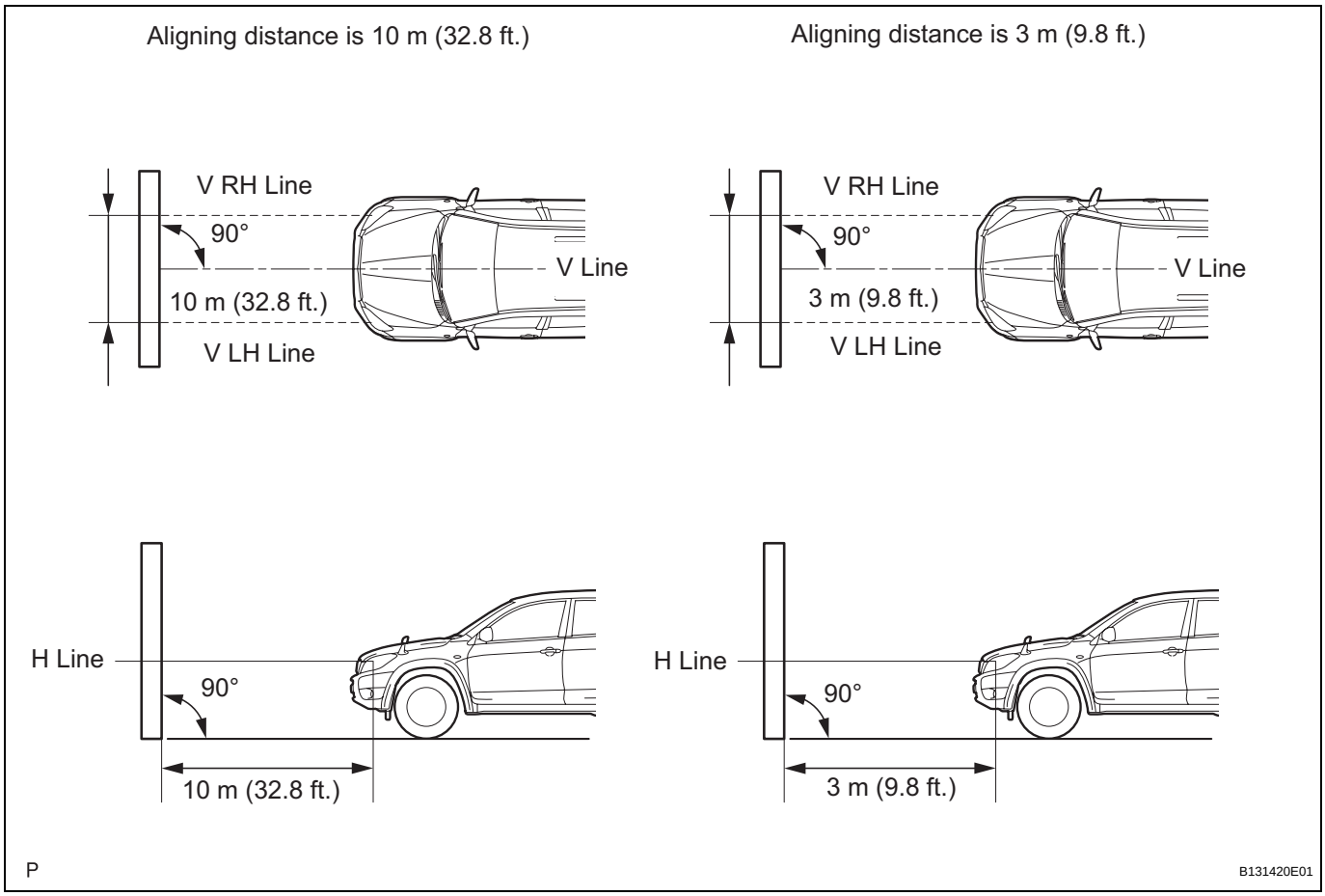

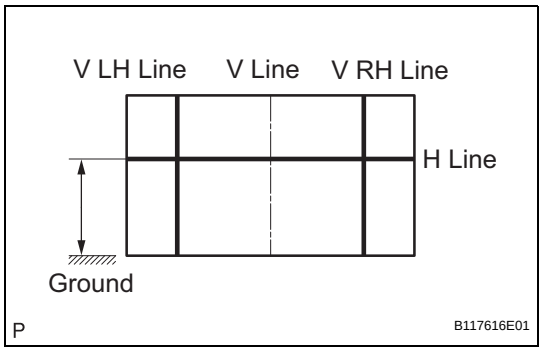

(e) Draw base lines (H line and V LH, V RH lines) on the screen as shown in the illustration.
HINT:
- The base lines differ for "lo beam inspection" and "hi beam inspection".
- Mark the headlight bulb center marks on the screen. If the center mark cannot be observed on the headlight, use the center of the headlight bulb or the manufacturer's name marked on the headlight as the center mark.

(1) H line (headlight height):
Draw a horizontal line across the screen so that it passes through the center marks. The H line should be at the same height as the headlight bulb center marks of the lo beam headlights.

(2) V LH line, V RH line (center mark position of LH and RH headlights):
Draw 2 vertical lines so that they intersect the H line at each center mark.

LI

3. INSPECT HEADLIGHT AIMING

(a) Choose a headlight to inspect first. Cover or disconnect the connector of the other headlight to prevent light from that headlight from affecting the headlight aiming inspection.
HINT:
When checking the aim of the hi beam bulb, cover the lo beam bulb or disconnect the connector.
NOTICE:
Do not keep the headlight covered for more than 3 minutes. The headlight lens is made of synthetic resin, and may easily melt or be damaged due to heat.

(b) Start the engine.
NOTICE:
Engine speed must be 1,500 rpm or more.

(c) Turn on the headlights and make sure that the cutoff line is within the specified area shown in the illustration.

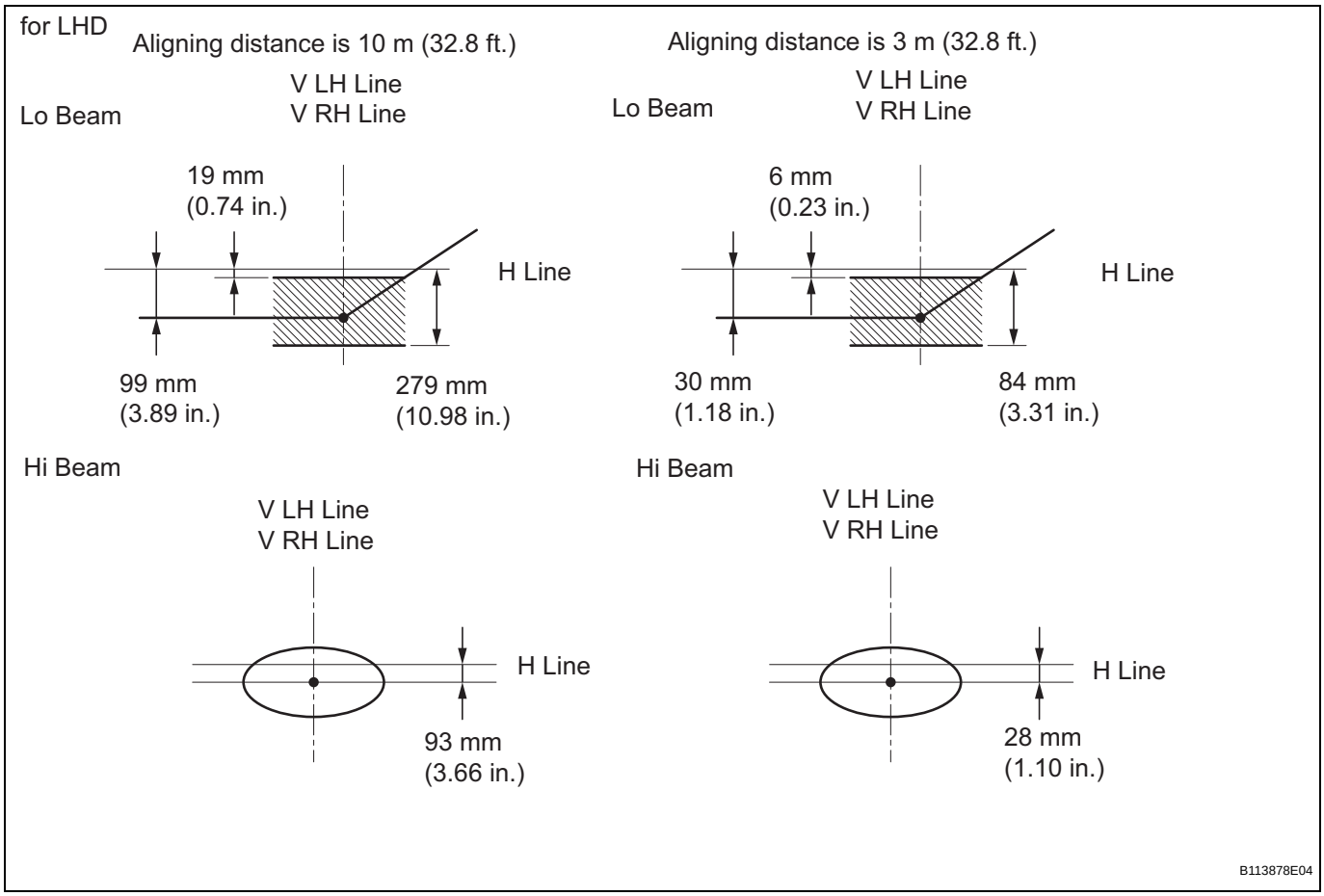

LI

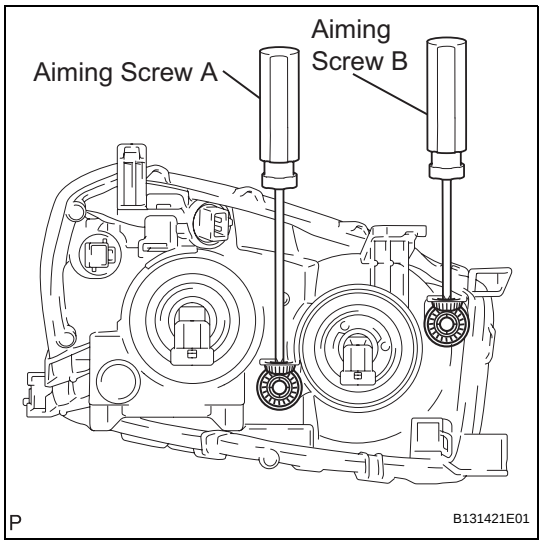

4. ADJUST HEADLIGHT AIMING

(a) Adjust the vertical headlight aim into the specified range by turning aiming screw A with a screwdriver.
HINT:
- Perform lo beam aim adjustment.
- The headlight aim moves down when turning the aiming screw clockwise, and moves up when turning the aiming screw counterclockwise.
- Adjust the aim vertically by turning the vertical aiming screw and the horizontal aiming screw at a 5:4 ratio (5 turns of the vertical aiming screw for 4 turns of the horizontal aiming screw).

NOTICE:
If the screw is tightened too much, loosen it and then retighten it so that the final turn of the screw is in the clockwise direction.

(b) Adjust the horizontal headlight aim into the specified range by turning aiming screw B with a screwdriver.
HINT:
Perform lo beam aim adjustment.
NOTICE:
If the screw is tightened too much, loosen it and then retighten it so that the final turn of the screw is in the clockwise direction.

REASSEMBLY

HINT:

- Use the same procedures for the RH and LH sides.
- The procedures listed below are for the LH side.

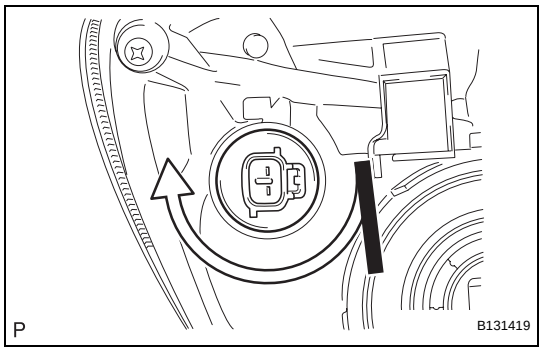

1. INSTALL FRONT TURN SIGNAL LIGHT BULB

(a) Install the bulb to the socket.
(b) Insert the bulb/socket unit into the headlight.
(c) Turn the bulb/socket unit in the direction indicated by the arrow to install it.

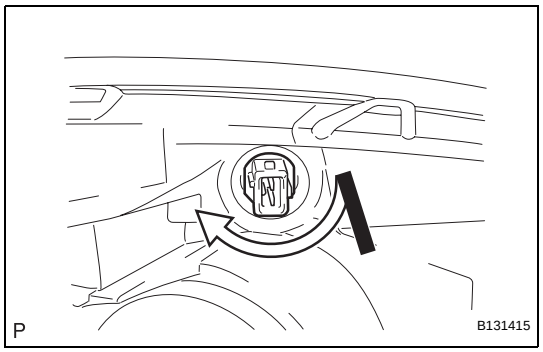

2. INSTALL CLEARANCE LIGHT BULB

(a) Insert the bulb into the headlight.
(b) Turn the bulb in the direction indicated by the arrow to install it.

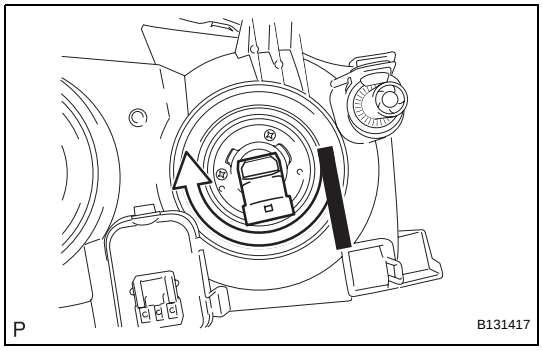

3. INSTALL NO. 2 HEADLIGHT BULB

(a) Insert the bulb into the headlight.
(b) Turn the bulb in the direction indicated by the arrow to install it.

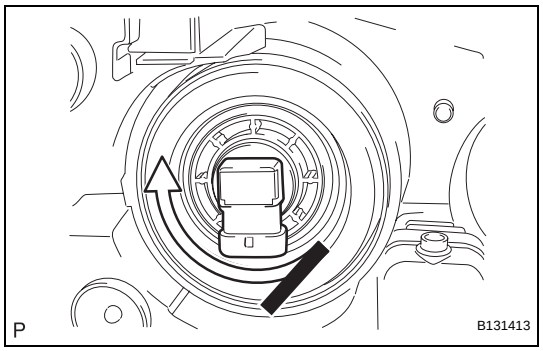

4. INSTALL NO. 1 HEADLIGHT BULB

(a) Insert the bulb into the headlight.
(b) Turn the bulb in the direction indicated by the arrow to install it.

INSTALLATION

HINT:

- Use the same procedures for the RH and LH sides.
- The procedures listed below are for the LH side.

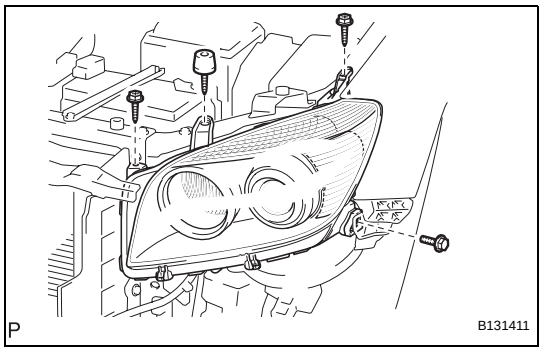

1. **INSTALL HEADLIGHT ASSEMBLY LH**
   (a) Connect the connectors with the headlight.
   (b) Install the 3 screws and bolt.
2. **INSTALL FRONT BUMPER REINFORCEMENT SUB-ASSEMBLY UPPER**
   (a) Install the reinforcement with the 2 bolts.
   (b) Connect the 2 horns connectors.
3. **INSTALL FRONT BUMPER COVER (See page ET-11)**
4. **INSTALL RADIATOR SUPPORT OPENING COVER (See page ET-12)**
5. **INSTALL FRONT FENDER LINER RH (See page ET-10)**
6. **INSTALL FRONT FENDER LINER LH (See page ET-12)**
7. **CONNECT CABLE TO NEGATIVE BATTERY TERMINAL**
8. **ADJUST HEADLIGHT AIMING**
   (a) Adjust the headlight aiming (see page LI-94).

HEADLIGHT ASSEMBLY

COMPONENTS

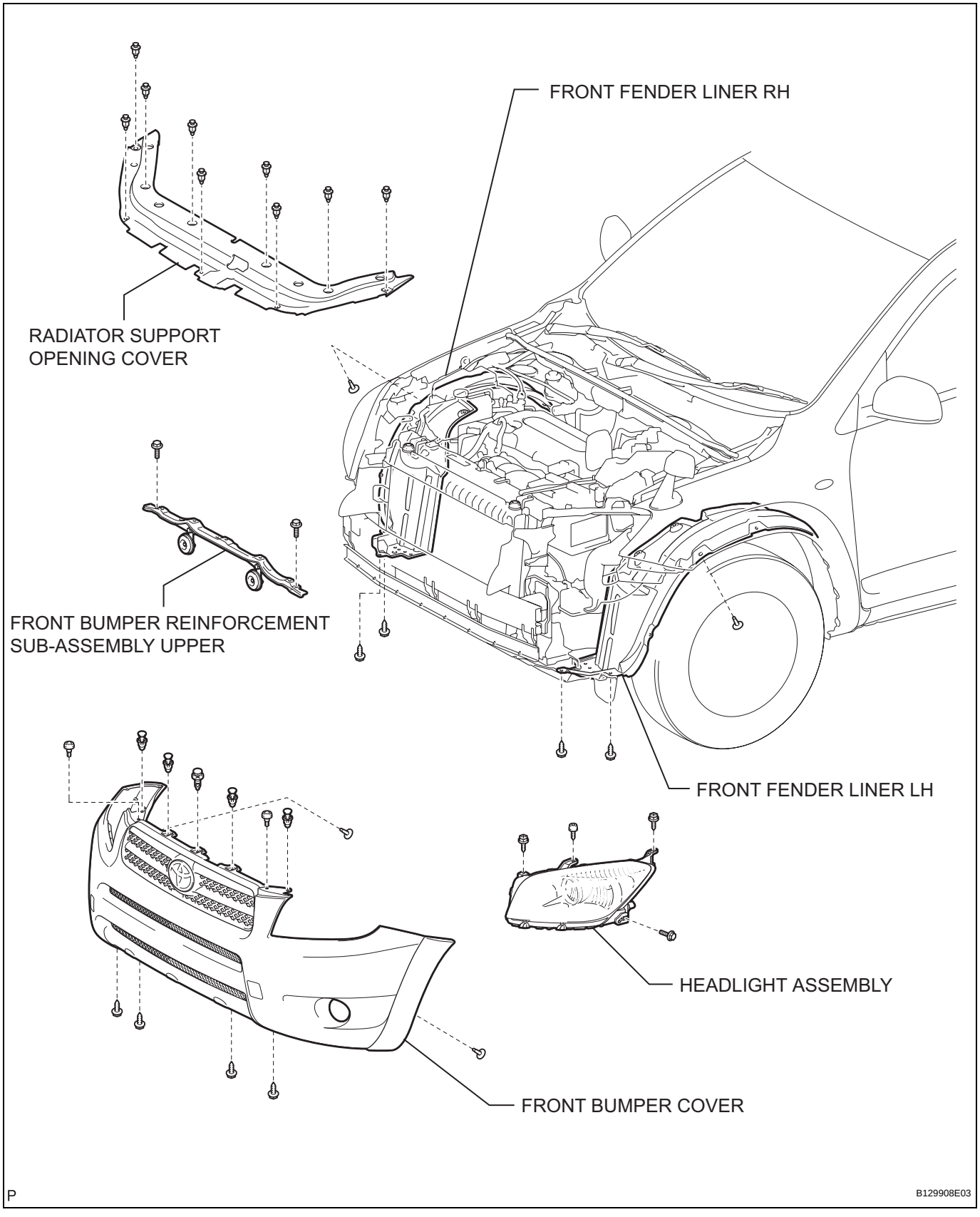

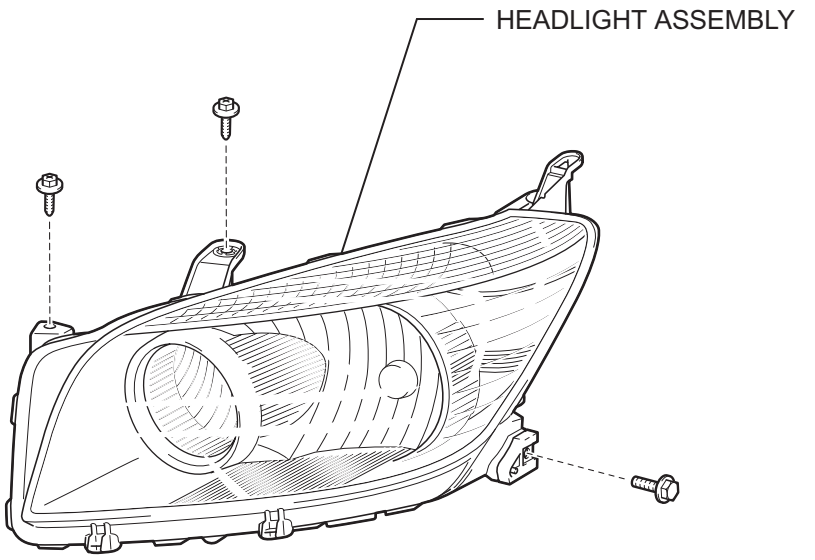

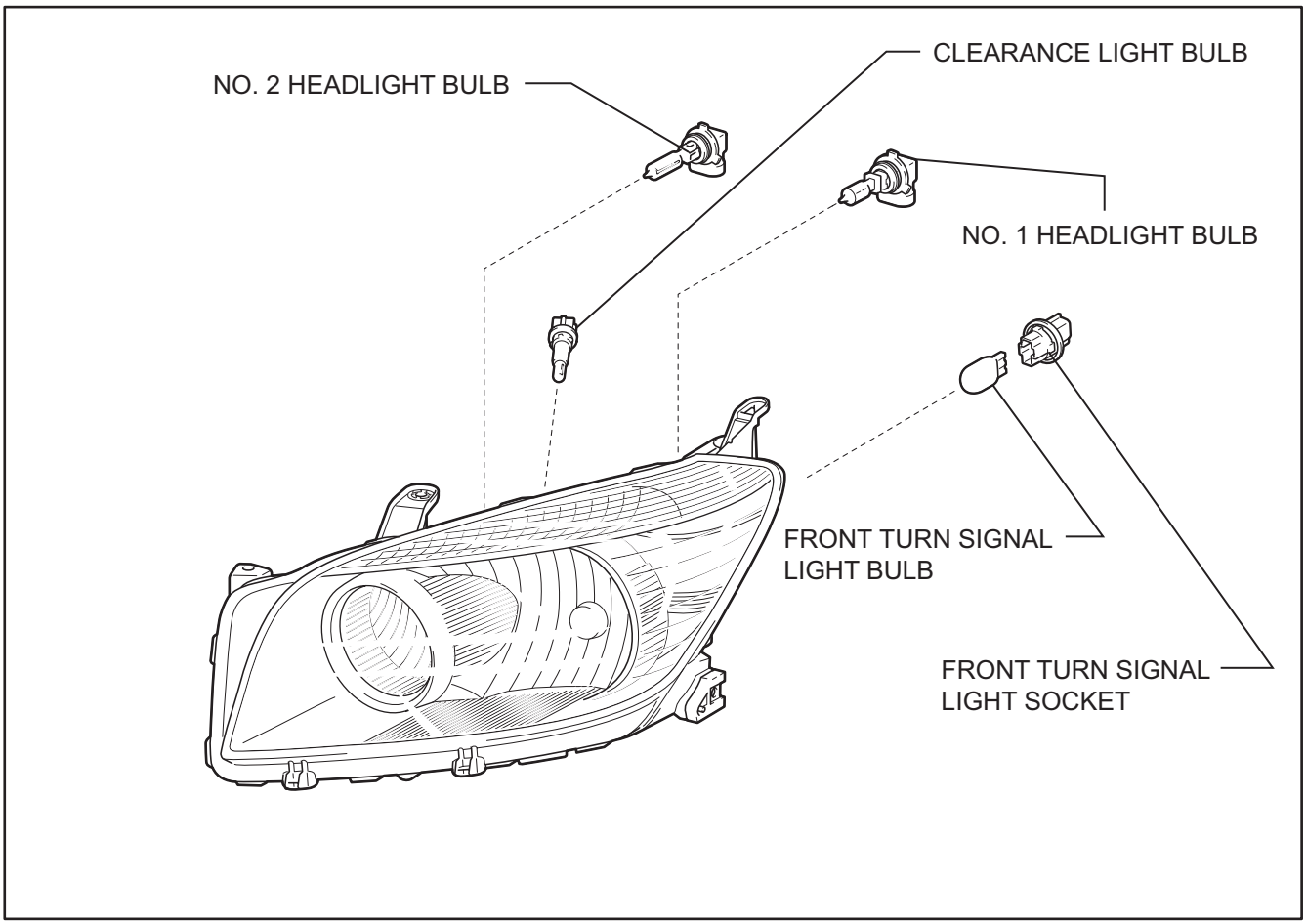

P

B136394E02

LI

REMOVAL

1. **DISCONNECT CABLE FROM NEGATIVE BATTERY TERMINAL**
   CAUTION:
   Wait at least 90 seconds after disconnecting the cable from the negative (-) battery terminal to prevent airbag and seat belt pretensioner activation.
2. **PLACE FRONT WHEELS FACING STRAIGHT AHEAD**
3. **REMOVE STEERING PAD ASSEMBLY (See page RS-336)**
4. **REMOVE STEERING WHEEL ASSEMBLY (See page SR-12)**
5. **REMOVE STEERING COLUMN COVER (See page SR-12)**
6. **REMOVE SPIRAL CABLE SUB-ASSEMBLY (See page RS-346)**
7. **REMOVE WIPER AND WASHER SWITCH (See page WW-27)**
8. **REMOVE HEADLIGHT DIMMER SWITCH ASSEMBLY**
   (a) Disconnect the connector.

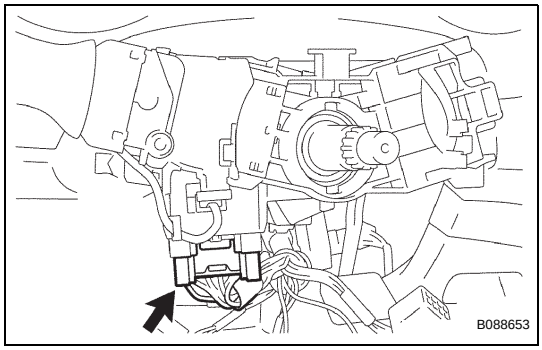

(b) Using needle-nose pliers, remove the band clamp as shown in the illustration.

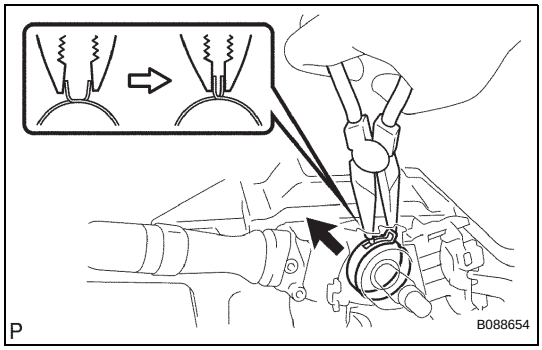

(c) Using a screwdriver, detach the claws and remove the switch.
HINT:
Tape the screwdriver tip before use.

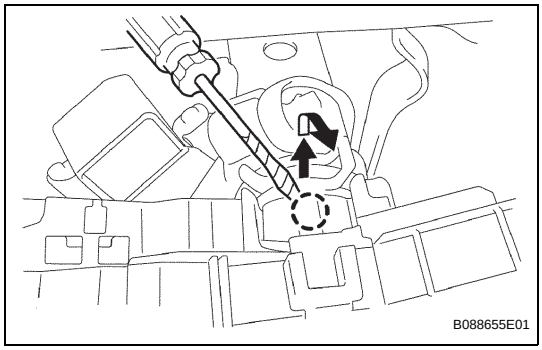

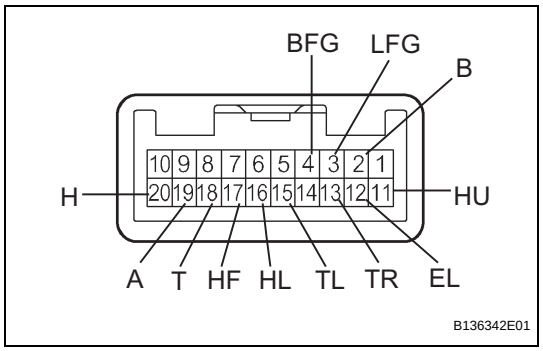

INSPECTION

1. INSPECT HEADLIGHT DIMMER SWITCH ASSEMBLY

(a) Measure the resistance of the switch.

Standard resistance:

Light control switch

Tester Connection	Switch Condition	Specified Condition
12 (EL) - 18 (T)	OFF	10 kΩ or higher
12 (EL) - 19 (A)	OFF	10 kΩ or higher
12 (EL) - 20 (H)	OFF	10 kΩ or higher
12 (EL) - 18 (T)	TAIL	Below 1 Ω
12 (EL) - 20 (H)	HEAD	Below 1 Ω
12 (EL) - 18 (T)	HEAD	Below 1 Ω
12 (EL) - 19 (A)	AUTO	Below 1 Ω

Headlight dimmer switch

Tester Connection	Switch Condition	Specified Condition
12 (EL) - 11 (HU)	FLASH	Below 1 Ω
12 (EL) - 16 (HL)	FLASH	Below 1 Ω
12 (EL) - 16 (HL)	LO BEAM	Below 1 Ω
12 (EL) - 11 (HU)	HI BEAM	Below 1 Ω

Turn signal switch

Tester Connection	Switch Condition	Specified Condition
12 (EL) - 13 (TR)	Right turn	Below 1 Ω
12 (EL) - 15 (TL)	Neutral	10 kΩ or higher
12 (EL) - 13 (TR)	Neutral	10 kΩ or higher
12 (EL) - 15 (TL)	Left turn	Below 1 Ω

Fog light switch

Tester Connection	Switch Condition	Specified Condition
3 (LFG) - 4 (BFG)	OFF	10 kΩ or higher
3 (LFG) - 4 (BFG)	ON	Below 1 Ω

If the result is not as specified, replace the dimmer switch assembly.

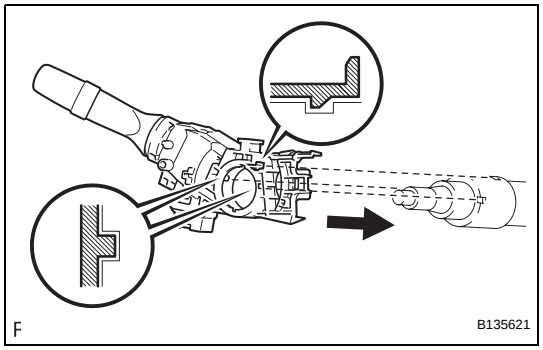

INSTALLATION

1. INSTALL HEADLIGHT DIMMER SWITCH ASSEMBLY

(a) Attach the claw to install the headlight dimmer switch with the claw as shown in the illustration.

LI

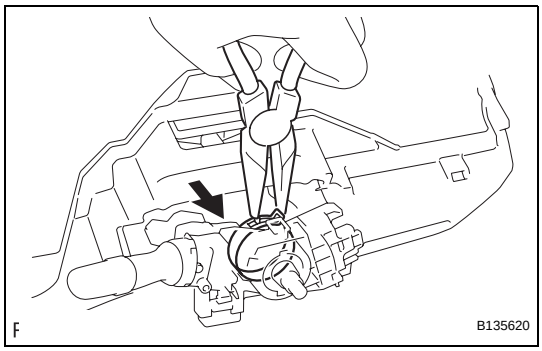

(b) Install the headlight dimmer switch with the clamp.

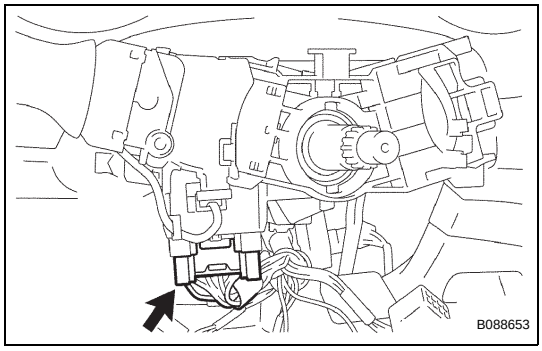

(c) Connect the connector.

2. **INSTALL WIPER AND WASHER SWITCH ASSEMBLY (See page WW-29)**
3. **INSTALL SPIRAL CABLE SUB-ASSEMBLY (See page RS-347)**
4. **INSTALL STEERING COLUMN COVER (See page SR-20)**
5. **INSTALL STEERING WHEEL ASSEMBLY (See page SR-21)**
6. **PLACE FRONT WHEELS FACING STRAIGHT AHEAD**
7. **INSPECT STEERING WHEEL CENTER POINT**
8. **INSTALL STEERING PAD ASSEMBLY (See page RS-336)**
9. **CONNECT CABLE TO NEGATIVE BATTERY TERMINAL**
10. **INSPECT STEERING PAD ASSEMBLY (See page RS-337)**
11. **CHECK SRS WARNING LIGHT**
    (a) Check the SRS warning light (see page RS-337).

HEADLIGHT DIMMER SWITCH

PRECAUTION

1. PRECAUTION FOR VEHICLE WITH SRS

(a) Some procedures in this section may affect the Supplemental Restraint System (SRS). Prior to performing the procedures, read the SRS section's "Precaution" (see page RS-1).

COMPONENTS

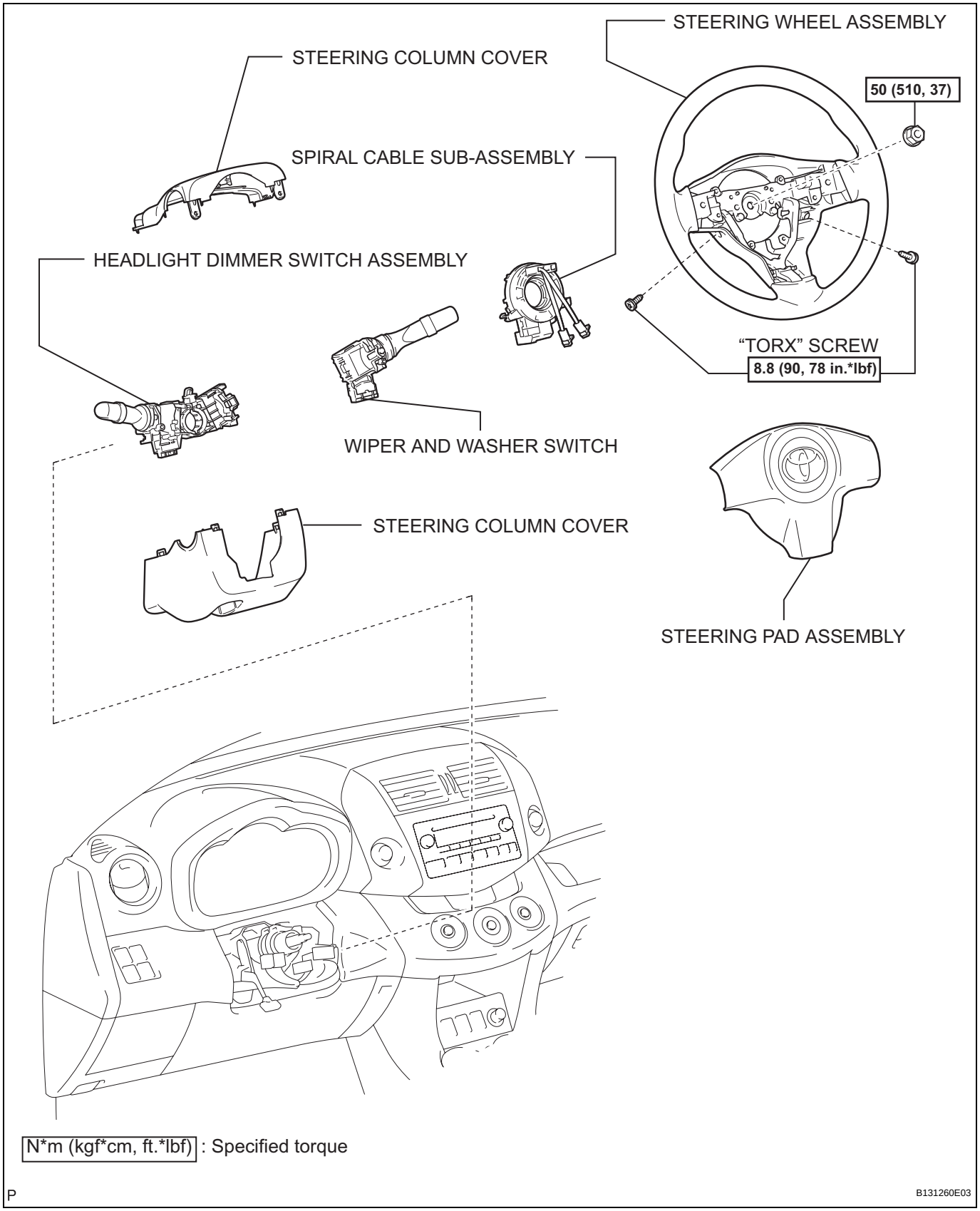

LI

HEADLIGHT RELAY

ON-VEHICLE INSPECTION

1. REMOVE HEADLIGHT RELAY

(a) Remove the headlight relay from the engine room No. 2 relay block.

(b) Measure the resistance of the relay.
Standard resistance

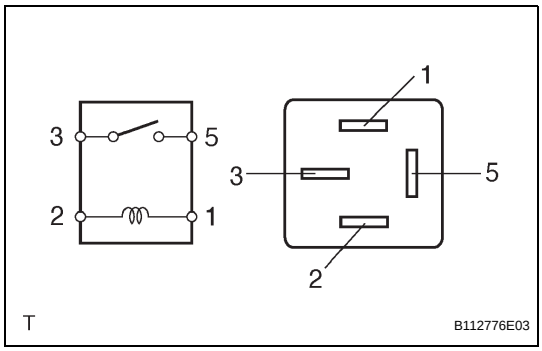

Tester Connection	Specified Condition
3 - 5	10 kΩ or higher
3 - 5	Below 1 Ω (Battery voltage applied to terminals 1 and 2)

If result is not as specified, replace the relay.

HIGH MOUNTED STOP LIGHT ASSEMBLY

COMPONENTS

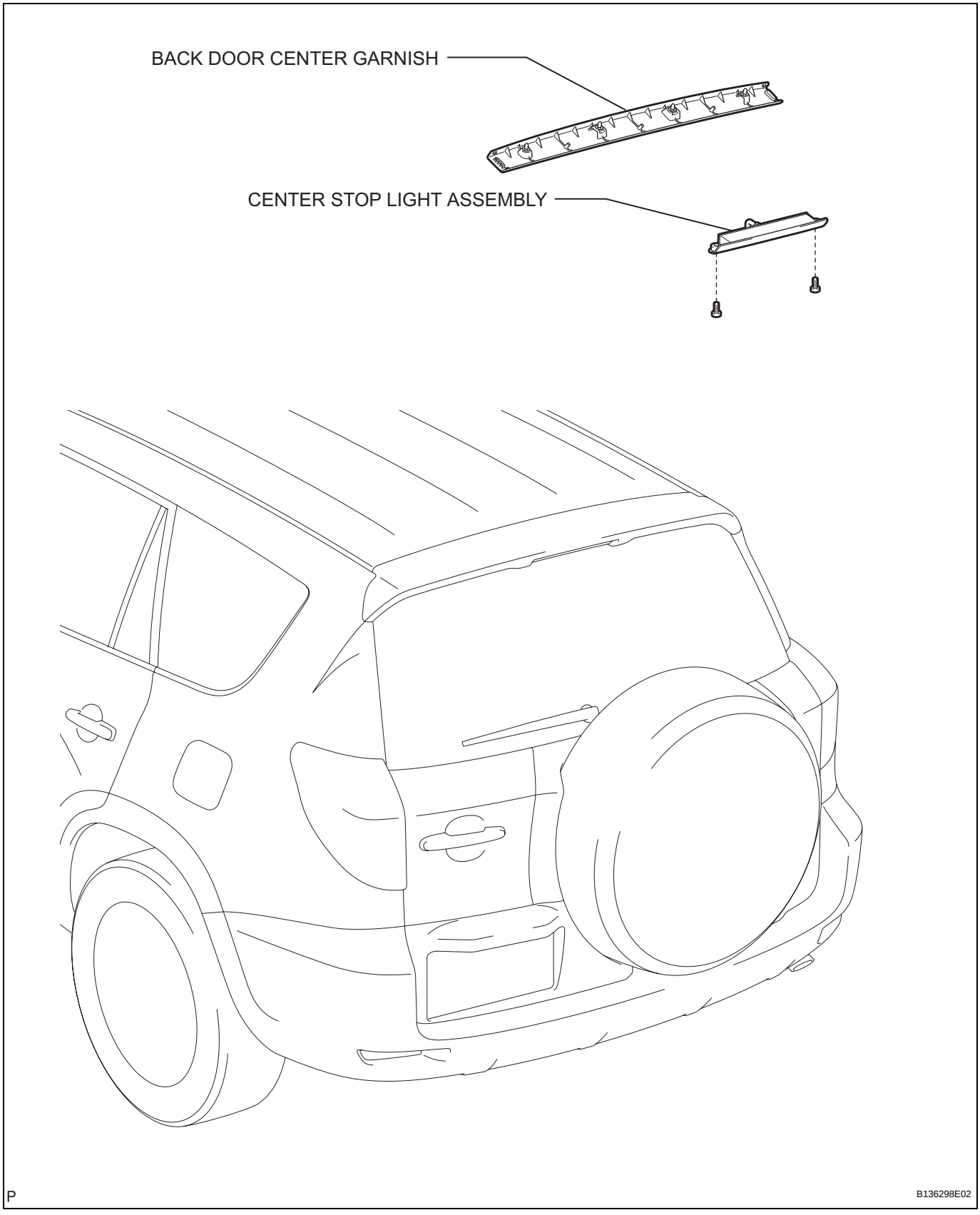

REMOVAL

1. **DISCONNECT CABLE FROM NEGATIVE BATTERY TERMINAL**
   CAUTION:
   Wait at least 90 seconds after disconnecting the cable from the negative (-) battery terminal to prevent airbag and seat belt pretensioner activation.
2. **REMOVE BACK DOOR CENTER GARNISH (See page ED-59)**
3. **REMOVE CENTER STOP LIGHT ASSEMBLY**
   (a) Disconnect the connector.
   (b) Remove the 2 screws and center stop light.

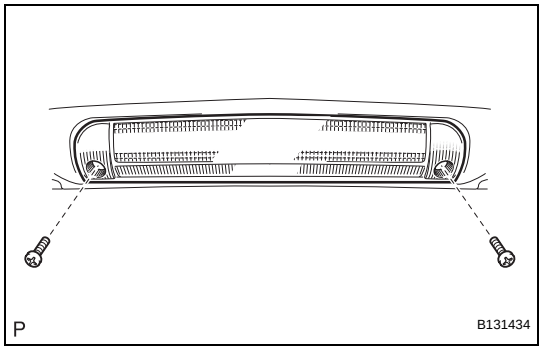

INSTALLATION

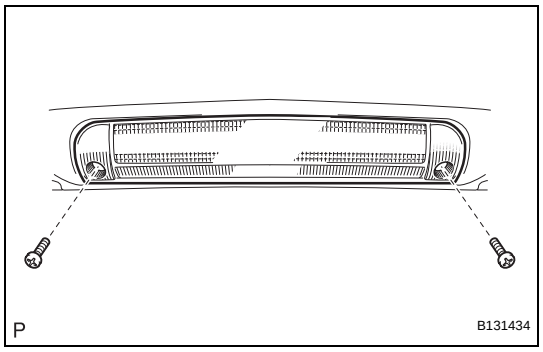

1. **INSTALL CENTER STOP LIGHT ASSEMBLY**
   (a) Install the center stop light with the 2 screws.
   (b) Connect the connector.
2. **INSTALL BACK DOOR CENTER GARNISH (See page ED-67)**
3. **CONNECT CABLE TO NEGATIVE BATTERY TERMINAL**

INSTALLATION

1. **INSTALL TRANSPONDER KEY AMPLIFIER (See page SR-18)**
2. **INSTALL STEERING COLUMN COVER (See page SR-20)**
3. **INSTALL STEERING WHEEL ASSEMBLY (See page SR-21)**
4. **PLACE FRONT WHEELS FACING STRAIGHT AHEAD**
5. **INSPECT STEERING WHEEL CENTER POINT**
6. **INSTALL STEERING PAD ASSEMBLY (See page RS-336)**
7. **CONNECT CABLE TO NEGATIVE BATTERY TERMINAL**
8. **INSPECT STEERING PAD ASSEMBLY (See page RS-337)**
9. **CHECK SRS WARNING LIGHT**
   (a) Check the SRS warning light (see page RS-337).

IGNITION KEY CYLINDER LIGHT

COMPONENTS

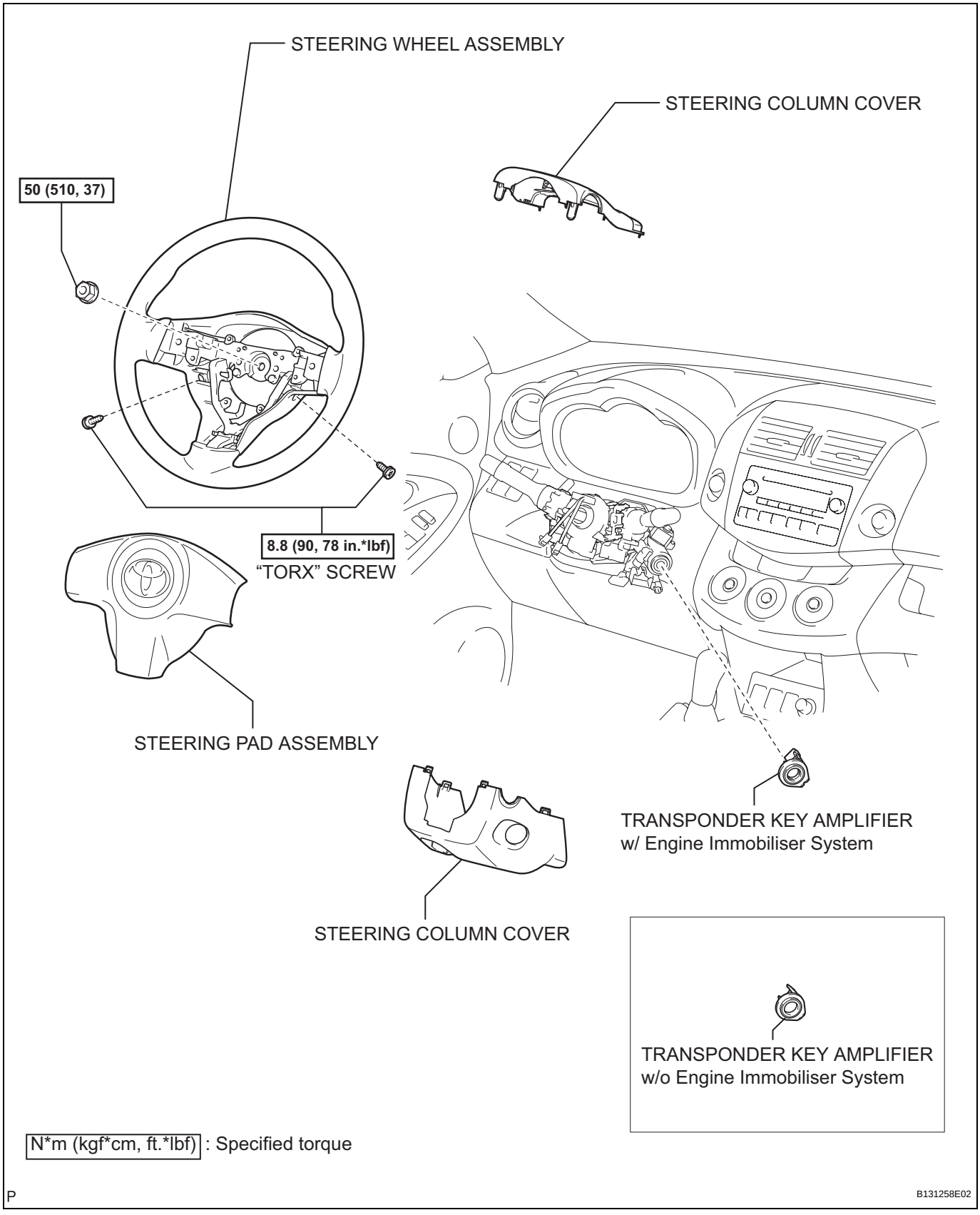

LI

REMOVAL

1. **DISCONNECT CABLE FROM NEGATIVE BATTERY**
   CAUTION:
   Wait at least 90 seconds after disconnecting the cable from the negative (-) battery terminal to prevent airbag and seat belt pretensioner activation.
2. **PLACE FRONT WHEELS FACING STRAIGHT AHEAD**
3. **REMOVE STEERING PAD ASSEMBLY (See page RS-336)**
4. **REMOVE STEERING WHEEL ASSEMBLY (See page SR-12)**
5. **REMOVE STEERING COLUMN COVER (See page SR-12)**
6. **REMOVE TRANSPONDER KEY AMPLIFIER (See page SR-14)**

INSPECTION

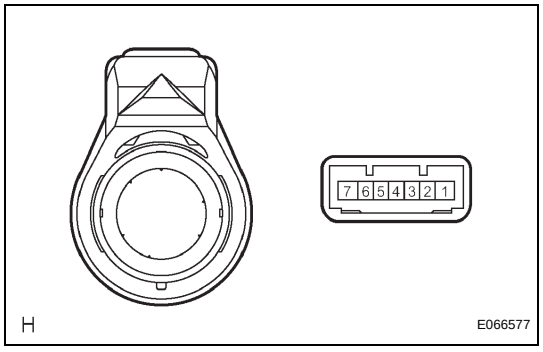

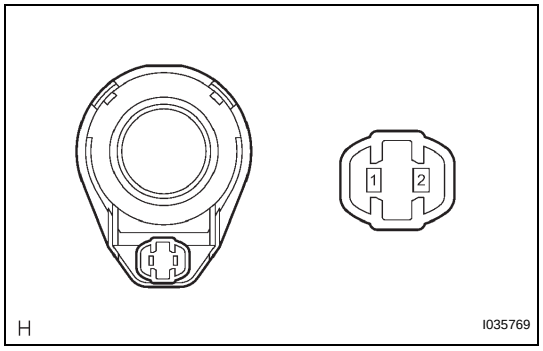

1. **INSPECT TRANSPONDER KEY AMPLIFIER**
   (a) w/ Engine immobiliser system:
      (1) Connect the battery's positive (+) lead to terminal 2 and the negative (-) lead to terminal 6, and then check that the light comes on.
      OK:
      LED illuminates.
      If the result is not as specified, replace the transponder key amplifier.

   (b) w/o Engine immobiliser system:
      (1) Connect the battery's positive (+) lead to terminal 2 and the negative (-) lead to terminal 1, and then check that the light comes on.
      OK:
      LED illuminates.
      If the result is not as specified, replace the transponder key amplifier.

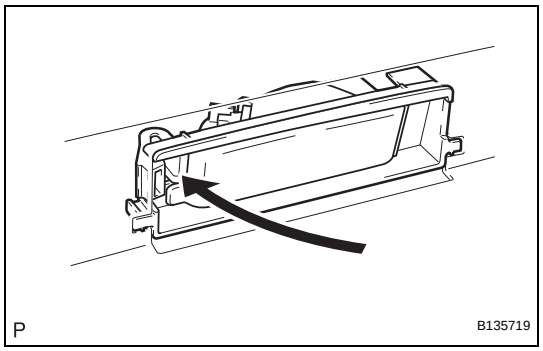

INSTALLATION

1. **INSTALL LICENSE PLATE LIGHT ASSEMBLY**
   (a) Install the light as shown in the illustration.
2. **INSTALL BACK DOOR LOWER OUTSIDE GARNISH SUB-ASSEMBLY (See page ET-61)**
3. **INSTALL BACK DOOR TRIM BOARD (See page ED-66)**
4. **INSTALL BACK DOOR SIDE GARNISH RH (See page ED-67)**
5. **INSTALL BACK DOOR SIDE GARNISH LH (See page ED-67)**
6. **INSTALL BACK DOOR CENTER GARNISH (See page ED-67)**
7. **CONNECT CABLE TO NEGATIVE BATTERY TERMINAL**

LICENSE PLATE LIGHT ASSEMBLY

COMPONENTS

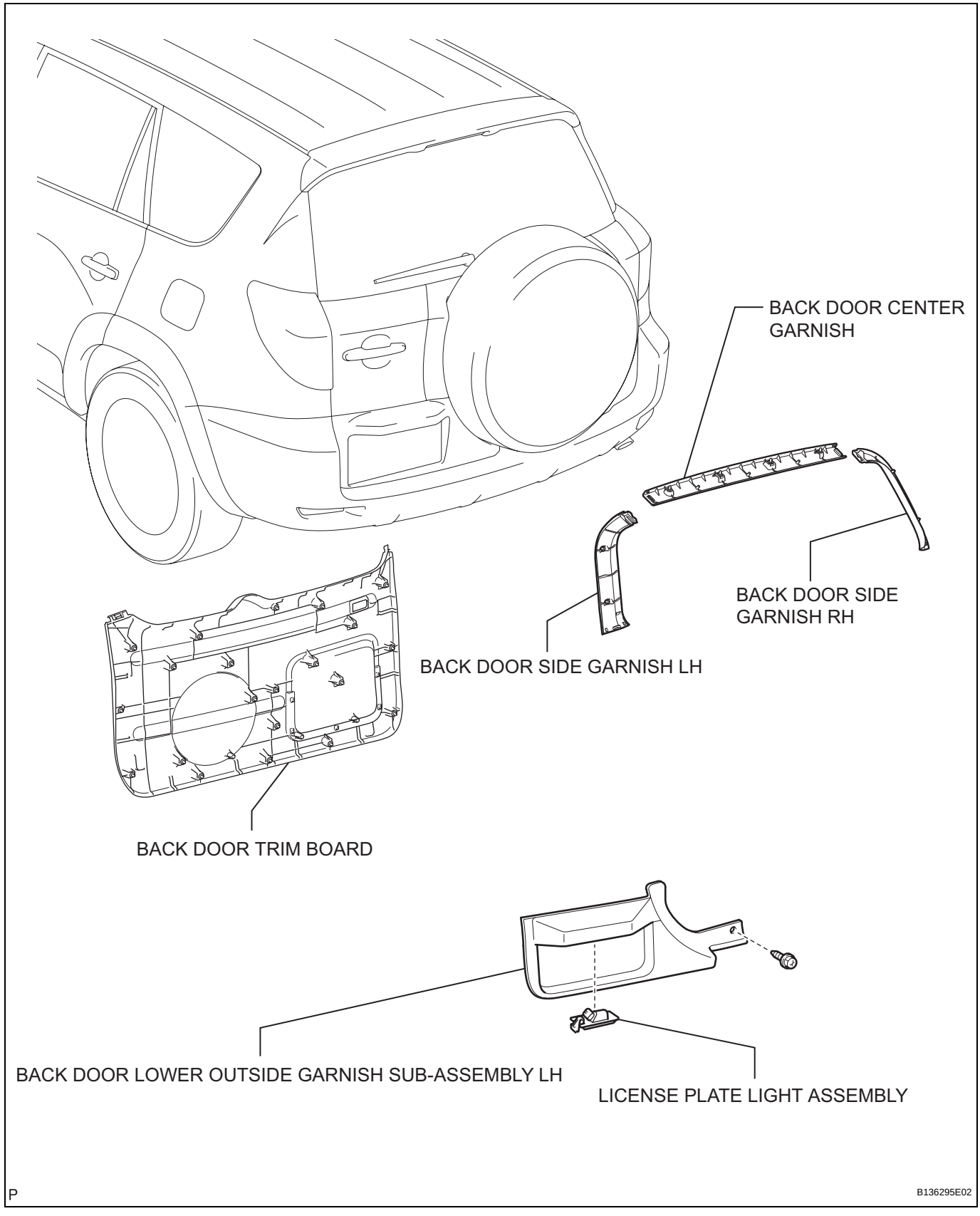

REMOVAL

1. **DISCONNECT CABLE FROM NEGATIVE BATTERY TERMINAL**
   CAUTION:
   Wait at least 90 seconds after disconnecting the cable from the negative (-) battery terminal to prevent airbag and seat belt pretensioner activation.
2. **REMOVE BACK DOOR CENTER GARNISH (See page ED-59)**
3. **REMOVE BACK DOOR SIDE GARNISH LH (See page ED-59)**
4. **REMOVE BACK DOOR SIDE GARNISH RH (See page ED-59)**
5. **REMOVE BACK DOOR TRIM BOARD (See page ED-59)**
6. **REMOVE BACK DOOR LOWER OUTSIDE GARNISH SUB-ASSEMBLY LH (See page ET-60)**
7. **REMOVE LICENSE PLATE LIGHT ASSEMBLY**
   (a) Disconnect the connector.
   (b) Using a screwdriver, remove the light as shown in the illustration.

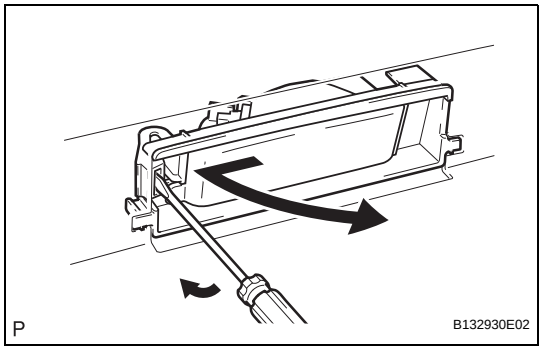

DISASSEMBLY

1. **REMOVE LICENSE PLATE LIGHT BULB**
   (a) Turn the bulb/socket unit in the direction indicated by the arrow and pull to remove it.
   (b) Remove the bulb from the socket.

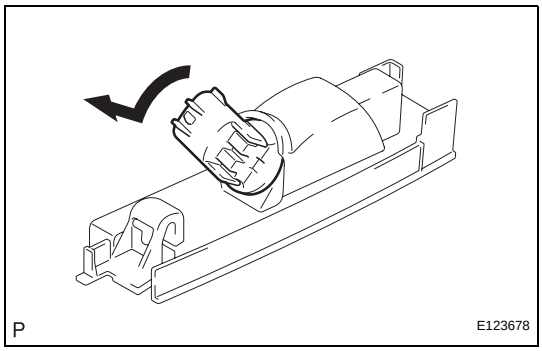

REASSEMBLY

1. **INSTALL LICENSE PLATE LIGHT BULB**
   (a) Install the bulb to the socket.
   (b) Insert the bulb/socket unit into the headlight.
   (c) Turn the bulb/socket unit in the direction indicated by the arrow to install it.

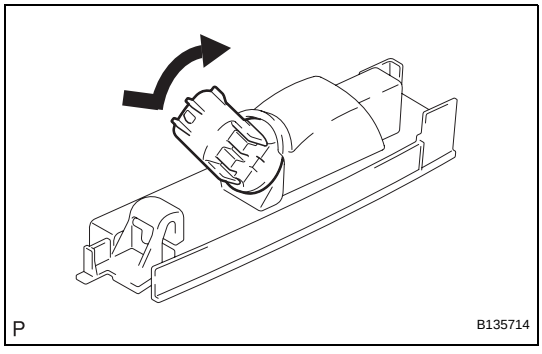

SYSTEM DIAGRAM

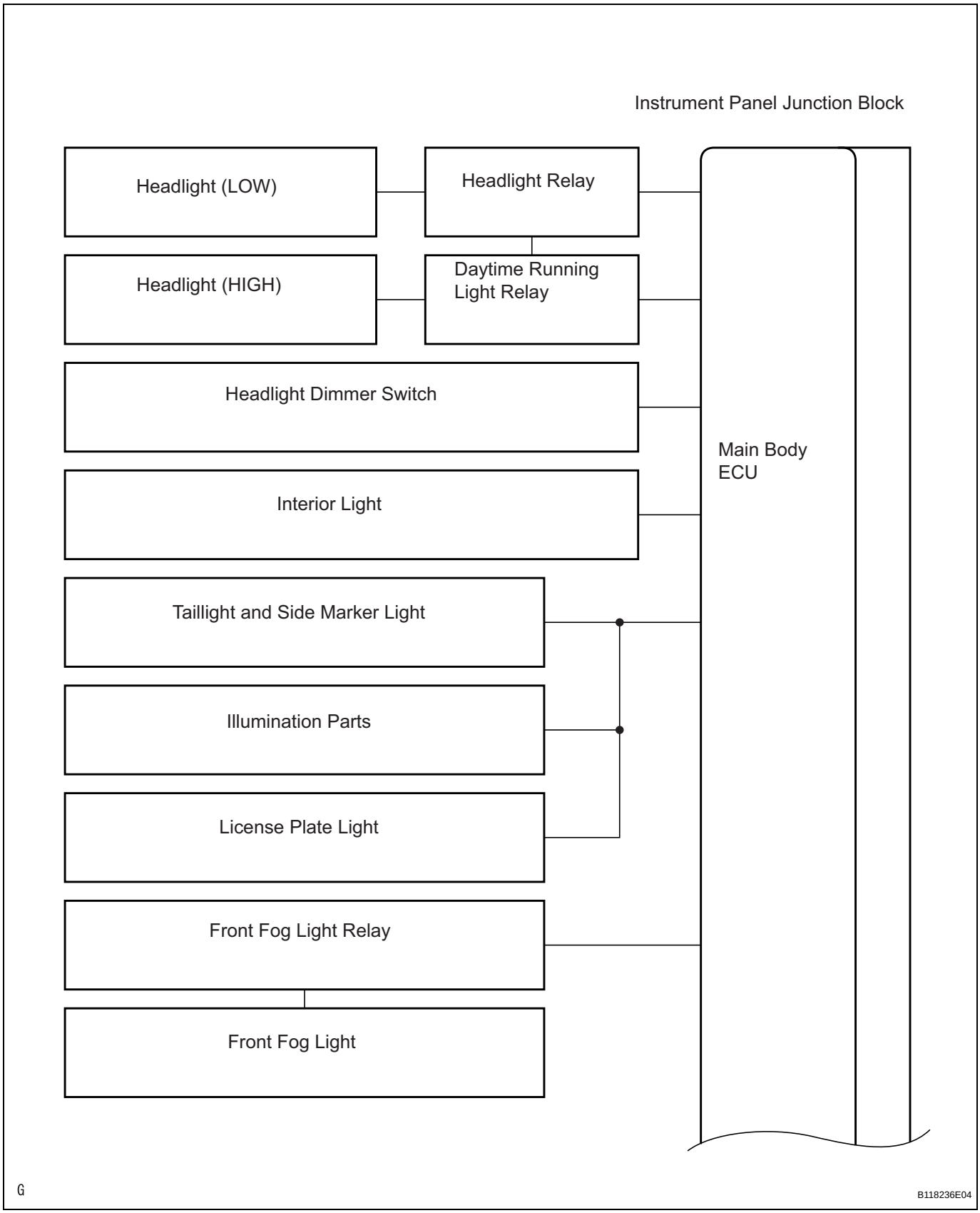

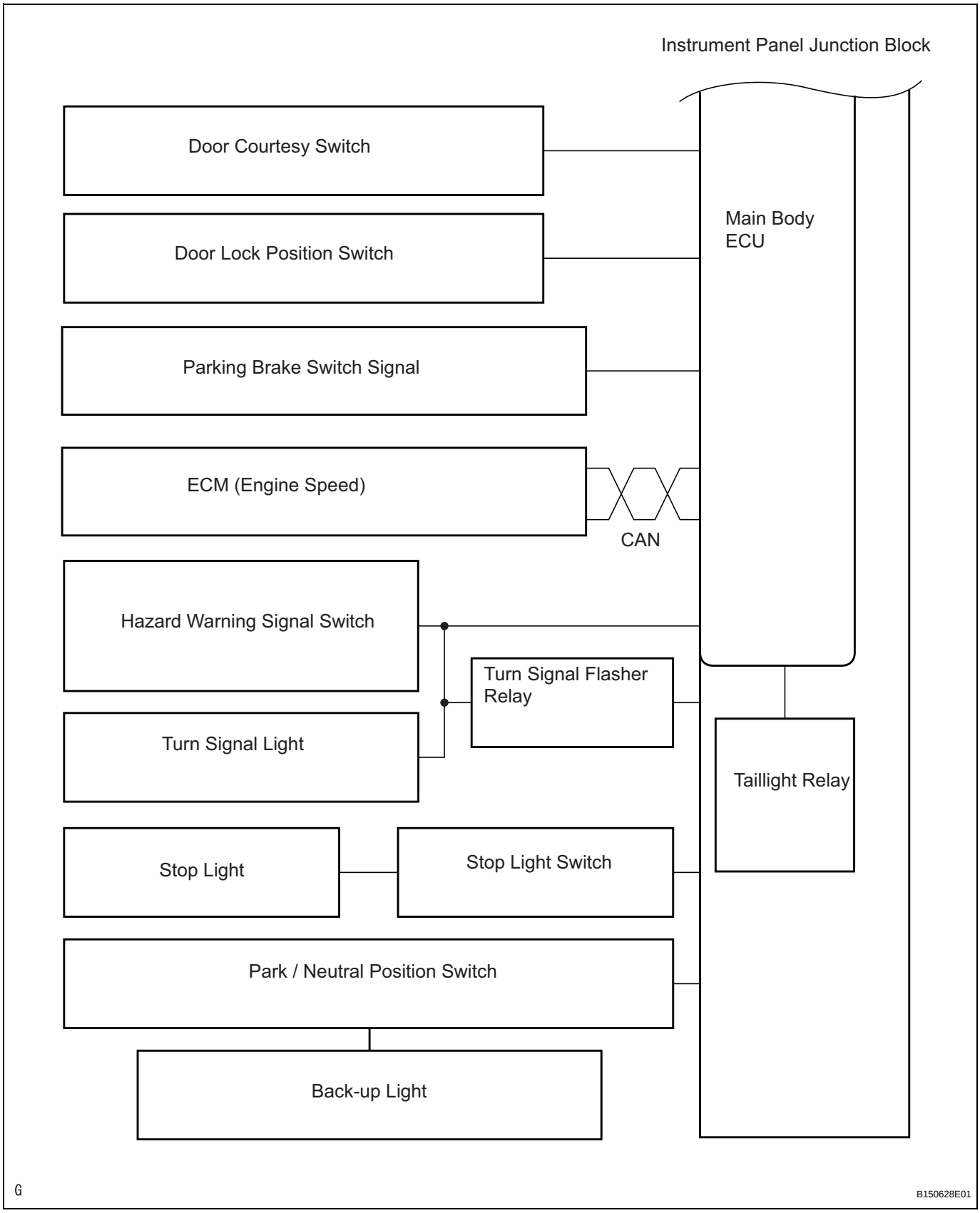
Instrument Panel Junction Block
Door Courtesy Switch
Door Lock Position Switch
Parking Brake Switch Signal
ECM (Engine Speed)
CAN
Main Body ECU
Hazard Warning Signal Switch
Turn Signal Flasher Relay
Turn Signal Light
Taillight Relay
Stop Light
Stop Light Switch
Park / Neutral Position Switch
Back-up Light
G
B150628E01

SYSTEM DESCRIPTION

1. LIGHTING SYSTEM

(a) Illumination control system (Illuminated entry system):

When the doors are unlocked by a key or transmitter operation, or when a door is opened or closed, the illuminated entry system turns on the room light, map light, foot light and ignition key cylinder light*1 or transponder key amplifier*2.

(1) The main body ECU receives the following signals (A).
- Door courtesy switch signal
- Door detection switch signal
- Ignition switch signal

(2) The main body ECU controls the following signal based on the signals listed in A.
- Illumination operation signal

(3) The main body ECU controls the on/off and fade-in/fade-out operation of the following parts.
- Room light
- Map light
- Foot light
- Ignition key cylinder light*1 or transponder key amplifier*2

HINT:
*1: w/o Engine immobiliser system
*2: w/ Engine immobiliser system

(b) Battery saver system:

When the ignition switch is turned off and any of the doors is open continuously for 20 minutes, the main body ECU turns the illumination operation signal off. As a result, the room light, map light, foot light and ignition key cylinder lights*1 or transponder key amplifier*2 turn off.

HINT:
*1: w/o Engine immobiliser system
*2: w/ Engine immobiliser system

(1) The main body ECU receives the following signals (B).
- Door courtesy switch signal
- Ignition switch signal

(2) The main body ECU controls the following signal based on the signals listed in B (C).
- Illumination operation signal

(3) The main body ECU controls the illumination period of the following parts based on the signals listed in C.
- Room light
- Map light
- Foot light
- Ignition key cylinder light*1 or transponder key amplifier*2

HINT:
*1: w/o Engine immobiliser system

*2: w/ Engine immobiliser system

(c) Manual light control system:
This system functions when lights such as the headlights and taillights are illuminated by manual operation of the light control switch.
(1) The main body ECU receives the following signals (D).
- Light control switch signal
- Headlight dimmer switch signal
- Front fog light switch signal

(2) The main body ECU controls the following signals based on the signals listed in D (E).
- Headlight relay operation signal
- Taillight relay operation signal
- Daytime running light No. 2 relay operation signal
- Daytime running light No. 3 relay operation signal
- Daytime running light No. 4 relay operation signal
- Front fog light relay operation signal

(3) The main body ECU controls the on/off operation of the following parts based on the signals listed in E.
- Headlight (LOW)
- Headlight (HIGH)
- Side marker light (front and rear)
- Front fog light

(d) Light auto turn off system:
When the headlights and taillights are illuminated by the operation of the light control switch, if the ignition switch is turned OFF, this system continues illuminating the headlights and taillights for approximately 30 seconds, and then turns off the lights. However, when all the doors are locked manually, using the door lock button, using the key or pressing LOCK on the transmitter turns the headlights and taillights off immediately.
(1) The main body ECU receives the following signals (F).
- Door courtesy switch signal
- Ignition switch signal

(2) The main body ECU controls the following signals based on the signals listed in F (G).
- Headlight relay operation signal
- Taillight relay operation signal
- Daytime running light No. 2 relay operation signal
- Daytime running light No. 3 relay operation signal
- Daytime running light No. 4 relay operation signal
- Front fog light relay operation signal

(3) The main body ECU controls the illumination period of the following parts based on the signals listed in G.
- Headlight (LOW)
- Headlight (HIGH)
- Side marker light (front and rear)
- Front fog light

(e) Daytime running light system:
This system is directly connected to the high-beam headlights and is designed to automatically activate the daytime running lights in order to increase the visibility of the vehicle.

(1) The main body ECU receives the following (H).
- Ignition switch signal
- Engine speed
- Parking brake switch signal
- Light control switch signal

(2) The main body ECU controls the following signal based on the signals listed in H (I).
- Daytime running light No. 2 relay operation signal

(3) The main body ECU controls the on/off operation of the following part based on the signal listed in I.
- Headlight (HIGH)

HOW TO PROCEED WITH TROUBLESHOOTING

HINT:

- Use these procedures to troubleshoot the lighting system.
- *: Use the intelligent tester.

1 **VEHICLE BROUGHT TO WORKSHOP**

NEXT

2 **INSPECT BATTERY VOLTAGE**

Standard voltage:
11 to 14 V

If the voltage is below 11 V, recharge or replace the battery before proceeding.

NEXT

3 **REFER TO PROBLEM SYMPTOMS TABLE**

Result	Proceed to
Fault is not listed in problem symptoms table	A
Fault is listed in problem symptoms table	B

B → **Go to step 5**

A

4 **OVERALL ANALYSIS AND TROUBLESHOOTING***

(a) DATA LIST / ACTIVE TEST (See page LI-22)
(b) Terminals of ECU (See page LI-19)

NEXT

5 **ADJUST, REPAIR OR REPLACE**

NEXT

6 **CONFIRMATION TEST**

NEXT

END

OPERATION CHECK

1. ILLUMINATED ENTRY SYSTEM OPERATION CHECK

(a) The illuminated entry system controls the following lights:
- Ignition key cylinder light*1 or transponder key amplifier*2
- Foot light
- Map light and room light

HINT:
*1: w/o Engine immobiliser system
*2: w/ Engine immobiliser system

(b) Check that the lights come on when unlocking any of the doors that are closed and locked with the ignition switch OFF. Then check that the lights fade out under the following conditions:
(1) Leave the doors unlocked for 15 seconds.
(2) Turn the ignition switch ACC or ON.
(3) Lock all the doors.

(c) Check that the lights stay on for at least 15 seconds after opening any of the doors before fading out. Then check that the lights fade out 15 seconds after closing all the doors.

(d) Check that the lights stay lit after turning the ignition switch OFF with all the doors closed and the ignition switch in the ACC or ON position. Then check that the lights fade out under the following conditions:
(1) Leave the doors unlocked for 15 seconds.
(2) Turn the ignition switch ACC or ON.
(3) Lock all the doors.

(e) Check that the lights stay on for at least 15 seconds after opening any of the doors. Then check that the lights fade out 15 seconds after closing all the doors.

(f) Check that the lights come on when opening any of the doors and fade out when closing and locking all the doors or turning the ignition switch to the ACC or ON position.

2. FOOT LIGHT OPERATION CHECK

(a) Check that the lights come on when unlocking any of the doors that are closed and locked with the ignition switch OFF. Then check that the lights fade out under the following conditions:
(1) Leave the doors unlocked for 15 seconds.
(2) Lock all the closed doors and turn the ignition switch OFF.

(b) Check that the lights stay on for at least 15 seconds under the following conditions before going off.
(1) Turn the ignition switch to the ON position, and move the shift lever to the P position.
(2) Open any of the doors.

(c) Check that the lights dim before going off when turning the ignition switch ON and shifting the shift lever into any position other than P.

(d) Check the conditions below before the lights go off.
(1) The lights dim when shifting the shift lever into a position other than P and closing all the doors with the ignition switch ON.
(2) The lights come on for 15 seconds and fade out when shifting the shift lever into the P position and closing all the doors with the ignition switch OFF.
(e) Check that the lights come on after opening any of the doors.
(f) Check that the lights fade out 15 seconds after closing all the doors, or locking all the doors.
(g) Check that the lights come on gradually with the ignition switch ON and the shift lever in the P position.
(h) Check that the lights dim when shifting the shift lever from P into another position with all the doors closed.
(i) Check that the lights stay dimmed with the ignition switch ON and the shift lever in a position other than P.

3. BATTERY SAVER OPERATION CHECK

(a) Turn the ignition switch OFF and close all the doors.
(b) Open any door to turn the room light on, and leave it open. Check that the light goes off after about 20 minutes.
(c) After the room light goes off, close the driver's door.
(d) Open any door to turn the room light on, and then open another door. Check that the room light goes off within 20 minutes after opening the doors.
(e) Close all the doors. Open any door to turn the room light on. Check that the room light goes off within 20 minutes.

4. LIGHT AUTO TURN OFF OPERATION CHECK

(a) Turn the ignition switch ON, and turn the light control switch to the TAIL or HEAD position.
(b) Turn the ignition switch OFF and open the driver's door, and check that the headlights go off after about 30 seconds.
(c) Turn the ignition switch to the ON position, and turn the light control switch to the TAIL or HEAD position.
(d) Turn the ignition switch OFF and open the driver's door. Before the headlight goes off after about 30 seconds, lock all the doors and press the LOCK switch on the wireless transmitter. Check that the headlights go off immediately.

5. DAYTIME RUNNING LIGHT OPERATION CHECK

(a) Check that the headlights come on when the light control switch is off with the engine running and the parking brake released. Then check that the lights go off under the following conditions:
(1) Turn the light control switch to the TAIL or HEAD position.

(2) Turn the ignition switch OFF. Check that the headlights go off immediately.

CUSTOMIZE PARAMETERS

HINT:
The following items can be customized.
NOTICE:

- **When the customer requests a change in a function, first make sure that the function can be customized.**
- **Be sure to make a note of the current settings before customizing.**
- **When troubleshooting a function, first make sure that the function is set to the default setting.**

Illuminated entry

Display (Item)	Default	Contents	Setting
LIGHTING TIME (Lighting Time)	15 seconds	Changes illumination duration after door closure. (It will quickly fade out in case of turning ignition switch ON.)	7.5/15/30 (seconds)
I/L ON /ACC OFF (Room light illuminates when ignition switch turned OFF)	ON	Illuminates light when ignition switch turned to ACC. (Room light illuminated when interior light switch in DOOR position)	ON/OFF
I/L ON / UNLOCK (Room light illuminates when door key unlocked.)	ON	Function to light up room light when unlocking with door key cylinder. (Room light illuminated when interior light switch in DOOR position)	ON/OFF
LIGHT CONTROL	ON	Function to light up foot light when ignition switch is ON and shift position is not P.	ON/OFF

Light control (USA)

Display (Item)	Default	Contents	Setting
DRL FUNCTION	ON	Daytime running light function ON or OFF.	ON/OFF

HINT:
Sensitivity adjustments are difficult to confirm. Check by driving the customer's vehicle.

PROBLEM SYMPTOMS TABLE

(2005/11-2006/01)
HINT:
Use the table below to help determine the cause of the problem symptom. The potential causes of the symptoms are listed in order of probability in the "Suspected area" column of the table. Check each symptom by checking the suspected areas in the order they are listed. Replace parts as necessary.

Headlight and taillight system

Symptom	Suspected area	See page
"Low beam" does not comes on (One side).	1. HEAD LL fuse, HEAD RL fuse	LI-31
	2. Bulb	LI-31
	3. Light control switch circuit	LI-62
	4. Headlight relay circuit	LI-28
	5. Instrument panel junction block	LI-19
"Low beam" does not come on (Both sides).	1. HEAD LL fuse, HEAD RL fuse	LI-31
	2. Bulb	LI-31
	3. Light control switch circuit	LI-62
	4. Headlight relay circuit	LI-28
	5. Instrument panel junction block	LI-19
"High beam" does not come on (One side).	1. HEAD LH fuse, HEAD RH fuse	LI-41
	2. HEAD RL fuse	LI-31
	3. Bulb	LI-42
	4. Light control switch circuit	LI-62
	5. Headlight (Hi-beam) circuit	LI-37
	6. Instrument panel junction block	LI-19
"High beam" does not come on (Both sides).	1. HEAD LH fuse, HEAD RH fuse	LI-41
	2. HEAD RL fuse	LI-31
	3. Bulb	LI-42
	4. Light control switch circuit	LI-62
	5. Headlight (Hi-beam) circuit	LI-37
	6. Instrument panel junction block	LI-19
"Low beam" and "High beam" do not come on (One side).	1. HEAD LL fuse, HEAD RL fuse	LI-31
	2. HEAD LH fuse, HEAD RH fuse	LI-41
	3. Bulb (high)	LI-42
	4. Bulb (low)	LI-31
	5. Light control switch circuit	LI-62
	6. Headlight relay circuit	LI-28
	7. Headlight (Hi-beam) circuit	LI-37
	8. Instrument panel junction block	LI-19
"Low beam" and "High beam" do not come on (Both sides).	1. HEAD LL fuse, HEAD RL fuse	LI-31
	2. HEAD LH fuse, HEAD RH fuse	LI-41
	3. Bulb (high)	LI-42
	4. Bulb (low)	LI-31
	5. Light control switch circuit	LI-62
	6. Headlight relay circuit	LI-28
	7. Headlight (Hi-beam) circuit	LI-37
	8. Instrument panel junction block	LI-19
"Flash" does not come on (Low beam and Hi-beam are normal).	1. Light control switch circuit	LI-62
	2. Instrument panel junction block	LI-19

Symptom	Suspected area	See page
Headlight is dark.	1. Bulb	-
	2. Wire harness	-
Taillight does not come on (All).	1. TAIL fuse	LI-87
	2. Light control switch circuit	LI-62
	3. Taillight relay circuit	LI-83
	4. Instrument panel junction block	LI-19
Only one front side marker light comes on.	1. Bulb	LI-90
	2. Wire harness	LI-90
Only one taillight comes on.	1. Rear combination light	LI-107
	2. Wire harness	LI-91
Only one rear side marker light comes on.	1. Bulb	LI-92
	2. Wire harness	LI-92
Daytime running light system does not operate.	1. Light control switch circuit	LI-62
	2. CAN communication line	CA-58
	3. Parking brake switch circuit	PB-14
	4. Daytime running light relay circuit	LI-33
	5. Instrument panel junction block	LI-19

Light auto turn off system

Symptom	Suspected area	See page
Light auto turn off system does not operate.	1. Light control switch circuit	LI-62
	2. Ignition switch	ST-18
	3. Door courtesy switch circuit	LI-66
	4. Instrument panel junction block	LI-19

Fog light system

Symptom	Suspected area	See page
Front fog light does not come on with light control switch in TAIL or HEAD position.	1. FF FOG fuse	LI-48
	2. Front fog light relay	LI-49
	3. Light control switch circuit	LI-62
	4. Front fog light circuit	LI-45
	5. Instrument panel junction block	LI-19
Only one front fog light does not come on.	1. Bulb	LI-48
	2. Wire harness	LI-45

Turn signal and hazard warning system

Symptom	Suspected area	See page
"Hazard" and "Turn" do not come on.	1. HAZ fuse	LI-59
	2. ECU-IG2 fuse	LI-53
	3. Ignition switch	ST-18
	4. Turn signal flasher relay	LI-145
	5. Wire harness	-
Hazard warning light does not come on (Turn is normal).	1. Hazard warning switch	LI-60
	2. Wire harness	LI-56
Turn signal does not come on (Hazard is normal).	1. Headlight dimmer switch (turn signal switch)	LI-54
	2. Wire harness	LI-50
Turn signal does not come on in one direction.	1. Headlight dimmer switch (turn signal switch)	LI-54
	2. Wire harness	LI-50
Only one bulb does not come on.	1. Bulb	LI-56
	2. Wire harness	LI-50

Stop light system

Symptom	Suspected area	See page
Stop light does not operate (All).	1. STOP fuse	LI-26
	2. BRK relay	LI-151
	3. Stop light switch	BR-13
	4. Wire harness	LI-24
Only one stop light does not operate.	1. Rear combination light	LI-107
	2. Wire harness	LI-24

Illuminated entry system

Symptom	Suspected area	See page
Illuminated entry of multiplex network body ECU control does not operate (All).	1. Ignition switch	ST-18
	2. Door lock position circuit	LI-70
	3. Door courtesy switch circuit	LI-66
	4. Illumination circuit	LI-75
	5. Instrument panel junction block	LI-19

Foot light system

Symptom	Suspected area	See page
Step light of body ECU control does not operate.	1. Ignition switch	ST-18
	2. Door lock position switch	LI-70
	3. Door courtesy switch circuit	LI-66
	4. Footwell light circuit	LI-73
	5. Instrument panel junction block	LI-19

Others

Symptom	Suspected area	See page
Vanity light does not operate.	1. Bulb	LI-127
	2. Vanity light switch	LI-128
	3. Wire harness	-
Back-up light does not come on (All).	1. GAUGE1 fuse	LI-61
	2. Park / neutral position switch	AX-108
	3. Wire harness	LI-59
Back door courtesy light does not come on.	1. Bulb	LI-122
	2. DOME fuse	-
	3. Back door courtesy switch	LI-143
	4. Wire harness	-
Center console illumination does not come on.	1. Center console light	LI-130
	2. Wire harness	-

PROBLEM SYMPTOMS TABLE

(2006/01-)
HINT:
Use the table below to help determine the cause of the problem symptom. The potential causes of the symptoms are listed in order of probability in the "Suspected Area" column of the table. Check each symptom by checking the suspected areas in the order they are listed. Replace parts as necessary.

Headlight and taillight system

Symptom	Suspected Area	See page
"Low beam" does not comes on (One side).	1. HEAD LL fuse, HEAD RL fuse	LI-31
	2. Bulb	LI-31
	3. Light control switch circuit	LI-62
	4. Headlight relay circuit	LI-28
	5. Instrument panel junction block	LI-19
"Low beam" does not come on (Both sides).	1. HEAD LL fuse, HEAD RL fuse	LI-31
	2. Bulb	LI-31
	3. Light control switch circuit	LI-62
	4. Headlight relay circuit	LI-28
	5. Instrument panel junction block	LI-19
"High beam" does not come on (One side).	1. HEAD LH fuse, HEAD RH fuse	LI-41
	2. HEAD RL fuse	LI-31
	3. Bulb	LI-42
	4. Light control switch circuit	LI-62
	5. Headlight (Hi-beam) circuit	LI-37
	6. Instrument panel junction block	LI-19
"High beam" does not come on (Both sides).	1. HEAD LH fuse, HEAD RH fuse	LI-41
	2. HEAD RL fuse	LI-31
	3. Bulb	LI-42
	4. Light control switch circuit	LI-62
	5. Headlight (Hi-beam) circuit	LI-37
	6. Instrument panel junction block	LI-19
"Low beam" and "High beam" do not come on (One side).	1. HEAD LL fuse, HEAD RL fuse	LI-31
	2. HEAD LH fuse, HEAD RH fuse	LI-41
	3. Bulb (high)	LI-42
	4. Bulb (low)	LI-31
	5. Light control switch circuit	LI-62
	6. Headlight relay circuit	LI-28
	7. Headlight (Hi-beam) circuit	LI-37
	8. Instrument panel junction block	LI-19
"Low beam" and "High beam" do not come on (Both sides).	1. HEAD LL fuse, HEAD RL fuse	LI-31
	2. HEAD LH fuse, HEAD RH fuse	LI-41
	3. Bulb (high)	LI-42
	4. Bulb (low)	LI-31
	5. Light control switch circuit	LI-62
	6. Headlight relay circuit	LI-28
	7. Headlight (Hi-beam) circuit	LI-37
	8. Instrument panel junction block	LI-19
"Flash" does not come on (Low beam and Hi-beam are normal).	1. Light control switch circuit	LI-62
	2. Instrument panel junction block	LI-19

Symptom	Suspected Area	See page
Headlight is dark.	1. Bulb	-
	2. Wire harness	-
Taillight does not come on (All).	1. TAIL fuse	LI-87
	2. Light control switch circuit	LI-62
	3. Taillight relay circuit	LI-83
	4. Instrument panel junction block	LI-19
Only one front side marker light comes on.	1. Bulb	LI-90
	2. Wire harness	LI-90
Only one taillight comes on.	1. Rear combination light	LI-107
	2. Wire harness	LI-91
Only one rear side marker light comes on.	1. Bulb	LI-92
	2. Wire harness	LI-92
Daytime running light system does not operate.	1. Light control switch circuit	LI-62
	2. CAN communication line	CA-60
	3. Parking brake switch circuit	PB-14
	4. Daytime running light relay circuit	LI-33
	5. Instrument panel junction block	LI-19

Light auto turn off system

Symptom	Suspected Area	See page
Light auto turn off system does not operate.	1. Light control switch circuit	LI-62
	2. Ignition switch	ST-18
	3. Door courtesy switch circuit	LI-66
	4. Instrument panel junction block	LI-19

Fog light system

Symptom	Suspected Area	See page
Front fog light does not come on with light control switch in TAIL or HEAD position.	1. FF FOG fuse	LI-48
	2. Front fog light relay	LI-49
	3. Light control switch circuit	LI-62
	4. Front fog light circuit	LI-45
	5. Instrument panel junction block	LI-19
Only one front fog light does not come on.	1. Bulb	LI-48
	2. Wire harness	LI-45

Turn signal and hazard warning system

Symptom	Suspected Area	See page
"Hazard" and "Turn" do not come on.	1. HAZ fuse	LI-59
	2. ECU-IG2 fuse	LI-53
	3. Ignition switch	ST-18
	4. Turn signal flasher relay	LI-145
	5. Wire harness	-
Hazard warning light does not come on (Turn is normal).	1. Hazard warning switch	LI-60
	2. Wire harness	LI-56
Turn signal does not come on (Hazard is normal).	1. Headlight dimmer switch (turn signal switch)	LI-54
	2. Wire harness	LI-50
Turn signal does not come on in one direction.	1. Headlight dimmer switch (turn signal switch)	LI-54
	2. Wire harness	LI-50
Only one bulb does not come on.	1. Bulb	LI-56
	2. Wire harness	LI-50

Stop light system

Symptom	Suspected Area	See page
Stop light does not operate (All).	1. STOP fuse	LI-26
	2. BRK relay	LI-151
	3. Stop light switch	BR-13
	4. Wire harness	LI-24
Only one stop light does not operate.	1. Rear combination light	LI-107
	2. Wire harness	LI-24

Illuminated entry system

Symptom	Suspected Area	See page
Illuminated entry of multiplex network body ECU control does not operate (All).	1. Ignition switch	ST-18
	2. Door lock position circuit	LI-70
	3. Door courtesy switch circuit	LI-66
	4. Illumination circuit	LI-75
	5. Instrument panel junction block	LI-19

Foot light system

Symptom	Suspected Area	See page
Step light of body ECU control does not operate.	1. Ignition switch	ST-18
	2. Door lock position switch	LI-70
	3. Door courtesy switch circuit	LI-66
	4. Footwell light circuit	LI-73
	5. Instrument panel junction block	LI-19

Others

Symptom	Suspected Area	See page
Vanity light does not operate.	1. Bulb	LI-127
	2. Vanity light switch	LI-128
	3. Wire harness	-
Back-up light does not come on (All).	1. GAUGE1 fuse	LI-61
	2. Park / neutral position switch	AX-108
	3. Wire harness	LI-59
Back door courtesy light does not come on.	1. Bulb	LI-122
	2. DOME fuse	-
	3. Back door courtesy switch	LI-143
	4. Wire harness	-
Center console illumination does not come on.	1. Center console light	LI-130
	2. Wire harness	-

TERMINALS OF ECU

1. CHECK INSTRUMENT PANEL JUNCTION BLOCK (MAIN BODY ECU)

Instrument Panel Junction Block (Front View)

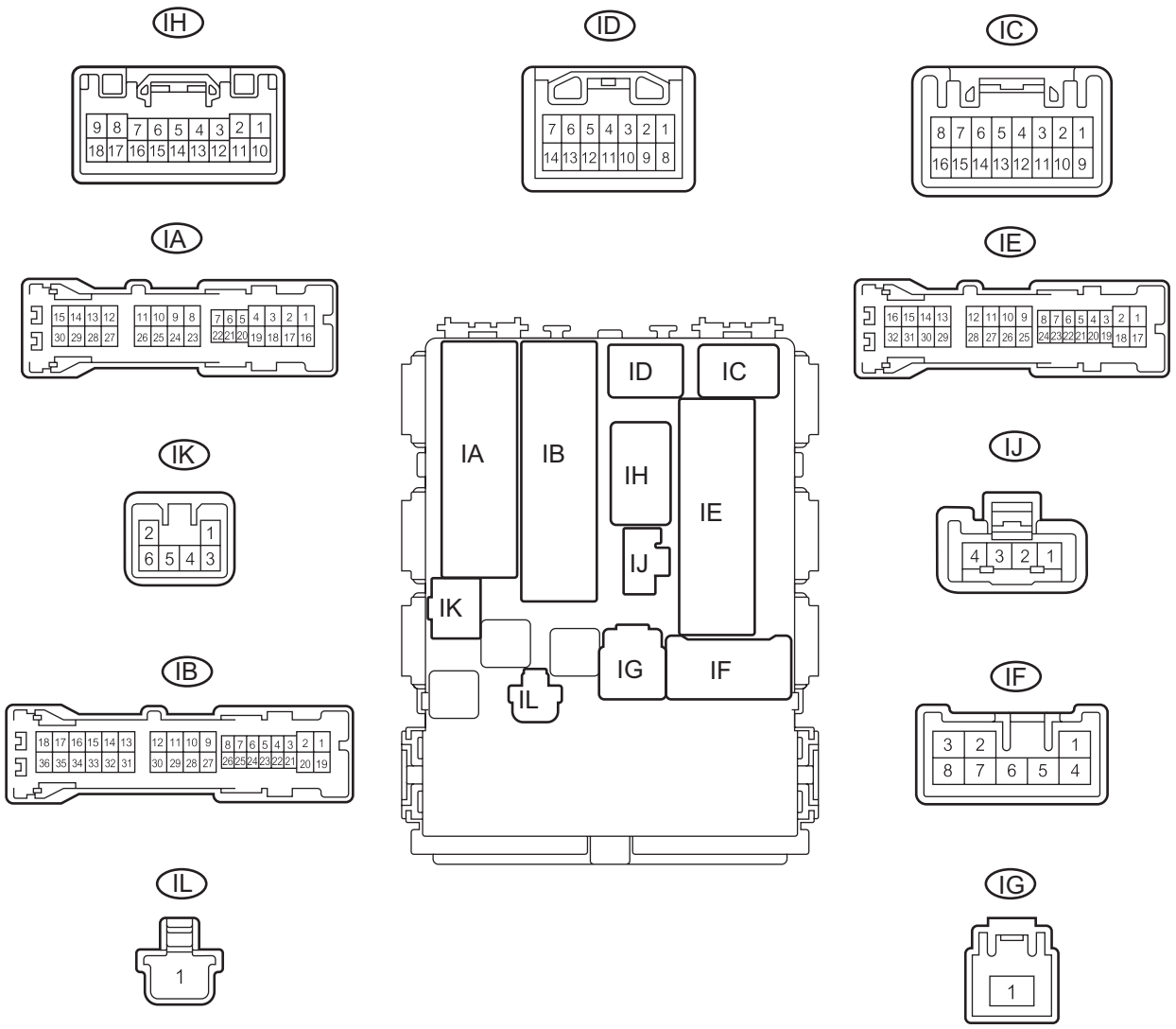

H

E114510E26

LI

Instrument Panel Junction Block (Rear View)

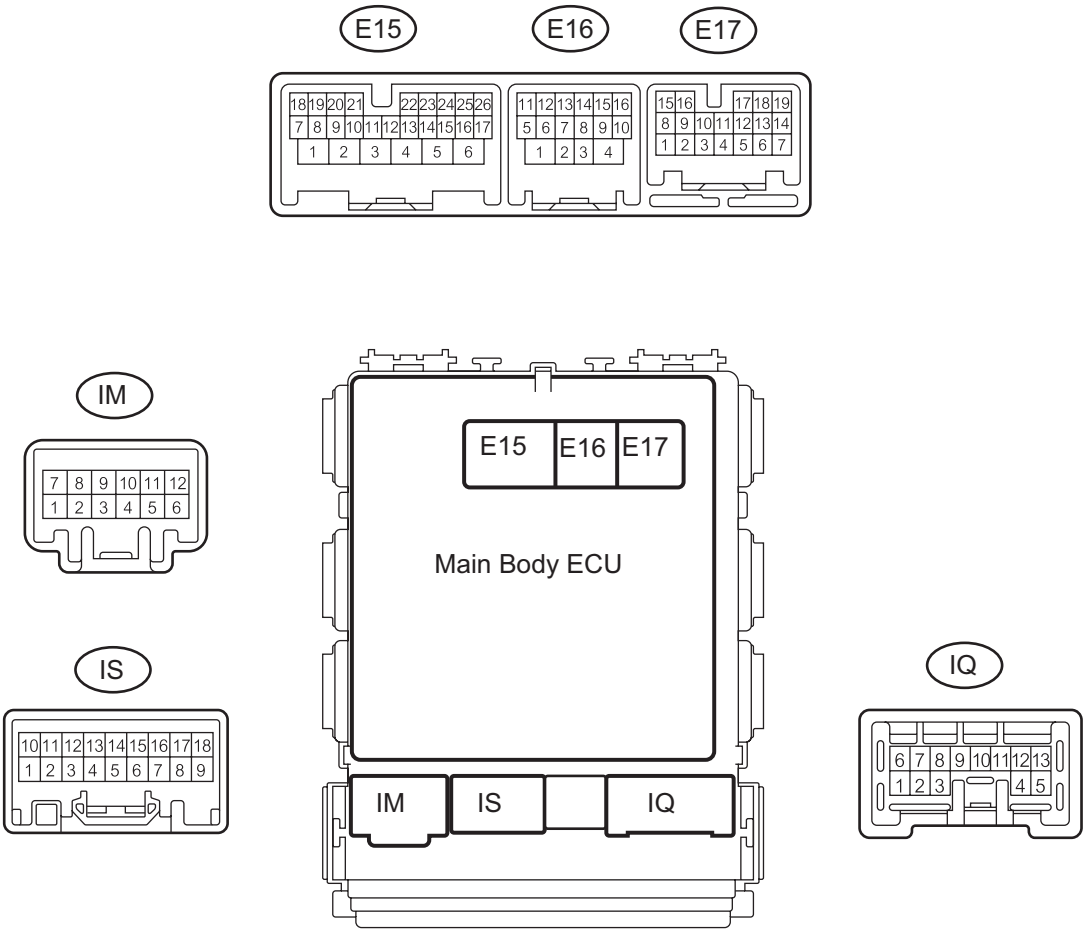

(a) Measure the voltage of the connectors.

Symbols (Terminal No.)	Wiring Color	Terminal Description	Condition	Specified Condition
HRLY (E15-20) - GND1 (IE-17)	BR - W-B	Headlight Relay (HEAD signal)	Light control switch is OFF or TAIL	10 to 14 V
HRLY (E15-20) - GND1 (IE-17)	BR - W-B	Headlight Relay (HEAD signal)	Light control switch is HEAD	Below 1 V
DIM (E16-3) - GND1 (IE-17)	LG - W-B	Daytime running light Relay (High beam signal)	Light control switch is HEAD	Below 1 V
DIM (E16-3) - GND1 (IE-17)	LG - W-B	Daytime running light Relay (High beam signal)	Light control switch is HEAD	10 to 14 V
TAIL (E15-21) - GND1 (IE-17)	W - W-B	Taillight relay (TAIL signal)	Light control switch is OFF	Below 1 V
TAIL (E15-21) - GND1 (IE-17)	W - W-B	Taillight relay (TAIL signal)	Light control switch is TAIL	10 to 14 V

Symbols (Terminal No.)	Wiring Color	Terminal Description	Condition	Specified Condition
ILE (IK-2) - GND1 (IE-17)	W - W-B	Illumination signal	• Room light switch position is DOOR • Door closed	10 to 14 V
ILE (IK-2) - GND1 (IE-17)	W - W-B	Illumination signal	• Room light switch position is DOOR • Door open	Below 1 V
FSPT (E15-2) - GND1 (IE-17)	V - W-B	Foot light illumination (Illumination signal)	Foot light illumination OFF	10 to 14 V
FSPT (E15-2) - GND1 (IE-17)	V - W-B	Foot light illumination (Illumination signal)	Foot light illumination ON	Below 1 V
HU (IJ-4) - GND1 (IE-17)	O - W-B	Headlight dimmer switch (HIGH signal)	Light control switch is HEAD Headlight dimmer switch is LOW	10 to 14 V
HU (IJ-4) - GND1 (IE-17)	O - W-B	Headlight dimmer switch (HIGH signal)	Light control switch is HEAD Headlight dimmer switch is HIGH	Below 1 V
LCTY (E15-8) - GND1 (IE-17)	SB - W-B	Courtesy switch (Rear left door circuit)	Rear left door is closed	Below 1 V
LCTY (E15-8) - GND1 (IE-17)	SB - W-B	Courtesy switch (Rear left door circuit)	Rear left door is open	10 to 14 V
FFGO (E17-17) - GND1 (IE-17)	G - W-B	Front fog relay (Front fog circuit)	Front fog light is OFF	10 to 14 V
FFGO (E17-17) - GND1 (IE-17)	G - W-B	Front fog relay (Front fog circuit)	Front fog light is ON	Below 1 V
DCTY (IA-21) - GND1 (IE-17)	W - W-B	Courtesy switch (Front left door circuit)	Front left door is open	Below 1 V
DCTY (IA-21) - GND1 (IE-17)	W - W-B	Courtesy switch (Front left door circuit)	Front left door is closed	10 to 14 V
RRCY (ID-7) - GND1 (IE-17)	LG - W-B	Courtesy switch (Rear right door circuit)	Rear right door is open	Below 1 V
RRCY (ID-7) - GND1 (IE-17)	LG - W-B	Courtesy switch (Rear right door circuit)	Rear right door is closed	10 to 14 V
HF (E15-22) - GND1 (IE-17)	R - W-B	Headlight dimmer switch (FLASH signal)	Headlight dimmer switch is OFF	10 to 14 V
HF (E15-22) - GND1 (IE-17)	R - W-B	Headlight dimmer switch (FLASH signal)	Headlight dimmer switch is FLASH	Below 1 V
FFOG (E17-13) - GND1 (IE-17)	GR - W-B	Front fog light switch (Front fog light signal)	Light control switch is TAIL Fog light switch is OFF	10 to 14 V
FFOG (E17-13) - GND1 (IE-17)	GR - W-B	Front fog light switch (Front fog light signal)	Light control switch is TAIL Fog light switch is ON	Below 1 V
PCTY (IC-14) - GND1 (IE-17)	BR - W-B	Courtesy switch (Front right door circuit)	Front right door is open	Below 1 V
PCTY (IC-14) - GND1 (IE-17)	BR - W-B	Courtesy switch (Front right door circuit)	Front right door is closed	10 to 14 V
BCTY (IA-7) - GND1 (IE-17)	LG - W-B	Courtesy switch (Back door)	Back door is open	Below 1 V
BCTY (IA-7) - GND1 (IE-17)	LG - W-B	Courtesy switch (Back door)	Back door is closed	10 to 14 V
LSWP (E15-10) - GND1 (IE-17)	Y - W-B	Door lock position switch (Front right door)	Front right door is in unlock position	10 to 14 V
LSWP (E15-10) - GND1 (IE-17)	Y - W-B	Door lock position switch (Front right door)	Front right door is in lock position	Below 1 V
LSWD (E15-25) - GND1 (IE-17)	Y - W-B	Door lock position switch (Front left door)	Front left door is in unlock position	10 to 14 V
LSWD (E15-25) - GND1 (IE-17)	Y - W-B	Door lock position switch (Front left door)	Front left door is in lock position	Below 1 V

If the result is not as specified, the junction block (main body ECU) may have a malfunction.

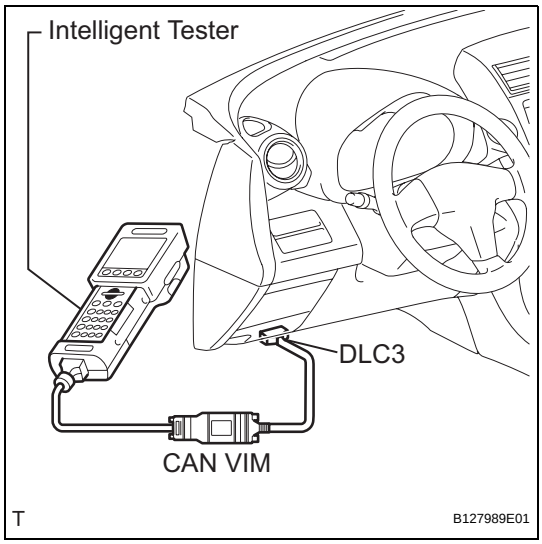

DATA LIST / ACTIVE TEST

1. READ DATA LIST

HINT:

Using the intelligent tester's DATA LIST allows switch, sensor, actuator and other item values to be read without removing any parts. Reading the DATA LIST early in troubleshooting is one way to save time.

(a) Connect the intelligent tester (with CAN VIM) to the DLC3.

(b) Turn the ignition switch ON.

(c) Read the DATA LIST according to the display on the tester.

Main body ECU

Item	Measurement Item/ Display (Range)	Normal Condition	Diagnostic Note
ACC SW	ACC switch signal / ON or OFF	ON: Ignition switch is in ACC, ON or START position OFF: Ignition switch is in OFF position	-
IG SW	IG switch signal / ON or OFF	ON: Ignition switch is in ON or START position OFF: Ignition switch is in OFF or ACC position	-
D DOR CTY SW	Driver's door courtesy switch signal / ON or OFF	ON: Driver's door is open OFF: Driver's door is closed	-
D LOCK POS SW	Driver's door lock position switch signal / ON or OFF	ON: Door lock is in unlock position OFF: Door lock is in lock position	-
P DOR CYT SW	Passenger's door courtesy switch signal / ON or OFF	ON: Front passenger's door is open OFF: Front passenger's door is closed	-
P LOCK POS SW	Front passenger's door lock position switch signal / ON or OFF	ON: Front passenger's door lock is in unlock position OFF: Front passenger's door lock is in lock position	-
RR DOR CTY SW	Rear door RH courtesy switch signal / ON or OFF	ON: Right rear door is open OFF: Right rear door is closed	-
DIMMER SW	Headlight dimmer switch signal / ON or OFF	ON: Headlight dimmer switch is in HI or FLASH position OFF: Headlight dimmer switch is in LO position	-
HIGH FLASHER SW	Headlight dimmer switch signal / ON or OFF	ON: Headlight dimmer switch is in FLASH position OFF: Headlight dimmer switch is in except FLASH position	-
F FOG LIGHT SW	Front fog light switch signal / ON or OFF	ON: Front fog light switch is ON position OFF: Front fog light switch is OFF position	-
HEAD LIGHT SW	Headlight control switch signal / ON or OFF	ON: Light control switch is in HEAD position OFF: Light control switch is in except HEAD position	-

Item	Measurement Item/ Display (Range)	Normal Condition	Diagnostic Note
TAIL LIGHT SW	Taillight switch signal / ON or OFF	ON: Light control switch is in TAIL or HEAD position OFF: Light control switch is in OFF position	-
RL DOR CTY SW	Rear door LH courtesy switch signal / ON or OFF	ON: Left rear door is open OFF Left rear door is closed	-
BK DOR CTY SW	Back door courtesy switch signal / ON or OFF	ON: Back door is open OFF: Back door is closed	-

2. PERFORM ACTIVE TEST

HINT:

Performing the intelligent tester's ACTIVE TEST allows relay, VSV, actuator and other items to be operated without removing any parts. Performing the ACTIVE TEST early in troubleshooting is one way to save time. The DATA LIST can be displayed during the ACTIVE TEST.

(a) Connect the intelligent tester (with CAN VIM) to the DLC3.

(b) Turn the ignition switch ON.

(c) Perform the ACTIVE TEST by following the directions on the tester screen.

Main body ECU

Item	Test Details	Diagnostic Note
HAZARD	Turn hazard light flasher relay ON / OFF	-
F FOG LIGHT RLY	Turn front fog light relay ON / OFF	-
HEAD LIGHT	Turn headlight relay ON / OFF	-
HEAD LIGHT (HI)	Turn headlight dimmer relay (Headlight dimmer switch HI position) ON / OFF	-
TAIL LIGHT	Turn taillight relay ON / OFF	-
ILLUMI OUTPUT	Test Details: Turn interior light and key illumination ON / OFF Vehicle Condition: Interior light switch is in DOOR position and all doors are closed	-
STEP LIGHT	Foot light illumination ON / OFF	-

Stop Light Switch Circuit

DESCRIPTION

When the stop light switch is turned on, current flows to the stop lights to illuminate them.

WIRING DIAGRAM

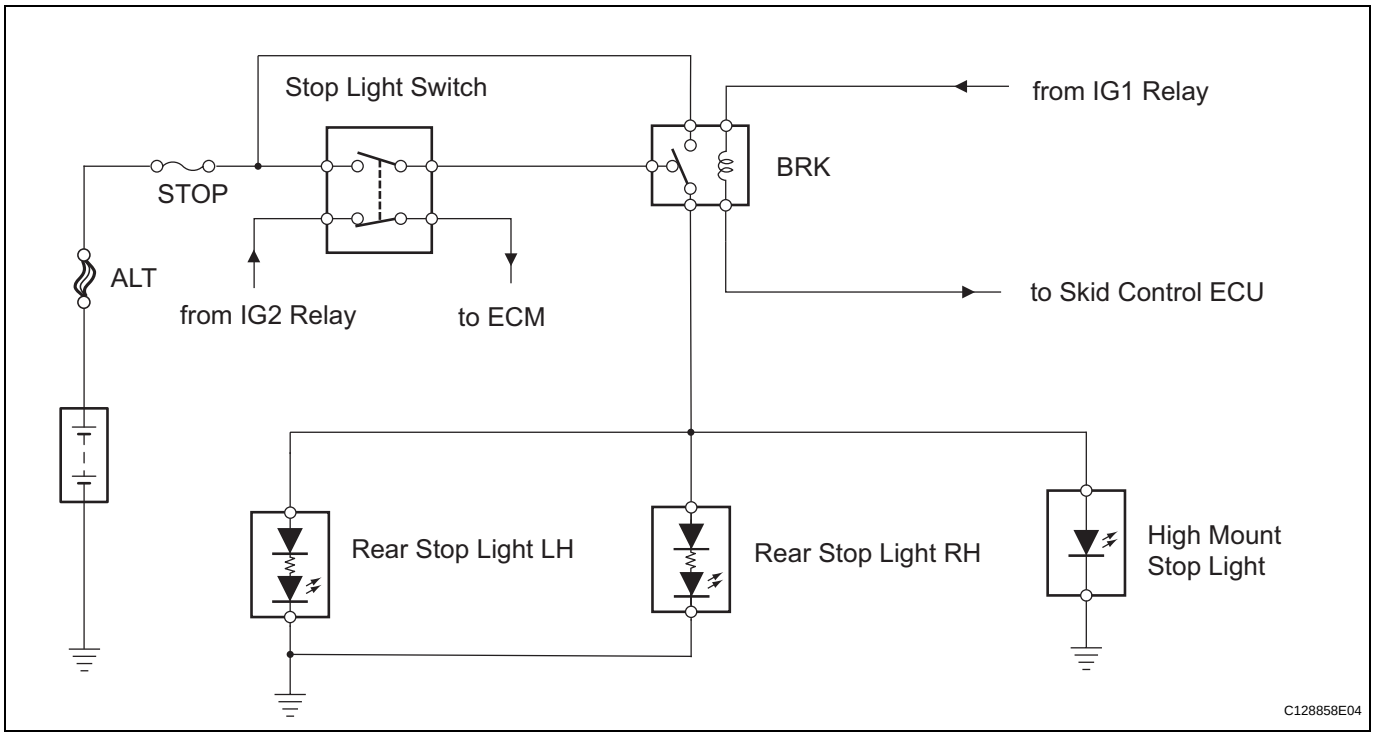

INSPECTION PROCEDURE

1	INSPECT FUSE (STOP)

(a) Remove the STOP fuse from the instrument panel junction block.
(b) Measure the resistance of the fuse.
Standard resistance:
Below 1 Ω

NG → **REPLACE FUSE**

OK

LI

2 INSPECT STOP LIGHT (REAR COMBINATION LIGHT)

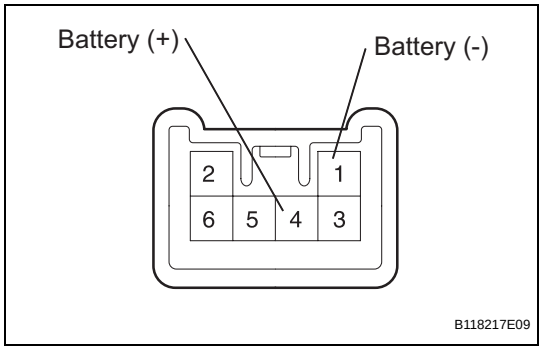

(a) Remove the rear combination light.
(b) Connect the positive (+) lead from the battery to terminal 4 and the negative (-) lead to terminal 1, then check that the light comes on.
OK:
Light comes on.

NG → **REPLACE REAR COMBINATION LIGHT**

OK

3 INSPECT REAR STOP LIGHT (HIGH MOUNT STOP LIGHT)

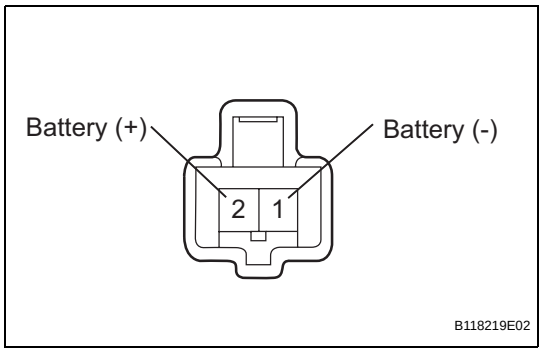

(a) Remove the high mount stop light assembly.
(b) Connect the positive (+) lead from the battery to terminal 2 and the negative (-) lead to terminal 1, then check that the light comes on.
OK:
Light comes on

NG → **REPLACE HIGH MOUNT STOP LIGHT ASSEMBLY**

OK

4 INSPECT BRK RELAY

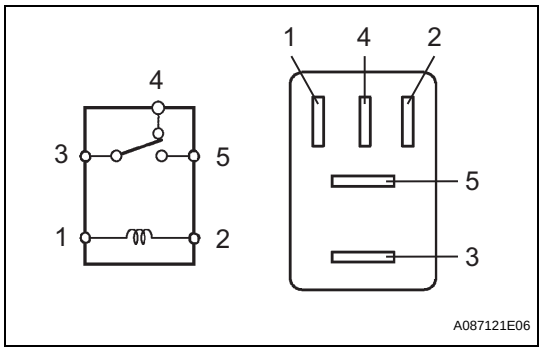

(a) Remove the BRK relay from the engine room No. 1 relay block.
(b) Measure the resistance of the relay.
Standard resistance

Tester Connection	Specified Condition
3 - 4	Below 1 Ω
3 - 4	10 kΩ or higher (Battery voltage applied to terminals 1 and 2)
3 - 5	10 kΩ or higher
3 - 5	Below 1 Ω (Battery voltage applied to terminals 1 and 2)

NG → **REPLACE BRK RELAY**

OK

LI

5 INSPECT STOP LIGHT SWITCH

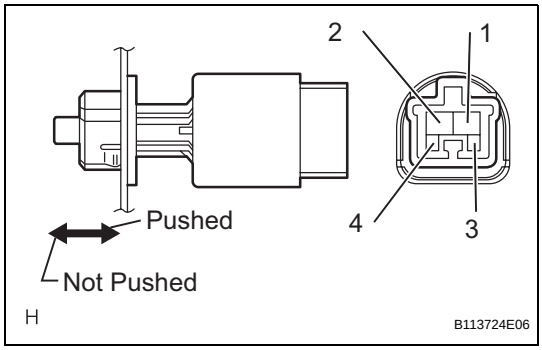

(a) Remove the stop light switch.
(b) Measure the resistance of the switch.
Standard resistance

Tester Connection	Condition	Specified Condition
1 - 2	Switch pin not pushed	Below 1 Ω
3 - 4	Switch pin pushed	10 kΩ or higher
1 - 2	Switch pin pushed	10 kΩ or higher
3 - 4	Switch pin not pushed	Below 1 Ω

NG → **REPLACE STOP LIGHT SWITCH**

OK

6 CHECK WIRE HARNESS (STOP LIGHT SWITCH - BATTERY)

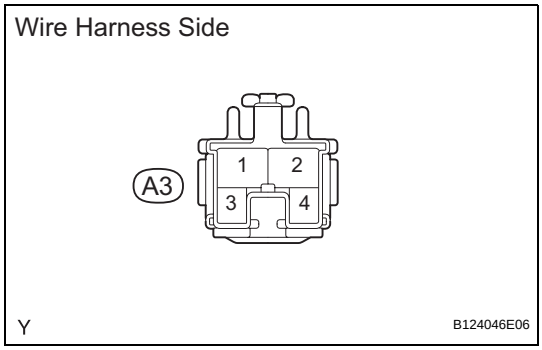

(a) Disconnect the A3 stop light switch connector.
(b) Measure the voltage of the wire harness side connector.
Standard voltage

Tester Connection	Specified Condition
A3-2 - Body ground	10 to 14 V

NG → **REPAIR OR REPLACE HARNESS AND CONNECTOR**

OK

7 CHECK WIRE HARNESS (STOP LIGHT SWITCH - REAR STOP LIGHT)

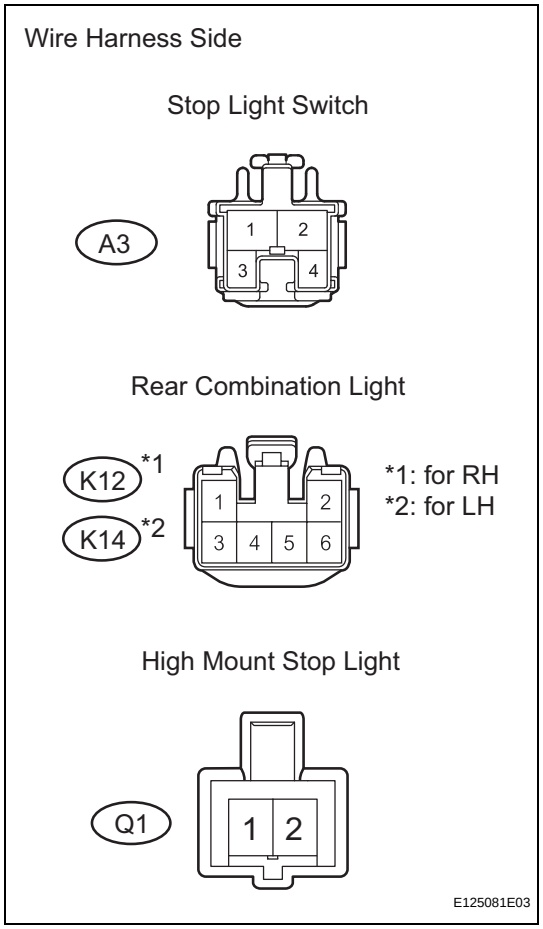

(a) Disconnect the A3 stop light switch connector.
(b) Disconnect the K12 and K14 rear combination light connectors.
(c) Disconnect the Q1 high mount stop light connector.
(d) Measure the resistance of the wire harness side connectors.

Standard resistance

Tester Connection	Specified Condition
A3-1 - K12-4	Below 1 Ω
A3-1 or K12-4 - Body ground	10 kΩ or higher
A3-1 - K14-4	Below 1 Ω
A3-1 or K14-4 - Body ground	10 kΩ or higher
A3-1 - Q1-2	Below 1 Ω
A3-1 or Q1-2 - Body ground	10 kΩ or higher

NG → **REPAIR OR REPLACE HARNESS AND CONNECTOR**

OK

REPAIR OR REPLACE HARNESS AND CONNECTOR (REAR STOP LIGHT - BODY GROUND)

Headlight Relay Circuit

DESCRIPTION

When the light control switch, located on the headlight dimmer switch, is turned to the HEAD position, the HEAD relay illuminates the headlights.

WIRING DIAGRAM

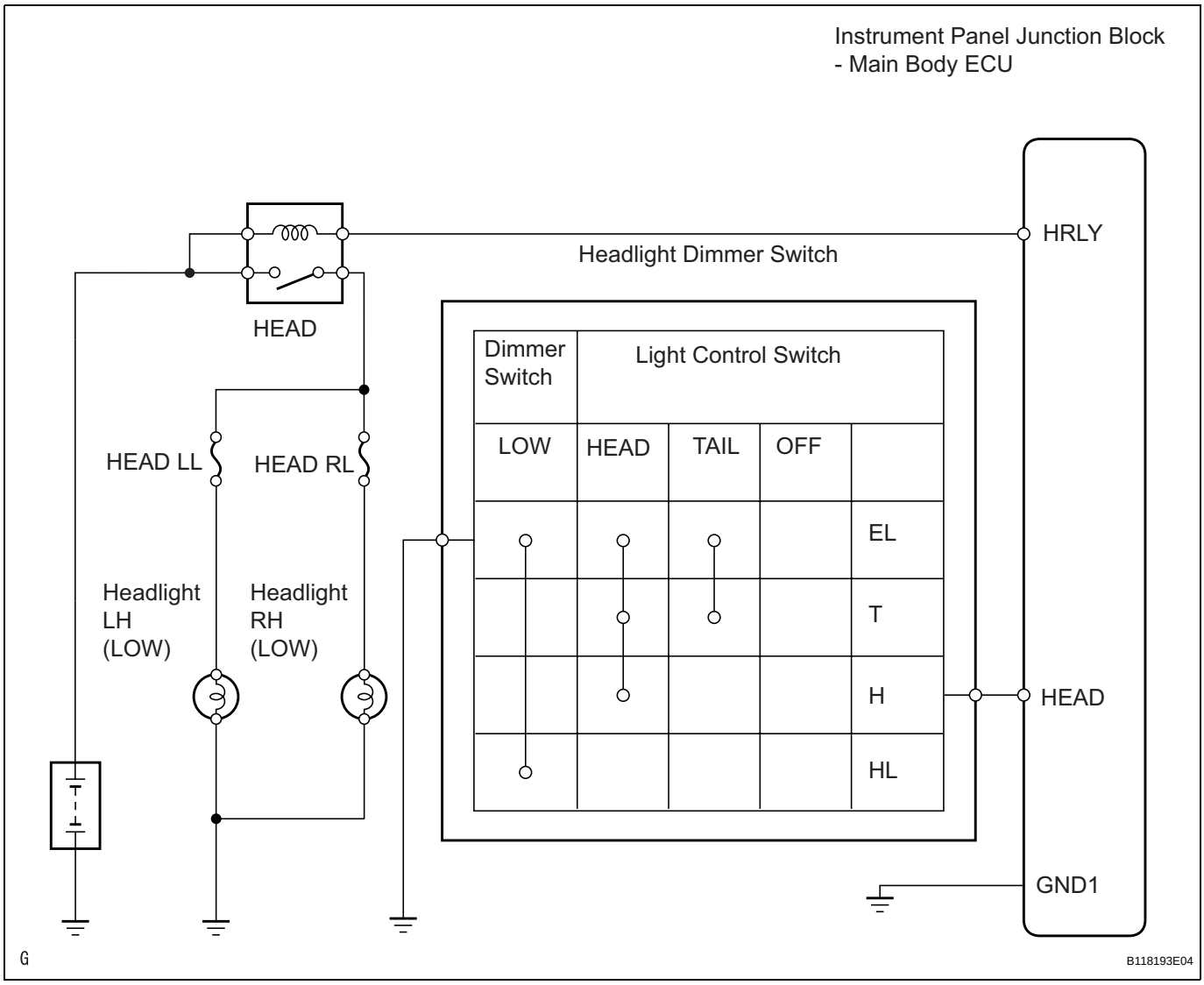

INSPECTION PROCEDURE

1	PERFORM ACTIVE TEST BY INTELLIGENT TESTER (HEADLIGHT)

(a) Connect the intelligent tester (with CAN VIM) to the DLC3.
(b) Turn the ignition switch ON and press the intelligent tester main switch ON.
(c) Select the item below in the ACTIVE TEST and then check the relay operation.

Main body ECU

Item	Test Details: Display (Range)	Diagnostic Note
HEAD LIGHT	Headlight Relay ON/OFF	-

OK:
Headlight comes on

OK → **Go to step 7**

NG

2 INSPECT FUSE (HEAD LL, HEAD RL)

(a) Remove the HEAD LL fuse and HEAD RL fuse from the engine room No. 2 relay block.
(b) Measure the resistance of the fuses.
Standard resistance:
Below 1 Ω

NG → **REPLACE FUSE**

OK

3 INSPECT HEADLIGHT RELAY (Marking: HEAD)

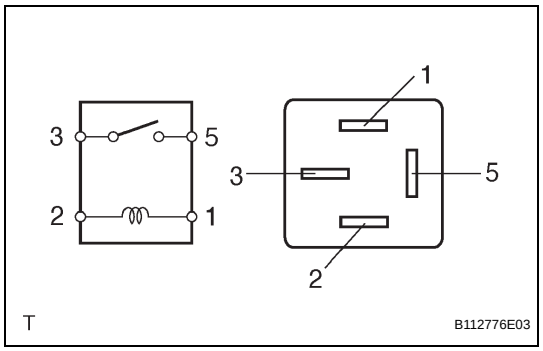

(a) Remove the headlight relay from the engine room No. 2 relay block.
(b) Measure the resistance of the relay.
Standard resistance

Tester Connection	Specified Condition
3 - 5	10 kΩ or higher
3 - 5	Below 1 Ω (Battery voltage applied to terminals 1 and 2)

NG → **REPLACE HEADLIGHT RELAY**

OK

4 INSPECT BULB (HEADLIGHT BULB)

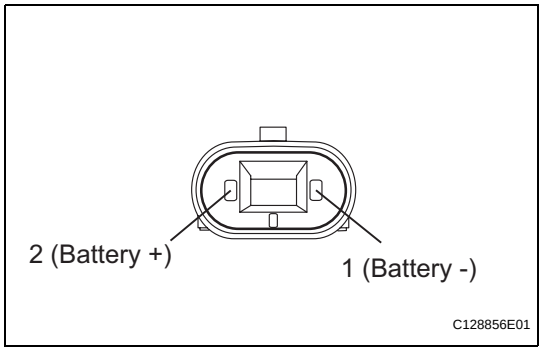

(a) Remove the headlight bulbs (LOW).
(b) Connect the positive (+) lead from the battery to terminal 2 and the negative (-) lead to terminal 1, then check that the bulb illuminates.
OK:
Bulb illuminates.

NG → **REPLACE BULB**

LI

OK

5 CHECK WIRE HARNESS (MAIN BODY ECU - BATTERY)

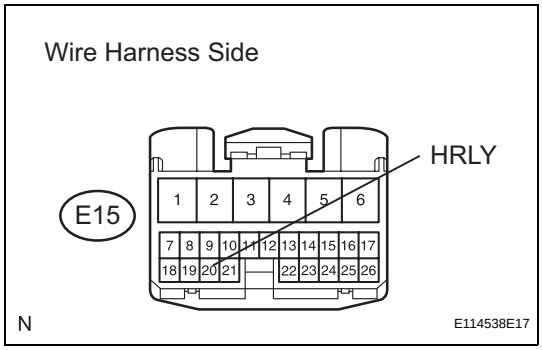

(a) Disconnect the E15 main body ECU connector.
(b) Measure the voltage of the wire harness side connector.
Standard voltage

Tester Connection	Specified Condition
E15-20 (HRLY) - Body ground	10 to 14 V

NG → **REPAIR OR REPLACE HARNESS AND CONNECTOR**

OK

6 CHECK INSTRUMENT PANEL JUNCTION BLOCK (MAIN BODY ECU)

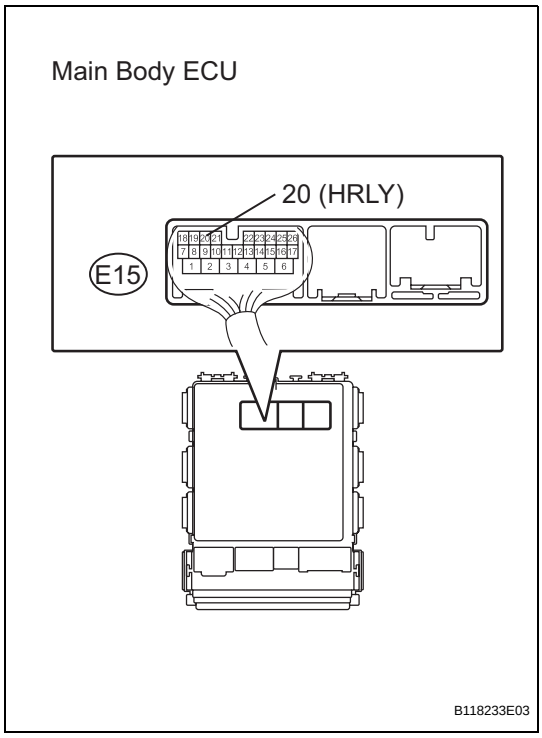

(a) Measure the voltage of the main body ECU.
Standard voltage

Tester Connection	Condition	Specified Condition
E15-20 (HRLY) - Body ground	Light control switch OFF	10 to 14 V
E15-20 (HRLY) - Body ground	Light control switch HEAD	Below 1 V

NG → **REPLACE INSTRUMENT PANEL JUNCTION BLOCK (MAIN BODY ECU)**

OK

REPAIR OR REPLACE HARNESS AND CONNECTOR (HEAD RELAY - HEADLIGHT BULB AND BODY GROUND)

7 CHECK WIRE HARNESS (HEADLIGHT DIMMER SWITCH - MAIN BODY ECU)

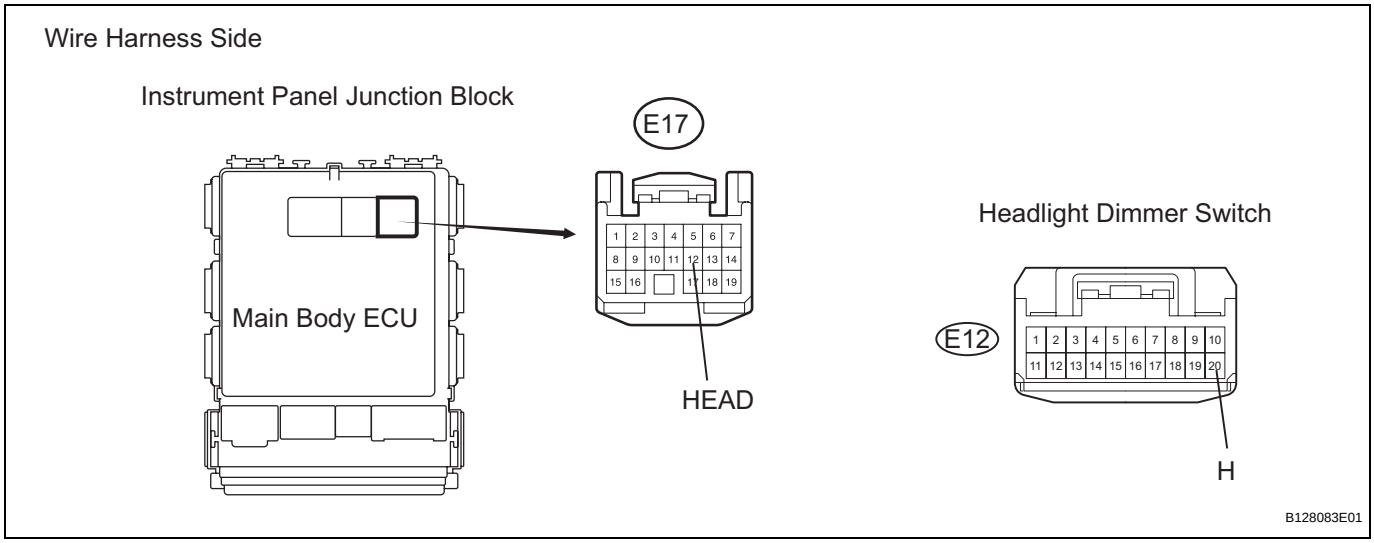

(a) Disconnect the E17 main body ECU connector.
(b) Disconnect the E12 headlight dimmer switch connector.
(c) Measure the resistance of the wire harness side connectors.

Standard resistance

Tester Connection	Specified Condition
E17-12 (HEAD) - E12-20 (H)	Below 1 Ω
E17-12 (HEAD) or E12-20 (H) - Body ground	10 kΩ or higher

NG → **REPAIR OR REPLACE HARNESS AND CONNECTOR**

OK

8 INSPECT HEADLIGHT DIMMER SWITCH

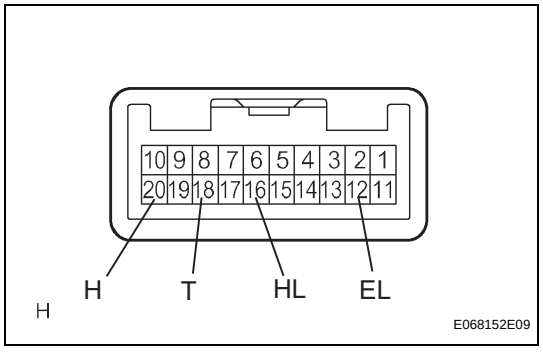

(a) Disconnect the E12 headlight dimmer switch.
(b) Measure the resistance of the switch.

Standard resistance

Tester Connection	Switch Condition	Specified Condition
18 (T) - 12 (EL)	TAIL	Below 1 Ω
18 (T) - 12 (EL)	OFF	10 kΩ or higher
20 (H) - 12 (EL)	HEAD	Below 1 Ω
20 (H) - 12 (EL)	OFF	10 kΩ or higher
16 (HL) - 12 (EL)	LOW	Below 1 Ω
16 (HL) - 12 (EL)	HIGH	10 kΩ or higher

NG → **REPLACE HEADLIGHT DIMMER SWITCH ASSEMBLY**

LI

OK

REPAIR OR REPLACE HARNESS AND CONNECTOR (HEADLIGHT DIMMER SWITCH - BODY GROUND)

DRL Relay Circuit

DESCRIPTION

The main body ECU controls the daytime running light No. 2 relay (Marking: DRL NO.2).

WIRING DIAGRAM

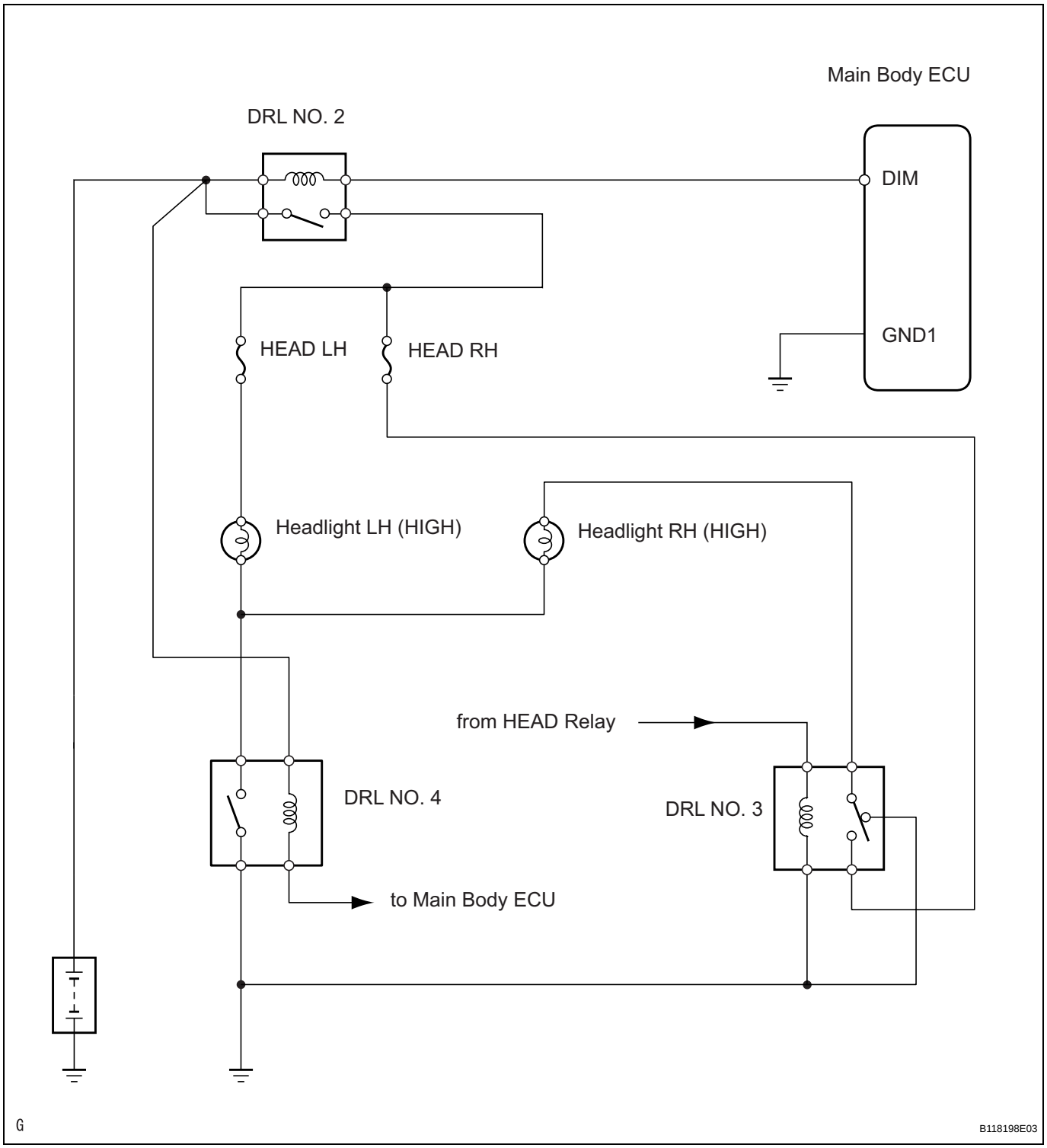

INSPECTION PROCEDURE

1	INSPECT DAYTIME RUNNING LIGHT RELAY (Marking: DRL NO. 2, DRL NO. 3, DRL NO. 4)

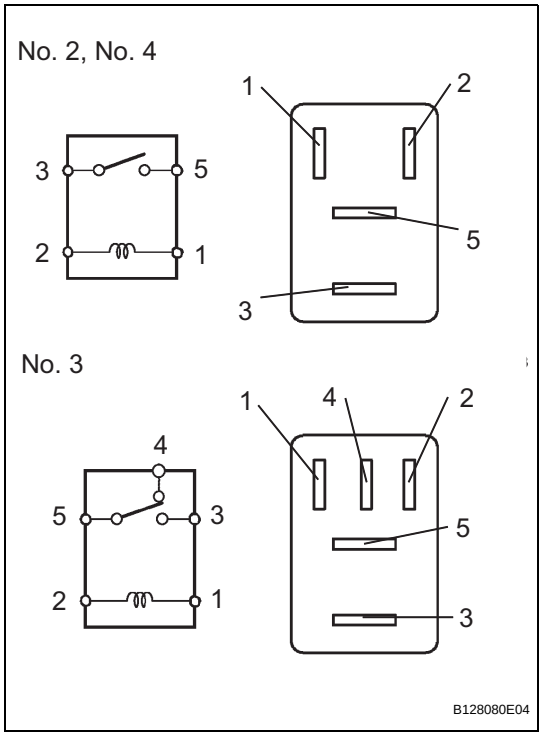

(a) Remove the No. 2 relay, No. 3 relay and No. 4 relay from the engine room No. 2 relay block.
(b) Measure the resistance of the relays.
Standard resistance:
No. 2, No. 4

Tester Connection	Specified Condition
3 - 5	10 kΩ or higher
3 - 5	Below 1 Ω (Battery voltage applied to terminals 1 and 2)

No. 3

Tester Connection	Specified Condition
4 - 5	Below 1 Ω
4 - 5	10 kΩ or higher (Battery voltage applied to terminals 1 and 2)
3 - 5	10 kΩ or higher
3 - 5	Below 1 Ω (Battery voltage applied to terminals 1 and 2)

NG → **REPLACE DAYTIME RUNNING LIGHT RELAY**

OK

2	INSPECT FUSE (HEAD LH)

(a) Remove the HEAD LH fuse from the engine room No. 2 relay block.
(b) Measure the resistance of the fuse.
Standard resistance:
Below 1 Ω

NG → **REPLACE FUSE**

OK

LI

3 INSPECT HEADLIGHT BULB (HIGH)

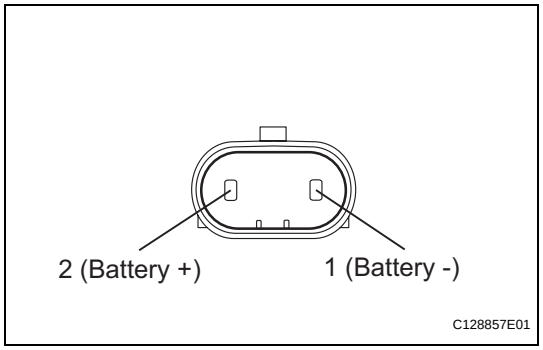

(a) Remove the headlight bulb (high).
(b) Connect the positive (+) lead from the battery to terminal 2 and the negative (-) lead to terminal 1, then check that the bulb illuminates.

NG → **REPLACE HEADLIGHT BULB (HIGH)**

OK

4 CHECK WIRE HARNESS (BATTERY - NO. 2 DAYTIME RUNNING LIGHT RELAY)

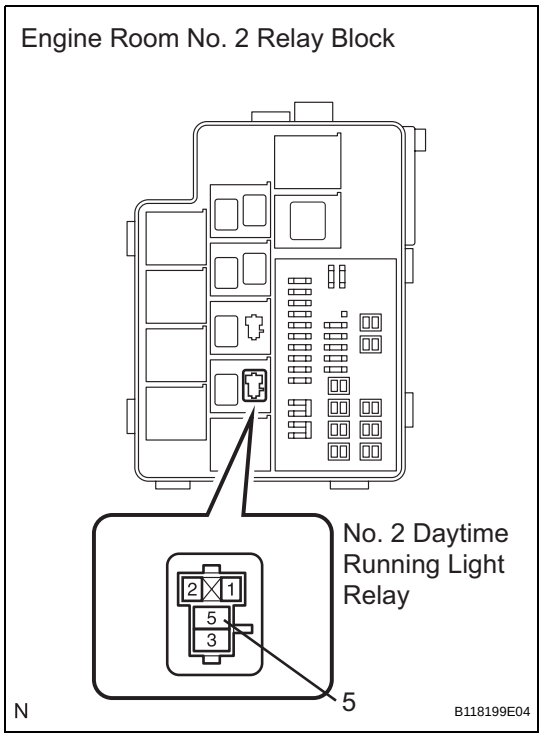

(a) Remove the No. 2 daytime running light relay from the engine room No. 2 relay block.
(b) Measure the voltage of the relay block.
Standard voltage

Tester Connection	Specified Condition
Relay block daytime running light No. 2 relay terminal 5 - Body ground	10 to 14 V

NG → **REPAIR OR REPLACE HARNESS AND CONNECTOR**

OK

LI

5	CHECK WIRE HARNESS (NO. 2 DAYTIME RUNNING LIGHT RELAY - HEADLIGHT BULB AND BODY GROUND)

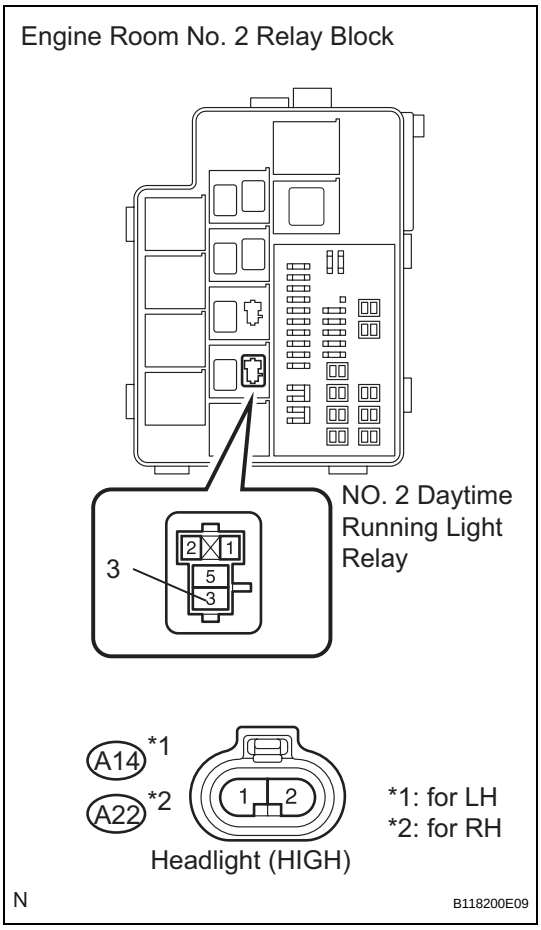

(a) Remove the No. 2 daytime running light relay from the engine room No. 2 relay block.
(b) Disconnect the A14 and A22 headlight (HIGH) connectors.
(c) Measure the resistance of the wire harness side connectors and relay block.

Standard resistance

Tester Connection	Specified Condition
Relay block daytime running light No. 2 relay terminal 3 - A14-2	Below 1 Ω
A14-2 - Body ground	10 kΩ or higher
A14-1 - A22-1	Below 1 Ω
A14-1 - Body ground	10 kΩ or higher
A22-2 - Body ground	Below 1 Ω

NG → **REPAIR OR REPLACE HARNESS AND CONNECTOR**

OK

6	CHECK WIRE HARNESS (MAIN BODY ECU - BATTERY)

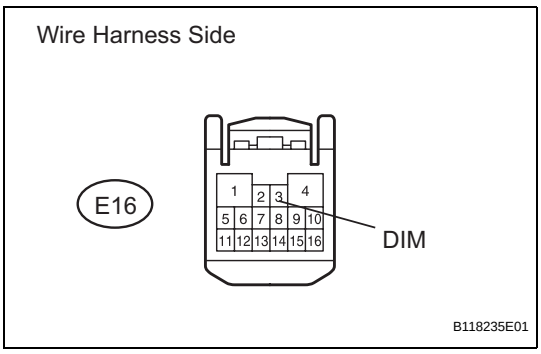

(a) Disconnect the E16 main body ECU connector.
(b) Measure the voltage of the wire harness side connector.

Standard voltage

Tester Connection	Specified Condition
E16-3 (DIM) - Body ground	10 to 14 V

NG → **REPAIR OR REPLACE HARNESS AND CONNECTOR**

OK

REPLACE INSTRUMENT PANEL JUNCTION BLOCK (MAIN BODY ECU)

LI

Headlight (HI-BEAM) Circuit

DESCRIPTION

The body ECU controls the headlight relay, No. 2 daytime running light relay (Marking: DRL NO. 2) and No. 4 daytime running light relay (Marking: DRL NO. 4).

WIRING DIAGRAM

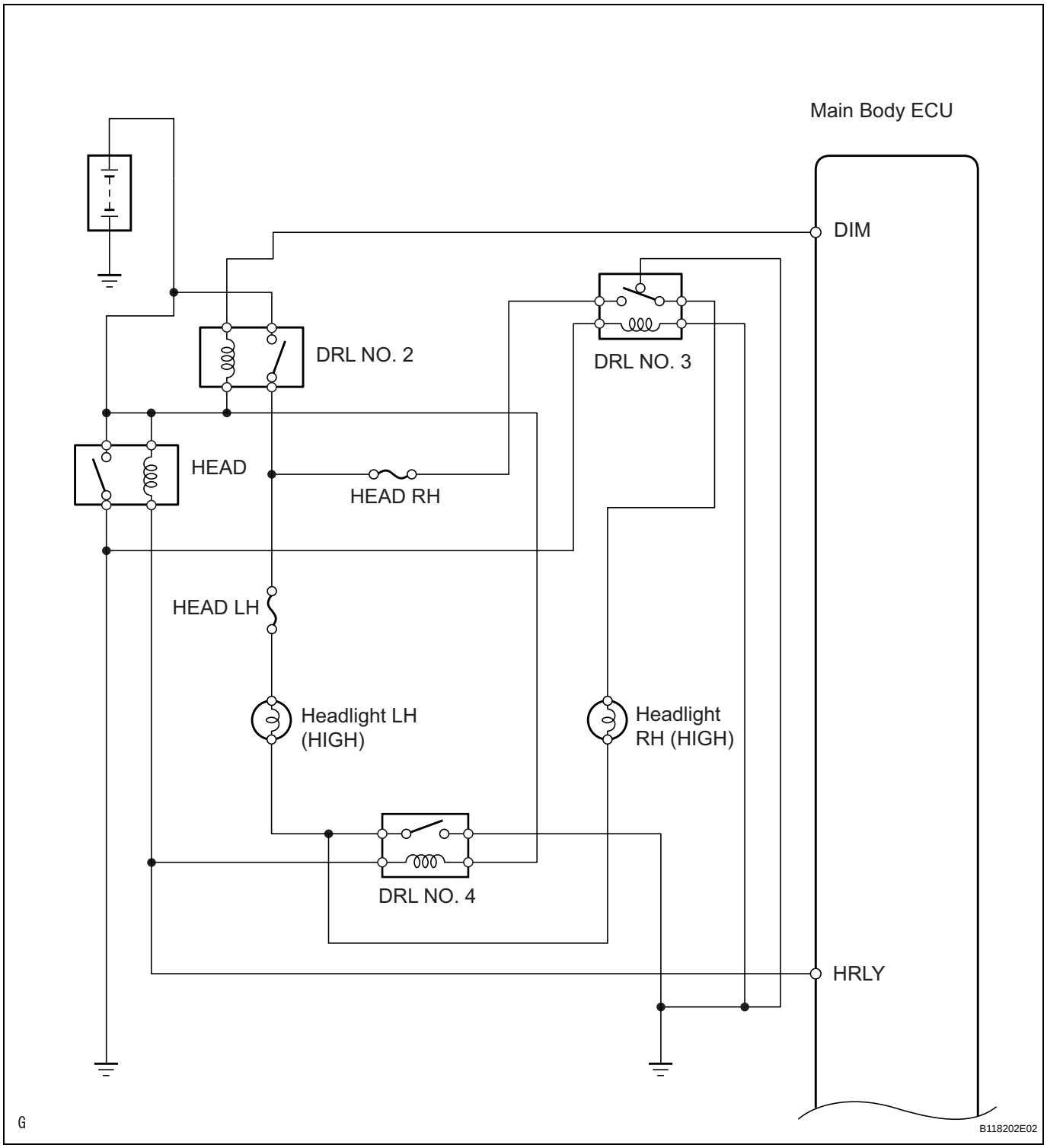

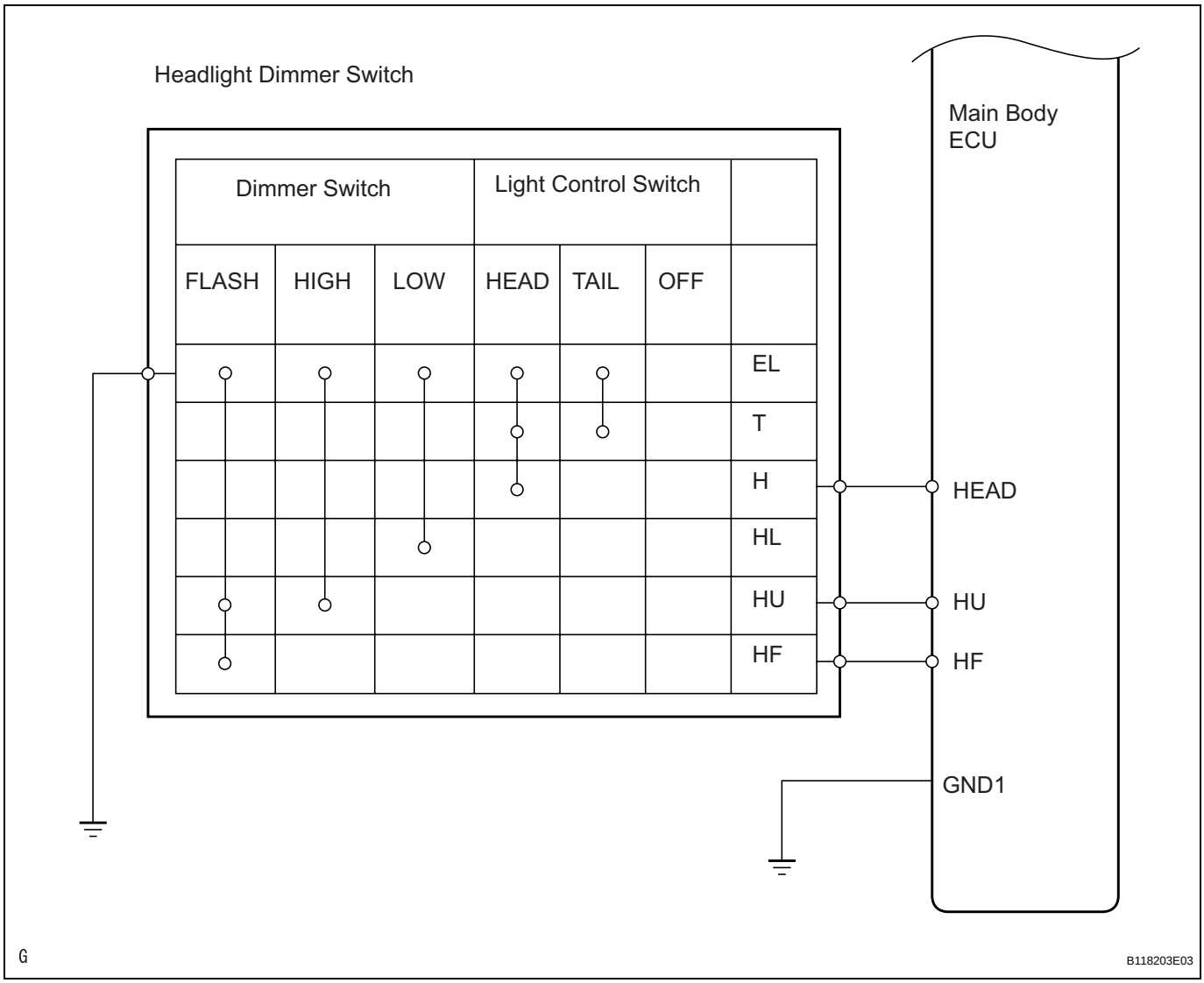

INSPECTION PROCEDURE

1	PERFORM ACTIVE TEST BY INTELLIGENT TESTER

(a) Connect the intelligent tester (with CAN VIM) to the DLC3.
(b) Turn the ignition switch to the ON position and press the intelligent tester main switch ON.
(c) Select the item below in the ACTIVE TEST and then check the relay operation.

Main body ECU

Item	Test Details	Diagnostic Note
HEADLIGHT HI	Turn headlight dimmer relay (Headlight dimmer switch HI position): ON / OFF	-

OK:
Headlight (HIGH) comes on.

OK	Go to step 10

NG

2	CHECK HEADLIGHT (LOW)

(a) Check that the headlight (LOW) comes on when the light control switch is on (HEAD).
OK:
Headlight (LOW) comes on.

NG → **GO TO HEADLIGHT RELAY CIRCUIT**

OK

3	INSPECT FUSE (HEAD LH, HEAD RH)

(a) Remove the HEAD LH fuse and HEAD RH fuse from the engine room No. 2 relay block.
(b) Measure the resistance of the fuses.
Standard resistance:
Below 1 Ω

NG → **REPLACE FUSE**

OK

4	INSPECT DAYTIME RUNNING LIGHT RELAY (Marking: DRL NO. 2, DRL NO. 3, DRL NO. 4)

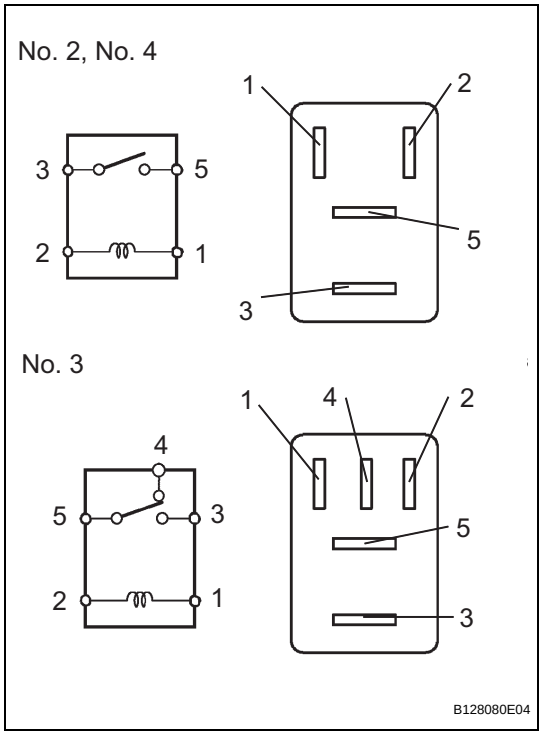

(a) Remove the No. 2 relay, No. 3 relay and No. 4 relay from the engine room No. 2 relay block.
(b) Measure the resistance of the relays.
Standard resistance:
No. 2, No. 4

Tester Connection	Specified Condition
3 - 5	10 kΩ or higher
3 - 5	Below 1 Ω (Battery voltage applied to terminals 1 and 2)

No. 3

Tester Connection	Specified Condition
4 - 5	Below 1 Ω
4 - 5	10 kΩ or higher (Battery voltage applied to terminals 1 and 2)
3 - 5	10 kΩ or higher
3 - 5	Below 1 Ω (Battery voltage applied to terminals 1 and 2)

NG → **REPLACE DAYTIME RUNNING LIGHT RELAY**

OK

LI

5	INSPECT HEADLIGHT BULB (HIGH)

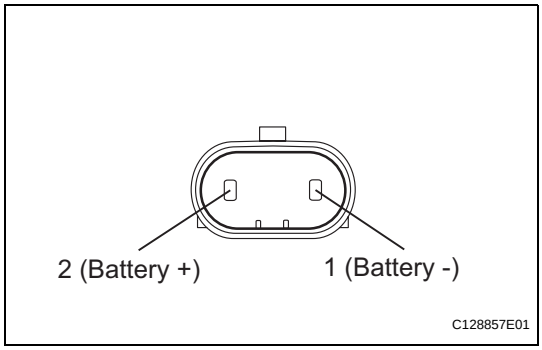

(a) Remove the headlight bulb (HIGH).
(b) Connect the positive (+) lead from the battery to terminal 2 and the negative (-) lead to terminal 1, then check that the bulb illuminates.

NG → **REPLACE HEADLIGHT BULB (HIGH)**

OK

6	CHECK WIRE HARNESS (MAIN BODY ECU - BATTERY)

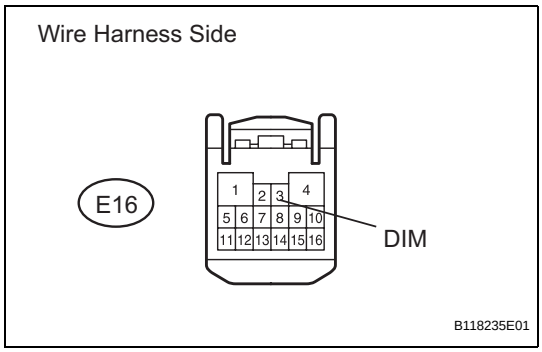

(a) Disconnect the E16 main body ECU connector.
(b) Measure the voltage of the wire harness side connector.
Standard voltage

Tester Connection	Specified Condition
E16-3 (DIM) - Body ground	10 to 14 V

NG → **REPAIR OR REPLACE HARNESS AND CONNECTOR**

OK

7	CHECK WIRE HARNESS (MAIN BODY ECU)

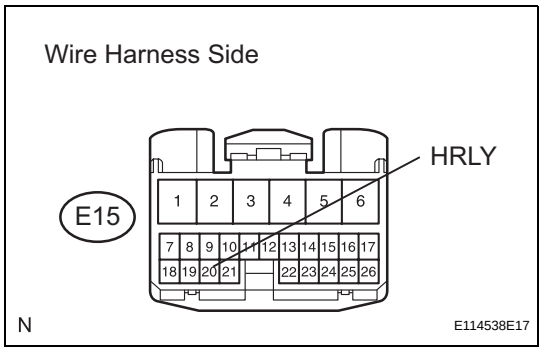

(a) Remove the headlight relay from the engine room No. 2 relay block.
(b) Disconnect the E15 main body ECU connector.
(c) Measure the voltage of the wire harness side connector.
Standard voltage

Tester Connection	Specified Condition
E15-20 (HRLY) - Body ground	10 to 14 V

NG → **REPAIR OR REPLACE HARNESS AND CONNECTOR**

OK

LI

8	CHECK WIRE HARNESS (HEADLIGHT RELAY - NO. 3 DAYTIME RUNNING LIGHT RELAY AND BODY GROUND)

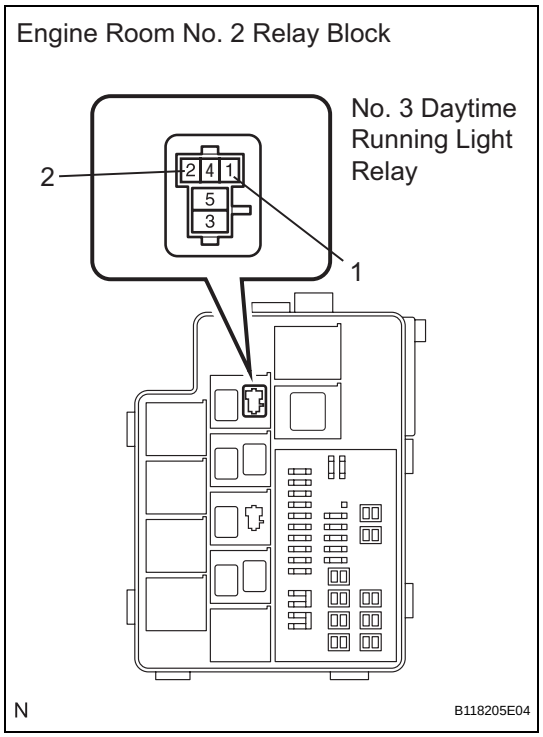

(a) Remove the No. 3 daytime running light relay from the engine room No. 2 relay block.

(b) Measure the voltage and resistance of the relay block.

Standard voltage

Tester Connection	Condition	Specified Condition
Relay block No. 3 daytime running light relay terminal 1 - Body ground	Light control switch ON (HEAD) Dimmer switch position LOW	10 to 14 V

Standard resistance

Tester Connection	Specified Condition
Relay block No. 3 daytime running light relay terminal 2 - Body ground	Below 1 Ω

NG → **REPAIR OR REPLACE HARNESS AND CONNECTOR**

OK

LI

9	CHECK WIRE HARNESS (BATTERY - NO. 2 DAYTIME RUNNING LIGHT RELAY, BULB AND BODY GROUND)

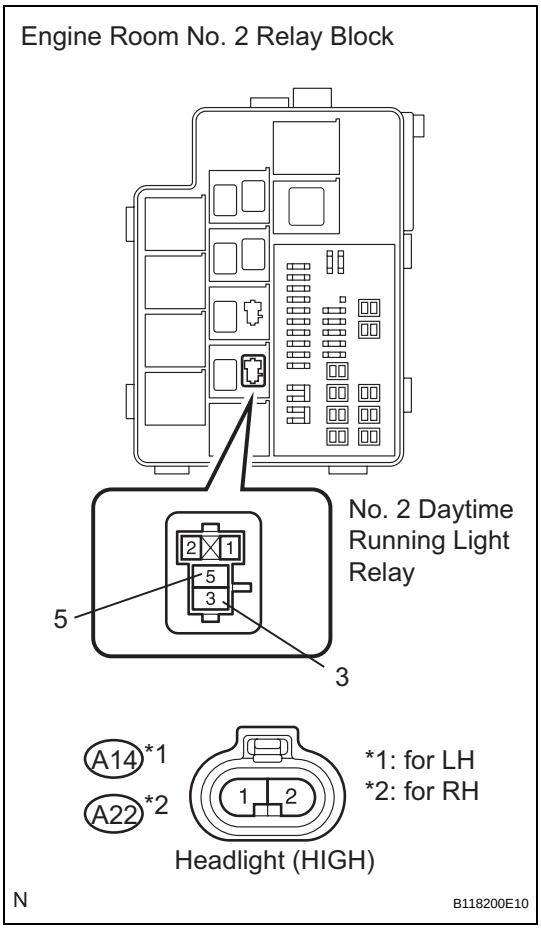

(a) Remove the No. 2 daytime running light relay from the engine room No. 2 relay block.
(b) Remove the A14 and A22 headlight bulb connectors.
(c) Measure the voltage and resistance of the relay block.

Standard voltage

Tester Connection	Specified Condition
Relay block No. 2 daytime running light relay terminal 5 - Body ground	10 to 14 V

Standard resistance

Tester Connection	Condition	Specified Condition
Relay block No. 2 daytime running light relay terminal 3 - A14-2	Always	Below 1 Ω
Relay block No. 2 daytime running light relay terminal 3 - Body ground	Always	10 kΩ or higher
A14-1 - A22-1	Always	Below 1 Ω
A14-1 or A22-1 - Body ground	Always	10 kΩ or higher
A22-2 - Body ground	Always	Below 1 Ω
Relay block No. 2 daytime running light relay terminal 3 - A22-2	Light control switch ON (HEAD) Dimmer switch position LOW	Below 1 Ω
Relay block No. 2 daytime running light relay terminal 3 - Body ground	Light control switch ON (HEAD) Dimmer switch position LOW	10 kΩ or higher
A22-1 - Body ground	Light control switch ON (HEAD) Dimmer switch position LOW	Below 1 Ω

NG → **REPAIR OR REPLACE HARNESS AND CONNECTOR**

LI

OK

REPLACE INSTRUMENT PANEL JUNCTION BLOCK (MAIN BODY ECU)

10	CHECK WIRE HARNESS (MAIN BODY ECU - DIMMER SWITCH)

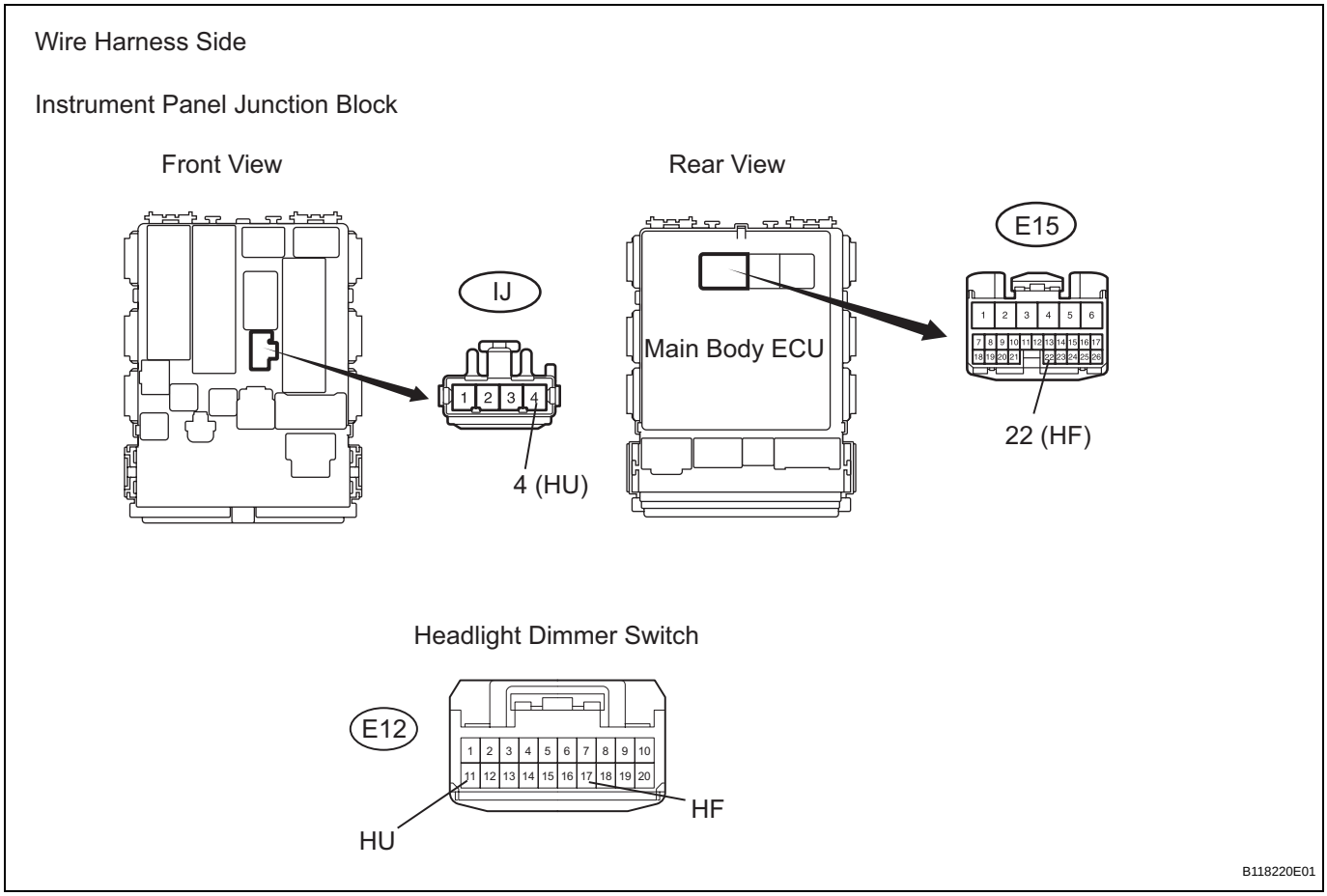

(a) Disconnect the E15 main body ECU connector.
(b) Disconnect the E12 headlight dimmer switch connector.
(c) Disconnect the IJ instrument panel junction block connector.
(d) Measure the resistance of the wire harness side connectors.

Standard resistance

Tester Connection	Specified Condition
E15-22 (HF) - E12-17 (HF)	Below 1 Ω
E15-22 (HF) or E12-17 (HF) - Body ground	10 kΩ or higher
IJ-4 (HU) - E12-11 (HU)	Below 1 Ω
IJ-4 (HU) or E12-11 (HU) - Body ground	10 kΩ or higher

LI

NG → **REPAIR OR REPLACE HARNESS AND CONNECTOR**

OK

11	INSPECT HEADLIGHT DIMMER SWITCH

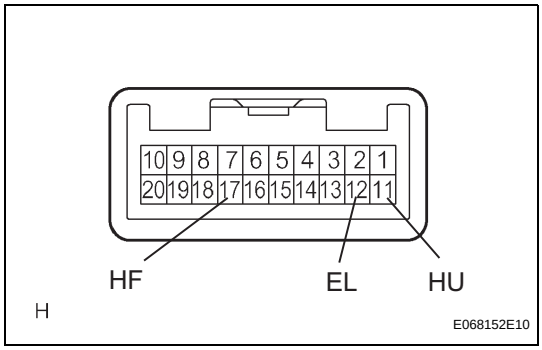

(a) Remove the headlight dimmer switch.
(b) Measure the resistance of the switch.
Standard resistance

Tester Connection	Condition	Specified Condition
11 (HU) - 12 (EL)	Dimmer switch HIGH	Below 1 Ω
17 (HF) - 12 (EL)	Dimmer switch FLASH	Below 1 Ω

NG → **REPLACE HEADLIGHT DIMMER SWITCH ASSEMBLY**

OK

REPAIR OR REPLACE HARNESS AND CONNECTOR (HEADLIGHT DIMMER SWITCH - BODY GROUND)

Front Fog Light Circuit

DESCRIPTION

The main body ECU controls the front fog light relay (Marking: FR FOG) when a signal is received from the headlight dimmer switch.

WIRING DIAGRAM

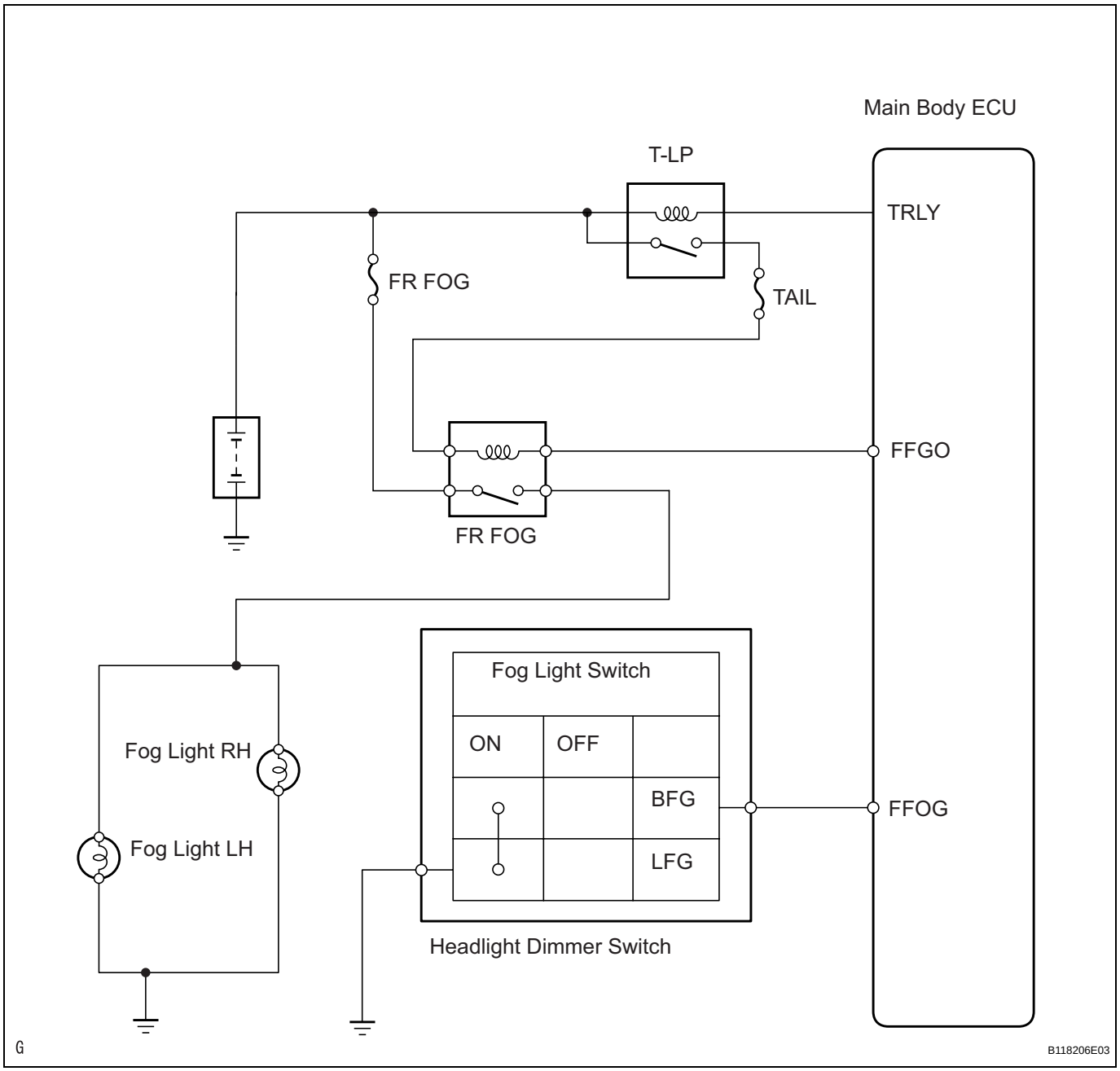

INSPECTION PROCEDURE

1	PERFORM ACTIVE TEST BY INTELLIGENT TESTER

(a) Connect the intelligent tester (with CAN VIM) to the DLC3.

LI

(b) Turn the ignition switch to the ON position and press the intelligent tester main switch ON.
(c) Select the item below in the ACTIVE TEST and then check the relay operation.

Main body ECU

Item	Test Details	Diagnostic Note
F FOG LIGHT RLY	Turn front fog light relay: ON / OFF	-

OK:
Front fog light comes on.

OK → **Go to step 9**

NG

2 CHECK TAILLIGHT

(a) Check that the taillight comes on when the light control switch is on (TAIL).
OK:
Taillight comes on.

NG → **GO TO TAILLIGHT RELAY CIRCUIT**

OK

3 INSPECT FUSE (FR FOG)

(a) Remove the FR FOG fuse from the instrument panel junction block.
(b) Measure the resistance of the fuses.
Standard resistance:
Below 1 Ω

NG → **REPLACE FUSE**

OK

4 INSPECT FOG LIGHT BULB

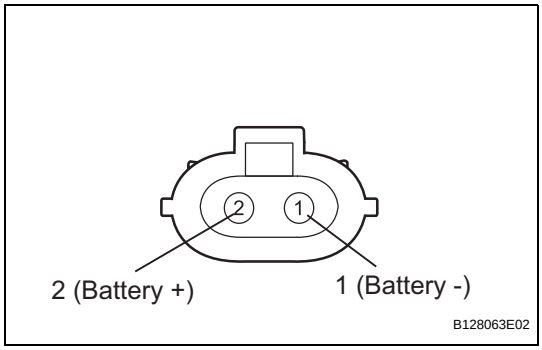

(a) Remove the fog light bulb.
(b) Connect the positive (+) lead from the battery to terminal 2 and the negative (-) lead to terminal 1, then check that the bulb illuminates.
OK:
Bulb illuminates.

NG → **REPLACE FOG LIGHT BULB**

OK

LI

5 INSPECT FRONT FOG LIGHT RELAY (Marking: FR FOG)

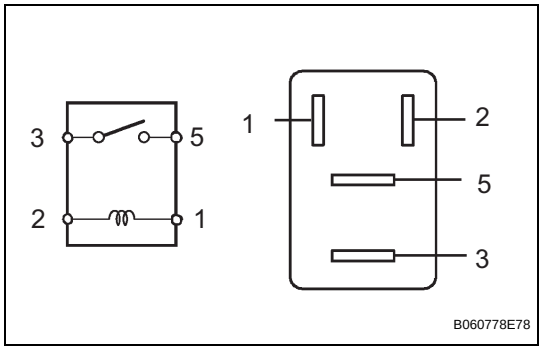

(a) Remove the front fog light relay from the No. 6 relay block.
(b) Measure the resistance of the relay.
Standard resistance

Tester Connection	Specified Condition
3 - 5	10 kΩ or higher
3 - 5	Below 1 Ω (Battery voltage applied to terminals 1 and 2)

NG → REPLACE FRONT FOG LIGHT RELAY

OK

6 CHECK WIRE HARNESS (BATTERY - MAIN BODY ECU)

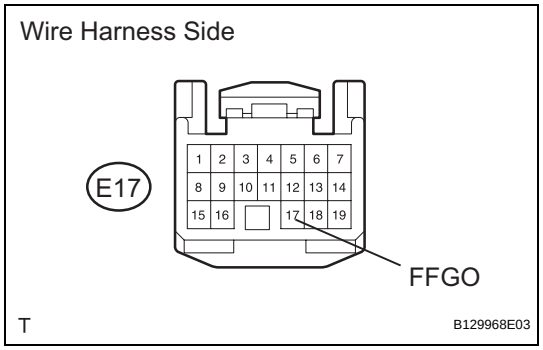

(a) Disconnect the E17 ECU connector.
(b) Measure the voltage of the wire harness side connector.
Standard voltage

Tester Connection	Condition	Specified Condition
E17-17 (FFGO) - Body ground	Light control switch on (TAIL)	10 to 14 V

NG → REPAIR OR REPLACE HARNESS AND CONNECTOR

OK

7 CHECK WIRE HARNESS (FRONT FOG LIGHT RELAY - BATTERY)

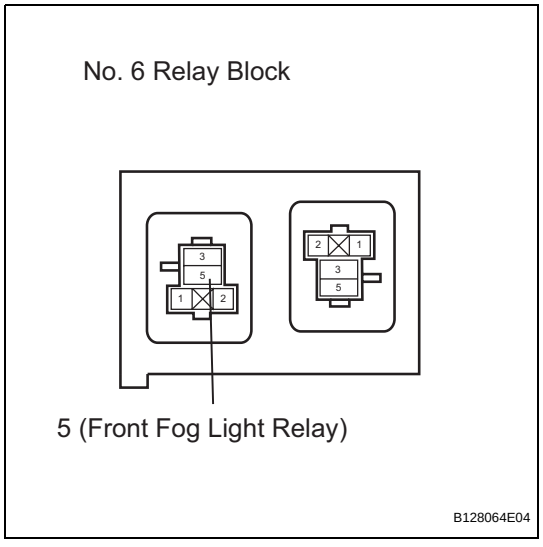

(a) Remove the front fog light relay from the No. 6 relay block.
(b) Measure the voltage of the relay block.
standard voltage

Tester Connection	Specified Condition
No. 6 relay block front fog light relay terminal 5 - Body ground	10 to 14 V

NG → REPAIR OR REPLACE HARNESS AND CONNECTOR

OK

LI

8	CHECK WIRE HARNESS (FRONT FOG LIGHT RELAY - FRONT FOG LIGHT AND BODY GROUND)

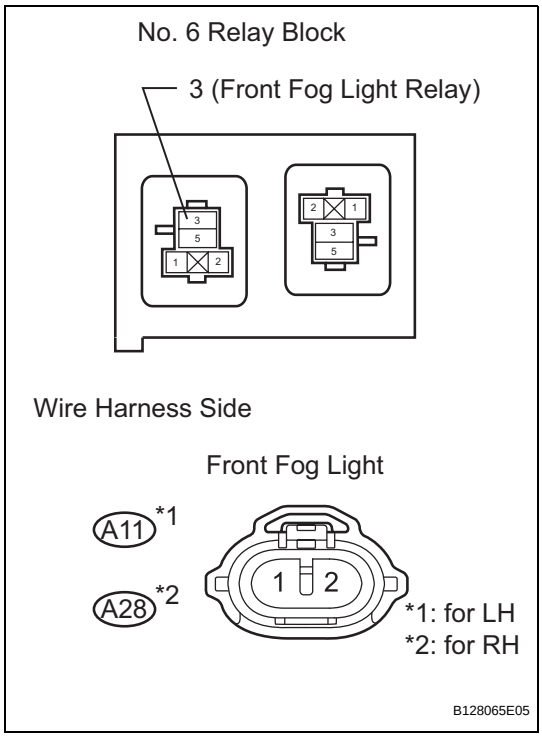

(a) Remove the front fog light relay from the No. 6 relay block.
(b) Disconnect the A11 and A28 front fog light connectors.
(c) Measure the resistance of the wire harness side connectors.

Standard resistance

Tester Connection	Specified Condition
No. 6 relay block front fog light relay terminal 3 - A11-2	Below 1 Ω
No. 6 relay block front fog light relay terminal 3 or A11-2 - Body ground	10 kΩ or higher
No. 6 relay block front fog light relay terminal 3 - A28-2	Below 1 Ω
No. 6 relay block front fog light relay terminal 3 or A28-2 - Body ground	10 kΩ or higher
A11-1 - Body ground	Below 1 Ω
A28-1 - Body ground	Below 1 Ω

NG → **REPAIR OR REPLACE HARNESS AND CONNECTOR**

OK

REPLACE INSTRUMENT PANEL JUNCTION BLOCK (MAIN BODY ECU)

9	CHECK WIRE HARNESS (DIMMER SWITCH - MAIN BODY ECU AND BODY GROUND)

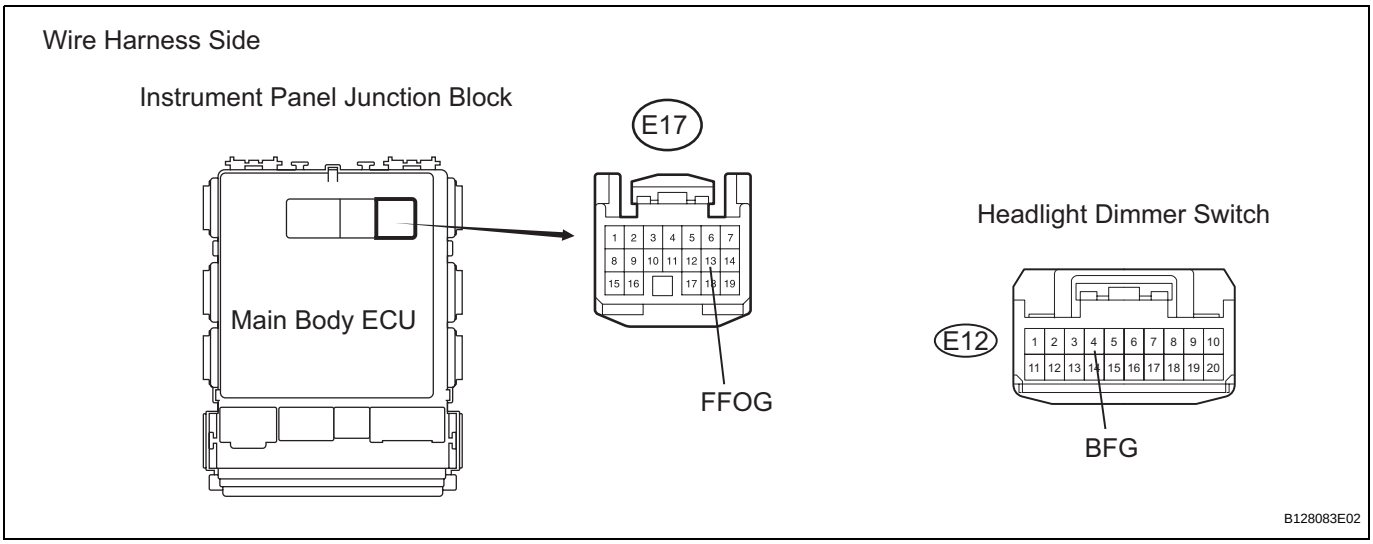

(a) Disconnect the E12 headlight dimmer switch connector.
(b) Disconnect the E17 main body ECU connector.

(c) Measure the resistance of the wire harness side connectors.

Standard resistance

Tester Connection	Specified Condition
E17-13 (FFOG) - E12-4 (BFG)	Below 1 Ω
E17-13 (FFOG) or E12-4 (BFG) - Body ground	10 kΩ or higher

NG → **REPAIR OR REPLACE HARNESS AND CONNECTOR**

OK

10 INSPECT FOG LIGHT SWITCH

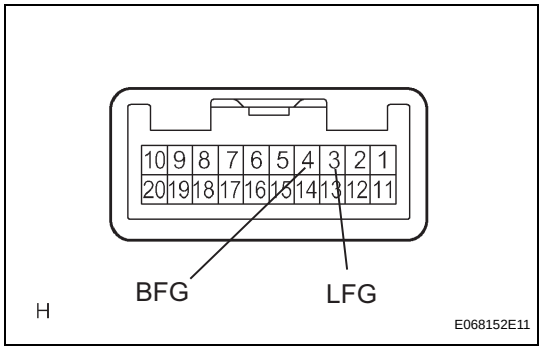

(a) Remove the headlight dimmer switch.

(b) Measure the resistance of the switch.

Standard resistance

Tester Connection	Condition	Specified Condition
4 (BFG) - 3 (LFG)	Fog light switch OFF	10 kΩ or higher
4 (BFG) - 3 (LFG)	Fog light switch ON	Below 1 Ω

NG → **REPLACE HEADLIGHT DIMMER SWITCH ASSEMBLY**

OK

REPAIR OR REPLACE HARNESS AND CONNECTOR (HEADLIGHT DIMMER SWITCH - BODY GROUND)

Turn Signal Light Circuit

DESCRIPTION

The turn signal flasher relay (Marking: FLSH) in the main body ECU turns on when it receives signals from the headlight dimmer switch integrated with the turn signal switch, causing the turn signal lights to flash.

WIRING DIAGRAM

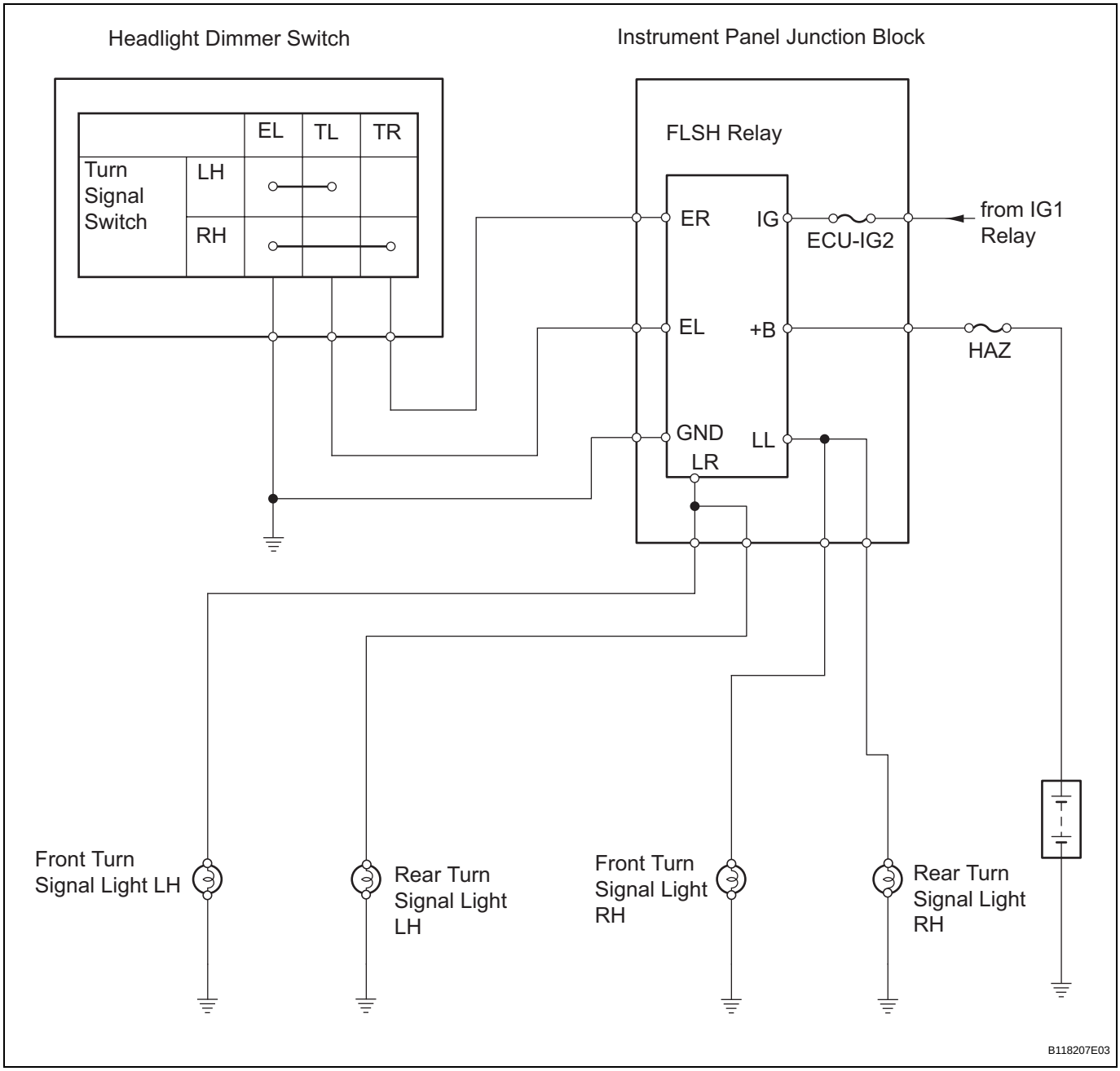

INSPECTION PROCEDURE

1	CHECK OPERATION OF TURN SIGNAL LIGHT

(a) When the turn signal light switch is operated, check that the appropriate turn signal light flashes.

Result

Condition	Proceed to
All lights do not flash	A
Front turn signal light (LH or RH) does not flash	B
Rear turn signal light (LH or RH) does not flash	C

B → **Go to step 6**

C → **Go to step 8**

A

2	INSPECT FUSE (ECU-IG2, HAZ)

(a) Remove the ECU-IG2 fuse from the instrument panel junction block.
(b) Remove the HAZ fuse from the engine room No. 1 relay block.
(c) Measure the resistance of the fuses.
Standard resistance:
Below 1 Ω

NG → **REPLACE FUSE**

OK

3 CHECK WIRE HARNESS (BATTERY - TURN SIGNAL FLASHER RELAY)

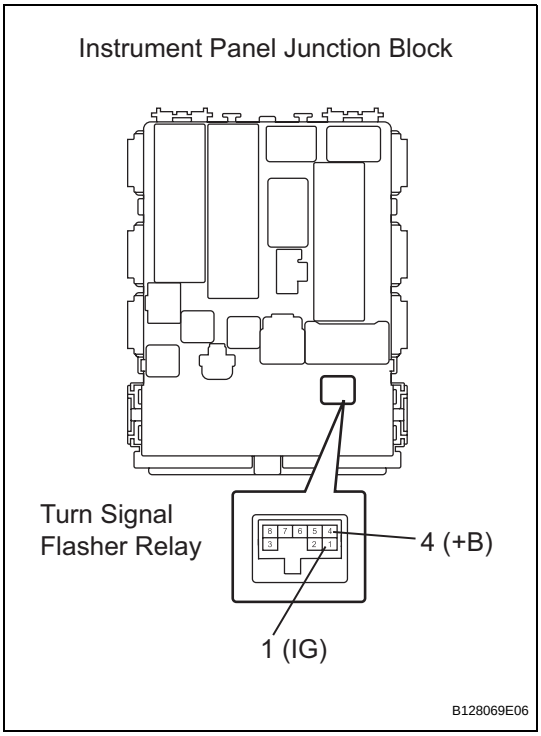

(a) Disconnect the IB instrument panel junction block connector.
(b) Remove the turn signal flasher relay from the instrument panel junction block.
(c) Measure the voltage of the wire harness side connectors.

Standard voltage

Tester Connection	Condition	Specified Condition
Junction block turn signal flasher relay terminal 4 (+B) - Body ground	Always	10 to 14 V
Junction block turn signal flasher relay terminal 1 (IG) - Body ground	Ignition Switch ON	10 to 14 V

NG → **REPAIR OR REPLACE HARNESS AND CONNECTOR**

OK

4 INSPECT HEADLIGHT DIMMER SWITCH

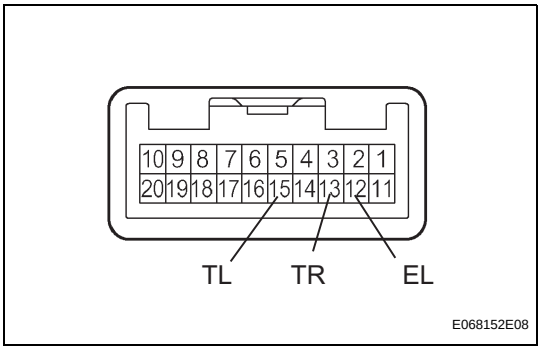

(a) Remove the headlight dimmer switch.
(b) Inspect the turn signal switch.
(c) Measure the resistance of the switch.

Standard resistance

Tester Connection	Condition	Specified Condition
13 (TR) - 12 (EL)	Right	Below 1 Ω
13 (TR) - 12 (EL)	Neutral	10 kΩ or higher
15 (TL) - 12 (EL)	Left	Below 1 Ω
15 (TL) - 12 (EL)	Neutral	10 kΩ or higher

NG → **REPLACE HEADLIGHT DIMMER SWITCH**

OK

LI

5	CHECK WIRE HARNESS (HEADLIGHT DIMMER SWITCH - INSTRUMENT PANEL JUNCTION BLOCK)

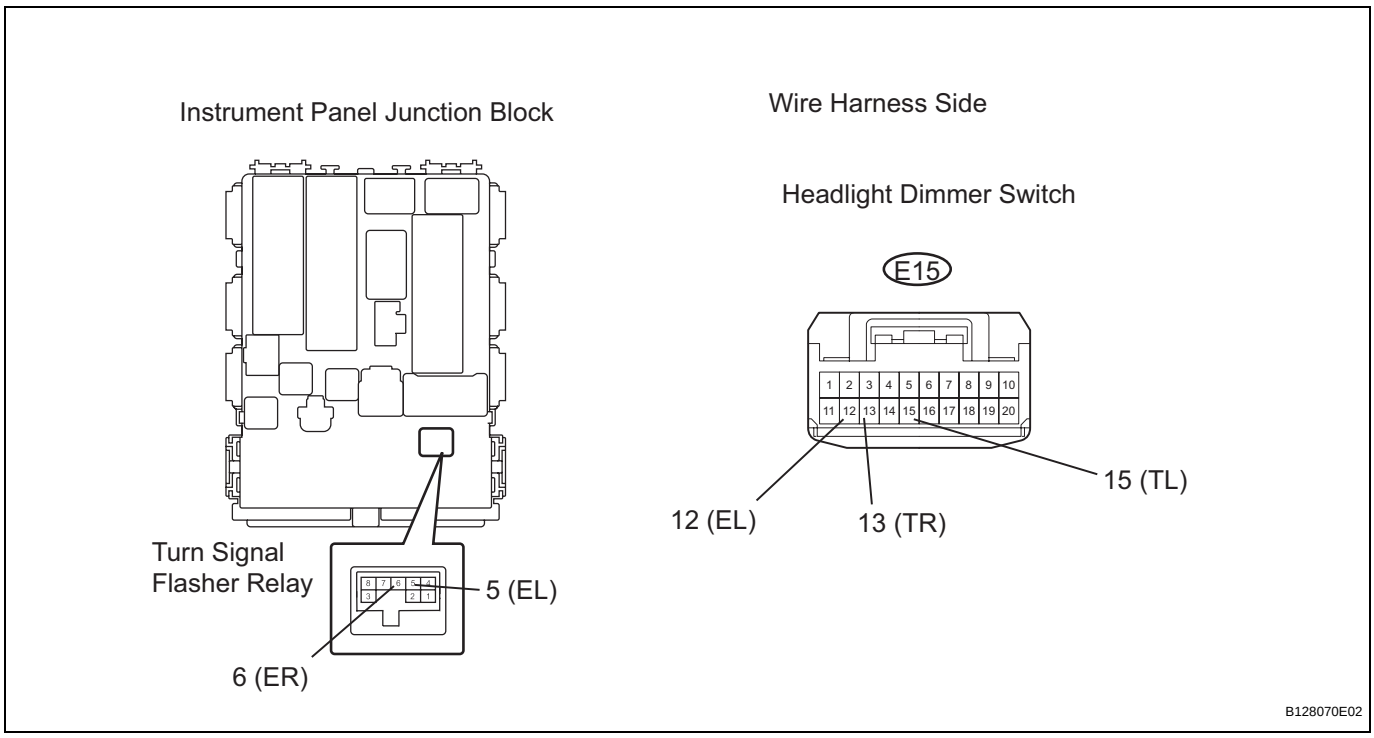

(a) Remove the turn signal flasher relay.
(b) Disconnect the E15 headlight dimmer switch connector.
(c) Measure the resistance of the wire harness side connectors and junction block.

Standard resistance

Tester Connection	Specified Condition
Junction block turn signal flasher relay terminal 5 (EL) - E15-15 (TL)	Below 1 Ω
Junction block turn signal flasher relay terminal 5 (EL) or E15-15 (TL) - Body ground	10 kΩ or higher
Junction block turn signal flasher relay terminal 6 (ER) - E15-13 (TR)	Below 1 Ω
Junction block turn signal flasher relay terminal 6 (ER) or E15-13 (TR) - Body ground	10 kΩ or higher
E15-12 (EL) - Body ground	Below 1 Ω

NG → **REPAIR OR REPLACE HARNESS AND CONNECTOR**

OK

REPLACE TURN SIGNAL FLASHER RELAY

6	INSPECT FRONT TURN SIGNAL LIGHT

(a) Remove the front turn signal light.
(b) Connect the positive (+) lead from the battery to terminal 1 and the negative (-) lead to terminal 2, then check that the light comes on.
OK:
Light comes on.

NG → **REPLACE BULB**

OK

7	CHECK WIRE HARNESS (INSTRUMENT PANEL JUNCTION BLOCK - FRONT TURN SIGNAL LIGHT)

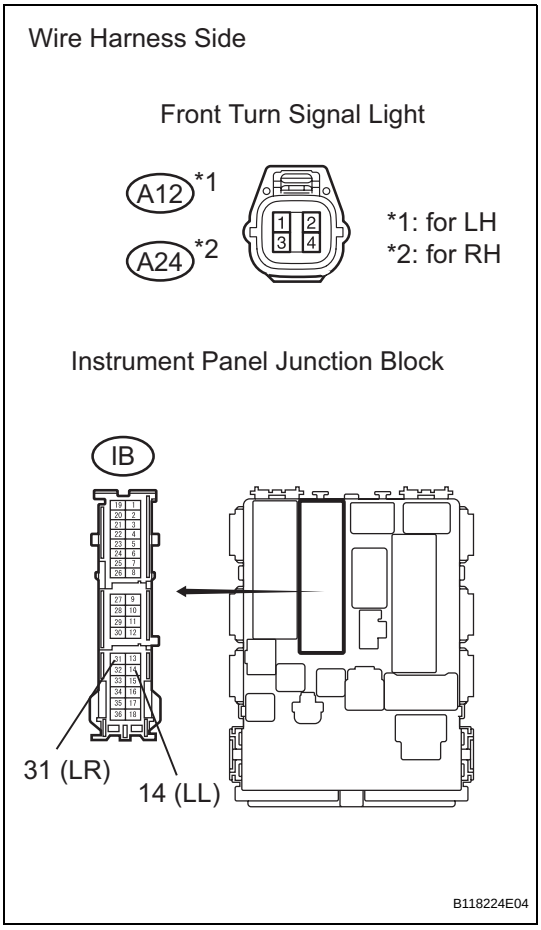

(a) Disconnect the A12 and A24 front turn signal light connectors.
(b) Disconnect the IB instrument panel junction block connector.
(c) Measure the resistance of the wire harness side connectors.
Standard resistance

Tester Connection	Specified Condition
IB-31 (LR) - A24-1	Below 1 Ω
IB-31 (LR) or A24-1 - Body ground	10 kΩ or higher
IB-14 (LL) - A12-1	Below 1 Ω
IB-14 (LL) or A12-1 - Body ground	10 kΩ or higher

NG → **REPAIR OR REPLACE HARNESS AND CONNECTOR**

OK

REPAIR OR REPLACE HARNESS AND CONNECTOR (FRONT TURN SIGNAL LIGHT - BODY GROUND)

LI

8	INSPECT REAR TURN SIGNAL LIGHT

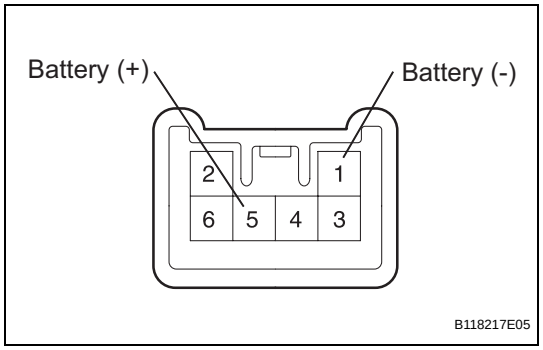

(a) Remove the rear combinationl light.
(b) Connect the positive (+) lead from the battery to terminal 5 and the negative (-) lead to terminal 1, then check that the light comes on.
OK:
Light comes on.

NG → **REPLACE BULB**

OK

9	CHECK WIRE HARNESS (INSTRUMENT PANEL JUNCTION BLOCK - REAR TURN SIGNAL LIGHT)

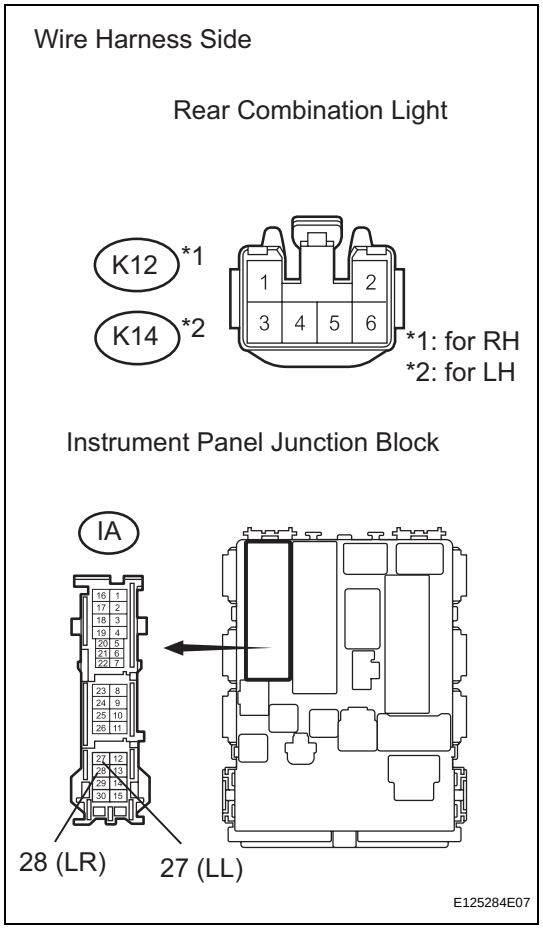

(a) Disconnect the K12 and K14 rear combination light connectors.
(b) Disconnect the IA instrument panel junction block connector.
(c) Measure the resistance of the wire harness side connectors.
Standard resistance

Tester Connection	Specified Condition
IA-28 (LR) - K12-5	Below 1 Ω
IA-28 (LR) or K12-5 - Body ground	10 kΩ or higher
IA-27 (LL) - K14-5	Below 1 Ω
IA-27 (LL) or K14-5 - Body ground	10 kΩ or higher

NG → **REPAIR OR REPLACE HARNESS AND CONNECTOR**

OK

REPAIR OR REPLACE HARNESS AND CONNECTOR (REAR TURN SIGNAL LIGHT - BODY GROUND)

LI

Hazard Warning Switch Circuit

DESCRIPTION

When the hazard warning signal switch is turned on, the turn signal flasher relay (Marking: FLSH) in the main body ECU turns on to flash the hazard warning signal lights.

WIRING DIAGRAM

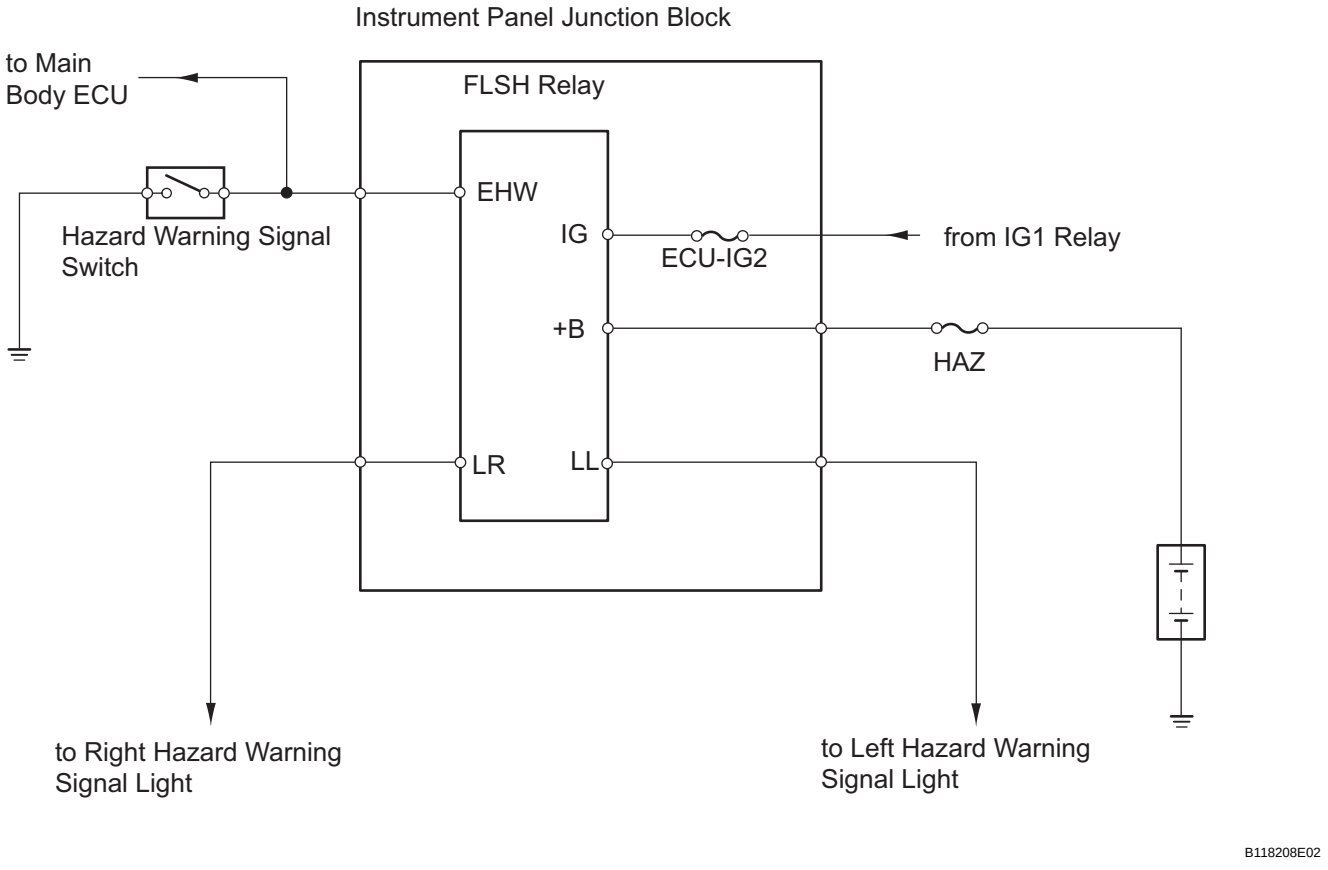

INSPECTION PROCEDURE

LI

1	PERFORM ACTIVE TEST BY INTELLIGENT TESTER

(a) Connect the intelligent tester (with CAN VIM) to the DLC3.
(b) Turn the ignition switch ON and press the intelligent tester main switch ON.
(c) Select the item below in the ACTIVE TEST and then check the relay operation.

Main body ECU

Item	Test Details/Display (Range)	Diagnostic Note
HAZARD	HAZARD ON/OFF	-

OK:

All hazard warning signal lights flash.

OK → Go to step 5

NG

2 INSPECT FUSE (HAZ)

(a) Remove the HAZ fuse from the engine room No. 1 relay block.
(b) Measure the resistance of the fuse.
Standard resistance:
Below 1 Ω

NG → **REPLACE FUSE**

OK

3 CHECK WIRE HARNESS (TURN SIGNAL FLASHER RELAY - BATTERY)

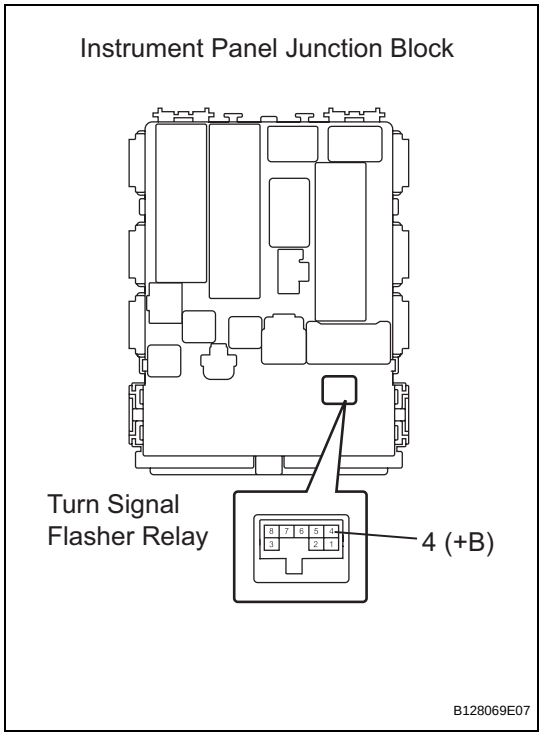

(a) Remove the turn signal flasher relay from the instrument panel junction block.
(b) Measure the voltage of the wire harness side connector.
Standard voltage

Tester Connection	Specified Condition
Junction Block turn signal flasher Relay terminal 4 (+B) - Body ground	10 to 14 V

NG → **REPAIR OR REPLACE HARNESS AND CONNECTOR**

OK

4 CHECK OPERATION OF TURN SIGNAL FLASHER RELAY (Marking: FLSH)

(a) Replace the turn signal flasher relay with a normally functioning one or a new one.
(b) Check that the appropriate turn signal light flashes.
(c) Connect the intelligent tester (with CAN VIM) to the DLC3.
(d) Turn the ignition switch ON and press the intelligent tester main switch ON.

(e) Select the item below in the ACTIVE TEST and then check the relay operation.

Main body ECU

Item	Test Details / Display (Range)	Diagnostic Note
HAZARD	HAZARD ON / OFF	-

OK:
All hazard warning signal lights flash.

NG → **REPAIR OR REPLACE HARNESS AND CONNECTOR (JUNCTION BLOCK - HAZARD WARNING SIGNAL SWITCH)**

OK

REPLACE TURN SIGNAL FLASHER RELAY

5 INSPECT HAZARD WARNING SIGNAL SWITCH

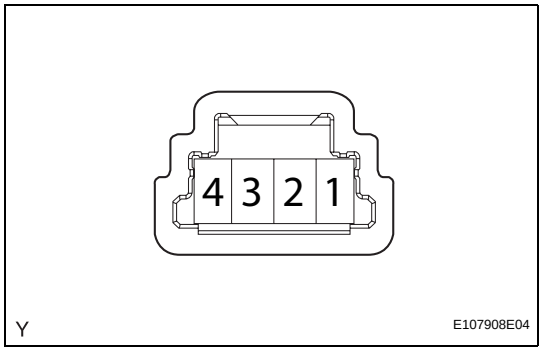

(a) Remove the hazard warning signal switch.
(b) Measure the resistance of the switch.
Standard resistance

Tester Connection	Condition	Specified Condition
1 - 4	OFF	10 kΩ or higher
1 - 4	ON	Below 23.4 Ω

NG → **REPLACE HAZARD WARNING SIGNAL SWITCH**

OK

REPAIR OR REPLACE HARNESS AND CONNECTOR (HAZARD WARNING SIGNAL SWITCH - BODY GROUND)

Back-up Light Circuit

DESCRIPTION

The park / neutral position switch turns on when the shift lever is moved into the R position, causing the back-up lights to illuminate.

WIRING DIAGRAM

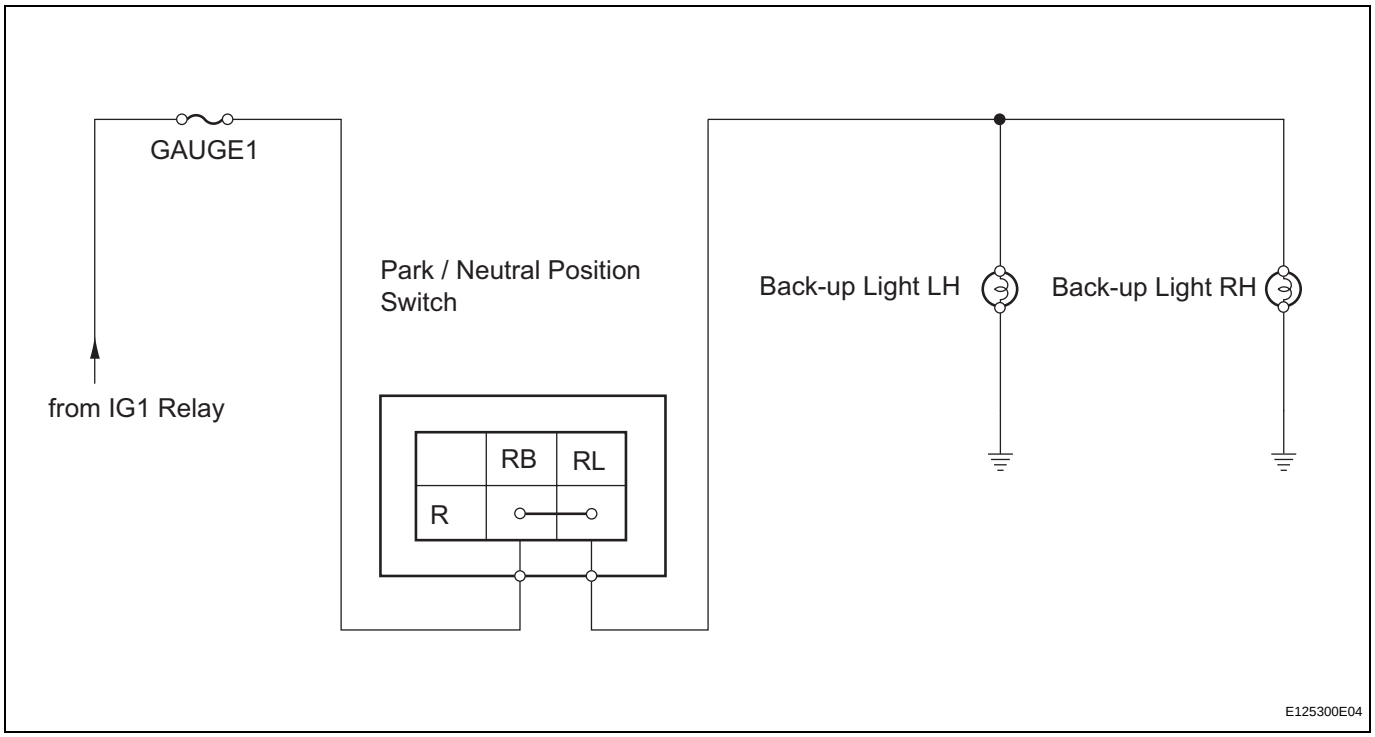

INSPECTION PROCEDURE

1	INSPECT FUSE (GAUGE1)

(a) Remove the GAUGE1 fuse from the instrument panel junction block.
(b) Measure the resistance of the fuse.
Standard resistance:
Below 1 Ω

NG → **REPLACE FUSE**

OK

LI

2 INSPECT BACK-UP LIGHT

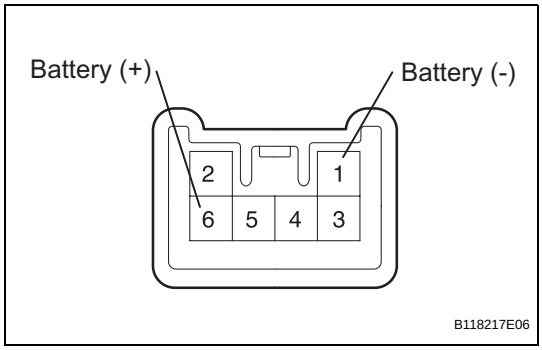

(a) Remove the rear combination light.
(b) Connect the positive (+) lead from the battery to terminal 6 and the negative (-) lead to terminal 1, then check that the light comes on.
OK:
Light comes on.

NG → **REPLACE BULB**

OK

3 INSPECT PARK / NEUTRAL POSITION SWITCH

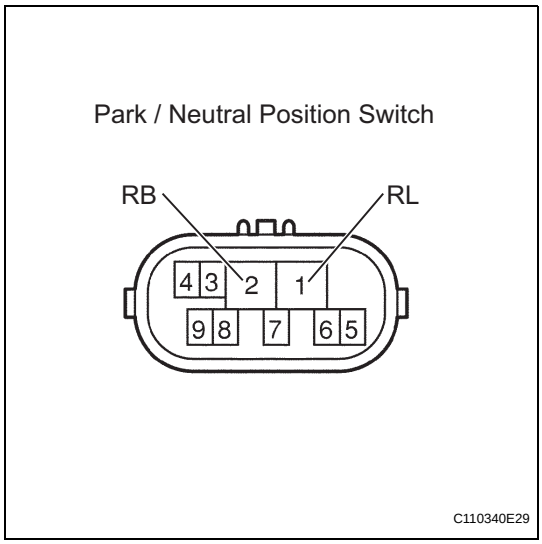

(a) Disconnect the B26 park / neutral position switch connector.
(b) Measure the resistance of the switch.
Standard resistance

Tester Connection	Shift Position	Specified Connection
2 (RB) - 1 (RL)	R	Below 1 Ω
2 (RB) - 1 (RL)	Except R	10 kΩ or higher

NG → **REPLACE PARK / NEUTRAL POSITION SWITCH**

OK

4 CHECK WIRE HARNESS (PARK / NEUTRAL POSITION SWITCH - BATTERY)

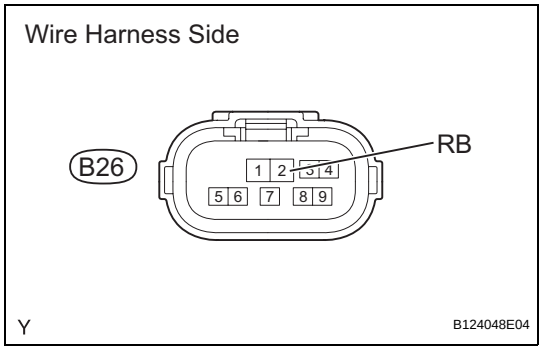

(a) Disconnect the B26 park / neutral position switch connector.
(b) Measure the voltage of the wire harness side connector.
Standard voltage

Tester Connection	Condition	Specified Condition
B26-2 (RB) - Body ground	Ignition switch ON	10 to 14 V

NG → **REPAIR OR REPLACE HARNESS AND CONNECTOR**

OK

LI

5	CHECK WIRE HARNESS (PARK / NEUTRAL POSITION SWITCH - BACK-UP LIGHT)

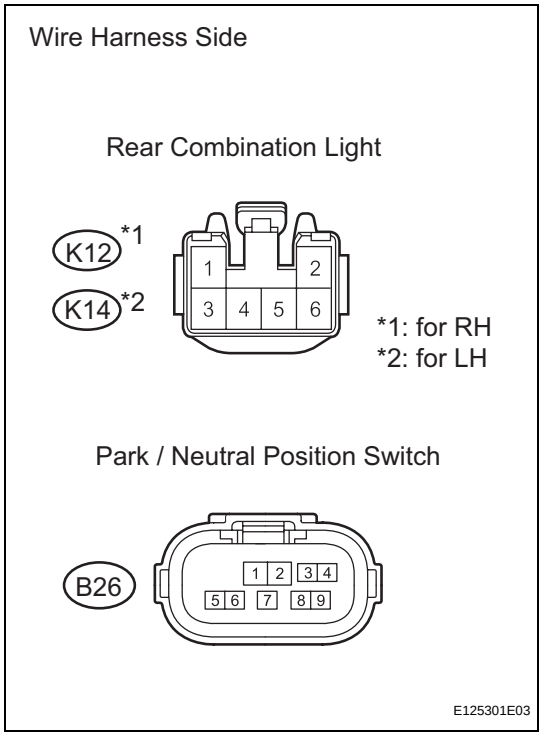

(a) Disconnect the B26 park / neutral position switch connector.
(b) Disconnect the K12 and K14 rear combination light assembly connectors.
(c) Measure the resistance of the wire harness side connectors.

Standard resistance

Tester Connection	Specified Condition
B26-1 - K12-6	Below 1 Ω
B26-1 or K12-6 - Body ground	10 kΩ or higher
B26-1 - K24-6	Below 1 Ω
B26-1 or K24-6 - Body ground	10 kΩ or higher

NG → **REPAIR OR REPLACE HARNESS AND CONNECTOR**

OK

REPAIR OR REPLACE HARNESS AND CONNECTOR (BACK-UP LIGHT - BODY GROUND)

Light Control Switch Circuit

DESCRIPTION

This circuit detects the state of the headlight dimmer switch.

WIRING DIAGRAM

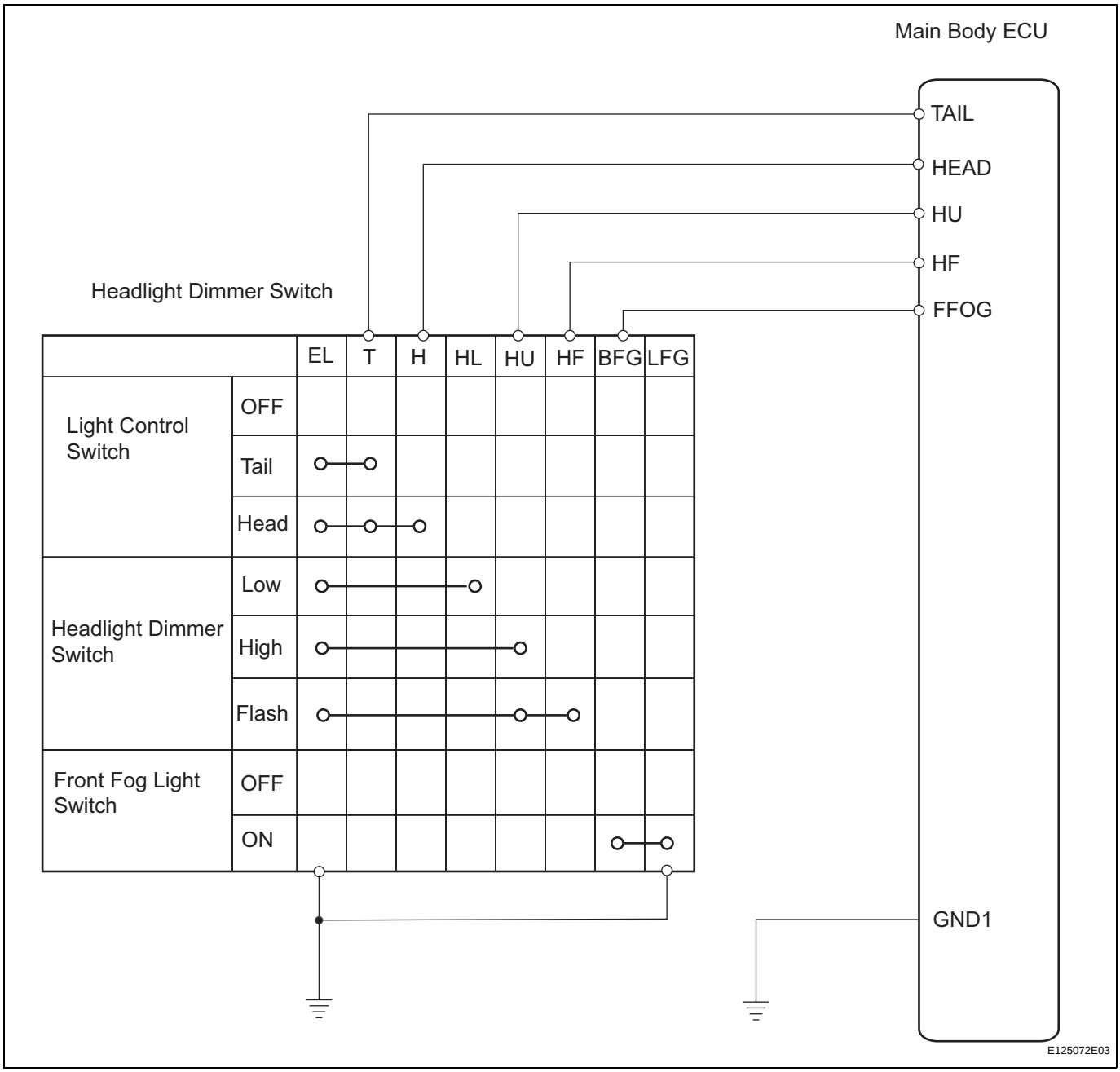

INSPECTION PROCEDURE

1	READ VALUE OF INTELLIGENT TESTER (MAIN BODY ECU)

(a) Connect the intelligent tester to the DLC3.
(b) Turn the ignition switch ON and press the intelligent tester main switch ON.

LI

(c) Select the items below in the DATA LIST, and read the displays on the intelligent tester.

Main body ECU

Item	Measurement / Display (Range)	Normal Condition	Diagnostic Note
DIMMER SW	Headlight dimmer switch signal / ON or OFF	ON: Headlight dimmer switch is in HI or FLASH position OFF: Headlight dimmer switch is in LO position	-
PASSING LIGHT SW	Passing light switch signal / ON or OFF	ON: Headlight dimmer switch is in FLASH position OFF: Headlight dimmer switch is in except FLASH position	-
FRONT FOG LIGHT SW	Front fog light switch signal / ON or OFF	ON: Front fog light switch is in ON position OFF: Front fog light switch is in OFF position	-
HEADLIGHT SW	Headlight control switch signal (HEAD) / ON or OFF	ON: Light control switch is in HEAD position OFF: Light control switch is in except HEAD position	-
HEADLIGHT SW (Tail)	Headlight control switch signal (TAIL) / ON or OFF	ON: Light control switch is in TAIL or HEAD position OFF: Light control switch is in except OFF position	-

OK:
ON is displayed on the intelligent tester screen.

OK → **PROCEED TO NEXT INSPECTION PROCEDURE SHOWN IN PROBLEM SYMPTOMS TABLE**

NG

2 INSPECT HEADLIGHT DIMMER SWITCH

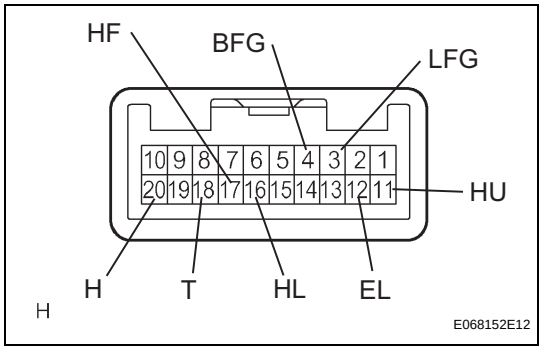

(a) Remove the headlight dimmer switch.
(b) Measure the resistance of the switch.

Standard resistance

Tester Connection	Condition	Specified Condition
18 (T) - 12 (EL)	OFF	10 kΩ or higher
18 (T) - 12 (EL)	TAIL	Below 1 Ω
20 (H) - 12 (EL)	OFF	10 kΩ or higher
20 (H) - 12 (EL)	HEAD	Below 1 Ω
16 (HL) - 12 (EL)	HIGH or FLASH	10 kΩ or higher
16 (HL) - 12 (EL)	LOW	Below 1 Ω
11 (HU) - 12 (EL)	LOW or FLASH	10 kΩ or higher
11 (HU) - 12 (EL)	HIGH	Below 1 Ω
17 (HF) - 12 (EL)	LOW or HIGH	10 kΩ or higher
17 (HF) - 12 (EL)	FLASH	Below 1 Ω
4 (BFG) - 3 (LFG)	Fog light switch OFF	10 kΩ or higher
4 (BFG) - 3 (LFG)	Fog light switch ON	Below 1 Ω

NG → **REPLACE HEADLIGHT DIMMER SWITCH ASSEMBLY**

LI

OK

3	CHECK WIRE HARNESS (MAIN BODY ECU - DIMMER SWITCH AND BODY GROUND)

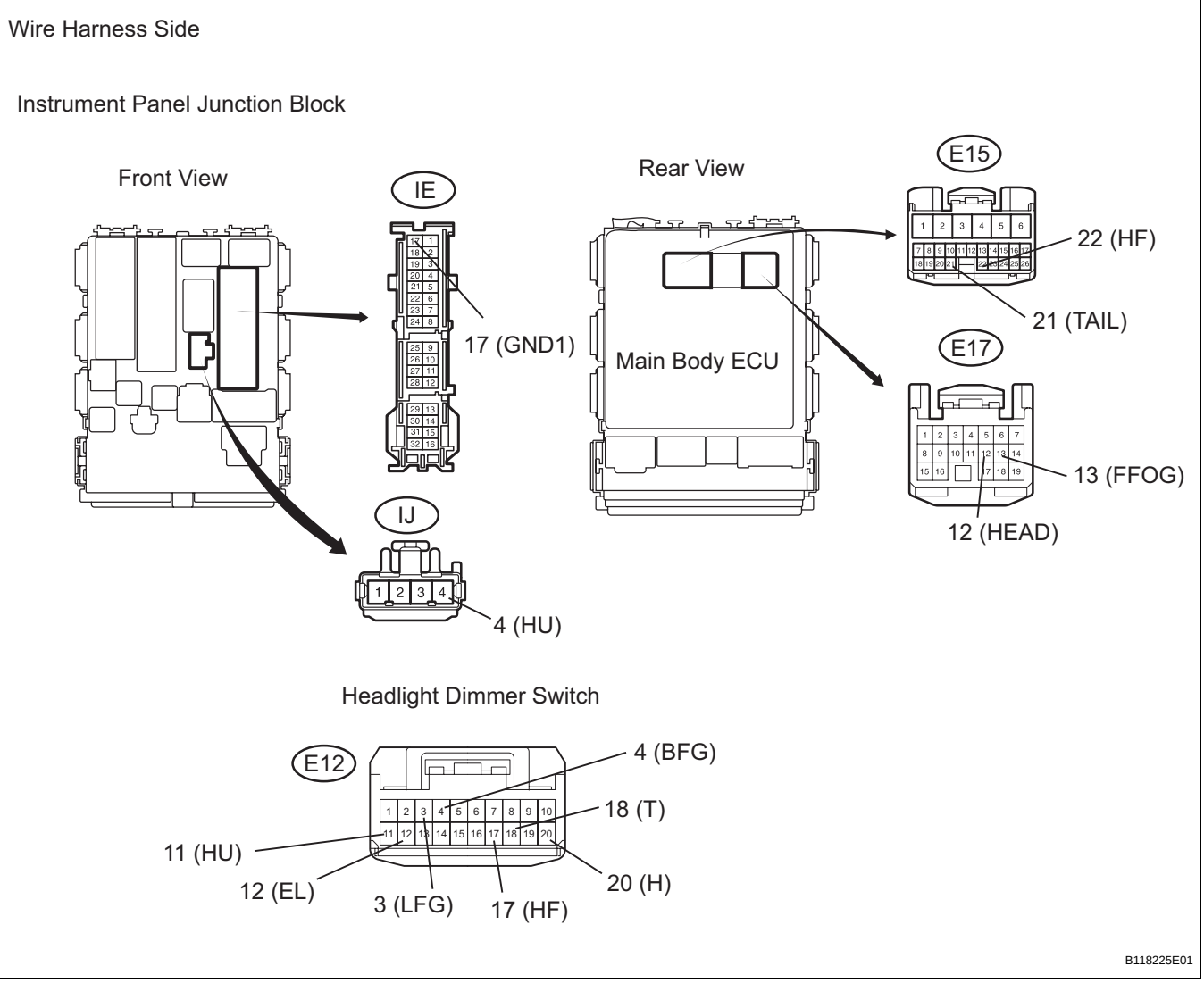

(a) Disconnect the E12 headlight dimmer switch connector.
(b) Disconnect the IE and IJ instrument panel junction block connectors.
(c) Disconnect the E15 and E17 main body ECU connectors.
(d) Measure the resistance of the wire harness side connectors.

Standard resistance

Tester Connection	Specified Condition
E15-22 (HF) - E12-17 (HF)	Below 1 Ω
E15-22 (HF) or E12-17 (HF) - Body ground	10 kΩ or higher
E15-21 (TAIL) - E12-18 (T)	Below 1 Ω
E15-21 (TAIL) or E12-18 (T) - Body ground	10 kΩ or higher
E17-12 (HEAD) - E12-20 (H)	Below 1 Ω

LI

Tester Connection	Specified Condition
E17-12 (HEAD) or E12-20 (H) - Body ground	10 kΩ or higher
E17-13 (FFOG) - E12-4 (BFG)	Below 1 Ω
E17-13 (FFOG) or E12-4 (BFG) - Body ground	10 kΩ or higher
IJ-4 (HU) - E12-11 (HU)	Below 1 Ω
IJ-4 (HU) or E12-11 (HU) - Body ground	10 kΩ or higher
E12-12 (EL) - Body ground	Below 1 Ω
E12-3 (LFG) - Body ground	Below 1 Ω
IE-17 (GND1) - Body ground	Below 1 Ω

NG → **REPAIR OR REPLACE HARNESS AND CONNECTOR**

OK

REPLACE INSTRUMENT PANEL JUNCTION BLOCK (MAIN BODY ECU)

Door Courtesy Switch Circuit

DESCRIPTION

The main body ECU detects the condition of the door courtesy switch.

WIRING DIAGRAM

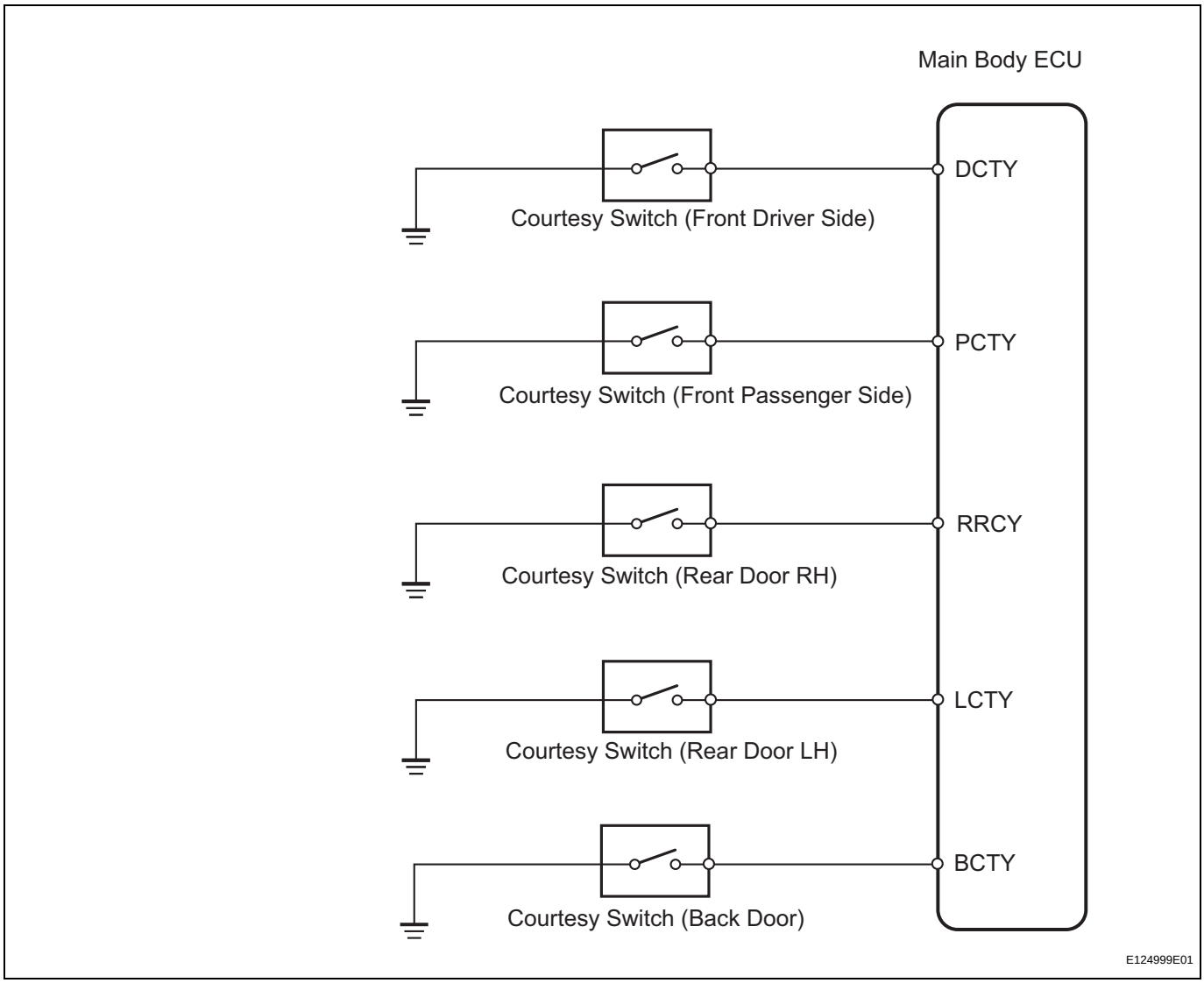

LI

INSPECTION PROCEDURE

1	READ VALUE OF INTELLIGENT TESTER (DOOR COURTESY LIGHT SWITCH)

(a) Connect the intelligent tester (with CAN VIM) to the DLC3.
(b) Turn the ignition switch to the ON position and press the intelligent tester main switch ON.
(c) Select the items below in the DATA LIST, and read the displays on the intelligent tester.

Main body ECU

Item	Measurement Item/Display (Range)	Normal Condition	Diagnostic Note
D DOR CTY SW	Driver's door courtesy switch signal/ON or OFF	ON: Driver side door is open OFF: Driver side door is closed	-
P DOR CYT SW	Passenger's door courtesy switch signal/ON or OFF	ON: Front passenger side door is open OFF: Front passenger door is closed	-
RR DOR CTY SW	Rear door courtesy switch signal/ON or OFF	ON: Rear right passenger side door is open OFF: Rear right passenger side door is closed	-
RL DOR CTY SW	Rear door courtesy switch signal/ON or OFF	ON: Rear left passenger side door is open OFF: Rear left passenger side door is closed	-
BK DOR CTY SW	Back door courtesy switch signal/ON or OFF	ON: Back door is open OFF: Back door is closed	-

OK:
Condition sign can be displayed.

OK → **PROCEED TO NEXT CIRCUIT INSPECTION SHOWN IN PROBLEM SYMPTOMS TABLE**

NG

2 INSPECT COURTESY LIGHT SWITCH

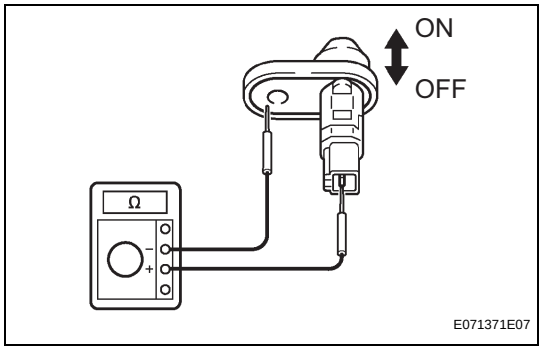

(a) Remove the door courtesy light switch.
(b) Measure the resistance of the switch.
Standard resistance:
Front LH, Front RH, Rear LH, Rear RH, Back Door

Tester Connection	Condition	Specified Condition
1 - Body ground	OFF	10 kΩ or higher
	ON	Below 1 Ω

NG → **REPLACE DOOR COURTESY LIGHT SWITCH**

OK

LI

3	CHECK WIRE HARNESS (MAIN BODY ECU - COURTESY LIGHT SWITCH)

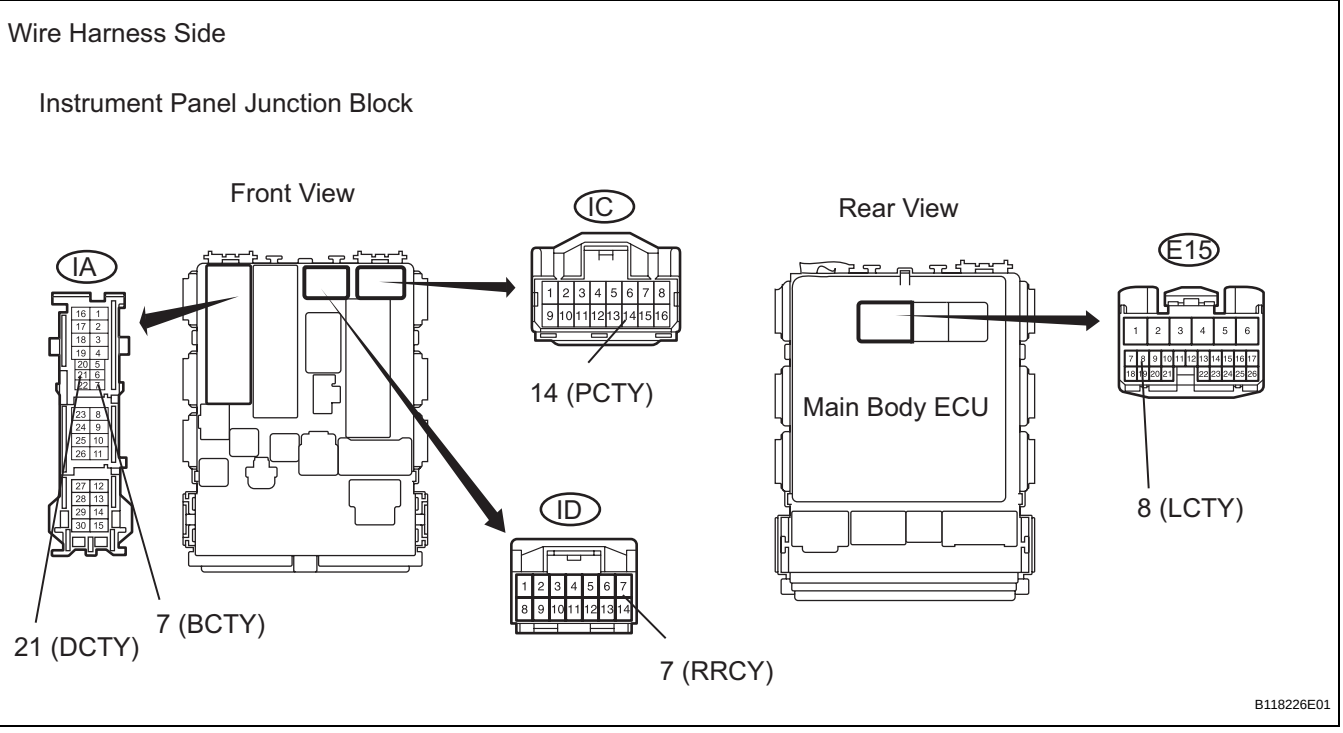

(a) Connect the courtesy light switch.
(b) Disconnect the IA, IC and ID instrument panel junction block connectors.
(c) Disconnect the E15 main body ECU connector.
(d) Measure the resistance of the wire harness side connectors.

Standard resistance:

Front door LH

Tester Connection	Condition	Specified Condition
IA-21 (DCTY) - Body ground	Front LH door is opened	Below 1 Ω
	Front LH door is closed	10 kΩ or higher

Front door RH

Tester Connection	Condition	Specified Condition
IC-14 (PCTY) - Body ground	Front RH door is opened	Below 1 Ω
	Front RH door is closed	10 kΩ or higher

Rear door RH

Tester Connection	Condition	Specified Condition
ID-7 (RRCY) - Body ground	Rear RH door is opened	Below 1 Ω
	Rear RH door is closed	10 kΩ or higher

Rear door LH

Tester Connection	Condition	Specified Condition
E15-8 (LCTY) - Body ground	Rear LH door is opened	Below 1 Ω
	Rear LH door is closed	10 kΩ or higher

Back door

Tester Connection	Condition	Specified Condition
IA-7 (BCTY) - Body ground	Back door is opened	Below 1 Ω
	Back door is closed	10 kΩ or higher

NG → **REPAIR OR REPLACE HARNESS AND CONNECTOR**

OK

REPLACE INSTRUMENT PANEL JUNCTION BLOCK (MAIN BODY ECU)

Door LOCK Position Circuit

DESCRIPTION

This circuit detects the state of the door lock detection sensor and sends it to the main body ECU.

WIRING DIAGRAM

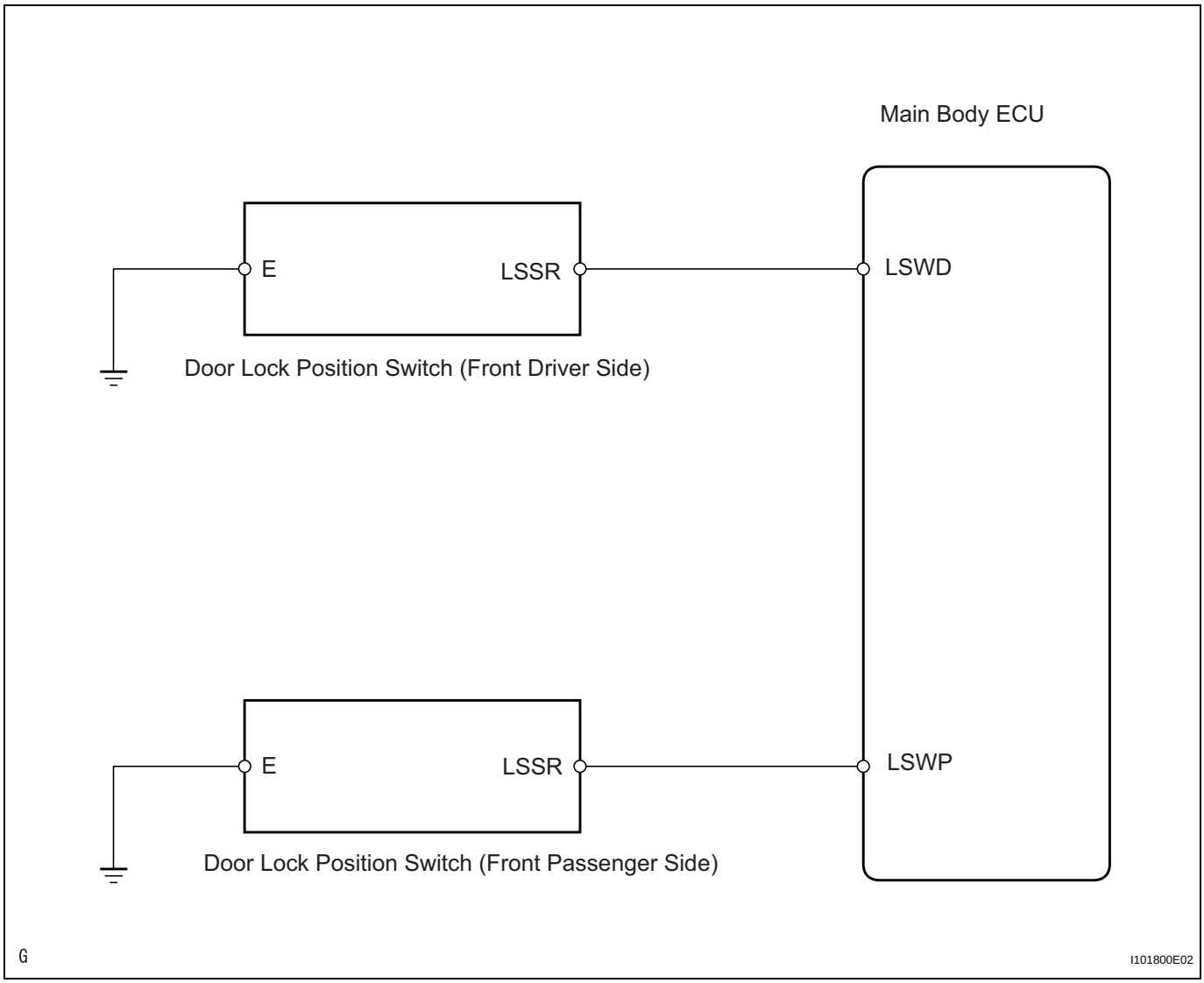

LI

INSPECTION PROCEDURE

1	READ VALUE OF INTELLIGENT TESTER (DOOR LOCK POSITION)

(a) Connect the intelligent tester (with CAN VIM) to the DLC3.
(b) Turn the ignition switch to the ON position and press the intelligent tester main switch ON.
(c) Select the items below in the DATA LIST, and read the displays on the intelligent tester.

Main body ECU

Item	Measurement item/Display (Range)	Normal Condition	Diagnostic Note
D LOCK POS SW	Driver's door lock position switch signal/ON or OFF	ON: Door lock is in unlock position OFF: Door lock is in lock position	-
P LOCK POS SW	Front passenger's door lock position switch signal/ON or OFF	ON: Front passenger's door lock is in unlock position OFF: Front passenger's door lock is in lock position	-

OK:
Condition sign can be displayed.

OK → **PROCEED TO NEXT CIRCUIT INSPECTION SHOWN IN PROBLEM SYMPTOMS TABLE**

NG

2 INSPECT FRONT DOOR LOCK

Door Lock

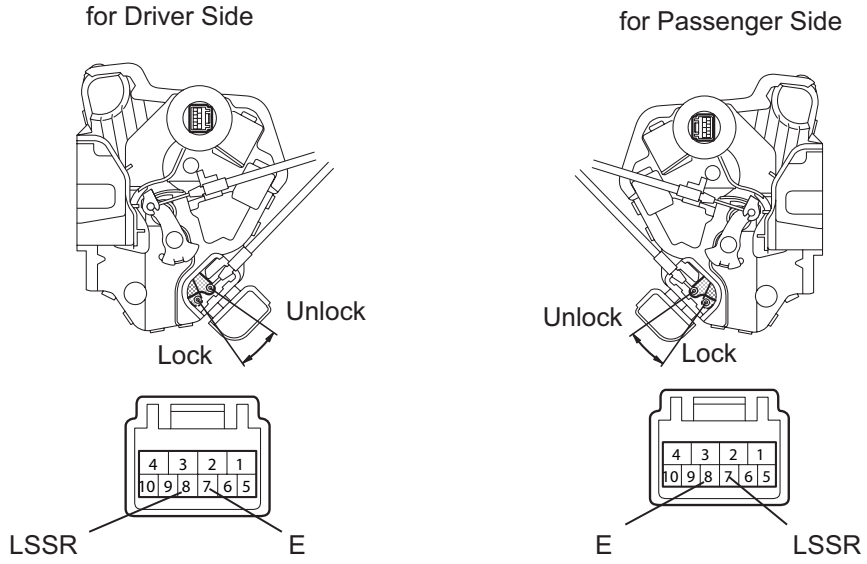

B128041E01

(a) Remove the front door lock (driver side or passenger side).
(b) Measure the resistance of the door lock.
Standard resistance:
Front door lock (for Driver Side)

Tester Connection	Condition	Specified Condition
8 (LSSR) - 7 (E)	LOCK	Below 1 Ω
	UNLOCK	10 kΩ or higher

Front door lock (for Passenger Side)

LI

Tester Connection	Condition	Specified Condition
7 (LSSR) - 8 (E)	LOCK	Below 1 Ω
	UNLOCK	10 kΩ or higher

NG → **REPLACE FRONT DOOR LOCK ASSEMBLY**

OK

3 CHECK WIRE HARNESS (MAIN BODY ECU - DOOR LOCK AND BODY GROUND)

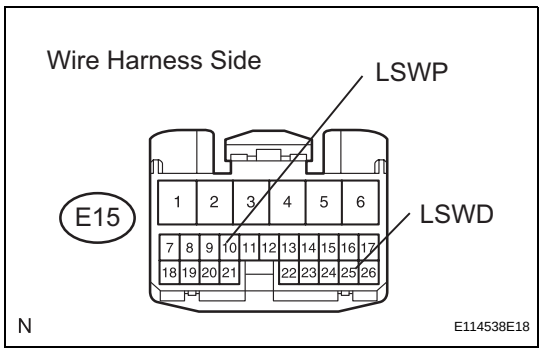

(a) Disconnect the E15 main body ECU connector.
(b) Measure the resistance of the wire harness side connector.

Standard resistance:

Front door lock (for Driver Side)

Tester Connection	Condition	Specified Condition
E15-25 (LSWD) - Body ground	LOCK	Below 1 Ω
	UNLOCK	10 kΩ or higher

Front door lock (for Passenger Side)

Tester Connection	Condition	Specified Condition
E15-10 (LSWP) - Body ground	LOCK	Below 1 Ω
	UNLOCK	10 kΩ or higher

NG → **REPAIR OR REPLACE HARNESS AND CONNECTOR**

OK

REPLACE INSTRUMENT PANEL JUNCTION BLOCK (MAIN BODY ECU)

Footwell Light Circuit

DESCRIPTION

The main body ECU receives information regarding the door lock position switch and ignition switch, and turns on each foot light.

WIRING DIAGRAM

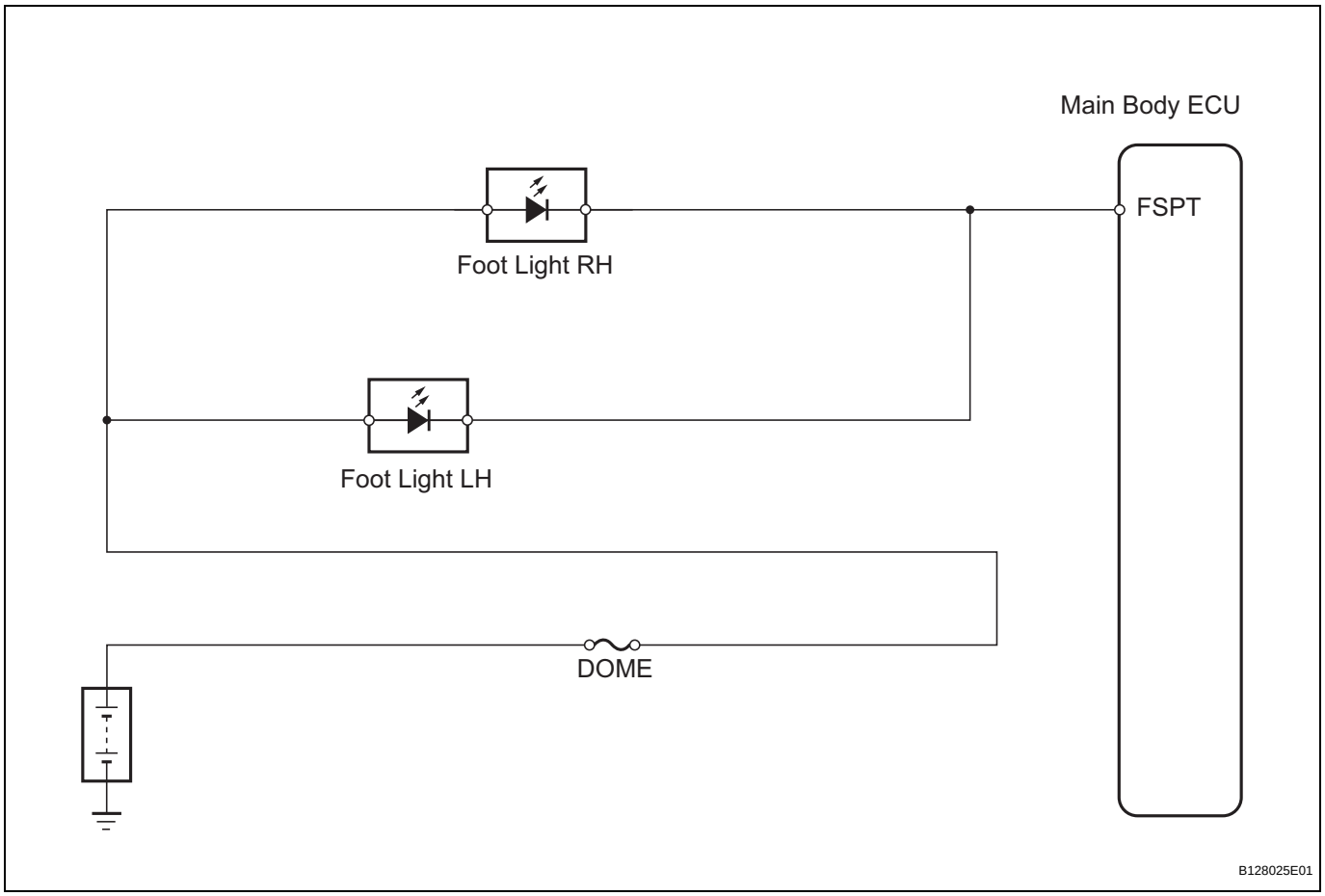

INSPECTION PROCEDURE

1	PERFORM ACTIVE TEST BY INTELLIGENT TESTER (MAIN BODY ECU)

(a) Connect the intelligent tester (with CAN VIM) to the DLC3.
(b) Turn the ignition switch to the ON position and press the intelligent tester main switch ON.
(c) Select the items below in the ACTIVE TEST and then check the relay operation.

Main body ECU

Item	Test Details	Diagnostic Note
STEP LIGHT	Foot light ON/OFF	-

OK:
Light comes on.

OK → **PROCEED TO NEXT CIRCUIT INSPECTION SHOWN IN PROBLEM SYMPTOMS TABLE**

NG

2 INSPECT FUSE (DOME)

(a) Remove the DOME fuse from the engine room No. 2 relay block.
(b) Measure the resistance of the fuse.
Standard resistance:
Below 1 Ω

NG → **REPLACE FUSE**

OK

3 INSPECT FOOT LIGHT

(a) Remove the foot light.
(b) Connect the positive (+) lead from the battery to terminal 2 and the negative (-) lead to terminal 1, then check that the light comes on.
OK:
Light comes on.

NG → **REPLACE FOOT LIGHT ASSEMBLY**

OK

4 CHECK WIRE HARNESS (BATTERY - MAIN BODY ECU)

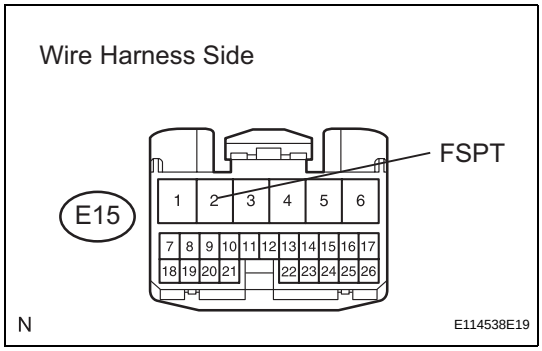

(a) Install the foot light.
(b) Disconnect the E15 main body ECU connector.
(c) Measure the voltage of the wire harness side connector.
Standard voltage

Tester Connection	Specified Condition
E15-2 (FSPT) - Body ground	10 to 14 V

NG → **REPAIR OR REPLACE HARNESS AND CONNECTOR**

OK

REPLACE INSTRUMENT PANEL JUNCTION BLOCK (MAIN BODY ECU)

LI

Illumination Circuit

DESCRIPTION

The main body ECU receives information regarding the door courtesy switch and door lock position switch, and turns on the room light.

WIRING DIAGRAM

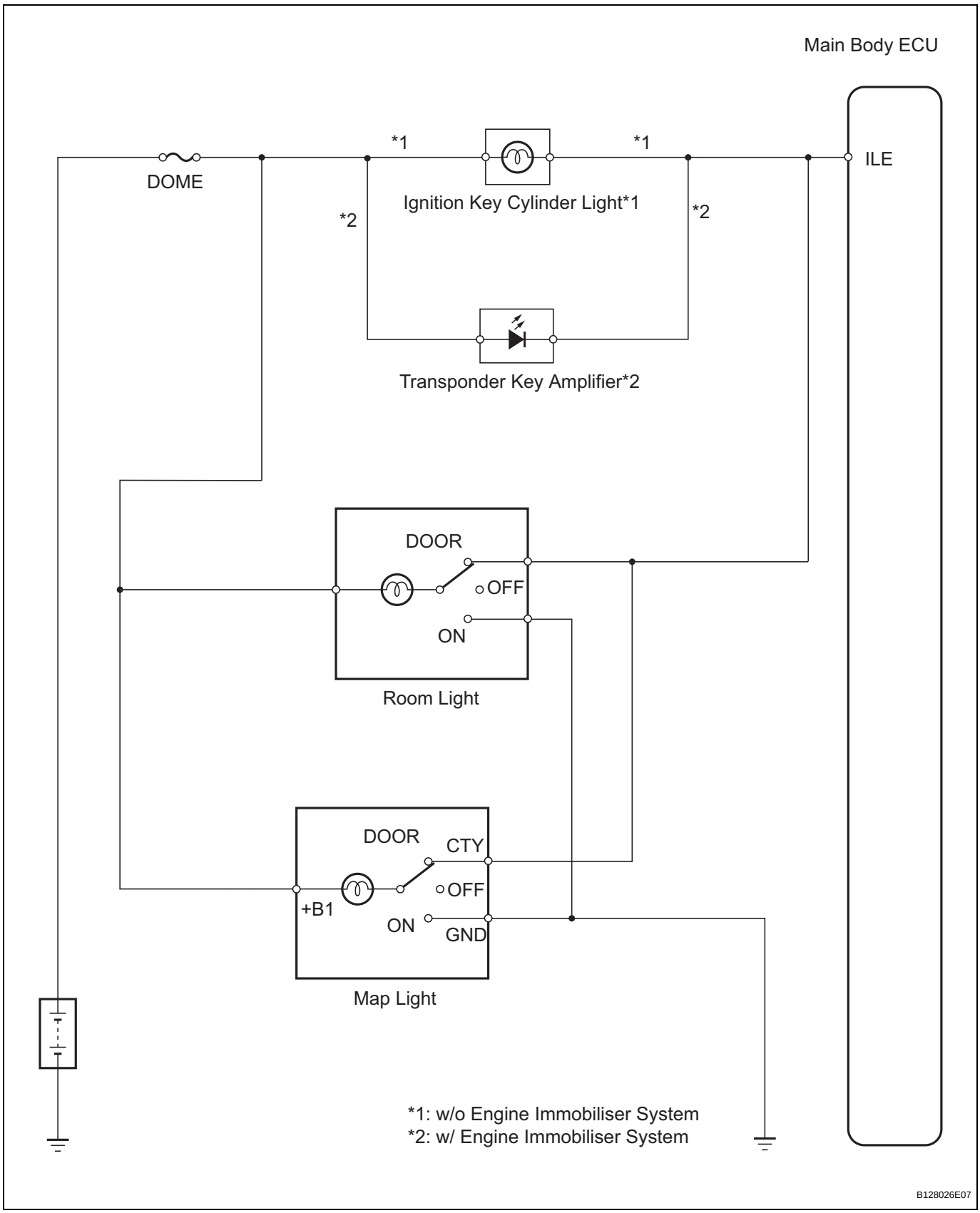

INSPECTION PROCEDURE

1	PERFORM ACTIVE TEST BY INTELLIGENT TESTER (MAIN BODY ECU)

(a) Connect the intelligent tester (with CAN VIM) to the DLC3.
(b) Turn the ignition switch to the ON position and press the intelligent tester main switch ON.
(c) Select the items below in the ACTIVE TEST and then check the main body ECU operation.

Main body ECU

Item	Test Details	Diagnostic Note
ILLUMI OUTPUT	Test Details: Turn interior light and key illumination ON/OFF Vehicle Condition: Interior light SW is in DOOR position and all doors are closed	-

OK:
Light comes on.

OK → **PROCEED TO NEXT CIRCUIT INSPECTION SHOWN IN PROBLEM SYMPTOMS TABLE**

NG

2	INSPECT FUSE (DOME)

(a) Remove the DOME fuse from the engine room No. 2 relay block.
(b) Measure the resistance of the fuse.
Standard resistance:
Below 1 Ω

NG → **REPLACE FUSE**

OK

3 INSPECT ROOM LIGHT ASSEMBLY

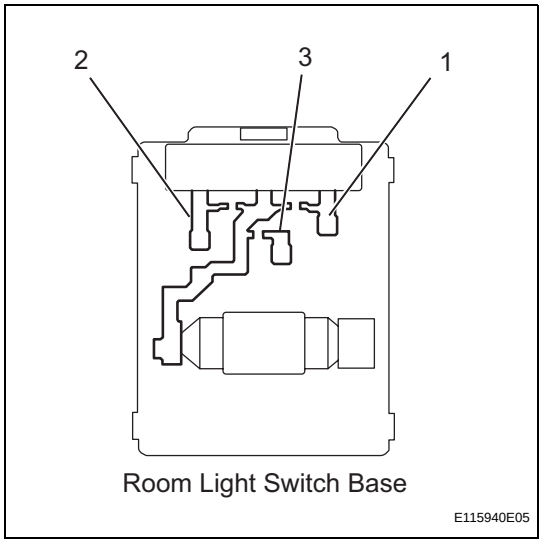

(a) Remove the room light assembly.
(b) Measure the resistance of the room light switch base.
Standard resistance

Tester Connection	Switch Condition	Specified Condition
1 - 2 1 - 3	OFF	10 kΩ or higher
1 - 2	DOOR	Below 1 Ω
1 - 3	ON	Below 1 Ω

NG → **REPLACE ROOM LIGHT ASSEMBLY**

OK

4 INSPECT ROOM LIGHT BULB

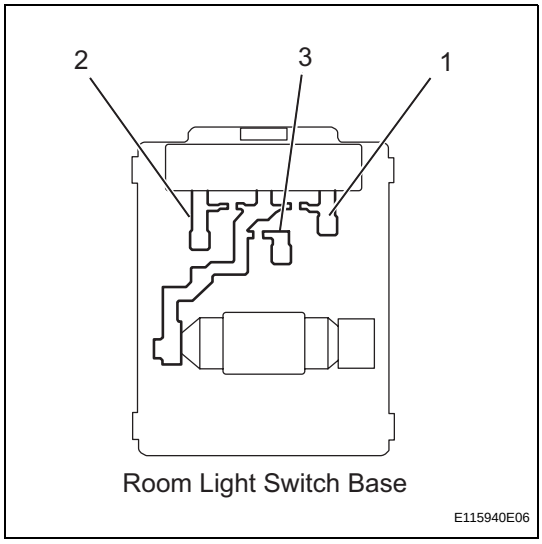

(a) Remove the room light assembly.
(b) Connect the positive (+) lead from the battery to terminal 1 and the negative (-) lead to terminal 2, then check that the light comes on when the switch is in the DOOR position.
OK:
Light comes on.
(c) Connect the positive (+) lead from the battery to terminal 1 and the negative (-) lead to terminal 3, then check that the light comes on when the switch is in the ON position.
OK:
Light comes on.

NG → **REPLACE BULB**

OK

5 CHECK HARNESS AND CONNECTOR (BATTERY - ROOM LIGHT AND MAIN BODY ECU)

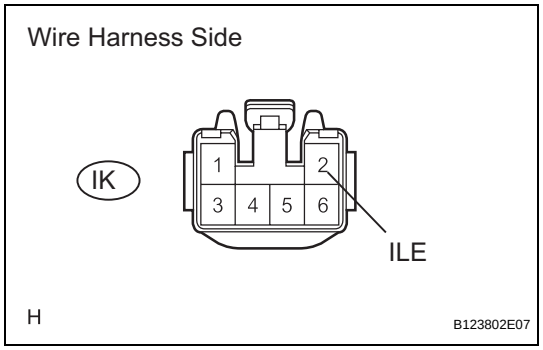

(a) Disconnect the IK instrument panel junction block connector.
(b) Measure the voltage of the wire harness side connector.
Standard voltage

Tester Connection	Condition	Specified Condition
IK-2 (ILE) - Body ground	Room light switch in DOOR position	10 to 14 V

NG → **REPAIR OR REPLACE HARNESS AND CONNECTOR**

OK

6 INSPECT MAP LIGHT BULB

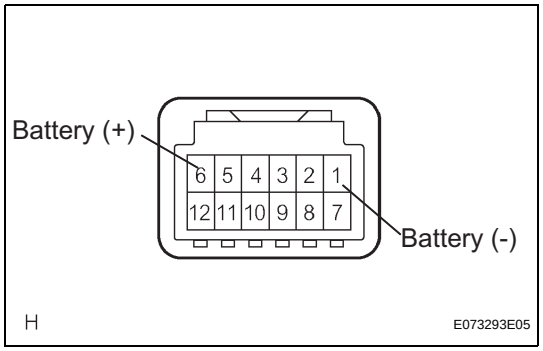

(a) Remove the map light assembly.
(b) Connect the positive (+) lead from the battery to terminal 6 and the negative (-) lead to terminal 1, then check that the light comes on when the switch is in the DOOR position.
OK:
Light comes on.

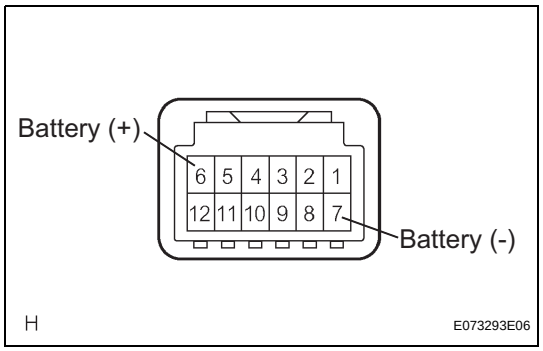

(c) Connect the positive (+) lead from the battery to terminal 6 and the negative (-) lead to terminal 7, then check that the light comes on when the switch is in the ON position.
OK:
Light comes on.

OK → **Go to step 8**

NG

LI

7 INSPECT MAP LIGHT

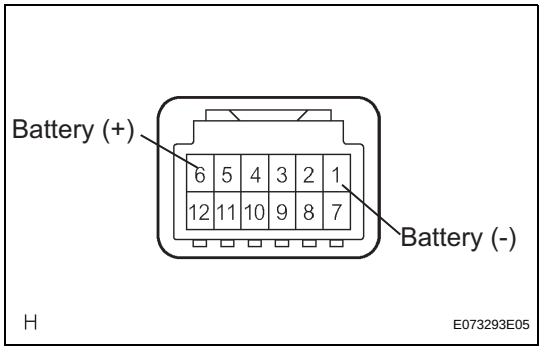

(a) Replace the map light bulb with a normally functioning one or a new one.
(b) Connect the positive (+) lead from the battery to terminal 6 and the negative (-) lead to terminal 1, then check that the light comes on when the switch is in the DOOR position.
OK:
Light comes on.

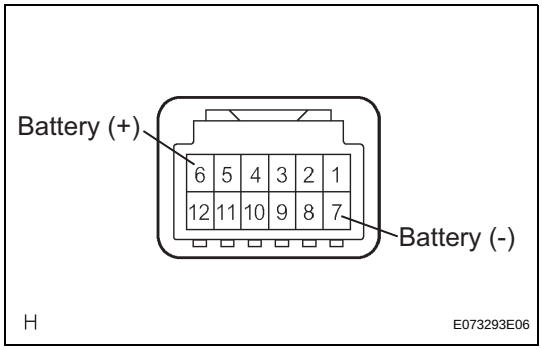

(c) Connect the positive (+) lead from the battery to terminal 6 and the negative (-) lead to terminal 7, then check that the light comes on when the switch is in the ON position.
OK:
Light comes on.

NG → **REPLACE MAP LIGHT ASSEMBLY**

OK →

REPLACE MAP LIGHT BULB

8 CHECK WIRE HARNESS (BATTERY - MAP LIGHT AND MAIN BODY ECU)

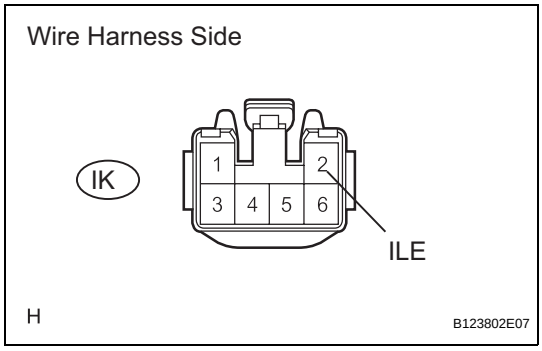

(a) Disconnect the IK instrument panel junction block connector.
(b) Measure the voltage of the wire harness side connector.
Standard voltage

Tester Connection	Condition	Specified Condition
IK-2 (ILE) - Body ground	Room light switch in DOOR position	10 to 14 V

NG → **REPAIR OR REPLACE HARNESS AND CONNECTOR**

OK →

9 INSPECT IGNITION KEY CYLINDER LIGHT

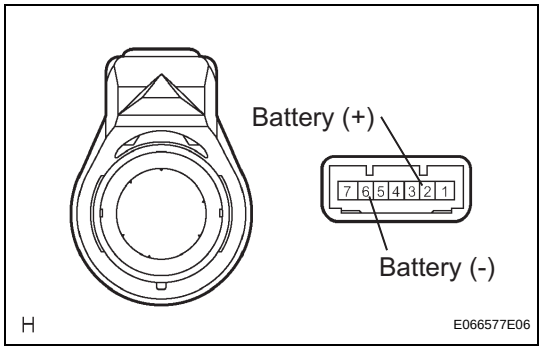

(a) w/ Engine Immobiliser System
  (1) Remove the transponder key amplifier (ignition key cylinder light).
  (2) Connect the positive (+) lead from the battery to terminal 2 and the negative (-) lead to terminal 6, then check that the light comes on.
  OK:
  Light comes on.

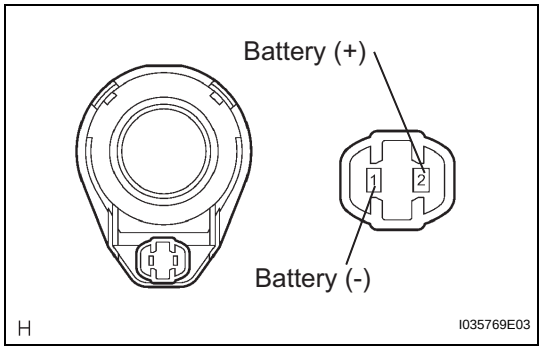

(b) w/o Engine Immobiliser System
  (1) Remove the ignition key cylinder light.
  (2) Connect the positive (+) lead from the battery to terminal 2 and the negative (-) lead to terminal 1, then check that the light comes on.
  OK:
  Light comes on.

NG → **REPLACE IGNITION KEY CYLINDER LIGHT**

OK

10 CHECK WIRE HARNESS (BATTERY - MAIN BODY ECU)

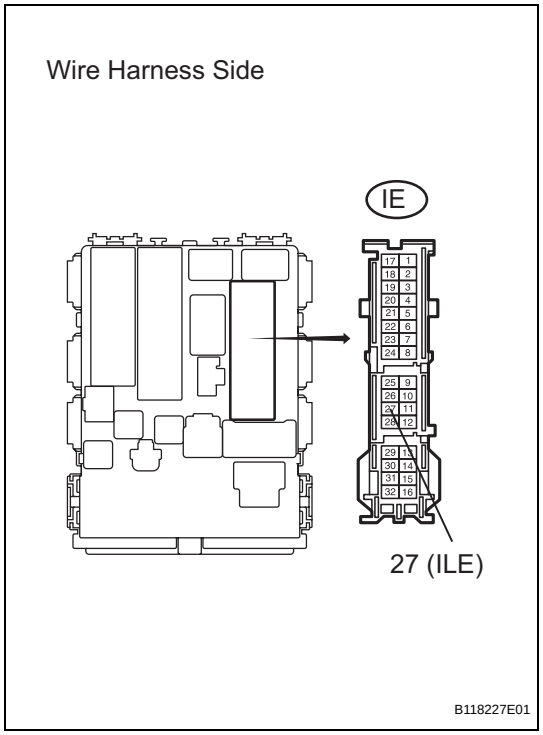

(a) Disconnect the IE instrument panel junction block connector.
(b) Measure the voltage of the wire harness side connector.

Tester Connection	Specified Condition
IE-27 (ILE) - Body ground	10 to 14 V

NG → **REPAIR OR REPLACE HARNESS AND CONNECTOR**

LI

OK

REPLACE INSTRUMENT PANEL JUNCTION BLOCK

Taillight Relay Circuit

DESCRIPTION

When the light control switch, located on the headlight dimmer switch, is turned to the TAIL position, the taillight relay (Marking: T-LP) turns on to illuminate the front side marker lights, rear taillights, side marker lights and license plate light.

WIRING DIAGRAM

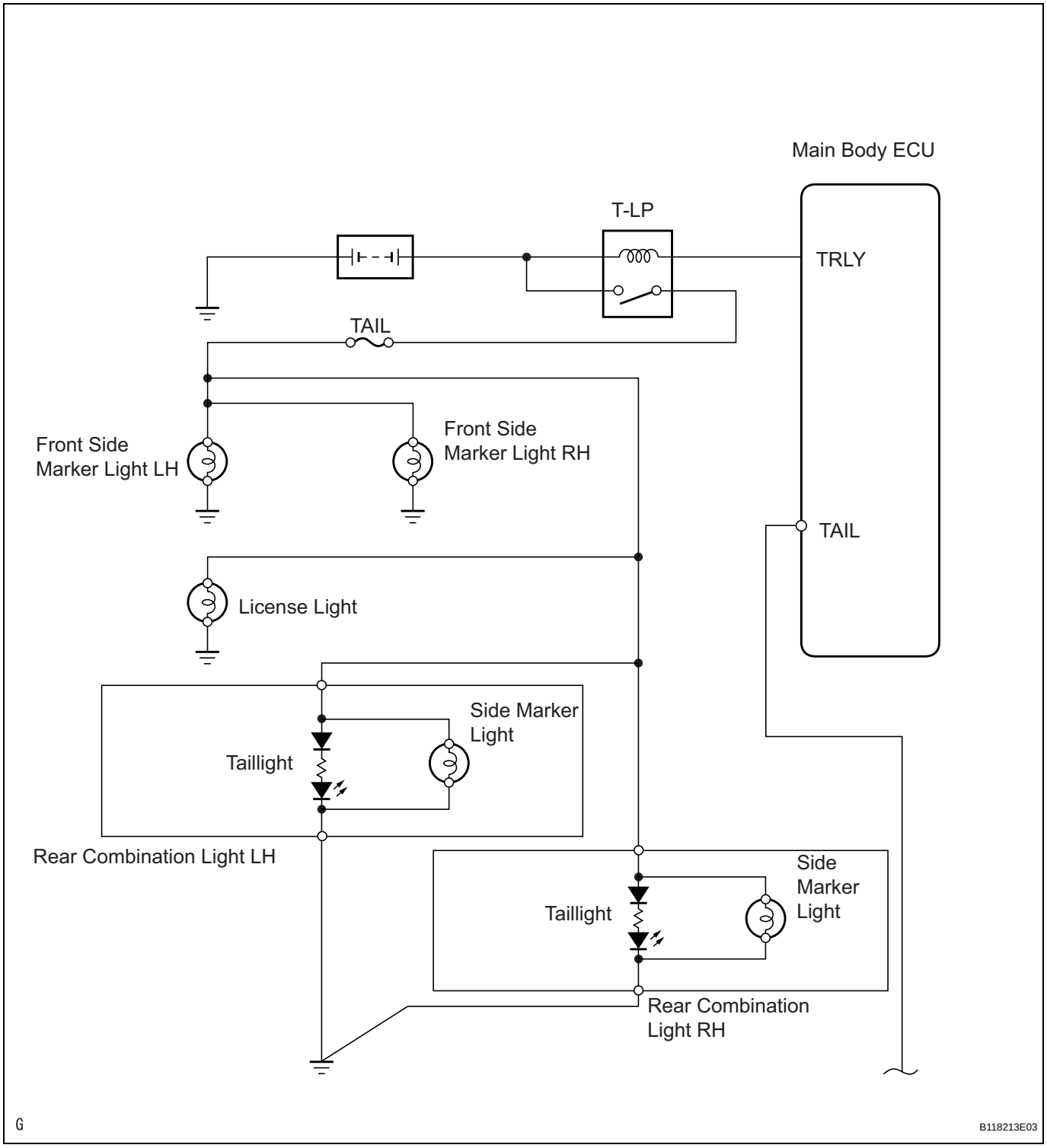

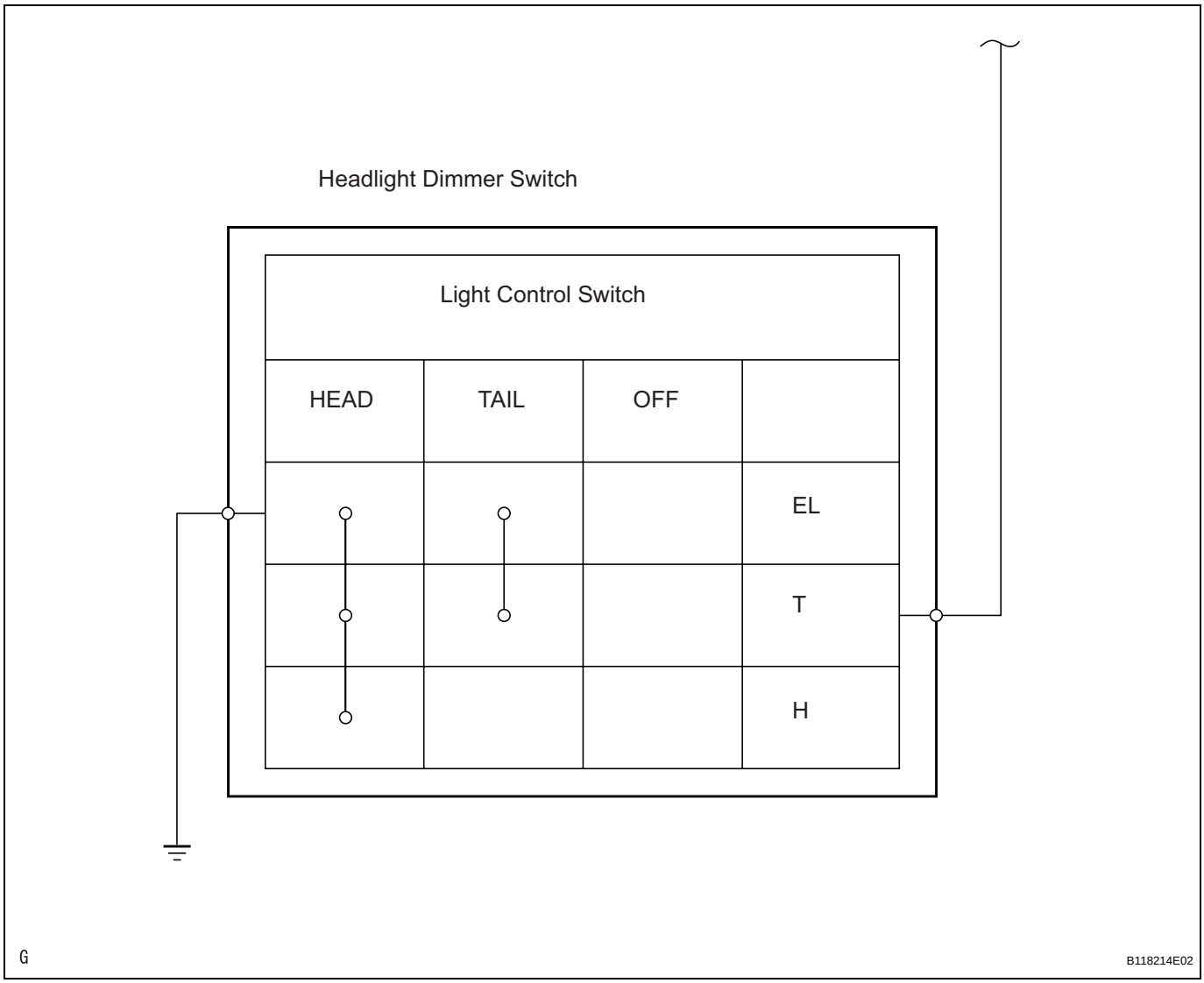

INSPECTION PROCEDURE

1	CHECK WHETHER LIGHTS ILLUMINATE

LI

(a) Check whether the following lights illuminate: front side marker lights, rear taillights, side marker lights and license plate light.

Result

Result	Proceed to
All lights do not illuminate	A
Front side marker lights do not illuminate	B
Rear taillights do not illuminate	C
License plate light does not illuminate	D
Rear side marker light do not illuminate.	E

B	Go to step 8
C	Go to step 10

D	Go to step 11
E	Go to step 12

A

2	INSPECT FUSE (TAIL)

(a) Remove the TAIL fuse from the instrument panel junction block.
(b) Measure the resistance of the fuse.
Standard resistance:
Below 1 Ω

NG	REPLACE FUSE

OK

3	CHECK WIRE HARNESS (BATTERY - INSTRUMENT PANEL JUNCTION BLOCK)

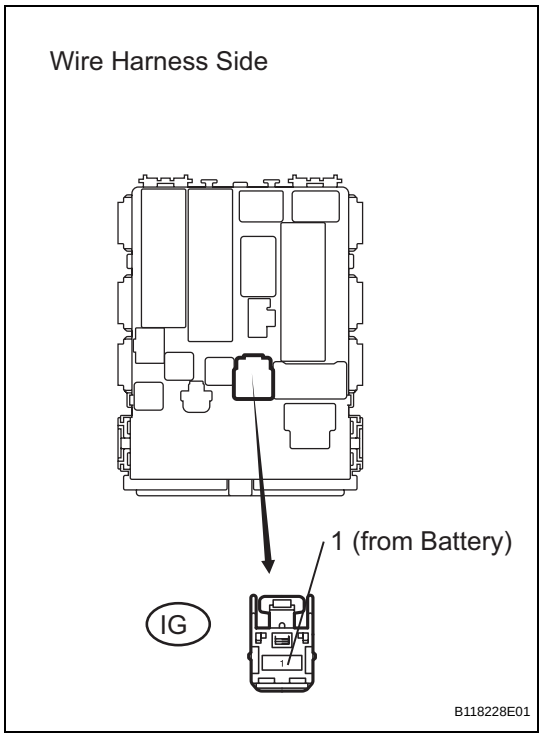

(a) Disconnect the IG instrument panel junction block connector.
(b) Measure the voltage of the wire harness side connector.
Standard voltage

Tester Connection	Specified Condition
IG-1 - Body ground	10 to 14 V

NG	REPAIR OR REPLACE HARNESS AND CONNECTOR

OK

4	CHECK WIRE HARNESS (MAIN BODY ECU - HEADLIGHT DIMMER SWITCH)

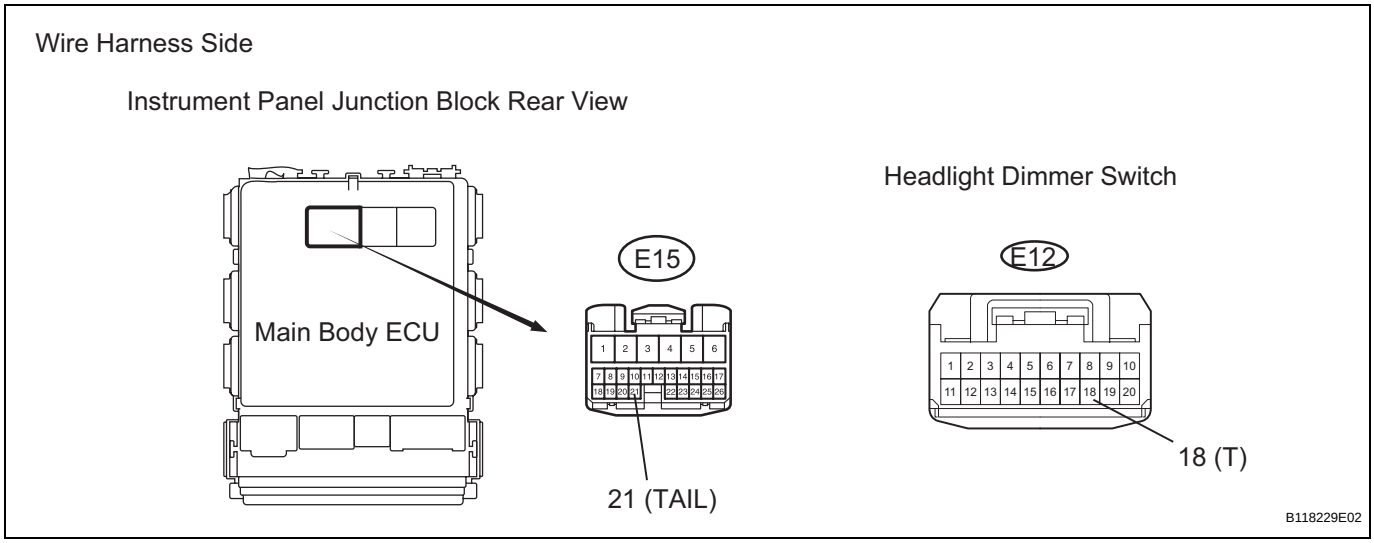

(a) Disconnect the E15 main body ECU connector.
(b) Disconnect the E12 headlight dimmer switch connector.
(c) Measure the resistance of the wire harness side connectors.

Standard resistance

Tester Connection	Specified Condition
E15-21 (TAIL) - E12-18 (T)	Below 1 Ω

NG → **REPAIR OR REPLACE HARNESS AND CONNECTOR**

OK

5	CHECK WIRE HARNESS (BATTERY - HEADLIGHT DIMMER SWITCH)

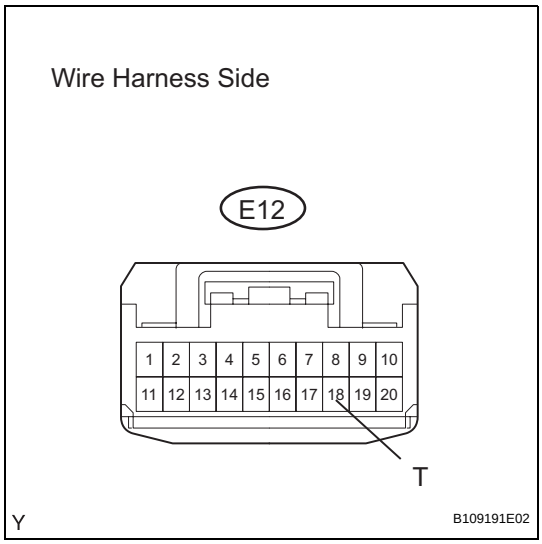

(a) Connect the E15 main body ECU connector.
(b) Disconnect the E12 headlight dimmer switch connector.
(c) Measure the voltage of the wire harness side connector.

Standard voltage

Tester Connection	Specified Condition
E12-18 (T) - Body ground	10 to 14 V

NG → **REPLACE INSTRUMENT PANEL JUNCTION BLOCK**

LI

OK

6 CHECK WIRE HARNESS (HEADLIGHT DIMMER SWITCH - BODY GROUND)

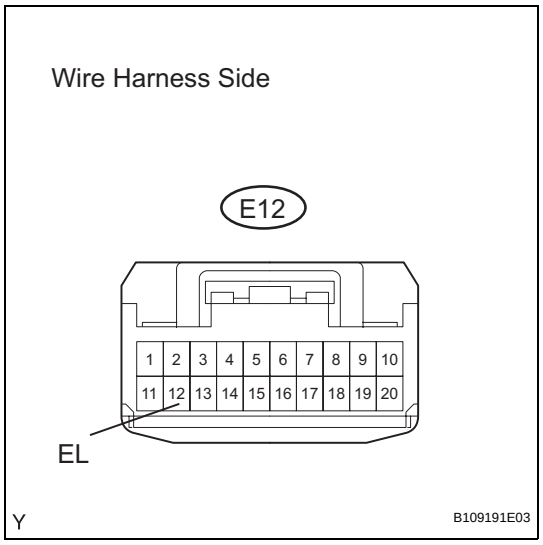

(a) Disconnect the E12 headlight dimmer switch connector.
(b) Measure the resistance of the wire harness side connector.

Standard resistance

Tester Connection	Specified Condition
E12-12 (EL) - Body ground	Below 1 Ω

NG → **REPAIR OR REPLACE HARNESS AND CONNECTOR**

OK

7 INSPECT HEADLIGHT DIMMER SWITCH

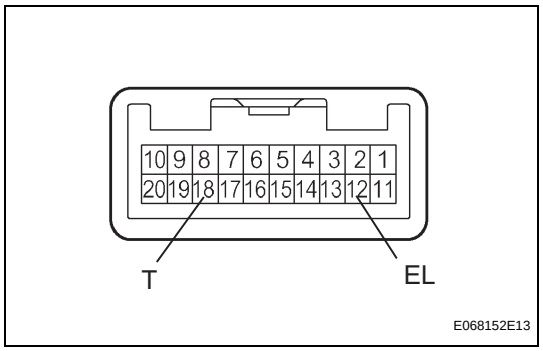

(a) Remove the headlight dimmer switch.
(b) Measure the resistance of the switch.

Standard resistance

Tester Connection	Condition	Specified Condition
18 (T) - 12 (EL)	OFF	10 kΩ or higher
18 (T) - 12 (EL)	TAIL	Below 1 Ω

NG → **REPLACE HEADLIGHT DIMMER SWITCH**

OK

REPLACE INSTRUMENT PANEL JUNCTION BLOCK

LI

8	CHECK INSTRUMENT PANEL JUNCTION BLOCK (TAILLIGHT RELAY)

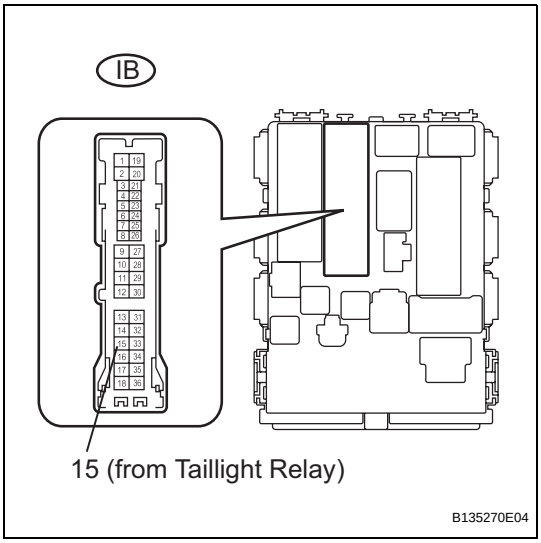

(a) Disconnect the IB instrument panel junction block connector.
(b) Measure the voltage of the junction block.

Standard voltage

Tester Connection	Condition	Specified Condition
Junction block IB terminal 15 - Body ground	Light control switch TAIL	10 to 14 V

NG → **REPLACE INSTRUMENT PANEL JUNCTION BLOCK**

OK

9	CHECK WIRE HARNESS (TAILLIGHT RELAY - FRONT SIDE MARKER LIGHT AND BODY GROUND)

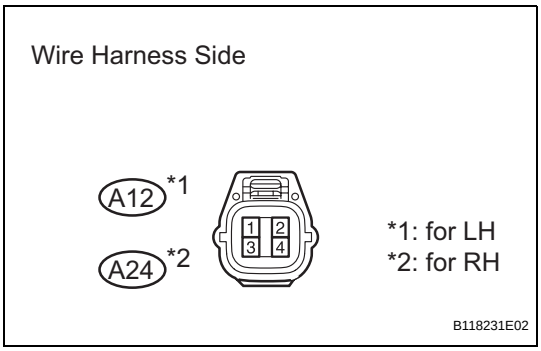

(a) Disconnect the A12 and A24 front side marker light connectors.
(b) Measure the voltage and resistance of the wire harness side connectors.

Standard resistance

Tester Connection	Condition	Specified Condition
A12-4 - Body ground	Light control switch on (TAIL)	10 to 14 V
A24-4 - Body ground	Light control switch on (TAIL)	10 to 14 V

Standard resistance

Tester Connection	Specified Condition
A12-1 - Body ground	Below 1 Ω
A24-1 - Body ground	Below 1 Ω

NG → **REPAIR OR REPLACE HARNESS AND CONNECTOR**

OK

REPLACE BULB

LI

10 CHECK WIRE HARNESS (MAIN BODY ECU - REAR COMBINATION LIGHT)

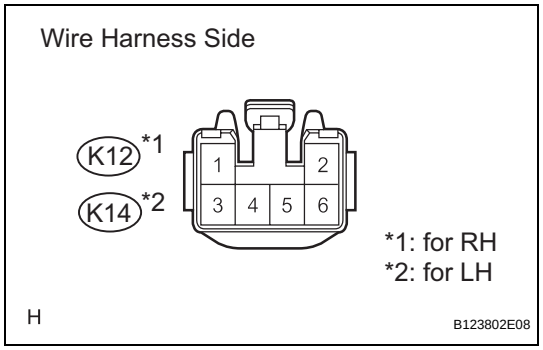

(a) Disconnect the K12 and K14 rear combination light connectors.
(b) Measure the voltage and resistance of the wire harness side connectors.

Standard voltage

Tester Connection	Condition	Specified Condition
K14-2 - Body ground	Light control switch on (TAIL)	10 to 14 V
K12-2 - Body ground	Light control switch on (TAIL)	10 to 14 V

Standard resistance

Tester Connection	Specified Condition
K14-1 - Body ground	Below 1 Ω
K12-1 - Body ground	Below 1 Ω

NG → **REPAIR OR REPLACE HARNESS AND CONNECTOR**

OK

REPLACE REAR COMBINATION LIGHT

11 CHECK WIRE HARNESS (MAIN BODY ECU - LICENSE PLATE LIGHT AND BODY GROUND)

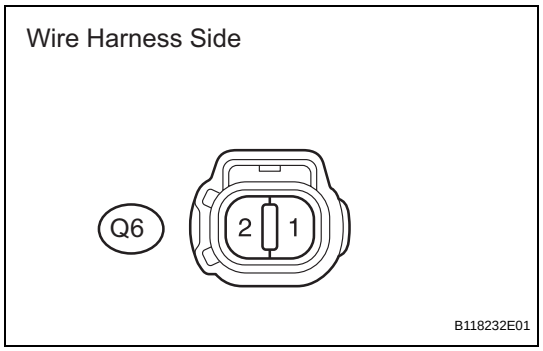

(a) Disconnect the Q6 license plate light connector.
(b) Measure the voltage and resistance of the wire harness side connector.

Standard voltage

Tester Connection	Condition	Specified Condition
Q6-2 - Body ground	Light control switch on (TAIL)	10 to 14 V

Standard resistance

Tester Connection	Specified Condition
Q6-1 - Body ground	Below 1 Ω

NG → **REPAIR OR REPLACE HARNESS AND CONNECTOR**

OK

REPLACE BULB

12	CHECK WIRE HARNESS (MAIN BODY ECU - REAR COMBINATION LIGHT)

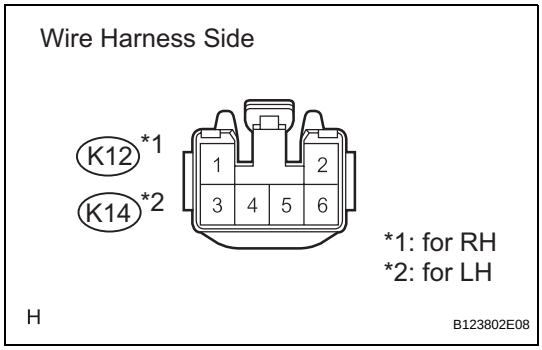

(a) Disconnect the K12 and K14 rear combination light connectors.
(b) Measure the voltage and resistance of the wire harness side connectors.

Standard voltage

Tester Connection	Condition	Specified Condition
K14-2 - Body ground	Light control switch on (TAIL)	10 to 14 V
K12-2 - Body ground	Light control switch on (TAIL)	10 to 14 V

Standard resistance

Tester Connection	Specified Condition
K14-1 - Body ground	Below 1 Ω
K12-1 - Body ground	Below 1 Ω

NG → **REPAIR OR REPLACE HARNESS AND CONNECTOR**

OK

REPLACE BULB

LIGHTING SYSTEM

PARTS LOCATION

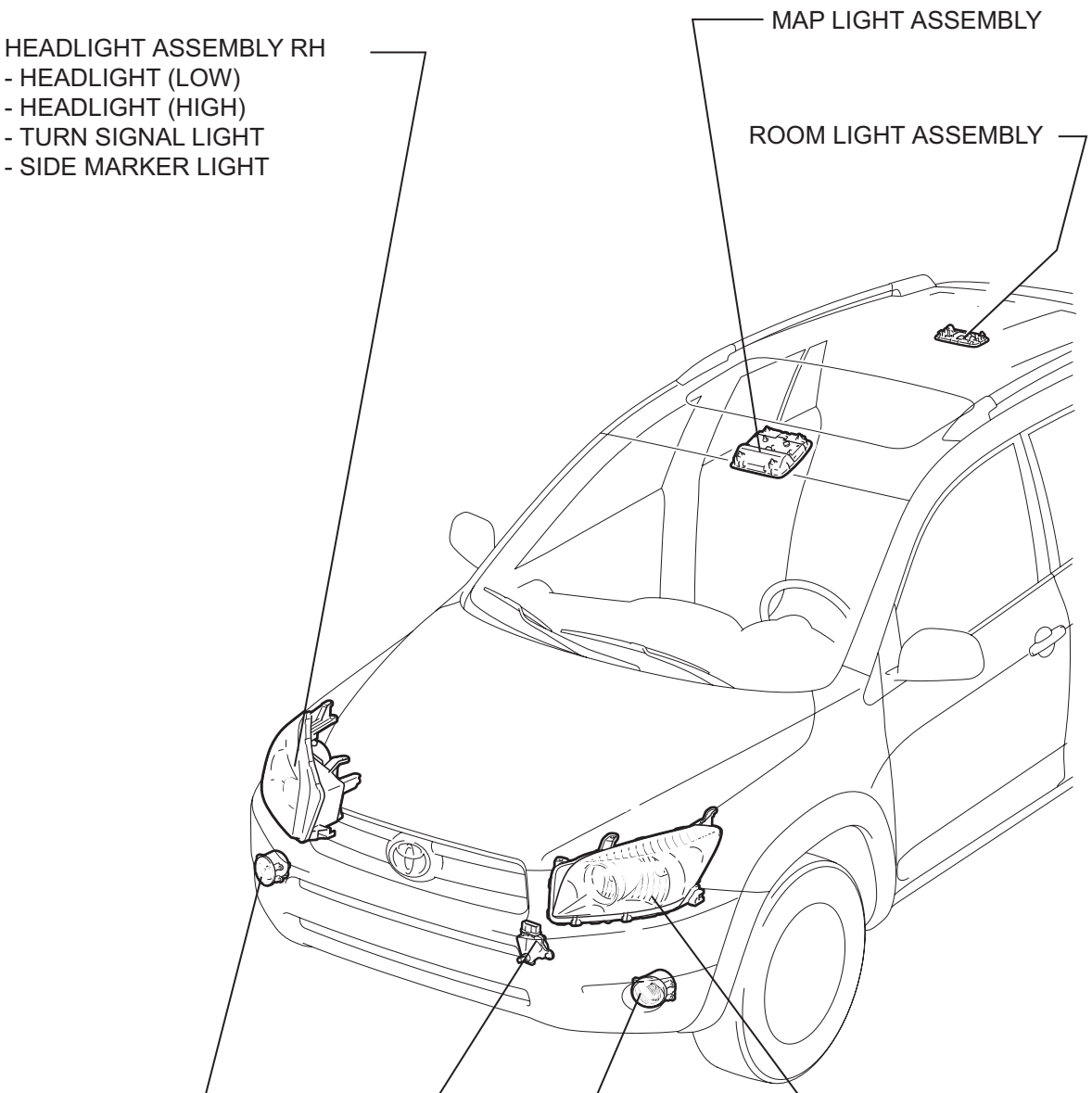

B128055E01

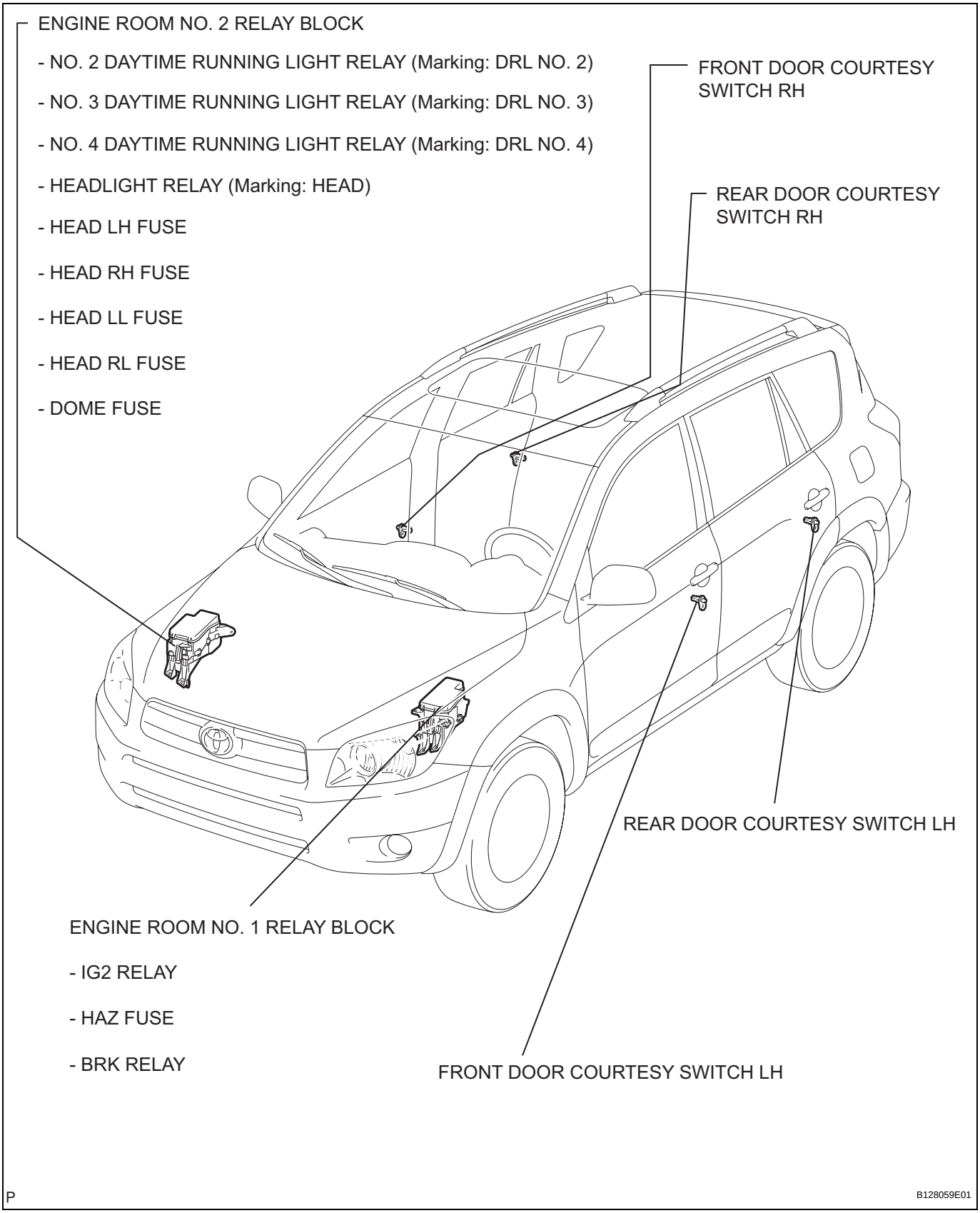
ENGINE ROOM NO. 2 RELAY BLOCK
- NO. 2 DAYTIME RUNNING LIGHT RELAY (Marking: DRL NO. 2)
- NO. 3 DAYTIME RUNNING LIGHT RELAY (Marking: DRL NO. 3)
- NO. 4 DAYTIME RUNNING LIGHT RELAY (Marking: DRL NO. 4)
- HEADLIGHT RELAY (Marking: HEAD)
- HEAD LH FUSE
- HEAD RH FUSE
- HEAD LL FUSE
- HEAD RL FUSE
- DOME FUSE
FRONT DOOR COURTESY SWITCH RH
REAR DOOR COURTESY SWITCH RH
REAR DOOR COURTESY SWITCH LH
ENGINE ROOM NO. 1 RELAY BLOCK
- IG2 RELAY
- HAZ FUSE
- BRK RELAY
FRONT DOOR COURTESY SWITCH LH
P
B128059E01

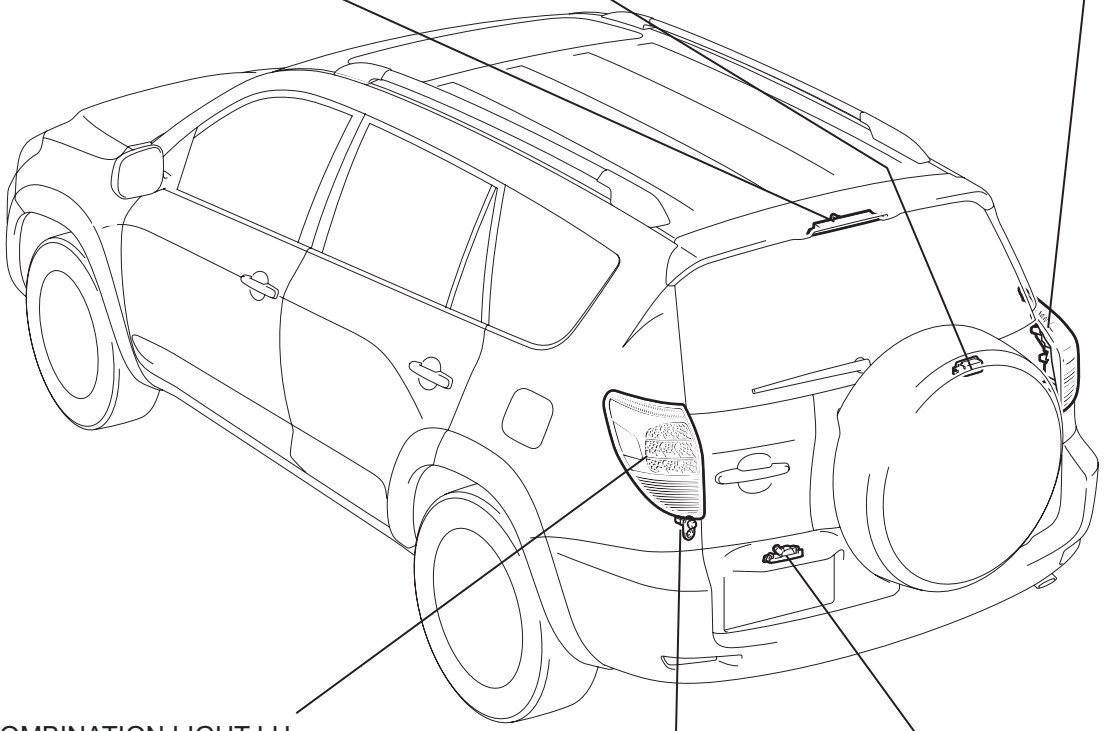

P

B128086E04

LI

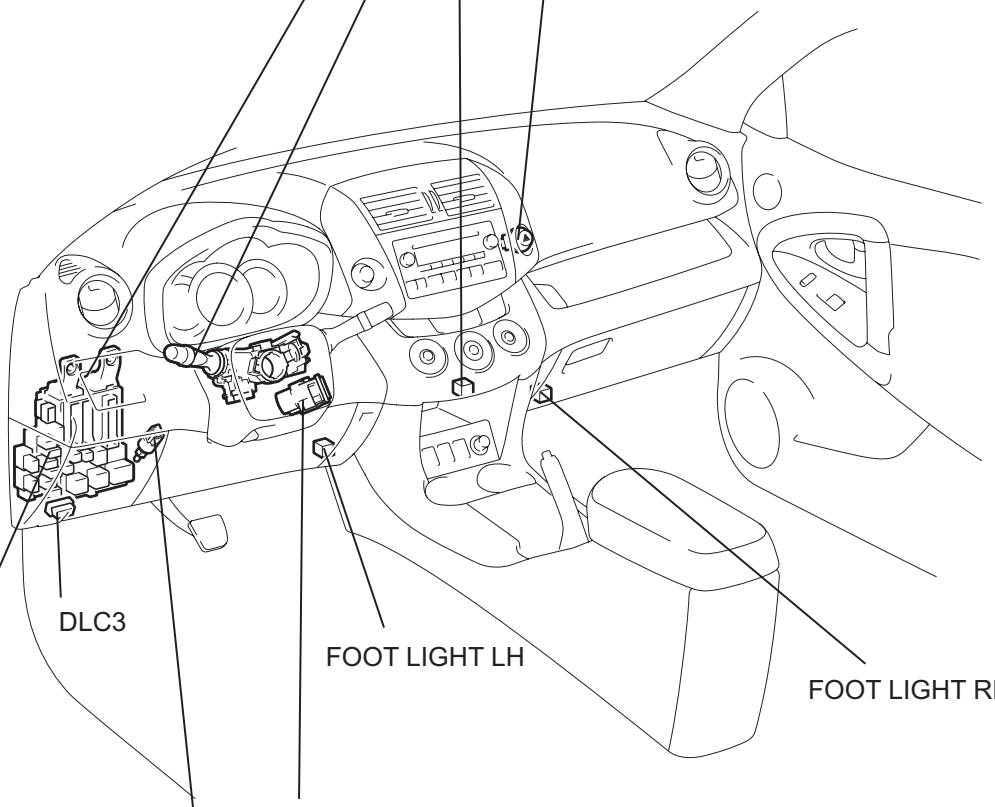

*1: w/o Engine Immobiliser System
*2: w/ Engine Immobiliser System

LI

P

B128056E01

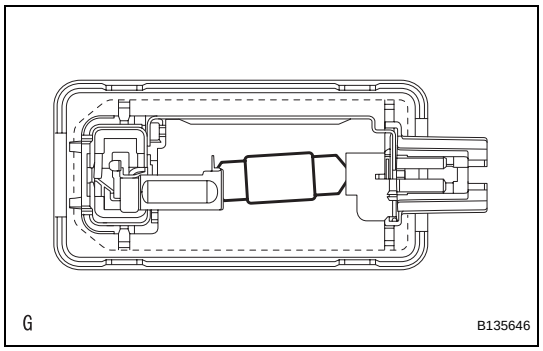

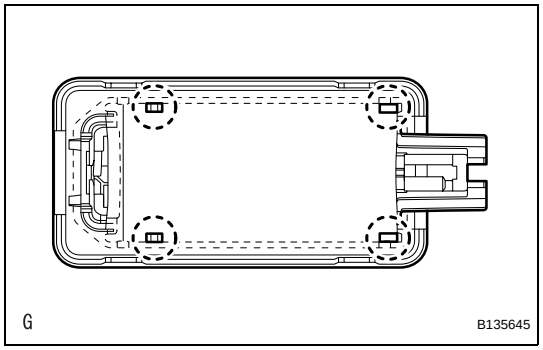

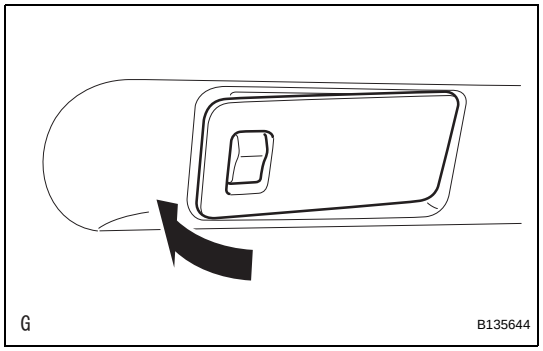

INSTALLATION

1. **INSTALL BACK DOOR COURTESY LIGHT ASSEMBLY**
   (a) Install the bulb to the light.

   (b) Attach the 4 claws to install the light shade.

   (c) Install the light as shown in the illustration.
2. **INSTALL BACK DOOR TRIM BOARD (See page ED-66)**
3. **INSTALL BACK DOOR SIDE GARNISH RH (See page ED-67)**
4. **INSTALL BACK DOOR SIDE GARNISH LH (See page ED-67)**
5. **INSTALL BACK DOOR CENTER GARNISH (See page ED-67)**
6. **CONNECT CABLE TO NEGATIVE BATTERY TERMINAL**

LUGGAGE ROOM LIGHT

COMPONENTS

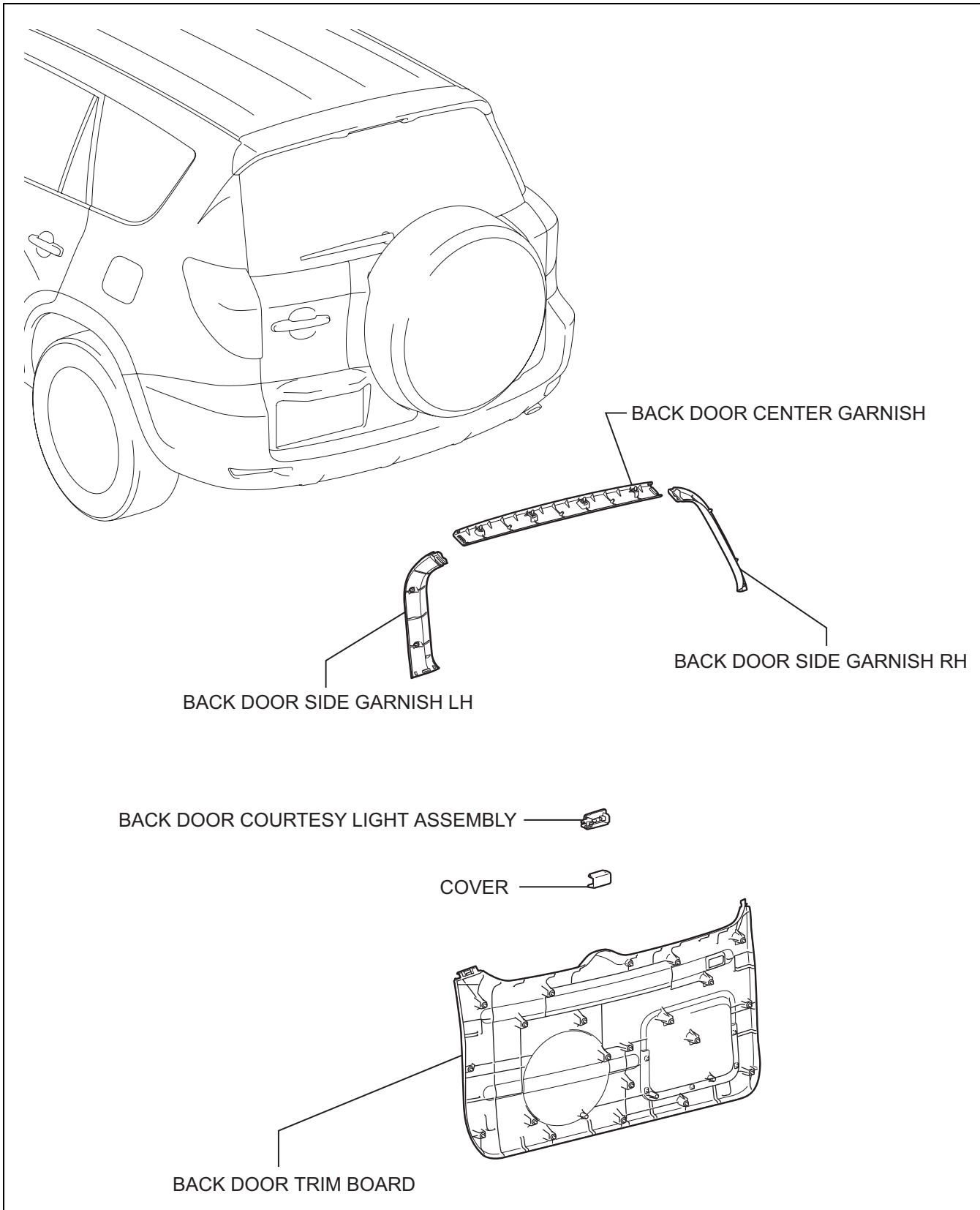

REMOVAL

1. **DISCONNECT CABLE FROM NEGATIVE BATTERY TERMINAL**
   CAUTION:
   Wait at least 90 seconds after disconnecting the cable from the negative (-) battery terminal to prevent airbag and seat belt pretensioner activation.
2. **REMOVE BACK DOOR CENTER GARNISH (See page ED-59)**
3. **REMOVE BACK DOOR SIDE GARNISH LH (See page ED-59)**
4. **REMOVE BACK DOOR SIDE GARNISH RH (See page ED-59)**
5. **REMOVE BACK DOOR TRIM BOARD (See page ED-59)**
6. **REMOVE BACK DOOR COURTESY LIGHT ASSEMBLY**
   (a) Using a screwdriver, pry out the light as shown in the illustration.
   HINT:
   Tape the screwdriver tip before use.

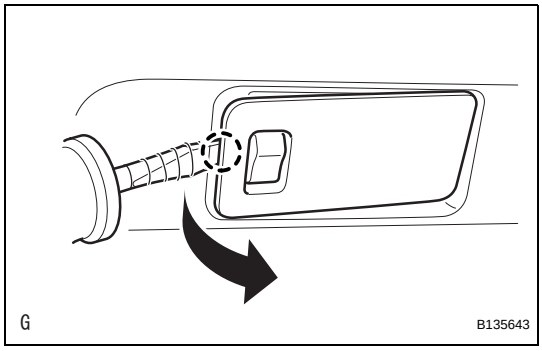

(b) Detach the 4 claws and remove the light shade.

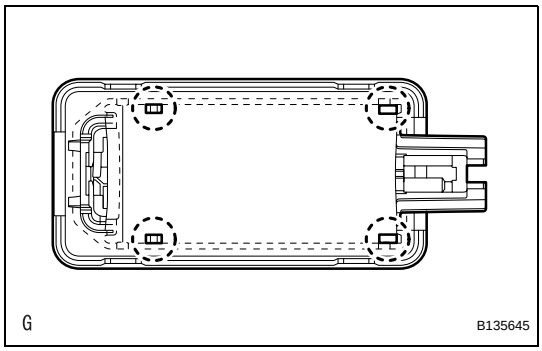

(c) Remove the light bulb from the light.

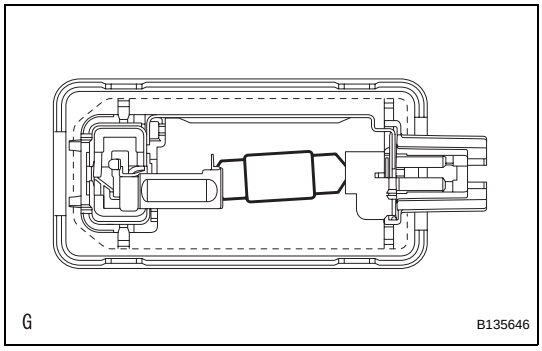

(b) Connect the battery's positive (+) lead to terminal 6 and the negative (-) lead to terminal 7, and then check that the light comes on when the switch is in the ON position.

OK:

Light comes on.

If the result is not as specified, replace the light assembly.

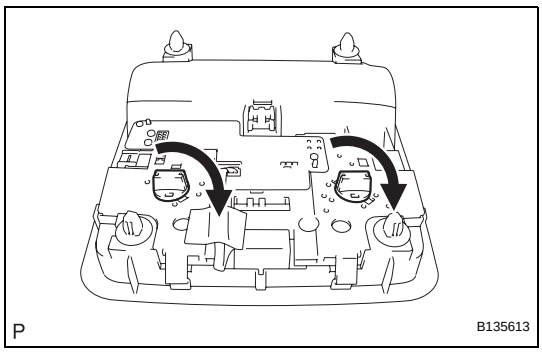

REASSEMBLY

1. INSTALL MAP LIGHT BULB

(a) Install the 2 bulbs to the light.

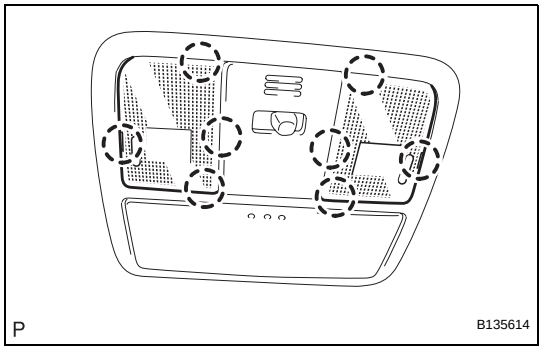

INSTALLATION

1. INSTALL MAP LIGHT LENS

(a) Attach the 8 claws to install the map light lens.

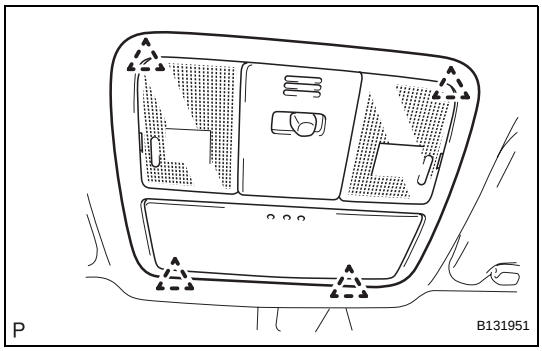

2. INSTALL MAP LIGHT ASSEMBLY

(a) Connect the light connector.

(b) Attach the 4 clips to install the map light.

3. CONNECT CABLE TO NEGATIVE BATTERY TERMINAL

MAP LIGHT ASSEMBLY

COMPONENTS

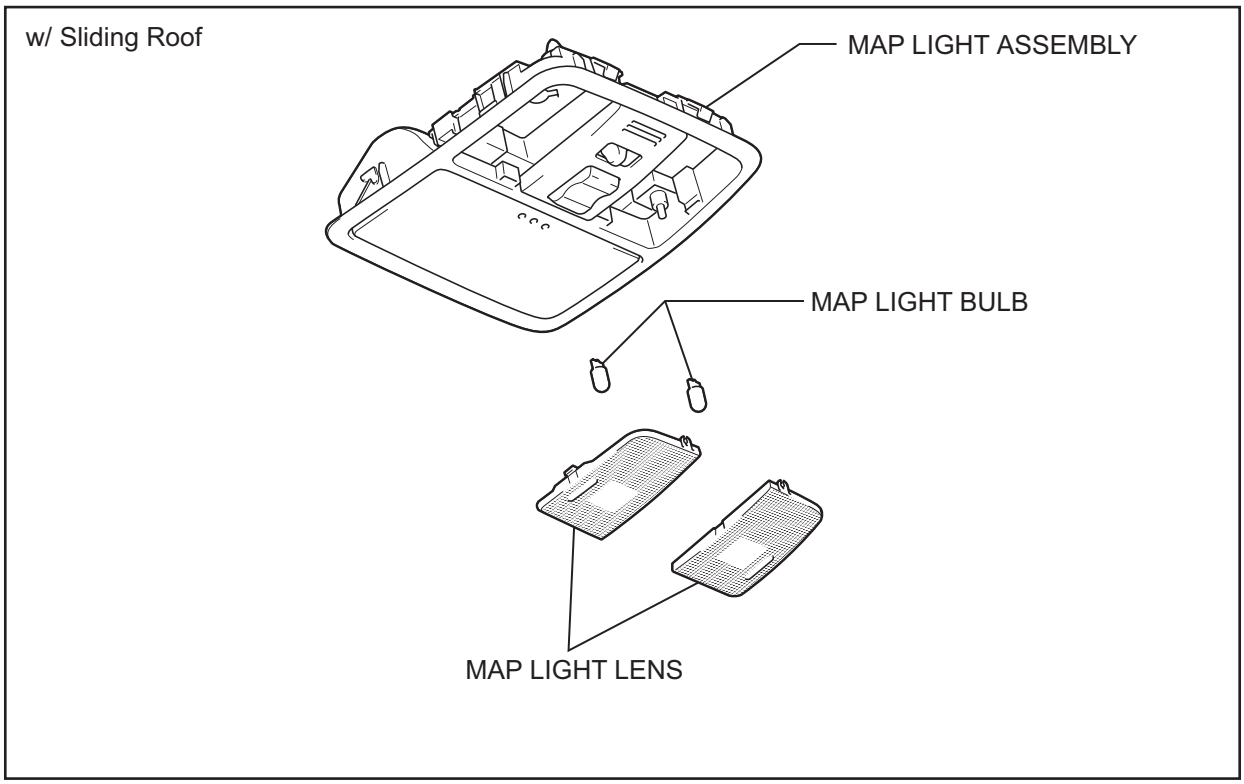

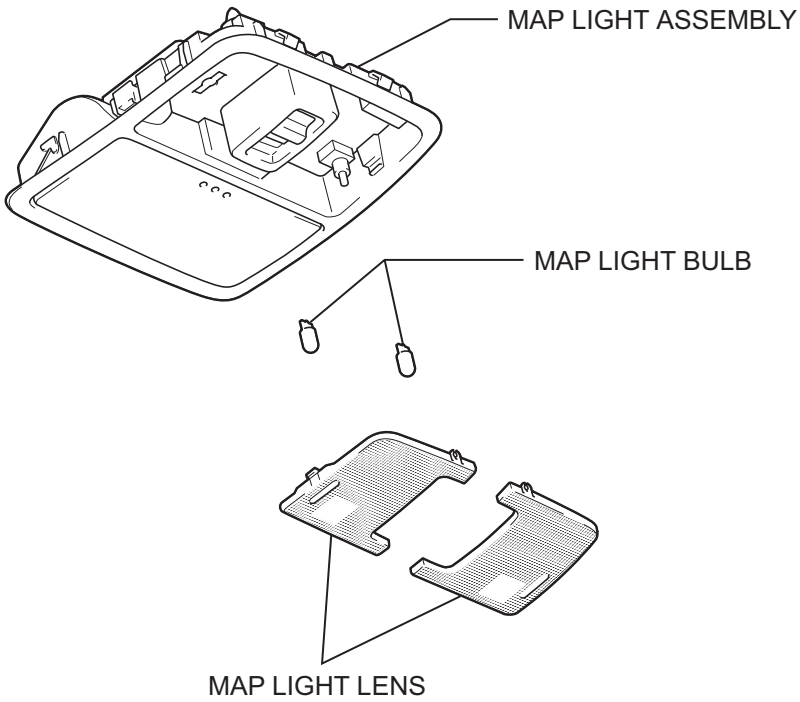

P

B129920E02

REMOVAL

1. DISCONNECT CABLE FROM NEGATIVE BATTERY TERMINAL

CAUTION:

Wait at least 90 seconds after disconnecting the cable from the negative (-) battery terminal to prevent airbag and seat belt pretensioner activation.

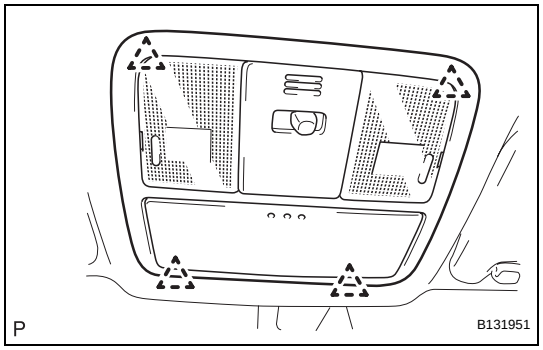

2. REMOVE MAP LIGHT ASSEMBLY

(a) Detach the 4 clips and remove the map light.

(b) Disconnect the light connector.

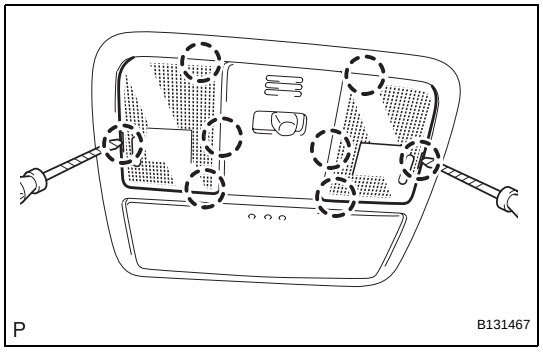

3. REMOVE MAP LIGHT LENS

(a) Using a screwdriver, pry out the 8 claws and remove the map light lens.

HINT:

Tape the screwdriver tip before use.

DISASSEMBLY

1. REMOVE MAP LIGHT BULB

(a) Remove the 2 bulbs from the light.

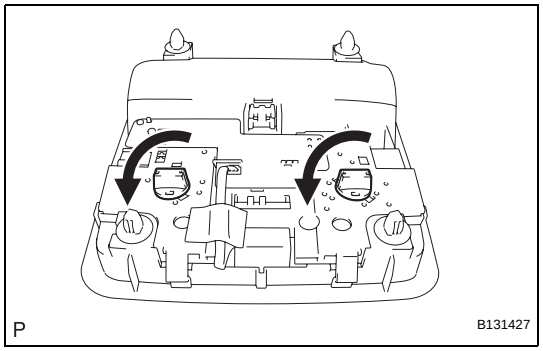

INSPECTION

1. INSPECT MAP LIGHT ASSEMBLY

(a) Connect the battery's positive (+) lead to terminal 6 and the negative (-) lead to terminal 1, and then check that the light comes on when the switch is in the DOOR position.

OK:

Light comes on.

If the result is not as specified, replace the light assembly.

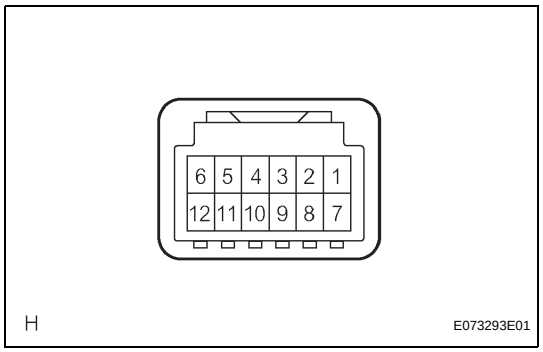

LI

DISASSEMBLY

HINT:

- Use the same procedures for the RH and LH sides.
- The procedures listed below are for the LH side.

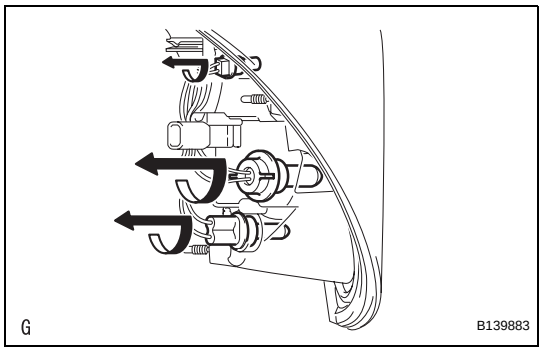

1. REMOVE REAR COMBINATION LIGHT BULB

(a) Turn the 3 bulbs in the direction indicated by the arrows and pull to remove them.

REASSEMBLY

HINT:

- Use the same procedures for the RH and LH sides.
- The procedures listed below are for the LH side.

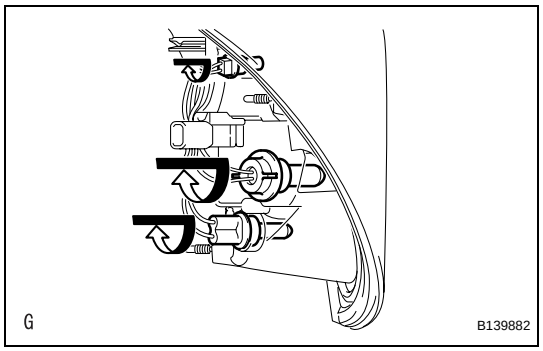

1. INSTALL REAR COMBINATION LIGHT BULB

(a) Turn the 3 bulbs in the direction indicated by the arrows to install them.

INSTALLATION

HINT:

- Use the same procedures for the RH and LH sides.
- The procedures listed below are for the LH side.

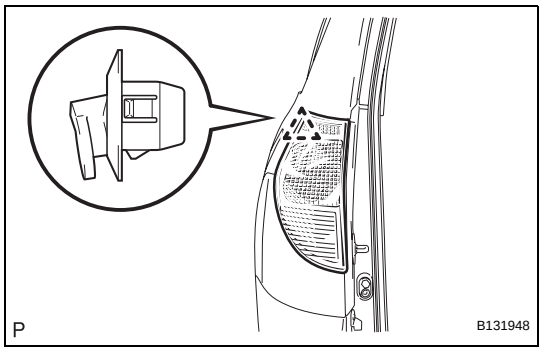

1. INSTALL REAR COMBINATION LIGHT ASSEMBLY

(a) Attach the clip to install the light.

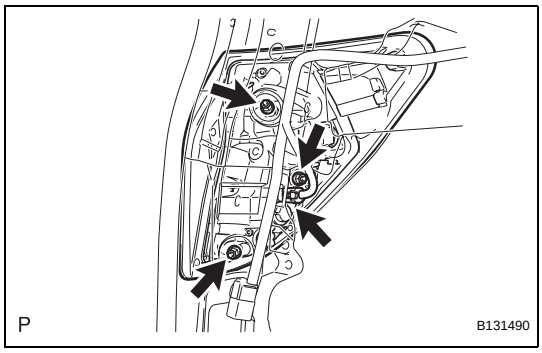

(b) Install the 3 nuts and connect the connector.

2. CONNECT CABLE TO NEGATIVE BATTERY TERMINAL

REAR COMBINATION LIGHT ASSEMBLY

COMPONENTS

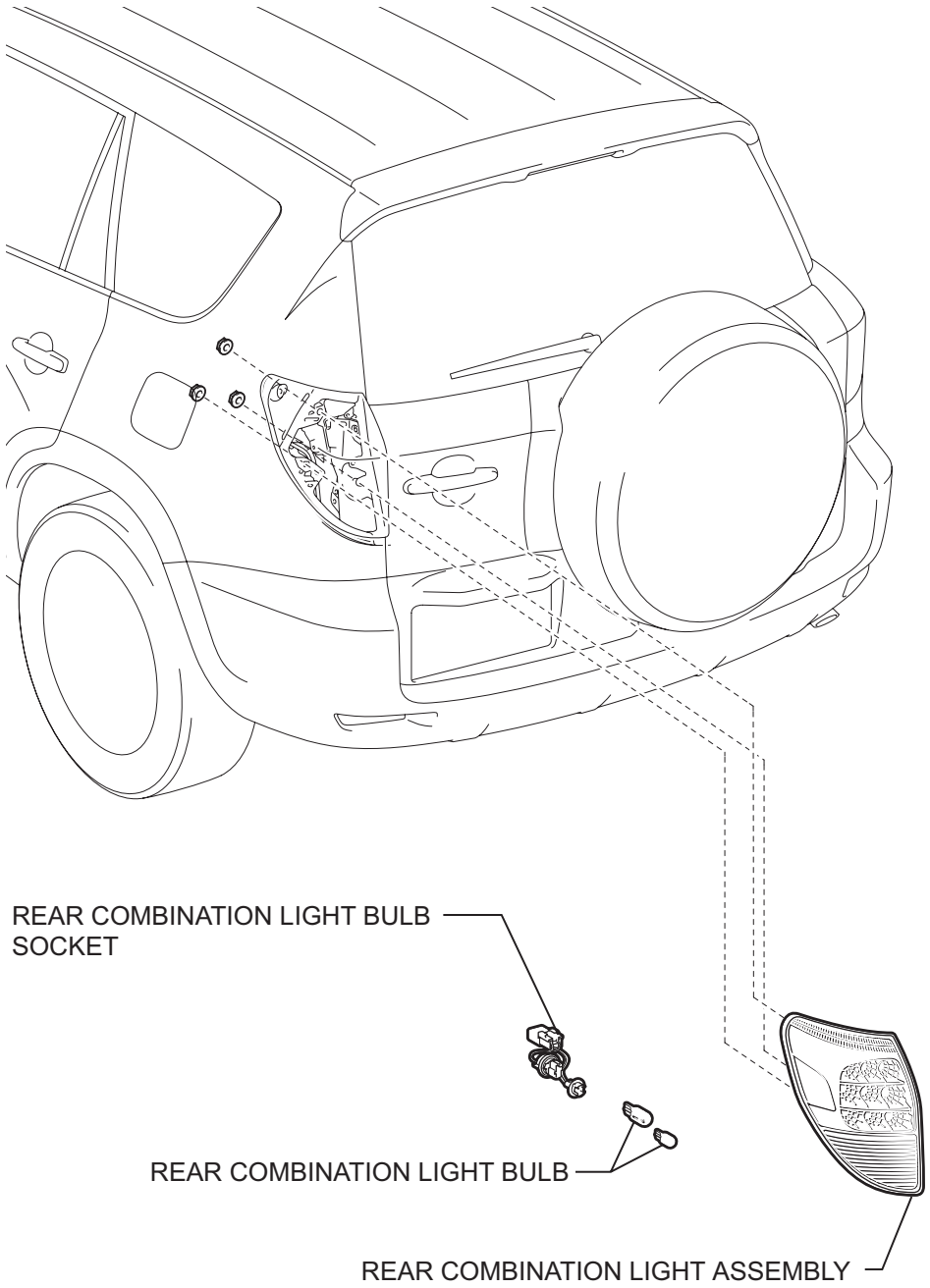

P

B136297E02

REMOVAL

HINT:

- Use the same procedures for the RH and LH sides.
- The procedures listed below are for the LH side.

1. DISCONNECT CABLE FROM NEGATIVE BATTERY TERMINAL

CAUTION:

Wait at least 90 seconds after disconnecting the cable from the negative (-) battery terminal to prevent airbag and seat belt pretensioner activation.

2. REMOVE REAR COMBINATION LIGHT ASSEMBLY

(a) Remove the 3 nuts and disconnect the connector.

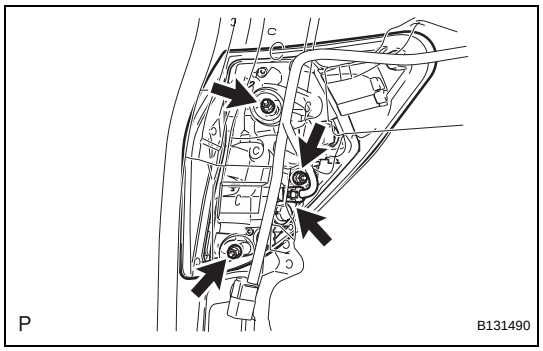

(b) Detach the clip and remove the light.

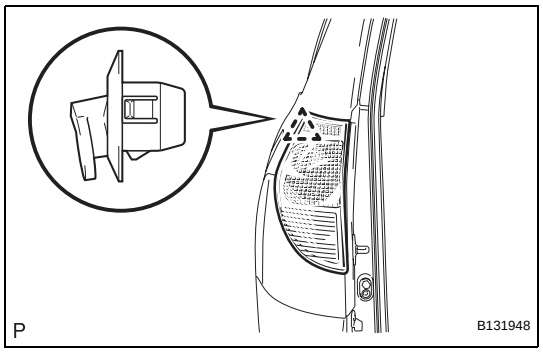

INSTALLATION

HINT:

- Use the same procedures for the RH and LH sides.
- The procedures listed below are for the LH side.
- A bolt without a torque specification is shown in the standard bolt chart (see page SS-2).

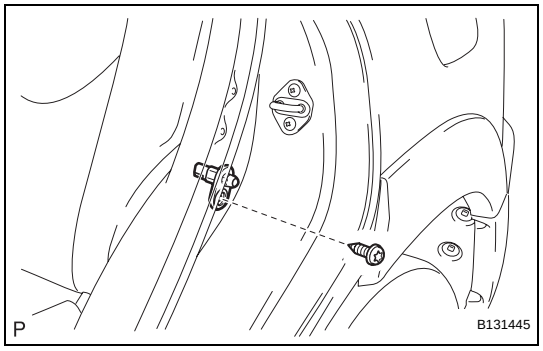

1. INSTALL REAR DOOR COURTESY LIGHT SWITCH ASSEMBLY

(a) Connect the connector.

(b) Install the switch with the bolt.

2. CONNECT CABLE TO NEGATIVE BATTERY TERMINAL

REAR DOOR COURTESY SWITCH

COMPONENTS

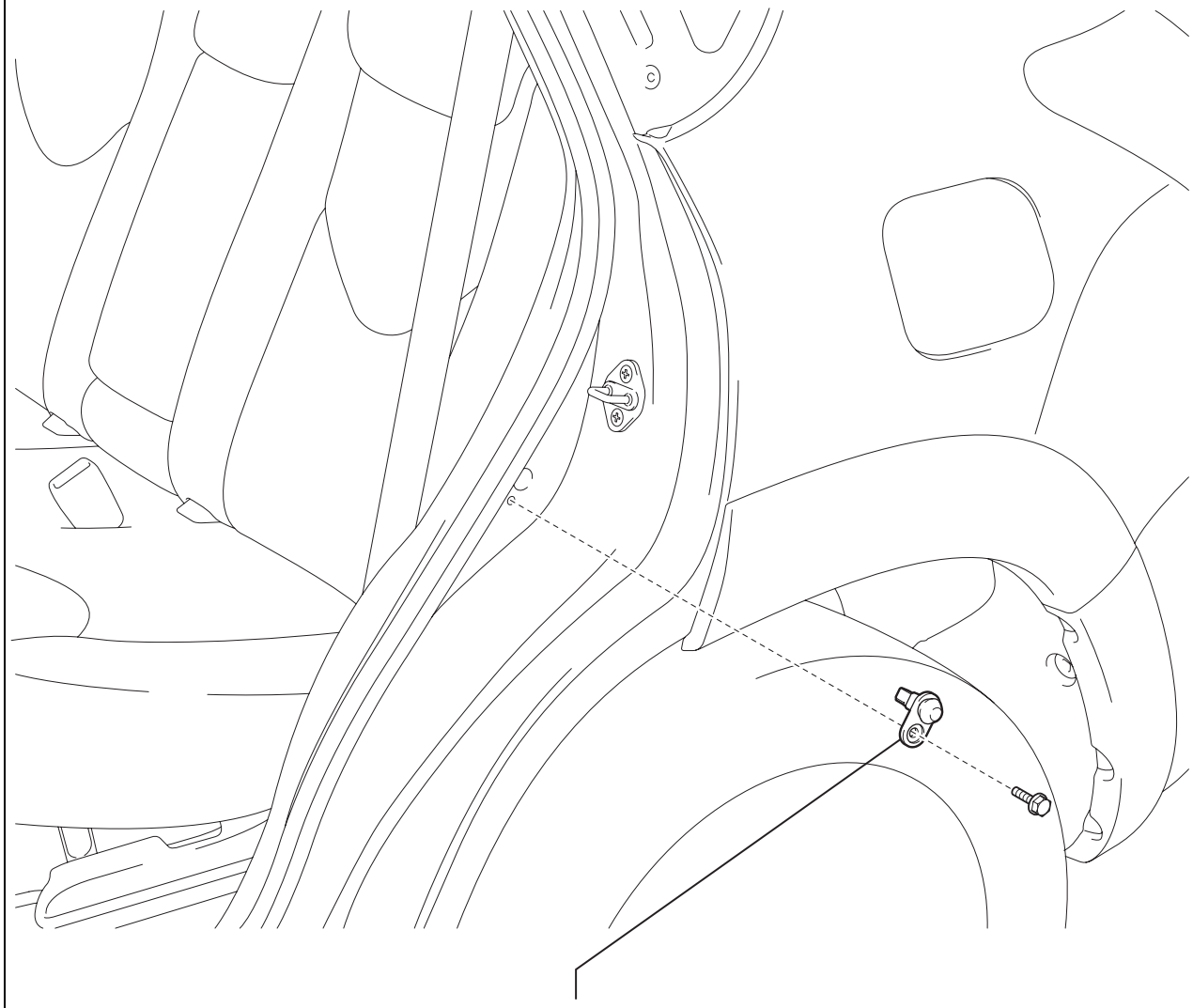

REAR DOOR COURTESY LIGHT SWITCH ASSEMBLY

P

B129916E02

REMOVAL

HINT:

- Use the same procedures for the RH and LH sides.
- The procedures listed below are for the LH side.

1. DISCONNECT CABLE FROM NEGATIVE BATTERY TERMINAL

CAUTION:

Wait at least 90 seconds after disconnecting the cable from the negative (-) battery terminal to prevent airbag and seat belt pretensioner activation.

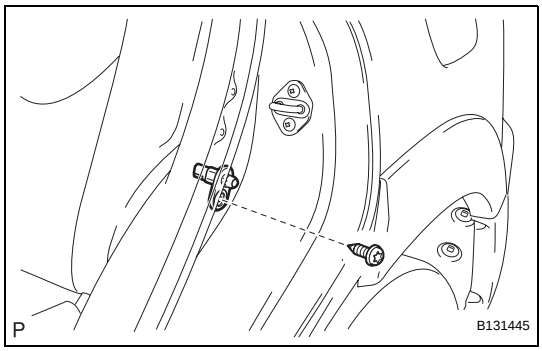

2. REMOVE REAR DOOR COURTESY LIGHT SWITCH ASSEMBLY

(a) Remove the bolt and switch.

(b) Disconnect the connector.

INSPECTION

1. INSPECT REAR DOOR COURTESY LIGHT SWITCH ASSEMBLY

(a) Measure the resistance of the switch.

Standard resistance

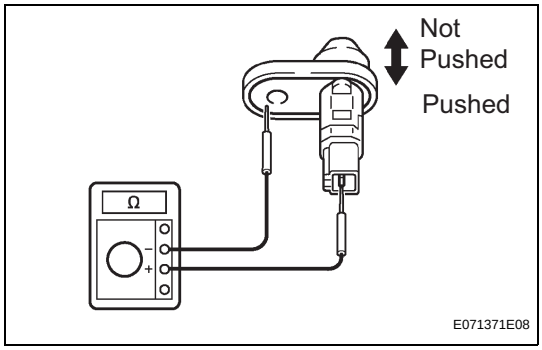

Tester Connection	Switch Condition	Specified Condition
1 - Switch body	Pushed	10 kΩ or higher
1 - Switch body	Not pushed	Below 1 Ω

If the result is not as specified, replace the switch assembly.

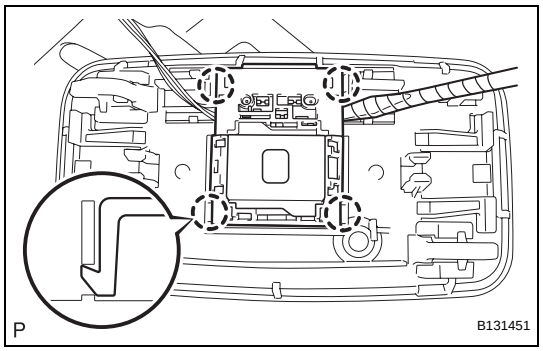

(d) Using a screwdriver, detach the 4 claws and remove the room light switch base.
HINT:
Tape the screwdriver tip before use.

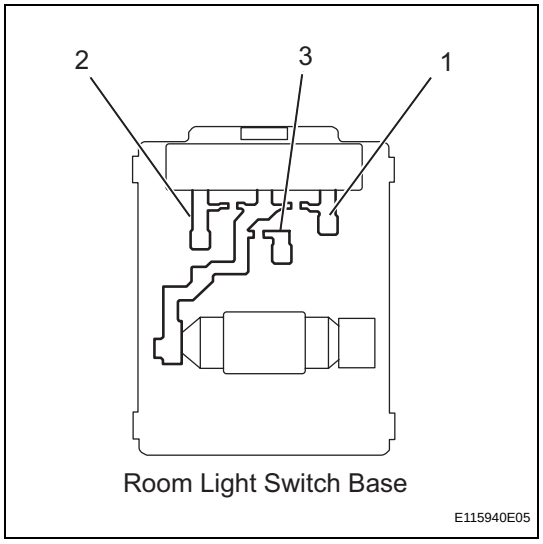

INSPECTION

1. INSPECT ROOM LIGHT

(a) Connect the battery's positive (+) lead to terminal 1 and the negative (-) lead to terminal 2, and then check that the light comes on when the switch is in the DOOR position.
OK:
Light comes on.
If the result is not as specified, replace the light assembly.

(b) Connect the positive (+) lead from the battery to terminal 1 and the negative (-) lead to terminal 3, then check that the light comes on when the switch is in the ON position.
OK:
Light comes on.
If the result is not as specified, replace the light assembly.

INSTALLATION

1. INSTALL ROOM LIGHT ASSEMBLY

(a) Attach the 4 claws to install the room light switch base.

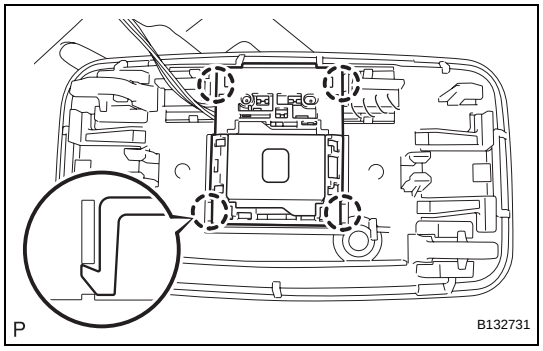

(b) Attach the 4 claws to install the room light.

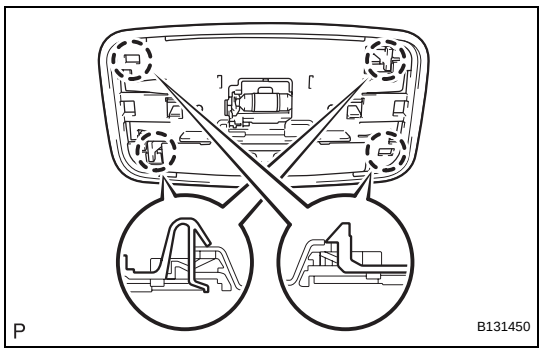

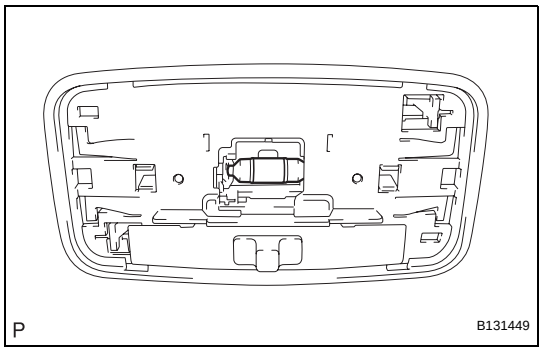

(c) Install the bulb to the room light switch base.

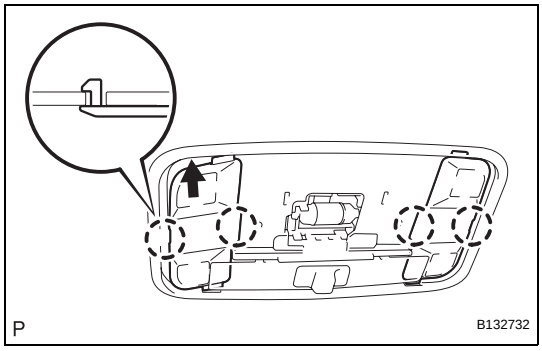

(d) Attach the 4 claws to install the 2 covers.

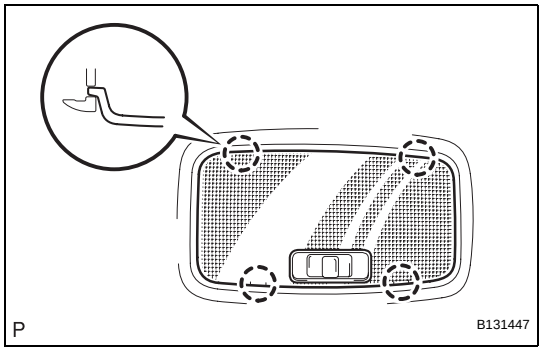

2. INSTALL ROOM LIGHT LENS

(a) Attach the 4 claws to install the lens.

3. CONNECT CABLE TO NEGATIVE BATTERY TERMINAL

ROOM LIGHT ASSEMBLY

COMPONENTS

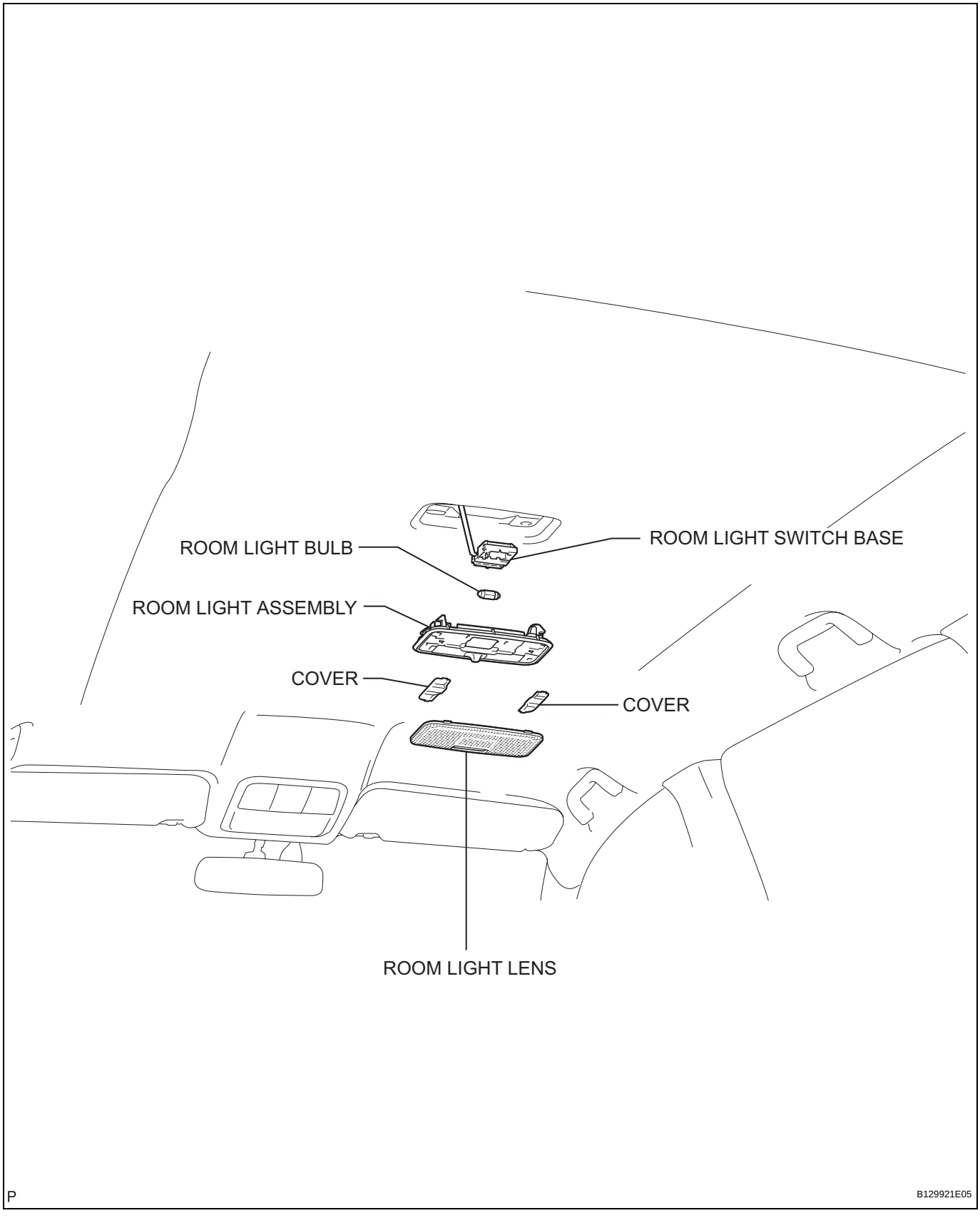

REMOVAL

1. DISCONNECT CABLE FROM NEGATIVE BATTERY TERMINAL

CAUTION:

Wait at least 90 seconds after disconnecting the cable from the negative (-) battery terminal to prevent airbag and seat belt pretensioner activation.

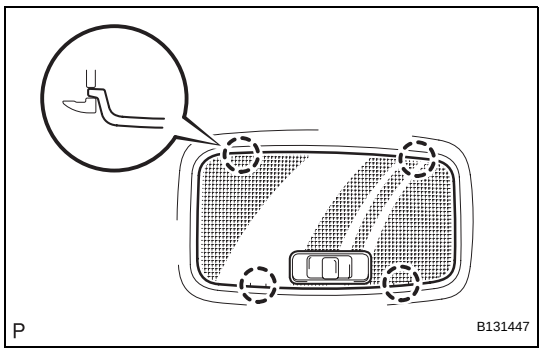

2. REMOVE ROOM LIGHT LENS

(a) Using a screwdriver, detach the 4 claws and remove the lens.

HINT:

Tape the screwdriver tip before use.

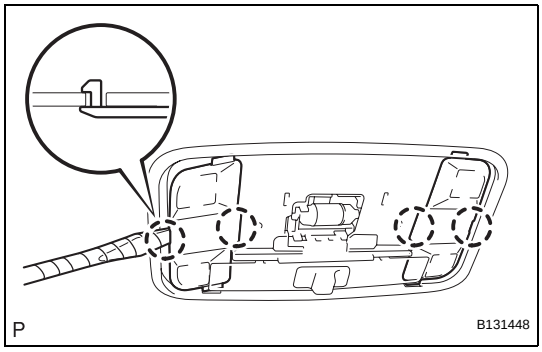

3. REMOVE ROOM LIGHT ASSEMBLY

(a) Using a screwdriver, detach the 4 claws and remove the 2 covers.

HINT:

Tape the screwdriver tip before use.

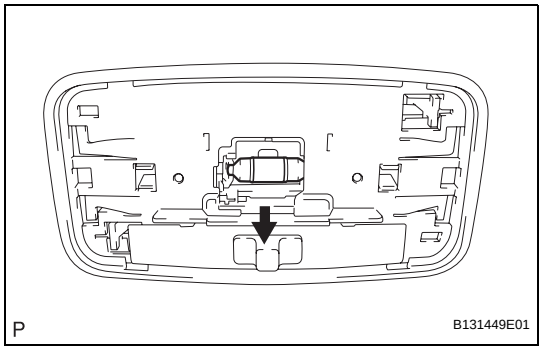

(b) Remove the bulb from the room light switch base.

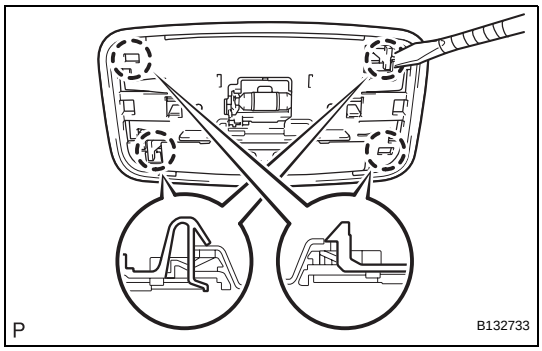

(c) Using a screwdriver, detach the 4 claws and remove the light.

HINT:

Tape the screwdriver tip before use.

LI

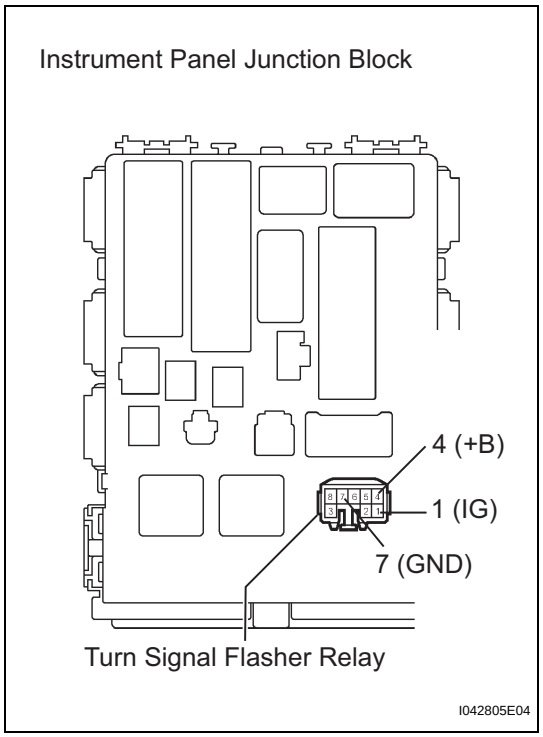

TURN SIGNAL FLASHER ASSEMBLY

ON-VEHICLE INSPECTION

1. INSPECT TURN SIGNAL FLASHER CIRCUIT

(a) Check the power source circuit and ground circuit.

(1) Remove the turn signal flasher relay from the instrument panel junction block.

(2) Measure the voltage and resistance of the instrument panel junction block.

Standard voltage

Tester Connection	Condition	Specified Condition
Instrument panel junction block turn signal flasher relay terminal 1 (IG) - Body ground	Ignition switch OFF	Below 1 V
Instrument panel junction block turn signal flasher relay terminal 1 (IG) - Body ground	Ignition switch ON	10 to 14 V
Instrument panel junction block turn signal flasher relay terminal 4 (+B) - Body ground	Always	10 to 14 V

Standard resistance

Tester Connection	Specified Condition
Instrument panel junction block turn signal flasher relay terminal 7 (GND) - Body ground	Below 1 Ω

(b) Check the output operation signal.
(1) Install the turn signal flasher relay onto the instrument panel junction block.

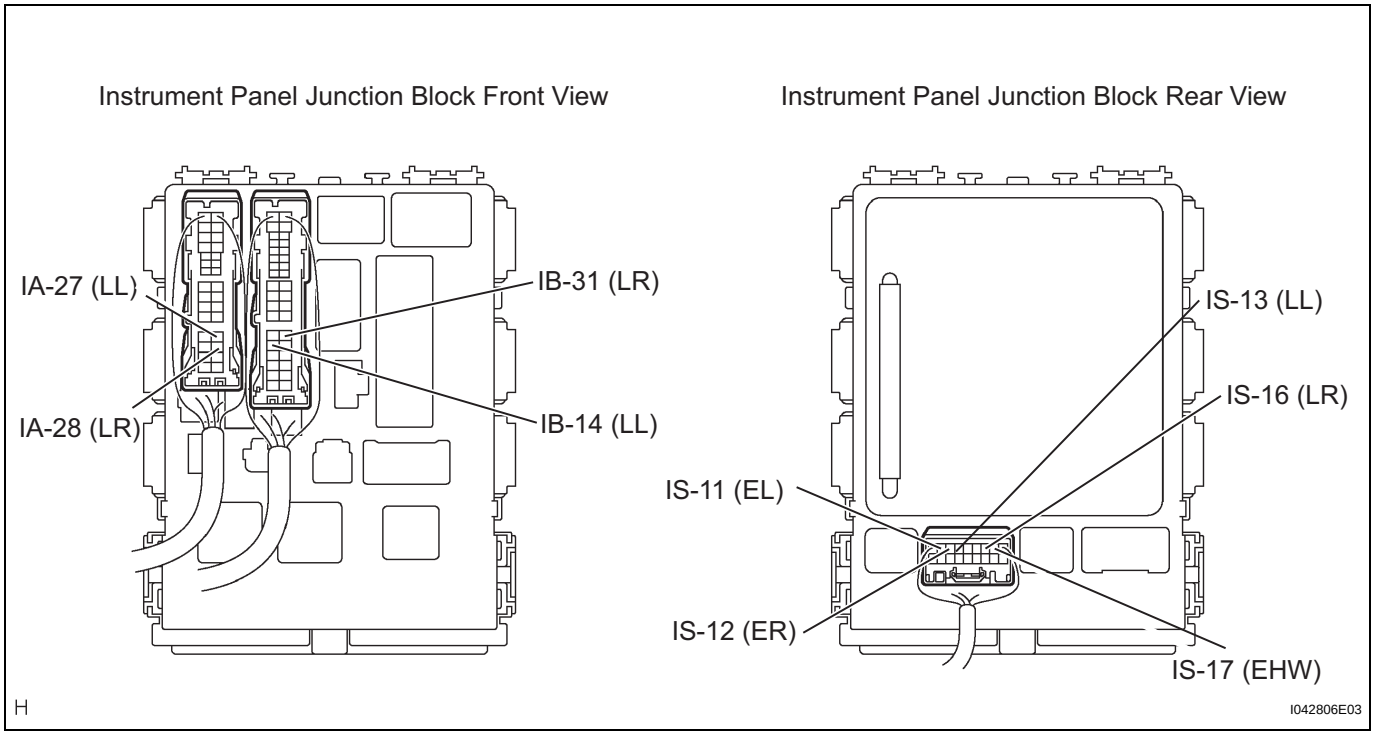

(2) Measure the voltage of the instrument panel junction block.

Standard voltage

Tester Connection	Condition	Specified Condition
IA-27 (LL) - Body ground	Hazard warning switch OFF → ON	0 V → 10 to 14 V (60 to 120 times per minute)
IA-27 (LL) - Body ground	Turn signal switch (left turn) OFF → ON	0 V → 10 to 14 V (60 to 120 times per minute)
IA-28 (LR) - Body ground	Hazard warning switch OFF → ON	0 V → 10 to 14 V (60 to 120 times per minute)
IA-28 (LR) - Body ground	Turn signal switch (right turn) OFF → ON	0 V → 10 to 14 V (60 to 120 times per minute)
IB-14 (LL) - Body ground	Hazard warning switch OFF → ON	0 V → 10 to 14 V (60 to 120 times per minute)
IB-14 (LL) - Body ground	Turn signal switch (left turn) OFF → ON	0 V → 10 to 14 V (60 to 120 times per minute)
IB-31 (LR) - Body ground	Hazard warning switch OFF → ON	0 V → 10 to 14 V (60 to 120 times per minute)
IB-31 (LR) - Body ground	Turn signal switch (right turn) OFF → ON	0 V → 10 to 14 V (60 to 120 times per minute)
IS-11 (EL) - Body ground	Turn signal switch (left turn) OFF → ON	10 to 14 V → 0 V
IS-12 (ER) - Body ground	Turn signal switch (right turn) OFF → ON	10 to 14 V → 0 V
IS-13 (LL) - Body ground	Hazard warning switch OFF → ON	0 V → 10 to 14 V (60 to 120 times per minute)
IS-13 (LL) - Body ground	Turn signal switch (left turn) OFF → ON	0 V → 10 to 14 V (60 to 120 times per minute)
IS-16 (LR) - Body ground	Hazard warning switch OFF → ON	0 V → 10 to 14 V (60 to 120 times per minute)
IS-16 (LR) - Body ground	Turn signal switch (right turn) OFF → ON	0 V → 10 to 14 V (60 to 120 times per minute)
IS-17 (EHW) - Body ground	Hazard warning switch OFF → ON	10 to 14 V → 0 V

If the result is not as specified, replace the turn signal flasher relay.

(b) Inspect vanity light switch.
Standard resistance

Tester Connection	Condition	Specified Condition
1 (L) - 2 (B)	Visor raise	10 kΩ or higher
	Visor lower and mirror cover open	Below 1 Ω
	Visor lower and mirror cover close	10 kΩ or higher

If the result is not as specified, replace the visor assembly.

INSTALLATION

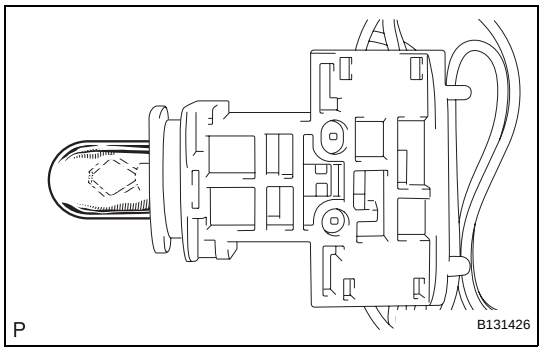

1. INSTALL VANITY LIGHT BULB

(a) Install the light bulb to the vanity light.

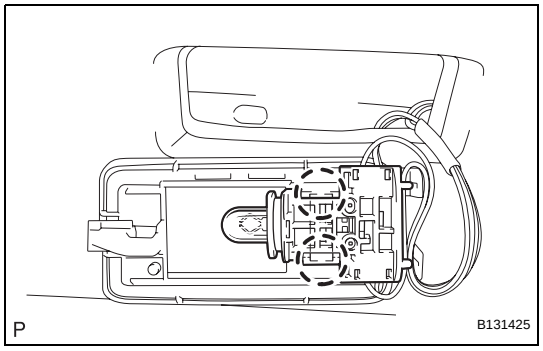

2. INSTALL VANITY LIGHT ASSEMBLY

(a) Attach the 2 claws and install the vanity light lens to the vanity light.

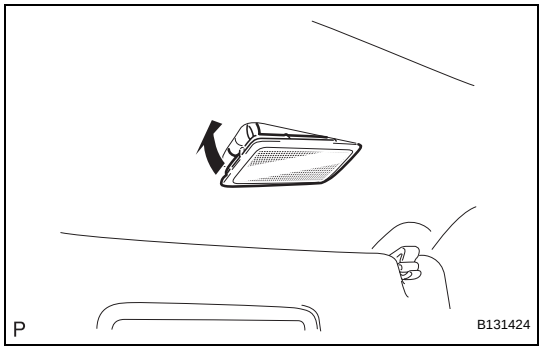

(b) Install the vanity light.

3. CONNECT CABLE TO NEGATIVE BATTERY TERMINAL

VANITY LIGHT

COMPONENTS

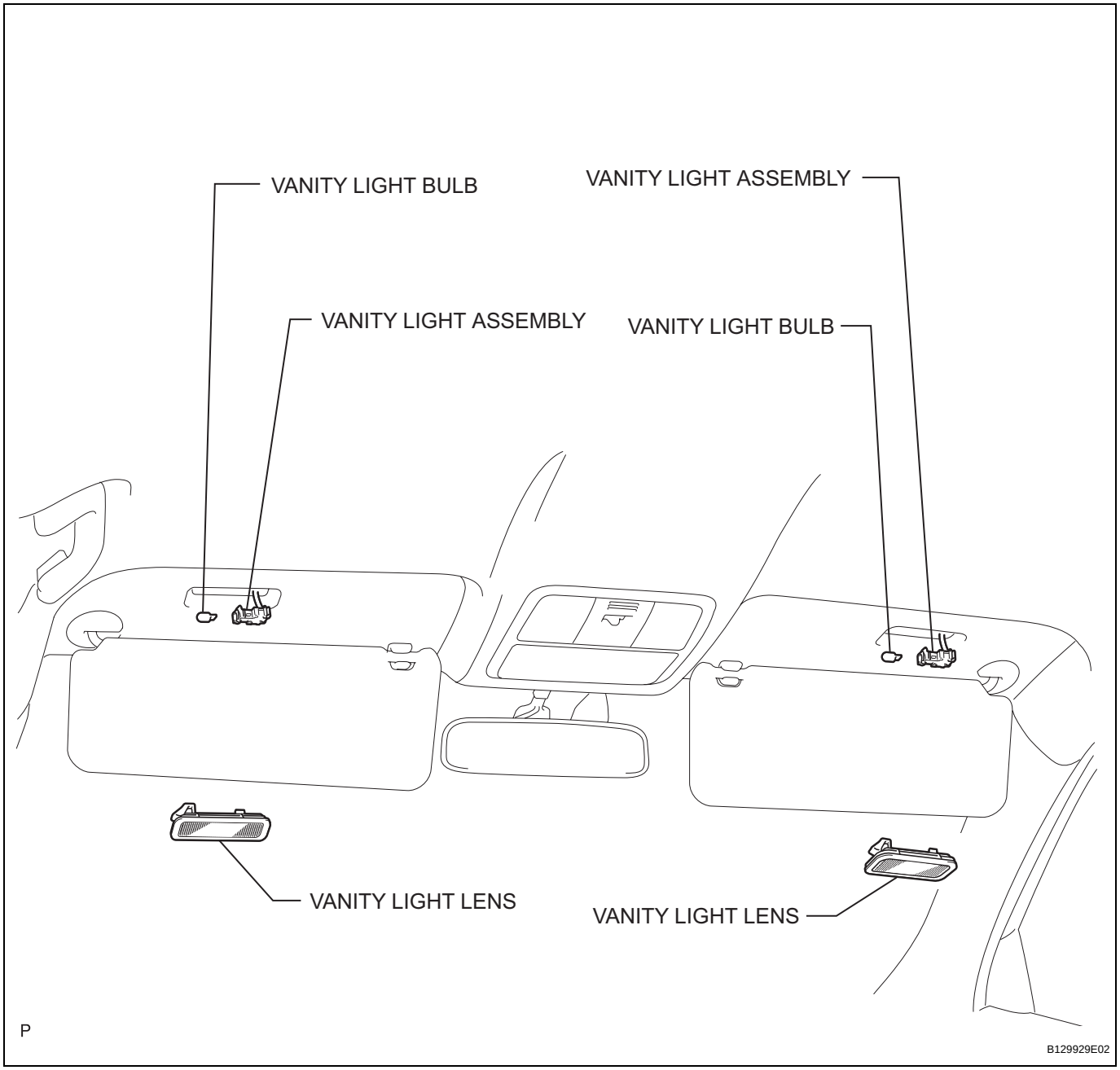

REMOVAL

HINT:
- Use the same procedures for the RH and LH sides.
- The procedures listed below are for the LH side.

1. DISCONNECT CABLE FROM NEGATIVE BATTERY TERMINAL
CAUTION:
Wait at least 90 seconds after disconnecting the cable from the negative (-) battery terminal to prevent airbag and seat belt pretensioner activation.

2. REMOVE VANITY LIGHT ASSEMBLY

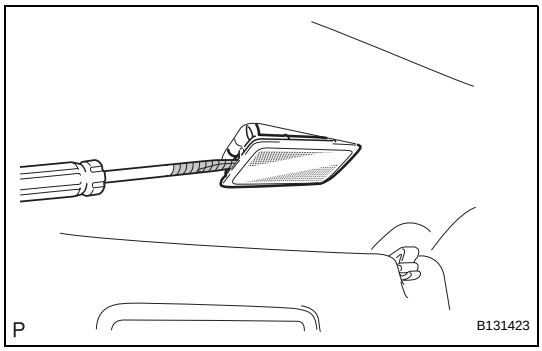

(a) Using a screwdriver, pry out the vanity light.
HINT:
Tape the screwdriver tip before use.

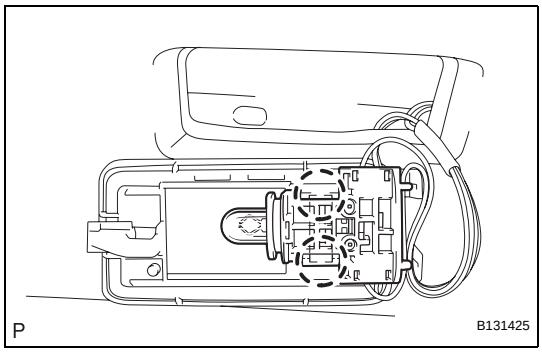

(b) Detach the 2 claws and vanity light.

3. REMOVE VANITY LIGHT BULB

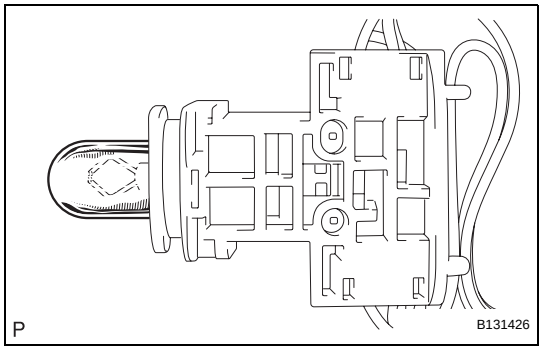

(a) Remove the light bulb from the vanity light.

INSPECTION

1. INSPECT VISOR ASSEMBLY

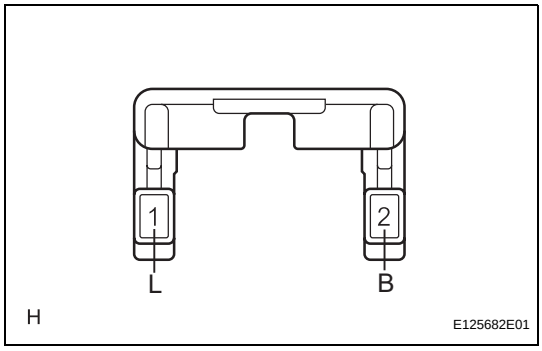

(a) Remove the visor assembly.

LI

BODY

GENERAL MAINTENANCE

1. TIGHTEN BOLTS AND NUTS

(a) Tighten the bolts and nuts on the chassis parts listed below, if necessary.
- Front axle and suspension
- Drivetrain
- Rear axle and suspension
- Brake system
- Engine mounting
- Other chassis parts

(b) Tighten the bolts and nuts on the body parts listed below, if necessary.
- Seat belt system
- Seats
- Doors and hood
- Body mountings
- Fuel tank
- Exhaust pipe system
- Other body parts

2. CLEAN AIR CONDITIONING FILTER

(a) Visually inspect the surface of the filter.

(b) If the filter is contaminated with foreign matter, clean or replace the filter.

BRAKE

GENERAL MAINTENANCE

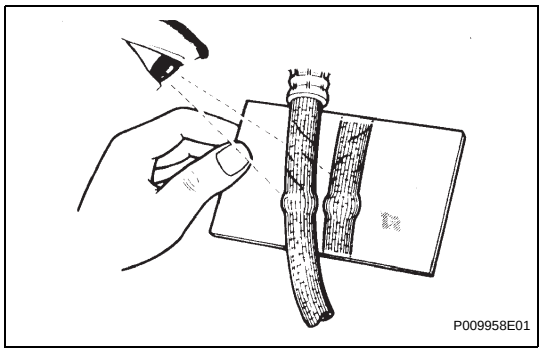

1. INSPECT BRAKE LINES AND HOSES

HINT:

Work in a well-lighted area. Turn the front wheels fully to the right or left before beginning the inspection.

(a) Using a mirror, check the entire circumference and length of the brake lines and hoses for:
- Damage
- Wear
- Deformation
- Cracks
- Corrosion
- Leaks
- Bends
- Twists

(b) Check all the clamps for tightness and the connections for leakage.

(c) Check that the hoses and lines are not near sharp edges, moving parts or the exhaust system.

(d) Check that the lines are installed properly and pass through the center of the grommets.

2. INSPECT FRONT BRAKE

(a) Check the front brake pads and discs (see page BR-42).

3. INSPECT BRAKE LININGS AND DRUMS

(a) Check the brake linings and drums. Also check the brake linings of the parking brake.

GENERAL MAINTENANCE

(2006/01-)

1. INSPECT STEERING LINKAGE AND GEAR HOUSING

(a) Check the steering wheel free play.

(b) Check the steering linkage for looseness or damage.

(1) Check that the tie rod ends do not have excessive play.

(2) Check that the dust seals and boots are not damaged.

(3) Check that the boot clamps are not loose.

(4) Check that the steering gear housing is not damaged.

(5) Check that the connectors are properly connected to the steering gear housing.

2. INSPECT BALL JOINTS AND DUST COVERS

(a) Inspect the ball joints for excessive looseness.

(1) Jack up the front of the vehicle and place wooden blocks with a height of 180 to 200 mm (7.09 to 7.87 in.) under the front tires.

(2) Lower the vehicle until the front coil spring has about half its ordinary load. Place stands under the vehicle for safety.

(3) Check that the front wheels are pointing straight ahead. Use wheel chocks on all 4 wheels.

(4) Using a lever, pry up the end of the lower arm. Check the amount of play.

Maximum ball joint vertical play:
0 mm (0 in.)

If there is any play, replace the ball joint.

(b) Check the dust cover for damage.

3. INSPECT DRIVE SHAFT BOOTS

(a) Check the drive shaft boots for loose clamps, grease leakage, kinks or damage.

4. INSPECT AUTOMATIC TRANSAXLE FLUID LEVEL

(a) Visually check the transmission for fluid leakage. If oil is leaking, find the cause and repair it.

Type	See procedures
U151E	See page AX-126
U151F	See page AX-126

5. INSPECT TRANSFER OIL (for 4WD)

(a) Visually check the transfer for oil leakage. If oil is leaking, find the cause and repair it.

Type	See procedures
Front Oil	See page TF-45
Rear Oil	See page TF-45

6. INSPECT REAR DIFFERENTIAL OIL (for 4WD)

(a) For the rear differential oil inspection, refer to the following procedures (see page DF-3).

7. **ROTATE TIRES (See page TW-1)**

CHASSIS

GENERAL MAINTENANCE

(2005/11-2006/01)

1. INSPECT STEERING LINKAGE AND GEAR HOUSING

(a) Check the steering wheel free play.

(b) Check the steering linkage for looseness or damage.

(1) Check that the tie rod ends do not have excessive play.

(2) Check that the dust seals and boots are not damaged.

(3) Check that the boot clamps are not loose.

(4) Check that the steering gear housing is not damaged.

(5) Check that the connectors are properly connected to the steering gear housing.

2. INSPECT BALL JOINTS AND DUST COVERS

(a) Inspect the ball joints for excessive looseness.

(1) Jack up the front of the vehicle and place wooden blocks with a height of 180 to 200 mm (7.09 to 7.87 in.) under the front tires.

(2) Lower the vehicle until the front coil spring has about half its ordinary load. Place stands under the vehicle for safety.

(3) Check that the front wheels are pointing straight ahead. Use wheel chocks on all 4 wheels.

(4) Using a lever, pry up the end of the lower arm. Check the amount of play.

Maximum ball joint vertical play:
0 mm (0 in.)

If there is any play, replace the ball joint.

(b) Check the dust cover for damage.

3. INSPECT DRIVE SHAFT BOOTS

(a) Check the drive shaft boots for loose clamps, grease leakage, kinks or damage.

4. INSPECT AUTOMATIC TRANSAXLE FLUID LEVEL

(a) Visually check the transmission for fluid leakage. If oil is leaking, find the cause and repair it.

Type	See procedures
U140F	See page AX-102
U241E	See page AX-102

5. INSPECT TRANSFER OIL (for 4WD)

(a) Visually check the transfer for oil leakage. If oil is leaking, find the cause and repair it.

Type	See procedures
Front Oil	See page TF-45
Rear Oil	See page TF-45

6. **INSPECT REAR DIFFERENTIAL OIL (for 4WD)**
   (a) For the rear differential oil inspection, refer to the following procedures (see page DF-3).

7. **ROTATE TIRES (See page TW-1)**

ENGINE

GENERAL MAINTENANCE

(2005/11-2006/01)

1. **INSPECT DRIVE BELT (See page EM-6)**
2. **REPLACE SPARK PLUGS (See page IG-7)**
3. **REPLACE AIR CLEANER FILTER**
   (a) Remove the air filter.
   (b) Visually check that the air filter is not excessively damaged or oily.
   (c) Replace the air filter with a new one, if necessary.
4. **REPLACE ENGINE OIL AND OIL FILTER (See page LU-1)**
5. **REPLACE ENGINE COOLANT (See page CO-1)**
6. **INSPECT GASKET IN FUEL TANK CAP (See page EC-25)**
7. **INSPECT FUEL LINES AND CONNECTIONS, FUEL TANK VAPOR VENT SYSTEM HOSES**
   (a) Visually check the fuel lines for cracks, leakage, loose connections, deformation.
8. **INSPECT EXHAUST PIPES AND MOUNTINGS**
   (a) Visually check the pipes, hangers and connections for severe corrosion, leaks or damage.
9. **INSPECT VALVE CLEARANCE (See page EM-8)**

GENERAL MAINTENANCE

(2006/01-)

1. **INSPECT DRIVE BELT (See page EM-7)**
2. **REPLACE SPARK PLUGS (See page IG-7)**
3. **REPLACE AIR CLEANER FILTER**
   (a) Remove the air filter.
   (b) Visually check that the air filter is not excessively damaged or oily.
   (c) Replace the air filter with a new one, if necessary.
4. **REPLACE ENGINE OIL AND OIL FILTER (See page LU-1)**
5. **REPLACE ENGINE COOLANT (See page CO-1)**
6. **INSPECT GASKET IN FUEL TANK CAP (See page EC-28)**
7. **INSPECT FUEL LINES AND CONNECTIONS, FUEL TANK VAPOR VENT SYSTEM HOSES**
   (a) Visually check the fuel lines for cracks, leakage, loose connections, deformation.
8. **INSPECT EXHAUST PIPES AND MOUNTINGS**
   (a) Visually check the pipes, hangers and connections for severe corrosion, leaks or damage.

INSIDE VEHICLE

GENERAL MAINTENANCE

Performing the following maintenance checks on the vehicle is the owner's responsibility. The owner may perform the maintenance or take the vehicle to a service center. Check the parts of the vehicle described below on a daily basis. In most cases, special tools are not required. It is recommended that the owner perform these checks. The procedures for general maintenance are as follows.

1. GENERAL NOTES

- Maintenance requirements vary depending on the country.
- Check the maintenance schedule in the owner's manual supplement.
- Following the maintenance schedule is mandatory.
- Determine the appropriate time to service the vehicle using either miles driven or months elapsed, whichever reaches the specification first.
- Maintain similar intervals between periodic maintenance, unless otherwise noted.
- Failing to check each vehicle part could lead to poor engine performance and increase exhaust emissions.

2. LIGHTS

(a) Check that the headlights, stop lights, taillights, turn signal lights, and other lights illuminate or blink properly. Also, check if they have enough brightness.

(b) Check that the headlights are aimed properly.

3. WARNING LIGHTS AND BUZZERS

(a) Check that all the warning lights and buzzers are working.

4. HORNS

(a) Check that the horn is working.

5. WINDSHIELD GLASS

(a) Check for scratches, pits or abrasions.

6. WINDSHIELD WIPERS AND WASHER

(a) Check that the windshield washers are aimed properly. Also, check that the center stream of washer fluid sprays on the windshield within the operating range of the wipers.

(b) Check if the wipers streak or not.

7. WINDSHIELD DEFROSTER

(a) When the heater or air conditioning is on the defroster setting, check if air comes out of the defroster outlet.

8. REAR VIEW MIRROR

(a) Check that the rear view mirror is securely mounted.

9. SUN VISORS

(a) Check that the sun visors move freely and are securely mounted.

10. STEERING WHEEL

(a) Check that the steering wheel has the proper amount of free play. Also check for steering difficulty and unusual noises.

11. SEATS

(a) Check that the seat adjusters, seatback recliner and other front seat controls operate smoothly.
(b) Check that all the latches lock securely in all positions.
(c) Check that the locks hold securely in all latched positions.
(d) Check that the headrests move up and down smoothly and that the locks hold securely in all latched positions.
(e) When the rear seatbacks are folded down, check that the latches lock securely.

12. SEAT BELTS

(a) Check that the seat belt system such as the buckles, retractors and anchors operate properly and smoothly.
(b) Check that the belt webbing is not cut, frayed, worn or damaged. Replace if necessary.

13. ACCELERATOR PEDAL

(a) Check that the accelerator pedal operates smoothly. In other words, check that the pedal does not have uneven pedal resistance or become stuck in certain positions.

14. CLUTCH PEDAL

(a) Check that the clutch pedal operates smoothly.
(b) Check that the pedal has the proper free play.

15. BRAKE PEDAL

(a) Check that the brake pedal operates smoothly.
(b) Check that the pedal has the proper reserve distance and free play.
(c) Start the engine and check the brake booster function.

16. BRAKES

(a) In a safe place, check that the vehicle remains straight when applying the brakes.

17. PARKING BRAKE

(a) Check that the parking brake lever has the proper amount of travel (see page PB-4).
(b) On a safe incline, check that the vehicle is held securely with only the parking brake applied.

18. AUTOMATIC TRANSAXLE "PARK" MECHANISM

(a) Check the lock release button of the shift lever for proper and smooth operation.

(b) When the shift lever is in the P position and all brakes are released on a low incline, check that the vehicle is stable.

OUTSIDE VEHICLE

GENERAL MAINTENANCE

Performing the following maintenance checks on the vehicle is the owner's responsibility. The owner may perform the maintenance or take the vehicle to a service center. Check the parts of the vehicle described below on a daily basis. In most cases, special tools are not required. It is recommended that the owner perform these checks. The procedures for general maintenance are as follows.

1. GENERAL NOTES

- Maintenance requirements vary depending on the country.
- Check the maintenance schedule in the owner's manual supplement.
- Following the maintenance schedule is mandatory.
- Determine the appropriate time to service the vehicle using either miles driven or months elapsed, whichever reaches the specification first.
- Maintain similar intervals between periodic maintenance, unless otherwise noted.
- Failing to check each vehicle part could lead to poor engine performance and increase exhaust emissions.

2. TIRES

(a) Check the tire inflation pressure with a gauge. Make adjustments if necessary.

(b) Check the surfaces of the tires for cuts, damage or excessive wear.

3. WHEEL NUTS

(a) Check for nuts that are loose or missing. Tighten them if necessary.

4. TIRE ROTATION (See page TW-1)

5. WINDSHIELD WIPER BLADES

(a) Check the blades for wear or cracks whenever they are unable to wipe the windshield clean. Replace them if necessary.

6. FLUID LEAKS

(a) Check under the vehicle for leaking fuel, oil, water and other fluids.

NOTICE:

If you smell gasoline fumes or notice any leaks, locate the cause and correct it.

7. DOORS AND ENGINE HOOD

(a) Check that all of the doors and the hood operate smoothly and that all the latches lock securely.

(b) When the primary latch is released, check that the engine hood secondary latch prevents the hood from opening.

GENERAL MAINTENANCE

(2006/01-)

1. GENERAL NOTES

- Maintenance requirements vary depending on the country.
- Check the maintenance schedule in the owner's manual supplement.
- Following the maintenance schedule is mandatory.
- Determine the appropriate time to service the vehicle using either miles driven or time elapsed, whichever reaches the specification first.
- Maintain similar intervals between periodic maintenance, unless otherwise noted.
- Failing to check each vehicle part could lead to poor engine performance and increase exhaust emissions.

2. WINDSHIELD WASHER FLUID

(a) Check that there is sufficient fluid in the tank.

3. ENGINE COOLANT LEVEL

(a) Check that the coolant level is between the "FULL" and "LOW" lines on the see-through reservoir.

4. RADIATOR AND HOSES

(a) Check that the front of the radiator is clean and not blocked by leaves, dirt or bugs.

(b) Check the hoses for cracks, kinks, rot or loose connections.

5. BATTERY ELECTROLYTE LEVEL

(a) Check that the electrolyte level of all the battery cells is between the upper and lower level lines on the case.

HINT:

If the electrolyte level is difficult to see, lightly shake the vehicle.

6. BRAKE FLUID LEVEL

(a) Check that the brake fluid levels are near the upper level lines on the see-through reservoirs.

7. ENGINE DRIVE BELT

(a) Check the drive belt for fraying, cracks, wear or oiliness.

8. ENGINE OIL LEVEL

(a) Check the level on the dipstick with the engine stopped.

9. AUTOMATIC TRANSAXLE FLUID LEVEL

Type	See procedures
U151E	See page AX-126
U151F	See page AX-126

10. EXHAUST SYSTEM

(a) Check for unusual exhaust sounds or abnormal exhaust fumes. Inspect the cause and repair it.

UNDER HOOD

GENERAL MAINTENANCE

(2005/11-2006/01)

1. GENERAL NOTES

- Maintenance requirements vary depending on the country.
- Check the maintenance schedule in the owner's manual supplement.
- Following the maintenance schedule is mandatory.
- Determine the appropriate time to service the vehicle using either miles driven or time elapsed, whichever reaches the specification first.
- Maintain similar intervals between periodic maintenance, unless otherwise noted.
- Failing to check each vehicle part could lead to poor engine performance and increase exhaust emissions.

2. WINDSHIELD WASHER FLUID

(a) Check that there is sufficient fluid in the tank.

3. ENGINE COOLANT LEVEL

(a) Check that the coolant level is between the "FULL" and "LOW" lines on the see-through reservoir.

4. RADIATOR AND HOSES

(a) Check that the front of the radiator is clean and not blocked by leaves, dirt or bugs.

(b) Check the hoses for cracks, kinks, rot or loose connections.

5. BATTERY ELECTROLYTE LEVEL

(a) Check that the electrolyte level of all the battery cells is between the upper and lower level lines on the case.

HINT:

If the electrolyte level is difficult to see, lightly shake the vehicle.

6. BRAKE FLUID LEVEL

(a) Check that the brake fluid levels are near the upper level lines on the see-through reservoirs.

7. ENGINE DRIVE BELT

(a) Check the drive belt for fraying, cracks, wear or oiliness.

8. ENGINE OIL LEVEL

(a) Check the level on the dipstick with the engine stopped.

9. AUTOMATIC TRANSAXLE FLUID LEVEL

Type	See procedures
U140F	See page AX-102
U241E	See page AX-102

10. EXHAUST SYSTEM

(a) Check for unusual exhaust sounds or abnormal exhaust fumes. Inspect the cause and repair it.

COMBINATION METER

COMPONENTS

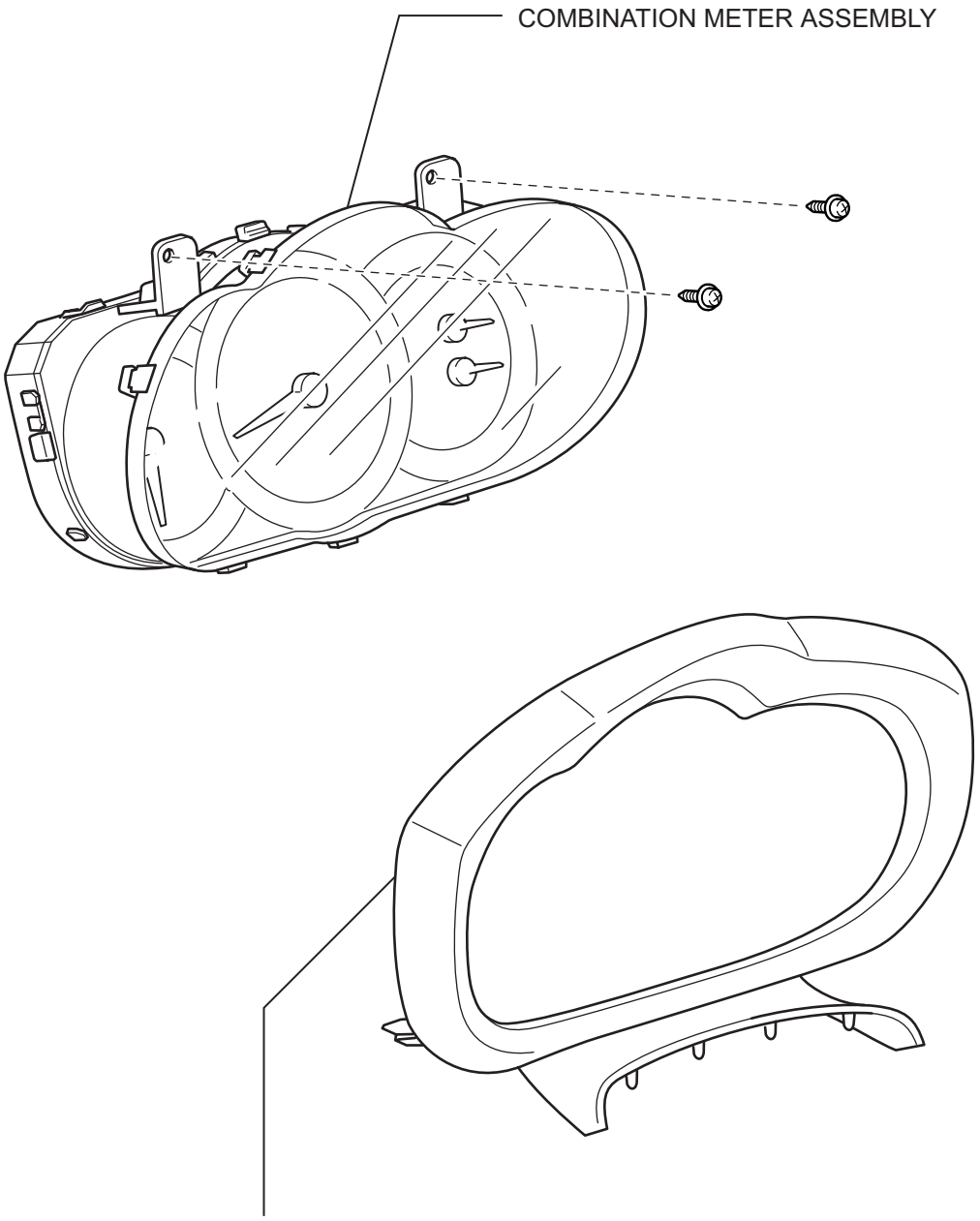

H

B127238E01

REMOVAL

1. DISCONNECT CABLE FROM NEGATIVE BATTERY TERMINAL

CAUTION:

Wait at least 90 seconds after disconnecting the cable from the negative (-) battery terminal to prevent airbag and seat belt pretensioner activation.

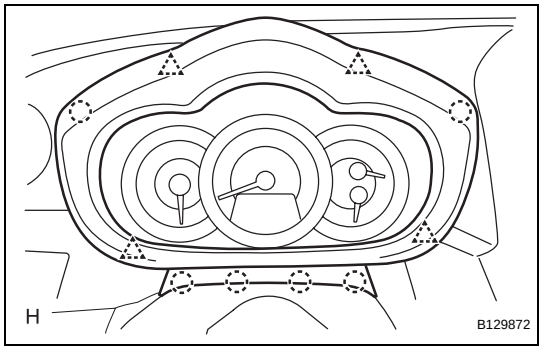

2. REMOVE INSTRUMENT CLUSTER FINISH PANEL ASSEMBLY

(a) Using a screwdriver, detach the 4 clips, 6 claws and remove the instrument cluster finish panel.

HINT:

Tape the screwdriver tip before use.

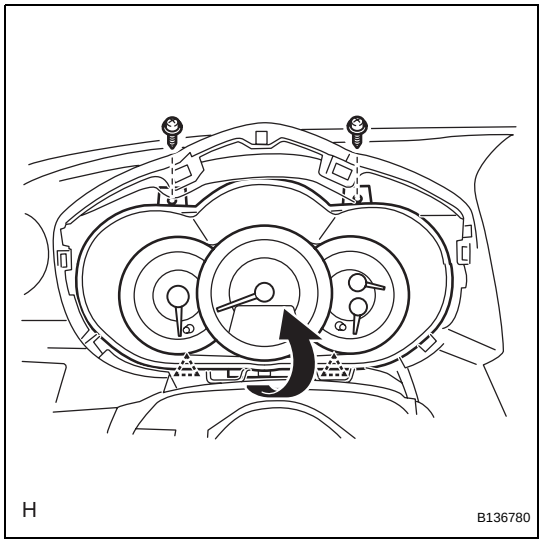

3. REMOVE COMBINATION METER ASSEMBLY

(a) Remove the 2 screws.

(b) Pull the combination meter as indicated by the arrow in the illustration to detach the 2 clips.

(c) Disconnect the connector and remove the combination meter.

INSTALLATION

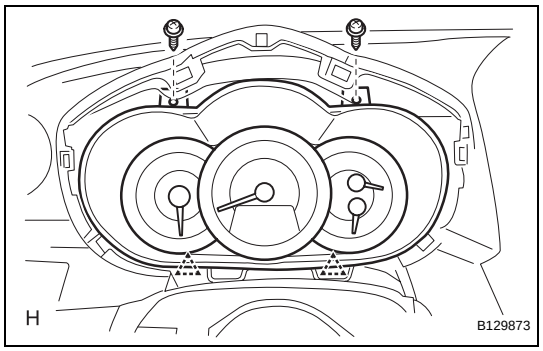

1. INSTALL COMBINATION METER ASSEMBLY

(a) Connect the connector.

(b) Attach the 2 clips to install the combination meter.

(c) Install the 2 screws.

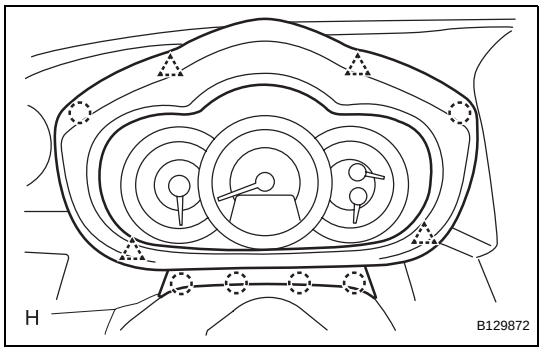

2. INSTALL INSTRUMENT CLUSTER FINISH PANEL ASSEMBLY

(a) Attach the 4 clips and 6 claws to install the instrument cluster finish panel.

3. CONNECT CABLE TO NEGATIVE BATTERY TERMINAL

4. CHECK SRS WARNING LIGHT

(a) Check the SRS warning light (see page RS-37).

INSTALLATION

1. INSTALL LIGHT CONTROL RHEOSTAT

(a) Connect the connector.

(b) Attach the 2 claws to install the switch.

LIGHT CONTROL RHEOSTAT

COMPONENTS

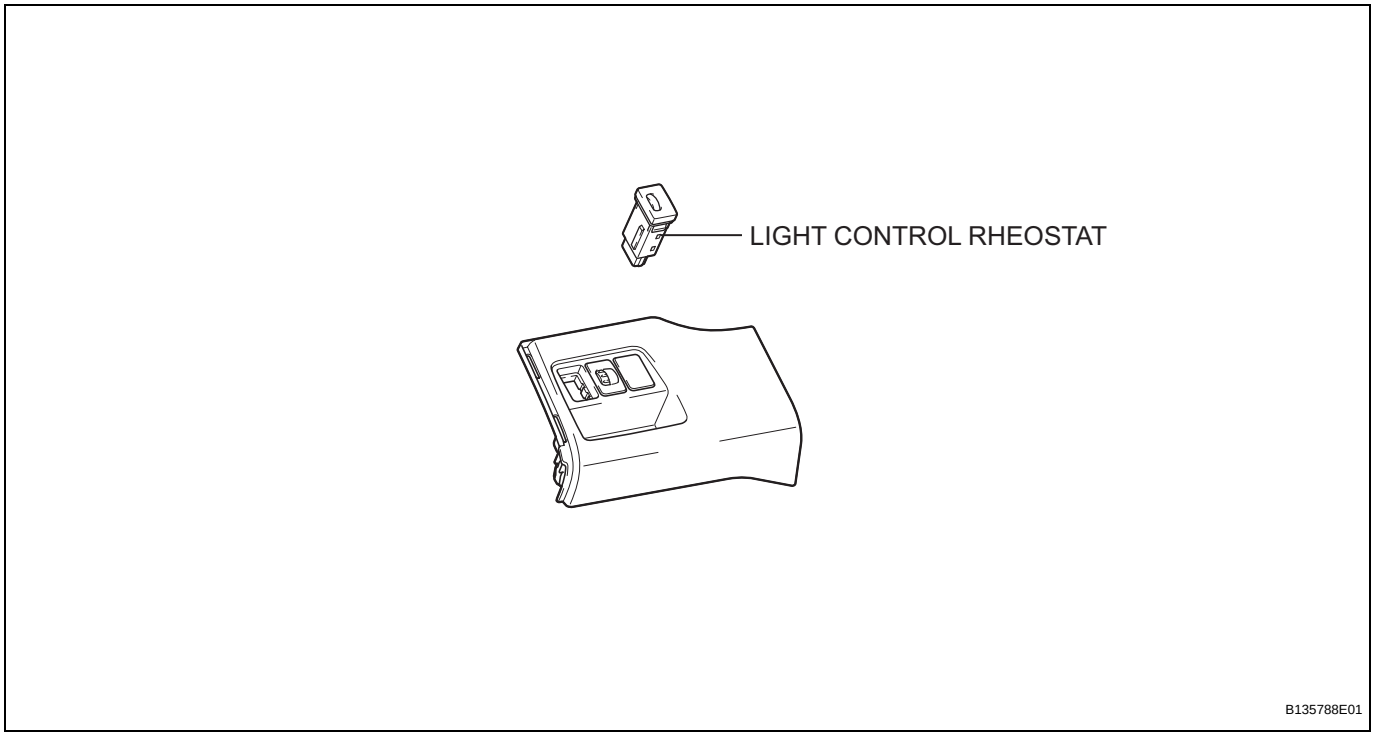

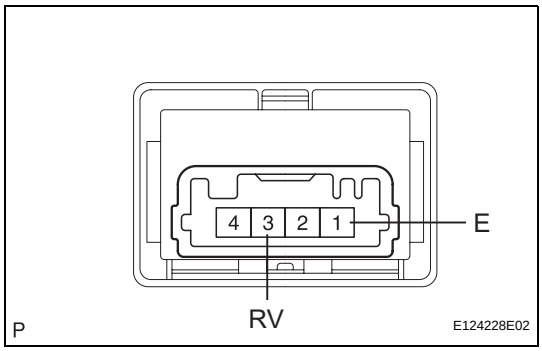

REMOVAL

1. REMOVE LIGHT CONTROL RHEOSTAT

(a) Detach the 2 claws.

(b) Disconnect the connector and remove the switch.

INSPECTION

1. INSPECT LIGHT CONTROL RHEOSTAT

(a) Remove the light control rheostat.

(b) Measure the resistance of the rheostat.

Standard resistance

Tester Connection	Rheostat Position	Specified Connection
1 (E) - 3 (RV)	Max	8 to 12 Ω
1 (E) - 3 (RV)	Mid	4.7 kΩ
1 (E) - 3 (RV)	Min	0 to 50 Ω

If result is not as specified, replace the rheostat.

INNER REAR VIEW MIRROR

COMPONENTS

MI

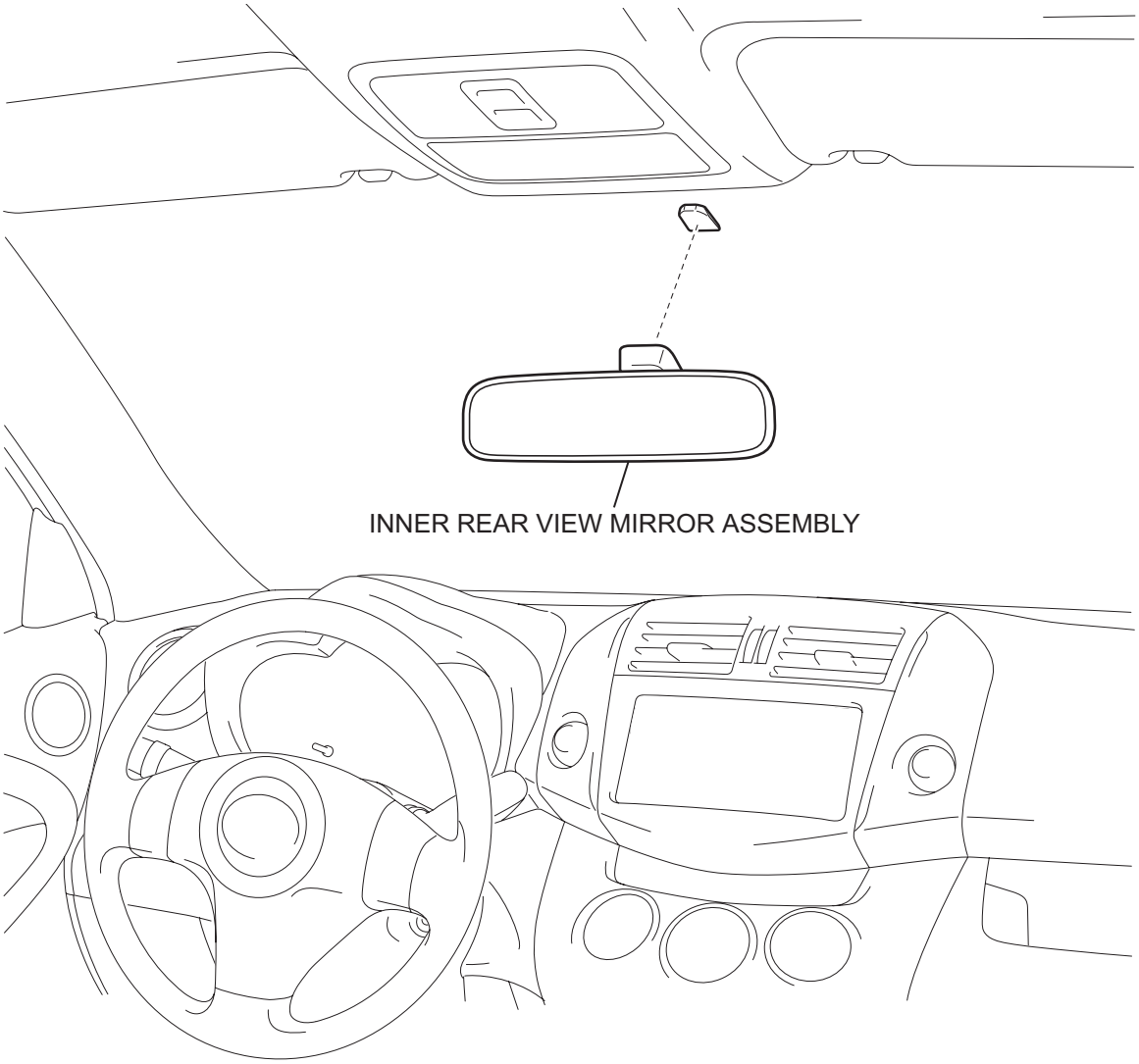

P

B129402E04

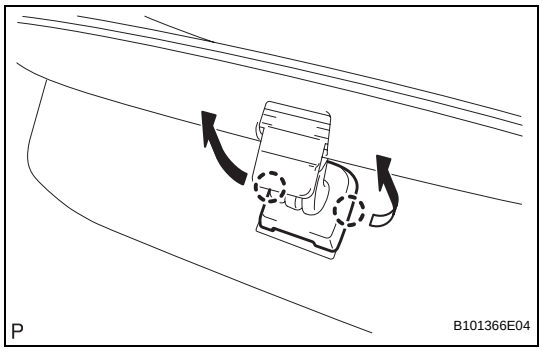

REMOVAL

1. REMOVE INNER REAR VIEW MIRROR ASSEMBLY

(a) Disengage the 2 claws and separate the inner rear view mirror cover as shown in the illustration.

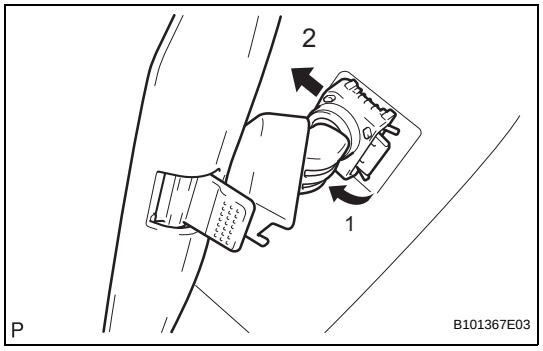

(b) Remove the inner rear view mirror as shown in the illustration.

INSTALLATION

1. INSTALL INNER REAR VIEW MIRROR ASSEMBLY

(a) Install the inner rear view mirror as shown in the illustration.

(b) Install the cover.

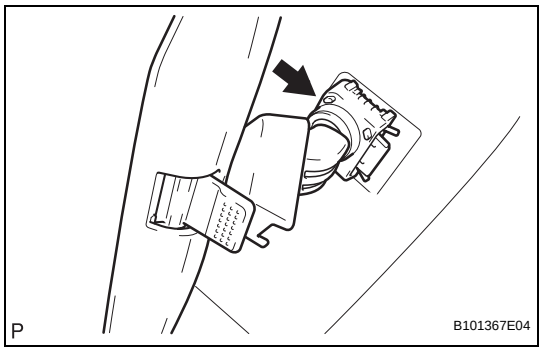

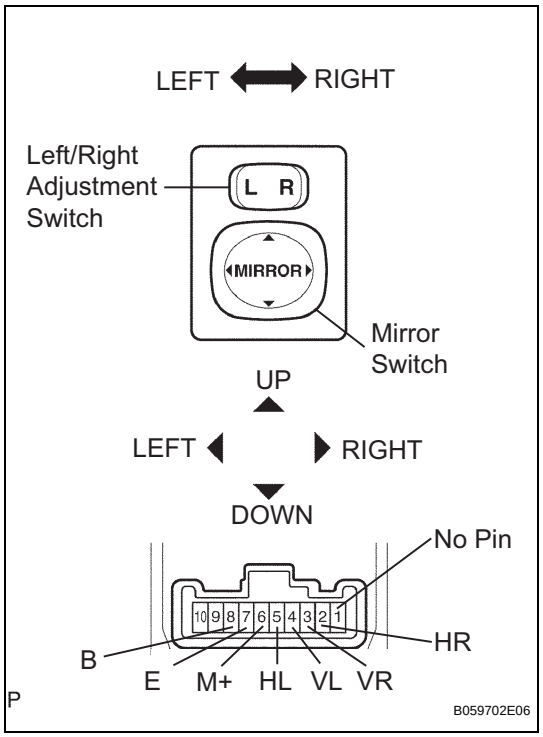

OUTER MIRROR SWITCH

INSPECTION

1. INSPECT OUTER MIRROR SWITCH ASSEMBLY

(a) The L position of the left/right adjustment switch: Measure the resistance of the mirror switch.

Standard resistance (for left side)

Tester Connection	Switch Condition	Specified Condition
4 (VL) - 8 (B) 6 (M+) - 7 (E)	UP	Below 1 Ω
	OFF	10 kΩ or higher
4 (VL) - 7 (E) 6 (M+) - 8 (B)	DOWN	Below 1 Ω
	OFF	10 kΩ or higher
5 (HL) - 8 (B) 6 (M+) - 7 (E)	LEFT	Below 1 Ω
	OFF	10 kΩ or higher
5 (HL) - 7 (E) 6 (M+) - 8 (B)	RIGHT	Below 1 Ω
	OFF	10 kΩ or higher

If the result is not as specified, replace the switch assembly.

(b) The R position of the left/right adjustment switch: Measure the resistance of the mirror switch.

Standard resistance (for right side)

Tester Connection	Switch Condition	Specified Condition
3 (VR) - 8 (B) 6 (M+) - 7 (E)	UP	Below 1 Ω
	OFF	10 kΩ or higher
3 (VR) - 7 (E) 6 (M+) - 8 (B)	DOWN	Below 1 Ω
	OFF	10 kΩ or higher
2 (HR) - 8 (B) 6 (M+) - 7 (E)	LEFT	Below 1 Ω
	OFF	10 kΩ or higher
2 (HR) - 7 (E) 6 (M+) - 8 (B)	RIGHT	Below 1 Ω
	OFF	10 kΩ or higher

If the result is not as specified, replace the switch assembly.

MI

REMOVAL

HINT:

- Use the same procedures for the LH side and RH side.
- The procedures listed below are for the LH side.

1. **REMOVE FRONT DOOR LOWER FRAME BRACKET GARNISH LH (See page ED-19)**
2. **REMOVE FRONT ARMREST UPPER BASE PANEL LH (See page ED-19)**
3. **REMOVE FRONT DOOR TRIM BOARD SUB-ASSEMBLY LH (See page ED-20)**
4. **REMOVE OUTER REAR VIEW MIRROR ASSEMBLY LH**
   (a) Disconnect the mirror connector labeled A.
   (b) Remove the 3 screws.
   (c) Remove the outer rear view mirror.

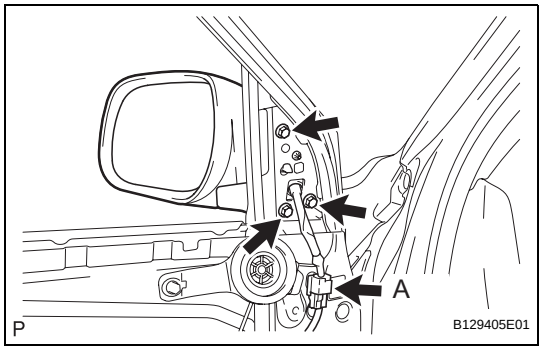

5. **REMOVE OUTER MIRROR COVER LH (w/ Mirror Heater)**
   (a) Using a moulding remover, detach the 4 claws.
   HINT:
   Apply protective tape to the mirror body.

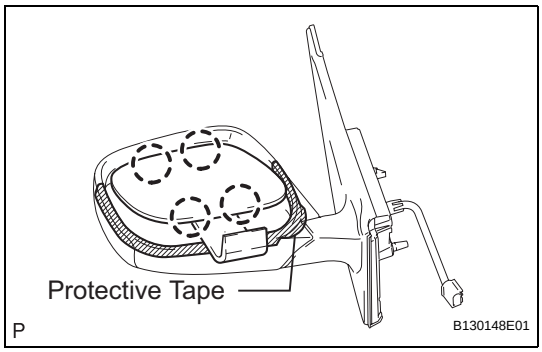

   (b) Remove the 2 connectors and disconnect the mirror.

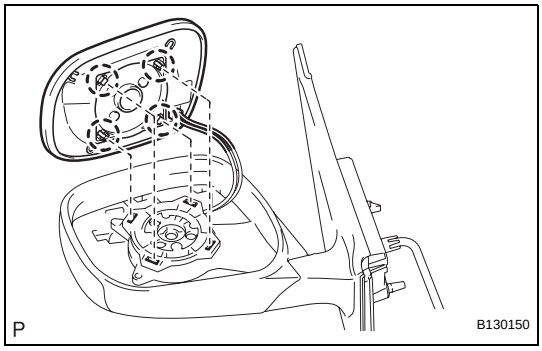

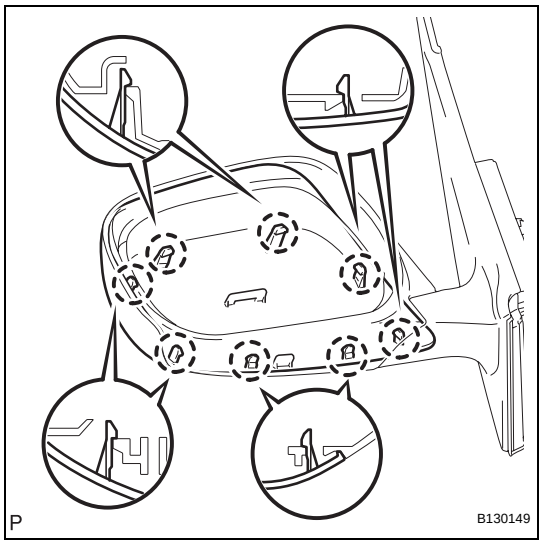

(c) Using a screwdriver, detach the 8 claws and remove the mirror cover.
HINT:
Tape the screwdriver tip before use.

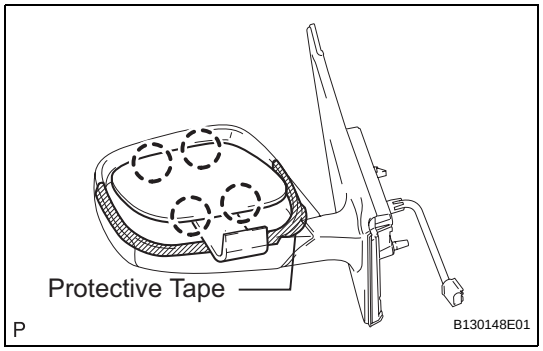

6. REMOVE OUTER MIRROR COVER LH (w/o Mirror Heater)

(a) Using a moulding remover, detach the 4 claws.
HINT:
Apply protective tape to the mirror body.

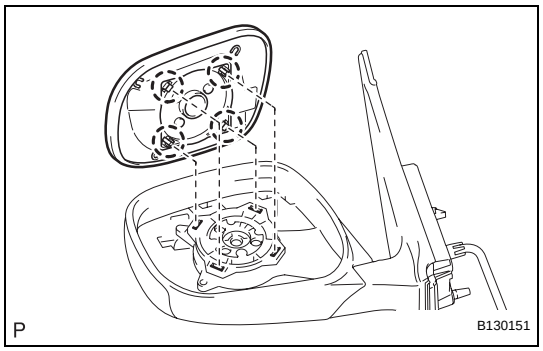

(b) Disconnect the mirror.

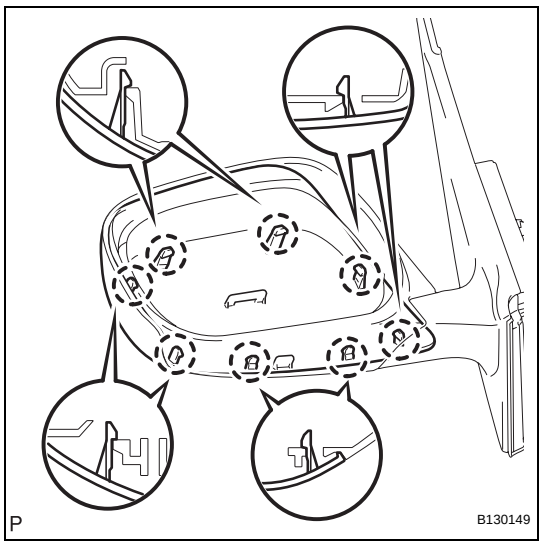

(c) Using a screwdriver, detach the 8 claws and remove the mirror cover.
HINT:
Tape the screwdriver tip before use.

MI

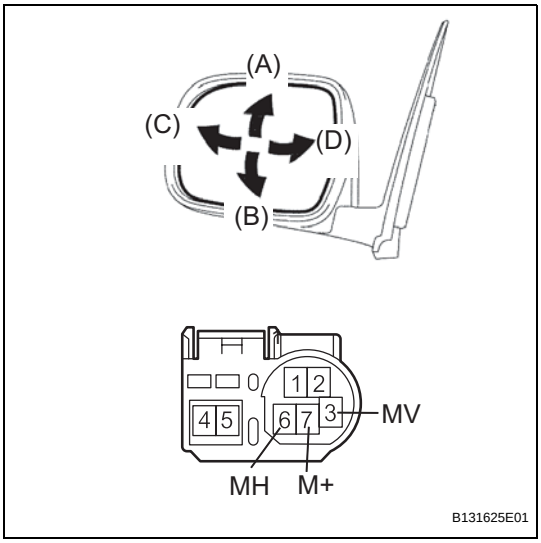

INSPECTION

1. INSPECT OUTER REAR VIEW MIRROR ASSEMBLY LH

(a) Disconnect the mirror connector.

(b) Apply battery voltage and check the operation of the mirror.

OK

Measurement Condition	Specified Condition
Battery positive (+) →Terminal 3 (MV) Battery negative (-) → Terminal 7 (M+)	Turns upward (A)
Battery positive (+) → Terminal 7 (M+) Battery negative (-) → Terminal 3 (MV)	Turns downward (B)
Battery positive (+) → Terminal 6 (MH) Battery negative (-) → Terminal 7 (M+)	Turns left (C)
Battery positive (+) → Terminal 7 (M+) Battery negative (-) → Terminal 6 (MH)	Turns right (D)

If the result is not as specified, replace the mirror assembly.

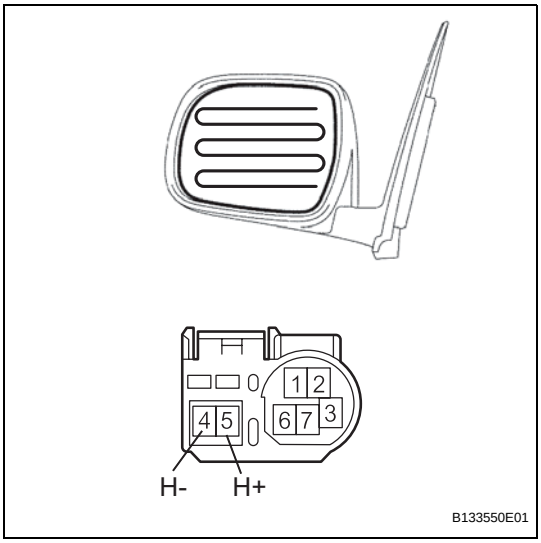

(c) w/ Mirror Heater:

Check the resistance.

(1) Measure the resistance between the terminals.

Standard resistance

Tester connection	Condition	Specified Condition
4 (H-) - 5 (H+)	65°C (149°F)	4 to 12 Ω

If the result is not as specified, replace the outer rear view mirror.

(2) Connect the cable from the negative battery (-) terminal to terminal 5 and the positive battery (+) terminal to terminal 4, then check that the mirror becomes warm.

OK:

Mirror becomes warm.

HINT:

It takes a short time for the mirror to become warm.

If the result is not as specified, replace the outer rear view mirror.

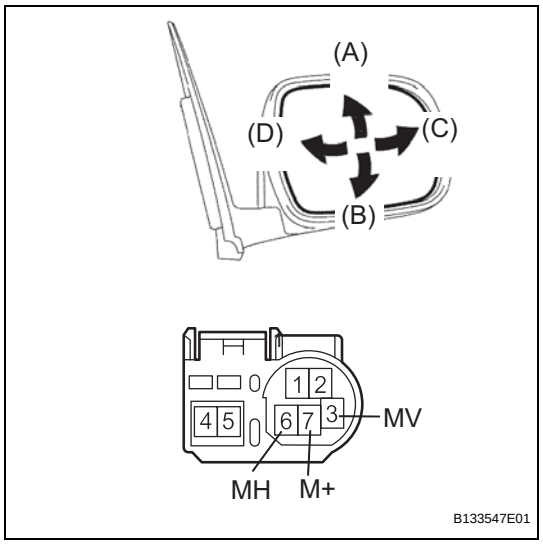

2. INSPECT OUTER REAR VIEW MIRROR ASSEMBLY RH

(a) Disconnect the mirror connector.

(b) Apply battery voltage and check the operation of the mirror.

OK

Measurement Condition	Specified Condition
Battery positive (+) → Terminal 3 (MV) Battery negative (-) → Terminal 7 (M+)	Turns upward (A)
Battery positive (+) → Terminal 7 (M+) Battery negative (-) → Terminal 3 (MV)	Turns downward (B)
Battery positive (+) → Terminal 6 (MH) Battery negative (-) → Terminal 7 (M+)	Turns left (D)
Battery positive (+) → Terminal 7 (M+) Battery negative (-) → Terminal 6 (MH)	Turns right (C)

If the result is not as specified, replace the mirror assembly.

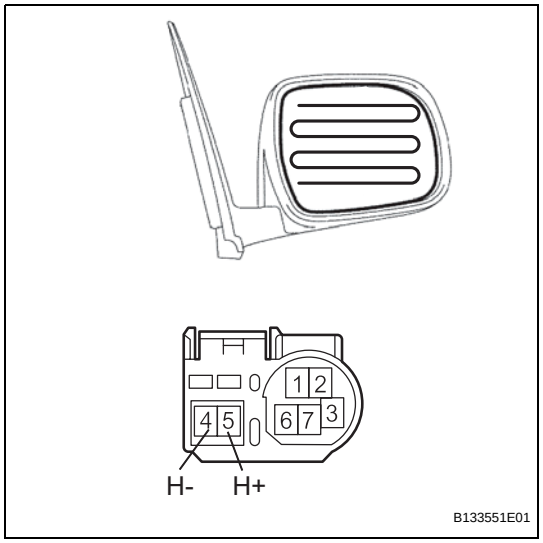

(c) w/ Mirror Heater:

Check the resistance.

(1) Measure the resistance between the terminals.

Standard resistance

Tester connection	Condition	Specified Condition
4 (H-) - 5 (H+)	65°C (149°F)	4 to 12 Ω

If the result is not as specified, replace the outer rear view mirror.

(2) Connect the cable from the negative battery (-) terminal to terminal 5 and the positive battery (+) terminal to terminal 4, then check that the mirror becomes warm.

OK:

Mirror becomes warm.

HINT:

It takes a short time for the mirror to become warm.

If the result is not as specified, replace the outer rear view mirror.

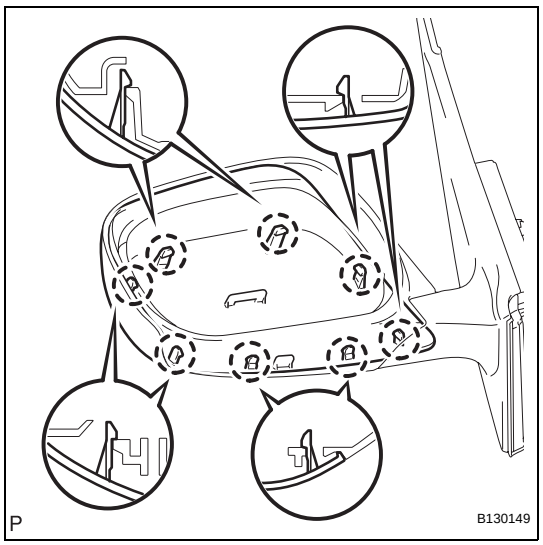

INSTALLATION

1. INSTALL OUTER MIRROR COVER LH

(a) Attach the 8 claws and install the mirror cover.

(b) After installing the outer mirror cover, check that there is no gap between the cover and mirror body.

HINT:

If there is a gap between the cover and body, noise will occur during driving.

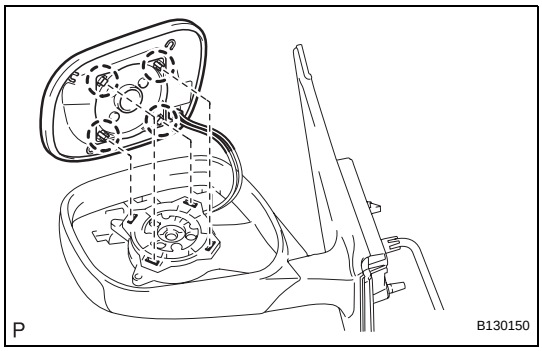

(c) w/ Mirror Heater:
Connect the 2 connectors. Attach the 4 claws to install the mirror.

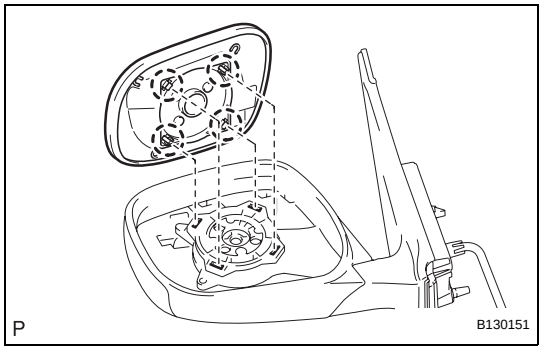

(d) w/o Mirror Heater:
Attach the 4 claws to install the mirror.

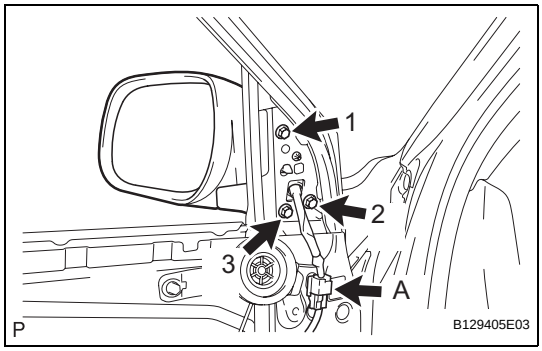

2. INSTALL OUTER REAR VIEW MIRROR ASSEMBLY LH

(a) Pass the connector labeled A and wire harness of the mirror through the wire harness hole.
(b) Temporarily install the mirror by inserting the bosses on the mirror into the holes on the vehicle.
(c) Tighten the 3 screws in the sequence shown in the illustration and Install the mirror.
Torque: 9.0 N*m (92 kgf*cm, 80 in.*lbf)
(d) Connect the connector labeled A.

3. INSTALL FRONT DOOR TRIM BOARD SUB-ASSEMBLY LH (See page ED-33)

4. INSTALL FRONT DOOR LOWER FRAME BRACKET GARNISH LH (See page ED-35)

OUTER REAR VIEW MIRROR

COMPONENTS

MI

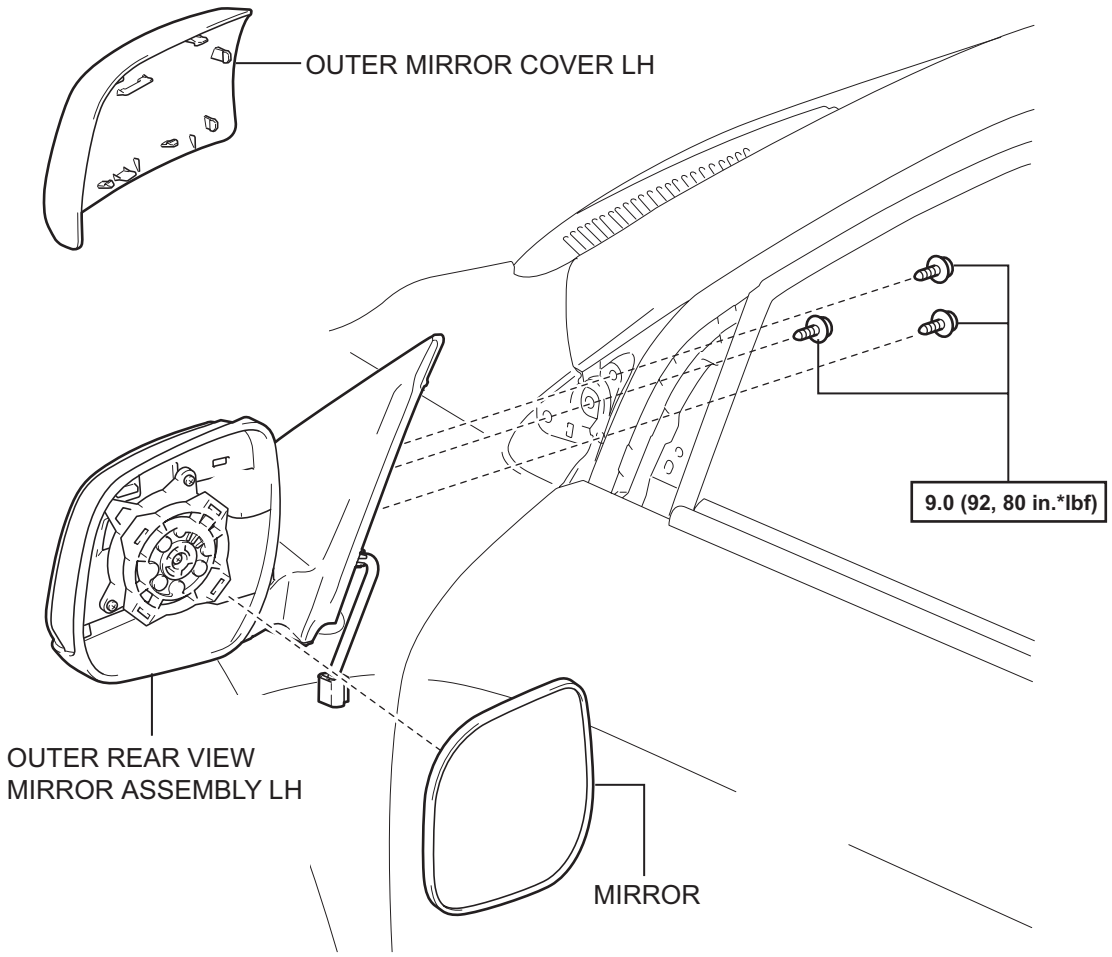

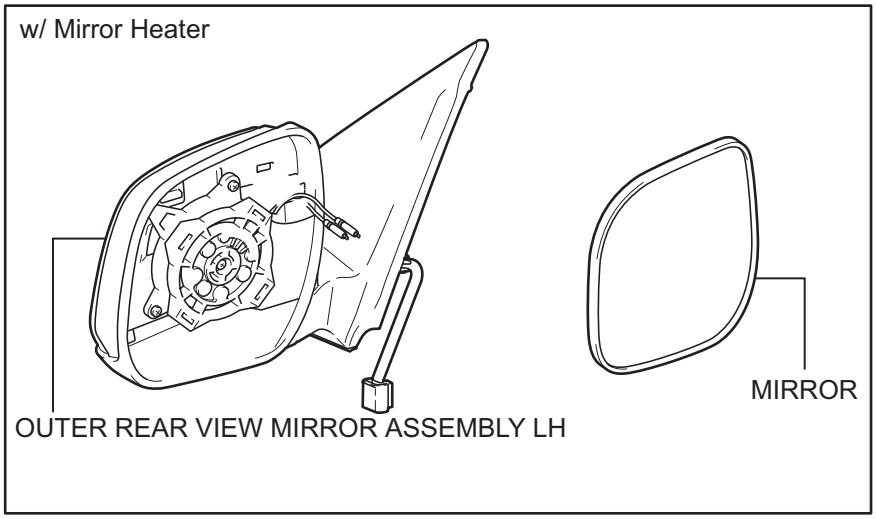

N*m (kgf*cm, ft.*lbf) : Specified torque

Y

B138213E02

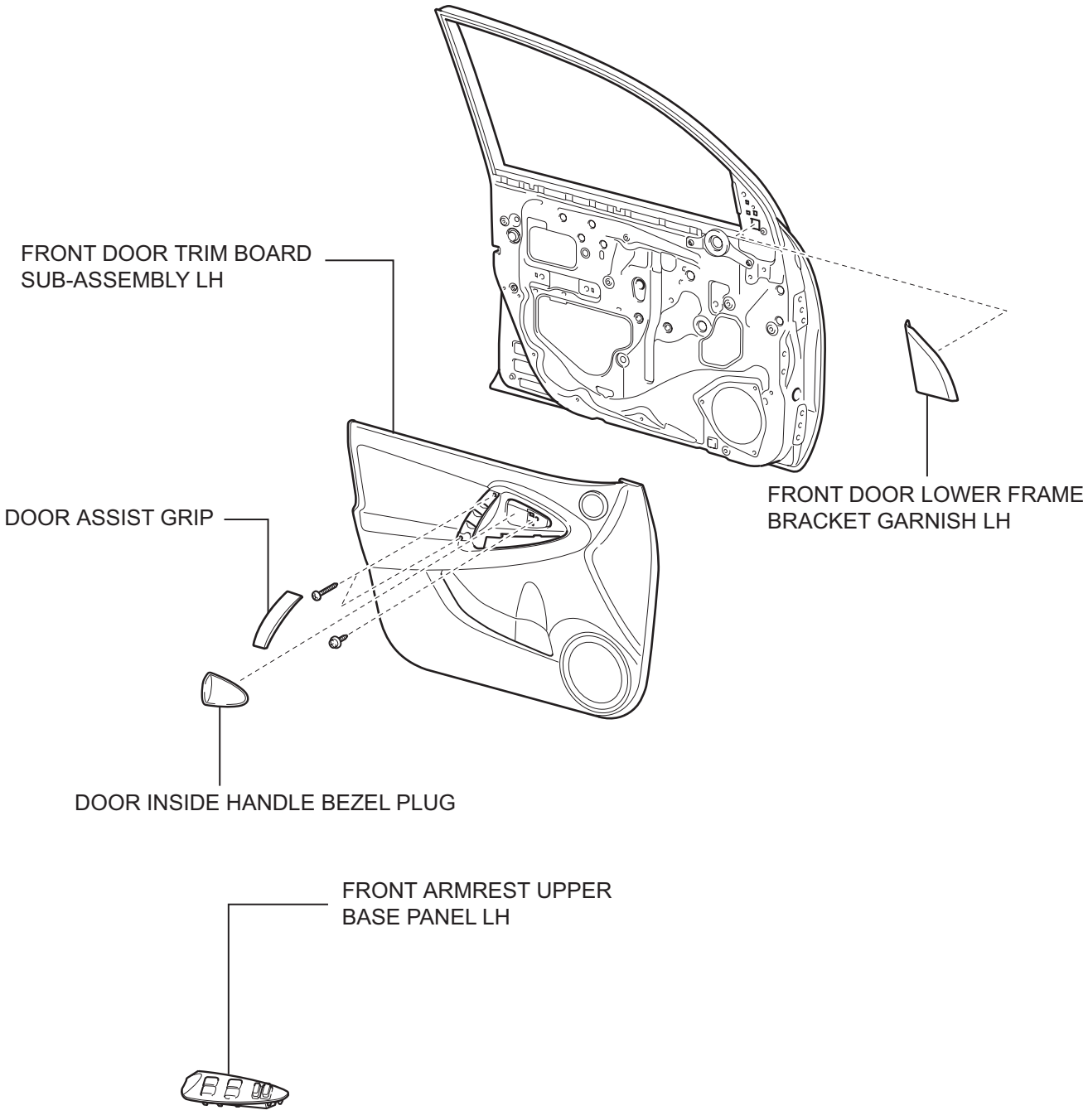
FRONT DOOR TRIM BOARD SUB-ASSEMBLY LH
FRONT DOOR LOWER FRAME BRACKET GARNISH LH
DOOR ASSIST GRIP
DOOR INSIDE HANDLE BEZEL PLUG
FRONT ARMREST UPPER BASE PANEL LH
T
B131624E03

SYSTEM DESCRIPTION

The outer mirror switch controls the outer rear view mirror LH and RH.

MI

PROBLEM SYMPTOMS TABLE

HINT:
Use the table below to help determine the cause of the problem symptom. The potential causes of the symptoms are listed in order of probability in the "Suspected area" column of the table. Check each symptom by checking the suspected areas in the order they are listed. Replace parts as necessary.

Power mirror control system

Symptom	Suspected area	See page
Mirror does not operate	1. ACC fuse	MI-1
	2. Outer mirror switch	MI-13
	3. Outer rear view mirror	MI-10
	4. Wire harness	-
Mirror operates abnormally	1. Outer mirror switch	MI-13
	2. Outer rear view mirror	MI-10
	3. Wire harness	-

POWER MIRROR CONTROL SYSTEM

PARTS LOCATION

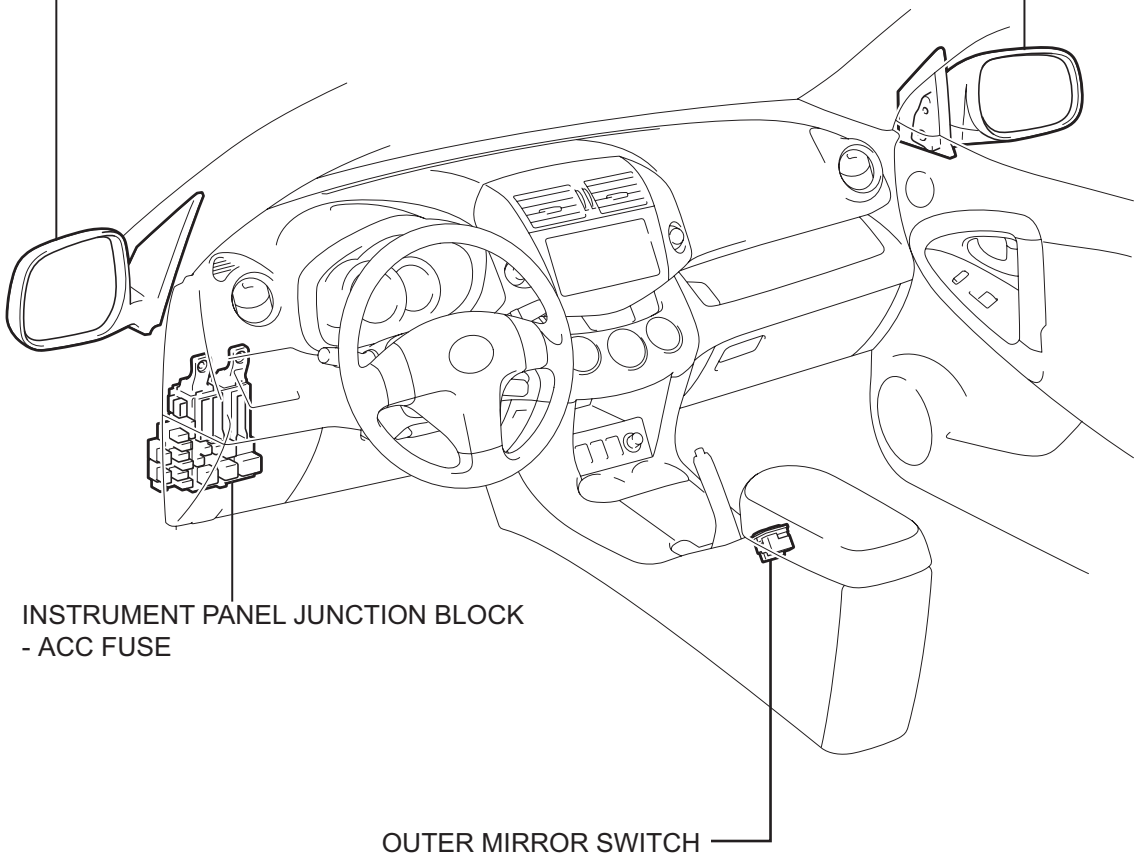

P

B129399E02

SYSTEM DIAGRAM

MI

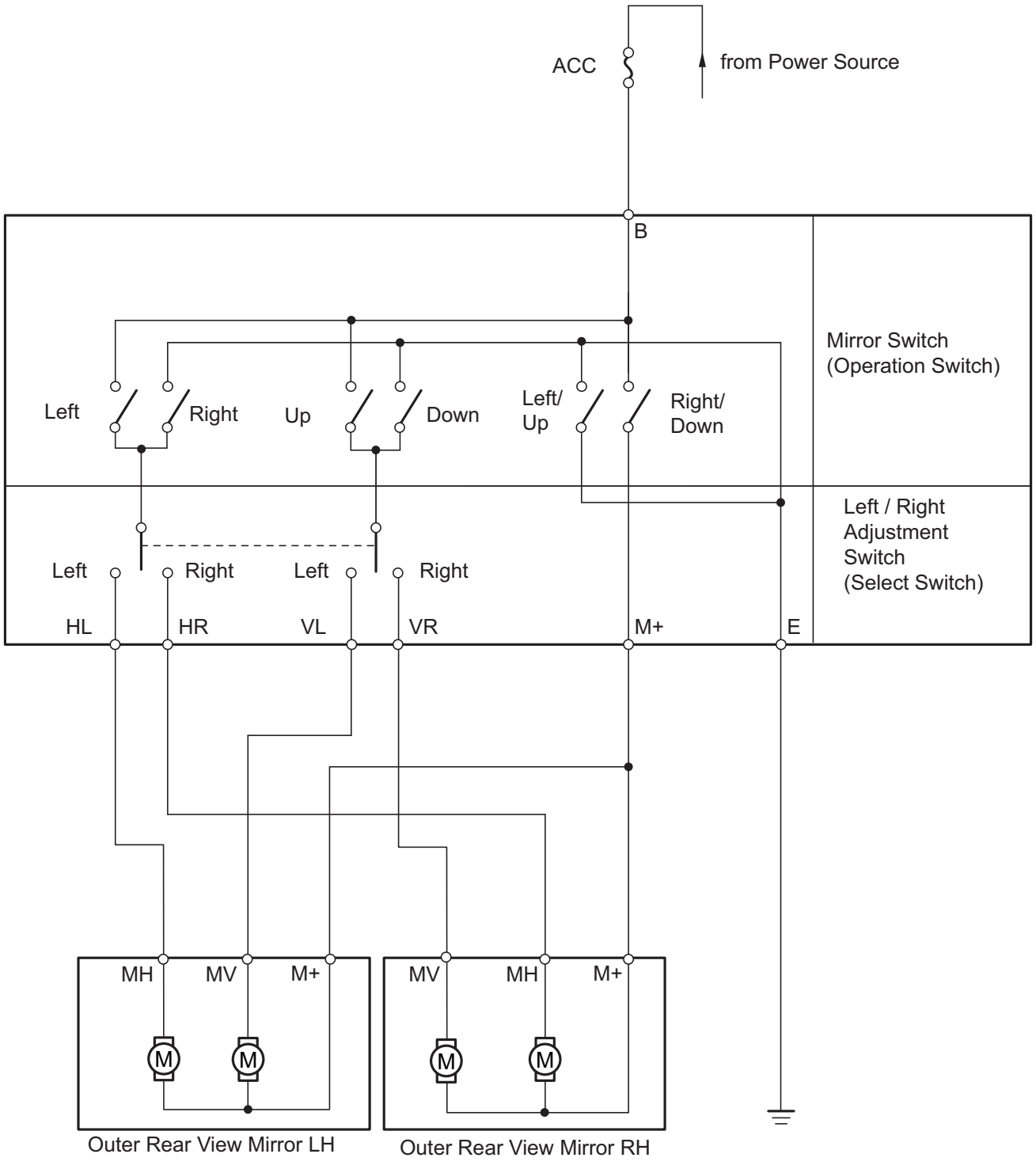

Y

B129380E03

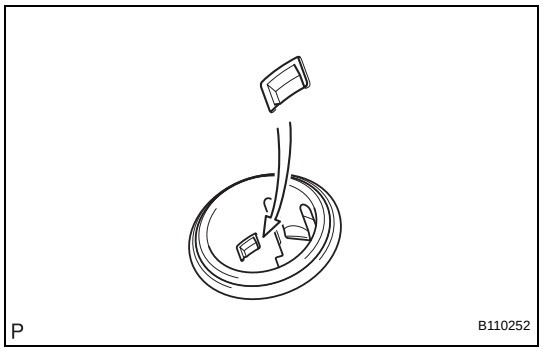

INSTALLATION

1. **INSTALL CENTER POWER OUTLET SOCKET ASSEMBLY**
   (a) Align the protrusion on the backside of the socket with the groove of the cover. Then push the socket into the cover.
2. **INSTALL UPPER REAR CONSOLE PANEL SUB-ASSEMBLY (See page IP-27)**
3. **INSTALL UPPER CONSOLE PANEL SUB-ASSEMBLY (See page IP-27)**
4. **INSTALL SHIFT LEVER KNOB SUB-ASSEMBLY**
5. **INSTALL NO. 2 CONSOLE UPPER PANEL GARNISH (See page IP-28)**
6. **INSTALL NO. 1 CONSOLE UPPER PANEL GARNISH (See page IP-28)**
7. **CONNECT CABLE TO NEGATIVE BATTERY TERMINAL**

CENTER POWER OUTLET SOCKET

COMPONENTS

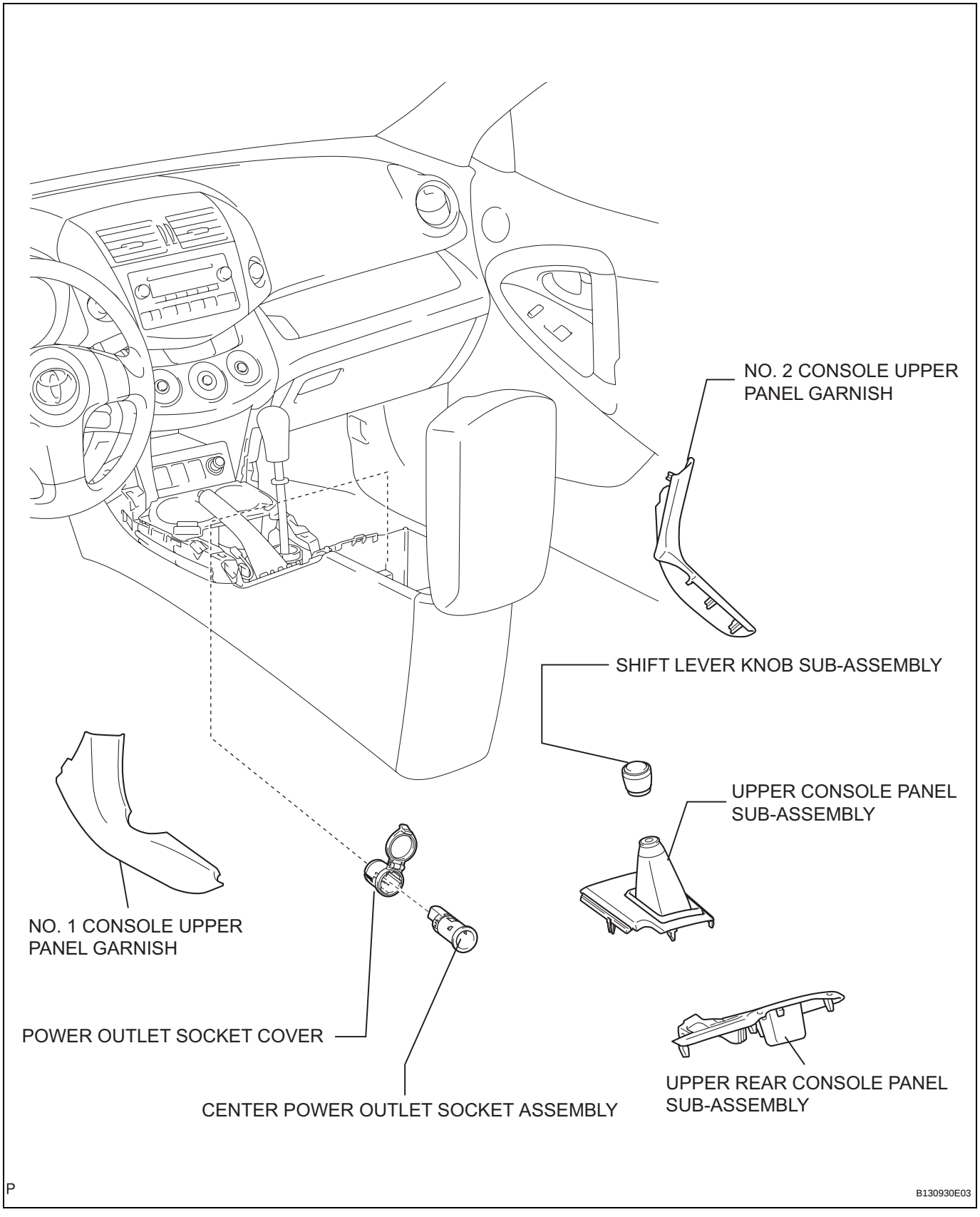

REMOVAL

1. **DISCONNECT CABLE FROM NEGATIVE BATTERY TERMINAL**
   CAUTION:
   Wait at least 90 seconds after disconnecting the cable from the negative (-) battery terminal to prevent airbag and seat belt pretensioner activation.
2. **REMOVE NO. 1 CONSOLE UPPER PANEL GARNISH (See page IP-17)**
3. **REMOVE NO. 2 CONSOLE UPPER PANEL GARNISH (See page IP-18)**
4. **REMOVE SHIFT LEVER KNOB SUB-ASSEMBLY**
5. **REMOVE UPPER CONSOLE PANEL SUB-ASSEMBLY (See page IP-18)**
6. **REMOVE UPPER REAR CONSOLE PANEL SUB-ASSEMBLY (See page IP-19)**
7. **REMOVE CENTER POWER OUTLET SOCKET ASSEMBLY**
   (a) Rotate the socket to disengage the notch.

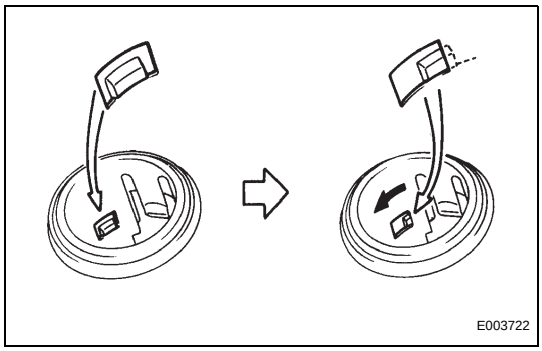

   (b) Pull out the socket halfway and rotate the socket until its protrusion is aligned with the groove of the cover.
   (c) Remove the socket from the cover.

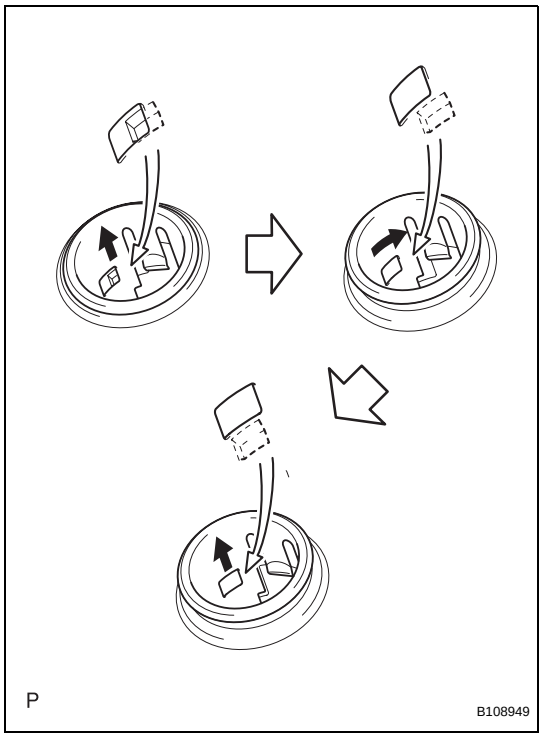

OT

CENTER POWER OUTLET SOCKET (for AC Power Supply)

COMPONENTS

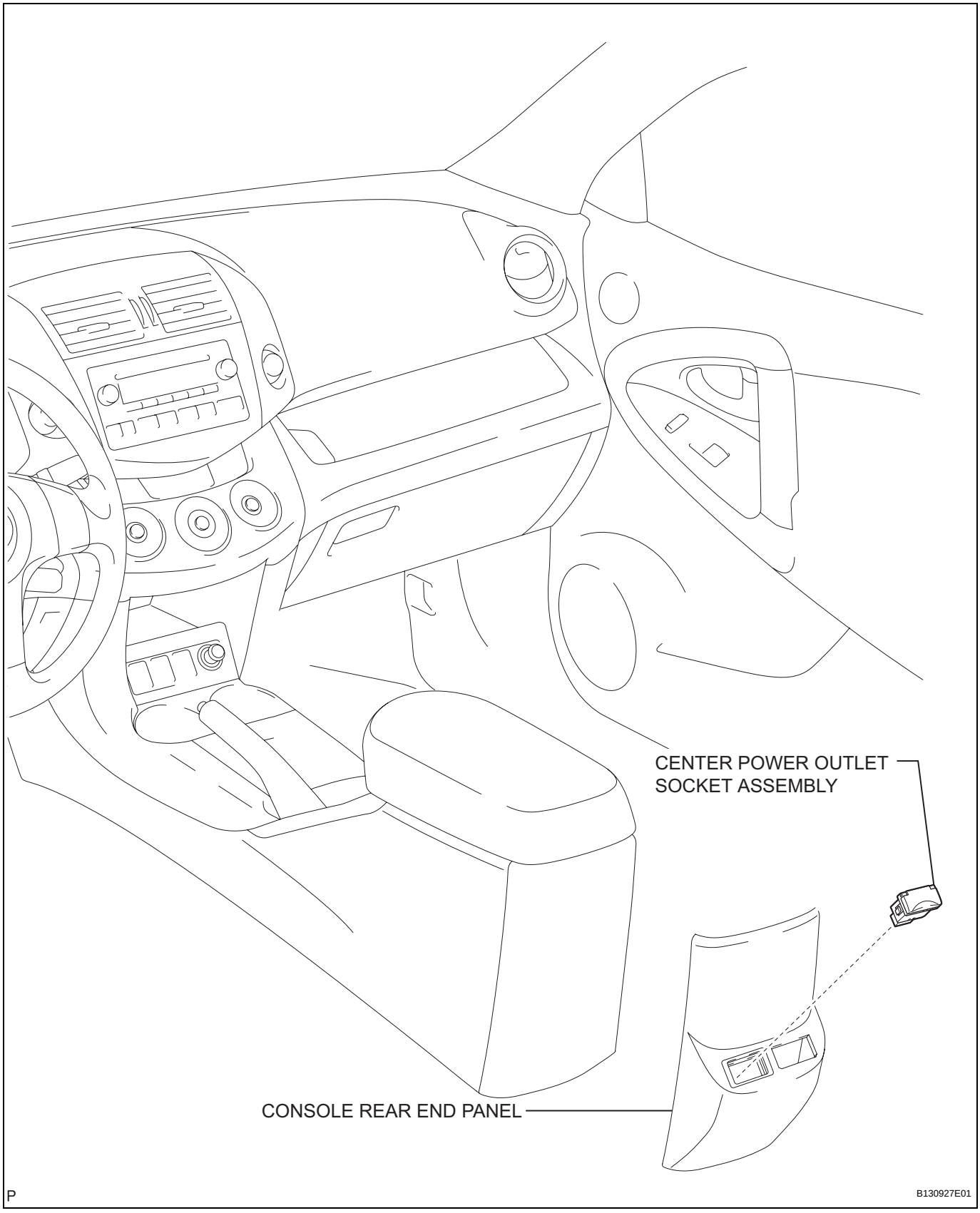

REMOVAL

1. **DISCONNECT CABLE FROM NEGATIVE BATTERY TERMINAL**
   CAUTION:
   Wait at least 90 seconds after disconnecting the cable from the negative (-) battery terminal to prevent airbag and seat belt pretensioner activation.
2. **REMOVE CONSOLE REAR END PANEL (See page IP-19)**
3. **REMOVE CENTER POWER OUTLET SOCKET ASSEMBLY**
   (a) Disconnect the connector.
   (b) Detach the 2 claws and remove the power outlet.

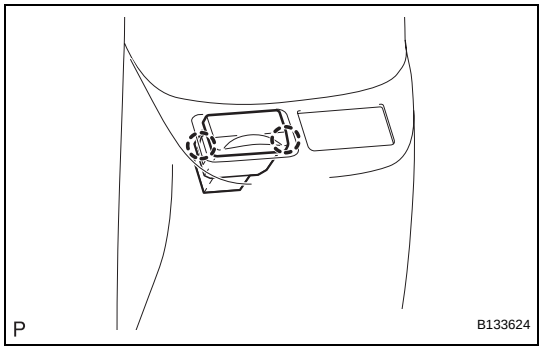

INSTALLATION

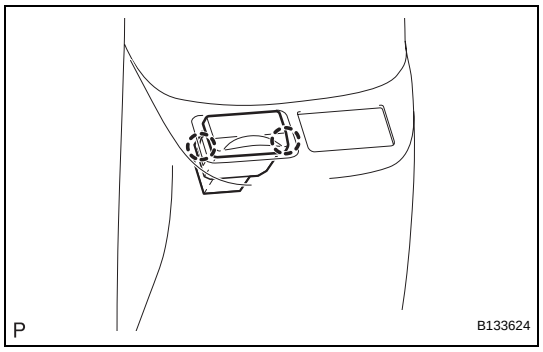

1. **INSTALL CENTER POWER OUTLET SOCKET ASSEMBLY**
   (a) Attach the 2 claws to install the voltage inverter.
   (b) Connect the connector.
2. **INSTALL CONSOLE REAR END PANEL (See page IP-27)**
3. **CONNECT CABLE TO NEGATIVE BATTERY TERMINAL**

CENTER POWER OUTLET SOCKET (for AC Power Supply)

COMPONENTS

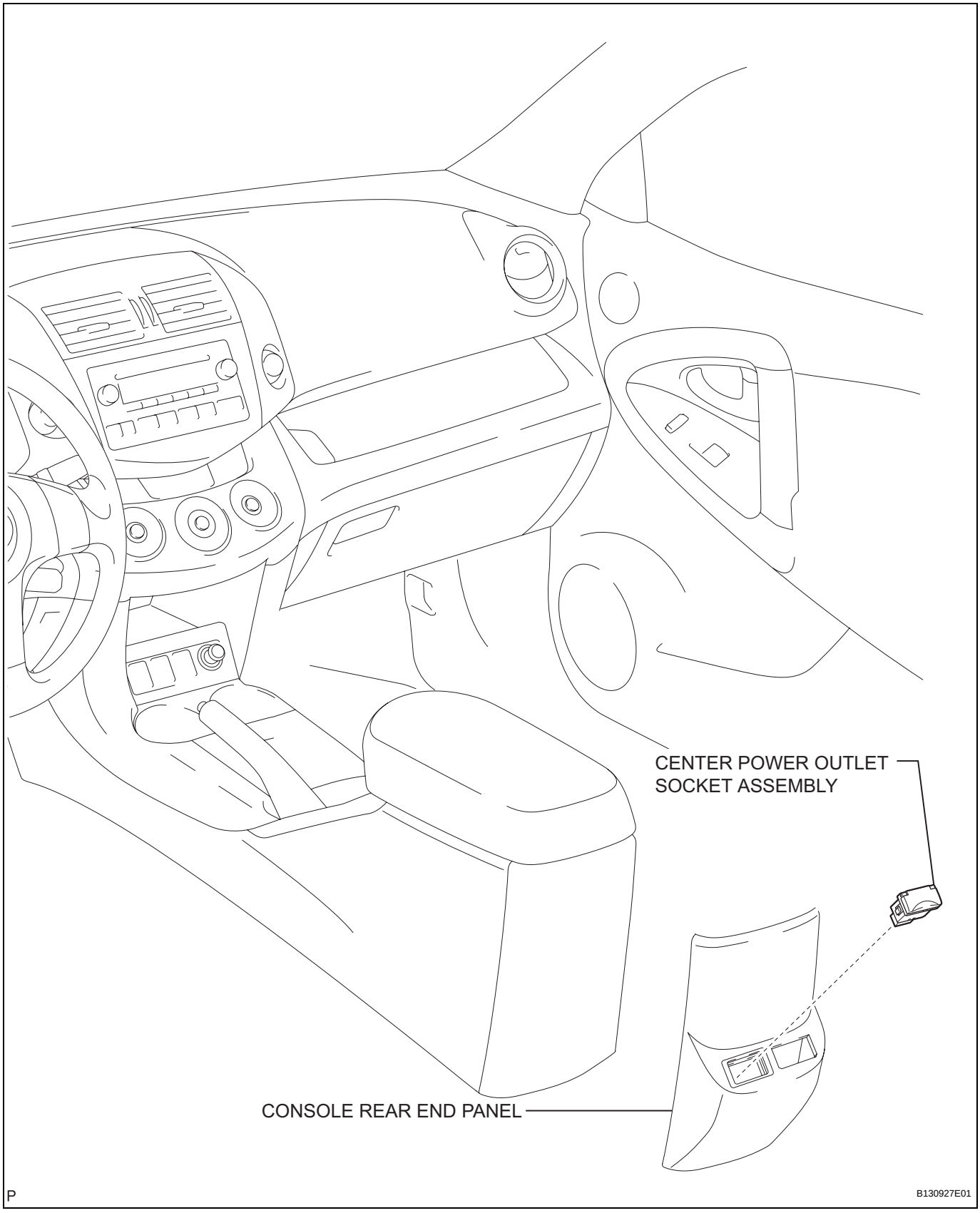

REMOVAL

1. **DISCONNECT CABLE FROM NEGATIVE BATTERY TERMINAL**
   CAUTION:
   Wait at least 90 seconds after disconnecting the cable from the negative (-) battery terminal to prevent airbag and seat belt pretensioner activation.
2. **REMOVE CONSOLE REAR END PANEL (See page IP-19)**
3. **REMOVE CENTER POWER OUTLET SOCKET ASSEMBLY**
   (a) Disconnect the connector.
   (b) Detach the 2 claws and remove the power outlet.

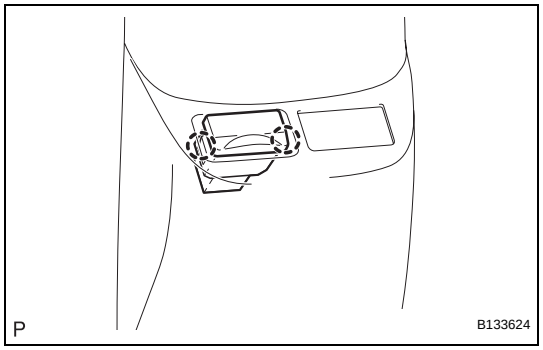

INSTALLATION

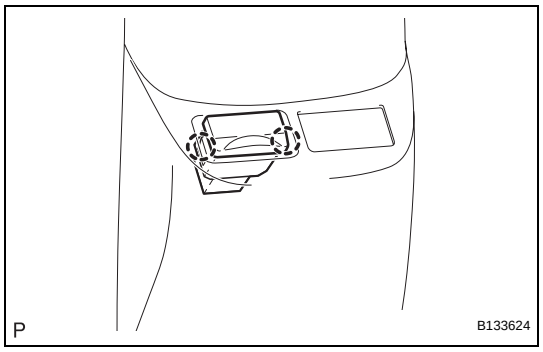

1. **INSTALL CENTER POWER OUTLET SOCKET ASSEMBLY**
   (a) Attach the 2 claws to install the voltage inverter.
   (b) Connect the connector.
2. **INSTALL CONSOLE REAR END PANEL (See page IP-27)**
3. **CONNECT CABLE TO NEGATIVE BATTERY TERMINAL**

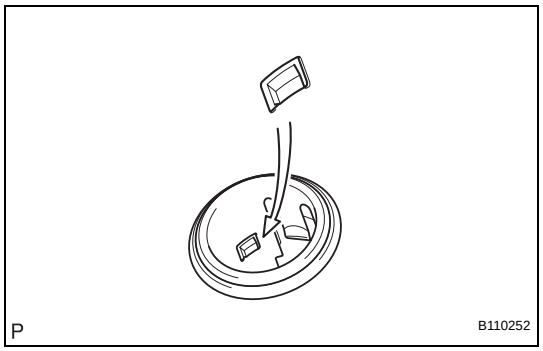

INSTALLATION

1. **INSTALL CENTER POWER OUTLET SOCKET ASSEMBLY**
   (a) Align the protrusion on the backside of the socket with the groove of the cover. Then push the socket into the cover.
2. **INSTALL UPPER REAR CONSOLE PANEL SUB-ASSEMBLY (See page IP-27)**
3. **INSTALL UPPER CONSOLE PANEL SUB-ASSEMBLY (See page IP-27)**
4. **INSTALL SHIFT LEVER KNOB SUB-ASSEMBLY**
5. **INSTALL NO. 2 CONSOLE UPPER PANEL GARNISH (See page IP-28)**
6. **INSTALL NO. 1 CONSOLE UPPER PANEL GARNISH (See page IP-28)**
7. **CONNECT CABLE TO NEGATIVE BATTERY TERMINAL**

REMOVAL

1. **DISCONNECT CABLE FROM NEGATIVE BATTERY TERMINAL**
   CAUTION:
   Wait at least 90 seconds after disconnecting the cable from the negative (-) battery terminal to prevent airbag and seat belt pretensioner activation.
2. **REMOVE REAR DOOR SCUFF PLATE LH (See page IR-26)**
3. **REMOVE REAR DOOR OPENING TRIM WEATHERSTRIP LH**
4. **REMOVE PACKAGE TRAY TRIM POCKET SUB-ASSEMBLY**
5. **REMOVE TONNEAU COVER ASSEMBLY**
6. **REMOVE REAR FLOOR NO. 1 BOARD**
7. **REMOVE DECK BOARD ASSEMBLY**
8. **REMOVE REAR FLOOR NO. 3 BOARD**
9. **REMOVE REAR FLOOR NO. 2 BOARD**
10. **REMOVE REAR FLOOR NO. 1 MAT SUPPORT SIDE PLATE (See page IR-31)**
11. **REMOVE BACK DOOR WEATHERSTRIP**
12. **REMOVE REAR FLOOR FINISH PLATE (See page IR-31)**
13. **REMOVE RECLINING REMOTE CONTROL LEVER BEZEL LH**
14. **REMOVE TETHER ANCHOR BRACKET SUB-ASSEMBLY**
15. **REMOVE DECK TRIM SIDE PANEL ASSEMBLY LH (w/ Rear No. 2 Seat) (See page IR-32)**
16. **REMOVE DECK TRIM SIDE PANEL ASSEMBLY LH (w/o Rear No. 2 Seat) (See page IR-32)**
17. **REMOVE REAR POWER OUTLET SOCKET ASSEMBLY**
    (a) Detach the 2 claws fittings and remove the socket.

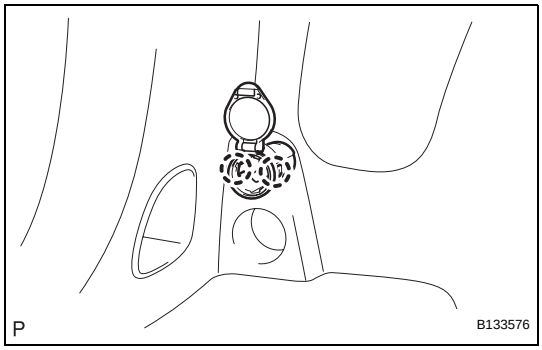

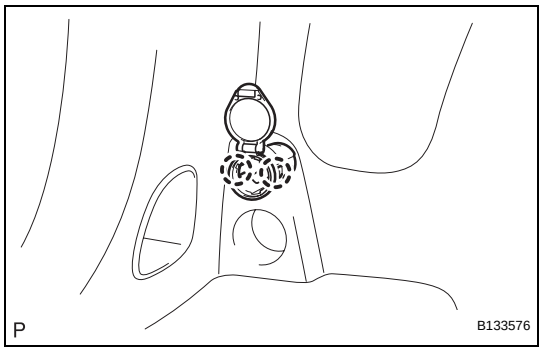

INSTALLATION

1. **INSTALL REAR POWER OUTLET SOCKET ASSEMBLY**
   (a) Attach the 2 claw fittings to install the socket.
2. **INSTALL DECK TRIM SIDE PANEL ASSEMBLY LH (w/ o Rear No. 2 Seat) (See page IR-52)**
3. **INSTALL DECK TRIM SIDE PANEL ASSEMBLY LH (w/ Rear No. 2 Seat) (See page IR-53)**
4. **INSTALL TETHER ANCHOR BRACKET SUB-ASSEMBLY**
5. **INSTALL RECLINING REMOTE CONTROL LEVER BEZEL LH**
6. **INSTALL REAR FLOOR FINISH PLATE (See page IR-55)**
7. **INSTALL BACK DOOR WEATHERSTRIP**
8. **INSTALL REAR FLOOR NO. 1 MAT SUPPORT SIDE PLATE (See page IR-55)**
9. **INSTALL REAR FLOOR NO. 2 BOARD**
10. **INSTALL REAR FLOOR NO. 3 BOARD**
11. **INSTALL DECK BOARD ASSEMBLY**
12. **INSTALL REAR FLOOR NO. 1 BOARD**
13. **INSTALL TONNEAU COVER ASSEMBLY**
14. **INSTALL PACKAGE TRAY TRIM POCKET SUB-ASSEMBLY**
15. **INSTALL REAR DOOR OPENING TRIM WEATHERSTRIP LH**
16. **INSTALL REAR DOOR SCUFF PLATE LH (See page IR-59)**
17. **CONNECT CABLE TO NEGATIVE BATTERY TERMINAL**

POWER OUTLET SOCKET

COMPONENTS

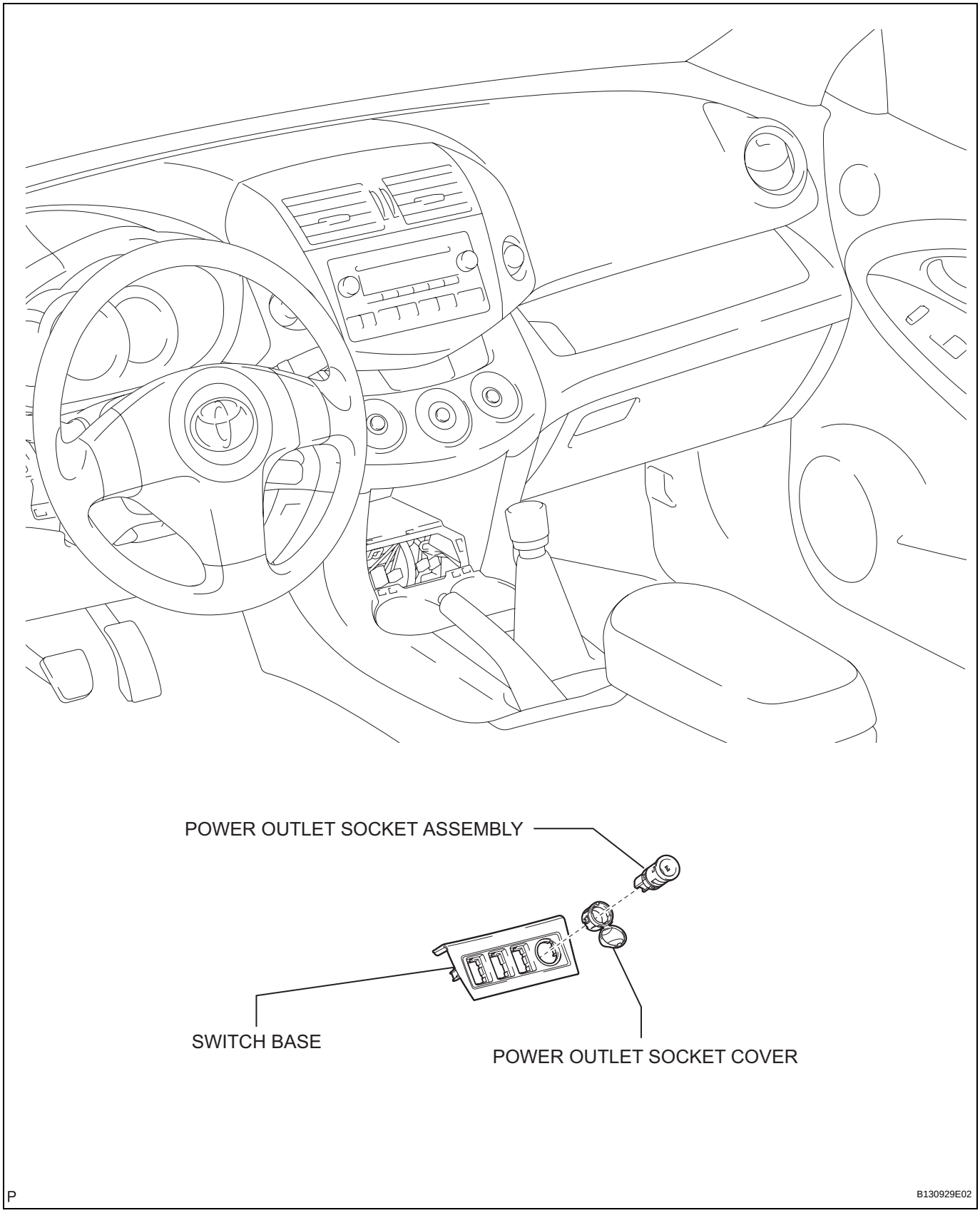

REMOVAL

1. **DISCONNECT CABLE FROM NEGATIVE BATTERY TERMINAL**
   CAUTION:
   Wait at least 90 seconds after disconnecting the cable from the negative (-) battery terminal to prevent airbag and seat belt pretensioner activation.
2. **REMOVE SWITCH BASE (See page IP-21)**
3. **REMOVE POWER OUTLET SOCKET ASSEMBLY**
   (a) Rotate the socket to disengage the notch.

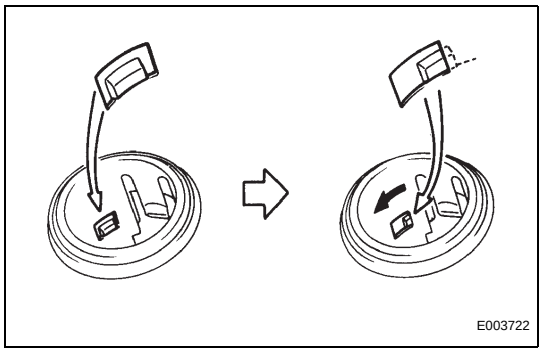

   (b) Pull out the socket halfway and rotate the socket until its protrusion is aligned with the groove of the cover.
   (c) Remove the socket from the cover.

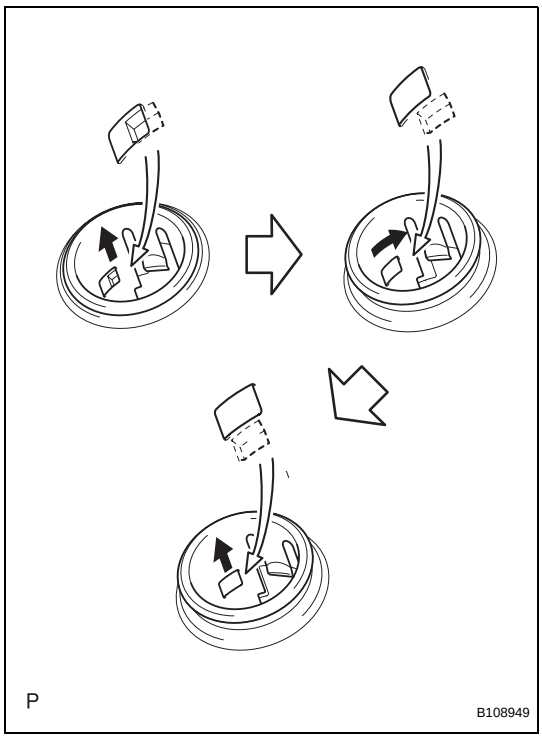

INSTALLATION

1. **INSTALL POWER OUTLET SOCKET ASSEMBLY**
   (a) Align the protrusion on the backside of the socket with the groove of the cover. Then push the socket into the cover.
2. **INSTALL SWITCH BASE (See page IP-24)**
3. **CONNECT CABLE TO NEGATIVE BATTERY TERMINAL**

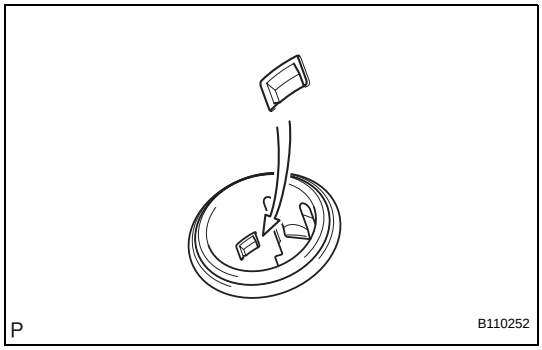

CENTER POWER OUTLET SOCKET

COMPONENTS

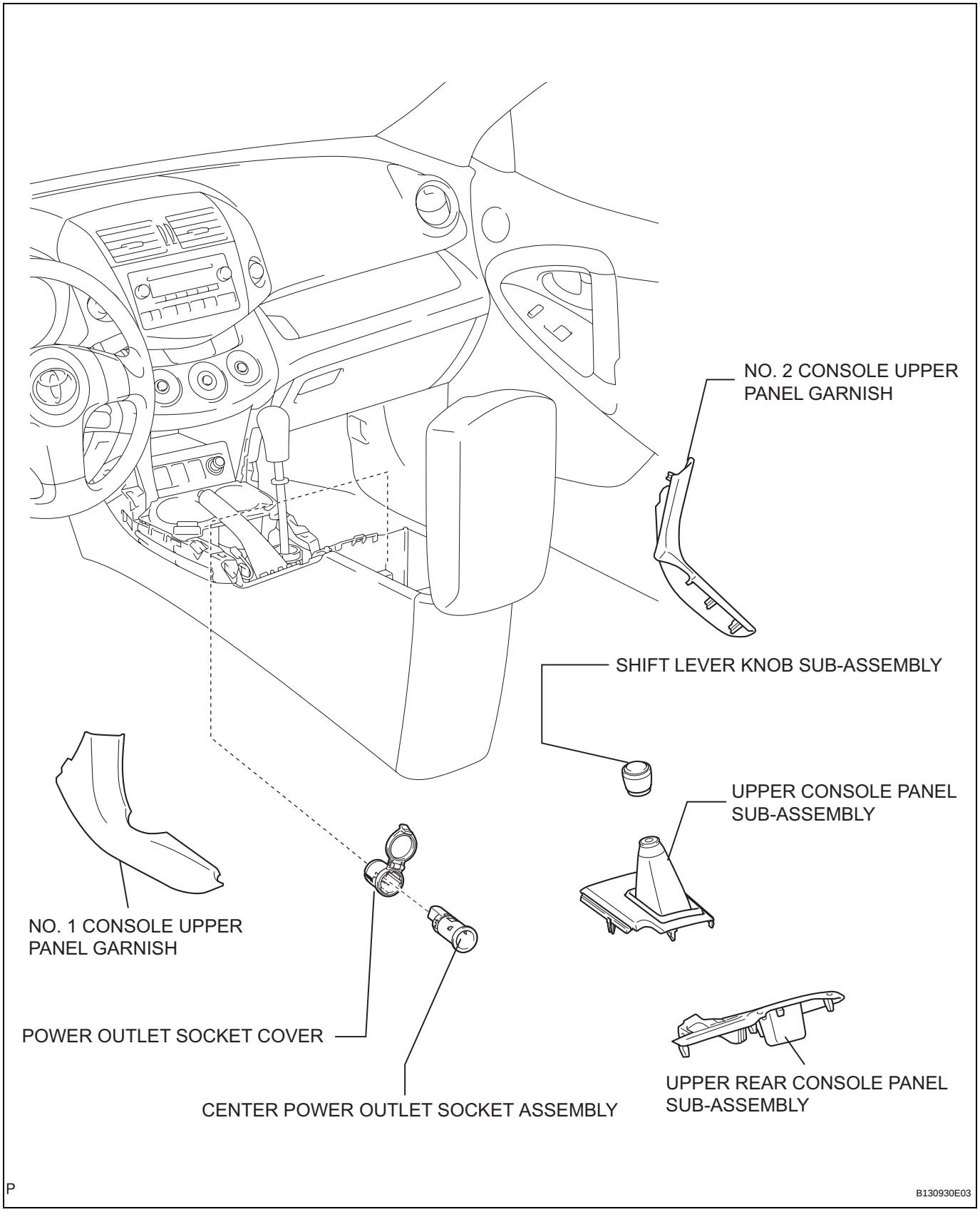

REMOVAL

1. **DISCONNECT CABLE FROM NEGATIVE BATTERY TERMINAL**
   CAUTION:
   Wait at least 90 seconds after disconnecting the cable from the negative (-) battery terminal to prevent airbag and seat belt pretensioner activation.
2. **REMOVE NO. 1 CONSOLE UPPER PANEL GARNISH (See page IP-17)**
3. **REMOVE NO. 2 CONSOLE UPPER PANEL GARNISH (See page IP-18)**
4. **REMOVE SHIFT LEVER KNOB SUB-ASSEMBLY**
5. **REMOVE UPPER CONSOLE PANEL SUB-ASSEMBLY (See page IP-18)**
6. **REMOVE UPPER REAR CONSOLE PANEL SUB-ASSEMBLY (See page IP-19)**
7. **REMOVE CENTER POWER OUTLET SOCKET ASSEMBLY**
   (a) Rotate the socket to disengage the notch.

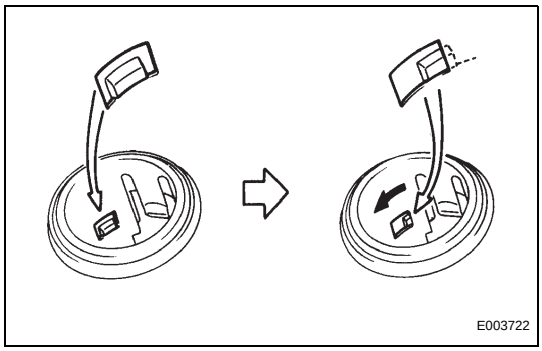

   (b) Pull out the socket halfway and rotate the socket until its protrusion is aligned with the groove of the cover.
   (c) Remove the socket from the cover.

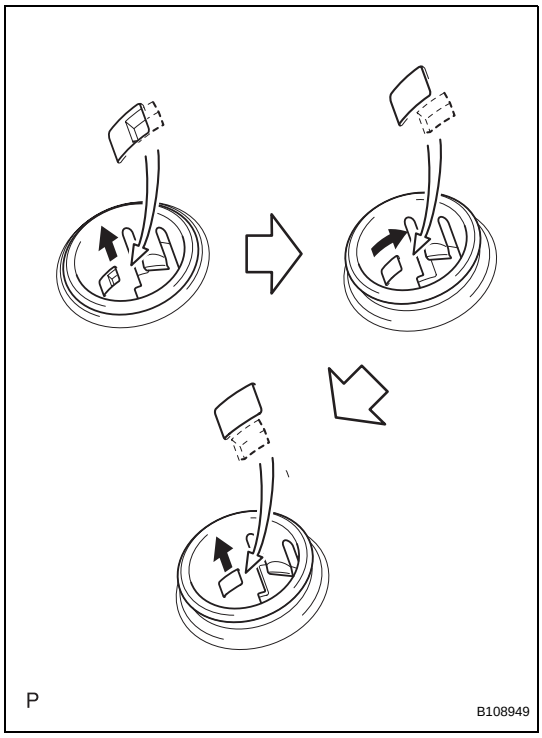

OT

CENTER POWER OUTLET SOCKET (for AC Power Supply)

COMPONENTS

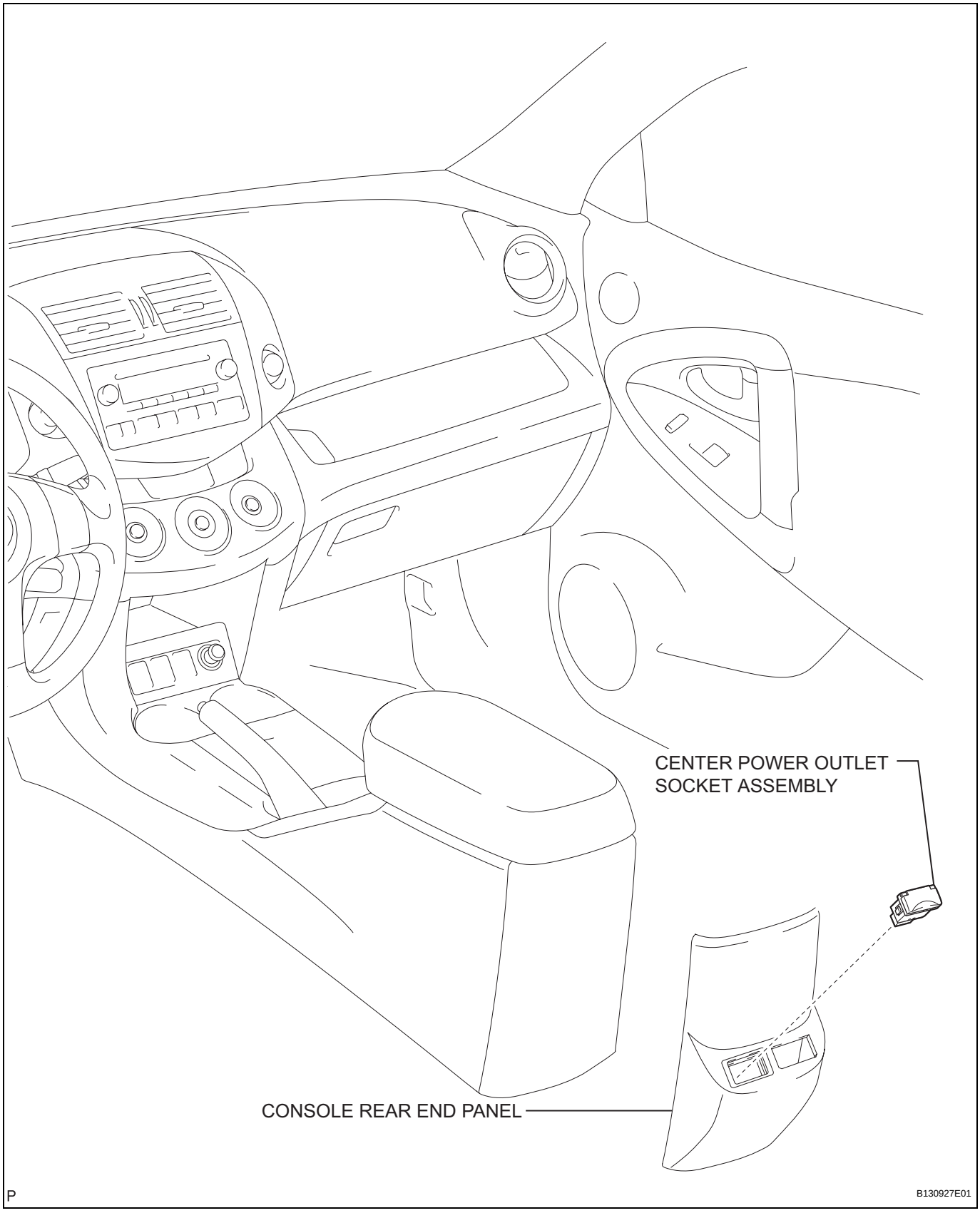

REMOVAL

1. **DISCONNECT CABLE FROM NEGATIVE BATTERY TERMINAL**
   CAUTION:
   Wait at least 90 seconds after disconnecting the cable from the negative (-) battery terminal to prevent airbag and seat belt pretensioner activation.
2. **REMOVE CONSOLE REAR END PANEL (See page IP-19)**
3. **REMOVE CENTER POWER OUTLET SOCKET ASSEMBLY**
   (a) Disconnect the connector.
   (b) Detach the 2 claws and remove the power outlet.

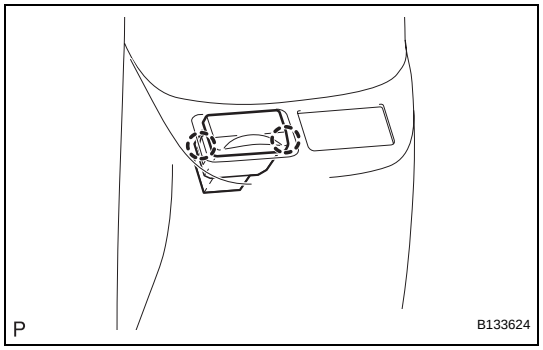

INSTALLATION

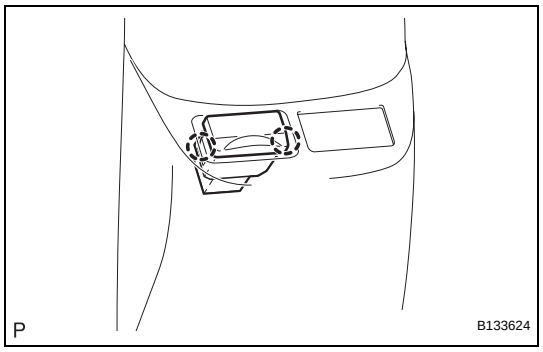

1. **INSTALL CENTER POWER OUTLET SOCKET ASSEMBLY**
   (a) Attach the 2 claws to install the voltage inverter.
   (b) Connect the connector.
2. **INSTALL CONSOLE REAR END PANEL (See page IP-27)**
3. **CONNECT CABLE TO NEGATIVE BATTERY TERMINAL**

REAR POWER OUTLET SOCKET

COMPONENTS

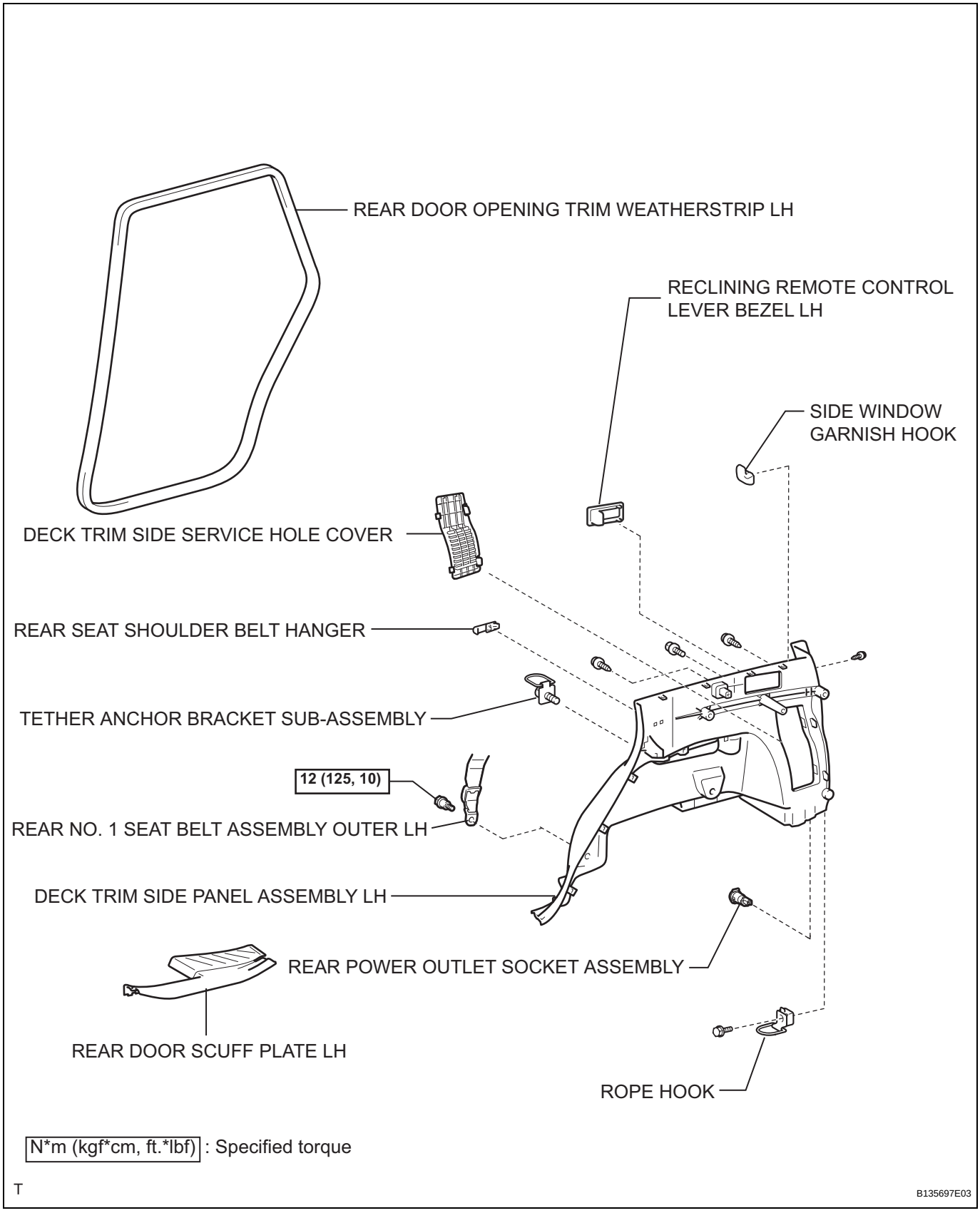

OT

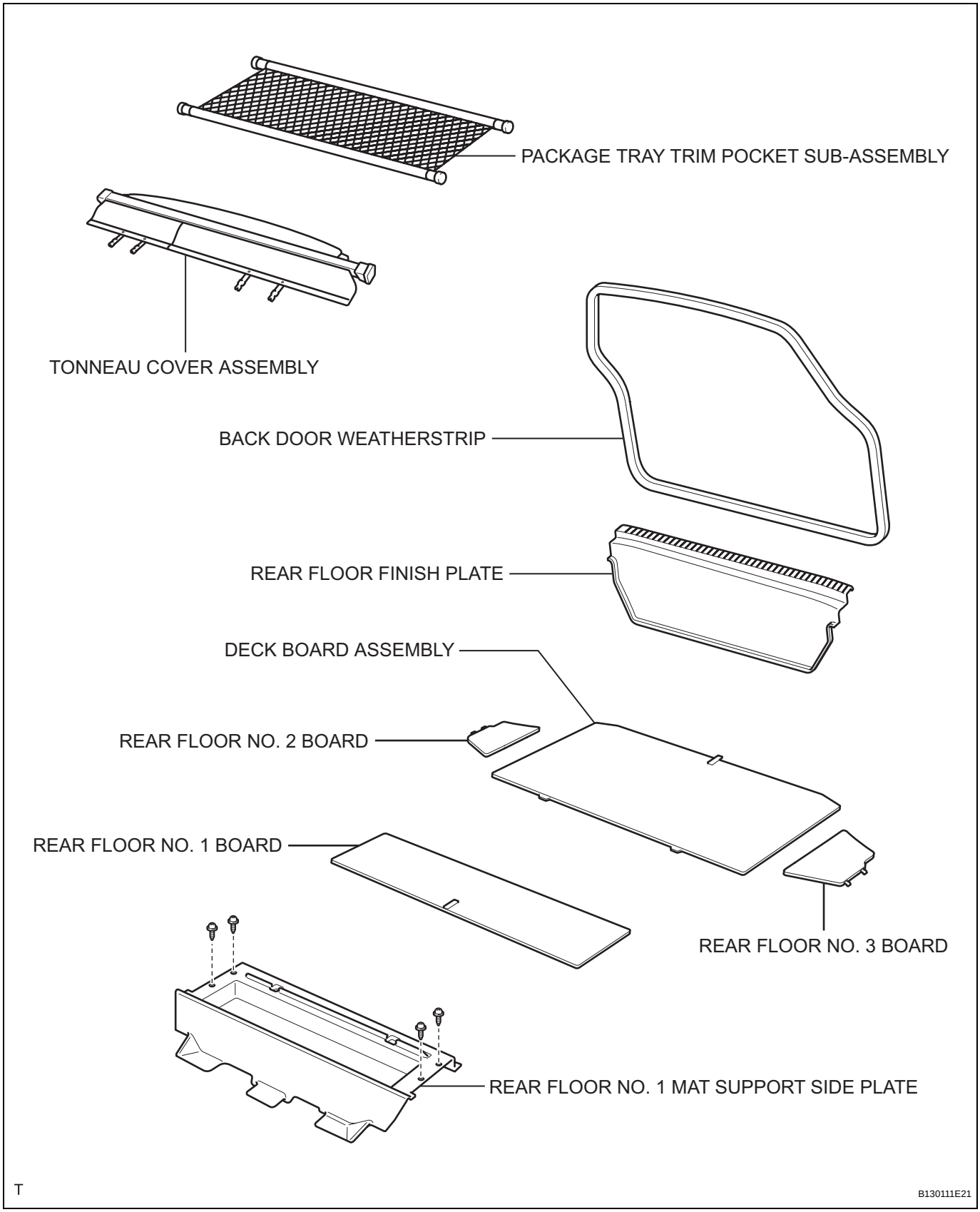
PACKAGE TRAY TRIM POCKET SUB-ASSEMBLY
TONNEAU COVER ASSEMBLY
BACK DOOR WEATHERSTRIP
REAR FLOOR FINISH PLATE
DECK BOARD ASSEMBLY
REAR FLOOR NO. 2 BOARD
REAR FLOOR NO. 1 BOARD
REAR FLOOR NO. 3 BOARD
REAR FLOOR NO. 1 MAT SUPPORT SIDE PLATE
T
B130111E21

REMOVAL

1. **DISCONNECT CABLE FROM NEGATIVE BATTERY TERMINAL**
   CAUTION:
   Wait at least 90 seconds after disconnecting the cable from the negative (-) battery terminal to prevent airbag and seat belt pretensioner activation.
2. **REMOVE REAR DOOR SCUFF PLATE LH (See page IR-26)**
3. **REMOVE REAR DOOR OPENING TRIM WEATHERSTRIP LH**
4. **REMOVE PACKAGE TRAY TRIM POCKET SUB-ASSEMBLY**
5. **REMOVE TONNEAU COVER ASSEMBLY**
6. **REMOVE REAR FLOOR NO. 1 BOARD**
7. **REMOVE DECK BOARD ASSEMBLY**
8. **REMOVE REAR FLOOR NO. 3 BOARD**
9. **REMOVE REAR FLOOR NO. 2 BOARD**
10. **REMOVE REAR FLOOR NO. 1 MAT SUPPORT SIDE PLATE (See page IR-31)**
11. **REMOVE BACK DOOR WEATHERSTRIP**
12. **REMOVE REAR FLOOR FINISH PLATE (See page IR-31)**
13. **REMOVE RECLINING REMOTE CONTROL LEVER BEZEL LH**
14. **REMOVE TETHER ANCHOR BRACKET SUB-ASSEMBLY**
15. **REMOVE DECK TRIM SIDE PANEL ASSEMBLY LH (w/ Rear No. 2 Seat) (See page IR-32)**
16. **REMOVE DECK TRIM SIDE PANEL ASSEMBLY LH (w/o Rear No. 2 Seat) (See page IR-32)**
17. **REMOVE REAR POWER OUTLET SOCKET ASSEMBLY**
    (a) Detach the 2 claws fittings and remove the socket.

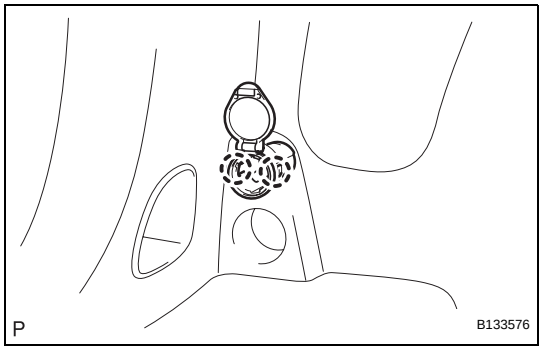

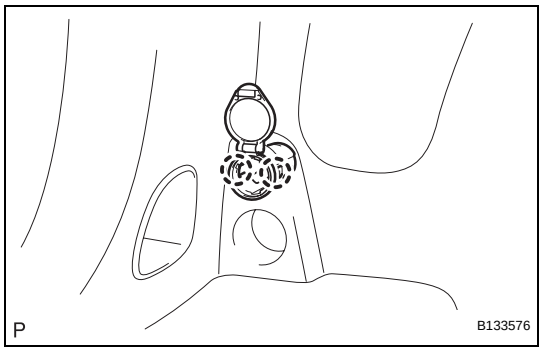

INSTALLATION

1. **INSTALL REAR POWER OUTLET SOCKET ASSEMBLY**
   (a) Attach the 2 claw fittings to install the socket.
2. **INSTALL DECK TRIM SIDE PANEL ASSEMBLY LH (w/ o Rear No. 2 Seat) (See page IR-52)**
3. **INSTALL DECK TRIM SIDE PANEL ASSEMBLY LH (w/ Rear No. 2 Seat) (See page IR-53)**
4. **INSTALL TETHER ANCHOR BRACKET SUB-ASSEMBLY**
5. **INSTALL RECLINING REMOTE CONTROL LEVER BEZEL LH**
6. **INSTALL REAR FLOOR FINISH PLATE (See page IR-55)**
7. **INSTALL BACK DOOR WEATHERSTRIP**
8. **INSTALL REAR FLOOR NO. 1 MAT SUPPORT SIDE PLATE (See page IR-55)**
9. **INSTALL REAR FLOOR NO. 2 BOARD**
10. **INSTALL REAR FLOOR NO. 3 BOARD**
11. **INSTALL DECK BOARD ASSEMBLY**
12. **INSTALL REAR FLOOR NO. 1 BOARD**
13. **INSTALL TONNEAU COVER ASSEMBLY**
14. **INSTALL PACKAGE TRAY TRIM POCKET SUB-ASSEMBLY**
15. **INSTALL REAR DOOR OPENING TRIM WEATHERSTRIP LH**
16. **INSTALL REAR DOOR SCUFF PLATE LH (See page IR-59)**
17. **CONNECT CABLE TO NEGATIVE BATTERY TERMINAL**

REAR POWER OUTLET SOCKET

COMPONENTS

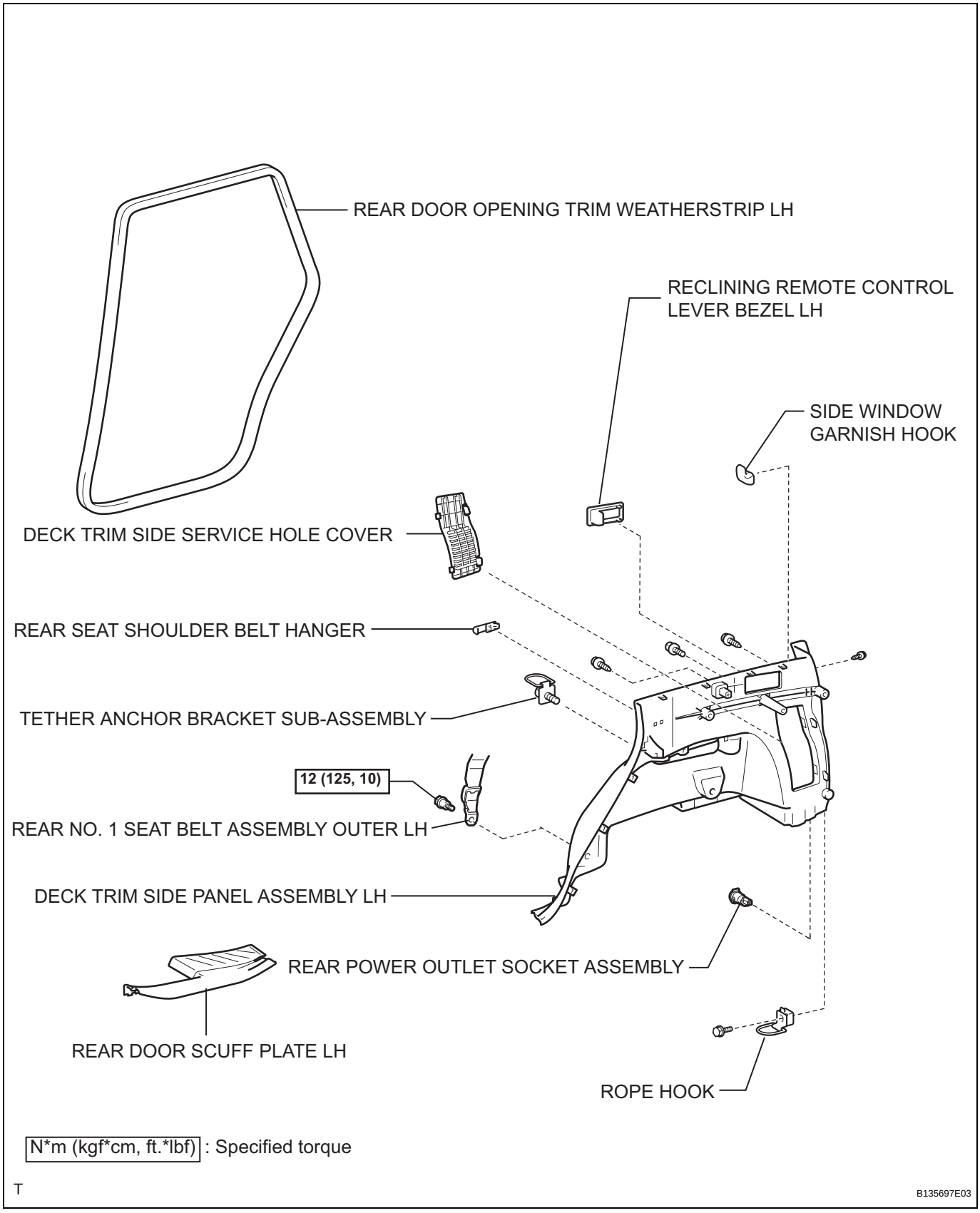

OT

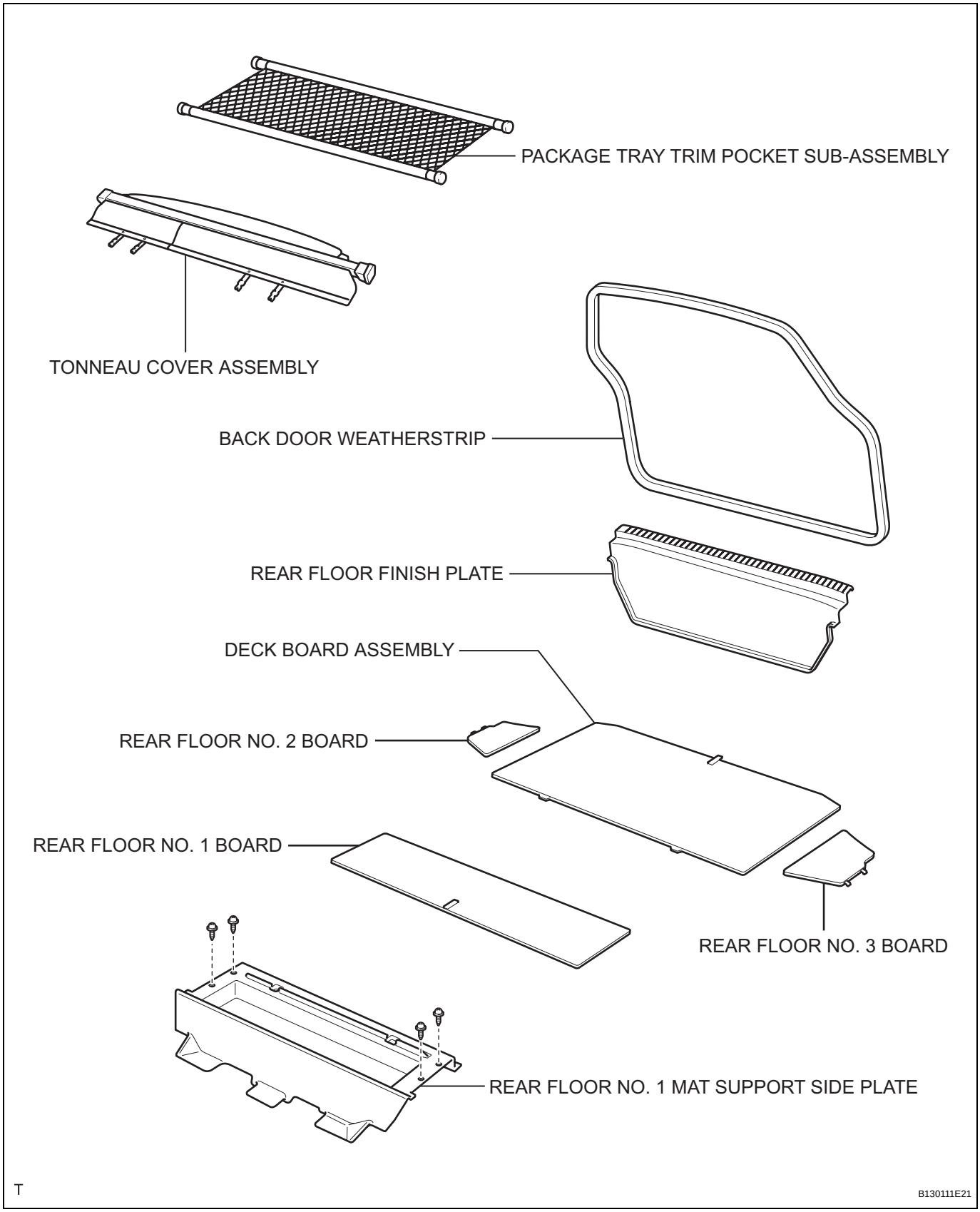
PACKAGE TRAY TRIM POCKET SUB-ASSEMBLY
TONNEAU COVER ASSEMBLY
BACK DOOR WEATHERSTRIP
REAR FLOOR FINISH PLATE
DECK BOARD ASSEMBLY
REAR FLOOR NO. 2 BOARD
REAR FLOOR NO. 1 BOARD
REAR FLOOR NO. 3 BOARD
REAR FLOOR NO. 1 MAT SUPPORT SIDE PLATE
T
B130111E21

REASSEMBLY

HINT:
- Use the same procedures for the LH side and RH side.
- The procedures listed below are for the LH side.

1. APPLY HIGH TEMPERATURE GREASE

(a) Apply high temperature grease to the contact surface of the shoe and backing plate.

2. INSTALL PARKING BRAKE SHOE LEVER LH

3. INSTALL NO. 2 PARKING BRAKE SHOE ASSEMBLY LH

(a) Connect the parking brake cable to the parking brake shoe lever.

(b) Apply high temperature grease to the following contact surfaces of the shoe.
- Shoe to anchor pin
- Shoe to parking brake lever pin
- Shoe to spring

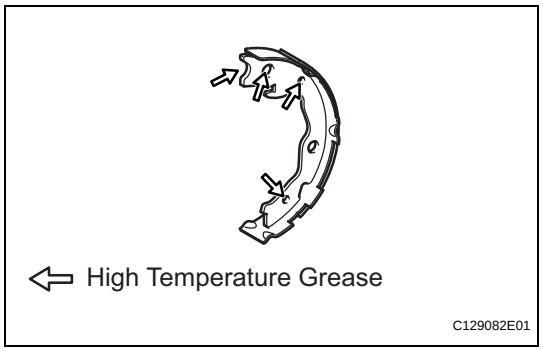

(c) Install the shoe with the shoe hold-down spring and pin.

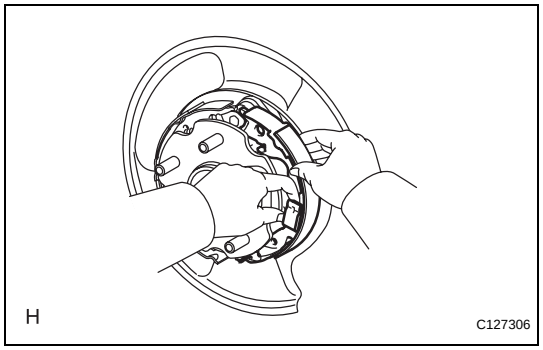

4. INSTALL NO. 1 PARKING BRAKE SHOE ASSEMBLY LH

(a) Apply high temperature grease to the following contact surfaces of the shoe.
- Shoe to anchor pin
- Shoe to spring

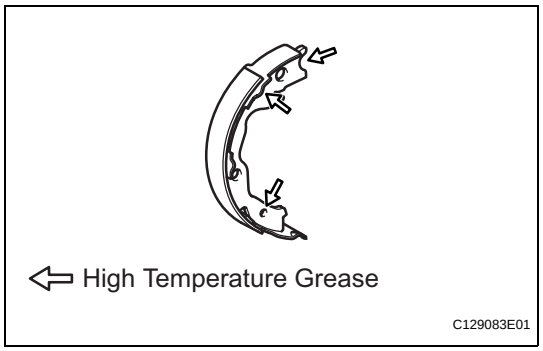

PB

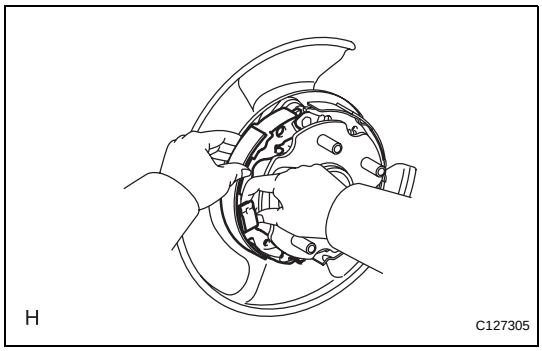

(b) Install the shoe with the shoe hold-down spring and pin.

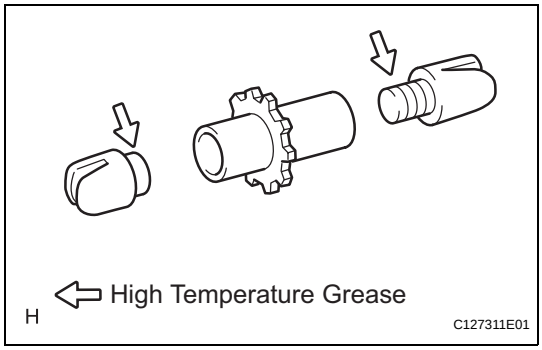

5. INSTALL PARKING BRAKE SHOE ADJUSTING SCREW SET

(a) Apply high temperature grease to the adjusting bolt.
(b) Install the screw set.

6. INSTALL PARKING BRAKE SHOE RETURN TENSION SPRING (for Lower Side)

(a) Using needle-nose pliers, install the tension spring.

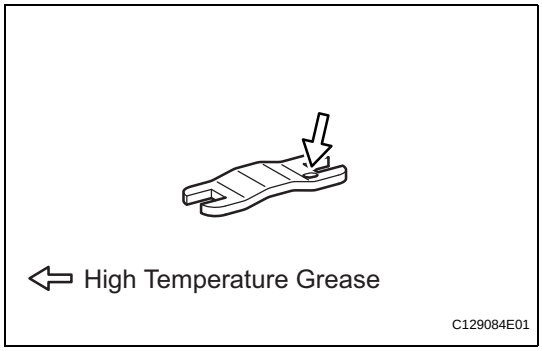

7. INSTALL PARKING BRAKE SHOE STRUT LH

(a) Apply high temperature grease to the contact surface of the strut and shoe return tension spring.
(b) Install the strut.

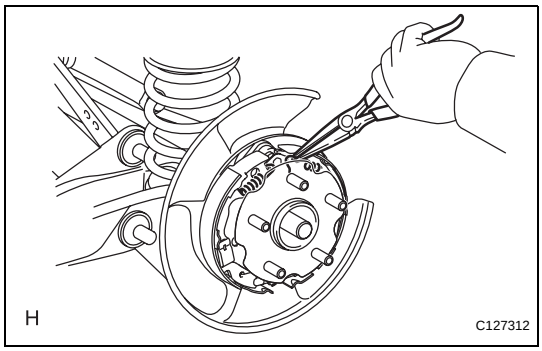

8. INSTALL PARKING BRAKE SHOE RETURN TENSION SPRING (for Upper Side)

(a) Using needle-nose pliers, install the 2 shoe return tension springs.

PB

9. CHECK PARKING BRAKE INSTALLATION

(a) Check that each part is installed properly.

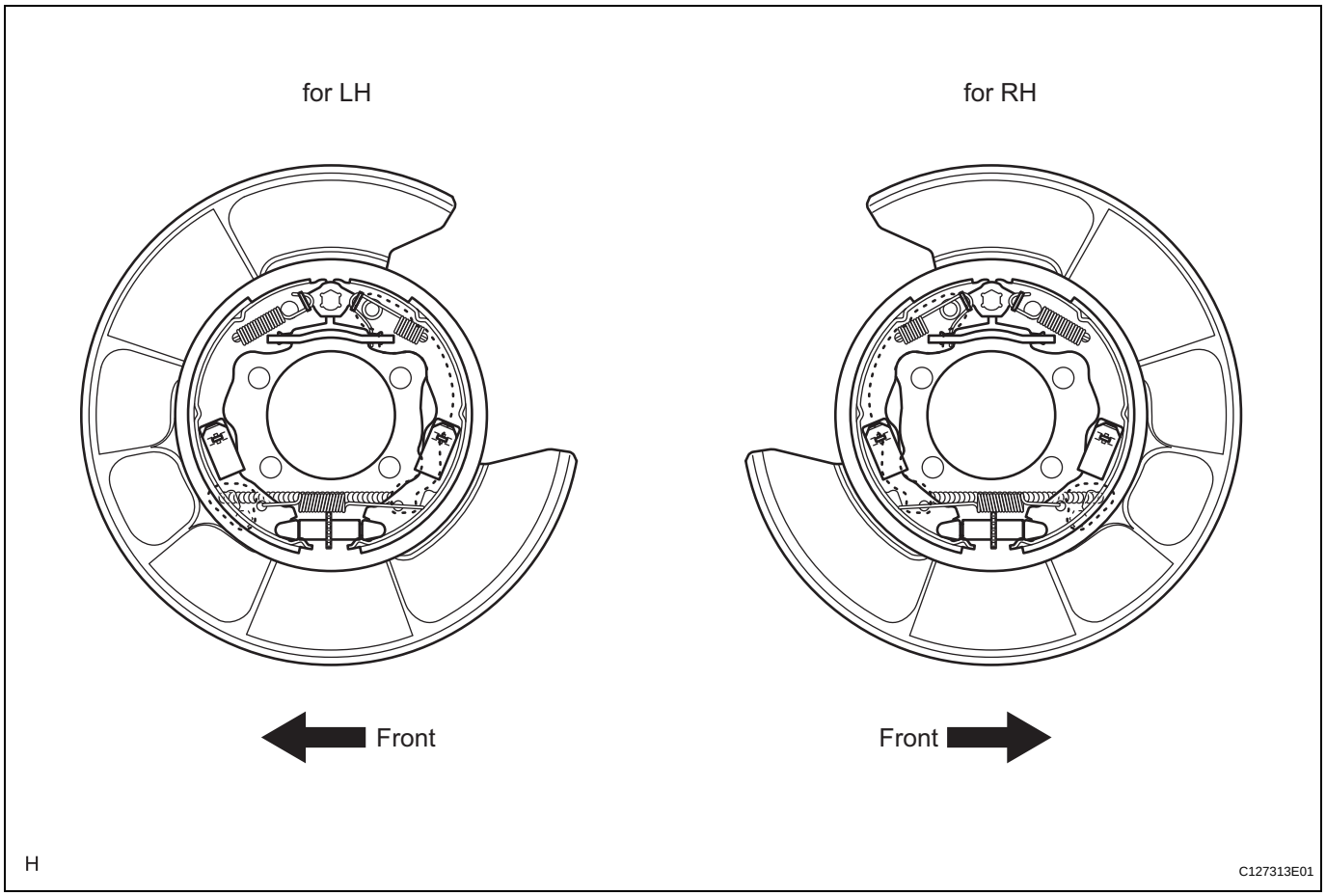

NOTICE:
There should be no oil or grease adhering to the friction surface of the shoe lining and disc.

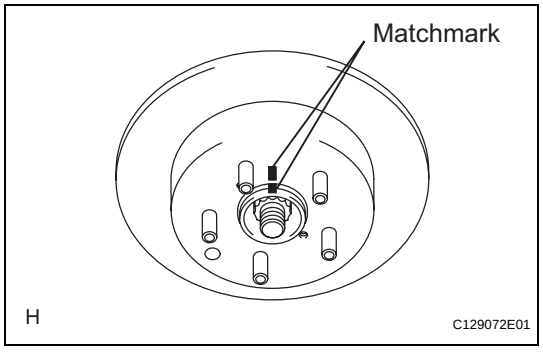

10. INSTALL REAR DISC

(a) Align the matchmarks and install the disc.
HINT:
When replacing the disc with new one, select the installation position where the disc has the minimum runout.

11. ADJUST PARKING BRAKE SHOE CLEARANCE

(a) Temporarily install the hub nuts.

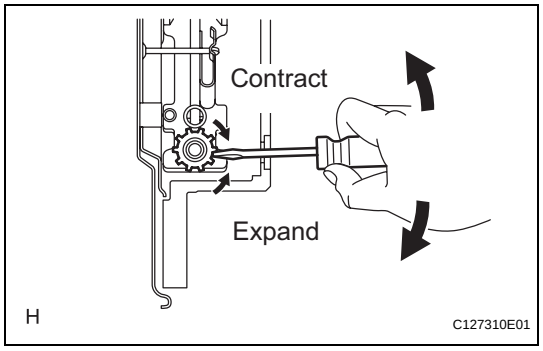

(b) Remove the shoe adjusting hole plug, and then turn the adjuster to expand the shoe adjuster until the disc locks.

(c) Turn and contact the shoe adjuster until the disc can rotate smoothly.
Standard return notch:
8 notches

(d) Check that the shoe has no brake drag.

PB

12. **INSTALL PARKING BRAKE SHOE ADJUSTING HOLE PLUG**
    (a) Install the shoe adjusting hole plug to the rear disc.
13. **CONNECT REAR DISC BRAKE CYLINDER MOUNTING LH (See page BR-60)**
14. **INSTALL REAR WHEEL**
    Torque: 103 N*m (1,050 kgf*cm, 76 ft.*lbf)
15. **DRIVE VEHICLE**
    (a) Pull the parking brake lever with a force of 147 N (15 kgf, 33 lbf).
    (b) Drive the vehicle at approximately 50 km/h (31 mph) for approximately 400 m (0.25 miles).
    NOTICE:
    Drive the vehicle on a safe, level and dry road.
    (c) Repeat the above steps 2 or 3 times.
16. **CHECK PARKING BRAKE LEVER TRAVEL (See page PB-1)**
17. **ADJUST PARKING BRAKE LEVER TRAVEL (See page PB-2)**

PARKING BRAKE ASSEMBLY

COMPONENTS

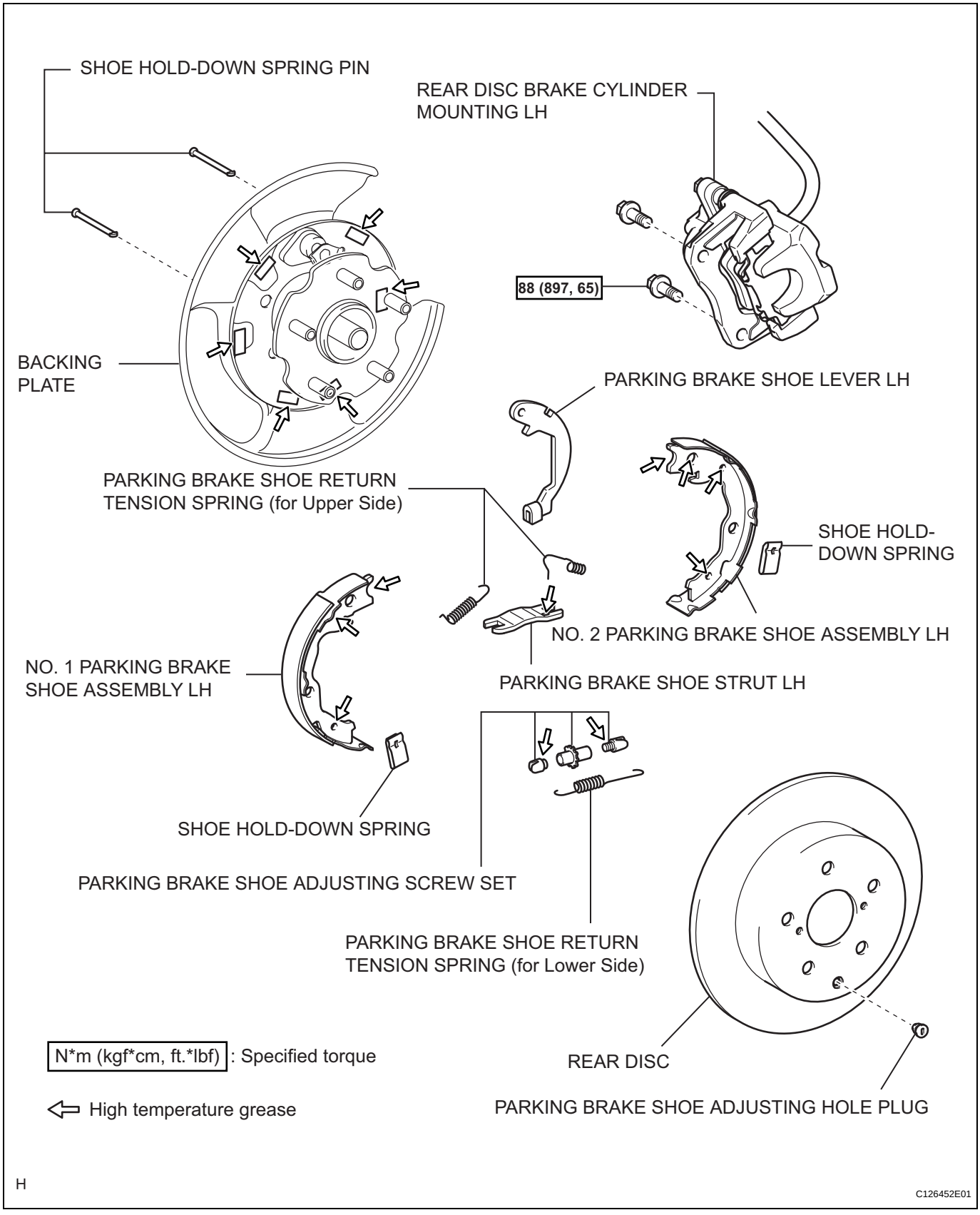

PB

DISASSEMBLY

HINT:
- Use the same procedures for the LH side and RH side.
- The procedures listed below are for the LH side.

1. REMOVE REAR WHEEL

2. DISCONNECT REAR DISC BRAKE CYLINDER MOUNTING LH (See page BR-55)

3. REMOVE PARKING BRAKE SHOE ADJUSTING HOLE PLUG

(a) Remove the shoe adjusting hole plug from the rear disc.

4. REMOVE REAR DISC

(a) Put matchmarks on the disc and axle hub.

(b) Release the parking brake.

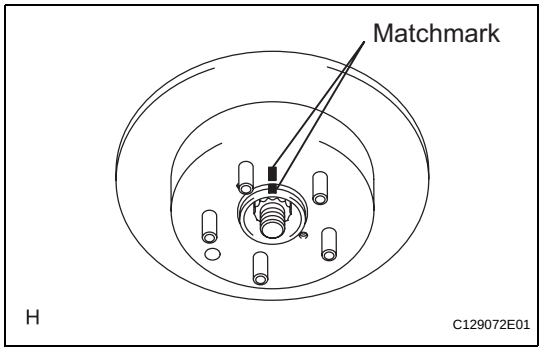

(c) Turn the shoe adjuster until the disc turns freely, and then remove the disc.

(d) Install the shoe adjusting hole plug to the disc.

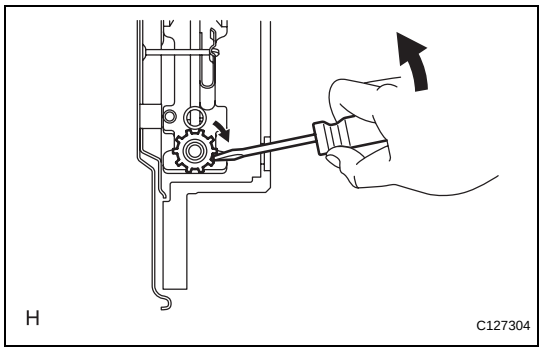

5. REMOVE PARKING BRAKE SHOE RETURN TENSION SPRING (for Upper Side)

(a) Using needle-nose pliers, remove the 2 shoe return tension springs.

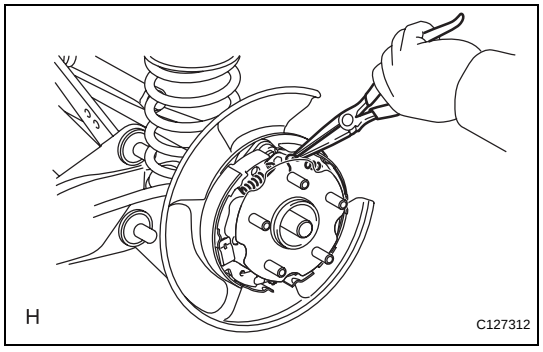

6. REMOVE PARKING BRAKE SHOE STRUT LH

7. REMOVE PARKING BRAKE SHOE RETURN TENSION SPRING (for Lower Side)

(a) Using needle-nose pliers, remove the tension spring.

8. REMOVE PARKING BRAKE SHOE ADJUSTING SCREW SET

(a) Remove the screw set.

PB

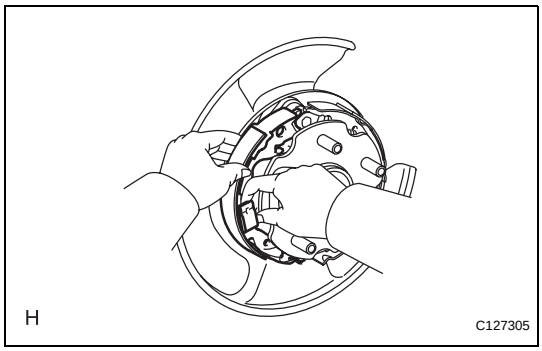

9. REMOVE NO. 1 PARKING BRAKE SHOE ASSEMBLY LH

(a) Press the shoe hold-down spring to remove the pin, shoe hold-down spring and shoe.

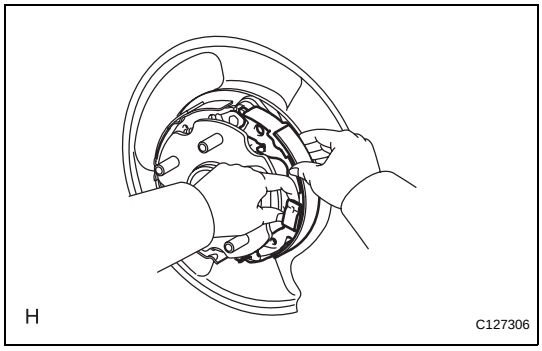

10. REMOVE NO. 2 PARKING BRAKE SHOE ASSEMBLY LH

(a) Slide the shoe to remove the shoe hold-down spring, pin and shoe.

(b) Disconnect the parking brake cable from the parking brake shoe lever.

11. REMOVE PARKING BRAKE SHOE LEVER LH

INSPECTION

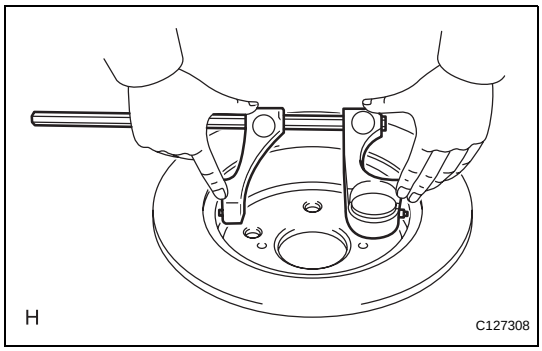

1. CHECK BRAKE DISC INSIDE DIAMETER

(a) Using a drum gauge or equivalent, measure the inside diameter of the disc.

Standard inside diameter:
172 mm (6.77 in.)
Maximum inside diameter:
173 mm (6.81 in.)

If the inside diameter is greater than the maximum, replace the disc.

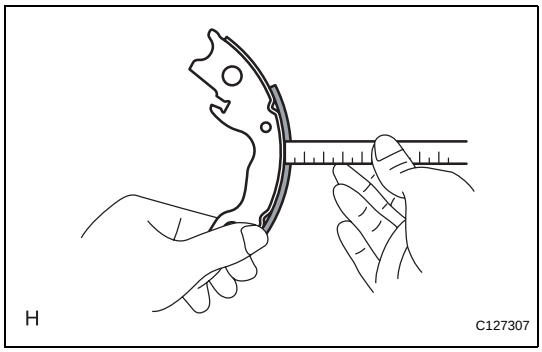

2. CHECK PARKING BRAKE SHOE LINING THICKNESS

(a) Using a ruler, measure the shoe lining thickness.

Standard thickness:
3.5 mm (0.138 in.)
Minimum thickness:
1.0 mm (0.039 in.)

If the shoe lining thickness is equal to or less than the minimum, replace the brake shoe assembly.

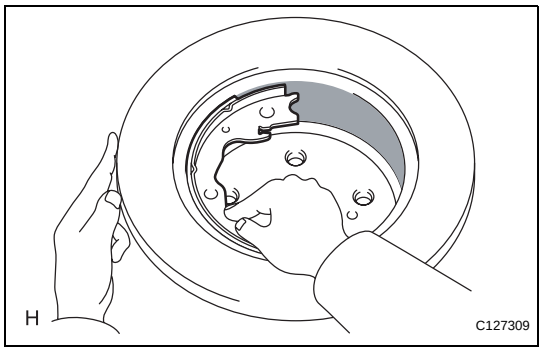

3. CHECK BRAKE DISC AND PARKING BRAKE SHOE LINING FOR PROPER CONTACT

(a) Apply chalk to the inside surface of the disc. Touch the brake shoe to the disc and check that there is full contact between the brake shoe and disc (white chalk is transferred to the entire brake shoe).

If the contact is not as specified, use a shoe grinder to repair the brake shoe, or replace the brake shoe assembly.

PB

INSTALLATION

1. INSTALL PARKING BRAKE CABLE

(a) Connect the cable to the backing plate and parking brake shoe lever.

(1) Pass the cable through the backing plate, and then connect the cable to the lever.

(2) Install the cable to the backing plate with the bolt.

Torque: 8.0 N*m (82 kgf*cm, 71 in.*lbf)

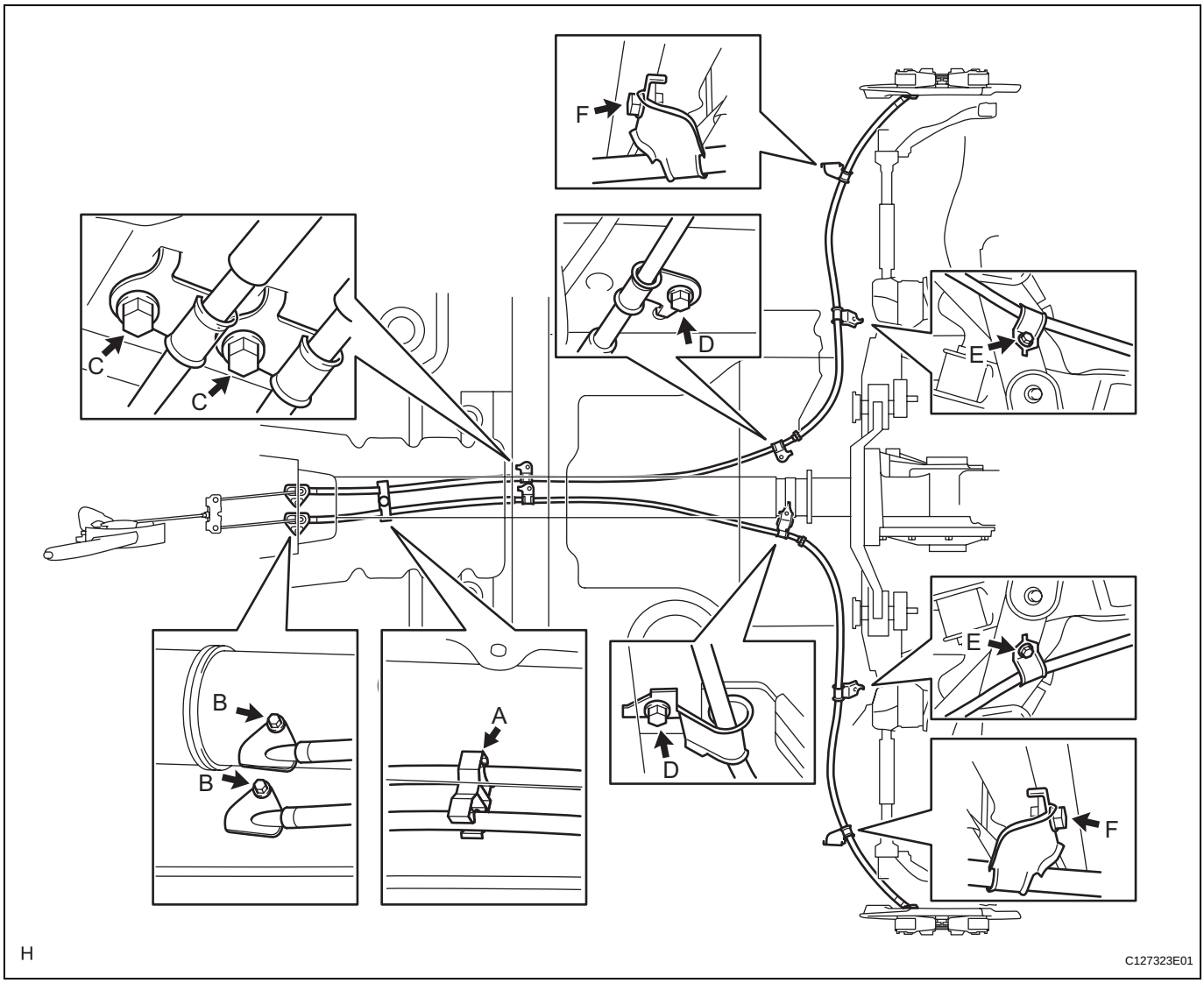

(b) Install the clamp and clamp bolt (labeled F) to the trailing arm.

Torque: 6.0 N*m (61 kgf*cm, 53 in.*lbf)

NOTICE:

Securely install the clamp.

(c) Install the clamp and clamp bolt (labeled E) to the rear suspension crossmember.

Torque: 6.0 N*m (61 kgf*cm, 53 in.*lbf)

NOTICE:

Securely install the clamp.

(d) Install the clamp and clamp bolt (labeled D) to the crossmember.
Torque: 6.0 N*m (61 kgf*cm, 53 in.*lbf)
NOTICE:
Securely install the clamp.

(e) Install the clamp and clamp bolt (labeled C) to the body.
Torque: 6.0 N*m (61 kgf*cm, 53 in.*lbf)
NOTICE:
Securely install the clamp.

(f) Install the casing cap and casing cap bolt (labeled B) to the body.
Torque: 6.0 N*m (61 kgf*cm, 53 in.*lbf)
NOTICE:
Securely install the casing cap.

(g) Install the cable clamp (labeled A) to the body.
NOTICE:
Securely install the clamp.

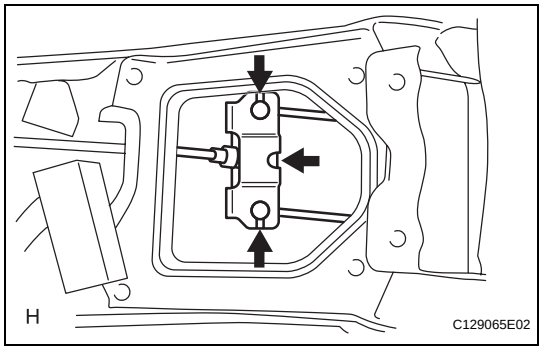

2. INSTALL PARKING BRAKE EQUALIZER

(a) Connect the 3 cable ends to the equalizer.

3. INSTALL REAR WHEEL
Torque: 103 N*m (1,050 kgf*cm, 76 ft.*lbf)

4. ADJUST PARKING BRAKE LEVER TRAVEL (See page PB-2)

5. INSTALL REAR CONSOLE BOX SUB-ASSEMBLY

(a) Install the rear console box (see page IP-23).
HINT:
Refer to the procedures from the installation of the rear console box sub-assembly up until the installation of the No. 1 console upper panel garnish.

PARKING BRAKE CABLE

COMPONENTS

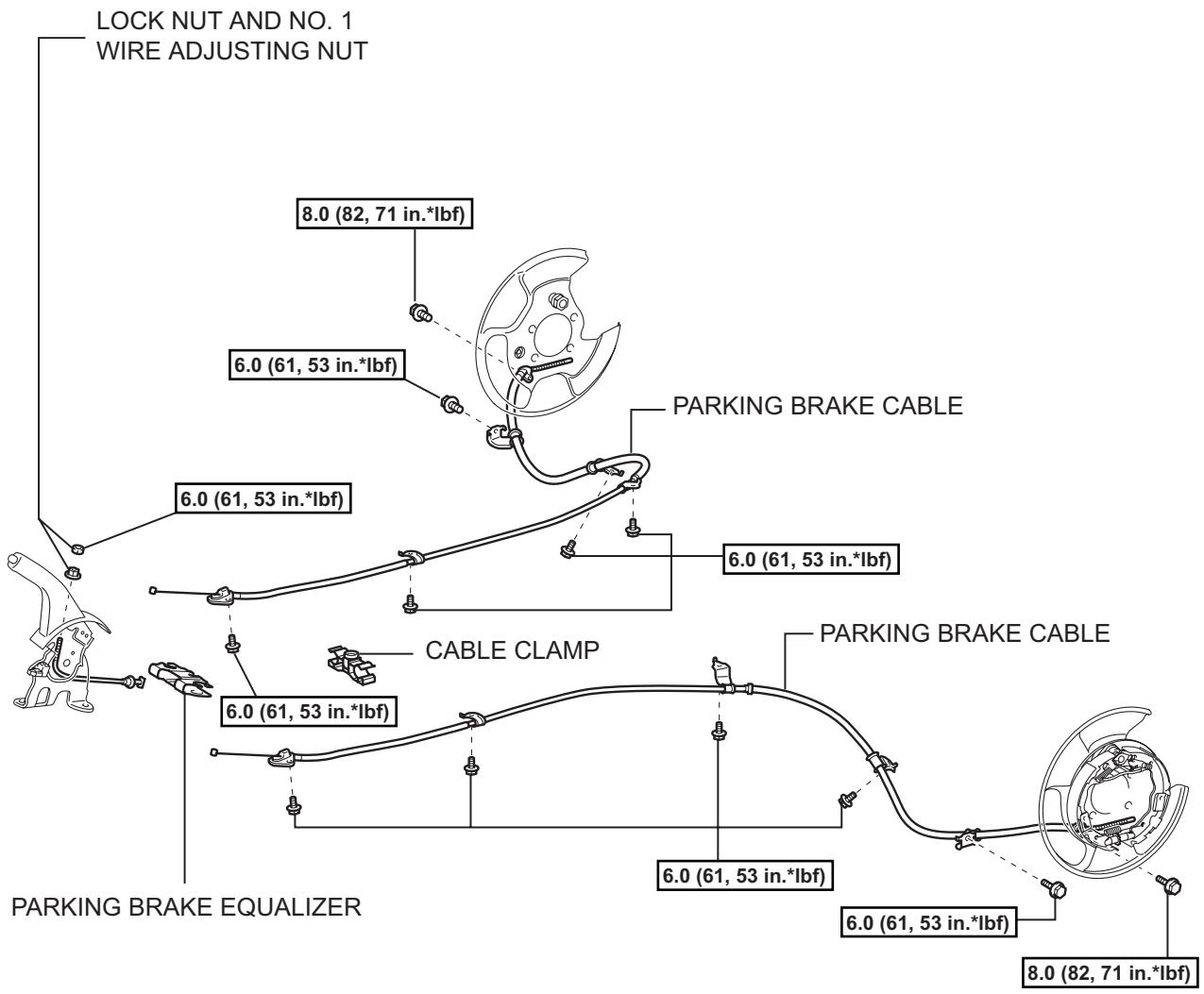

N*m (kgf*cm, ft.*lbf) : Specified torque

H

C127049E02

PB

REMOVAL

1. **REMOVE REAR CONSOLE BOX SUB-ASSEMBLY**
   (a) Remove the rear console box (see page IP-16).
   HINT:
   Refer to the procedures from the removal of the No. 1 console upper panel garnish up until the removal of the rear console box sub-assembly.
2. **LOOSEN LOCK NUT AND NO. 1 WIRE ADJUSTING NUT (See page PB-1)**
3. **REMOVE PARKING BRAKE EQUALIZER**
   (a) Disconnect the 3 cable ends and then remove the equalizer.
4. **REMOVE REAR WHEEL**
5. **REMOVE PARKING BRAKE CABLE**

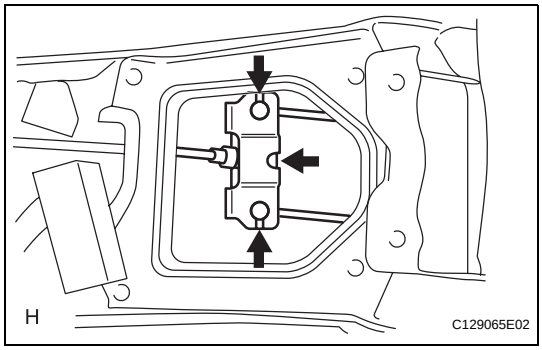

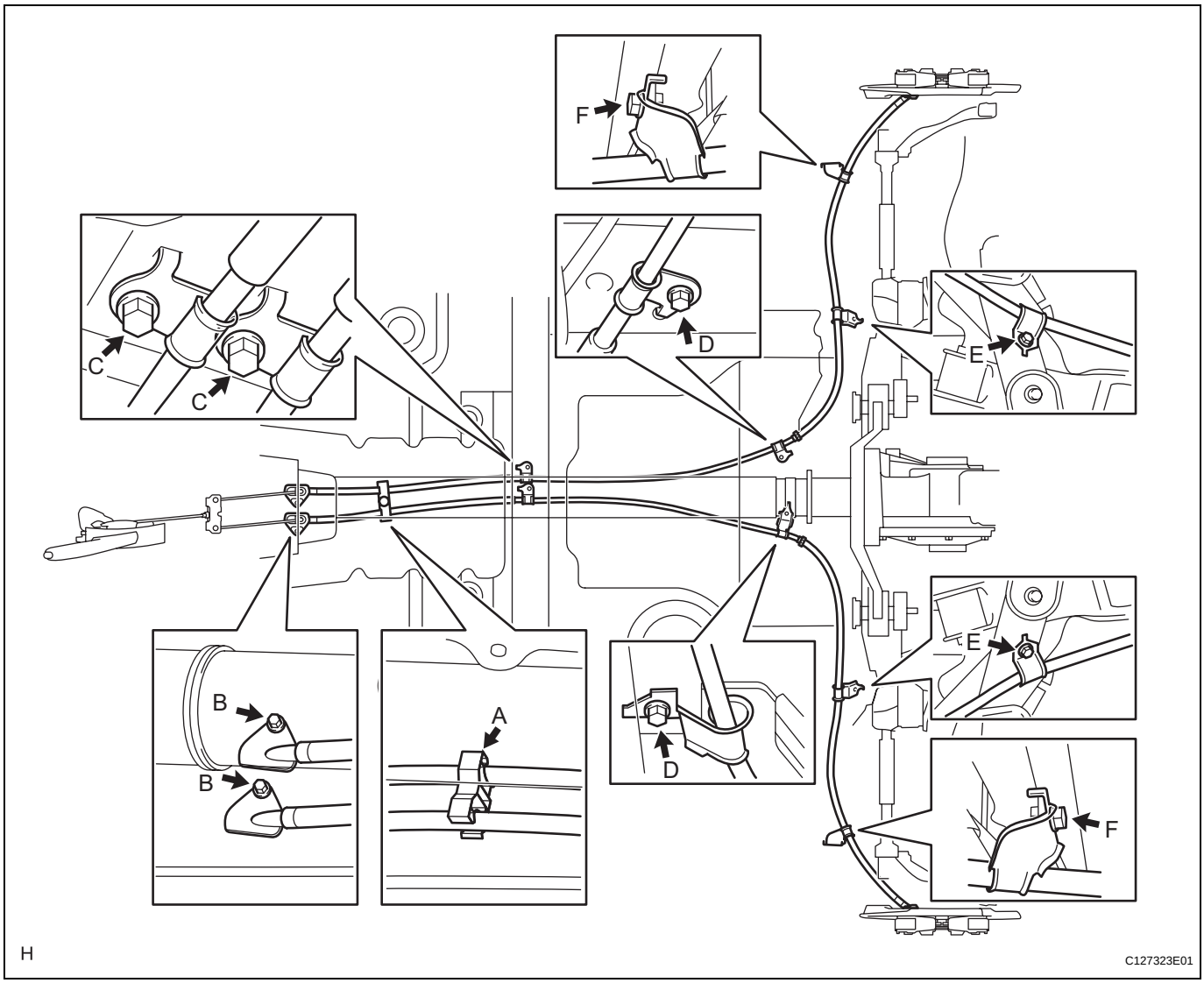

(a) Remove the cable clamp (labeled A) from the body.

(b) Remove the casing cap bolt (labeled B) from the body.
(c) Remove the clamp bolt (labeled C) from the body.
(d) Remove the clamp bolt (labeled D) from the crossmember.
(e) Remove the clamp bolt (labeled E) from the rear suspension crossmember.
(f) Remove the clamp bolt (labeled F) from the trailing arm.
(g) Disconnect the cable from the parking brake shoe lever and backing plate.
    (1) Disconnect the cable from the lever (see page PB-13).
    (2) Remove the bolt and disconnect the cable from the backing plate.

REMOVAL

1. DISCONNECT CABLE FROM NEGATIVE BATTERY TERMINAL

CAUTION:

Wait at least 90 seconds after disconnecting the cable from the negative (-) battery terminal to prevent airbag and seat belt pretensioner activation.

2. REMOVE REAR CONSOLE BOX SUB-ASSEMBLY

(a) Remove the rear console box (see page IP-16).

HINT:

Refer to the procedures from the removal of the No. 1 console upper panel garnish up until the removal of the rear console box sub-assembly.

3. REMOVE PARKING BRAKE LEVER SUB-ASSEMBLY

(a) Disconnect the parking brake switch connector.

(b) Remove the lock nut and wire adjusting nut.

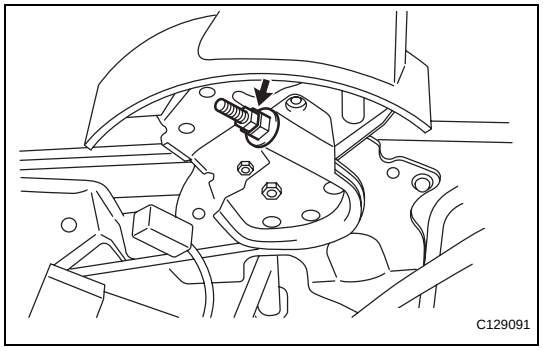

(c) Disconnect the No. 1 parking brake cable from the parking brake equalizer.

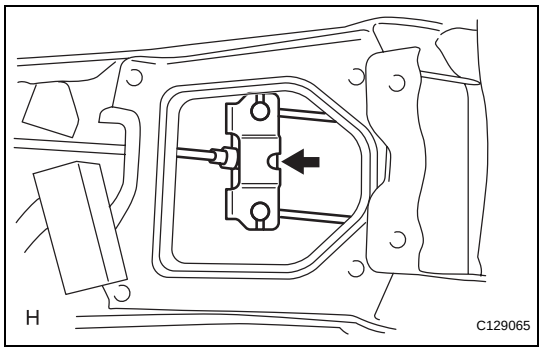

(d) Remove the 2 bolts and parking brake lever (with the No. 1 parking brake cable).

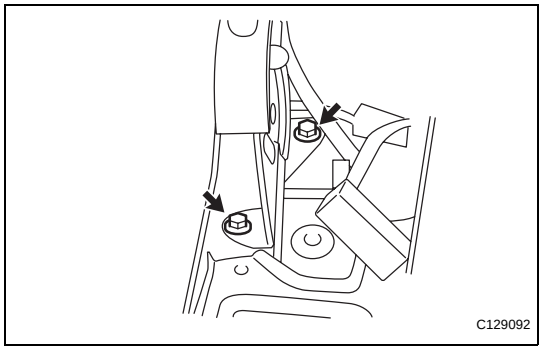

4. REMOVE NO. 1 PARKING BRAKE CABLE ASSEMBLY

(a) Disconnect the cable from the lever.

5. REMOVE PARKING BRAKE SWITCH ASSEMBLY

(a) Remove the screw and switch from the lever.

INSTALLATION

1. **INSTALL PARKING BRAKE SWITCH ASSEMBLY**
   (a) Install the parking brake switch with the screw.
   Torque: 0.88 N*m (9.0 kgf*cm, 7.8 in.*lbf)

2. **INSTALL NO. 1 PARKING BRAKE CABLE ASSEMBLY**
   (a) Connect the cable to the lever.

3. **INSTALL PARKING BRAKE LEVER SUB-ASSEMBLY**
   (a) Install the parking brake lever (with the No. 1 parking brake cable) with the 2 bolts.
   Torque: 14.5 N*m (148 kgf*cm, 11 ft.*lbf)

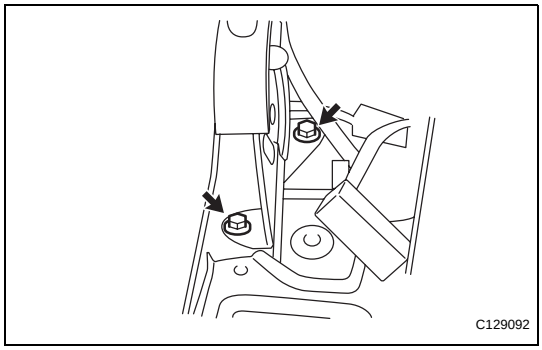

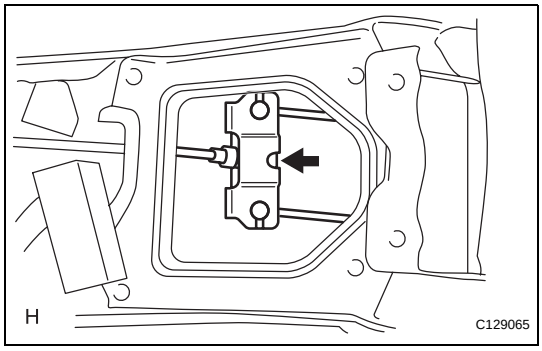

   (b) Connect the No. 1 parking brake cable to the parking brake equalizer.

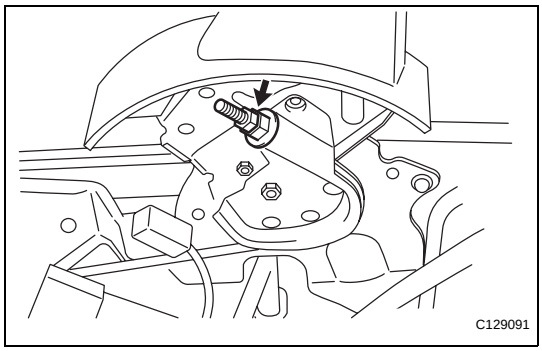

   (c) Temporarily install the wire adjusting nut and lock nut.
   (d) Connect the parking brake switch connector.

4. **CHECK PARKING BRAKE LEVER TRAVEL (See page PB-1)**

5. **ADJUST PARKING BRAKE LEVER TRAVEL (See page PB-2)**

6. **INSTALL REAR CONSOLE BOX SUB-ASSEMBLY**
   (a) Install the rear console box (see page IP-23).
   HINT:
   Refer to the procedures from the installation of the rear console box sub-assembly up until the installation of the No. 1 console upper panel garnish.

7. **CONNECT CABLE TO NEGATIVE BATTERY TERMINAL**

PB

PARKING BRAKE LEVER

COMPONENTS

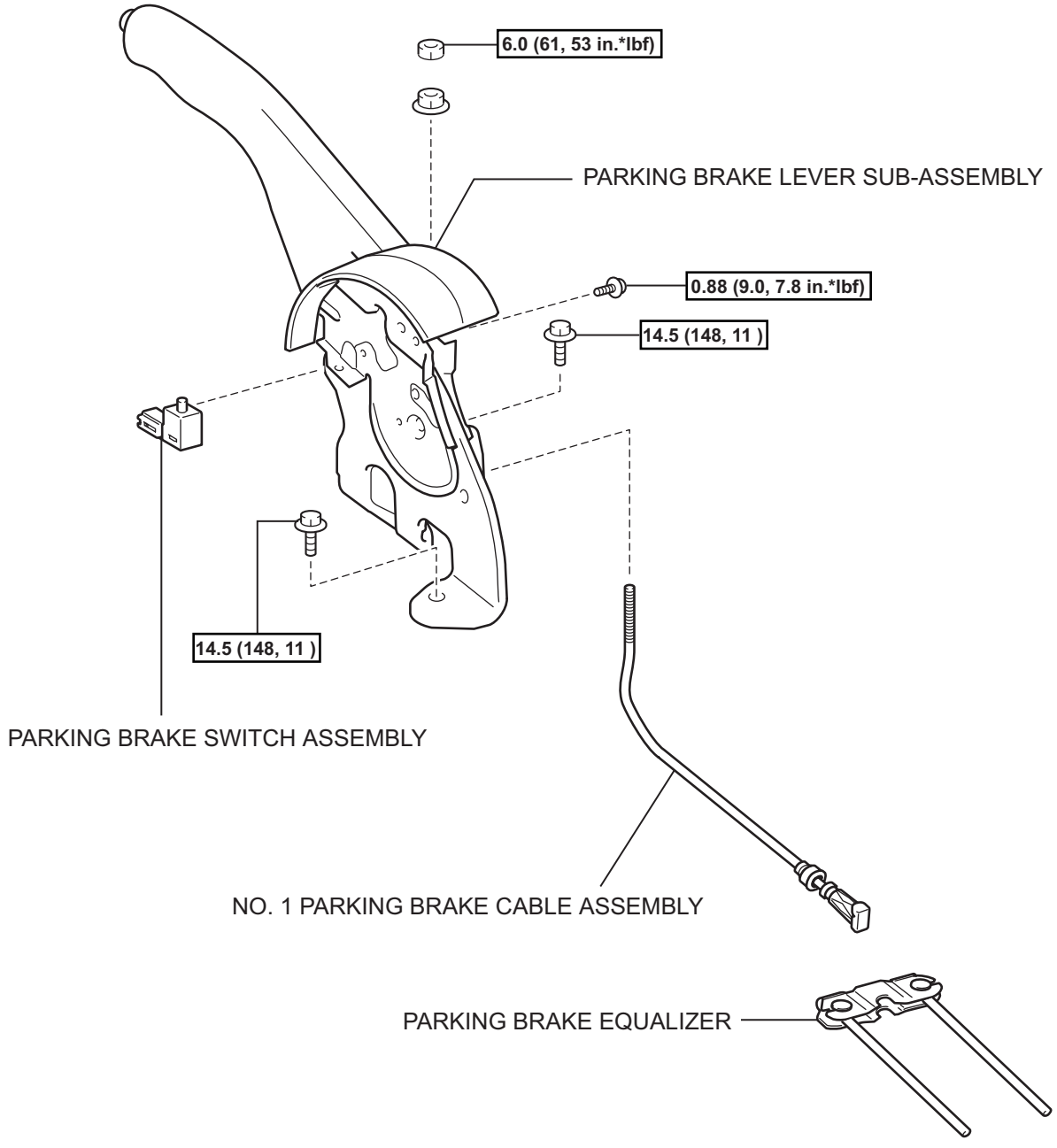

N*m (kgf*cm, ft.*lbf) : Specified torque

H

C127048E02

PB

ON-VEHICLE INSPECTION

1. CHECK PARKING BRAKE SWITCH ASSEMBLY

(a) Remove the rear console box (see page IP-16).
HINT:
Refer to the procedures from the removal of the No. 1 console upper panel garnish up until the removal of the rear console box sub-assembly.

(b) Disconnect the parking brake switch connector.

(c) Measure the resistance of the switch.
Standard resistance

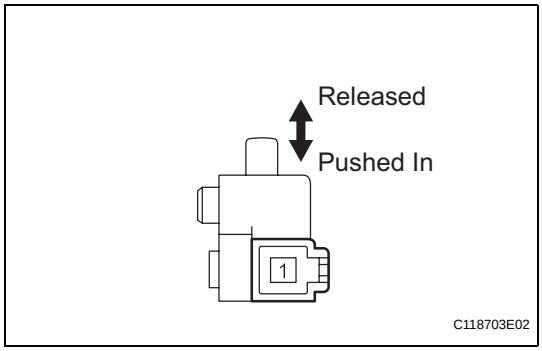

Tester Connection	Condition	Specified Condition
1 - Body ground	Parking brake switch ON (Switch pin released)	Below 1 Ω
1 - Body ground	Parking brake switch OFF (Switch pin pushed in)	10 kΩ or higher

If the result is not as specified, replace the switch assembly.

PARKING BRAKE SYSTEM

PROBLEM SYMPTOMS TABLE

HINT:
Use the table below to help determine the cause of the problem symptom. The potential causes of the symptoms are listed in order of probability in the "Suspected area" column of the table. Check each symptom by checking the suspected areas in the order they are listed. Replace parts as necessary.

Parking brake system

Symptom	Suspected area	See page
Parking brake drags	1. Parking brake lever travel (adjustment necessary)	PB-1
	2. No. 1 parking brake cable (sticking)	PB-4
	3. No. 2 parking brake cable (sticking)	PB-8
	4. No. 3 parking brake cable (sticking)	PB-8
	5. Parking brake shoe clearance (adjustment necessary)	PB-15
	6. Shoe return tension spring (damaged)	PB-13

ADJUSTMENT

1. **CHECK PARKING BRAKE LEVER TRAVEL**
   (a) Pull the lever upward with a force of approximately 200 N (20 kgf, 44 lbf) and count the number of clicks.
   OK:
   7 to 9 clicks (without rear brake dragging)
2. **REMOVE UPPER REAR CONSOLE PANEL SUB-ASSEMBLY (See page IP-19)**
3. **LOOSEN LOCK NUT AND NO. 1 WIRE ADJUSTING NUT**

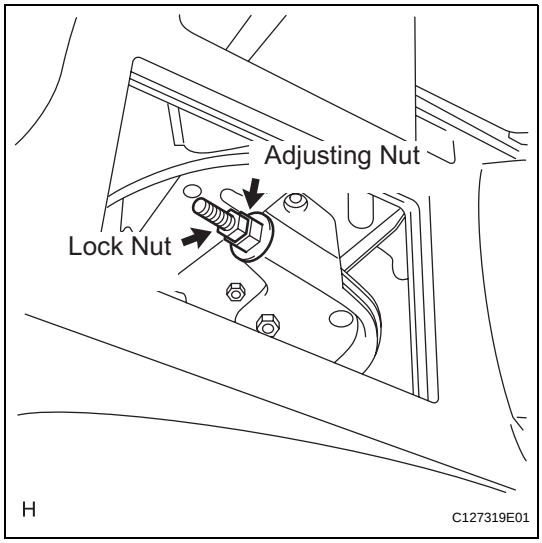

4. **REMOVE REAR WHEEL**
5. **ADJUST PARKING BRAKE SHOE CLEARANCE (See page PB-17)**
6. **INSTALL REAR WHEEL**
   Torque: 103 N*m (1,050 kgf*cm, 76 ft.*lbf)

PB

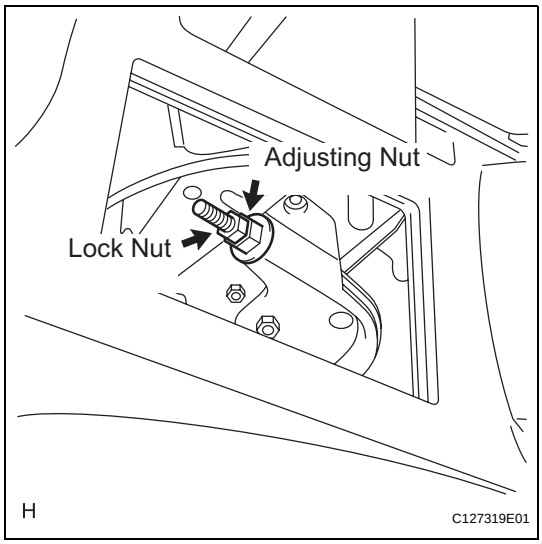

7. **ADJUST PARKING BRAKE LEVER TRAVEL**
   (a) Turn the No. 1 wire adjusting nut until the lever travel is correct.
   OK:
   7 to 9 clicks (without rear brake dragging)
   <Lever pulling force: approximately 200 N (20 kgf, 44 lbf)>
   (b) Tighten the lock nut.
   Torque: 6.0 N*m (61 kgf*cm, 53 in.*lbf)
   (c) Operate the parking brake lever 3 to 4 times, and check the parking brake lever travel.
   OK:
   7 to 9 clicks (without rear brake dragging)
   <Lever pulling force: approximately 200 N (20 kgf, 44 lbf)>
   (d) When operating the parking brake lever, check that the brake warning light illuminates at the first click.
   Standard condition:
   Brake warning light always illuminates at the first click.

SYSTEM DIAGRAM

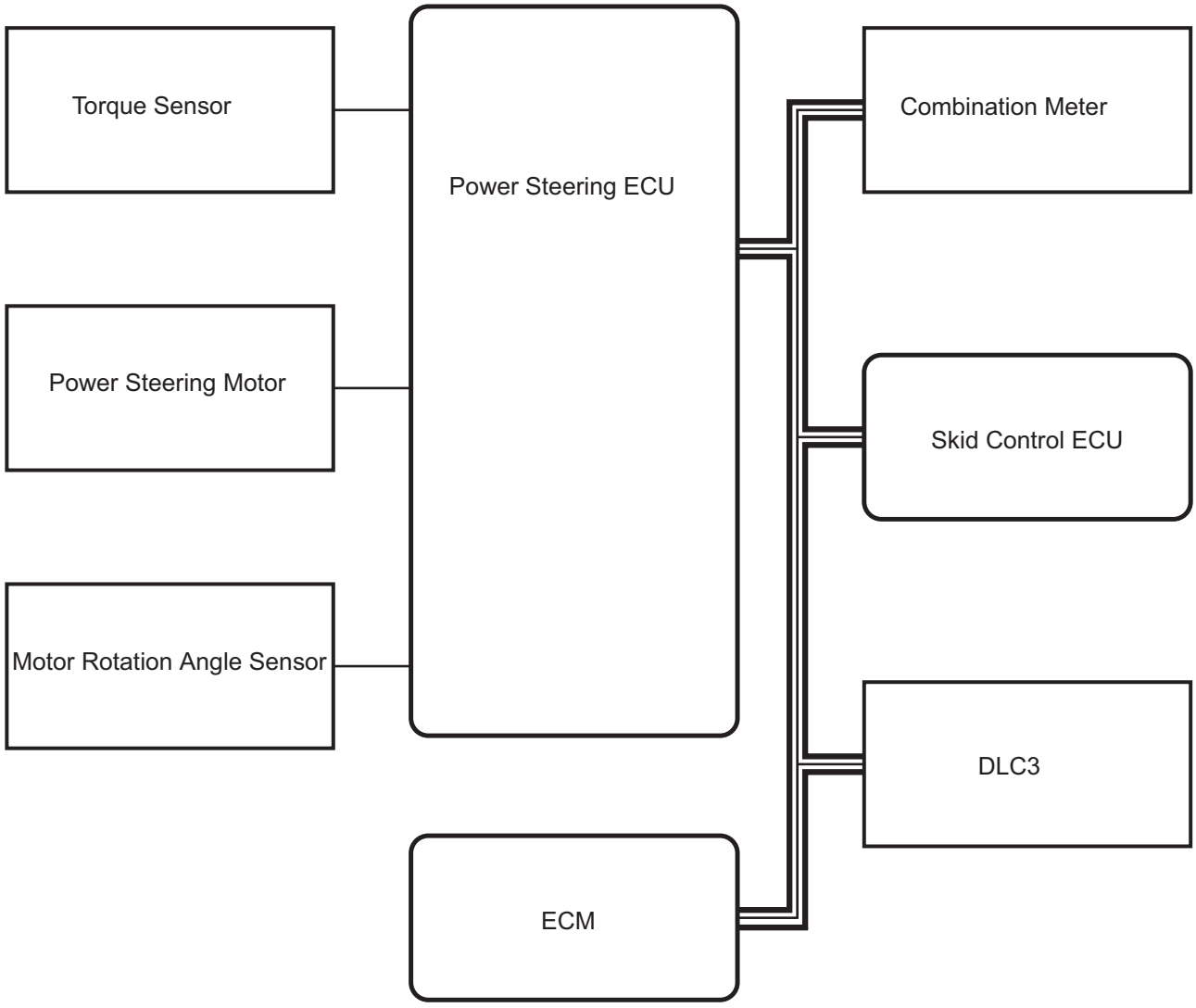

N

F100914E05

PS

SYSTEM DESCRIPTION

1. DESCRIPTION

The EPS (Electronic Power Steering) system generates torque through the operation of the motor and the reduction gear installed on the column shaft in order to assist steering effort.

The power steering ECU determines directions and the amount of assisting power in accordance with vehicle speed signals and signals from the torque sensor built into the steering column assembly. As a result, the power steering adjusts the steering effort so that it is lighter during low speed driving and heavier during high speed driving.

(a) Power steering ECU:
The power steering ECU calculates assisting power based on steering torque signals from the torque sensor and vehicle speed signals from the skid control ECU.

(b) Torque sensor:
The torque sensor detects the steering effort generated when the steering wheel is turned and converts it to an electrical signal.

(c) EPS motor:
The EPS motor is activated by the current from the power steering ECU and generates torque to assist the steering effort.

(d) Motor rotation angle sensor:
The motor rotation angle sensor consists of the resolver sensor, which excels in reliability and durability. The rotation angle sensor detects the rotation angle of the motor and outputs it to the power steering ECU. As a result, it ensures efficient EPS control.

HOW TO PROCEED WITH TROUBLESHOOTING

HINT:
Perform troubleshooting in accordance with the following flowchart.
*: Use the intelligent tester.

1 **VEHICLE BROUGHT TO WORKSHOP**

NEXT

2 **INSPECT BATTERY VOLTAGE**

Standard voltage:
11 to 14 V
If the voltage is below 11 V, recharge or replace the battery before proceeding.

NEXT

3 **PROBLEM SYMPTOM CONFIRMATION**

NEXT

PS

4 **CHECK CAN COMMUNICATION SYSTEM***

(a) Check for DTC (see page PS-11).
Result

Result	Proceed to
CAN system DTC is not output	A
CAN system DTC is output	B

HINT:
- When any CAN communication system DTCs are output, perform troubleshooting on the CAN communication system first.
- When communication to the power steering ECU is not established through the intelligent tester, inspect terminals SIL of the DLC3 and the power steering ECU, and the IG circuit of the power steering ECU.

B → **PROCEED TO CAN COMMUNICATION SYSTEM**

A

5	CHECK DTC*

(a) Check for DTC (see page PS-11).

Result

Result	Proceed to
DTC is output	A
DTC is not output	B

A → **Go to step 8**

B

6	PROBLEM SYMPTOMS TABLE

Result

Result	Proceed to
Fault is not listed in problem symptoms table	A
Fault is listed in problem symptoms table	B

B → **Go to step 8**

A

7	OVERALL ANALYSIS AND TROUBLESHOOTING*

(a) Terminals of ECU (see page PS-8).
(b) DATA LIST / ACTIVE TEST (see page PS-14).

NEXT

8	REPAIR OR REPLACE

NEXT

9	CONFIRMATION TEST

NEXT

END

PROBLEM SYMPTOMS TABLE

HINT:
Use the table below to help determine the cause of the problem symptom. The potential causes of the symptoms are listed in order of probability in the "Suspected area" column of the table. Check each symptom by checking the suspected areas in the order they are listed. Replace parts as necessary.

Electronic power steering system

Symptom	Suspected area	See page
Heavy steering	1. Front tires (improperly inflated, unevenly worn)	TW-1
	2. Front wheel alignment (incorrect)	SP-3
	3. Front suspension (lower ball joint)	SP-27
	4. Steering gear assembly	PS-42
	5. Power steering motor	PS-25
	6. Power source voltage of power steering ECU	PS-37
	7. Power steering ECU	PS-46
Steering effort differs between turning right and left, or steering effort uneven	1. Front tires (improperly inflated, unevenly worn)	TW-1
	2. Front wheel alignment (incorrect)	SP-3
	3. Front suspension (lower ball joint)	SP-27
	4. Steering gear assembly	PS-42
	5. Torque sensor (built into steering column)	PS-22
	6. Steering column assembly	SR-11
	7. Power steering motor	PS-25
	8. Power steering ECU	PS-46
While driving, steering effort does not change in accordance with vehicle speed or steering wheel does not return properly	1. Front suspension (lower ball joint)	SP-27
	2. Speed sensor	BC-28
	3. Skid control ECU	BC-41
	4. Torque sensor (built into steering column)	PS-22
	5. Power steering motor	PS-25
	6. Power steering ECU	PS-46
	7. Controlling CAN communication system	CA-8
Friction occurs when turning steering wheel during low speed driving	1. Power steering motor	PS-25
	2. Steering column assembly	SR-11
High-pitched sound (squeaking) occurs when turning steering wheel slowly with vehicle stopped	1. Power steering motor	PS-25
Steering wheel vibrates and noise occurs when turning steering wheel with vehicle stopped	1. Power steering motor	PS-25
	2. Steering column assembly	SR-11
P/S warning always indicated on combination meter	1. Power source voltage of power steering ECU	PS-37
	2. Combination meter	ME-53
	3. Power steering ECU	PS-46

TERMINALS OF ECU

1. CHECK POWER STEERING ECU

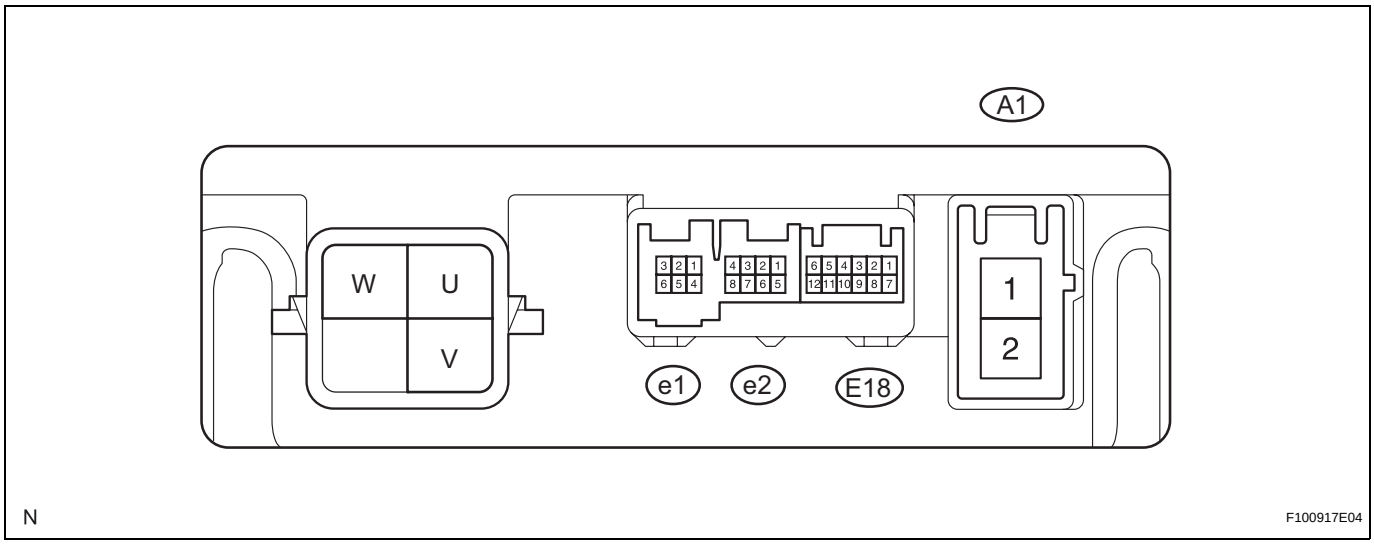

HINT:
Measurements cannot be performed on the C connector side of the power steering ECU.

Symbols	Wiring Color	Terminal Description
U	W	U phase motor output
V	B	V phase motor output
W	W-R	W phase motor output

(a) Measure the voltage and resistance of the connectors.

PS

Symbols (Terminal No.)	Wiring Color	Terminal Description	Condition	Specified Condition
PIG (A1-1) - PGND (A1-2)	W-B - W-B	Power source	Always	10 to 14 V
IG (E18-5) - PGND (A1-2)	L - W-B	IG power source	Ignition switch ON	10 to 14 V
TRQ1 (e1-6) - TRQG (e1-1)	G - B	Torque sensor signal	Ignition switch ON Steering wheel not turned (without load)	2.3 to 2.7 V
			Ignition switch ON Steering wheel turned to right with vehicle stopped	2.5 to 4.04 V
			Ignition switch ON Steering wheel turned to left with vehicle stopped	0.95 to 2.5 V
TRQ2 (e1-2) - TRQG (e1-1)	Y - B	Torque sensor signal	Ignition switch ON Steering wheel not turned (without load)	2.3 to 2.7 V
			Ignition switch ON Steering wheel turned to right with vehicle stopped	0.95 to 2.5 V
			Ignition switch ON Steering wheel turned to left with vehicle stopped	2.5 to 4.04 V
TRQF (e1-4) - TRQG (e1-1)	W - B	Torque sensor reference voltage	Ignition switch ON	3.35 to 3.37 V
TRQV (e1-3) - TRQG (e1-1)	R - B	Torque sensor voltage source	Ignition switch ON	8.5 to 10.5 V
TRQG (e1-1) - Body ground	B - Body ground	Torque sensor ground	Always	Below 1 Ω

Symbols (Terminal No.)	Wiring Color	Terminal Description	Condition	Specified Condition
PGND (A1-2) - Body ground	W-B - Body ground	Power ground	Always	Below 1 Ω
C1 (e2-1) - PGND (A1-2)	R - W-B	Resolver signal	Ignition switch ON Steering wheel is turned	0.68 to 4.42 V
C2 (e2-5) - PGND (A1-2)	L - W-B	Resolver signal	Ignition switch ON Steering wheel is turned	0.68 to 4.42 V
S1 (e2-2) - PGND (A1-2)	B - W-B	Resolver signal	Ignition switch ON Steering wheel is turned	0.68 to 4.42 V
S2 (e2-6) - PGND (A1-2)	Y - W-B	Resolver signal	Ignition switch ON Steering wheel is turned	0.68 to 4.42 V
R1 (e2-4) - PGND (A1-2)	W - W-B	Resolver excitation signal	Ignition switch ON Steering wheel is turned	2.9 to 5.1 V
R2 (e2-8) - PGND (A1-2)	G - W-B	Resolver excitation signal	Ignition switch ON Steering wheel is turned	2.9 to 5.1 V
CANH (E18-2) - CANL (E18-8)	Y - W	CAN communication line	Ignition switch OFF	54 to 67 Ω

If the result is not as specified, the ECU may have a malfunction.

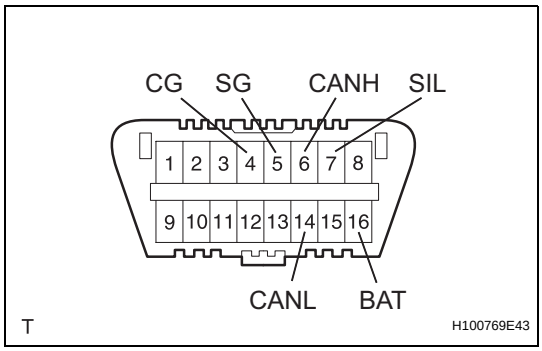

DIAGNOSIS SYSTEM

1. CHECK DLC3

(a) Check the DLC3:

The power steering ECU uses CAN (ISO11898-1) and ISO9141-2 for communication protocol. The terminal arrangement of the DLC3 complies with SAE J1962 and matches the ISO9141-2 format.

PS

Symbols (Terminal No.)	Terminal Description	Condition	Specified Condition
SIL (7) - SG (5)	Bus [+] line	During transmission	Pulse generation
CG (4) - Body ground	Chassis ground	Always	Below 1 Ω
SG (5) - Body ground	Signal ground	Always	Below 1 Ω
BAT (16) -Body ground	Battery positive	Always	11 to 14 V
CANH (6) - CANL (14)	HIGH-level CAN bus line	Ignition switch OFF*	54 to 67 Ω
CANH (6) - Battery positive	HIGH-level CAN bus line	Ignition switch OFF*	1 MΩ or higher
CANH (6) - CG (4)	HIGH-level CAN bus line	Ignition switch OFF*	200 Ω or higher
CANL (14) - Battery positive	LOW-level CAN bus line	Ignition switch OFF*	1 MΩ or higher
CANL (14) - CG (4)	LOW-level CAN bus line	Ignition switch OFF*	200 Ω or higher

NOTICE:

***: Before measuring the resistance, leave the vehicle as is for at least 1 minute and do not operate the ignition switch, other switches or the doors.**

If the result is not as specified, the DLC3 may have a malfunction. Repair or replace the harness and connector.

HINT:

Connect the cable of the intelligent tester to the DLC3, turn the ignition switch ON and attempt to use the tester. If the display indicates that a communication error has occurred, there is a problem either with the vehicle or with the tester.

- If communication is normal when the tester is connected to another vehicle, inspect the DLC3 of the original vehicle.
- If communication is still not possible when the tester is connected to another vehicle, the problem may be in the tester itself. Consult the Service Department listed in the tester's instruction manual.

2. WARNING LIGHT

(a) When a problem occurs in the electronic power steering system, the P/S warning light on the combination meter comes on to inform the driver of the problem.

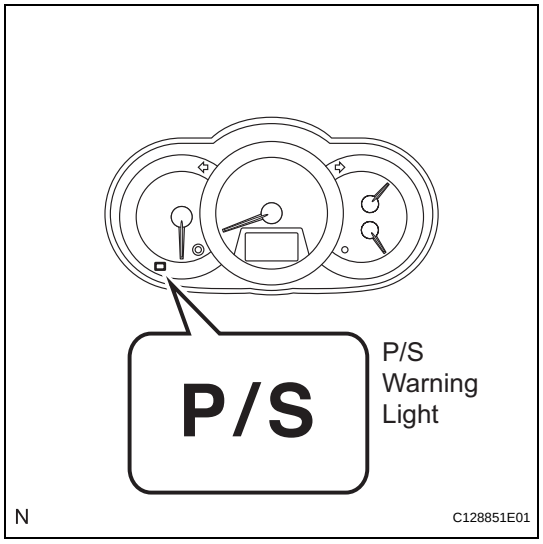

DTC CHECK / CLEAR

1. CHECK DTC

(a) When using intelligent tester:

(1) Connect the intelligent tester (with CAN VIM) to the DLC3.

(2) Turn the ignition switch ON and press the intelligent tester main switch ON.

(3) Read the DTCs by following the prompts on the intelligent tester.

HINT:

Refer to the intelligent tester operator's manual for further details.

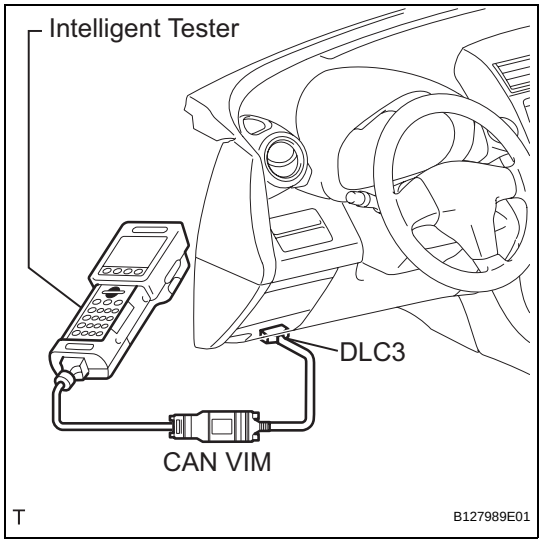

(b) When not using intelligent tester:

(1) Using SST, connect terminals 13 (TC) and 4 (CG) of the DLC3.

SST 09843-18040

(2) Turn the ignition switch ON.

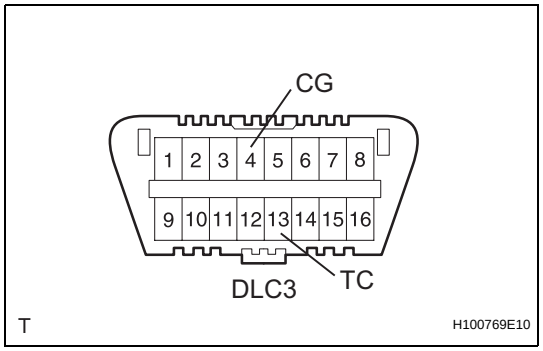

PS

(3) Read and write down any DTCs indicated by the P/S warning light on the combination meter. Refer to the chart below for examples of a normal code and DTCs 21 and 22.

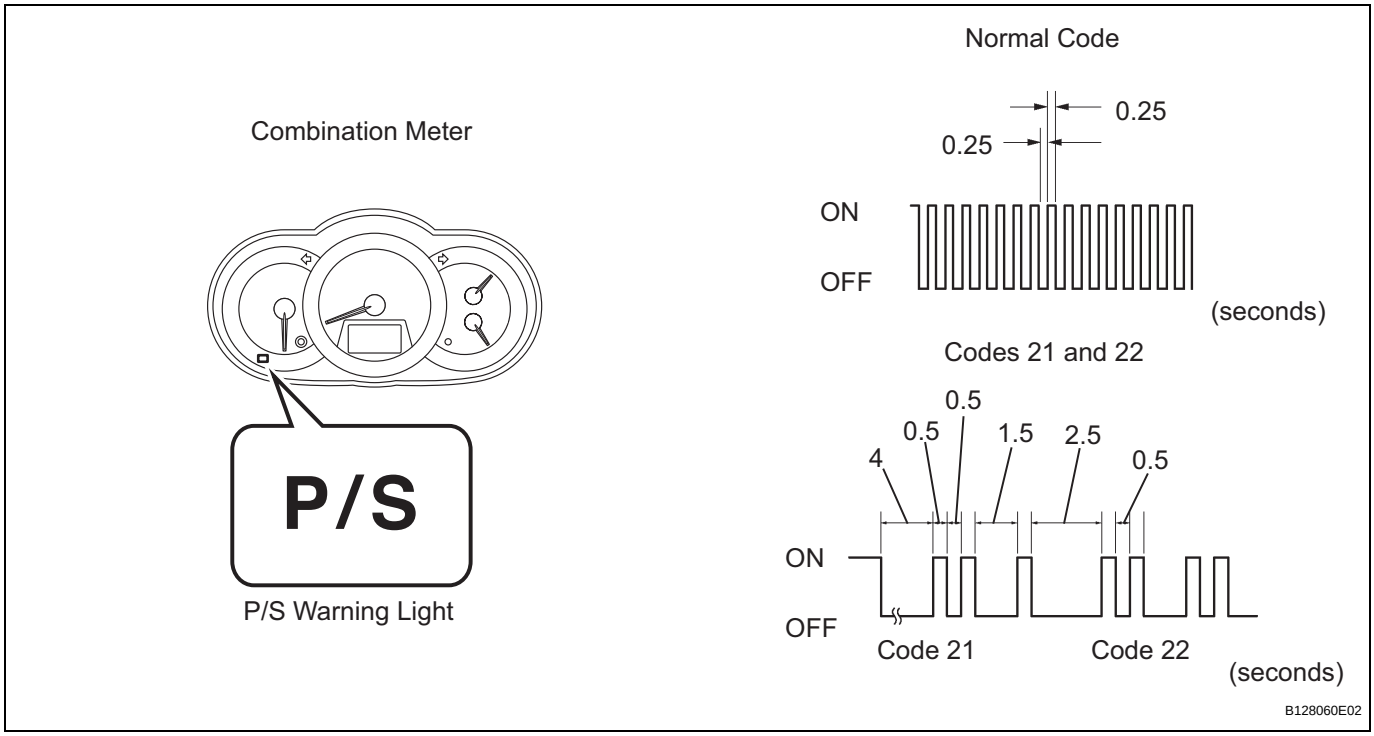

HINT:

- If the P/S warning light does not blink to display any DTCs set or the normal code, inspect the circuit shown in the table below.

Trouble Area	See Page
EPS warning light circuit	PS-37

- If two or more malfunctions are detected simultaneously, DTCs will be displayed in ascending numerical order.

(4) Refer to the Diagnostic Trouble Code Chart (See page PS-16) for DTC information.

2. CLEAR DTC

(a) When using intelligent tester:

(1) Connect the intelligent tester (with CAN VIM) to the DLC3.

(2) Turn the ignition switch ON and press the intelligent tester main switch ON.

(3) Clear the DTCs by following the prompts on the intelligent tester.

(4) Turn the ignition switch OFF.

(5) Disconnect the intelligent tester from the DLC3.

PS

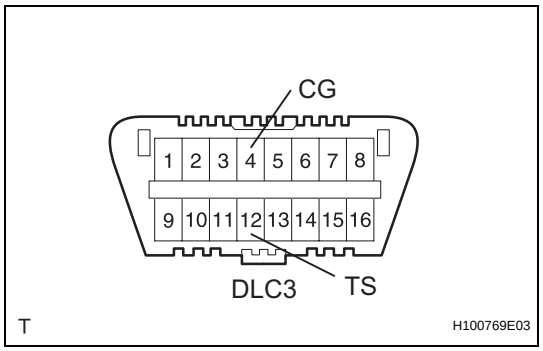

(b) When not using intelligent tester:
(1) Using SST, connect terminals 12 (TS) and 4 (CG) of the DLC3.
SST 09843-18040
(2) Turn the ignition switch ON.
(3) Disconnect the SST check wire from terminal 4 (CG) and reconnect it, and repeat this procedure 4 times or more within 8 seconds.
(4) Check that the P/S warning light blinking pattern is the normal code.
(5) Turn the ignition switch OFF.
(6) Remove SST from the DLC3.

FREEZE FRAME DATA

1. FREEZE FRAME DATA

NOTICE:

- **It is difficult to show the specified values (judgment values) clearly because freeze frame data values change significantly due to differences in measurement conditions, surroundings, or vehicle conditions. For this reason, there may be a problem even when the values are within specifications.**
- **Turn the ignition switch ON and park the vehicle on level ground. Check the freeze frame data by using intelligent tester.**

(a) Connect the intelligent tester (with CAN VIM) to the DLC3.

(b) Turn the ignition switch ON and check the freeze frame data by following the prompts on the intelligent tester display.

Power steering ECU

Item	Item Description: Range (Display)	Inspection Condition	Reference Value
BATTERY VOLTAGE	Battery voltage: Min.: 0 V Max.: 25.5 V	-	10 to 14 V
SPD	Vehicle speed from meter: Min.: 0 km/h (0 mph) Max.: 300 km/h (187.5 mph)	Vehicle stopped	0 km/h (mph)
		Vehicle driven at constant speed	No significant fluctuation
ENGINE REV	Show the engine revolution: Min.: 0 rpm Max.: 12800 rpm	Engine is running at a constant speed	No significant fluctuation
MOTOR ACTUAL	Amount of current to motor: Min.: -327.68 A Max.: 327.67 A	Power steering is in operation	Value changes in proportion to steering effort
COMMAND VALUE	Demanded amount of current to motor: Min.: -327.68 A Max.: 327.68 A	Power steering is in operation	Value changes in proportion to steering effort
STR ANGL VEL	Steering angle speed: Min.: -32768°/sec. Max.: 32767°/sec.	Steering wheel is turned	Value changes in proportion to steering effort
STEERING TORQUE	Steering wheel torque: Min.: -7 Nm Max.: 7 Nm	-	-
THERMISTOR TEMP	ECU substrate temperature: Min.: -40°C Max.: 150°C	Ignition switch ON	-
PIG SUPPLY	Power source voltage to activate motor: Min.: 0 V Max.: 20.1531 V	Power steering in operation	10 to 14 V
IG SUPPLY	ECU power source voltage: Min.: 0 V Max.: 20.1531 V	Ignition switch ON	10 to 14 V
MOTOR ROTATE	Motor rotation angle: Min.: 0° Max.: 360°	Power steering in operation	During steering operation, motor rotation angle value changes from 0 to 360°
MOTOR VOLTAGE	Motor power supply voltage: 0 V Max.: 45.955 V	Power steering in operation	-

Item	Item Description: Range (Display)	Inspection Condition	Reference Value
MTR TERMINAL(U)	Motor terminal voltage (U phase): Min.: 0 V Max.: 46.667 V	Steering wheel is turned	While turning the steering wheel, a value within the range of 1 V to approximately 0.7 V less than the battery voltage is displayed. (The value changes according to the steering load.)
MTR TERMINAL(V)	Motor terminal voltage (V phase): Min.: 0 V Max.: 46.667 V	Steering wheel is turned	While turning the steering wheel, a value within the range of 1 V to approximately 0.7 V less than the battery voltage is displayed. (The value changes according to the steering load.)
MTR TERMINAL(W)	Motor Terminal voltage (W phase): Min.: 0 V Max.: 46.667 V	Steering wheel is turned	While turning the steering wheel, a value within the range of 1 V to approximately 0.7 V less than the battery voltage is displayed. (The value changes according to the steering load.)
PS ASSIST SIG	Power steering assist signal: ON or OFF	-	-

FAIL-SAFE CHART

If a problem occurs in the electric power steering system, the P/S warning light will come on in the combination meter and steering power assist will be stopped, fixed at a particular point, or decreased simultaneously to protect the system.

Electronic power steering system

DTC No.	Detection Condition	Fail-safe
C1511/11	Torque sensor malfunction	Power assist stops
C1512/11		
C1513/11		
C1514/11		
C1521/25	Motor malfunction	
C1524/24		
C1528/12	Motor rotation angle sensor malfunction	
C1531/25	ECU malfunction	
C1532/25		
C1534/25		
C1551/25	IG power source voltage error	
C1552/22	PIG power source voltage error	
C1554/23	Power source relay malfunction	
C1555/25	Motor relay malfunction	
C1533/25	ECU malfunction	Assist force restricted
U0073/49	CAN bus malfunction	Amount of power assist is locked at 140 km/h (87.5 mph) level of power assist
U0121/42	Skid control ECU communication error	
U0105/41	ECM communication error	Power assist stops

PS

HINT:

The amount of power assist may be decreased to prevent the motor and ECUs from overheating if the steering wheel is continuously turned when the vehicle is either stopped or driven at a low speed, or if the steering wheel is kept at either full lock position for a long time. In such cases, the amount of power assist returns to normal if the steering wheel is not turned for approximately 10 minutes with the engine idling.

DATA LIST / ACTIVE TEST

1. READ DATA LIST

HINT:

Using the intelligent tester's DATA LIST allows switch, sensor, actuator and other item values to be read without removing any parts. Reading the DATA LIST early in troubleshooting is one way to save time.

(a) Connect the intelligent tester (with CAN VIM) to the DLC3.

(b) Turn the ignition switch ON and press the intelligent tester main switch ON.

(c) Read the DATA LIST by following the directions on the tester screen.

Tester Display	Measurement Item/Range	Normal Condition	Reference Value
BATTERY VOLTAGE	Battery voltage: Min.: 0 V Max.: 25.5 V	-	10 to 14 V
SPD	Vehicle speed from meter: Min.: 0 km/h (0 mph) Max.: 300 km/h (187.5 mph)	Vehicle stopped	0 km/h (0 mph)
		Vehicle driven at constant speed	No significant fluctuation
SPD SIG INVALID	Record of vehicle speed signal invalid: REC or UNREC	-	UNREC
ENGINE REV	Show the engine revolution: Min.: 0 rpm Max.: 12800 rpm	Engine is running at a constant speed	No significant fluctuation
ENG REV INTER	Record of engine revolution signal interruption REC or UNREC	-	UNREC
MOTOR ACTUAL	Amount of current to motor: Min.: -327.68 A Max.: 327.67 A	Power steering is in operation	Value changes in proportion to steering effort
COMMAND VALUE	Demanded amount of current to motor: Min.: -327.68 A Max.: 327.68 A	Power steering is in operation	Value changes in proportion to steering effort
STR ANGL VEL	Steering angle speed: Min.: -32768°/sec. Max.: 32767°/sec.	Steering wheel is turned	Value changes in proportion to steering effort
STEERING TORQUE	Steering wheel torque: Min.: -7 Nm Max.: 7 Nm	-	-
THERMISTOR TEMP	ECU substrate temperature: Min.: -40°C Max.: 150°C	Ignition switch ON	-
PIG SUPPLY	Power source voltage to activate motor: Min.: 0 V Max.: 20.1531 V	Power steering in operation	10 to 14 V
IG SUPPLY	ECU power source voltage: Min.: 0 V Max.: 20.1531 V	Ignition switch ON	10 to 14 V
MTR OVERHEAT	Continuous overheat prevention control record: REC or UNREC	-	UNREC
MTR LOW POWER	PIG power source voltage drop record: REC or UNREC	-	UNREC

Tester Display	Measurement Item/Range	Normal Condition	Reference Value
MOTOR ROTATE	Motor rotation angle: Min.: 0° Max.: 360°	Power steering in operation	During steering operation, motor rotation angle value changes from 0 to 360°
MOTOR VOLTAGE	Motor power supply voltage: 0 V Max.: 45.955 V	Power steering in operation	-
MTR TERMINAL(U)	Motor terminal voltage (U phase): Min.: 0 V Max.: 46.667 V	Steering wheel is turned	While turning the steering wheel, a value within the range of 1 V to approximately 0.7 V less than the battery voltage is displayed. (The value changes according to the steering load.)
MTR TERMINAL(V)	Motor terminal voltage (V phase): Min.: 0 V Max.: 46.667 V	Steering wheel is turned	While turning the steering wheel, a value within the range of 1 V to approximately 0.7 V less than the battery voltage is displayed. (The value changes according to the steering load.)
MTR TERMINAL(W)	Motor Terminal voltage (W phase): Min.: 0 V Max.: 46.667 V	Steering wheel is turned	While turning the steering wheel, a value within the range of 1 V to approximately 0.7 V less than the battery voltage is displayed. (The value changes according to the steering load.)
IG ON/OFF TIMES	Ignition switch ON/OFF number of times after fail detection: Min.: 0 times Max.: 65535 times	-	-
# CODES	Number of detected DTCs when freeze frame data stored: Min.: 0 Max.: 255	-	-
PS ASSIST SIG	Power steering assist signal: ON or OFF	-	-

PS

2. PERFORM ACTIVE TEST

HINT:

Performing the intelligent tester's ACTIVE TEST allows relays, the VSV, actuators and other items to be operated without removing any parts. Performing the ACTIVE TEST early in troubleshooting is one way to save time. The DATA LIST can be displayed in the ACTIVE TEST.

(a) Connect the intelligent tester (with CAN VIM) to the DLC3.

(b) Turn the ignition switch ON and turn the intelligent tester ON.

(c) Perform the ACTIVE TEST by following the prompts on the tester.

Combination meter

Tester Display	Test Part	Control Range
EPS INDIC	P/S indicator ON/OFF	Confirm that vehicle is stopped, engine idling

DIAGNOSTIC TROUBLE CODE CHART

HINT:
If any DTCs are displayed during the DTC check, inspect the circuit listed for these DTCs. For details of each DTC, refer to the page indicated in the DTC chart.

Electric Power Steering System

DTC No.	Detection Item	Trouble Area	Normal Function Return Condition	P/S Warning Light	See page
C1511/11	Torque Sensor 1 Malfunction	- Steering column assembly (Torque sensor) - Power steering ECU	Ignition switch ON again	O	PS-18
C1512/11	Torque Sensor 2 Malfunction	- Steering column assembly (Torque sensor) - Power steering ECU	Ignition switch ON again	O	PS-18
C1513/11	Torque Sensor Deviation Excessive	- Steering column assembly (Torque sensor) - Power steering ECU	Ignition switch ON again	O	PS-18
C1514/11	Torque Sensor Power Supply Voltage Malfunction	- Steering column assembly (Torque sensor) - Power steering ECU	Ignition switch ON again	O	PS-18
C1521/25	Short in Motor Circuit	- Power steering ECU	Ignition switch ON again	O	PS-21
C1524/24	Motor Terminal Voltage Malfunction	- Steering column assembly (Torque sensor) - Power steering ECU	Ignition switch ON again	O	PS-22
C1528/12	Motor Rotation Angle Sensor Malfunction	- Steering column assembly (Torque sensor) - Power steering ECU	Ignition switch ON again	O	PS-24
C1531/25	ECU Malfunction	- Power steering ECU	Ignition switch ON again	O	PS-26
C1532/25	ECU Malfunction	- Power steering ECU	Ignition switch ON again	O	PS-26
C1533/25	Temperature Sensor Circuit is Low or High	- Power steering ECU	Ignition switch ON again or after normal confirmation	O	PS-26
C1534/25	EEPROM Malfunction	- Power steering ECU	Ignition switch ON again	O	PS-26
C1551/25	IG Power Supply Voltage Malfunction	- ECU-IG1 fuse - IG power source circuit - Power steering ECU	Ignition switch ON again or after normal confirmation	O	PS-27
C1552/22	PIG Power Supply Voltage Malfunction	- PIG power source circuit - Power steering ECU	Ignition switch ON again or after normal confirmation	O	PS-29
C1554/23	Power Supply Relay Failure	- PIG power source circuit - Power steering ECU	Ignition switch ON again	O	PS-31
C1555/25	Motor Relay Welding Failure	- Power steering ECU	Ignition switch ON again	O	PS-31
C1581/26	Assist Map Number Un-Writing	- Power steering ECU	Assist map write or ignition switch ON again	O	PS-32
U0073/49	Control Module Communication Bus Off	- CAN communication system	Ignition switch ON again	O	PS-34

DTC No.	Detection Item	Trouble Area	Normal Function Return Condition	P/S Warning Light	See page
U0105/41	Lost Communication with Fuel Injector Control Module	- CAN communication system - ECM	Ignition switch ON again or after normal confirmation	X	PS-34
U0121/42	Lost Communication with Anti-Lock Brake System (ABS) Control Module	- CAN communication system - Skid control ECU	Ignition switch ON again or after normal confirmation	O	PS-34

HINT:
O: Warning light comes on
X: Warning light turns off (normal reset)

DTC	C1511/11	Torque Sensor 1 Malfunction

DTC	C1512/11	Torque Sensor 2 Malfunction

DTC	C1513/11	Torque Sensor Deviation Excessive

DTC	C1514/11	Torque Sensor Power Supply Voltage Malfunction

DESCRIPTION

The torque sensor converts the rotation torque input from the steering wheel into electric signals and sends them to the power steering ECU.

DTC No.	DTC Detection Condition	Trouble Area
C1511/11	Torque sensor malfunction	• Torque sensor (built into steering column assembly) • Power steering ECU • Connector
C1512/11		
C1513/11		
C1514/11		

WIRING DIAGRAM

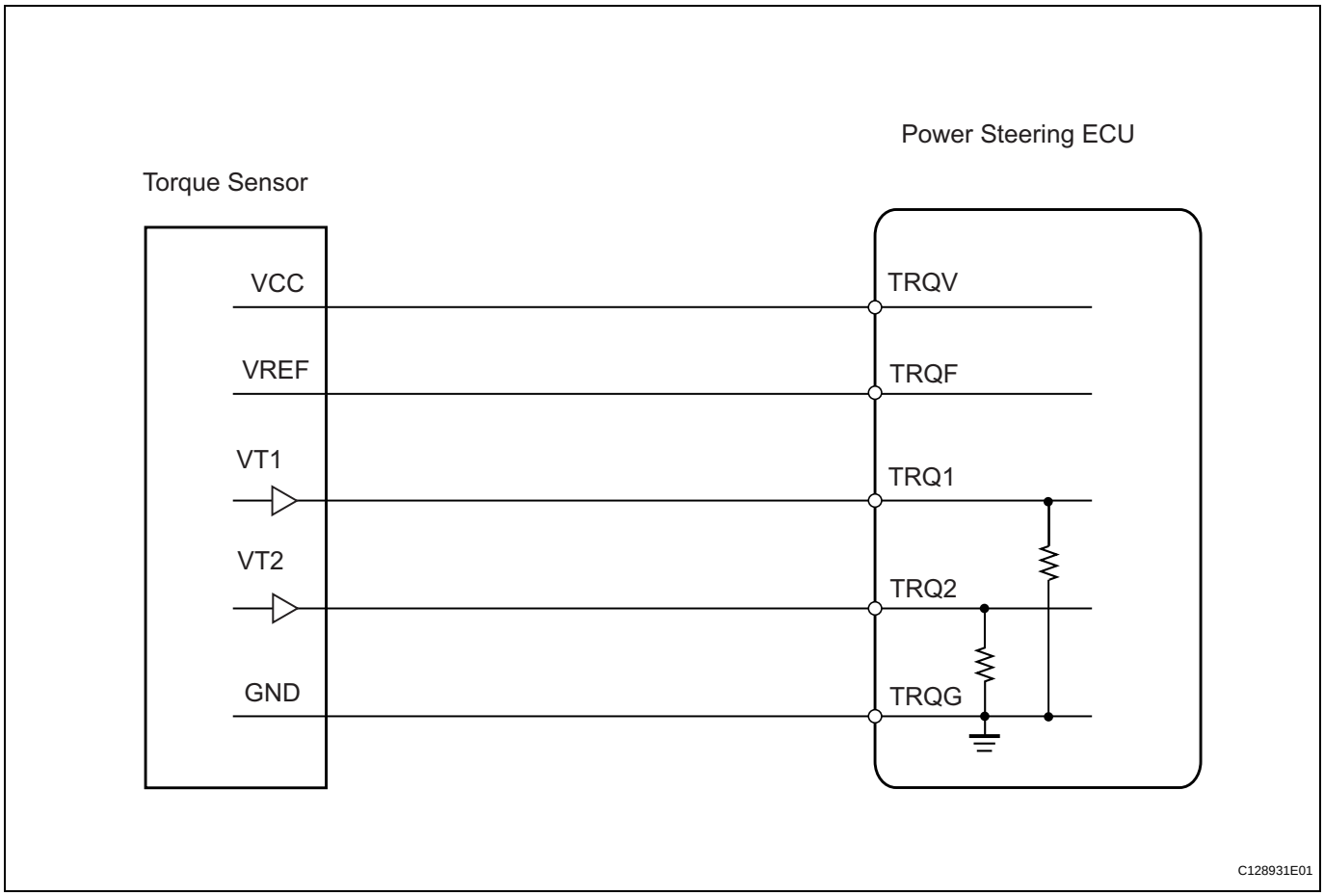

PS

INSPECTION PROCEDURE

1	CHECK CONNECTOR CONNECTION CONDITION (TORQUE SENSOR - ECU)

(a) Check the installation condition of the torque sensor connector.

OK:

Torque sensor connector is securely installed to the power steering ECU.

Result

Result	Proceed to
NG	A
OK	B

B → **Go to step 3**

A

2	RECONFIRM DTC

(a) Reinstall the torque sensor connector.

(b) Check for DTCs.

OK:

DTC is not output.

Result	Proceed to
DTC is output	A
DTC is not output	B

B → **END**

A

3	INSPECT TORQUE SENSOR

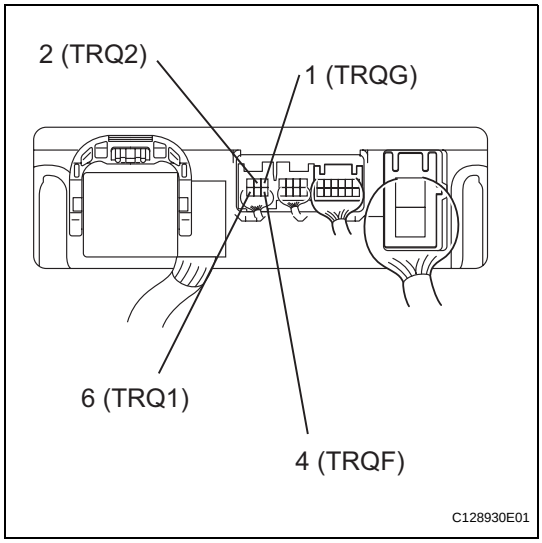

(a) Turn the ignition switch ON.

(b) Measure the voltage of the ECU.

Standard voltage

Tester Connection	Condition	Specified Condition
6 (TRQ1) - 1 (TRQG)	Steering wheel not turned (without load)	2.3 to 2.7 V
	Steering wheel turned to right with vehicle stopped	2.5 to 4.04 V
	Steering wheel turned to left with vehicle stopped	0.95 to 2.5 V

PS

Tester Connection	Condition	Specified Condition
2 (TRQ2) - 1 (TRQG)	Steering wheel not turned (without load)	2.3 to 2.7 V
	Steering wheel turned to right with vehicle stopped	0.95 to 2.5 V
	Steering wheel turned to left with vehicle stopped	2.5 to 4.04 V
4 (TRQF) - 1 (TRQG)	Always	3.35 to 3.37 V
3 (TRQV) - 1 (TRQG)	Always	8.5 to 10.5 V

NG → **REPLACE STEERING COLUMN ASSEMBLY**

OK

PROCEED TO NEXT CIRCUIT INSPECTION SHOWN IN PROBLEM SYMPTOMS TABLE

DTC	C1521/25	Short in Motor Circuit

DESCRIPTION

The power steering ECU supplies current to the power steering motor through this circuit.

DTC No.	DTC Detection Condition	Trouble Area
C1521/25	Motor over current	Power steering ECU

INSPECTION PROCEDURE

1	RECONFIRM DTC

(a) Check for DTC.
OK:
DTC is not output.

OK → **PROCEED TO NEXT CIRCUIT INSPECTION SHOWN IN PROBLEM SYMPTOMS TABLE**

NG

REPLACE POWER STEERING ECU

DTC	C1524/24	Motor Terminal Voltage Malfunction

DESCRIPTION

The power steering ECU supplies the current to the power steering motor through the motor circuit.

DTC No.	DTC Detection Condition	Trouble Area
C1524/24	Short (or open) in motor circuit or abnormal voltage or current in motor circuit	• Steering column assembly • Power steering ECU

WIRING DIAGRAM

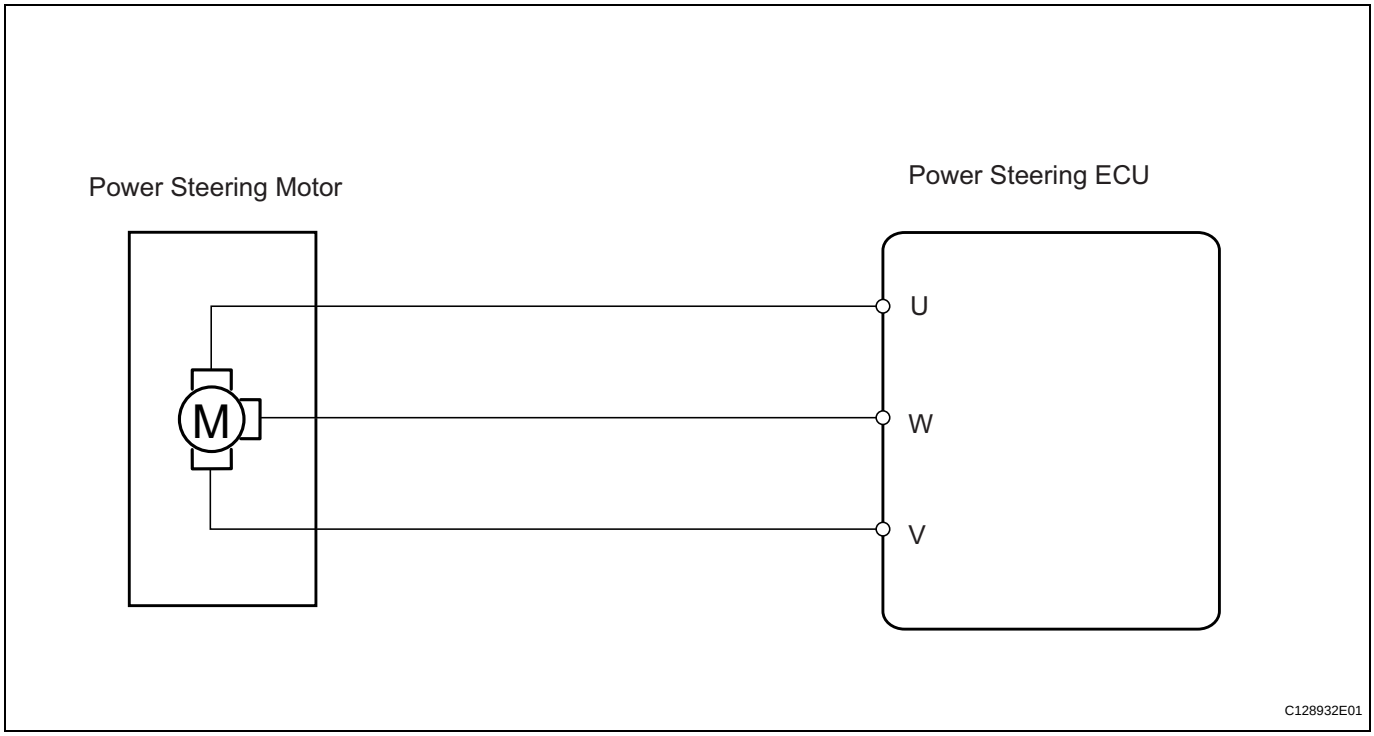

PS

INSPECTION PROCEDURE

1	READ VALUE OF INTELLIGENT TESTER (MOTOR VOLTAGE)

(a) Connect the intelligent tester (with CAN VIM) to the DLC3.
(b) Turn the ignition switch ON and press the intelligent tester main switch ON.
(c) Select the items "MTR TERMINAL(U)", "MTR TERMINAL(V)", "MTR TERMINAL(W)" in the DATA LIST and read the value displayed on the intelligent tester.

Power steering ECU

Item	Item Description: Range (Display)	Inspection Condition	Reference Value
MTR TERMINAL(U)	Motor terminal voltage (U phase): Min.: 0 V Max.: 46.667 V	Steering wheel is turned	While turning the steering wheel, a value within the range of 1 V to approximately 0.7 V less than the battery voltage is displayed. (The value changes according to the steering load.)

Item	Item Description: Range (Display)	Inspection Condition	Reference Value
MTR TERMINAL(V)	Motor terminal voltage (V phase): Min.: 0 V Max.: 46.667 V	Steering wheel is turned	While turning the steering wheel, a value within the range of 1 V to approximately 0.7 V less than the battery voltage is displayed. (The value changes according to the steering load.)
MTR TERMINAL(W)	Motor terminal voltage (W phase): Min.: 0 V Max.: 46.667 V	Steering wheel is turned	While turning the steering wheel, a value within the range of 1 V to approximately 0.7 V less than the battery voltage is displayed. (The value changes according to the steering load.)

Result

Result	Proceed to
While turning the steering wheel, a value within the range of 1 V to approximately 0.7 V less than the battery voltage is displayed. (Power assist is operating.)	A
While turning the steering wheel, 0 V or a value equal to the battery voltage is displayed. (Power assist is not operating.)	B

B → **REPLACE STEERING COLUMN ASSEMBLY**

A

REPLACE POWER STEERING ECU

DTC	C1528/12	Motor Rotation Angle Sensor Malfunction

DESCRIPTION

The motor rotation angle sensor detects the motor rotation angle and sends this information to the power steering ECU.

DTC No.	DTC Detection Condition	Trouble Area
C1528/12	Motor rotation angle sensor malfunction	• Steering column assembly • Power steering ECU

WIRING DIAGRAM

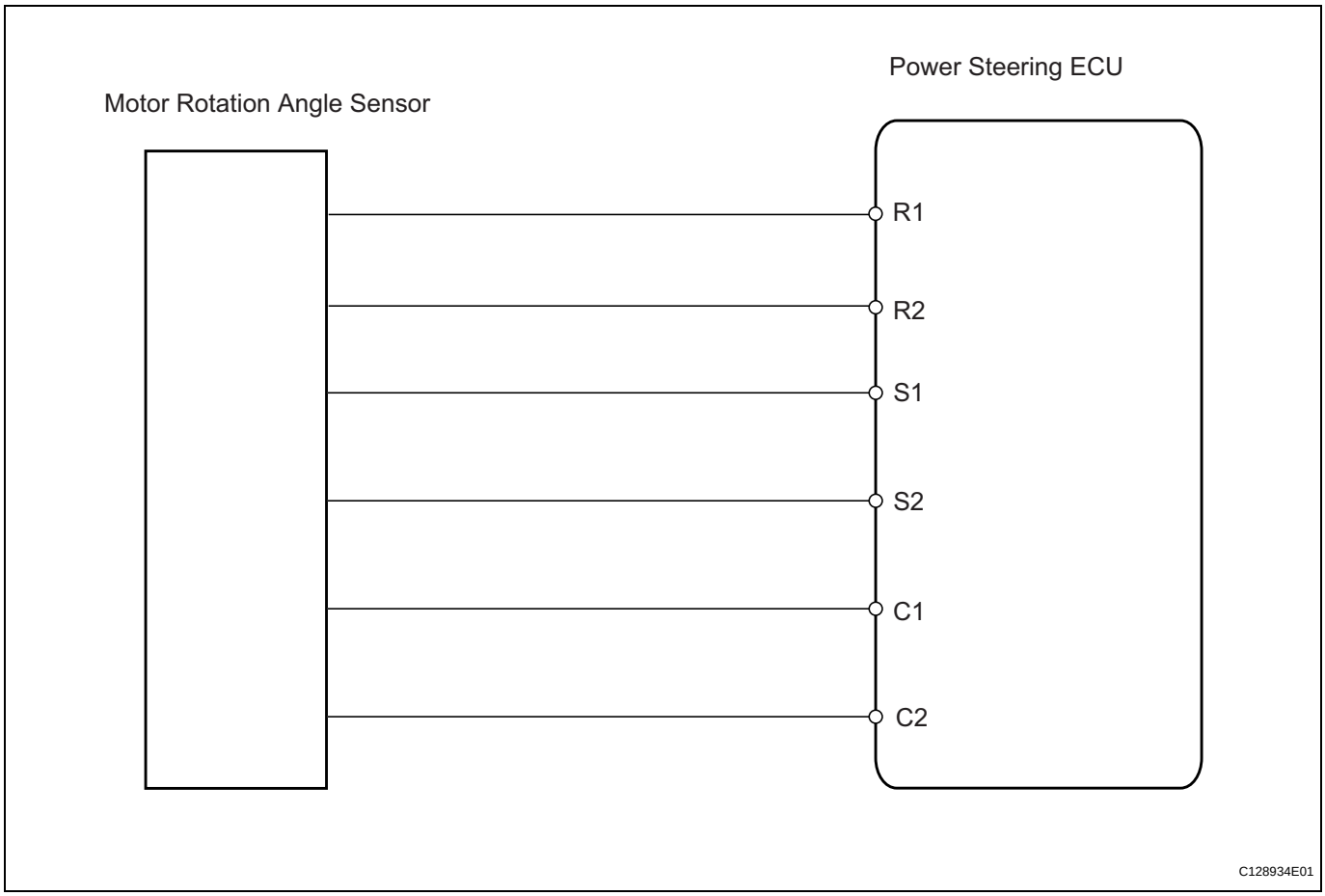

INSPECTION PROCEDURE

1	CHECK CONNECTOR CONNECTION CONDITION

(a) Check the installation condition of the motor rotation angle sensor connector.

OK:

Motor rotation angle sensor connector is securely connected to the power steering ECU.

Result

Result	Proceed to
NG	A
OK	B

PS

B → Go to step 3

A

2 RECONFIRM DTC

(a) Reinstall motor rotation angle sensor connector.
(b) Check for DTC.

OK:

DTC is not output.

Result

Result	Proceed to
DTC is output	A
DTC is not output	B

B → END

A

3 READ VALUE OF INTELLIGENT TESTER (MOTOR ROTATION ANGLE SENSOR)

(a) Connect the intelligent tester (with CAN VIM) to the DLC3.
(b) Turn the ignition switch ON and press the intelligent tester main switch ON.
(c) Select the items "MOTOR ROTATE" in the DATA LIST and read the value displayed on the intelligent tester.

PS

Item	Item Description: Range (Display)	Inspection Condition	Reference Value
MOTOR ROTATE	Motor Rotation Angle: Min.: 0° Max.: 360°	Steering wheel is turned	During steering operation, motor rotation angle value changes from 0 to 360°

OK:

During steering operation, motor rotation angle value changes from 0 to 360°

NG → **REPLACE STEERING COLUMN ASSEMBLY**

OK

REPLACE POWER STEERING ECU

DTC	C1531/25	ECU Malfunction

DTC	C1532/25	ECU Malfunction

DTC	C1533/25	Temperature Sensor Circuit is Low or High

DTC	C1534/25	EEPROM Malfunction

DESCRIPTION

INSPECTION PROCEDURE

If the power steering ECU detects these DTCs, it will shut off the motor relay circuit (built into the power steering ECU) and stop power assist. However, power assist continues if DTC C1533 is output.

DTC No.	DTC Detection Condition	Trouble Area
C1531/25	ECU internal malfunction (CPU malfunction)	Power steering ECU
C1532/25	ECU internal malfunction (Peripheral circuit malfunction)	Power steering ECU
C1533/25	ECU internal malfunction (Substrate temperature sensor malfunction)	Power steering ECU
C1534/25	ECU internal malfunction (EEPROM error)	Power steering ECU

1	RECONFIRM DTC

(a) Check for DTC.
OK:
DTC is not output.

OK → **PROCEED TO NEXT CIRCUIT INSPECTION SHOWN IN PROBLEM SYMPTOMS TABLE**

NG

REPLACE POWER STEERING ECU

PS

DTC	C1551/25	IG Power Supply Voltage Malfunction

DESCRIPTION

The power steering ECU distinguishes the ignition switch status as ON or OFF through the IG power source circuit.

DTC No.	Detection Condition	Trouble Area
C1551/25	IG power source circuit malfunction inside ECU	• ECU-IG1 fuse • IG power source circuit • Power steering ECU

WIRING DIAGRAM

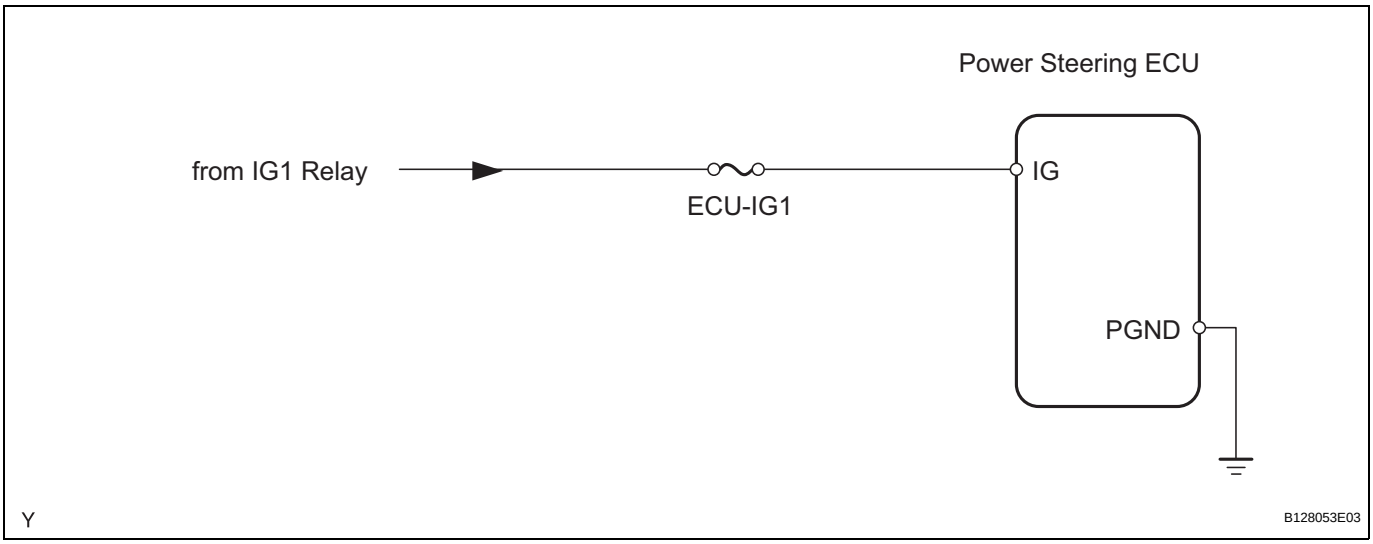

PS

INSPECTION PROCEDURE

1	READ VALUE OF INTELLIGENT TESTER (IG POWER SUPPLY)

(a) Connect the intelligent tester (with CAN VIM) to the DLC3.
(b) Turn the ignition switch ON.
(c) Select the item "IG SUPPLY" in the DATA LIST and read the value displayed on the intelligent tester.

Power steering ECU

Item	Item Description: Range (Display)	Inspection Condition	Specified Condition
IG SUPPLY	IG power supply: Min.: 0 V Max.: 20.1531 V	Ignition switch ON	10 to 14 V

OK → CHECK INTERMITTENT PROBLEMS

NG

2	INSPECT FUSE (ECU-IG1)

(a) Remove the ECU-IG1 fuse from the instrument panel junction block.
(b) Measure the resistance of the fuse.

OK:

Below 1 Ω

NG → **REPLACE FUSE**

OK

3	CHECK HARNESS AND CONNECTOR (BATTERY - POWER STEERING ECU)

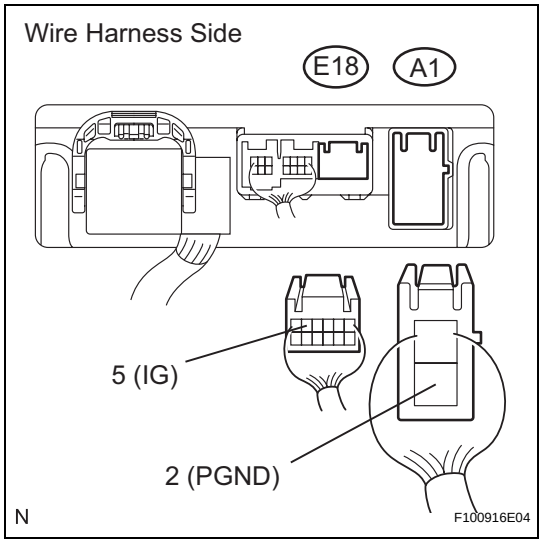

(a) Disconnect the E18 and A1 power steering ECU connectors.
(b) Measure the voltage of the wire harness side connectors.

Standard voltage

Tester Connection	Condition	Specified Condition
E18 -5 (IG) - A1-2 (PGND)	Ignition switch ON	10 to 14 V

NG → **REPAIR OR REPLACE HARNESS AND CONNECTOR**

OK

REPLACE POWER STEERING ECU

DTC	C1552/22	PIG Power Supply Voltage Malfunction

DESCRIPTION

When a problem occurs in the system, the power source relay circuit is shut off to stop the power assist.

DTC No.	DTC Detection Condition	Trouble Area
C1552/22	PIG power source circuit malfunction inside ECU	• PIG power source circuit • Power steering ECU

WIRING DIAGRAM

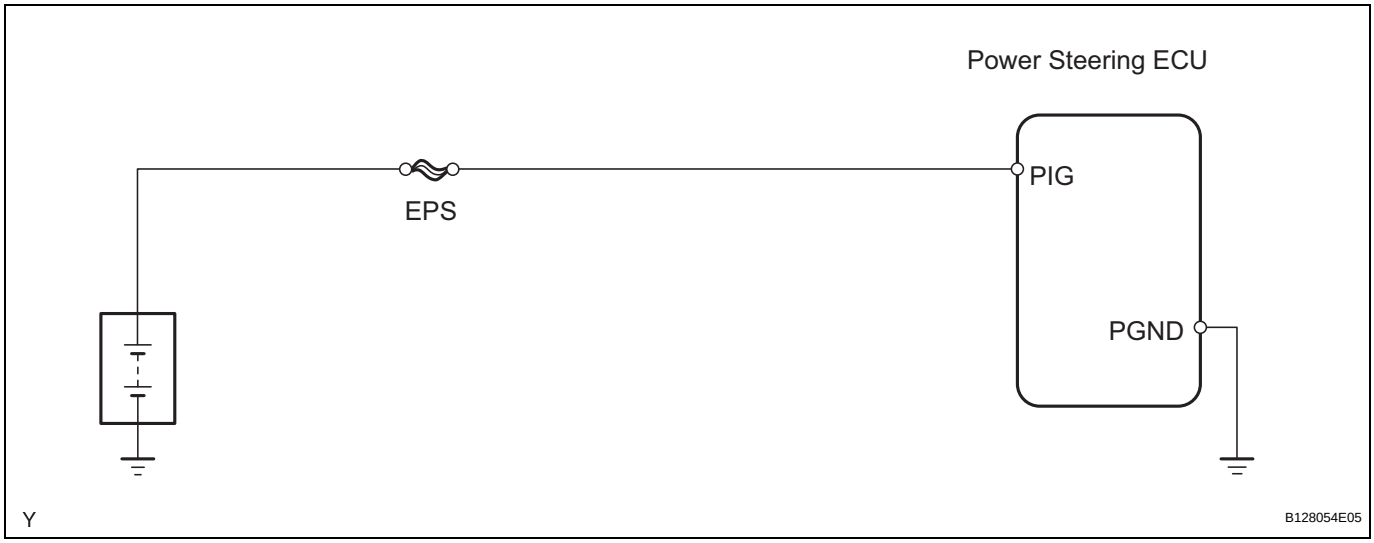

PS

INSPECTION PROCEDURE

1	READ VALUE OF INTELLIGENT TESTER (PIG POWER SUPPLY)

(a) Connect the intelligent tester (with CAN VIM) to the DLC3.
(b) Turn the ignition switch ON.
(c) Select the item "PIG SUPPLY" in the DATA LIST and read the value displayed on the intelligent tester.

Power steering ECU

Item	Item Description: Range (Display)	Inspection Condition	Specified Condition
PIG SUPPLY	PIG power supply: Min.: 0 V Max.: 20.1531 V	Power steering in operation	10 to 14 V

OK → CHECK INTERMITTENT PROBLEMS

NG

2	CHECK WIRE HARNESS (BATTERY - POWER STEERING ECU)

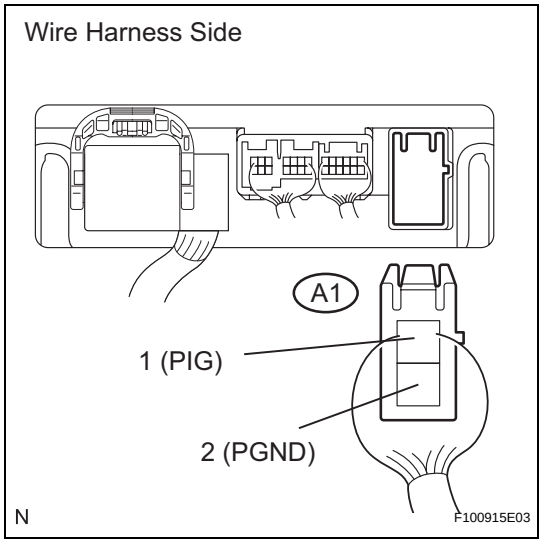

(a) Disconnect the A1 power steering ECU connector.
(b) Measure the voltage of the wire harness side connector.
Standard voltage

Tester Connection	Specified Condition
A1 -1 (PIG) - A1-2 (PGND)	10 to 14 V

NG → **REPAIR OR REPLACE HARNESS AND CONNECTOR**

OK

REPLACE POWER STEERING ECU

PS

DTC	C1554/23	Power Supply Relay Failure

DTC	C1555/25	Motor Relay Welding Failure

DESCRIPTION

If the power steering ECU detects these DTCs, it shuts off the motor relay circuit (built into the power steering ECU) and stops power assist.

DTC No.	DTC Detection Condition	Trouble Area
C1554/23	Power source relay circuit malfunction	Power steering ECU
C1555/25	Motor relay circuit malfunction	Power Steering ECU

INSPECTION PROCEDURE

1	RECONFIRM DTC

(a) Check for DTC.
OK:
DTC is not output.

OK → **PROCEED TO NEXT CIRCUIT INSPECTION SHOWN IN PROBLEM SYMPTOMS TABLE**

NG

REPLACE POWER STEERING ECU

DTC	C1581/26	Assist Map Number Un-Writing

DESCRIPTION

The power steering ECU outputs this DTC when it determines that the assist map is not written in the ECU.
HINT:
The assist map data is written in the power steering ECU to control assisting power.
The assist map has 3 types. Select an assist map according to the vehicle country information that is recorded in the ECU.

DTC No.	DTC Detection Condition	Trouble Area
C1581/26	Assist map not written in power steering ECU	Power steering ECU

INSPECTION PROCEDURE

1	PERFORM ASSIST MAP WRITING

(a) Turn the ignition switch ON.
(b) Connect the intelligent tester (with CAN VIM) to the DLC3.
HINT:
At this time, check that the P/S warning light is illuminated.
(1) Select signal check, and change to test mode.
(c) Wait for 3 seconds.

NEXT

PS

2	CHECK P/S WARNING LIGHT

(a) Check the P/S warning light.

Result

Result	Proceed to
P/S warning light illuminates	A
P/S warning light blinks at 0.25 second intervals	B

HINT:
If the P/S warning light blinks at 0.25 second intervals, the assist map adjustment has completed normally.

B → END

A

3	CHECK DTC

(a) Check for DTC.

Result

Result	Proceed to
C1581/26 output Assist map write adjustment operation not completed 3 times or more	A

Result	Proceed to
Code other than C1581/26 is output	B
C1581/26 output Assist map write adjustment operation not completed less than 3 times	C

HINT:
If DTC C1581/26 is output, turn the ignition switch OFF. Enter test mode again. If the DTC is output 3 times in a row, replace the power steering ECU.

B → REFER TO DTC

C → Go to step 1

A

REPLACE POWER STEERING ECU

DTC	U0073/49	Control Module Communication Bus Off

DTC	U0105/41	Lost Communication with Fuel Injector Control Module

DTC	U0121/42	Lost Communication with Anti-Lock Brake System (ABS) Control Module

DESCRIPTION

The power steering ECU receives signals from the ECM and the skid control ECU via the CAN communication system.

DTC No.	DTC Detection Condition	Trouble Area
U0073/49	Control Module Communication Bus Off	CAN communication system
U0105/41	Lost Communication with Fuel Injector Control Module	• CAN communication system • ECM
U0121/42	Lost Communication with Anti-Lock Brake System (ABS) Control Module	• CAN communication system • Skid control ECU

HINT:

- When 2 or more DTCs starting with [U] are output simultaneously, inspect the connectors and wire harness of each ECU.
- If DTC U0105/41 is output, first erase the DTCs. Then turn the ignition switch from OFF to ON. If DTC U0105/41 is not output again, there is no malfunction.

WIRING DIAGRAM

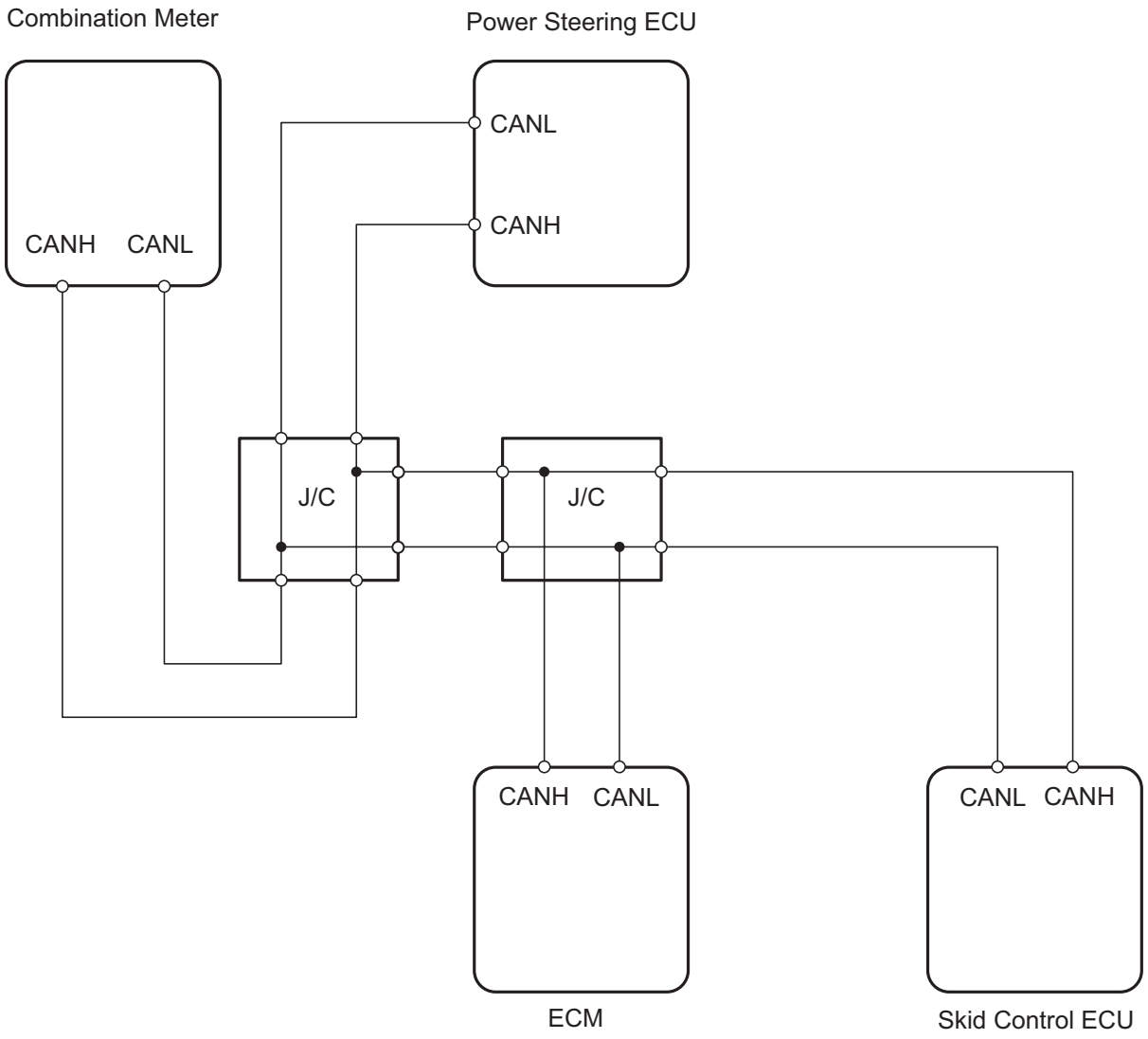

PS

INSPECTION PROCEDURE

1	RECONFIRM DTC

(a) Check for DTC.
OK:
DTC is not output.

OK → **PROCEED TO NEXT CIRCUIT INSPECTION SHOWN IN PROBLEM SYMPTOMS TABLE**

NG

GO TO CAN COMMUNICATION SYSTEM

EPS Warning Light Circuit

DESCRIPTION

If the power steering ECU detects a malfunction, the P/S warning light comes on. At this time, the power steering ECU stores a DTC in its memory.

WIRING DIAGRAM

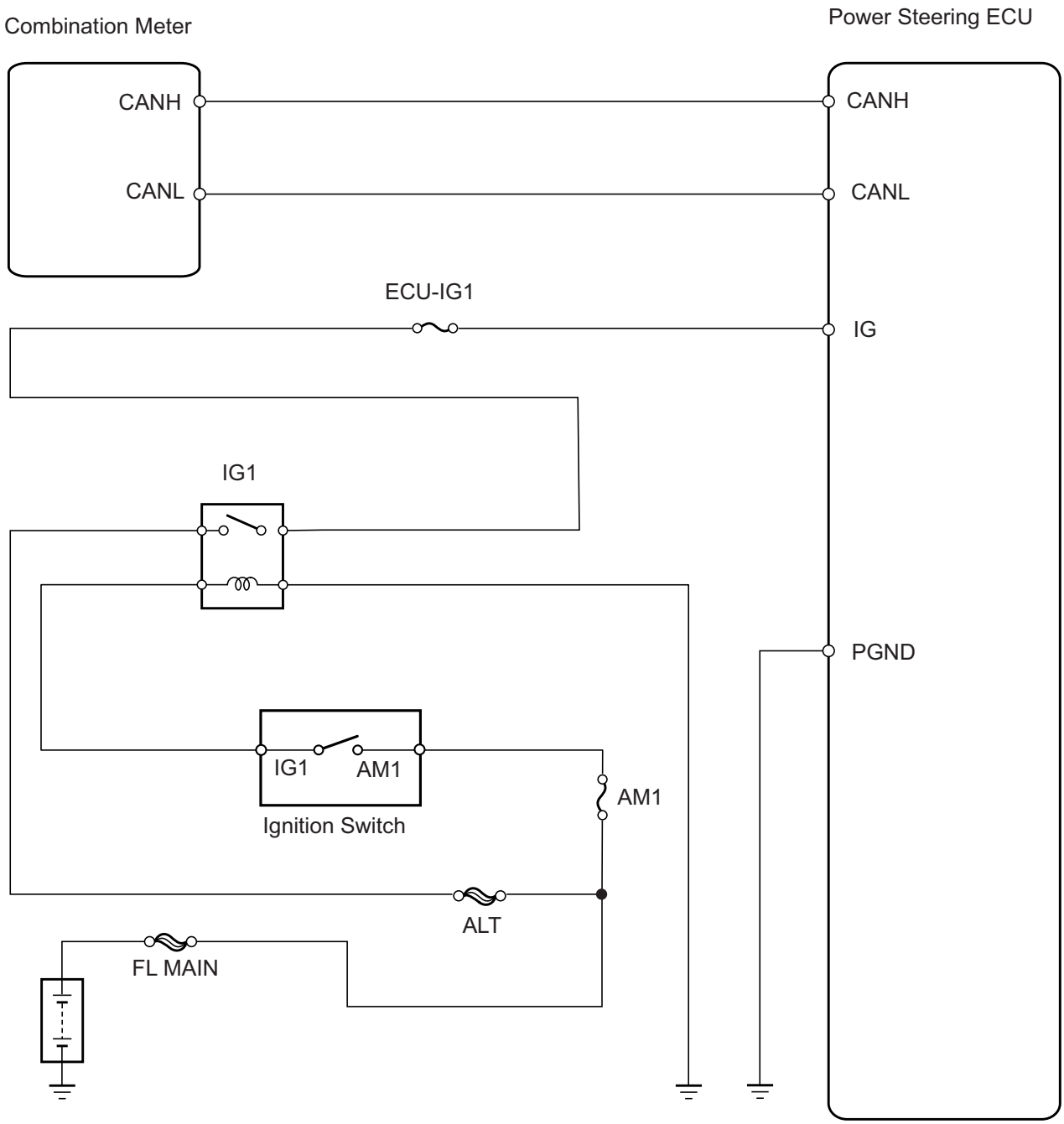

PS

INSPECTION PROCEDURE

1	CHECK FOR DTC

(a) Using the intelligent tester (with CAN VIM), check for DTCs and confirm that there are no problems in the CAN communication system.
OK:
CAN DTCs are not output.

NG → **GO TO CAN COMMUNICATION SYSTEM**

OK

2	READ VALUE OF INTELLIGENT TESTER (IG POWER SUPPLY)

(a) Connect the intelligent tester (with CAN VIM) to the DLC3.
(b) Turn the ignition switch ON and press the intelligent tester main switch ON.
(c) Select the item "IG SUPPLY" in the DATA LIST and read the value displayed on the intelligent tester.

Main body ECU

Item	Item Description: Range (Display)	Inspection Condition	Specified Condition
IG SUPPLY	ECU power source voltage: Min.: 0 V Max.: 20.1531 V	Ignition switch ON	10 to 14 V

OK → **Go to step 5**

NG

3	INSPECT FUSE (ECU-IG1)

(a) Remove the ECU-IG1 fuse from the instrument panel junction block.
(b) Measure the resistance of the fuse.
OK:
Below 1 Ω

NG → **INSPECT SHORT CIRCUIT IN COMPONENTS AND WIRES CONNECTED TO FUSE**

OK

PS

4	CHECK WIRE HARNESS (BATTERY - POWER STEERING ECU AND BODY GROUND)

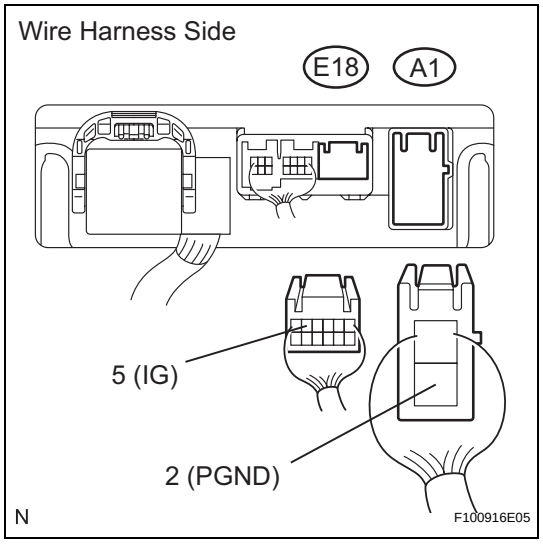

(a) Disconnect the A1 and E18 power steering ECU connector.
(b) Measure the voltage of the wire harness side connectors.

Standard voltage

Tester Connection	Condition	Specified Condition
E18-5 (IG) - A1-2 (PGND)	Ignition switch ON	10 to 14 V

NG → **REPAIR OR REPLACE HARNESS AND CONNECTOR**

OK

5	PERFORM ACTIVE TEST BY INTELLIGENT TESTER

(a) Connect the intelligent tester (with CAN VIM) to the DLC3.
(b) Turn the ignition switch ON and press the intelligent tester main switch ON.
(c) Operate the intelligent tester according to the steps on the display and select the ACTIVE TEST.

Combination meter

Item	Test Details	Diagnostic Note
EPS INDIC	P/S indicator (ON/OFF)	Confirm that the vehicle is stopped, engine idling

OK:
Indicator comes on.

NG → **REPLACE COMBINATION METER ASSEMBLY**

OK

REPLACE POWER STEERING ECU

PS

ELECTRONIC POWER STEERING SYSTEM

PRECAUTION

1. HANDLING PRECAUTION

(a) When handling the electronic parts:
- Avoid any impact to electronic parts such as ECUs and relays. Replace with new ones if dropped or subjected to a severe blow.
- Do not expose any electronic parts to high temperatures and humidity.
- Do not touch the connector terminals in order to prevent deformation or malfunctions due to static electricity.

(b) When handling the steering column assembly:
- Avoid any impact to the steering column assembly, especially to the motor and torque sensor. Replace with new ones if dropped or subjected to a severe blow.
- Do not pull the wire harness when moving the steering column assembly.

(c) When disconnecting and reconnecting the connectors:
When disconnecting the connectors related to the electronic power steering system, turn the ignition switch ON, center the steering wheel, turn the ignition switch off, and then disconnect the connectors.

2. PRECAUTIONS FOR CAN COMMUNICATION

(a) CAN communication lines are used to receive information from the skid control ECU and the ECM, and to transmit warnings to the combination meter. When there are any problems in the CAN communication lines, DTCs of the CAN communication line are output.

(b) Perform troubleshooting for the communication line problems when the CAN communication DTCs are output. Be sure to start troubleshooting on the electronic power steering system after confirming that the CAN communication system is normal.

(c) Since the CAN communication line has its own length and route, it cannot be repaired temporarily with a bypass wire, etc.

PARTS LOCATION

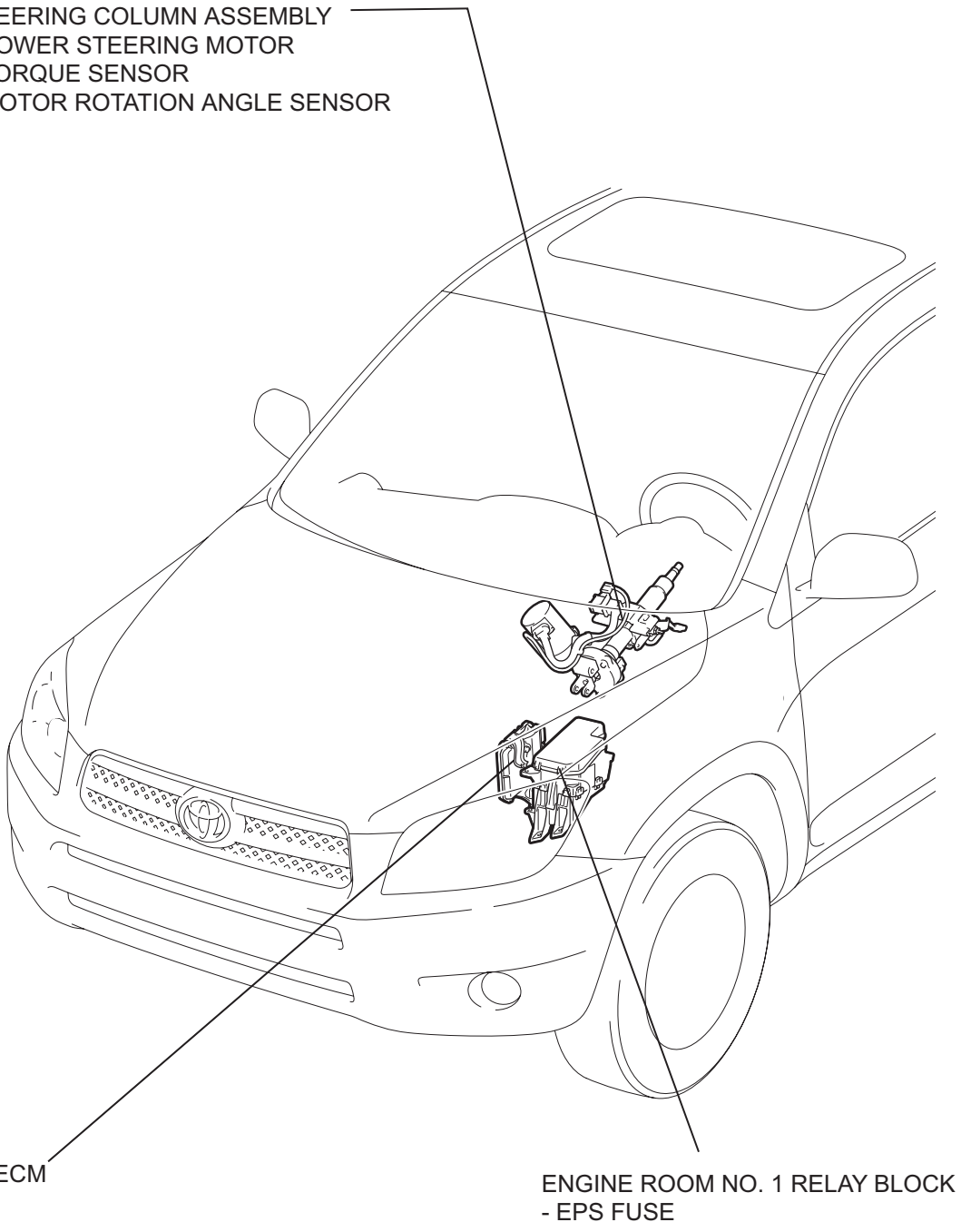

P

C128850E05

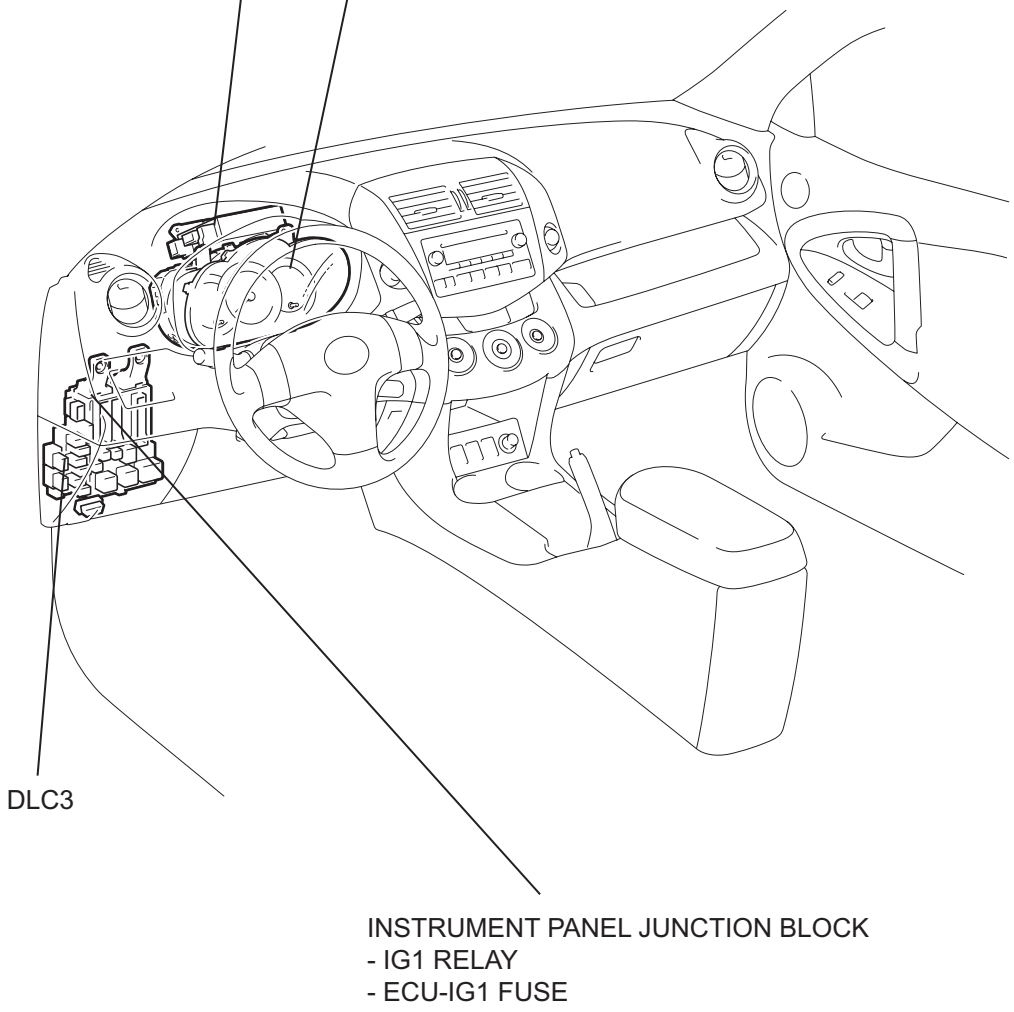

P

C123335E06

PS

POWER STEERING ECU

COMPONENTS

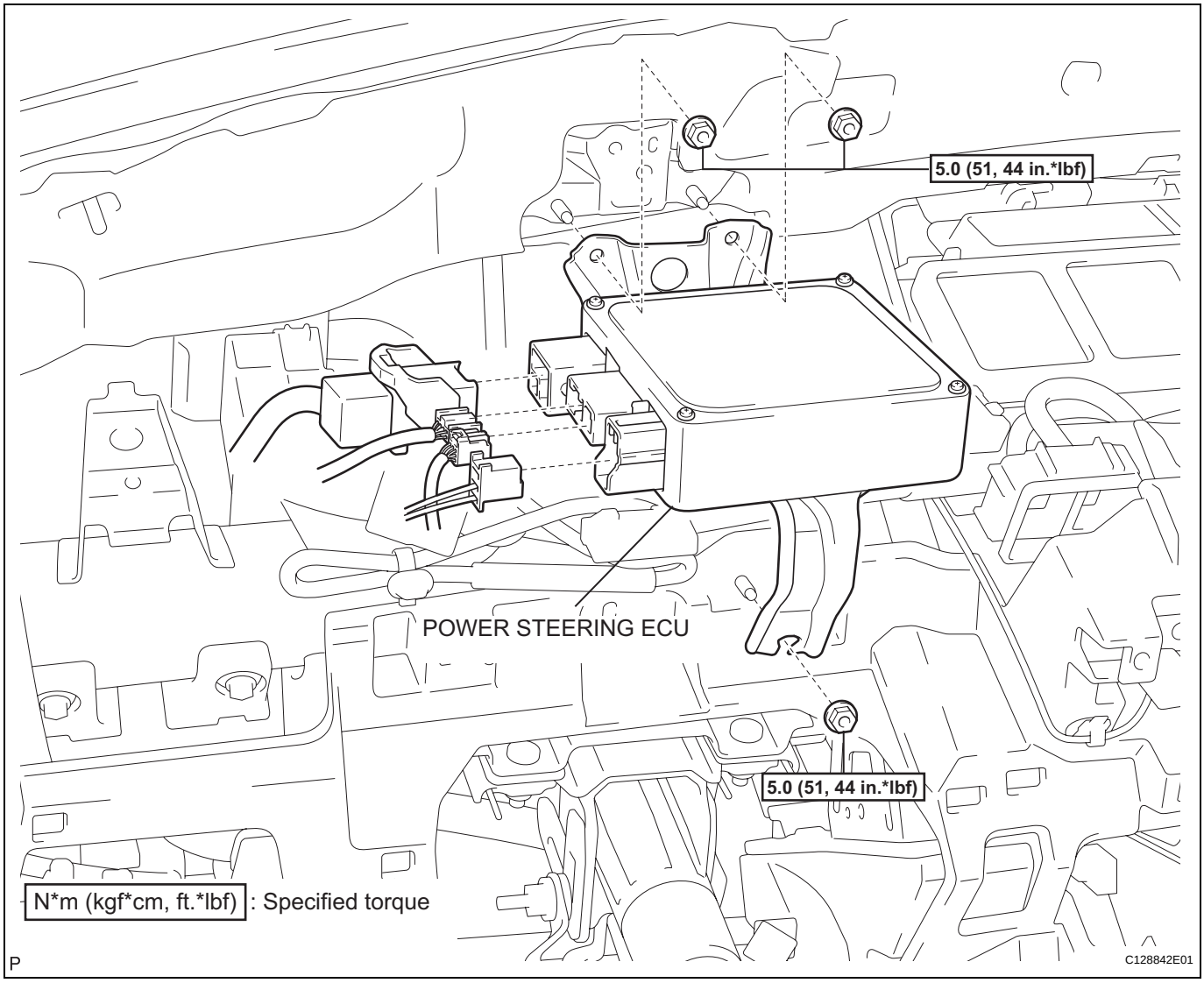

REMOVAL

1. **DISCONNECT CABLE FROM NEGATIVE BATTERY TERMINAL**
2. **REMOVE INSTRUMENT PANEL SUB-ASSEMBLY UPPER**
   (a) Remove the instrument panel (see page IP-4).
3. **REMOVE POWER STEERING ECU**
   (a) Disconnect the 4 connectors.
   (b) Remove the 3 nuts and remove the power steering ECU.

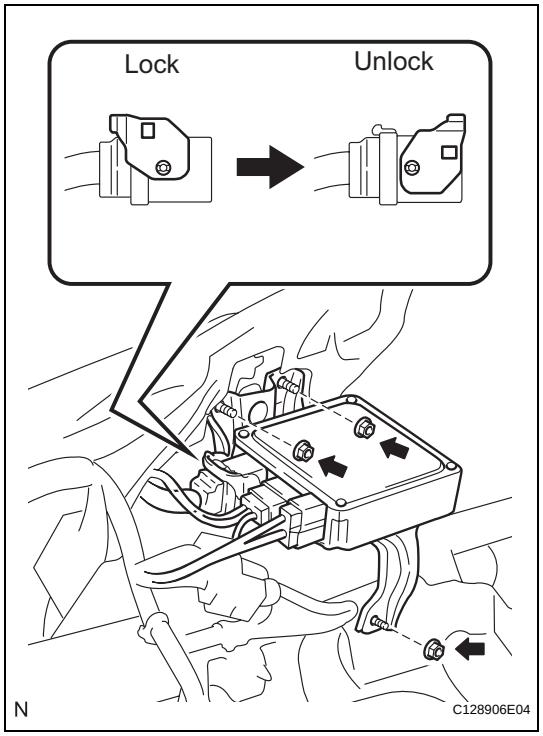

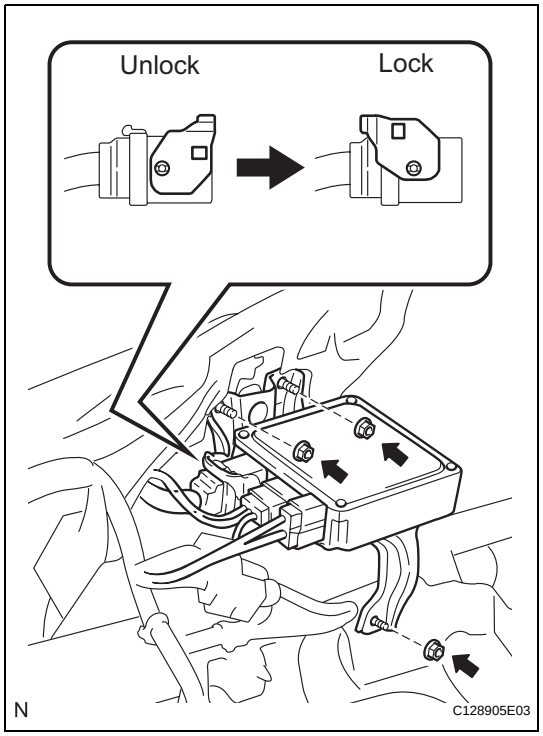

INSTALLATION

1. **INSTALL POWER STEERING ECU**
   (a) Install the power steering ECU with the 3 nuts.
   Torque: 5.0 N*m (51 kgf*cm, 44 in.*lbf)
   (b) Connect the 4 connectors.
2. **INSTALL INSTRUMENT PANEL SUB-ASSEMBLY UPPER**
   (a) Install the instrument panel (see page IP-9).
3. **CONNECT CABLE TO NEGATIVE BATTERY TERMINAL**

REMOVAL

1. POSITION FRONT WHEELS FACING STRAIGHT AHEAD

2. DISCONNECT CABLE FROM NEGATIVE BATTERY TERMINAL
CAUTION:
Wait at least 90 seconds after disconnecting the cable from the negative (-) battery terminal to prevent airbag and seat belt pretensioner activation.

3. REMOVE FRONT WHEEL

4. DISCONNECT TIE ROD END SUB-ASSEMBLY LH
(a) Remove the cotter pin and castle nut.

(b) Using SST, disconnect the tie rod end from the steering knuckle.
SST 09628-62011
NOTICE:
Do not damage the tie rod end dust cover.

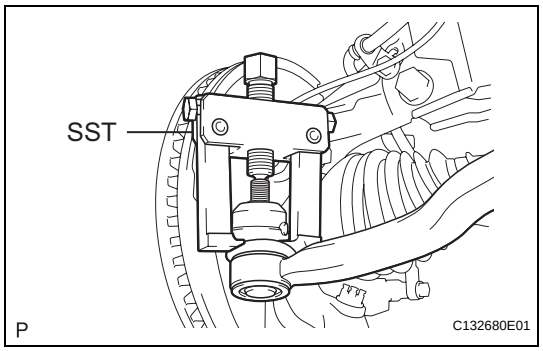

5. DISCONNECT TIE ROD END SUB-ASSEMBLY RH
HINT:
Use the same procedure for the RH side as for the LH side.

6. REMOVE COLUMN HOLE COVER SILENCER SHEET
(a) Remove the floor carpet, 2 clips and column hole cover silencer.

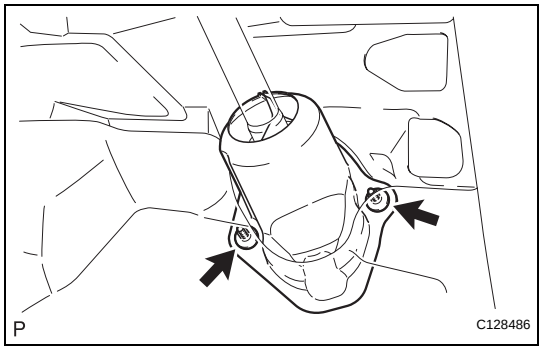

7. DISCONNECT STEERING SLIDING YOKE SUB-ASSEMBLY
(a) Use a seat belt to fix the steering wheel in place to avoid breakage of the spiral cable.

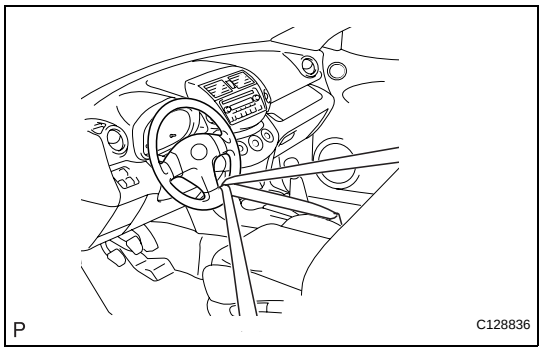

PS

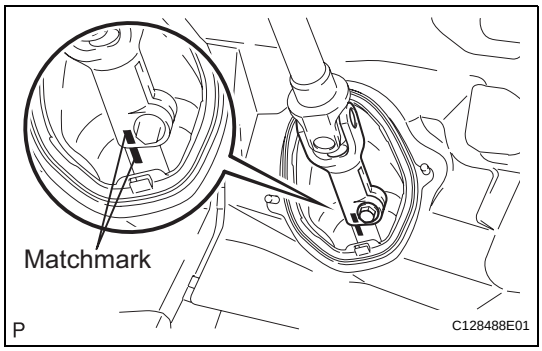

(b) Place matchmarks on the sliding yoke of the steering intermediate shaft.
(c) Remove the bolt and disconnect the sliding yoke.

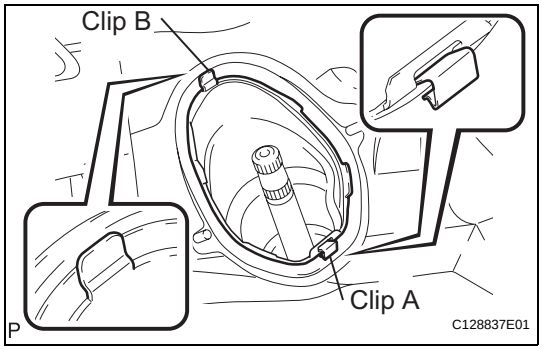

8. DISCONNECT NO. 1 STEERING COLUMN HOLE COVER SUB-ASSEMBLY

(a) Remove clip A, detach clip B from the body and disconnect the No. 1 steering column hole cover.
NOTICE:
Do not damage clips A and B.

9. REMOVE ENGINE ASSEMBLY WITH TRANSAXLE

(a) Remove the engine with transaxle (see page EM-98).

10. REMOVE NO. 1 STEERING COLUMN HOLE COVER SUB-ASSEMBLY

(a) Remove the clamp and disconnect the column hole cover from the steering gear.

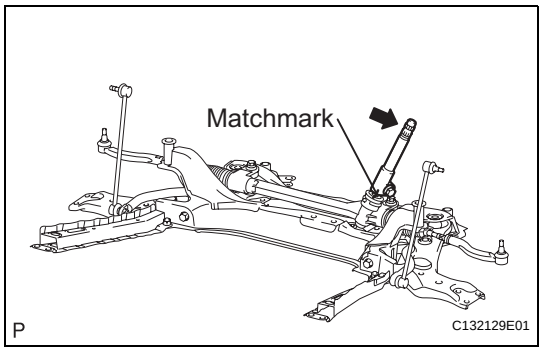

11. REMOVE INTERMEDIATE SHAFT

(a) Place matchmarks on the intermediate shaft of the steering gear.
(b) Remove the bolt and disconnect the steering intermediate shaft from the steering gear.

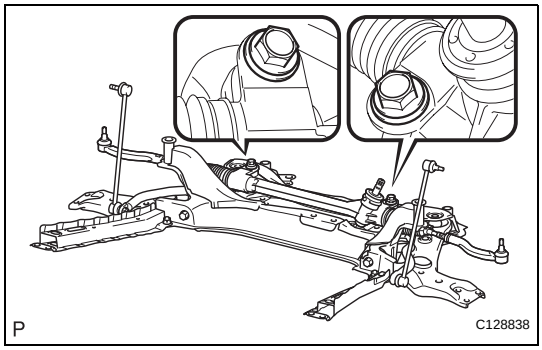

12. REMOVE STEERING GEAR ASSEMBLY

(a) Remove the 2 bolts, 2 nuts and steering gear from the suspension crossmember.
NOTICE:
Keep the nut from rotating while turning the bolt.

PS

INSTALLATION

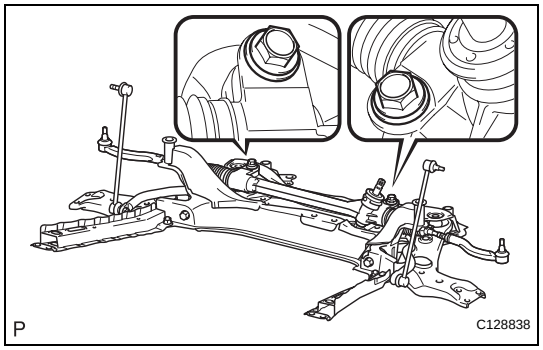

1. INSTALL STEERING GEAR ASSEMBLY

(a) Install the steering gear onto the front suspension crossmember with the 2 bolts and 2 nuts.
Torque: 138 N*m (1407 kgf*cm, 102 ft.*lbf)
NOTICE:
Keep the nut from rotating while turning the bolt.

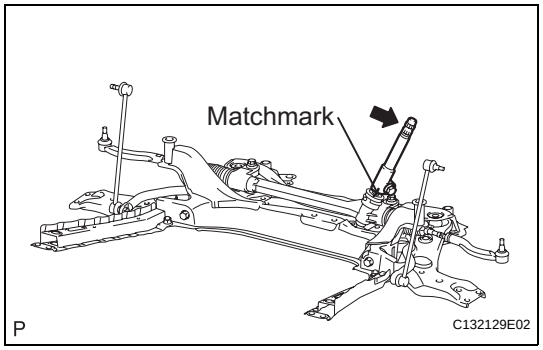

2. INSTALL INTERMEDIATE SHAFT

(a) Align the matchmarks and install the intermediate shaft onto the steering gear.
Torque: 35 N*m (360 kgf*cm, 26 ft.*lbf)

3. INSTALL NO. 1 STEERING COLUMN HOLE COVER SUB-ASSEMBLY

(a) Install the column hole cover onto the steering gear with a new clamp.

4. INSTALL ENGINE ASSEMBLY WITH TRANSAXLE

(a) Install the engine with transaxle (see page EM-105).

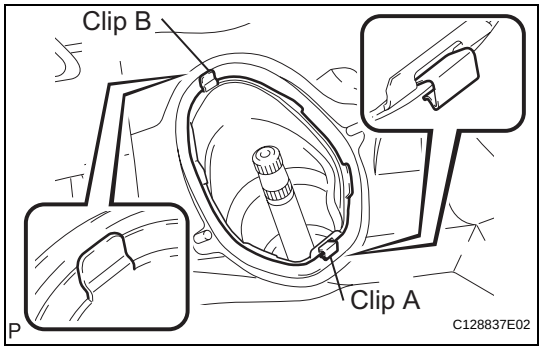

5. INSTALL NO. 1 STEERING COLUMN HOLE COVER SUB-ASSEMBLY

(a) Attach clip B onto the body portion and install the No. 1 hole cover onto the body portion with clip A.
NOTICE:
Make sure that the lip portion of the No. 1 hole cover is not damaged.

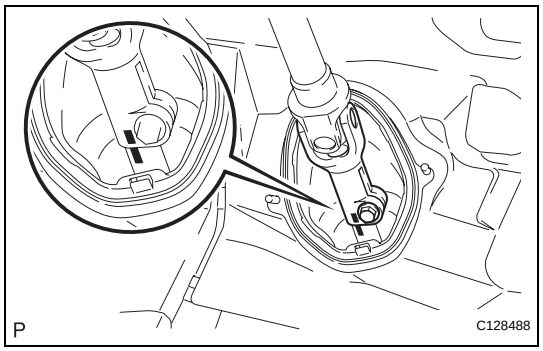

6. CONNECT STEERING SLIDING YOKE SUB-ASSEMBLY

(a) Align the matchmarks and install the sliding yoke onto the intermediate shaft.
Torque: 35 N*m (360 kgf*cm, 26 ft.*lbf)

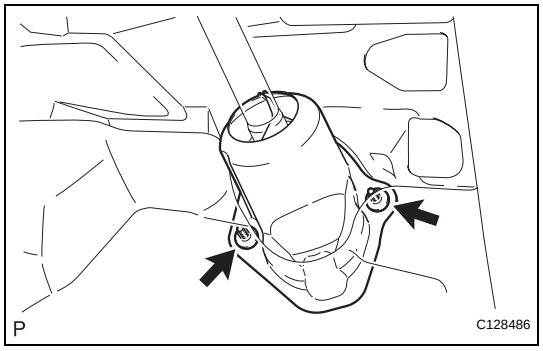

7. INSTALL COLUMN HOLE COVER SILENCER SHEET

(a) Install the column hole cover silencer sheet with the 2 clips.
(b) Install the floor carpet.

PS

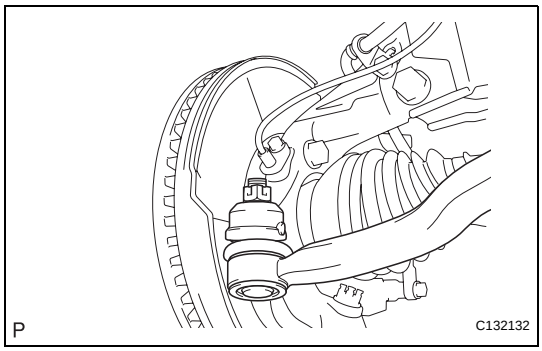

8. **CONNECT TIE ROD END SUB-ASSEMBLY LH**
   (a) Connect the tie rod end onto the steering knuckle with the castle nut.
   Torque: 49 N*m (500 kgf*cm, 36 ft.*lbf)
   NOTICE:
   If the holes for the clip are not aligned, tighten the nut up to 60° further.
   (b) Install a new cotter pin.

9. **CONNECT TIE ROD END SUB-ASSEMBLY RH**
   HINT:
   Use the same procedure for the RH side as for the LH side.

10. **INSTALL FRONT WHEEL**
    Torque: 103 N*m (1,050 kgf*cm, 76 ft.*lbf)

11. **CONNECT CABLE TO NEGATIVE BATTERY TERMINAL**

12. **POSITION FRONT WHEELS FACING STRAIGHT AHEAD**

13. **INSPECT AND ADJUST FRONT WHEEL ALIGNMENT**
    (a) Inspect and adjust the wheel alignment (see page SP-3).

STEERING GEAR

COMPONENTS

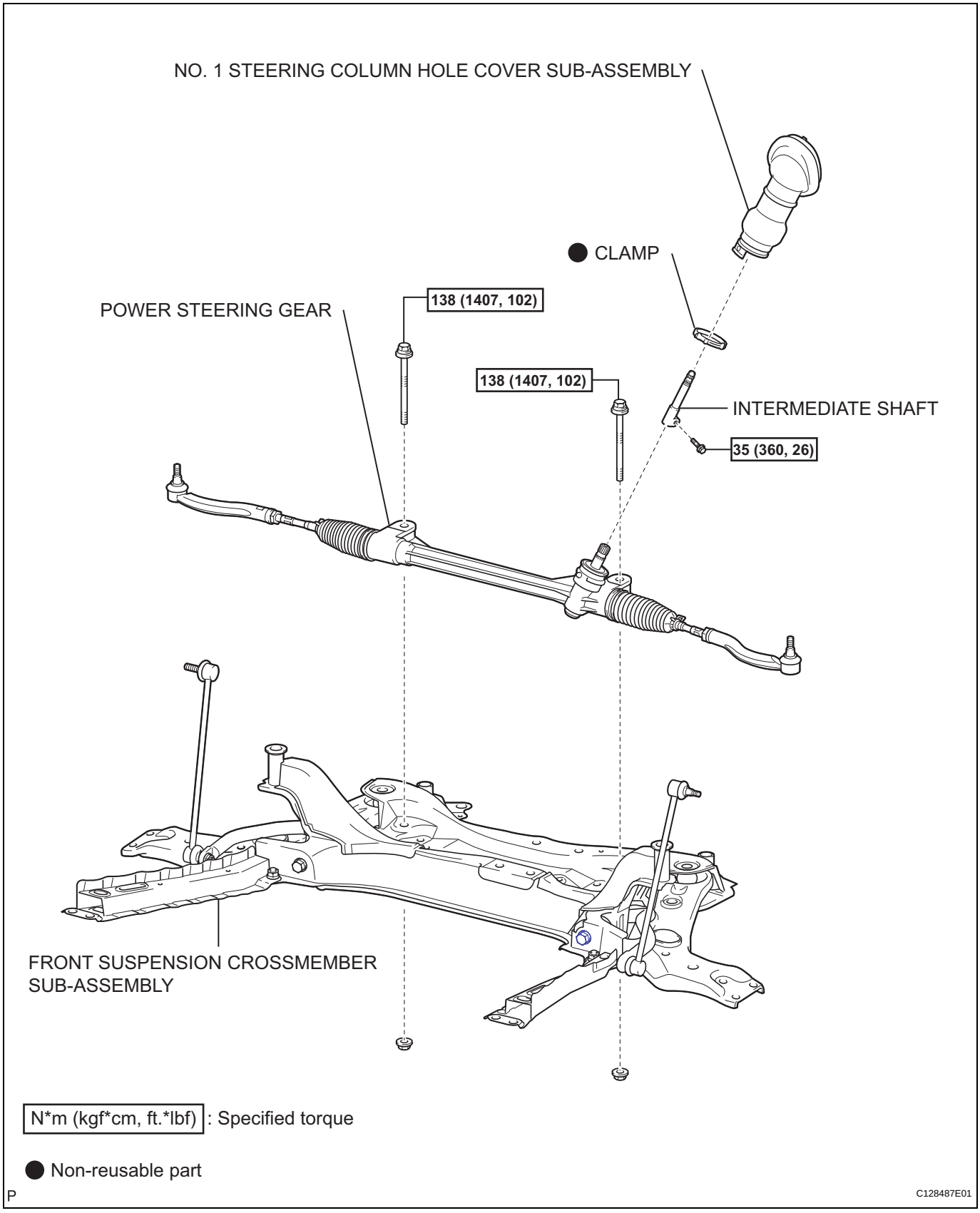

PS

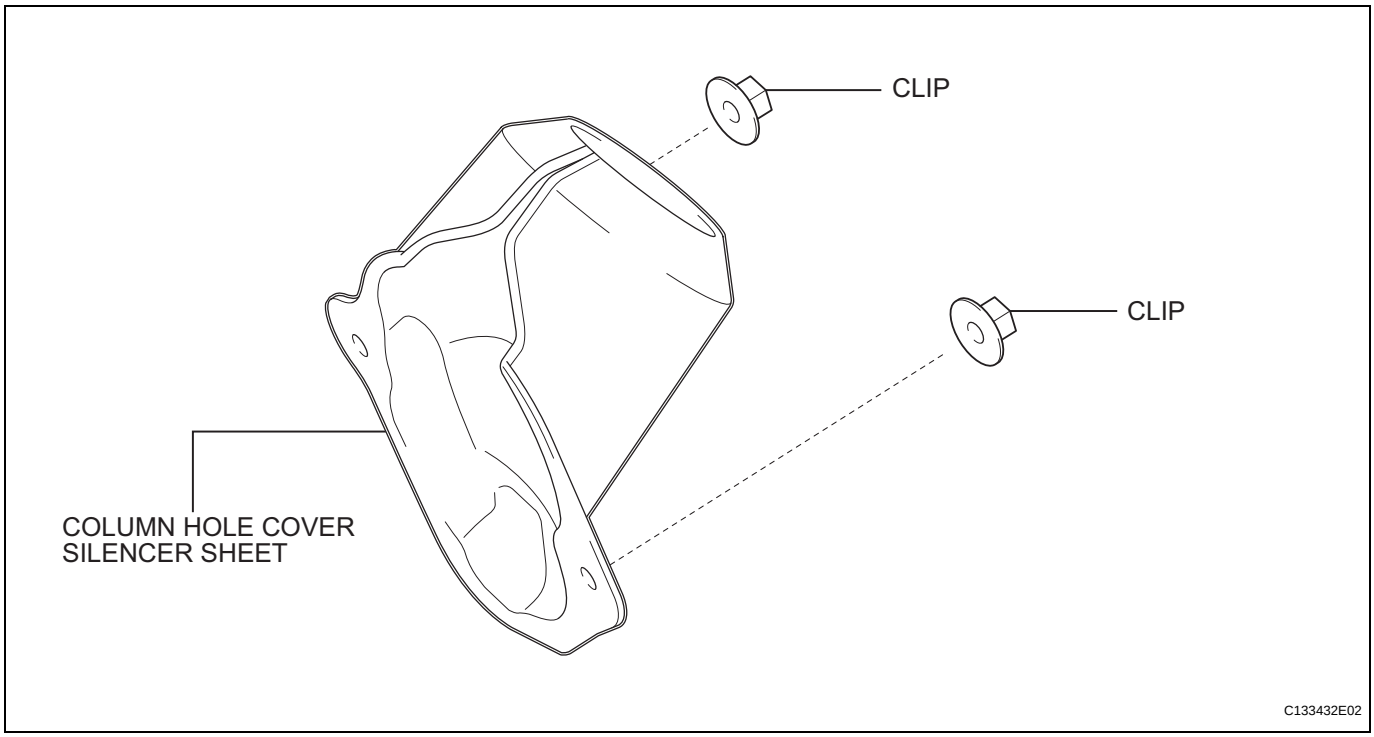
CLIP
CLIP
COLUMN HOLE COVER SILENCER SHEET
C133432E02

RECOMMENDED TOOLS

	09082-00040	TOYOTA Electrical Tester	-
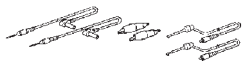	(09083-00150)	Test Lead Set	-

EQUIPMENT

Ammeter	-
Ohmmeter	-
Service wire	-
Torque wrench	-

2AZ-FE CHARGING

SST

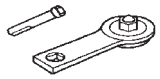	09820-63020	Alternator Pulley Wrench Set	-
	09950-40011	Puller B Set	-
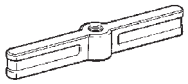	(09951-04020)	Hanger 200	-
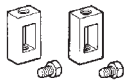	(09952-04010)	Slide Arm	-
	(09953-04020)	Center Bolt 150	-
	(09954-04010)	Arm 25	-
	(09955-04071)	Claw No.7	-
	(09957-04010)	Attachment	-
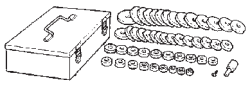	09950-60010	Replacer Set	-
	(09951-00250)	Replacer 25	-
	09950-70010	Handle Set	-

	(09951-07100)	Handle 100	-

EQUIPMENT

Ohmmeter	-
Radiator cap tester	-
Thermometer	-
Torque wrench	-
Slide calipers	-
Heater	-

COOLANT

Capacity	Classification
6.8 liters (7.2 US qts, 5.9 Imp. qts)	Use only "TOYOTA Super Long Life Coolant" or similar high quality ethylene glycol based non-silicate, non-amine, non-nitrite, non-borate coolant with long-life hybrid organic acid technology (coolant with long-life hybrid organic acid technology consists of a combination of low phosphates and organic acids).

SSM

Toyota Genuine Seal Packing Black, Three Bond 1207B or Equivalent	-

2AZ-FE COOLING

SST

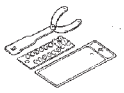	09960-10010	Variable Pin Wrench Set	-
	(09962-01000)	Variable Pin Wrench Arm Assembly	-
	(09963-00700)	Pin 7	-

RECOMMENDED TOOLS

	09082-00040	TOYOTA Electrical Tester	-
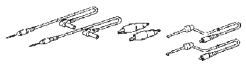	(09083-00150)	Test Lead Set	-

EQUIPMENT

Torque wrench	-
Vacuum gauge	-
Hose clipper	-
Pressure gauge	-

SSM

Toyota Genuine Adhesive 1324, Three Bond 1324 or Equivalent	-

2AZ-FE EMISSION CONTROL

SST

	09224-00010	O2 Sensor Wrench	-

RECOMMENDED TOOLS

	09082-00040	TOYOTA Electrical Tester	-
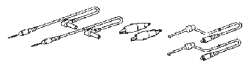	(09083-00150)	Test Lead Set	-

EQUIPMENT

Ohmmeter	-
Service wire	-
Torque wrench	-

2AZ-FE ENGINE CONTROL SYSTEM

SST

	09817-33190	Sensor Socket Wrench	-

RECOMMENDED TOOLS

	09082-00040	TOYOTA Electrical Tester	-
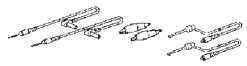	(09083-00150)	Test Lead Set	-

RECOMMENDED TOOLS

	09011-12301	Socket Wrench 30 mm	-
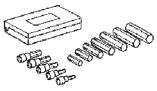	09040-00011	Hexagon Wrench Set	-
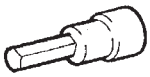	(09043-20060)	Socket Hexagon Wrench 6	-
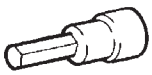	(09043-20120)	Socket Hexagon Wrench 12	-
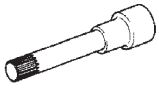	09043-50100	Bi-hexagon Wrench 10 mm	-
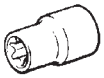	09044-00020	Torx Socket E10	-
	09090-04020	Engine Sling Device	-
	(09857-00031)	Spark Plug Gap Gauge	-

EQUIPMENT

V-block	-
Piston ring compressor	-
Piston ring expander	-
Valve seat cutter	-
Feeler gauge	-
CO/HC meter	-
Connecting rod aligner	-
Cylinder gauge	-
Micrometer	-
Precision straight edge	-
Radiator cap tester	-
Steel square	-
Tachometer	-
Torque wrench	-
Vernier calipers	-
Dial indicator with magnetic base	-
Alignment tester	-
toe-in gauge	-
Spring tension gauge	-
Slide calipers	-
Sandpaper (#400)	-
Piston heater	-
Wooden block	-
Plastigage	-
Angle gauge	-
Timing light	-

SSM

Toyota Genuine Seal Packing Black, Three Bond 1207B or Equivalent	-
Toyota Genuine Adhesive 1324, Three Bond 1324 or Equivalent	-
Toyota Genuine Adhesive, Three Bond 1344 or Equivalent	-

2AZ-FE ENGINE MECHANICAL

SST

	09032-00100	Oil Pan Seal Cutter	-
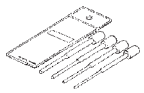	09201-10000	Valve Guide Bushing Remover & Replacer Set	-
	(09201-01050)	Valve Guide Bushing Remover & Replacer 5	-
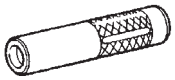	09201-41020	Valve Stem Oil Seal Replacer	-
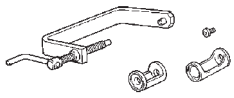	09202-70020	Valve Spring Compressor	-
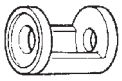	(09202-00010)	Attachment	-
	09213-54015	Crankshaft Pulley Holding Tool	-
	(91651-60855)	Bolt	-
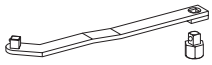	09216-42010	Belt Tension Wrench Set	-
	09223-15030	Oil Seal & Bearing Replacer	-
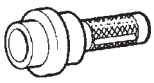	09223-22010	Crankshaft Front Oil Seal Replacer	-

PP

PP

	09309-37010	Transmission Bearing Replacer	-
	09330-00021	Companion Flange Holding Tool	-
	09817-33190	Sensor Socket Wrench	-
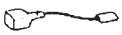	09843-18030	Tacho-pulse Pickup Wire No.2	-
	09843-18040	Diagnosis Check Wire No.2	-
	09950-40011	Puller B Set	-
	(09957-04010)	Attachment	-
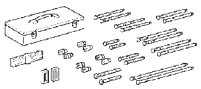	09950-50013	Puller C Set	-
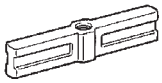	(09951-05010)	Hanger 150	-
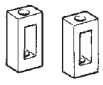	(09952-05010)	Slide Arm	-
	(09953-05020)	Center Bolt 150	-
	(09954-05021)	Claw No.2	-

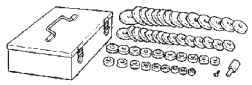	09950-60010	Replacer Set	-
	(09951-00200)	Replacer 20	-
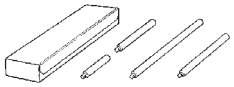	09950-70010	Handle Set	-
	(09951-07100)	Handle 100	-
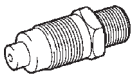	09992-00500	Compression Gauge Attachment	-

2AZ-FE EXHAUST

EQUIPMENT

Torque wrench	-
Vernier calipers	-

RECOMMENDED TOOLS

	09082-00040	TOYOTA Electrical Tester	-
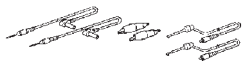	(09083-00150)	Test Lead Set	-

EQUIPMENT

Clip	-
Plastic bag	-
Torque wrench	-
Vernier caliper	-

2AZ-FE FUEL

SST

	09268-21010	Fuel Hose Puller	-
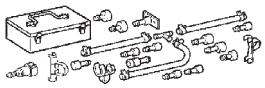	09268-31011	Injection Measuring Tool Set	-
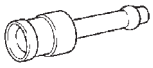	(09268-41110)	Adaptor	-
	(09268-41130)	Adapter	-
	(09268-41310)	Clamp	-
	(09268-41500)	Fuel Tube Connector	-
	(90467-13001)	Clip	-
	(95336-08070)	Hose	-
	09268-45014	EFI Fuel Pressure Gauge	-
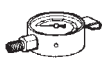	(09268-41200)	Gauge	-
	(09268-41220)	Hose	-

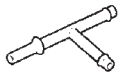	(09268-41250)	T Joint	-
	09842-30080	Wire H EFI Inspection	-

2AZ-FE IGNITION

RECOMMENDED TOOLS

	09082-00040	TOYOTA Electrical Tester	-
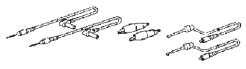	(09083-00150)	Test Lead Set	-

EQUIPMENT

Ohmmeter	-
Torque wrench	-
Voltmeter	-

EQUIPMENT

Feeler gauge	-
Precision straight edge	-
Torque wrench	-
Vernier calipers	-
Wooden block	-

LUBRICANT

Item	Condition	Capacity	Classification
Oil grade	-	-	Use API grade SL "Energy-Conserving" or ILSAC multigrade engine oil. SAE 5W-20 and SAE 0W-20 engine oil may be used. However, SAE0W-20 is the best choice for good fuel economy and good starting in cold weather.
Drain and refill	with oil filter change	4.3 liters (4.5 US qts, 3.8 Imp. qts)	-
	without oil filter change	4.1 liters (4.3 US qts, 3.6 Imp. qts)	-
Dry fill	Dry fill	5.0 liters (5.3 US qts, 4.4 Imp. qts)	-

SSM

Toyota Genuine Adhesive 1344, Three Bond 1344B or Equivalent	-

2AZ-FE LUBRICATION

SST

	09228-06501	Oil Filter Wrench	-

RECOMMENDED TOOLS

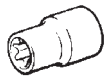	09044-00020	Torx Socket E10	-

2AZ-FE STARTING

RECOMMENDED TOOLS

	09082-00040	TOYOTA Electrical Tester	-
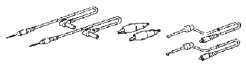	(09083-00150)	Test Lead Set	-

EQUIPMENT

Ammeter(A)	-
Ohmmeter	-
Torque wrench	-
Service Wire Harness	-
Vernier calipers	-

RECOMMENDED TOOLS

	09082-00040	TOYOTA Electrical Tester	-
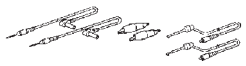	(09083-00150)	Test Lead Set	-

EQUIPMENT

Ammeter	-
Ohmmeter	-
Service wire	-
Torque wrench	-
Vernier calipers	-

2GR-FE CHARGING

SST

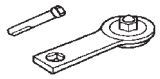	09820-63020	Alternator Pulley Wrench Set	-
	09950-40011	Puller B Set	-
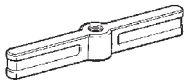	(09951-04020)	Hanger 200	-
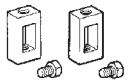	(09952-04010)	Slide Arm	-
	(09953-04020)	Center Bolt 150	-
	(09954-04010)	Arm 25	-
	(09955-04071)	Claw No.7	-
	(09957-04010)	Attachment	-
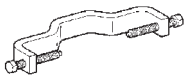	(09958-04011)	Holder	-
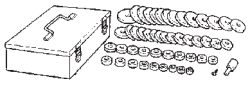	09950-60010	Replacer Set	-
	(09951-00250)	Replacer 25	-

PP

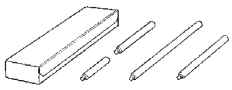	09950-70010	Handle Set	-
	(09951-07100)	Handle 100	-

EQUIPMENT

Ohmmeter	-
Radiator cap tester	-
Thermometer	-
Torque wrench	-
Side calipers	-
Heater	-

COOLANT

Item	Capacity	Classification
STD (A/T)	8.9 liters (9.4 US qts, 7.8 Imp. qts)	Use only "TOYOTA Super Long Life Coolant" or similar high quality ethylene glycol based non-silicate, non-amine, non-nitrite, non-borate, coolant with long-life hybrid organic acid technology (coolant with long-life hybrid organic acid technology consists of a combination of low phosphates and organic acids).
TWG (A/T)	9.3 liters (9.8 US qts, 8.2 Imp. qts)	

SSM

Toyota Genuine Adhesive 1344, Three Bond 1344 or Equivalent	-

2GR-FE COOLING

SST

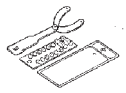	09960-10010	Variable Pin Wrench Set	-
	(09962-01000)	Variable Pin Wrench Arm Assembly	-
	(09963-00700)	Pin 7	-

RECOMMENDED TOOLS

	09082-00040	TOYOTA Electrical Tester	-
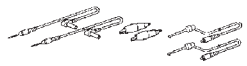	(09083-00150)	Test Lead Set	-

EQUIPMENT

Ohmmeter	-
Pressure gauge	-
Torque wrench	-
Vacuum gauge	-

SSM

Toyota Genuine Adhesive 1324, Three Bond 1324 or Equivalent	-

2GR-FE EMISSION CONTROL

SST

	09224-00010	O2 Sensor Wrench	-

RECOMMENDED TOOLS

	09082-00040	TOYOTA Electrical Tester	-
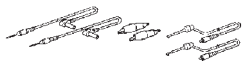	(09083-00150)	Test Lead Set	-

2GR-FE ENGINE CONTROL SYSTEM

RECOMMENDED TOOLS

	09082-00040	TOYOTA Electrical Tester	-
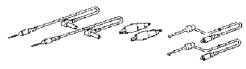	(09083-00150)	Test Lead Set	-

EQUIPMENT

Ohmmeter	-
Service wire	-
Torque wrench	-

RECOMMENDED TOOLS

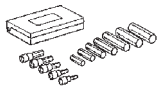	09040-00011	Hexagon Wrench Set	-
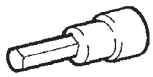	(09043-20050)	Socket Hexagon Wrench 5	-
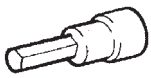	(09043-20100)	Socket Hexagon Wrench 10	-
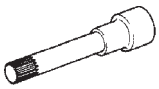	09043-50100	Bi-hexagon Wrench 10 mm	-
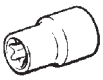	09044-00010	Torx Socket E14	-
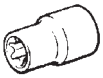	09044-00020	Torx Socket E10	-
	09090-04020	Engine Sling Device	-
	(09857-00031)	Spark Plug Gap Gauge	-

PP

EQUIPMENT

Alignment tester	-
Angle gauge	-
Brass bar	-
Caliper gauge	-
Chain block	-
Compression gauge	-
CO/HC meter	-
Connecting rod aligner	-
Cylinder gauge	-
Dial indicator with magnetic base	-
Engine stand	-
Feeler gauge	-
Gasket scraper	-
Magnetic finger	-
Micrometer	-
Needle-nose pliers	-
No. 1 engine hanger	-
No. 2 engine hanger	-
Pin hole grinder	-
Piston ring compressor	-
Piston ring expander	-
Piston heater	-
Plastigage	-
Plastic-faced hammer	-
Press	-
Radiator cap tester	-
Reamer (5.5 mm)	-
Ridge reamer	-
Rod aligner	-
Sandpaper (#400)	-
Slide calipers	-
Straightedge	-
Spring scale	-
Spring tension gauge	-
Steel square	-
Tachometer	-
Timing light	-
Toe-in gauge	-
Torque wrench	-
Valve seat cutter	-
V-block	-
Vernier calipers	-
Vise	-
Wooden block	-

SSM

Toyota Genuine Seal Packing Black, Three Bond 1207B or Equivalent	-
Toyota Genuine Adhesive 1324, Three Bond 1324 or Equivalent	-
Toyota Genuine Adhesive, Three Bond 1344 or Equivalent	-

2GR-FE ENGINE MECHANICAL

SST

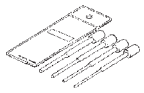	09201-10000	Valve Guide Bushing Remover & Replacer Set	-
	(09201-01050)	Valve Guide Bushing Remover & Replacer 5	-
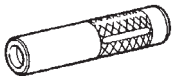	09201-41020	Valve Stem Oil Seal Replacer	-
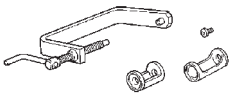	09202-70020	Valve Spring Compressor	-
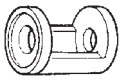	(09202-00010)	Attachment	-
	09213-70011	Crankshaft Pulley Holding Tool	-
	(09213-70020)	Bolt	-
	09222-30010	Connecting Rod Bushing Remover & Replacer	-
	09223-15030	Oil Seal & Bearing Replacer	-
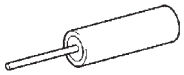	09276-75010	Valve Lifter Tool	-
	09330-00021	Companion Flange Holding Tool	-

PP

	09843-18040	Diagnosis Check Wire No.2	-
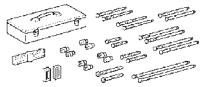	09950-50013	Puller C Set	-
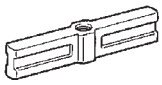	(09951-05010)	Hanger 150	-
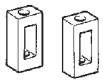	(09952-05010)	Slide Arm	-
	(09953-05020)	Center Bolt 150	-
	(09954-05021)	Claw No.2	-
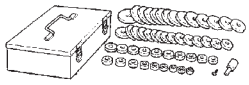	09950-60010	Replacer Set	-
	(09951-00340)	Replacer 34	-
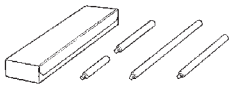	09950-70010	Handle Set	-
	(09951-07100)	Handle 100	-

2GR-FE EXHAUST

EQUIPMENT

Torque wrench	-
Vernier calipers	-

EQUIPMENT

Ohmmeter	-
Plastic bag	-
Torque wrench	-
Vernier caliper	-

2GR-FE FUEL

SST

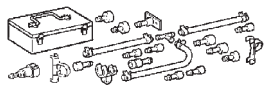	09268-41048	Injection Measuring Tool Set	-
	(09268-41130)	Adapter	-
	(09268-41500)	Fuel Tube Connector	-
	(90467-13001)	Clip	-
	(95336-08070)	Hose	-
	09268-41400	Clamp	-
	09268-45014	EFI Fuel Pressure Gauge	-
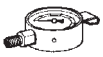	(09268-41200)	Gauge	-
	(09268-41220)	Hose	-
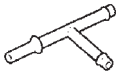	(09268-41250)	T Joint	-
	09842-30080	Wire H EFI Inspection	-

PP

RECOMMENDED TOOLS

	09082-00040	TOYOTA Electrical Tester	-
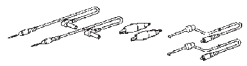	(09083-00150)	Test Lead Set	-

2GR-FE IGNITION

RECOMMENDED TOOLS

	09082-00040	TOYOTA Electrical Tester	-
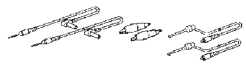	(09083-00150)	Test Lead Set	-

EQUIPMENT

Ohmmeter	-
Voltmeter	-
Megohmmeter	-
Spark plug cleaner	-
Torque wrench	-

2GR-FE INTAKE

RECOMMENDED TOOLS

	09082-00040	TOYOTA Electrical Tester	-
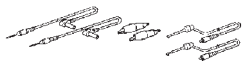	(09083-00150)	Test Lead Set	-

EQUIPMENT

Intelligent tester	-
Vacuum pump	-

EQUIPMENT

Container	-
Deep socket wrench (24 mm)	-
Hose	Oil filter
Oil pressure gauge	-
Socket wrench (27 mm)	-
Straightedge	-
Torque wrench	-
Wooden block	-

LUBRICANT

Item		Capacity	Classification
Oil grade		-	ILSAC multigrade engine oil is recommended. SAE 5W-30 is the best choice for good fuel economy and good starting in cold weather.
Drain and refill	With oil filter change	6.1 liters (6.4 US qts, 5.4 Imp. qts)	-
	Without oil filter change	5.7 liters (6.0 US qts, 5.0 Imp. qts)	-
Dry fill		6.5 liters (6.9 US qts, 5.7 Imp. qts)	-

SSM

Toyota Genuine Adhesive 1344, Three Bond 1344 or Equivalent	-
Toyota Genuine Seal Packing Block, Three Bond 1207B or Equivalent	-
Toyota Genuine Seal Packing 1282B, Three Bond 1282B or Equivalent	-

2GR-FE LUBRICATION

SST

	09032-00100	Oil Pan Seal Cutter	-
	09228-06501	Oil Filter Wrench	-
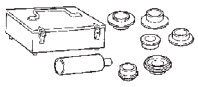	09316-60011	Transmission & Transfer Bearing Replacer	-
	(09316-00011)	Replacer Pipe	-

RECOMMENDED TOOLS

	09200-00010	Engine Adjust Kit	-

2GR-FE STARTING

RECOMMENDED TOOLS

	09082-00040	TOYOTA Electrical Tester	-
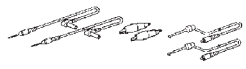	(09083-00150)	Test Lead Set	-

EQUIPMENT

Ammeter	-
Ohmmeter	-
Torque wrench	-
Service wire harness	-
Vernier calipers	-

EQUIPMENT

Torque wrench	-
Tape	To avoid surface damage

LUBRICANT

Item	Capacity	Classification
Compressor oil	-	ND-OIL 8 or equivalent

AIR CONDITIONING

SST

	07110-58060	Air Conditioner Service Tool Set	-
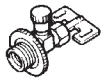	(07117-58060)	Refrigerant Drain Service Valve	-
	(07117-58070)	T-Joint	-
	(07117-58080)	Quick Disconnect Adapter	-
	(07117-58090)	Quick Disconnect Adapter	-
	(07117-78050)	Refrigerant Charging Gauge	-
	(07117-88060)	Refrigerant Charging Hose	-
	(07117-88070)	Refrigerant Charging Hose	-
	(07117-88080)	Refrigerant Charging Hose	-

RECOMMENDED TOOLS

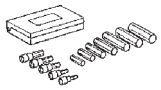	09040-00011	Hexagon Wrench Set	-
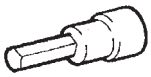	(09043-20060)	Socket Hexagon Wrench 6	-
	09082-00040	TOYOTA Electrical Tester	-
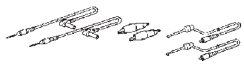	(09083-00150)	Test Lead Set	-
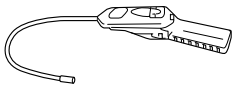	95146-00180	Halogen Leak Detector DENSO Part No.	-

PP

AXLE

SST

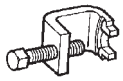	09650-17011	Hub Bolt Remover	-
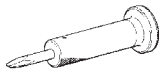	09930-00010	Drive Shaft Nut Chisel	-

EQUIPMENT

Dial indicator with magnetic base	
Micrometer	
Torque wrench	

EQUIPMENT

Soft jaw vise	Skid control sensor
Torque wrench	-

LUBRICANT

Item	Capacity	Classification
Brake fluid	-	SAE J1703 or FMVSS No. 116 DOT3

BRAKE CONTROL

SST

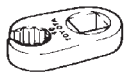	09023-00101	Union Nut Wrench 10 mm	-
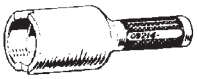	09214-76011	Crankshaft Pulley Replacer	-
	09520-00031	Rear Axle Shaft Puller	-
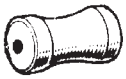	(09520-00040)	Shocker	-
	09521-00020	Drive Shaft Boot Clamping Tool	-
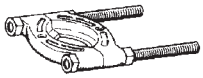	09950-00020	Bearing Remover	-

RECOMMENDED TOOLS

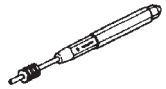	09031-00040	Pin Punch .	Skid control sensor
	09082-00040	TOYOTA Electrical Tester	-
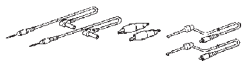	(09083-00150)	Test Lead Set	-

EQUIPMENT

Soft jaw vise	Skid control sensor
Torque wrench	-

LUBRICANT

Item	Capacity	Classification
Brake fluid	-	SAE J1703 or FMVSS No. 116 DOT3

BRAKE CONTROL

SST

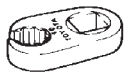	09023-00101	Union Nut Wrench 10 mm	-
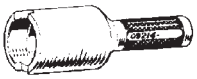	09214-76011	Crankshaft Pulley Replacer	-
	09520-00031	Rear Axle Shaft Puller	-
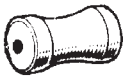	(09520-00040)	Shocker	-
	09521-00020	Drive Shaft Boot Clamping Tool	-
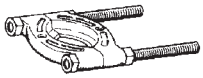	09950-00020	Bearing Remover	-

RECOMMENDED TOOLS

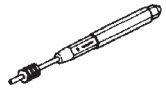	09031-00040	Pin Punch .	Skid control sensor
	09082-00040	TOYOTA Electrical Tester	-
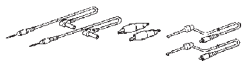	(09083-00150)	Test Lead Set	-

CAN COMMUNICATION

RECOMMENDED TOOLS

	09082-00040	TOYOTA Electrical Tester	-
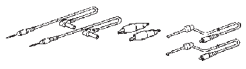	(09083-00150)	Test Lead Set	-

CRUISE CONTROL

RECOMMENDED TOOLS

	09082-00040	TOYOTA Electrical Tester	-
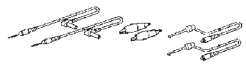	(09083-00150)	Test Lead Set	-

EQUIPMENT

Torque wrench	-

RECOMMENDED TOOLS

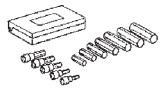	09040-00011	Hexagon Wrench Set	-
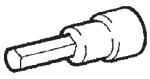	(09043-20050)	Socket Hexagon Wrench 5	-
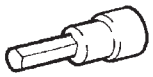	(09043-20080)	Socket Hexagon Wrench 8	-
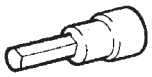	(09043-20100)	Socket Hexagon Wrench 10	-

EQUIPMENT

Chisel	
Dial indicator with magnetic base	
Plastic-faced hammer	
Torque wrench	

LUBRICANT

Item	Capacity	Classification
Rear differential oil	0.45 to 0.55 liters (0.48 to 0.58 US qts., 0.40 to 0.48 Imp. qts.)	Hypoid gear oil API GL-5 or equivalent

SSM

Toyota Genuine Seal Packing 1281 Three Bond 1281 or Equivalent	-

DIFFERENTIAL

SST

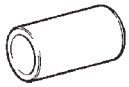	09223-00010	Cover & Seal Replacer	-
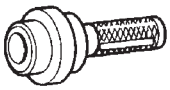	09223-50010	Crankshaft Front Oil Seal Replacer	-
	09308-00010	Oil Seal Puller	-
	09308-10010	Oil Seal Puller	-
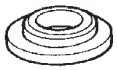	09506-30012	Differential Drive Pinion Rear Bearing Cone Replacer	-
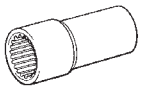	09556-16011	Differential Drive Pinion Holding Tool	-
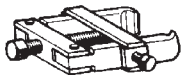	09556-30010	Drive Pinion Front Bearing Remover	-
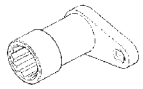	09564-16020	Drive Pinion Lock Nut Wrench	-
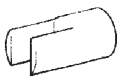	09564-32011	Differential Preload Adaptor	-
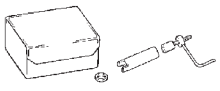	09612-07010	Main Shaft Retaining Ring Remover & Replacer	-
	(09612-10061)	Steering Pinion Bearing Replacer	-

	09612-65014	Steering Worm Bearing Puller	-
	(09612-01020)	Claw B	-
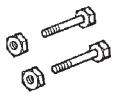	(09612-01050)	Hanger Pin with Nut	-
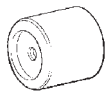	09649-17010	Steering Knuckle Tool	-
	(09951-00510)	Replacer 51	-
	09710-30021	Suspension Bushing Tool Set	-
	(09710-03121)	Bushing Remover Base	-
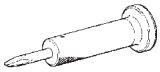	09930-00010	Drive Shaft Nut Chisel	-
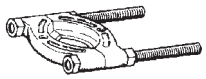	09950-00020	Bearing Remover	-
	09950-40011	Puller B Set	-
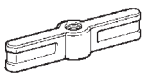	(09951-04010)	Hanger 150	-
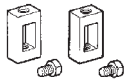	(09952-04010)	Slide Arm	-

PP

	(09953-04020)	Center Bolt 150	-
	(09954-04010)	Arm 25	-
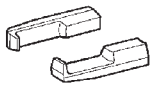	(09955-04061)	Claw No.6	-
	(09957-04010)	Attachment	-
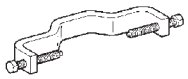	(09958-04011)	Holder	-
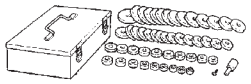	09950-60010	Replacer Set	-
	(09951-00320)	Replacer 32	-
	(09951-00460)	Replacer 46	-
	(09951-00510)	Replacer 51	-
	(09951-00550)	Replacer 55	-
	(09951-00570)	Replacer 57	-
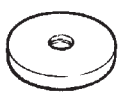	(09951-00600)	Replacer 60	-

	(09951-00620)	Replacer 62	-
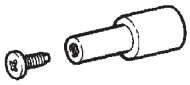	(09952-06010)	Adapter	-
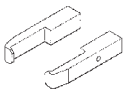	(09955-04071)	Claw No.7	-
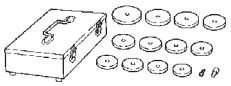	09950-60020	Replacer Set No.2	-
	(09951-00680)	Replacer 68	-
	(09951-00750)	Replacer 75	-
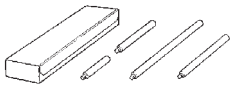	09950-70010	Handle Set	-
	(09951-07100)	Handle 100	-
	(09951-07150)	Handle 150	-

PP

DOOR LOCK

RECOMMENDED TOOLS

	09082-00040	TOYOTA Electrical Tester	-
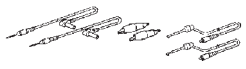	(09083-00150)	Test Lead Set	-

DRIVE SHAFT

SST

	09520-01010	Drive Shaft Remover Attachment	-
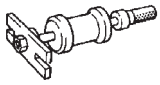	09520-24010	Differential Side Gear Shaft Puller	-
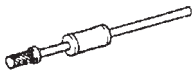	(09520-32040)	Shocker Set	-
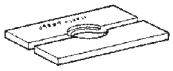	09527-10011	Rear Axle Shaft Bearing Remover	-
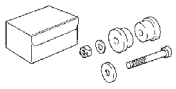	09608-16042	Front Hub Bearing Adjusting Tool	-
	(09608-02021)	Bolt & Nut	-
	(09608-02041)	Retainer	-
	09710-04081	Base	-
	09726-40010	Lower Control Shaft Bearing Replacer	-
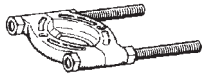	09950-00020	Bearing Remover	-

PP

EQUIPMENT

Dial indicator with magnetic base	
Micrometer	
Torque wrench	

ENGINE IMMOBILISER

RECOMMENDED TOOLS

	09082-00040	TOYOTA Electrical Tester	-
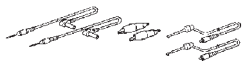	(09083-00150)	Test Lead Set	-

EXTERIOR

RECOMMENDED TOOLS

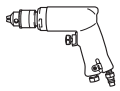	09050-00032	Air Drill	-
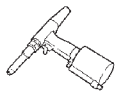	09050-20010	Air Riveter	-
	09070-20010	Moulding Remover	-

EQUIPMENT

Cleaner	
Clip remover	
Double-sided tape	
Hand riveter	
Protective tape	To avoid surface damage
Torque wrench	

RECOMMENDED TOOLS

	09904-00010	Expander Set	
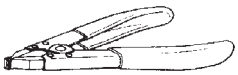	09905-00012	Snap Ring No.1 Expander	

EQUIPMENT

Dial indicator or dial indicator with magnetic base	
Plastic-faced hammer	
Hammer	
Press	
Torque wrench	

LUBRICANT

Item	Capacity	Classification
Transfer oil	0.5 liters (0.5 US qts, 0.4 Imp. qts)	API GL-5 SAE 75W-90

SSM

Toyota Genuine Seal Packing Black, Three Bond 1207B or Equivalent	

GF1A TRANSFER

SST

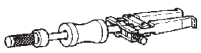	09308-00010	Oil Seal Puller	
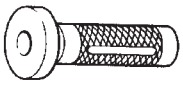	09310-35010	Countershaft Bearing Replacer	
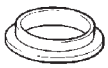	09316-12010	Transfer Bearing Replacer	
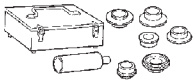	09316-60011	Transmission & Transfer Bearing Replacer	
	(09316-00011)	Replacer Pipe	
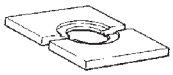	09336-16010	Wrench 55 x 32 mm	
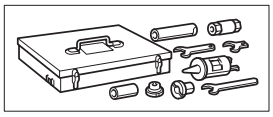	09612-10093	Steering Gear Housing Overhaul Tool Set	
	(09612-10061)	Steering Pinion Bearing Replacer	
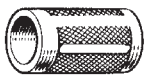	09636-20010	Upper Ball Joint Dust Cover Replacer	
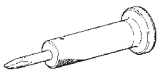	09930-00010	Drive Shaft Nut Chisel	
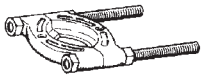	09950-00020	Bearing Remover	

	09950-40011	Puller B Set	
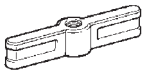	(09951-04010)	Hanger 150	
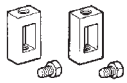	(09952-04010)	Slide Arm	
	(09953-04020)	Center Bolt 150	
	(09953-04030)	Center Bolt 200	
	(09954-04010)	Arm 25	
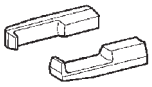	(09955-04061)	Claw No.6	
	(09957-04010)	Attachment	
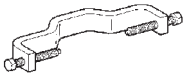	(09958-04011)	Holder	
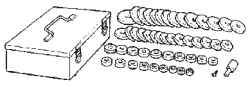	09950-60010	Replacer Set	
	(09951-00220)	Replacer 22	
	(09951-00400)	Replacer 40	

PP

	(09951-00440)	Replacer 44	
	(09951-00540)	Replacer 54	
	(09951-00560)	Replacer 56	
	(09951-00620)	Replacer 62	
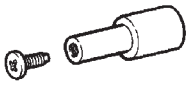	(09952-06010)	Adapter	
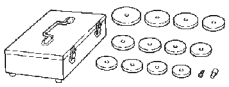	09950-60020	Replacer Set No.2	
	(09951-00750)	Replacer 75	
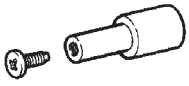	(09952-06010)	Adapter	
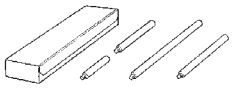	09950-70010	Handle Set	
	(09951-07100)	Handle 100	
	(09951-07150)	Handle 150	

HORN

RECOMMENDED TOOLS

	09082-00040	TOYOTA Electrical Tester	-
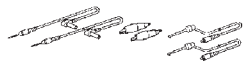	(09083-00150)	Test Lead Set	-

EQUIPMENT

Torque wrench	

INSTRUMENT PANEL

EQUIPMENT

Tape	To avoid surface damage
Torque wrench	-

INTERIOR

EQUIPMENT

Clip remover	
Double-sided tape	
Protective tape	To avoid surface damage

LIGHTING

RECOMMENDED TOOLS

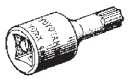	09042-00010	Torx Socket T30	-
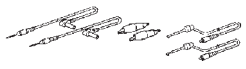	(09083-00150)	Test Lead Set	-
	09082-00040	TOYOTA Electrical Tester	-

EQUIPMENT

Tape	To avoid surface damage

METER

RECOMMENDED TOOLS

	09082-00040	TOYOTA Electrical Tester	-
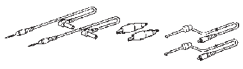	(09083-00150)	Test Lead Set	-

PP

MIRROR

RECOMMENDED TOOLS

	09082-00040	TOYOTA Electrical Tester	-
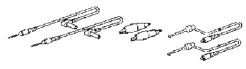	(09083-00150)	Test Lead Set	-

EQUIPMENT

Tape	To avoid surface damage
Torque wrench	

PARKING BRAKE

RECOMMENDED TOOLS

	09082-00040	TOYOTA Electrical Tester	-
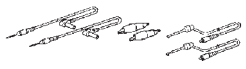	(09083-00150)	Test Lead Set	-

EQUIPMENT

Torque wrench	
Needle-nose pliers	
Brake drum gauge	
Ruler	

EQUIPMENT

Torque wrench	-

POWER STEERING

SST

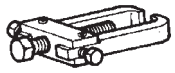	09628-62011	Boll Joint Puller	-

RECOMMENDED TOOLS

	09082-00040	TOYOTA Electrical Tester	-
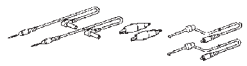	(09083-00150)	Test Lead Set	-

PROPELLER SHAFT

SST

	09370-50010	Drive Line Angle Gauge	-

EQUIPMENT

Dial indicator with magnetic base	
Torque wrench	
V - block	
Vernier calipers	

SEAT BELT

SST

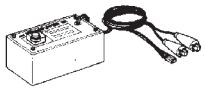	09082-00700	SRS Airbag Deployment Tool	-
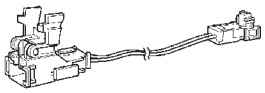	09082-00770	Airbag Deployment Wire Sub-harness No.5	-

EQUIPMENT

Torque wrench	

SEAT

RECOMMENDED TOOLS

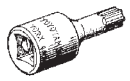	09042-00010	Torx Socket T30	-
	09082-00040	TOYOTA Electrical Tester	-
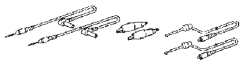	(09083-00150)	Test Lead Set	-
	09200-00010	Engine Adjust Kit	-

EQUIPMENT

Clip remover	
Hog ring	
Hog ring pliers	
Protective tape	To avoid surface damage
Tacker	
Tack pin	
Torque wrench	

SEAT BELT

SST

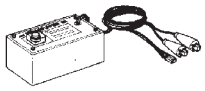	09082-00700	SRS Airbag Deployment Tool	-
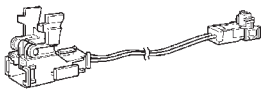	09082-00770	Airbag Deployment Wire Sub-harness No.5	-

EQUIPMENT

Torque wrench	

SLIDING ROOF

RECOMMENDED TOOLS

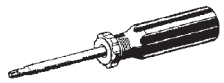	09041-00020	Torx Driver T25	-
	09082-00040	TOYOTA Electrical Tester	-
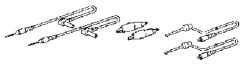	(09083-00150)	Test Lead Set	-

EQUIPMENT

Torque wrench	

EQUIPMENT

Torque wench	-
Drill	-

STEERING COLUMN

SST

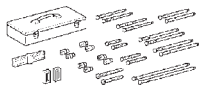	09950-50013	Puller C Set	-
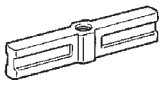	(09951-05010)	Hanger 150	-
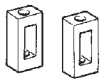	(09952-05010)	Slide Arm	-
	(09953-05020)	Center Bolt 150	-
	(09954-05021)	Claw No.2	-

RECOMMENDED TOOLS

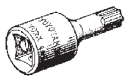	09042-00010	Torx Socket T30	-

RECOMMENDED TOOLS

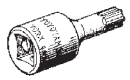	09042-00010	Torx Socket T30	-
	09082-00050	TOYOTA Electrical Tester Set	-
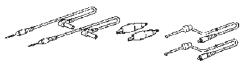	(09083-00150)	Test Lead Set	-

EQUIPMENT

Bolt Length: 35.0 mm (1.378 in.) Pitch: 1.0 mm (0.039 in.) Diameter: 6.0 mm (0.236 in.)	Airbag disposal
Plastic bag	Airbag disposal
Tire Width: 185 mm (7.28 in.) Inner diameter: 360 mm (14.17 in.)	Airbag disposal
Tire with disc wheel Width: 185 mm (7.28 in.) Inner diameter: 360 mm (14.17 in.)	Airbag disposal
Torque wrench	-

SUPPLEMENTAL RESTRAINT SYSTEM

SST

PP

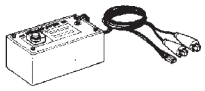	09082-00700	SRS Airbag Deployment Tool	-
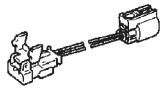	09082-00750	Airbag Deployment Wire Sub-harness No.3	-
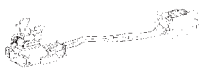	09082-00780	Airbag Deployment Wire Sub-harness No.6	-
	09082-00802	Airbag Deployment Wire Sub-Harness No. 8	-
	(09082-10801)	Wire A	-
	(09082-20801)	Wire B	-
	(09082-30801)	Wire C	-
	09843-18060	SRS Check Wire	-
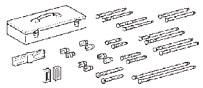	09950-50013	Puller C Set	-
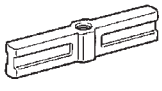	(09951-05010)	Hanger 150	-
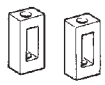	(09952-05010)	Slide Arm	-

	(09953-05020)	Center Bolt 150	-
	(09954-05021)	Claw No.2	-

SUSPENSION

SST

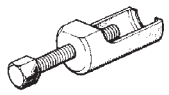	09610-20012	Pitman Arm Puller	-
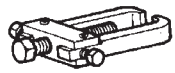	09628-62011	Boll Joint Puller	-
	09670-00020	Front Crossmember Guide Tool	-
	09727-30021	Coil Spring Compressor	-
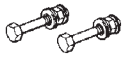	(09727-00010)	Bolt Set	-
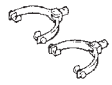	(09727-00021)	Arm Set	-
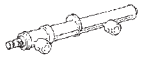	(09727-00031)	Compressor	-
	09729-22031	Front Spring Upper Seat Holder	-
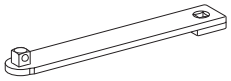	09961-01270	Torque Wrench Adapter	-

EQUIPMENT

Alignment tester	
Angle gauge	
Dial indicator with magnetic base	
Drill	
Toe-in gauge	
Torque wrench	

TIRE AND WHEEL

RECOMMENDED TOOLS

	09082-00040	TOYOTA Electrical Tester	-
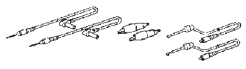	(09083-00150)	Test Lead Set	-

EQUIPMENT

Dial indicator with magnetic base	
Tire pressure gauge	
Torque wrench	
Wheel balancer	

RECOMMENDED TOOLS

	09011-12301	Socket Wrench 30 mm	-
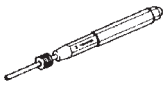	09031-00030	Pin Punch	-
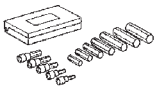	09040-00011	Hexagon Wrench Set	-
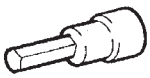	(09043-20060)	Socket Hexagon Wrench 6	-
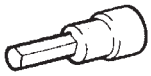	(09043-20100)	Socket Hexagon Wrench 10	-
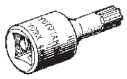	09042-00010	Torx Socket T30	-
	09904-00010	Expander Set	-
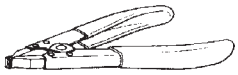	09905-00012	Snap Ring No.1 Expander	-
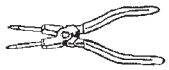	09905-00013	Snap Ring Pliers	-

EQUIPMENT

Straight edge	-
Vernier calipers	-
Dial indicator or dial indicator with magnetic base	-
Torque wrench	-
Feeler gauge	-
Plastic-faced hammer	-
Press	-
Seal packing 2403, THREE BOND 2403 or equivalent	-

LUBRICANT

Automatic transaxle fluid Dry fill (w/ Warmer)	8.1 liters (8.6 US qts, 7.2 Imp. qts)	Toyota Genuine ATF WS
Automatic transaxle fluid Drain and refill (w/ Warmer)	3.5 liters (3.7 US qts, 3.1 Imp. qts)	

SSM

Toyota Genuine Seal Packing 1281 Three Bond 1281 or Equivalent	-
Toyota Genuine Adhesive 1344 Three Bond 1344 or Equivalent	-

U140F AUTOMATIC TRANSAXLE

SST

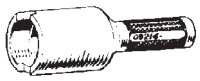	09214-76011	Crankshaft Pulley Replacer	-
	09215-00013	Crankshaft Bearing Remover & Replacer Set B	-
	(09215-00471)	Camshaft Bearing Remover & Replacer	-
	09223-15020	Oil Seal & Bearing Replacer	-
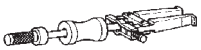	09308-00010	Oil Seal Puller	-
	09309-37010	Transmission Bearing Replacer	-
	09350-32014	TOYOTA Automatic Transmission Tool Set	-
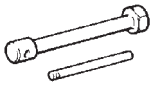	(09351-32010)	One-way Clutch Test Tool	-
	(09351-32020)	Stator Stopper	-
	(09351-32070)	No.2 Piston Spring Compressor	-
	(09351-32140)	Oil Seal Replacer	-

PP

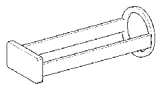	09387-00020	Direct Clutch Wrench	-
	09387-00030	Counter Drive Gear Holding Tool	-
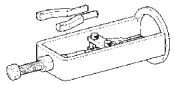	09387-00041	Bearing Puller Assembly	-
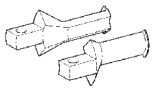	(09387-01010)	Claw No.1	-
	(09387-01030)	Pin	-
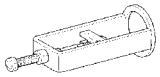	(09387-01040)	Bearing Puller Body	-
	09387-00050	Under Drive Gear Puller	-
	09387-00060	Second Brake Wrench	-
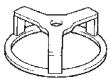	09387-00070	First & Reverse Brake Wrench	-
	09387-00080	Counter Drive Gear Nut Wrench	-
	09514-35011	Rear Wheel Bearing Puller	-
	09550-60010	Differential Side Bearing Replacer	-

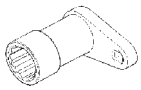	09564-16020	Drive Pinion Lock Nut Wrench	-
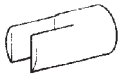	09564-32011	Differential Preload Adaptor	-
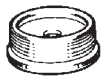	09608-10010	Steering Knuckle Oil Seal Replacer	-
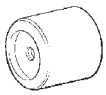	09649-17010	Steering Knuckle Tool	-
	09710-30050	Suspension Arm Bushing Replacer	-
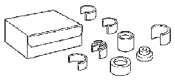	09726-27012	Front Suspension Arm Bushing Remover & Replacer	-
	(09726-02041)	Replacer	-
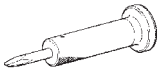	09930-00010	Drive Shaft Nut Chisel	-
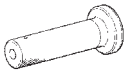	(09931-00010)	Handle	-
	(09931-00020)	Nut Chisel	-
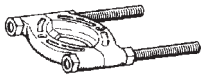	09950-00020	Bearing Remover	-
	09950-00030	Bearing Remover Attachment	-

PP

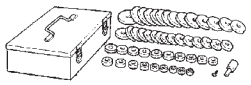	09950-60010	Replacer Set	-
	(09951-00230)	Replacer 23	-
	(09951-00320)	Replacer 32	-
	(09951-00340)	Replacer 34	-
	(09951-00450)	Replacer 45	-
	(09951-00500)	Replacer 50	-
	(09951-00580)	Replacer 58	-
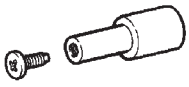	(09952-06010)	Adapter	-
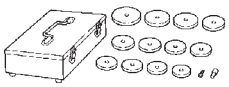	09950-60020	Replacer Set No.2	-
	(09951-00680)	Replacer 68	-
	(09951-00750)	Replacer 75	-
	(09951-00810)	Replacer 81	-

	(09951-00890)	Replacer 89	-
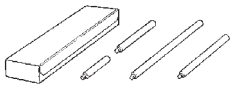	09950-70010	Handle Set	-
	(09951-00890)	Replacer 89	-
	(09951-07100)	Handle 100	-
	(09951-07150)	Handle 150	-
	(09951-07200)	Handle 200	-

PP

RECOMMENDED TOOLS

	09011-12301	Socket Wrench 30 mm	-
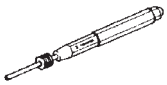	09031-00030	Pin Punch	-
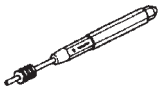	09031-00040	Pin Punch .	-
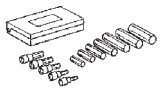	09040-00011	Hexagon Wrench Set	-
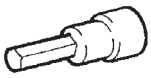	(09043-20050)	Socket Hexagon Wrench 5	-
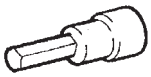	(09043-20060)	Socket Hexagon Wrench 6	-
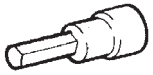	(09043-20100)	Socket Hexagon Wrench 10	-
	09070-20010	Moulding Remover	-
	09090-04020	Engine Sling Device	-
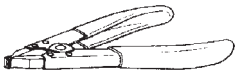	09905-00012	Snap Ring No.1 Expander	-
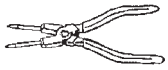	09905-00013	Snap Ring Pliers	-

PP

EQUIPMENT

Straight edge	
Torque wrench	
Vernier calipers	
Dial indicator with magnetic base	
Slide calipers	
Chain block	
Feeler gauge	
Plastic hammer	
Press	

LUBRICANT

Automatic transaxle fluid

Dry fill Drain and refill	8.1 liter (8.6 US qts, 7.1 Imp.qts) 3.6 liter (3.8 US qts, 3.2 Imp.qts)	Toyota Genuine ATF WS

SSM

Toyota Genuine Seal Packing 1281 Three Bond 1281 or Equivalent	-
Toyota Genuine Adhesive 1344 Three Bond 1344 or Equivalent	-

U151E AUTOMATIC TRANSMISSION

SST

	09215-00013	Crankshaft Bearing Remover & Replacer Set B	-
	(09215-00471)	Camshaft Bearing Remover & Replacer	-
	09223-15020	Oil Seal & Bearing Replacer	-
	09223-15030	Oil Seal & Bearing Replacer	-
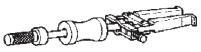	09308-00010	Oil Seal Puller	-
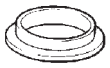	09316-12010	Transfer Bearing Replacer	-
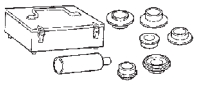	09316-60011	Transmission & Transfer Bearing Replacer	-
	(09316-00011)	Replacer Pipe	-
	09350-32014	TOYOTA Automatic Transmission Tool Set	-
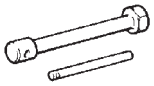	(09351-32010)	One-way Clutch Test Tool	-
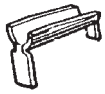	(09351-32020)	Stator Stopper	-

PP

PP

	(09351-32070)	No.2 Piston Spring Compressor	-
	(09351-32140)	Oil Seal Replacer	-
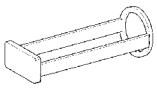	09387-00020	Direct Clutch Wrench	-
	09387-00030	Counter Drive Gear Holding Tool	-
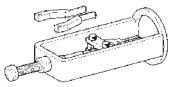	09387-00041	Bearing Puller Assembly	-
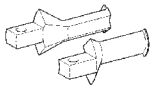	(09387-01010)	Claw No.1	-
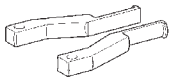	(09387-01021)	Claw No.2	-
	(09387-01030)	Pin	-
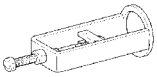	(09387-01040)	Bearing Puller Body	-
	09387-00050	Under Drive Gear Puller	-
	09387-00060	Second Brake Wrench	-
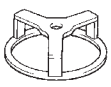	09387-00070	First & Reverse Brake Wrench	-

	09387-00080	Counter Drive Gear Nut Wrench	-
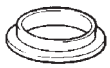	09502-12010	Differential Bearing Replacer	-
	09506-35010	Differential Drive Pinion Rear Bearing Replacer	-
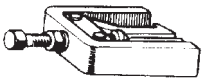	09514-35011	Rear Wheel Bearing Puller	-
	09527-17011	Rear Axle Shaft Bearing Remover	-
	09550-60010	Differential Side Bearing Replacer	-
	(09951-00490)	Replacer 49	-
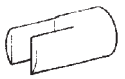	09564-32011	Differential Preload Adaptor	-
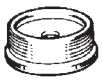	09608-10010	Steering Knuckle Oil Seal Replacer	-
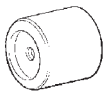	09649-17010	Steering Knuckle Tool	-
	09710-30050	Suspension Arm Bushing Replacer	-
	09726-40010	Lower Control Shaft Bearing Replacer	-

PP

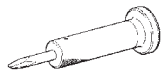	09930-00010	Drive Shaft Nut Chisel	-
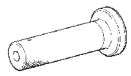	(09931-00010)	Handle	-
	(09931-00020)	Nut Chisel	-
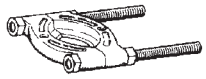	09950-00020	Bearing Remover	-
	09950-00030	Bearing Remover Attachment	-
	09950-40011	Puller B Set	-
	(09957-04010)	Attachment	-
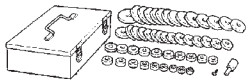	09950-60010	Replacer Set	-
	(09951-00230)	Replacer 23	-
	(09951-00260)	Replacer 26	-
	(09951-00320)	Replacer 32	-
	(09951-00450)	Replacer 45	-

	(09951-00490)	Replacer 49	-
	(09951-00500)	Replacer 50	-
	(09951-00590)	Replacer 59	-
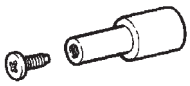	(09952-06010)	Adapter	-
	(09957-04010)	Attachment	-
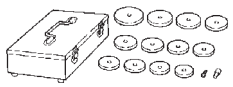	09950-60020	Replacer Set No.2	-
	(09951-00750)	Replacer 75	-
	(09951-00810)	Replacer 81	-
	(09951-00890)	Replacer 89	-
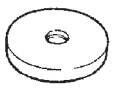	(09951-00910)	Replacer 91	-
	(09951-01030)	Replacer 103	-
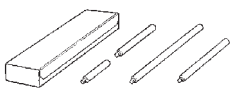	09950-70010	Handle Set	-

PP

	(09951-07100)	Handle 100	-
	(09951-07150)	Handle 150	-

RECOMMENDED TOOLS

	09011-12301	Socket Wrench 30 mm	-
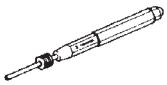	09031-00030	Pin Punch	-
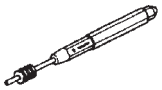	09031-00040	Pin Punch .	-
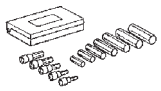	09040-00011	Hexagon Wrench Set	-
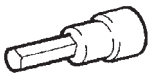	(09043-20050)	Socket Hexagon Wrench 5	-
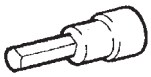	(09043-20060)	Socket Hexagon Wrench 6	-
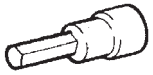	(09043-20100)	Socket Hexagon Wrench 10	-
	09070-20010	Moulding Remover	-
	09090-04020	Engine Sling Device	-
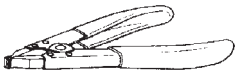	09905-00012	Snap Ring No.1 Expander	-
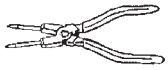	09905-00013	Snap Ring Pliers	-

PP

EQUIPMENT

Straight edge	
Torque wrench	
Vernier calipers	
Dial indicator with magnetic base	
Slide calipers	
Chain block	
Feeler gauge	
Plastic hammer	
Press	

LUBRICANT

Automatic transaxle fluid

Dry fill Drain and refill	8.1 liter (8.6 US qts, 7.1 Imp.qts) 3.6 liter (3.8 US qts, 3.2 Imp.qts)	Toyota Genuine ATF WS

SSM

Toyota Genuine Seal Packing 1281 Three Bond 1281 or Equivalent	-
Toyota Genuine Adhesive 1344 Three Bond 1344 or Equivalent	-

U151F AUTOMATIC TRANSMISSION

SST

	09215-00013	Crankshaft Bearing Remover & Replacer Set B	-
	(09215-00471)	Camshaft Bearing Remover & Replacer	-
	09223-15020	Oil Seal & Bearing Replacer	-
	09223-15030	Oil Seal & Bearing Replacer	-
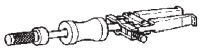	09308-00010	Oil Seal Puller	-
	09350-32014	TOYOTA Automatic Transmission Tool Set	-
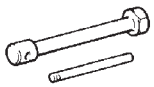	(09351-32010)	One-way Clutch Test Tool	-
	(09351-32020)	Stator Stopper	-
	(09351-32070)	No.2 Piston Spring Compressor	-
	(09351-32140)	Oil Seal Replacer	-
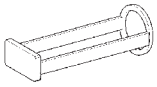	09387-00020	Direct Clutch Wrench	-

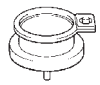	09387-00030	Counter Drive Gear Holding Tool	-
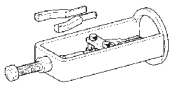	09387-00041	Bearing Puller Assembly	-
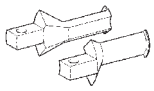	(09387-01010)	Claw No.1	-
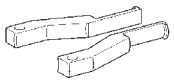	(09387-01021)	Claw No.2	-
	(09387-01030)	Pin	-
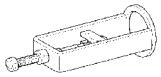	(09387-01040)	Bearing Puller Body	-
	09387-00050	Under Drive Gear Puller	-
	09387-00060	Second Brake Wrench	-
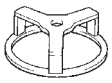	09387-00070	First & Reverse Brake Wrench	-
	09387-00080	Counter Drive Gear Nut Wrench	-
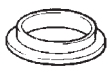	09502-12010	Differential Bearing Replacer	-
	09506-35010	Differential Drive Pinion Rear Bearing Replacer	-

PP

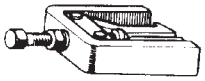	09514-35011	Rear Wheel Bearing Puller	-
	09527-17011	Rear Axle Shaft Bearing Remover	-
	09550-60010	Differential Side Bearing Replacer	-
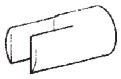	09564-32011	Differential Preload Adaptor	-
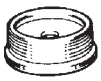	09608-10010	Steering Knuckle Oil Seal Replacer	-
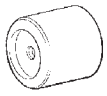	09649-17010	Steering Knuckle Tool	-
	09710-30050	Suspension Arm Bushing Replacer	-
	09726-40010	Lower Control Shaft Bearing Replacer	-
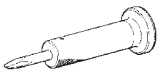	09930-00010	Drive Shaft Nut Chisel	-
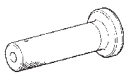	(09931-00010)	Handle	-
	(09931-00020)	Nut Chisel	-
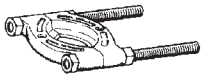	09950-00020	Bearing Remover	-

	09950-00030	Bearing Remover Attachment	-
	09950-40011	Puller B Set	-
	(09957-04010)	Attachment	-
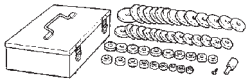	09950-60010	Replacer Set	-
	(09951-00230)	Replacer 23	-
	(09951-00260)	Replacer 26	-
	(09951-00320)	Replacer 32	-
	(09951-00450)	Replacer 45	-
	(09951-00500)	Replacer 50	-
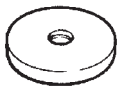	(09951-00590)	Replacer 59	-
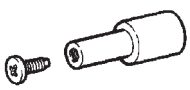	(09952-06010)	Adapter	-
	(09957-04010)	Attachment	-

PP

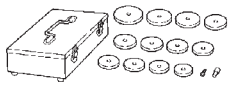	09950-60020	Replacer Set No.2	-
	(09951-00680)	Replacer 68	-
	(09951-00750)	Replacer 75	-
	(09951-00810)	Replacer 81	-
	(09951-00890)	Replacer 89	-
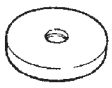	(09951-00910)	Replacer 91	-
	(09951-01030)	Replacer 103	-
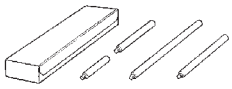	09950-70010	Handle Set	-
	(09951-00890)	Replacer 89	-
	(09951-07100)	Handle 100	--
	(09951-0750)	Handle 150	-
	(09951-07200)	Handle 200	-

RECOMMENDED TOOLS

	09011-12301	Socket Wrench 30 mm	-
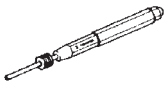	09031-00030	Pin Punch	-
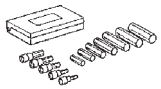	09040-00011	Hexagon Wrench Set	-
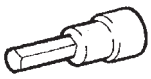	(09043-20060)	Socket Hexagon Wrench 6	-
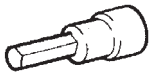	(09043-20100)	Socket Hexagon Wrench 10	-
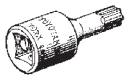	09042-00010	Torx Socket T30	-
	09904-00010	Expander Set	-
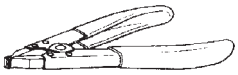	09905-00012	Snap Ring No.1 Expander	-
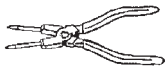	09905-00013	Snap Ring Pliers	-

PP

EQUIPMENT

Straight edge	-
Vernier calipers	-
Dial indicator or dial indicator with magnetic base	-
Torque wrench	-
Feeler gauge	-
Plastic-faced hammer	-
Press	-
Seal packing 2403, THREE BOND 2403 or equivalent	-

LUBRICANT

Automatic transaxle fluid Dry fill	8.1 liters (8.6 US qts, 7.2 Imp. qts)	Toyota Genuine ATF WS
Automatic transaxle fluid Drain and refill	3.5 liters (3.7 US qts, 3.1 Imp. qts)	

SSM

Toyota Genuine Seal Packing 1281 Three Bond 1281 or Equivalent	-
Toyota Genuine Adhesive 1344 Three Bond 1344 or Equivalent	-

U241E AUTOMATIC TRANSAXLE

SST

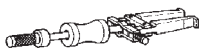	09308-00010	Oil Seal Puller	-
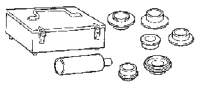	09316-60011	Transmission & Transfer Bearing Replacer	-
	(09316-00011)	Replacer Pipe	-
	09350-32014	TOYOTA Automatic Transmission Tool Set	-
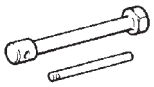	(09351-32010)	One-way Clutch Test Tool	-
	(09351-32020)	Stator Stopper	-
	(09351-32070)	No.2 Piston Spring Compressor	-
	(09351-3240)	Oil Seal Replacer	-
	(09351-32150)	Oil Seal Replacer	-
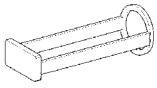	09387-00020	Direct Clutch Wrench	-
	09387-00030	Counter Drive Gear Holding Tool	-

PP

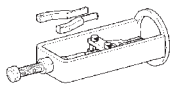	09387-00041	Bearing Puller Assembly	-
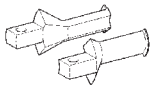	(09387-01010)	Claw No.1	-
	(09387-01030)	Pin	-
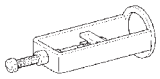	(09387-01040)	Bearing Puller Body	-
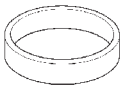	(09387-02010)	Oil Seal Replacer	-
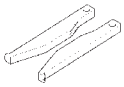	(09387-02020)	One-way Clutch Test Tool Set	-
	09387-00050	Under Drive Gear Puller	-
	09387-00060	Second Brake Wrench	-
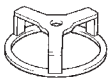	09387-00070	First & Reverse Brake Wrench	-
	09387-00080	Counter Drive Gear Nut Wrench	-
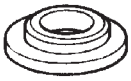	09506-35010	Differential Drive Pinion Rear Bearing Replacer	-
	09514-35011	Rear Wheel Bearing Puller	-

	09550-60010	Differential Side Bearing Replacer	-
	(09951-00320)	Replacer 32	-
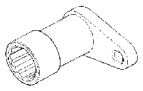	09564-16020	Drive Pinion Lock Nut Wrench	-
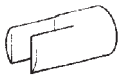	09564-32011	Differential Preload Adaptor	-
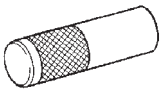	09608-06041	Front Hub Inner Bearing Cone Replacer	-
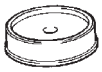	09608-32010	Steering Knuckle Oil Seal Replacer	-
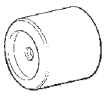	09649-17010	Steering Knuckle Tool	-
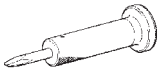	09930-00010	Drive Shaft Nut Chisel	-
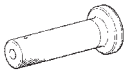	(09931-00010)	Handle	-
	(09931-00020)	Nut Chisel	-
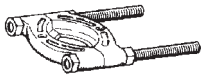	09950-00020	Bearing Remover	-
	09950-00030	Bearing Remover Attachment	-

PP

PP

	09950-40011	Puller B Set	-
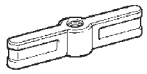	(09951-04010)	Hanger 150	-
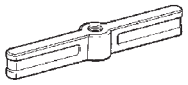	(09951-04020)	Hanger 200	-
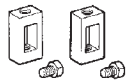	(09952-04010)	Slide Arm	-
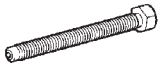	(09953-04020)	Center Bolt 150	-
	(09954-04010)	Arm 25	-
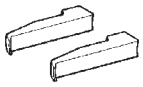	(09955-04011)	Claw No.1	-
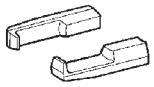	(09955-04061)	Claw No.6	-
	(09957-04010)	Attachment	-
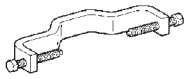	(09958-04011)	Holder	-
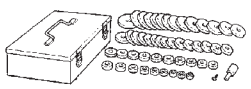	09950-60010	Replacer Set	-
	(09951-00230)	Replacer 23	-

	(09951-00250)	Replacer 25	-
	(09951-00320)	Replacer 32	-
	(09951-00340)	Replacer 34	-
	(09951-00350)	Replacer 35	-
	(09951-00400)	Replacer 40	-
	(09951-00450)	Replacer 45	-
	(09951-00600)	Replacer 60	-
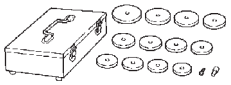	09950-60020	Replacer Set No.2	-
	(09951-00680)	Replacer 68	-
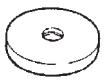	(09951-00710)	Replacer 71	-
	(09951-00890)	Replacer 89	-
	(09951-07150)	Handle 150	-

PP

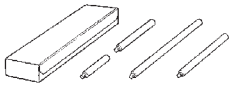	09950-70010	Handle Set	-
	(09951-07100)	Handle 100	-
	(09951-07150)	Handle 150	-

WIPER AND WASHER

RECOMMENDED TOOLS

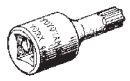	09042-00010	Torx Socket T30	-
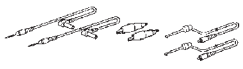	(09083-00150)	Test Lead Set	-
	09082-00040	TOYOTA Electrical Tester	-

EQUIPMENT

Torque wrench	
Tape	To avoid surface damage

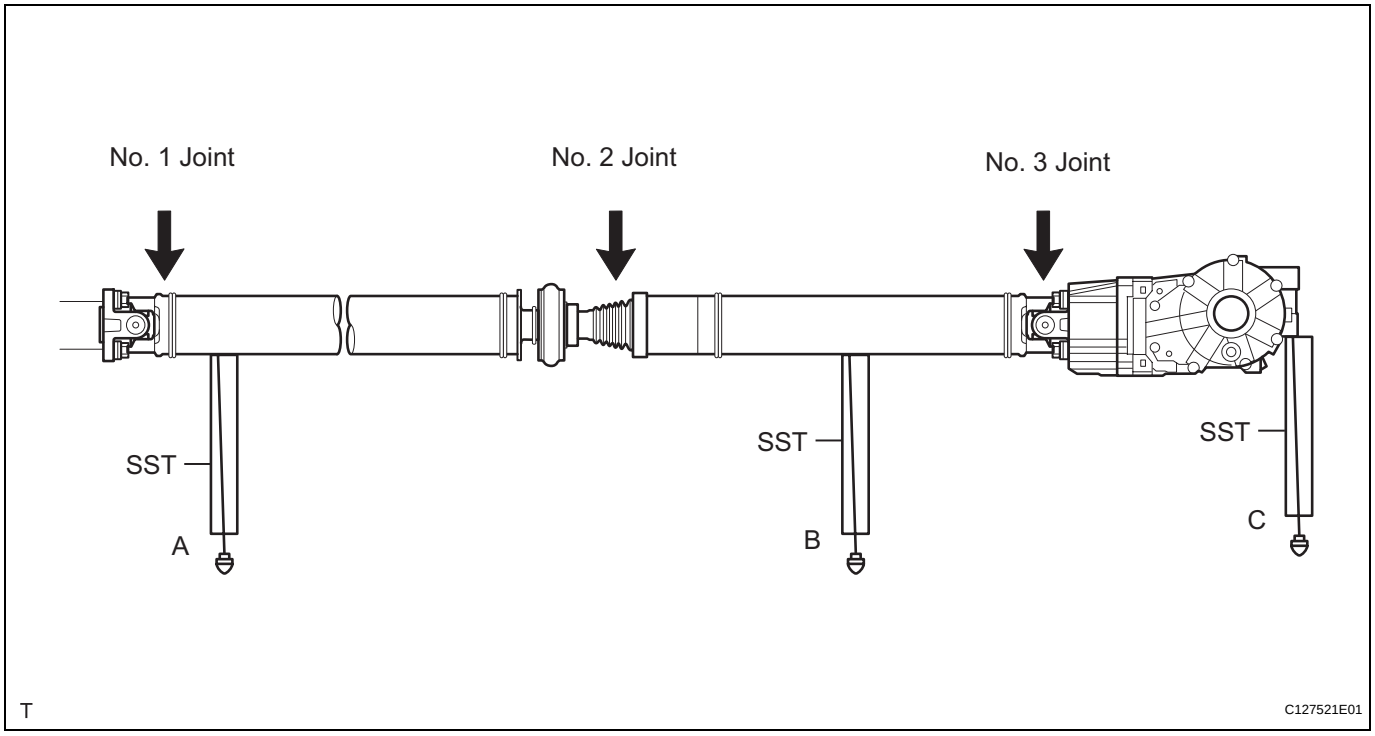

(e) If the result is not as specified, replace the center support bearing adjusting washer with a more appropriate one.

NOTICE:

- **Use washers of the same thickness on the left and right sides.**
- **Do not use 2 or more washers stacked together.**

Standard adjusting washer

Part No.	Thickness
90201-10123	2.0 mm (0.08 in.)
90201-10081	4.5 mm (0.18 in.)
90201-10083	6.5 mm (0.26 in.)
90201-10084	9.0 mm (0.35 in.)
90201-10085	11.0 mm (0.43 in.)

INSTALLATION

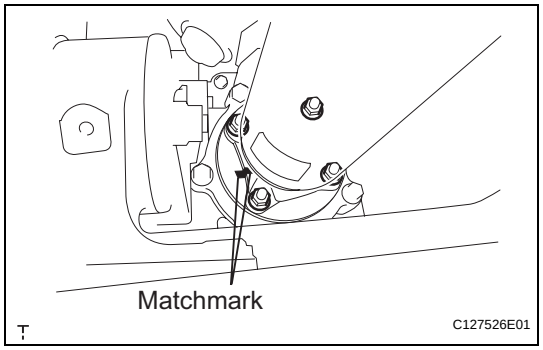

1. TEMPORARILY INSTALL PROPELLER SHAFT WITH CENTER BEARING SHAFT ASSEMBLY

(a) Align the matchmarks of the transfer and propeller shaft.

(b) Temporarily install the propeller shaft with center bearing with the 4 nuts and 4 washers.

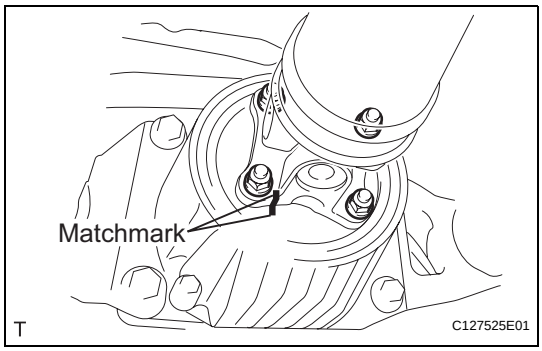

(c) Align the matchmarks of the differential carrier and propeller shaft.
(d) Temporarily install the propeller shaft with center bearing with the 4 bolts and 4 washers.

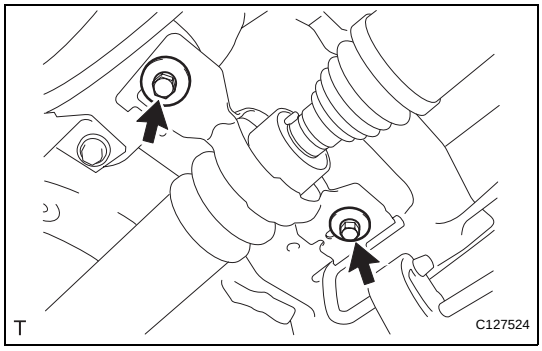

(e) Temporarily install the center support bearing and center support bearing washer with the 2 bolts.

2. TIGHTEN PROPELLER SHAFT WITH CENTER BEARING SHAFT ASSEMBLY

(a) Tighten the 4 nuts of the propeller shaft and transfer to the torque specification.
Torque: 35 N*m (357 kgf*cm, 26 ft.*lbf)
(b) Tighten the 4 nuts of the propeller shaft and differential carrier to the torque specification.
Torque: 35 N*m (357 kgf*cm, 26 ft.*lbf)
(c) Check that the center line of the center support bearing housing is perpendicular to the axis of the propeller shaft.
(d) Tighten the 2 bolts of the center support bearing to the torque specification.
Torque: 36.8 N*m (375 kgf*cm, 27 ft.*lbf)

3. INSPECT JOINT ANGLE (See page PR-4)

PROPELLER SHAFT ASSEMBLY

COMPONENTS

PR

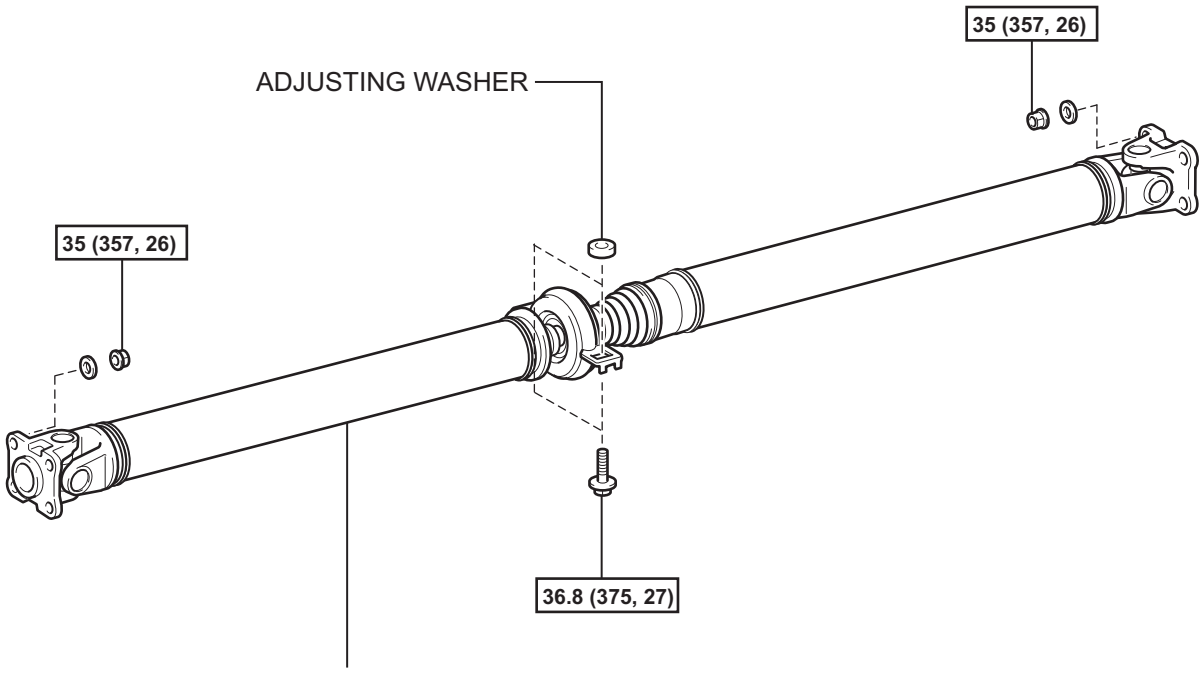

N*m (kgf*cm, ft.*lbf) : Specified torque

T

C129508E01

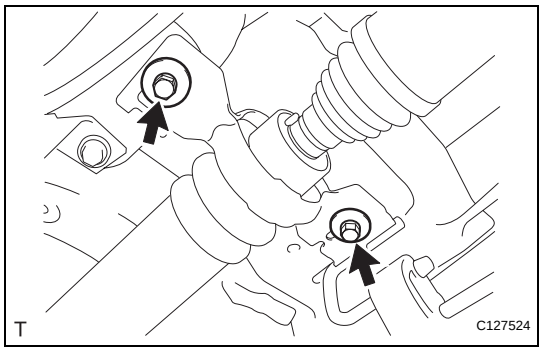

REMOVAL

1. REMOVE PROPELLER SHAFT WITH CENTER BEARING SHAFT ASSEMBLY

(a) Remove the 2 bolts and 2 adjusting washers, and disconnect the propeller with center bearing shaft.

NOTICE:

- **During the removal, do not exert excessive force on the universal joint.**
- **When removing, transporting or storing the propeller with center bearing shaft assembly, do not allow the No. 2 joint angle to exceed 20°.**

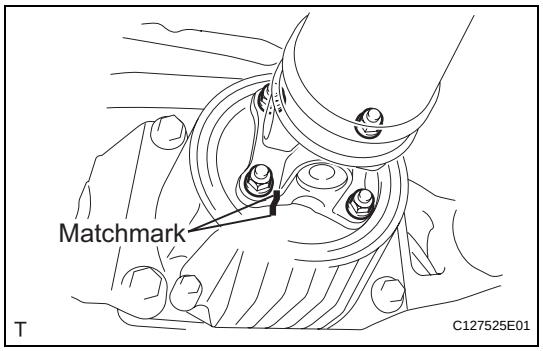

(b) Place matchmarks on the differential carrier and propeller shaft.

(c) Remove the 4 nuts and 4 washers, and disconnect the propeller shaft and differential carrier.

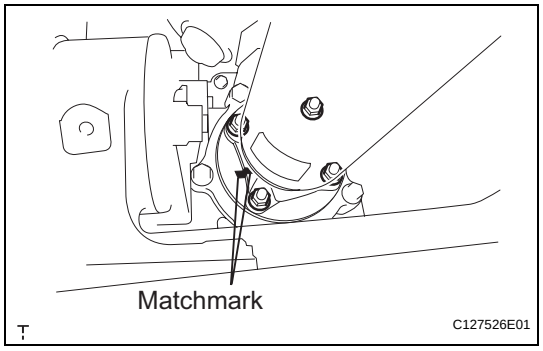

(d) Place matchmarks on the transfer and propeller shaft.

(e) Remove the 4 nuts and 4 washers, and disconnect the propeller shaft from the transfer.

INSPECTION

1. INSPECT PROPELLER SHAFT WITH CENTER BEARING SHAFT ASSEMBLY

(a) Using a dial indicator, measure the propeller shaft runout for front side.

Maximum runout:

0.4 mm (0.02 in.)

If the shaft runout is greater than the maximum, replace the propeller shaft.

NOTICE:

Place the dial indicator on the center of the shaft, and perpendicular to the shaft.

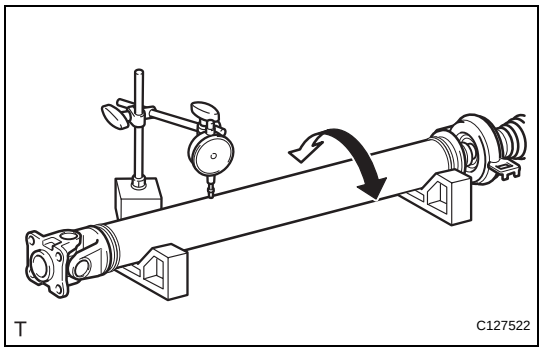

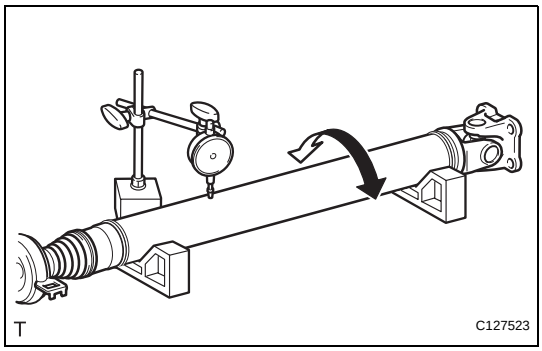

(b) Using a dial indicator, measure the propeller shaft runout for rear side.
Maximum runout:
0.4 mm (0.02 in.)
If the shaft runout is greater than the maximum, replace the propeller shaft.
NOTICE:
Place the dial indicator on the center of the shaft, and perpendicular to the shaft.

2. INSPECT JOINT ANGLE

(a) Before the angle measurement, use procedures like the examples below to stabilize each part.
(1) Rotate the propeller shaft several times by hand.
(2) Set the jack to the differential, and raise and lower it.
NOTICE:
Perform the measurement with a 4 post lift or pit so that the vehicle condition is as close to a standard ground condition as possible.

(b) Using SST, measure the installation angle of the propeller shaft for front side (A in illustration).
SST 09370-50010
Standard angle A:
-2°49'
-3°01' for w/ 3rd seat

(c) Using SST, measure the installation angle of the propeller shaft for front side (A in illustration) and propeller shaft for rear side (B in illustration).
SST 09370-50010
Standard angle A-B:
1°35'

(d) Using SST, measure the installation angle of the propeller shaft for rear side (B in illustration) and differential carrier rear side (C in illustration).
SST 09370-50010
Standard angle B-C:
2°04'

PR

PROPELLER SHAFT SYSTEM

PROBLEM SYMPTOMS TABLE

HINT:
Use the table below to help determine the cause of the problem symptom. The potential causes of the symptoms are listed in order of probability in the "Suspected area" column of the table. Check each symptom by checking the suspected areas in the order they are listed. Replace parts as necessary.

Propeller shaft system

Symptom	Suspected area	See page
Noise or Vibration	1. Center bearing (worn)	PR-3
	2. Propeller shaft (runout)	PR-3

PROBLEM SYMPTOMS TABLE

HINT:
Use the table below to help determine the cause of the problem symptom. The potential causes of the symptoms are listed in order of probability in the "Suspected Area" column of the table. Check each symptom by checking the suspected areas in the order they are listed. Replace parts as necessary.

Front power seat control system

Symptom	Suspected area	See page
All functions do not operate (except lumbar support)	1. P/SEAT fuse	SE-1
	2. Front power seat switch	SE-124
	3. Wire harness	-
Only slide operation function does not operate	1. Front power seat switch	SE-124
	2. Front seat frame with adjuster (slide motor)	SE-125
	3. Wire harness	-
Only front vertical operation function does not operate	1. Front power seat switch	SE-124
	2. Front seat frame with adjuster (front vertical motor)	SE-125
	3. Wire harness	-
Only lifter operation function does not operate	1. Front power seat switch	SE-124
	2. Front seat frame with adjuster (lifter motor)	SE-125
	3. Wire harness	-
Only reclining operation function does not operate	1. Front power seat switch	SE-124
	2. Front seat frame with adjuster (reclining motor)	SE-125
	3. Wire harness	-
Only lumbar support operation function does not operate	1. Front power seat lumbar switch	SE-127
	2. Lumbar support adjuster (lumbar support motor)	SE-127
	3. Wire harness	-

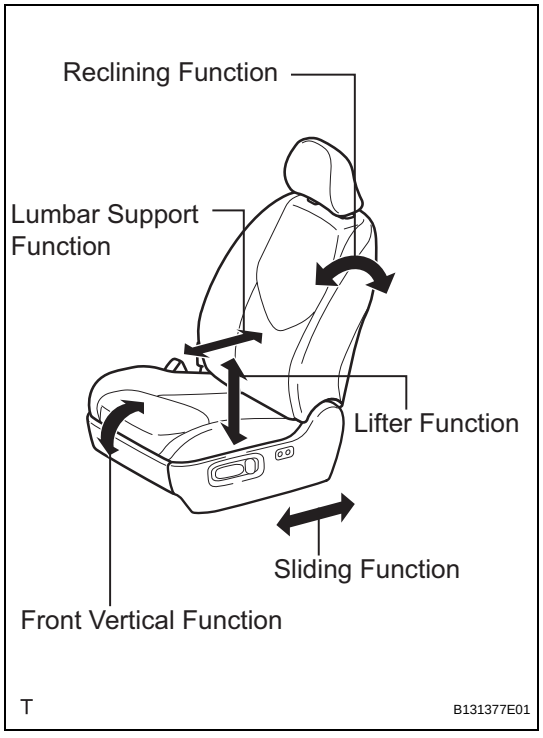

ON-VEHICLE INSPECTION

1. CHECK POWER SEAT FUNCTION

(a) Check the basic functions.

(1) Operate the power seat switches and check to make sure each seat function works:

- Sliding
- Front vertical
- Lifter
- Reclining
- Lumbar support

2. CHECK FRONT SEAT FRAME WITH ADJUSTER (SLIDING, FRONT VERTICAL, LIFTER AND RECLINING FUNCTIONS)

(a) Check the PTC operation inside the power seat motor.

HINT:
The PTC thermistor's resistance increases when the power seat switch is held down even after the power seat has been moved to the maximum in one direction. If the resistance increases beyond a specified level, current is cut to prevent a short circuit.

NOTICE:

- **The inspection should be performed with the seat installed in the vehicle.**
- **Perform the 4 steps below for the full range of motion for each power seat function.**

(1) Choose a power seat function. Operate the power seat switch and move the seat as much as possible in one direction. Keep the seat in that position for approximately 60 seconds.

(2) Operate the power seat switch again and continue to try to move the seat in the same direction as in the previous step. Measure the amount of time elapsed before current is automatically cut (the sound of the motor has stopped).

Standard:

4 to 90 seconds

(3) After current has been cut, release the power seat switch and wait for approximately 60 seconds.

(4) Operate the same power seat switch and move the seat in the opposite direction. Check that the motor operates.

3. CHECK LUMBAR SUPPORT ADJUSTER ASSEMBLY

(a) Check the PTC operation inside the power seat motor.

NOTICE:

The inspection should be performed with the seat installed in the vehicle.

(1) Operate the lumbar support switch and move the lumbar support to either the foremost or rearmost position. Keep the seat in that position for approximately 60 seconds.

(2) Operate the lumbar support switch again and continue to try to move the lumbar support in the same direction as in the previous step. Measure the amount of time elapsed before current is automatically cut (the sound of the motor has stopped).

Standard:

4 to 90 seconds

(3) After current has been cut, release the lumbar support switch and wait for approximately 60 seconds.

(4) Operate the lumbar support switch and move the seat in the opposite direction. Check that the motor operates.

FRONT POWER SEAT CONTROL SYSTEM

PARTS LOCATION

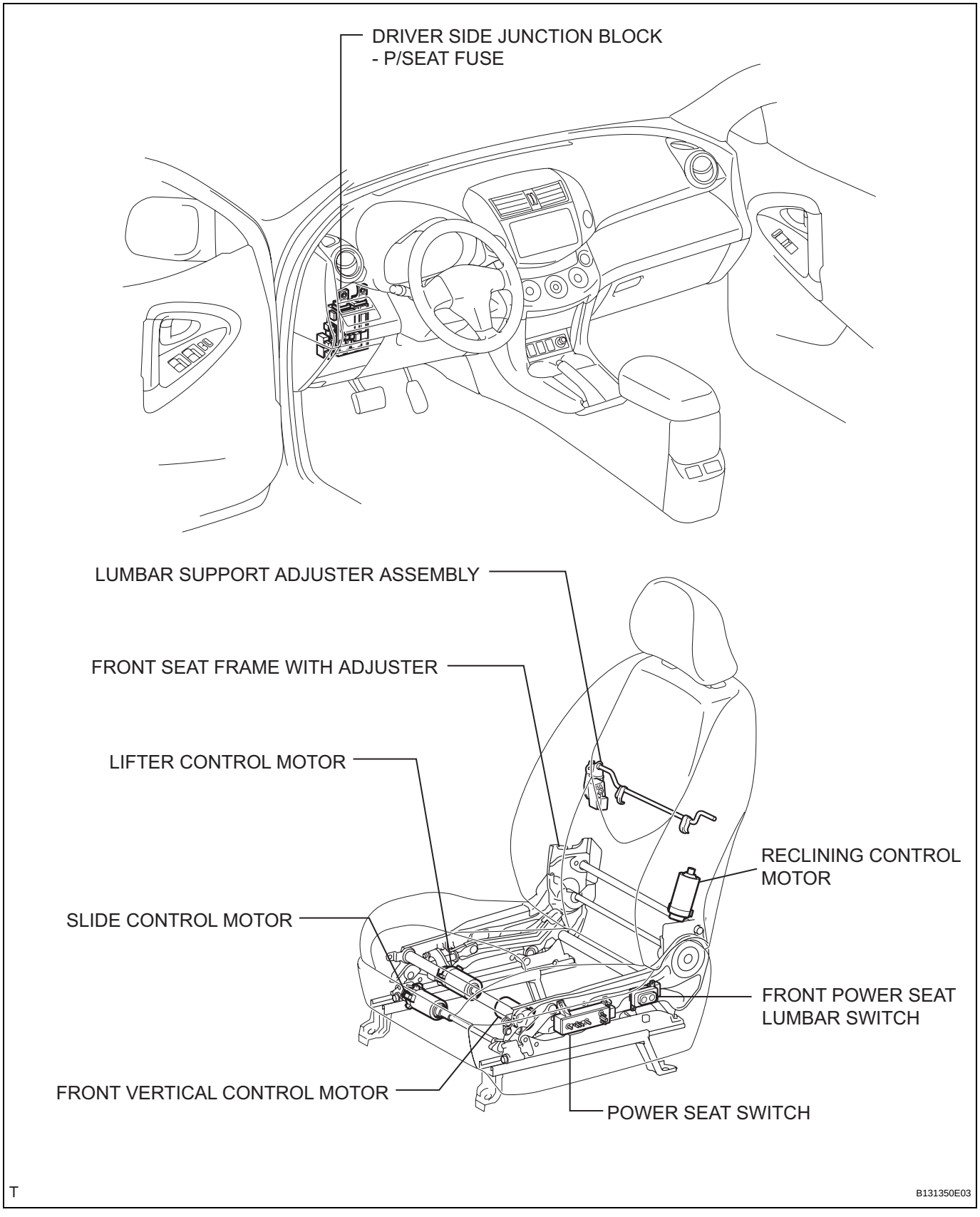

SE

SYSTEM DIAGRAM

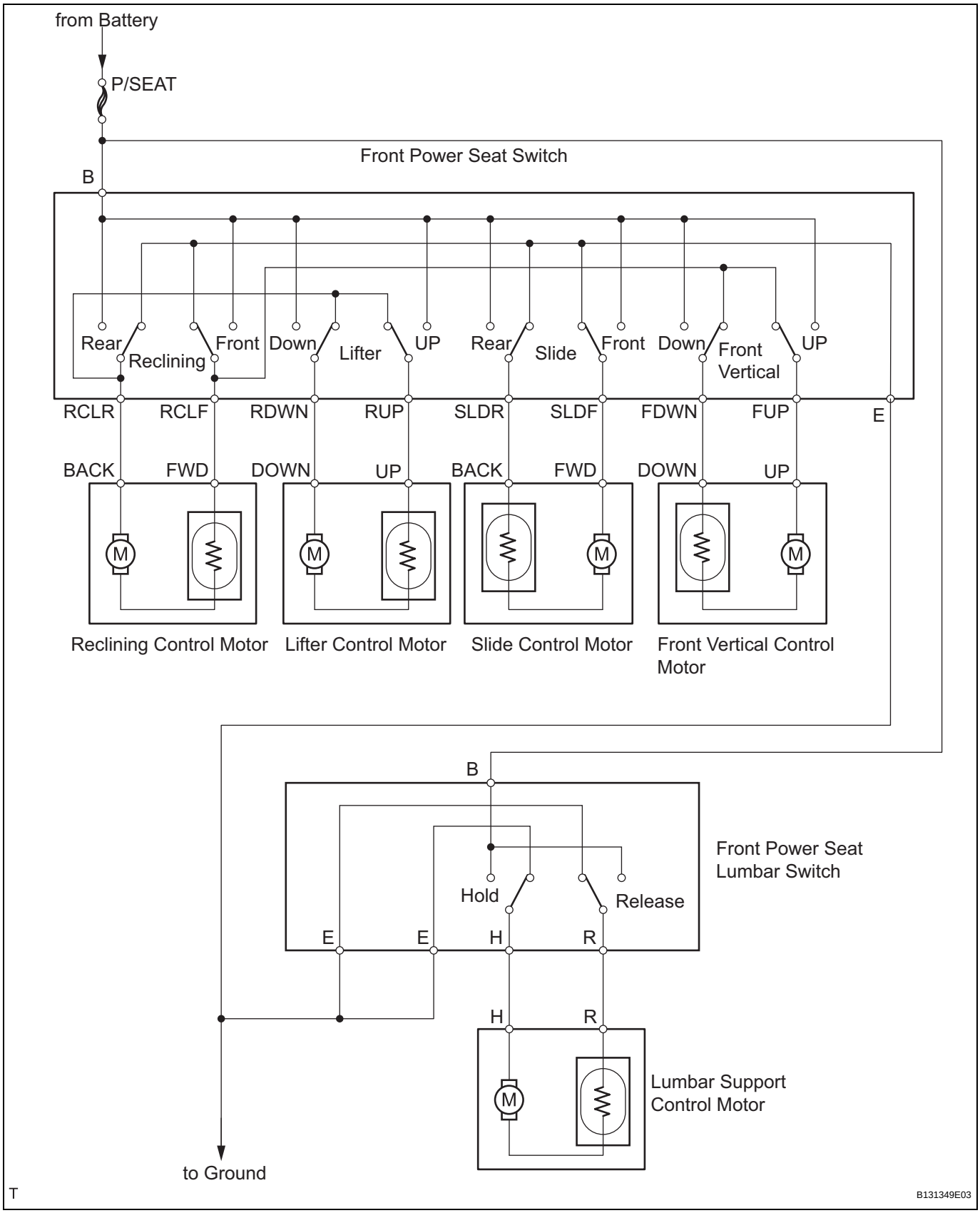

T

B131349E03

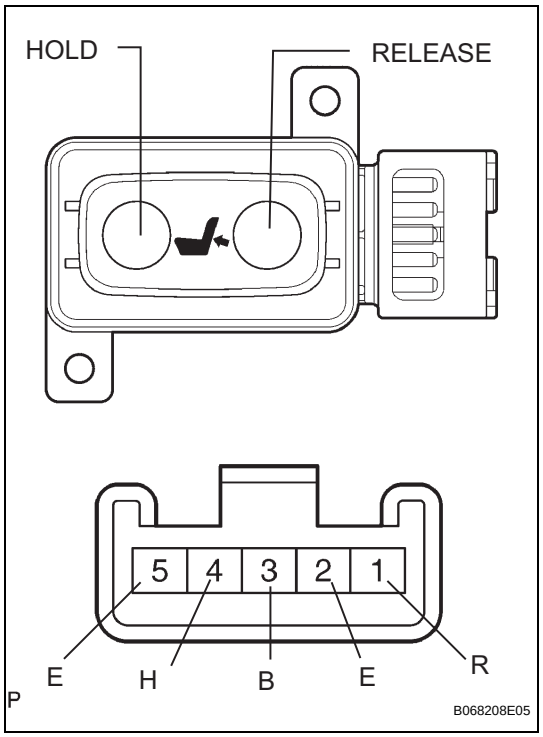

FRONT POWER SEAT LUMBAR SWITCH

INSPECTION

1. INSPECT FRONT POWER SEAT LUMBAR SWITCH LH

(a) Measure the resistance between the terminals when the switch is operated.

Standard resistance

Tester Connection	Switch Condition	Specified Condition
3 (B) - 4 (H)	HOLD	Below 1 Ω
1 (R) - 2 (E)	HOLD	Below 1 Ω
1 (R) - 2 (E)	OFF	Below 1 Ω
4 (H) - 5 (E)	OFF	Below 1 Ω
1 (R) - 3 (B)	RELEASE	Below 1 Ω
4 (H) - 5 (E)	RELEASE	Below 1 Ω

If the result is not as specified, replace the switch.

SE

REMOVAL

HINT:
- Use the same procedures for the RH side and LH side.
- The procedures listed below are for the LH side.

1. DISCONNECT CABLE FROM NEGATIVE BATTERY TERMINAL

CAUTION:
Wait at least 90 seconds after disconnecting the cable from the negative (-) battery terminal to prevent airbag and seat belt pretensioner activation.

2. REMOVE FRONT SEAT HEADREST ASSEMBLY

3. REMOVE FRONT SEAT TRACK BRACKET OUTER COVER LH

(a) Lift up the seat track adjusting handle and move the seat to the foremost position.

(b) Using a screwdriver, detach the 4 claws.
HINT:
Tape the screwdriver tip before use.

(c) Remove the outer cover in the direction indicated by the arrow in the illustration.

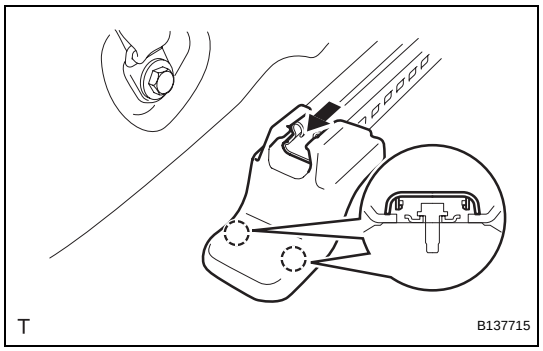

4. REMOVE FRONT SEAT TRACK BRACKET INNER COVER LH

(a) Using a screwdriver, detach the 2 claws.
HINT:
Tape the screwdriver tip before use.

(b) Remove the inner cover in the direction indicated by the arrow in the illustration.

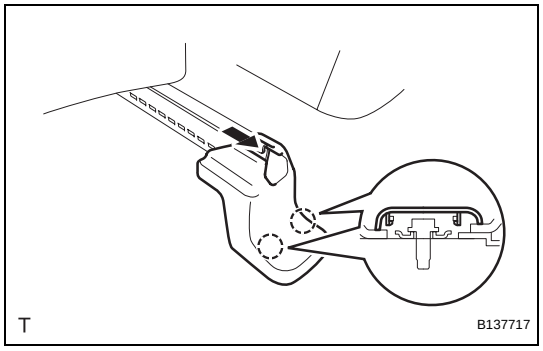

5. REMOVE FRONT SEAT ASSEMBLY

(a) Remove the 2 bolts on the rear side of the seat.

(b) Lift up the seat track adjusting handle and move the seat to the rearmost position.

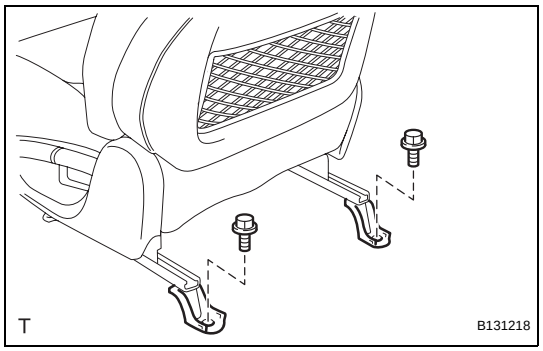

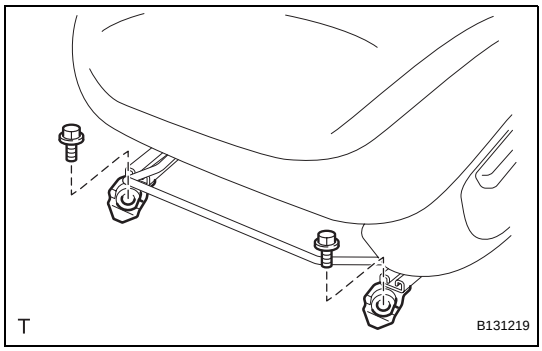

(c) Remove the 2 bolts on the front side of the seat.
(d) Lift up the seat track adjusting handle and move the seat to the center position. Also, operate the reclining adjuster release handle and move the seatback to the upright position.
(e) Disconnect the connector under the seat.
(f) Remove the seat.

NOTICE:
Be careful not to damage the vehicle body.

DISASSEMBLY

CAUTION:
Wear protective gloves. Sharp areas on the seat frame (with adjuster) may injure your hands.
HINT:
- Use the same procedures for the RH side and LH side.
- The procedures listed below are for the LH side.

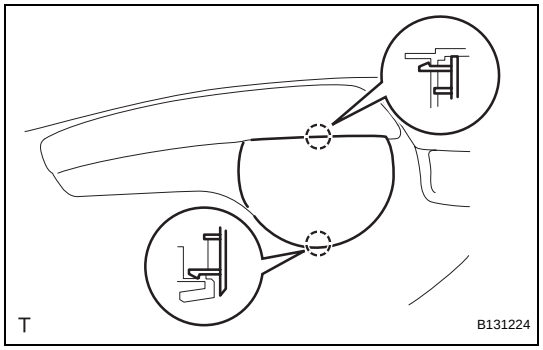

1. REMOVE VERTICAL ADJUSTER COVER LH (for Driver Side)
(a) Using a screwdriver, detach the 2 claws and remove the cover.
HINT:
Tape the screwdriver tip before use.

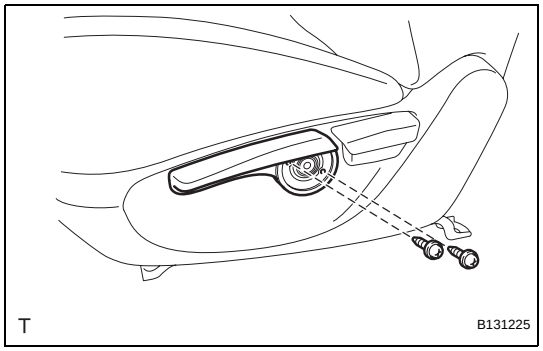

2. REMOVE VERTICAL ADJUSTING HANDLE LH (for Driver Side)
(a) Remove the 2 screws and handle.

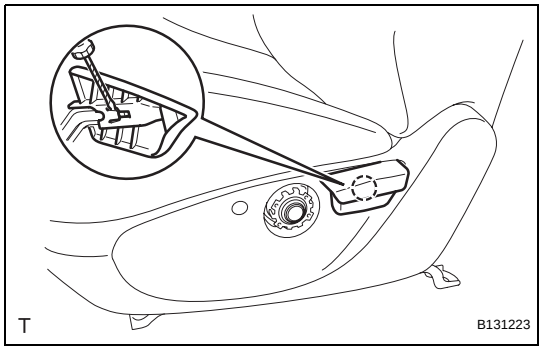

3. REMOVE RECLINING ADJUSTER RELEASE HANDLE LH (for Driver Side)
(a) Raise the reclining adjuster release handle to reveal the claw. Using a screwdriver, detach the claw and remove the release handle.
HINT:
Tape the screwdriver tip before use.

4. REMOVE RECLINING ADJUSTER RELEASE HANDLE RH (for Front Passenger Side)
HINT:
Use the same procedures described for the driver side.

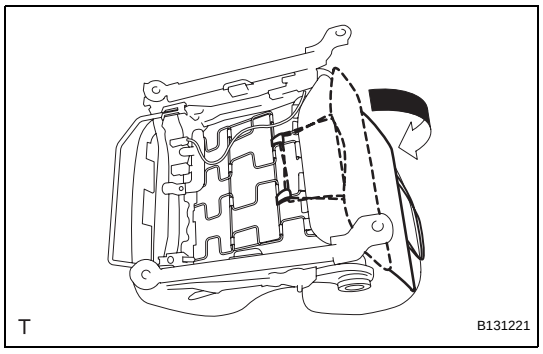

5. REMOVE FRONT SEAT CUSHION SHIELD LH (for Driver Side)
(a) Disconnect the 2 rubber bands of the front seatback board or front seatback cover from the front seat frame (with adjuster).

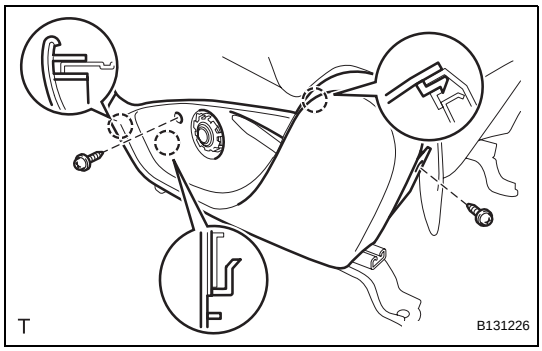

(b) Remove the 2 screws.
(c) Using a screwdriver, detach the 3 claws and remove the cushion shield.
HINT:
Tape the screwdriver tip before use.

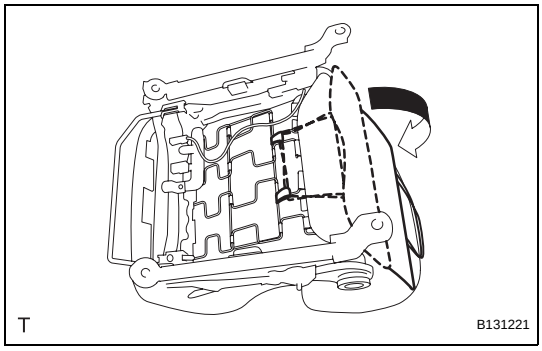

6. REMOVE FRONT SEAT CUSHION SHIELD RH (for Front Passenger Side)
(a) Disconnect the 2 rubber bands of the front seatback board or front seatback cover from the front seat frame (with adjuster).

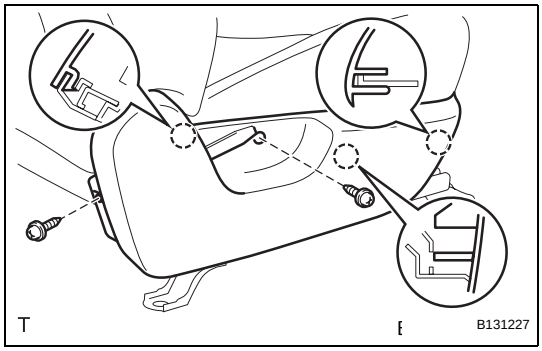

(b) Remove the 2 screws.
(c) Using a screwdriver, detach the 3 claws and remove the cushion shield.
HINT:
Tape the screwdriver tip before use.

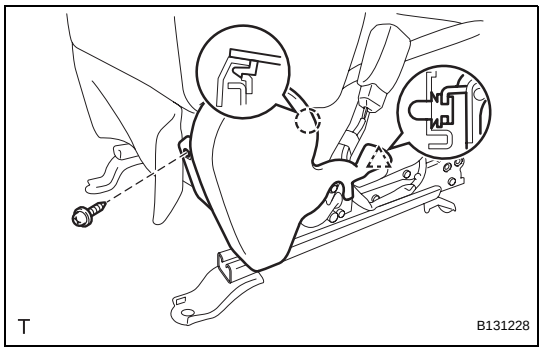

7. REMOVE FRONT SEAT CUSHION INNER SHIELD LH
(a) Remove the screw.
(b) Using a screwdriver, detach the claw and clip. Then remove the inner shield.
HINT:
Tape the screwdriver tip before use.

8. REMOVE FRONT SEAT INNER BELT ASSEMBLY LH (See page SB-22)

9. REMOVE FRONT SEAT CUSHION COVER
(a) w/ Seat Heater System:
Disconnect the connector.

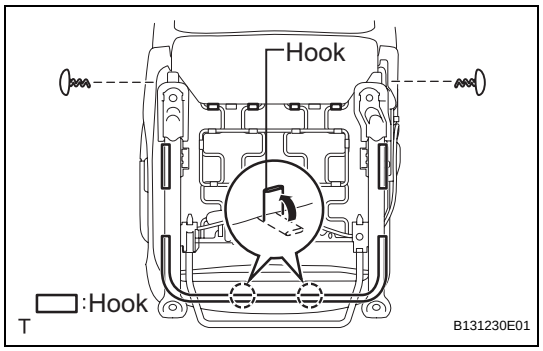

(b) Using a clip remover, remove the 2 clips.
(c) Detach the 2 hooks on the seat cushion front side.
(d) Using a screwdriver, detach the hooks and remove the seat cushion cover (with pad).
HINT:
Tape the screwdriver tip before use.

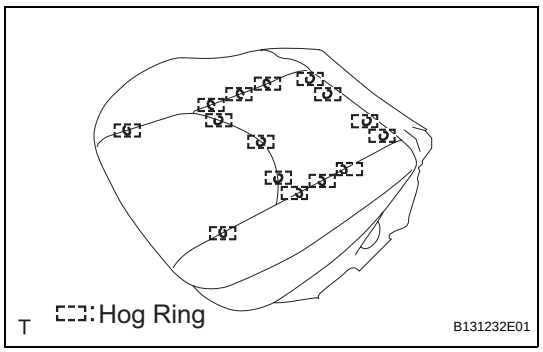

(e) Remove the 15 hog rings and seat cushion cover from the seat cushion pad.

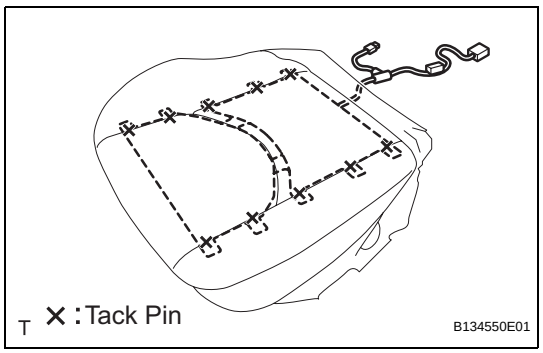

10. REMOVE FRONT SEAT CUSHION HEATER (w/ Seat Heater System)

(a) Cut off the 10 tack pins which fasten the seat heater, and then remove the seat cushion heater from the seat cushion cover.
NOTICE:
Be careful not to damage the seat cushion cover and seat heater.

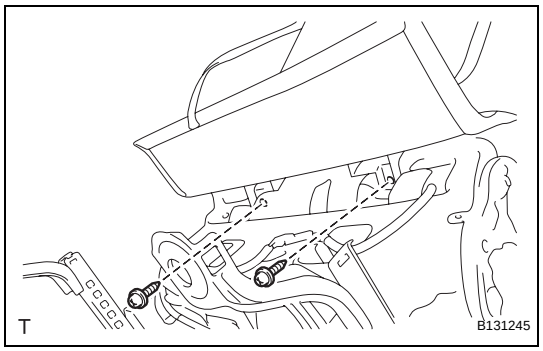

11. REMOVE FRONT SEATBACK BOARD SUB-ASSEMBLY LH (w/ Seatback Board)

(a) Open the lower part of the seatback board. Then remove the 2 screws.

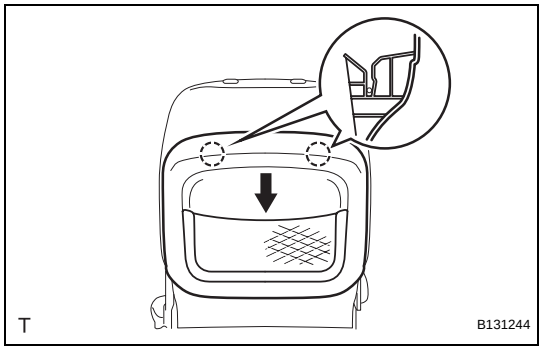

(b) Pull the seatback board in the direction indicated by the arrow in the illustration to detach the 2 claws. Then, remove the seatback board.

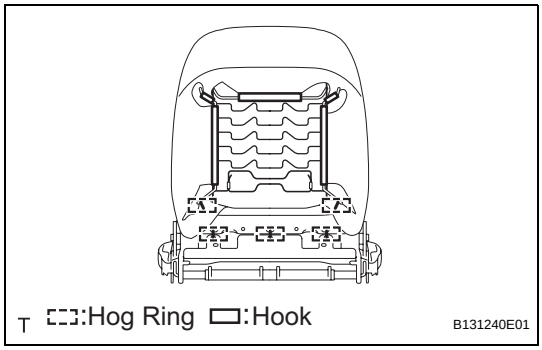

12. REMOVE FRONT SEATBACK COVER

(a) w/ Seatback Board:
Remove the 5 hog rings

(b) w/ Seatback Board:
Using a screwdriver, detach the hooks.
HINT:
Tape the screwdriver tip before use.

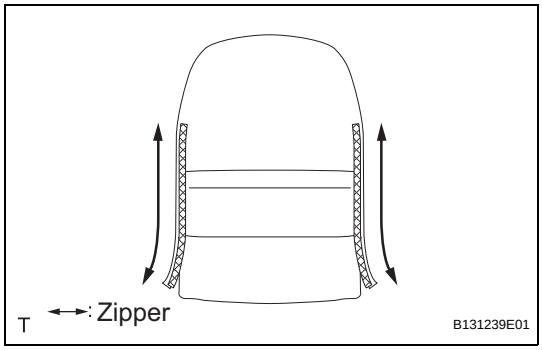

(c) w/o Seatback Board:
Open the 2 zippers.

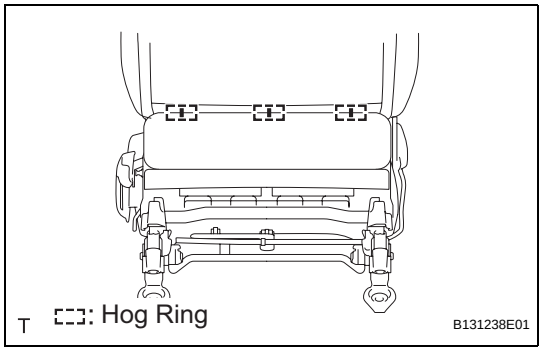

(d) w/o Seatback Board:
Lift up the seatback cover and remove the 3 hog rings.

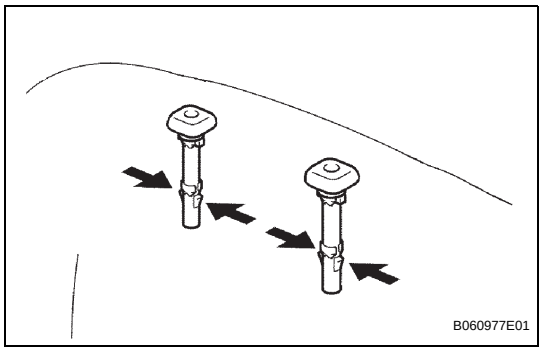

(e) Detach the 4 claws and remove the 2 headrest supports.

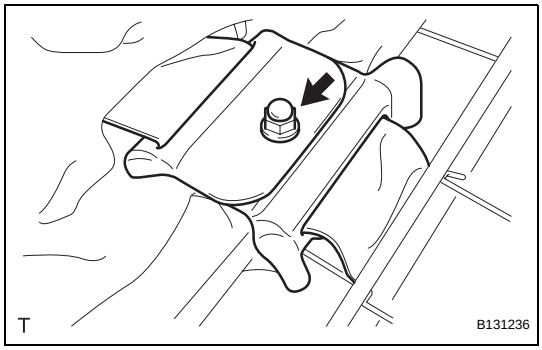

(f) w/ Front Seat Side Airbag:
Remove the nut and move the 2 seatback cover brackets.

(g) Remove the seatback cover (with pad) from the seat frame (with adjuster).

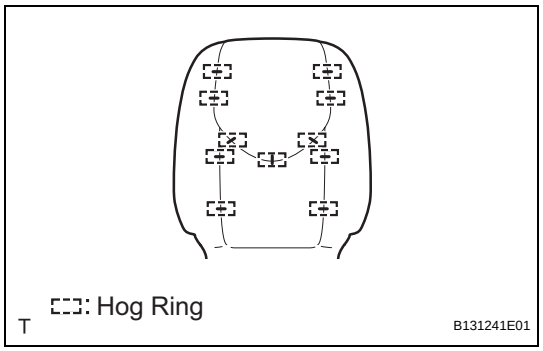

(h) Remove the 11 hog rings and seatback cover from the seatback pad.

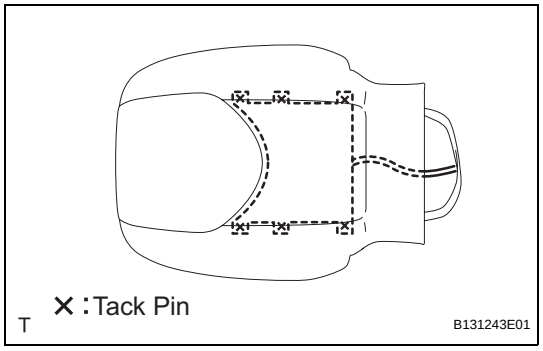

13. REMOVE FRONT SEATBACK HEATER (w/ Seat Heater System)

(a) Cut off the 6 tack pins which fasten the seat heater, and then remove the seat cushion heater from the seat cushion cover.

NOTICE:

Be careful not to damage the seat cushion cover and seat heater.

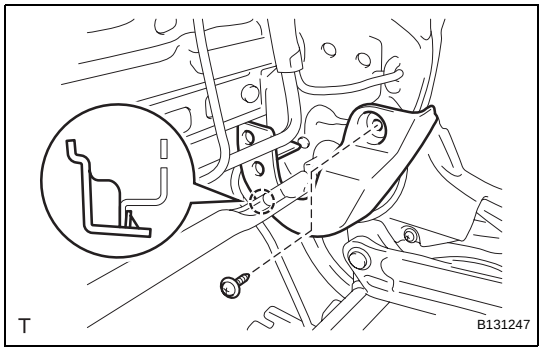

14. REMOVE RECLINING ADJUSTER LOWER INSIDE COVER LH

(a) Remove the screw.

(b) Detach the claw and remove the inside cover.

15. REMOVE RECLINING ADJUSTER LOWER INSIDE COVER RH

HINT:

Use the same procedures described for the LH side.

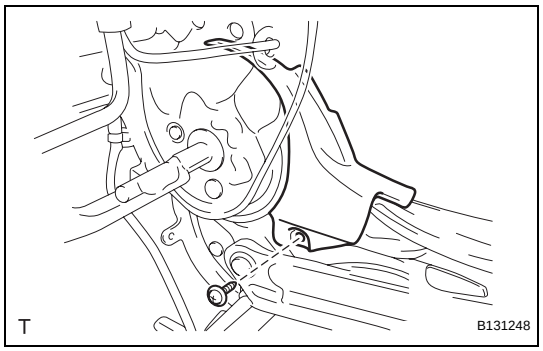

16. REMOVE RECLINING ADJUSTER UPPER INSIDE COVER LH

(a) Remove the screw and inside cover.

17. REMOVE RECLINING ADJUSTER UPPER INSIDE COVER RH

(a) Remove the screw and inside cover.

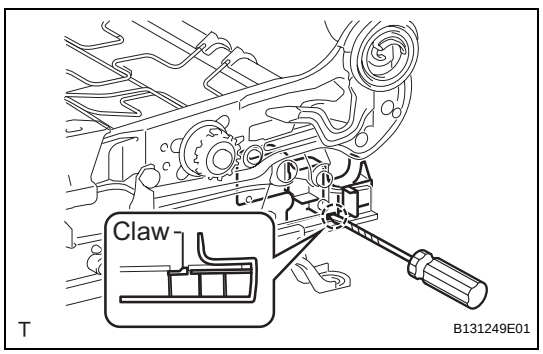

18. REMOVE FRONT SEAT CUSHION LOWER SHIELD LH

(a) Using a screwdriver, detach the claw and remove the lower shield.

HINT:

Tape the screwdriver tip before use.

19. REMOVE FRONT SEAT CUSHION LOWER SHIELD RH

HINT:

Use the same procedures described for the LH side.

20. REMOVE SEAT POSITION AIRBAG SENSOR (for Driver Side) (See page RS-390)

21. REMOVE OCCUPANT CLASSIFICATION ECU (for Front Passenger Side) (See page RS-393)

REASSEMBLY

CAUTION:
Wear protective gloves. Sharp areas on the seat frame (with adjuster) may injure your hands.
HINT:
- Use the same procedures for the RH side and LH side.
- The procedures listed below are for the LH side.

1. **INSTALL OCCUPANT CLASSIFICATION ECU (for Driver Side) (See page RS-394)**
2. **INSTALL SEAT POSITION AIRBAG SENSOR (for Driver Side) (See page RS-390)**
3. **INSTALL FRONT SEAT CUSHION LOWER SHIELD LH**
   (a) Attach the claw to install the lower shield.
4. **INSTALL FRONT SEAT CUSHION LOWER SHIELD RH**
   HINT:
   Use the same procedures described for the LH side.

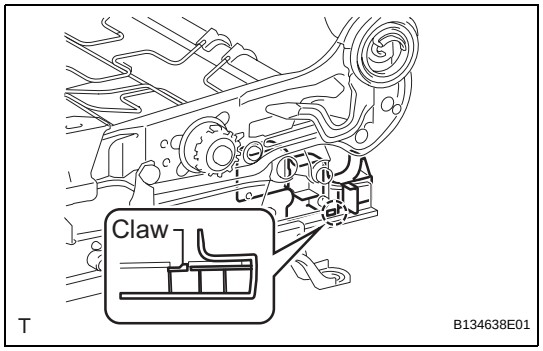

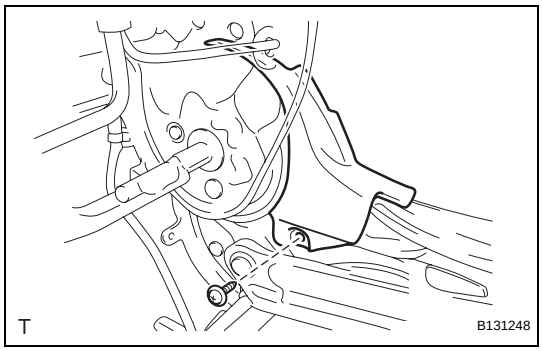

5. **INSTALL RECLINING ADJUSTER UPPER INSIDE COVER LH**
   (a) Install the inside cover with the screw.
6. **INSTALL RECLINING ADJUSTER UPPER INSIDE COVER RH**
   (a) Install the inside cover with the screw.

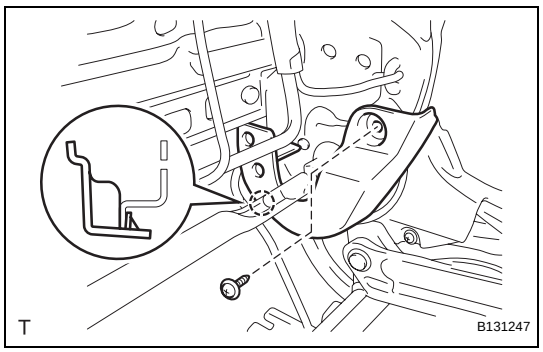

7. **INSTALL RECLINING ADJUSTER LOWER INSIDE COVER LH**
   (a) Attach the claw to install the inside cover.
   (b) Install the screw.
8. **INSTALL RECLINING ADJUSTER LOWER INSIDE COVER RH**
   HINT:
   Use the same procedures described for the LH side.

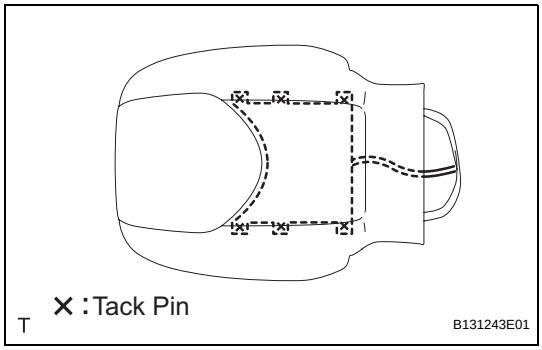

9. INSTALL FRONT SEATBACK HEATER (w/ Seat Heater System)

(a) Using a tacker, install the seatback heater to the end of the seat cover with 6 new tack pins.
NOTICE:
Do not substitute other metal parts for tack pins.

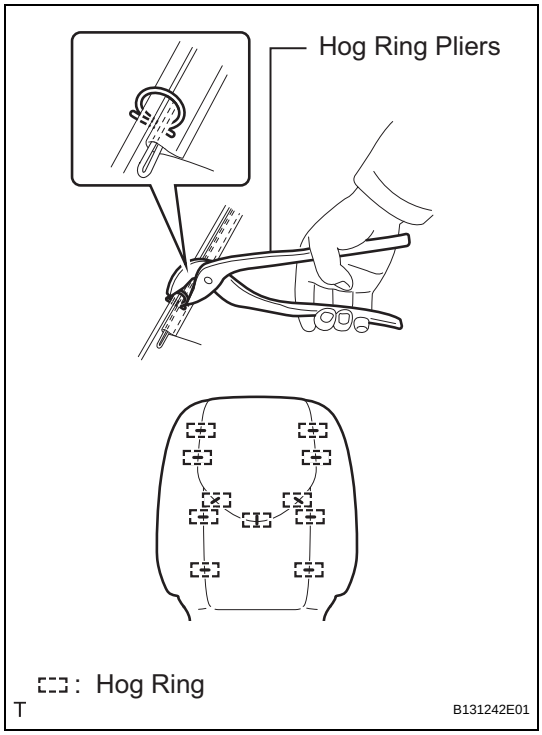

10. INSTALL FRONT SEATBACK COVER
NOTICE:
- **Be careful not to damage the cover.**
- **When installing the hog rings, avoid wrinkling the cover.**

(a) Using hog ring pliers, install the seatback cover to the seatback pad with 11 new hog rings.

(b) Install the seatback cover (with pad) to the seat frame (with adjuster).

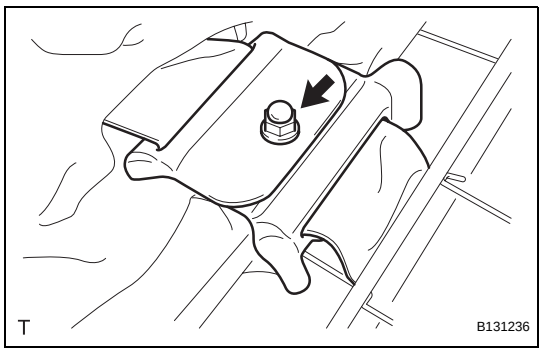

(c) w/ Front Seat Side Airbag:
Fully cover the airbag with the 2 seatback cover brackets and install the nut.
Torque: 5.5 N*m (56 kgf*cm, 49 in.*lbf)
CAUTION:
- **For vehicles with side airbags, the seatback cover must be securely installed. Otherwise, the side airbags may not deploy properly.**
- **Make sure that the strap is not twisted after installing the bracket.**
- **Install the bracket securely.**

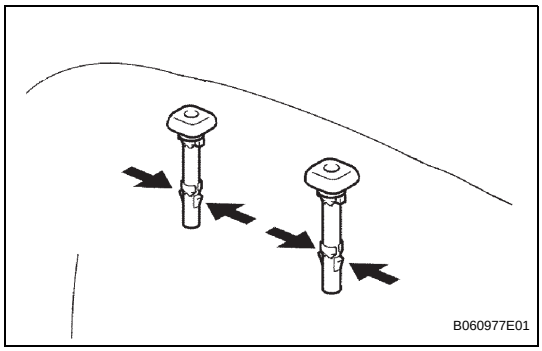

(d) Attach the 4 claws to install the 2 headrest supports.

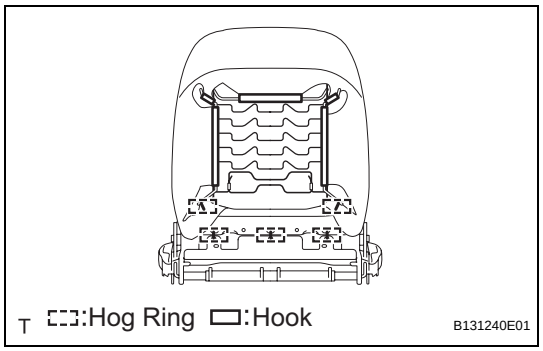

(e) w/ Seatback Board:
Attach the hooks.

(f) w/ Seatback Board:
Using hog ring pliers, install 5 new hog rings.

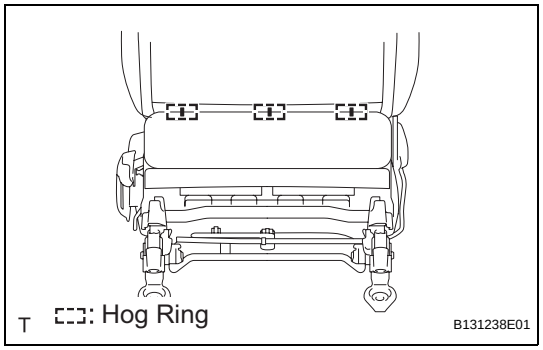

(g) w/o Seatback Board:
Using hog ring pliers, install 3 new hog rings.

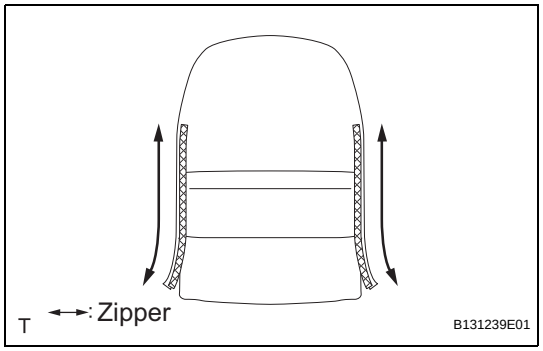

(h) w/o Seatback Board:
Close the 2 zippers.

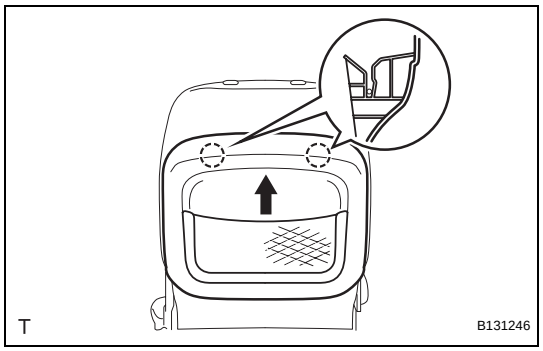

11. INSTALL FRONT SEATBACK BOARD SUB-ASSEMBLY LH (w/ Seatback Board)

(a) Push the seatback board in the direction indicated by the arrow in the illustration to attach the 2 claws.

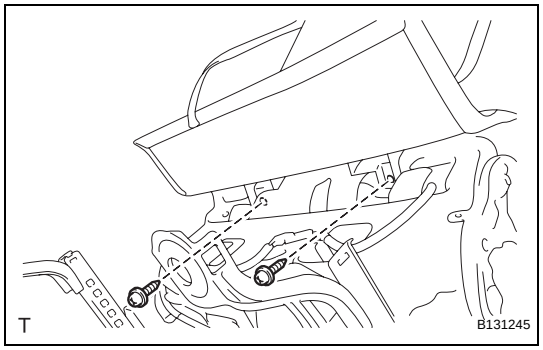

(b) Open the lower part of the seatback board. Then install the seatback board with the 2 screws.

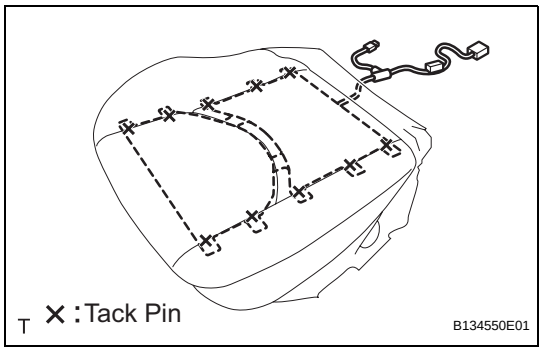

12. INSTALL FRONT SEAT CUSHION HEATER (w/ Seat Heater System)

(a) Using a tacker, install the seat cushion heater to the end of the seat cover with 10 new tack pins.
NOTICE:
Do not substitute other metal parts for tack pins.

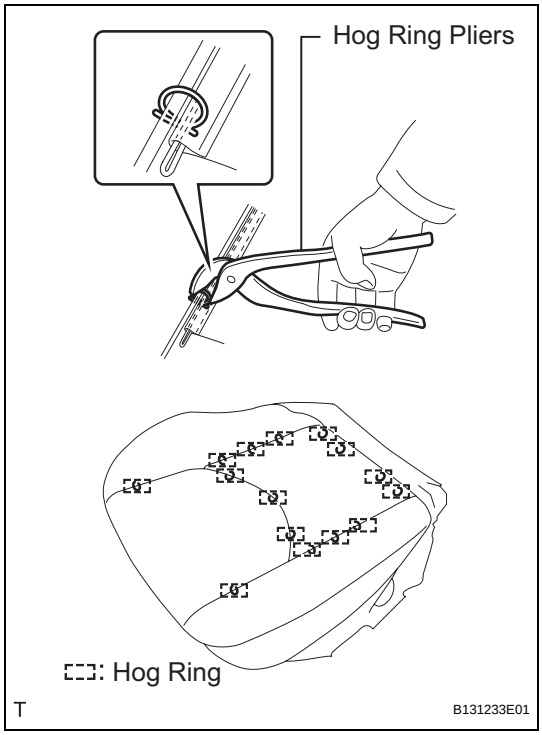

13. INSTALL FRONT SEAT CUSHION COVER

(a) Using hog ring pliers, install the seat cushion cover to the seat cushion pad with 15 new hog rings.
NOTICE:
- **Be careful not to damage the cover.**
- **When installing the hog rings, avoid wrinkling the cover.**

(b) Install the seat cushion cover (with pad) to the seat frame (with adjuster).

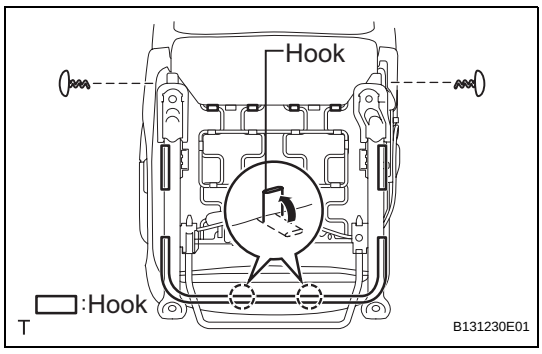

(c) Attach the hooks and install the 2 clips.

(d) w/ Seat Heater System:
Connect the connector.

14. INSTALL FRONT SEAT INNER BELT ASSEMBLY (See page SB-23)

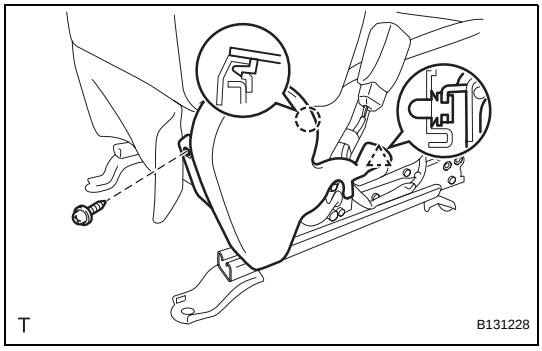

15. INSTALL FRONT SEAT CUSHION INNER SHIELD LH

(a) Attach the clip and claw to install the inner shield.

(b) Install the screw.

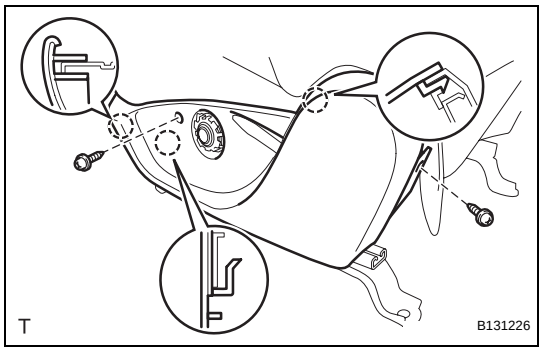

16. INSTALL FRONT SEAT CUSHION SHIELD LH (for Driver Side)

(a) Attach the 3 claws to install the cushion shield.

(b) Install the 2 screws.

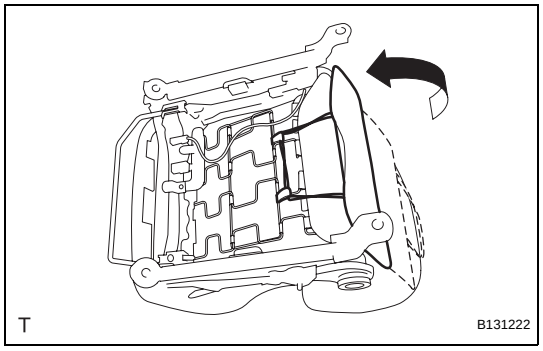

(c) Connect the 2 rubber bands of the front seatback board or front seatback cover to the seat frame (with adjuster).

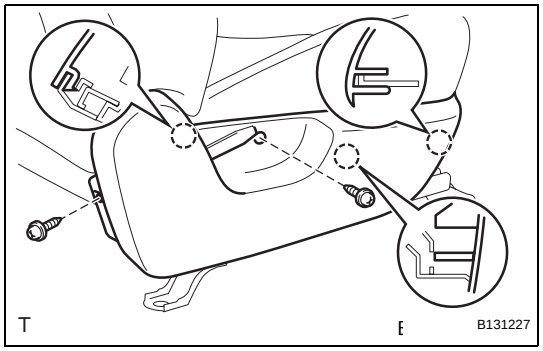

17. INSTALL FRONT SEAT CUSHION SHIELD RH (for Front Passenger Side)

(a) Attach the 3 claws to install the cushion shield.

(b) Install the 2 screws.

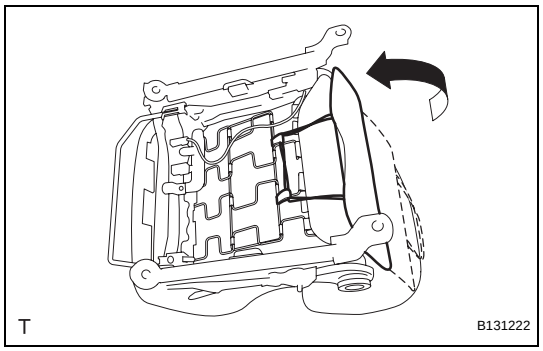

(c) Connect the 2 rubber bands of the front seatback board or front seatback cover to the seat frame (with adjuster).

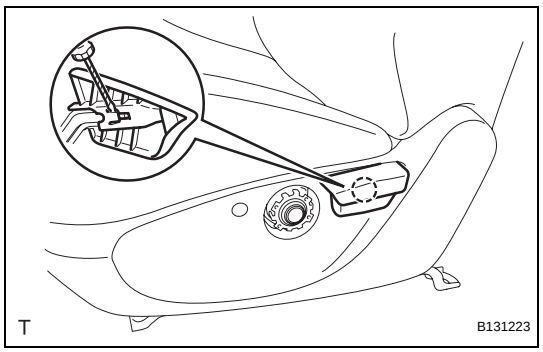

18. INSTALL RECLINING ADJUSTER RELEASE HANDLE LH (for Driver Side)

(a) Attach the claw to install the release handle.

19. INSTALL RECLINING ADJUSTER RELEASE HANDLE RH (for Front Passenger Side)

HINT:

Use the same procedures described for the driver side.

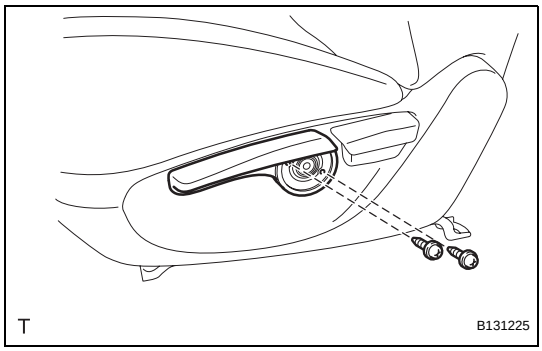

20. INSTALL VERTICAL ADJUSTING HANDLE (for Driver Side)

(a) Install the handle with the 2 screws.

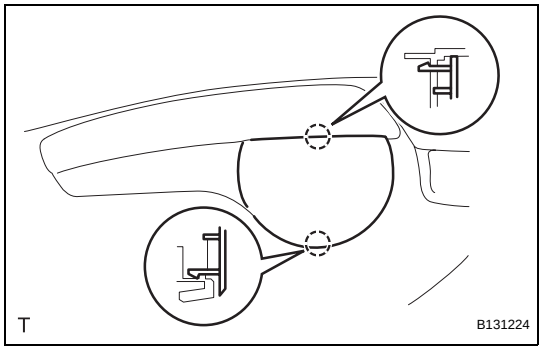

21. INSTALL VERTICAL ADJUSTER COVER LH (for Driver Side)

(a) Attach the 2 claws to install the cover.

INSTALLATION

HINT:

- Use the same procedures for the RH side and LH side.
- The procedures listed below are for the RH side.

1. INSTALL FRONT SEAT ASSEMBLY

(a) Place the seat in the cabin.
NOTICE:
Be careful not to damage the vehicle body.

(b) Connect the connector under the seat.

(c) Lift up the seat track adjusting handle and move the seat to the rearmost position.

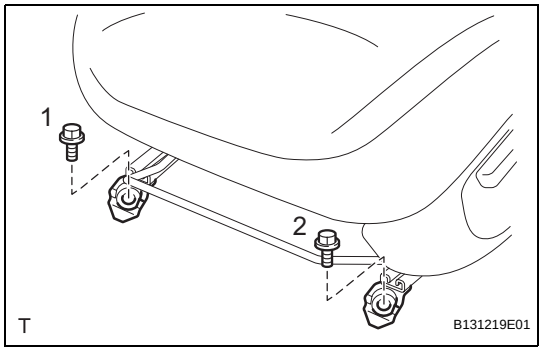

(d) Tighten the 2 bolts on the front side of the seat.
Torque: 37 N*m (377 kgf*cm, 27 ft.*lbf)
HINT:
Tighten the bolts in the order indicated in the illustration.

(e) Lift up the seat track adjusting handle and move the seat to the foremost position.

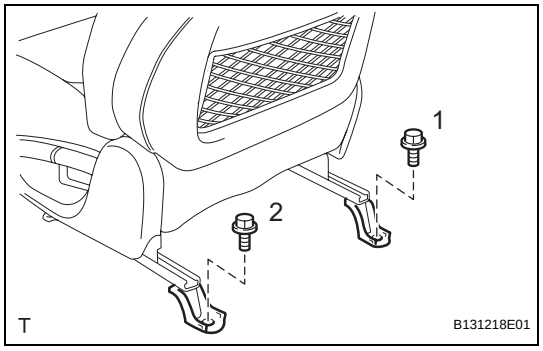

(f) Tighten the 2 bolts on the rear side of the seat.
Torque: 37 N*m (377 kgf*cm, 27 ft.*lbf)
HINT:
Tighten the bolts in the order indicated in the illustration.

2. INSPECT AND ADJUST SEAT SLIDE ADJUSTER LOCKS

(a) During sliding operation of the front seat, check that the left and right adjusters move together smoothly and lock simultaneously.
If the seat adjusters do not lock simultaneously, loosen the seat fixation bolts to adjust the adjuster's position.

3. INSTALL FRONT SEAT TRACK BRACKET OUTER COVER LH

(a) Install the outer cover in the direction indicated by the arrow in the illustration and attach the 2 claws.

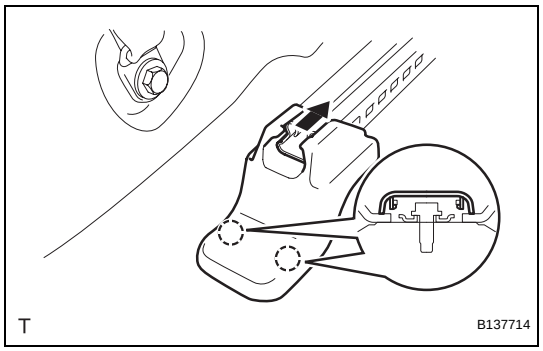

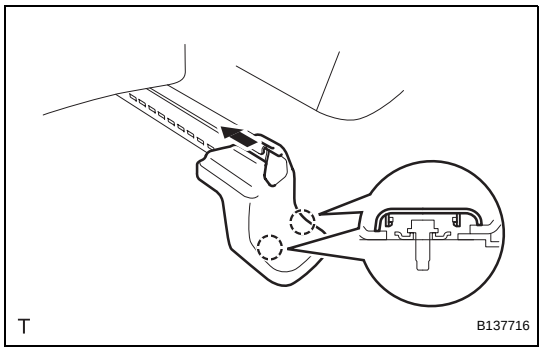

SE

4. **INSTALL FRONT SEAT TRACK BRACKET INNER COVER LH**
   (a) Install the inner cover in the direction indicated by the arrow in the illustration and attach the 2 claws.
5. **INSTALL FRONT SEAT HEADREST ASSEMBLY**
6. **CONNECT CABLE TO NEGATIVE BATTERY TERMINAL**
7. **CHECK SRS WARNING LIGHT (w/ Front Seat Side Airbag)**
   (a) Check the SRS warning light (see page RS-37).
8. **INSPECT FRONT SEAT ASSEMBLY**
   (a) for Passenger Side:
   Perform the zero point calibration and sensitivity check (see page RS-241).
   (b) w/ Seat Heater System:
   Check the seat heater operation.
   (1) Turn the ignition switch on (IG).
   (2) Push the seat heater switch ON.
   (3) Wait 5 minutes or more and confirm that the seat surface becomes warm.

FRONT SEAT ASSEMBLY (for Manual Seat)

COMPONENTS

SE

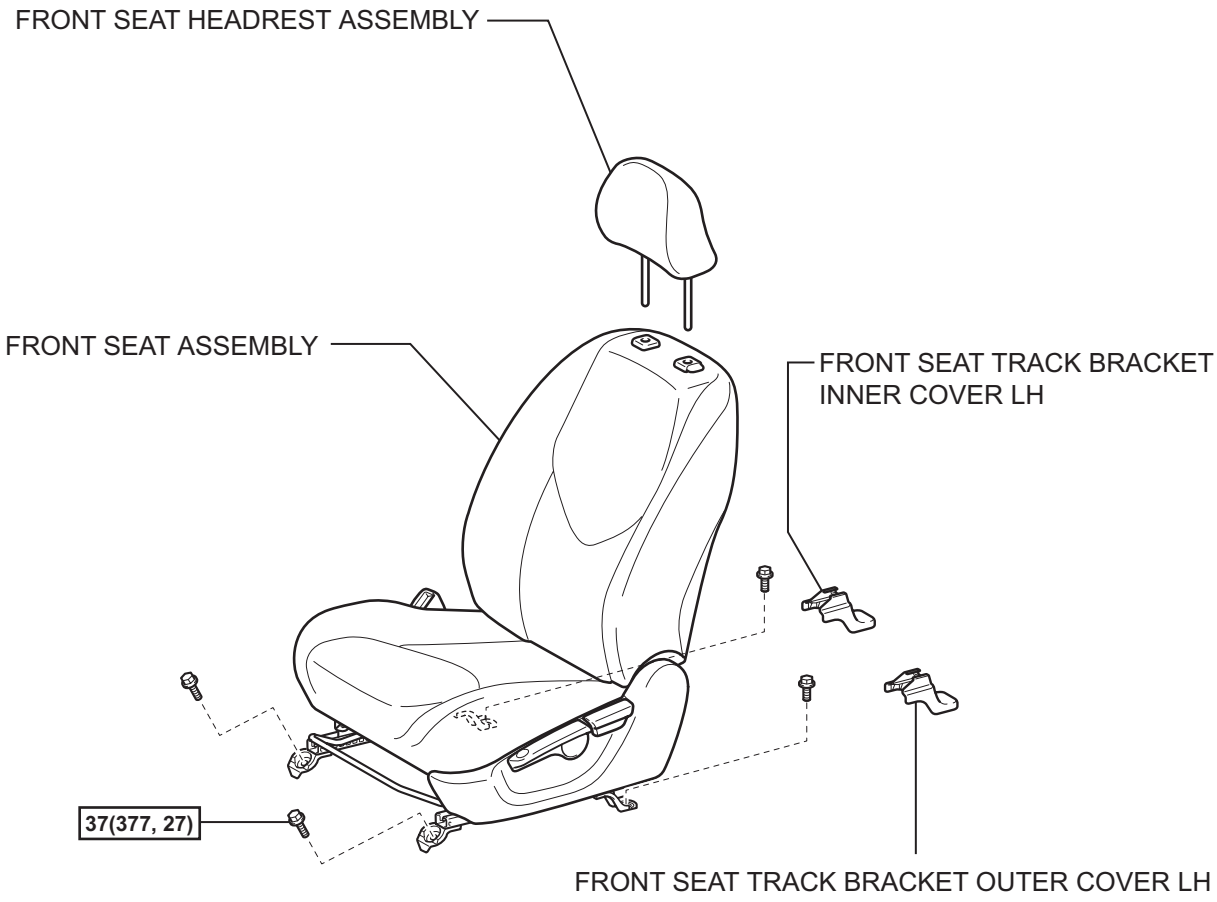

N*m (kgf*cm, ft.*lbf) : Specified torque

T

B130319E07

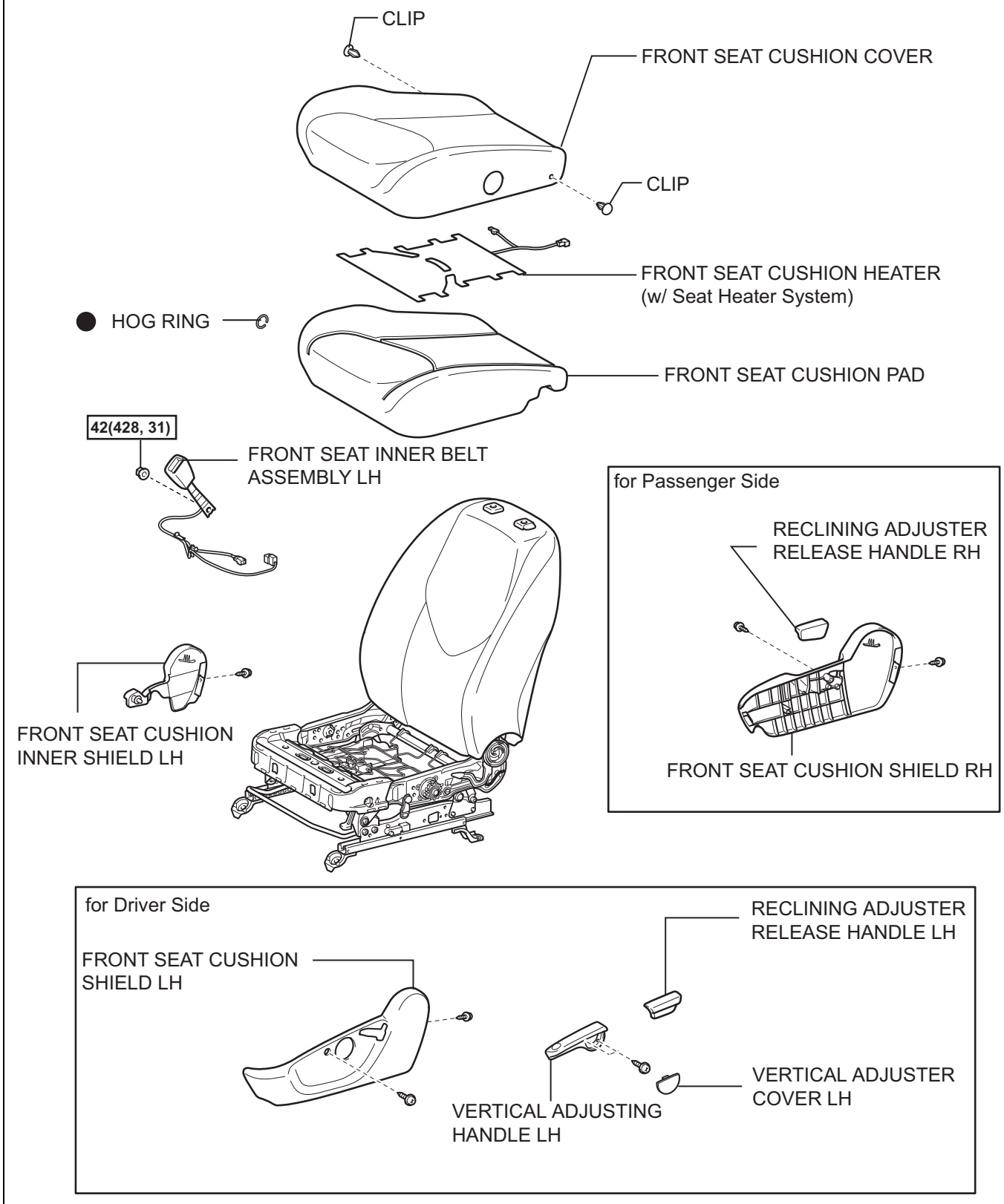

N*m (kgf*cm, ft.*lbf) : Specified torque

● Non-reusable part

T

B131220E03

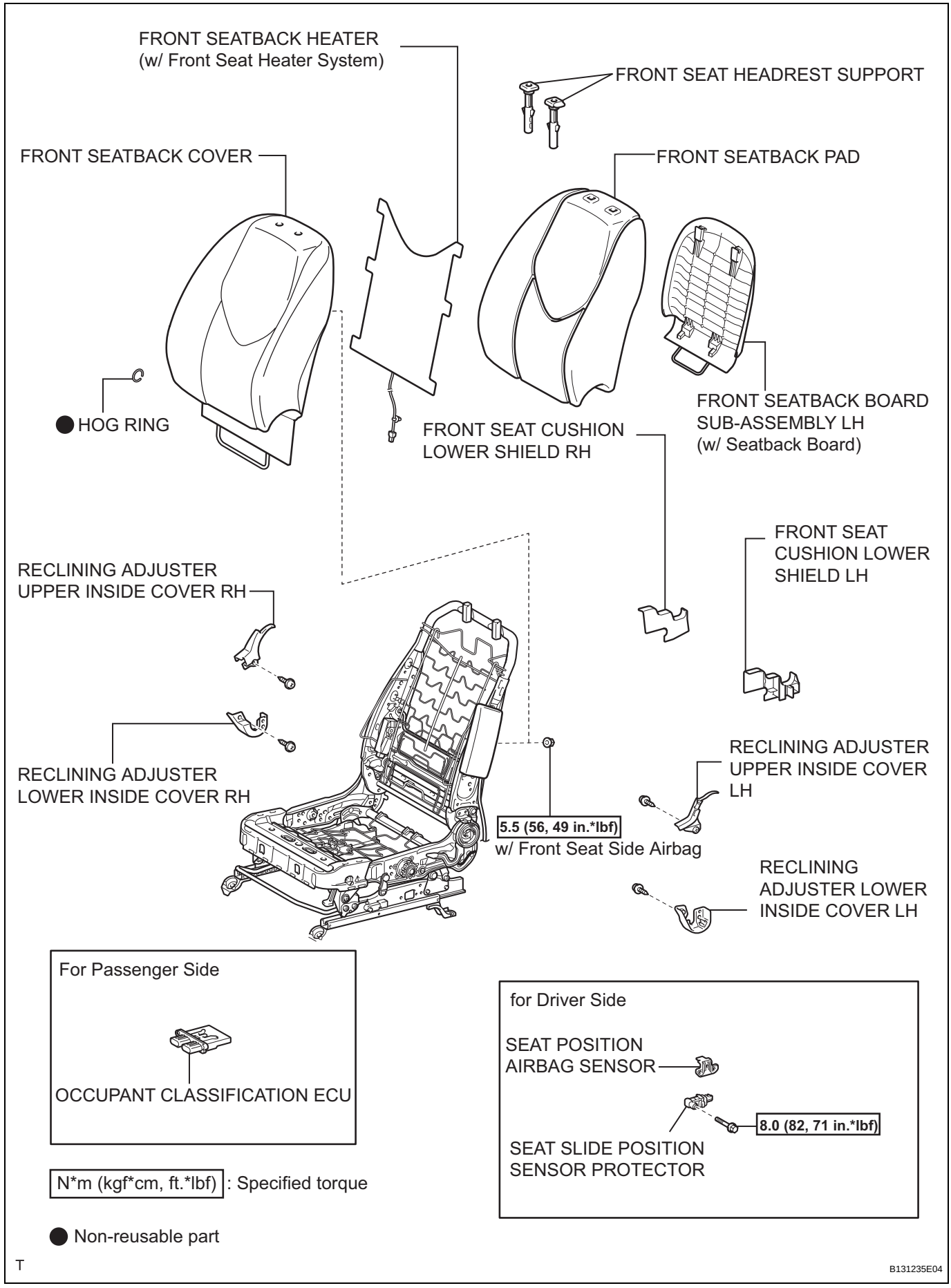
FRONT SEATBACK HEATER
(w/ Front Seat Heater System)
FRONT SEAT HEADREST SUPPORT
FRONT SEATBACK COVER
FRONT SEATBACK PAD
HOG RING
FRONT SEAT CUSHION
LOWER SHIELD RH
FRONT SEATBACK BOARD
SUB-ASSEMBLY LH
(w/ Seatback Board)
FRONT SEAT
CUSHION LOWER
SHIELD LH
RECLINING ADJUSTER
UPPER INSIDE COVER RH
RECLINING ADJUSTER
LOWER INSIDE COVER RH
5.5 (56, 49 in.*lbf)
w/ Front Seat Side Airbag
RECLINING ADJUSTER
UPPER INSIDE COVER
LH
RECLINING
ADJUSTER LOWER
INSIDE COVER LH
For Passenger Side
OCCUPANT CLASSIFICATION ECU
for Driver Side
SEAT POSITION
AIRBAG SENSOR
8.0 (82, 71 in.*lbf)
SEAT SLIDE POSITION
SENSOR PROTECTOR
N*m (kgf*cm, ft.*lbf) : Specified torque
Non-reusable part
T
B131235E04

REMOVAL

HINT:
- Use the same procedures for the RH side and LH side.
- The procedures listed below are for the RH side.

1. REMOVE FRONT SEAT HEADREST ASSEMBLY

2. REMOVE FRONT SEAT ASSEMBLY

(a) Operate the power seat switch knob and move the seat to the foremost position.

(b) Using a screwdriver, detach the 2 claws.
HINT:
Tape the screwdriver tip before use.

(c) Remove the front seat track bracket outer cover in the direction indicated by the arrow in the illustration.

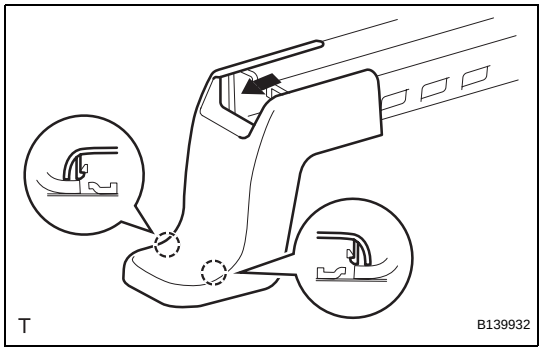

(d) Using a screwdriver, detach the 2 claws.
HINT:
Tape the screwdriver tip before use.

(e) Remove the front seat track bracket inner cover in the direction indicated by the arrow in the illustration.

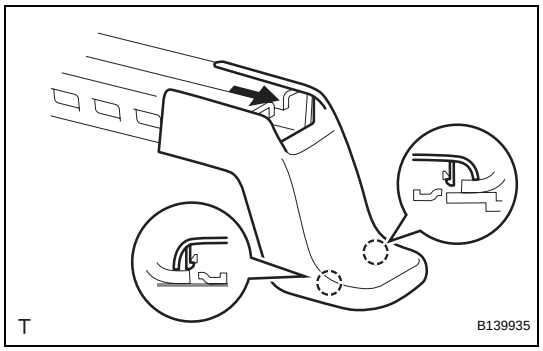

(f) Remove the 2 bolts on the rear side of the seat.

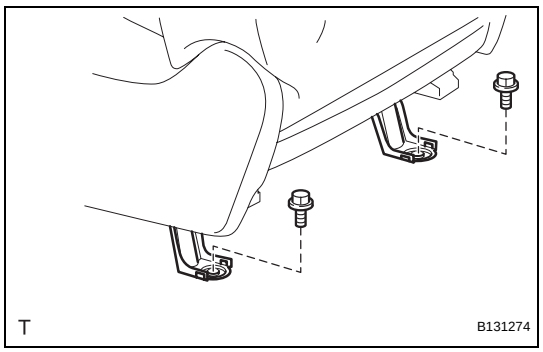

(g) Operate the power seat switch knob and move the seat to the rearmost position.

(h) Remove the 2 bolts on the front side of the seat.

(i) Operate the power seat switch knob and move the seat to the center position. Then, operate the power seat switch knob and move the seatback to the upright position.

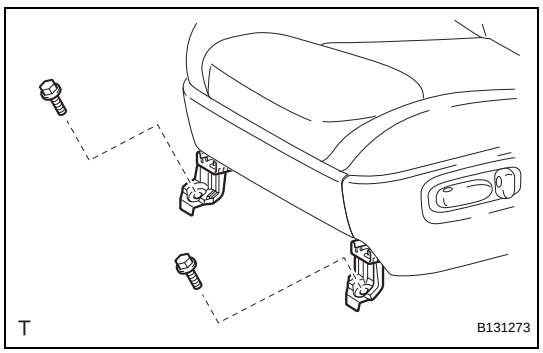

(j) Disconnect the cable from the negative (-) battery terminal.

CAUTION:
Wait at least 90 seconds after disconnecting the cable from the negative (-) battery terminal to prevent airbag and seat belt pretensioner activation.

(k) Disconnect the connectors under the seat. Then remove the seat.

DISASSEMBLY

CAUTION:
Wear protective gloves. Sharp areas on the seat frame (with adjuster) may injure your hands.

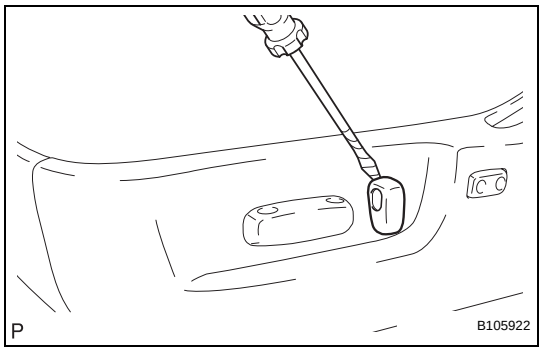

1. REMOVE RECLINING POWER SEAT SWITCH KNOB

(a) Using a screwdriver, detach the knob.
HINT:
Tape the screwdriver tip before use.

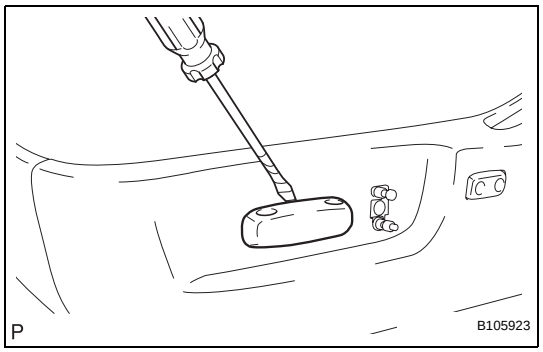

2. REMOVE SLIDE AND VERTICAL POWER SEAT SWITCH KNOB

(a) Using a screwdriver, detach the knob.
HINT:
Tape the screwdriver tip before use.

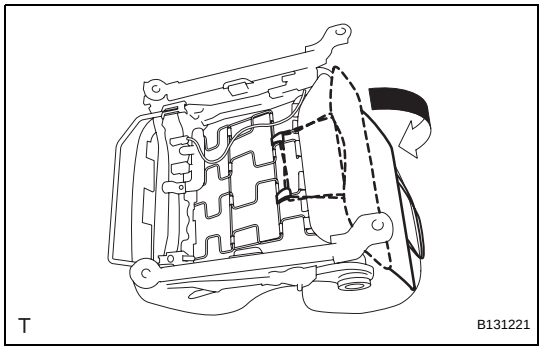

3. REMOVE FRONT SEAT CUSHION SHIELD LH

(a) Disconnect the 2 rubber bands of the front seatback board from the front seat frame (with adjuster).

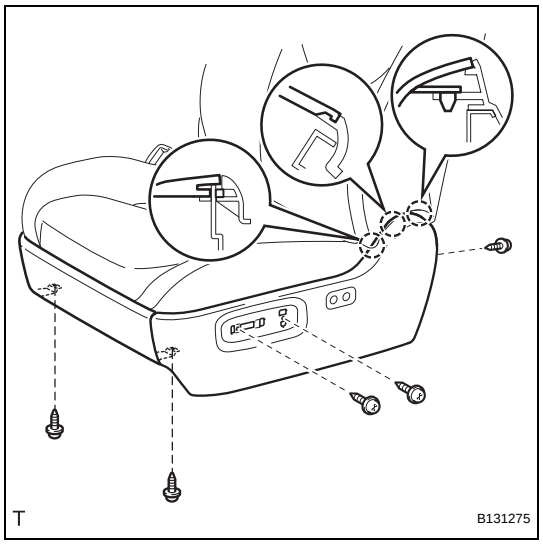

(b) Remove the 5 screws.
(c) Using a screwdriver, detach the 3 claws and remove the cushion shield (with front No. 1 seat cushion inner shield).
HINT:
Tape the screwdriver tip before use.
(d) Disconnect the connector from the front power seat lumbar switch.

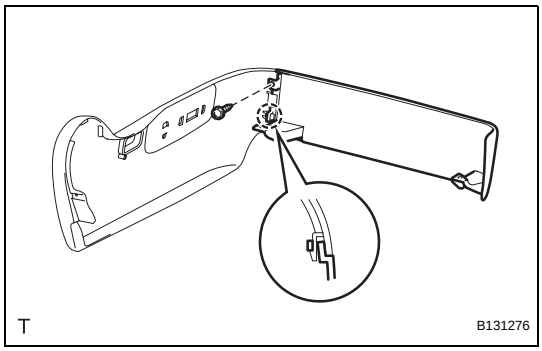

(e) Remove the front No. 1 seat cushion inner shield from the cushion shield.
  (1) Remove the screw.
  (2) Using a screwdriver, detach the claw and remove the inner shield.
  HINT:
  Tape the screwdriver tip before use.

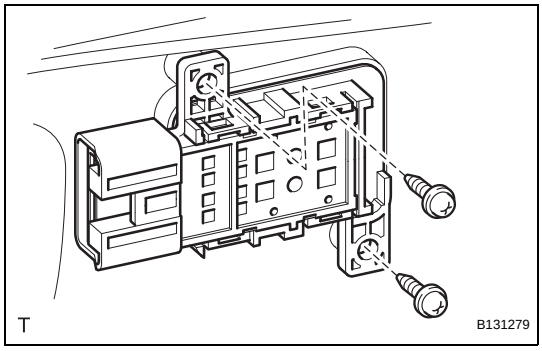

4. REMOVE FRONT POWER SEAT LUMBAR SWITCH
(a) Remove the 2 screws and switch.

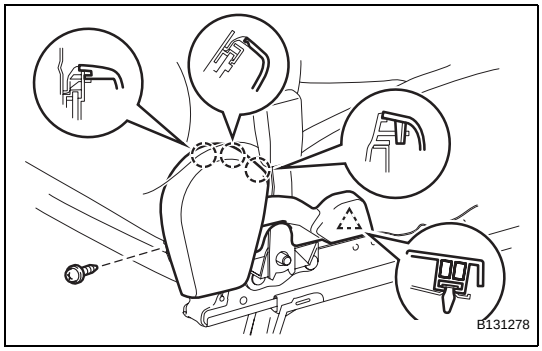

5. REMOVE FRONT SEAT CUSHION INNER SHIELD LH
(a) Remove the screw.
(b) Using a screwdriver, detach the 3 claws.
  HINT:
  Tape the screwdriver tip before use.
(c) Using a clip remover, detach the clip and remove the inner shield.

6. REMOVE FRONT SEAT INNER BELT ASSEMBLY LH
(See page SB-22)

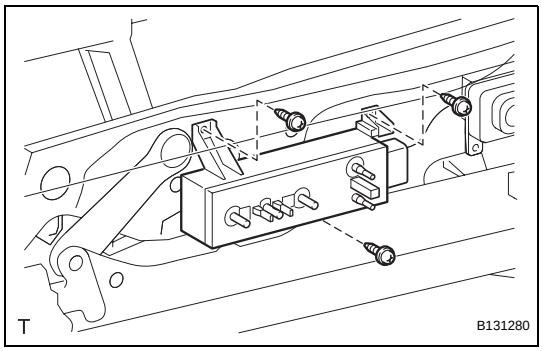

7. REMOVE FRONT POWER SEAT SWITCH
(a) Remove the 3 screws.
(b) Disconnect the connector and remove the switch.

8. REMOVE FRONT SEAT CUSHION COVER
(a) w/ Seat Heater System:
  Disconnect the connector.

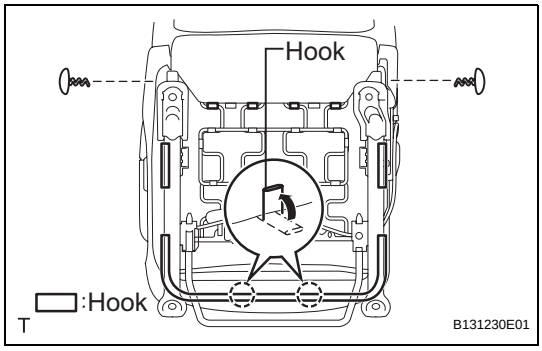

(b) Using a clip remover, remove the 2 clips.
(c) Detach the 2 hooks on the seat cushion front side.
(d) Using a screwdriver, detach the hooks and remove the seat cushion cover (with pad).
  HINT:
  Tape the screwdriver tip before use.

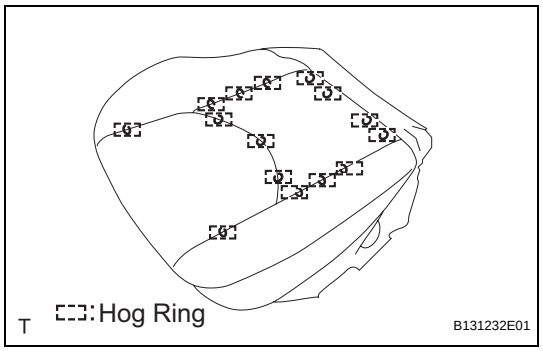

(e) Remove the 15 hog rings and seat cushion cover from the seat cushion pad.

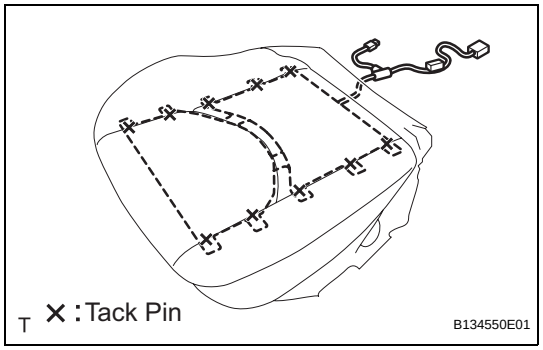

9. REMOVE FRONT SEAT CUSHION HEATER (w/ Seat Heater System)

(a) Cut off the 10 tack pins which fasten the seat heater, and then remove the seat cushion heater from the seat cushion cover.

NOTICE:

Be careful not to damage the seat cushion cover and seat heater.

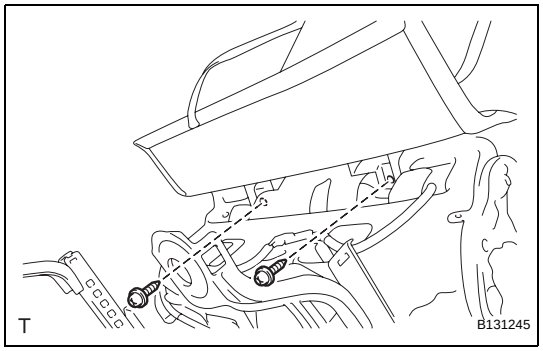

10. REMOVE FRONT SEATBACK BOARD SUB-ASSEMBLY LH

(a) Open the lower part of the seatback board. Then remove the 2 screws.

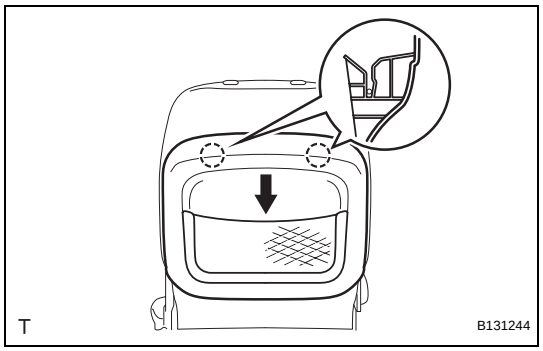

(b) Pull the seatback board in the direction indicated by the arrow in the illustration to detach the 2 claws. Then, remove the seatback board.

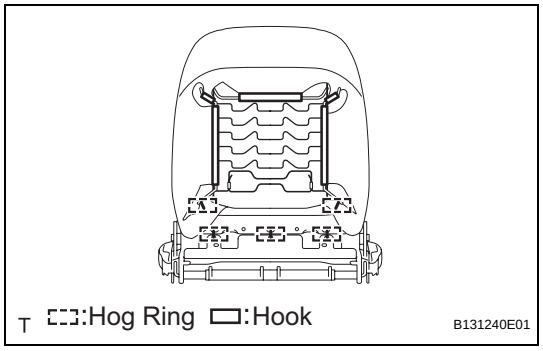

11. REMOVE FRONT SEATBACK COVER

(a) Remove the 5 hog rings.

(b) Using a screwdriver, detach the hooks.

HINT:

Tape the screwdriver tip before use.

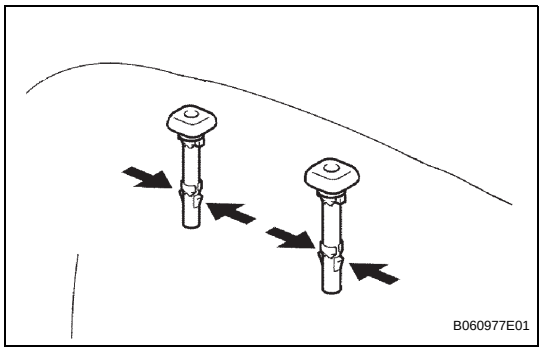

(c) Detach the 4 claws and remove the 2 headrest supports.

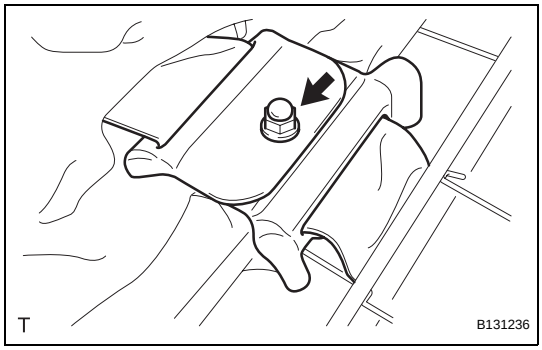

(d) w/ Front Seat Side Airbag:
Remove the nut and move the 2 seatback cover brackets.
(e) Remove the seatback cover (with pad) from the seat frame (with adjuster).

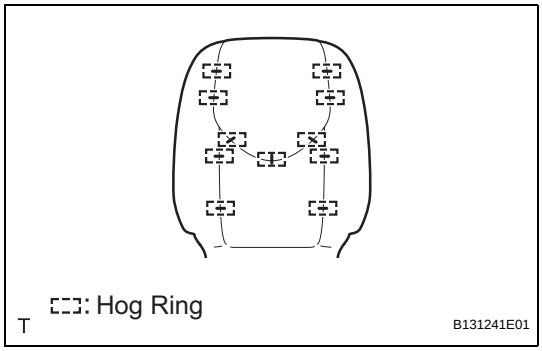

(f) Remove the 11 hog rings and seatback cover from the seatback pad.

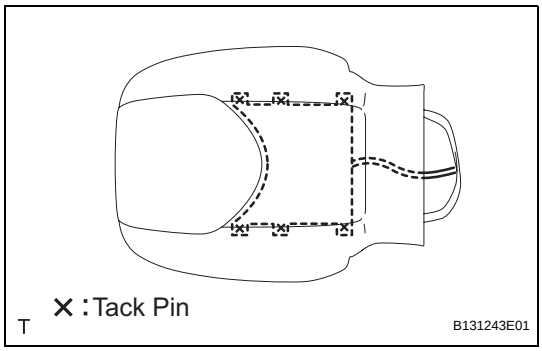

12. REMOVE FRONT SEATBACK HEATER (w/ Seat Heater System)

(a) Cut off the 6 tack pins which fasten the seat heater, and then remove the seat cushion heater from the seat cushion cover.
NOTICE:
Be careful not to damage the seat cushion cover and seat heater.

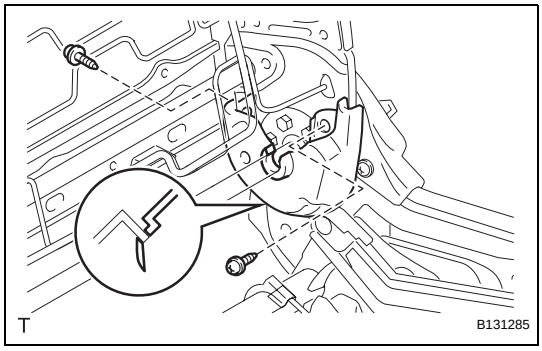

13. REMOVE RECLINING ADJUSTER LOWER INSIDE COVER LH

(a) Remove the 2 screws.
(b) Detach the claw and remove the inside cover.

14. REMOVE RECLINING ADJUSTER LOWER INSIDE COVER RH

HINT:
Use the same procedures described for the LH side.

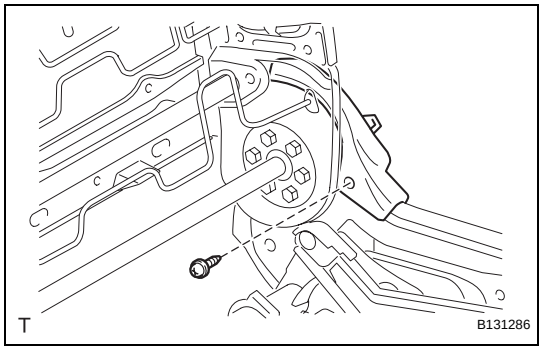

15. REMOVE RECLINING ADJUSTER UPPER INSIDE COVER LH

(a) Remove the screw and inside cover.

16. REMOVE RECLINING ADJUSTER UPPER INSIDE COVER RH

(a) Remove the screw and inside cover.

SE

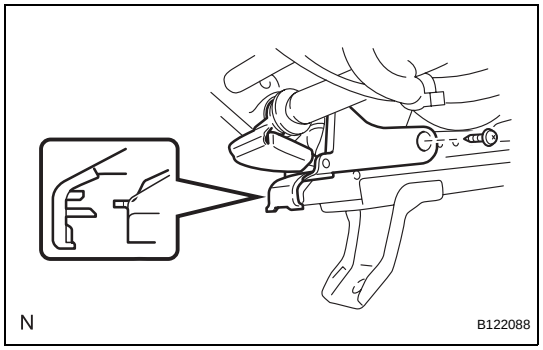

17. REMOVE FRONT SEAT CUSHION LOWER SHIELD LH

(a) Remove the screw.

(b) Detach the hook of the lower shield and remove the lower shield.

18. REMOVE FRONT SEAT CUSHION LOWER SHIELD RH

HINT:

Use the same procedures described for the LH side.

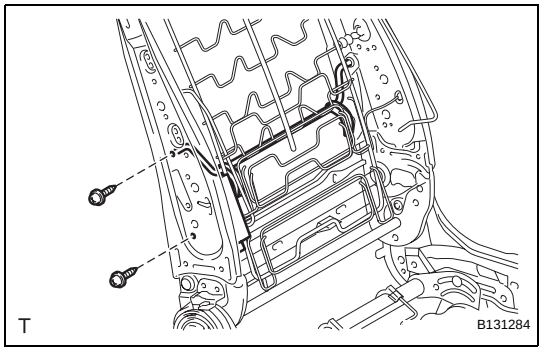

19. REMOVE LUMBAR SUPPORT ADJUSTER ASSEMBLY

(a) Disconnect the connector.

(b) Remove the 2 screws and lumbar support adjuster.

20. REMOVE SEAT POSITION AIRBAG SENSOR (See page RS-390)

21. REMOVE FRONT SEAT WIRE

SE

REASSEMBLY

CAUTION:
Wear protective gloves. Sharp areas on the seat frame (with adjuster) may injure your hands.

1. **INSTALL FRONT SEAT WIRE**
2. **INSTALL SEAT POSITION AIRBAG SENSOR (See page RS-390)**
3. **INSTALL LUMBAR SUPPORT ADJUSTER ASSEMBLY**
   (a) Install the lumbar support adjuster with the 2 screws.
   (b) Connect the connector.

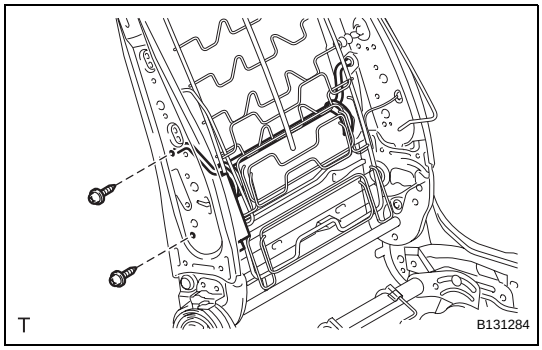

4. **INSTALL FRONT SEAT CUSHION LOWER SHIELD LH**
   (a) Attach the hook of the lower shield.
   (b) Install the lower shield with the screw.
5. **INSTALL FRONT SEAT CUSHION LOWER SHIELD RH**
   HINT:
   Use the same procedures described for the LH side.

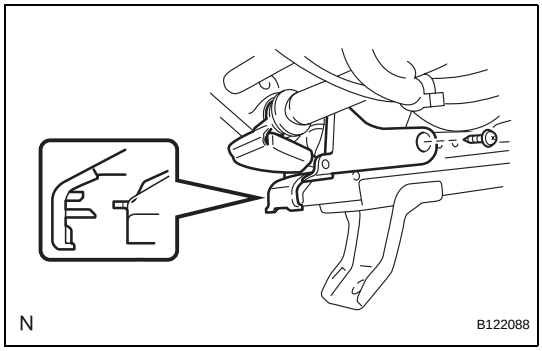

6. **INSTALL RECLINING ADJUSTER UPPER INSIDE COVER LH**
   (a) Install the inside cover with the screw.
7. **INSTALL RECLINING ADJUSTER UPPER INSIDE COVER RH**
   (a) Install the inside cover with the screw.

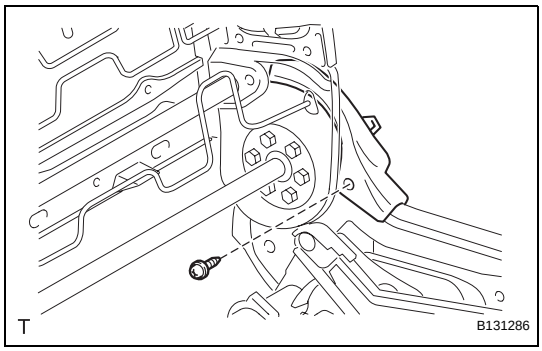

8. **INSTALL RECLINING ADJUSTER LOWER INSIDE COVER LH**
   (a) Attach the claw to install the inside cover.
   (b) Install the 2 screws.
9. **INSTALL RECLINING ADJUSTER LOWER INSIDE COVER RH**
   HINT:
   Use the same procedures described for the LH side.

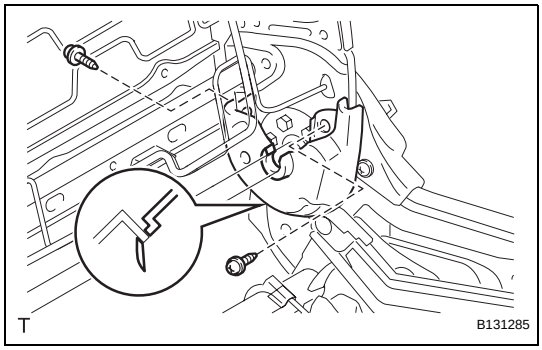

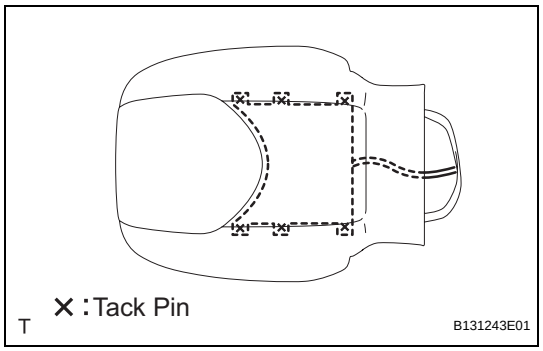

10. INSTALL FRONT SEATBACK HEATER (w/ Seat Heater System)

(a) Using a tacker, install the seatback heater to the end of the seat cover with 6 new tack pins.
NOTICE:
Do not substitute other metal parts for tack pins.

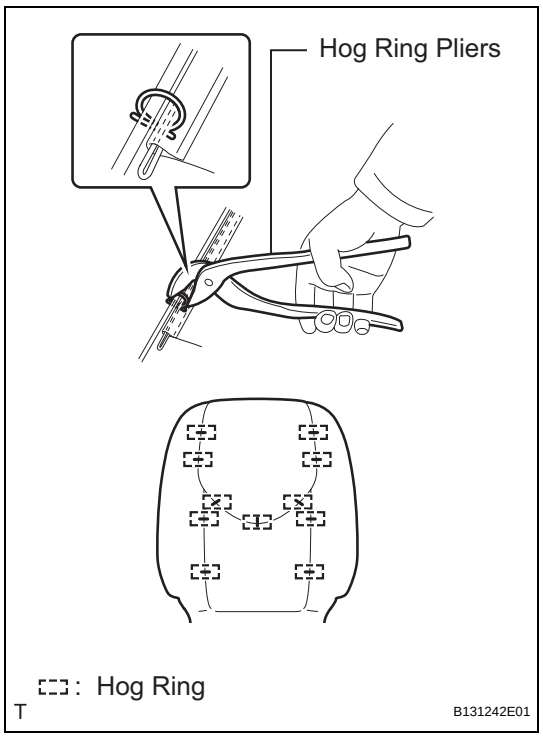

11. INSTALL FRONT SEATBACK COVER
NOTICE:
- **Be careful not to damage the cover.**
- **When installing the hog rings, avoid wrinkling the cover.**

(a) Using hog ring pliers, install the seatback cover to the seatback pad with 11 new hog rings.

(b) Install the seatback cover (with pad) to the seat frame (with adjuster).

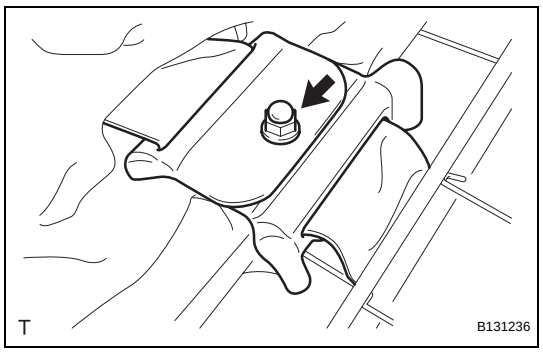

(c) w/ Front Seat Side Airbag:
Fully cover the airbag with the 2 seatback cover brackets and install the nut.
Torque: 5.5 N*m (56 kgf*cm, 49 in.*lbf)
CAUTION:
- **For vehicles with side airbags, the seatback cover must be securely installed. Otherwise, the side airbags may not deploy properly.**
- **Make sure that the strap is not twisted after installing the bracket.**
- **Install the bracket securely.**

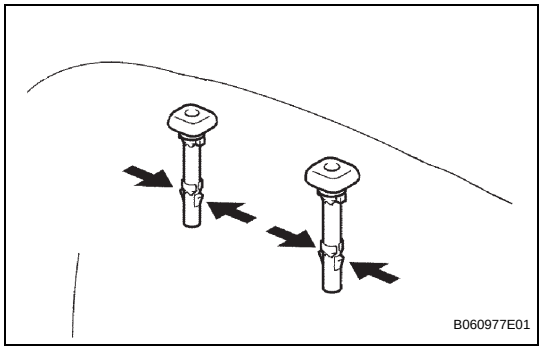

(d) Attach the 4 claws to install the 2 headrest supports.

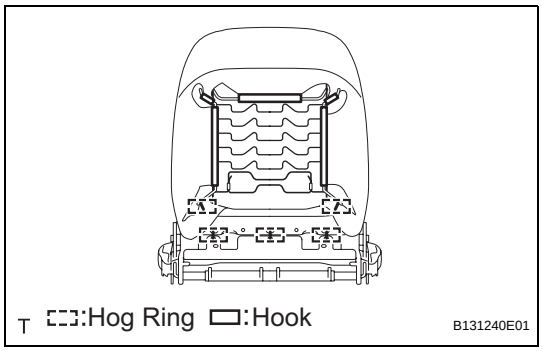

(e) Attach the hooks.
(f) Using hog ring pliers, install the seatback cover (with pad) with 5 new hog rings.

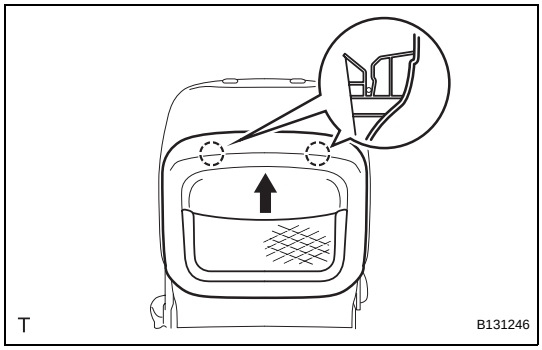

12. INSTALL FRONT SEATBACK BOARD SUB-ASSEMBLY LH

(a) Push the seatback board in the direction indicated by the arrow in the illustration to attach the 2 claws.

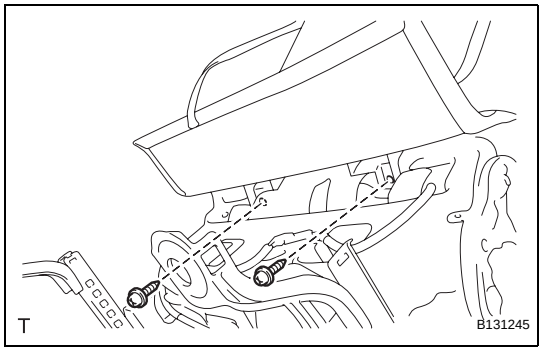

(b) Open the lower part of the seatback board. Then install the seatback board with the 2 screws.

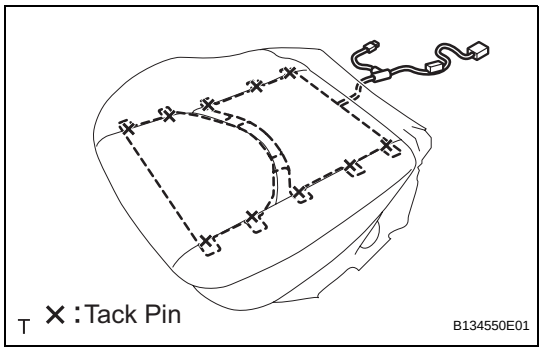

13. INSTALL FRONT SEAT CUSHION HEATER (w/ Seat Heater System)

(a) Using a tacker, install the seat cushion heater to the end of the seat cover with 10 new tack pins.
NOTICE:
Do not substitute other metal parts for tack pins.

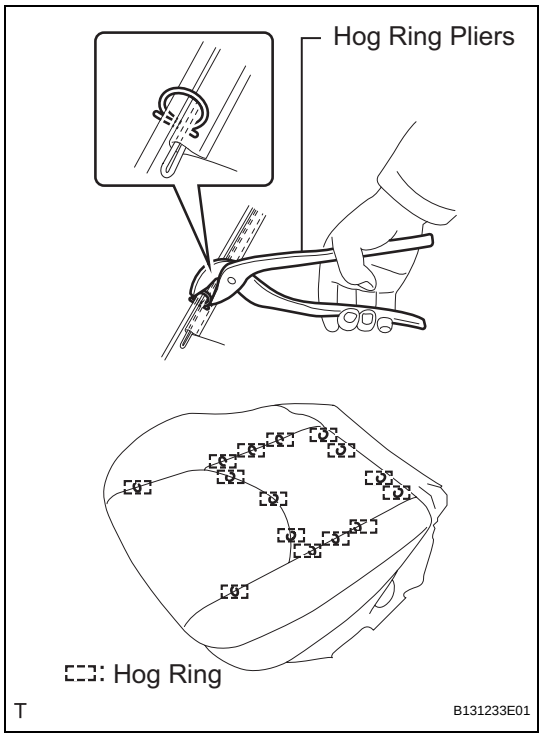

14. INSTALL FRONT SEAT CUSHION COVER

(a) Using hog ring pliers, install the seat cushion cover to the seat cushion pad with 15 new hog rings.
NOTICE:
- **Be careful not to damage the cover.**
- **When installing the hog rings, avoid wrinkling the cover.**

(b) Install the seat cushion cover (with pad) to the seat frame (with adjuster).

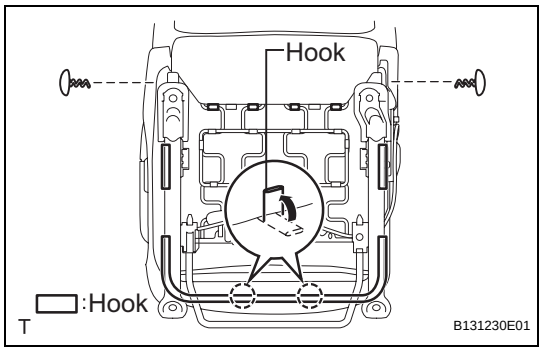

(c) Attach the hooks and install the 2 clips.

(d) w/ Seat Heater System:
Connect the connector.

15. INSTALL FRONT POWER SEAT SWITCH

(a) Connect the connector.

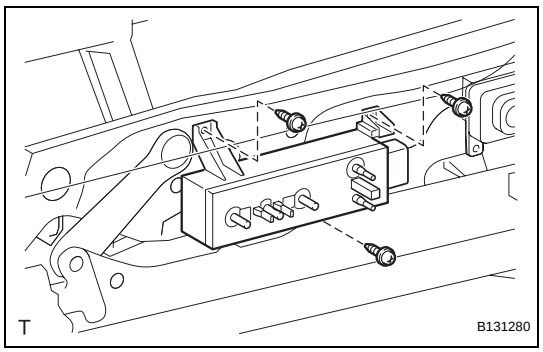

(b) Install the switch with the 3 screws.

16. INSTALL FRONT SEAT INNER BELT ASSEMBLY LH (See page SB-23)

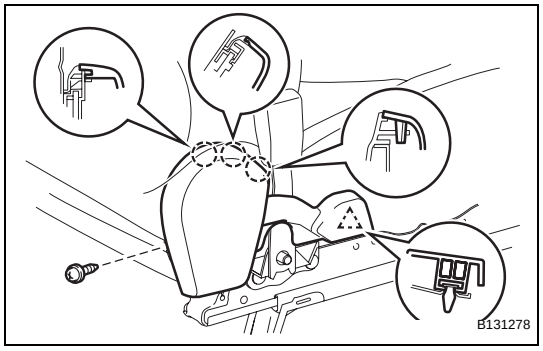

17. INSTALL FRONT SEAT CUSHION INNER SHIELD LH

(a) Attach the clip and 3 claws to install the inner shield.

(b) Install the screw.

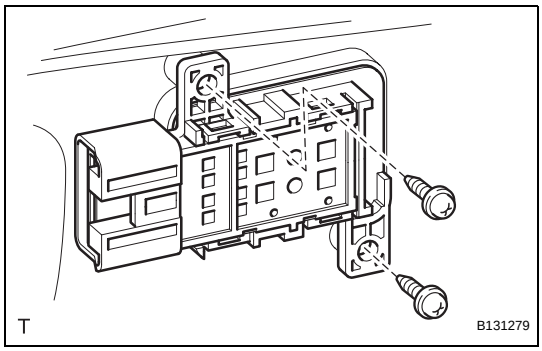

18. INSTALL FRONT POWER SEAT LUMBAR SWITCH

(a) Install the switch to the cushion shield with the 2 screws.

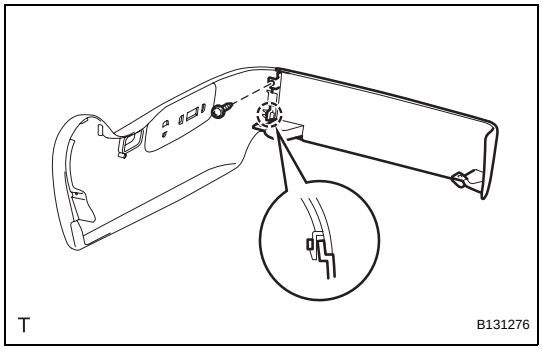

19. INSTALL FRONT SEAT CUSHION SHIELD LH

(a) Install the front No. 1 seat cushion inner shield to the cushion shield.
  (1) Attach the claw to install the front No. 1 seat cushion inner shield.
  (2) Install the screw.

(b) Connect the connector to the front power seat lumbar switch.

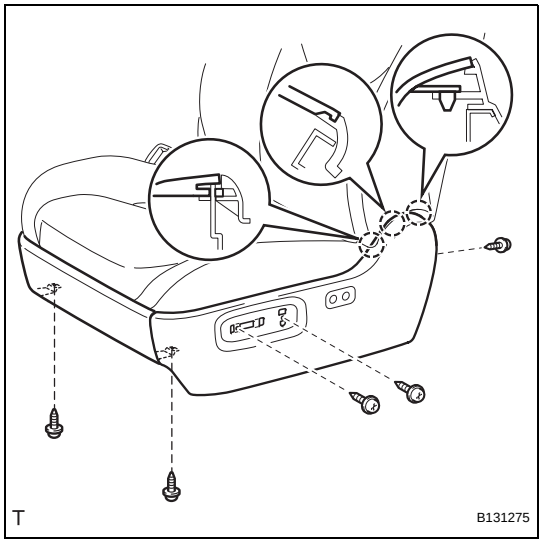

(c) Attach the 3 claws and install the cushion shield (with front No. 1 seat cushion inner shield) to the seat frame (with adjuster).

(d) Install the 5 screws.

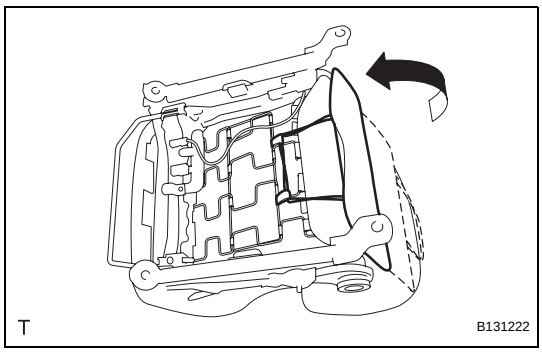

(e) Connect the 2 rubber bands of the front seatback board to the seat frame (with adjuster).

20. INSTALL SLIDE AND VERTICAL POWER SEAT SWITCH KNOB

21. INSTALL RECLINING POWER SEAT SWITCH KNOB

INSTALLATION

HINT:
Use the same procedures for the LH and RH side.

1. INSTALL FRONT SEAT ASSEMBLY

(a) Place the seat in the cabin.
(b) Connect the connectors under the seat.
(c) Connect the cable to the negative (-) battery terminal.

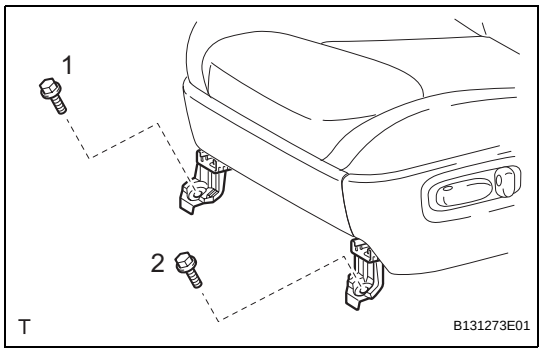

(d) Operate the power seat switch knob and move the seat to the rearmost position.
(e) Tighten the 2 bolts on the front side of the seat.
Torque: 37 N*m (377 kgf*cm, 27 ft.*lbf)
HINT:
Tighten the 2 bolts in the order indicated in the illustration.

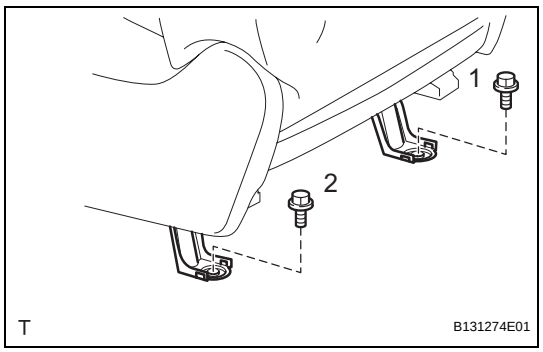

(f) Operate the power seat switch knob and move the seat to the foremost position.
(g) Tighten the 2 bolts on the rear side of the seat.
Torque: 37 N*m (377 kgf*cm, 27 ft.*lbf)
HINT:
Tighten the 2 bolts in the order indicated in the illustration.

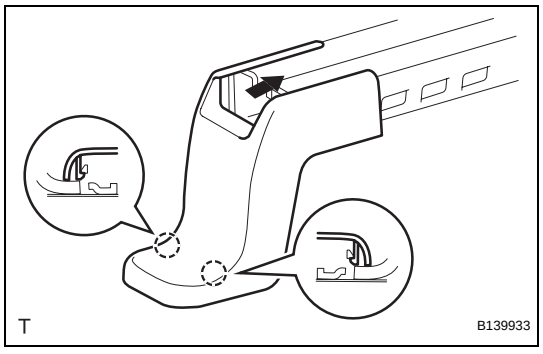

(h) Install the front seat track bracket outer cover in the direction indicated by the arrow in the illustration and attach the 2 claws.

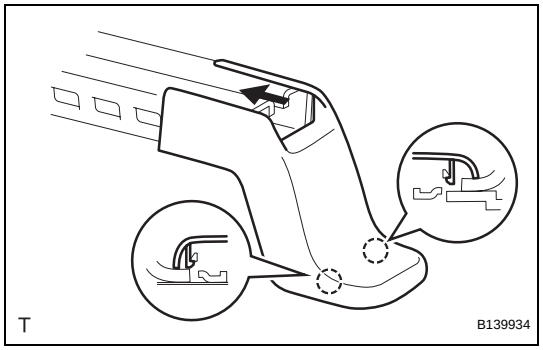

(i) Install the front seat track bracket inner cover in the direction indicated by the arrow in the illustration and attach the 2 claws.

2. INSTALL FRONT SEAT HEADREST ASSEMBLY

3. CHECK SRS WARNING LIGHT (w/ Front Seat Side Airbag)
Check the SRS warning light (see page RS-37).

4. INSPECT FRONT SEAT ASSEMBLY

(a) Check the power seat operation.
(b) w/ Seat Heater System:
Check the seat heater operation.

(1) Turn the ignition switch on (IG).
(2) Push the seat heater switch ON.
(3) Wait 5 minutes or more and confirm that the seat surface becomes warm.

FRONT SEAT ASSEMBLY (for Power Seat Type LH Side)

COMPONENTS

SE

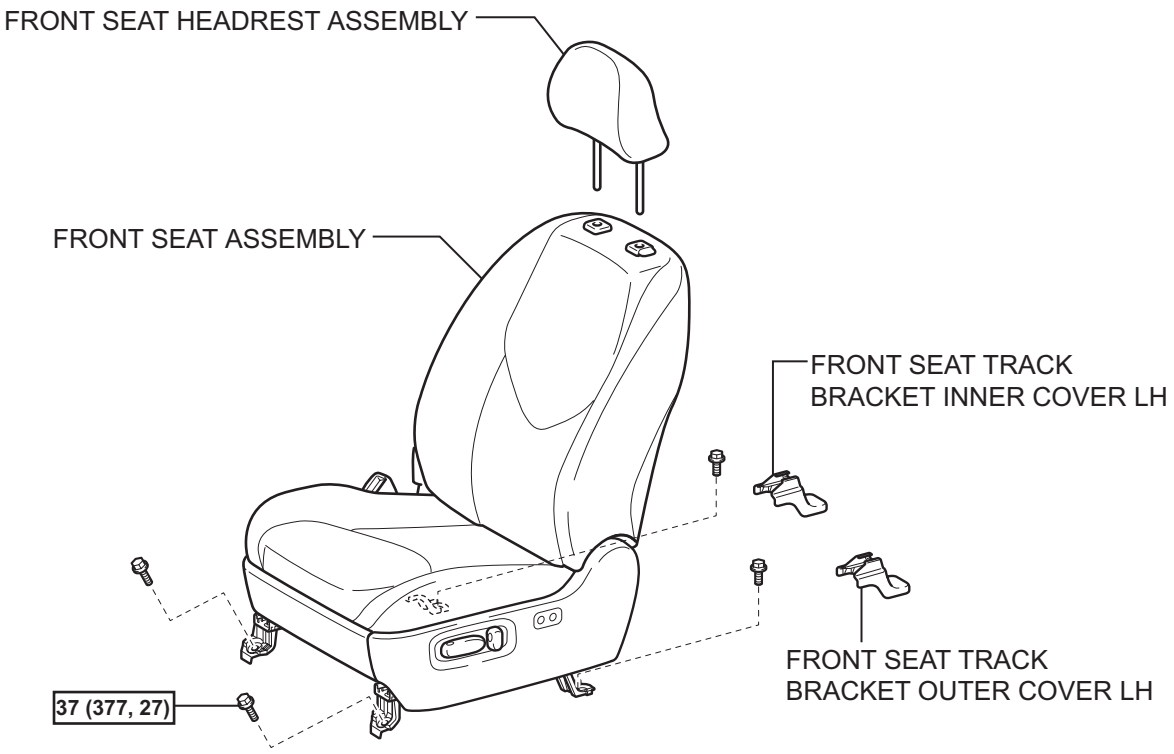

N*m (kgf*cm, ft.*lbf) : Specified torque

T

B131250E07

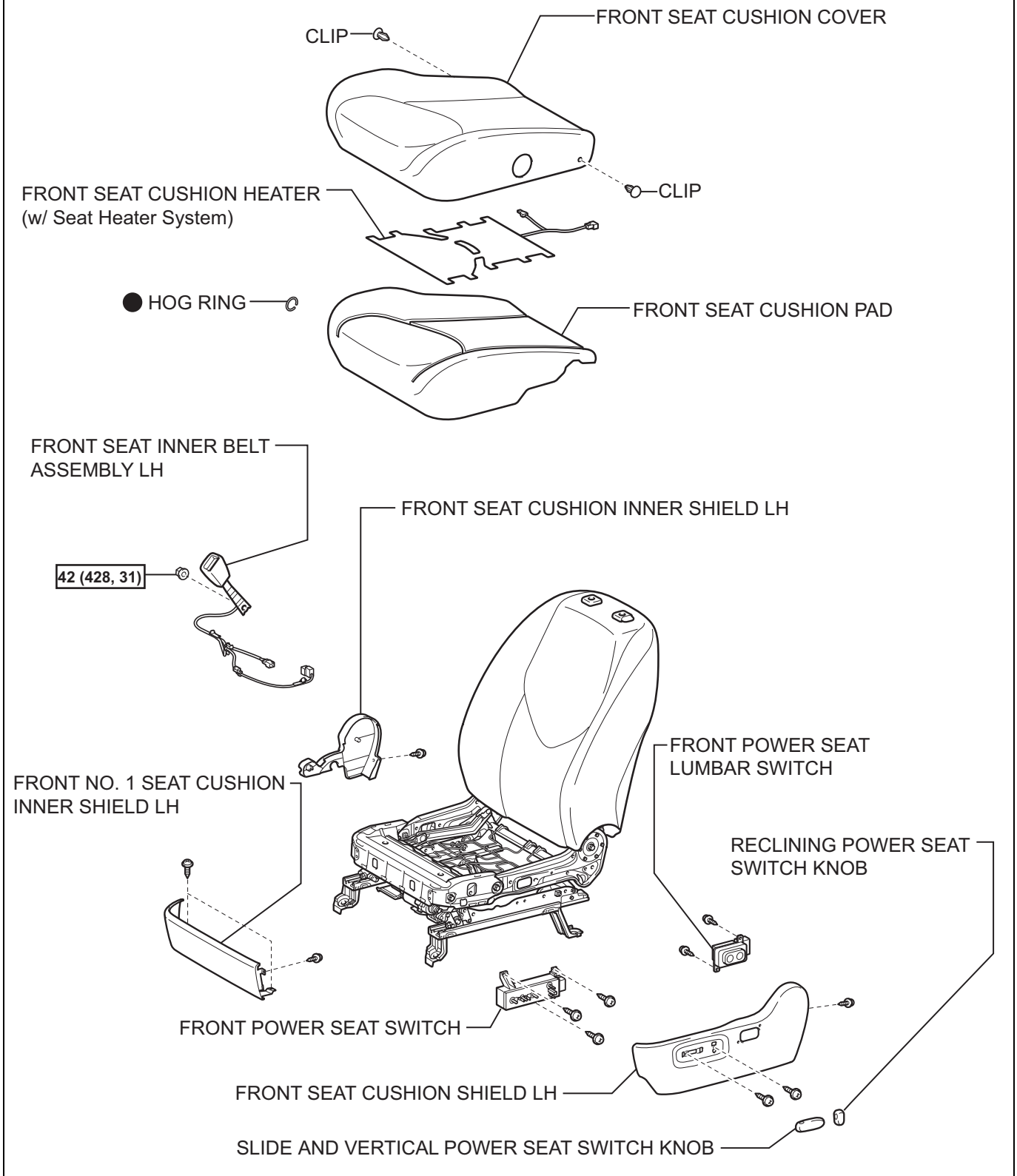

N*m (kgf*cm, ft.*lbf) : Specified torque

● Non-reusable part

T

B131269E04

SE

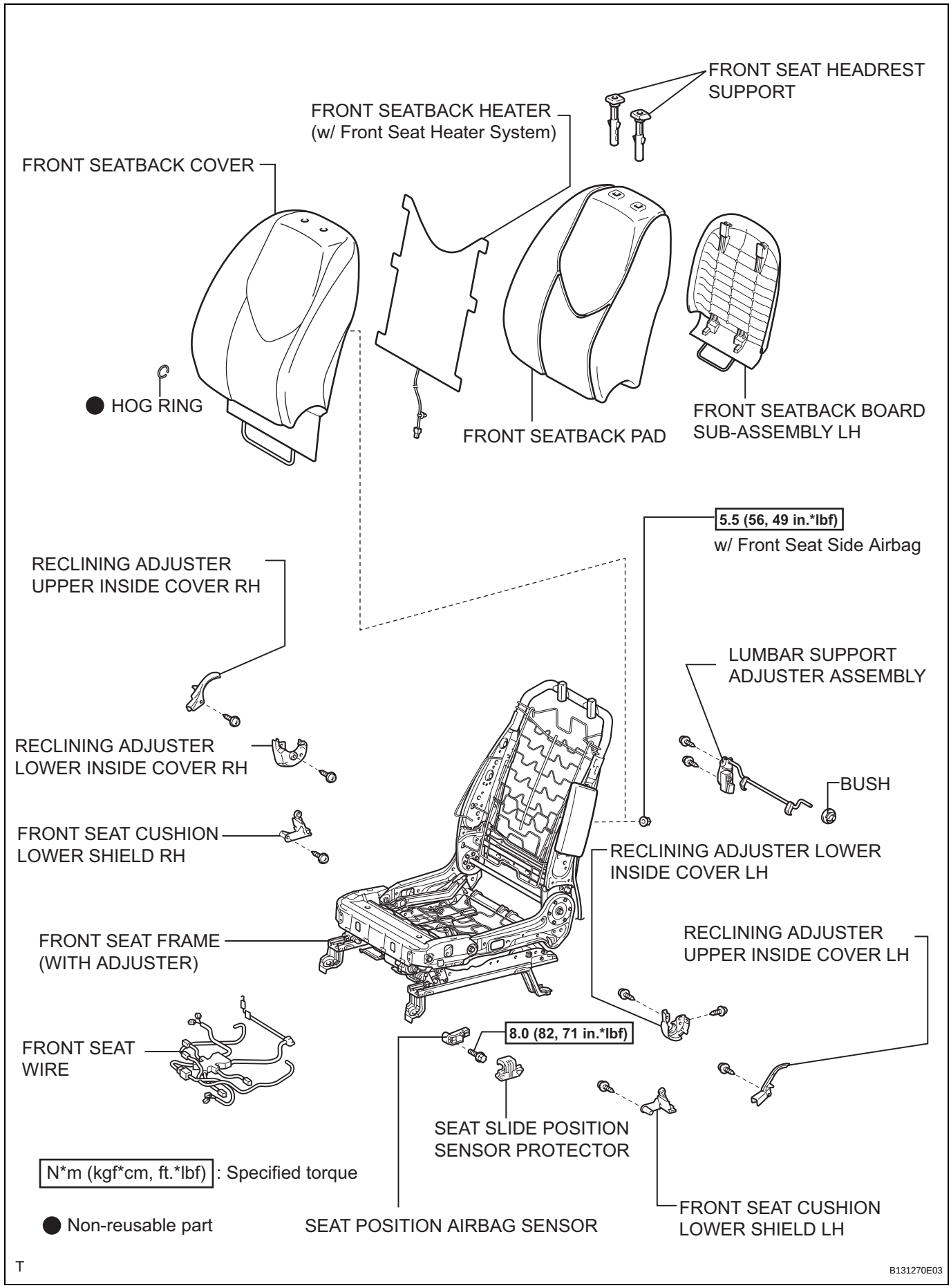
FRONT SEAT HEADREST SUPPORT
FRONT SEATBACK HEATER (w/ Front Seat Heater System)
FRONT SEATBACK COVER
HOG RING
FRONT SEATBACK PAD
FRONT SEATBACK BOARD SUB-ASSEMBLY LH
5.5 (56, 49 in.*lbf)
w/ Front Seat Side Airbag
RECLINING ADJUSTER UPPER INSIDE COVER RH
LUMBAR SUPPORT ADJUSTER ASSEMBLY
RECLINING ADJUSTER LOWER INSIDE COVER RH
BUSH
FRONT SEAT CUSHION LOWER SHIELD RH
RECLINING ADJUSTER LOWER INSIDE COVER LH
FRONT SEAT FRAME (WITH ADJUSTER)
RECLINING ADJUSTER UPPER INSIDE COVER LH
FRONT SEAT WIRE
8.0 (82, 71 in.*lbf)
SEAT SLIDE POSITION SENSOR PROTECTOR
N*m (kgf*cm, ft.*lbf) : Specified torque
Non-reusable part
SEAT POSITION AIRBAG SENSOR
FRONT SEAT CUSHION LOWER SHIELD LH
T
B131270E03

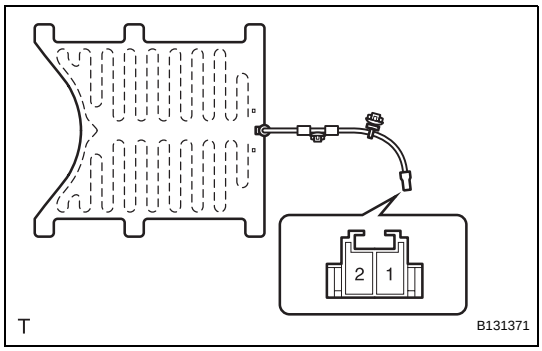

SE

FRONT SEATBACK HEATER

INSPECTION

1. INSPECT FRONT SEATBACK HEATER ASSEMBLY LH

(a) Measure the resistance of the seatback heater.
Standard resistance

Tester Connection	Condition	Specified Condition
1 - 2	Seatback heater temperature 20°C (68°F)	Approx. 6.21 Ω

If the result is not as specified, replace the seatback heater assembly.

2. INSPECT FRONT SEATBACK HEATER ASSEMBLY RH

HINT:
Use the same procedures described for the LH side.

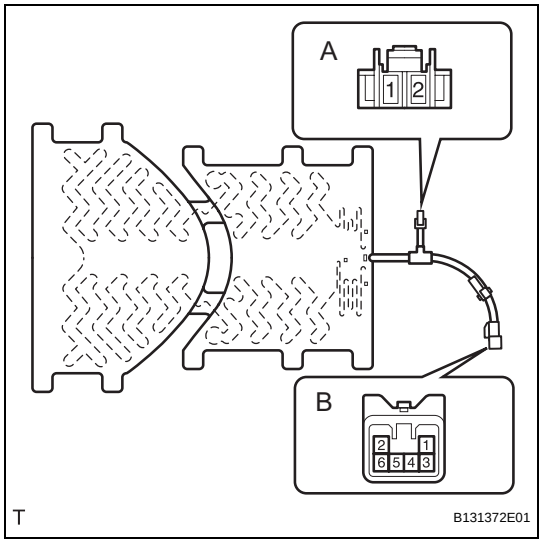

FRONT SEAT CUSHION HEATER

INSPECTION

1. INSPECT FRONT SEAT CUSHION HEATER ASSEMBLY LH

(a) Measure the resistance of the seat cushion heater.
Standard resistance

Tester Connection	Condition	Specified Condition
A1 - B6	Seat cushion heater temperature 20°C (68°F)	Below 1 Ω
A1 - A2	Seat cushion heater temperature 20°C (68°F)	Approx. 5.20 Ω

If the result is not as specified, replace the seat cushion heater assembly.

(b) Heat the thermostat with a light.

(c) Measure the resistance of the seat cushion heater.
Standard resistance

Tester Connection	Condition	Specified Condition
B4 - B6	Seat heater temperature 20°C (68°F)	Approx. 4.85 Ω
B4 - B6	Seat heater temperature 30°C (86°F)	Approx. 5.00 Ω
B4 - B6	Seat heater temperature 30°C (86°F)	Approx. 5.15 Ω

If the result is not as specified, replace the seat cushion heater assembly.

2. INSPECT FRONT SEAT CUSHION HEATER ASSEMBLY RH

HINT:
Use the same procedures described for the LH side.

SE

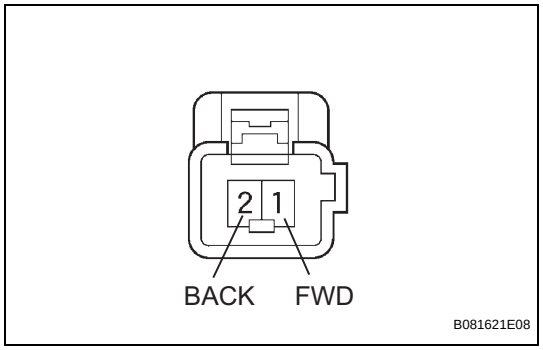

FRONT SEAT FRAME WITH ADJUSTER

INSPECTION

1. INSPECT FRONT SEAT FRAME WITH ADJUSTER

(a) Check operation of the seat frame (slide motor).

(1) Check if the seat frame moves smoothly when the battery is connected to the slide motor connector terminals.

OK

Measurement Condition	Operational Direction
Battery positive (+) → 1 (FWD) Battery negative (-) → 2 (BACK)	Forward
Battery positive (+) → 2 (BACK) Battery negative (-) → 1 (FWD)	Backward

If the result is not as specified, replace the seat frame with adjuster.

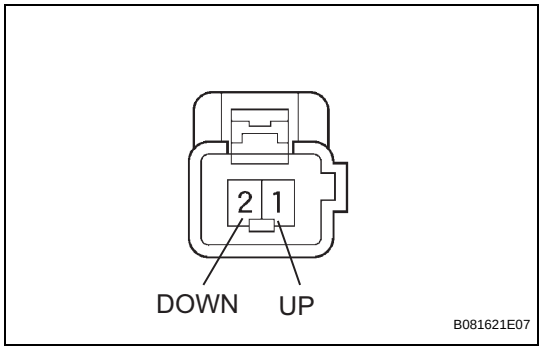

(b) Check operation of the seat frame (front vertical motor).

(1) Check if the seat frame moves smoothly when the battery is connected to the front vertical motor connector terminals.

OK

Measurement Condition	Operational Direction
Battery positive (+) → 1 (UP) Battery negative (-) → 2 (DOWN)	Upward
Battery positive (+) → 2 (DOWN) Battery negative (-) → 1 (UP)	Downward

If the result is not as specified, replace the seat frame with adjuster.

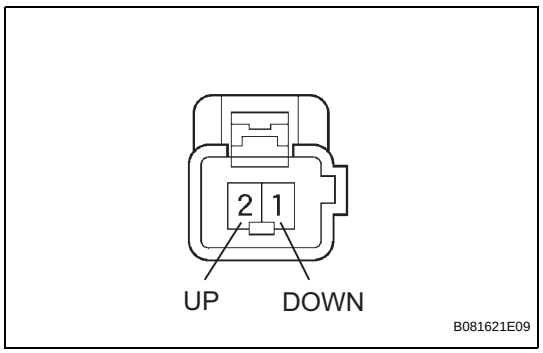

(c) Check operation of the seat frame (lifter motor).

(1) Check if the seat frame moves smoothly when the battery is connected to the lifter motor connector terminals.

OK

Measurement Condition	Operational Direction
Battery positive (+) → 2 (UP) Battery negative (-) → 1 (DOWN)	Upward
Battery positive (+) → 1 (DOWN) Battery negative (-) → 2 (UP)	Downward

If the result is not as specified, replace the seat frame with adjuster.

SE

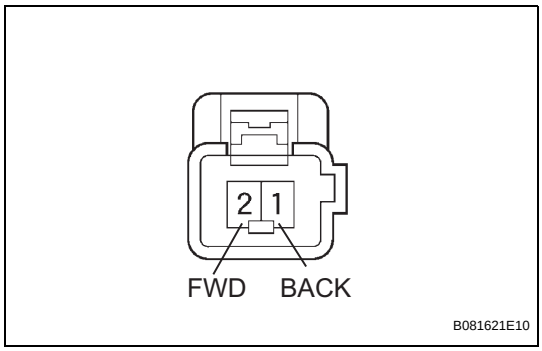

(d) Check operation of the seat frame (reclining motor).
(1) Check if the seat frame moves smoothly when the battery is connected to the reclining motor connector terminals.
OK

Measurement Condition	Operational Direction
Battery positive (+) → 2 (FWD) **Battery negative (-) → 1 (BACK)**	**Forward**
Battery positive (+) → 1 (BACK) **Battery negative (-) → 2 (FWD)**	**Backward**

If the result is not as specified, replace the seat frame with adjuster.

SE

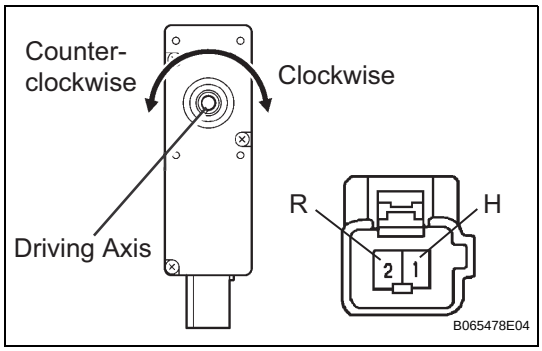

LUMBAR SUPPORT ADJUSTER ASSEMBLY

INSPECTION

1. INSPECT LUMBAR SUPPORT ADJUSTER ASSEMBLY

(a) Check operation of the lumbar support adjuster.

(1) Check if the lumbar support adjuster moves smoothly when the battery is connected to the lumbar support adjuster motor connector terminals.

OK

Measurement Condition	Operation Direction
Battery positive (+) → 1 (H) Battery negative (-) → 2 (R)	Clockwise
Battery positive (+) → 2 (R) Battery negative (-) → 1 (H)	Counterclockwise

If the result is not as specified, replace the lumbar support adjuster assembly.

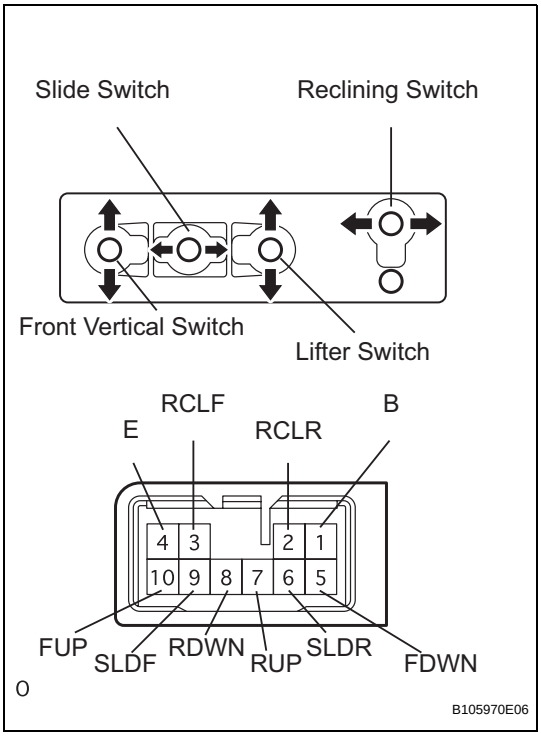

POWER SEAT SWITCH

INSPECTION

1. INSPECT FRONT POWER SEAT SWITCH

(a) Measure the resistance between the terminals when each switch is operated.

Standard resistance

Slide switch

Tester Connection	Switch Condition	Specified Condition
1 (B) - 9 (SLDF)	FRONT	Below 1 Ω
4 (E) - 6 (SLDR)	FRONT	Below 1 Ω
4 (E) - 6 (SLDR)	OFF	Below 1 Ω
4 (E) - 9 (SLDF)	OFF	Below 1 Ω
1 (B) - 6 (SLDR)	REAR	Below 1 Ω
4 (E) - 9 (SLDF)	REAR	Below 1 Ω

Front vertical switch

Tester Connection	Switch Condition	Specified Condition
1 (B) - 10 (FUP)	UP	Below 1 Ω
4 (E) - 5 (FDWN)	UP	Below 1 Ω
4 (E) - 5 (FDWN)	OFF	Below 1 Ω
4 (E) - 10 (FUP)	OFF	Below 1 Ω
1 (B) - 5 (FDWN)	DOWN	Below 1 Ω
4 (E) - 10 (FUP)	DOWN	Below 1 Ω

Lifter switch

Tester Connection	Switch Condition	Specified Condition
1 (B) - 7 (RUP)	UP	Below 1 Ω
4 (E) - 8 (RDWN)	UP	Below 1 Ω
4 (E) - 7 (RUP)	OFF	Below 1 Ω
4 (E) - 8 (RDWN)	OFF	Below 1 Ω
1 (B) - 8 (RDWN)	DOWN	Below 1 Ω
4 (E) - 7 (RUP)	DOWN	Below 1 Ω

Reclining switch

Tester Connection	Switch Condition	Specified Condition
1 (B) - 3 (RCLF)	FRONT	Below 1 Ω
2 (RCLR) - 4 (E)	FRONT	Below 1 Ω
2 (RCLR) - 4 (E)	OFF	Below 1 Ω
3 (RCLF) - 4 (E)	OFF	Below 1 Ω
1 (B) - 2 (RCLR)	REAR	Below 1 Ω
3 (RCLF) - 4 (E)	REAR	Below 1 Ω

If the result is not as specified, replace the switch.

REMOVAL

1. **REMOVE PACKAGE TRAY TRIM POCKET SUB-ASSEMBLY (w/o Rear No. 2 Seat)**
2. **REMOVE TONNEAU COVER ASSEMBLY (w/o Rear No. 2 Seat)**
3. **REMOVE REAR FLOOR NO. 1 BOARD (w/o Rear No. 2 Seat)**
4. **REMOVE DECK BOARD ASSEMBLY (w/o Rear No. 2 Seat)**
5. **REMOVE REAR FLOOR NO. 3 BOARD (w/o Rear No. 2 Seat)**
6. **REMOVE REAR FLOOR NO. 2 BOARD (w/o Rear No. 2 Seat)**
7. **REMOVE REAR FLOOR NO. 1 MAT SUPPORT SIDE PLATE (w/o Rear No. 2 Seat) (See page IR-31)**
8. **REMOVE BACK DOOR WEATHERSTRIP (w/o Rear No. 2 Seat)**
9. **REMOVE REAR FLOOR FINISH PLATE (w/o Rear No. 2 Seat) (See page IR-31)**
10. **REMOVE RECLINING REMOTE CONTROL LEVER BEZEL LH (w/o Rear No. 2 Seat)**
    (a) Using a screwdriver, detach the 6 claws and remove the bezel.
    HINT:
    Tape the screwdriver tip before use.

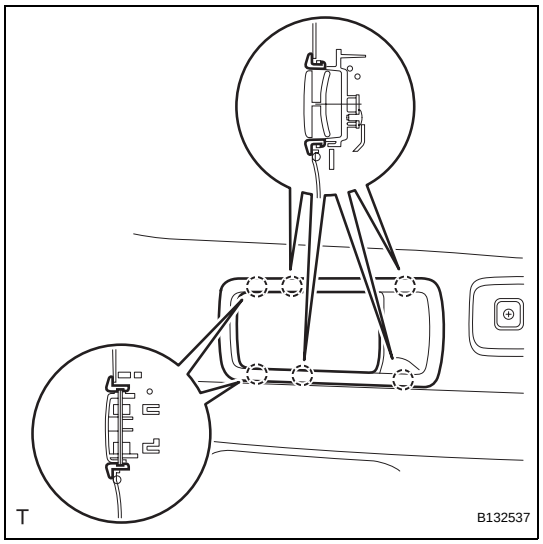

11. **REMOVE TETHER ANCHOR BRACKET SUB-ASSEMBLY (w/o Rear No. 2 Seat) (See page IR-32)**
12. **REMOVE DECK TRIM SIDE PANEL ASSEMBLY LH (w/o Rear No. 2 Seat) (See page IR-32)**
13. **REMOVE RECLINING REMOTE CONTROL LEVER SUB-ASSEMBLY LH (w/o Rear No. 2 Seat)**
    (a) Remove the 2 bolts and lever.
    (b) Disconnect the rear No. 1 seat lock cable from the lever.

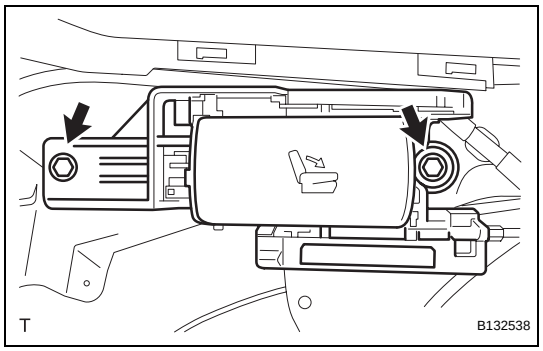

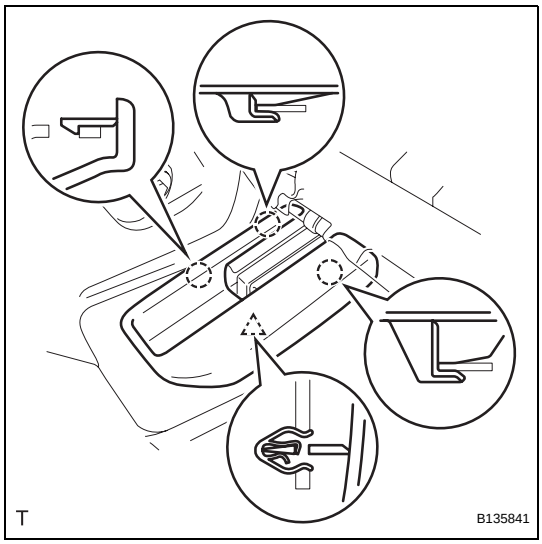

14. REMOVE REAR NO. 5 SEAT LEG SIDE COVER

(a) Using a screwdriver, detach the 3 claws and clip, and remove the side cover.
HINT:
Tape the screwdriver tip before use.

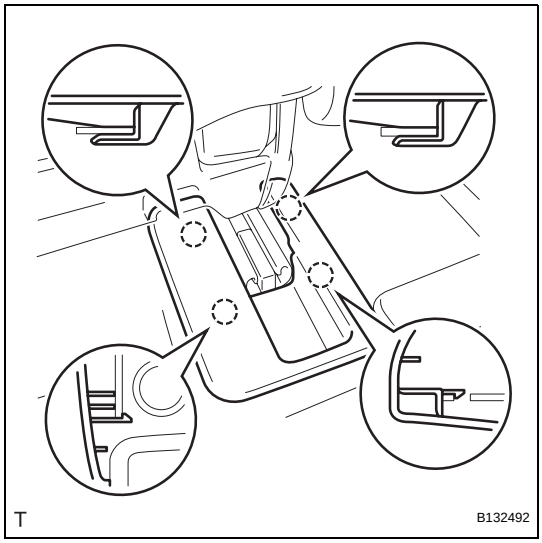

15. REMOVE REAR NO. 4 SEAT LEG SIDE COVER (w/ Rear No. 2 Seat)

(a) Using a screwdriver, detach the 4 claws and remove the side cover.
HINT:
Tape the screwdriver tip before use.

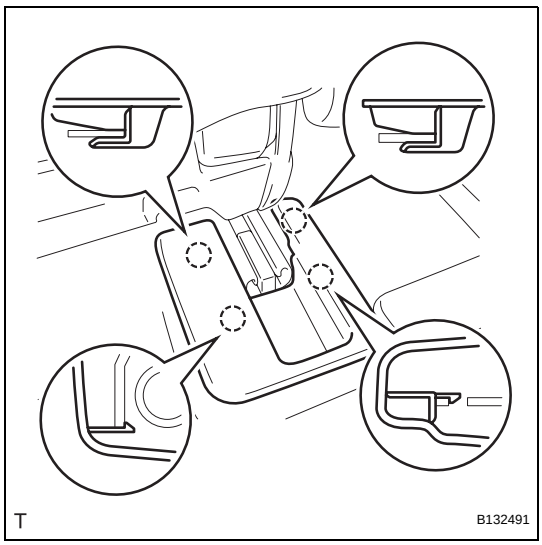

16. REMOVE REAR NO. 4 SEAT LEG SIDE COVER (w/o Rear No. 2 Seat)

(a) Using a screwdriver, detach the 4 claws and remove the side cover.
HINT:
Tape the screwdriver tip before use.

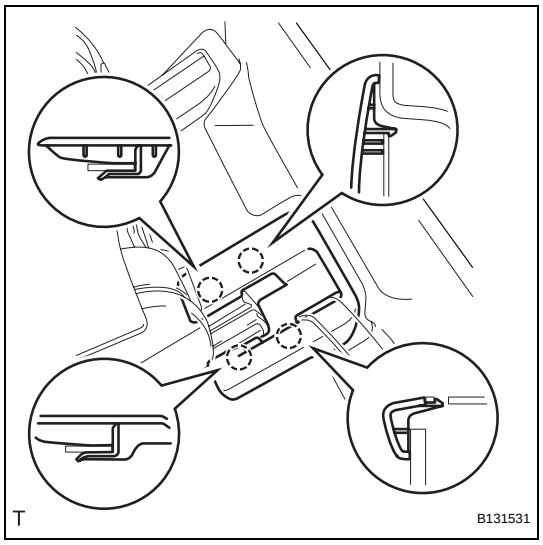

17. REMOVE REAR NO. 3 SEAT LEG SIDE COVER (w/ Rear No. 2 Seat)

(a) Using a screwdriver, detach the 4 claws and remove the side cover.
HINT:
Tape the screwdriver tip before use.

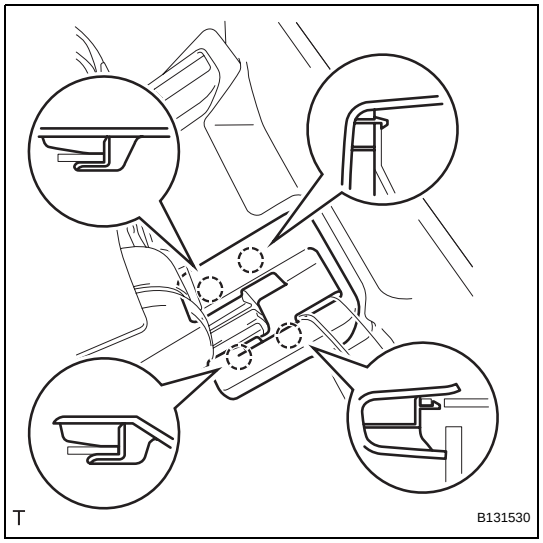

18. REMOVE REAR NO. 3 SEAT LEG SIDE COVER (w/o Rear No. 2 Seat)

(a) Using a screwdriver, detach the 4 claws and remove the side cover.
HINT:
Tape the screwdriver tip before use.

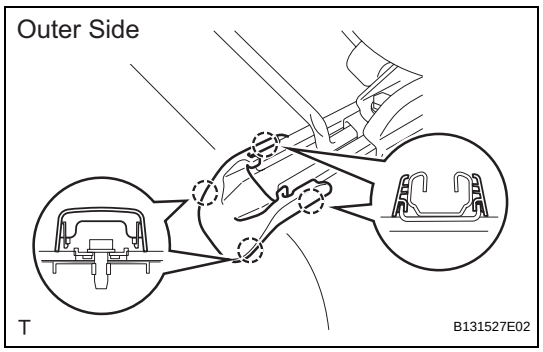

19. REMOVE REAR SEAT LEG COVER

(a) Using a screwdriver, detach the 8 claws and remove the 2 leg covers.
HINT:
Tape the screwdriver tip before use.

20. REMOVE REAR SEAT LAP TYPE BELT ASSEMBLY CENTER RH (w/ Rear No. 2 Seat) (See page SB-39)

21. REMOVE REAR SEAT LAP TYPE BELT ASSEMBLY CENTER RH (w/o Rear No. 2 Seat) (See page SB-39)

22. REMOVE REAR NO. 1 SEAT LOCK CABLE ASSEMBLY (w/o Rear No. 2 Seat)

(a) Disconnect the lock cable from the seat.

(1) Raise the adjuster's lock piece to release the lock.

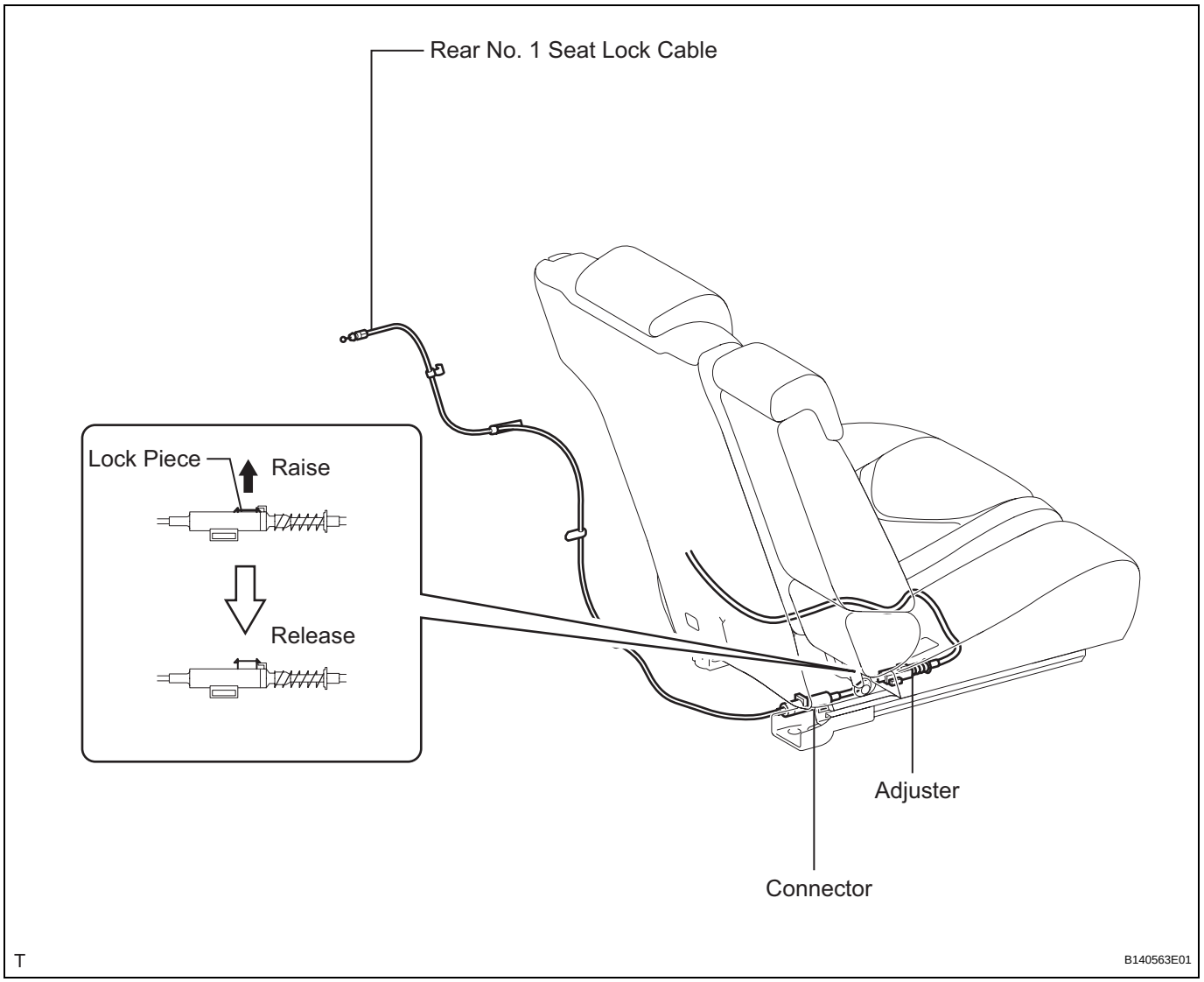

(2) Slide the seat forward and tilt the seatback forward.

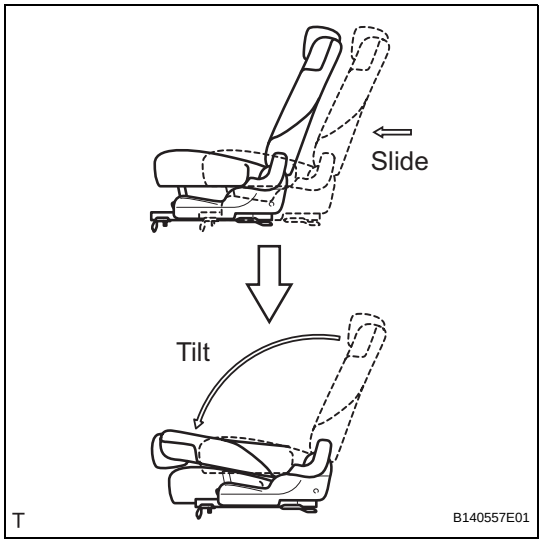

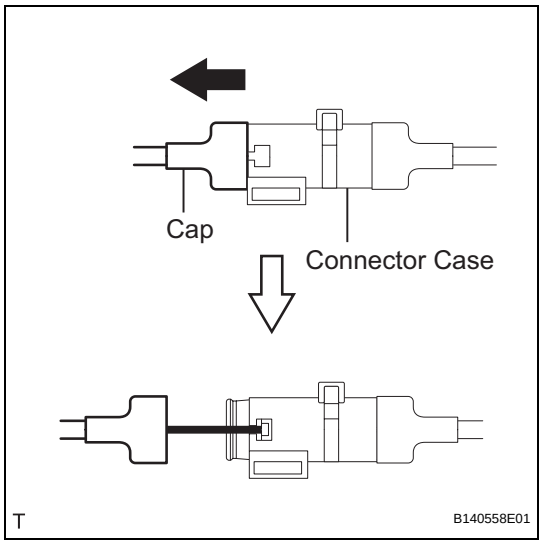

(3) Remove the seat's cap from the connector case.

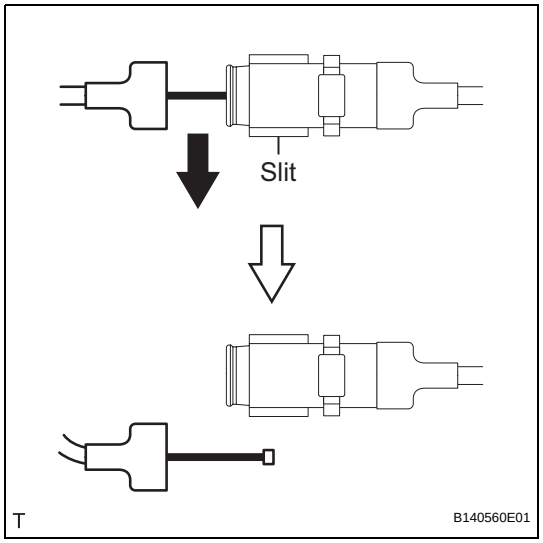

(4) Pull the seat's cap toward the outside of the vehicle. Then remove the cable from the connector case's slit.

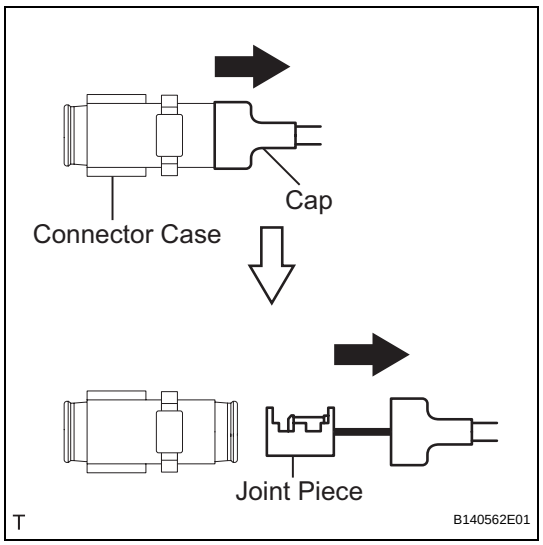

(5) Remove the body's cap from the connector case.

SE

(b) Detach the clamps and remove the lock cable.

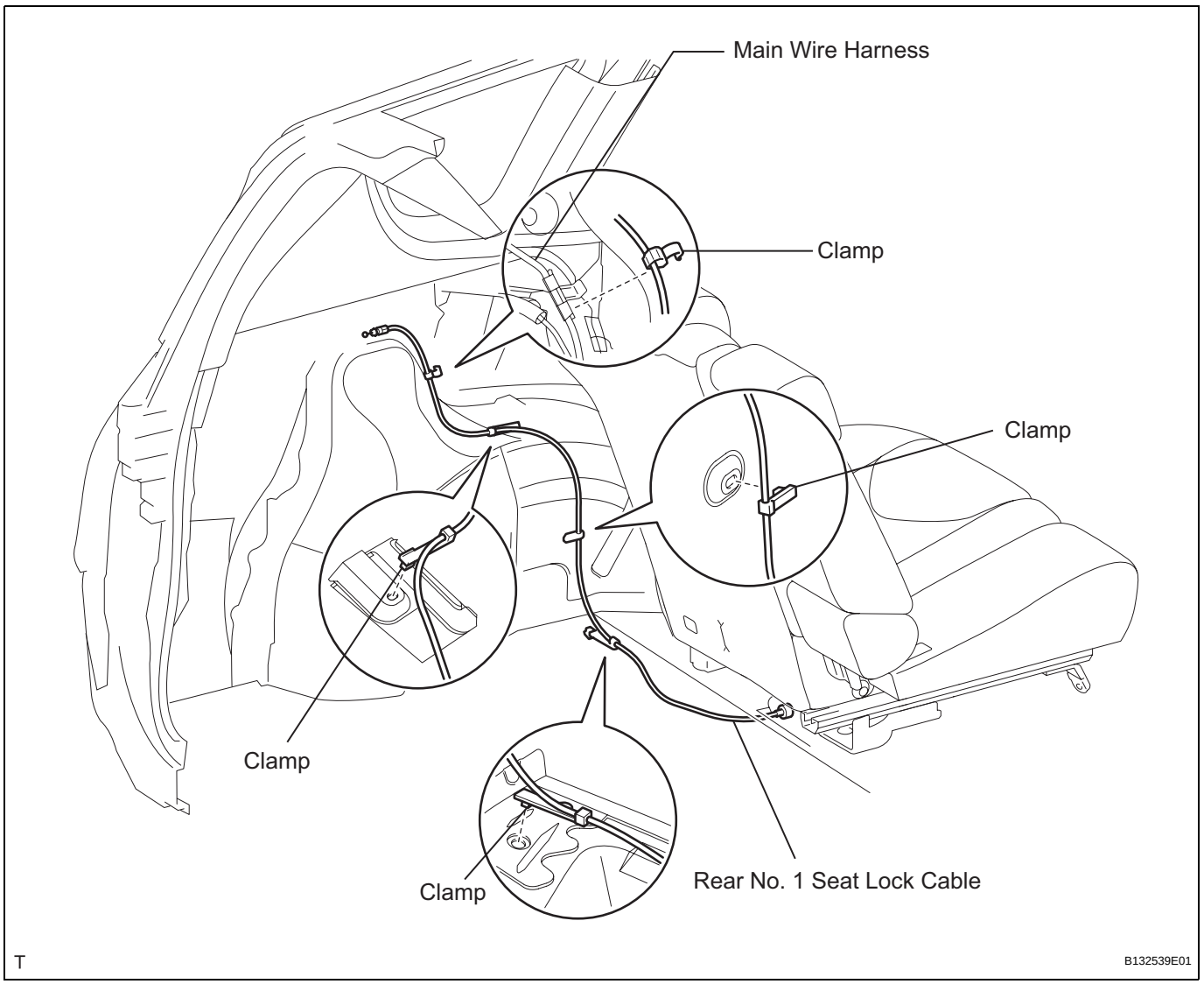

23. REMOVE REAR NO. 1 SEAT ASSEMBLY LH

(a) Lift up the seat track adjusting handle and move the seat to the rearmost position.

(b) Remove the 2 bolts on the front side of the seat.

(c) Lift up the seat track adjusting handle and move the seat to the foremost position.

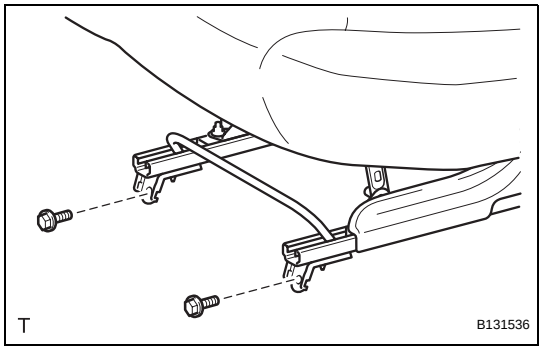

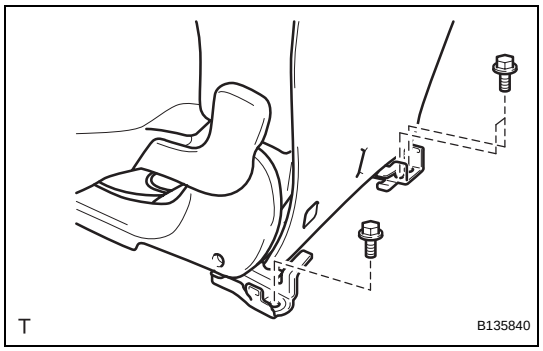

(d) Remove the 3 bolts on the rear side of the seat.
(e) Fully tilt the seatback forward. Then remove the seat.

NOTICE:
Be careful not to damage the vehicle body,

SE

DISASSEMBLY

CAUTION:
Wear protective gloves. Sharp areas on the seatback frame, seat cushion frame and reclining adjuster may injure your hands.

1. REMOVE REAR SEAT HEADREST ASSEMBLY

2. REMOVE REAR SEAT CENTER HEADREST ASSEMBLY

3. REMOVE CENTER ARMREST HINGE COVER RH

(a) Return the seatback to the upright position.

(b) Remove the 2 rear seatback lock hooks.

(c) Fold back the seatback cover until the screws are visible, and remove the 2 screws.

(d) Detach the claw and remove the hinge cover.

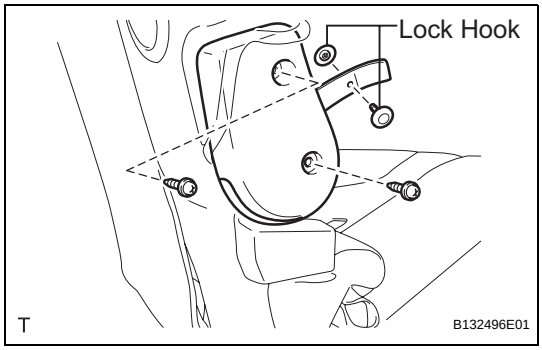

4. REMOVE CENTER ARMREST HINGE COVER LH

(a) Using a screwdriver, detach the 4 claws and remove the hinge cover.
HINT:
Tape the screwdriver tip before use.

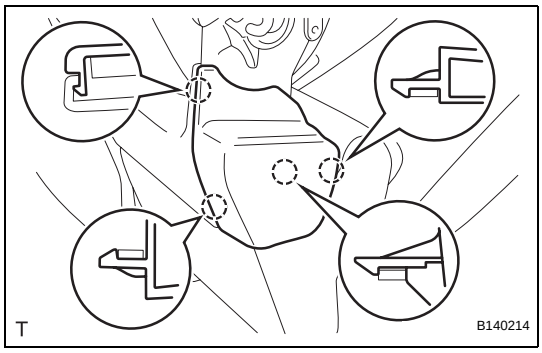

5. REMOVE REAR SEAT CENTER ARMREST ASSEMBLY

(a) Remove the 2 nuts and armrest.

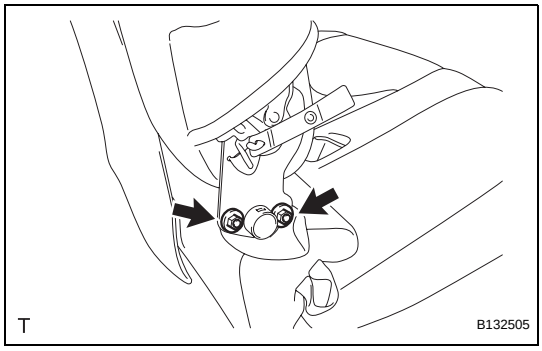

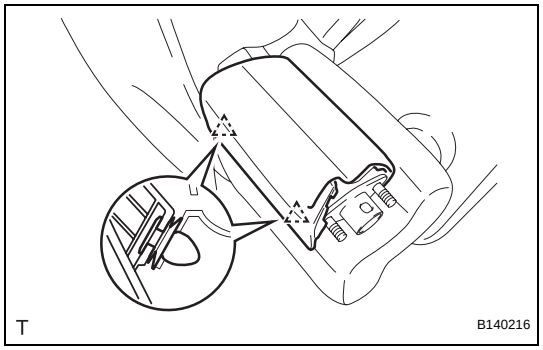

6. REMOVE REAR SEAT CENTER ARMREST COVER

(a) Detach the 2 clips.

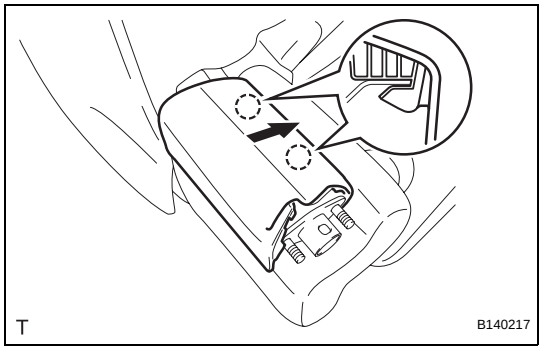

(b) Pull the armrest cover in the direction indicated by the arrow in the illustration to detach the 2 claws. Then remove the armrest cover.

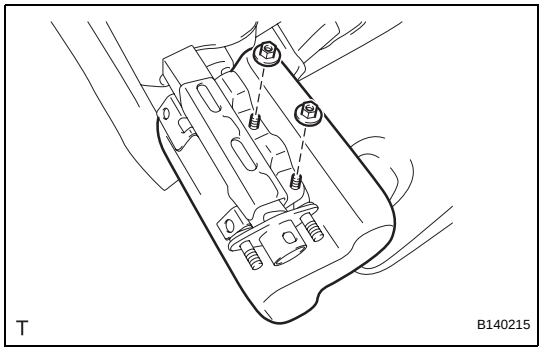

7. REMOVE REAR NO. 1 SEAT ARMREST ASSEMBLY LH

(a) Remove the 2 nuts and armrest.

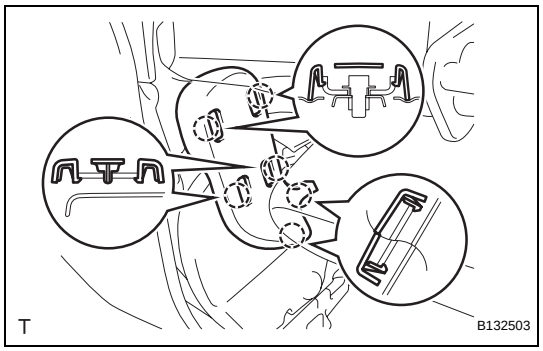

8. REMOVE REAR NO. 3 SEAT CUSHION HINGE COVER

(a) Using a screwdriver, detach the 6 claws and remove the hinge cover.
HINT:
Tape the screwdriver tip before use.

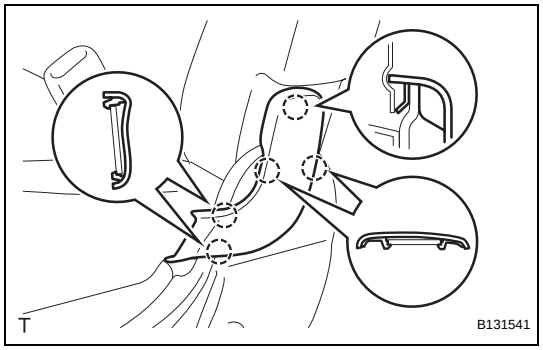

9. REMOVE REAR SEAT CUSHION LOWER HINGE COVER LH

(a) Using a screwdriver, detach the 5 claws and remove the hinge cover.
HINT:
Tape the screwdriver tip before use.

10. REMOVE REAR SEAT INNER BELT ASSEMBLY RH (See page SB-40)

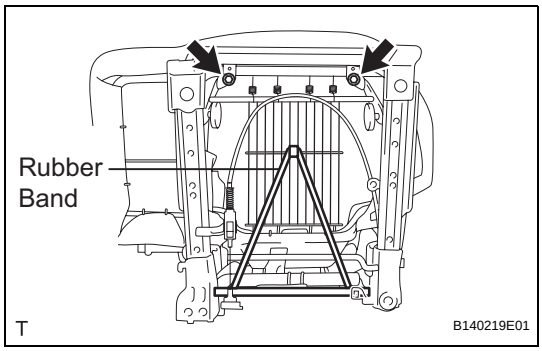

11. REMOVE REAR NO. 1 SEAT CUSHION ASSEMBLY LH

(a) Disconnect the rubber band of the seatback cover from the seat cushion frame.

(b) Remove the 2 bolts

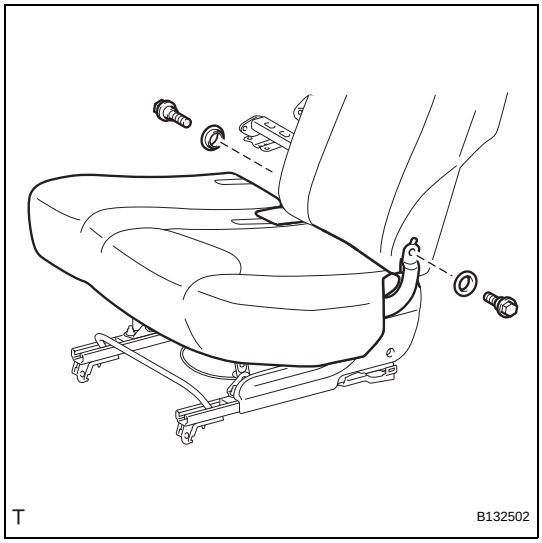

(c) Remove the 2 bolts, 2 bushes and cushion.

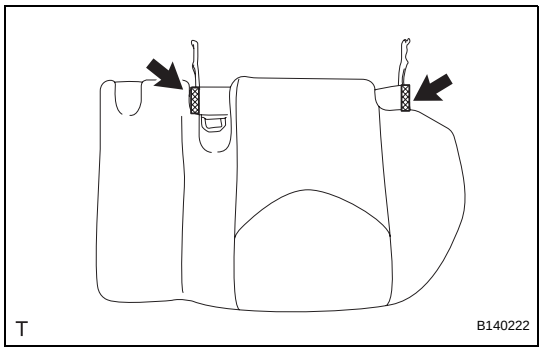

12. REMOVE REAR NO. 1 SEAT CUSHION COVER

(a) Detach the 2 hooks.

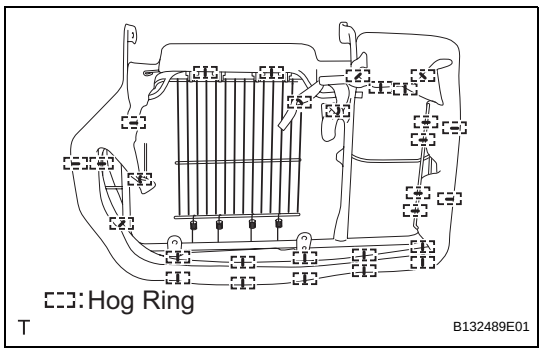

(b) Remove the 29 hog rings and seat cushion cover (with pad) from the seat cushion frame.

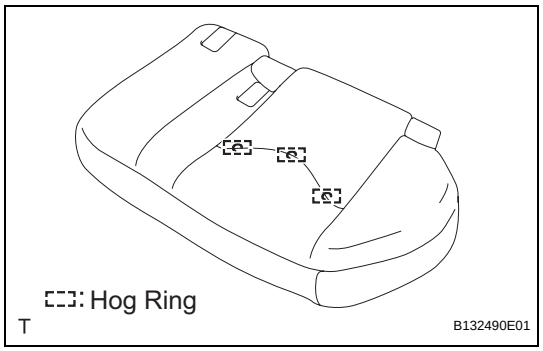

(c) Remove the 3 hog rings and seat cushion cover from the seat cushion pad.

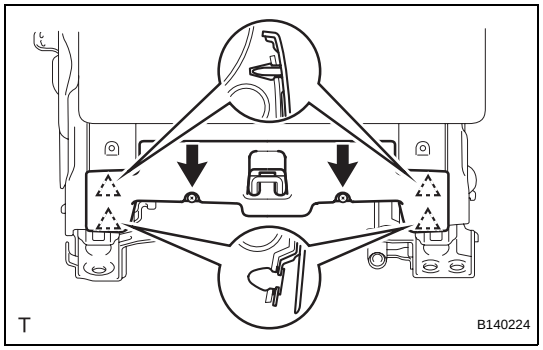

13. REMOVE REAR SEAT REAR BRACKET COVER LH

(a) Open the lower part of the seatback cover. Then remove the 2 screws.

(b) Using a screwdriver, detach the 4 clips and remove the bracket cover.
HINT:
Tape the screwdriver tip before use.

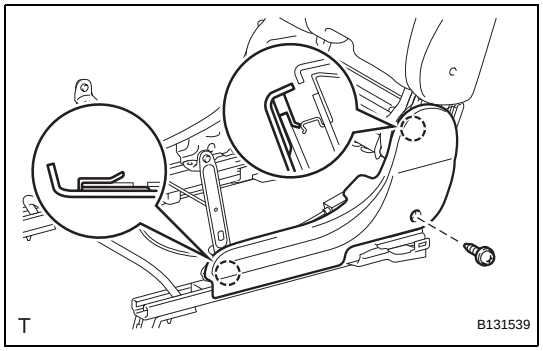

14. REMOVE REAR SEAT CUSHION MOULDING LH

(a) Remove the screw.

(b) Detach the 2 claws and remove the moulding.

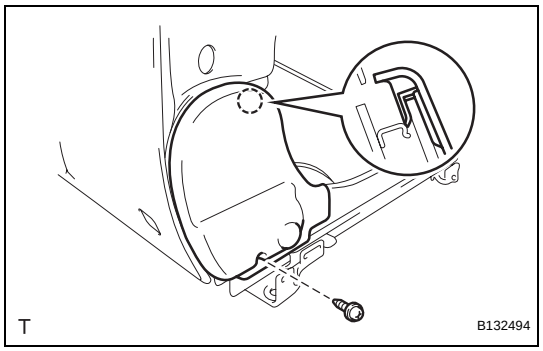

15. REMOVE REAR SEAT CUSHION REAR MOULDING LH

(a) Remove the screw.

(b) Detach the claw and remove the moulding.

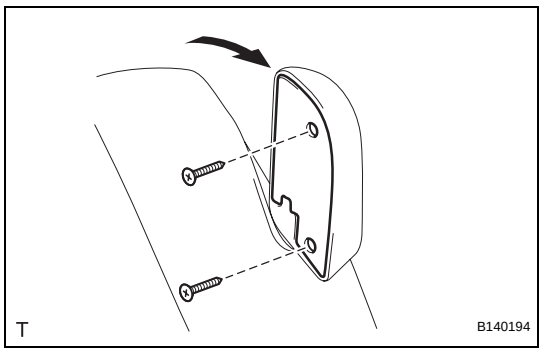

16. REMOVE REAR SEAT RECLINING RELEASE LEVER

(a) Pull the reclining control lever to reveal the 2 screws. Then remove the 2 screws and cover.

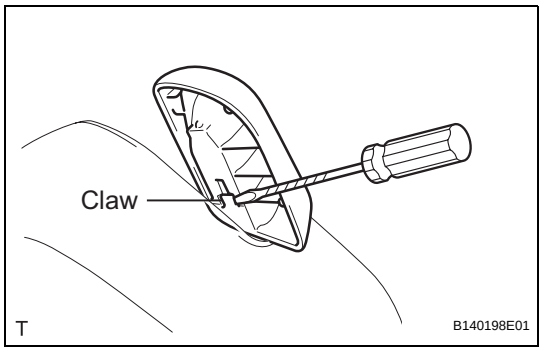

(b) Using a screwdriver, detach the claw and remove the release lever.
HINT:
Tape the screwdriver tip before use.

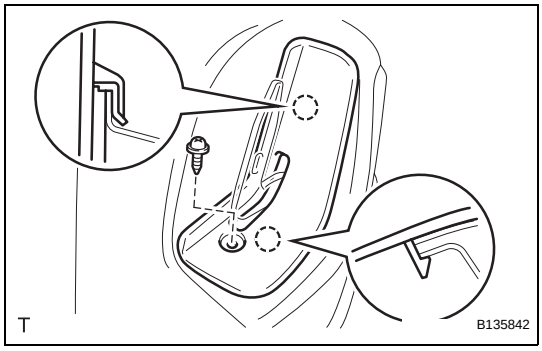

17. REMOVE REAR SEATBACK LOCK CONTROL LEVER BASE LH

(a) Remove the screw.

(b) Using a screwdriver, detach the 2 claws and remove the lever base.
HINT:
Tape the screwdriver tip before use.

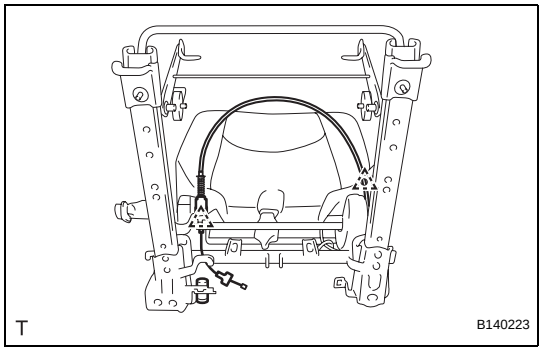

18. REMOVE REAR NO. 1 SEATBACK ASSEMBLY LH

(a) w/o Rear No. 2 Seat:
Detach the 2 clamps and disconnect the cable from the reclining adjuster.

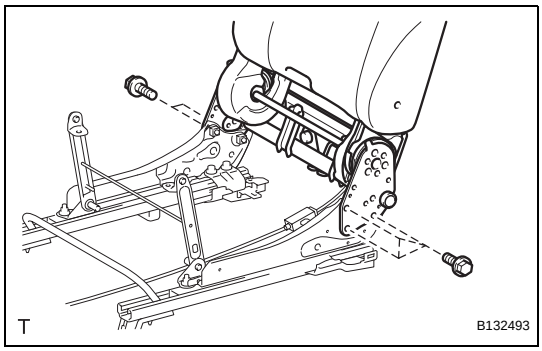

(b) Remove the 5 bolts and seatback.

19. REMOVE REAR SEAT LAP TYPE BELT ASSEMBLY CENTER LH (See page SB-39)

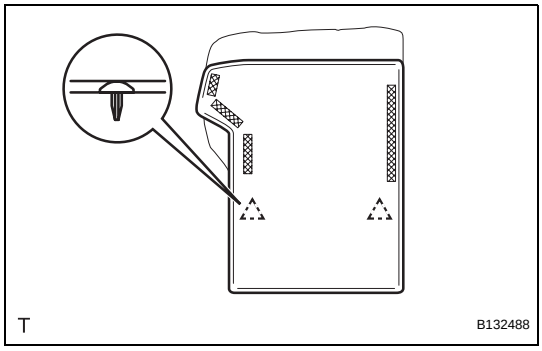

20. REMOVE REAR SEATBACK PROTECTOR

(a) Using a clip remover, detach the 2 clips and open the fastening tape.
NOTICE:
If clips are damaged during removal, replace them.

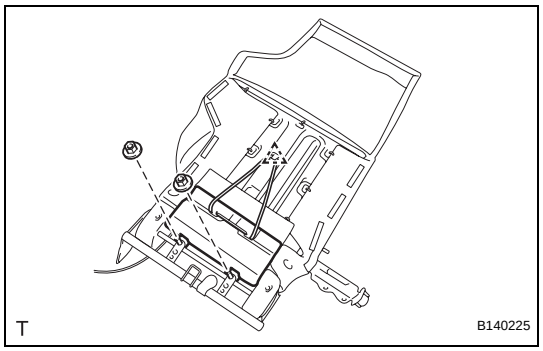

(b) Detach the clip.
(c) Remove the 2 nuts and protector.

21. REMOVE REAR NO. 1 SEATBACK COVER

(a) Lift up the seatback cover and remove the 13 hog rings.

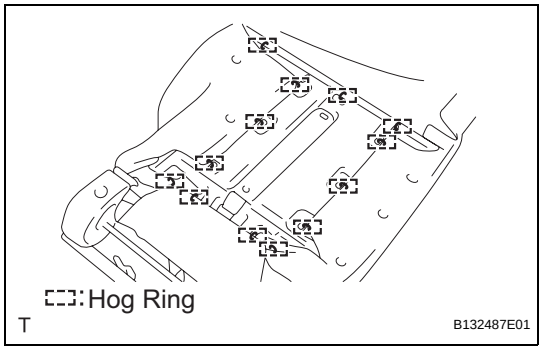

(b) Detach the 4 claws and remove the 2 headrest supports.
(c) Remove the seatback cover (with pad) from the seatback frame.

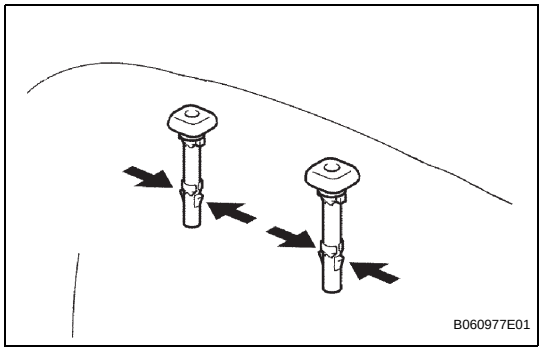

(d) Remove the 3 hog rings and seatback cover from the seatback pad.

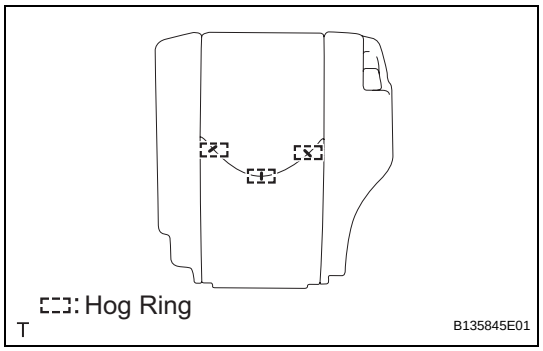

22. REMOVE REAR SEAT COVER LH

(a) Remove the 2 screws.
(b) Using a screwdriver, detach the 2 claws and remove the cover.
HINT:
Tape the screwdriver tip before use.

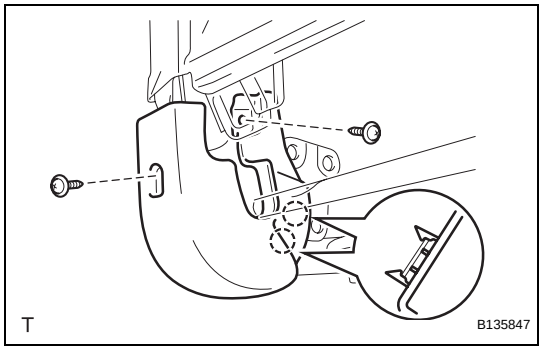

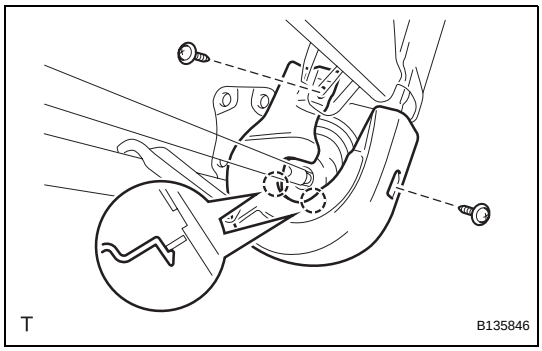

23. REMOVE REAR SEATBACK COVER LH

(a) Remove the 2 screws.

(b) Using a screwdriver, detach the 2 claws and remove the cover.
HINT:
Tape the screwdriver tip before use.

REASSEMBLY

CAUTION:
Wear protective gloves. Sharp areas on the seatback frame, seat cushion frame and reclining adjuster may injure your hands.
HINT:
A bolt without a torque specification is shown in the standard bolt chart (see page SS-2).

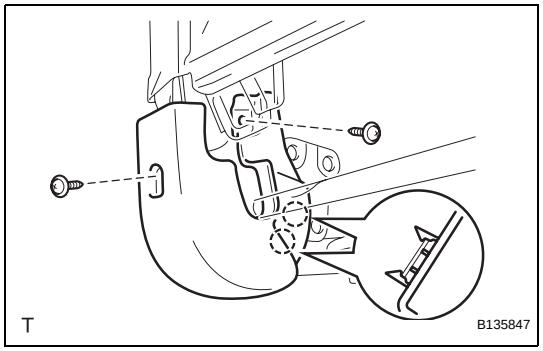

1. INSTALL REAR SEAT COVER LH
(a) Attach the 2 claws to install the cover.
(b) Install the 2 screws.

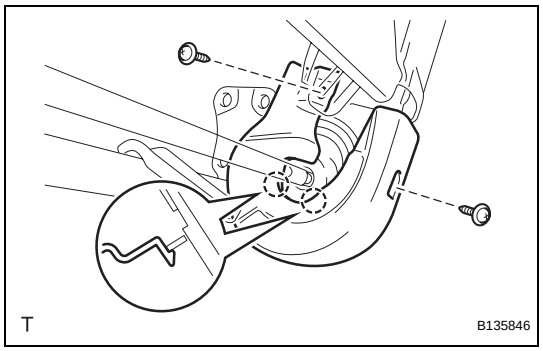

2. INSTALL REAR SEATBACK COVER LH
(a) Attach the 2 claws to install the cover.
(b) Install the 2 screws.

3. INSTALL REAR NO. 1 SEATBACK COVER
NOTICE:
- **Be careful not to damage the cover.**
- **When installing the hog rings, avoid wrinkling the cover.**

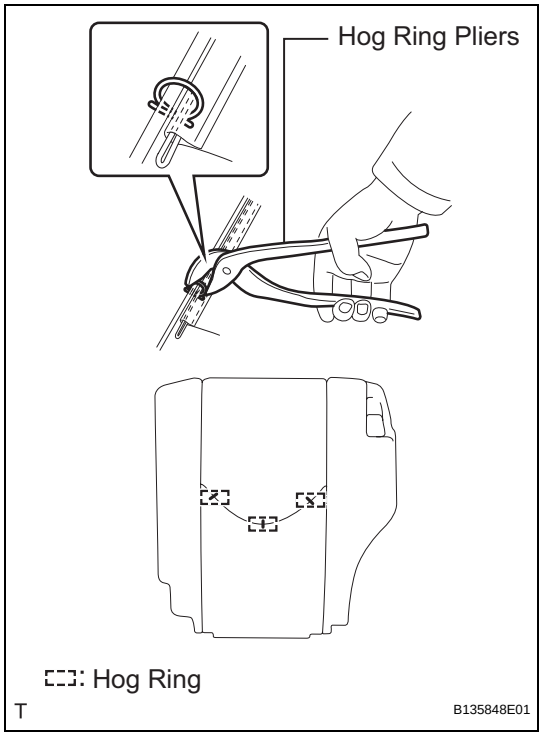

(a) Using hog ring pliers, install the seatback cover to the seatback pad with 3 new hog rings.
(b) Install the seatback cover (with pad) to the seatback frame.

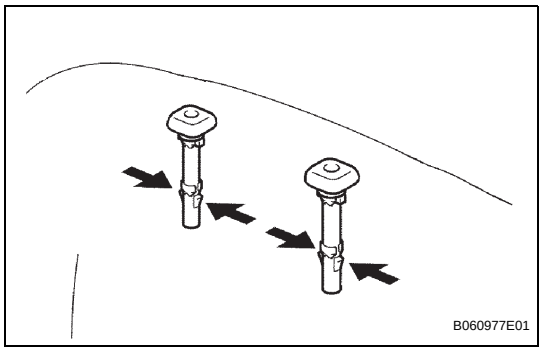

(c) Attach the 4 claws to install the 2 headrest supports.

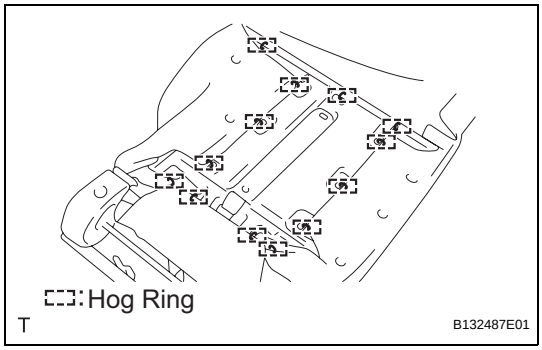

(d) Lift up the seatback cover and install the 13 hog rings.

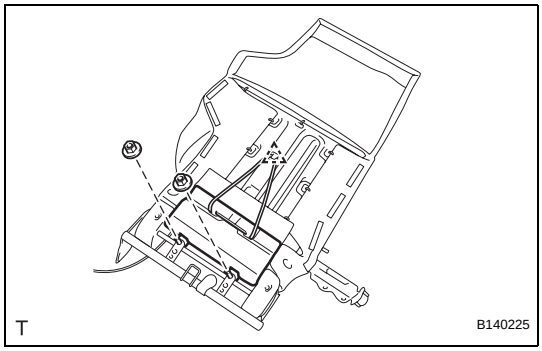

4. INSTALL REAR SEATBACK PROTECTOR

(a) Install the protector with the 2 nuts.
Torque: 20 N*m (204 kgf*cm, 15 ft.*lbf)

(b) Attach the clip.

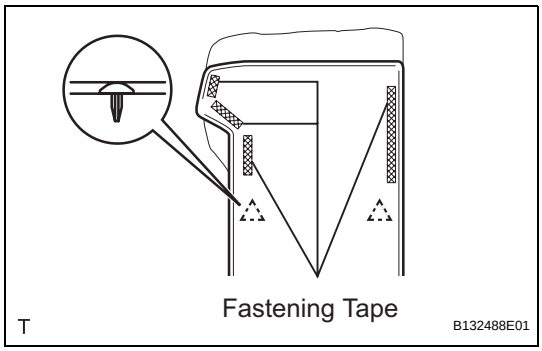

(c) Attach the clips and close the fastening tape.

5. INSTALL REAR SEAT LAP TYPE CENTER BELT ASSEMBLY LH (See page SB-41)

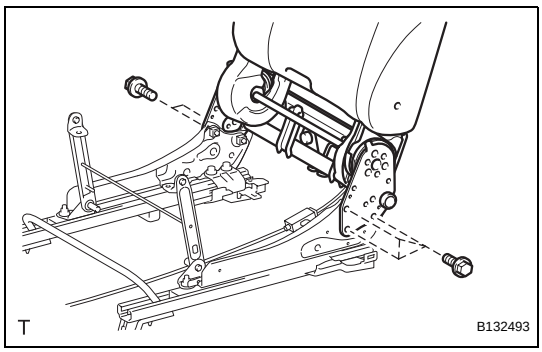

6. INSTALL REAR NO. 1 SEATBACK ASSEMBLY LH

(a) Install the seatback with the 5 bolts.
Torque: 42 N*m (428 kgf*cm, 31 ft.*lbf)

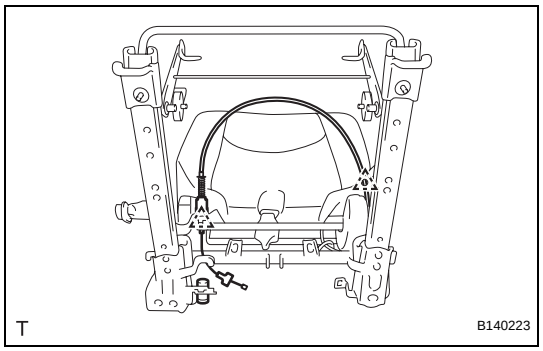

(b) w/o Rear No. 2 Seat:
Attach the 2 clamps and connect the cable to the reclining adjuster.

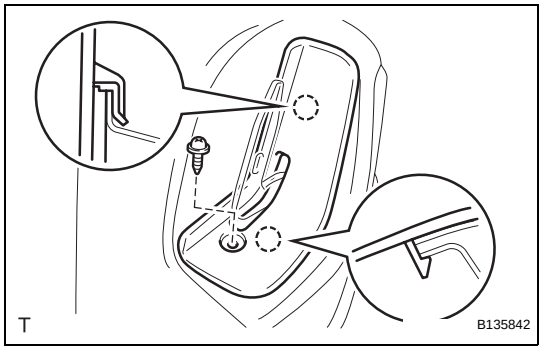

7. INSTALL REAR SEATBACK LOCK CONTROL LEVER BASE LH

(a) Attach the 2 claws to install the lever base.
(b) Install the screw.

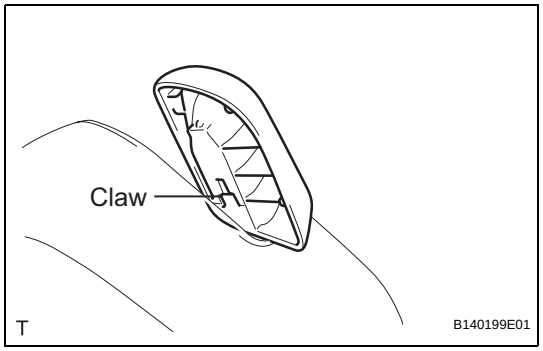

8. INSTALL REAR SEAT RECLINING RELEASE LEVER

(a) Attach the claw to install the release lever.

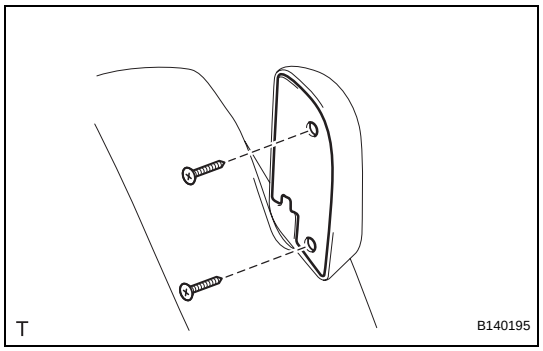

(b) Install the cover with the 2 screws.

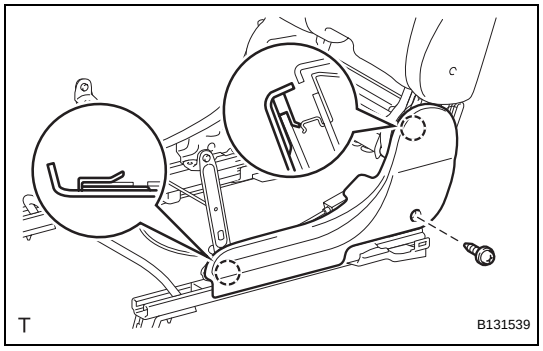

9. INSTALL REAR SEAT CUSHION MOULDING LH

(a) Attach the 2 claws to install the moulding.
(b) Install the screw.

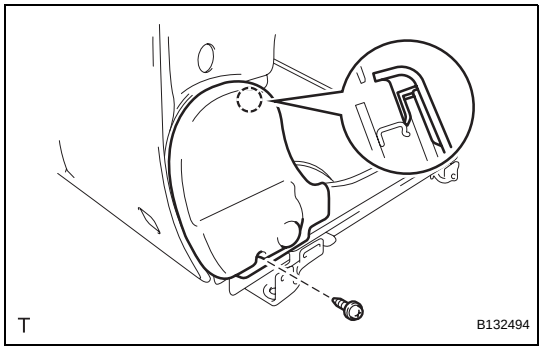

10. INSTALL REAR SEAT CUSHION REAR MOULDING LH

(a) Attach the claw to install the moulding.

(b) Install the screw.

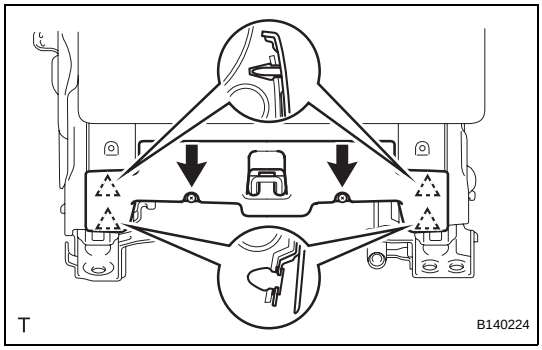

11. INSTALL REAR SEAT REAR BRACKET COVER LH

(a) Open the lower part of the seatback cover. Then attach the 4 clips to install the bracket cover.

(b) Install the 2 screws.

12. INSTALL REAR NO. 1 SEAT CUSHION COVER

NOTICE:

- **Be careful not to damage the cover.**
- **When installing the hog rings, avoid wrinkling the cover.**

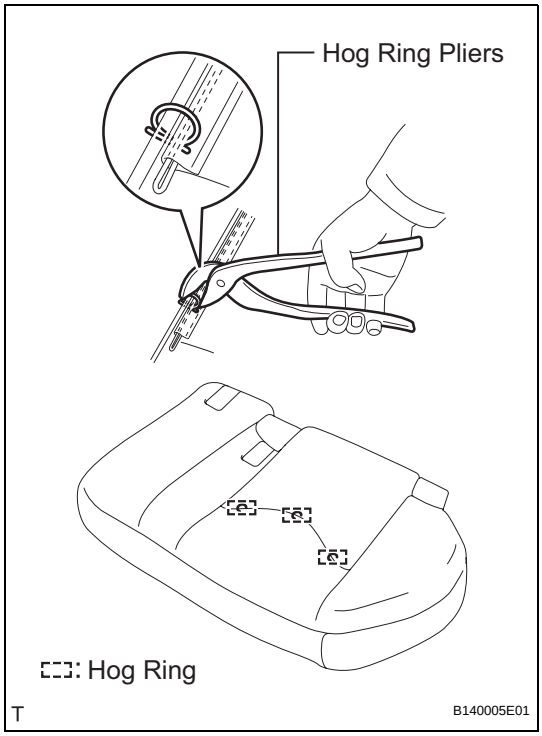

(a) Using hog ring pliers, install the seat cushion cover to the seat cushion pad with 3 new hog rings.

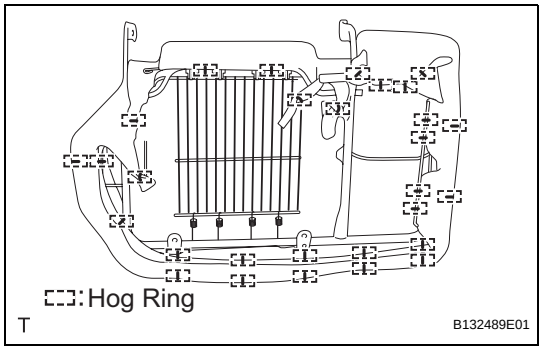

(b) Using hog ring pliers, install the seat cushion cover (with pad) to the seat cushion frame with 29 new hog rings.

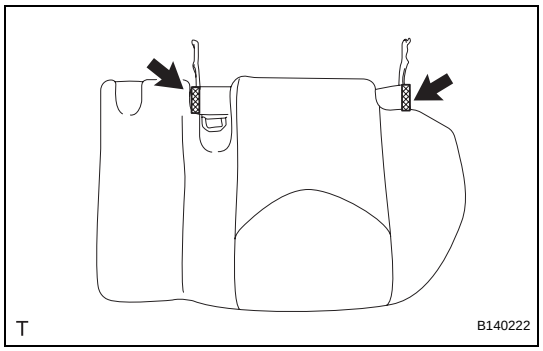

(c) Attach the 2 hooks.

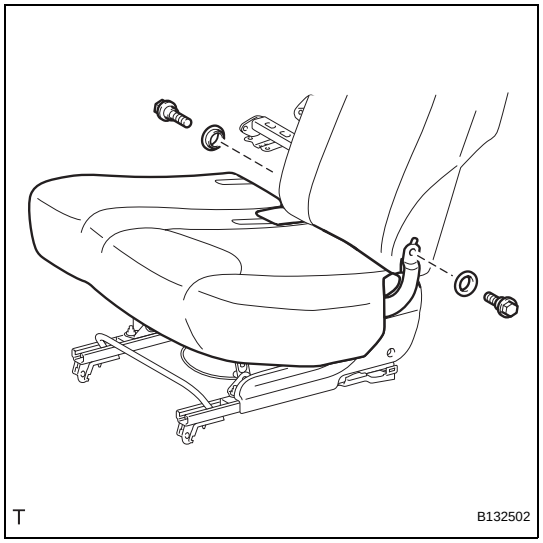

13. INSTALL REAR NO. 1 SEAT CUSHION ASSEMBLY LH

(a) Install the cushion with the 2 bushes and 2 bolts.
Torque: 21 N*m (214 kgf*cm, 15 ft.*lbf)

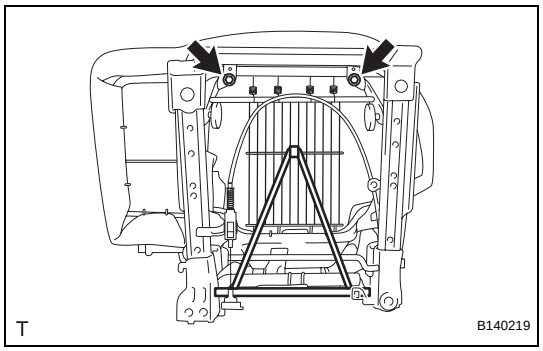

(b) Install the 2 bolts.
Torque: 21 N*m (214 kgf*cm, 15 ft.*lbf)

(c) Connect the rubber band of the seatback cover to the seat cushion frame.

14. INSTALL REAR SEAT INNER BELT ASSEMBLY RH (See page SB-41)

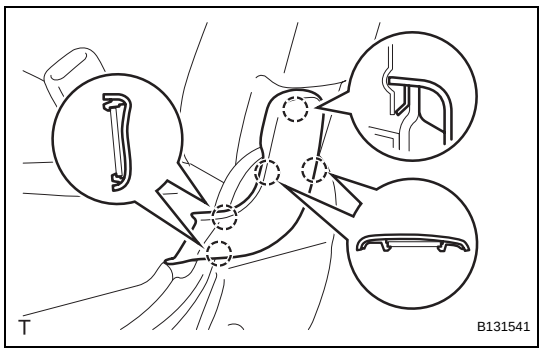

15. INSTALL REAR SEAT CUSHION LOWER HINGE COVER LH

(a) Attach the 5 claws to install the hinge cover.

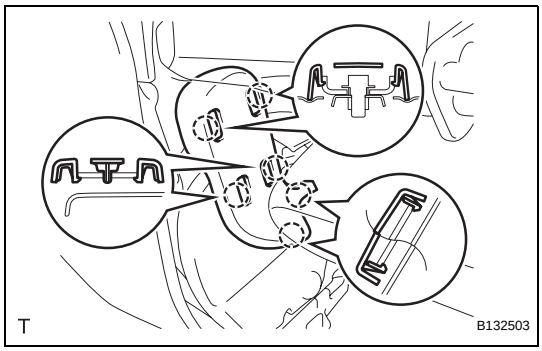

16. INSTALL REAR NO. 3 SEAT CUSHION HINGE COVER

(a) Attach the 6 claws to install the hinge cover.

SE

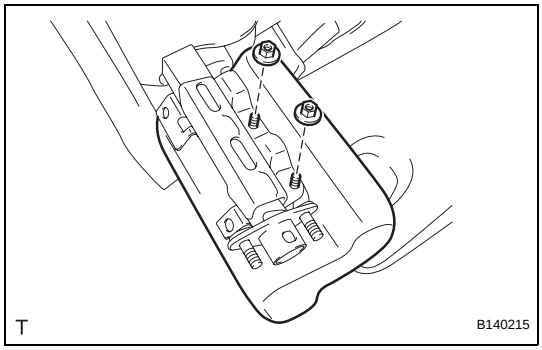

17. INSTALL REAR NO. 1 SEAT ARMREST ASSEMBLY LH

(a) Install the armrest with the 2 nuts.
Torque: 32 N*m (326 kgf*cm, 24 ft.*lbf)

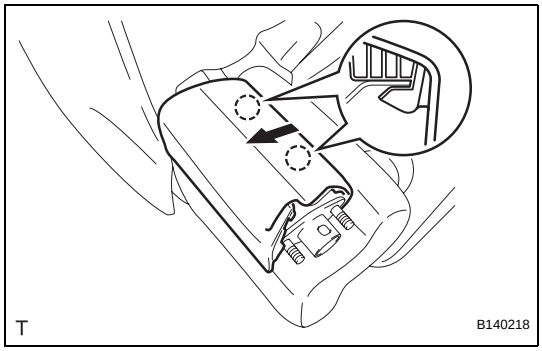

18. INSTALL REAR SEAT CENTER ARMREST COVER

(a) Push the armrest cover in the direction indicated by the arrow in the illustration to attach the 2 claws.

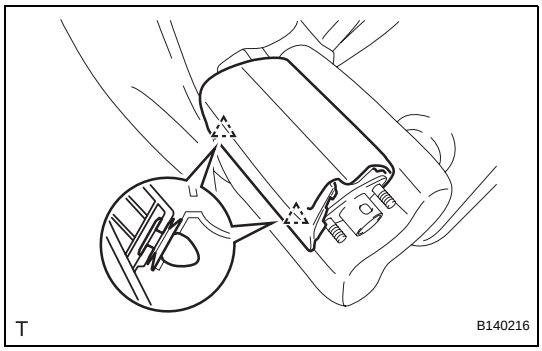

(b) Attach the 2 clips to install the armrest cover.

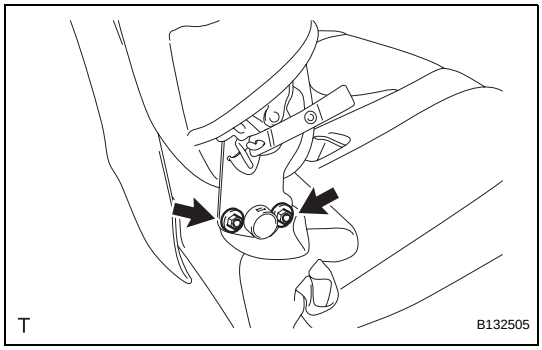

19. INSTALL REAR SEAT CENTER ARMREST ASSEMBLY

(a) Install the armrest with the 2 nuts.
Torque: 32 N*m (326 kgf*cm, 24 ft.*lbf)

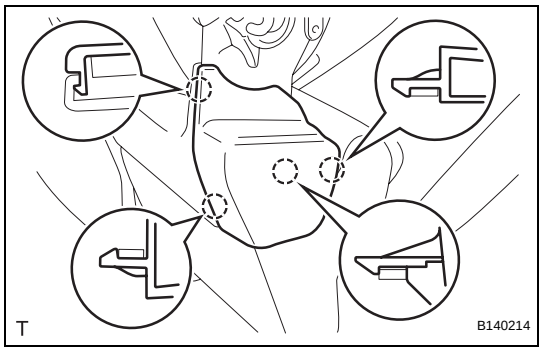

20. INSTALL CENTER ARMREST HINGE COVER LH

(a) Attach the 4 claws to install the hinge cover.

21. INSTALL CENTER ARMREST HINGE COVER RH

(a) Pass the seat lock release strap through the hole in the hinge cover.

(b) Attach the claw to install the hinge cover.

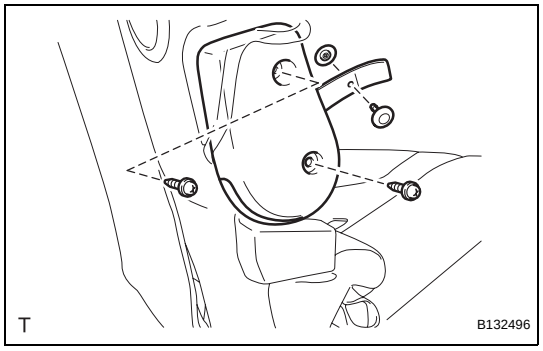

(c) Install the 2 screws and 2 rear seatback lock hooks.

22. INSTALL REAR SEAT CENTER HEADREST ASSEMBLY

23. INSTALL REAR SEAT HEADREST ASSEMBLY

INSTALLATION

1. INSTALL REAR NO. 1 SEAT ASSEMBLY LH (w/o Rear No. 2 Seat)

(a) Fully tilt the seatback forward.

(b) Place the seat in the cabin.

NOTICE:

Be careful not to damage the vehicle body.

(c) Connection procedures of seat to lock cable when reusing seat:

(1) Using a screwdriver, detach the claw and remove the connector case from the seat.

HINT:

Tape the screwdriver tip before use.

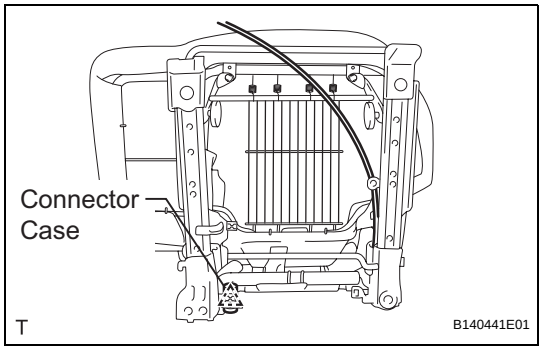

(2) Install the connector case to the body's cap.

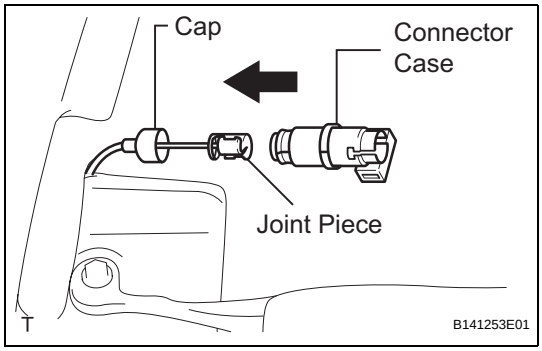

(3) Pull out the joint piece. Align the slits of the joint piece and connector case.

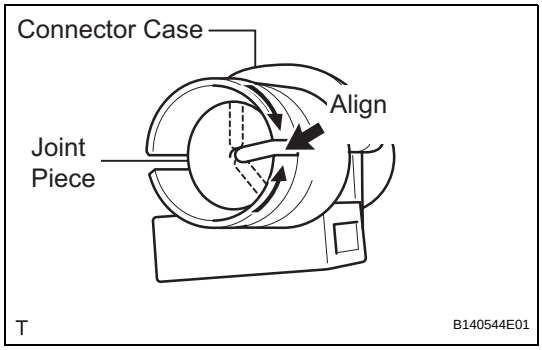

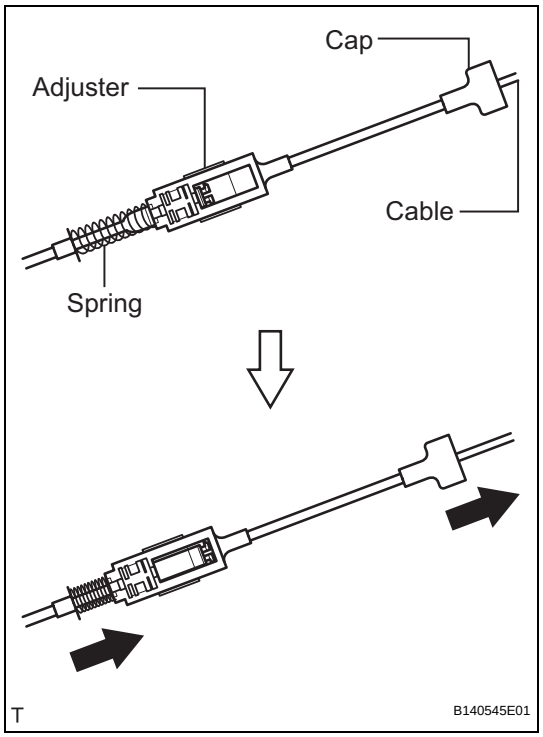

(4) Compress the spring of the adjuster, and pull out the cable from the seat's cap.
HINT:
Perform this procedure with the lock of the adjuster released.

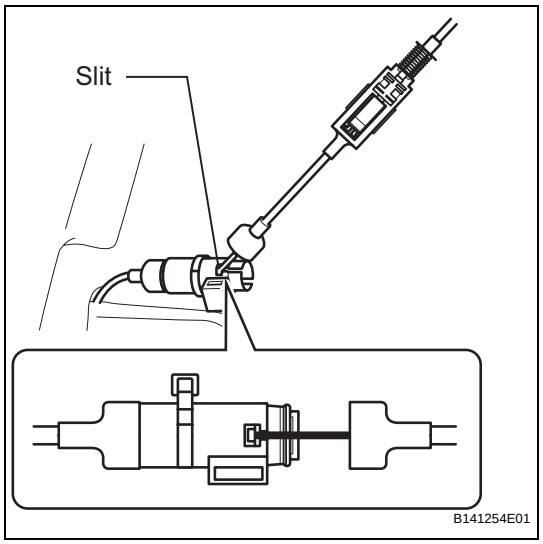

(5) Install the seat cable's end part to the connector case's slit.

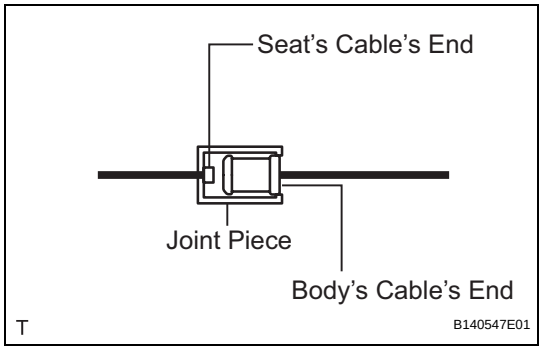

HINT:
Position the joint piece cable's end part as shown in the illustration.

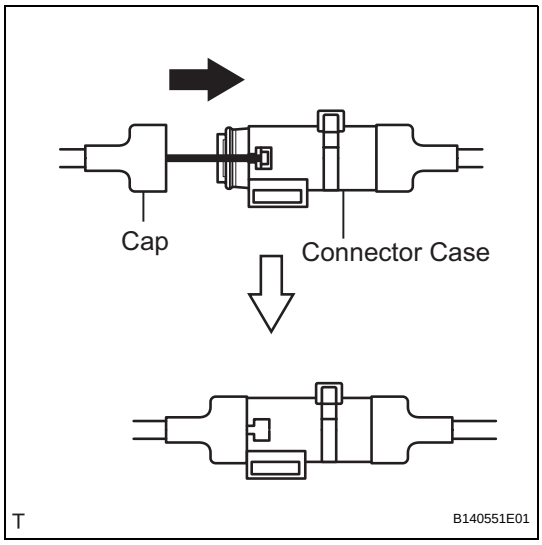

(6) Install the seat's cap to the connector case.
(7) Temporarily place the seat into the vehicle where it will be installed.

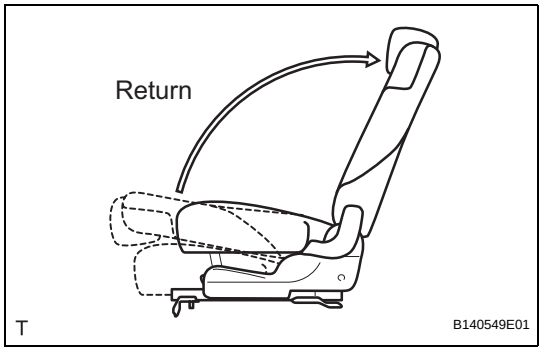

(8) Return the seatback to the upright position.

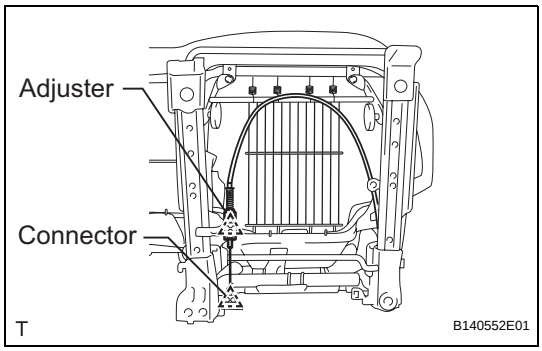

(9) Attach the claws of the connector and adjuster, and install them to the seat.

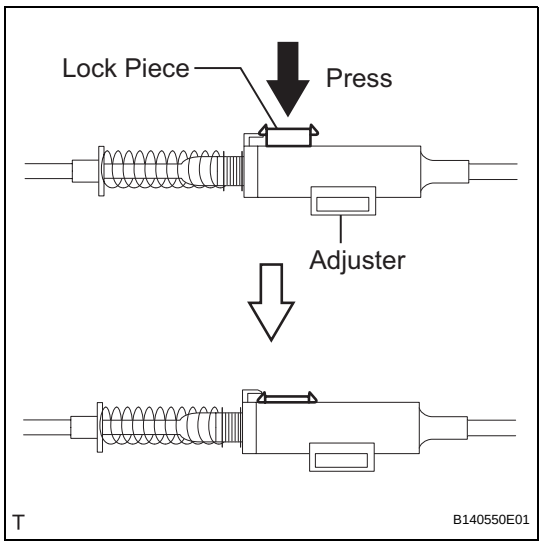

(10) Press the adjuster's lock piece to lock it.
NOTICE:
When pressing the lock piece, make sure the adjuster's spring is not compress.

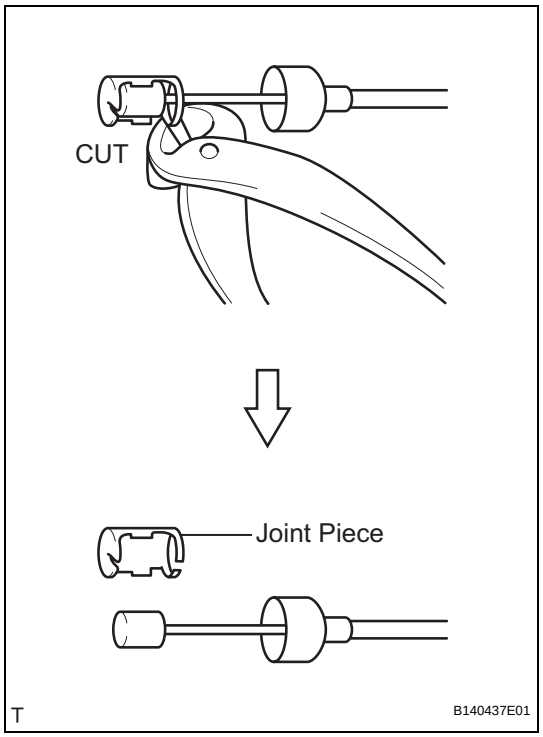

(d) Connection procedures of seat to lock cable when replacing seat:

(1) Cut the joint piece on the lock cable, and remove it.
HINT:
- A joint piece is included with new seats.
- This procedure is not necessary when the lock cable is replaced with a new one.

(2) Temporarily place the seat into the vehicle where it will be installed.

SE

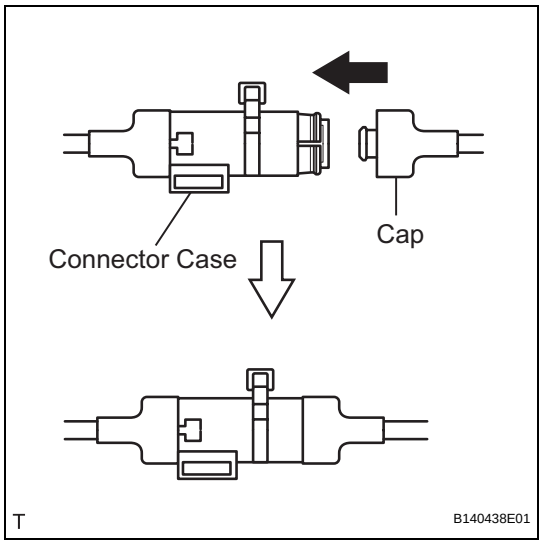

(3) Install the body's cap to the connector case.

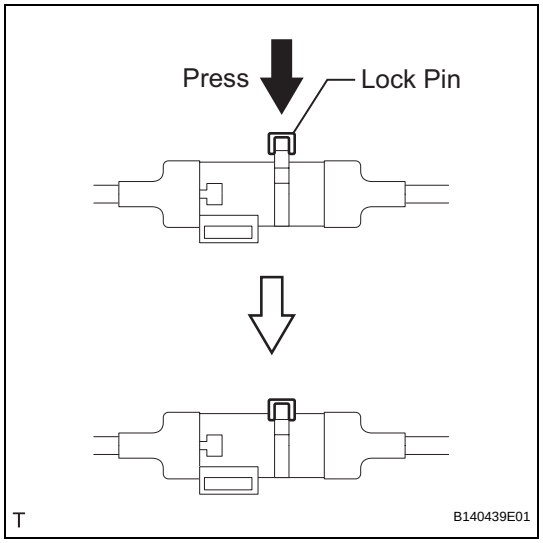

(4) Press the adjuster's lock pin.

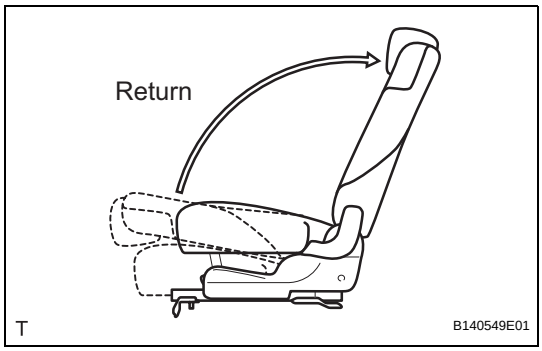

(5) Return the seatback to the upright position.

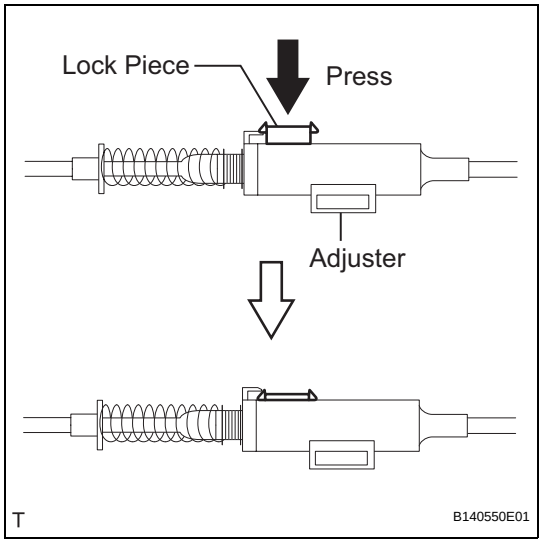

(6) Press the adjuster's lock piece to lock it.
NOTICE:
When pressing the lock piece, make sure the adjuster's spring is not compress.

(e) Lift up the seat track adjusting handle and move the seat to the foremost position.

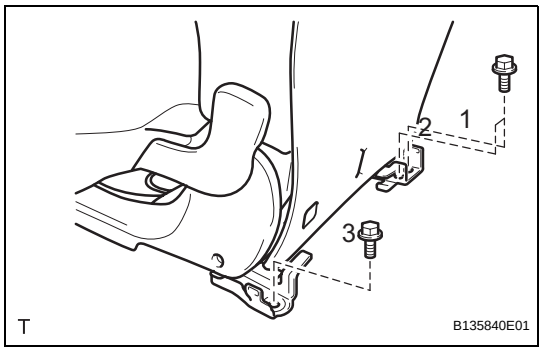

(f) Tighten the 3 bolts on the rear side of the seat.
Torque: 42 N*m (428 kgf*cm, 31 ft.*lbf)
HINT:
Tighten the bolts in the order indicated in the illustration.

(g) Lift up the seat track adjusting handle and move the seat to the rearmost position.

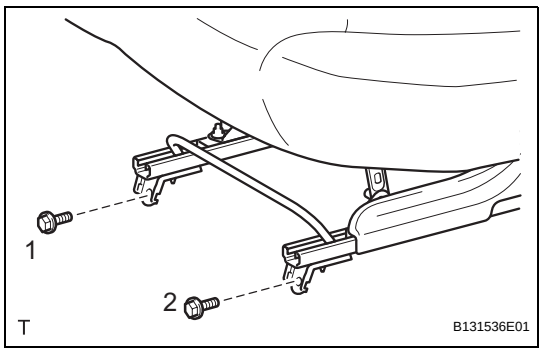

(h) Tighten the 2 bolts on the front side of the seat.
Torque: 42 N*m (428 kgf*cm, 31 ft.*lbf)
HINT:
Tighten the bolts in the order indicated in the illustration.

2. INSTALL REAR NO. 1 SEAT ASSEMBLY LH (w/ Rear No. 2 Seat)

(a) Fully tilt the seatback forward.

(b) Place the seat in the cabin.
NOTICE:
Be careful not to damage the vehicle body.

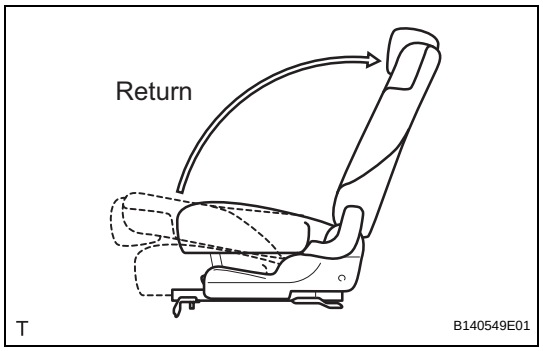

(c) Return the seatback to the upright position.
(d) Lift up the seat track adjusting handle and move the seat to the foremost position.

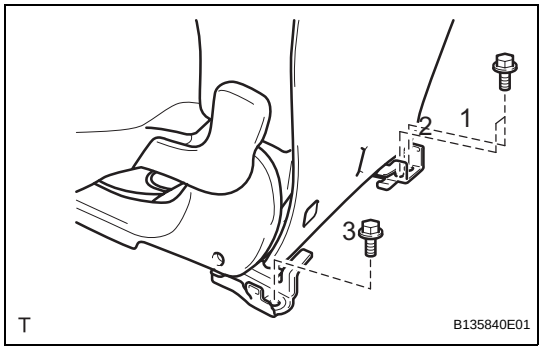

(e) Tighten the 3 bolts on the rear side of the seat.
Torque: 42 N*m (428 kgf*cm, 31 ft.*lbf)
HINT:
Tighten the bolts in the order indicated in the illustration.
(f) Lift up the seat track adjusting handle and move the seat to the rearmost position.

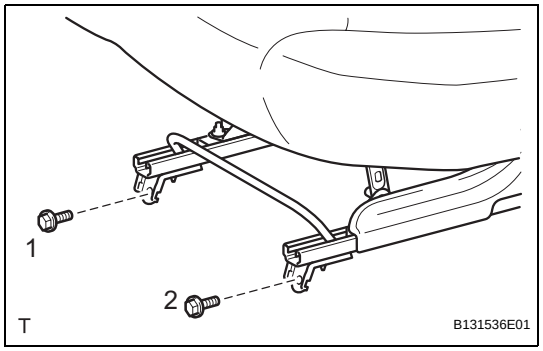

(g) Tighten the 2 bolts on the front side of the seat.
Torque: 42 N*m (428 kgf*cm, 31 ft.*lbf)
HINT:
Tighten the bolts in the order indicated in the illustration.

3. INSTALL REAR NO. 1 SEAT LOCK CABLE ASSEMBLY (w/o Rear No. 2 Seat)

(a) Attach the clamps and install the cable to the vehicle body.

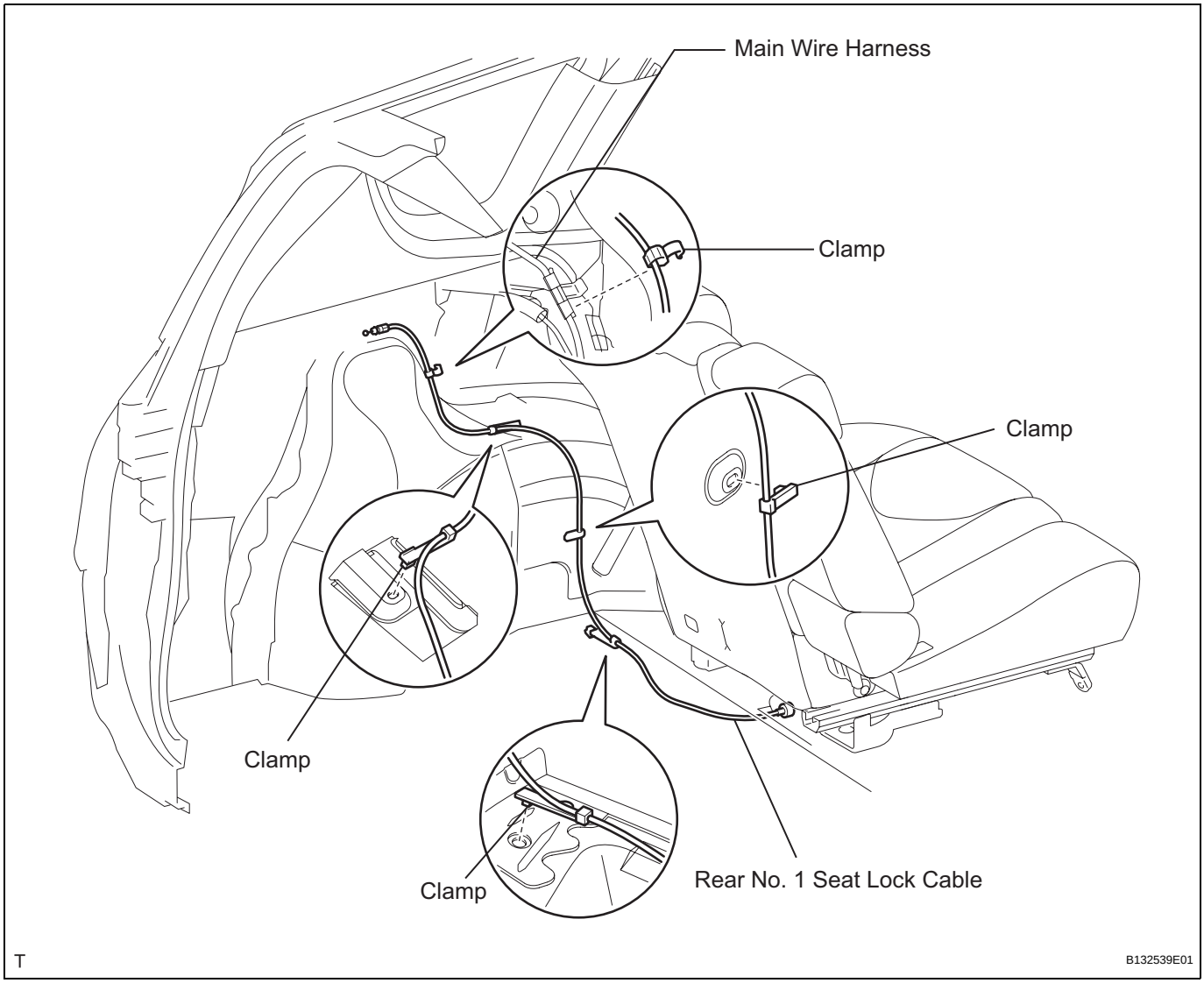

4. INSTALL REAR SEAT LAP TYPE BELT ASSEMBLY CENTER RH (w/ Rear No. 2 Seat) (See page SB-42)

5. INSTALL REAR SEAT LAP TYPE BELT CENTER ASSEMBLY RH (w/o Rear No. 2 Seat) (See page SB-42)

6. INSTALL REAR SEAT LEG COVER

(a) Attach the 8 claws to install the 2 leg covers.

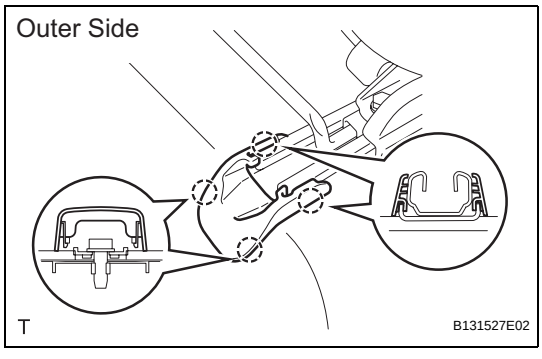

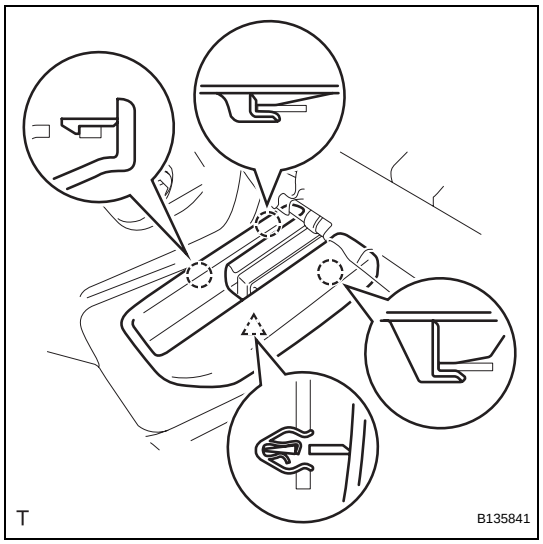

7. INSTALL REAR NO. 5 SEAT LEG SIDE COVER

(a) Attach the 3 claws and clip to install the side cover.

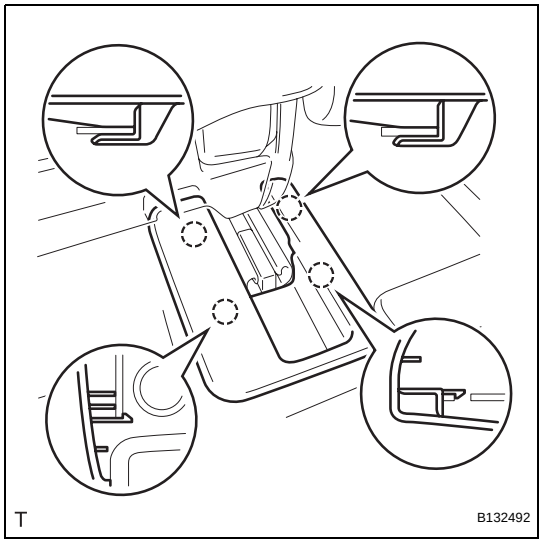

8. INSTALL REAR NO. 4 SEAT LEG SIDE COVER (w/ Rear No. 2 Seat)

(a) Attach the 4 claws to install the side cover.

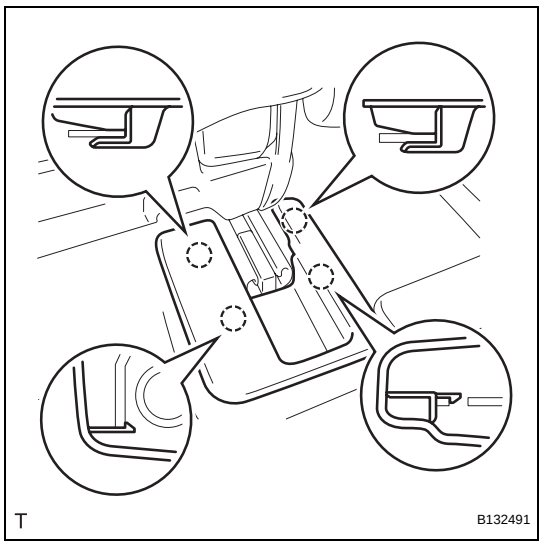

9. INSTALL REAR NO. 4 SEAT LEG SIDE COVER (w/o Rear No. 2 Seat)

(a) Attach the 4 claws to install the rear No. 4 seat leg side cover.

SE

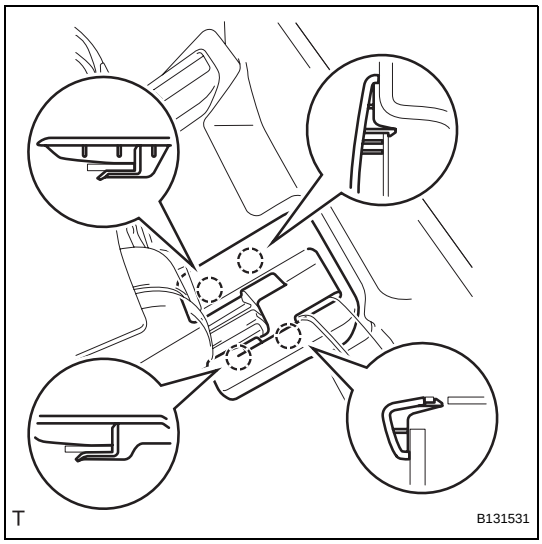

10. INSTALL REAR NO. 3 SEAT LEG SIDE COVER (w/ Rear No. 2 Seat)

(a) Attach the 4 claws to install the side cover.

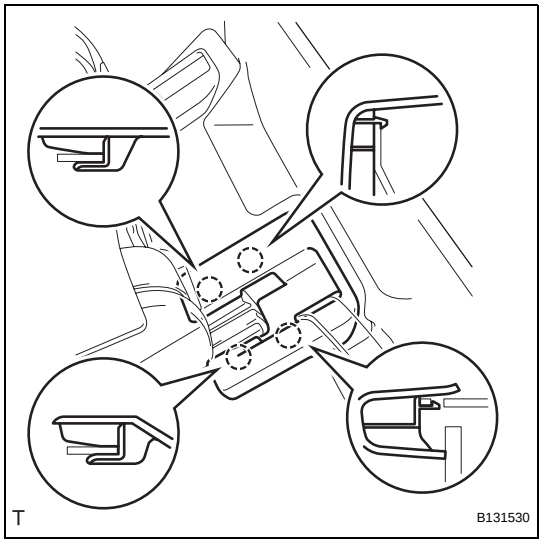

11. INSTALL REAR NO. 3 SEAT LEG SIDE COVER (w/o Rear No. 2 Seat)

(a) Attach the 4 claws to install the side cover.

12. INSTALL RECLINING REMOTE CONTROL LEVER SUB-ASSEMBLY LH (w/o Rear No. 2 Seat)

(a) Connect the rear No. 1 seat lock cable to the lever.

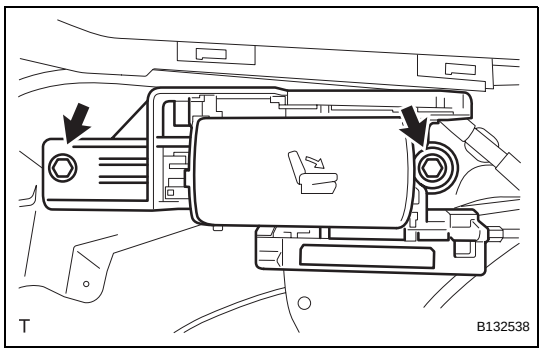

(b) Install the lever with the 2 bolts.
Torque: 18 N*m (184 kgf*cm, 13 ft.*lbf)

13. INSTALL DECK TRIM SIDE PANEL ASSEMBLY LH (w/ o Rear No. 2 Seat) (See page IR-52)

14. INSTALL TETHER ANCHOR BRACKET SUB-ASSEMBLY (w/o Rear No. 2 Seat) (See page IR-54)

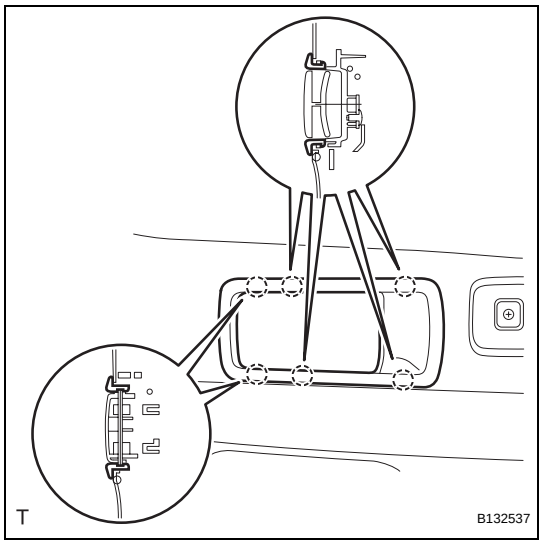

15. **INSTALL RECLINING REMOTE CONTROL LEVER BEZEL LH (w/o Rear No. 2 Seat)**
    (a) Attach the 6 claws to install the bezel.
16. **INSTALL REAR FLOOR FINISH PLATE (w/o Rear No. 2 Seat) (See page IR-55)**
17. **INSTALL BACK DOOR WEATHERSTRIP (w/o Rear No. 2 Seat)**
18. **INSTALL REAR FLOOR NO. 1 MAT SUPPORT SIDE PLATE (w/o Rear No. 2 Seat) (See page IR-55)**
19. **INSTALL REAR FLOOR NO. 3 BOARD (w/o Rear No. 2 Seat)**
20. **INSTALL REAR FLOOR NO. 2 BOARD (w/o Rear No. 2 Seat)**
21. **INSTALL DECK BOARD ASSEMBLY (w/o Rear No. 2 Seat)**
22. **INSTALL REAR FLOOR NO. 1 BOARD (w/o Rear No. 2 Seat)**
23. **INSTALL TONNEAU COVER ASSEMBLY (w/o Rear No. 2 Seat)**
24. **INSTALL PACKAGE TRAY TRIM POCKET SUB-ASSEMBLY (w/o Rear No. 2 Seat)**

REAR NO. 1 SEAT ASSEMBLY (for LH Side)

COMPONENTS

w/o Rear No. 2 Seat

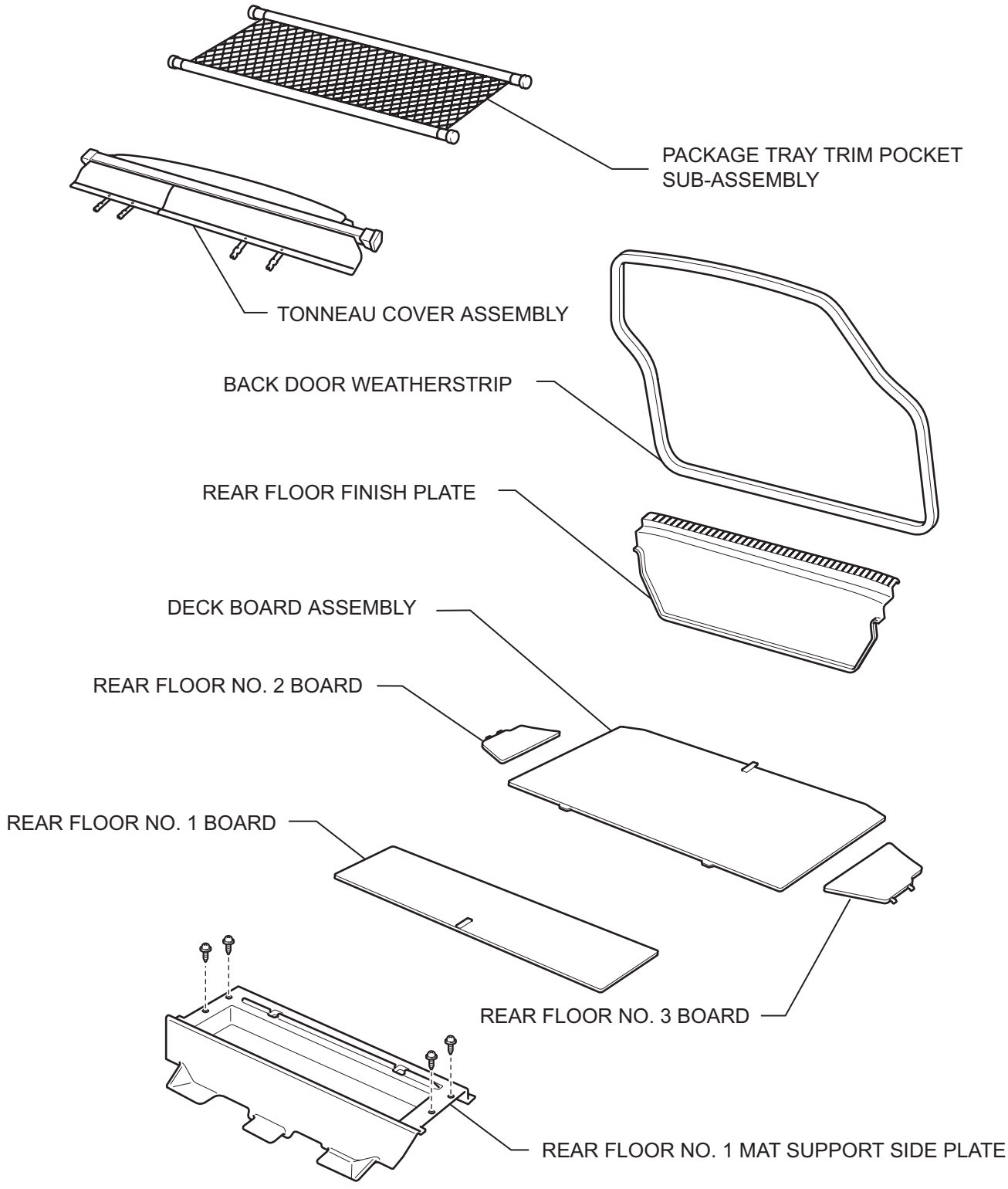

T

B130111E10

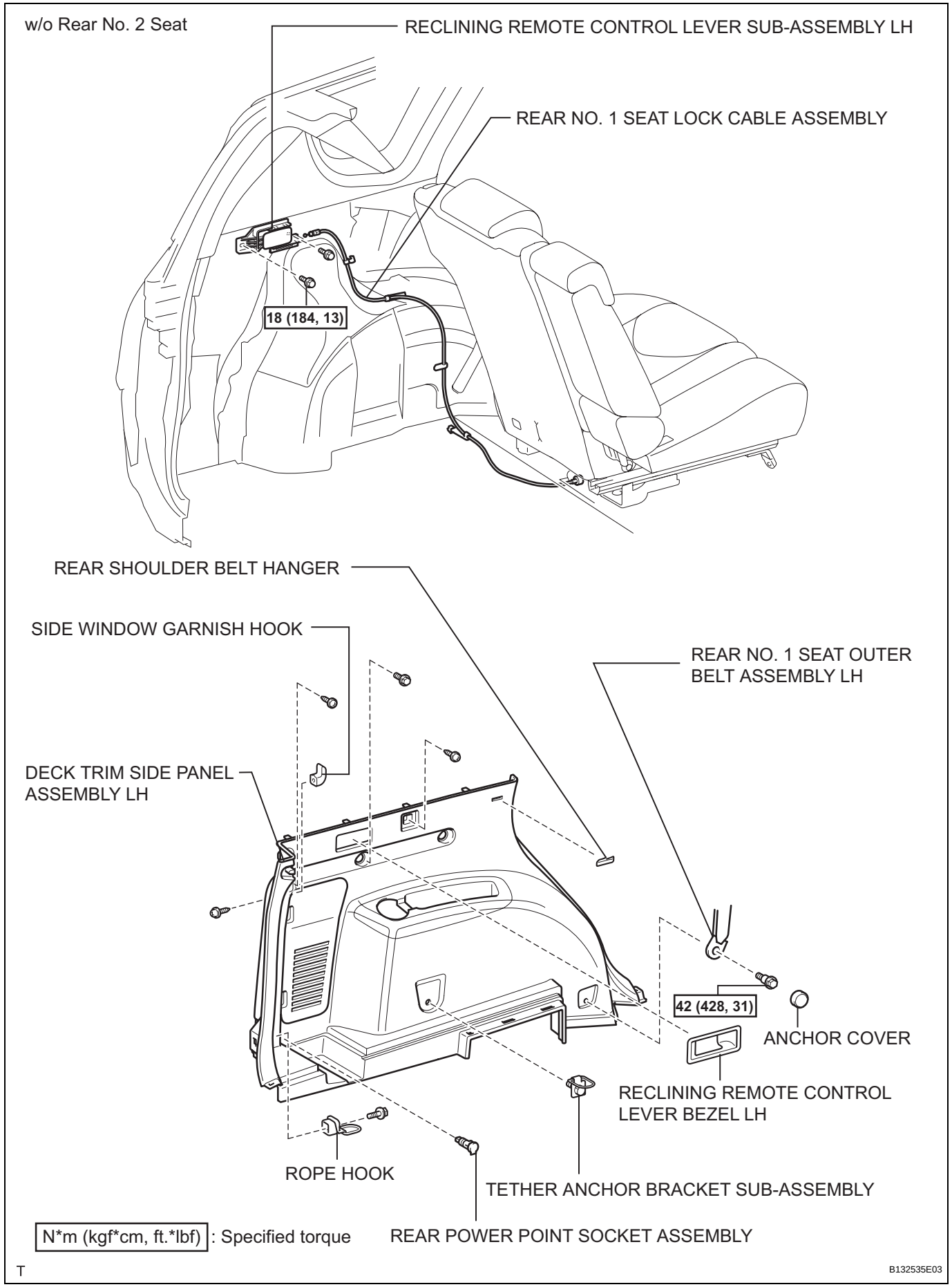
w/o Rear No. 2 Seat
RECLINING REMOTE CONTROL LEVER SUB-ASSEMBLY LH
REAR NO. 1 SEAT LOCK CABLE ASSEMBLY
18 (184, 13)
REAR SHOULDER BELT HANGER
SIDE WINDOW GARNISH HOOK
REAR NO. 1 SEAT OUTER BELT ASSEMBLY LH
DECK TRIM SIDE PANEL ASSEMBLY LH
42 (428, 31)
ANCHOR COVER
RECLINING REMOTE CONTROL LEVER BEZEL LH
ROPE HOOK
TETHER ANCHOR BRACKET SUB-ASSEMBLY
REAR POWER POINT SOCKET ASSEMBLY
N*m (kgf*cm, ft.*lbf) : Specified torque
T
B132535E03

SE

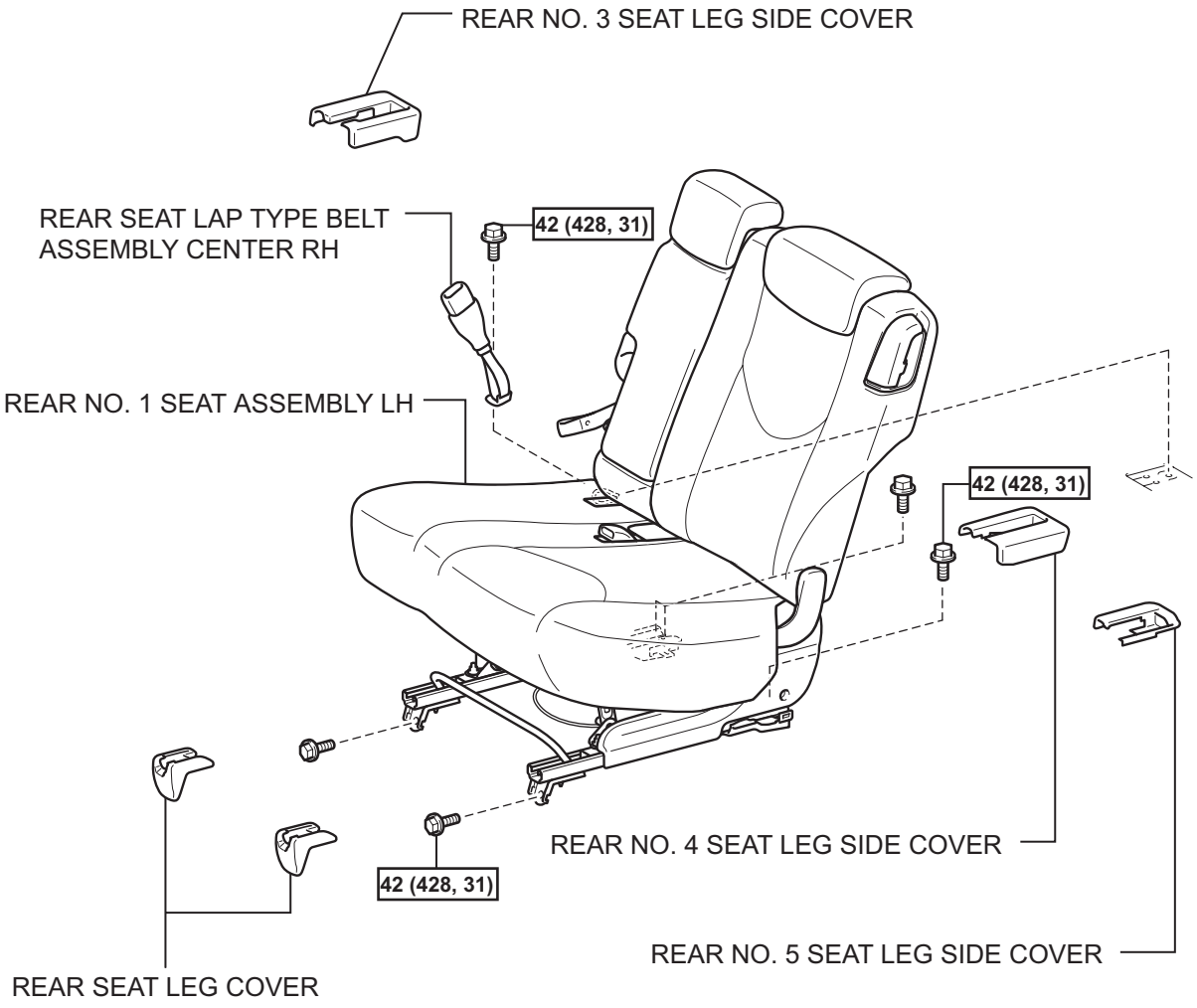

N*m (kgf*cm, ft.*lbf) : Specified torque

T

B132374E09

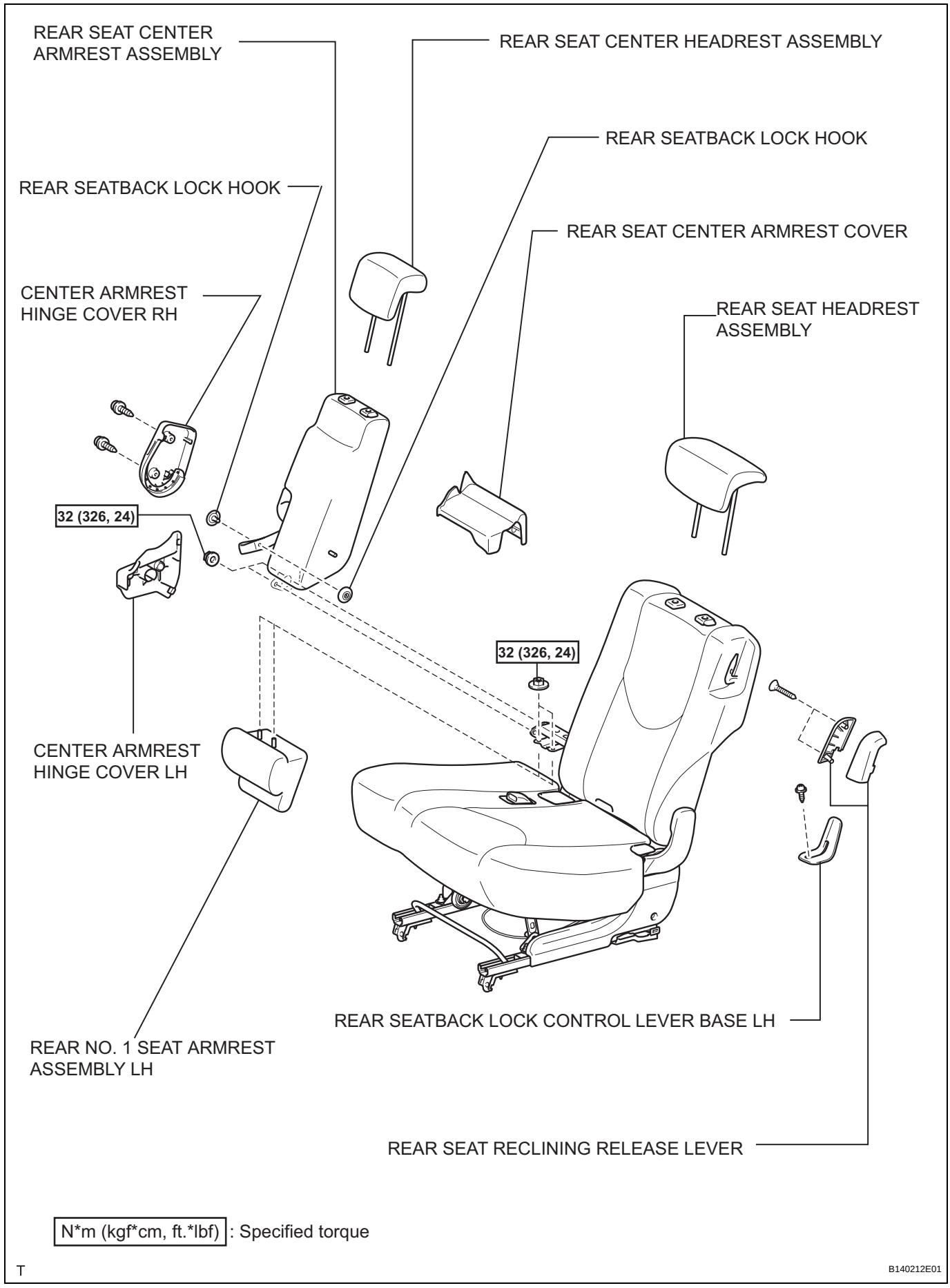

N*m (kgf*cm, ft.*lbf) : Specified torque

T

B140212E01

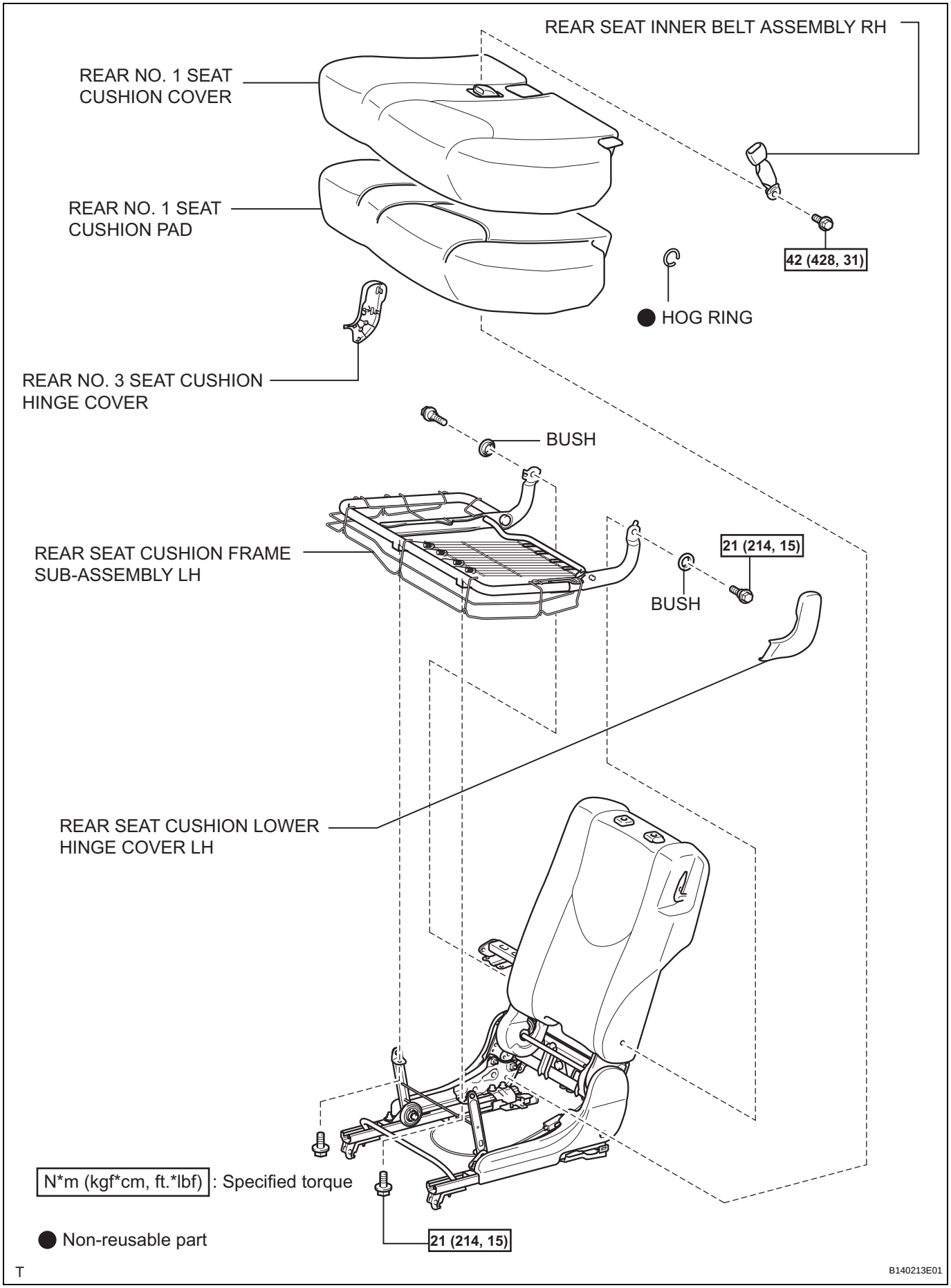
REAR SEAT INNER BELT ASSEMBLY RH
REAR NO. 1 SEAT CUSHION COVER
REAR NO. 1 SEAT CUSHION PAD
42 (428, 31)
HOG RING
REAR NO. 3 SEAT CUSHION HINGE COVER
BUSH
REAR SEAT CUSHION FRAME SUB-ASSEMBLY LH
21 (214, 15)
BUSH
REAR SEAT CUSHION LOWER HINGE COVER LH
N*m (kgf*cm, ft.*lbf) : Specified torque
Non-reusable part
21 (214, 15)
T
B140213E01

SE

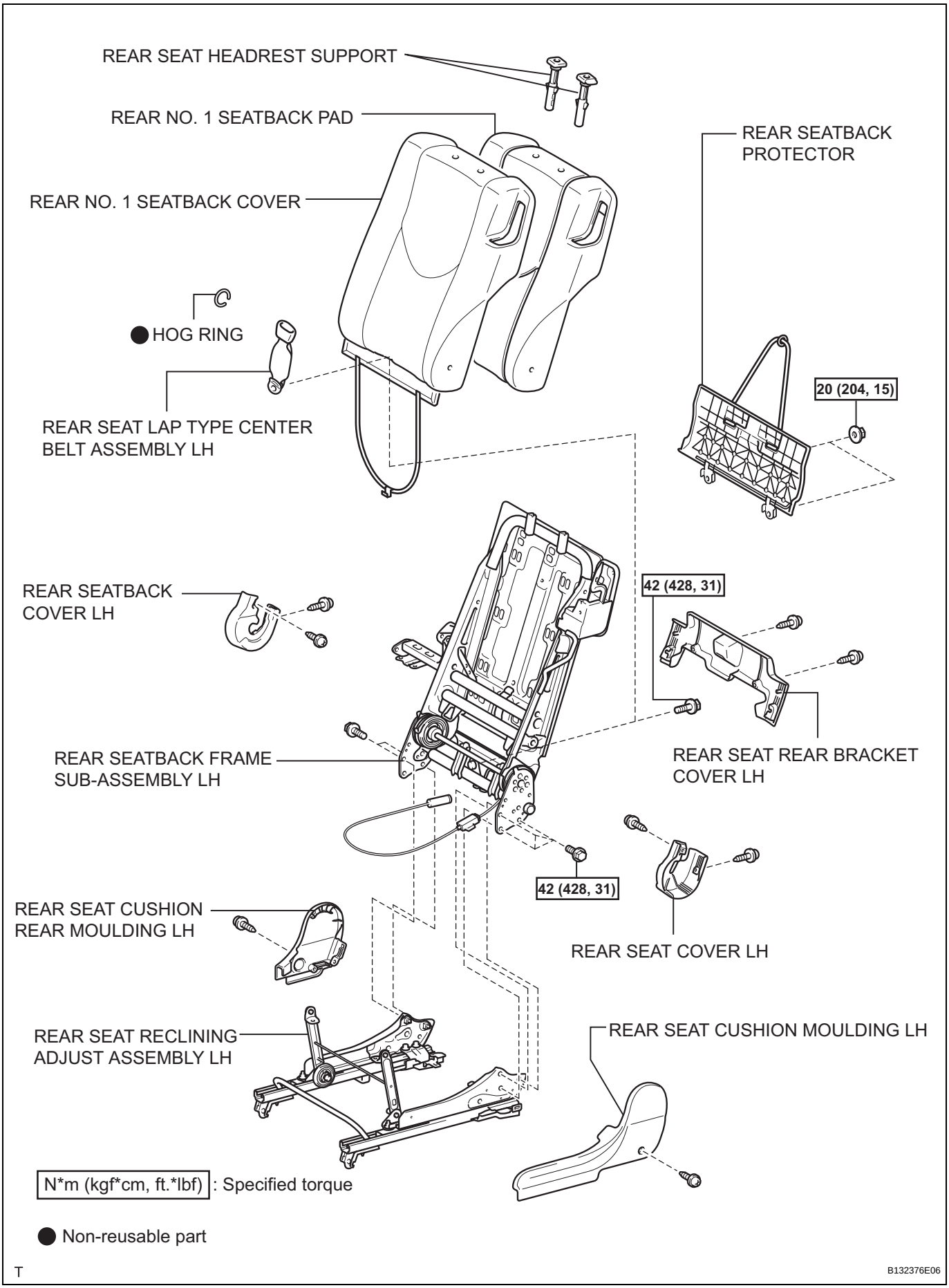
REAR SEAT HEADREST SUPPORT
REAR NO. 1 SEATBACK PAD
REAR SEATBACK PROTECTOR
REAR NO. 1 SEATBACK COVER
HOG RING
REAR SEAT LAP TYPE CENTER BELT ASSEMBLY LH
20 (204, 15)
REAR SEATBACK COVER LH
42 (428, 31)
REAR SEATBACK FRAME SUB-ASSEMBLY LH
REAR SEAT REAR BRACKET COVER LH
42 (428, 31)
REAR SEAT CUSHION REAR MOULDING LH
REAR SEAT COVER LH
REAR SEAT RECLINING ADJUST ASSEMBLY LH
REAR SEAT CUSHION MOULDING LH
N*m (kgf*cm, ft.*lbf) : Specified torque
Non-reusable part
T
B132376E06

SE

REMOVAL

1. **REMOVE PACKAGE TRAY TRIM POCKET SUB-ASSEMBLY (w/o Rear No. 2 Seat)**
2. **REMOVE TONNEAU COVER ASSEMBLY (w/o Rear No. 2 Seat)**
3. **REMOVE REAR FLOOR NO. 1 BOARD (w/o Rear No. 2 Seat)**
4. **REMOVE DECK BOARD ASSEMBLY (w/o Rear No. 2 Seat)**
5. **REMOVE REAR FLOOR NO. 3 BOARD (w/o Rear No. 2 Seat)**
6. **REMOVE REAR FLOOR NO. 2 BOARD (w/o Rear No. 2 Seat)**
7. **REMOVE REAR FLOOR NO. 1 MAT SUPPORT SIDE PLATE (w/o Rear No. 2 Seat) (See page IR-31)**
8. **REMOVE BACK DOOR WEATHERSTRIP (w/o Rear No. 2 Seat)**
9. **REMOVE REAR FLOOR FINISH PLATE (w/o Rear No. 2 Seat) (See page IR-31)**
10. **REMOVE RECLINING REMOTE CONTROL LEVER BEZEL RH (w/o Rear No. 2 Seat)**
    (a) Using a screwdriver, detach the 6 claws and remove the bezel.
    HINT:
    Tape the screwdriver tip before use.

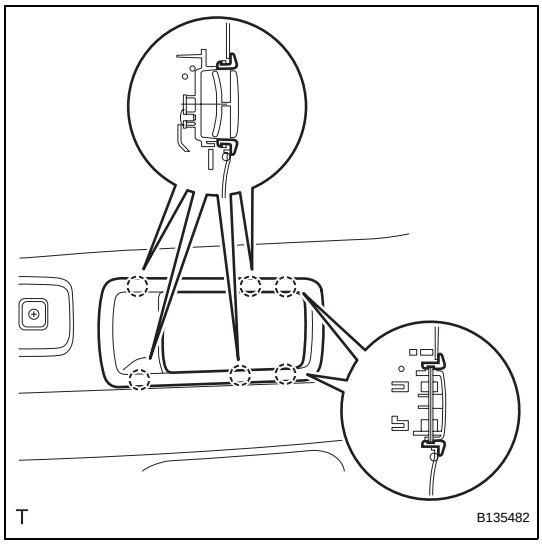

11. **REMOVE TETHER ANCHOR BRACKET SUB-ASSEMBLY (w/o Rear No. 2 Seat) (See page IR-32)**
12. **REMOVE DECK TRIM SIDE PANEL ASSEMBLY RH (w/o Rear No. 2 Seat) (See page IR-33)**
13. **REMOVE RECLINING REMOTE CONTROL LEVER SUB-ASSEMBLY RH (w/o Rear No. 2 Seat)**
    (a) Remove the 2 bolts and lever.
    (b) Disconnect the rear No. 1 seat lock cable from the lever.

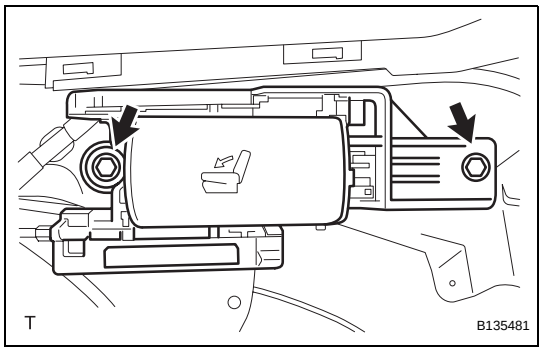

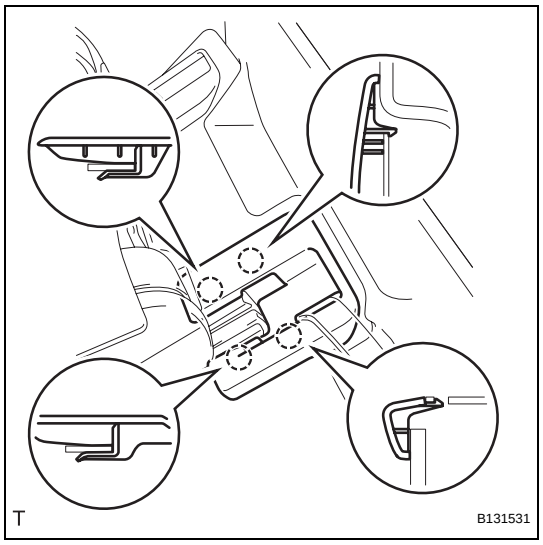

14. REMOVE REAR NO. 3 SEAT LEG SIDE COVER (w/ Rear No. 2 Seat)

(a) Using a screwdriver, detach the 4 claws and remove the side cover.
HINT:
Tape the screwdriver tip before use.

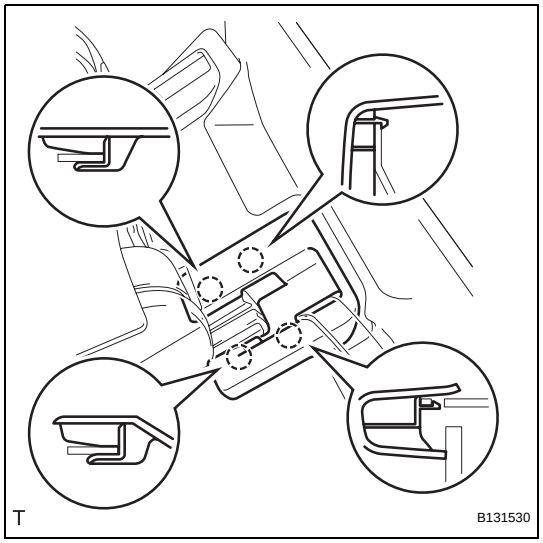

15. REMOVE REAR NO. 3 SEAT LEG SIDE COVER (w/o Rear No. 2 Seat)

(a) Using a screwdriver, detach the 4 claws and remove the side cover.
HINT:
Tape the screwdriver tip before use.

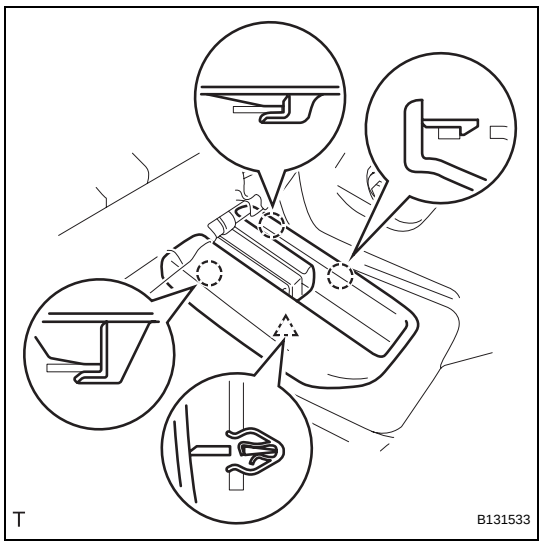

16. REMOVE REAR NO. 2 SEAT LEG SIDE COVER

(a) Using a screwdriver, detach the 3 claws and clip, and remove the side cover.
HINT:
Tape the screwdriver tip before use.

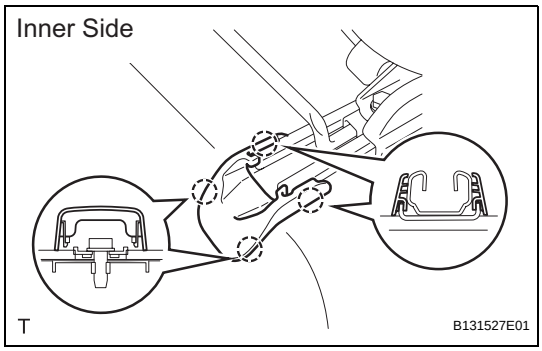

17. REMOVE REAR SEAT LEG COVER

(a) Using a screwdriver, detach the 8 claws and remove the 2 leg covers.
HINT:
Tape the screwdriver tip before use.

18. REMOVE REAR NO. 1 SEAT LOCK CABLE ASSEMBLY (w/o Rear No. 2 Seat)

(a) Disconnect the lock cable from the seat.
(1) Raise the adjuster's lock piece to release the lock.

SE

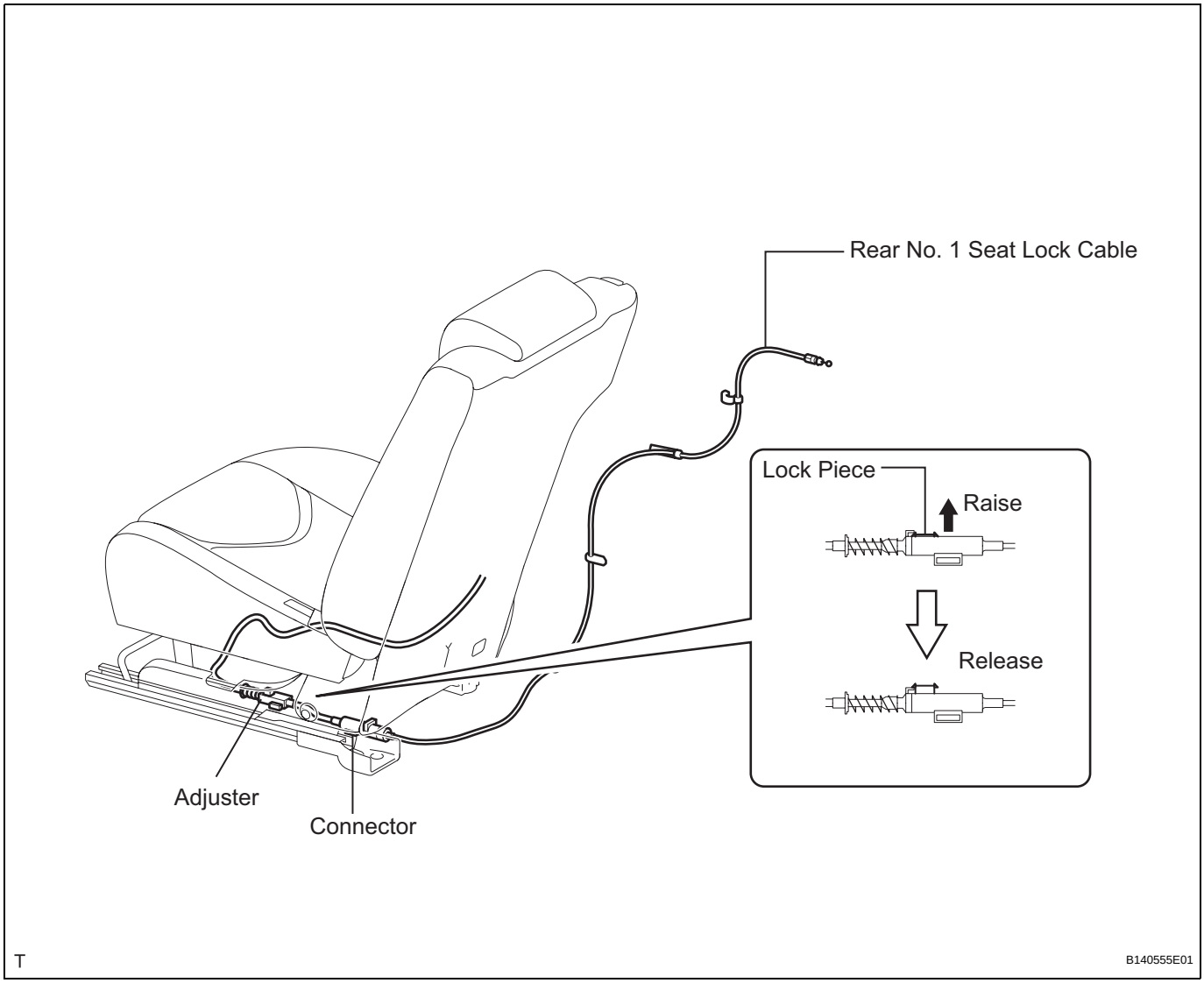

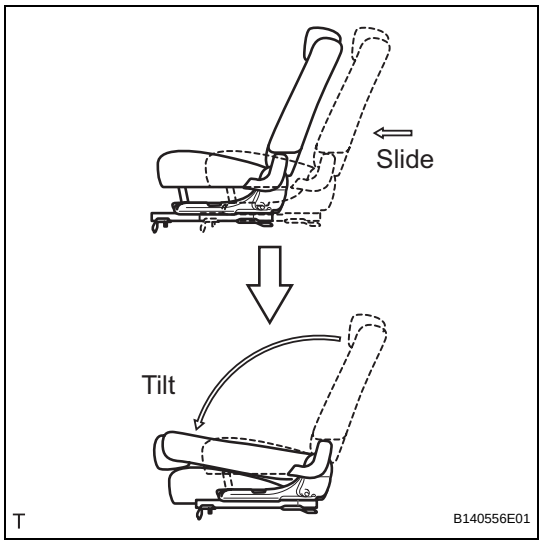

(2) Slide the seat forward and tilt the seatback forward.

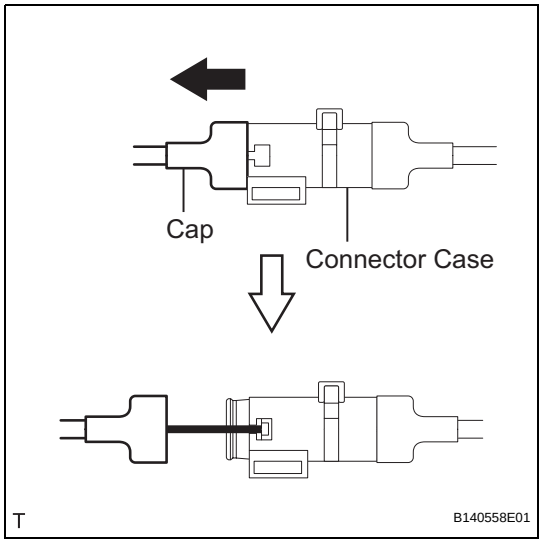

(3) Remove the seat's cap from the connector case.

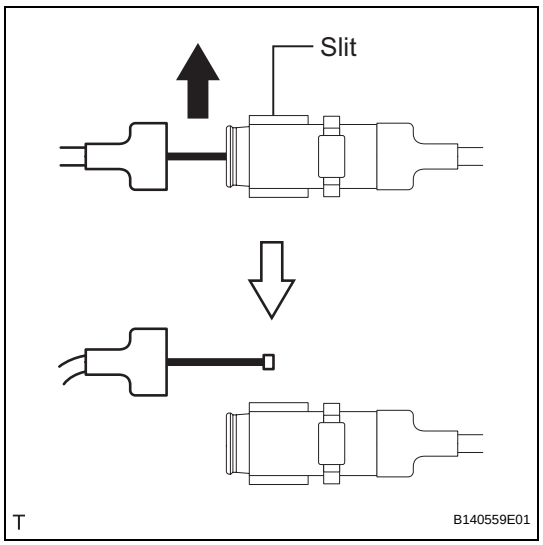

(4) Pull the seat's cap toward the outside of the vehicle. Then remove the cable from the connector case's slit.

SE

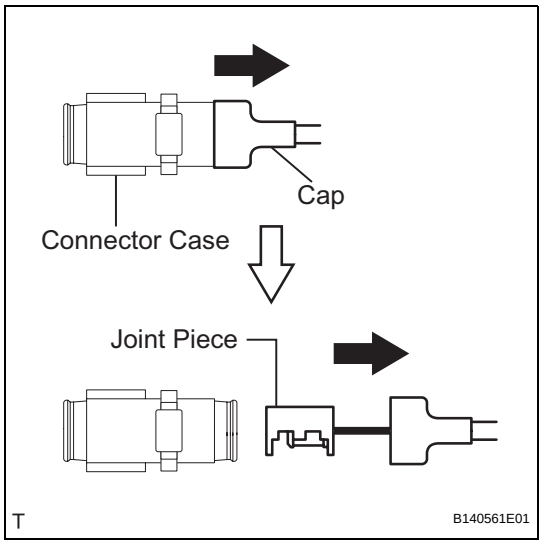

(5) Remove the body's cap from the connector case.

(b) Detach the clamps and remove the lock cable.

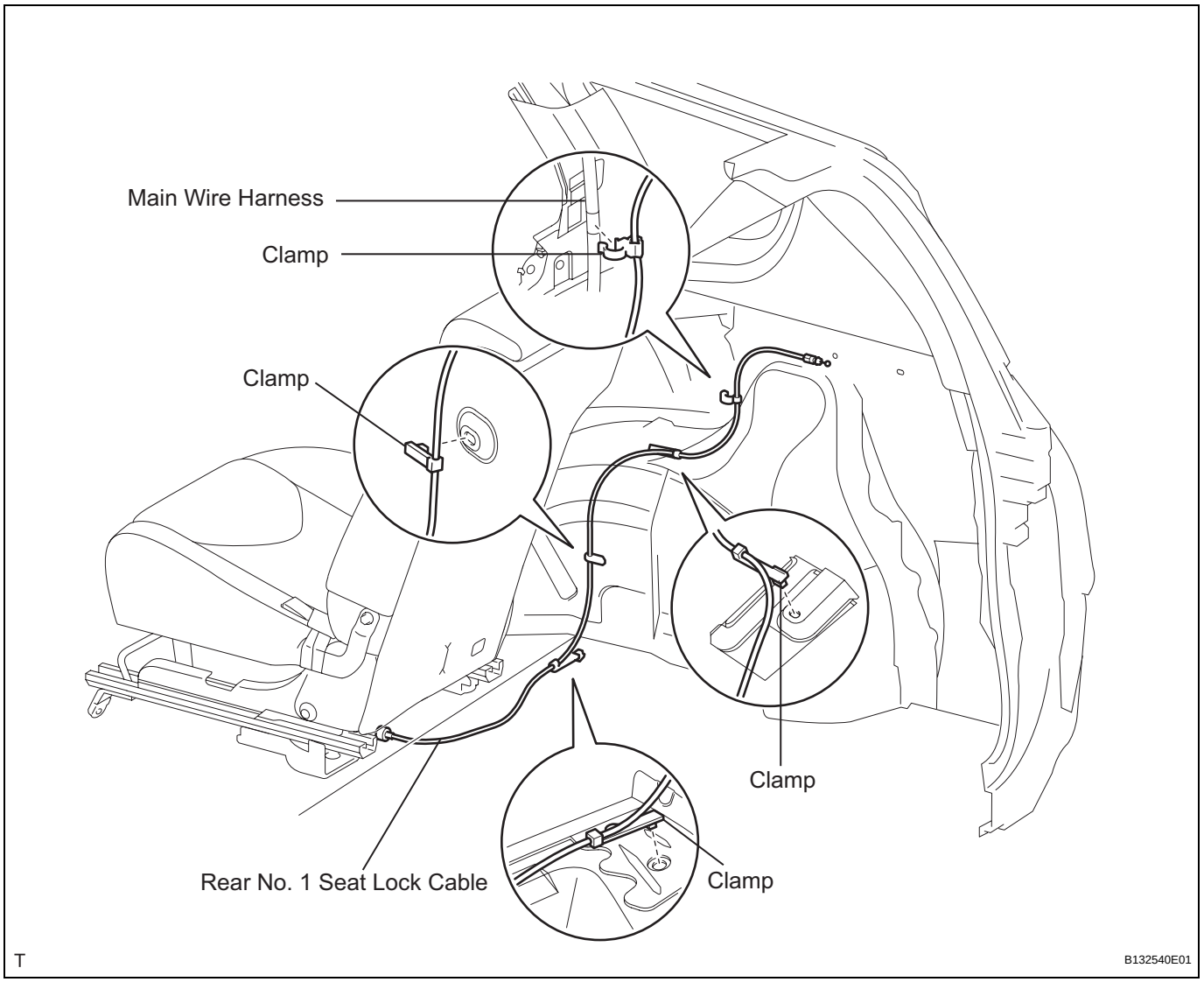

19. REMOVE REAR NO. 1 SEAT ASSEMBLY RH

(a) Lift up the seat track adjusting handle and move the seat to the rearmost position.

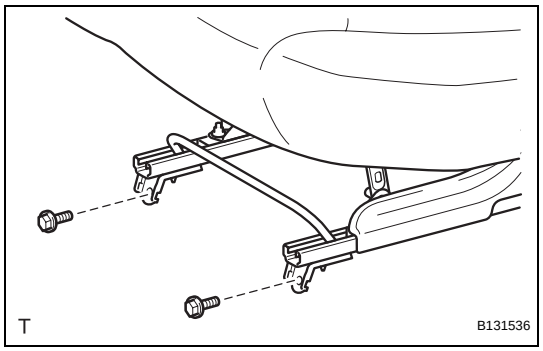

(b) Remove the 2 bolts on the front side of the seat.
(c) Lift up the seat track adjusting handle and move the seat to the foremost position.

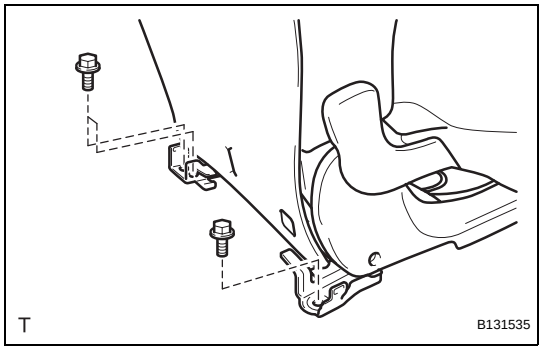

(d) Remove the 3 bolts on the rear side of the seat.
(e) Lift up the seat track adjusting handle and move the seat to the center position. Then remove the seat.
NOTICE:
Be careful not to damage the vehicle body,

SE

DISASSEMBLY

CAUTION:
Wear protective gloves. Sharp areas on the seatback frame, seat cushion frame and reclining adjuster may injure your hands.

1. **REMOVE REAR SEAT HEADREST ASSEMBLY**

2. **REMOVE REAR NO. 2 SEAT CUSHION HINGE COVER**
   (a) Return the seatback to the upright position.
   (b) Using a screwdriver, detach the 5 claws and remove the hinge cover.
   HINT:
   Tape the screwdriver tip before use.

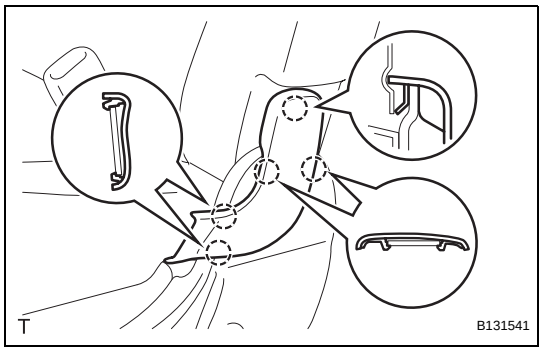

3. **REMOVE REAR NO. 1 SEAT CUSHION HINGE COVER**
   HINT:
   Use the same procedures described for the rear No. 2 seat cushion hinge cover.

4. **REMOVE REAR SEAT INNER BELT ASSEMBLY RH (See page SB-40)**

5. **REMOVE REAR NO. 1 SEAT CUSHION ASSEMBLY RH**
   (a) Disconnect the rubber band of the seatback cover from the seat cushion frame.
   (b) Remove the 2 bolts.

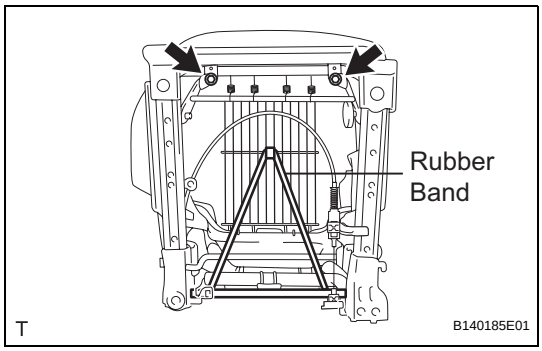

   (c) Remove the 2 bolts, 2 bushes and cushion.

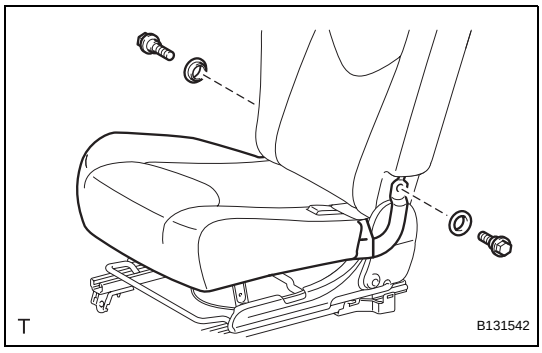

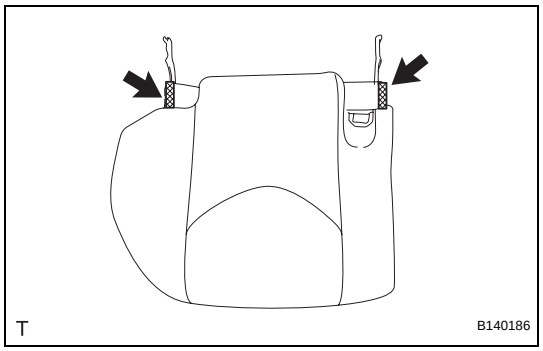

6. REMOVE REAR NO. 1 SEAT CUSHION COVER

(a) Detach the 2 hooks.

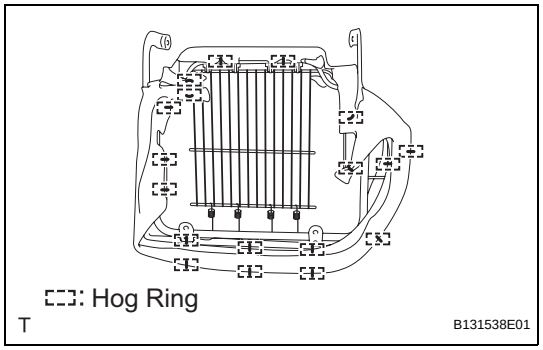

(b) Remove the 18 hog rings and seat cushion cover (with pad) from the seat cushion frame.

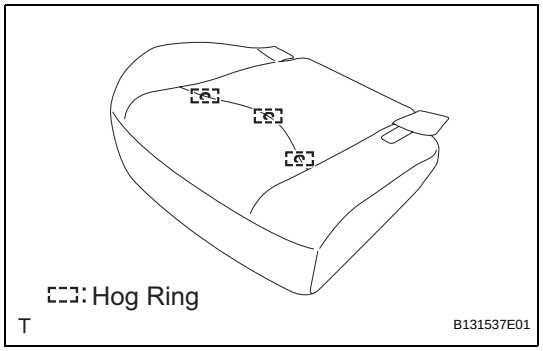

(c) Remove the 3 hog rings and seat cushion cover from the seat cushion pad.

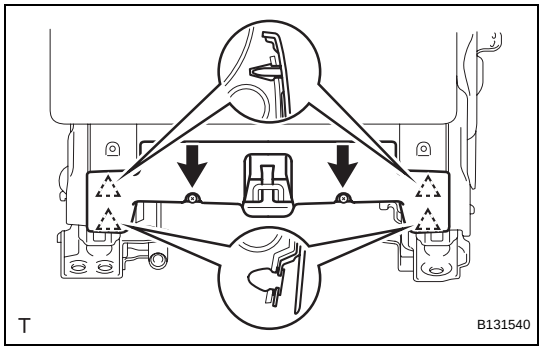

7. REMOVE REAR SEAT REAR BRACKET COVER RH

(a) Open the lower part of the seatback cover. Then remove the 2 screws.

(b) Using a screwdriver, detach the 4 clips and remove the bracket cover.
HINT:
Tape the screwdriver tip before use.

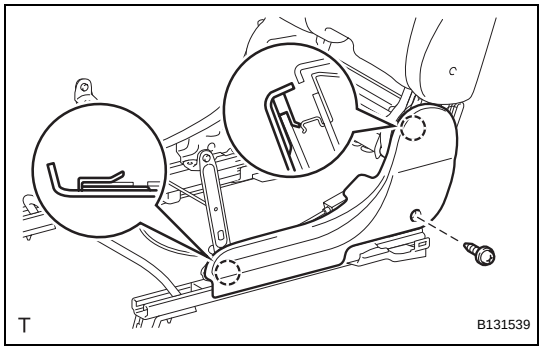

8. REMOVE REAR SEAT CUSHION REAR MOULDING RH

(a) Remove the screw.

(b) Detach the 2 claws and remove the moulding.

9. REMOVE REAR SEAT CUSHION MOULDING RH

HINT:
Use the same procedures described for the rear seat cushion rear moulding RH.

SE

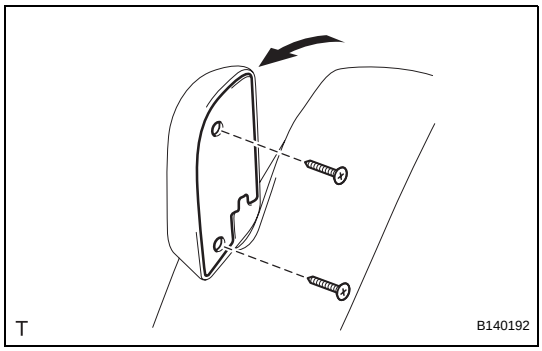

10. REMOVE REAR SEAT RECLINING RELEASE LEVER (w/o Rear No. 2 Seat)

(a) Pull the reclining control lever to reveal the 2 screws. Then remove the 2 screw and cover.

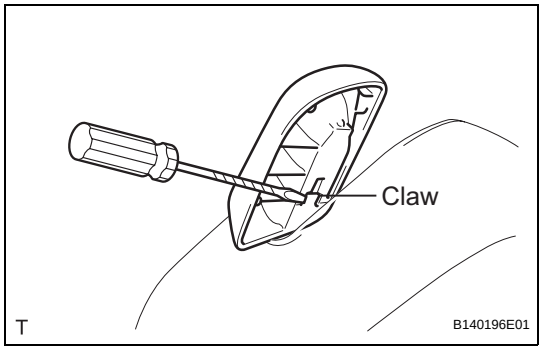

(b) Using a screwdriver, detach the claw and remove the release lever.
HINT:
Tape the screwdriver tip before use.

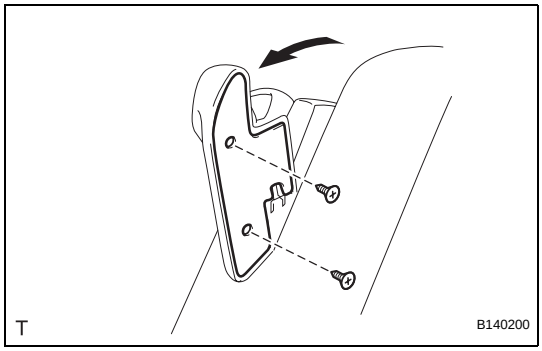

11. REMOVE REAR SEAT RECLINING RELEASE LEVER (w/ Rear No. 2 Seat)

(a) Pull the reclining control lever to reveal the 2 screws. Then remove the 2 screw and cover.

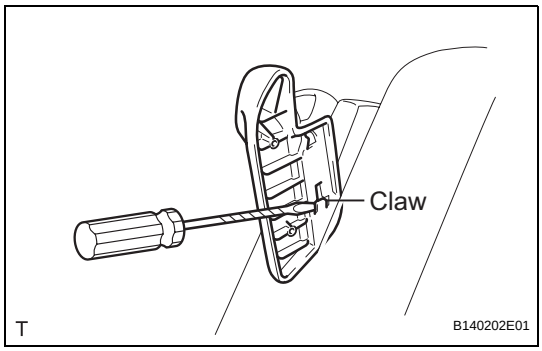

(b) Using a screwdriver, detach the claw and remove the release lever.
HINT:
Tape the screwdriver tip before use.

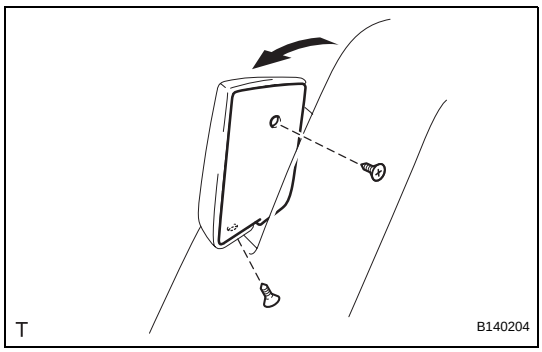

12. REMOVE REAR SEAT RECLINING CONTROL LEVER (w/ Rear No. 2 Seat)

(a) Pull the reclining control lever to reveal the 2 screws. Then remove the 2 screw and cover.

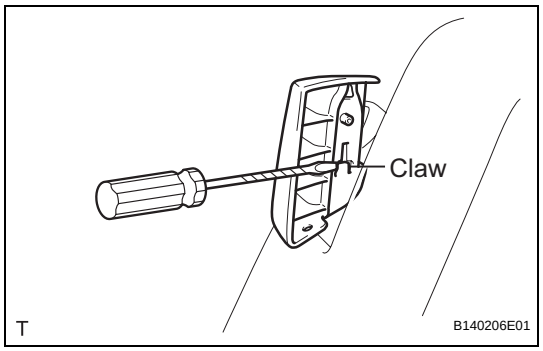

(b) Using a screwdriver, detach the claw and remove the control lever.
HINT:
Tape the screwdriver tip before use.

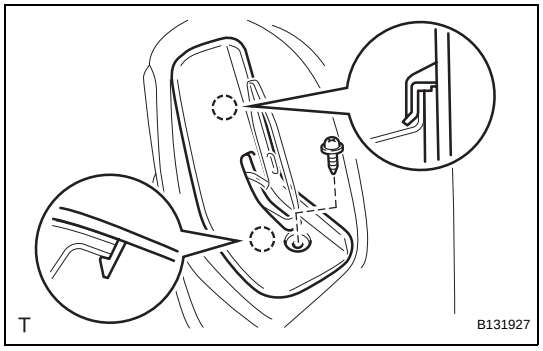

13. REMOVE REAR SEATBACK LOCK CONTROL LEVER BASE RH (w/o Rear No. 2 Seat)
(a) Remove the screw.
(b) Using a screwdriver, detach the 2 claws and remove the lever base.
HINT:
Tape the screwdriver tip before use.

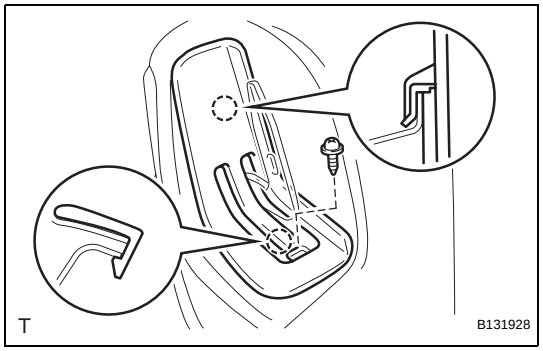

14. REMOVE REAR SEATBACK LOCK CONTROL LEVER BASE RH (w/ Rear No. 2 Seat)
(a) Remove the screw.
(b) Using a screwdriver, detach the 2 claws and remove the lever base.
HINT:
Tape the screwdriver tip before use.

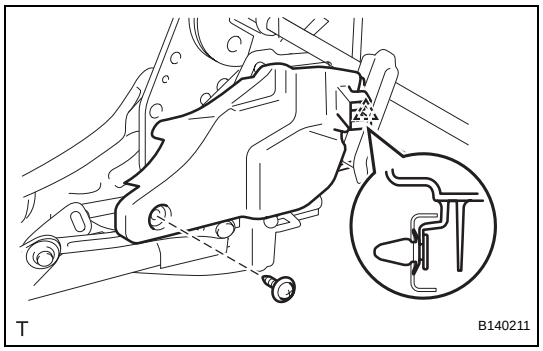

15. REMOVE REAR SEAT RECLINING INNER PROTECTOR RH (w/ Rear No. 2 Seat)
(a) Remove the screw.
(b) Detach the clip and remove the inner protector.

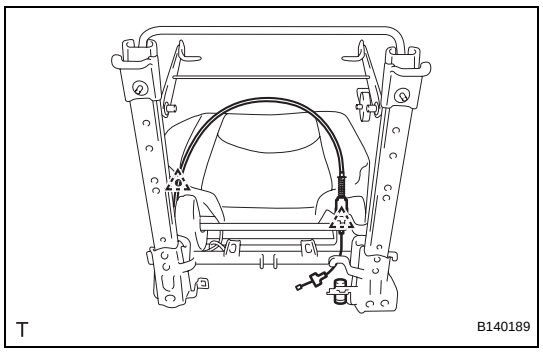

16. REMOVE REAR NO. 1 SEATBACK ASSEMBLY RH (w/o Rear No. 2 Seat)
(a) Detach the 2 clamps and disconnect the cable from the reclining adjuster.

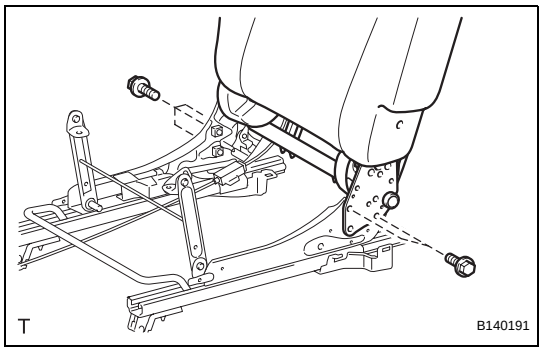

(b) Remove the 5 bolts and the seatback.

SE

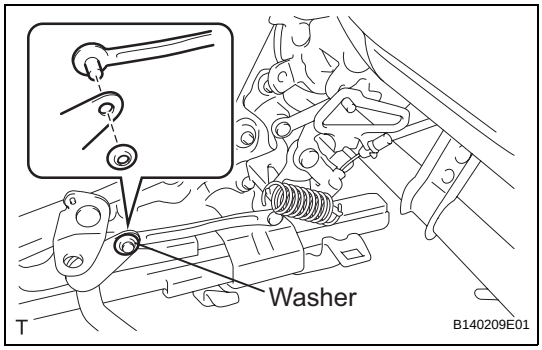

17. REMOVE REAR NO. 1 SEATBACK ASSEMBLY RH (w/ Rear No. 2 Seat)

(a) Using a screwdriver, remove the washer and disconnect the W/I unit from the reclining adjuster.

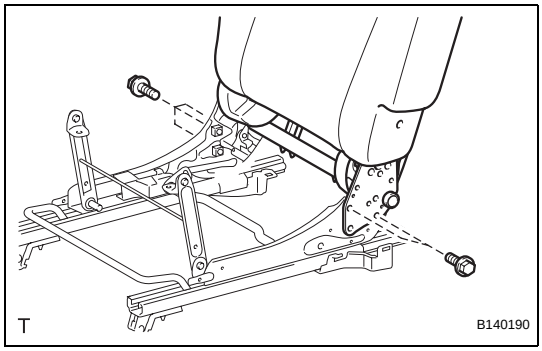

(b) Remove the 5 bolts and the seatback.

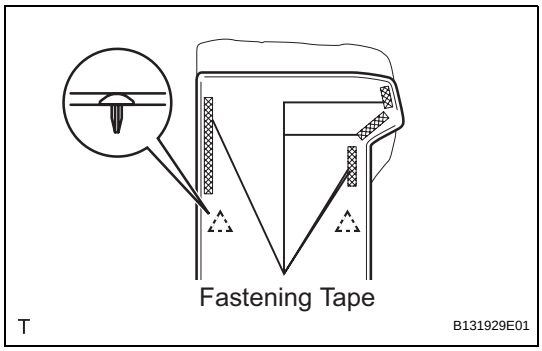

18. REMOVE REAR SEATBACK PROTECTOR

(a) Using a clip remover, detach the 5 clips and open the fastening tape.

NOTICE:
If clips are damaged during removal, replace them.

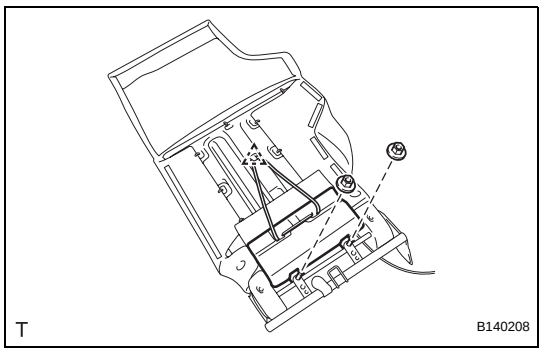

(b) Detach the clip.
(c) Remove the 2 nuts and protector.

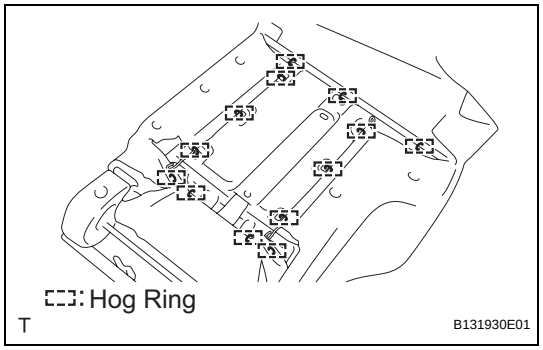

19. REMOVE REAR NO. 1 SEATBACK COVER

(a) Remove the 13 hog rings.

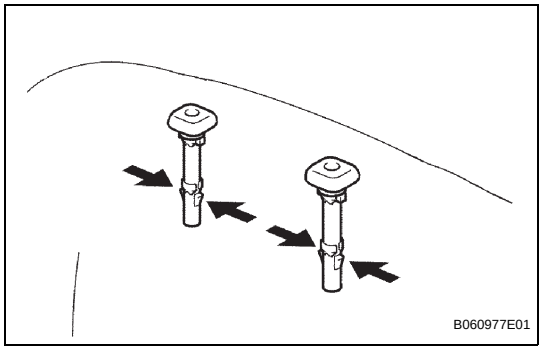

(b) Detach the 4 claws and remove the 2 headrest supports.

(c) Remove the seatback cover (with pad) from the seatback frame.

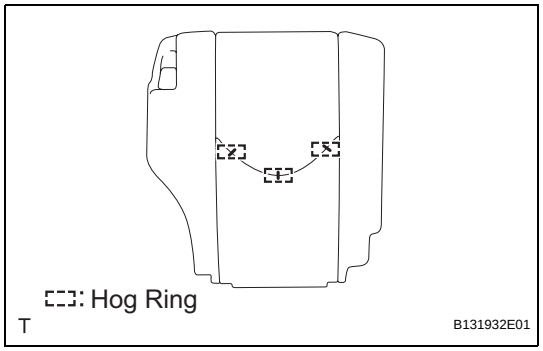

(d) Remove the 3 hog rings and seatback cover from the seatback pad.

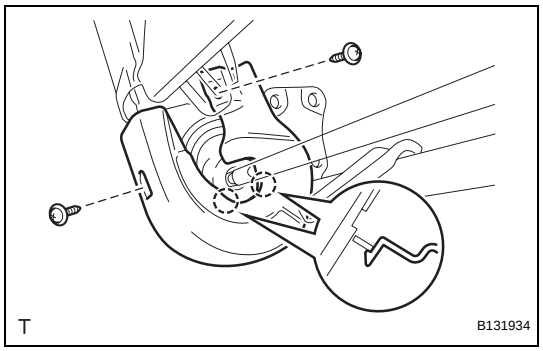

20. REMOVE REAR SEATBACK COVER RH

(a) Remove the 2 screws.

(b) Using a screwdriver, detach the 2 claws and remove the cover.
HINT:
Tape the screwdriver tip before use.

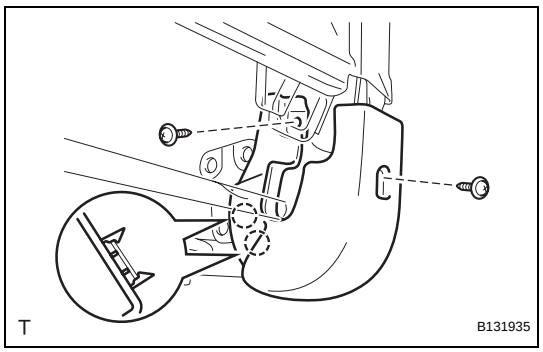

21. REMOVE REAR SEAT COVER (w/o Rear No. 2 Seat)

(a) Remove the 2 screws.

(b) Using a screwdriver, detach the 2 claws and remove the cover.
HINT:
Tape the screwdriver tip before use.

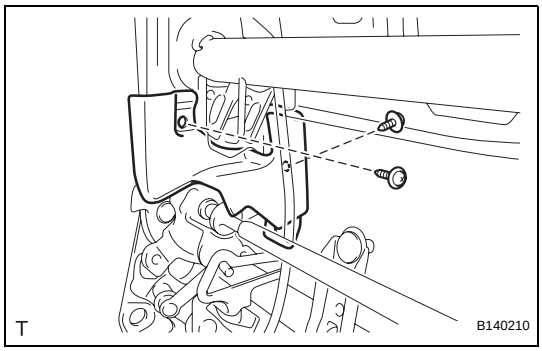

22. REMOVE REAR SEAT COVER (w/ Rear No. 2 Seat)

(a) Remove the 2 screws and cover.

REASSEMBLY

CAUTION:
Wear protective gloves. Sharp areas on the seatback frame, seat cushion frame and reclining adjuster may injure your hands.
HINT:
A bolt without a torque specification is shown in the standard bolt chart (see page SS-2).

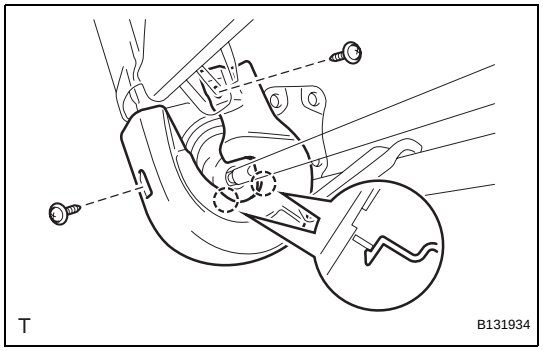

1. INSTALL REAR SEATBACK COVER RH
(a) Attach the 2 claws to install the cover.
(b) Install the 2 screws.

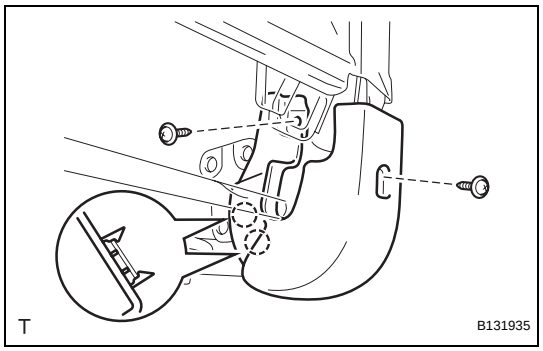

2. INSTALL REAR SEAT COVER (w/o Rear No. 2 Seat)
(a) Attach the 2 claws to install the cover.
(b) Install the 2 screws.

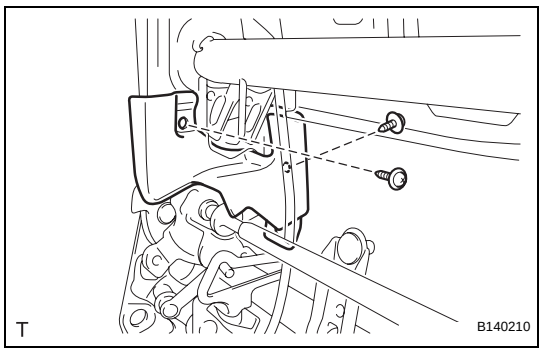

3. INSTALL REAR SEAT COVER (w/ Rear No. 2 Seat)
(a) Install the cover with the 2 screws.

4. INSTALL REAR NO. 1 SEATBACK COVER
NOTICE:
- **Be careful not to damage the cover.**
- **When installing the hog rings, avoid wrinkling the cover.**

SE

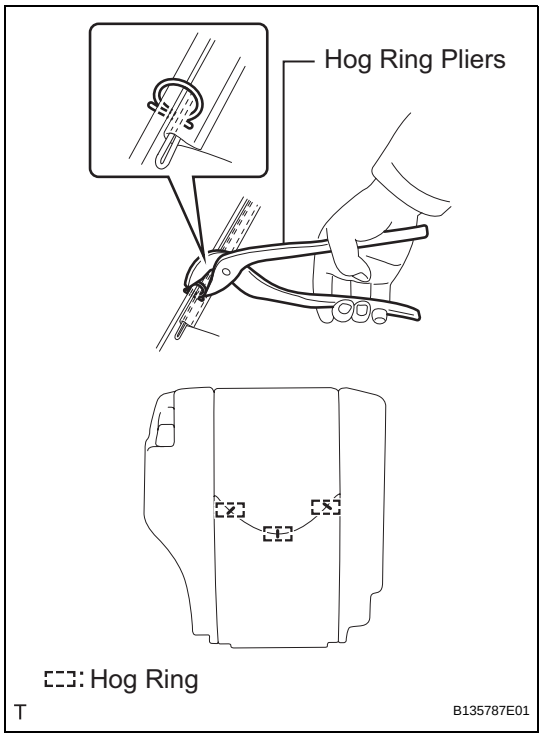

(a) Using hog ring pliers, install the seatback cover to the seatback pad with 3 new hog rings.
(b) Install the seatback cover (with pad) to the seatback frame.

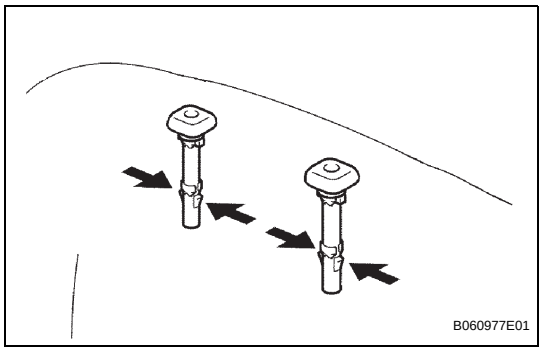

(c) Attach the 4 claws to install the 2 headrest supports.

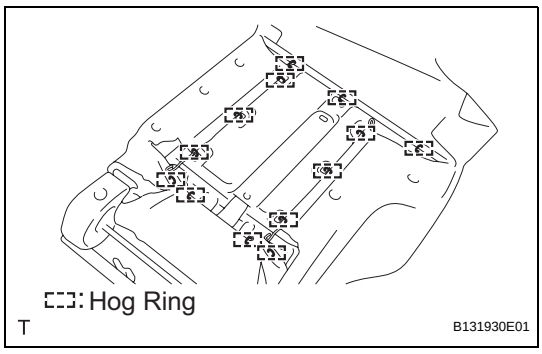

(d) Lift up the seatback cover and install the 13 hog rings.

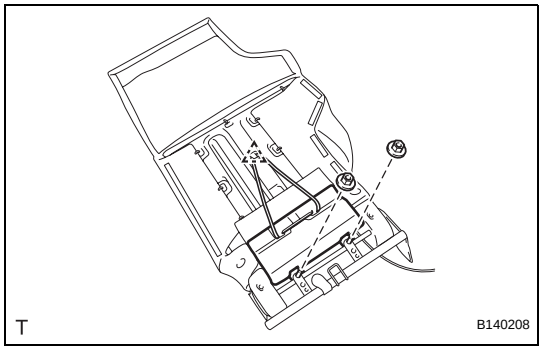

5. INSTALL REAR SEATBACK PROTECTOR

(a) Install the protector with the 2 nuts.
Torque: 20 N*m (204 kgf*cm, 15 ft.*lbf)
(b) Attach the clip.

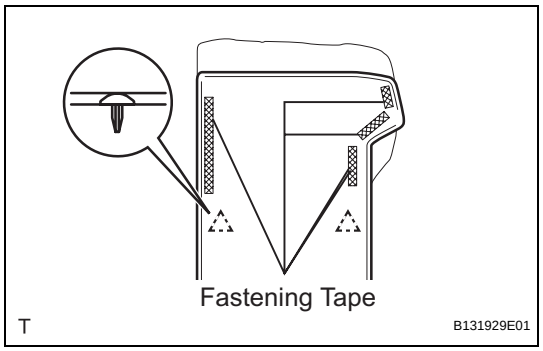

(c) Attach the 2 clips and close the fastening tape.

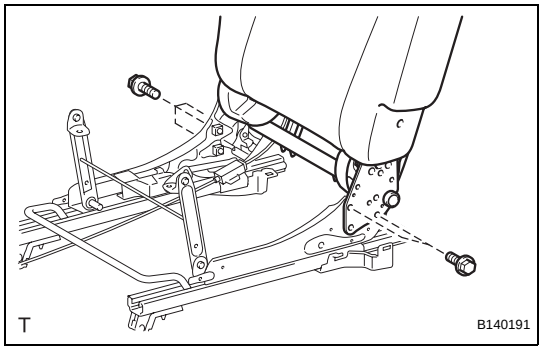

6. INSTALL REAR NO. 1 SEATBACK ASSEMBLY RH (w/ o Rear No. 2 Seat)

(a) Install the seatback with the 5 bolts.
Torque: 42 N*m (428 kgf*cm, 31 ft.*lbf)

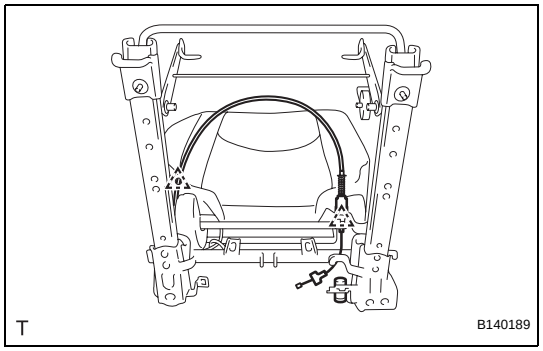

(b) Attach the 2 clamps and connect the cable to the reclining adjuster.

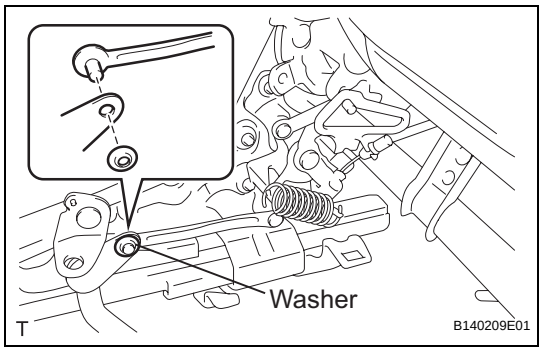

7. INSTALL REAR NO. 1 SEATBACK ASSEMBLY RH (w/ Rear No. 2 Seat)

(a) Connect the W/I unit to the reclining adjuster with the washer.

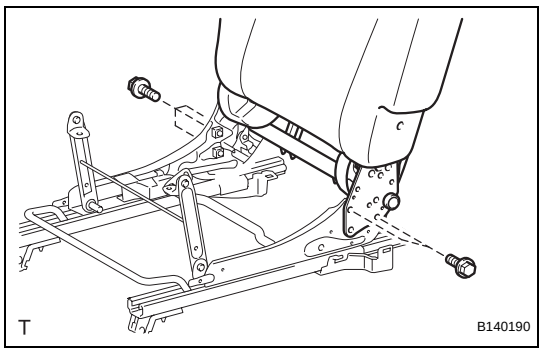

(b) Install the seatback with the 5 bolts.
Torque: 42 N*m (428 kgf*cm, 31 ft.*lbf)

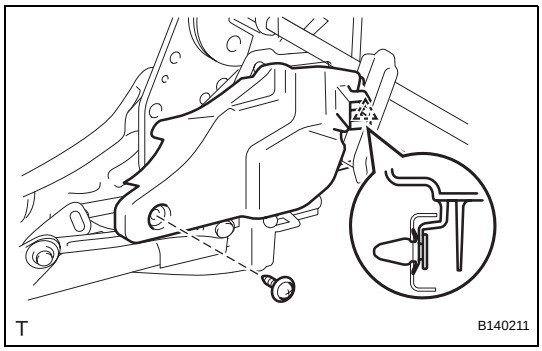

8. INSTALL REAR SEAT RECLINING INNER PROTECTOR RH (w/ Rear No. 2 Seat)

(a) Attach the clip to install the inner protector.

(b) Install the screw.

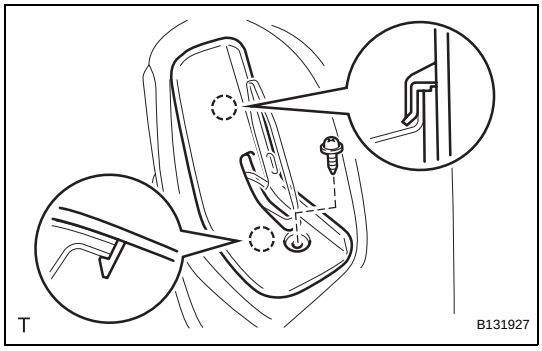

9. INSTALL REAR SEATBACK LOCK CONTROL LEVER BASE RH (w/o Rear No. 2 Seat)

(a) Attach the 2 claws to install the lever base.

(b) Install the screw.

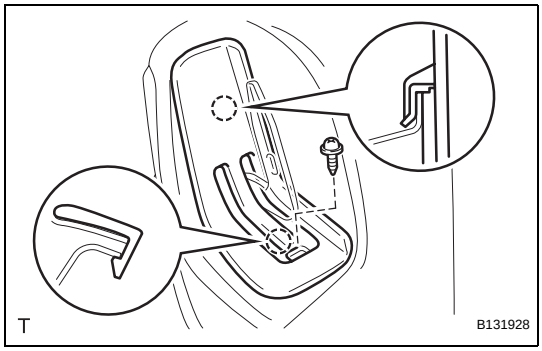

10. INSTALL REAR SEATBACK LOCK CONTROL LEVER BASE RH (w/ Rear No. 2 Seat)

(a) Attach the 2 claws to install the lever base.

(b) Install the screw.

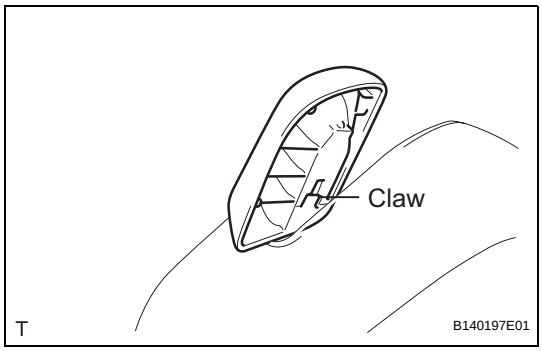

11. INSTALL REAR SEAT RECLINING RELEASE LEVER (w/o Rear No. 2 Seat)

(a) Attach the claw to install the release lever.

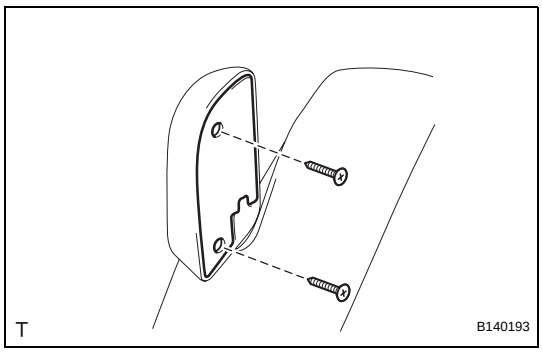

(b) Install the cover with the 2 screws.

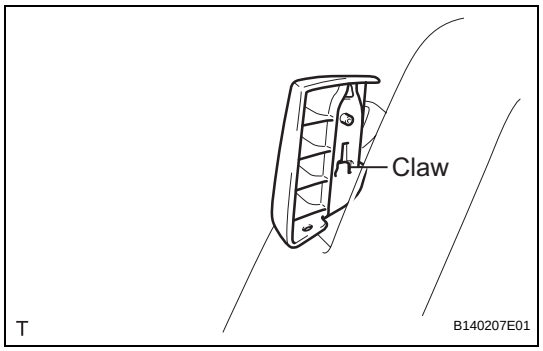

12. INSTALL REAR SEAT RECLINING CONTROL LEVER (w/ Rear No. 2 Seat)

(a) Attach the claw to install the control lever.

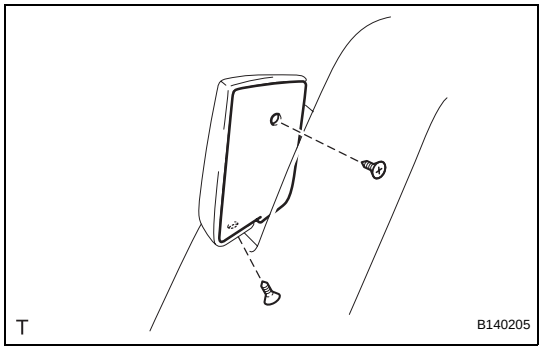

(b) Install the cover with the 2 screws.

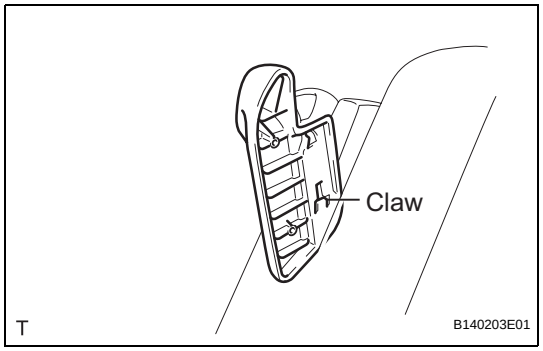

13. INSTALL REAR SEAT RECLINING RELEASE LEVER (w/ Rear No. 2 Seat)

(a) Attach the claw to install the release lever.

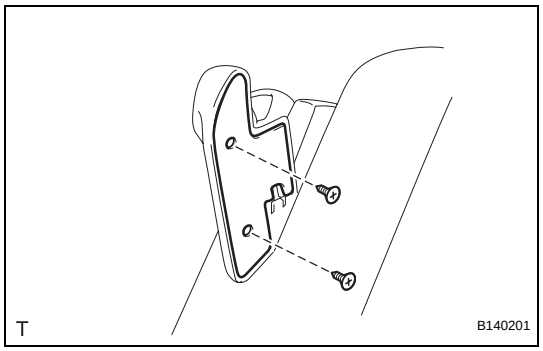

(b) Install the cover with the 2 screws.

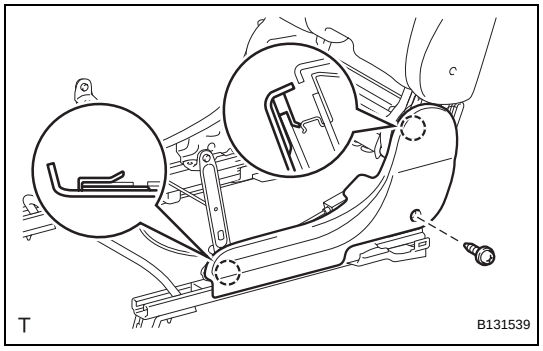

14. INSTALL REAR SEAT CUSHION REAR MOULDING RH

(a) Attach the 2 claws to install the moulding.

(b) Install the screw.

15. INSTALL REAR SEAT CUSHION MOULDING RH

HINT:

Use the same procedures described for the rear seat cushion rear moulding RH.

SE

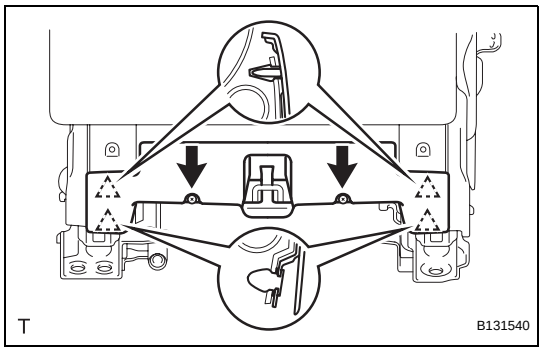

16. INSTALL REAR SEAT REAR BRACKET COVER RH

(a) Open the lower part of the seatback cover. Then attach the 4 clips to install the bracket cover.

(b) Install the 2 screws.

17. INSTALL REAR NO. 1 SEAT CUSHION COVER

NOTICE:

- **Be careful not to damage the cover.**
- **When installing the hog rings, avoid wrinkling the cover.**

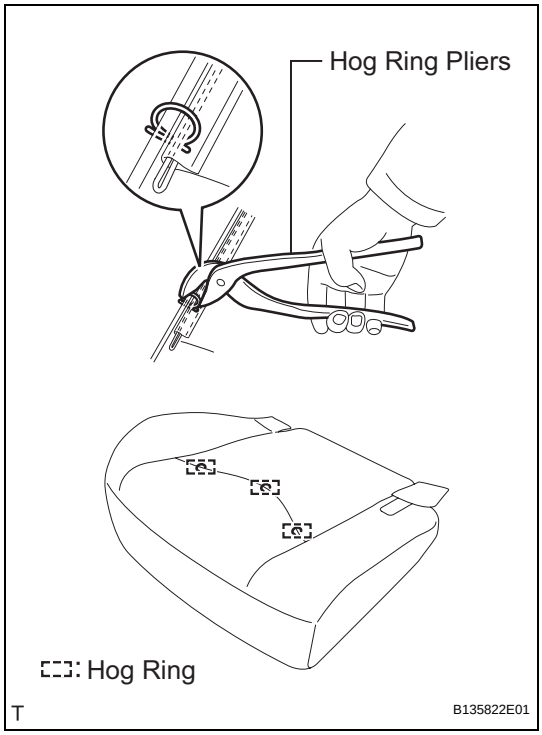

(a) Using hog ring pliers, install the seat cushion cover to the seat cushion pad with 3 new hog rings.

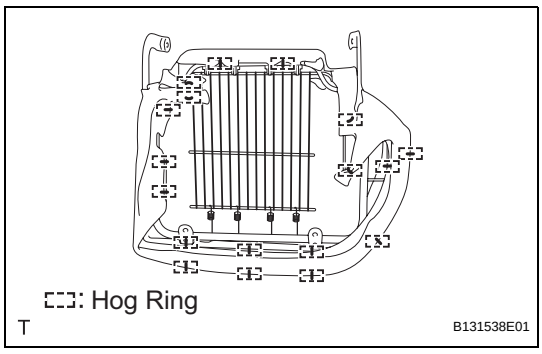

(b) Using hog ring pliers, install the seat cushion cover (with pad) to the seat cushion frame with 18 new hog rings.

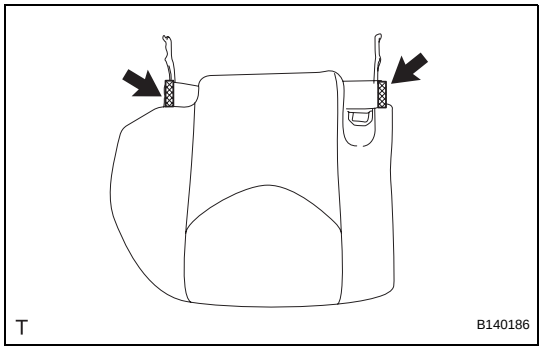

(c) Attach the 2 hooks.

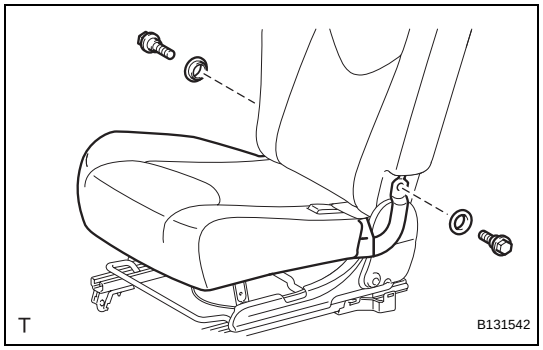

18. INSTALL REAR NO. 1 SEAT CUSHION ASSEMBLY RH

(a) Install the cushion with the 2 bushes and 2 bolts.
Torque: 21 N*m (214 kgf*cm, 15 ft.*lbf)

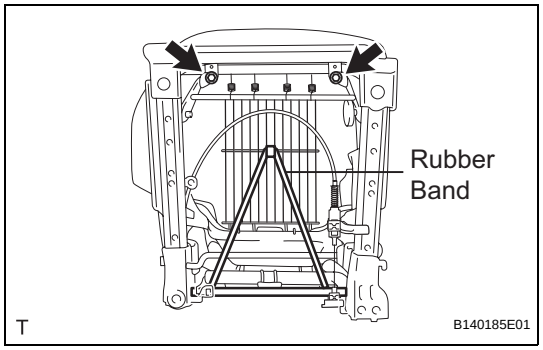

(b) Install the 2 bolts.
Torque: 21 N*m (214 kgf*cm, 15 ft.*lbf)

(c) Connect the rubber band of the seatback cover to the seat cushion frame.

19. INSTALL REAR SEAT INNER BELT ASSEMBLY RH (See page SB-41)

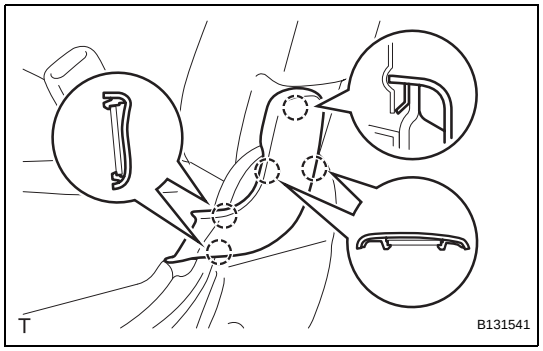

20. INSTALL REAR NO. 2 SEAT CUSHION HINGE COVER

(a) Attach the 5 claws to install the hinge cover.

21. INSTALL REAR NO. 1 SEAT CUSHION HINGE COVER

HINT:
Use the same procedures described for the rear No. 2 seat cushion hinge cover.

22. INSTALL REAR SEAT HEADREST ASSEMBLY

SE

INSTALLATION

1. INSTALL REAR NO. 1 SEAT ASSEMBLY RH (w/o Rear No. 2 Seat)

(a) Fully tilt the seatback forward.

(b) Place the seat in the cabin.

NOTICE:

Be careful not to damage the vehicle body.

(c) Connection procedures of seat to lock cable when reusing seat:

(1) Using a screwdriver, detach the claw and remove the connector case from the seat.

HINT:

Tape the screwdriver tip before use.

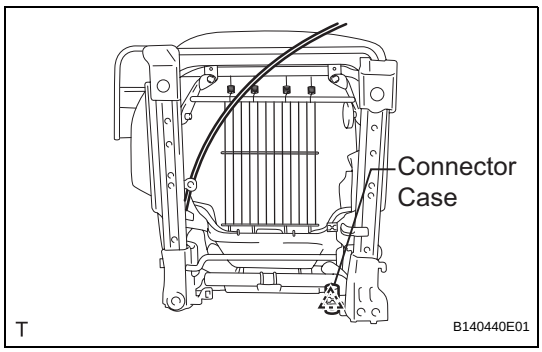

(2) Install the connector case to the body's cap.

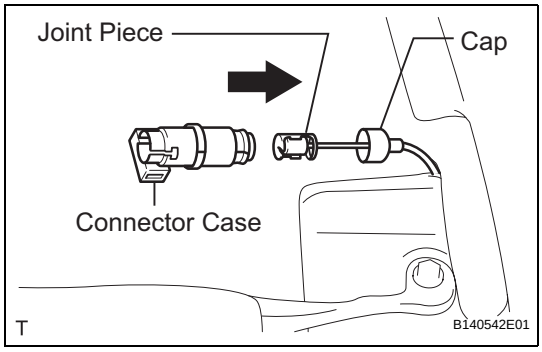

(3) Pull out the joint piece. Align the slits of the joint piece and connector case.

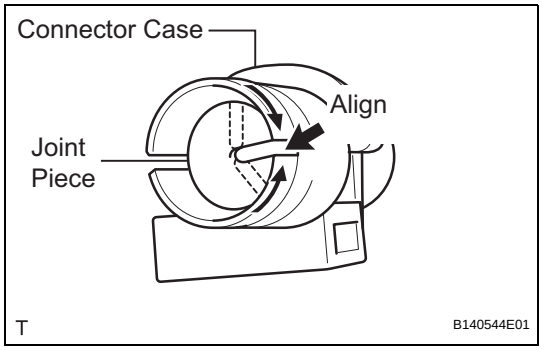

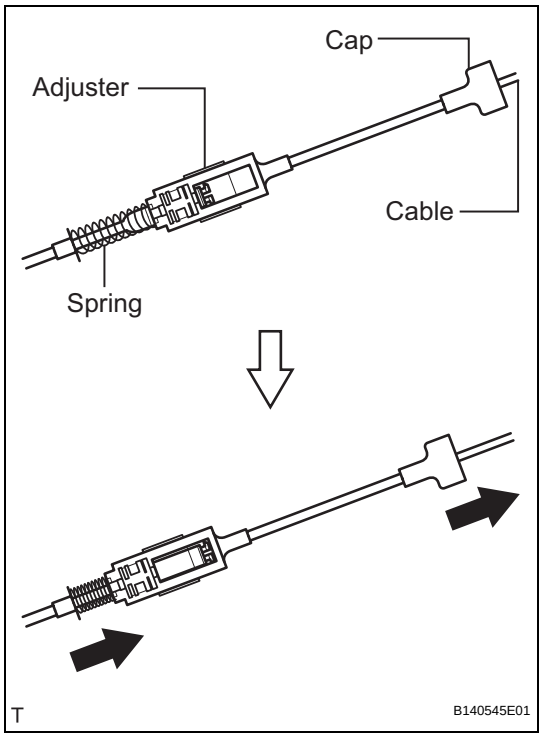

(4) Compress the spring of the adjuster, and pull out the cable from the seat's cap.
HINT:
Perform this procedure with the lock of the adjuster released.

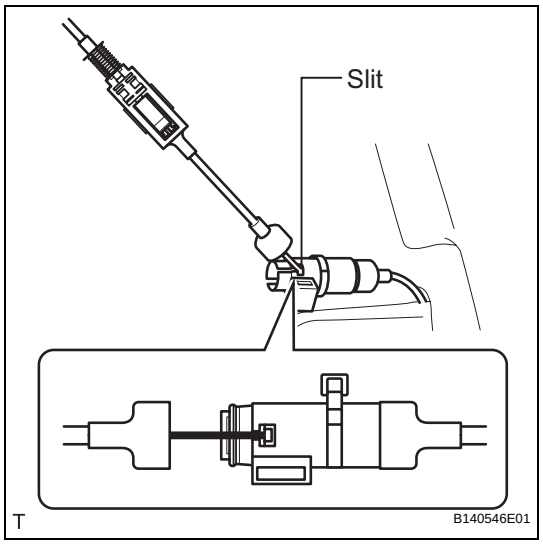

(5) Install the seat cable's end part to the connector case's slit.

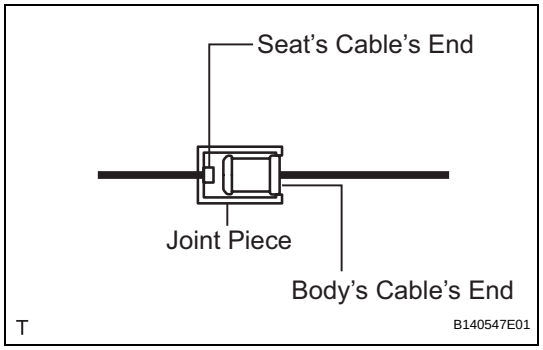

HINT:
Position the joint piece cable's end part as shown in the illustration.

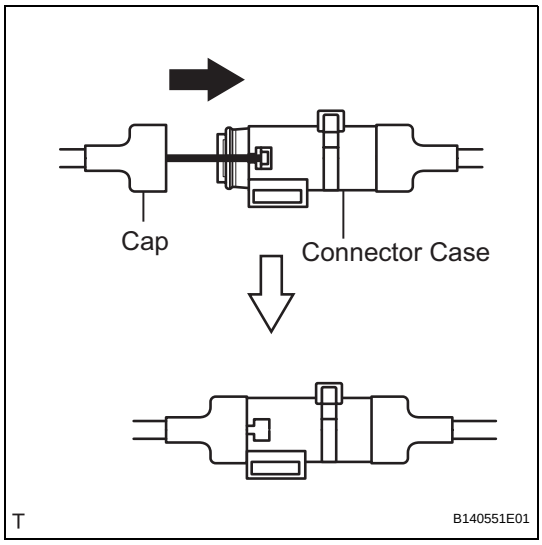

(6) Install the seat's cap to the connector case.
(7) Temporarily place the seat into the vehicle where it will be installed.

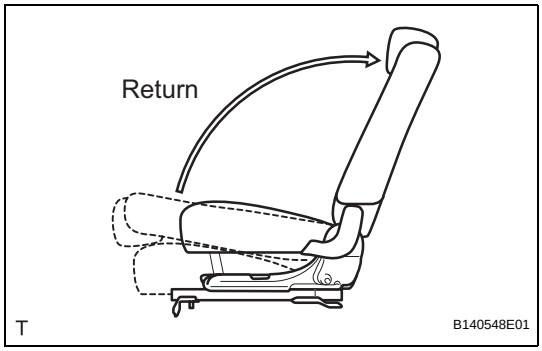

(8) Return the seatback to the upright position.

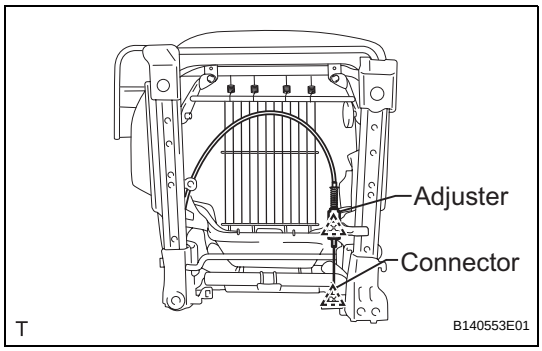

(9) Attach the claws of the connector and adjuster, and install them to the seat.

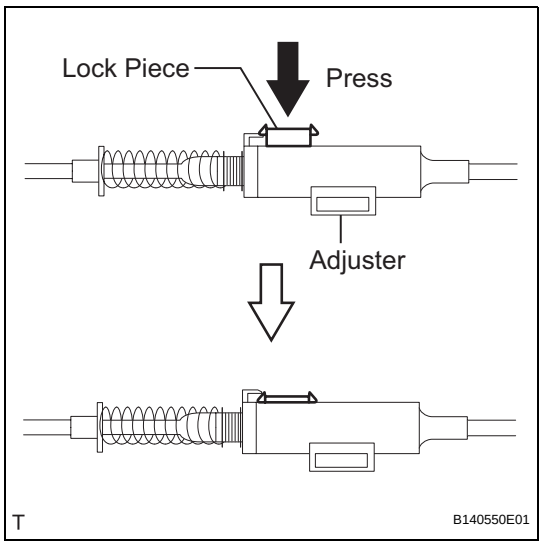

(10) Press the adjuster's lock piece to lock it.
NOTICE:
When pressing the lock piece, make sure the adjuster's spring is not compress.

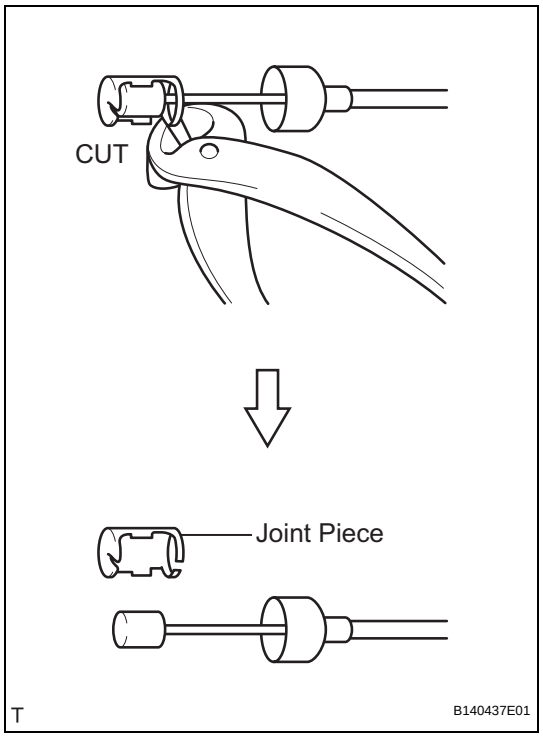

(d) Connection procedures of seat to lock cable when replacing seat:

(1) Cut the joint piece on the lock cable, and remove it.
HINT:
- A joint piece is included with new seats.
- This procedure is not necessary when the lock cable is replaced with a new one.

(2) Temporarily place the seat into the vehicle where it will be installed.

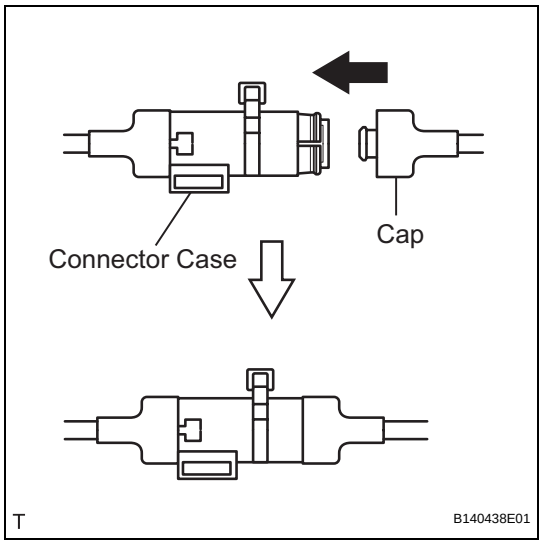

(3) Install the body's cap to the connector case.

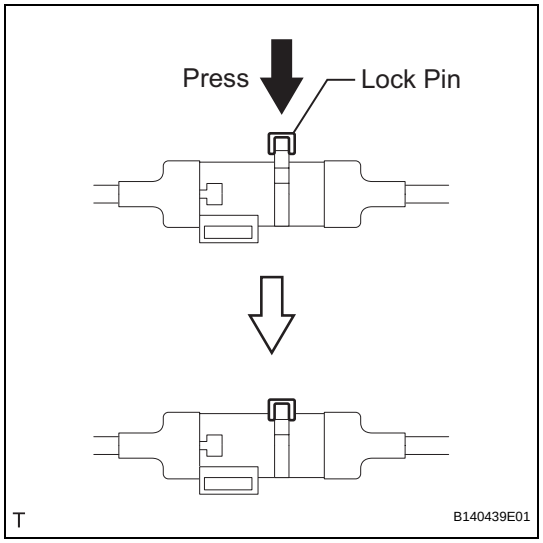

(4) Press the adjuster's lock pin.

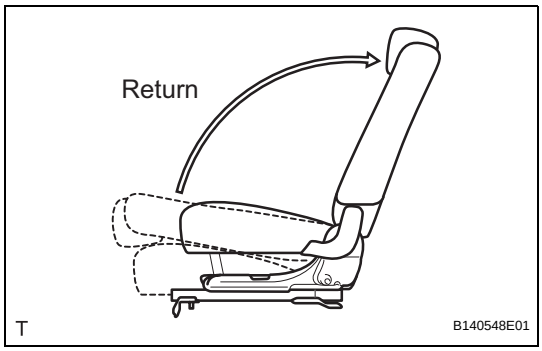

(5) Return the seatback to the upright position.

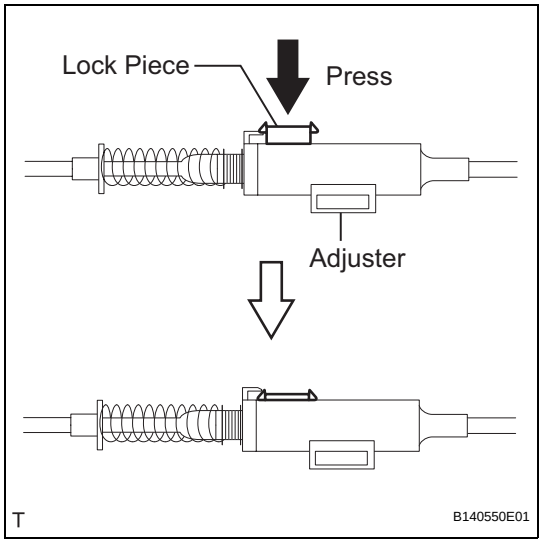

(6) Press the adjuster's lock piece to lock it.
NOTICE:
When pressing the lock piece, make sure the adjuster's spring is not compressed.

(e) Lift up the seat track adjusting handle and move the seat to the foremost position.

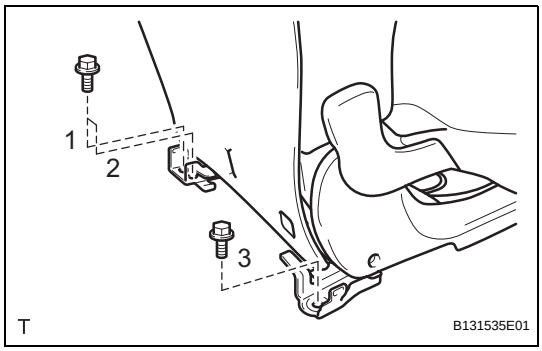

(f) Tighten the 2 bolts on the rear side of the seat.
Torque: 42 N*m (428 kgf*cm, 31 ft.*lbf)
HINT:
Tighten the bolts in the order indicated in the illustration.

(g) Lift up the seat track adjusting handle and move the seat to the rearmost position.

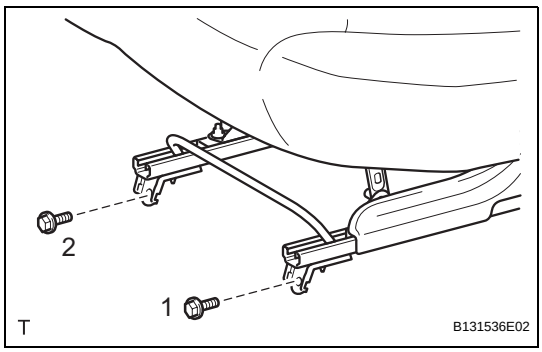

(h) Tighten the 2 bolts on the front side of the seat.
Torque: 42 N*m (428 kgf*cm, 31 ft.*lbf)
HINT:
Tighten the bolts in the order indicated in the illustration.

2. INSTALL REAR NO. 1 SEAT ASSEMBLY RH (w/ Rear No. 2 Seat)

(a) Fully tilt the seatback forward.

(b) Place the seat in the cabin.
NOTICE:
Be careful not to damage the vehicle body.

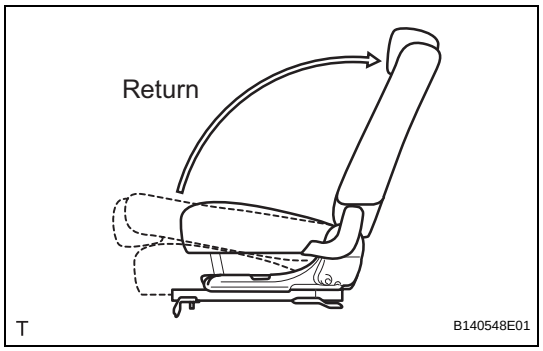

(c) Return the seatback to the upright position.
(d) Lift up the seat track adjusting handle and move the seat to the foremost position.

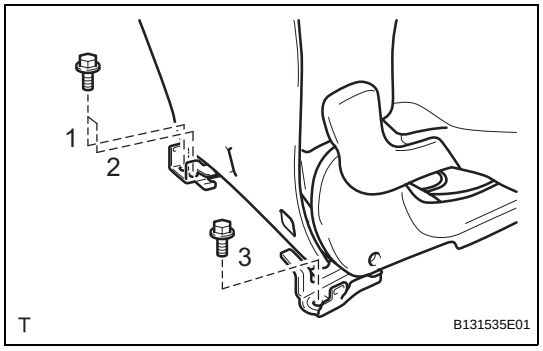

(e) Tighten the 2 bolts on the rear side of the seat.
Torque: 42 N*m (428 kgf*cm, 31 ft.*lbf)
HINT:
Tighten the bolts in the order indicated in the illustration.
(f) Lift up the seat track adjusting handle and move the seat to the rearmost position.

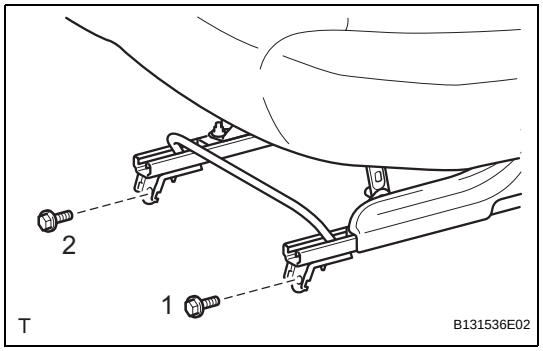

(g) Tighten the 2 bolts on the front side of the seat.
Torque: 42 N*m (428 kgf*cm, 31 ft.*lbf)
HINT:
Tighten the bolts in the order indicated in the illustration.

3. INSTALL REAR NO. 1 SEAT LOCK CABLE ASSEMBLY (w/o Rear No. 2 Seat)

(a) Attach the clamps and install the cable to the vehicle body.

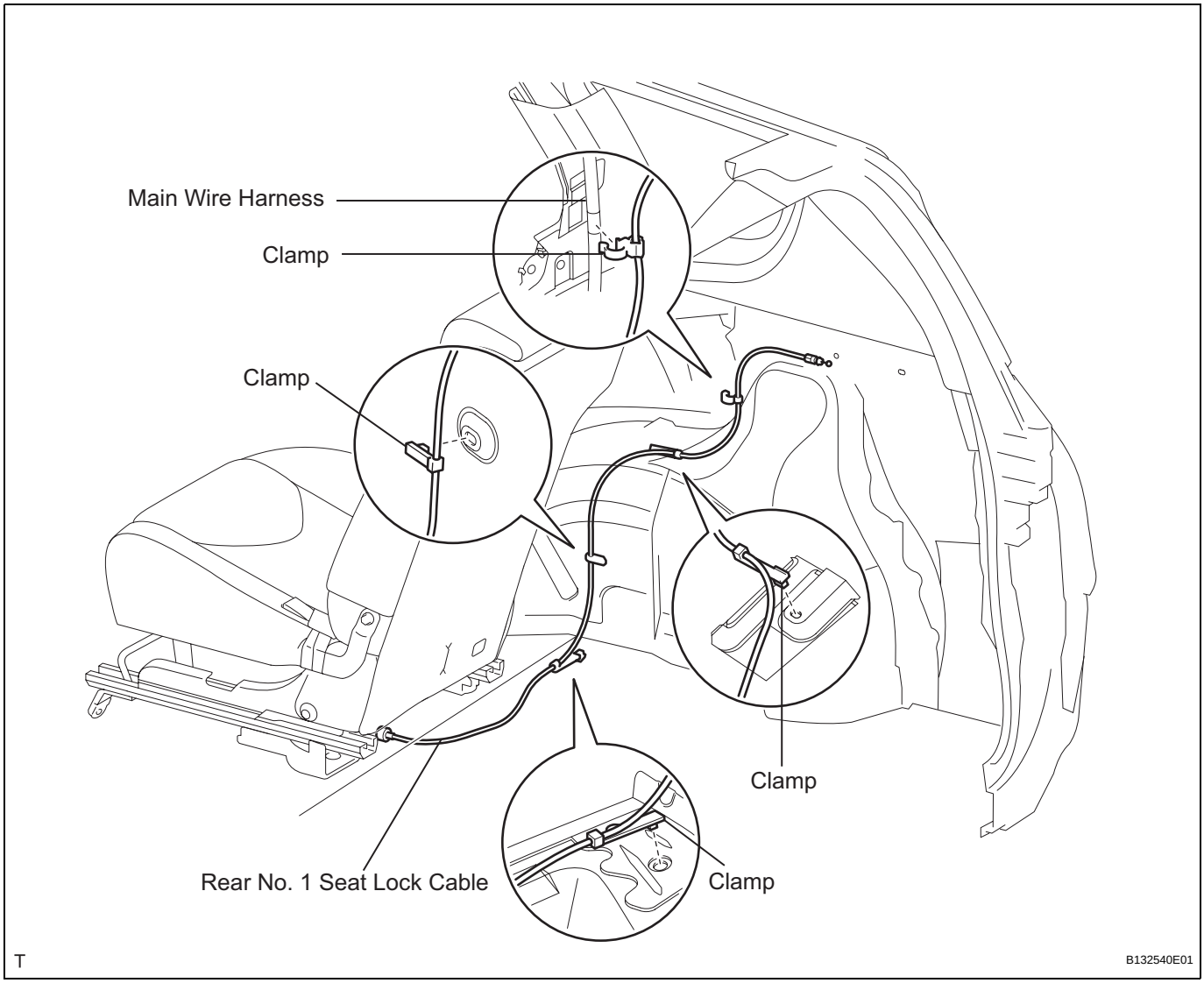

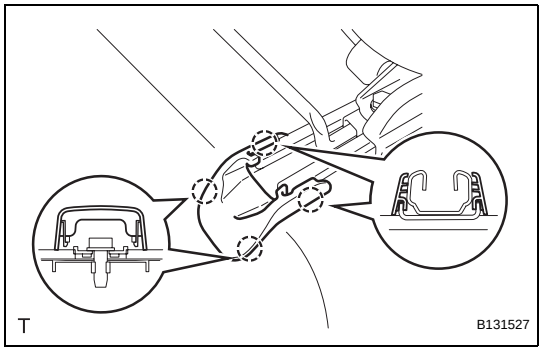

4. INSTALL REAR SEAT LEG COVER

(a) Attach the 8 claws to install the 2 leg covers.

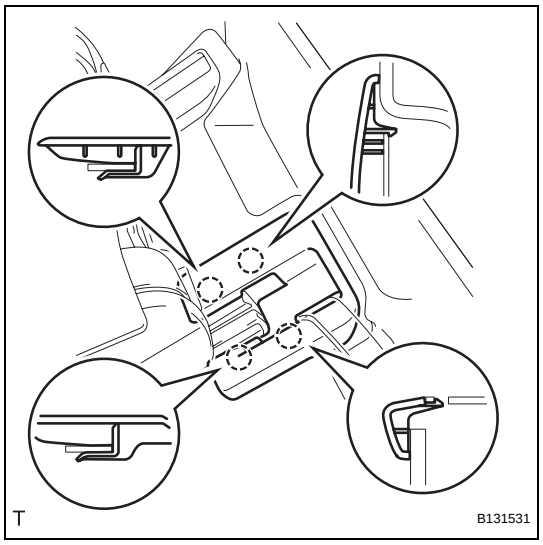

5. INSTALL REAR NO. 3 SEAT LEG SIDE COVER (w/ Rear No. 2 Seat)

(a) Attach the 4 claws to install the rear No. 3 seat leg side cover.

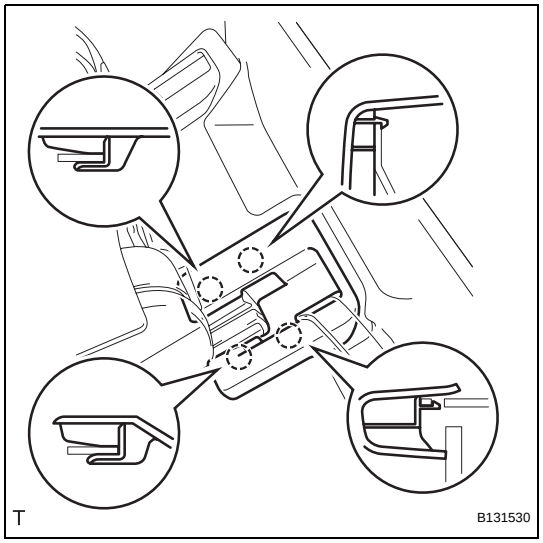

6. INSTALL REAR NO. 3 SEAT LEG SIDE COVER (w/o Rear No. 2 Seat)

(a) Attach the 4 claws to install the No. 3 rear seat leg side cover.

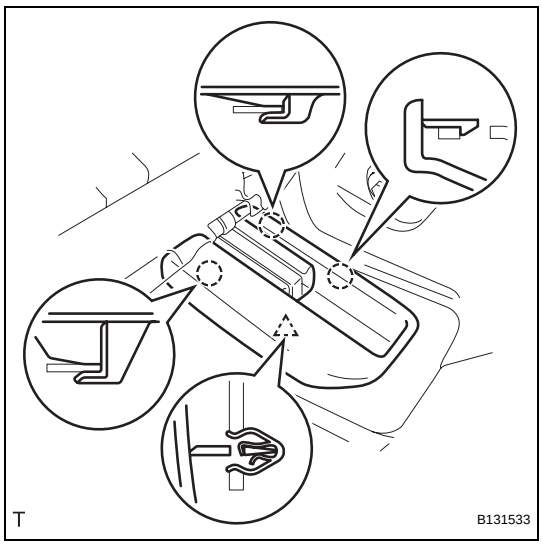

7. INSTALL REAR NO. 2 SEAT LEG SIDE COVER

(a) Attach the 3 claws and clip to install the rear No. 2 seat leg side cover.

8. INSTALL RECLINING REMOTE CONTROL LEVER SUB-ASSEMBLY RH (w/o Rear No. 2 Seat)

(a) Connect the rear No. 1 seat lock cable to the lever.

SE

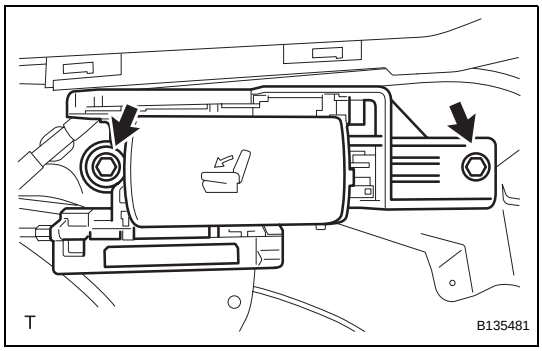

(b) Install the lever with the 2 bolts.
Torque: 18 N*m (184 kgf*cm, 13 ft.*lbf)

9. **INSTALL DECK TRIM SIDE PANEL ASSEMBLY RH (w/o Rear No. 2 Seat) (See page IR-53)**

10. **INSTALL TETHER ANCHOR BRACKET SUB-ASSEMBLY (w/o Rear No. 2 Seat) (See page IR-54)**

SE

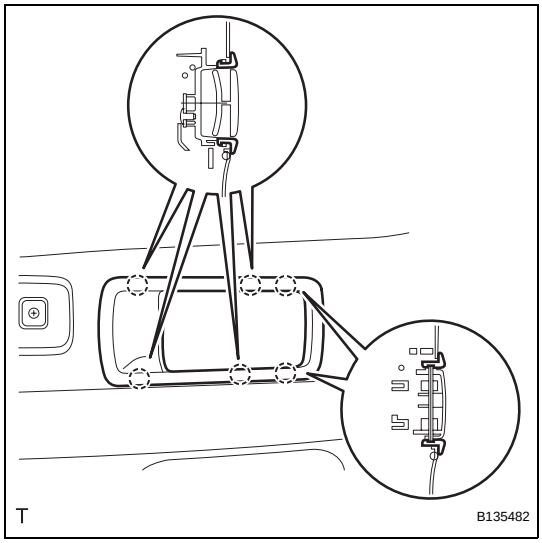

11. **INSTALL RECLINING REMOTE CONTROL LEVER BEZEL RH (w/o Rear No. 2 Seat)**
(a) Attach the 6 claws to install the bezel.

12. **INSTALL REAR FLOOR FINISH PLATE (w/o Rear No. 2 Seat) (See page IR-55)**

13. **INSTALL BACK DOOR WEATHERSTRIP (w/o Rear No. 2 Seat)**

14. **INSTALL REAR FLOOR NO. 1 MAT SUPPORT SIDE PLATE (w/o Rear No. 2 Seat) (See page IR-55)**

15. **INSTALL REAR FLOOR NO. 3 BOARD (w/o Rear No. 2 Seat)**

16. **INSTALL REAR FLOOR NO. 2 BOARD (w/o Rear No. 2 Seat)**

17. **INSTALL DECK BOARD ASSEMBLY (w/o Rear No. 2 Seat)**

18. **INSTALL REAR FLOOR NO. 1 BOARD (w/o Rear No. 2 Seat)**

19. **INSTALL TONNEAU COVER ASSEMBLY (w/o Rear No. 2 Seat)**

20. **INSTALL PACKAGE TRAY TRIM POCKET SUB-ASSEMBLY (w/o Rear No. 2 Seat)**

REAR NO. 1 SEAT ASSEMBLY (for RH Side)

COMPONENTS

w/o Rear No. 2 Seat

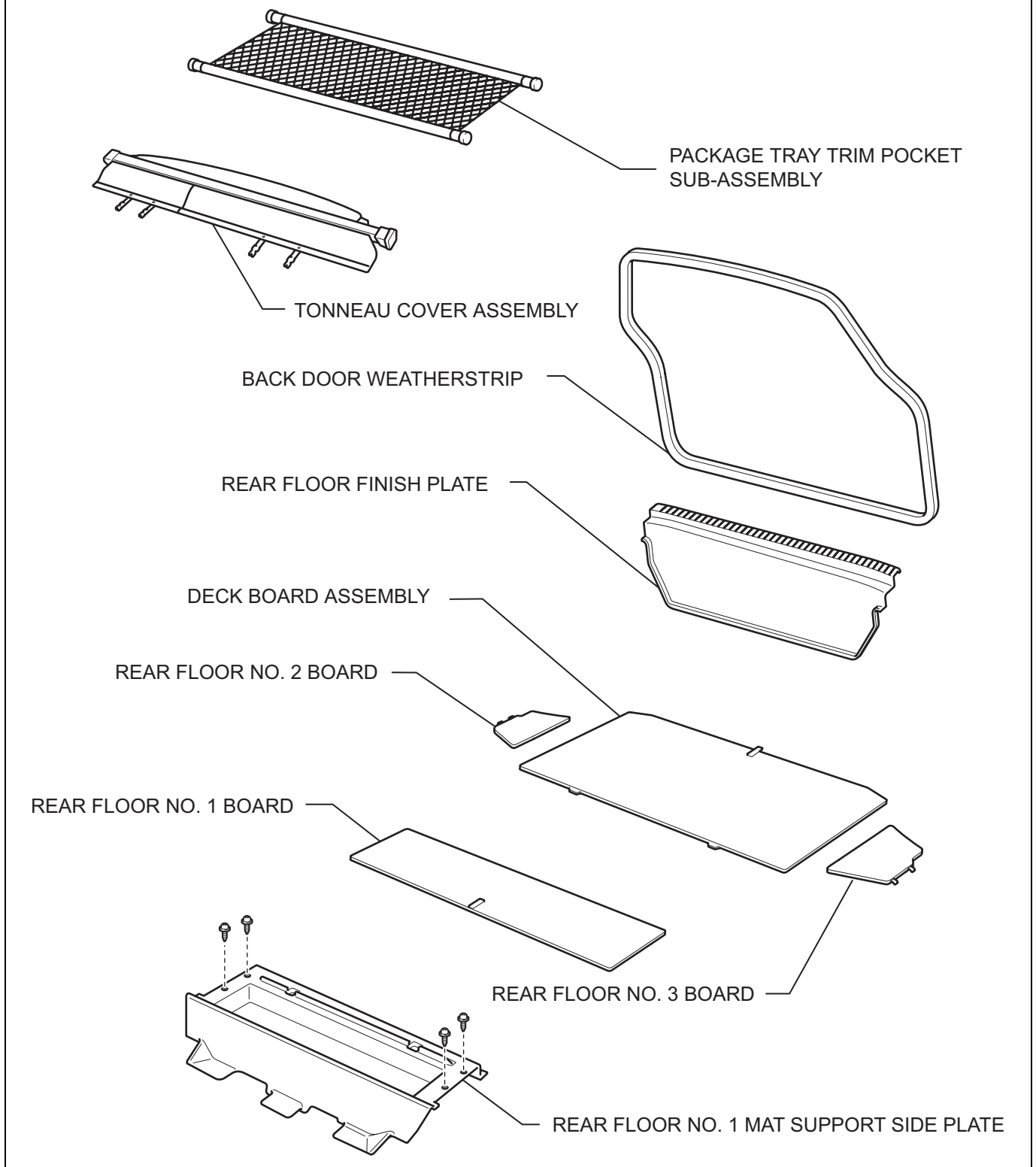

T

B130111E10

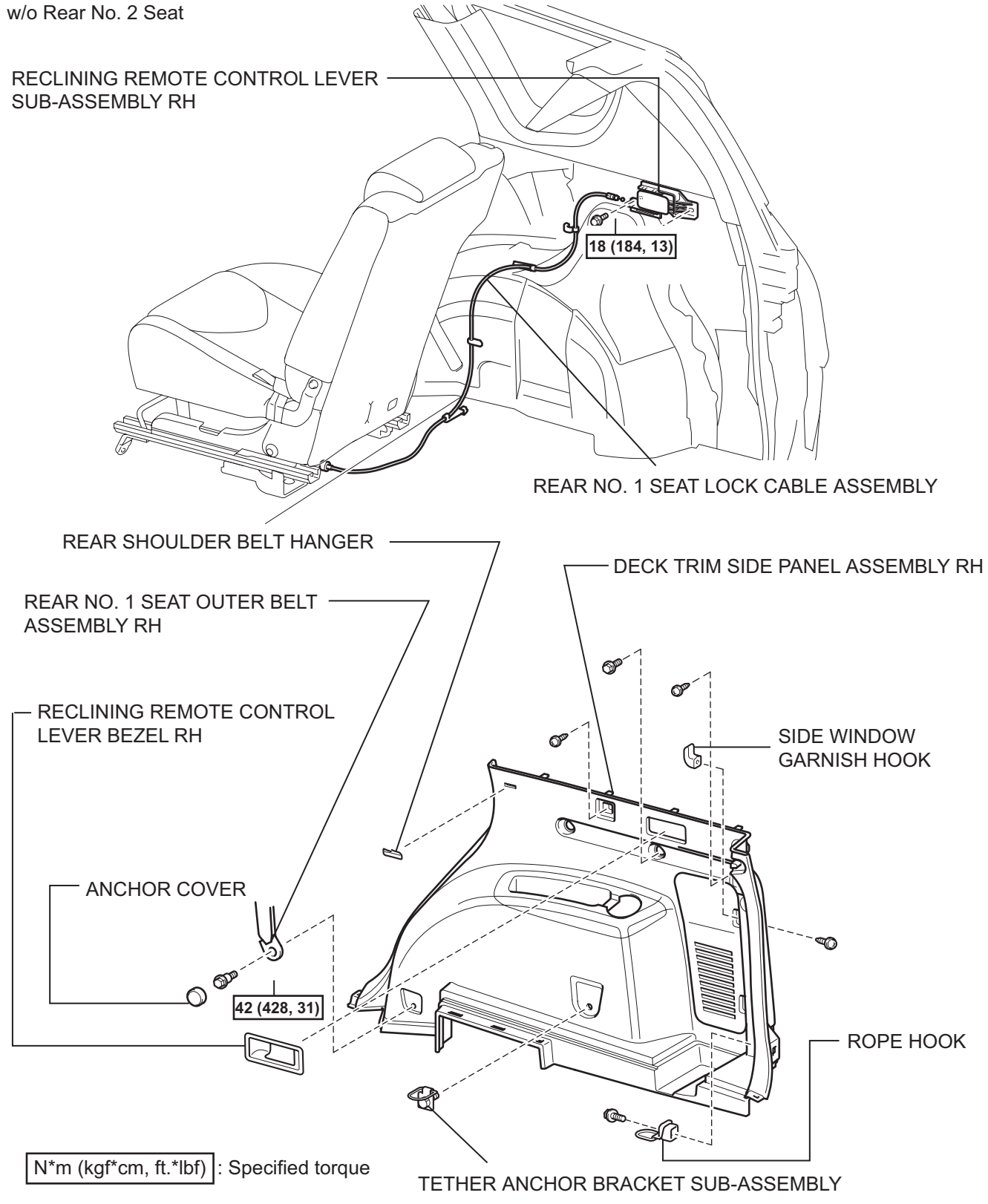

T

B132536E01

SE

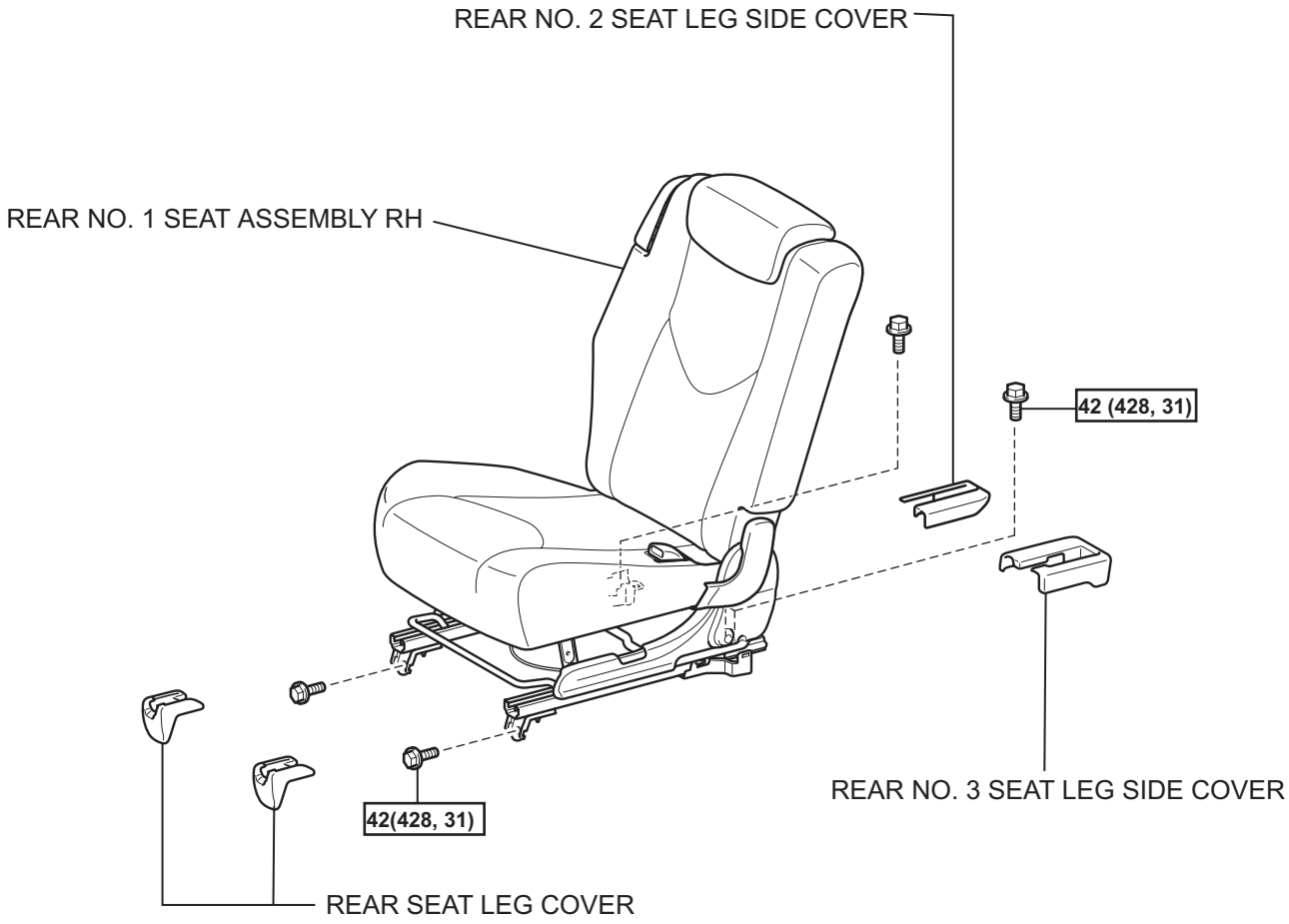

N*m (kgf*cm, ft.*lbf) : Specified torque

T

B131526E07

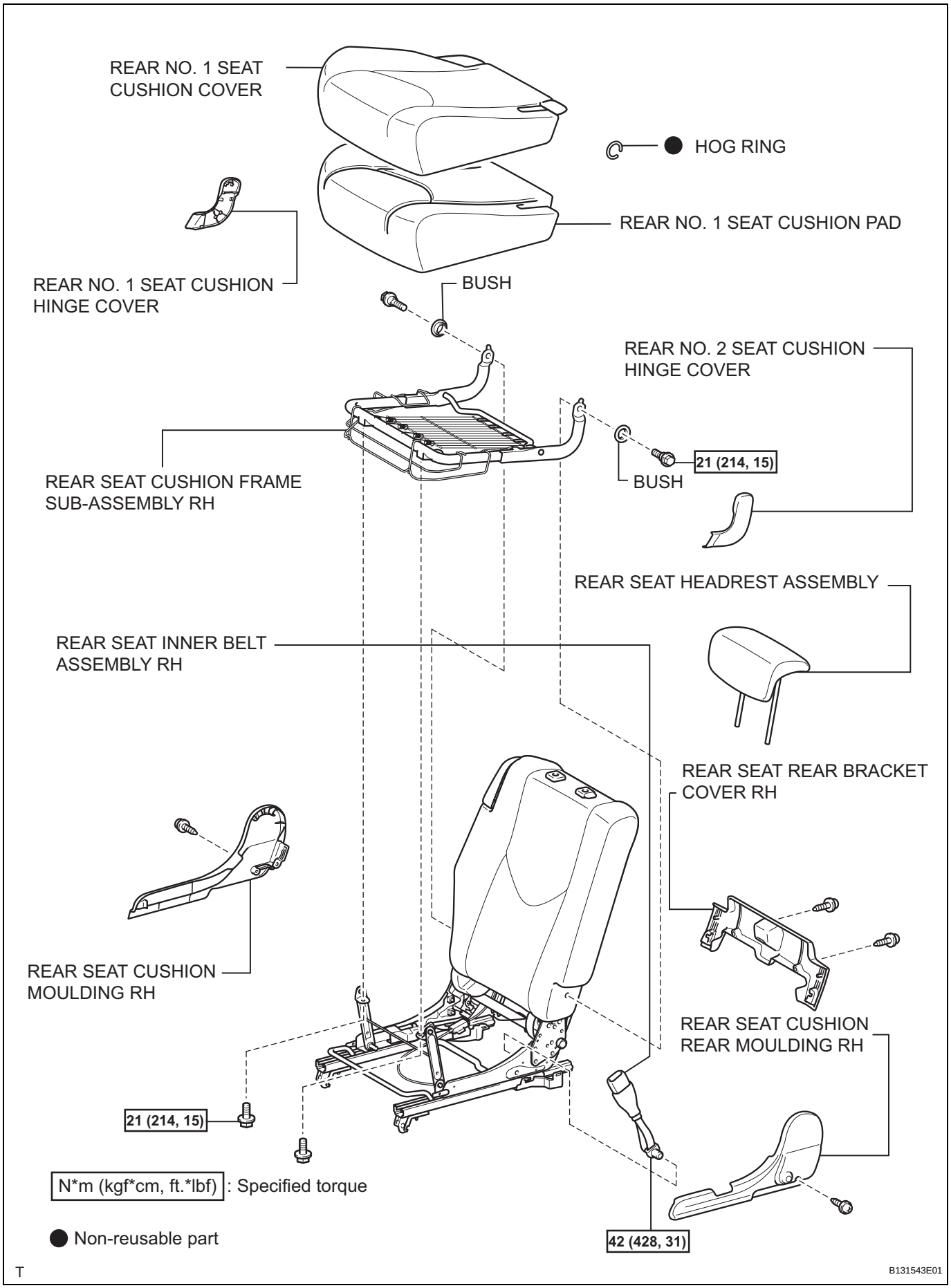
REAR NO. 1 SEAT CUSHION COVER
HOG RING
REAR NO. 1 SEAT CUSHION PAD
REAR NO. 1 SEAT CUSHION HINGE COVER
BUSH
REAR NO. 2 SEAT CUSHION HINGE COVER
21 (214, 15)
BUSH
REAR SEAT CUSHION FRAME SUB-ASSEMBLY RH
REAR SEAT HEADREST ASSEMBLY
REAR SEAT INNER BELT ASSEMBLY RH
REAR SEAT REAR BRACKET COVER RH
REAR SEAT CUSHION MOULDING RH
REAR SEAT CUSHION REAR MOULDING RH
21 (214, 15)
42 (428, 31)
N*m (kgf*cm, ft.*lbf) : Specified torque
Non-reusable part
T
B131543E01

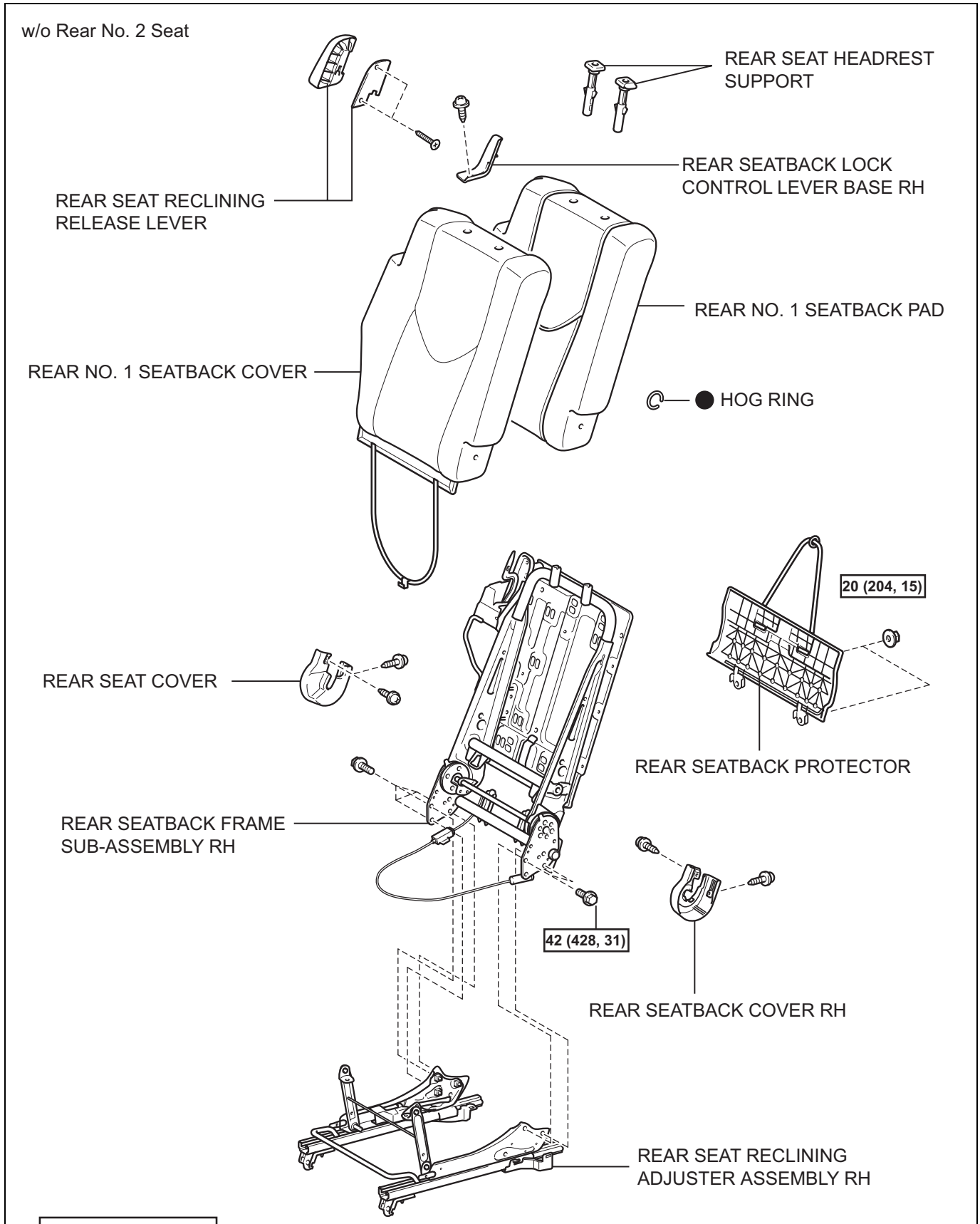
w/o Rear No. 2 Seat
REAR SEAT HEADREST SUPPORT
REAR SEATBACK LOCK CONTROL LEVER BASE RH
REAR SEAT RECLINING RELEASE LEVER
REAR NO. 1 SEATBACK PAD
REAR NO. 1 SEATBACK COVER
HOG RING
20 (204, 15)
REAR SEAT COVER
REAR SEATBACK PROTECTOR
REAR SEATBACK FRAME SUB-ASSEMBLY RH
42 (428, 31)
REAR SEATBACK COVER RH
REAR SEAT RECLINING ADJUSTER ASSEMBLY RH
N*m (kgf*cm, ft.*lbf) : Specified torque
Non-reusable part
T
B131926E01

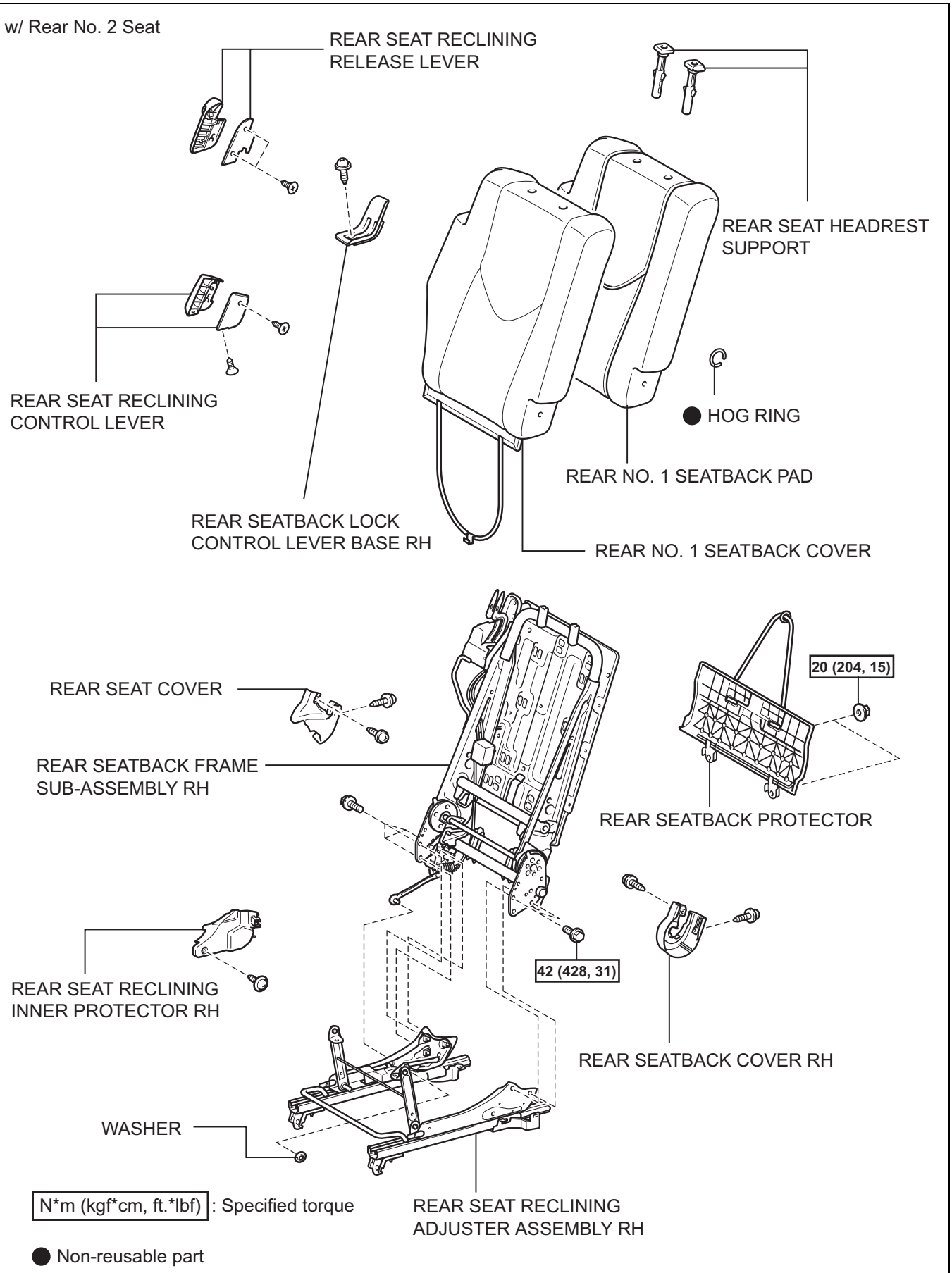
w/ Rear No. 2 Seat
REAR SEAT RECLINING RELEASE LEVER
REAR SEAT HEADREST SUPPORT
REAR SEAT RECLINING CONTROL LEVER
HOG RING
REAR NO. 1 SEATBACK PAD
REAR SEATBACK LOCK CONTROL LEVER BASE RH
REAR NO. 1 SEATBACK COVER
REAR SEAT COVER
20 (204, 15)
REAR SEATBACK FRAME SUB-ASSEMBLY RH
REAR SEATBACK PROTECTOR
42 (428, 31)
REAR SEAT RECLINING INNER PROTECTOR RH
REAR SEATBACK COVER RH
WASHER
N*m (kgf*cm, ft.*lbf) : Specified torque
REAR SEAT RECLINING ADJUSTER ASSEMBLY RH
Non-reusable part
T
B140184E01

REMOVAL

HINT:

- Use the same procedures for the RH side and LH side.
- The procedures listed below are for the RH side.

1. REMOVE NO. 2 SEAT HINGE COVER LH

(a) Fully tilt the seatback forward.

(b) Attach the 2 claws and clip.

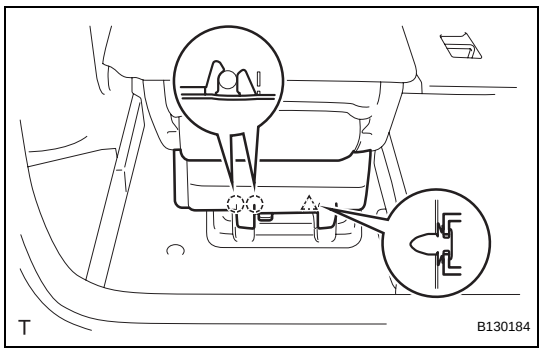

(c) Pull the hinge cover in the direction indicated by the arrow in the illustration to detach the 2 claws. Then, remove the hinge cover.

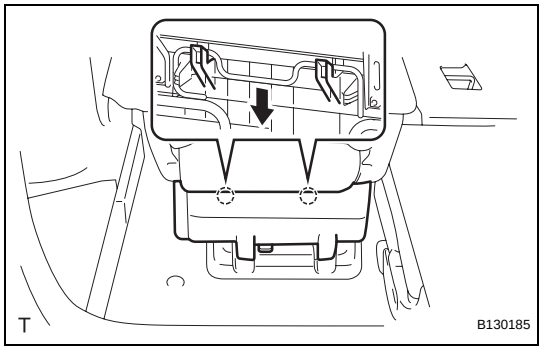

2. REMOVE NO. 2 SEAT LEG COVER LH

(a) Using a screwdriver, detach the 5 claws and remove the leg cover.
HINT:
Tape the screwdriver tip before use.

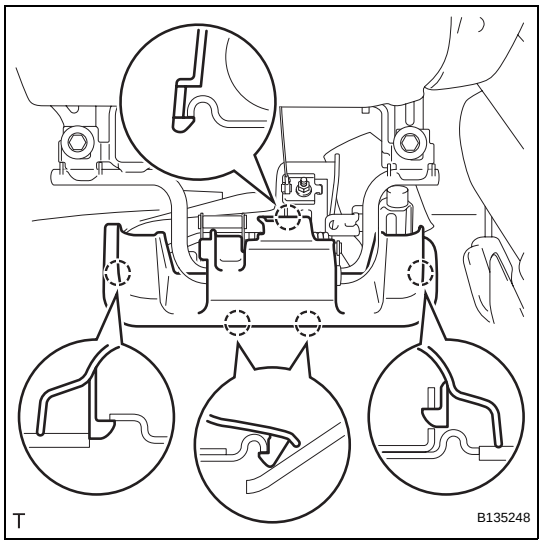

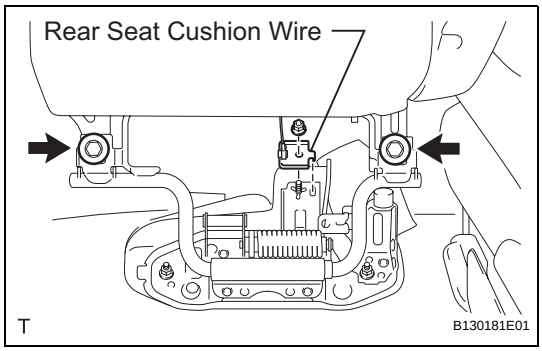

3. REMOVE REAR NO. 2 SEAT ASSEMBLY

(a) Remove the nut and rear seat cushion wire.

(b) Remove the 2 bolts. Then disconnect the seat from the rear No. 2 seat link.

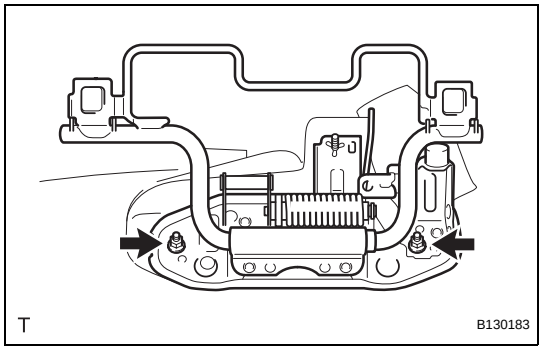

(c) Remove the 2 nuts and the rear No. 2 seat link.

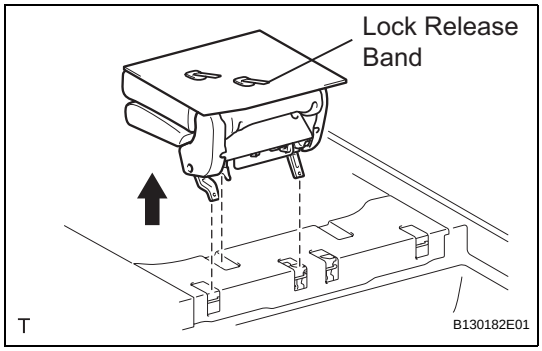

(d) Pull the lock release band backward and release the 3 seat cushion locks from the lock strikers.

(e) Lift up and remove the seat.

NOTICE:

Be careful not to damage the vehicle body,

4. REMOVE REAR NO. 1 FLOOR MAT SUPPORT SIDE PLATE

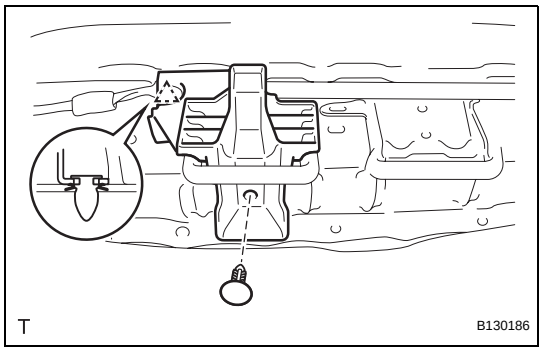

5. REMOVE NO. 2 SEAT LEG BOX PROTECTOR.

(a) Using a clip remover, remove the clip.

(b) Detach the clip. Then remove the protector.

DISASSEMBLY

HINT:
- Use the same procedures for the RH side and LH side.
- The procedures listed below are for the LH side.

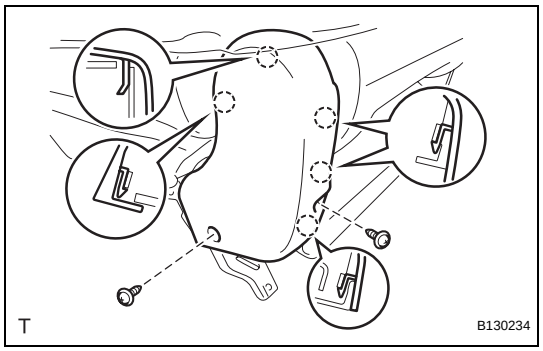

1. REMOVE NO. 1 REAR SEAT RECLINING COVER LH

(a) Remove the 2 screws.

(b) Using a screwdriver, detach the 5 claws and remove the cover.
HINT:
Tape the screwdriver tip before use.

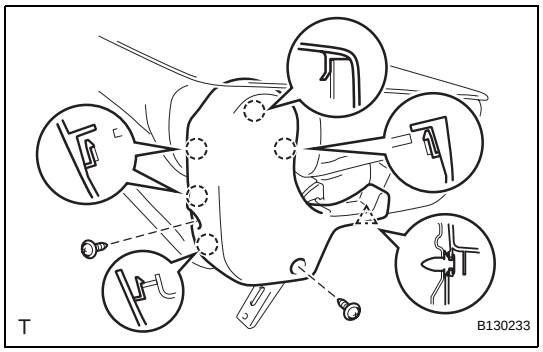

2. REMOVE NO. 2 REAR SEAT RECLINING COVER LH

(a) Remove the 2 screws.

(b) Using a screwdriver, detach the 5 claws and clip, and remove the cover.
HINT:
Tape the screwdriver tip before use.

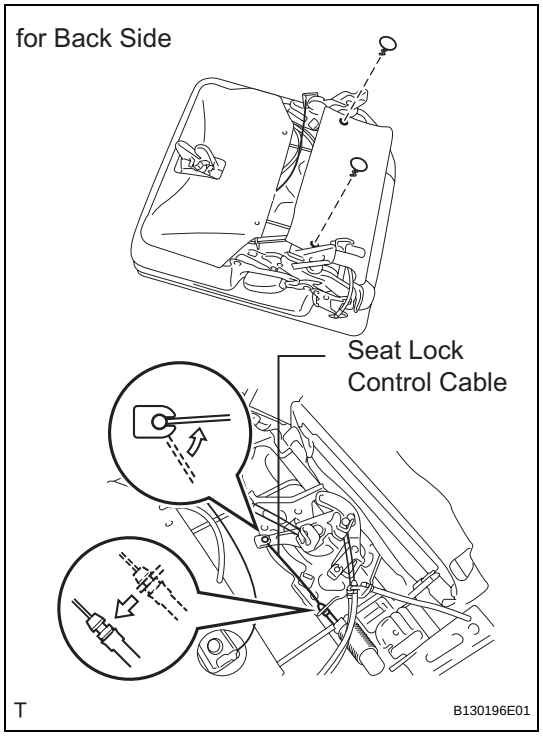

3. REMOVE REAR NO. 2 SEAT CUSHION ASSEMBLY

(a) Using a clip remover, remove the 2 clips of the seat cushion back side. Then open the seat cushion cover.

(b) Disconnect the seat lock control cable on the back side from the seat cushion as shown in the illustration.

SE

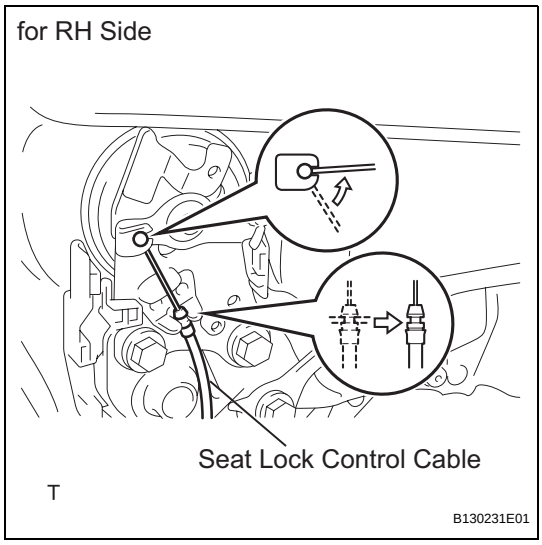

(c) Disconnect the seat lock control cable on the RH side from the seatback as shown in the illustration.

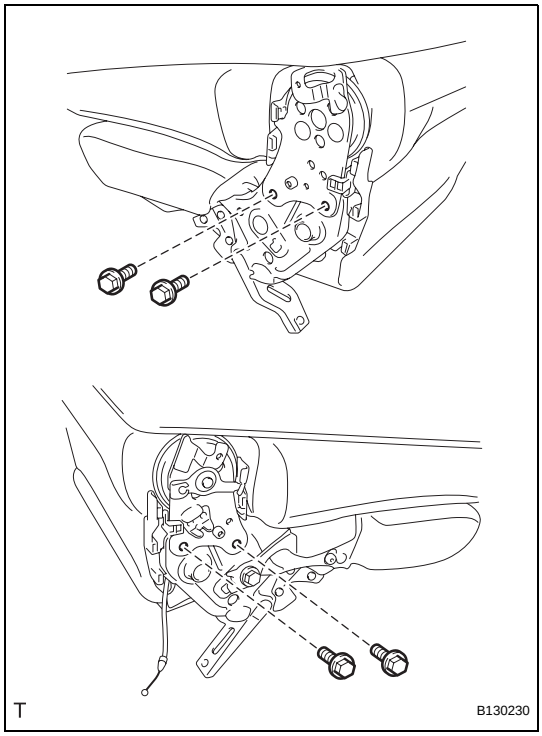

(d) Remove the 4 bolts and seat cushion.

4. REMOVE REAR NO. 2 SEAT INNER BELT ASSEMBLY LH (See page SE-110)

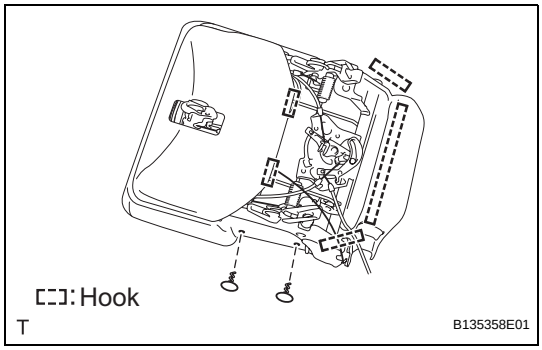

5. REMOVE REAR NO. 2 SEAT CUSHION COVER LH

(a) Using a clip remover, remove the 2 clips.

(b) Using a screwdriver, detach the 5 hooks.
HINT:
Tape the screwdriver tip before use.

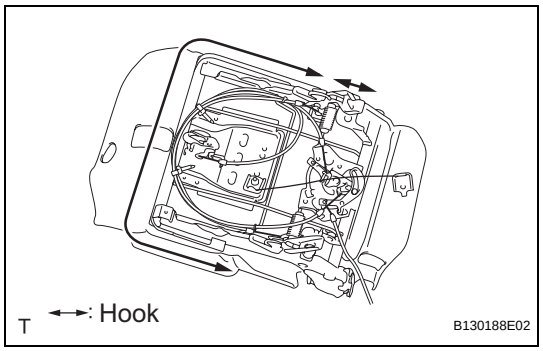

(c) Using a screwdriver, detach the hooks and remove the seat cushion cover (with pad) from the seat cushion spring.

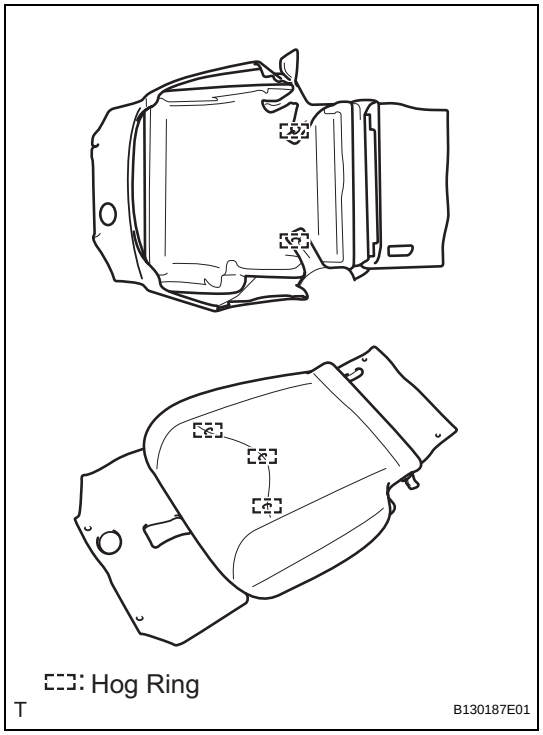

(d) Remove the 5 hog rings and seat cushion cover from the seat cushion pad.

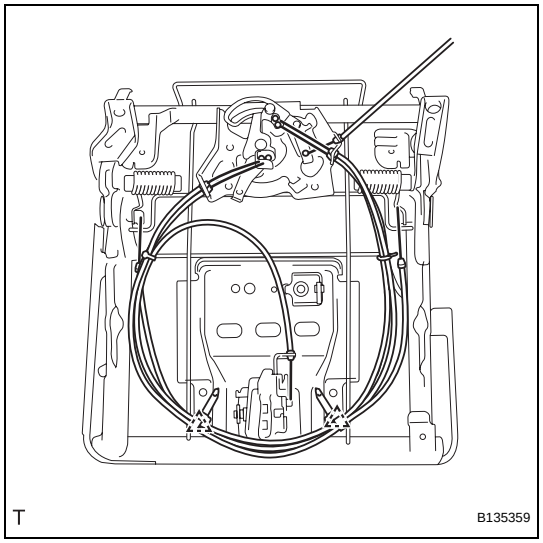

6. REMOVE SEAT LOCK CONTROL CABLE ASSEMBLY

(a) Using a screwdriver, detach the 2 clamps of the cable tie.

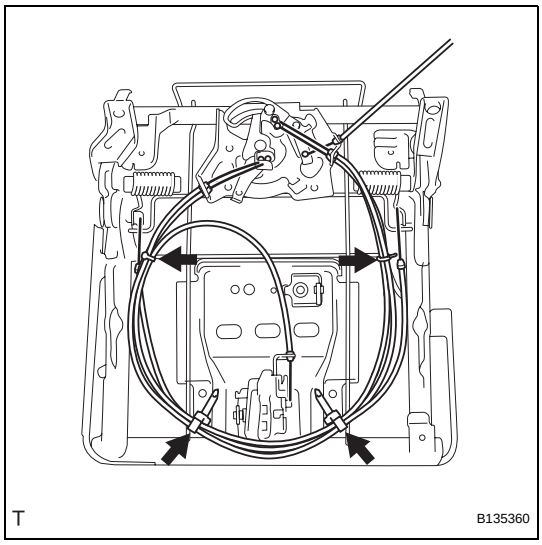

(b) Cut the 4 cable ties.
(c) Remove the 5 cables from the seat cushion spring.

7. REMOVE REAR SEAT CUSHION WIRE SUB-ASSEMBLY

(a) Remove the nut and wire.

8. REMOVE REAR NO. 2 SEAT HEADREST ASSEMBLY

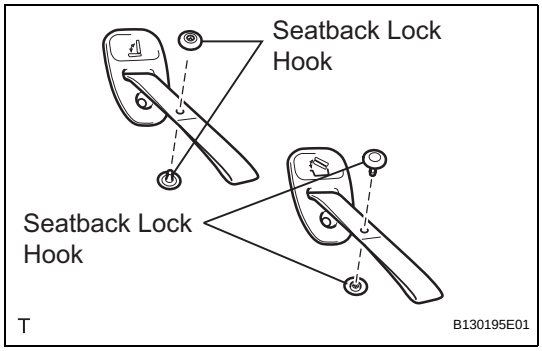

9. REMOVE REAR SEATBACK LOCK CONTROL BEZEL

(a) Remove the 4 seatback lock hooks.

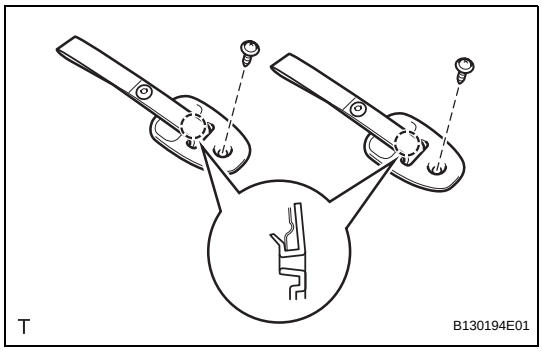

(b) Remove the 2 screws.
(c) Detach the 2 claws and remove the bezel.

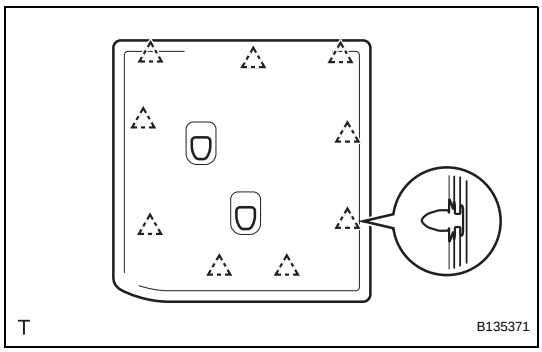

10. REMOVE REAR SEATBACK BOARD CARPET ASSEMBLY LH

(a) Using a clip remover, detach the 9 clips and remove the seatback board carpet.
NOTICE:
Be careful not to damage the seatback board carpet.

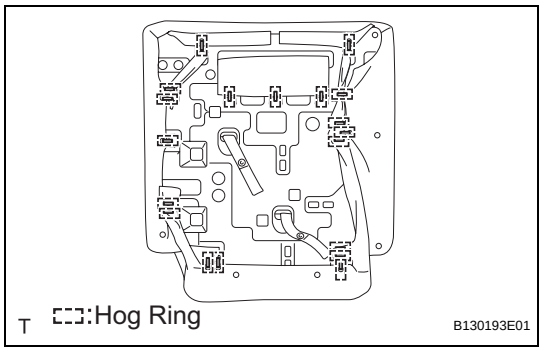

11. REMOVE REAR NO. 2 SEATBACK COVER

(a) Remove the 19 hog rings.

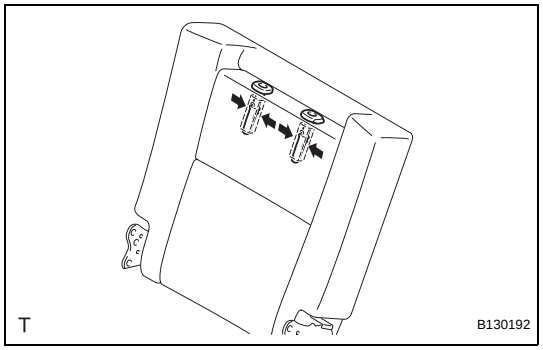

(b) Detach the 4 claws and remove the 2 headrest supports.

(c) Remove the seatback cover (with pad) from the seatback frame.

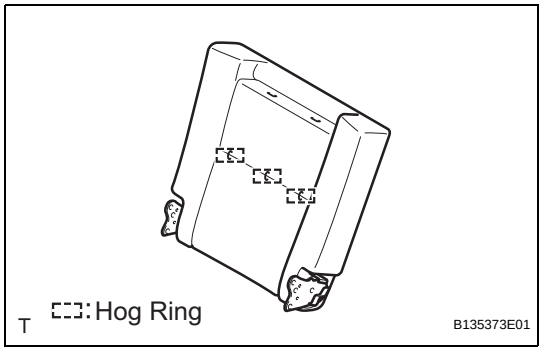

(d) Remove the 3 hog rings and seatback cover from the seatback pad.

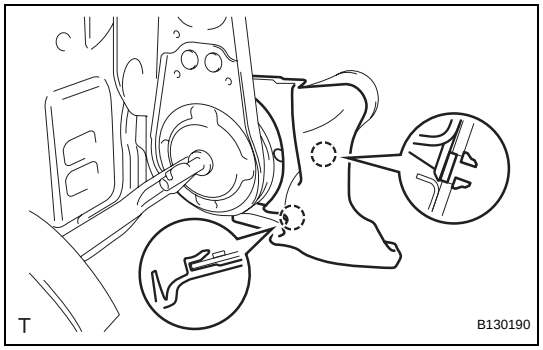

12. REMOVE REAR SEAT RECLINING INNER COVER LH

(a) Using a screwdriver, detach the 2 claws and remove the inner cover.
HINT:
Tape the screwdriver tip before use.

13. REMOVE REAR SEAT RECLINING INNER COVER RH

HINT:
Use the same procedures described for the LH side.

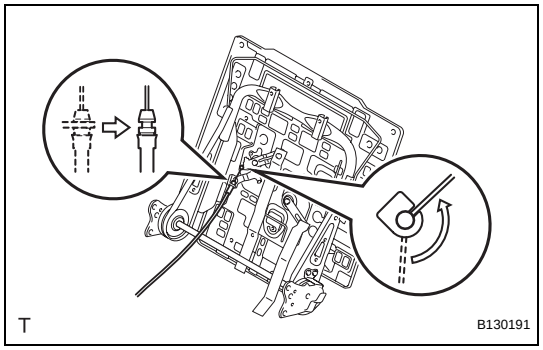

14. REMOVE SEATBACK LOCK CONTROL CABLE ASSEMBLY

(a) Remove the cable from the seatback frame as shown in the illustration.

15. REMOVE RECLINING LOCK RELEASE BAND

(a) Remove the nut and band.

16. REMOVE SEAT LOCK RELEASE BAND

(a) Remove the nut and band.

SE

REASSEMBLY

HINT:
- Use the same procedures for the RH side and LH side.
- The procedures listed below are for the LH side.

1. INSTALL SEAT LOCK RELEASE BAND

(a) Install the band with nut.
HINT:
After installing the band, feed it through the seatback frame hole towards the rear of the vehicle.

2. INSTALL RECLINING LOCK RELEASE BAND

HINT:
Use the same procedures described for the LH side.

3. INSTALL SEATBACK LOCK CONTROL CABLE ASSEMBLY

(a) Install the cable to the seatback frame as shown in the illustration.

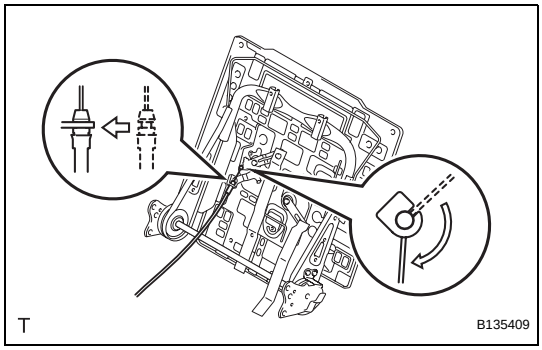

4. INSTALL REAR SEAT RECLINING INNER COVER LH

(a) Attach the 2 claws to install the inner cover.

5. INSTALL REAR SEAT RECLINING INNER COVER RH

HINT:
Use the same procedures described for the LH side.

6. INSTALL REAR NO. 2 SEATBACK COVER

NOTICE:
- **Be careful not to damage the cover.**
- **When installing the hog rings, avoid wrinkling the cover.**

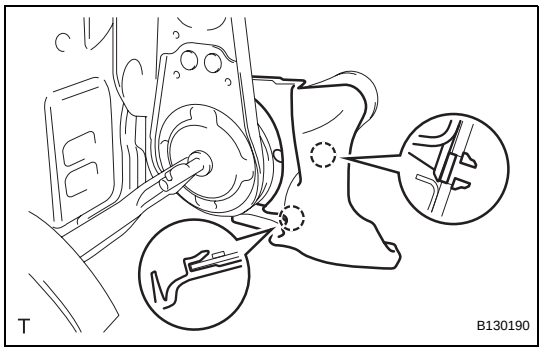

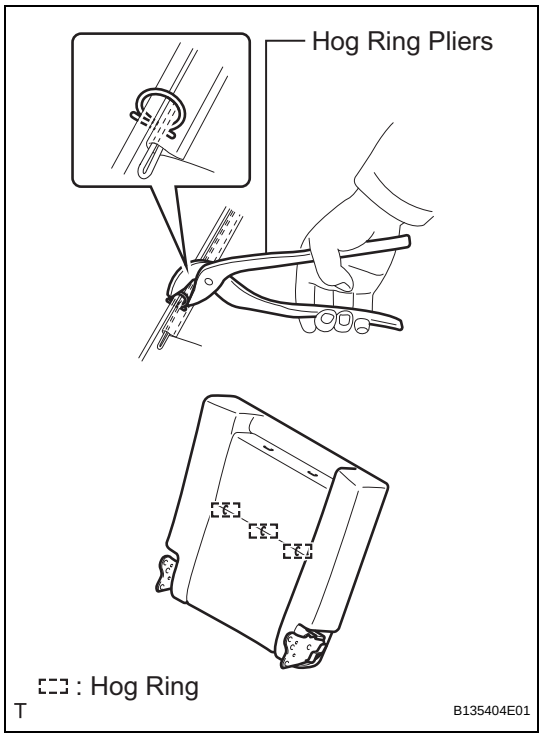

(a) Using hog ring pliers, install the seatback cover to the seatback pad with 3 new hog rings.
(b) Install the seatback cover (with pad) to the seatback frame.

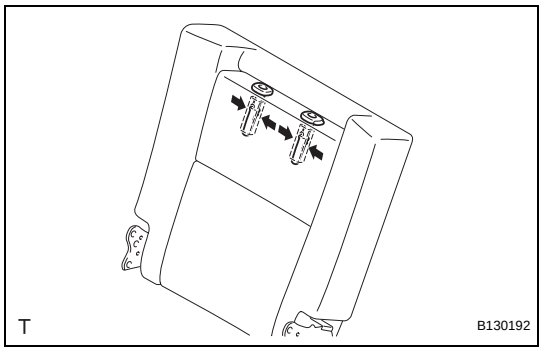

(c) Attach the 4 claws to install the 2 headrest supports.

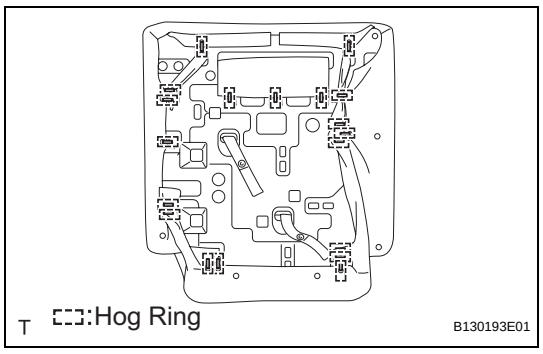

(d) Using hog ring pliers, install 19 new hog rings.

7. INSTALL REAR SEATBACK BOARD CARPET ASSEMBLY LH

(a) Pass the 2 release bands through the 2 holes in the seatback board carpet.

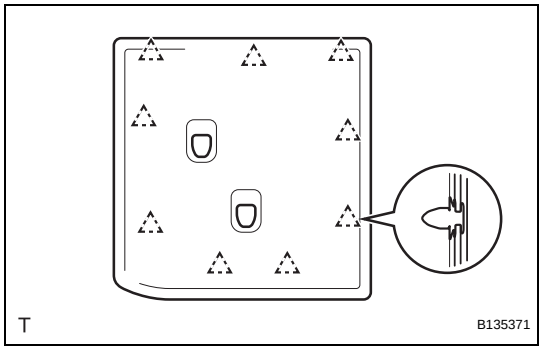

(b) Attach the 9 clips to install the carpet.
HINT:
Make sure that the release band is not inside the seatback board carpet.

SE

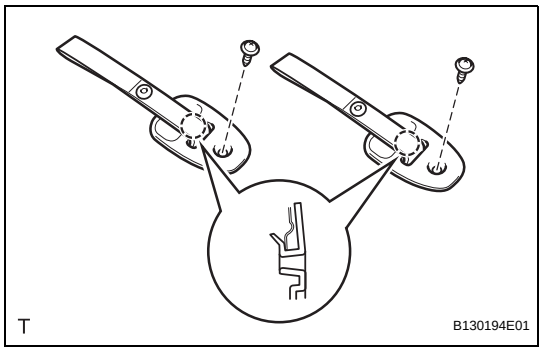

8. INSTALL REAR SEATBACK LOCK CONTROL BEZEL

(a) Pass the 2 release bands through the 2 holes in the 2 bezels.

(b) Attach the 2 claws to install the 2 bezels.

(c) Install the 2 screws.

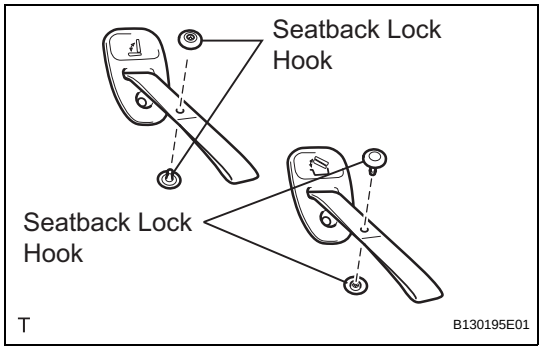

(d) Install the 4 seatback lock hooks.

9. INSTALL REAR NO. 2 SEAT HEADREST ASSEMBLY

10. INSTALL REAR SEAT CUSHION WIRE SUB-ASSEMBLY

(a) Install the wire with the nut.

Torque: 18 N*m (184 kgf*cm, 13 ft.*lbf)

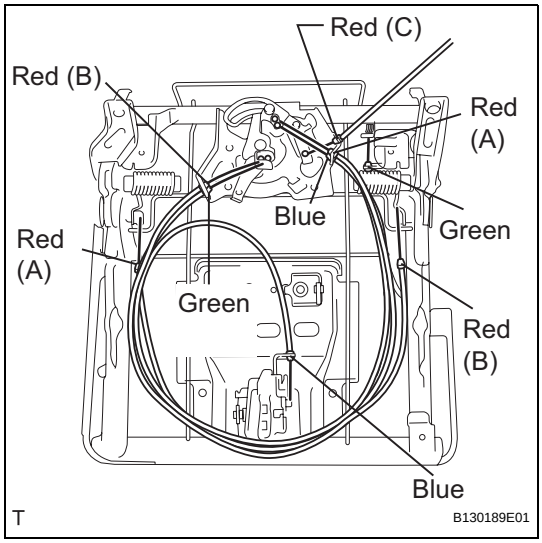

11. INSTALL SEAT LOCK CONTROL CABLE ASSEMBLY

(a) Install the 5 cables to the seat cushion spring as shown in the illustration.

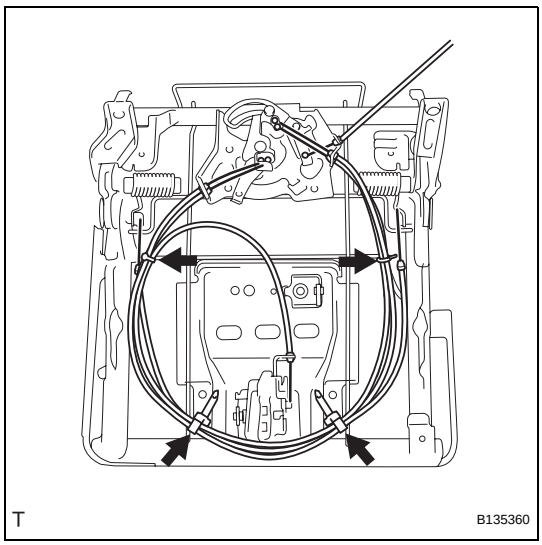

(b) Clamp the cables to the seat cushion spring with 4 new cable ties as shown in the illustration.

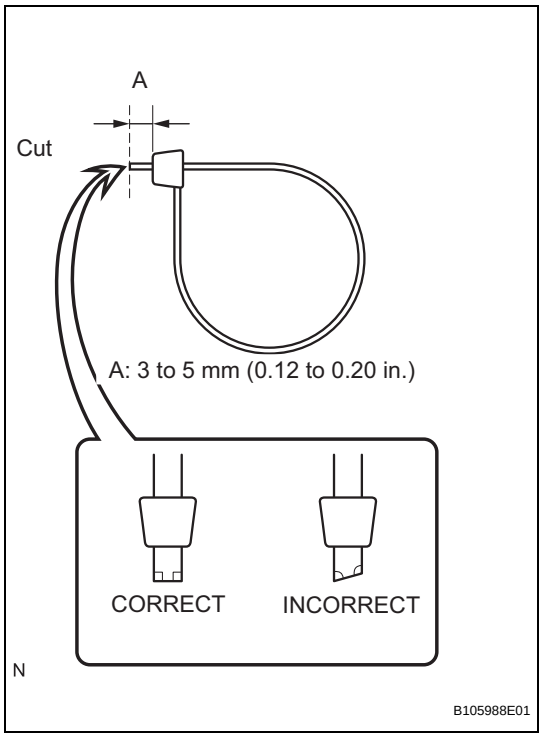

(c) Cut off the 2 cable ties, as shown in the illustration.

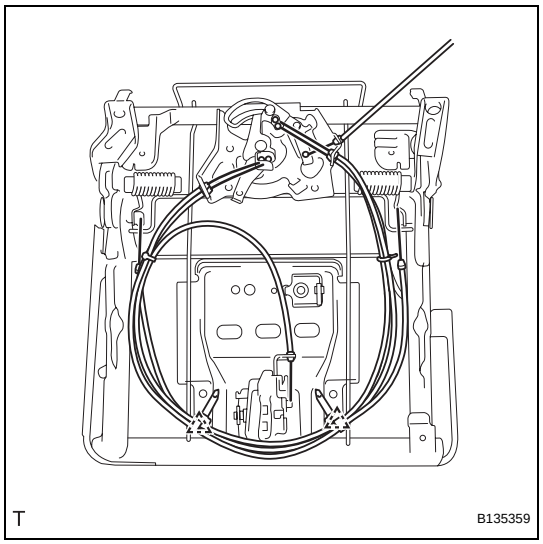

(d) Attach the 2 clamps of the cable tie to the seat cushion spring.

12. INSTALL REAR NO. 2 SEAT CUSHION COVER LH

NOTICE:

- **Be careful not to damage the cover.**
- **When installing the hog rings, avoid wrinkling the cover.**

SE

SE

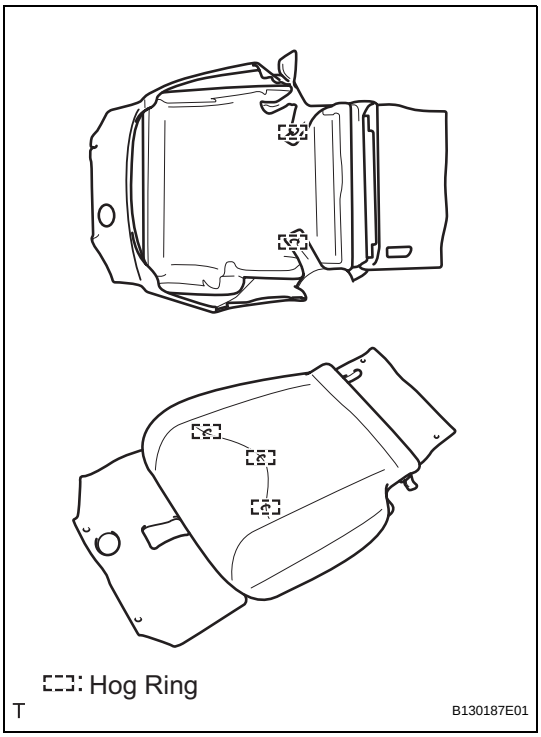

(a) Using hog ring pliers, install the seat cushion cover to the seat cushion pad with 5 new hog rings.

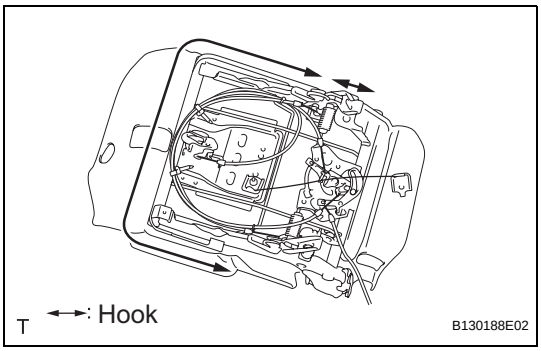

(b) Attach the hooks and install the seat cushion cover (with pad) to the seat cushion spring.

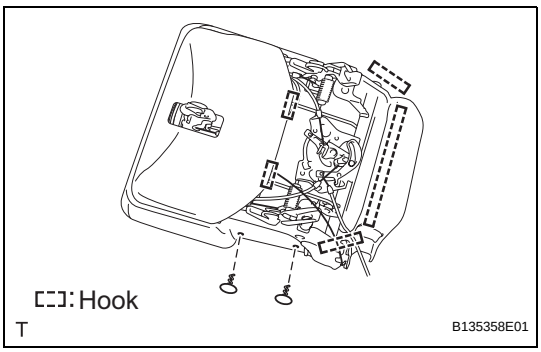

(c) Attach the 5 hooks.
(d) Install the 2 clips.

13. INSTALL REAR NO. 2 SEAT INNER BELT ASSEMBLY LH (See page SB-40)

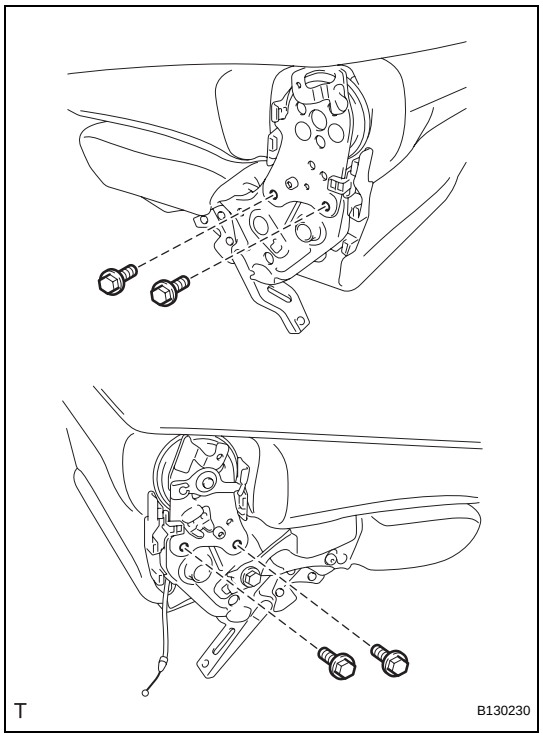

14. REMOVE REAR NO. 2 SEAT CUSHION ASSEMBLY

(a) Install the seat cushion to the seatback with the 4 bolts.
Torque: 42 N*m (428 kgf*cm, 31 ft.*lbf)

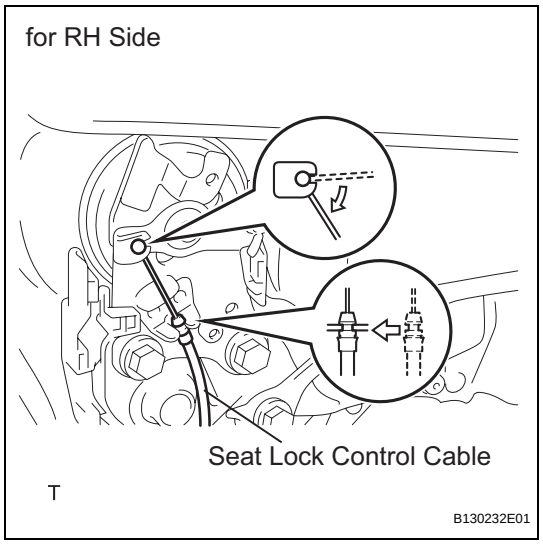

(b) Connect the seat lock control cable of the RH side to the seatback as shown in the illustration.

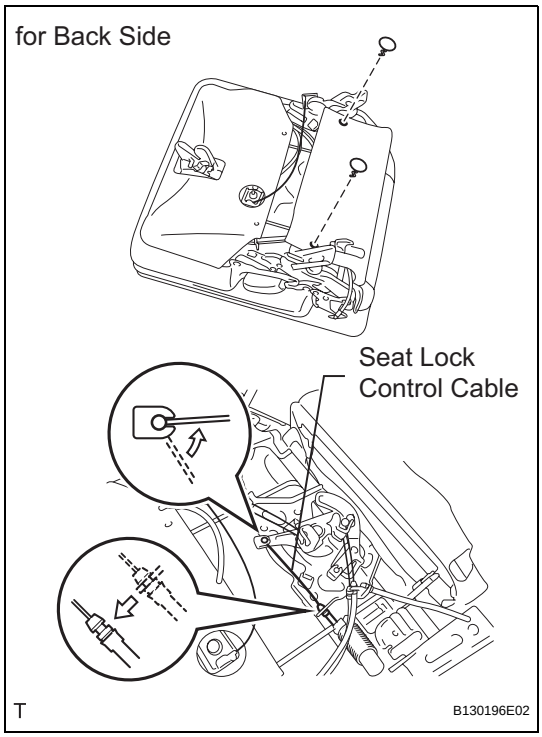

(c) Connect the seat lock control cable of the back side to the seat cushion as shown in the illustration.
(d) Close the seat cushion cover and install the 2 clips.

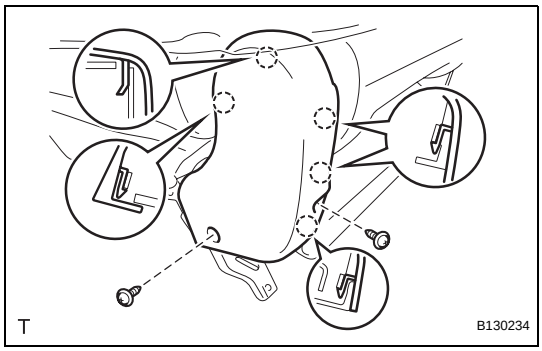

15. INSTALL NO. 1 REAR SEAT RECLINING COVER LH
(a) Attach the 5 claws to install the cover.
(b) Install the 2 screws.

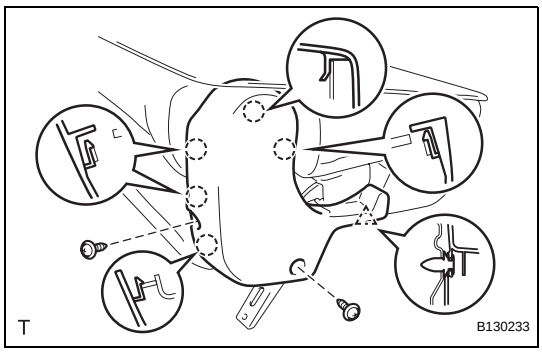

16. INSTALL NO. 2 REAR SEAT RECLINING COVER LH
(a) Attach the clip and 5 claws to install the cover.
(b) Install the 2 screws.

INSTALLATION

HINT:
- Use the same procedures for the RH side and LH side.
- The procedures listed below are for the LH side.

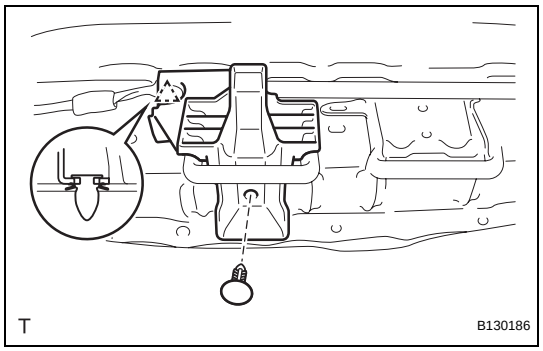

1. INSTALL NO. 2 SEAT LEG BOX PROTECTOR
(a) Attach the clip to install the protector.
(b) Install the clip.

2. INSTALL REAR NO. 1 FLOOR MAT SUPPORT SIDE PLATE

3. INSTALL REAR NO. 2 SEAT ASSEMBLY
(a) Fully tilt the seatback forward.

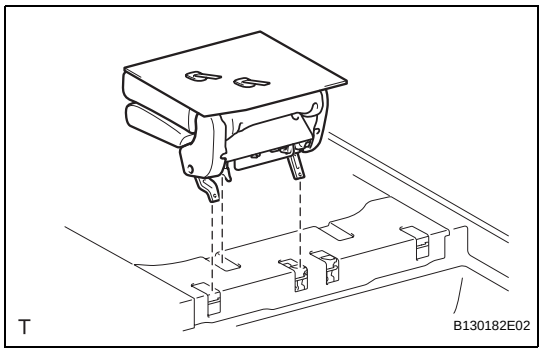

(b) Place the seat onto the lock striker.
(c) Fully lock the seat to the lock striker.
HINT:
- Lock the rear side, then lock the front side.
- Confirm that the seat is firmly locked to the lock striker.

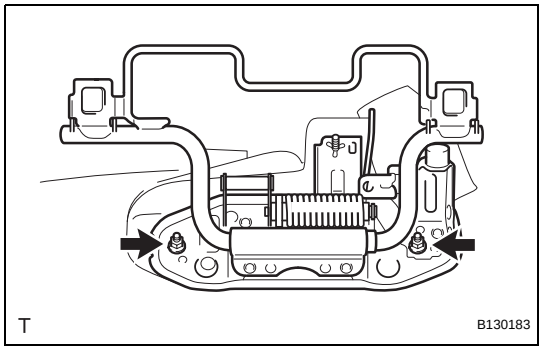

(d) Install the rear No. 2 seat link with the 2 nuts.
Torque: 18 N*m (184 kgf*cm, 13 ft.*lbf)

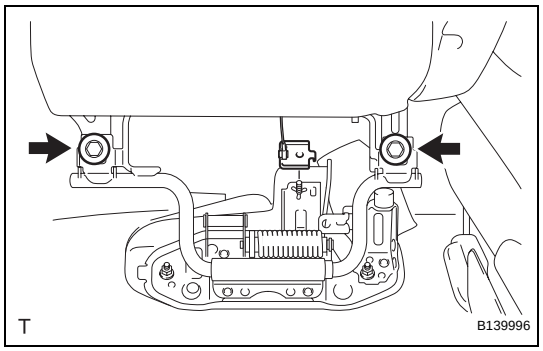

(e) Install the seat to the rear No. 2 seat link with the 2 bolts.
Torque: 18 N*m (184 kgf*cm, 13 ft.*lbf)

SE

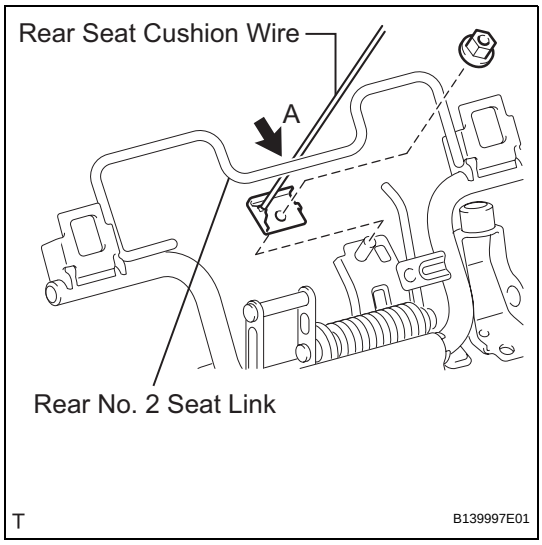

(f) Pass the rear seat cushion wire underneath the rear No. 2 seat link part labeled A.
NOTICE:
If the wire is not installed as described, the seat will not move properly.

(g) Install the rear seat cushion wire to the rear No. 2 seat link with the nut.
Torque: 18 N*m (184 kgf*cm, 13 ft.*lbf)

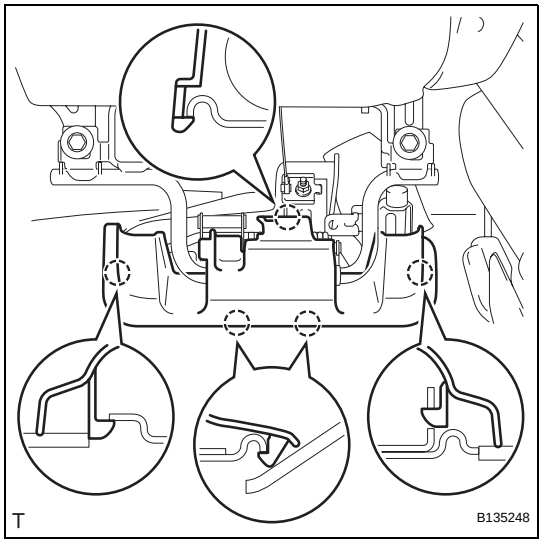

4. INSTALL NO. 2 SEAT LEG COVER LH

(a) Attach the 5 claws to install the leg cover.

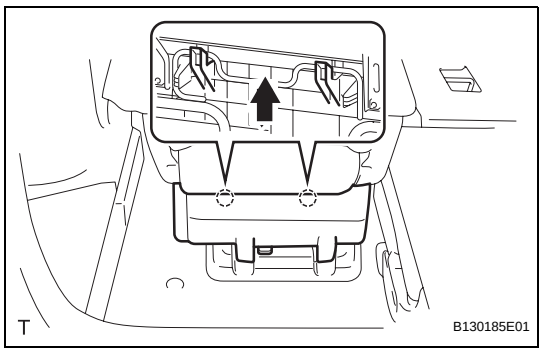

5. INSTALL NO. 2 SEAT HINGE COVER LH

(a) Push the hinge cover in the direction indicated by the arrow in the illustration to attach the 2 claws.

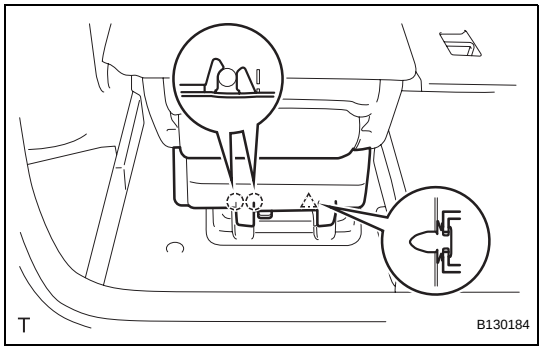

(b) Attach the 2 claws and clip to install the hinge cover.

(c) Return the seatback to the upright position.

REAR NO. 2 SEAT ASSEMBLY

COMPONENTS

SE

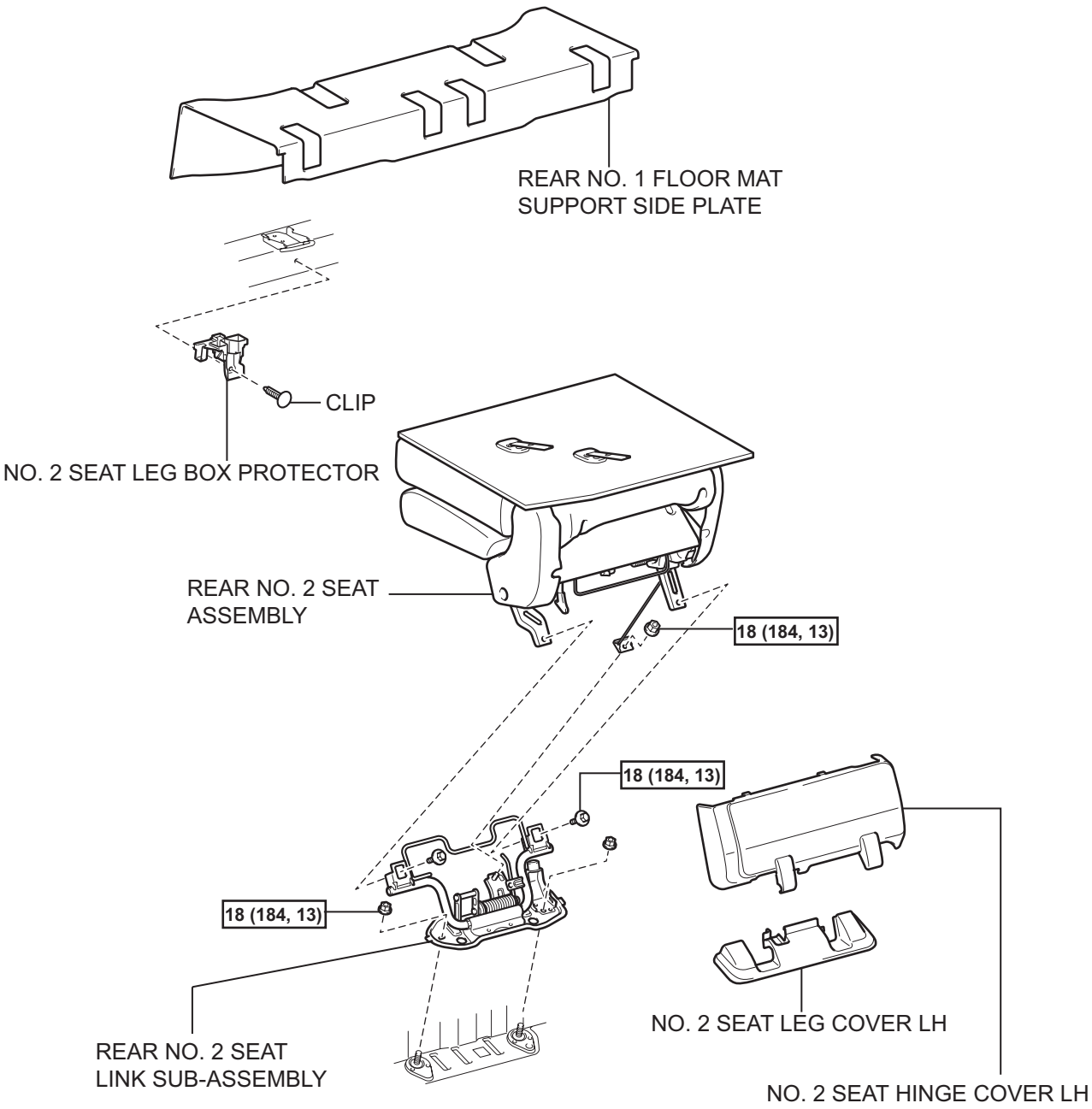

N*m (kgf*cm, ft.*lbf) : Specified torque

T

B130178E03

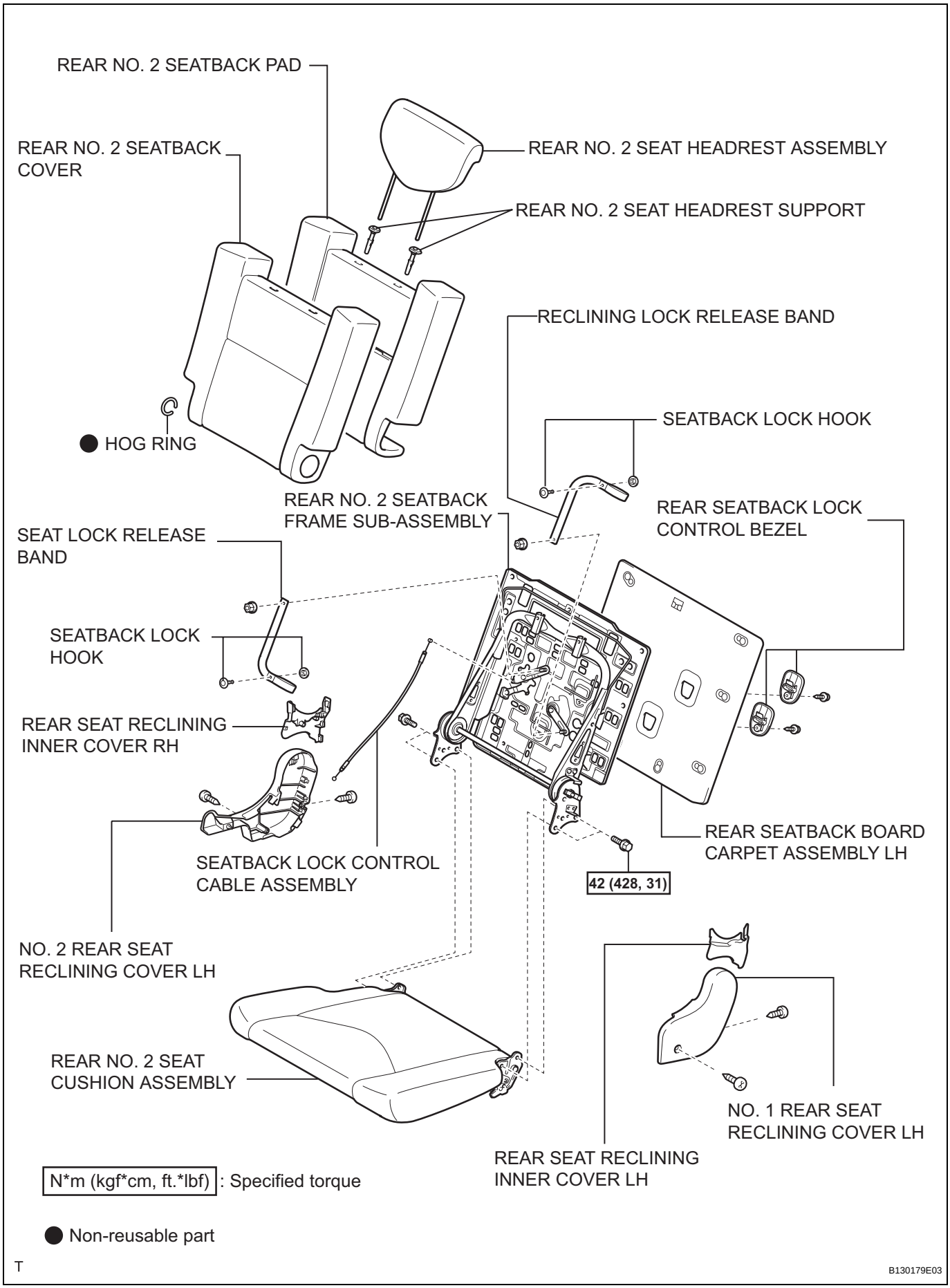
REAR NO. 2 SEATBACK PAD
REAR NO. 2 SEATBACK COVER
REAR NO. 2 SEAT HEADREST ASSEMBLY
REAR NO. 2 SEAT HEADREST SUPPORT
RECLINING LOCK RELEASE BAND
SEATBACK LOCK HOOK
● HOG RING
REAR NO. 2 SEATBACK FRAME SUB-ASSEMBLY
REAR SEATBACK LOCK CONTROL BEZEL
SEAT LOCK RELEASE BAND
SEATBACK LOCK HOOK
REAR SEAT RECLINING INNER COVER RH
REAR SEATBACK BOARD CARPET ASSEMBLY LH
SEATBACK LOCK CONTROL CABLE ASSEMBLY
42 (428, 31)
NO. 2 REAR SEAT RECLINING COVER LH
REAR NO. 2 SEAT CUSHION ASSEMBLY
NO. 1 REAR SEAT RECLINING COVER LH
REAR SEAT RECLINING INNER COVER LH
N*m (kgf*cm, ft.*lbf) : Specified torque
● Non-reusable part
T
B130179E03

SE

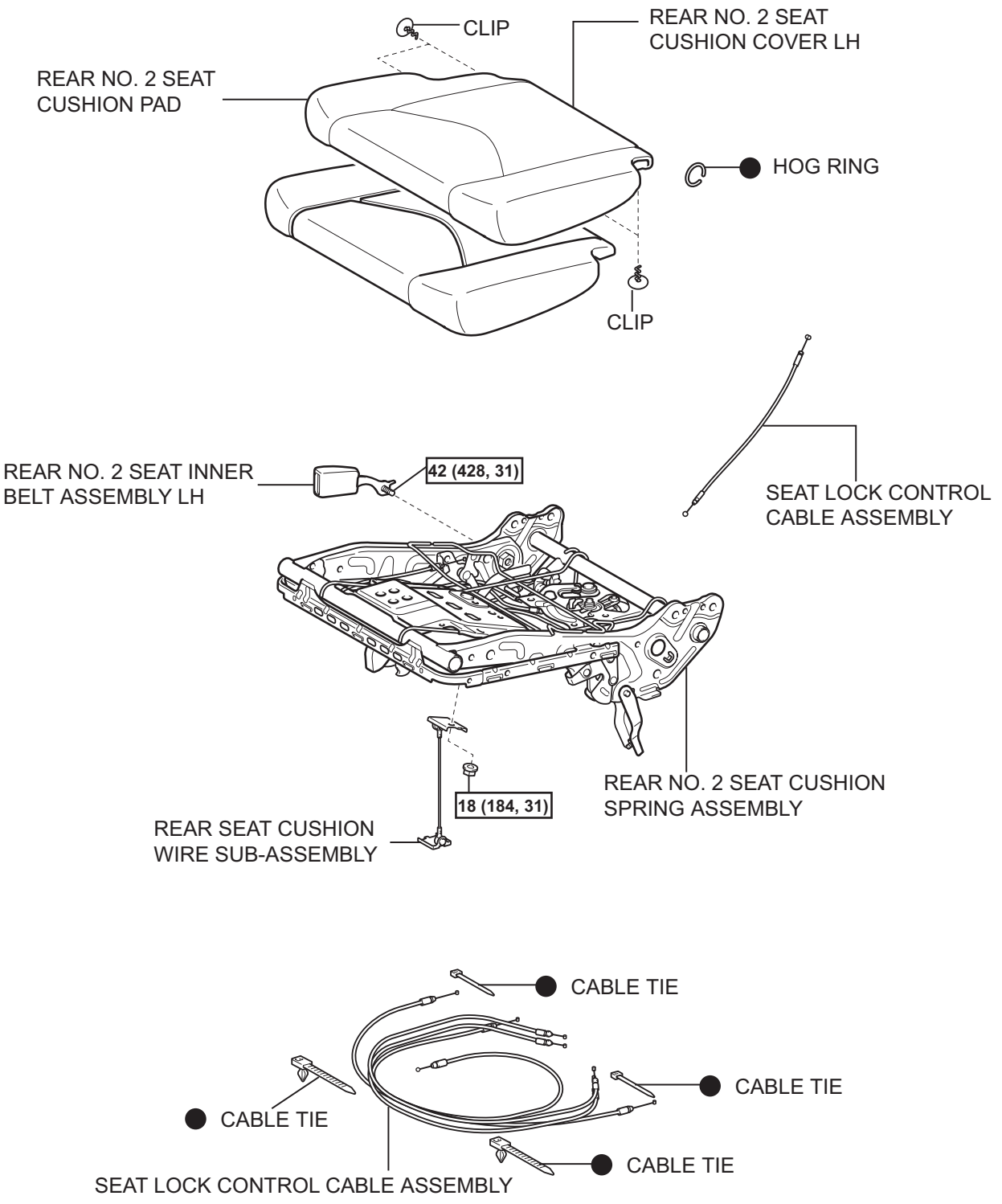

N*m (kgf*cm, ft.*lbf) : Specified torque

● Non-reusable part

T

B130180E03

SEAT HEATER SWITCH

COMPONENTS

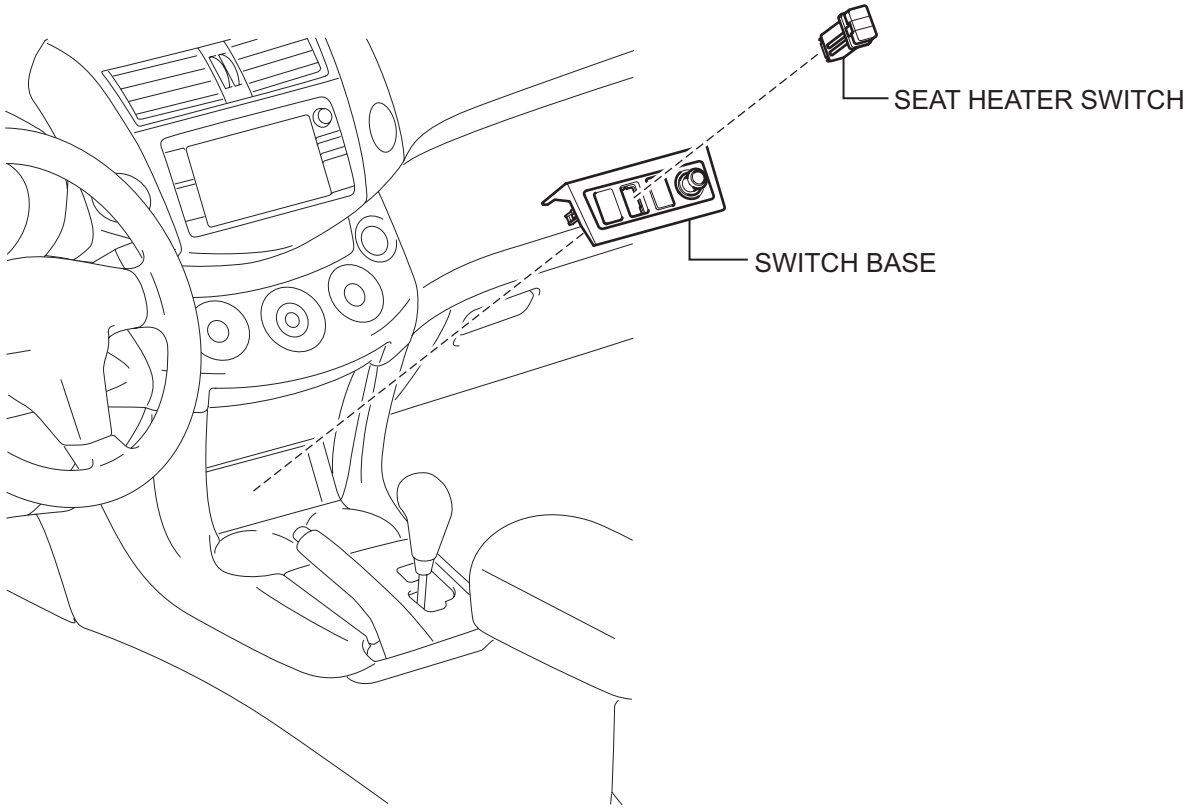

T

B131351E02

SE

REMOVAL

1. **DISCONNECT CABLE FROM NEGATIVE BATTERY TERMINAL**
   CAUTION:
   Wait at least 90 seconds after disconnecting the cable from the negative (-) battery terminal to prevent airbag and seat belt pretensioner activation.
2. **REMOVE SWITCH BASE (See page IP-18)**
3. **REMOVE SEAT HEATER SWITCH**
   (a) Using a screwdriver, detach the 2 claws and remove the switch.
   HINT:
   Tape the screwdriver tip before use.

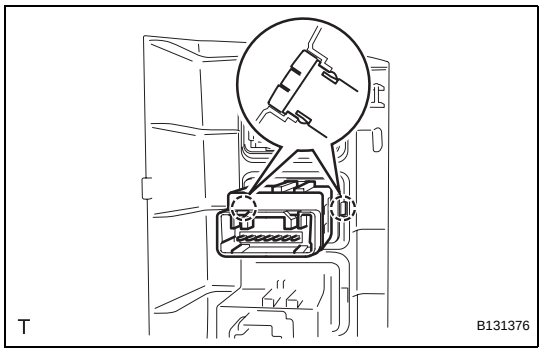

INSPECTION

1. **INSPECT SEAT HEATER SWITCH**
   (a) Measure the resistance of the seat heater switch when the switch is operated.
   Standard resistance
   for LH

Tester Connection	Switch Condition	Specified Condition
5 (IG) - 6 (LH)	ON	Below 1 Ω
5 (IG) - 6 (LH)	OFF	10 kΩ or higher

for RH

Tester Connection	Switch Condition	Specified Condition
4 (IG) - 3 (RH)	ON	Below 1 Ω
4 (IG) - 3 (RH)	OFF	10 kΩ or higher

If the result is not as specified, replace the switch.

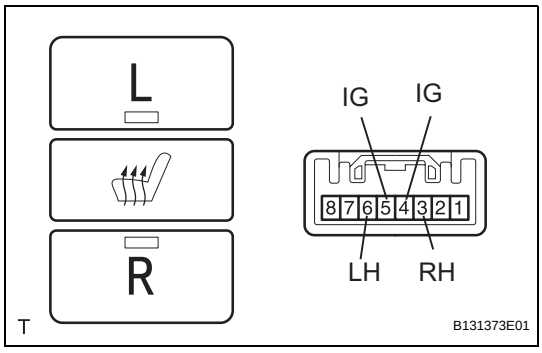

(b) Check that the seat heater switch indicator light illuminates when the switch is operated.
OK
for LH

Measurement Connection	Switch Condition	Specified Condition
Battery positive (+) → 5 (IG) Battery negative (-) → 2 (E)	ON	Illuminates

for RH

Measurement Connection	Switch Condition	Specified Condition
Battery positive (+) → 4 (IG) Battery negative (-) → 2 (E)	ON	Illuminates

If the result is not as specified, replace the switch.

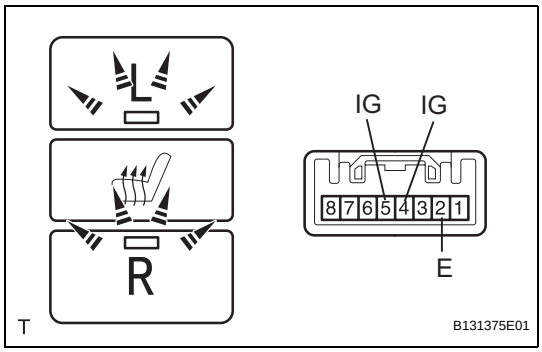

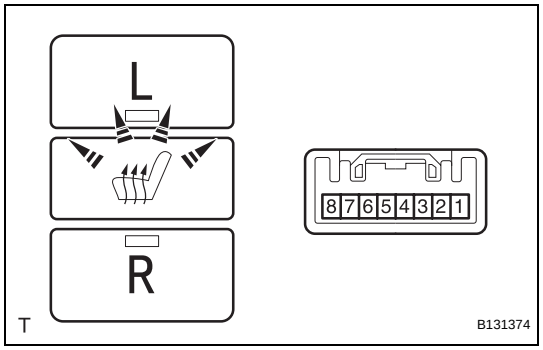

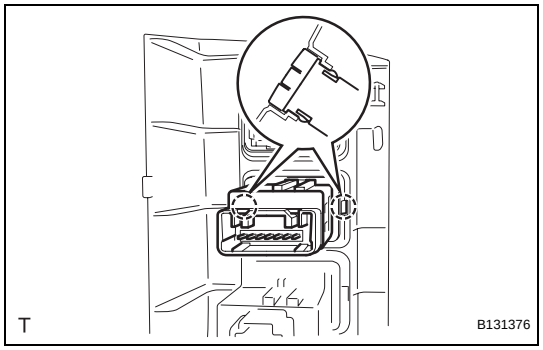

(c) Check that the seat heater switch illuminates.
OK

Measurement Connection	Switch Condition	Specified Condition
Battery positive (+) → 7 Battery negative (-) → 8	Always	Illuminates

If the result is not as specified, replace the switch.

SE

INSTALLATION

1. **INSTALL SEAT HEATER SWITCH**
   (a) Attach the 2 claws to install the switch.
2. **INSTALL SWITCH BASE (See page IP-27)**
3. **CONNECT CABLE TO NEGATIVE BATTERY TERMINAL**

PROBLEM SYMPTOMS TABLE

HINT:
Use the table below to help determine the cause of the problem symptom. The potential causes of the symptoms are listed in order of probability in the "Suspected Area" column of the table. Check each symptom by checking the suspected areas in the order they are listed. Replace parts as necessary.

Seat heater system

Symptom	Suspected area	See page
Driver's and passenger's seat heaters do not warm up	1. S-HTR fuse	SE-5
	2. Seat heater switch	SE-130
	3. Wire harness	-
Only driver's seat heater does not warm up	1. Front seat cushion heater LH	SE-133
	2. Front seatback heater LH	SE-132
	3. Wire harness	-
Only passenger's seat heater does not warm up	1. Front seat cushion heater RH	SE-133
	2. Front seatback heater RH	SE-132
	3. Wire harness	-

SEAT HEATER SYSTEM

PARTS LOCATION

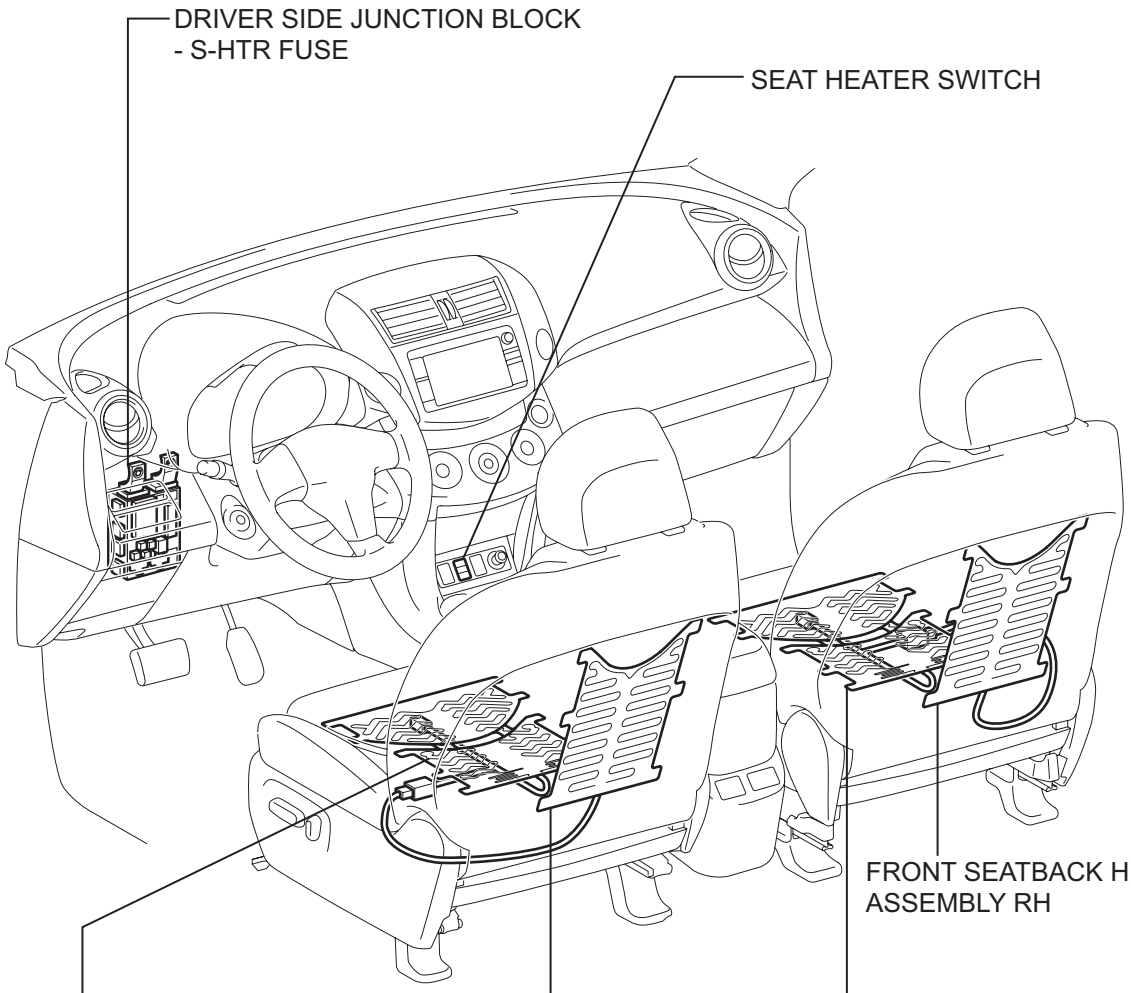

T

B131348E05

SYSTEM DIAGRAM

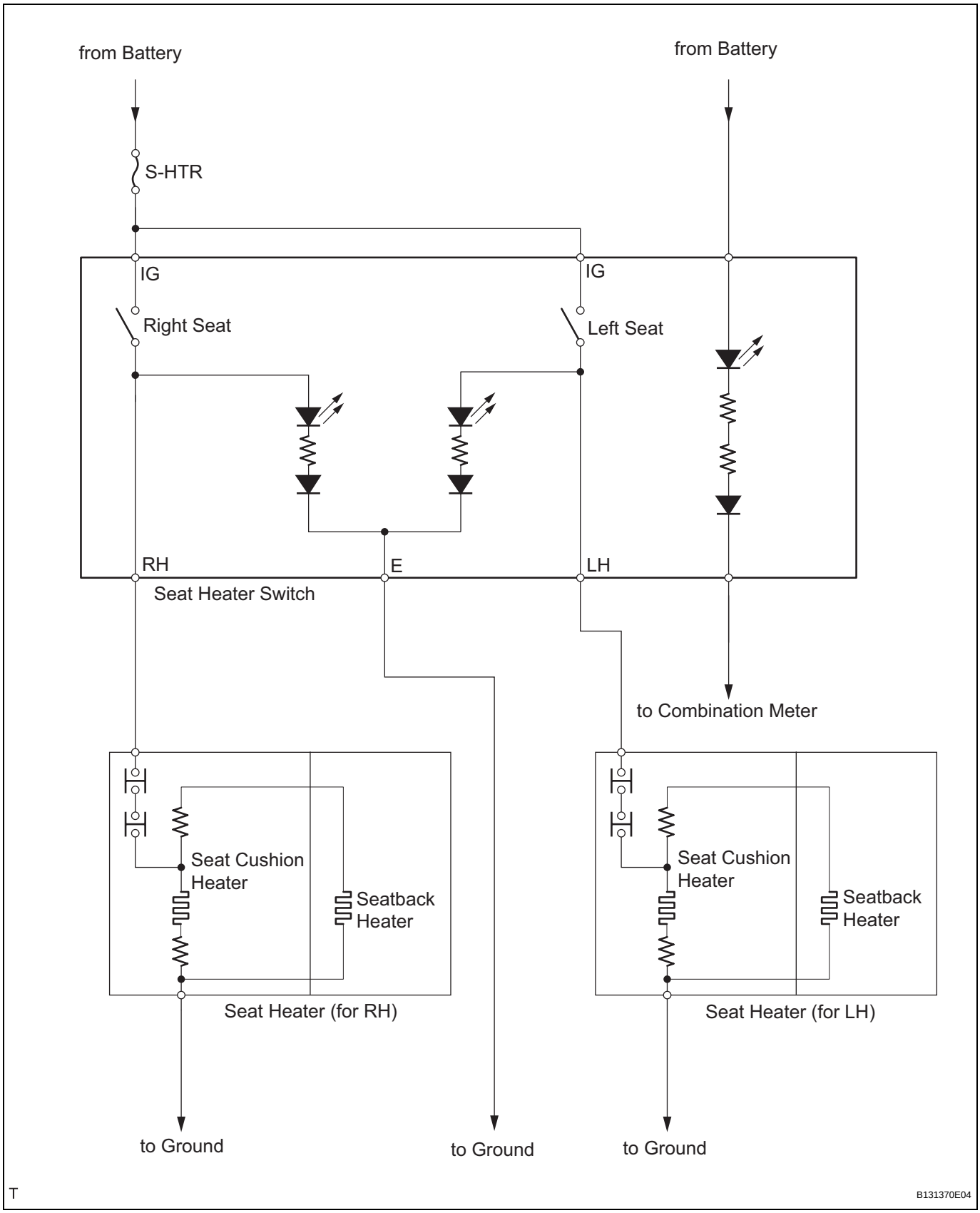

INSTALLATION

1. INSTALL CHILD RESTRAINT SEAT PROTECTOR

2. INSTALL CHILD RESTRAINT SEAT TETHER ANCHOR BRACKET

(a) Align the claws with the positioning holes, and install the bracket with the bolt.
Torque: 42 N*m (428 kgf*cm, 31 ft.*lbf)

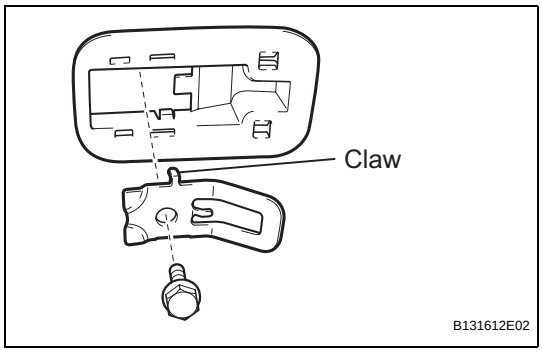

3. INSTALL ROOF HEADLINING ASSEMBLY

(a) Install the roof headlining (see page IR-49).

4. INSTALL CHILD RESTRAINT SEAT TETHER ANCHOR COVER

(a) Install the cover with the 4 claws.

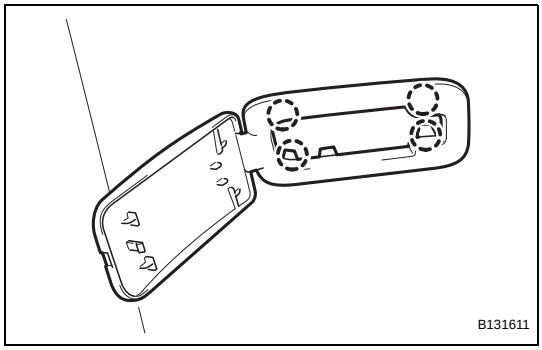

CHILD RESTRAINT SEAT TETHER ANCHOR

COMPONENTS

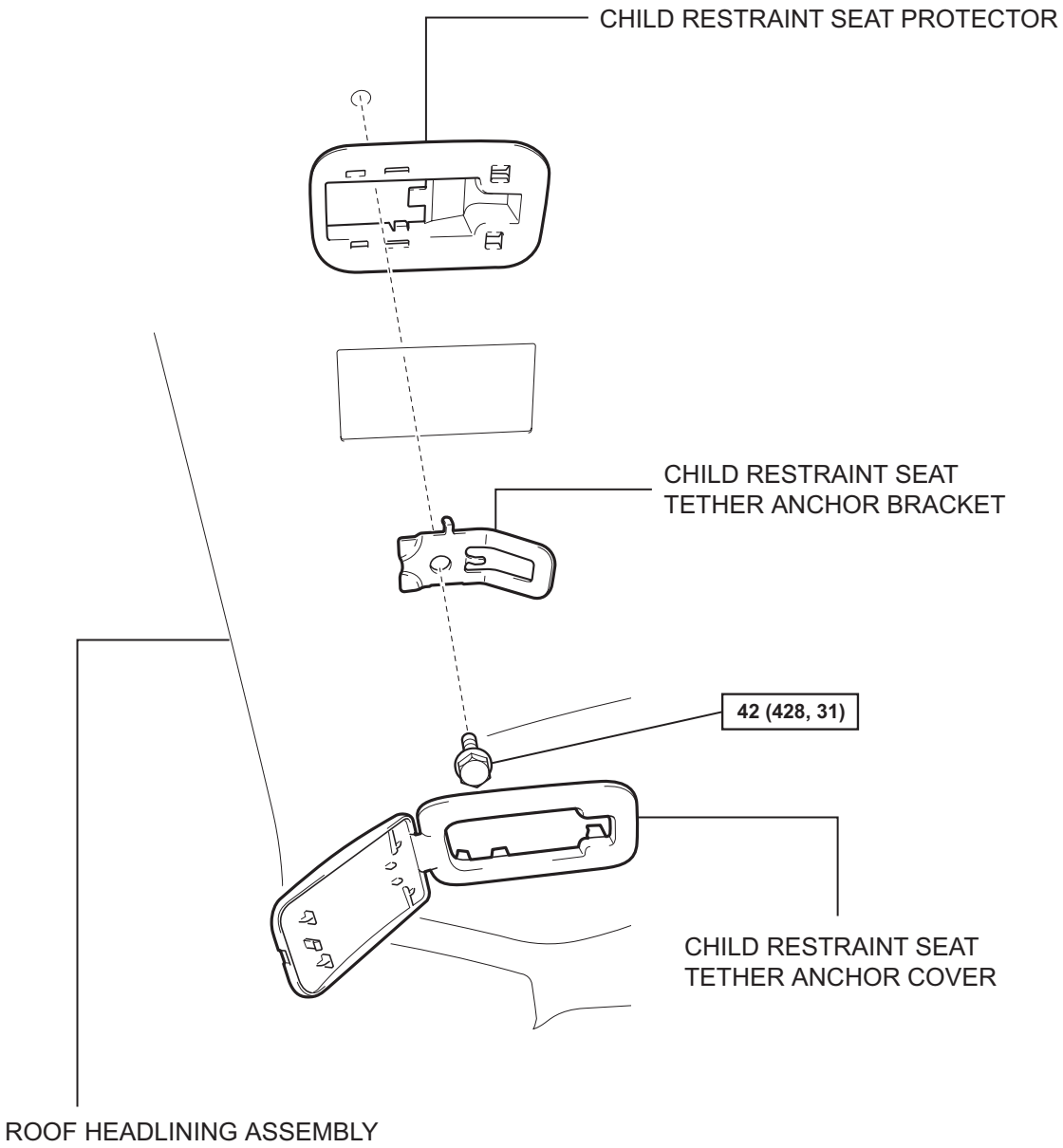

N*m (kgf*cm, ft.*lbf) : Specified torque

P

B130162E02

SB

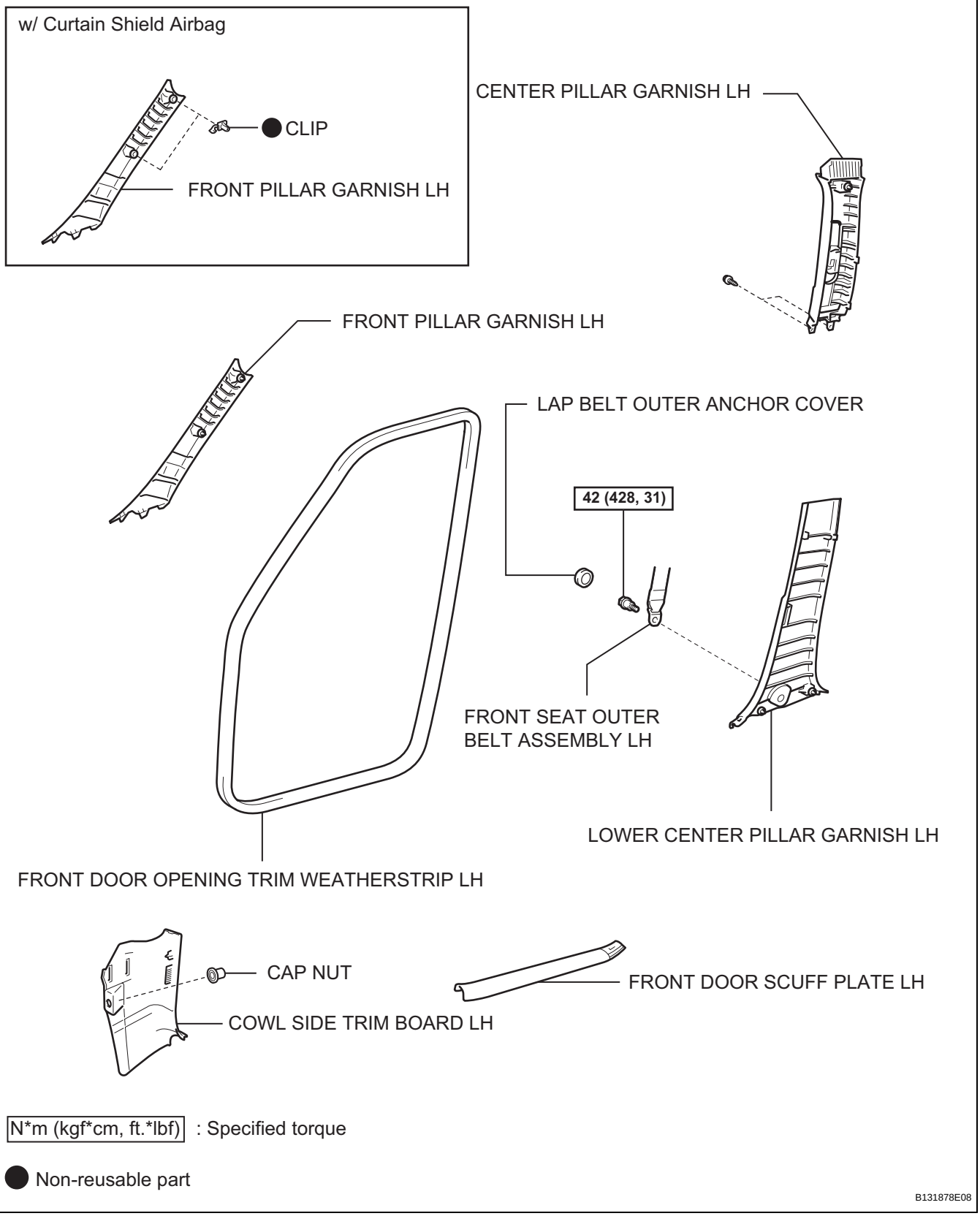
w/ Curtain Shield Airbag
CLIP
FRONT PILLAR GARNISH LH
CENTER PILLAR GARNISH LH
FRONT PILLAR GARNISH LH
LAP BELT OUTER ANCHOR COVER
42 (428, 31)
FRONT SEAT OUTER BELT ASSEMBLY LH
LOWER CENTER PILLAR GARNISH LH
FRONT DOOR OPENING TRIM WEATHERSTRIP LH
CAP NUT
COWL SIDE TRIM BOARD LH
FRONT DOOR SCUFF PLATE LH
N*m (kgf*cm, ft.*lbf) : Specified torque
Non-reusable part
B131878E08

SB

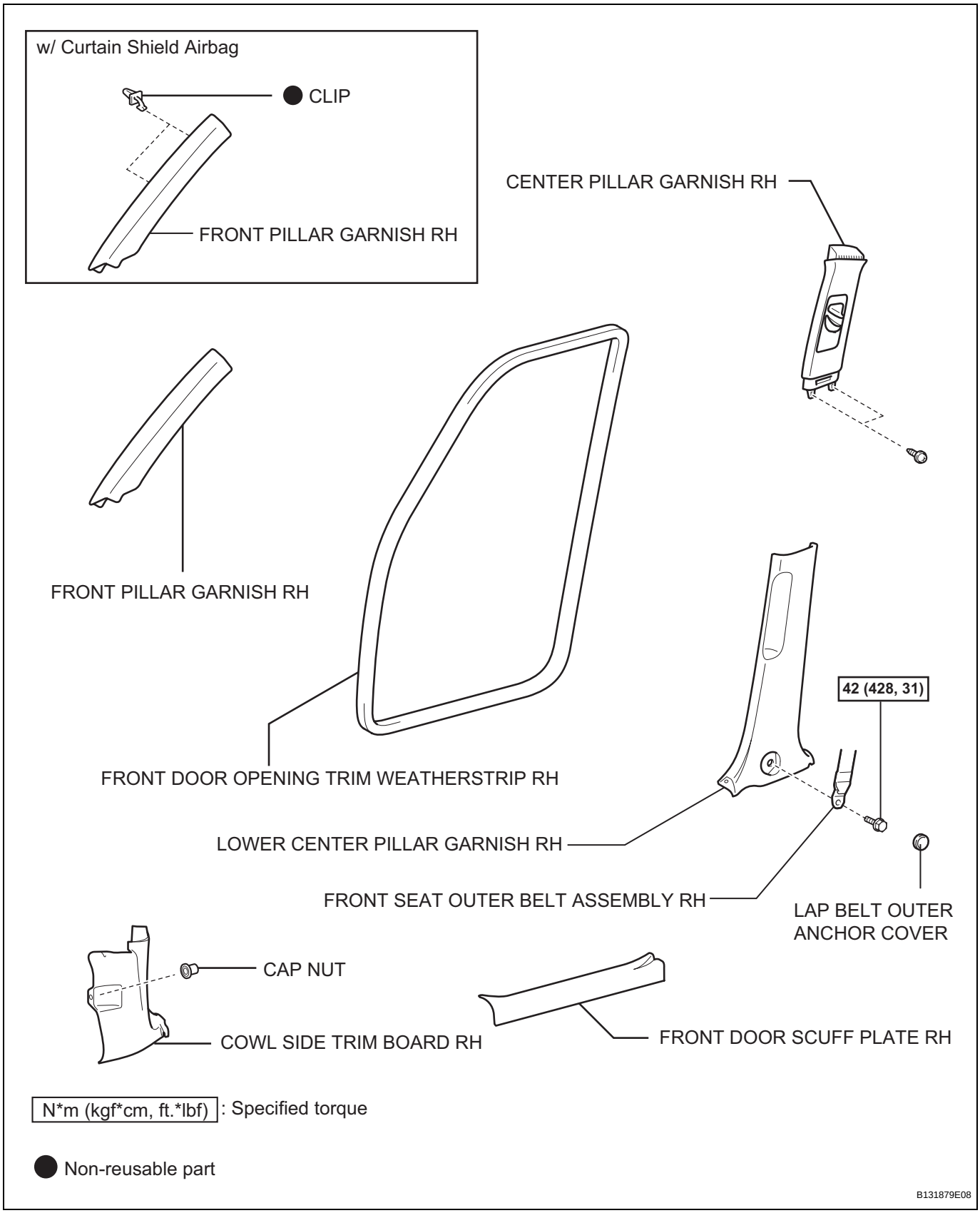
w/ Curtain Shield Airbag
CLIP
FRONT PILLAR GARNISH RH
CENTER PILLAR GARNISH RH
FRONT PILLAR GARNISH RH
FRONT DOOR OPENING TRIM WEATHERSTRIP RH
42 (428, 31)
LOWER CENTER PILLAR GARNISH RH
FRONT SEAT OUTER BELT ASSEMBLY RH
LAP BELT OUTER ANCHOR COVER
CAP NUT
COWL SIDE TRIM BOARD RH
FRONT DOOR SCUFF PLATE RH
N*m (kgf*cm, ft.*lbf) : Specified torque
Non-reusable part
B131879E08

SB

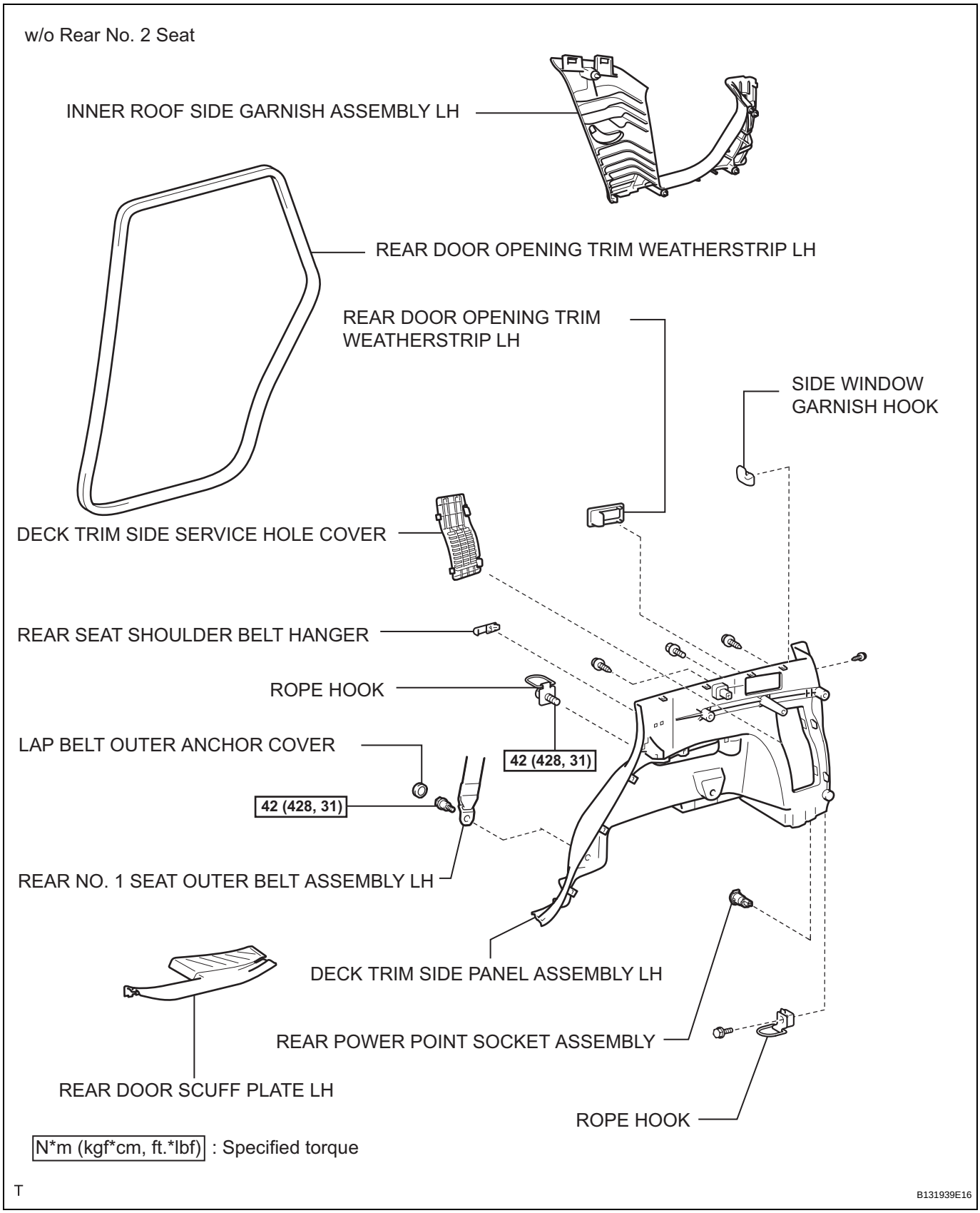
w/o Rear No. 2 Seat
INNER ROOF SIDE GARNISH ASSEMBLY LH
REAR DOOR OPENING TRIM WEATHERSTRIP LH
REAR DOOR OPENING TRIM WEATHERSTRIP LH
SIDE WINDOW GARNISH HOOK
DECK TRIM SIDE SERVICE HOLE COVER
REAR SEAT SHOULDER BELT HANGER
ROPE HOOK
42 (428, 31)
LAP BELT OUTER ANCHOR COVER
42 (428, 31)
REAR NO. 1 SEAT OUTER BELT ASSEMBLY LH
DECK TRIM SIDE PANEL ASSEMBLY LH
REAR POWER POINT SOCKET ASSEMBLY
REAR DOOR SCUFF PLATE LH
ROPE HOOK
N*m (kgf*cm, ft.*lbf) : Specified torque
T
B131939E16

SB

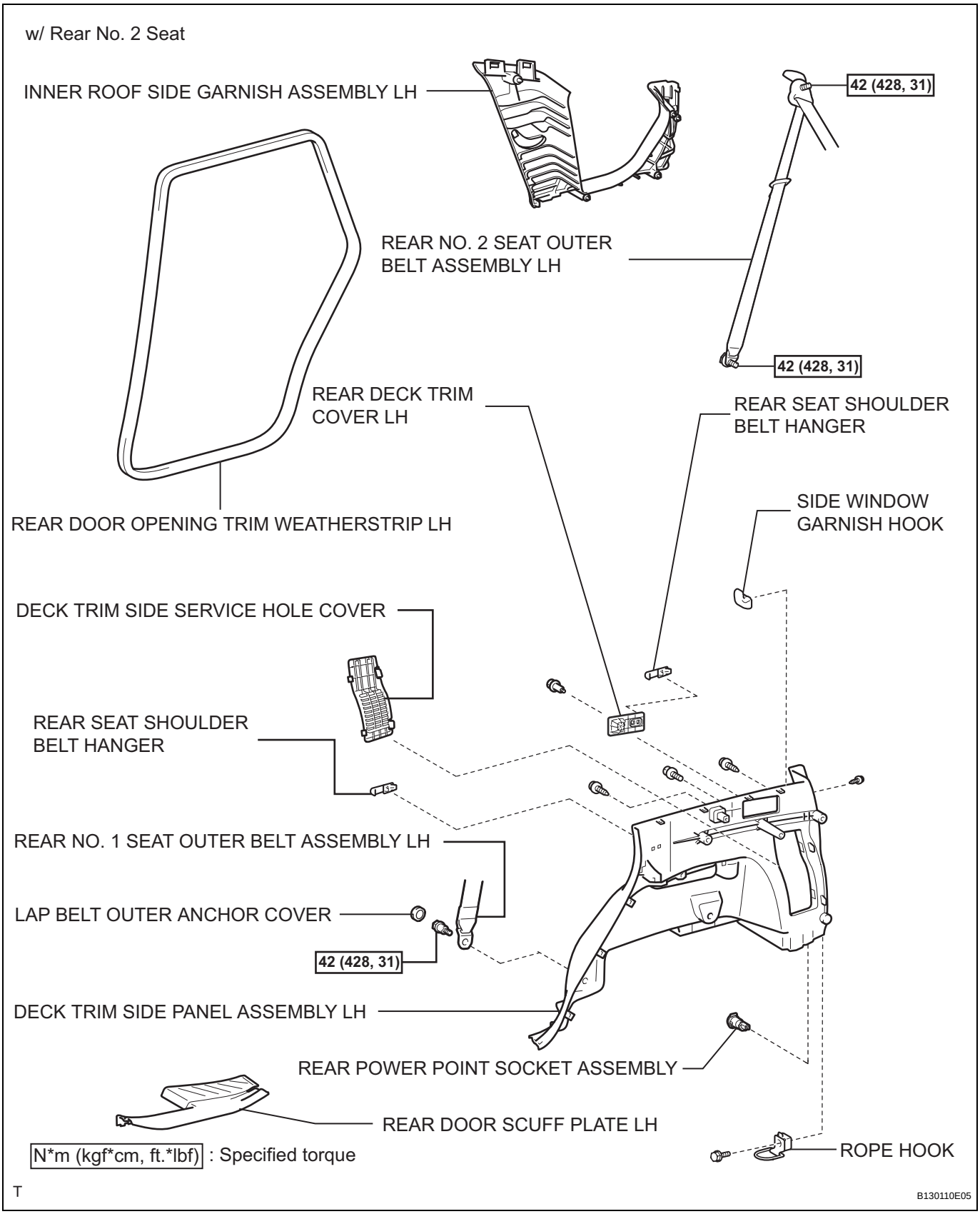
w/ Rear No. 2 Seat
INNER ROOF SIDE GARNISH ASSEMBLY LH
42 (428, 31)
REAR NO. 2 SEAT OUTER BELT ASSEMBLY LH
42 (428, 31)
REAR DECK TRIM COVER LH
REAR SEAT SHOULDER BELT HANGER
REAR DOOR OPENING TRIM WEATHERSTRIP LH
SIDE WINDOW GARNISH HOOK
DECK TRIM SIDE SERVICE HOLE COVER
REAR SEAT SHOULDER BELT HANGER
REAR NO. 1 SEAT OUTER BELT ASSEMBLY LH
LAP BELT OUTER ANCHOR COVER
42 (428, 31)
DECK TRIM SIDE PANEL ASSEMBLY LH
REAR POWER POINT SOCKET ASSEMBLY
REAR DOOR SCUFF PLATE LH
ROPE HOOK
N*m (kgf*cm, ft.*lbf) : Specified torque
T
B130110E05

SB

w/o Rear No. 2 Seat

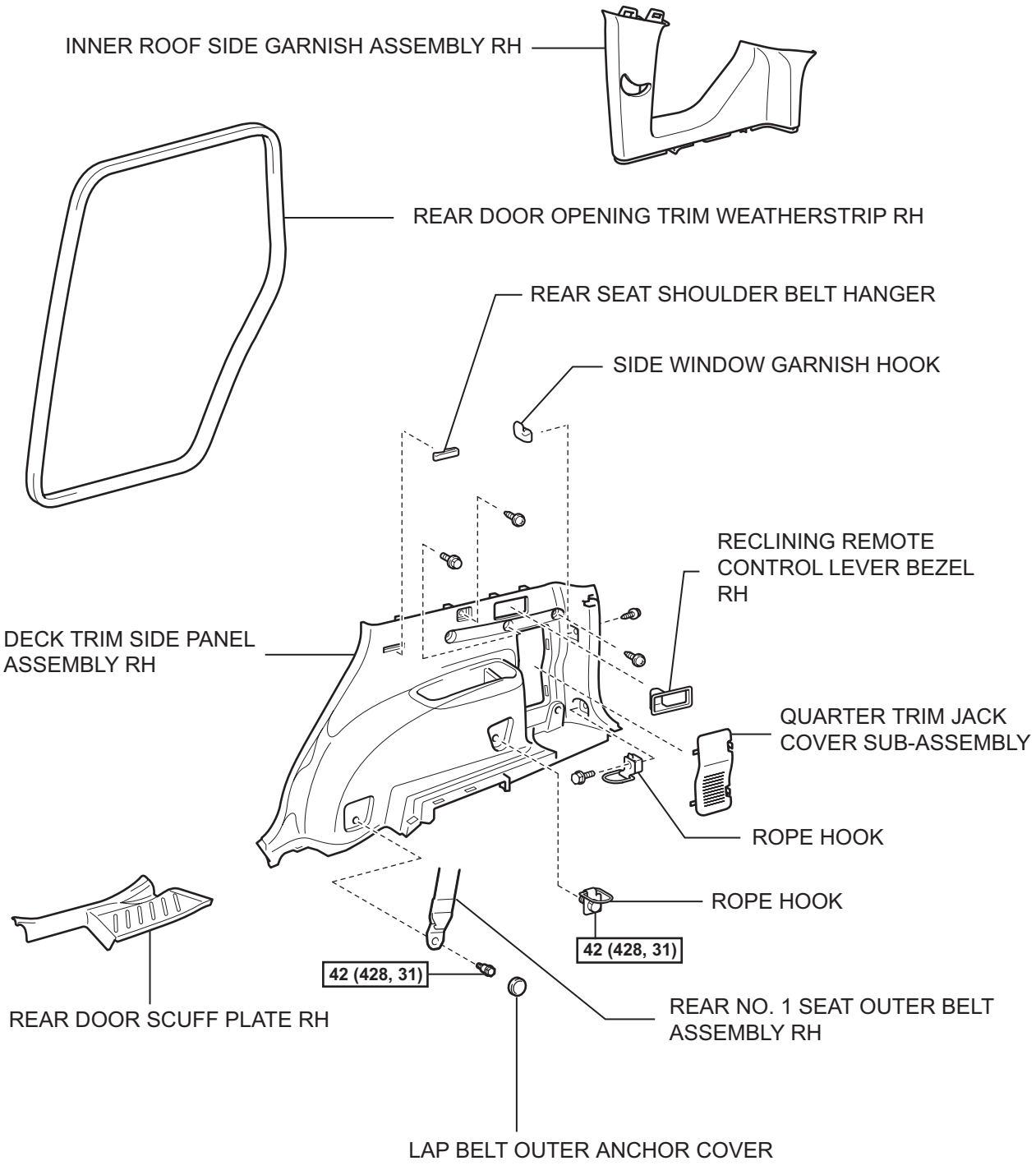

N*m (kgf*cm, ft.*lbf) : Specified torque

T

B131940E15

SB

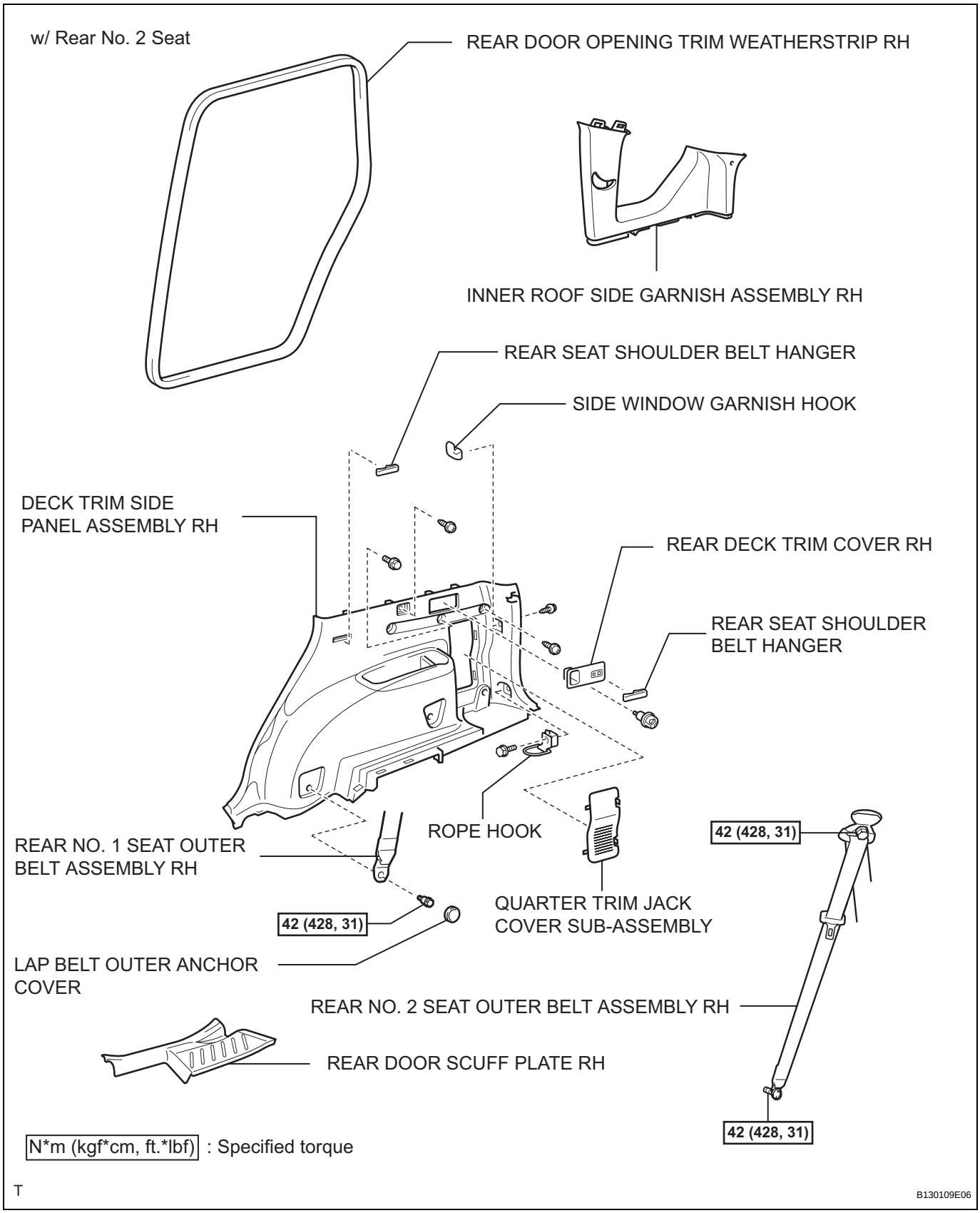
w/ Rear No. 2 Seat
REAR DOOR OPENING TRIM WEATHERSTRIP RH
INNER ROOF SIDE GARNISH ASSEMBLY RH
REAR SEAT SHOULDER BELT HANGER
SIDE WINDOW GARNISH HOOK
DECK TRIM SIDE PANEL ASSEMBLY RH
REAR DECK TRIM COVER RH
REAR SEAT SHOULDER BELT HANGER
ROPE HOOK
REAR NO. 1 SEAT OUTER BELT ASSEMBLY RH
42 (428, 31)
QUARTER TRIM JACK COVER SUB-ASSEMBLY
LAP BELT OUTER ANCHOR COVER
REAR NO. 2 SEAT OUTER BELT ASSEMBLY RH
REAR DOOR SCUFF PLATE RH
42 (428, 31)
42 (428, 31)
N*m (kgf*cm, ft.*lbf) : Specified torque
T
B130109E06

w/o Rear No. 2 Seat

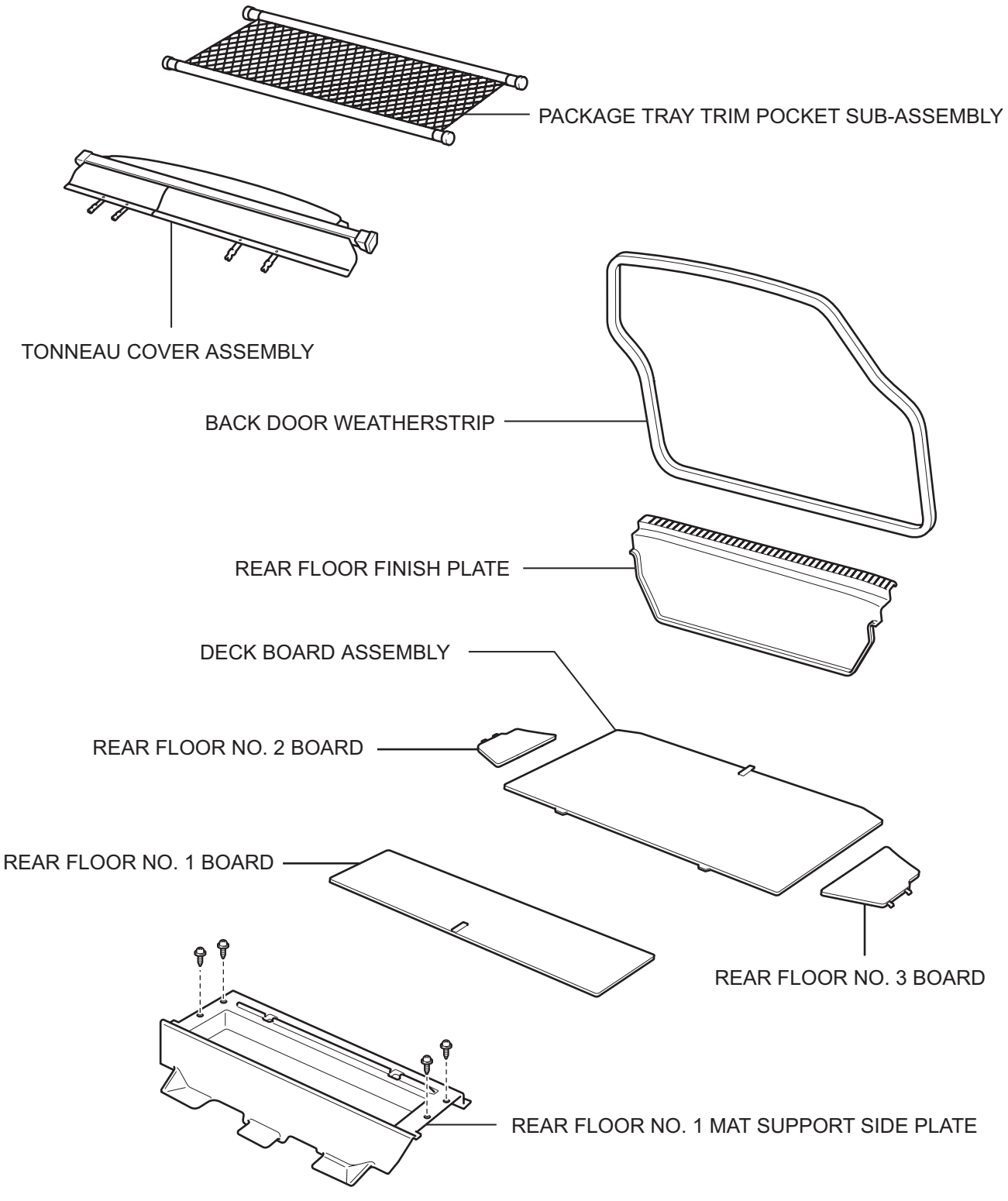

T

B130111E20

SB

w/ Rear No. 2 Seat

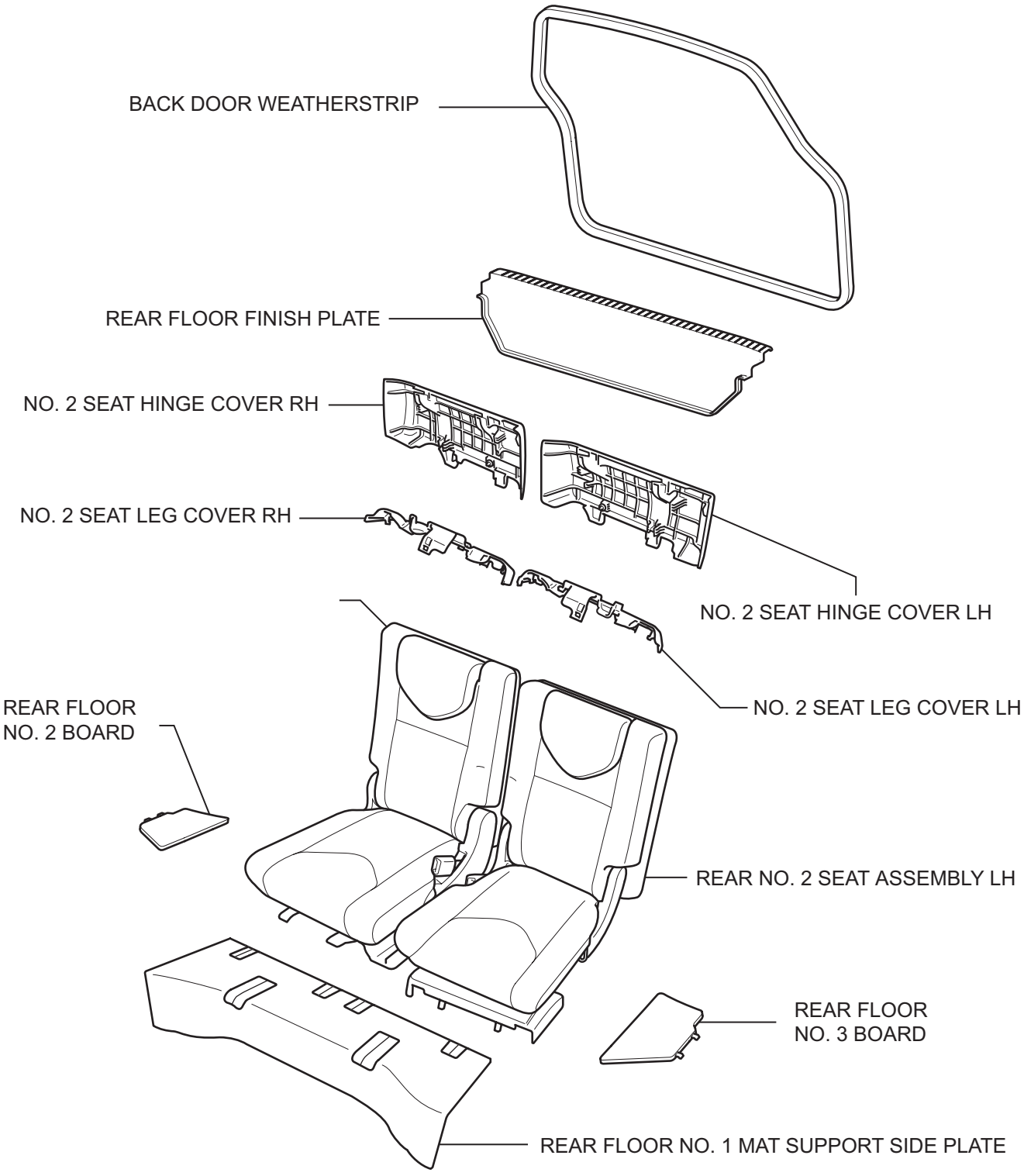

T

B130112E10

SB

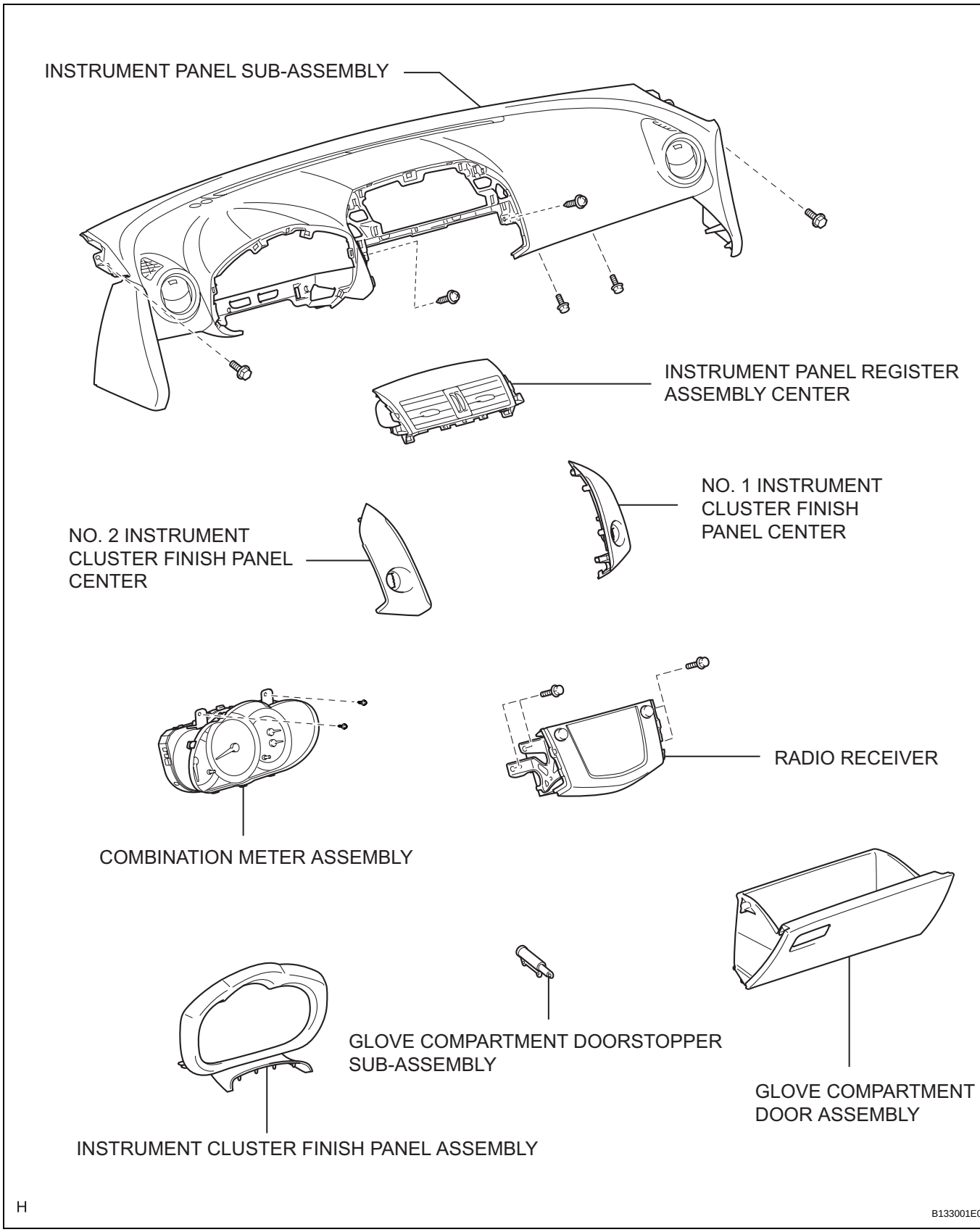
INSTRUMENT PANEL SUB-ASSEMBLY
INSTRUMENT PANEL REGISTER ASSEMBLY CENTER
NO. 1 INSTRUMENT CLUSTER FINISH PANEL CENTER
NO. 2 INSTRUMENT CLUSTER FINISH PANEL CENTER
RADIO RECEIVER
COMBINATION METER ASSEMBLY
GLOVE COMPARTMENT DOORSTOPPER SUB-ASSEMBLY
GLOVE COMPARTMENT DOOR ASSEMBLY
INSTRUMENT CLUSTER FINISH PANEL ASSEMBLY
H
B133001E03

SB

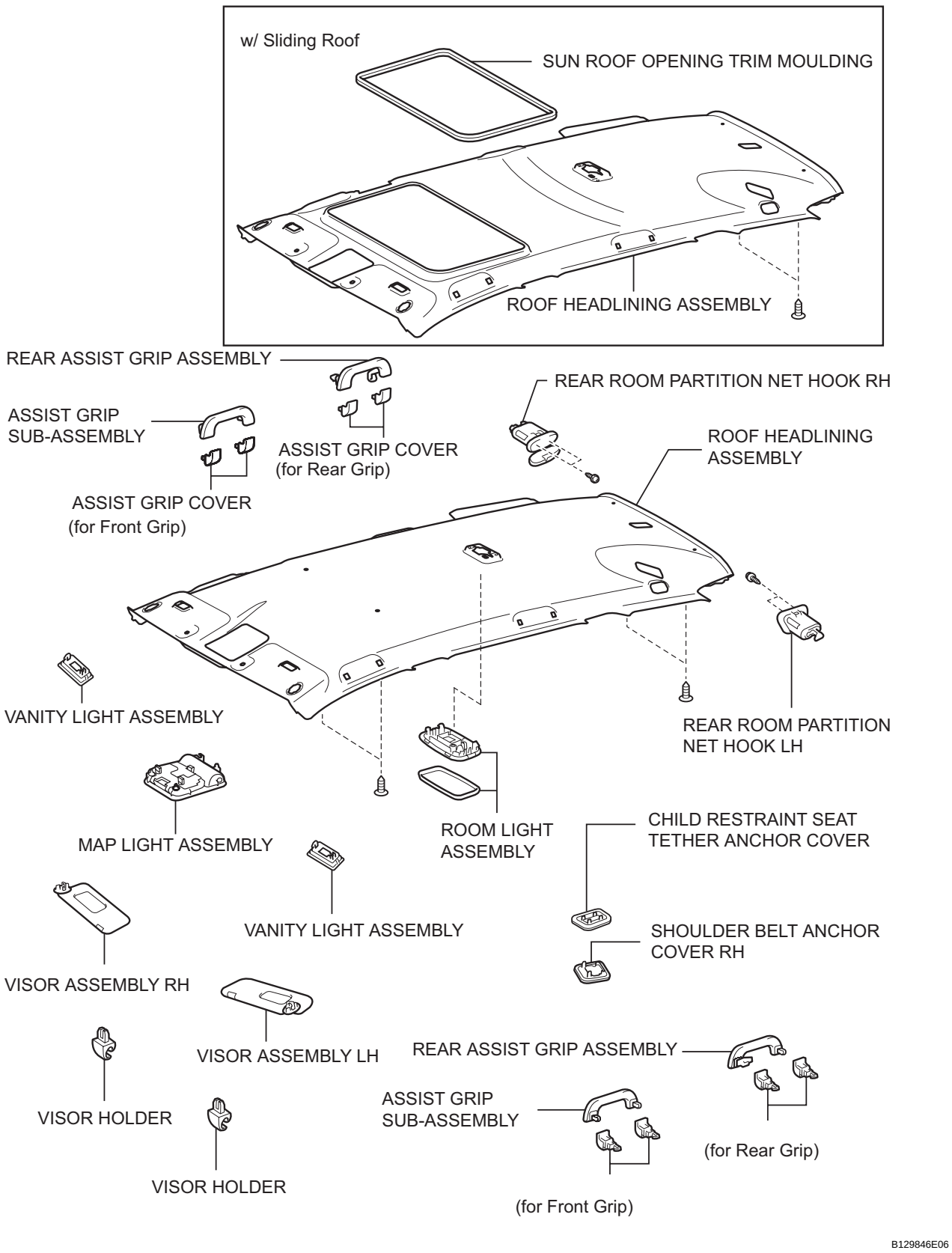
w/ Sliding Roof
SUN ROOF OPENING TRIM MOULDING
ROOF HEADLINING ASSEMBLY
REAR ASSIST GRIP ASSEMBLY
ASSIST GRIP SUB-ASSEMBLY
ASSIST GRIP COVER (for Rear Grip)
ASSIST GRIP COVER (for Front Grip)
REAR ROOM PARTITION NET HOOK RH
ROOF HEADLINING ASSEMBLY
VANITY LIGHT ASSEMBLY
REAR ROOM PARTITION NET HOOK LH
MAP LIGHT ASSEMBLY
ROOM LIGHT ASSEMBLY
CHILD RESTRAINT SEAT TETHER ANCHOR COVER
VANITY LIGHT ASSEMBLY
SHOULDER BELT ANCHOR COVER RH
VISOR ASSEMBLY RH
VISOR ASSEMBLY LH
REAR ASSIST GRIP ASSEMBLY
VISOR HOLDER
ASSIST GRIP SUB-ASSEMBLY
(for Rear Grip)
VISOR HOLDER
(for Front Grip)
T
B129846E06

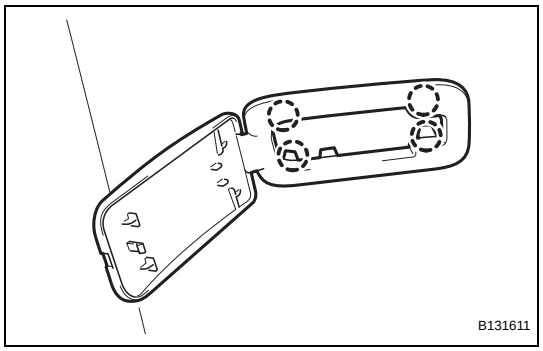

REMOVAL

1. REMOVE CHILD RESTRAINT SEAT TETHER ANCHOR COVER

(a) Using a screwdriver, detach the 4 claws and remove the cover.
HINT:
Tape the screwdriver tip before use.

2. REMOVE ROOF HEADLINING ASSEMBLY

HINT:
It is not necessary to completely remove the roof headlining. Slightly lower the rear section of the roof headlining.

(a) Partially remove the roof headlining (see page IR-26).

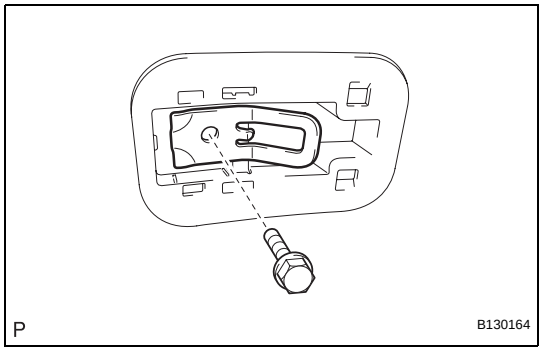

3. REMOVE CHILD RESTRAINT SEAT TETHER ANCHOR BRACKET

(a) Remove the bolt and bracket.

4. REMOVE CHILD RESTRAINT SEAT PROTECTOR

INSTALLATION

HINT:
A bolt without a torque specification is shown in the standard bolt chart (see page SS-2).

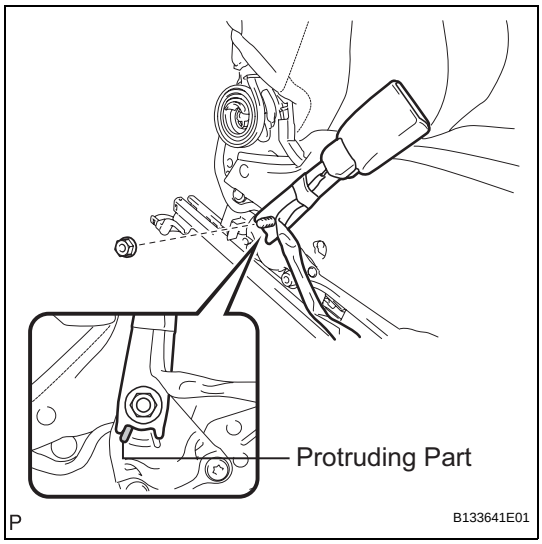

1. **INSTALL FRONT SEAT INNER BELT ASSEMBLY (for Power Seat)**
   (a) Install the front seat inner belt assembly with the nut.
   Torque: 42 N*m (428 kgf*cm, 31 ft.*lbf)
   NOTICE:
   Do not overlap the anchor part of the seat belt and protruding part of the seat adjuster.
   (b) for driver seat:
   Attach the 2 clamps and connect the 2 connector.
   (c) for Passenger Seat:
   Attach the clamp and connect the 2 connector.

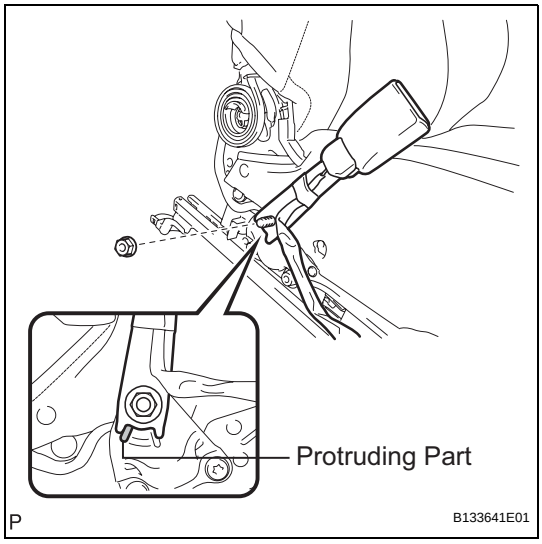

2. **INSTALL FRONT SEAT INNER BELT ASSEMBLY (for Manual Seat)**
   (a) Install the front seat inner belt assembly with the nut.
   Torque: 42 N*m (428 kgf*cm, 31 ft.*lbf)
   NOTICE:
   Do not overlap the anchor part of the seat belt and protruding part of the seat adjuster.
   (b) for driver seat:
   Attach the 3 clamps and connect the 2 connector.
   (c) for Passenger Seat:
   Attach the 2 clamps and connect the connector.
3. **INSTALL FRONT SEAT CUSHION INNER SHIELD LH (See page SE-21)**
4. **INSTALL FRONT SEAT CUSHION INNER SHIELD RH (See page SE-21)**
5. **INSTALL FRONT SEAT ASSEMBLY (for Power Seat) (See page SE-27)**
6. **INSTALL FRONT SEAT ASSEMBLY (for Manual Seat) (See page SE-11)**
7. **INSTALL FRONT SEAT TRACK BRACKET OUTER COVER LH (See page SE-23)**
8. **INSTALL FRONT SEAT TRACK BRACKET INNER COVER LH (See page SE-23)**
9. **INSTALL FRONT SEAT TRACK BRACKET INNER COVER RH**
   (a) Use the same procedures described for the LH side.

10. INSTALL FRONT SEAT TRACK BRACKET OUTER COVER RH

(a) Use the same procedures described for the LH side.

11. CONNECT CABLE TO NEGATIVE BATTERY TERMINAL

FRONT SEAT INNER BELT ASSEMBLY

COMPONENTS

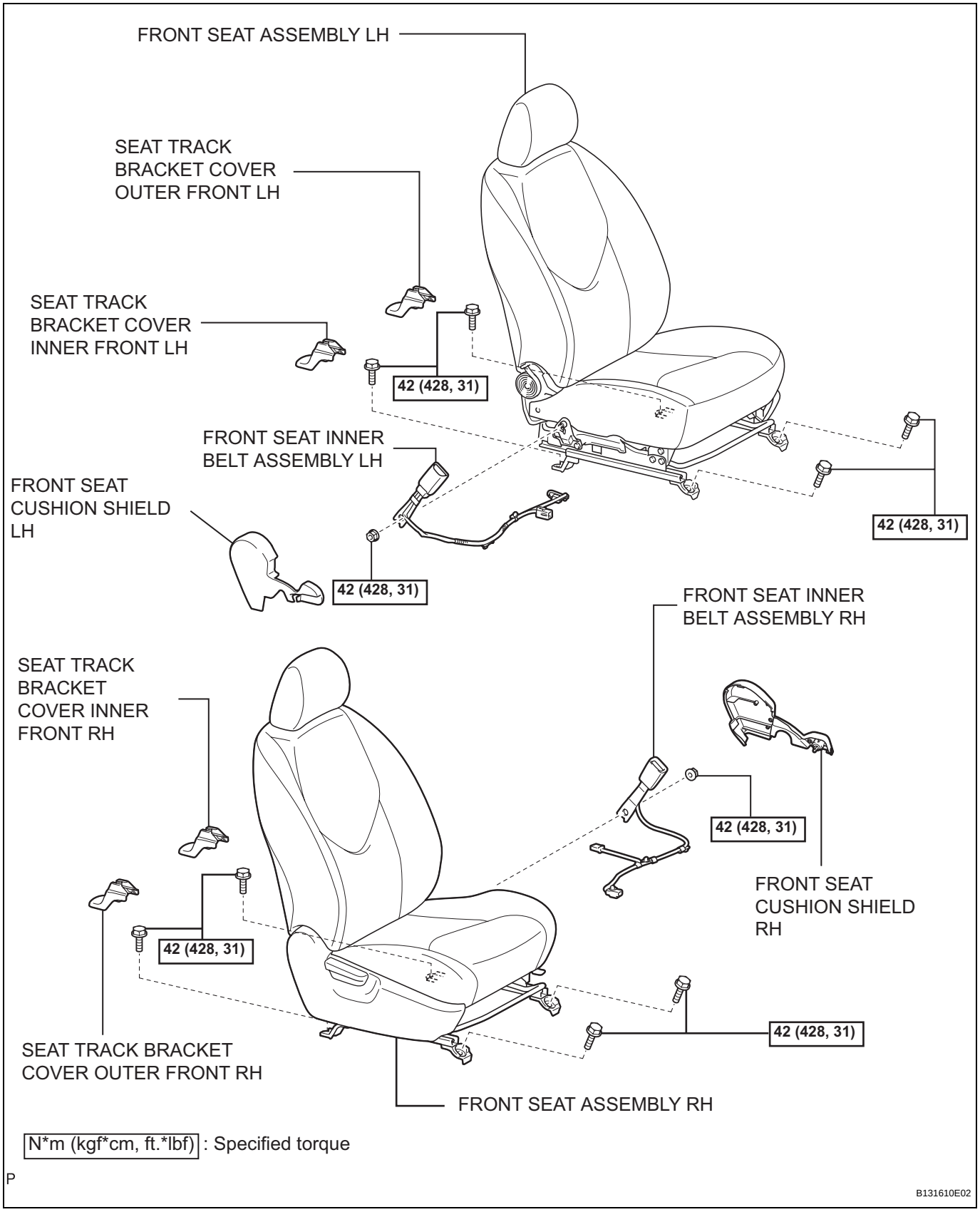

SB

REMOVAL

1. **DISCONNECT CABLE FROM NEGATIVE BATTERY TERMINAL**
   CAUTION:
   Wait at least 90 seconds after disconnecting the cable from the negative (-) battery terminal to prevent airbag and seat belt pretensioner activation.
2. **REMOVE FRONT SEAT TRACK BRACKET OUTER COVER LH (See page SE-11)**
3. **REMOVE FRONT SEAT TRACK BRACKET INNER COVER LH (See page SE-11)**
4. **REMOVE SEAT TRACK BRACKET COVER OUTER FRONT RH**
   (a) Use the same procedures described for the LH side.
5. **REMOVE SEAT TRACK BRACKET COVER INNER FRONT RH**
   (a) Use the same procedures described for the LH side.
6. **REMOVE FRONT SEAT ASSEMBLY (for Power Seat) (See page SE-27)**
7. **REMOVE FRONT SEAT ASSEMBLY (for Manual Seat) (See page SE-11)**
8. **REMOVE FRONT SEAT CUSHION SHIELD RH (for Power Seat) (See page SE-29)**
9. **REMOVE FRONT SEAT CUSHION INNER SHIELD LH (for Manual Seat) (See page SE-13)**
10. **REMOVE FRONT SEAT INNER BELT ASSEMBLY (for Power Seat)**
    (a) for Driver Seat:
    Disconnect the 2 connectors and detach the 2 clamps.
    (b) for Passenger Seat:
    Disconnect the connector and detach the 2 clamps.
    (c) Remove the nut and seat belt.
11. **REMOVE FRONT SEAT INNER BELT ASSEMBLY (for Manual Seat)**
    (a) for Driver Seat:
    Disconnect the 2 connectors and detach the 3 clamps.
    (b) for Passenger Seat:
    Disconnect the connector and detach the 2 clamps.

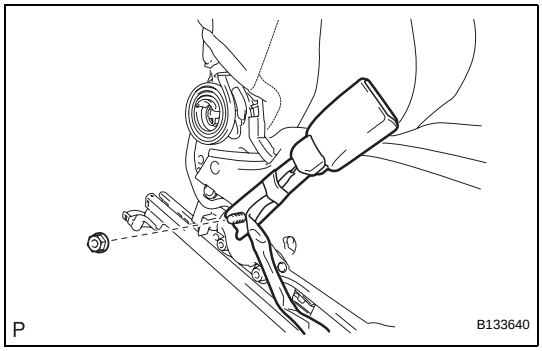

SB

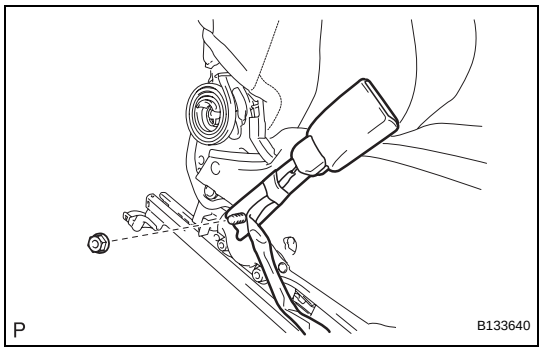

(c) Remove the nut and seat belt.

REMOVAL

HINT:

- Use the same procedures for the LH side and RH side.
- The procedures listed below are for the LH side.

1. **DISCONNECT CABLE FROM NEGATIVE BATTERY TERMINAL**
   CAUTION:
   Wait at least 90 seconds after disconnecting the cable from the negative (-) battery terminal to prevent airbag and seat belt pretensioner activation.
2. **REMOVE FRONT DOOR SCUFF PLATE LH (See page IR-26)**
3. **REMOVE FRONT DOOR OPENING TRIM WEATHERSTRIP LH**
4. **REMOVE REAR DOOR SCUFF PLATE LH (See page IR-29)**
5. **REMOVE REAR DOOR OPENING TRIM WEATHERSTRIP LH**
6. **REMOVE CENTER PILLAR GARNISH LOWER LH**
   (a) Remove the lap belt anchor cover.
   (b) Remove the anchor's built-in bolt from the pillar and disconnect the outer belt.

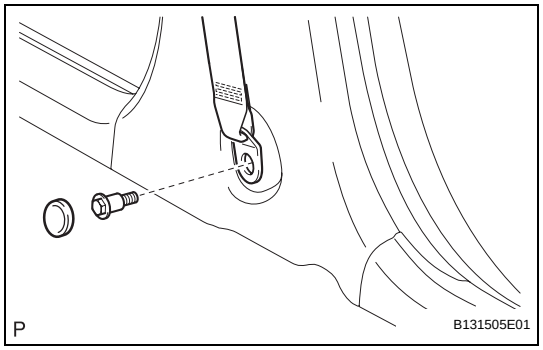

   (c) Using a screwdriver, detach the 2 claws.
   HINT:
   Tape the screwdriver tip before use.
   (d) Using a clip remover, detach the 2 clips and remove the garnish.

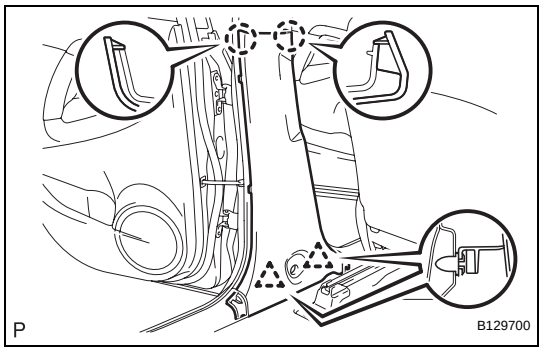

7. **REMOVE CENTER PILLAR GARNISH LH**
   (a) Using a screwdriver, remove the 2 screws.
   (b) Using a clip remover, detach the clip then remove the garnish.
   (c) Pull out the outer belt anchor from the center pillar garnish.

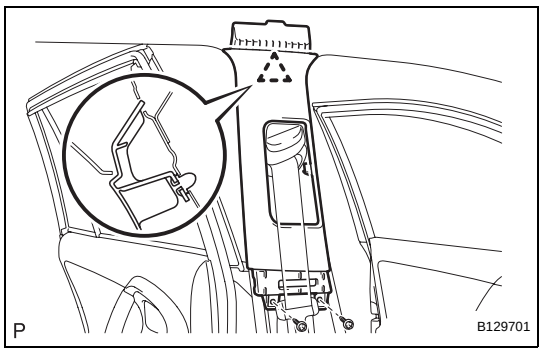

SB

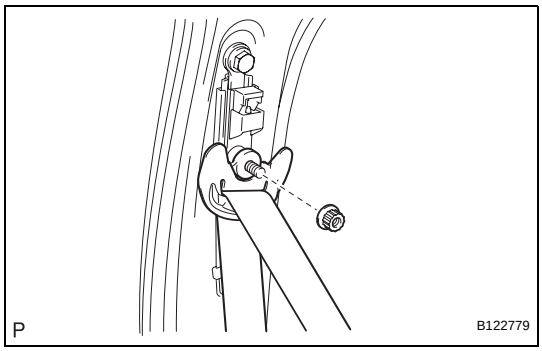

8. REMOVE FRONT SEAT OUTER BELT ASSEMBLY LH

(a) Remove the nut and disconnect the shoulder anchor.

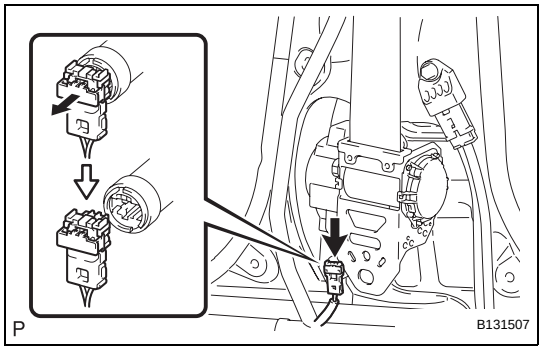

(b) Disconnect the pretensioner connector as shown in the illustration.

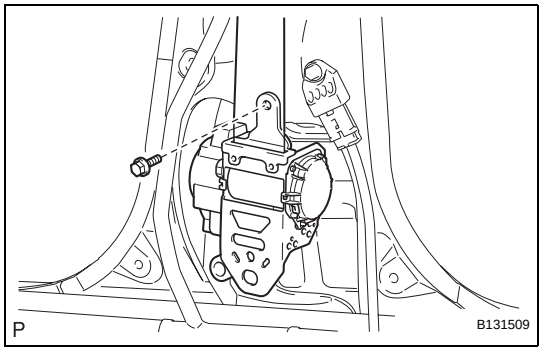

(c) Remove the bolt and outer belt.

SB

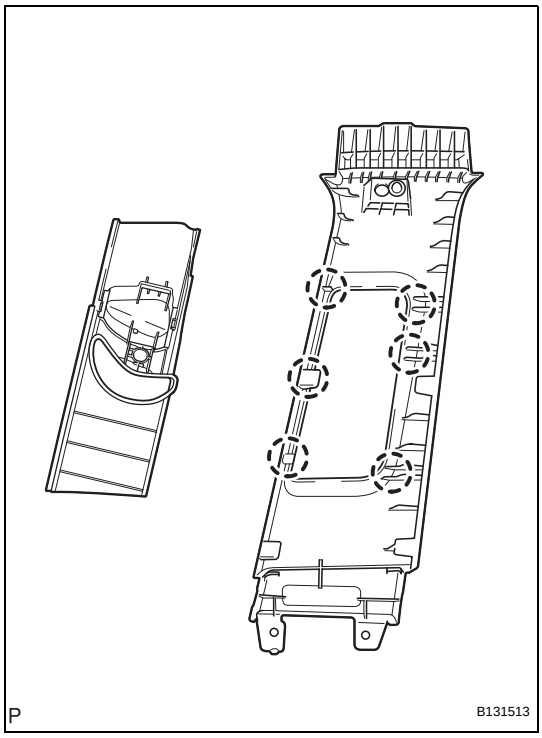

9. REMOVE FRONT SHOULDER BELT ANCHOR PLATE SUB-ASSEMBLY LH

(a) Using a screwdriver, detach the 6 claws.

(b) Remove the anchor plate from the garnish.
HINT:
Tape the screwdriver tip before use.

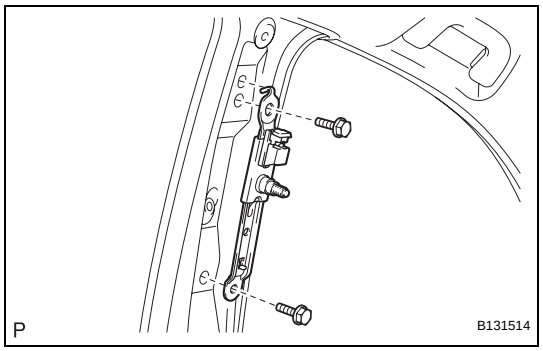

10. REMOVE FRONT SHOULDER BELT ANCHOR ADJUSTER ASSEMBLY

(a) Remove the 2 bolts and anchor.

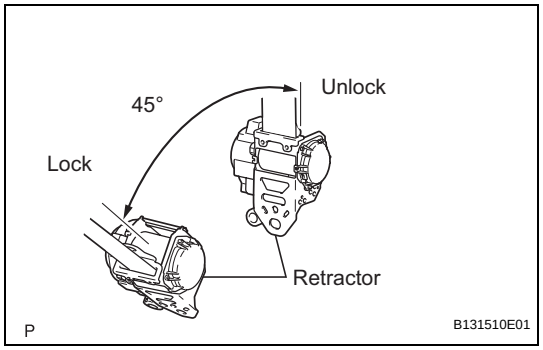

INSPECTION

1. INSPECT FRONT SEAT OUTER BELT ASSEMBLY

NOTICE:

Do not disassemble the retractor.

(a) Before installing the outer belt, check the ELR.

(1) When the inclination of the retractor is 15° or less, check that the belt can be pulled from the retractor. When the inclination of the retractor is over 45°, check that the belt locks.

If the result is not as specified, replace the outer belt assembly.

INSTALLATION

HINT:

- Use the same procedures for the LH side and RH side.
- The procedures listed below are for the LH side.
- A bolt without a torque specification is shown in the standard bolt chart (see page SS-2).

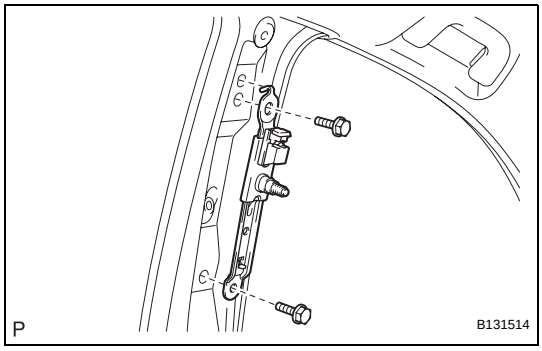

1. INSTALL FRONT SHOULDER BELT ANCHOR ADJUSTER ASSEMBLY

(a) Align the adjuster positioning hole with the claw, and install the adjuster with the 2 bolts as shown in the illustration.
Torque: 42 N*m (428 kgf*cm, 31 ft.*lbf)

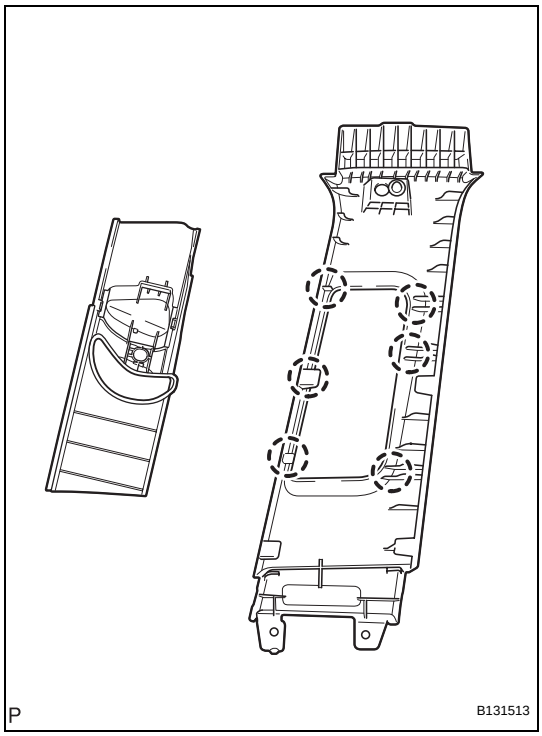

2. INSTALL FRONT SHOULDER BELT ANCHOR PLATE SUB-ASSEMBLY LH

(a) Install the plate as shown in the illustration.
HINT:
Make sure the plate is firmly set into the garnish's claws.

3. INSTALL FRONT SEAT OUTER BELT ASSEMBLY LH
NOTICE:
Do not disassemble the retractor.

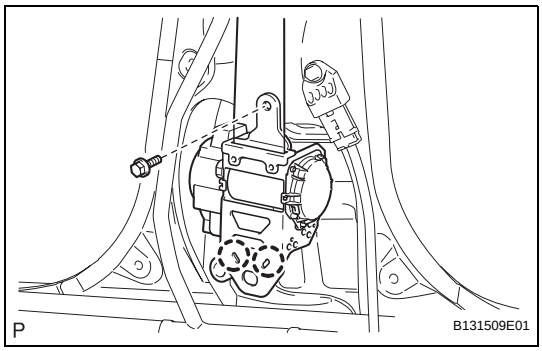

(a) Align the 2 claws with the seat belt positioning holes, and install the retractor of the outer belt with the bolt as shown in the illustration.
Torque: 8.5 N*m (87 kgf*cm, 75 in.*lbf)

SB

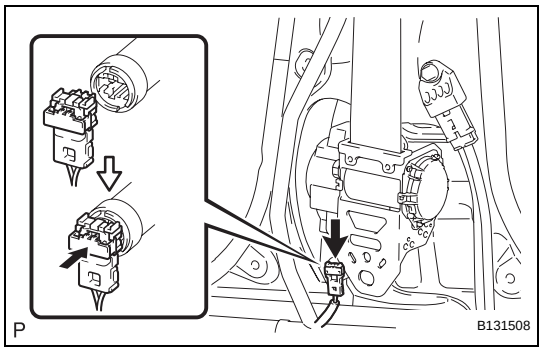

(b) Connect the pretensioner connector as shown in the illustration.

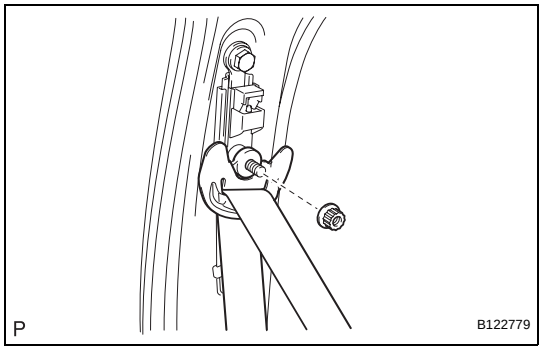

(c) Connect the outer belt with the shoulder anchor's bolt.
Torque: 42 N*m (428 kgf*cm, 31 ft.*lbf)

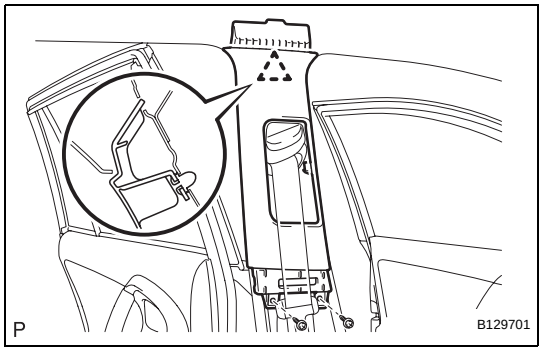

4. INSTALL CENTER PILLAR GARNISH LH
(a) Pass the outer belt anchor through the center pillar garnish.
(b) Attach the clip.
(c) Install the garnish with the 2 screws.

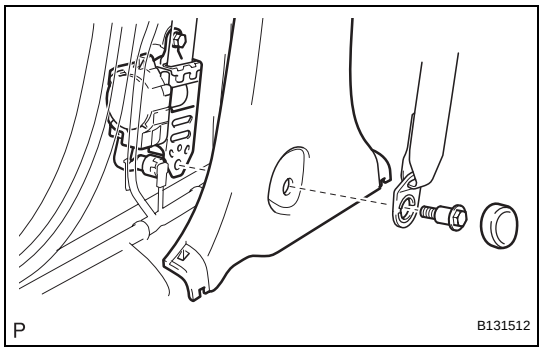

5. INSTALL CENTER PILLAR GARNISH LOWER LH
(a) Attach the 2 claws and 2 clips to install the garnish.
(b) Connect the floor anchor with the bolt.
Torque: 42 N*m (428 kgf*cm, 31 ft.*lbf)
(c) Attach the lap belt outer anchor cover.

6. INSTALL REAR DOOR OPENING TRIM WEATHERSTRIP LH

7. INSTALL REAR DOOR SCUFF PLATE LH (See page IR-57)

8. INSTALL FRONT DOOR SCUFF PLATE LH (See page IR-59)

9. INSTALL FRONT DOOR OPENING TRIM WEATHERSTRIP LH

10. CONNECT CABLE TO NEGATIVE BATTERY TERMINAL

DISPOSAL

HINT:
When scrapping vehicles equipped with a seat belt pretensioner or disposing of a front seat outer belt (with seat belt pretensioner), always first activate the seat belt pretensioner in accordance with the procedures described below. If any abnormality occurs during activation of the seat belt pretensioner, contact the SERVICE DEPARTMENT of TOYOTA MOTOR SALES, U.S.A., INC.

CAUTION:

- **Never dispose of a front seat outer belt that has a non-activated pretensioner.**
- **The seat belt pretensioner produces a loud, exploding sound when it activates. Perform the operation where it will not be a nuisance to nearby people.**
- **When activating a front seat outer belt (with seat belt pretensioner), stand at least 10 m (33 ft.) away from the front seat outer belt.**
- **Use gloves and safety glasses when handling a front seat outer belt with an activated pretensioner.**
- **Always wash your hands with water after completing the disposal.**
- **Do not apply water to a front seat outer belt that has an activated pretensioner.**
- **Perform procedures in a place away from electrical interference.**
- **When activating the seat belt pretensioner, always use the specified SST (SRS airbag deployment tool).**

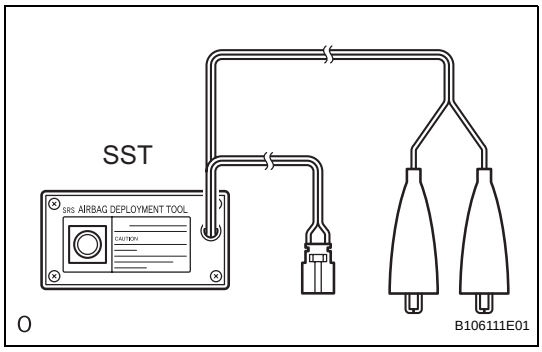

1. DISPOSE OF FRONT SEAT OUTER BELT ASSEMBLY RH (WHEN INSTALLED IN VEHICLE)

HINT:
Prepare a battery to activate the seat belt pretensioner.

(a) Check if SST is functioning properly.
SST 09082-00700
CAUTION:
When activating the seat belt pretensioner, always use the specified SST.

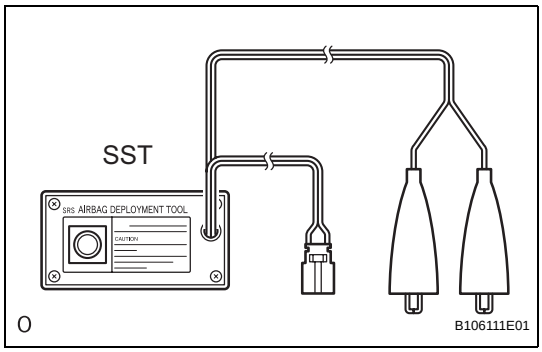

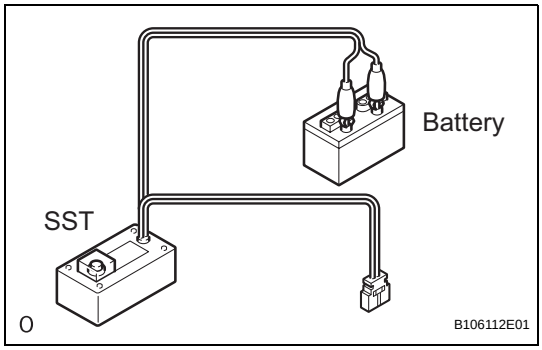

(1) Connect SST's red clip to the battery's positive (+) terminal and the black clip to the battery's negative (-) terminal.
HINT:
Do not connect the yellow connector. The yellow connector is used to connect to the seat belt pretensioner.

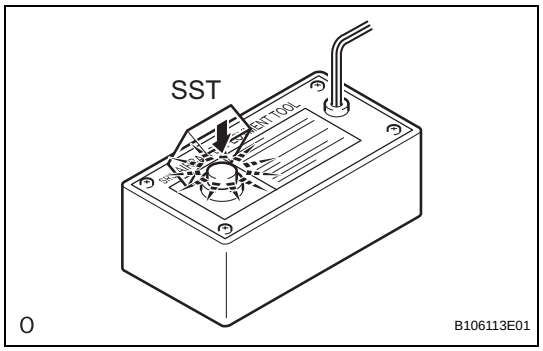

(2) Press the SST activation switch and check that the LED of the SST activation switch illuminates.
CAUTION:
If the LED illuminates when the activation switch is not being pressed, SST may be malfunctioning. Replace SST with a new one.

(b) Disconnect SST from the battery.

(c) Disconnect the pretensioner connector.
(1) Disconnect the cable from the negative (-) battery terminal.
(2) Remove the front door scuff plate (see page IR-26).
(3) Remove the rear door scuff plate (see page IR-29).
(4) Remove the lower center pillar garnish (see page IR-29).

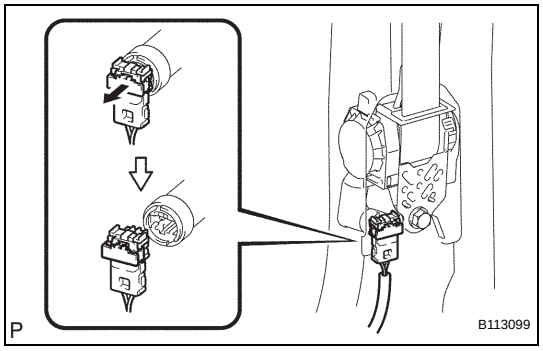

(5) Disconnect the pretensioner connector as shown in the illustration.

(d) Prepare SST for activation of the seat belt pretensioner.
(1) Install the floor anchor of the seat belt.

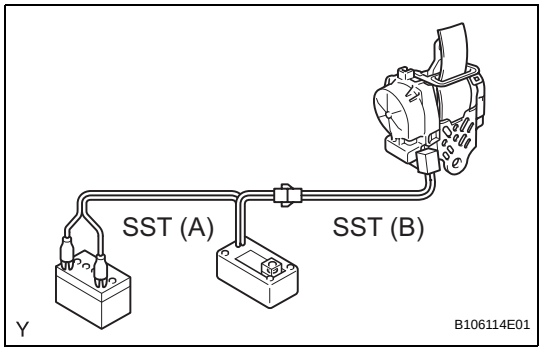

(2) Connect SST (A) to SST (B). Then connect SST (B)'s connector to the seat belt pretensioner.
SST 09082-00700, 09082-00770
NOTICE:
To avoid damaging SST connector and wire harness, do not lock the secondary lock of the twin lock.

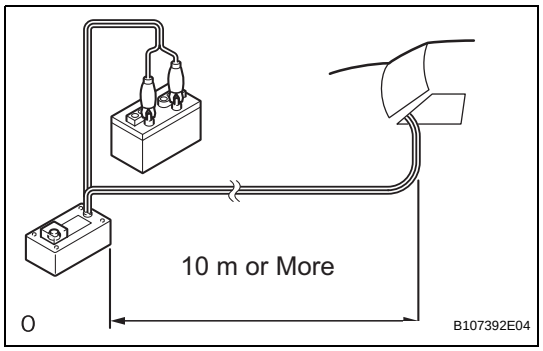

(3) Move SST at least 10 m (33 ft.) away from the front of the vehicle.
(4) Close all the doors and windows of the vehicle.
HINT:
Leave a gap in one of the windows for inserting SST wire harness.
NOTICE:
Take care not to damage SST wire harness.
(5) Connect SST's red clip to the battery's positive (+) terminal and the black clip to the negative (-) terminal.

(e) Activate the seat belt pretensioner.
(1) Confirm that no one is inside the vehicle or within 10 m (33 ft.) of the vehicle.

SB

(2) Press the SST activation switch to activate the seat belt pretensioner.
HINT:
The seat belt pretensioner operates at the same time the SST activation switch's LED illuminates.

(f) Dispose of the front seat outer belt (with the seat belt pretensioner).
CAUTION:
- **Do not touch the front seat outer belt for at least 30 minutes after the seat belt pretensioner has been activated. It is very hot.**
- **Use gloves and safety glasses when handling a front seat outer belt whose pretensioner has been activated.**
- **Always wash your hands with water after completing the disposal.**
- **Do not apply water to a front seat outer belt that has an activated pretensioner.**

HINT:
When scrapping a vehicle, activate the seat belt pretensioner, and then scrap the vehicle with the activated front seat outer belt installed.

2. DISPOSE OF FRONT SEAT OUTER BELT ASSEMBLY (WHEN NOT INSTALLED IN VEHICLE)
NOTICE:
- **When only disposing of the front seat outer belt (with the seat belt pretensioner), never use the customer's vehicle to activate the seat belt pretensioner.**
- **Be sure to follow the procedures listed below when activating the seat belt pretensioner.**

SB

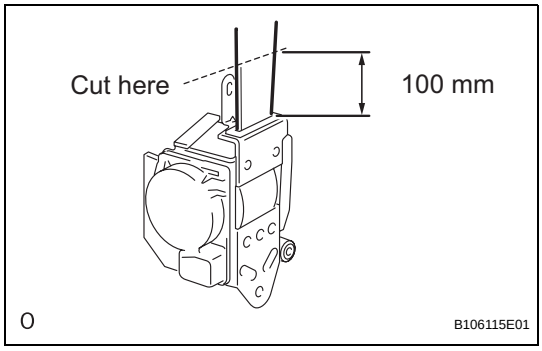

(a) Remove the front seat outer belt.
(1) Wind the seat belt with the retractor.
(2) When the seat belt is sufficiently wound, cut the seat belt approximately 100 mm (0.39 in.) from the retractor, as shown in the illustration.
HINT:
The seat belt is designed so that winding the seat belt before pretensioner activation will decrease the pulling power of the seat belt during pretensioner activation.

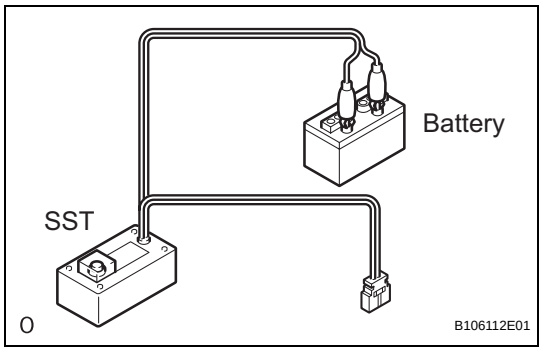

(b) Check if SST is functioning properly.
SST 09082-00700, 09082-00770
CAUTION:
When activating a seat belt pretensioner, always use the specified SST.

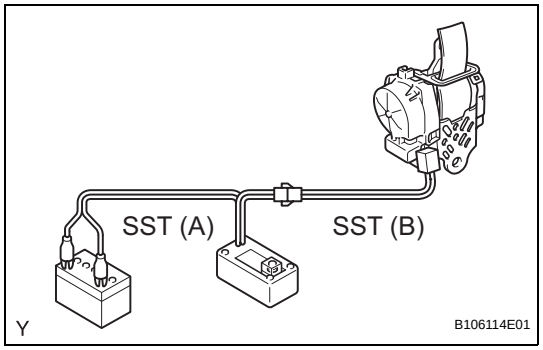

(c) Prepare SST for activation of the seat belt pretensioner.
(1) Connect SST (A) to SST (B). Then connect SST (B)'s connector to the seat belt pretensioner.
NOTICE:
To avoid damaging SST connector and wire harness, do not lock the secondary lock of the twin lock.

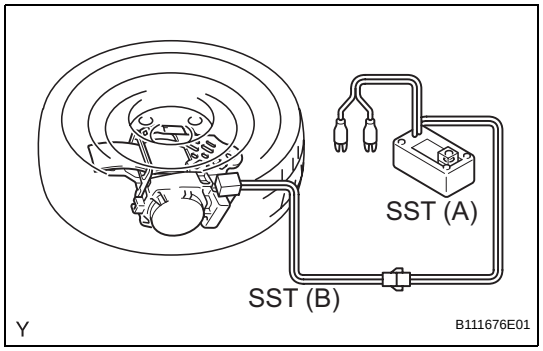

(2) Place the front seat outer belt on the ground and cover it with a tire (with wheel).
NOTICE:
Set up the front seat outer belt as shown in the illustration.

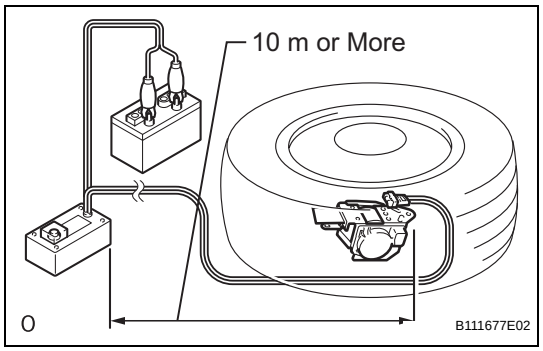

(3) Move SST at least 10 m (33 ft.) away from the wheel.
NOTICE:
Take care not to damage the SST wire harness.

(d) Activate the seat belt pretensioner.
(1) Connect SST's red clip to the battery's positive (+) terminal and the black clip to the battery's negative (-) terminal.
(2) Check that no one is within 10 m (33 ft) of the wheel.
(3) Press the SST activation switch to activate the seat belt pretensioner.
HINT:
The seat belt pretensioner operates at the same time the SST activation switch's LED illuminates.

SB

(e) Dispose of the front seat outer belt (with the seat belt pretensioner).

CAUTION:

- **Do not touch the front seat outer belt for at least 30 minutes after the seat belt pretensioner has been activated. It is very hot.**
- **Use gloves and safety glasses when handling a front seat outer belt whose pretensioner has been activated.**
- **Always wash your hands with water after completing the disposal.**
- **Do not apply water to a front seat outer belt that has an activated pretensioner.**

(1) Remove the tire (with wheel) and SST.

(2) Place the front seat outer belt in a plastic bag, tie the end tightly and dispose of it in the same way as other general parts.

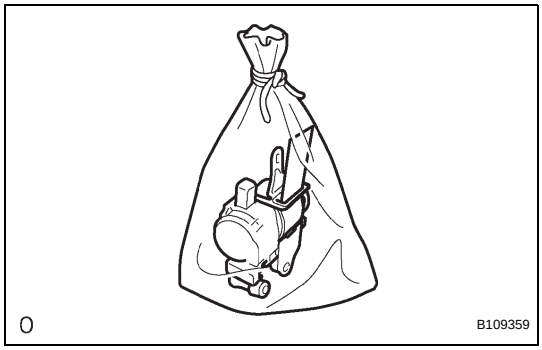

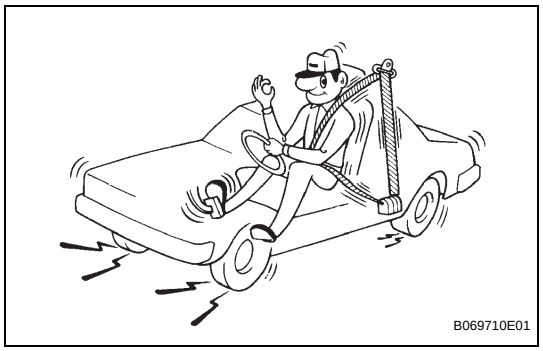

FRONT SEAT OUTER BELT ASSEMBLY

PRECAUTION

CAUTION:
Replace the faulty parts of the seat belt systems (outer belt, inner belt, bolts, nuts, adjustable shoulder anchor, tether anchor hardware and other related parts). When inspecting a vehicle that was in a collision, be sure to check all of the seat belt systems regardless of whether or not the system was activated in the collision. Replace any damaged or malfunctioning systems.

1. **RUNNING TEST (IN SAFE AREA)**
   CAUTION:
   Conduct this test in a safe area.
   (a) Fasten the front seat belt.
   (b) Drive the vehicle at 16 km/h (10 mph) and firmly depress the brakes. Check that the belts lock and cannot be extended at this time.
   If a belt does not lock, replace the seat belt assembly (see page SB-27).
   HINT:
   Inspect a seat belt assembly before installing it (see page SB-29).

COMPONENTS

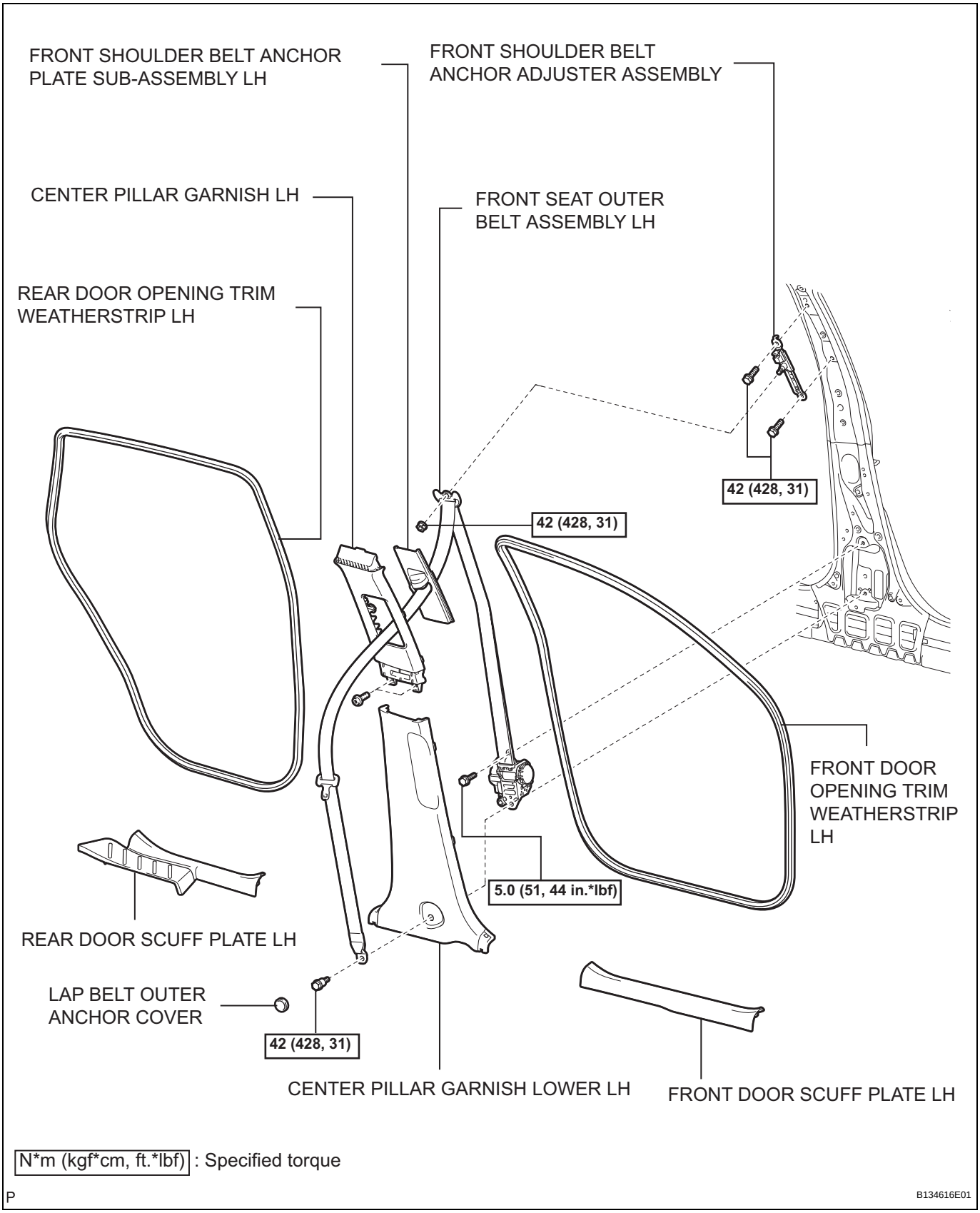

N*m (kgf*cm, ft.*lbf) : Specified torque

P

B134616E01

SB

REMOVAL

CAUTION:
Wait at least 90 seconds after disconnecting the cable from the negative (-) battery terminal to prevent airbag and seat belt pretensioner activation.

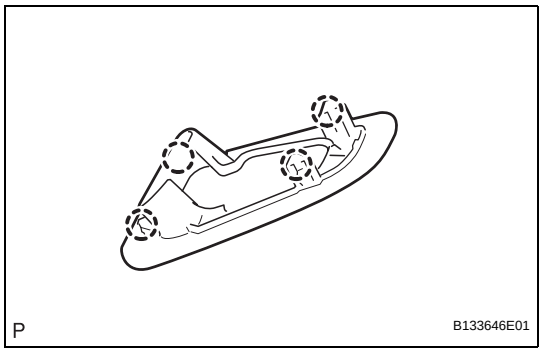

1. **REMOVE SHOULDER BELT ANCHOR COVER RH**
   (a) Using a screwdriver, remove the 4 claws and cover.
   HINT:
   Tape the screwdriver tip before use.

2. **REMOVE ROOF HEADLINING ASSEMBLY**
   HINT:
   It is not necessary to completely remove the roof headlining. Slightly lower the rear section of the roof headlining.
   (a) Partially remove the roof headlining (see page IR-26).

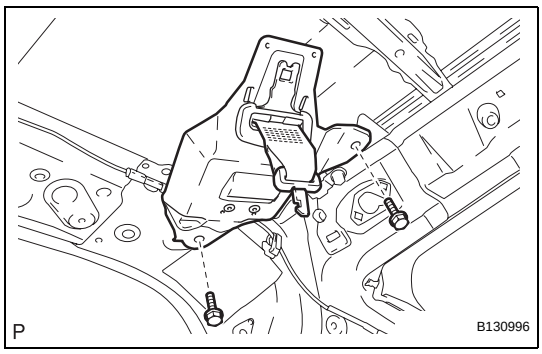

3. **REMOVE REAR CENTER SEAT OUTER BELT ASSEMBLY**
   (a) Remove the 2 bolts and seat belt.

INSPECTION

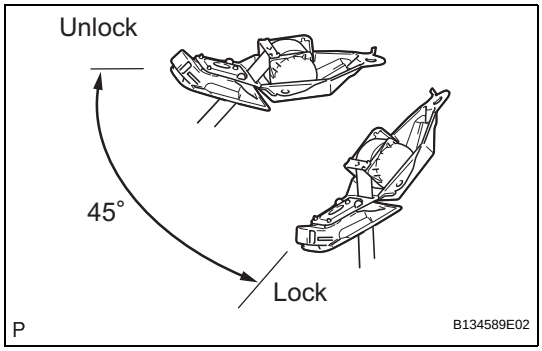

1. **INSPECT REAR CENTER SEAT OUTER BELT ASSEMBLY**
   NOTICE:
   Do not disassemble the retractor.
   (a) When the inclination of the retractor is 15° or less, check that the belt can be pulled from the retractor. When the inclination of the retractor is over 45°, check that the belt locks.
   If the operation is not as specified, replace the belt.

INSTALLATION

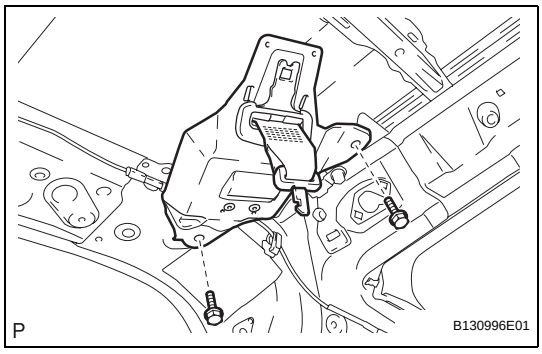

1. **INSTALL REAR CENTER SEAT OUTER BELT ASSEMBLY**
   (a) Install the seat belt with the 2 bolts.
   Torque: 42 N*m (428 kgf*cm, 31 ft.*lbf)

2. **INSTALL ROOF HEADLINING ASSEMBLY**
   (a) Install the roof headlining (see page IR-49).

SB

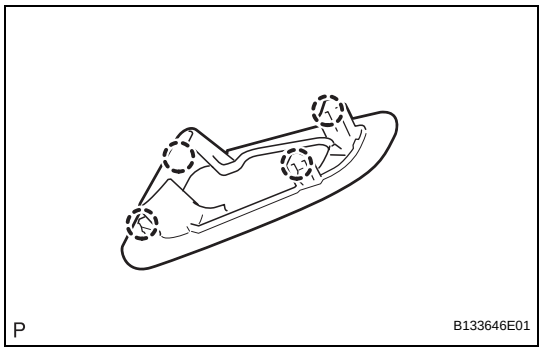

3. INSTALL SHOULDER BELT ANCHOR COVER RH

(a) Install the cover with the 4 claws.

REAR CENTER SEAT OUTER BELT ASSEMBLY

COMPONENTS

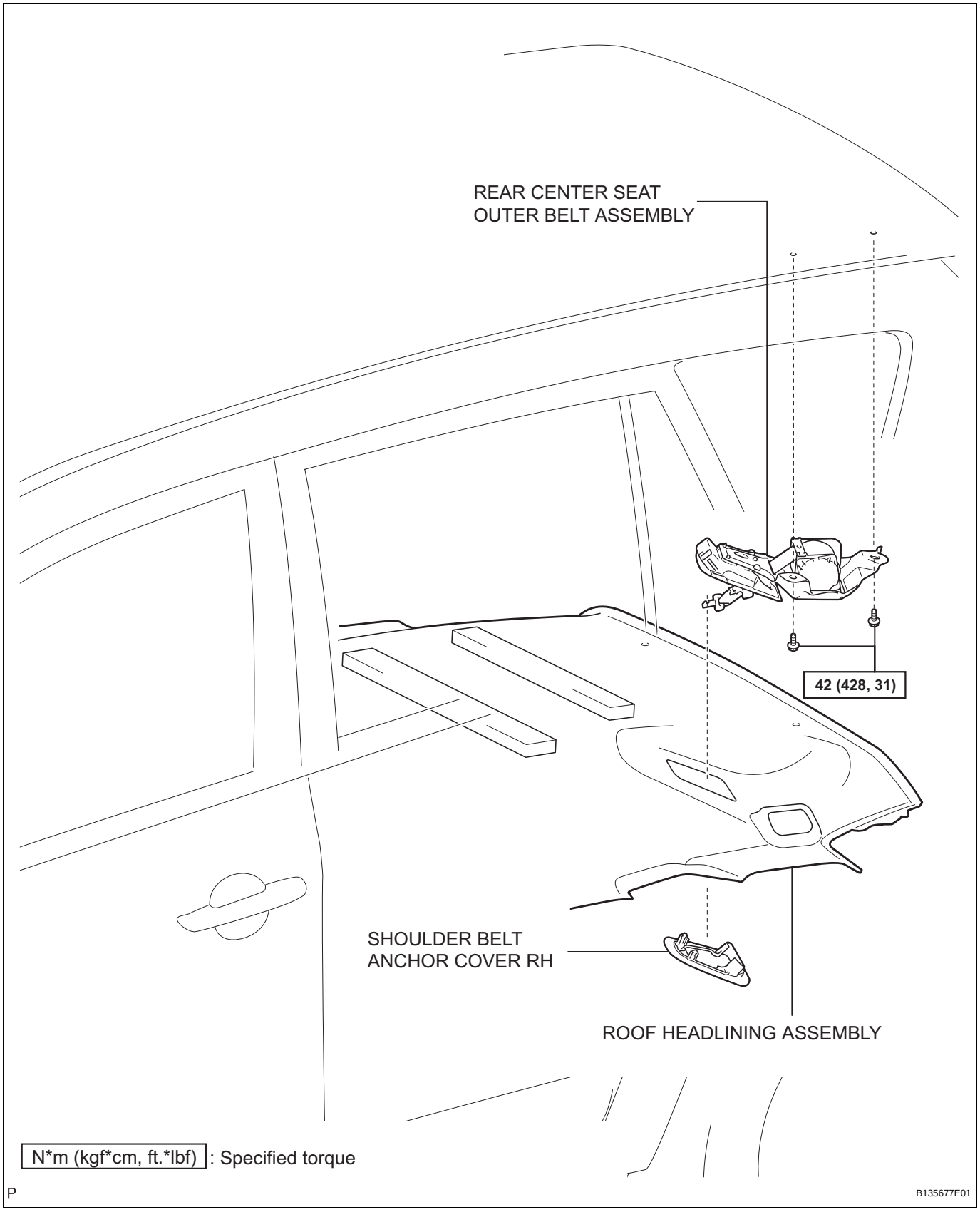

SB

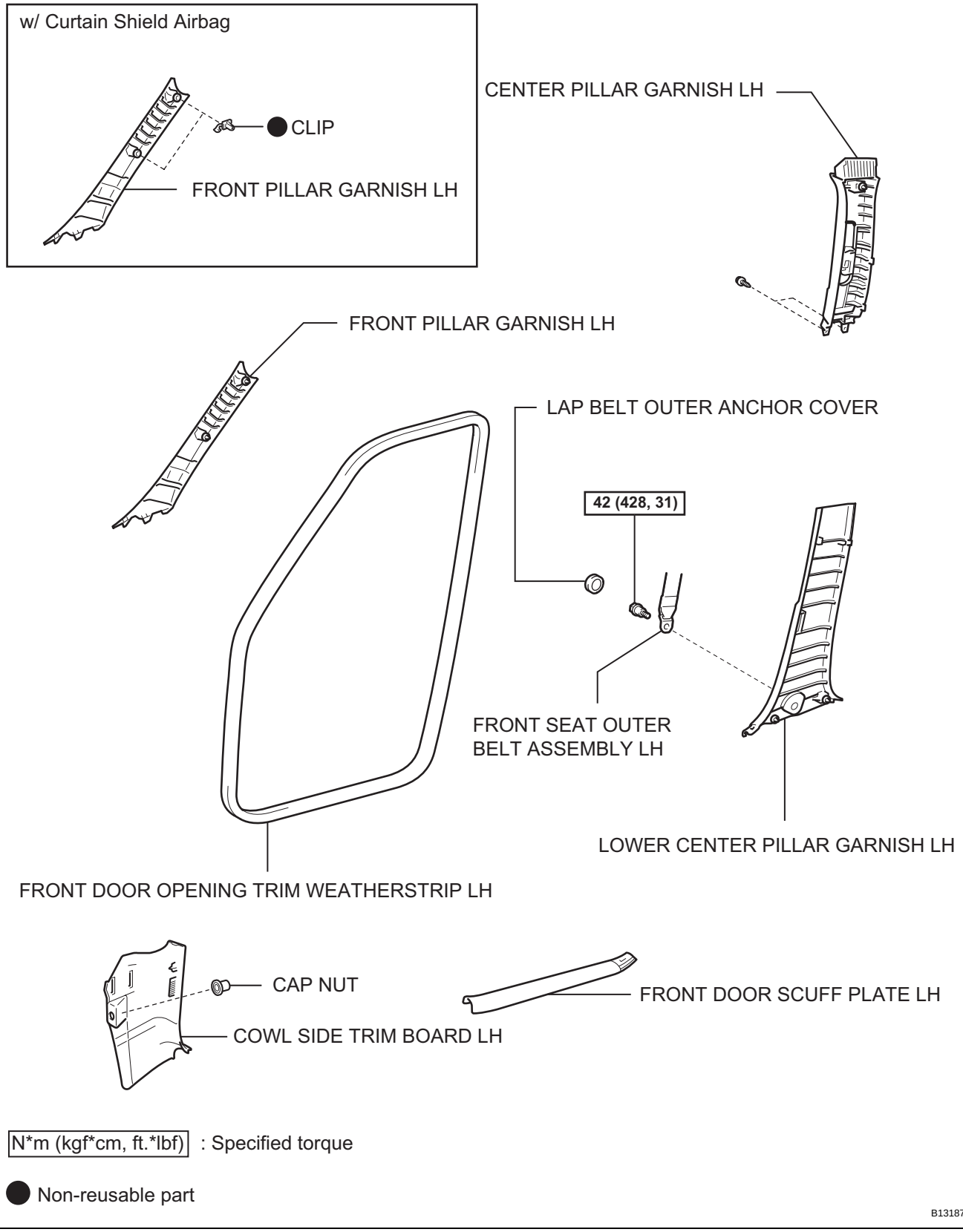
w/ Curtain Shield Airbag
CLIP
FRONT PILLAR GARNISH LH
CENTER PILLAR GARNISH LH
FRONT PILLAR GARNISH LH
LAP BELT OUTER ANCHOR COVER
42 (428, 31)
FRONT SEAT OUTER BELT ASSEMBLY LH
LOWER CENTER PILLAR GARNISH LH
FRONT DOOR OPENING TRIM WEATHERSTRIP LH
CAP NUT
COWL SIDE TRIM BOARD LH
FRONT DOOR SCUFF PLATE LH
N*m (kgf*cm, ft.*lbf) : Specified torque
Non-reusable part
B131878E08

SB

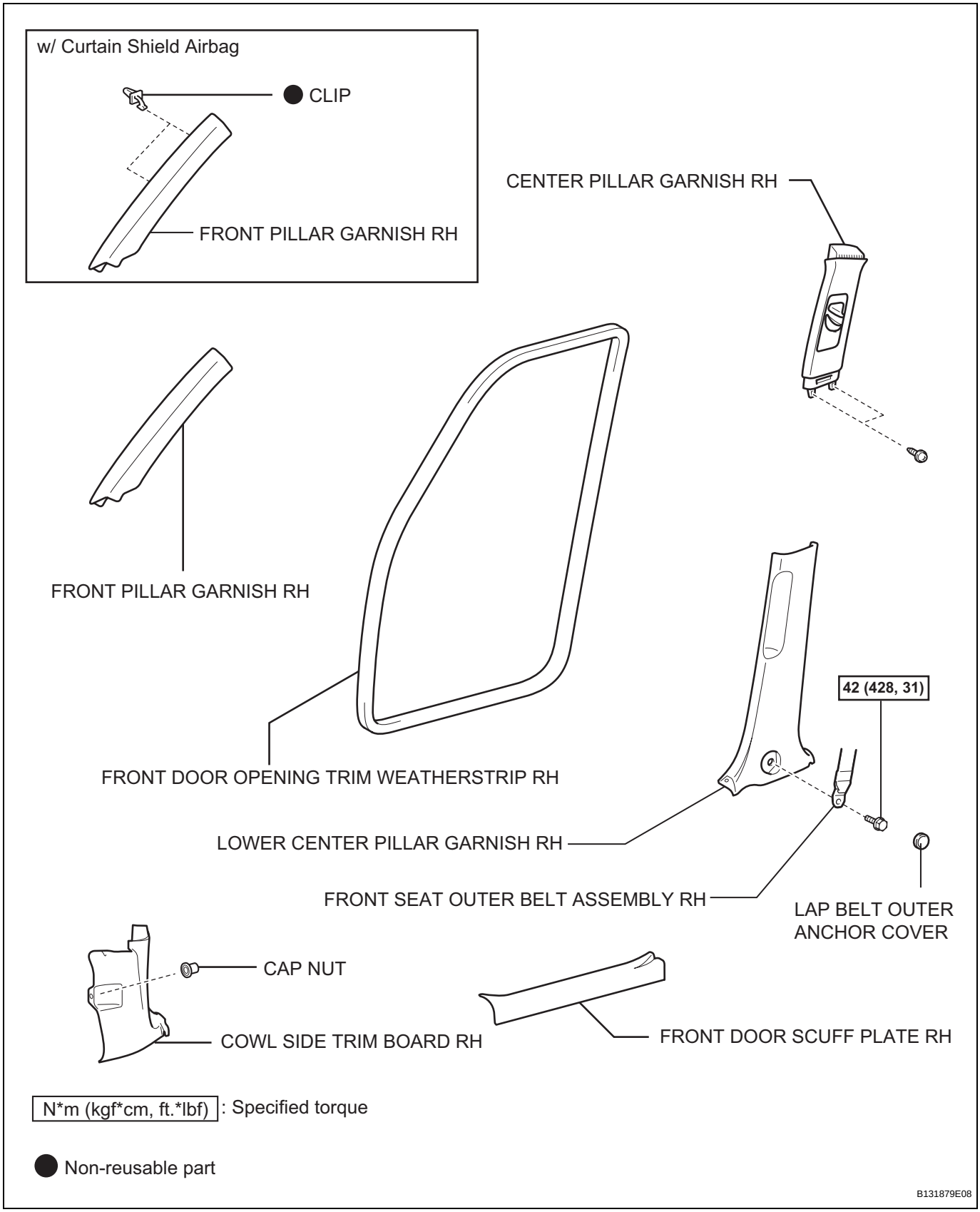
w/ Curtain Shield Airbag
CLIP
FRONT PILLAR GARNISH RH
CENTER PILLAR GARNISH RH
FRONT PILLAR GARNISH RH
FRONT DOOR OPENING TRIM WEATHERSTRIP RH
42 (428, 31)
LOWER CENTER PILLAR GARNISH RH
FRONT SEAT OUTER BELT ASSEMBLY RH
LAP BELT OUTER ANCHOR COVER
CAP NUT
COWL SIDE TRIM BOARD RH
FRONT DOOR SCUFF PLATE RH
N*m (kgf*cm, ft.*lbf) : Specified torque
Non-reusable part
B131879E08

SB

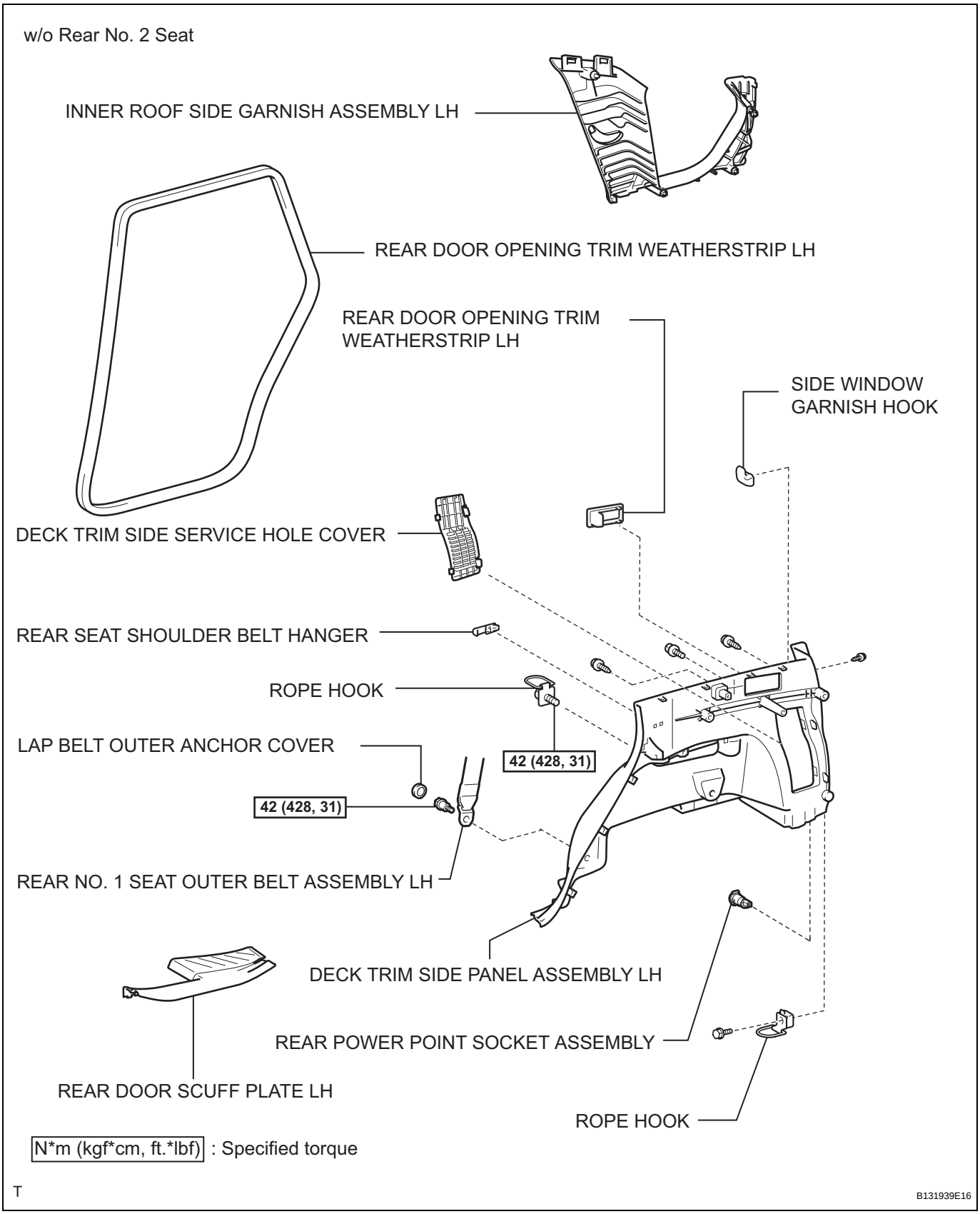
w/o Rear No. 2 Seat
INNER ROOF SIDE GARNISH ASSEMBLY LH
REAR DOOR OPENING TRIM WEATHERSTRIP LH
REAR DOOR OPENING TRIM WEATHERSTRIP LH
SIDE WINDOW GARNISH HOOK
DECK TRIM SIDE SERVICE HOLE COVER
REAR SEAT SHOULDER BELT HANGER
ROPE HOOK
LAP BELT OUTER ANCHOR COVER
42 (428, 31)
42 (428, 31)
REAR NO. 1 SEAT OUTER BELT ASSEMBLY LH
DECK TRIM SIDE PANEL ASSEMBLY LH
REAR POWER POINT SOCKET ASSEMBLY
REAR DOOR SCUFF PLATE LH
ROPE HOOK
N*m (kgf*cm, ft.*lbf) : Specified torque
T
B131939E16

SB

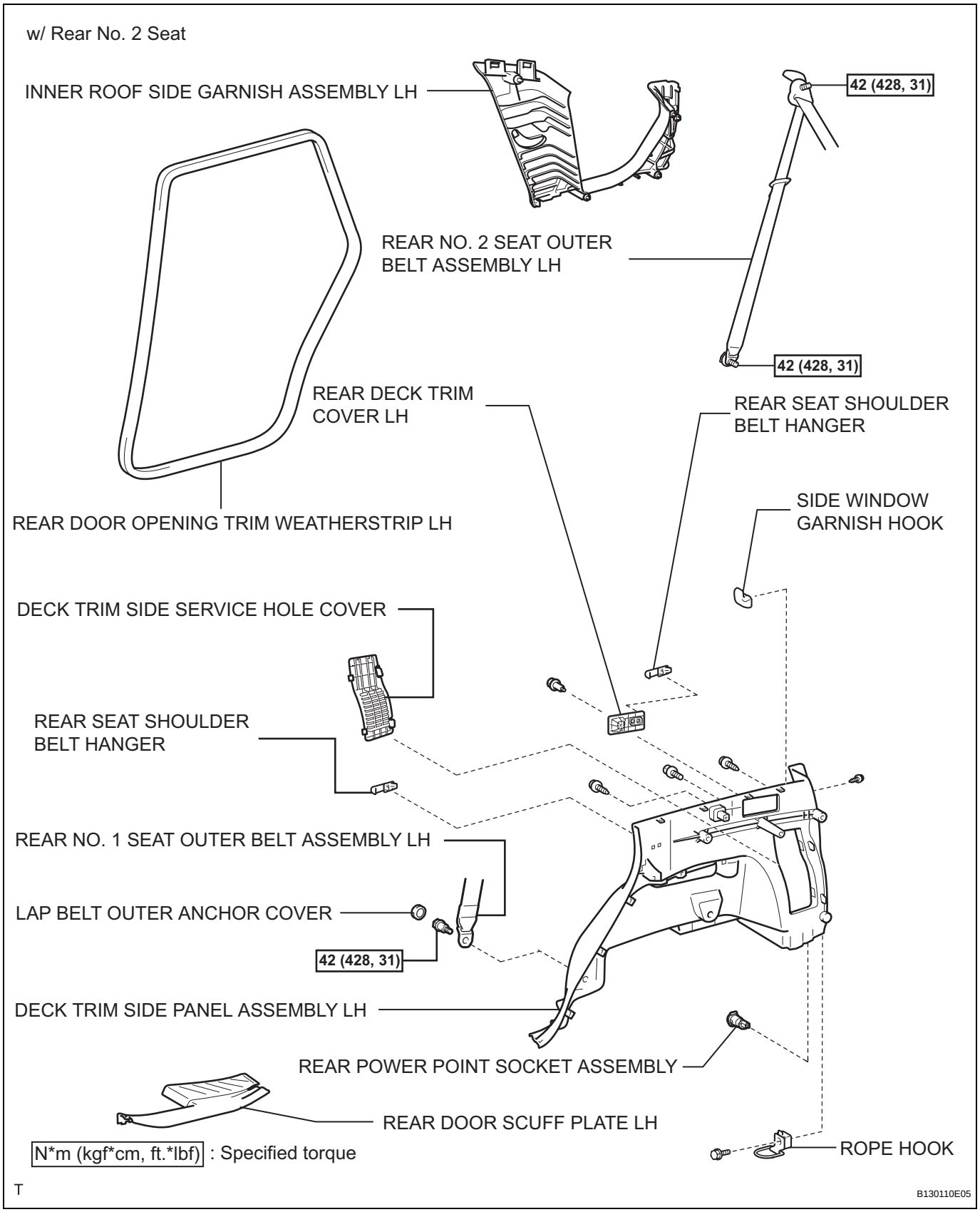
w/ Rear No. 2 Seat
INNER ROOF SIDE GARNISH ASSEMBLY LH
42 (428, 31)
REAR NO. 2 SEAT OUTER BELT ASSEMBLY LH
42 (428, 31)
REAR DECK TRIM COVER LH
REAR SEAT SHOULDER BELT HANGER
REAR DOOR OPENING TRIM WEATHERSTRIP LH
SIDE WINDOW GARNISH HOOK
DECK TRIM SIDE SERVICE HOLE COVER
REAR SEAT SHOULDER BELT HANGER
REAR NO. 1 SEAT OUTER BELT ASSEMBLY LH
LAP BELT OUTER ANCHOR COVER
42 (428, 31)
DECK TRIM SIDE PANEL ASSEMBLY LH
REAR POWER POINT SOCKET ASSEMBLY
REAR DOOR SCUFF PLATE LH
ROPE HOOK
N*m (kgf*cm, ft.*lbf) : Specified torque
T
B130110E05

SB

w/o Rear No. 2 Seat

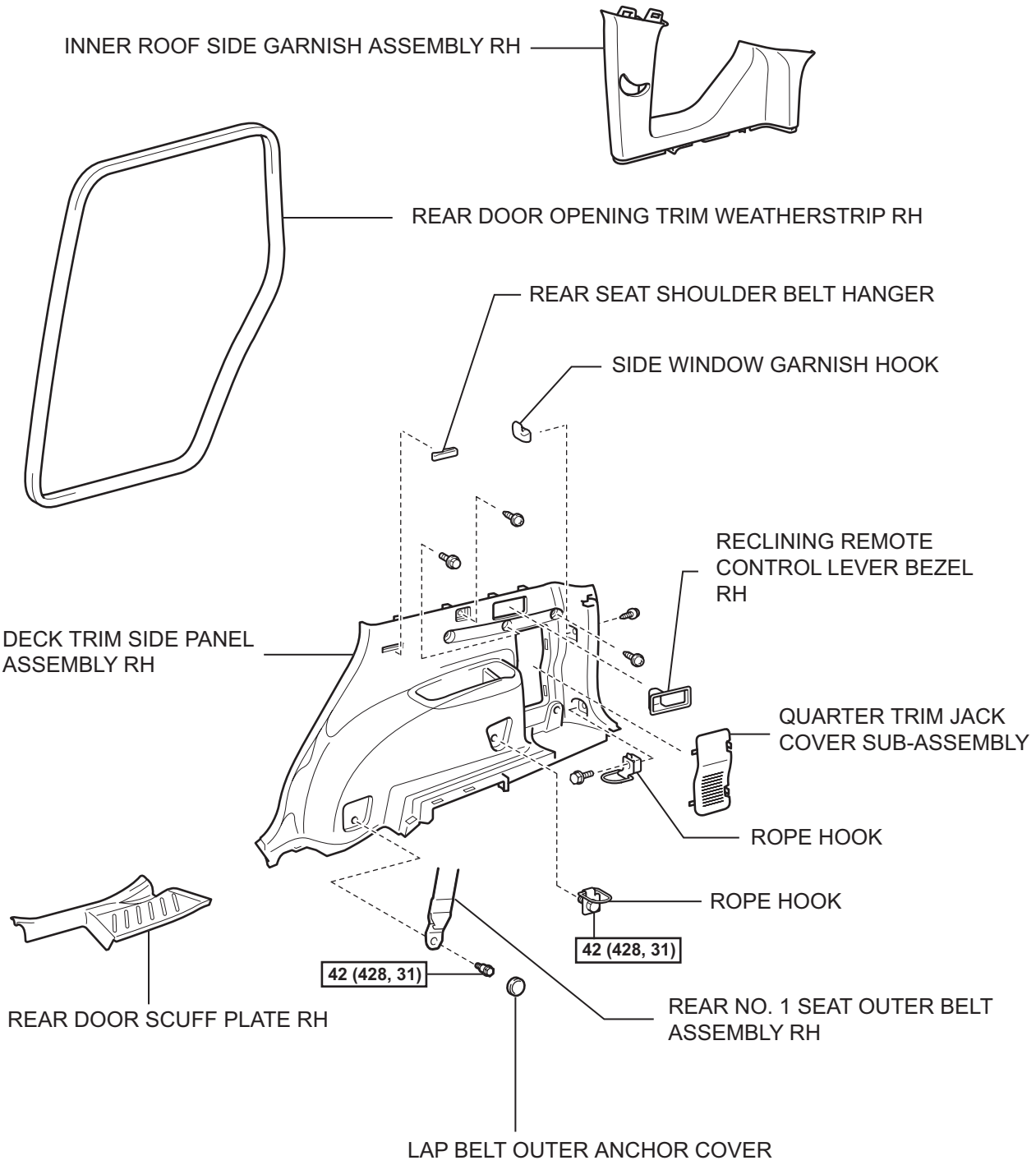

N*m (kgf*cm, ft.*lbf) : Specified torque

T

B131940E15

SB

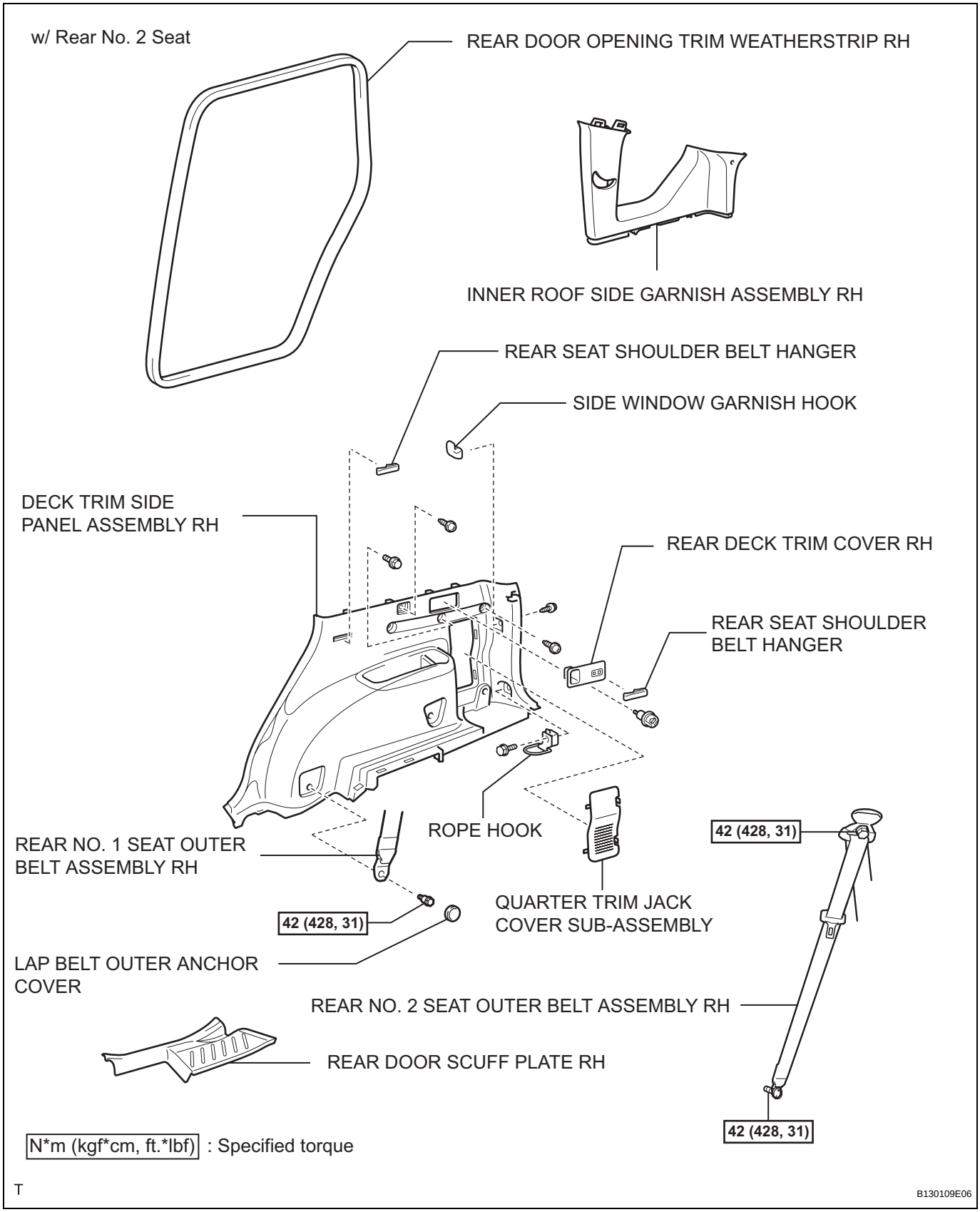
w/ Rear No. 2 Seat
REAR DOOR OPENING TRIM WEATHERSTRIP RH
INNER ROOF SIDE GARNISH ASSEMBLY RH
REAR SEAT SHOULDER BELT HANGER
SIDE WINDOW GARNISH HOOK
DECK TRIM SIDE PANEL ASSEMBLY RH
REAR DECK TRIM COVER RH
REAR SEAT SHOULDER BELT HANGER
ROPE HOOK
REAR NO. 1 SEAT OUTER BELT ASSEMBLY RH
42 (428, 31)
QUARTER TRIM JACK COVER SUB-ASSEMBLY
LAP BELT OUTER ANCHOR COVER
REAR NO. 2 SEAT OUTER BELT ASSEMBLY RH
REAR DOOR SCUFF PLATE RH
42 (428, 31)
42 (428, 31)
N*m (kgf*cm, ft.*lbf) : Specified torque
T
B130109E06

SB

w/o Rear No. 2 Seat

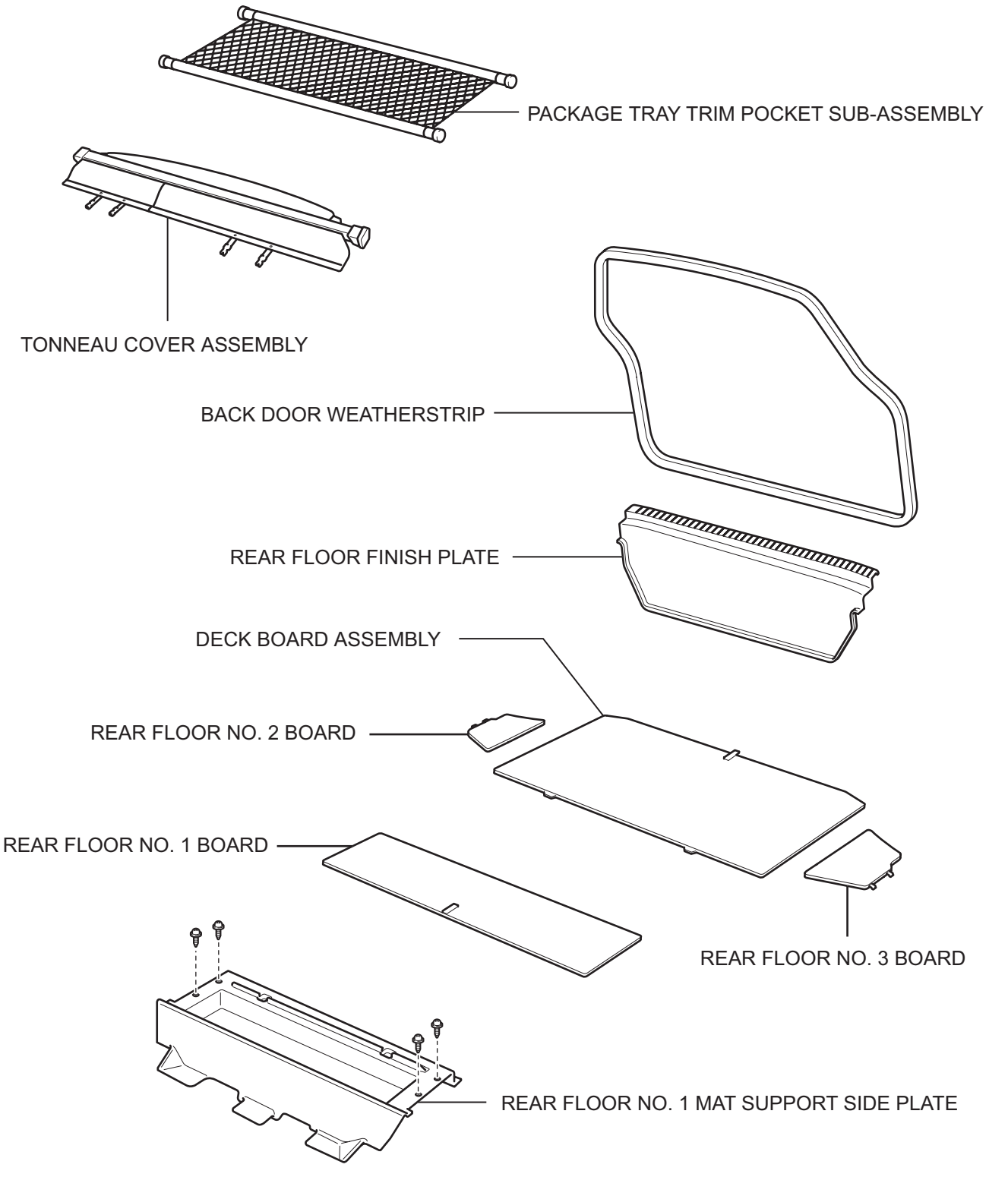

T

B130111E20

SB

w/ Rear No. 2 Seat

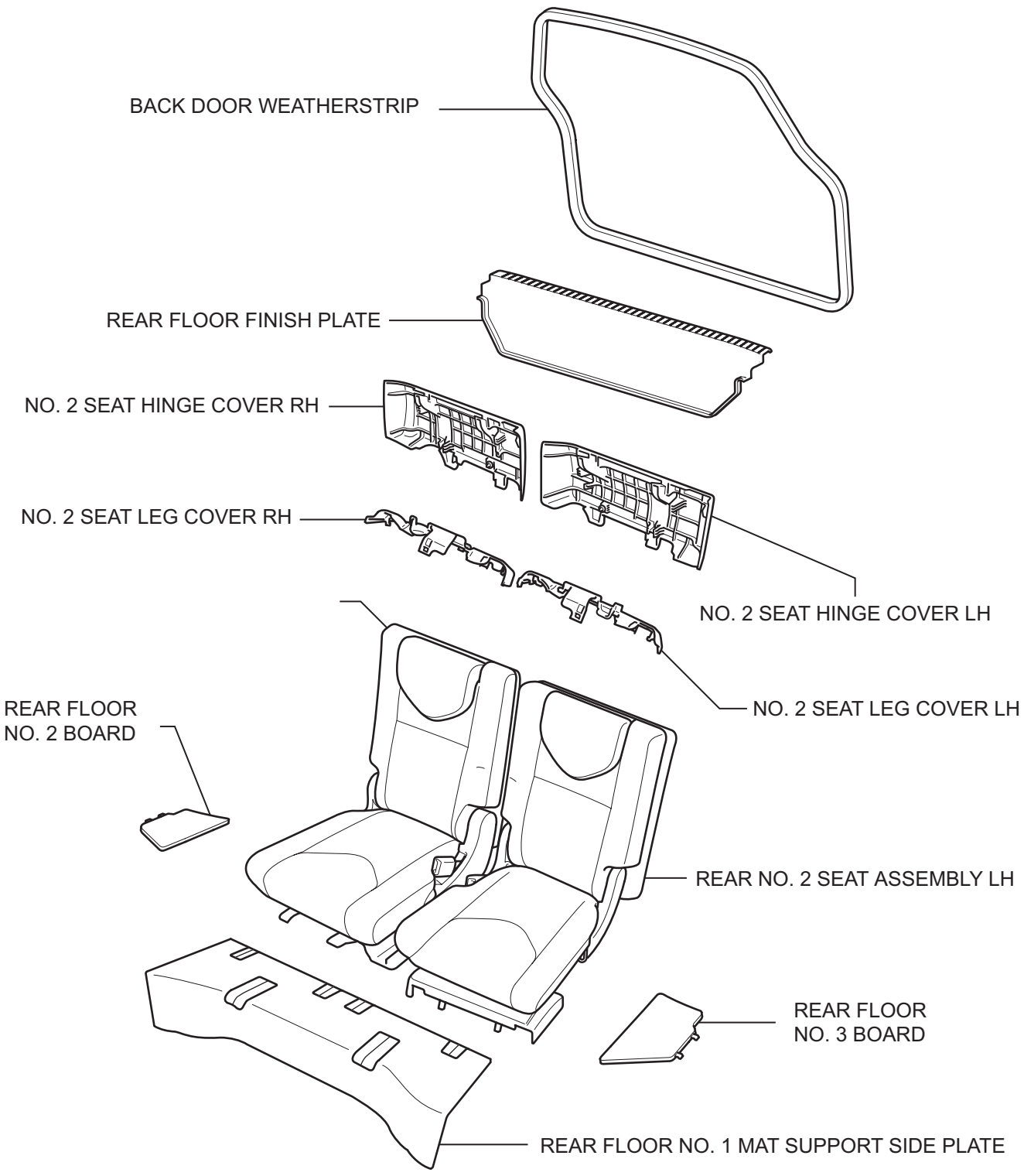

T

B130112E10

SB

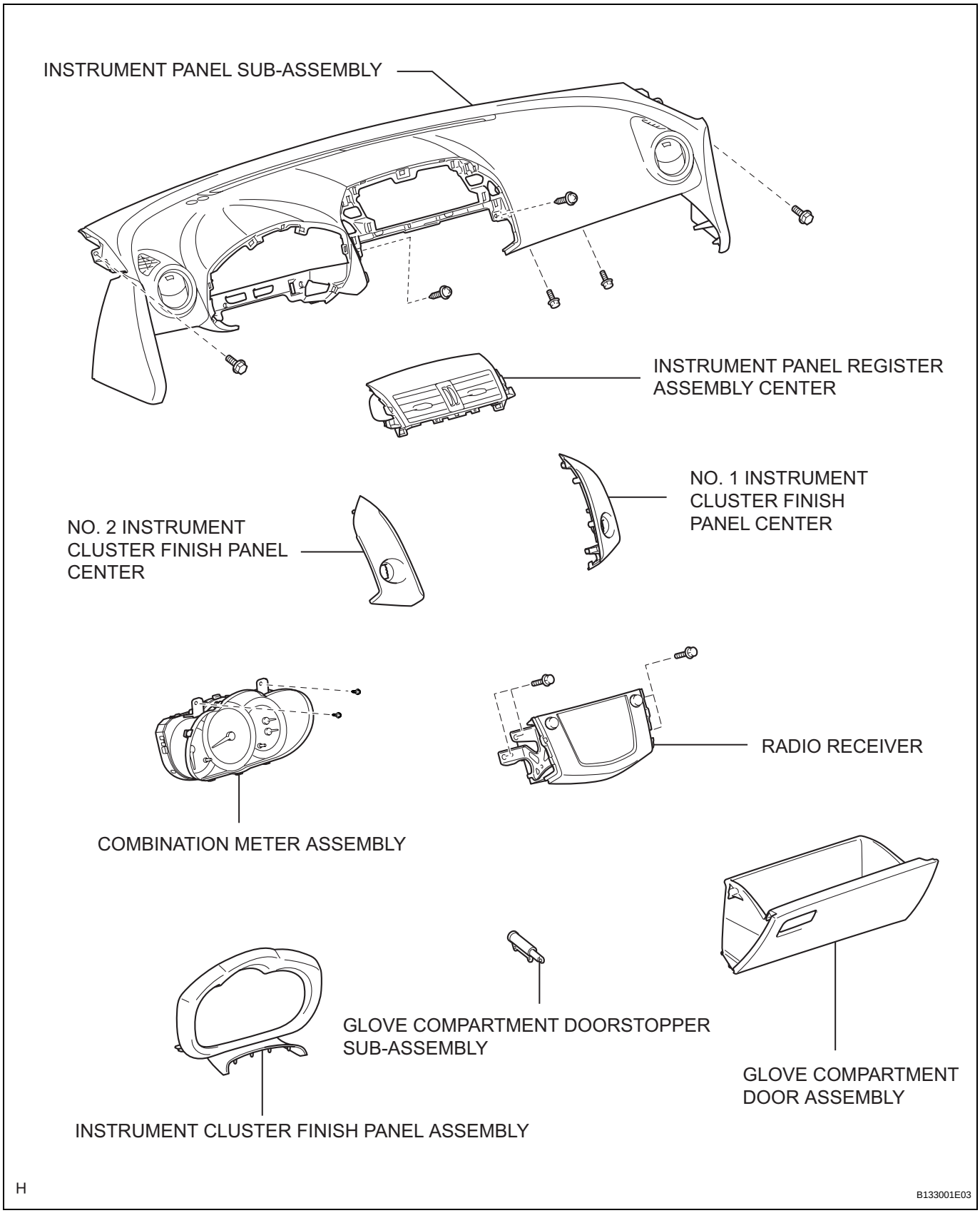
INSTRUMENT PANEL SUB-ASSEMBLY
INSTRUMENT PANEL REGISTER ASSEMBLY CENTER
NO. 1 INSTRUMENT CLUSTER FINISH PANEL CENTER
NO. 2 INSTRUMENT CLUSTER FINISH PANEL CENTER
RADIO RECEIVER
COMBINATION METER ASSEMBLY
GLOVE COMPARTMENT DOORSTOPPER SUB-ASSEMBLY
GLOVE COMPARTMENT DOOR ASSEMBLY
INSTRUMENT CLUSTER FINISH PANEL ASSEMBLY
H
B133001E03

SB

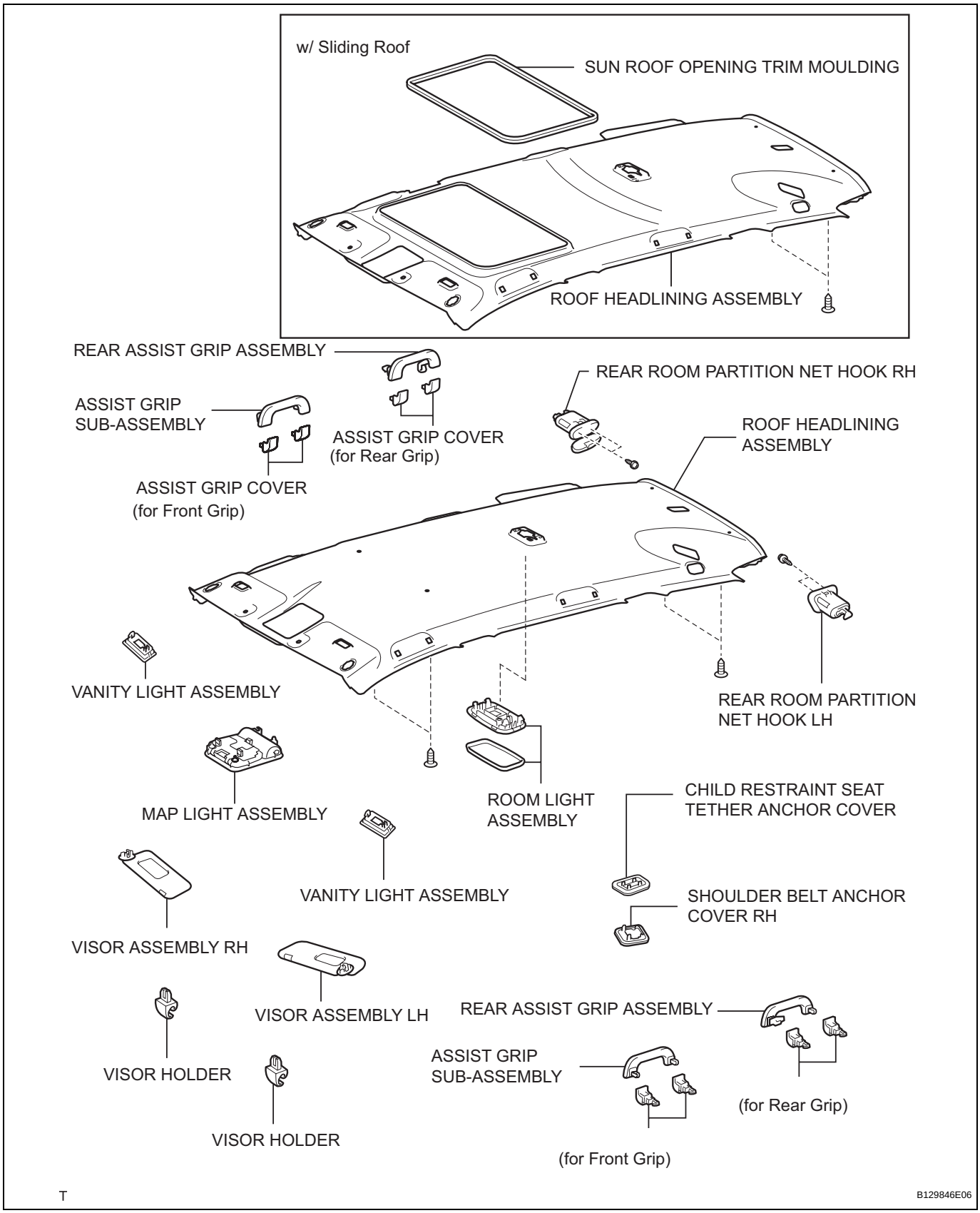
w/ Sliding Roof
SUN ROOF OPENING TRIM MOULDING
ROOF HEADLINING ASSEMBLY
REAR ASSIST GRIP ASSEMBLY
ASSIST GRIP SUB-ASSEMBLY
ASSIST GRIP COVER (for Rear Grip)
ASSIST GRIP COVER (for Front Grip)
REAR ROOM PARTITION NET HOOK RH
ROOF HEADLINING ASSEMBLY
VANITY LIGHT ASSEMBLY
REAR ROOM PARTITION NET HOOK LH
MAP LIGHT ASSEMBLY
ROOM LIGHT ASSEMBLY
CHILD RESTRAINT SEAT TETHER ANCHOR COVER
VANITY LIGHT ASSEMBLY
SHOULDER BELT ANCHOR COVER RH
VISOR ASSEMBLY RH
VISOR ASSEMBLY LH
REAR ASSIST GRIP ASSEMBLY
VISOR HOLDER
ASSIST GRIP SUB-ASSEMBLY
(for Rear Grip)
VISOR HOLDER
(for Front Grip)
T
B129846E06

SB

REMOVAL

1. **REMOVE REAR SEAT LEG COVER**
2. **REMOVE REAR NO. 2 SEAT LEG SIDE COVER**
3. **REMOVE REAR NO. 3 SEAT LEG SIDE COVER (w/ Rear No. 2 Seat) (See page SE-81)**
4. **REMOVE REAR NO. 3 SEAT LEG SIDE COVER (w/o Rear No. 2 Seat) (See page SE-81)**
5. **REMOVE REAR NO. 4 SEAT LEG SIDE COVER**
6. **REMOVE REAR NO. 5 SEAT LEG SIDE COVER**
7. **REMOVE REAR SEAT LAP TYPE BELT ASSEMBLY CENTER RH (w/o Rear No. 2 Seat)**
   (a) Remove the bolt and seat belt.

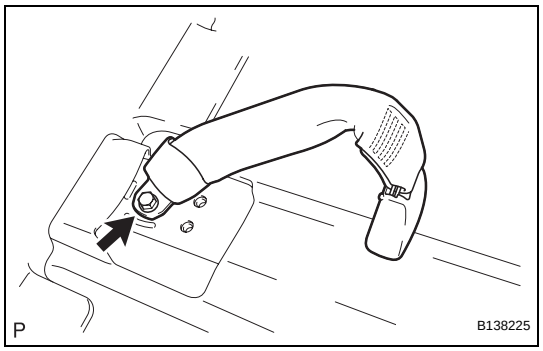

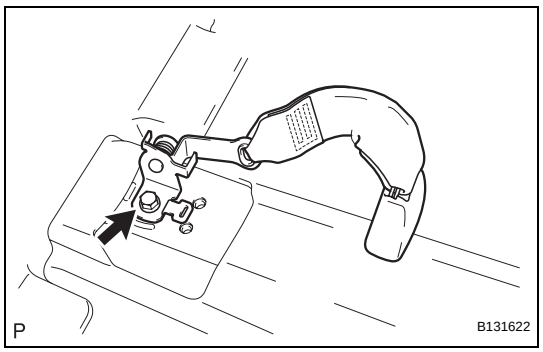

8. **REMOVE REAR SEAT LAP TYPE BELT ASSEMBLY CENTER RH (w/ Rear No. 2 Seat)**
   (a) Remove the bolt and seat belt.
9. **REMOVE REAR NO. 1 SEAT ASSEMBLY LH (See page SE-50)**
10. **REMOVE REAR SEAT REAR BRACKET COVER LH (See page SE-54)**

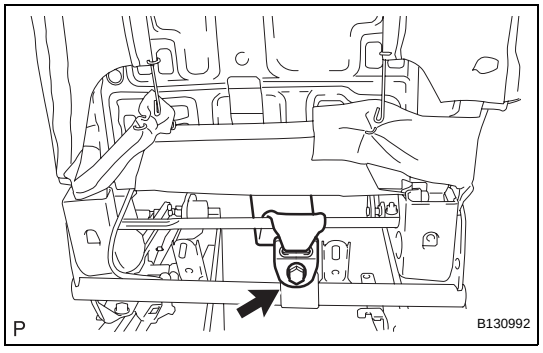

11. **REMOVE REAR SEAT LAP TYPE BELT ASSEMBLY CENTER LH**
    (a) Remove the bolt and the seat belt.

SB

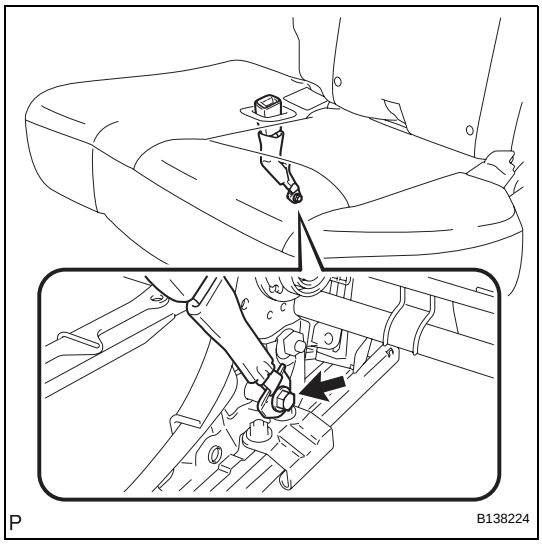

12. **REMOVE REAR SEAT INNER BELT ASSEMBLY RH (for 60/40 Split Seat Type LH Side)**
    (a) Remove the bolt and the seat belt.
13. **REMOVE REAR NO. 1 SEAT ASSEMBLY RH (See page SE-84)**

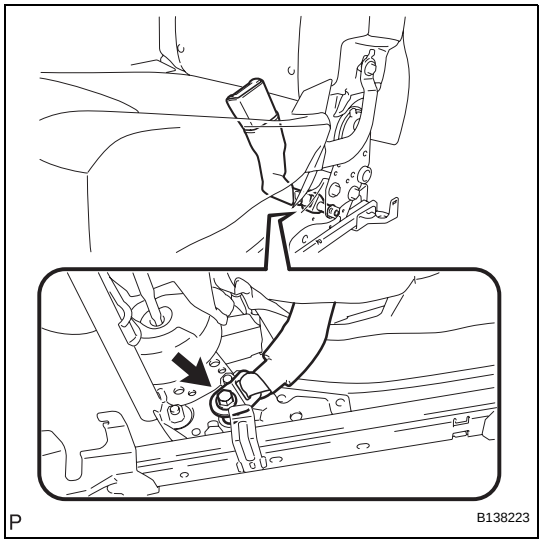

14. **REMOVE REAR SEAT INNER BELT ASSEMBLY RH (for 60/40 Split Seat Type RH Side)**
    (a) Remove the bolt and the seat belt.
15. **REMOVE NO. 2 SEAT HINGE COVER LH (w/ Rear No. 2 Seat) (See page SE-109)**
16. **REMOVE NO. 2 SEAT LEG COVER (w/ Rear No. 2 Seat) (See page SE-109)**
17. **REMOVE REAR NO. 2 SEAT ASSEMBLY LH (w/ Rear No. 2 Seat) (See page SE-110)**
18. **REMOVE REAR NO. 2 SEAT RECLINING COVER LH (w/ Rear No. 2 Seat) (See page SE-111)**

SB

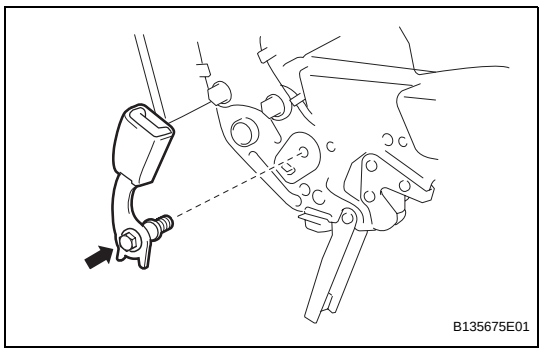

19. **REMOVE REAR NO. 2 SEAT INNER BELT ASSEMBLY LH (w/ Rear No. 2 Seat)**
    (a) Remove the bolt and seat belt.

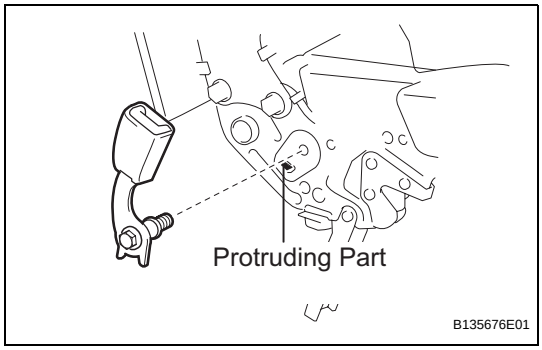

INSTALLATION

1. **INSTALL REAR NO. 2 SEAT INNER BELT ASSEMBLY LH (w/ Rear No. 2 Seat)**
    (a) Install the seat belt with the bolt.
    Torque: 42 N*m (428 kgf*cm, 31 ft.*lbf)
2. **INSTALL REAR NO. 2 SEAT RECLINING COVER LH (w/ Rear No. 2 Seat) (See page SE-121)**
3. **INSTALL REAR NO. 2 SEAT ASSEMBLY LH (w/ Rear No. 2 Seat) (See page SE-121)**

4. **INSTALL NO. 2 SEAT LEG COVER (w/ Rear No. 2 Seat) (See page SE-123)**
5. **INSTALL NO. 2 SEAT HINGE COVER (w/ Rear No. 2 Seat) (See page SE-123)**
6. **INSTALL REAR SEAT INNER BELT ASSEMBLY RH (for 60/40 Split Seat Type RH Side)**
   (a) Install the belt with the bolt.
   Torque: 42 N*m (428 kgf*cm, 31 ft.*lbf)
7. **INSTALL REAR NO. 1 SEAT ASSEMBLY RH (See page SE-97)**

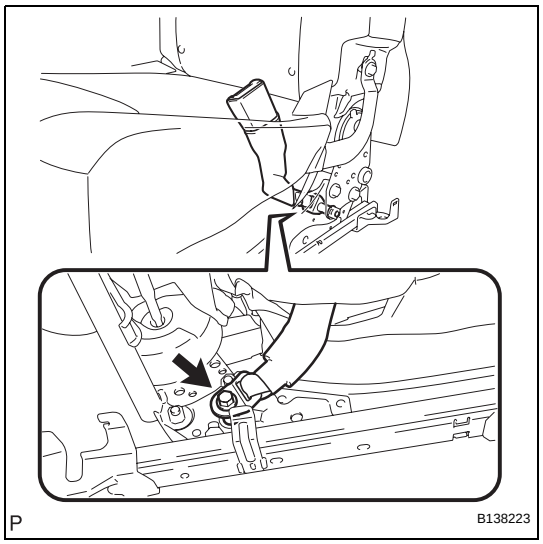

8. **INSTALL REAR SEAT INNER BELT ASSEMBLY RH (for 60/40 Split Seat Type LH Side)**
   (a) Install the belt with the bolt.
   Torque: 42 N*m (428 kgf*cm, 31 ft.*lbf)

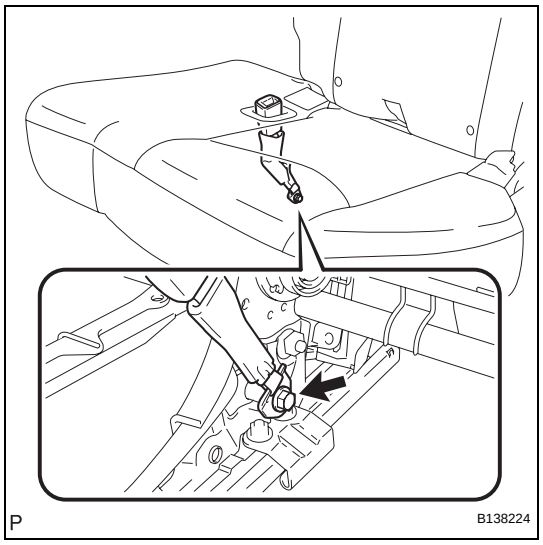

9. **INSTALL REAR SEAT LAP TYPE BELT ASSEMBLY CENTER LH**
   (a) Install the belt with the bolt.
   Torque: 42 N*m (428 kgf*cm, 31 ft.*lbf)
10. **INSTALL REAR SEAT REAR BRACKET COVER LH (See page SE-60)**
11. **INSTALL REAR NO. 1 SEAT ASSEMBLY LH (See page SE-64)**

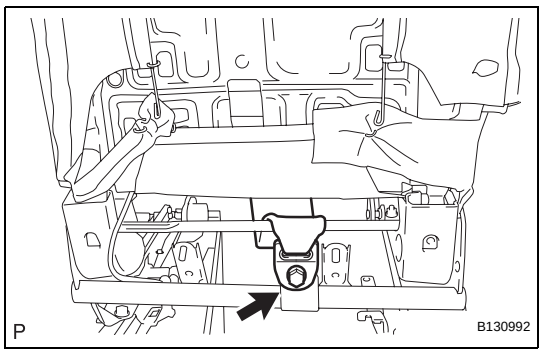

SB

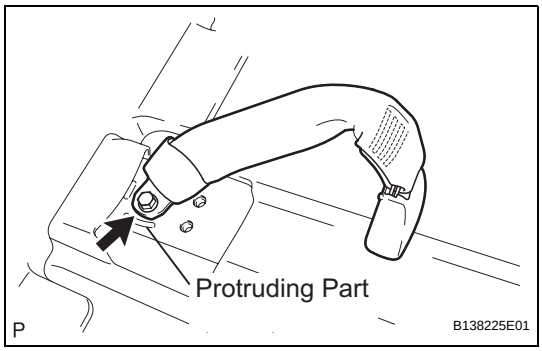

12. **INSTALL REAR SEAT LAP TYPE BELT ASSEMBLY CENTER RH (w/o Rear No. 2 Seat)**
    (a) Install the belt with the bolt.
    Torque: 42 N*m (428 kgf*cm, 31 ft.*lbf)
    NOTICE:
    The anchor part of the seat belt must not overlap the protruding part.

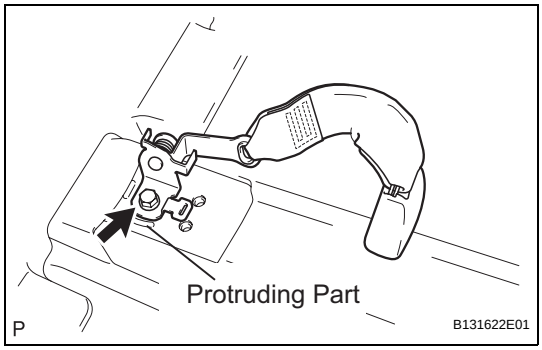

13. **INSTALL REAR SEAT LAP TYPE BELT ASSEMBLY CENTER RH (w/ Rear No. 2 Seat)**
    (a) Install the belt with the bolt.
    Torque: 42 N*m (428 kgf*cm, 31 ft.*lbf)
    NOTICE:
    The anchor part of the seat belt must not overlap the protruding part.
14. **INSTALL REAR NO. 5 SEAT LEG SIDE COVER**
15. **INSTALL REAR NO. 4 SEAT LEG SIDE COVER**
16. **INSTALL REAR NO. 3 SEAT LEG SIDE COVER (w/ Rear No. 2 Seat) (See page SE-72)**
17. **INSTALL REAR NO. 3 SEAT LEG SIDE COVER (w/o Rear No. 2 Seat) (See page SE-72)**
18. **INSTALL REAR NO. 2 SEAT LEG SIDE COVER**
19. **INSTALL REAR SEAT LEG COVER**

REAR SEAT INNER BELT ASSEMBLY

COMPONENTS

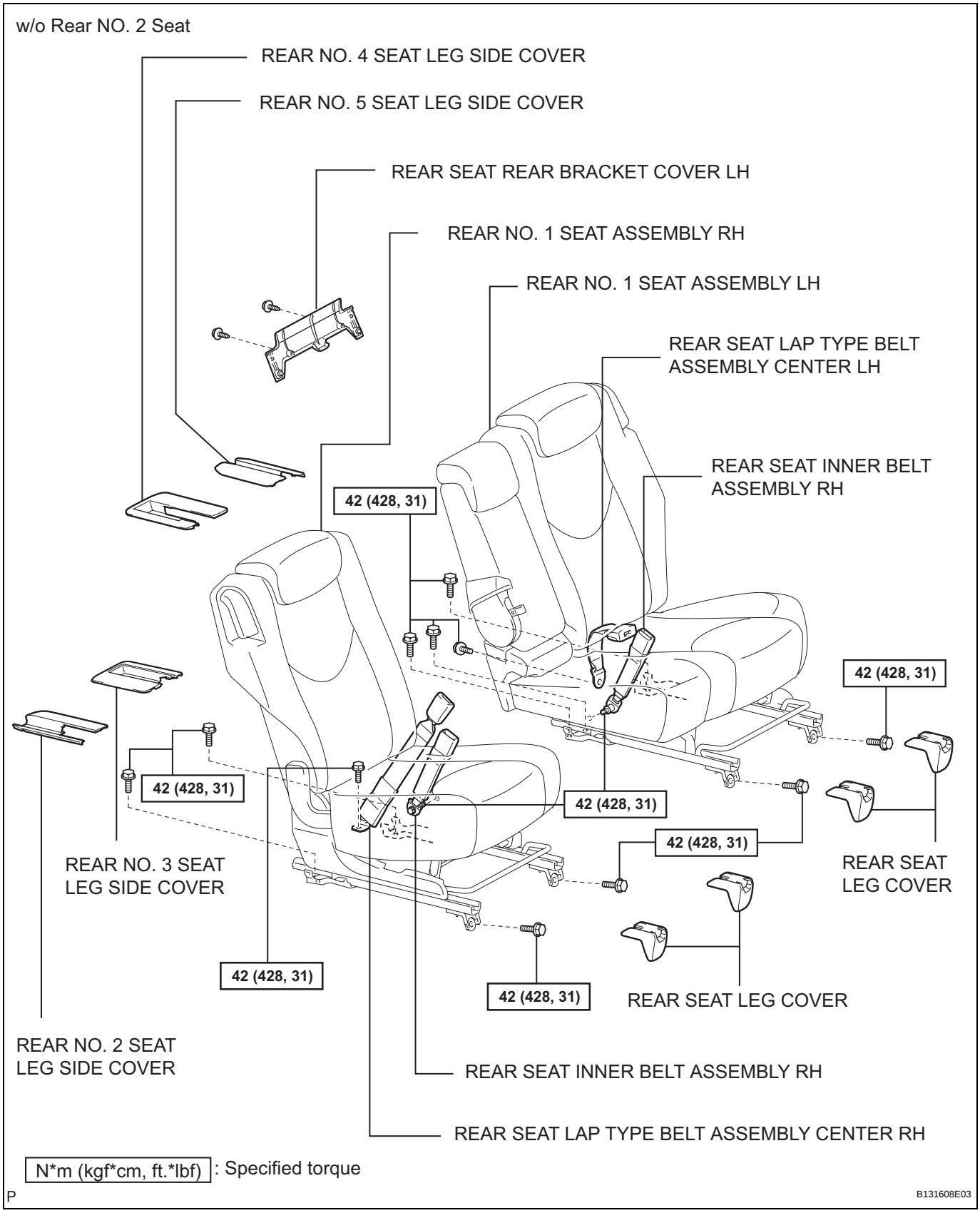

SB

w/ Rear NO. 2 Seat

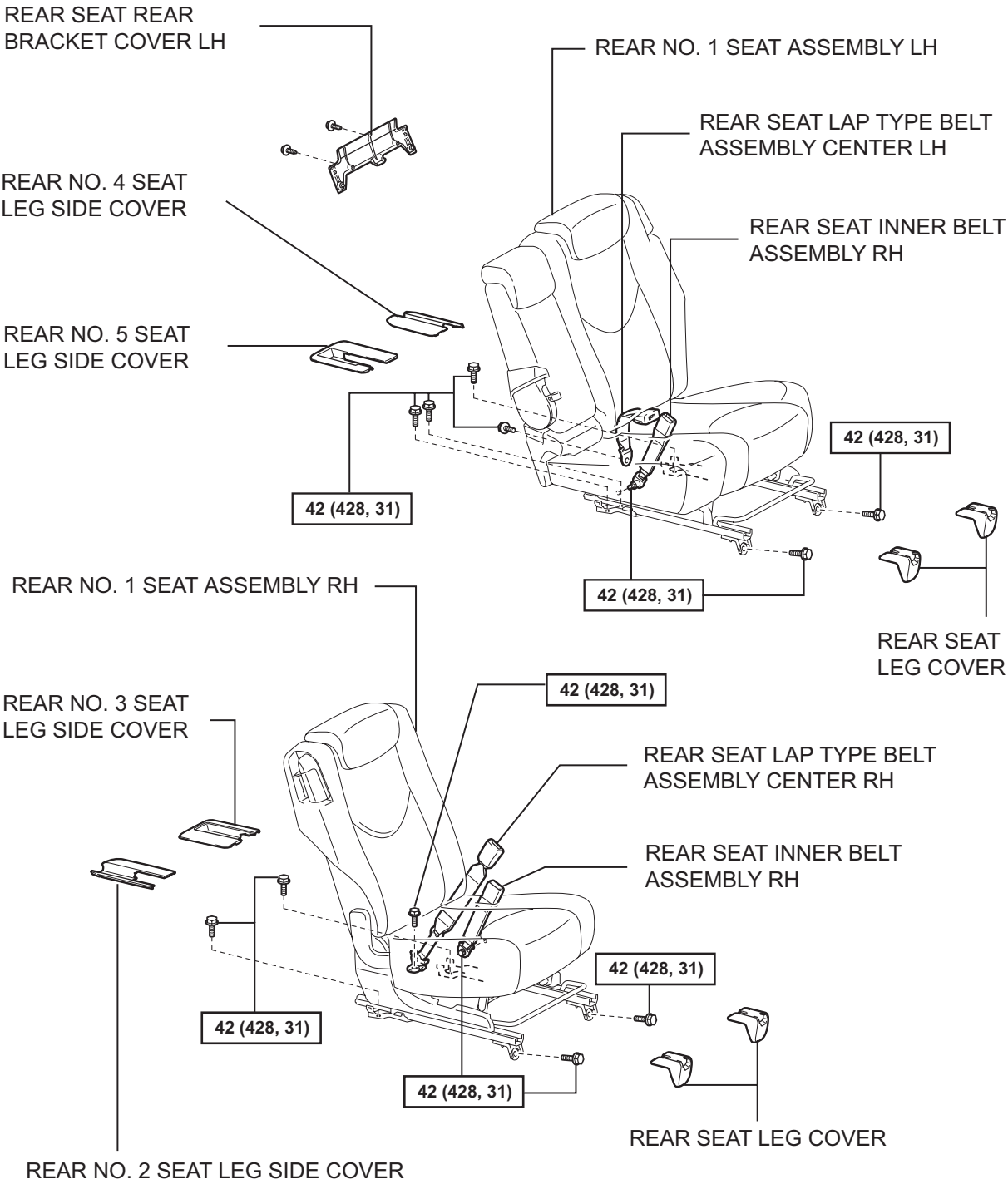

N*m (kgf*cm, ft.*lbf) : Specified torque

P

B131621E01

SB

w/ Rear No. 2 Seat

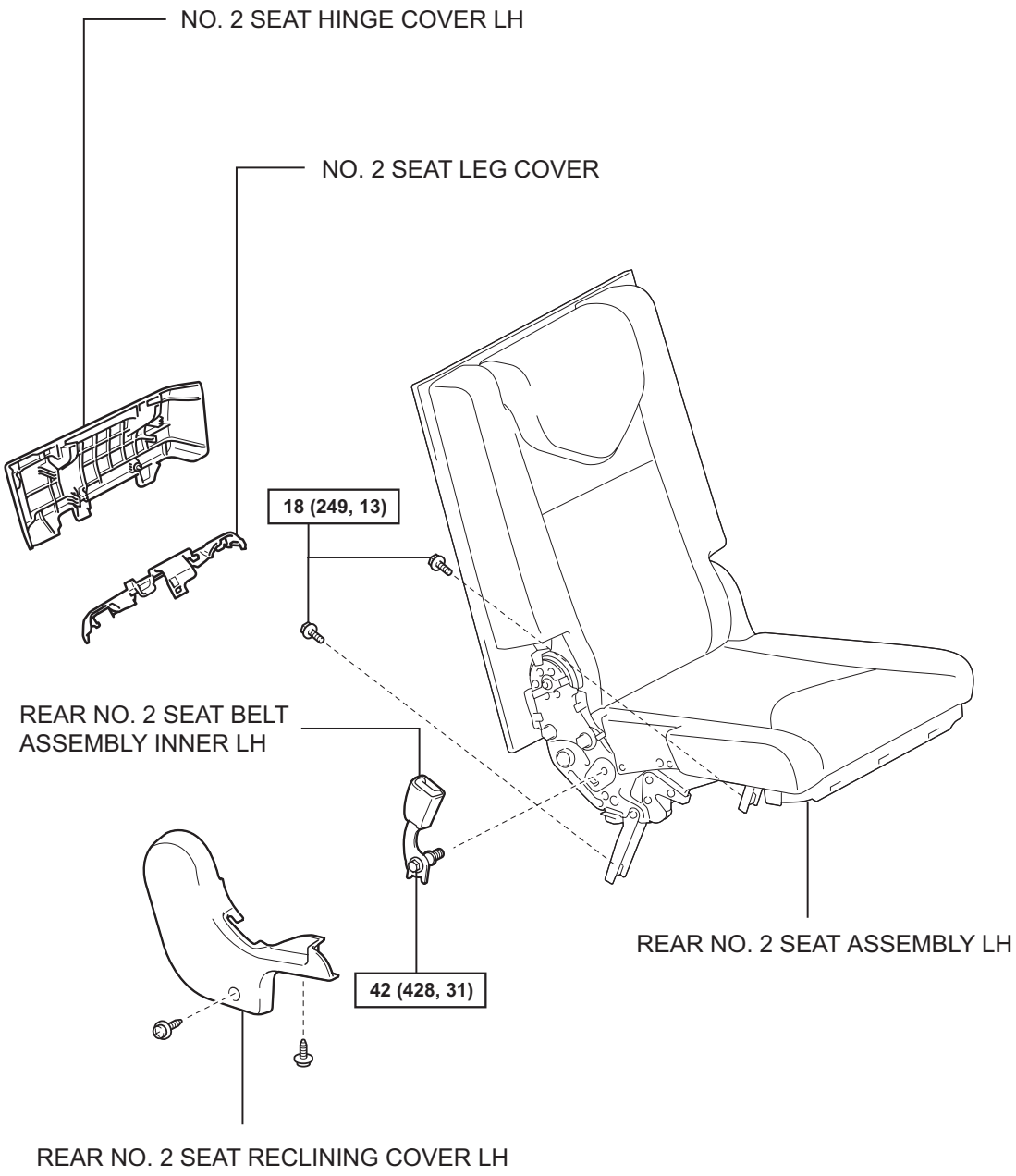

SB

N*m (kgf*cm, ft.*lbf) : Specified torque

P

B131609E02

REMOVAL

HINT:

- Use the same procedures for the RH side and LH side.
- The procedures listed below are for the LH side.

1. **DISCONNECT CABLE FROM NEGATIVE BATTERY TERMINAL**
   CAUTION:
   Wait at least 90 seconds after disconnecting the cable from the negative (-) battery terminal to prevent airbag and seat belt pretensioner activation.
2. **REMOVE REAR DOOR SCUFF PLATE LH (See page IR-26)**
3. **REMOVE REAR DOOR OPENING TRIM WEATHERSTRIP LH**
4. **REMOVE PACKAGE TRAY TRIM POCKET SUB-ASSEMBLY (w/o Rear No. 2 Seat)**
5. **REMOVE TONNEAU COVER ASSEMBLY (w/o Rear No. 2 Seat)**
6. **REMOVE REAR FLOOR NO. 1 BOARD (w/o Rear No. 2 Seat)**
7. **REMOVE DECK BOARD ASSEMBLY (w/o Rear No. 2 Seat)**
8. **REMOVE NO. 2 SEAT HINGE COVER LH (w/ Rear No. 2 Seat) (See page SE-109)**
9. **REMOVE NO. 2 SEAT HINGE COVER RH (w/ Rear No. 2 Seat) (See page IR-30)**
10. **REMOVE NO. 2 SEAT LEG COVER LH (w/ Rear No. 2 Seat) (See page SE-109)**
11. **REMOVE NO. 2 SEAT LEG COVER RH (w/ Rear No. 2 Seat) (See page IR-30)**
12. **REMOVE REAR NO. 2 SEAT ASSEMBLY LH (w/ Rear No. 2 Seat) (See page SE-110)**
13. **REMOVE REAR NO. 2 SEAT ASSEMBLY RH (w/ Rear No. 2 Seat) (See page SE-110)**
14. **REMOVE REAR FLOOR NO. 2 BOARD**
15. **REMOVE REAR FLOOR NO. 3 BOARD**
16. **REMOVE REAR NO. 1 FLOOR MAT SUPPORT SIDE PLATE (See page IR-31)**
17. **REMOVE BACK DOOR WEATHERSTRIP**
18. **REMOVE REAR FLOOR FINISH PLATE (See page IR-31)**
19. **REMOVE REAR DECK TRIM COVER (w/ Rear No. 2 Seat)**
20. **REMOVE RECLINING REMOTE CONTROL LEVER BEZEL LH (w/o Rear No. 2 Seat)**

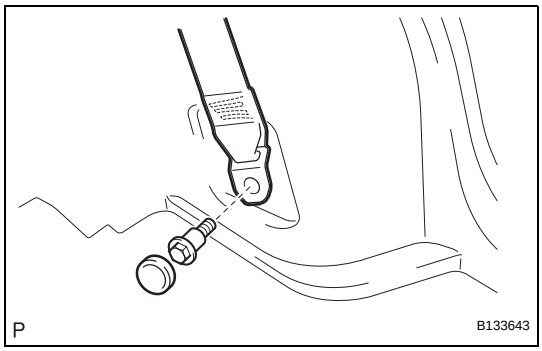

21. DISCONNECT REAR NO. 1 SEAT OUTER BELT ASSEMBLY RH

(a) Remove the lap belt outer anchor cover.

(b) Remove the bolt and disconnect the floor anchor.

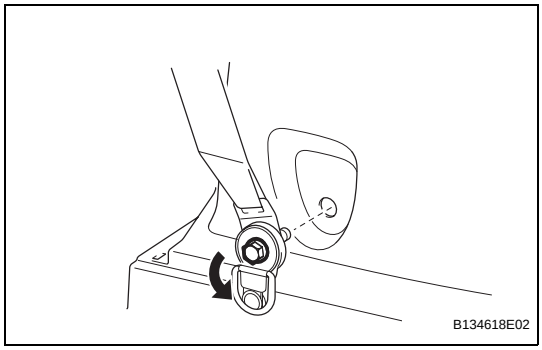

22. DISCONNECT REAR NO. 2 SEAT OUTER BELT ASSEMBLY LH (w/ Rear No. 2 Seat)

(a) Open the cover.

(b) Remove the bolt and disconnect the floor anchor.

23. REMOVE DECK TRIM SIDE PANEL ASSEMBLY LH (w/o Rear No. 2 Seat) (See page IR-32)

24. REMOVE DECK TRIM SIDE PANEL ASSEMBLY LH (w/ Rear No. 2 Seat) (See page IR-32)

25. REMOVE INNER ROOF SIDE GARNISH ASSEMBLY LH (w/o Rear No. 2 Seat) (See page IR-34)

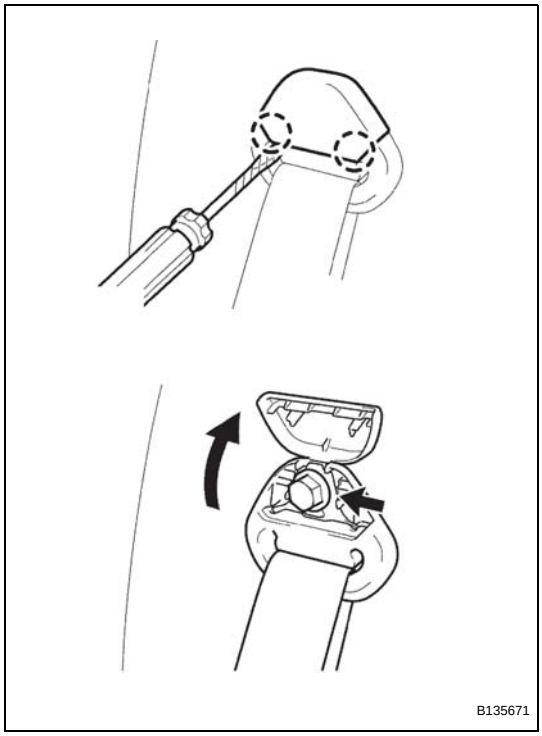

26. REMOVE REAR NO. 2 SEAT OUTER BELT ASSEMBLY LH (w/ Rear No. 2 Seat)

(a) Using a screwdriver, detach the 2 claws and open the seat belt anchor cover as shown in the illustration.
HINT:
Tape the screwdriver tip before use.

(b) Remove the bolt and disconnect the seat belt's shoulder anchor.

SB

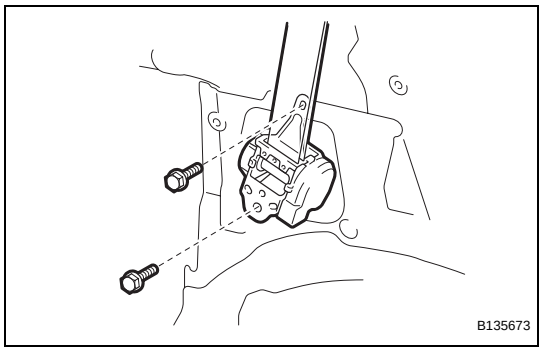

(c) Remove the 2 bolts and seat belt.

27. REMOVE INNER ROOF SIDE GARNISH ASSEMBLY LH (w/ Rear No. 2 Seat) (See page IR-35)

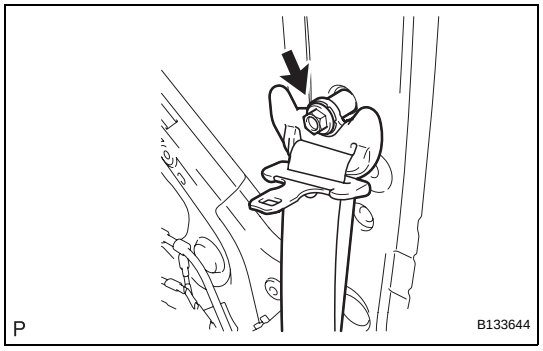

28. REMOVE REAR NO. 1 SEAT OUTER BELT ASSEMBLY LH

(a) Remove the bolt and disconnect the seat belt's shoulder anchor.

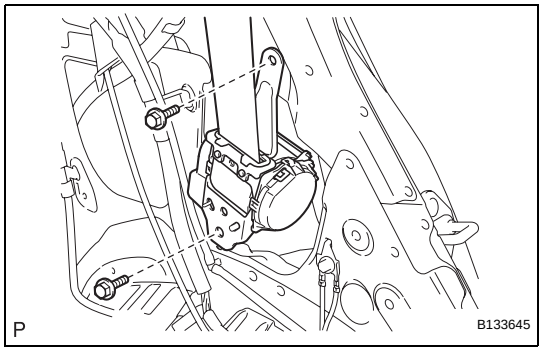

(b) Remove the 2 bolts and seat belt.

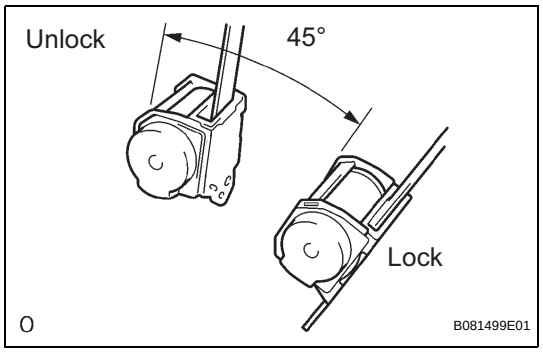

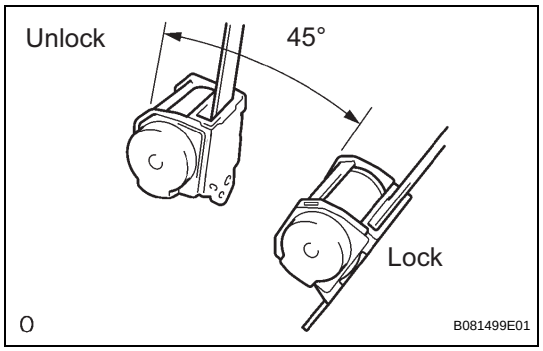

INSPECTION

1. INSPECT REAR NO. 1 SEAT BELT ASSEMBLY OUTER

NOTICE:

Do not disassemble the retractor.

(a) When the inclination of the retractor is 15° or less, check that the belt can be pulled from the retractor. When the inclination of the retractor is over 45°, check that the belt locks.

If the operation is not as specified, replace the belt.

2. INSPECT REAR NO. 2 SEAT BELT ASSEMBLY OUTER

NOTICE:

Do not disassemble the retractor.

(a) When the inclination of the retractor is 15° or less, check that the belt can be pulled from the retractor. When the inclination of the retractor is over 45°, check that the belt locks.

If the operation is not as specified, replace the belt.

SB

INSTALLATION

HINT:

- Use the same procedures for the LH side and RH side.
- The procedures listed below are for the LH side.
- A bolt without a torque specification is shown in the standard bolt chart (see page SS-2).

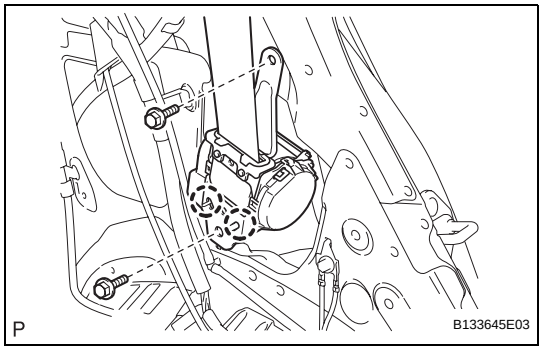

1. INSTALL REAR NO. 1 SEAT OUTER BELT ASSEMBLY LH

(a) Align the claws with the seat belt positioning holes, and install the retractor of the seat belt with the 2 bolts as shown in the illustration.

Torque: 8.5 N*m (87 kgf*cm, 75 in.*lbf) for upper bolt
42 N*m (428 kgf*cm, 31 ft.*lbf) for lower bolt

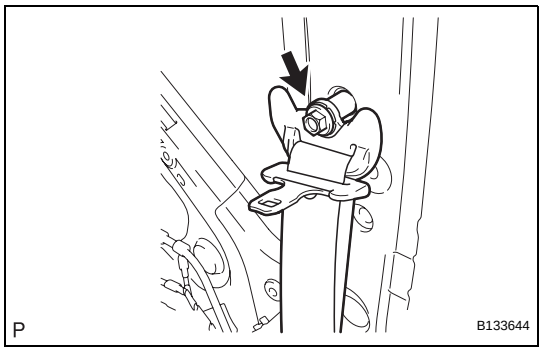

(b) Connect the shoulder anchor with the bolt.

Torque: 42 N*m (428 kgf*cm, 31 ft.*lbf)

2. INSTALL INNER ROOF SIDE GARNISH ASSEMBLY LH (w/ Rear No. 2 Seat) (See page IR-52)

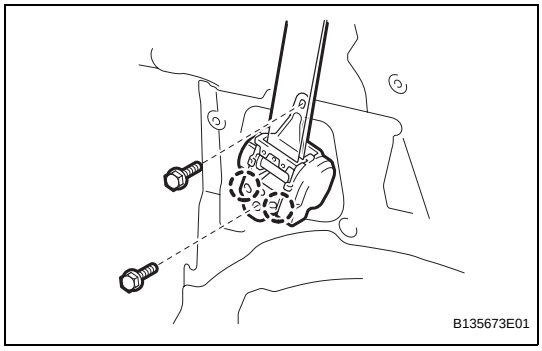

3. INSTALL REAR NO. 2 SEAT OUTER BELT ASSEMBLY LH (w/ Rear No. 2 Seat)

(a) Align the claws with the seat belt positioning holes and install the retractor of the seat belt with the 2 bolts as shown in the illustration.

Torque: 8.5 N*m (87 kgf*cm, 75 in.*lbf) for upper bolt
42 N*m (428 kgf*cm, 31 ft.*lbf) for lower bolt

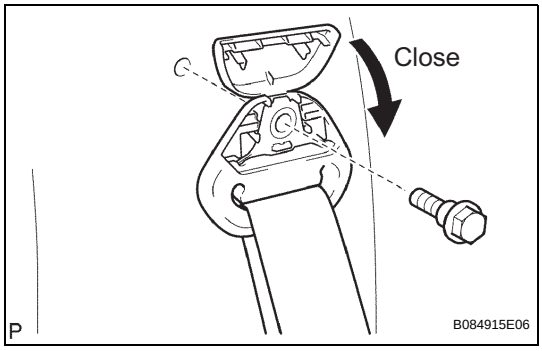

(b) Connect the shoulder anchor with the bolt.

Torque: 42 N*m (428 kgf*cm, 31 ft.*lbf)

(c) Close the cover cap.

4. INSTALL INNER ROOF SIDE GARNISH ASSEMBLY LH (w/o Rear No. 2 Seat) (See page IR-51)

5. INSTALL DECK TRIM SIDE PANEL ASSEMBLY LH (w/ Rear No. 2 Seat) (See page IR-53)

6. INSTALL DECK TRIM SIDE PANEL ASSEMBLY LH (w/ o Rear No. 2 Seat) (See page IR-52)

SB

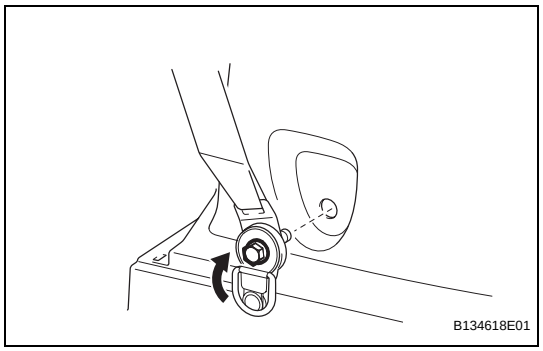

7. **CONNECT REAR NO. 2 SEAT OUTER BELT ASSEMBLY LH (w/ Rear No. 2 Seat)**
   (a) Connect the seat belt's floor anchor with the bolt.
   Torque: 42 N*m (428 kgf*cm, 31 ft.*lbf)
   (b) Close the cover.

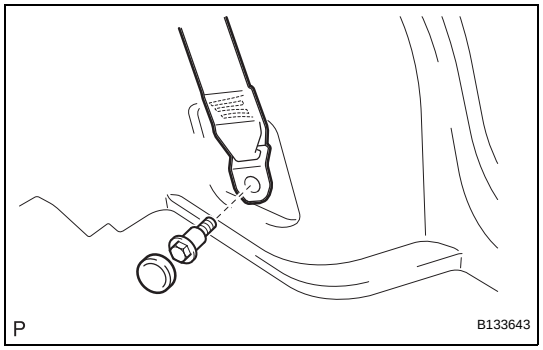

8. **CONNECT REAR NO. 1 SEAT OUTER BELT ASSEMBLY LH**
   (a) Connect the seat belt's floor anchor with the bolt.
   Torque: 42 N*m (428 kgf*cm, 31 ft.*lbf)
   (b) Attach the lap belt outer anchor cover.
9. **INSTALL RECLINING REMOTE CONTROL LEVER BEZEL LH (w/o Rear No. 2 Seat)**
10. **INSTALL REAR FLOOR FINISH PLATE (See page IR-55)**
11. **INSTALL REAR NO. 1 FLOOR MAT SUPPORT SIDE PLATE (See page IR-55)**
12. **INSTALL REAR FLOOR NO. 3 BOARD**
13. **INSTALL REAR FLOOR NO. 2 BOARD**
14. **INSTALL REAR NO. 2 SEAT ASSEMBLY LH (w/ Rear No. 2 Seat) (See page SE-121)**
15. **INSTALL REAR NO. 2 SEAT ASSEMBLY RH (w/ Rear No. 2 Seat) (See page IR-55)**
16. **INSTALL NO. 2 SEAT LEG COVER LH (w/ Rear No. 2 Seat) (See page SE-123)**
17. **INSTALL NO. 2 SEAT LEG COVER RH (w/ Rear No. 2 Seat) (See page IR-56)**
18. **INSTALL NO. 2 SEAT HINGE COVER LH (w/ Rear No. 2 Seat) (See page SE-123)**
19. **REMOVE NO. 2 SEAT HINGE COVER RH (w/ Rear No. 2 Seat) (See page IR-56)**
20. **INSTALL DECK BOARD ASSEMBLY (w/o Rear No. 2 Seat)**
21. **INSTALL REAR FLOOR NO. 1 BOARD (w/o Rear No. 2 Seat)**
22. **INSTALL TONNEAU COVER ASSEMBLY (w/o Rear No. 2 Seat)**
23. **INSTALL PACKAGE TRAY TRIM POCKET SUB-ASSEMBLY (w/o Rear No. 2 Seat)**
24. **INSTALL REAR DOOR OPENING TRIM WEATHERSTRIP LH**

25. **INSTALL REAR DOOR SCUFF PLATE LH (See page IR-57)**

26. **CONNECT CABLE TO NEGATIVE BATTERY TERMINAL**

REAR SEAT OUTER BELT ASSEMBLY

COMPONENTS

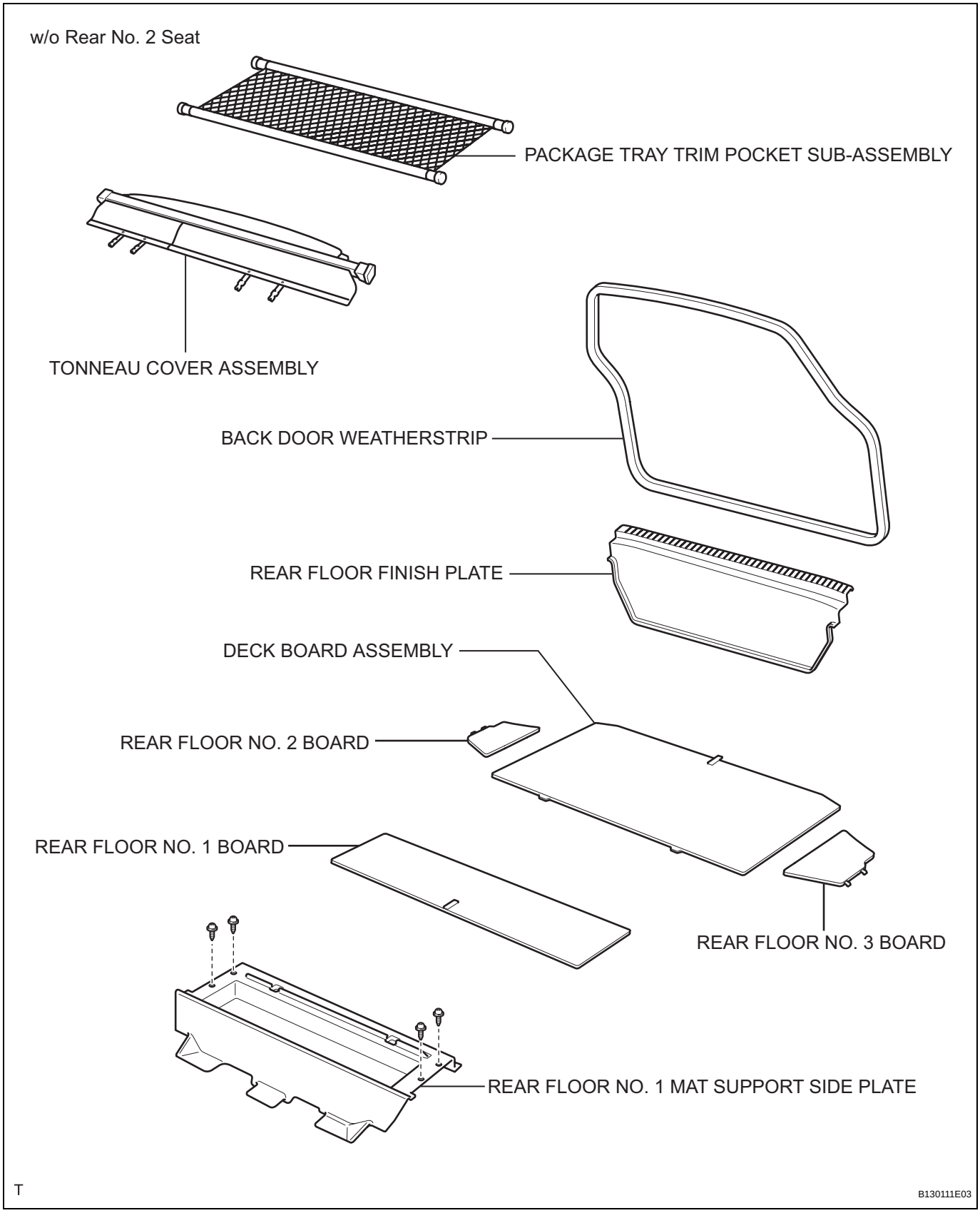

SB

w/o Rear No. 2 Seat

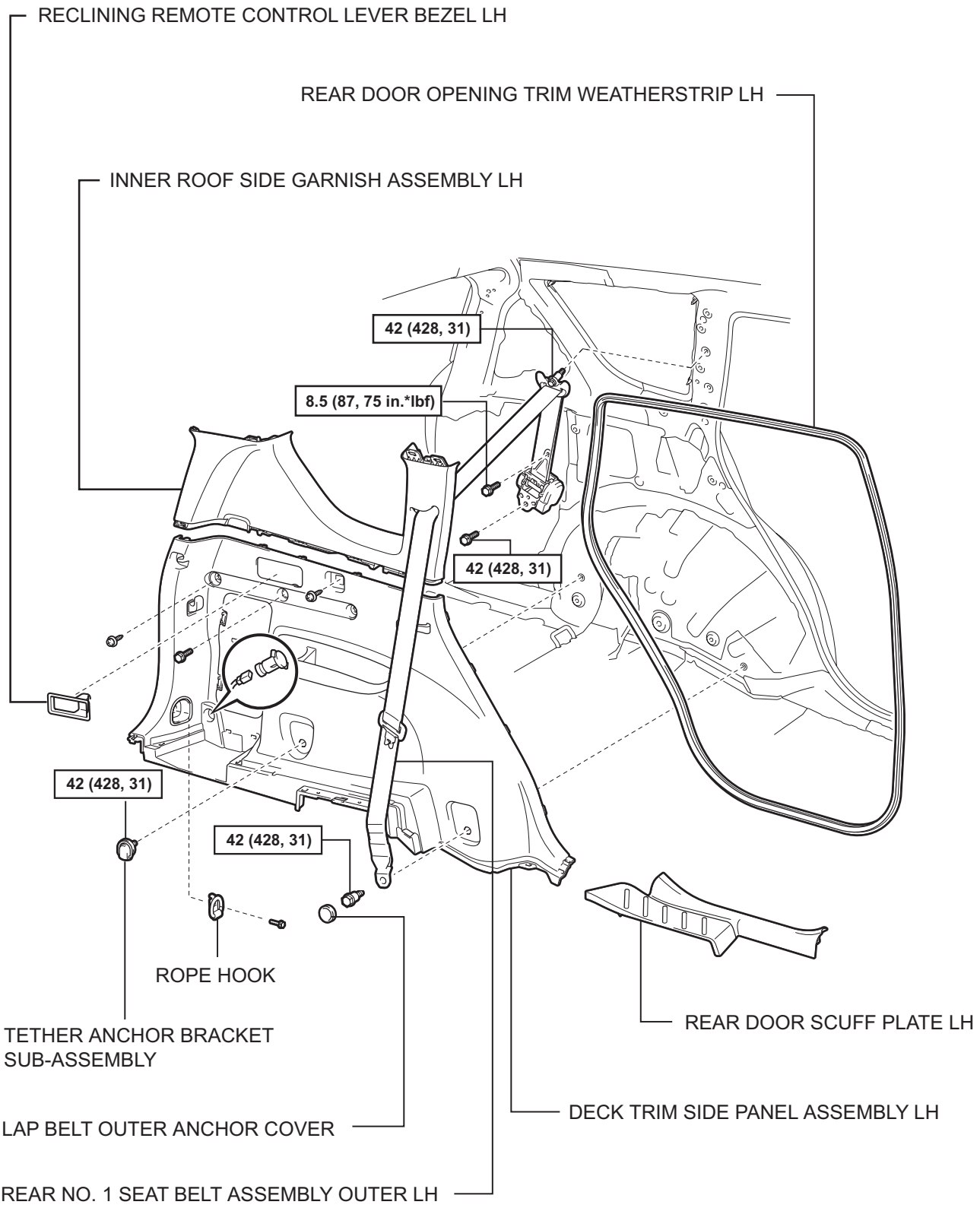

N*m (kgf*cm, ft.*lbf) : Specified torque

P

B130169E04

SB

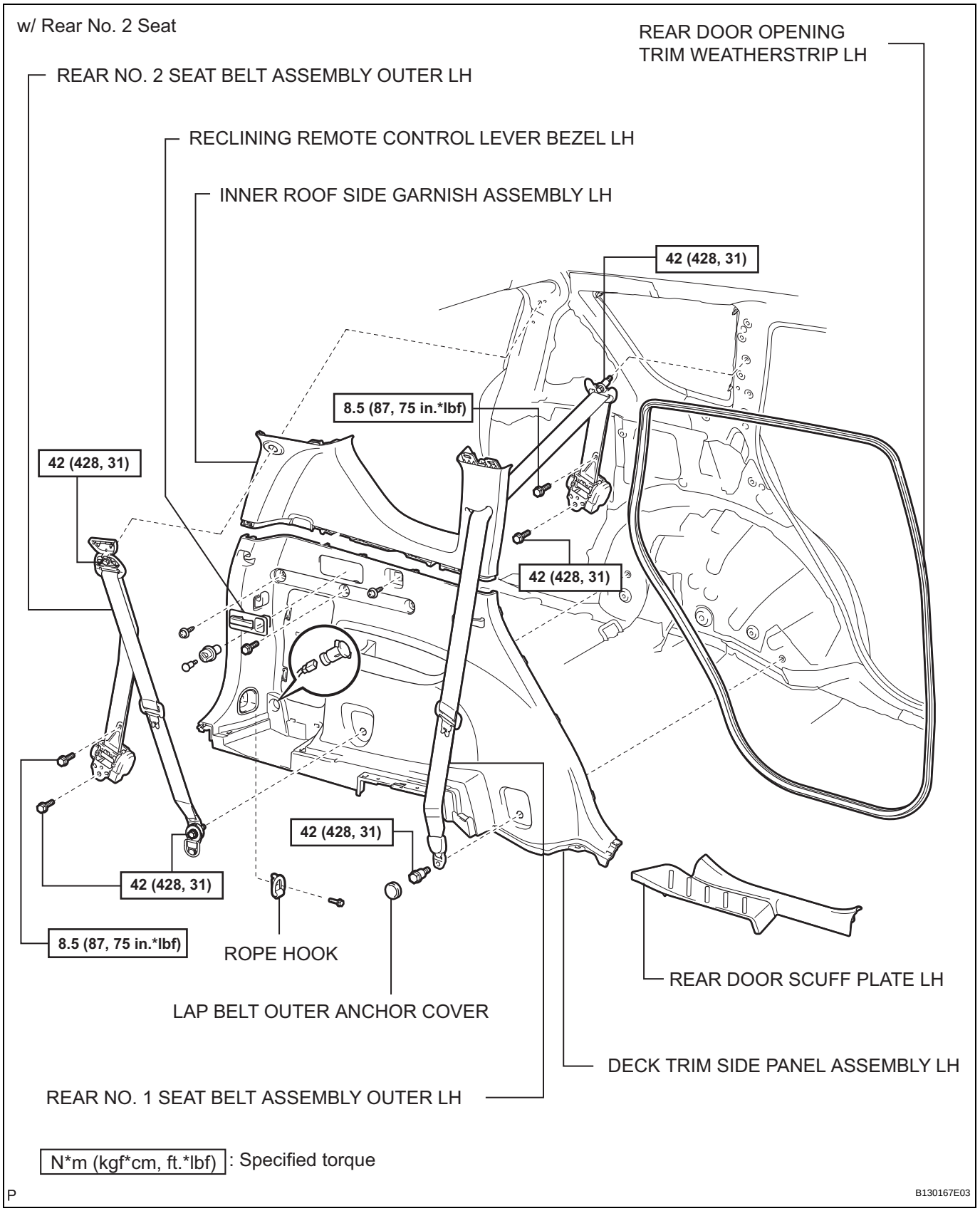
w/ Rear No. 2 Seat
REAR DOOR OPENING TRIM WEATHERSTRIP LH
REAR NO. 2 SEAT BELT ASSEMBLY OUTER LH
RECLINING REMOTE CONTROL LEVER BEZEL LH
INNER ROOF SIDE GARNISH ASSEMBLY LH
42 (428, 31)
8.5 (87, 75 in.*lbf)
42 (428, 31)
42 (428, 31)
42 (428, 31)
42 (428, 31)
8.5 (87, 75 in.*lbf)
ROPE HOOK
LAP BELT OUTER ANCHOR COVER
REAR DOOR SCUFF PLATE LH
DECK TRIM SIDE PANEL ASSEMBLY LH
REAR NO. 1 SEAT BELT ASSEMBLY OUTER LH
N*m (kgf*cm, ft.*lbf) : Specified torque
P
B130167E03

SB

w/ Rear No. 2 Seat

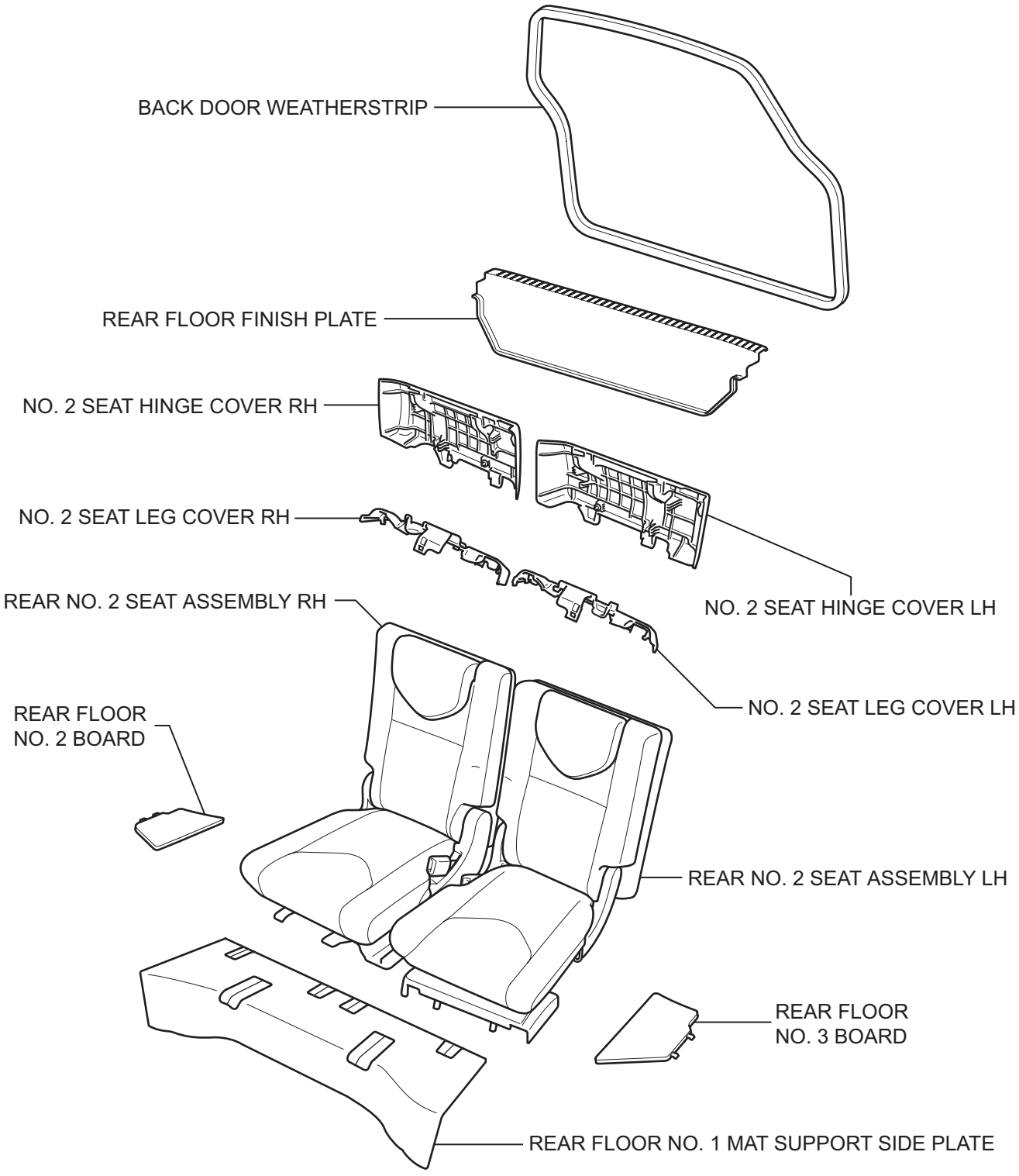

T

B130112E11

SB

SYSTEM DESCRIPTION

1. DRIVER SEAT BELT WARNING LIGHT

(a) When the driver seat belt is not fastened with the ignition switch ON, the driver seat belt warning light on the combination meter comes on to inform the driver. The center airbag sensor detects the driver seat belt status and sends signals to the combination meter through the CAN bus line.

2. PASSENGER SEAT BELT WARNING LIGHT

(a) for Automatic air conditioning system:
When the passenger seat belt is not fastened with the ignition switch ON and the passenger seat occupied, check that the passenger seat belt warning light on the heater control panel display blinks. The combination meter detects the passenger seat belt status and whether the passenger seat is occupied.

(b) for Manual air conditioning system:
When the passenger seat belt is not fastened with the ignition switch ON and the passenger seat occupied, check that the passenger seat belt warning light on the clock panel blinks. The combination meter detects the passenger seat belt status and whether the passenger seat is occupied.

HOW TO PROCEED WITH TROUBLESHOOTING

HINT:

- Use these procedures to troubleshoot the seat belt warning system.
- *: Use the intelligent tester.

1	VEHICLE BROUGHT TO WORKSHOP

NEXT

2	INSPECT BATTERY VOLTAGE

Standard voltage:
11 to 14 V
If the voltage is below 11 V, recharge or replace the battery before proceeding.

NEXT

3	CHECK FUNCTION OF AIRBAG SYSTEM*

(a) Use the intelligent tester to check if the airbag system is functioning normally.
Result

Result	Proceed to
DTC is not output	A
DTC is output	B

B → **GO TO AIRBAG SYSTEM**

SB

A

4	CHECK FUNCTION OF OCCUPANT CLASSIFICATION SYSTEM*

(a) Use the intelligent tester to check if the occupant classification system is functioning normally.
Result

Result	Proceed to
DTC is not output	A
DTC is output	B

B → **GO TO OCCUPANT CLASSIFICATION SYSTEM**

A

5	CHECK COMMUNICATION FUNCTION OF CAN COMMUNICATION SYSTEM (CAN)*

(a) Use the intelligent tester to check if the CAN Communication System (CAN) is functioning normally.

Result

Result	Proceed to
CAN DTC is not output	A
CAN DTC is output	B

B → GO TO CAN COMMUNICATION SYSTEM

A

6	PROBLEM SYMPTOMS TABLE

Result

Result	Proceed to
Fault is not listed in problem symptoms table	A
Fault is listed in problem symptoms table	B

B → Go to step 8

A

7	OVERALL ANALYSIS AND TROUBLESHOOTING*

(a) DATA LIST / ACTIVE TEST (see page SB-10)
(b) Terminals of ECU (see page SB-7)
(c) On-vehicle Inspection (see page SB-10)

NEXT

SB

8	REPAIR OR REPLACE

NEXT

9	CONFIRMATION TEST

NEXT

END

OPERATION CHECK

1. INSPECT DRIVER SIDE SEAT BELT WARNING LIGHT

(a) Turn the ignition switch ON.

(b) When the driver seat belt is not fastened, check that the driver seat belt warning light on the combination meter blinks.

(c) When the driver seat belt is fastened, check that the driver seat belt warning light on the combination meter is off.

2. INSPECT PASSENGER SIDE SEAT BELT WARNING LIGHT (For Automatic Air Conditioning System)

(a) Turn the ignition switch ON.

(b) When the front passenger seat belt is not fastened with the passenger seat occupied, check that the front passenger seat belt warning light on the heater control panel display blinks.

(c) When the front passenger seat belt is fastened with the passenger seat occupied, check that the front passenger seat belt warning light on the heater control panel display is off.

3. REMOVE PASSENGER SIDE SEAT BELT WARNING LIGHT (For Manual Air Conditioning System)

(a) Turn the ignition switch ON.

(b) When the front passenger seat belt is not fastened with the passenger seat occupied, check that the front passenger seat belt warning light on the clock panel blinks.

(c) When the front passenger seat belt is fastened with the passenger seat occupied, check that the front passenger seat belt warning light on the clock panel is off.

4. INSPECT SEAT BELT WARNING BUZZER

HINT:

If the buzzer does not sound, the buzzer cancel setting may be set to ON.

(a) Turn the ignition switch ON.

(b) When the vehicle is driven at approximately 20 km/h (12.4 mph) or more while the driver or front passenger seat belt is not fastened, check that the buzzer in the combination meter sounds at 1.2 second intervals for 30 seconds.

(c) 30 seconds after the buzzer has first sounded, check that the buzzer sounds at 0.4 second intervals for 90 seconds.

(d) 120 seconds after the buzzer has first sounded, check that the buzzer stops.

(e) After the buzzer has stopped, turn the ignition switch off and then start the engine again. Drive the vehicle at approximately 25 km/h (16 mph) or more while the driver or front passenger seat belt is not fastened, and then check that the buzzer sounds again.

(f) After the buzzer has stopped, fasten the driver and front passenger seat belts. Drive the vehicle at approximately 25 km/h (16 mph) or more and unfasten the driver or front passenger seat belt, and then check that the buzzer sounds again.

(g) After the buzzer has stopped, move the shift lever to the R position, and then move it to the D position. Drive the vehicle at approximately 25 km/h (16 mph) or more, and then check that the buzzer sounds again.

PROBLEM SYMPTOMS TABLE

HINT:
Use the table below to help determine the cause of the problem symptom. The potential causes of the symptoms are listed in order of probability in the "Suspected Area" column of the table. Check each symptom by checking the suspected areas in the order they are listed. Replace parts as necessary.

Seat belt warning system

Symptom	Suspected area	See page
Diver side seat belt warning light does not operate	1. Front seat inner belt LH	SB-12
	2. Center airbag sensor assembly	SB-12
	3. Combination meter	SB-12
	4. Wire harness	SB-12
Front passenger side seat belt warning light does not operate	1. Front seat inner belt RH	SB-15
	2. Combination meter	SB-15
	3. Occupant detection sensor	SB-15
	4. Heater control panel	SB-15
	5. Wire harness	SB-15

TERMINALS OF ECU

1. CHECK COMBINATION METER ASSEMBLY

(a) Disconnect the E19 meter connector.

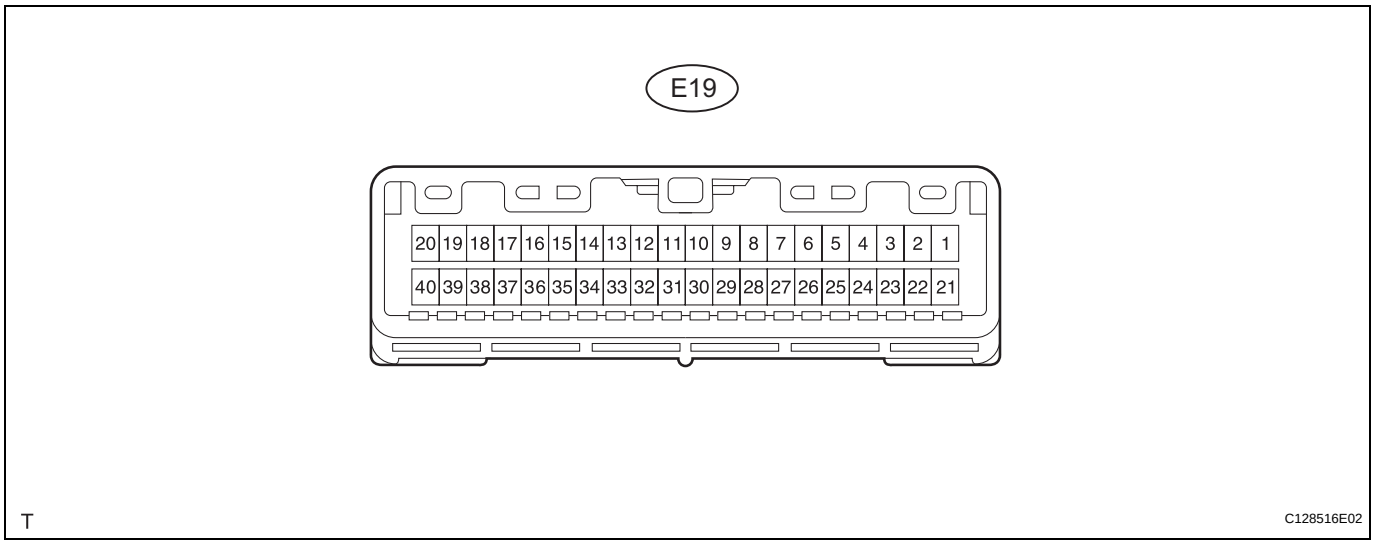

(b) Measure the voltage and resistance of the wire harness side connector.

Symbols (Terminal No.)	Wiring Color	Terminal Description	Condition	Specified Condition
B (E19-22) - Body ground	R - Body Ground	Power supply	Always	10 to 14 V
IG+ (E19-21) - Body ground	B - Body Ground	Power supply	Ignition switch OFF	Below 1 V
			Ignition switch ON	10 to 14 V
PBLT (E19-1) - Body ground	LG - Body Ground	Passenger seat belt signal	Sit on passenger seat, seat belt is fastened	Below 1 Ω
			Sit on passenger seat, seat belt is unfastened	10 kΩ or higher
ET (E19-33) - Body ground	W-B - Body Ground	Ground	Always	Below 1 Ω

If the result is not as specified, there may be a malfunction on the wire harness side.

2. CHECK HEATER CONTROL PANEL (for Automatic Air Conditioning System)

(a) Disconnect the E23 panel connector.

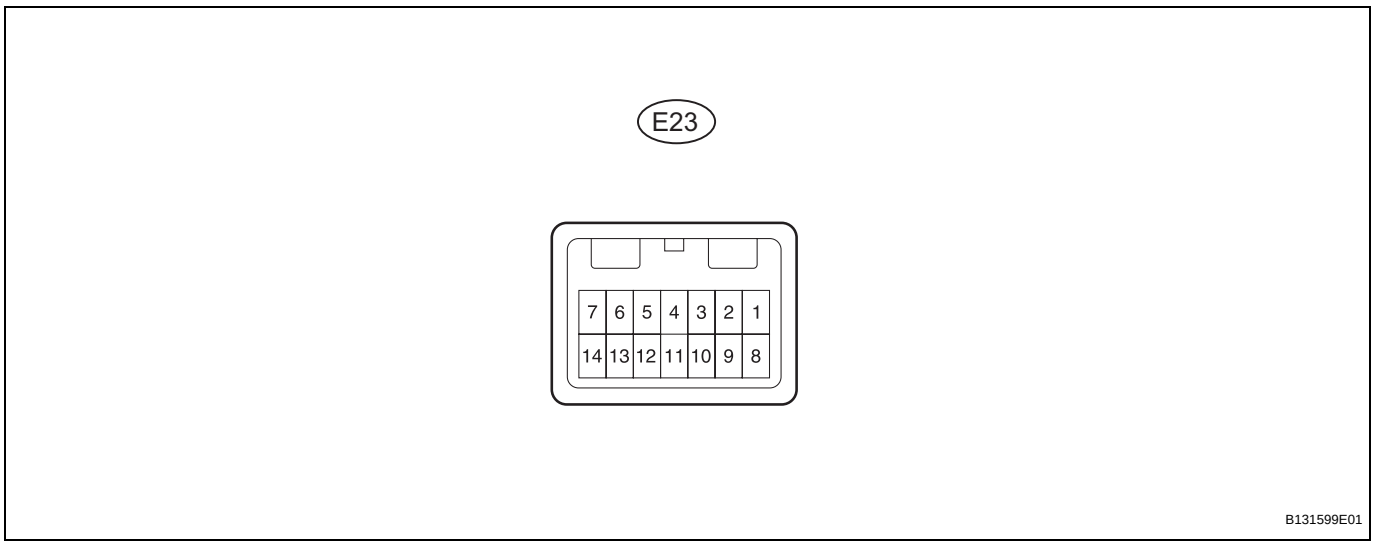

SB

(b) Measure the voltage and resistance of the wire harness side connector.

Symbols (Terminal No.)	Wiring Color	Terminal Description	Condition	Specified Condition
+B (E23-1) - Body ground	R - Body Ground	Power supply	Always	10 to 14 V
IG+ (E23-2) - Body ground	L - Body Ground	Power supply	Ignition switch OFF	Below 1 V
			Ignition switch ON	10 to 14 V
PBEW (E23-4) - Body ground	LG - Body Ground	Passenger seat belt signal	Sit on passenger seat, seat belt is fastened	Below 1 Ω
			Sit on passenger seat, seat belt is unfastened	10 kΩ or higher
GND (E23-7) - Body ground	W-B - Body Ground	Ground	Always	Below 1 Ω

If the result is not as specified, there may be a malfunction on the wire harness side.

3. CHECK CLOCK ASSEMBLY (for Manual Air Conditioning System)

(a) Disconnect the E22 clock connector.

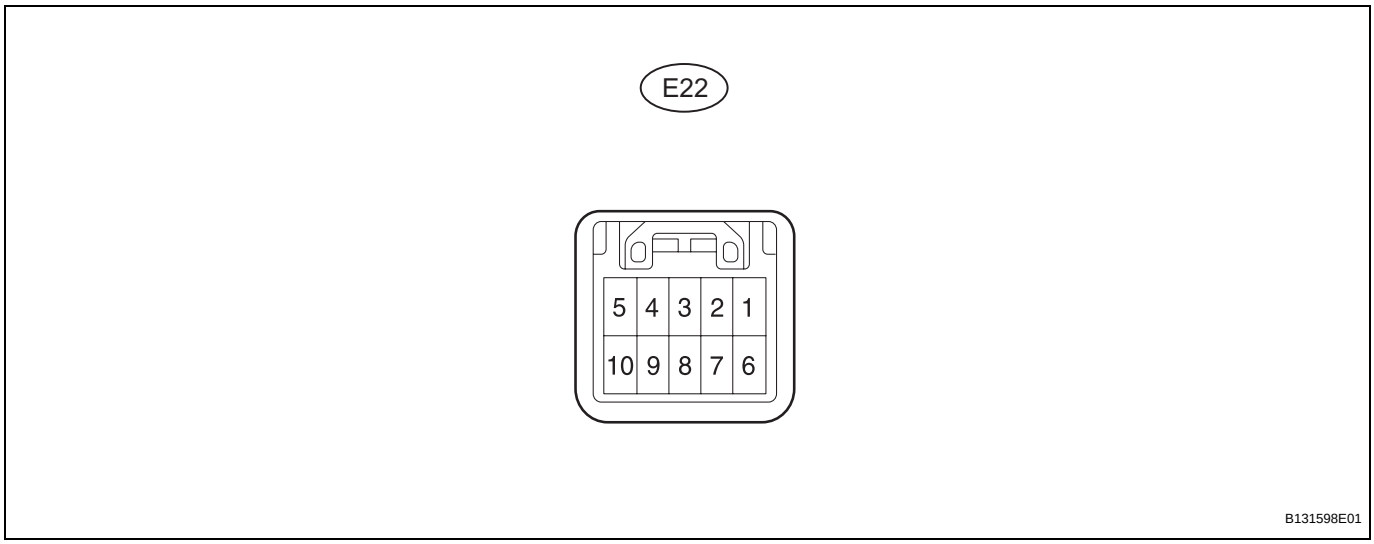

(b) Measure the voltage and resistance of the wire harness side connector.

Symbols (Terminal No.)	Wiring Color	Terminal Description	Condition	Specified Condition
+B (E22-1) - Body ground	R - Body ground	Power supply	Always	10 to 14 V
IG+ (E22-2) - Body ground	L - Body ground	Power supply	Ignition switch OFF	Below 1 V
			Ignition switch ON	10 to 14 V
PBEW (E22-3) - Body ground	LG - Body ground	Passenger seat belt signal	Sit on passenger seat, seat belt is fastened	Below 1 Ω
			Sit on passenger seat, seat belt is unfastened	10 kΩ or higher
GND (E22-5) - Body ground	W-B - Body ground	Ground	Always	Below 1 Ω

If the result is not as specified, there may be a malfunction on the wire harness side.

DIAGNOSIS SYSTEM

1. DESCRIPTION

(a) Data of the system can be read through the Data Link Connector 3 (DLC3) of the vehicle. Therefore, when the system seems to be malfunctioning, use the intelligent tester to check for a malfunction and repair it.

2. CHECK DLC3

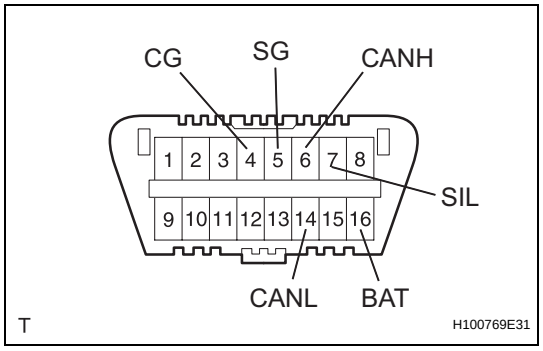

(a) The vehicle's ECM uses ISO 15765-4 communication protocol. The terminal arrangement of the DLC3 complies with SAE J1962 and matches the ISO 15765-4 format.

HINT:

Connect the cable of the intelligent tester to the DLC3, turn the ignition switch ON and attempt to use the tester. If the display indicates that a communication error has occurred, there is a problem either with the vehicle or with the tester.

- If communication is normal when the tester is connected to another vehicle, inspect the DLC3 of the original vehicle.
- If communication is still not possible when the tester is connected to another vehicle, the problem may be in the tester itself. Consult the Service Department listed in the tester's instruction manual.

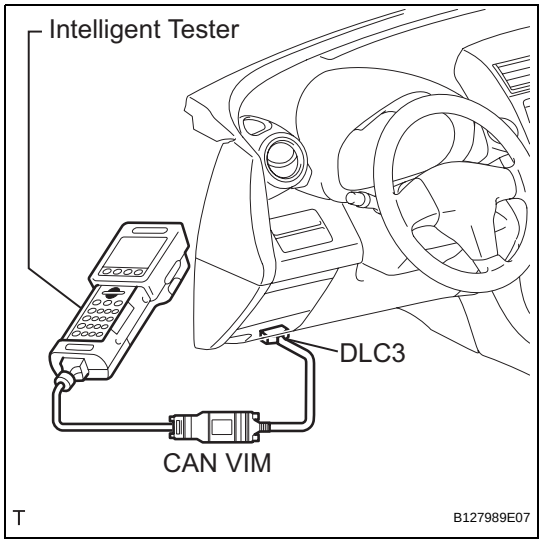

Symbols (Terminal No.)	Terminal Description	Condition	Specified Condition
SIL (7) - SG (5)	Bus "+" line	During transmission	Pulse generation
CG (4) - Body ground	Chassis ground	Always	Below 1 Ω
SG (5) - Body ground	Signal ground	Always	Below 1 Ω
BAT (16) - Body ground	Battery positive	Always	11 to 14 V
CANH (6) - CANL (14)	HIGH-level CAN bus line	Ignition switch OFF	54 to 69 Ω
CANH (6) - Battery positive	HIGH-level CAN bus line	Ignition switch OFF	1 MΩ or higher
CANH (6) - CG (4)	HIGH-level CAN bus line	Ignition switch OFF	1 kΩ or higher
CANL (14) - Battery positive	LOW-level CAN bus line	Ignition switch OFF	1 MΩ or higher
CANL (14) - CG (4)	LOW-level CAN bus line	Ignition switch OFF	1 kΩ or higher

DATA LIST / ACTIVE TEST

1. ACTIVE TEST

HINT:

Performing the intelligent tester ACTIVE TEST allows relay, VSV, actuator and other items to be operated without removing any parts. Performing the ACTIVE TEST early in troubleshooting is one way to save time. The DATA LIST can be displayed during the ACTIVE TEST.

(a) Connect the intelligent tester to the DLC3.
(b) Turn the ignition switch ON.
(c) Perform the ACTIVE TEST according to the display on the tester.

Center airbag sensor:

Item	Test Details	Diagnostic Note
D-BELT REMIND	D-SEAT BELT warning light (OFF / ON)	Confirm that the vehicle is stopped, engine idling
P-BELT REMIND	P-SEAT BELT warning light (OFF / ON)	Confirm that the vehicle is stopped, engine idling

ON-VEHICLE INSPECTION

1. CHECK DRIVER SIDE SEAT BELT WARNING LIGHT

(a) Turn the ignition switch ON.

(b) When the driver side seat belt is not fastened, check that the combination meter's driver side seat belt warning light starts blinking.

(c) When the seat belt is fastened, check that the combination meter's driver side seat belt warning light turns off.

2. CHECK PASSENGER SIDE SEAT BELT WARNING LIGHT

(a) Turn the ignition switch ON.

(b) When the front passenger seat belt is not fastened, check that the heater control panel's front passenger side seat belt warning light starts blinking.

(c) When the front passenger seat belt is fastened, check that the heater control panel's front passenger side seat belt warning light turns off.

3. CHECK SEAT BELT WARNING BUZZER

(a) Turn the ignition switch ON.

(b) After turning the ignition switch ON, if the vehicle is driven at 20 km/h (12.4 mph) or more and the driver side or front passenger side seat belt is not fastened, check that the combination meter's buzzer sounds at 1.2 second intervals for 30 seconds.

(c) 30 seconds after the buzzer first sounds, check that the buzzer sounds at 0.4 second intervals for 90 seconds.

(d) 120 seconds after the buzzer has first sounded, check that the buzzer stops.

(e) After the buzzer has stopped, turn the ignition switch OFF and then start the engine again. With the driver side or front passenger side seat belt unfastened, drive the vehicle at 20 km/h (12.4 mph) or more. Check that the buzzer sounds.

(f) After the buzzer has stopped, fasten the driver side or front passenger side seat belt, drive the vehicle at 20 km/h (12.4 mph) or more, and then unfasten the seat belt. Check that the buzzer sounds.

(g) After the buzzer has stopped, move the shift lever to R. Then move the shift lever to D and with the driver side or front passenger side seat belt unfastened, drive the vehicle at 20 km/h (12.4 mph) or more. Check that the buzzer sounds.

Driver Side Seat Belt Warning Light does not Operate

DESCRIPTION

When the ignition switch is ON, the center airbag sensor transmits front seat inner belt status signals to the combination meter through the CAN bus line. If the driver seat belt is not fastened, the combination meter blinks the driver side seat belt warning light. If the seat belt is fastened, the warning light goes off.

NOTICE:

The seat belt warning system uses the CAN bus line. Before troubleshooting the seat belt warning system, perform "COMMUNICATION FUNCTION CHECK" by following "HOW TO PROCEED WITH TROUBLESHOOTING" to confirm that the communication systems are normal.

WIRING DIAGRAM

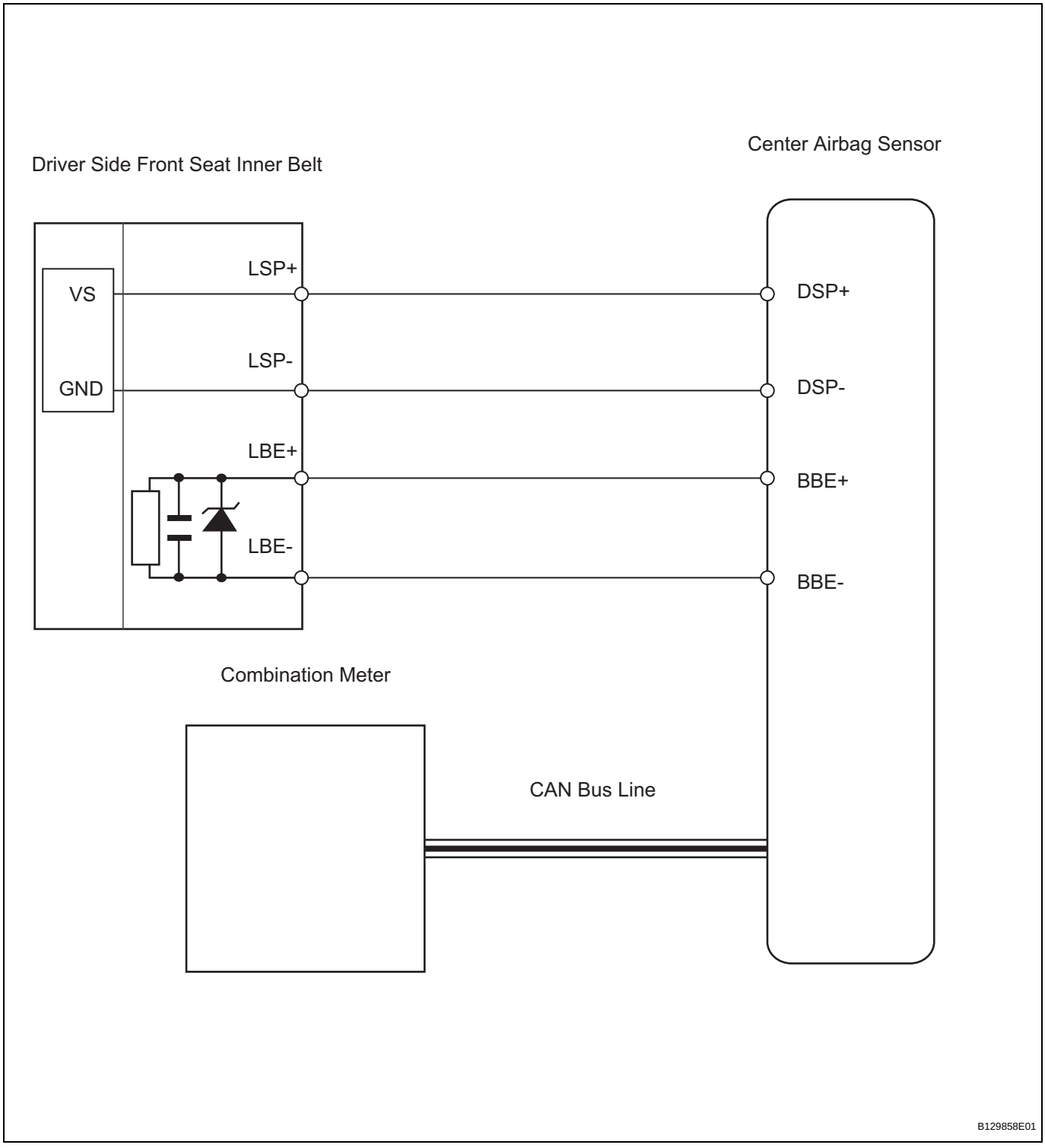

SB

INSPECTION PROCEDURE

1	PERFORM ACTIVE TEST USING INTELLIGENT TESTER

(a) Select the Active Test, use the intelligent tester to generate a control command, and then check that the seat belt warning light operates.

Center airbag sensor:

Item	Test Details	Diagnosis Note
D-BELT REMIND	D-SEAT BELT warning light (OFF/ON)	-

OK:

Driver side seat belt warning light operates normally.

NG → **REPLACE COMBINATION METER ASSEMBLY**

OK ↓

REPLACE CENTER AIRBAG SENSOR ASSEMBLY

Front Passenger Side Seat Belt Warning Light Malfunction

DESCRIPTION

When the ignition switch is ON, the center airbag sensor transmits front seat inner belt status signals to the combination meter through the CAN bus line. If the front passenger seat belt is not fastened, the heater control panel (automatic A/C) or clock (manual A/C) blinks the front passenger seat belt warning light. If the seat belt is fastened, the warning light goes off.

NOTICE:

The seat belt warning system uses the CAN bus line. Before troubleshooting the seat belt warning system, perform "COMMUNICATION FUNCTION CHECK" by following "HOW TO PROCEED WITH TROUBLESHOOTING" to confirm that the communication systems are normal.

WIRING DIAGRAM

*1: for Automatic Air Conditioning System *2: for Manual Air Conditioning System

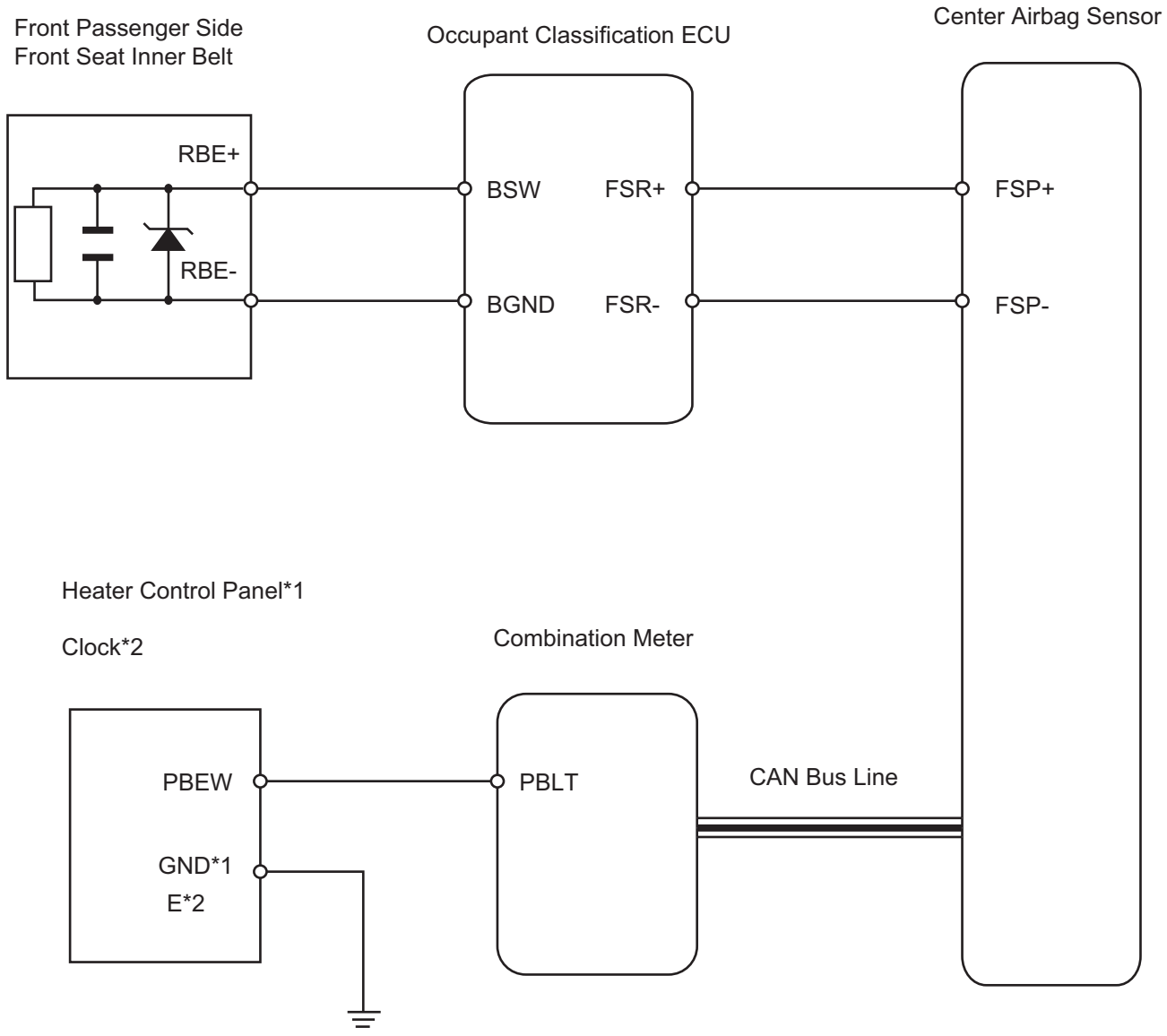

B129859E01

SB

INSPECTION PROCEDURE

1	PERFORM ACTIVE TEST BY INTELLIGENT TESTER

(a) Select the Active Test, use the intelligent tester to generate a control command, and then check that the seat belt warning light operates.

Center airbag sensor:

Item	Test Details	Diagnostic Note
P-BELT REMIND	P-SEAT BELT warning light (OFF/ON)	Confirm that the vehicle is stopped, engine idling

OK:

Passenger side seat belt warning light operates normally.

OK → **REPLACE CENTER AIRBAG SENSOR ASSEMBLY**

NG

2	CHECK A/C TYPE

(a) Check system.

A/C type	Proceed to
for Automatic air conditioning system	A
for Manual air conditioning system	B

B → **Go to step 6**

A

3	CHECK HEATER CONTROL PANEL (POWER SOURCE CIRCUIT)

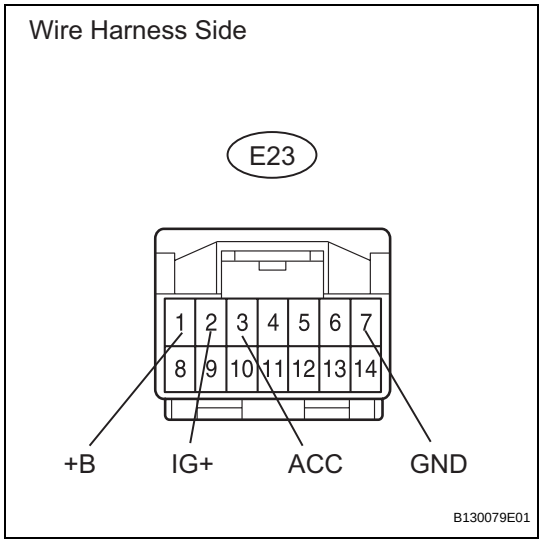

(a) Disconnect the E23 panel connector.
(b) Measure the voltage and resistance of the wire harness side connector.

Standard voltage

Tester Connection	Condition	Specified Condition
E23-1 (+B) - Body ground	Always	10 to 14 V
E23-2 (IG+) - Body ground	Ignition switch ON	10 to 14 V
E23-3 (ACC) - Body ground	Ignition switch ON (ACC)	10 to 14 V

Standard resistance

Tester Connection	Specified Condition
E23-7 (GND) - Body ground	Below 1 Ω

NG → **REPAIR OR REPLACE HARNESS AND CONNECTOR**

SB

OK

4	CHECK WIRE HARNESS (HEATER CONTROL PANEL - COMBINATION METER ASSEMBLY)

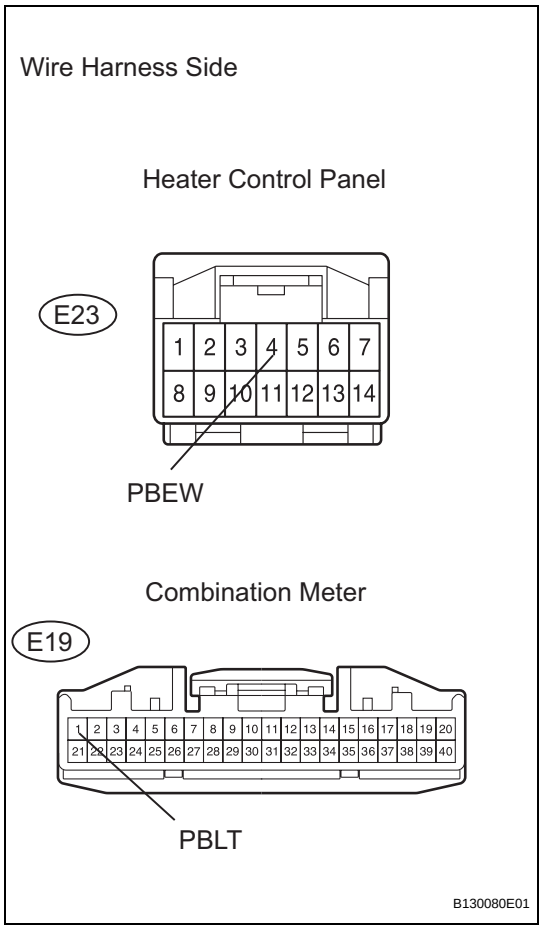

(a) Disconnect the E23 panel connector.
(b) Disconnect the E19 meter connector.
(c) Measure the resistance of the wire harness side connectors.

Standard resistance

Tester Connection	Specified Condition
E19-1 (PBLT) - E23-4 (PBEW)	Below 1 Ω

NG → **REPAIR OR REPLACE HARNESS AND CONNECTOR**

SB

OK

5	INSPECT HEATER CONTROL PANEL

(a) Remove the heater control panel.

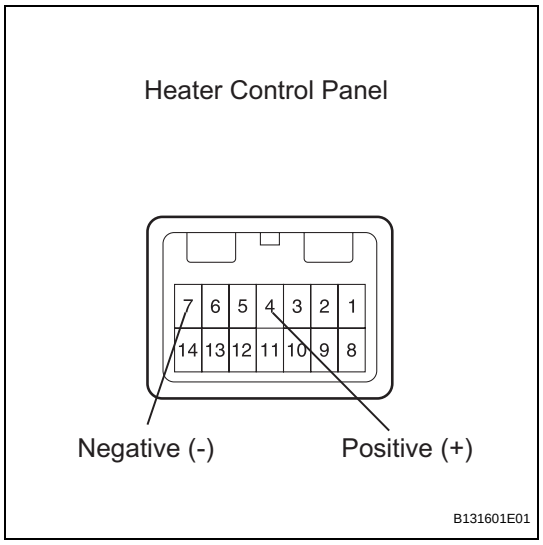

(b) Apply battery voltage and check that the front passenger side seat belt warning light illuminates.
OK

Measurement Condition	Specified Condition
Battery positive (+) - Terminal 4 Battery negative (-) - Terminal 7	Front passenger side seat belt warning light illuminates

HINT:
When the battery's negative (-) lead is applied to terminal 4 and the positive (+) lead is applied to terminal 7, the seat belt warning light does not illuminate.

NG → **REPLACE HEATER CONTROL PANEL**

OK

REPLACE COMBINATION METER ASSEMBLY

6 CHECK CLOCK SUB-ASSEMBLY (POWER SOURCE CIRCUIT)

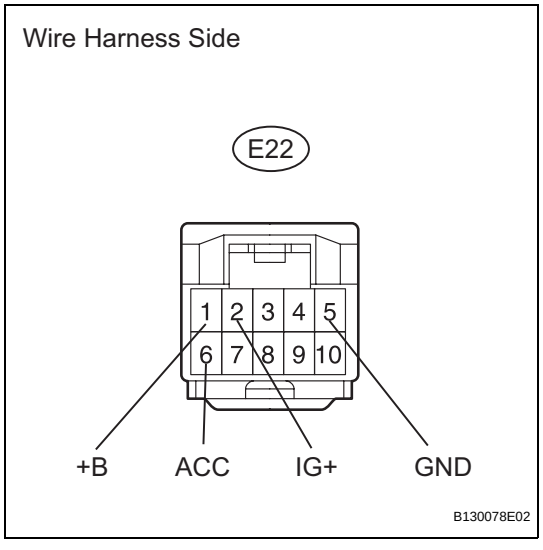

(a) Disconnect the E22 clock connector.
(b) Measure the voltage and resistance of the wire harness side connector.
Standard voltage

Tester Connection	Condition	Specified Condition
E22-1 (+B) - Body ground	Always	10 to 14 V
B22-6 (ACC) - Body ground	Ignition switch ACC	10 to 14 V
E22-2 (IG+) - Body ground	Ignition switch ON	10 to 14 V

Standard resistance

Tester Connection	Specified Condition
E22-5 - Body ground	Below 1 Ω

NG → **REPAIR OR REPLACE HARNESS AND CONNECTOR**

OK

7 CHECK WIRE HARNESS (CLOCK - COMBINATION METER)

(a) Disconnect the E22 clock connector.

SB

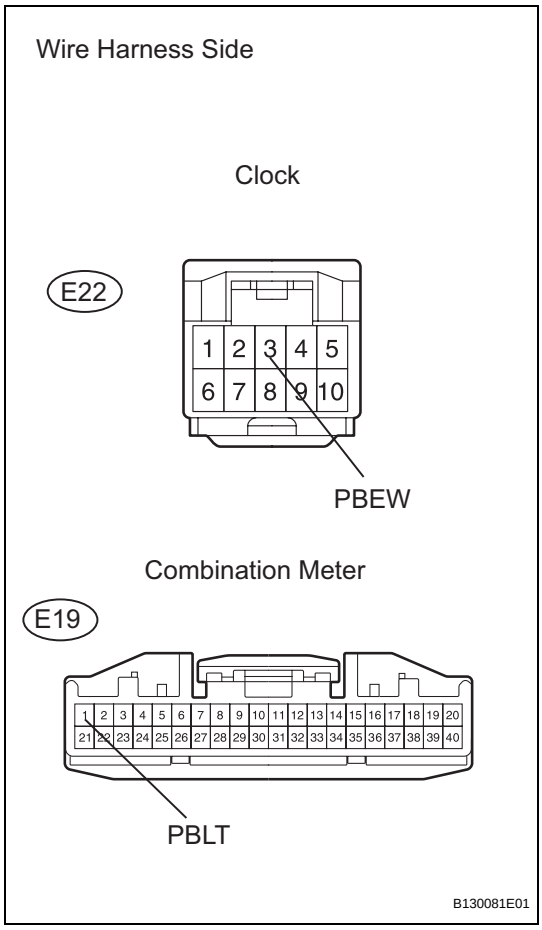

(b) Disconnect the E19 meter connector.
(c) Measure the resistance of the wire harness side connectors.

Standard resistance

Tester Connection	Specified Condition
E22-3 (PBEW) - E19-1 (PBLT)	Below 1 Ω

NG → **REPAIR OR REPLACE HARNESS AND CONNECTOR**

OK

8 INSPECT CLOCK SUB-ASSEMBLY

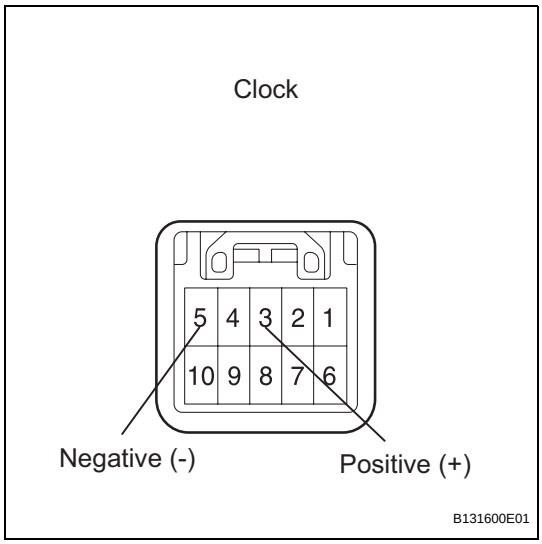

(a) Remove the clock.
(b) Apply battery voltage and check that the front passenger side seat belt warning light illuminates.

OK

Measurement Condition	Specified Condition
Battery positive (+) - Terminal 3 Battery negative (-) - Terminal 5	Front passenger side seat belt warning light illuminates

HINT:
When the battery's negative (-) lead is applied to terminal 3 and the positive (+) lead is applied to terminal 5, the seat belt warning light does not illuminate.

NG → **REPLACE CLOCK SUB-ASSEMBLY**

OK

REPLACE COMBINATION METER ASSEMBLY

SB

SEAT BELT WARNING SYSTEM

PARTS LOCATION

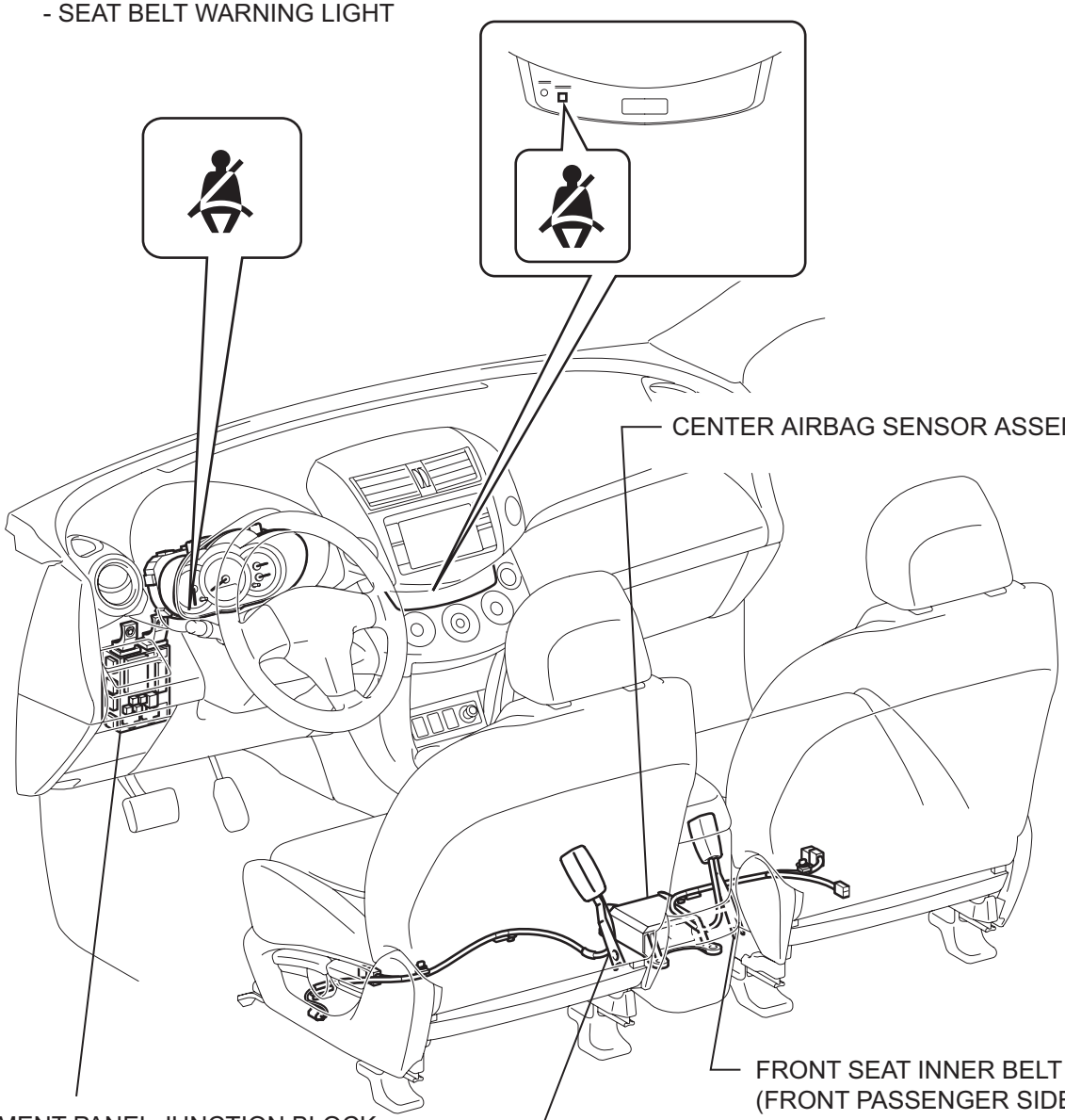

*1: for Automatic Air Conditioning System

*2: for Manual Air Conditioning System

T

B131001E01

SB

SYSTEM DIAGRAM

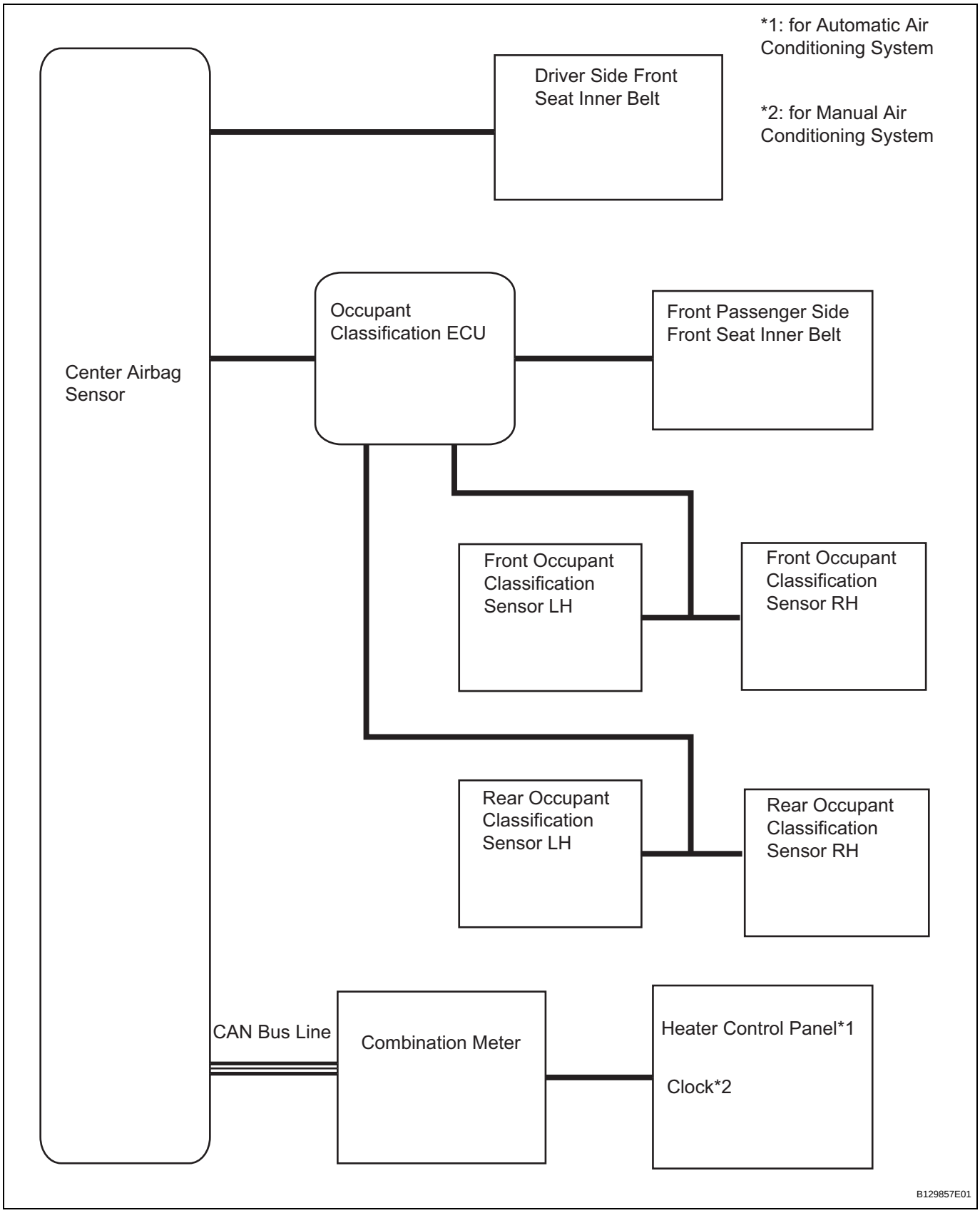

SB

2AZ-FE CHARGING

SERVICE DATA

Battery	Standard voltage		12.5 to 12.9 V at 20°C (68°F)
Charging circuit with load	Standard amperage		30 A or more
Generator brush holder assembly	Brush length	Standard length	9.5 to 11.5 mm (0.374 to 0.453 in.)
		Minimum length	4.5 mm (0.177 in.)
Generator rotor assembly	Standard resistance	Slip ring	2.1 to 2.5 Ω at 20°C (68°F)
		Slip ring - Rotor core	10 kΩ or higher
	Slip ring diameter	Standard diameter	14.2 to 14.4 mm (0.559 to 0.567 in.)
		Minimum diameter	12.8 mm (0.504 in.)

TORQUE SPECIFICATIONS

Part Tightened		N*m	kgf*cm	ft.*lbf
Generator assembly x Cylinder block	bolt A	21	215	16
	bolt B	52	530	38
Generator wire harness bracket x Generator assembly		8.4	85	74 in.*lbf
Generator Wire x Generator Assembly		9.8	100	7
Generator pulley with clutch x Generator rotor assembly		110	1122	82
Bearing retainer plate x Generator drive end frame		2.3	23	20 in.*lbf
Generator brush holder assembly x Generator rectifier end frame		1.8	18	16 in.*lbf
Generator rectifier end frame x Generator drive end frame		5.8	59	51 in.*lbf
Cord clip x Generator rectifier end frame		4.6	47	41 in.*lbf
Generator rear end cover x Generator rectifier end frame		4.6	47	41 in.*lbf

2AZ-FE COOLING

SERVICE DATA

THERMOSTAT

Condition	Specified Condition
Standard valve opening temperature	80 to 84 °C (176 to 183 °F)
Standard valve lift	10 mm (0.39 in.) or more at 95 °C (203 °F)

COOLING FAN MOTOR

Item	Indication Mark	Motor Type	Condition	Specified Condition
No. 1 cooling fan motor	B, C	160 W	at 20°C (68 °F)	11.7 to 14.7 A
No. 2 cooling fan motor	B	120 W	at 20°C (68 °F)	8.4 to 10.4 A
	C	160 W	at 20°C (68 °F)	11.7 to 14.7 A

COOLING FAN RELAY

Item	Tester Connection	Specified Condition
No. 1 fan relay	3 - 5	10 Ωor higher
	3 - 5	Below 1 Ω (when battery voltage is applied to terminals 1 and 2)
No. 2 fan relay	3 - 4	Below 1 Ω
	3 - 5	10 Ωor higher
	3 - 4	10 Ωor higher (when battery voltage is applied to terminals 1 and 2)
	3 - 5	Below 1 Ω (when battery voltage is applied to terminals 1 and 2)
No. 3 fan relay	3 - 5	10 Ωor higher
	3 - 5	Below 1 Ω (when battery voltage is applied to terminals 1 and 2)

RADIATOR

Item	Condition	Specified Condition
Radiator reservoir cap	For brand-new cap	93.3 to 122.7 kPa (0.95 to 1.25 kgf/cm^2, 13.5 to 17.8 psi)
	After using cap	78.5 kPa (0.8 kgf/cm^2, 11.4 psi)

TORQUE SPECIFICATIONS

COOLANT

Part Tightened	N*m	kgf*cm	ft.*lbf
Cylinder block drain cock plug x Cylinder block	12.7	130	10

WATER PUMP

Part Tightened	N*m	kgf*cm	ft.*lbf
Water pump x Cylinder block	9.0	92	80 in.*lbf
Water pump pulley x Water pump	26	265	19

THERMOSTAT

Part Tightened	N*m	kgf*cm	ft.*lbf
Water inlet x Cylinder block	9.0	92	80 in.*lbf

COOLING FAN MOTOR

Part Tightened	N*m	kgf*cm	ft.*lbf
No. 1 and No. 2 cooling fan motor x Fan shroud	3.9	40	35 in.*lbf
Fan x No. 1 and No. 2 cooling fan motor	6.3	64	55 in.*lbf

RADIATOR

Part Tightened		N*m	kgf*cm	ft.*lbf
Fan shroud with cooling fan x Radiator		10.5	107	8
Upper radiator support x Radiator support LH and RH		29	296	21
No. 2 fan shroud x Radiator		10.5	107	8
Upper radiator support bracket x Upper radiator support		19	194	14
No. 1 water by-pass pipe x Upper radiator support		9.0	92	80 in.*lbf
Battery clamp x Upper radiator support	Bolt	8.5	87	75 in.*lbf
Battery clamp x Battery clamp bolt	Nut	5.0	51	44 in.*lbf

2AZ-FE EMISSION CONTROL

SERVICE DATA

Purge VSV

Tester Connection	Specified Condition
1 - 2	23 to 26 Ω at 20°C (68°F)
1 - Body ground 2 - Body ground	10 MΩ or higher

Air fuel ratio sensor

Tester Connection	Specified Condition
1 (HA1A) - 2 (+B)	1.8 to 3.4 Ω at 20°C (68°F)
1 (HA1A) - 4 (A1A-)	10 kΩ or higher

Heated oxygen sensor

Tester Connection	Specified Condition
1 (HT1B) - 2 (+B)	11 to 16 Ω at 20°C (68°F)
1 (HT1B) - 4 (E2)	10 kΩ or higher

TORQUE SPECIFICATIONS

Part Tightened	N*m	kgf*cm	ft.*lbf
No. 1 engine cover x Engine	7.0	70	62 in.*lbf
Ventilation valve sub-assembly x Cylinder head	19	194	14
Air fuel ratio sensor x Exhaust manifold : for use with SST	40	408	30
Air fuel ratio sensor x Exhaust manifold : for use without SST	44	449	32
Heated oxygen sensor x Exhaust manifold : for use with SST	40	408	30
Heated oxygen sensor x Exhaust manifold : for use without SST	44	449	32
Canister x Body	20	204	15

2AZ-FE ENGINE CONTROL SYSTEM

SERVICE DATA

Camshaft timing oil control valve : Standard resistance (1 (+B) - 2 (GND))	6.9 to 7.9 kΩ at 20 °C (68°F)
Camshaft position sensor : Standard resistance (1 (G+) - 2 (G-))	835 to 1,400 Ω at cold 1,060 to 1,645 Ω at hot
Crankshaft position sensor : Standard resistance (1 (Ne+) - 2 (Ne-))	985 to 1,600 Ω at cold 1,265 to 1,890 Ω at hot
Engine coolant temperature sensor : Standard resistance (1 (E2) - 2 (THW))	2.32 to 2.59 kΩ at 20 °C (68°F) 0.310 to 0.326 kΩ at 80°C (176°F)
Throttle body : Standard resistance (1 (M-) - 2 (M+)	0.3 to 100 kΩ at 20 °C (68°F)
Knock sensor : Standard resistance (1 (Ground) - 2 (Output)	120 to 280 kΩ at 20 °C (68°F)
Accelerator pedal (ACCEL POS #1) : Standard voltage	0.5 to 1.1 V (accelerator pedal released) 2.5 to 4.5 V (accelerator pedal depressed)
Accelerator pedal (ACCEL POS #2) : Standard voltage	1.2 to 2.0 V (accelerator pedal released) 3.4 to 5.0 V (accelerator pedal depressed)

TORQUE SPECIFICATIONS

Part Tightened	N*m	kgf*cm	ft.*lbf
Camshaft timing oil control valve x Timing chain cover	9.0	92	80 in.*lbf
Engine coolant temperature sensor x Cylinder head	19.6	200	14
Camshaft position sensor x Cylinder head	9.0	92	80 in.*lbf
Crankshaft position sensor x Timing chain cover	9.0	92	80 in.*lbf
Throttle body x Intake manifold	30	305	22
No. 1 engine cover x Cylinder head cover	7.0	71	62 in.*lbf
Knock sensor x Cylinder block	20	205	15
Intake manifold x Cylinder head	30	305	22
No. 2 ECM bracket x ECM	3.0	30	27 in.*lbf
No. 1 ECM bracket x ECM	3.0	30	27 in.*lbf
ECM with bracket x Body	6.5	66	57 in.*lbf
Air cleaner case x Body	5.0	51	44 in.*lbf
Accelerator pedal x Body	5.4	55	48 in.*lbf

TORQUE SPECIFICATIONS

DRIVE BELT

Part Tightened	N*m	kgf*cm	ft.*lbf
Front suspension member reinforcement RH x Front cross member, Front suspension crossmember	96	979	71

VALVE CLEARANCE

Part Tightened	N*m	kgf*cm	ft.*lbf
No. 1 camshaft bearing cap x Cylinder head	29.5	301	22
No. 2 camshaft bearing cap x Cylinder head	29.5	301	22
No. 3 camshaft bearing cap x Cylinder head	9.0	92	80 in.*lbf
No. 1 chain tensioner x Timing chain cover	9.0	92	80 in.*lbf

TIMING CHAIN

Part Tightened		N*m	kgf*cm	ft.*lbf
Chain tensioner plate x Crankshaft bearing cap		12	122	9
Oil pump drive shaft sprocket x Oil pump		29.5	301	22
No. 1 chain vibration damper x Cylinder head, Cylinder block		9.0	92	80 in.*lbf
Chain tensioner slipper x Cylinder head, Cylinder block		19	194	14
Timing chain guide x Crankshaft bearing cap		9.0	92	80 in.*lbf
Timing chain cover x Cylinder head, Cylinder block	Bolt A (Head: 10 mm)	9.0	92	80 in.*lbf
	Bolt B (Head: 12 mm)	25	255	18
	Bolt C (Head: 14 mm)	55	561	41
	Nut	11	112	8
V-ribbed belt tensioner x Timing chain cover		59.5	607	44
Engine mounting bracket RH x Timing chain cover		55	561	41
Crankshaft pulley x Crankshaft		180	1,835	133
Oil pan x Stiffening crankcase	Bolt, Nut	9.0	92	80 in.*lbf
Cylinder head cover x Cylinder head	Bolt A	11	112	8
	Bolt B	14	143	10
	Nut	11	112	8
Engine wire x Cylinder head cover		8.4	86	74 in.*lbf
Idler pulley bracket x Cylinder block		60	612	44
Engine mounting insulator FR x Front cross member		95	969	70
Engine mounting insulator FR	Through bolt x Nut	145	1,479	107
Engine mounting insulator RH x Body		95	969	70
Engine mounting insulator RH x Engine mounting bracket	Nut A	95	969	70
	Nut B	52	530	38
Radiator reservoir x Radiator support RH, Engine mounting insulator RH		5.0	51	44 in.*lbf
No. 1 engine cover x Cylinder head		7.0	71	62 in.*lbf

CYLINDER HEAD

Part Tightened		N*m	kgf*cm	ft.*lbf
Camshaft position sensor x Cylinder head		9.0	92	80 in.*lbf
Oil pressure switch x Cylinder head		13	133	10
Radio setting condenser x Cylinder head		10	102	7
Cylinder head set bolt Cylinder head x Cylinder block	1 st	70	714	52
	2 nd	Turn 90°	Turn 90°	Turn 90°
Camshaft timing gear x Camshaft		54	551	40
No. 2 camshaft timing sprocket x No. 2 camshaft		54	551	40
No. 1 and No. 2 camshaft bearing cap x Cylinder head		29.5	301	22
No. 3 camshaft bearing cap x Cylinder head		9.0	92	80 in.*lbf
Exhaust manifold x Cylinder head		37	377	27
No. 1 exhaust manifold heat insulator x Exhaust manifold		12	122	9
No. 1 and No. 2 manifold stay x Cylinder block, Exhaust manifold		44	449	32
Oil dipstick guide x Cylinder block		9.0	92	80 in.*lbf

ENGINE ASSEMBLY

Part Tightened		N*m	kgf*cm	ft.*lbf
Drive plate x Crankshaft		98	1,000	72
Drive shaft bearing bracket x Cylinder block		64	653	47
No. 1 and No. 2 engine hanger x Cylinder head		38	387	28
Engine mounting insulator LH x Body		95	969	70
Engine mounting insulator LH	Through bolt	56	571	41
Engine mounting insulator RH x Body		95	969	70
Engine mounting insulator RH x Engine mounting bracket	Nut A	95	969	70
	Nut B	52	530	38
Engine mounting insulator RR x Front suspension crossmember	Bolt and Nut	95	969	70
Engine mounting insulator RR x Engine mounting bracket	Though bolt	95	969	70
Engine mounting insulator FR x Front cross member		95	969	70
Engine mounting insulator FR	Though bolt	145	1,479	107
Battery carrier bracket x Body		20	204	15
Battery bracket reinforcement x Battery carrier		20	204	15
Front battery carrier x Battery bracket reinforcement		20	204	15
Air cleaner filter element x Body		5.0	51	44 in.*lbf
Radiator reservoir x Radiator support RH, Engine mounting insulator RH		5.0	51	44 in.*lbf
Battery clamp x Upper Radiator support	For bolt	8.5	87	75 in.*lbf
Battery clamp x Battery clamp bolt	For nut	5.0	51	44 in.*lbf

ENGINE UNIT

Part Tightened		N*m	kgf*cm	ft.*lbf
Balance shaft housing x Stiffening crankcase	1 st	21.6	220	16
	2 nd	Turn 90°	Turn 90°	Turn 90°
Connecting rod bolt Connecting rod cap x connecting rod	1 st	24.5	250	18
	2 nd	Turn 90°	Turn 90°	Turn 90°
Crankshaft bearing cap set bolt Crankshaft bearing cap x Cylinder block	1 st	40	408	30
	2 nd	Turn 90°	Turn 90°	Turn 90°
Stud bolt x Cylinder block	Bolt A, C and D	5.0	51	44 in.*lbf
	Bolt B	21.5	219	16
No. 1 oil nozzle x Cylinder block		7.0	71	62 in.*lbf
Connecting rod cap x Connecting rod	1 st	24.5	250	18
	2 nd	Turn 90°	Turn 90°	Turn 90°
Stiffening crankcase x Cylinder block		24	245	18
Oil control valve filter x Cylinder block		30	306	22
Cylinder block water drain cock x Cylinder block		25	255	18
Camshaft timing oil control valve x Cylinder head		9.0	92	80 in.*lbf
Oil pan drain plug x Oil pan		40	408	30
Oil filter union x Stiffening crankcase		29.5	301	22
Oil filler cap x Cylinder head cover		3.0	31	26 in.*lbf
Spark plug x Cylinder head		25	254	18
Ventilation valve x Cylinder head cover		19	194	14
No. 3 water by-pass hose x Cylinder head		9.0	92	80 in.*lbf
No. 1 water by-pass pipe x Cylinder head		9.0	92	80 in.*lbf
Idler pulley bracket x Cylinder block		60	612	44
Union bolt	With oil cooler	25	255	18
Oil cooler pipe x Cylinder head		9.0	92	80 in.*lbf

2AZ-FE ENGINE MECHANICAL

SERVICE DATA

ENGINE

Item	Condition	Specified Condition
Standard ignition timing	When using intelligent tester	5 to 15° BTDC @ idle
Standard ignition timing	When not using intelligent tester (Connect SST)	8 to 12° BTDC @ idle
Standard ignition timing	When not using intelligent tester (Disconnect SST)	5 to 15° BTDC @ idle
Standard idle speed	-	600 to 700 rpm
Compression	Standard pressure	1,300 kPa (13.8 kgf/cm^2, 196 psi)
	Minimum pressure	1,000 kPa (10 kgf/cm^2, 142 psi)
	Difference between each cylinder	100 kPa (1.0 kgf/cm^2, 14 psi)

VALVE CLEARANCE

Item	Condition	Specified Condition
Intake	Cold	0.19 to 0.29 mm (0.0075 to 0.0114 in.)
Exhaust	Cold	0.38 to 0.48 mm (0.0150 to 0.0189 in.)

TIMING CHAIN

Item	Condition	Specified Condition
Chain sub-assembly	Maximum wear	122.6 mm (4.827 in.)
Chain tensioner slipper	Maximum wear	1.0 mm (0.039 in.)
No. 1 chain vibration damper	Maximum wear	1.0 mm (0.039 in.)
Crankshaft timing sprocket	Minimum gear diameter (with chain)	51.6 mm (2.031 in.)
Oil pump drive sprocket	Minimum gear diameter (with chain)	48.2 mm (1.898 in.)
Oil pump drive shaft sprocket	Minimum gear diameter (with chain)	48.2 mm (1.898 in.)

CYLINDER HEAD

Item	Condition	Position	Specified Condition
Cylinder head	Maximum warpage	-	0.08 mm (0.0032 in.)
Camshaft (Intake)	Maximum circle runout	-	0.03 mm (0.0012 in.)
	Standard cam lobe height	-	47.306 to 47.406 mm (1.8624 to 1.8664 in.)
	Minimum cam lobe height	-	47.196 mm (1.8581 in.)
	Standard journal diameter	No. 1 journal	35.971 to 35.985 mm (1.4162 to 1.4167 in.)
	Standard journal diameter	Other journal	22.959 to 22.975 mm (0.9039 to 0.9045 in.)
	Standard oil clearance	No. 1 journal	0.007 to 0.038 mm (0.0003 to 0.0015 in.)
	Maximum oil clearance		0.07 mm (0.0028 in.)
	Standard oil clearance	Other journal	0.025 to 0.062 mm (0.0010 to 0.062 in.)
	Maximum oil clearance		0.10 mm (0.0039 in.)
	Standard thrust clearance	-	0.040 to 0.095 mm (0.0016 to 0.0037 in.)
	Maximum thrust clearance	-	0.11 mm (0.0043 in.)

Item	Condition	Position	Specified Condition
No. 2 camshaft (Exhaust)	Maximum circle runout	-	0.03 mm (0.0012 in.)
	Standard cam lobe height	-	45.983 to 46.083 mm (1.8104 to 1.8143 in.)
	Minimum cam lobe height	-	45.873 mm (1.8060 in.)
	Standard journal diameter	No. 1 journal	35.971 to 35.985 mm (1.4162 to 1.4167 in.)
	Standard journal diameter	Other journal	22.959 to 22.975 mm (0.9039 to 0.9045 in.)
	Standard oil clearance	No. 1 journal	0.040 to 0.079 mm (0.0016 to 0.0031 in.)
	Maximum oil clearance		0.10 mm (0.0039 in.)
	Standard oil clearance	Other journal	0.025 to 0.062 mm (0.0010 to 0.062 in.)
	Maximum oil clearance		0.10 mm (0.0039 in.)
	Standard thrust clearance	-	0.080 to 0.135 mm (0.0032 to 0.0053 in.)
	Maximum thrust clearance	-	0.15 mm (0.0059 in.)
Valve lifter	Standard lifter diameter	-	30.966 to 30.976 mm (1.2191 to 1.2195 in.)
	Standard lifer bore diameter	-	31.009 to 31.025 mm (1.2208 to 1.2215 in.)
	Standard oil clearance	-	0.033 to 0.059 mm (0.0013 to 0.0023 in.)
	Maximum oil clearance	-	0.079 mm (0.0031 in.)
Inner compression spring	Standard free length	-	47.43 mm (1.8673 in.)
	Maximum deviation	-	1.6 mm (0.063 in.)
	Maximum angle (Reference)	-	2°
Intake valve	Standard overall length	-	101.71 mm (4.0043 in.)
	Minimum overall length	-	101.21 mm (3.9846 in.)
	Standard valve stem diameter	-	5.470 to 5.485 mm (0.2154 to 0.2159 in.)
	Standard valve head margin thickness	-	1.25 mm (0.0492 in.)
	Minimum valve head margin thickness	-	1.05 mm (0.0413 in.)
Exhaust valve	Standard overall length	-	101.15 mm (3.9823 in.)
	Minimum overall length	-	100.70 mm (3.9646 in.)
	Standard valve stem diameter	-	5.465 to 5.480 mm (0.2152 to 0.2158 in.)
	Standard valve head margin thickness	-	1.40 mm (0.0551 in.)
	Minimum valve head margin thickness	-	1.20 mm (0.0472 in.)

Item	Condition	Position	Specified Condition
Intake valve guide bush	Standard bush bore diameter (For cylinder head)	-	10.285 to 10.306 mm (0.4049 to 0.4058 in.)
	Standard valve guide bush diameter	STD	10.333 to 10.344 mm (0.4068 to0.4072 in.)
		O/S (0.05 mm)	10.383 to 10.394 mm (0.4088 to 0.4092 in.)
	Standard bush inside diameter	-	5.510 to 5.530 mm (0.2169 to 0.2177 in.)
	Standard oil clearance	-	0.025 to 0.060 mm (0.0010 to 0.0024 in.)
	Maximum oil clearance	-	0.08 mm (0.0032 in.)
	Standard protrusion height	-	9.6 to 10.0 mm (0.378 to 0.394 in.)
Exhaust valve guide bush	Standard bush bore diameter (For cylinder head)	-	10.285 to 10.306 mm (0.4049 to 0.4058 in.)
	Standard valve guide bush diameter	STD	10.333 to 10.344 mm (0.4068 to 0.4072 in.)
		O/S (0.05 mm)	10.383 to 10.394 mm (0.4088 to 0.4092 in.)
	Standard bush inside diameter	-	5.510 to 5.530 mm (0.2169 to 0.2177 in.)
	Standard oil clearance	-	0.030 to 0.065 mm (0.0012 to 0.0026 in.)
	Maximum oil clearance	-	0.10 mm (0.004 in.)
	Standard protrusion height	-	9.6 to 10.0 mm (0.378 to 0.394 in.)
Cylinder head set bolt	Standard bolt length	-	141.3 to 142.7 mm (5.563 to 5.618 in.)
	Maximum bolt length	-	144.2 mm (5.677 in.)
Exhaust manifold	Maximum warpage	-	0.70 mm (0.028 in.)
Ring pin	Protrusion height	-	3.0 mm (0.12 in.)

ENGINE UNIT

Item	Condition	Mark	Specified Condition
Balance shaft	Standard thrust clearance	-	0.05 to 0.09 mm (0.0020 to 0.0035 in.)
	Maximum thrust clearance	-	0.09 mm (0.0035 in.)
	Standard oil clearance	-	0.004 to 0.049 mm (0.0002 to 0.0019 in.)
	Maximum oil clearance	-	0.049 mm (0.0019 in.)
	Standard journal diameter	-	22.985 to 23.000 mm (0.9049 to 0.9055 in.)
	Standard balance shaft housing journal bore diameter	Mark 1	6.000 to 26.006 mm (1.0236 to 1.0239 in.)
		Mark 2	26.007 to 26.012 in.)
		Mark 3	26.013 to 26.018 in.)
	Standard bearing center wall thickness	Mark 1	1.486 to 1.489 mm (0.05850 to 0.05862 in.)
		Mark 2	1.490 to 1.492 mm (0.05866 to 0.05874 in.)
		Mark 3	1.493 to 1.495 mm (0.0585 to 0.0586 in.)

Item	Condition	Mark	Specified Condition
Connecting rod	Standard thrust clearance	-	0.160 to 0.362 mm (0.0063 to 0.0143 in.)
	Maximum thrust clearance	-	0.362 mm (0.0143 in.)
	Standard oil clearance	-	0.024 to 0.048 mm (0.0009 to 0.0019 in.)
	Maximum oil clearance	-	0.08 mm (0.0032 in.)
	Standard large end bore diameter	Mark 1	51.000 to 51.007 mm (2.0079 to 2.0082 in.)
		Mark 2	51.008 to 51.013 mm (2.0082 to 2.0084 in.)
		Mark 3	51.014 to 51.020 mm (2.0084 to 2.0087 in.)
	Standard bearing thickness	Mark 1	1.485 to 1.488 mm (0.0585 to 0.0586 in.)
		Mark 2	1.489 to 1.491 mm (0.0586 to 0.0587 in.)
		Mark 3	1.492 to 1.494 mm (0.0587 to 0.0588 in.)
	Standard crankshaft pin diameter	-	47.990 to 48.000 mm (1.8894 to 1.8898 in.)
Crankshaft	Standard thrust clearance	-	0.04 to 0.24 mm (0.0016 to 0.0095 in.)
	Maximum thrust clearance	-	0.30 mm (0.0118 in.)
	Standard oil clearance	-	0.008 to 0.024 mm (0.0003 to 0.0010 in.)
	Maximum oil clearance	-	0.050 mm (0.0020 in.)
Crankshaft	Standard cylinder block journal bore diameter	Mark 0	59.000 to 59.002 mm (2.3228 to 2.3229 in.)
		Mark 1	59.003 to 59.004 mm (2.3230 to 2.3230 in.)
		Mark 2	59.005 to 59.006 mm(2.3230 to 2.3231 in.)
		Mark 3	59.007 to 59.009 mm (2.3231 to 2.3232 in.)
		Mark 4	59.010 to 59.011 mm(2.3232 to 2.3233 in.)
		Mark 5	59.012 to 59.013 mm (2.3233 to 2.3234 in.)
		Mark 6	59.014 to 59.016 mm (2.3234 to 2.3235 in.)
Crankshaft	Standard crankshaft journal diameter	Mark 0	54.999 to 55.000 mm (2.1653 to 2.1654 in.)
		Mark 1	54.997 to 54.998 mm (2.1652 to 2.1653 in.)
		Mark 2	54.995 to 54.996 mm (2.1652 to 2.1652 in.)
		Mark 3	54.993 to 54.994 mm (2.1651 to 2.1651 in.)
		Mark 4	54.991 to 54.992 mm (2.1650 to 2.1650 in.)
		Mark 5	54.988 to 54.990 mm (2.1649 to 2.1650 in.)

Item	Condition	Mark	Specified Condition
Crankshaft	Standard bearing center wall thickness	Mark 1	1.993 to 1.996 mm (0.0785 to 0.0786 in.)
		Mark 2	1.997 to 1.999 mm (0.0786 to 0.0787 in.)
		Mark 3	2.000 to 2.002 mm (0.0787 to 0.0788 in.)
		Mark 4	2.003 to 2.005 mm (0.0789 to 0.0789 in.)
Crankshaft	Standard main journal diameter	-	54.988 to 55.000 mm (2.1830 to 2.1654 in.)
	Standard main journal diameter (Reference)	Mark 0	54.999 to 55.000 mm (2.1653 to 2.1654 in.)
		Mark 1	54.997 to 54.998 mm (2.1652 to 2.1653 in.)
		Mark 2	54.995 to 54.996 mm (2.1652 to 2.1652 in.)
		Mark 3	54.993 to 54.994 mm (2.1651 to 2.1651 in.)
		Mark 4	54.991 to 54.992 mm (2.1650 to 2.1650 in.)
		Mark 5	54.998 to 54.990 mm (2.1649 to 2.1650 in.)
Crankshaft	Maximum taper and distortion (Main journal)	-	0.003 mm (0.0001 in.)
	Standard crank pin diameter	-	47.990 to 48.000 mm (1.8894 to 1.8898 in.)
	Maximum taper and distortion (Crank pin)	-	0.003 mm (0.0001 in.)
Cylinder block	Maximum warpage (Measure the warpage of the surface that is in contact with the cylinder head gasket.)	-	0.05 mm (0.0020 in.)
	Standard cylinder bore diameter	-	88.500 to 88.513 mm (3.4843 to 3.4847 in.)
	Maximum cylinder bore diameter	-	88.633 mm (3.4849 in.)
Piston	Standard diameter (Measure the position diameter at right angles to the piston pin hole, and at the piston 44.3 mm (1.7587 in.) from the piston head.)	-	88.477 to 88.487 mm (3.5125 to 3.5129 in.)
	Standard oil clearance	-	0.021 to 0.044 mm (0.0008 to 0.0017 in.)
	Maximum oil clearance	-	0.10 mm (0.0039 in.)
	Standard piston pin bore diameter	-	22.001 to 22.010 mm (0.8662 to 0.8665 in.)
	-	Mark A	22.001 to 22.004 mm (0.8662 to 0.8663 in.)
		Mark B	22.005 to 22.007 mm (0.8663 to 0.8664 in.)
		Mark C	22.008 to 22.010 mm (0.8665 to 0.8665 in.)
	Standard piston pin bore oil clearance	-	0.001 to 0.007 mm (0.00004 to 0.0003 in.)
	Maximum piston pin bore oil clearance	-	0.013 mm (0.0005 in.)

Item	Condition	Mark	Specified Condition
Piston ring	Standard ring groove clearance	No. 1 ring	0.020 to 0.070 mm (0.0008 to 0.0028 in.)
		No. 2 ring	0.020 to 0.060 mm (0.0008 to 0.0024 in.)
		Oil ring	0.020 to 0.070 mm (0.0008 to 0.0028 in.)
	Standard end gap (Measure the piston ring a little beyond the bottom of the ring travel, 110 mm (4.33 in.) from the top of the cylinder block.)	No. 1 ring	0.24 to 0.31 mm (0.0094 to 0.0122 in.)
		No. 2 ring	0.33 to 0.43 mm (0.0130 to 0.0169 in.)
		Oil ring	0.10 to 0.30 mm (0.0040 to 0.0119 in.)
	Maximum end gap	No. 1 ring	0.89 mm (0.0350 in.)
		No. 2 ring	1.37 mm (0.0539 in.)
		Oil ring	0.73 mm (0.0287 in.)
Piston pin	Standard piston pin diameter	-	21.997 to 22.006 mm (0.8660 to 0.8664 in.)
	-	Mark A	21.997 to 22.000 mm (0.8660 to 0.8661 in.)
		Mark B	22.001 to 22.003 mm (0.8662 to 0.8663 in.)
		Mark C	22.004 to 22.006 mm (0.8663 to 0.8664 in.)
Connecting rod	Standard small end bore diameter	-	22.005 to 22.014 mm (0.8663 to 0.8667 in.)
	-	Mark A	22.005 to 22.008 mm (0.8663 to 0.8665 in.)
		Mark B	22.009 to 22.011 mm (0.8665 to 0.8666 in.)
		Mark C	22.012 to 22.014 mm (0.8666 to 0.8667 in.)
	Standard small end bore oil clearance	-	0.005 to 0.011 mm (0.0002 to 0.0004 in.)
	Maximum small end bore oil clearance	-	0.017 mm (0.0007 in.)
	Maximum misalignment	-	0.05 mm (0.0020 in.) per 100 mm (3.94 in.)
	Maximum twist	-	0.15 mm (0.0059 in.) per 100 mm (3.94 in.)
Connecting rod bolt	Standard diameter (Measure the tension portion diameter of the bolt.)	-	7.2 to 7.3 mm (0.283 to 0.287 in.)
	Minimum diameter	-	7.0 mm (0.276 in.)

2AZ-FE EXHAUST

SERVICE DATA

Compression spring (Front exhaust pipe assembly x Exhaust manifold)	Minimum length: 41.5 mm (1.634 in)
Compression spring (Center exhaust pipe assembly x Tailpipe assembly)	Minimum length: 38.5 mm (1.515 in.)

TORQUE SPECIFICATIONS

Part Tightened	N*m	kgf*cm	ft.*lbf
Front exhaust pipe assembly x Exhaust manifold	43	440	32
Center exhaust pipe assembly x Front exhaust pipe assembly	43	440	32
Tailpipe assembly x Center exhaust pipe assembly	43	440	32
Heated oxygen sensor (for bank1 sensor 2)	44	449	33

2AZ-FE FUEL

SERVICE DATA

Fuel pressure			304 to 343 kPa (3.1 to 3.5 kgf/cm^2, 44 to 50 psi)
Fuel injector	Resistance	at 20°C (68°F)	11.6 to 12.4 Ω
	Injection volume		76 to 92 cm^3 (4.6 to 5.6 cu in.) per 15 seconds
	Difference between each cylinder		16 cm^3 (1.0 cu in.) or less
	Fuel leakage		1 drop or less per 12 minutes
Fuel pump	Resistance	at 20°C (68°F)	0.2 to 3.0 Ω

TORQUE SPECIFICATIONS

Part Tightened	N*m	kgf*cm	ft.*lbf
Fuel delivery pipe x Cylinder head	20	204	15
Fuel tank vent tube set plate x Fuel tank	4.0	41	35 in.*lbf
No. 1 engine cover x Cylinder head cover sub-assembly	7.0	70	62 in.*lbf
Fuel pressure pulsation damper x Fuel delivery pipe	9.0	90	80 in.*lbf
Fuel tank filler pipe x Body	23.5	240	17
Filler pipe protector x Body	5.4	55	48 in.*lbf
Fuel tank band x Body	40	408	30
Fuel sender gauge assembly x Fuel tank	1.5	15	13 in.*lbf

2AZ-FE IGNITION

SERVICE DATA

Spark Plug	Standard electrode gap	1.0 to 1.1 mm (0.039 to 0.043 in.) for new spark plug
	Maximum electrode gap	1.3 mm (0.051 in.) for used spark plug

TORQUE SPECIFICATIONS

Part Tightened	N*m	kgf*cm	ft.*lbf
Spark plug x Cylinder head sub-assembly	25	254	18
Ignition coil assembly x Cylinder head cover	9.0	92	80 in.*lbf

2AZ-FE LUBRICATION

SERVICE DATA

OIL PRESSURE

Condition	Specified Condition
Idle	29 kPa (0.3 kgf/cm^2, 4.3 psi) or more
3,000 rpm	160 to 539 kPa (1.6 to 5.5 kgf/cm^2, 23 to 78 psi)

OIL PUMP

Item	Condition	Specified Condition
Oil pump rotor	Standard side clearance	0.100 to 0.170 mm (0.0039 to 0.0067 in.)
	Maximum side clearance	0.325 mm (0.0128 in.)
	Standard tip clearance	0.080 to 0.160 mm (0.0031 to 0.0063 in.)
	Maximum tip clearance	0.35 mm (0.0138 in.)
	Standard body clearance	0.100 to 0.170 mm (0.0039 to 0.0067 in.)
	Maximum body clearance	0.325 mm (0.01128 in.)
Oil pump drive chain	Maximum chain elongation	52.4 mm (2.063 in.)
Oil pump sprocket	Minimum crankshaft sprocket diameter (with chain)	48.2 mm (1.898 in.)
	Minimum oil pump drive shaft sprocket	48.2 mm (1.898 in.)
Chain tensioner plate	Maximum wear	0.5 mm (0.020 in.)

TORQUE SPECIFICATIONS

OIL FILTER

Part Tightened	N*m	kgf*cm	ft.*lbf
Oil filter x Stiffening crankcase	17.2	175	13
Oil drain plug x Oil pan	40	408	30

OIL PUMP

Part Tightened	N*m	kgf*cm	ft.*lbf
Oil pump cover x Oil pump	8.8	90	78 in.*lbf
Oil pump relief valve x Oil pump	49	500	36
Oil pump strainer x Oil pump	8.8	90	78 in.*lbf
Oil pump X Cylinder block	19	194	14

2AZ-FE STARTING

SERVICE DATA

Starter assembly	Standard current: 90 A or less at 11.5 V
Starter magnetic switch assembly	Standard resistance 50 - C: Below 1 Ω 50 - Body: Below 2 Ω
Starter armature assembly	Standard resistance Segment: Below 1 Ω Segment - Coil core: 10 kΩ or higher
	Standard length: 3.1 to 3.8 mm (0.122 to 0.150 in.)
Starter commutator end frame	Standard length: 4.0 to 9.0 mm (0.158 to 0.359 in.)
	Standard resistance Positive (+) - Negative (-): 10 kΩ or higher
Snap ring	Maximum length: 5.0 mm (0.197 in.)
Starter relay	3 - 5: 10 kΩ or higher 3 - 5: Below 1 Ω (when battery voltage is applied to terminals 1 and 2)
Ignition switch	LOCK: Between all terminals 10 kΩ or higher ACC: 2 (AM1) - 3 (ACC) Below 1 Ω ON: 2 (AM1) - 3 (ACC) Below 1 Ω ON: 2 (AM1) - 4 (IG1) Below 1 Ω ON: 6 (IG2) - 7 (AM2) Below 1 Ω START: 1 (ST1) - 2 (AM1) Below 1 Ω START: 1 (ST1) - 4 (IG1) Below 1 Ω START: 6 (IG2) - 7 (AM2) Below 1 Ω START: 6 (IG2) - 8 (ST2) Below 1 Ω

TORQUE SPECIFICATIONS

Part Tightened	N*m	kgf*cm	ft.*lbf
Lead wire x Terminal C	10	102	7
Starter assembly x Cylinder block sub-assembly	37	377	27
Starter wire x Starter assembly	9.8	100	7
Starter commutator end frame assembly x Starter drive housing assembly	5.9	60	52 in.*lbf
Magnetic switch assembly x Starter drive housing assembly	7.5	76	66 in.*lbf
Battery clamp x Body : for bolt	5.0	51	44 in.*lbf
Battery clamp x Front battery bracket : for nut	5.0	51	44 in.*lbf
Front battery bracket x Body	19	194	14
Battery bracket reinforcement x Battery carrier bracket	19	194	14

2GR-FE CHARGING

SERVICE DATA

Battery	Standard specific gravity		1.25 to 1.29 at 20°C (68°F)
Charging circuit with load	Standard amperage		30 A or more
Generator brush holder assembly	Brush length	Standard length	9.5 to 11.5 mm (0.374 to 0.453 in.)
		Minimum length	4.5 mm (0.177 in.)
Generator rotor assembly	Standard resistance	Slip ring	2.3 to 2.7 Ω at 20°C (68°F)
		Slip ring - Rotor core	1 MΩ or higher
	Slip ring diameter	Standard diameter	14.2 to 14.4 mm (0.559 to 0.567 in.)
		Minimum diameter	14.0 mm (0.551 in.)

TORQUE SPECIFICATIONS

Part Tightened	N*m	kgf*cm	ft.*lbf
Generator assembly x Cylinder block	43	438	32
Bracket x Cylinder block	20	204	15
Wire harness clamp stay x Generator assembly	8.4	85	74 in.*lbf
Generator wire x Generator assembly	9.8	100	88 in.*lbf
Generator pulley with clutch x Generator rotor assembly	110	1122	82
Bearing retainer plate x Generator drive end frame	2.3	23	20 in.*lbf
Generator brush holder assembly x Generator rectifier end frame	1.8	18	16 in.*lbf
Generator rectifier end frame x Generator drive end frame	5.8	59	51 in.*lbf
Generator rear end cover x Generator rectifier end frame	4.6	47	41 in.*lbf

2GR-FE COOLING

SERVICE DATA

THERMOSTAT

Condition	Specified Condition
Standard valve opening temperature	80 to 84°C (176 to 183°F)
Standard valve lift	10 mm (0.39 in.) or more at 95°C (203°F)

COOLING FAN MOTOR

Item	Indication Mark	Motor Type	Condition	Specified Condition
No. 1 cooling fan motor (w/o Trailer towing system)	E	160 W	at 20°C (68°F)	11.8 to 14.8 A
No. 1 cooling fan motor (w/ Trailer towing system)	H	240 W	at 20°C (68°F)	18.0 to 22.0 A
No. 2 cooling fan motor (w/o Trailer towing system)	E	160 W	at 20°C (68°F)	11.8 to 14.8 A
No. 2 cooling fan motor (w/ Trailer towing system)	H	240 W	at 20°C (68°F)	18.0 to 22.0 A

COOLING FAN ECU

Item	Tester Connection	Condition	Specified Condition
Cooling fan ECU (w/o Trailer towing system)	B12-3 - Body ground	Ignition switch ON	9 to 14 V
	B12-1 - Body ground	Always	Below 1 Ω
Cooling fan ECU (w/ Trailer towing system)	B10-1 - Body ground	Ignition switch ON	9 to 14 V
	B11-1 - Body ground	Ignition switch ON	9 to 14 V
	B10-3 - Body ground	Always	Below 1 Ω
	B11-3 - Body ground	Always	Below 1 Ω

COOLING FAN RELAY

Item	Tester Connection	Specified Condition
No. 1 fan relay	3 - 5	10 Ω or higher
	3 - 5	Below 1 Ω (when battery voltage is applied to terminals 1 and 2)
No. 2 fan relay	3 - 5	10 Ω or higher
	3 - 5	Below 1 Ω (when battery voltage is applied to terminals 1 and 2)

RADIATOR

Item	Tester Connection	Specified Condition
Radiator reservoir cap	For brand-new cap	93.3 to 122.7 kPa (0.95 to 1.25 kgf/cm^2, 13.5 to 17.8 psi)
	After using cap	78.5 kPa (0.8 kgf/cm^2, 11.4 psi)

TORQUE SPECIFICATIONS

COOLANT

Part Tightened	N*m	kgf*cm	ft.*lbf
Cylinder block drain cock plug x Cylinder block	12.7	130	10

WATER PUMP

Part Tightened		N*m	kgf*cm	ft.*lbf
Water pump x Cylinder block	for bolt A	21	214	15
	for bolt B	9.0	92	80 in.*lbf
	for bolt C	9.0	92	80 in.*lbf
V-ribbed belt tensioner assembly x Cylinder block		43	438	32
No. 2 idler pulley sub-assembly x Cylinder block		43	438	32
Water pump pulley x Water pump		21	214	15
Water inlet housing x Cylinder block		10	102	7
Radiator reservoir tank x Body		5.0	51	44 in.*lbf

THERMOSTAT

Part Tightened	N*m	kgf*cm	ft.*lbf
Water inlet x Water inlet housing	10	102	7

COOLING FAN MOTOR

Part Tightened	N*m	kgf*cm	ft.*lbf
No. 1 and No. 2 cooling fan motor x Fan shroud	3.9	40	35 in.*lbf
Fan x No. 1 and No. 2 cooling fan motor	6.3	64	55 in.*lbf

RADIATOR

Part Tightened	N*m	kgf*cm	ft.*lbf
Fan shroud with cooling fan x Radiator	10.5	107	8
Upper radiator support x Radiator support LH and RH	29	296	21
No. 2 fan shroud x Radiator	10.5	107	8
Upper radiator support bracket x Upper radiator support	19	194	14
No. 1 water by-pass pipe x Upper radiator support	9.0	92	80 in.*lbf

2GR-FE EMISSION CONTROL

SERVICE DATA

Purge VSV

Tester Connection	Specified Condition
1 - 2	23 to 26 Ω at 20°C (68°F)
1 - Body ground 2 - Body ground	10 MΩ or higher

Air fuel ratio sensor

Tester Connection	Specified Condition
1 (HA1A) - 2 (+B)	1.8 to 3.4 Ω at 20°C (68°F)
1 (HA1A) - 4 (A1A-)	10 kΩ or higher

Heated oxygen sensor

Tester Connection	Specified Condition
1 (HT1B) - 2 (+B)	11 to 16 Ω at 20°C (68°F)
1 (HT1B) - 4 (E2)	10 kΩ or higher

TORQUE SPECIFICATIONS

Part Tightened		N*m	kgf*cm	ft.*lbf
Canister x Body		20	204	15
Purge VSV x Cylinder head cover		10	102	7
Ventilation valve sub-assembly x Cylinder head cover		27	275	20
Air fuel ratio sensor x Exhaust manifold sub-assembly		44	449	32
	with SST	40	408	30
Oxygen sensor x Front pipe assembly		44	449	32
	with SST	40	408	30

2GR-FE ENGINE CONTROL SYSTEM

SERVICE DATA

Camshaft timing oil control valve : Standard resistance (1 (+B) - 2 (GND))	6.9 to 7.9 kΩ at 20 °C (68°F)
Camshaft position sensor : Standard resistance (1 (G+) - 2 (G-))	835 to 1,400 Ω at cold 1,060 to 1,645 Ω at hot
Crankshaft position sensor : Standard resistance (1 (Ne+) - 2 (Ne-))	1,630 to 2,740 Ω at cold 2,065 to 3,225 Ω at hot
Engine coolant temperature sensor : Standard resistance (1 (E2) - 2 (THW))	2.32 to 2.59 kΩ at 20 °C (68°F) 0.310 to 0.326 kΩ at 80°C (176°F)
Throttle body : Standard resistance (1 (M-) - 2 (M+)	0.3 to 100 kΩ at 20 °C (68°F)
Knock sensor : Standard resistance (1 (Ground) - 2 (Output)	120 to 280 kΩ at 20 °C (68°F)
Accelerator pedal (ACCEL POS #1) : Standard voltage	0.5 to 1.1 V (accelerator pedal released) 2.5 to 4.5 V (accelerator pedal depressed)
Accelerator pedal (ACCEL POS #2) : Standard voltage	1.2 to 2.0 V (accelerator pedal released) 3.4 to 5.0 V (accelerator pedal depressed)

TORQUE SPECIFICATIONS

Part Tightened	N*m	kgf*cm	ft.*lbf
Intake air surge tank assembly x Intake manifold	18	184	13
Intake air surge tank assembly x Intake manifold	18	184	13
No. 1 surge tank stay x Intake air surge tank assembly	21	214	15
Camshaft timing oil control valve assembly x Cylinder head cover	10	102	7
Camshaft timing oil control valve assembly x Cylinder head cover	10	102	7
VVT sensor x Cylinder head cover	10	102	7
Crankshaft position sensor x Cylinder block	10	102	7
Engine coolant temperature sensor x Water pipe	19.6	200	14
Throttle body x Intake air surge tank assembly	10	102	7
Intake manifold x Cylinder head sub-assembly	21	214	15
Knock sensor x Cylinder block sub-assembly	20	204	15
Water outlet x Cylinder head sub-assembly	15	153	11
ECM x Body	6.5	66	57 in.*lbf
Accelerator pedal rod x Body	5.4	55	48 in.*lbf

TORQUE SPECIFICATIONS

Part Tightened		N*m	kgf*cm	ft.*lbf
Front suspension member reinforcement RH x Front crossmember		95	969	70
Front suspension member reinforcement RH x Front suspension crossmember		95	969	70
Radiator reservoir tank x Bract		5.0	51	44 in.*lbf
Engine coolant temperature sensor x Water outlet		20	204	14
Engine oil pressure sensor x Oil pan		21	214	15
No. 1 front engine mounting bracket LH x Timing chain cover		54	551	40
No. 2 idler pulley x Timing chain cover		43	438	32
No. 2 timing gear cover x Timing chain cover		6.0	61	53 in.*lbf
V-ribbed belt tensioner x Timing chain cover		43	438	32
V-ribbed belt tensioner x Cylinder block		43	438	32
Drive shaft bearing bracket x Cylinder block		64	653	47
Exhaust manifold LH x Cylinder head		21	214	15
No. 2 exhaust heat insulator x Exhaust manifold		8.5	87	75 in.*lbf
No. 2 manifold stay x Exhaust manifold		34	347	25
No. 2 manifold stay x Cylinder block		34	347	25
No. 1 oil dipstick guide x Cylinder block		21	214	15
No. 2 oil dipstick guide x Cylinder head		21	214	15
Exhaust manifold RH x Cylinder head		21	214	15
Intake manifold x Cylinder head		21	214	15
No. 2 engine mounting stay RH x Intake manifold		21	214	15
No. 2 engine mounting stay RH x Timing chain cover		21	214	15
Ignition coil x Cylinder head cover		10	102	7
Intake air surge tank x Intake manifold	5 mm hexagon wrench	18	184	13
	for Bolt	21	214	15
	for Nut	16	163	12
Vacuum hose clamp x Intake air surge tank		5.4	55	48 in.*lbf
Drive plate and ring gear x Crankshaft		178	1,815	132
Engine mounting bracket RR x Engine mounting insulator RR		95	969	70
Engine mounting bracket FR x Engine mounting insulator FR		145	1,479	107
Engine mounting bracket LH x Engine mounting insulator LH		56	571	41
Engine mounting insulator RH x Front No. 1 engine mounting bracket	for Bolt and nut A	95	969	70
	for Nut B	52	530	38
Front crossmember x Body	for Bolt A	96	979	71
Front suspension member x Body	for Bolt B	145	1,478	107
Front suspension member brace rear x Body	for Bolt C	145	1,478	107
	for Bolt D	93	948	69
Air cleaner case x Engine mounting insulator LH		5.0	51	44 in.*lbf
Battery bracket reinforcement x Body		19	194	14
Front battery bracket x Body		19	194	14
Front battery bracket x Battery bracket reinforcement		19	194	14
Battery clamp x Body		5.0	51	44 in.*lbf

Part Tightened		N*m	kgf*cm	ft.*lbf
Connecting rod x Connecting cap	1st	25	255	18
	2nd	Turn 90°	Turn 90°	Turn 90°
Cylinder block x Crankshaft bearing cap	1st	61	622	45
	2nd	Turn 90°	Turn 90°	Turn 90°
	Main bearing cap bolt	52	530	38
Camshaft timing gear x Intake camshaft		100	1,020	74
Camshaft timing exhaust gear x Exhaust camshaft		100	1,020	74
Stud bolt x Cylinder block		10	102	7
Stud bolt x Cylinder head	for Stud bolt A and B	10	102	7
	for Stud bolt C	4.0	41	35 in.*lbf
No. 1 oil nozzle x Cylinder block		9.0	92	80
Cylinder block water drain cock x Cylinder block	1st	25	255	18
	Adjusting position	45 or less	459 or less	33 or less
Water drain cock plug x Water drain cock		13	130	9
Crankshaft position sensor x Cylinder block		10	102	7
No. 2 straight screw plug x Cylinder head		80	816	59
No. 1 straight screw plug x Cylinder head		44	449	32
Water inlet pipe x Cylinder block		10	102	7
Cylinder head (for Bank 1) x Cylinder block	1st	36	367	27
	2nd	Turn 90°	Turn 90°	Turn 90°
	3rd	Turn 90°	Turn 90°	Turn 90°
Cylinder head (for Bank2) x Cylinder block	1st	36	367	27
	2nd	Turn 90°	Turn 90°	Turn 90°
	3rd	Turn 90°	Turn 90°	Turn 90°
	Except bolt	30	306	22
Camshaft bearing cap x Camshaft housing (for Bank 1)	1st	10	102	7
Camshaft housing x Cylinder head (for Bank 1)		28	286	21
Camshaft bearing cap x Camshaft housing (for Bank 1)	2nd	16	163	12
Camshaft bearing cap x Camshaft housing (for Bank 2)	1st	10	102	7
Camshaft housing x Cylinder head (for Bank 2)		28	286	21
Camshaft bearing cap x Camshaft housing (for Bank 2)	2nd	16	163	12
No. 2 chain tensioner x Camshaft housing (for Bank 1)		21	214	15
No. 3 chain tensioner x Camshaft housing (for Bank 2)		21	214	15
No. 1 chain vibration damper x Cylinder block		23	235	17
Idle sprocket x Cylinder block		60	612	44
No. 1 chain tensioner x Cylinder block		10	102	7
Engine rear oil seal retainer x Cylinder block		10	102	7
Crankshaft pulley x Crankshaft		250	2,549	184
Oil pan baffle plate x Cylinder block		10	102	7
Front No. 1 engine mounting bracket x Timing chain cover		54	551	40

Part Tightened		N*m	kgf*cm	ft.*lbf
Cylinder head cover x Cylinder head (for Bank 1)	for Bolt A	21	214	15
	for Except bolt A	10	102	7
Oil pipe bracket x Cylinder head (for Bank 1)		10	102	7
Oil pipe union bolt x Cylinder head cover (for Bank 1)		65	663	48
Oil pipe union bolt x Cylinder head (for Bank 1)		65	663	48
Cylinder head cover x Cylinder head	for Bolt A	21	214	15
	for Except bolt A	10	102	7
No. 1 oil pipe union bolt x Cylinder head cover (for Bank 2)		65	663	48
No. 1 oil pipe union bolt x Cylinder head (for Bank 2)		65	663	48
Water outlet x Cylinder head		10	102	7
Camshaft timing oil control valve x Cylinder head cover		10	102	7
VVT sensor x Cylinder head cover		10	102	7
Spark plug x Cylinder head		18	184	13

2GR-FE ENGINE MECHANICAL

SERVICE DATA

Engine	Ignition timing	When using the intelligent tester		8 to 12° BTDC @ idle
		When not using the intelligent tester	Connect SST	8 to 12° BTDC @ idle
			Disconnect SST	5 to 15° BTDC @ idle
	Idle speed	When using the intelligent tester		600 to 700 rpm
		When not using the intelligent tester		600 to 700 rpm
	Compression	Compression pressure		1,400 kPa (14 kgf/cm^2, 199 psi) or more
		Minimum pressure		980 kPa (10.0 kgf/cm^2, 142 psi)
		Difference between each cylinder		100 kPa (1.0 kgf/cm^2, 15 psi) or less
Intake manifold	Warpage	Maximum	Intake manifold side	0.8 mm (0.031 in.)
			Cylinder head side	0.2 mm (0.008 in.)
Exhaust manifold	Warpage	Maximum		0.70 mm (0.0028 in.)
Connecting rod	Thrust clearance	Standard		0.15 to 0.40 mm (0.0059 to 0.0157 in.)
		Maximum		0.50 mm (0.0197 in.)
	Oil clearance	Standard		0.045 to 0.067 mm (0.0018 to 0.0026 in.)
		Maximum		0.070 mm (0.0028 in.)
	Big end inside diameter	Mark 1		56.000 to 56.006 mm (2.2047 to 2.2050 in.)
		Mark 2		56.007 to 56.012 mm (2.2050 to 2.2052 in.)
		Mark 3		56.013 to 56.018 mm (2.2052 to 2.2054 in.)
		Mark 4		56.019 to 56.024 mm (2.2055 to 2.2057 in.)
	Standard sized bearing center wall thickness	Mark 1		1.481 to 1.484 mm (0.0583 to 0.0584 in.)
		Mark 2		1.484 to 1.497 mm (0.0584 to 0.0585 in.)
		Mark 3		1.487 to 1.490 mm (0.0585 to 0.0587 in.)
		Mark 4		1.490 to 1.493 mm (0.0587 to 0.0588 in.)
	Bend	Maximum		0.05 mm (0.0020 in.) per 100 mm (3.94 in.)
	Twist	Maximum		0.15 mm (0.0059 in.) per 100 mm (3.94 in.)

SS

Crankshaft	Pin diameter	Standard		52.992 to 53.000 mm (2.0863 to 2.0866 in.)
	Thrust clearance	Standard		0.04 to 0.24 mm (0.0016 to 0.0094 in.)
		Maximum		0.30 mm (0.0118 in.)
	Thrust washer thickness	Standard		2.43 to 2.48 mm (0.0957 to 0.0976 in.)
	Main journal diameter	Standard	Mark 00	60.999 to 61.000 mm (2.4015 to 2.4016 in.)
			Mark 01	60.998 to 60.999 mm (2.4015 to 2.4015 in.)
			Mark 02	60.997 to 60.998 mm (2.4015 to 2.4015 in.)
			Mark 03	60.996 to 60.997 mm (2.4014 to 2.4015 in.)
			Mark 04	60.995 to 60.996 mm (2.4014 to 2.4014 in.)
			Mark 05	60.994 to 60.995 mm (2.4013 to 2.4014 in.)
			Mark 06	60.93 to 60.994 mm (2.4013 to 2.4013 in.)
			Mark 07	60.992 to 60.993 mm (2.4013 to 2.4013 in.)
			Mark 08	60.991 to 60.992 mm (2.4012 to 2.4013 in.)
			Mark 09	60.990 to 60.991 mm (2.4012 to 2.4012 in.)
			Mark 10	60.989 to 60.990 mm (2.4011 to 2.4012 in.)
			Mark 11	60.988 to 60.989 mm (2.4.11 to 2.4011 in.)
Crankshaft	Upper bearing center wall thickness	Standard No. 1 and No. 4 journal	Mark 1	2.500 to 2.503 mm (0.0984 to 0.0985 in.)
			Mark 2	2.503 to 2.506 mm (0.0985 to 0.0987 in.)
			Mark 3	2.506 to 2.509 mm (0.0987 to 0.0988 in.)
			Mark 4	2.509 to 2.512 mm (0.0988 to 0.0989 in.)
			Mark 5	2.512 to 2.515 mm (0.0989 to 0.0990 in.)
		Standard No. 2 and No. 3 journal	Mark 1	2.478 to 2.481 mm (0.0976 to 0.0977 in.)
			Mark 2	2.481 to 2.484 mm (0.0977 to 0.0978 in.)
			Mark 3	2.484 to 2.487 mm (0.0978 to 0.0979 in.)
			Mark 4	2.487to 2.490 mm (0.0979 to 0.0980 in.)
			Mark 5	2.490 to 2.493 mm (0.0980 to 0.0981 in.)

Crankshaft	Lower bearing center wall thickness	Standard No. 1 and No. 4 journal	Mark 1	2.478 to 2.481 mm (0.0976 to 0.0977 in.)
			Mark 2	2.481 to 2.484 mm (0.0977 to 0.0780 in.)
			Mark 3	2.484 to 2.487 mm (0.0978 to 0.0979 in.)
			Mark 4	2.487 to 2.490 mm (0.0979 to 0.0980 in.)
			Mark 5	2.490 to 2.493 mm (0.0980 to 0.0981 in.)
		Standard No. 2 and No. 3 journal	Mark 1	2.500 to 2.503 mm (0.0984 to 0.0985 in.)
			Mark 2	2.503 to 2.506 mm (0.0985 to 0.0987 in.)
			Mark 3	2.506 to 2.509 mm (0.0987 to 0.0988 in.)
			Mark 4	2.509 to 2.512 mm (0.0988 to 0.0989 in.)
			Mark 5	2.512 to 2.515 mm (0.0989 to 0.0990 in.)
	Circle runout	Maximum		0.06 mm (0.0024 in.)
	Journal diameter	Standard		60.988 to 61.00 mm (2.4011 to 2.4016 in.)
	Taper and out-of-round	Maximum		0.02 mm (0.0008 in.)
	Crank pin diameter	Standard		52.992 to 53.000 mm (2.0863 to 2.0866 in.)
	Taper and out-of-round	Maximum		Taper and out-of-round0.02 mm (0.0008 in.)
Camshaft	Circle runout	Maximum		0.04 mm (0.0016 in.)
	Cam lobe height	Standard	Intake	44.316 to 44.416 mm (1.7447 to 1.7487 in.)
			Exhaust	44.262 to 44.362 mm (1.7426 to 1.7465 in.)
		Maximum	Intake	44.166 mm (1.7388 in.)
			Exhaust	44.112 mm (1.7367 in.)
	Journal diameter	Standard	No. 1 journal	35.946 to 35.960 mm (1.4152 to 1.4157 in.)
			Other journal	25.959 to 25.975 mm (1.0220 to 1.0226 in.)
	Thrust clearance (bank 1)	Standard		0.08 to 0.13 mm (0.0031 to 0.0051 in.)
		Maximum		0.15 mm (0.006 in.)
	Thrust clearance (bank 2)	Standard		0.08 to 0.13 mm (0.0031 to 0.0051 in.)
		Maximum		0.15 mm (0.006 in.)
	Oil clearance	Standard	No. 1 journal	0.040 to 0.079 mm (0.0016 to 0.0031 in.)
			Other journal	0.025 to 0.062 mm (0.0010 to 0.0024 in.)
		Maximum	No. 1 Journal	0.10 mm (0.0039 in.)
			Other journal	0.09 mm (0.0035 in.)
Timing chain	Chain elongation	Maximum		136.9 mm (5.389 in.)
No. 2 timing chain	Chain elongation	Maximum		137.6 mm (5.417 in.)
Crankshaft timing gear or sprocket	Sprocket diameter (w/ chain)	Minimum		61.4 mm (2.417 in.)

SS

Idle sprocket	Sprocket diameter (w/ chain)	Minimum		61.4 mm (2.417 in.)
Idle gear shaft	Idle gear shaft diameter	Standard		22.987 to 23.000 mm (0.9050 to 0.9055 in.)
	Idle gear inside diameter	Standard		23.02 to 23.03 mm (0.9062 to 0.9067 in.)
	Oil clearance	Standard		0.02 to 0.043 mm (0.0001 to 0.0017 in.)
		Maximum		0.043 mm (0.0017 in.)
No. 2 chain tensioner	Depth	Maximum		0.9 mm (0.035 in.)
No. 3 chain tensioner	Depth	Maximum		0.9 mm (0.035 in.)
Chain tensioner slipper	Depth	Maximum		1.0 mm (0.039 in.)
No. 1 chain vibration damper	Depth	Maximum		1.0 mm (0.039 in.)
No. 2 chain vibration damper	Depth	Maximum		1.0 mm (0.039 in.)
Cylinder head	Warpage	Standard	Cylinder head lower side	0.05 mm (0.0020 in.)
			Intake side	0.08 mm (0.0031 in.)
			Exhaust side	0.08 mm (0.0031 in.)
		Maximum		0.10 mm (0.0039 in.)
	Protrusion height	Standard		18.0 to 19.0 mm (0.71 to 0.75 in.)
Intake valve guide bush	Cylinder bore diameter	Standard		10.285 to 10.306 mm (0.4049 to0.4057 in.)
	Bush bore diameter	Standard	Use STD	10.335 to 10.356 mm (0.4069 to 0.4077 in.)
			Use O/S	0.05 10.285 to 10.306 mm (0.4049 to 0.4057 in.)
	Protrusion height	Standard		9.1 to 9.9 mm (0.3582 to 0.3900 in.)
Exhaust valve guide bush	Cylinder bore diameter	Standard		10.285 to 10.306 mm (0.4049 to 0.4057 in.)
	Bush bore diameter	Standard	Use STD	10.335 to 10.356 mm (0.4069 to 0.4077 in.)
			Use O/S 0.05	10.285 to 10.306 mm (0.4049 to 0.4057 in.)
	Protrusion height	Standard		9.30 to 9.70 mm (0.3661 to 0.3819 in.)
Intake valve	Valve stem diameter	Standard		5.470 to 5.485 mm (0.2154 to 0.2159 in.)
	Margin thickness	Standard		1.0 mm (0.0394 in.)
		Minimum		0.50 mm (0.0197 in.)
	Overall length	Standard		105.85 mm (4.1673 in.)
		Minimum		105.35 mm (4.1476 in.)
Exhaust valve	Valve stem diameter	Standard		5.465 to 5.480 mm (0.2151 to 0.2157 in.)
	Margin thickness	Standard		1.0 mm (0.0394 in.)
		Minimum		0.50 mm (0.0197 in.)
	Overall length	Standard		110.40 mm (4.3464 in.)
		Minimum		109.90 mm (4.3268 in.)
Inner compression spring	Free length	Standard		45.46 mm (1.7898 in.)
	Deviation	Maximum		1.0 mm (0.039 in.)
	Angle (reference)	Maximum		2°

Valve guide bush	Bush inside diameter	Standard		5.51 to 5.53 mm (0.2169 to 0.2177 in.)
	Clearance	Standard	Intake	0.025 to 0.060 m (0.0010 to 0.0024 in.)
			Exhaust	0.030 to 0.065 mm (0.0012 to 0.0026 in.)
		Maximum	Intake	0.08 mm (0.0031 in.)
			Exhaust	0.10 mm (0.0039 in.)
Cylinder block	Warpage	Maximum		0.07 mm (0.0028 in.)
	Bore diameter	Standard		94.000 to 94.012 mm (3.7008 to 3.7013 in.)
		Maximum		94.200 mm (3.7087 in.)

SS

Piston	Diameter	Standard		93.960 to 93.980 mm (3.6992 to 3.6999 in.)
		Maximum		93.830 mm (3.6941 in.)
		Distance		9.8 mm (0.3858 in.)
	Oil clearance	Standard		0.020 to 0.052 mm (0.0007 to 0.0020 in.)
		Maximum		0.06 mm (0.0024 in.)
	Ring groove clearance	Standard	No. 1	0.020 to 0.070 mm (0.0008 to 0.0028 in.)
			No. 2	0.020 to 0.060 mm (0.0008 to 0.0024 in.)
			Oil	0.070 to 0.150 mm (0.0028 to 0.0059 in.)
	Ring end gap	Standard	No. 1	0.25 to 0.35 mm (0.0098 to 0.0138 in.)
			No. 2	0.50 to 0.60 mm (0.0197 to 0.0236 in.)
			Oil	0.10 to 0.40 mm (0.0039 to 0.0157 in.)
		Maximum	No. 1	0.50 mm (0.0197 in.)
			No. 2	0.85 mm (0.0335 in.)
			Oil	0.60 mm (0.0236 in.)
	Piston pin hole inside diameter	Standard	Mark A	22.001 to 22.004 mm (0.8662 to 0.8663 in.)
			Mark B	22.005 to 22.007 mm (0.8663 to 0.8664 in.)
			Mark C	22.008 to 22.010 mm (0.8665 to 0.8665 in.)
	piston pin diameter	Standard	Mark A	21.997 to 22.000 mm (0.8660 to 0.8661 in.)
			Mark B	22.001 to 22.003 mm (0.8662 to 0.8663 in.)
			Mark C	22.004 to 22.006 mm (0.8663 to 0.8664 in.)
	Oil clearance	Standard		0.001 to 0.007 mm (0.00004 to 0.0003 in.)
		Maximum		0.015 mm (0.0006 in.)
	Bush inside diameter	Standard	Mark A	22.005 to 22.008 mm (0.8663 to 0.8665 in.)
			Mark B	22.009 to 22.011 mm (0.8665 to 0.8666 in.)
			Mark C	22.012 to 22.014 mm (0.8666 to 0.8667 in.)
	Oil clearance	Standard		0.005 to 0.011 mm (0.0002 to 0.0004 in.)
		Maximum		0.03 mm (0.0012 in.)
Crankshaft bearing cap set bolt	Diameter	Standard		10.8 to 11.0 mm (0.4252 to 0.4331 in.)
		Minimum		10.70 mm (0.4213 in.)
Cylinder head set bolt	Outside diameter	Minimum		10.70 mm (0.4213 in.)
Connecting rod bolt	Diameter	Standard		7.2 to 7.3 mm (0.283 to 0.287 in.)
		Minimum		7.0 mm (0.276 in.)

2GR-FE EXHAUST

SERVICE DATA

Compression spring (Center exhaust pipe assembly x Tailpipe assembly)	Minimum length 38.5 mm (1.516 in.)

TORQUE SPECIFICATIONS

Part Tightened	N*m	kgf*cm	ft.*lbf
Exhaust manifold LH x Front exhaust pipe assembly	62	632	46
No. 1 front exhaust pipe support bracket x No. 1 exhaust pipe support bracket stay	21	214	16
Front exhaust pipe assembly x Center exhaust pipe assembly	43	440	32
Exhaust manifold RH x Center exhaust pipe assembly	62	632	46
Center exhaust pipe assembly x Tailpipe assembly	43	440	32

2GR-FE FUEL

SERVICE DATA

Fuel pressure			304 to 343 kPa (3.1 to 3.5 kgf/cm^2, 44 to 50 psi)
Fuel injector	Resistance	at 20°C (68°F)	11.6 to 12.4 Ω
	Injection volume		84 to 100 cm^3 (5.1 to 6.0 cu in.) per 15 seconds
	Difference between each cylinder		16 cm^3 (1.0 cu in.) or less
	Fuel leakage		1 drop or less per 12 minutes
Fuel pump	Resistance	at 20°C (68°F)	0.2 to 3.0 Ω
Fuel pump resistor	Resistance	at 20°C (68°F)	0.53 to 0.57 Ω

TORQUE SPECIFICATIONS

Part Tightened		N*m	kgf*cm	ft.*lbf
Fuel delivery pipe sub-assembly x Intake manifold		21	214	15
Intake air surge tank x Intake manifold	Bolt	18	184	13
	Nut	16	163	12
Fuel tank bent tube set plate x Fuel tank assembly		4.0	41	35 in.*lbf
Fuel pump resistor x Body		7.0	71.4	62 in.*lbf
Fuel filler pipe x Body		23.5	240	17
Fuel sender gauge assembly x Fuel tank		1.5	15	13 in.*lbf
Fuel tank band x Body		40	408	30
Parking brake cable assembly No. 2 x Body	Bolt	6.0	61	53 in.*lbf
	Nut	8.5	87	75 in.*lbf

2GR-FE IGNITION

SERVICE DATA

Spark plug	Standard electrode gap	1.0 to 1.1 mm (0.039 to 0.043 in.) for new spark plug
	Maximum electrode gap	1.4 mm (0.055 in.) for used spark plug

TORQUE SPECIFICATIONS

Part Tightened	N*m	kgf*cm	ft.*lbf
Spark plug x Cylinder head sub-assembly	25	254	18
Ignition coil assembly x Cylinder head cover	10	102	7

2GR-FE INTAKE

SERVICE DATA

Vacuum switching valve	Resistance	1 - 2	37 to 44 Ω at 20°C (68°F)
		1 - Body ground	10 kΩ or higher
		2 - Body ground	

2GR-FE LUBRICATION

SERVICE DATA

Oil pressure		Idle	80 kPa (0.8 kgf/cm^2, 11.6 psi) or more
		6,000 rpm	380 kPa (3.9 kgf/cm^2, 55.5 psi) or more
Oil pump	Tip clearance	Standard	0.060 to 0.160 mm (0.0024 to 0.0063 in.)
		Maximum	0.16 mm (0.0063 in.)
	Body clearance	Standard	0.250 to 0.325 mm (0.0098 to 0.0128 in.)
		Maximum	0.325 mm (0.0128 in.)
	Side clearance	Standard	0.030 to 0.090 mm (0.0012 to 0.0035 in.)
		Maximum	0.090 mm (0.0035 in.)

TORQUE SPECIFICATIONS

Part Tightened		N*m	kgf*cm	ft.*lbf
Oil pressure switch x Oil pan		15	153	11
Oil filter cap x Oil pan		25	255	18
Oil filter drain plug x Oil filter cap		12.5	127	9
Oil pan drain plug x No. 2 oil pan		40	408	30
Oil pump cover x Timing chain cover		9.0	92	80 in.*lbf
Plug x Oil pump cover		49	500	36
Timing chain cover x Cylinder block	Area 1, 2 bolt	21	214	15
	Area 3 bolt, nut	21	214	15
	Area 4 bolt A	43	438	32
	Area 4 except bolt A	21	214	15
Oil pan x Cylinder block	Bolt A	10	102	7
	Except bolt A, nut	21	214	15
Oil strainer x Cylinder block		10	102	7
No. 2 oil pan x Oil pan		10	102	7
Oil dipstick guide x Cylinder block		21	214	15
No. 2 oil dipstick guide x Cylinder head		21	214	15

2GR-FE STARTING

SERVICE DATA

Starter assembly	Standard current		90 A or less at 11.5 V
Starter relay	Standard resistance	3 - 5	10 kΩ or higher
		3 - 5	Below 1 Ω (when battery voltage is applied to terminals 1 and 2)
Ignition switch	Standard resistance	-	10 kΩ or higher at LOCK
		2 (AM1) - 3 (ACC)	Below 1 Ω at ACC
		2 (AM1) - 3 (ACC)	Below 1 Ω at ON
		3 (ACC) - 4 (IG1)	Below 1 Ω at ON
		6 (IG2) - 7 (AM2)	Below 1 Ω at ON
		1 (ST1) - 2 (AM1)	Below 1 Ω at START
		1 (ST1) - 4 (IG1)	Below 1 Ω at START
		6 (IG2) - 7 (AM2)	Below 1 Ω at START
		6 (IG2) - 8 (ST2)	Below 1 Ω at START
Starter magnetic switch assembly	Standard resistance	50 - C	1 Ω or lower
		50 - Body	2 Ω or lower
Starter armature assembly	Standard resistance	Segment	1 Ω or lower
		Segment - Coil core	10 kΩ or higher
Starter armature assembly	Commutator depth	Standard	3.1 mm (0.122 in.)
		Maximum	3.8 mm (0.150 in.)
Starter commutator end frame	Brush length	Standard length	9.0 mm (0.354 in.)
		Minimum length	4.0 mm (0.158 in.)
	Standard resistance	Positive (+) - Negative (-)	10 kΩ or higher
Snap ring	Maximum length		5.0 mm (0.197 in.)

TORQUE SPECIFICATIONS

Part Tightened	N*m	kgf*cm	ft.*lbf
Lead wire x Terminal C	10	102	7
Starter assembly x Cylinder block sub-assembly	37	377	27
Starter wire x Starter assembly	9.8	100	88 in.*lbf
Starter commutator end frame x Starter drive housing assembly	6.0	61	53 in.*lbf
Starter magnetic switch assembly x Starter drive housing assembly	7.5	76	66 in.*lbf

AIR CONDITIONING

SERVICE DATA

Refrigerant charge volume	Standard: 430 +- 30 g (15.2 +- 1.1 oz.)

TORQUE SPECIFICATIONS

REFRIGERANT LINE

Part Tightened	N*m	kgf*cm	ft.*lbf
Discharge hose sub-assembly x Cooler compressor assembly	9.8	100	7
Suction hose sub-assembly x Cooler compressor assembly	9.8	100	7
Discharge hose sub-assembly x Cooler condenser assembly	9.8	100	7
Suction hose sub-assembly x Cooler condenser assembly	9.8	100	7
Suction tube sub-assembly x Suction hose sub-assembly	9.8	100	7
Plate x Body	9.8	100	7

AIR CONDITIONING UNIT

Part Tightened	N*m	kgf*cm	ft.*lbf
Instrument panel reinforcement assembly x Body	20	204	15
No. 2 instrument panel brace sub-assembly x Instrument panel reinforcement	9.8	100	7
No. 2 instrument panel brace sub-assembly x Body	9.8	100	7
Air conditioning unit assembly x Instrument panel reinforcement	9.8	100	7
Air conditioning unit assembly x Body	9.8	100	7
Cooler expansion valve x No. 1cooler evaporator sub-assembly	3.5	35	30 in.*lbf

COMPRESSOR AND PULLEY

Part Tightened	N*m	kgf*cm	ft.*lbf
No. 1 cooler refrigerant suction hose x Cooler compressor assembly	9.8	100	7
No. 1 cooler refrigerant discharge hose x Cooler compressor assembly	9.8	100	7
Cooler compressor assembly x Engine	24.5	250	18

CONDENSER

Part Tightened	N*m	kgf*cm	ft.*lbf
No. 1 cooler refrigerant discharge hose x Cooler condenser assembly	9.8	100	7
Cooler refrigerant liquid pipe x Cooler condenser assembly	9.8	100	7
Cap x Cooler condenser assembly	5.4	55	48 in.*lbf
No. 2 fan shroud x Cooler condenser	10.5	107	8
Upper radiator support bracket x Upper radiator support	45	459	33

AXLE

SERVICE DATA

Axle

Front axle hub backlash	Maximum: 0.05 mm (0.0020 in.)
Front axle hub deviation	Maximum: 0.05 mm (0.0020 in.)
Rear axle hub backlash	Maximum: 0.05 mm (0.0020 in.)
Rear axle hub deviation	Maximum for 2WD: 0.08 mm (0.0031 in.) Maximum for 4WD: 0.06 mm (0.0024 in.)

TORQUE SPECIFICATIONS

Axle

Part Tightened		N*m	kgf*cm	ft.*lbf
Front wheel		103	1,050	76
Rear wheel		103	1,050	76
Steering knuckle x Lower ball joint		133	1,356	98
Steering knuckle x Suspension Lower No. 1 arm		92	938	68
Steering knuckle x Front axle hub		96	976	71
Steering knuckle x Front disc brake cylinder		98	999	72
Steering knuckle x Front speed sensor bolt		8.5	87	75 in.*lbf
Front drive shaft x Front axle hub nut	ϕ26	216	2,203	159
	ϕ30	292	2,978	215
Front shock absorber x Steering knuckle		240	2,447	177
Rear drive shaft x Rear axle shaft nut	4WD	216	2,203	159
Rear shock absorber x Rear Axle carrier		80	816	59
Rear axle carrier x Rear disc brake cylinder		88	897	65
Rear axle carrier x Rear axle hub and bearing		90	918	66
Rear suspension member x Rear suspension No. 1 arm		90	918	66
Rear axle carrier x Rear suspension No. 1 arm		100	1,020	74
Rear axle carrier x Skid control sensor wire: for 2WD	Bolt	8.5	87	75
	Nut	5.0	51	44
Rear axle carrier x Rear speed sensor: for 4WD		8.5	87	75

TORQUE SPECIFICATIONS

Brake Pedal

Part tightened	N*m	kgf*cm	ft.*lbf
Brake pedal support x Body	12.7	130	9
Brake pedal support x Instrument panel reinforcement	25	255	18
Stop light switch	1.5 or less	15 or less	13 in.*lbf or less

Brake Master Cylinder

Part tightened	N*m	kgf*cm	ft.*lbf
Brake master cylinder x Brake booster	12.5	127	9
Brake master cylinder x Brake tube (without SST)	15.2	155	11
Brake master cylinder x Brake tube (with SST)	14	144	10

Brake Booster

Part tightened	N*m	kgf*cm	ft.*lbf
Brake booster x Brake pedal support	12.7	130	9
Push rod clevis lock nut	26	265	19

Front Brake

Part tightened	N*m	kgf*cm	ft.*lbf
Bleeder plug	8.3	85	73 in.*lbf
Cylinder mounting x Knuckle	98	999	72
Cylinder x Cylinder mounting	34.3	350	25
Flexible hose x Cylinder	29.4	300	22

Front Brake Flexible Hose

Part tightened	N*m	kgf*cm	ft.*lbf
Flexible hose x Brake cylinder	29.4	300	22
Flexible hose clamp bolt	18.5	189	14
Flexible hose x Brake tube (without SST)	15.2	155	11
Flexible hose x Brake tube (with SST)	14	144	10

Rear Brake

Part tightened	N*m	kgf*cm	ft.*lbf
Bleeder plug	8.3	85	73 in.*lbf
Cylinder mounting x Carrier	88	897	65
Cylinder x Cylinder mounting	26.5	270	20
Flexible hose x Cylinder	30.4	310	22

Rear Brake Flexible Hose

Part tightened	N*m	kgf*cm	ft.*lbf
Flexible hose x Brake cylinder	30.4	310	22
Flexible hose x Brake tube (without SST)	15.2	155	11
Flexible hose x Brake tube (with SST)	14	144	10

BRAKE CONTROL

SERVICE DATA

Brake pedal load sensing switch BC-216	Resistance 1 - 2	Brake pedal depressed	Approx. 1 kΩ
		Brake pedal released	Approx. 213 Ω
Downhill assist control switch BC-218	Resistance 1 - 4	Switch pushed in	Bellow 25 Ω
		Switch released	10 kΩ or higher
Traction control switch (Auto LSD switch) BC-220	Resistance 3 - 6	Switch pushed in	Bellow 25 Ω
		Switch released	10 kΩ or higher

TORQUE SPECIFICATIONS

ABS and Traction Actuator

Part tightened	N*m	kgf*cm	ft.*lbf
ABS and traction actuator x Brake actuator bracket	5.4	55	48 in.*lbf
ABS and traction actuator with bracket x Body	19	194	14
ABS and traction actuator x Brake tube (without SST)	15.2	155	11
ABS and traction actuator x Brake tube (with SST)	14	144	10

Front Speed Sensor

Part tightened	N*m	kgf*cm	ft.*lbf
Front speed sensor body x Knuckle	8.5	87	75 in.*lbf
Front speed sensor clamp/ Flexible hose clamp x Flexible hose bracket	18.5	189	14
Front speed sensor clamp x Side member	8.5	87	75 in.*lbf

Skid Control Sensor (for 2WD)

Part tightened	N*m	kgf*cm	ft.*lbf
Skid control sensor clamp bolt	8.5	87	75 in.*lbf
Skid control sensor clamp nut	5.0	51	44 in.*lbf

Rear Speed Sensor (for 4WD)

Part tightened	N*m	kgf*cm	ft.*lbf
Rear speed sensor body x Carrier	8.5	87	75 in.*lbf
Rear speed sensor clamp bolt	8.5	87	75 in.*lbf
Rear speed sensor clamp nut	5.0	51	44 in.*lbf

Yaw Rate Sensor

Part tightened	N*m	kgf*cm	ft.*lbf
Yaw rate sensor assembly x Body	14.5	148	11
Yaw rate sensor bracket x Body	14.5	148	11

BRAKE

SERVICE DATA

(2005/11-2006/01)

Stop Light Switch

Stop light switch BR-13	Resistance 1 - 2	Switch pin released	Below 1 Ω
	Resistance 1 - 2	Switch pin pushed in	10 kΩ or higher

Brake Pedal Load Sensing Switch

Brake pedal load sensing switch BC-216	Resistance 1 - 2	Brake pedal depressed	Approx. 1 kΩ
	Resistance 1 - 2	Brake pedal released	Approx. 213 Ω

Brake Pedal

Brake pedal height from dash panel BR-13	184.2 to 194.2 mm (7.252 to 7.646 in.)
Stop light switch clearance BR-13	1.5 to 2.5 mm (0.059 to 0.098 in.)
Brake pedal free play BR-14	1.0 to 6.0 mm (0.039 to 0.236 in.)
Brake pedal reserve distance from dash panel BR-14	See the table below.

Brake Pedal Reserve Distance from Dash Panel

Engine	Seat Type	Specified Condition
2AZ-FE	w/o 3rd seat	More than 95 mm (3.74 in.)
	w/ 3rd seat	More than 120 mm (4.72 in.)

Brake Fluid Level Warning Switch

Brake fluid level warning switch BR-20	Resistance 1 - 2	Float up (Switch OFF)	10 kΩ or higher
	Resistance 1 - 2	Float down (Switch ON)	Below 1 Ω

Brake Booster

Booster push rod and pin head (SST) clearance BR-24	-0.21 to 0 mm (-0.0083 to 0 in.)

Front Brake

Pad lining thickness BR-42		Standard	12.0 mm (0.472 in.)
		Minimum	1.0 mm (0.039 in.)
Disc thickness BR-43	15-inch disc	Standard	25.0 mm (0.984 in.)
		Minimum	22.0 mm (0.866 in.)
	16-inch disc	Standard	28.0 mm (1.102 in.)
		Minimum	25.0 mm (0.984 in.)
Disc runout BR-43		Maximum	0.05 mm (0.0020 in.)

Rear Brake

Pad lining thickness BR-57	Standard	10.5 mm (0.413 in.)
	Minimum	1.0 mm (0.039 in.)
Disc thickness BR-58	Standard	12.0 mm (0.472 in.)
	Minimum	10.5 mm (0.413 in.)
Disc runout BR-58	Maximum	0.15 mm (0.0059 in.)

SERVICE DATA

(2006/01-)

Stop Light Switch

Stop light switch BR-13	Resistance 1 - 2	Switch pin released	Below 1 Ω
	Resistance 1 - 2	Switch pin pushed in	10 kΩ or higher

Brake Pedal Load Sensing Switch

Brake pedal load sensing switch BC-216	Resistance 1 - 2	Brake pedal depressed	Approx. 1 kΩ
	Resistance 1 - 2	Brake pedal released	Approx. 213 Ω

Brake Pedal

Brake pedal height from dash panel BR-15	184.2 to 194.2 mm (7.252 to 7.646 in.)
Stop light switch clearance BR-15	1.5 to 2.5 mm (0.059 to 0.098 in.)
Brake pedal free play BR-15	1.0 to 6.0 mm (0.039 to 0.236 in.)
Brake pedal reserve distance from dash panel BR-16	See the table below.

Brake Pedal Reserve Distance from Dash Panel

Engine	Specified Condition
2AZ-FE (w/o 3rd seat)	More than 95 mm (3.74 in.)
2AZ-FE (w/ 3rd seat)	More than 120 mm (4.72 in.)
2GR-FE	More than 120 mm (4.72 in.)

Brake Fluid Level Warning Switch

Brake fluid level warning switch BR-20	Resistance 1 - 2	Float up (Switch OFF)	10 kΩ or higher
	Resistance 1 - 2	Float down (Switch ON)	Below 1 Ω

Brake Booster

Booster push rod and pin head (SST) clearance BR-24	-0.21 to 0 mm (-0.0083 to 0 in.)

Front Brake

Pad lining thickness BR-42		Standard	12.0 mm (0.472 in.)
		Minimum	1.0 mm (0.039 in.)
Disc thickness BR-43	15-inch disc	Standard	25.0 mm (0.984 in.)
		Minimum	22.0 mm (0.866 in.)
	16-inch disc	Standard	28.0 mm (1.102 in.)
		Minimum	25.0 mm (0.984 in.)
Disc runout BR-43		Maximum	0.05 mm (0.0020 in.)

Rear Brake

Pad lining thickness BR-57	Standard	10.5 mm (0.413 in.)
	Minimum	1.0 mm (0.039 in.)
Disc thickness BR-58	Standard	12.0 mm (0.472 in.)
	Minimum	10.5 mm (0.413 in.)
Disc runout BR-58	Maximum	0.15 mm (0.0059 in.)

PARKING BRAKE

SERVICE DATA

Parking brake lever travel PB-2	Pull the lever upward with a force of approximately 200 N (20 kgf, 44 lbf) and count the number of clicks.		7 to 9 clicks (without rear brake dragging)
Parking brake switch PB-4	Resistance 1 - Body ground	Parking brake switch ON (Switch pin released)	Below 1 Ω
	Resistance 1 - Body ground	Parking brake switch OFF (Switch pin pushed in))	10 kΩ or higher
Brake disc inside diameter PB-14		Standard	172 mm (6.77 in.)
		Maximum	173 mm (6.81 in.)
Parking brake shoe lining thickness PB-14		Standard	3.5 mm (0.138 in.)
		Minimum	1.0 mm (0.039 in.)
Parking brake shoe clearance adjustment PB-17	Standard shoe adjuster return notch		8 notches

TORQUE SPECIFICATIONS

Parking Brake Lever

Part tightened	N*m	kgf*cm	ft.*lbf
Parking brake switch mounting screw	0.88	9.0	7.8 in.*lbf
Parking brake lever x Body	14.5	148	11
No. 1 parking brake cable lock nut	6.0	61	53 in.*lbf

Parking Brake Cable

Part tightened	N*m	kgf*cm	ft.*lbf
Parking brake cable x Backing plate	8.0	82	71 in.*lbf
Parking brake cable clamp bolt	6.0	61	53 in.*lbf

BRAKE CONTROL

SERVICE DATA

Brake pedal load sensing switch BC-216	Resistance 1 - 2	Brake pedal depressed	Approx. 1 kΩ
		Brake pedal released	Approx. 213 Ω
Downhill assist control switch BC-218	Resistance 1 - 4	Switch pushed in	Bellow 25 Ω
		Switch released	10 kΩ or higher
Traction control switch (Auto LSD switch) BC-220	Resistance 3 - 6	Switch pushed in	Bellow 25 Ω
		Switch released	10 kΩ or higher

TORQUE SPECIFICATIONS

ABS and Traction Actuator

Part tightened	N*m	kgf*cm	ft.*lbf
ABS and traction actuator x Brake actuator bracket	5.4	55	48 in.*lbf
ABS and traction actuator with bracket x Body	19	194	14
ABS and traction actuator x Brake tube (without SST)	15.2	155	11
ABS and traction actuator x Brake tube (with SST)	14	144	10

Front Speed Sensor

Part tightened	N*m	kgf*cm	ft.*lbf
Front speed sensor body x Knuckle	8.5	87	75 in.*lbf
Front speed sensor clamp/ Flexible hose clamp x Flexible hose bracket	18.5	189	14
Front speed sensor clamp x Side member	8.5	87	75 in.*lbf

Skid Control Sensor (for 2WD)

Part tightened	N*m	kgf*cm	ft.*lbf
Skid control sensor clamp bolt	8.5	87	75 in.*lbf
Skid control sensor clamp nut	5.0	51	44 in.*lbf

Rear Speed Sensor (for 4WD)

Part tightened	N*m	kgf*cm	ft.*lbf
Rear speed sensor body x Carrier	8.5	87	75 in.*lbf
Rear speed sensor clamp bolt	8.5	87	75 in.*lbf
Rear speed sensor clamp nut	5.0	51	44 in.*lbf

Yaw Rate Sensor

Part tightened	N*m	kgf*cm	ft.*lbf
Yaw rate sensor assembly x Body	14.5	148	11
Yaw rate sensor bracket x Body	14.5	148	11

CRUISE CONTROL

TORQUE SPECIFICATIONS

Part Tightened	N*m	kgf*cm	ft.*lbf
Cruise control main switch assembly x Steering wheel assembly	1.7 to 3.0	17.34 to 30.60	15.04 to 26.55 in.*lbf

TORQUE SPECIFICATIONS

Differential

Part Tightened	N*m	kgf*cm	ft.*lbf
Rear differential No. 2 support x Rear suspension member	86	877	63
Rear differential support x Rear suspension member	140	1,428	103
Rear differential No. 2 support x Rear differential Rear differential No. 1 support x Rear differential	55	561	41
Rear differential support x Rear differential	98	999	72
Drain plug x Differential carrier Filler plug x Differential carrier	39	398	29
Electromagnetic coupling x Stud bolt	8.0	82	71 in.*lbf
Electromagnetic coupling x Differential carrier	19.6	200	14
Yoke x Differential carrier	5.0	51	44 in.*lbf
Drive pinion nut x Differential drive pinion	245 or less	2,498 or less	181 or less
Differential side bearing retainer x Differential carrier	34.3	350	25
Differential carrier x Differential breather plug oil deflector	5.0	51	44 in.*lbf
Differential ring gear x Differential case	90	918	66

DIFFERENTIAL

SERVICE DATA

Differential

Rear differential carrier oil seal drive in depth	7.0 +-0.5 mm (0.28 +-0.02 in.)
Rear differential side gear shaft oil seal drive in depth	7.2 +-0.5 mm (0.28 +-0.02 in.)
Differential ring gear backlash	0.09 to 0.16 mm (0.0034 to 0.0063 in.)
Companion flange runout	Maximum vertical runout: 0.06 mm (0.0023 in.) Maximum lateral runout: 0.07 mm (0.0028 in.)
Drive pinion preload (start torque)	New bearing: 1.31 to 2.18 N*m (13 to 22 kgf*cm, 12 to 19 in.*lbf) Reused bearing: 0.24 to 0.37 N*m (2 to 4 kgf*cm, 2 to 3 in.*lbf)
Total preload (Drive pinion preload plus)	New bearing: 1.18 to 1.90 N*m (12 to 19 kgf*cm, 10 to 17 in.*lbf) Reused bearing: 0.99 to 1.63 N*m (10 to 17 kgf*cm, 9 to 14 in.*lbf)
Side gear shaft plate washer thickness mm (in.)	1.59 to 1.61 (0.0625 to 0.0633) 1.62 to 1.64 (0.0637 to 0.0649) 1.65 to 1.67 (0.0650 to 0.0657) 1.68 to 1.70 (0.0661 to 0.0669) 1.71 to 1.73 (0.0673 to 0.0681) 1.74 to 1.76 (0.0685 to 0.0693) 1.77 to 1.79 (0.0697 to 0.0705) 1.80 to 1.82 (0.0709 to 0.0717) 1.83 to 1.85 (0.0720 to 0.0728) 1.86 to 1.88 (0.0732 to 0.0740) 1.89 to 1.91 (0.0744 to 0.0752) 1.92 to 1.94 (0.0756 to 0.0764) 1.95 to 1.97 (0.0768 to 0.0776) 1.98 to 2.00 (0.0780 to 0.0787) 2.02 to 2.04 (0.0795 to 0.0803) 2.04 to 2.06 (0.0803 to 0.0811) 2.07 to 2.09 (0.0815 to 0.0823) 2.10 to 2.12 (0.0827 to 0.0835) 2.13 to 2.15 (0.0839 to 0.0846) 2.16 to 2.18 (0.0850 to 0.0858) 2.19 to 2.21 (0.0862 to 0.0870) 2.22 to 2.24 (0.0874 to 0.0882) 2.25 to 2.27 (0.0886 to 0.0894) 2.28 to 2.30 (0.0898 to 0.0906) 2.31 to 2.33 (0.0909 to 0.0917) 2.34 to 2.36 (0.0921 to 0.0929) 2.37 to 2.39 (0.0930 to 0.0941) 2.40 to 2.42 (0.0945 to 0.0953) 2.43 to 2.45 (0.0957 to 0.0965) 2.46 to 2.48 (0.0969 to 0.0976) 2.49 to 2.51 (0.0980 to 0.0988) 2.52 to 2.54 (0.0992 to 0.1000) 2.55 to 2.57 (0.1004 to 0.1012) 2.58 to 2.60 (0.1016 to 0.1024) 2.61 to 2.63 (0.1028 to 0.1035) 2.64 to 2.66 (0.1039 to 0.1047)

Rear differential drive pinion washer thickness mm (in.)	1.695 to 1.705 (0.0667 to 0.0671) 1.705 to 1.715 (0.0671 to 0.0675) 1.715 to 1.725 (0.0675 to 0.0679) 1.725 to 1.735 (0.0679 to 0.0683) 1.735 to 1.745 (0.0683 to 0.0687) 1.745 to 1.755 (0.0687 to 0.0690) 1.755 to 1.765 (0.0690 to 0.0695) 1.765 to 1.775 (0.0695 to 0.0699) 1.775 to 1.785 (0.0699 to 0.0703) 1.785 to 1.795 (0.0703 to 0.0707) 1.795 to 1.805 (0.0707 to 0.0711) 1.805 to 1.815 (0.0711 to 0.0715) 1.815 to 1.825 (0.0715 to 0.0719) 1.825 to 1.835 (0.0719 to 0.0720) 1.835 to 1.845 (0.0720 to 0.0726) 1.845 to 1.855 (0.0726 to 0.0730) 1.855 to 1.865 (0.0730 to 0.0734) 1.865 to 1.875 (0.0734 to 0.0738) 1.875 to 1.885 (0.0738 to 0.0742) 1.885 to 1.895 (0.0742 to 0.0746) 1.895 to 1.905 (0.0746 to 0.0750) 1.905 to 1.915 (0.0750 to 0.0754) 1.915 to 1.925 (0.0754 to 0.0758) 1.925 to 1.935 (0.0758 to 0.0762) 1.935 to 1.945 (0.0762 to 0.0766) 1.945 to 1.955 (0.0766 to 0.0770) 1.955 to 1.965 (0.0770 to 0.0774) 1.965 to 1.975 (0.0774 to 0.0778) 1.975 to 1.985 (0.0778 to 0.0781) 1.985 to 1.995 (0.0781 to 0.0785) 1.995 to 2.005 (0.0785 to 0.0789) 2.005 to 2.015 (0.0789 to 0.0793) 2.015 to 2.025 (0.0793 to 0.0797) 2.025 to 2.035 (0.0797 to 0.0801) 2.035 to 2.045 (0.0801 to 0.0805) 2.045 to 2.055 (0.0805 to 0.0809) 2.055 to 2.065 (0.0809 to 0.0813) 2.065 to 2.075 (0.0813 to 0.0817) 2.075 to 2.085 (0.0817 to 0.0821) 2.085 to 2.095 (0.0821 to 0.0825) 2.095 to 2.105 (0.0825 to 0.0829) 2.105 to 2.115 (0.0829 to 0.0833) 2.115 to 2.125 (0.0833 to 0.0837) 2.125 to 2.135 (0.0837 to 0.0841) 2.135 to 2.145 (0.0841 to 0.0844) 2.145 to 2.155 (0.0844 to 0.0848) 2.155 to 2.165 (0.0848 to 0.0852) 2.165 to 2.175 (0.0852 to 0.0856) 2.175 to 2.185 (0.0856 to 0.0860) 2.185 to 2.195 (0.0860 to 0.0864) 2.195 to 2.205 (0.0864 to 0.0868)

Difference of dimension A and B mm (in.): Transmission coupling shim thickness mm (in.)	3.96 to 4.01 (0.148 to 0.154): 1.98 to 2.02 (0.078 to 0.080) 4.26 to 4.31 (0.161 to 0.168): 2.28 to 2.32 (0.090 to 0.091) 4.56 to 4.61 (0.174 to 0.181): 2.58 to 2.62 (0.102 to 0.103) 3.81 to 3.86 (0.141 to 0.148): 1.83 to 1.87 (0.072 to 0.074) 4.11 to 4.16 (0.154 to 0.161): 2.13 to 2.17 (0.084 to 0.085) 4.41 to 4.46 (0.168 to 0.174): 2.43 to 2.47 (0.096 to 0.097) 3.71 to 3.76 (0.146 to 0.148): 1.73 to 1.77 (0.068 to 0.70) 3.76 to 3.81 (0.148 to 0.150): 1.78 to 1.82 (0.070 to 0.072) 3.86 to 3.91 (0.151 to 0.154): 1.88 to 1.92 (0.074 to 0.076) 3.91 to 3.96 (0.154 to 0.156): 1.93 to 1.97 (0.076 to 0.078) 4.01 to 4.06 (0.158 to 0.160): 2.03 to 2.07 (0.080 to 0.081) 4.06 to 4.11 (0.160 to 0.162): 2.08 to 2.12 (0.082 to 0.083) 4.16 to 4.21 (0.164 to 0.166): 2.18 to 2.22 (0.086 to 0.087) 4.21 to 4.26 (0.166 to 0.168): 2.23 to 2.27 (0.088 to 0.089) 4.31 to 4.36 (0.170 to 0.172): 2.33 to 2.37 (0.092 to 0.093) 4.36 to 4.41 (0.172 to 0.174): 2.38 to 2.42 (0.094 to 0.095) 4.46 to 4.51 (0.176 to 0.178): 2.48 to 2.52 (0.098 to 0.099) 4.51 to 4.56 (0.178 to 0.180): 2.53 to 2.57 (0.100 to 0.101) 4.61 to 4.66 (0.181 to 0.183): 2.63 to 2.67 (0.104 to 0.105) 4.66 to 4.71 (0.183 to 0.185): 2.68 to 2.72 (0.106 to 0.107)

TORQUE SPECIFICATIONS

(2005/11-2006/01)

Drive shaft

Part Tightened		N*m	kgf*cm	ft.*lbf
Front wheel Rear wheel		103	1,050	76
front suspension lower arm x Lower ball joint		92	938	68
Front axle hub nut		216	2,203	159
Drive shaft bearing bracket x Engine		63.7	650	47
Drive shaft bearing case bolt	2WD	63.7	650	47
Drive shaft bearing bracket x Drive shaft	4WD	32.4	330	24

TORQUE SPECIFICATIONS

(2006/01-)

Drive shaft

Part Tightened		N*m	kgf*cm	ft.*lbf
Front wheel Rear wheel		103	1,050	76
front suspension lower arm x Lower ball joint		92	938	68
Front axle hub nut	ϕ 26	216	2,203	159
	ϕ 30	292	2,978	215
Drive shaft bearing bracket x Engine		63.7	650	47
Drive shaft bearing case bolt	2WD	63.7	650	47
Drive shaft bearing bracket x Drive shaft	4WD	32.4	330	24

DRIVE SHAFT

SERVICE DATA

(2005/11-2006/01)

Drive shaft

Front drive shaft standard length for 2WD	LH	585.2 mm (23.039 in.)
	RH	902 mm (35.512 in.)
Front drive shaft standard length for 4WD	LH	572.5 mm (22.539 in.)
	RH	918 mm (36.142 in.)
Rear drive shaft standard length		733.8 mm (28.890 in.)

SERVICE DATA

(2006/01-)

Drive shaft

Front drive shaft standard length for 2WD	2AZ-FE	LH	585.2 mm (23.039 in.)
		RH	902 mm (35.512 in.)
	2GR-FE	LH	570.9 mm (22.476 in.)
		RH	914.4 mm (36.000 in.)
Front drive shaft standard length for 4WD	2AZ-FE	LH	572.5 mm (22.539 in.)
		RH	918 mm (36.142 in.)
	2GR-FE	LH	570.9 mm (22.476 in.)
		RH	922.4 mm (36.315 in.)
Rear drive shaft standard length			733.8 mm (28.890 in.)

EXTERIOR

TORQUE SPECIFICATIONS

Front Bumper

Part tightened	N*m	kgf*cm	ft.*lbf
Front bumper reinforcement x Body	70	713	51
Front bumper side retainer x Body	6.0	61	53 in.*lbf

Rear Bumper

Part tightened	N*m	kgf*cm	ft.*lbf
Rear bumper reinforcement x Body	37	377	27

Rear Spoiler

Part tightened	N*m	kgf*cm	ft.*lbf
Rear spoiler x Body	7.5	76	66 in.*lbf

Roof Rack

Part tightened	N*m	kgf*cm	ft.*lbf
Roof rack bar x Roof rack bar joint	1.96 to 2.94	20 to 30	17 to 26 in.*lbf
Roof rack leg x Body	38	387	28
Roof rack x Roof rack leg	2.8 to 5.0	29 to 51	25 to 43 in.*lbf

TORQUE SPECIFICATIONS

Part Tightened	N*m	kgf*cm	ft.*lbf
Breather oil deflector x transfer case	6.5	66	58
Output shaft x Transfer gear nut	360	3700	266
Driven pinion front bearing x Transfer case	38	390	28
No. 1 transfer case cover x transfer case	47	480	35
Transfer drain plug x transfer case	49	500	36
Transfer drain plug x transfer case	49	500	36
Transfer & Transaxle setting stud bolt x transfer case	39	400	29
Transfer assembly x transaxle	69	700	51
4WD Control ECU x Body	4.5	46	40

GF1A TRANSFER

SERVICE DATA

Transfer case oil seal drive in depth for LH side		0 to 0.5 mm (0 to 0.020 in.)
Transfer case oil seal drive in depth for RH side		0 to 0.5 mm (0 to 0.020 in.)
Transfer assembly		
Output rear shaft preload	Standard preload (turning)	0.77 to 2.13 N*m (7.9 to 21.7 kgf*cm, 6.82 to 18.85 in.*lbf)
Ring gear backlash	Standard backlash	0.10 to 0.20 mm (0.0039 to 0.0079 in.)
Driven pinion preload	Standard preload (turning)	0.29 to 1.49 N*m (3.0 to 15.2 kgf*cm, 2.57 to 13.19 in.*lbf)

Washer thickness LH side	A0	1.97 mm (0.0776 in.)
	A1	1.99 mm (0.0783 in.)
	A2	2.01 mm (0.0791 in.)
	A3	2.03 mm (0.0799 in.)
	A4	2.05 mm (0.0807 in.)
	A5	2.07 mm (0.0815 in.)
	A6	2.09 mm (0.0823 in.)
	A7	2.11 mm (0.0831 in.)
	A8	2.13 mm (0.0839 in.)
	A9	2.15 mm (0.0846 in.)
	B0	2.17 mm (0.0854 in.)
	B1	2.19 mm (0.0862 in.)
	B2	2.21 mm (0.087 in.)
	B3	2.23 mm (0.0878 in.)
	B4	2.25 mm (0.0886 in.)
	B5	2.27 mm (0.0894 in.)
	B6	2.29 mm (0.0902 in.)
	B7	2.31 mm (0.0909 in.)
	B8	2.33 mm (0.0917 in.)
	B9	2.35 mm (0.0925 in.)
	C0	2.37 mm (0.0933 in.)
	C1	2.39 mm (0.0941 in.)
	C2	2.41 mm (0.0949 in.)
	C3	2.43 mm (0.0957 in.)
	C4	2.45 mm (0.0965 in.)
	C5	2.47 mm (0.0972 in.)
	C6	2.49 mm (0.098 in.)
	C7	2.51 mm (0.0988 in.)
	C8	2.53 mm (0.0996 in.)
	C9	2.55 mm (0.1004 in.)
	D0	2.57 mm (0.1012 in.)
	D1	2.59 mm (0.102 in.)
	D2	2.61 mm (0.1028 in.)
	D3	2.63 mm (0.1035 in.)
	D4	2.65 mm (0.1043 in.)
	D5	2.67 mm (0.1051 in.)
	D6	2.39 mm (0.0941 in.)
	D7	2.71 mm (0.1067 in.)
	D8	2.73 mm (0.1075 in.)
	D9	2.75 mm (0.1083 in.)

Driven pinion bearing washer thickness front side	A0	1.18 mm (0.0465 in.)
	A1	1.20 mm (0.0472 in.)
	A2	1.22 mm (0.048 in.)
	A3	1.24 mm (0.0488 in.)
	A4	1.26 mm (0.0496 in.)
	A5	1.28 mm (0.0504 in.)
	A6	1.30 mm (0.0512 in.)
	A7	1.32 mm (0.052 in.)
	A8	1.34 mm (0.0528 in.)
	A9	1.36 mm (0.535 in.)
	B0	1.38 mm (0.0543 in.)
	B1	1.40 mm (0.0551 in.)
	B2	1.42 mm (0.0559 in.)
	B3	1.44 mm (0.0567 in.)
	B4	1.46 mm (0.0575 in.)
	B5	1.48 mm (0.0583 in.)
	B6	1.50 mm (0.0591 in.)
	B7	1.52 mm (0.0598 in.)
	B8	1.54 mm (0.0606 in.)
	B9	1.56 mm (0.0614 in.)
	C0	1.58 mm (0.0622 in.)
	C1	1.60 mm (0.063 in.)
	C2	1.62 mm (0.0638 in.)
	C3	1.64 mm (0.0646 in.)
	C4	1.66 mm (0.0654 in.)
	C5	1.68 mm (0.0661 in.)
	C6	1.70 mm (0.067 in.)
	C7	1.72 mm (0.0677 in.)
	C8	1.74 mm (0.0685 in.)
	C9	1.76 mm (0.0693 in.)
	D0	1.78 mm (0.0701 in.)
	D1	1.80 mm (0.0709 in.)
	D2	1.82 mm (0.0717 in.)
	D3	1.84 mm (0.0724 in.)
	D4	1.86 mm (0.0732 in.)
	D5	1.88 mm (0.074 in.)
	D6	1.90 mm (0.0748 in.)
	D7	1.92 mm (0.0756 in.)
	D8	1.94 mm (0.0764 in.)
	D9	1.96 mm (0.0772 in.)
	E0	1.98 mm (0.0781 in.)
	E1	2.00 mm (0.0787 in.)
	E2	2.02 mm (0.0795 in.)

Washer thickness RH side	01	1.02 mm (0.0402 in.)
	02	1.04 mm (0.0409 in.)
	03	1.06 mm (0.0417 in.)
	04	1.08 mm (0.0425 in.)
	05	1.10 mm (0.0433 in.)
	06	1.12 mm (0.0441 in.)
	07	1.14 mm (0.0449 in.)
	08	1.16 mm (0.0457 in.)
	09	1.18 mm (0.0465 in.)
	10	1.20 mm (0.0472 in.)
	11	1.22 mm (0.0480 in.)
	12	1.24 mm (0.0488 in.)
	13	1.26 mm (0.0496 in.)
	14	1.28 mm (0.0504 in.)
	15	1.30 mm (0.0512 in.)
	16	1.32 mm (0.0520 in.)
	17	1.34 mm (0.0528 in.)
	18	1.36 mm (0.0535 in.)
	19	1.38 mm (0.0543 in.)
	20	1.40 mm (0.0551 in.)
	21	1.42 mm (0.0559 in.)
	22	1.44 mm (0.0567 in.)
	23	1.46 mm (0.0575 in.)
	24	1.48 mm (0.0583 in.)
	25	1.50 mm (0.0591 in.)
	26	1.52 mm (0.0598 in.)
	27	1.54 mm (0.0606 in.)
	28	1.56 mm (0.0614 in.)

HORN

TORQUE SPECIFICATIONS

HORN

Part Tightened	N*m	kgf*cm	ft.*lbf
Low pitched horn x Body	19.5	199	14
High pitched horn x Body	19.5	199	14

MIRROR

TORQUE SPECIFICATIONS

MIRROR

Part Tightened	N*m	kgf*cm	ft.*lbf
Inner rear view mirror assembly (w/EC Mirror) x Body	1.8	18	16 in.*lbf
Outer rear view mirror assembly x Door panel	9.0	92	80 in.*lbf

PARKING BRAKE

SERVICE DATA

Parking brake lever travel PB-2	Pull the lever upward with a force of approximately 200 N (20 kgf, 44 lbf) and count the number of clicks.		7 to 9 clicks (without rear brake dragging)
Parking brake switch PB-4	Resistance 1 - Body ground	Parking brake switch ON (Switch pin released)	Below 1 Ω
	Resistance 1 - Body ground	Parking brake switch OFF (Switch pin pushed in))	10 kΩ or higher
Brake disc inside diameter PB-14		Standard	172 mm (6.77 in.)
		Maximum	173 mm (6.81 in.)
Parking brake shoe lining thickness PB-14		Standard	3.5 mm (0.138 in.)
		Minimum	1.0 mm (0.039 in.)
Parking brake shoe clearance adjustment PB-17	Standard shoe adjuster return notch		8 notches

TORQUE SPECIFICATIONS

Parking Brake Lever

Part tightened	N*m	kgf*cm	ft.*lbf
Parking brake switch mounting screw	0.88	9.0	7.8 in.*lbf
Parking brake lever x Body	14.5	148	11
No. 1 parking brake cable lock nut	6.0	61	53 in.*lbf

Parking Brake Cable

Part tightened	N*m	kgf*cm	ft.*lbf
Parking brake cable x Backing plate	8.0	82	71 in.*lbf
Parking brake cable clamp bolt	6.0	61	53 in.*lbf

POWER STEERING

SERVICE DATA

Steering wheel free play	Maximum	30 mm (1.18 in.)

TORQUE SPECIFICATIONS

Part Tightened	N*m	kgf*cm	ft.*lbf
Steering sliding yoke sub-assembly x Steering intermediate shaft assembly No, 2	35	360	26
Steering intermediate shaft assembly No, 2 x Power steering gear	35	360	26
Power steering gear x Front suspension crossmember sub-assembly	138	1407	102
Power steering ECU x Instrument panel reinforcement assembly	5.0	51	44 in.*lbf

PROPELLER SHAFT

SERVICE DATA

Propeller shaft

Propeller shaft runout	Maximum: 0.4 mm (0.02 in.)

Joint angle	Angle A	Angle A- B	Angle B-C
	w/ 3rd seat:-2°49'	1°35'	2°04'
	w/o 3rd seat: -3°01'		

Adjusting washer Thickness mm (in.)	2.0 (0.08) 4.5 (0.18) 6.5 (0.26) 9.0 (0.35) 11.0 (0.43)

TORQUE SPECIFICATIONS

Propeller shaft

Part Tightened	N*m	kgf*cm	ft.*lbf
Propeller shaft x Transaxle companion flange	35	357	26
Propeller shaft x Differential companion flange	35	357	26
Propeller shaft center bearing x Body	36.8	375	27

SEAT BELT

TORQUE SPECIFICATIONS

FRONT SEAT BELT

Part Tightened	N*m	kgf*cm	ft.*lbf
Front seat inner belt assembly x Front seat	42	428	31
Front shoulder belt anchor adjuster assembly x Body	42	428	31
Front seat outer belt assembly (Upper part of retractor) x Body	5.0	51	44 in.*lbf
Front seat outer belt assembly (shoulder anchor) x Body	42	428	31
Front seat outer belt assembly (floor anchor) x Body	42	428	31

REAR SEAT BELT

Part Tightened	N*m	kgf*cm	ft.*lbf
Rear NO. 2 Seat Inner Belt Assembly x Seat	42	428	31
Rear Seat Inner Belt Assembly RH (for 60/40 split Seat Type RH Side) x Seat	42	428	31
Rear Seat Inner Belt Assembly LH (for 60/40 split Seat Type LH Side) x Seat	42	428	31
Rear Seat Lap Type Belt Assembly Center LH x Seat	42	428	31
Rear Seat Lap Type Belt Assembly Center RH (w/o Rear No. 2 Seat) x Seat	42	428	31
Rear Seat Lap Type Belt Assembly Center RH (w/ Rear No. 2 Seat) x Seat	42	428	31
Rear NO. 1 seat outer belt assembly (Upper part of retractor) x Body	8.5	87	75
Rear NO. 1 seat outer belt assembly (Lower part of retractor) x Body	42	428	31 in.*lbf
Rear NO. 1 seat outer belt assembly (shoulder anchor) x Body	42	428	31
Rear NO. 1 seat outer belt assembly (floor anchor) x Body	42	428	31
Rear NO. 2 seat outer belt assembly (Upper part of retractor) (w/ Rear No. 2 Seat) x Body	8.5	87	75
Rear NO. 2 seat outer belt assembly (Lower part of retractor) (w/ Rear No. 2 Seat) x Body	42	428	31 in.*lbf
Rear NO. 2 seat outer belt assembly (shoulder anchor) (w/ Rear No. 2 Seat) x Body	42	428	31
Rear NO. 2 seat outer belt assembly (floor anchor) (w/ Rear No. 2 Seat) x Body	42	428	31

Part Tightened	N*m	kgf*cm	ft.*lbf
Rear center seat outer belt assembly x Body	42	428	31
Child restraint seat tether anchor bracket x Body	42	428	31

SEAT

TORQUE SPECIFICATIONS

Front Seat Assembly (for Manual Seat)

Part Tightened	N*m	kgf*cm	ft.*lbf
Airbag sensor x Seat adjuster frame	8.0	82	71 in.*lbf
Seatback cover bracket x Seat frame with adjuster (w/ front seat side airbag)	5.5	56	49 in.*lbf
Inner belt x Seat adjuster frame	42	428	31
Front seat x Body	37	377	27

Front Seat Assembly (for Power Seat)

Part Tightened	N*m	kgf*cm	ft.*lbf
Airbag sensor x Seat adjuster frame	8.0	82	71 in.*lbf
Seatback cover bracket x Seat frame with adjuster (w/ front seat side airbag)	5.5	56	49 in.*lbf
Inner belt x Seat adjuster frame	42	428	31
Front seat x Body	37	377	27

Rear No. 1 Seat Assembly (for LH Side)

Part Tightened	N*m	kgf*cm	ft.*lbf
Reclining remote control lever x Body	18	184	13
lap type belt center RH x Body	42	428	31
Inner belt x Reclining adjuster	42	428	31
Rear seat cushion frame x Seatback frame	21	214	15
Rear seat cushion frame x Reclining adjuster	21	214	15
Center armrest x Seatback frame	32	326	24
Rear No. 1 seat armrest x Seatback frame	32	326	24
Seatback frame x Reclining adjuster	42	428	31
Lap type belt center LH x Seatback frame	42	428	31
Rear No. 1 seat x Body	42	428	31

Rear No. 1 Seat Assembly (for RH Side)

Part Tightened	N*m	kgf*cm	ft.*lbf
Reclining remote control lever x Body	18	184	13
Inner belt x Reclining adjuster	42	428	31
Rear seat cushion frame x Seatback frame	21	214	15
Rear seat cushion frame x Reclining adjuster	21	214	15
Seatback frame x Reclining adjuster	42	428	31
Rear No. 1 seat x Body	42	428	31

Rear No. 2 Seat Assembly

Part Tightened	N*m	kgf*cm	ft.*lbf
Rear No. 2 seat link x Body	18	184	13
Rear No. 2 seat x Rear No. 2 seat link	18	184	13
Rear seat cushion wire x Rear No. 2 seat link	18	184	13
Rear seat cushion wire x Rear No. 2 seat cushion spring	18	184	13
Inner belt x Rear No. 2 seat cushion spring	42	428	31
Rear No. 2 seatback frame x Rear No. 2 seat cushion spring	42	428	31

SEAT BELT

TORQUE SPECIFICATIONS

FRONT SEAT BELT

Part Tightened	N*m	kgf*cm	ft.*lbf
Front seat inner belt assembly x Front seat	42	428	31
Front shoulder belt anchor adjuster assembly x Body	42	428	31
Front seat outer belt assembly (Upper part of retractor) x Body	5.0	51	44 in.*lbf
Front seat outer belt assembly (shoulder anchor) x Body	42	428	31
Front seat outer belt assembly (floor anchor) x Body	42	428	31

REAR SEAT BELT

Part Tightened	N*m	kgf*cm	ft.*lbf
Rear NO. 2 Seat Inner Belt Assembly x Seat	42	428	31
Rear Seat Inner Belt Assembly RH (for 60/40 split Seat Type RH Side) x Seat	42	428	31
Rear Seat Inner Belt Assembly LH (for 60/40 split Seat Type LH Side) x Seat	42	428	31
Rear Seat Lap Type Belt Assembly Center LH x Seat	42	428	31
Rear Seat Lap Type Belt Assembly Center RH (w/o Rear No. 2 Seat) x Seat	42	428	31
Rear Seat Lap Type Belt Assembly Center RH (w/ Rear No. 2 Seat) x Seat	42	428	31
Rear NO. 1 seat outer belt assembly (Upper part of retractor) x Body	8.5	87	75
Rear NO. 1 seat outer belt assembly (Lower part of retractor) x Body	42	428	31 in.*lbf
Rear NO. 1 seat outer belt assembly (shoulder anchor) x Body	42	428	31
Rear NO. 1 seat outer belt assembly (floor anchor) x Body	42	428	31
Rear NO. 2 seat outer belt assembly (Upper part of retractor) (w/ Rear No. 2 Seat) x Body	8.5	87	75
Rear NO. 2 seat outer belt assembly (Lower part of retractor) (w/ Rear No. 2 Seat) x Body	42	428	31 in.*lbf
Rear NO. 2 seat outer belt assembly (shoulder anchor) (w/ Rear No. 2 Seat) x Body	42	428	31
Rear NO. 2 seat outer belt assembly (floor anchor) (w/ Rear No. 2 Seat) x Body	42	428	31

Part Tightened	N*m	kgf*cm	ft.*lbf
Rear center seat outer belt assembly x Body	42	428	31
Child restraint seat tether anchor bracket x Body	42	428	31

SLIDING ROOF

TORQUE SPECIFICATIONS

SLIDING ROOF HOUSING

Part Tightened		N*m	kgf*cm	ft.*lbf
Sliding roof glass X Sliding roof housing		5.5	56	49 in.*lbf
Sliding roof drive gear X Sliding roof housing		5.4	55	48 in.*lbf
Sliding roof housing X Bracket		5.5	56	49 in.*lbf
Sliding roof housing X Body	for Bolt	8.0	82	71 in.*lbf
	for Nut	5.5	56	49 in.*lbf

HOW TO DETERMINE NUT STRENGTH

Nut Type

Present Standard Hexagon Nut	Old Standard Hexagon Nut		Class
	Cold Forging Nut	Cutting Processed Nut	
No Mark 			4N
No Mark (w/ Washer) 	No Mark (w/ Washer) 	No Mark 	5N (4T)
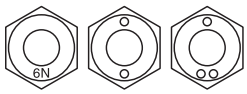			6N
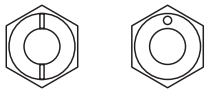		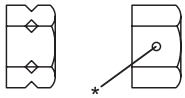	7N (5T)
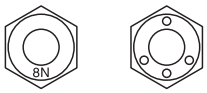			8N
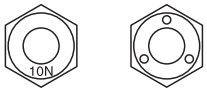	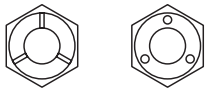	No Mark 	10N (7T)
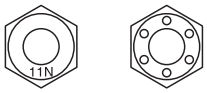			11N
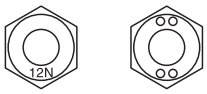			12N

HINT:

- *: Nut with 1 or more marks on one side surface of the nut.
- Use a nut with the same nut strength classification number (or greater) as the bolt strength classification number when tightening parts with a bolt and nut.

Example:

- Bolt = 4T
- Nut = 4N or more

STANDARD BOLT

HOW TO DETERMINE BOLT STRENGTH

Bolt Type

Hexagon Head Bolt			Stud Bolt	Weld Bolt	Class
Normal Recess Bolt		Deep Recess Bolt			
	 No Mark	 No Mark	 No Mark	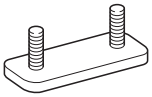	4T
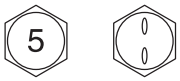					5T
	 w/ Washer	 w/ Washer			6T
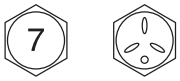		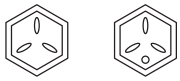			7T
					8T
					9T
					10T
					11T

SS

SPECIFIED TORQUE FOR STANDARD BOLTS

Class	Diameter (mm)	Pitch (mm)	Specified torque					
			Hexagon head bolt			Hexagon flange bolt		
			N*m	kgf*cm	ft.*lbf	N*m	kgf*cm	ft.*lbf
4T	6	1	5	55	48 in.*lbf	6	60	52 in.*lbf
	8	1.25	12.5	130	9	14	145	10
	10	1.25	26	260	19	29	290	21
	12	1.25	47	480	35	53	540	39
	14	1.5	74	760	55	84	850	61
	16	1.5	115	1,150	83	-	-	-
5T	6	1	6.5	65	56 in.*lbf	7.5	75	65 in.*lbf
	8	1.25	15.5	160	12	17.5	175	13
	10	1.25	32	330	24	36	360	26
	12	1.25	59	600	43	65	670	48
	14	1.5	91	930	67	100	1,050	76
	16	1.5	140	1,400	101	-	-	-
6T	6	1	8	80	69 in.*lbf	9	90	78 in.*lbf
	8	1.25	19	195	14	21	210	15
	10	1.25	39	400	29	44	440	32
	12	1.25	71	730	53	80	810	59
	14	1.5	110	1,100	80	125	1,250	90
	16	1.5	170	1,750	127	-	-	-
7T	6	1	10.5	110	8	12	120	9
	8	1.25	25	260	19	28	290	21
	10	1.25	52	530	38	58	590	43
	12	1.25	95	970	70	105	1,050	76
	14	1.5	145	1,500	108	165	1,700	123
	16	1.5	230	2,300	166	-	-	-
8T	8	1.25	29	300	22	33	330	24
	10	1.25	61	620	45	68	690	50
	12	1.25	110	1,100	80	120	1,250	90
9T	8	1.25	34	340	25	37	380	27
	10	1.25	70	710	51	78	790	57
	12	1.25	125	1,300	94	140	1,450	105
10T	8	1.25	38	390	28	42	430	31
	10	1.25	78	800	58	88	890	64
	12	1.25	140	1,450	105	155	1,600	116
11T	8	1.25	42	430	31	47	480	35
	10	1.25	87	890	64	97	990	72
	12	1.25	155	1,600	116	175	1,800	130

STEERING COLUMN

SERVICE DATA

Steering wheel free play	Maximum	30 mm (1.18 in.)

TORQUE SPECIFICATIONS

Part tightened	N*m	kgf*cm	ft.*lbf
Steering wheel assembly x Steering column assembly	50	510	37
Steering sliding yoke sub-assembly x Steering gear assembly	35	360	26
Steering intermediate shaft assembly No. 2 x Steering column assembly	35	360	26
Steering column x Instrument panel reinforcement assembly	25	255	18

SUPPLEMENTAL RESTRAINT SYSTEM

TORQUE SPECIFICATIONS

Part tightened	N*m	kgf*cm	ft.*lbf
Steering pad assembly x Steering wheel assembly	8.8	90	78 in.*lbf
Steering wheel assembly x Steering column assembly	50	510	37
Front passenger airbag x Instrument panel reinforcement	20	203	14
Curtain shield airbag assembly x Body	14	143	10
Center airbag sensor assembly x Body	17.5	179	13
Front airbag sensor x Body	9.0	92	80 in.*lbf
Side airbag sensor x Body	9.0	92	80 in.*lbf
Rear airbag sensor x Body	9.0	92	80 in.*lbf

SUSPENSION

SERVICE DATA

Front wheel alignment	Vehicle height		C-A: D-B:
	Tire size	215/70R16	89 mm (3.50 in.) 57 mm (2.24 in.)
		225/65R17 235/55R18	97 mm (3.82 in.) 65 mm (2.56 in.)
		225/65R17*	97 mm (3.82 in.) 54 mm (2.13 in.)
	Toe-in (total)	A + B: C - D:	0°05' +-10' (0.08°+-0.16°) 1.0 +-2.0 mm (0.04 +-0.08 in.)
	Wheel angle	Tire size: 215/70R16	Inside wheel: 38°55' (36°55' to 40°55') 38.9°(36.9° to 40.9°) Outside wheel: Reference 32°20' 32.3°
		Tire size: 225/65R17 235/55R18	Inside wheel: 35°50' (33°55' to 37°55') 35.8°(33.8° to 37.9°) Outside wheel: Reference 30°29' 30.5°
	Camber	Tire size: 215/70R16	-0°08' +-45' (-0.13°+-0.75°)
		Tire size: 225/65R17 235/55R18	-0°11' +-45' (-0.18°+-0.75°)
	Caster	Tire size: 215/70R16	5°43' +-45' (5.72°+-0.75°)
		Tire size: 225/65R17 235/55R18	5°50' +-45' (5.83°+-0.75°)
		Tire size: 225/65R17*	5°37' +-45' (5.62°+-0.75°)
	Steering axis inclination	Tire size: 215/70R16	11°16' +-30' (11.27°+-0.50°)
		Tire size: 225/65R17 235/55R18	11°26' +-30' (11.43°+-0.50°)
Rear wheel alignment	Toe-in (total)	A + B: C - D:	0°11' +-10' (0.18° +-0.17°) 2.3 +-1 mm (0.09 +-0.04 in.)
	Camber Right-left error	Tire size: 215/70R16	0°55' +-45' (-0.92 +-0.75°) 45' (0.75°) or less
		Tire size: 225/65R17 235/55R18	-1°04' +-45' (-1.07 +-0.75°) 45' (0.75°) or less
		Tire size: 225/65R17*	-0°52' +-45' (-0.87 +-0.75°) 45' (0.75°) or less
Front suspension	Lower ball joint turning torque		0.98 to 3.43 N*m (10 to 35 kgf*cm, 9 to 30 in.*lbf) or less
	Stabilizer link turning torque		0.05 to 1.96 N*m, (0.5 to 20 kgf*cm, 0.4 to 17 in.*lbf) or less
Rear suspension	No. 1 suspension arm turning torque		3.4 N*m (35 kgf*cm, 30 in.*lbf)
	Stabilizer link turning torque		0.05 to 1.96 N*m, (0.5 to 20 kgf*cm, 0.4 to 17 in.*lbf) or less

*: w/ 3rd seat.

TORQUE SPECIFICATIONS

Part Tightened	N*m	kgf*cm	ft.*lbf
Front shock absorber nut x Piston rod	47	479	35
Front shock absorber with coil spring x Body	50	510	37
Front shock absorber x Stabilizer link	74	755	55
Front shock absorber x Steering knuckle	240	2,447	177
Front shock absorber x Front speed sensor wire	18.5	189	14
Hood bolt	13	133	10
Tie rod end x Steering knuckle	49	500	36
Front suspension crossmember x Lower No. 1 arm	233	2,376	172
Front suspension member brace rear (front side) x Body	145	1,479	107
Front suspension member brace rear (rear side) x Body	93	948	69
Front suspension lower No. 1 arm x Lower ball joint	92	938	68
Rear engine mounting insulator x Front suspension crossmember	95	969	70
Steering knuckle x Lower ball joint	133	1,356	98
Front axle hub nut	216	2,203	159
Front brake cylinder x steering knuckle	98	999	72
Front suspension crossmember x Front suspension member brace front	87	887	64
No. 2 parking brake cable x Trailing arm	6.0	61	53 in.*lbf
Skid control sensor wire (for nut)	5.0	51	44
Skid control sensor wire (for bolt)	8.5	87	75 in.*lbf
Rear speed sensor x Rear axle carrier	8.5	87	75 in.*lbf
Rear suspension No. 2 arm x Rear stabilizer link	30	306	22
Rear stabilizer bar x Rear stabilizer link	74	755	55
Rear suspension member x Rear suspension No. 2 arm	90	918	66
Rear axle carrier x Rear suspension No. 2 arm	90	918	66
Rear shock absorber x Rear suspension member	80	816	59
Bracket x Rear axle carrier	80	816	59
Rear upper control arm x Rear suspension member	90	918	66
Rear upper control arm x Rear axle carrier	90	918	66
Rear suspension No. 1 arm x Rear axle carrier	100	1,020	74
Rear suspension No. 1 arm x Rear suspension member	90	918	66

Part Tightened	N*m	kgf*cm	ft.*lbf
Rear stabilizer bracket x Rear suspension member	60	612	44
Rear trailing arm x Body (front side)	150	1,530	111
Rear trailing arm x Body (Rear side)	200	2,039	148

TIRE AND WHEEL

SERVICE DATA

Cold tire inflation pressure	Tire size: 215/70R16 99H	Front, Rear	220kPa (2.2 kgf/cm^2, 32 psi)
	Tire size: 225/65R17 101H	Front, Rear	220kPa (2.2 kgf/cm^2, 32 psi)
	Tire size: 235/55R18 99H	Front, Rear	220kPa (2.2 kgf/cm^2, 32 psi)

Tire runout	1.0 mm (0.039 in.) or less
Imbalance after adjustment	8.0 g (0.018 lb) or less

TORQUE SPECIFICATIONS

Part Tightened	N*m	kgf*cm	ft*lbf
Tire pressure warning antenna and receiver set bolt	7.5	76	66 in.*ibf
Tire pressure warning valve sub-assembly set nut	4.0	41	35 in.*ibf
Tire pressure warning ECU set bolt	4.5	46	40 in.*ibf

TORQUE SPECIFICATIONS

Automatic Transaxle Assembly

Part Tightened		N*m	kgf*cm	ft.*lbf
Park/neutral position switch	Nut	6.9	70	61 in.*lbf
	Bolt	5.4	55	48 in.*lbf
Control shaft lever x Control shaft		12.7	130	9
Shift control cable x Control shaft lever		15	153	11
Transaxle housing x Engine block	A bolt	64	653	47
	B bolt	46	470	34
	Lower side bolt	37	377	27
Torque converter clutch x Drive plate		41	418	30
Engine mounting bracket FR x Transaxle		64	653	47
Oil filler tube x Transaxle		5.5	56	49 in.*lbf
Control cable bracket No.1 x Transaxle		12	122	9
Oil cooler tube clamp x Control cable bracket		5.4	55	48 in.*lbf
Oil cooler inlet tube x Transaxle		34	347	25
Oil cooler outlet tube x Transaxle		34	347	25
Starter x Transaxle		37	377	27
Wire harness x Transaxle		13	133	10
Speed sensor (NC) x Transaxle		11	115	8
Speed sensor (NT) x Transaxle		11	112	8
Air cleaner x No. 1 air cleaner inlet		5.0	51	44 in.*lbf
Drain plug x Oil pan		47	479	35
Transmission wire x Transaxle		5.4	55	48 in.*lbf
ATF temperature sensor x Valve body		6.6	67	58 in.*lbf
Oil pan x Transaxle		7.6	77	67 in.*lbf
Solenoid valve x Valve body	Bolt A	6.6	67	58 in.*lbf
	Bolt B	11	110	8
Valve body x Transaxle		10.8	110	8
Oil strainer x Valve body		11	110	8
Floor shift assembly x Body		12	120	9
Control cable x Body		5.0	51	44 in.*lbf
Transfer x Transaxle		69	704	51
Engine mount bracket RR x Transfer stiffener, plate RH		45	459	34

Automatic Transaxle Unit

Part Tightened		N*m	kgf*cm	ft.*lbf
Differential gear lube apply tube x Transaxle housing		9.8	100	7
Front planetary gear lock nut		268	2,732	198
Brake apply tube clamp x Transaxle case		5.4	55	48 in.*lbf
Transaxle case No. 1 plug x Transaxle rear cover		7.4	75	65 in.*lbf
Transaxle rear cover plate x transaxle rear cover sub-assembly		7.5	76	66 in.*lbf
Transaxle rear cover x Transaxle case	Bolt A	18.6	190	14
	Other bolt	24.5	250	18
Pawl shaft clamp x Transaxle case		9.8	100	7
Oil pump assembly x Transaxle case		22	226	16
Transaxle housing x Transaxle case	Bolt A	22.1	225	16.3
	Bolt B, C	29.4	300	21.7
Transaxle case No. 1 plug x Transaxle housing		7.4	75	65 in.*lbf
Parking lock pawl bracket x Transaxle case		20	205	15

Part Tightened		N*m	kgf*cm	ft.*lbf
Detent spring x Transaxle case	Bolt A	20	205	15
	Bolt B	12	120	9
Solenoid wire retaining bolt x Transaxle housing		5.4	55	48 in.*lbf
Transmission valve body x Transaxle case		11	110	8
ATF temperature sensor clamp x Valve body		6.6	67	58 in.*lbf
Valve body oil strainer x Transmission valve		11	110	8
Automatic transaxle oil pan sub-assembly x Transaxle case		7.8	80	69 in.*lbf
Speed sensor x Transaxle case		11.3	115	8
Transmission revolution sensor x Transaxle case		11.3	115	8
Oil cooler tube union x Transaxle case		27	276	20
Oil cooler tube union x Transaxle case		27	280	20
Speedometer driven hole cover sub-assembly x Transaxle case		7.0	70	61
Oil pump body x Stator shaft assembly		9.8	100	7
Under drive planetary gear x Lock nut		280	2,855	207
Line pressure control solenoid assembly x Transmission valve body assembly		11	110	8
No. 1 clutch control solenoid assembly x Transmission valve body assembly		11	110	8
Automatic transmission 3 way solenoid assembly x Transmission valve body assembly		11	110	8
No. 2 clutch control solenoid assembly x Transmission valve body assembly		11	110	8
No. 2 transmission 3 way solenoid assembly x Transmission valve body assembly		11	110	8
Front differential case x Front differential ring gear		95.1	970	70

U140F AUTOMATIC TRANSAXLE

SERVICE DATA

AUTOMATIC TRANSMISSION ASSEMBLY

Line pressure (Wheel locked) AT stall (Throttle valve fully opened)	D position	931 to 1,031 kPa (9.1 to 10.5 kgf*cm^2, 129 to 149 psi)
	R position	1,768 to 1,968 kPa (18.0 to 20.0 kgf/cm^2, 284 to 256 psi)
Engine stall revolution	D positions	2,400 to 2,700 rpm
Time lag	N → D position	Less than 1.2 seconds
	N → R position	Less than 1.2 seconds
Engine idle speed (A/C OFF)	N position	610 to 710 rpm
Drive plate runout	Maximum.	0.20 mm (0.0079 in.)
Differential oil seal drive in depth	LH side	5.4 to 6.4 mm (0.213 to 0.252 in.)
	RH side	1.5 to 2.5 mm (0.059 to 0.098 in.)
Shift point		
D position (Throttle valve fully opened)	1 → 2	55 to 63 km/h (34 to 39 mph)
	2 → 3	102 to 112 km/h (63 to 70 mph)
	3 → 4	156 to 171 km/h (97 to 106 mph)
	4 → 3	148 to 163 km/h (92 to 101 mph)
	3 → 2	94 to 104 km/h (58 to 65 mph)
	2 → 1	44 to 51 km/h (27 to 32 mph)
D position (Throttle valve fully closed)	3 → 4	40 to 47 km/h (25 to 29 mph)
	4 → 3	16 to 22 km/h (10 to 14 mph)
2 position (Throttle valve fully opened)	1 → 2	55 to 63 km/h (34 to 39 mph)
	3 → 2	102 to 112 km/h (63 to 70 mph)
	2 → 1	32 to 39 km/h (20 to 24 mph)
L position (Throttle valve fully opened)	3 → 2	102 to 112 km/h (63 to 70 mph)
	2 → 1	48 to 55 km/h (30 to 34 mph)
Lock-up point		
D position (Throttle valve opening 5 %)	Lock-up ON 4 → 4L	53 to 60 km/h (33 to 37 mph)
	Lock-up OFF 4L → 4	51 to 58 km/h (32 to 36 mph)
Input shaft		
End play	0.262 to 1.249 mm (0.0103 to 0.0492 in.)	
Multiple disc clutch clutch hub		
Inside diameter	STD	23.025 to 23.045 mm (0.9065 to 0.9073 in.)
	Max.	23.09 mm (0.9091 in.)
Underdrive brake		
Return spring free length	14.04 mm (0.5528 in.)	
Pack clearance	1.81 to 2.20 mm (0.0713 to 0.0866 in.)	
Flange thickness	Mark 1	3.0 mm (0.118 in.)
	Mark 2	3.2 mm (0.126 in.)
	Mark 3	3.4 mm (0.134 in.)
2nd brake		
Pack clearance	0.62 to 0.91 mm (0.0244 to 0.0358 in.)	
Return spring free length	16.61 mm (0.6539 in.)	

Flange thickness	Mark 1	3.0 mm (0.118 in.)
	Mark 2	3.1 mm (0.122 in.)
	Mark 3	3.2 mm (0.126 in.)
	Mark 4	3.3 mm (0.130 in.)
	Mark 5	3.4 mm (0.134 in.)
	Mark 6	3.5 mm (0.138 in.)
	Mark 7	3.6 mm (0.142 in.)
1st and reverse brake		
Pack clearance	1.10 to 1.29 mm (0.0433 to 0.0508 in.)	
Return spring free length	15.51 mm (0.6106 in.)	
Flange thickness	Mark 1	1.8 mm (0.071 in.)
	Mark 2	1.9 mm (0.075 in.)
	Mark 3	2.0 mm (0.079 in.)
	Mark 4	2.1 mm (0.083 in.)
	Mark 5	2.2 mm (0.087 in.)
	Mark 6	2.3 mm (0.091 in.)
	Mark 7	2.4 mm (0.094 in.)
	Mark 8	2.5 mm (0.098 in.)

OIL PUMP

Body clearance	STD	0.10 to 0.17 mm (0.0039 to 0.0067 in.)
	Max.	0.17 mm (0.0067 in.)
Tip clearance	STD	0.07 to 0.15 mm (0.0028 to 0.0059 in.)
	Max.	0.15 mm (0.0059 in.)
Side clearance	STD	0.02 to 0.05 mm (0.0008 to 0.0020 in.)
	Max.	0.05 mm (0.0020 in.)
Drive gear thickness	Mark 1	10.690 to 10.699 mm (0.4209 to 0.4212 in.)
	Mark 2	10.700 to 10.709 mm (0.4213 to 0.4216 in.)
	Mark 3	10.710 to 10.720 mm (0.4217 to 0.4220 in.)
	Mark 4	10.721 to 10.730 mm (0.4221 to 0.4224 in.)
	Mark 5	10.731 to 10.740 mm (0.4225 to 0.4228 in.)
Driven gear thickness	Mark 1	10.690 to 10.699 mm (0.4209 to 0.4212 in.)
	Mark 2	10.700 to 10.709 mm (0.4213 to 0.4216 in.)
	Mark 3	10.710 to 10.720 mm (0.4217 to 0.4220 in.)
	Mark 4	10.721 to 10.730 mm (0.4221 to 0.4224 in.)
	Mark 5	10.731 to 10.740 mm (0.4225 to 0.4228 in.)
Pump body bushing inside diameter	STD	38.113 to 38.138 mm (1.50050 to 1.50149 in.)
	Max.	38.138 mm (1.50149 in.)
Oil seal in depth	STD	0 +- 0.5 mm (0 +- 0.020 in.)
Stator shaft bushing inside diameter	STD	21.500 to 21.526 mm (0.84646 to 0.84748 in.)
	Max	21.526 mm (0.84748 in.)

SECOND BRAKE PISTON

Piston return spring free length	18.99 mm (0.7476 in.)

FORWARD CLUTCH

Pack clearance		1.74 to 2.08 mm (0.0685 to 0.0819 in.)
Piston return spring free length		28.23 mm (1.1102 in.)
Flange thickness	No. 1	3.00 mm (0.1181 in.)
	No. 2	3.15 mm (0.1240 in.)
	No. 3	3.30 mm (0.1299 in.)
	No. 4	3.45 mm (0.1358 in.)
	No. 5	3.60 mm (0.1417 in.)

DIRECT CLUTCH

Pack clearance		0.605 to 0.825 mm (0.02382 to 0.03248 in.)
Piston return spring free length		22.58 mm (0.8898 in.)
Flange thickness (Direct clutch)	Mark 1	3.0 mm (0.118 in.)
	Mark 2	3.1 mm (0.122 in.)
	Mark 3	3.2 mm (0.126 in.)
	Mark 4	3.3 mm (0.130 in.)
	Mark 5	3.4 mm (0.134 in.)
	Mark 6	3.5 mm (0.138 in.)

UNDERDRIVE PLANETARY GEAR

Turning torque (at 60 rpm)	0.10 to 4.41 N*m (1.0 to 45 kgf*cm, 0.9 to 39 in*lbf)

UNDERDRIVE CLUTCH

Pack clearance		1.51 to 1.90 mm (0.0594 to 0.0748 in.)
Piston return spring free length		17.14 mm (0.6752 in.)
	Mark 1	3.0 mm (0.118 in.)
	Mark 2	3.2 mm (0.126 in.)
	Mark 3	3.4 mm (0.134 in.)
U/D clutch drum bushing inside diameter	STD	37.06 to 37.08 mm (1.4591 to 1.4598 in.)
	Max.	37.13 mm (1.4618 in.)

TRANSMISSION VALVE BODY ASSEMBLY

Valve body assembly installation bolt length	25 mm (0.984 in.) for bolt A
	41 mm (1.614 in.) for bolt B
	45 mm (1.771 in.) for bolt C
Detente spring installation bolt length	27 mm (1.063 in.) for bolt A
	16 mm (0.630 in.) for bolt B

DIFFERENTIAL

Side gear backlash		0.05 to 0.20 mm (0.0020 to 0.0070 in.)
Thrust washer thickness	Mark -	1.625 mm (0.0640 in.)
	Mark -	1.725 mm (0.0679 in.)
	Mark -	1.825 mm (0.0719 in.)
Preload (turning torque at 60 rpm))	New bearing	0.20 to 0.69 N*m (2.0 to 7.0 kgf*cm, 1.8 to 6.1 in.*lbf)
	Using bearing	0.10 to 0.35 N*m (1.0 to 3.6 kgf*cm, 0.9 to 3.1 in.*lbf)

Shim thickness	Mark 0	2.00 mm (0.0787 in.)
	Mark 1	2.05 mm (0.0807 in.)
	Mark 2	2.10 mm (0.0827 in.)
	Mark 3	2.15 mm (0.0846 in.)
	Mark 4	2.20 mm (0.0866 in.)
	Mark 5	2.25 mm (0.0886 in.)
	Mark 6	2.30 mm (0.0906 in.)
	Mark 7	2.35 mm (0.0925 in.)
	Mark 8	2.40 mm (0.0945 in.)
	Mark 9	2.45 mm (0.0965 in.)
	Mark A	2.50 mm (0.0984 in.)
	Mark B	2.55 mm (0.1004 in.)
	Mark C	2.60 mm (0.1024 in.)
	Mark D	2.65 mm (0.1043 in.)
	Mark E	2.70 mm (0.1063 in.)
	Mark F	2.75 mm (0.1083 in.)
	Mark G	2.80 mm (0.1102 in.)
	Mark H	2.85 mm (0.1122 in.)

TORQUE SPECIFICATIONS

Automatic Transaxle Assembly

Part Tightened		N*m	kgf*cm	ft*lbf
Park/neutral position switch	Nut	6.9	70	61 in.*lbf
	Bolt	5.4	55	48 in.*lbf
Control shaft lever x Control shaft		13	133	10
Shift control cable x Control shaft lever		15	153	11
Transaxle housing x Engine block	Upper side bolt	64	653	47
	Lower side bolt A	37	377	27
	Lower side bolt B	46	470	34
Torque converter clutch x Drive plate		41	418	30
Flywheel housing under cover x Automatic transaxle		7.8	80	69 in.*lbf
Front engine mounting bracket x Transaxle		64	653	47
Rear engine mounting bracket x Transaxle		45	459	33
Engine mounting bracket LH x Transaxle		64	653	47
Oil filler tube x Transaxle Oil filler tube x Front engine mounting bracket		5.5	56	49 in.*lbf
Control cable bracket No. 1 x Transaxle		12	122	9
Control cable bracket No. 2 x Transaxle		12	122	9
Oil cooler inlet elbow x Transaxle		27	276	20
Oil cooler outlet elbow x Transaxle		27	276	20
Starter x Transaxle		37	377	27
Starter wire x Starter		9.8	100	88 in.*lbf
Speed sensor (NC) x Transaxle		11	112	8
Speed sensor (NT) x Transaxle		11	112	8
Drain plug x Oil pan		47	479	35
Transmission wire x Transaxle		5.4	55	48 in.*lbf
ATF temperature sensor x Valve body		6.6	67	58 in.*lbf
Oil pan x Transaxle		7.8	80	69 in.*lbf
Solenoid valve x Valve body	SL2, DSL, S4	11	110	8
	SL1, SL3	6.6	67	58 in.*lbf
Valve body x Transaxle		11	112	8
Oil strainer x Valve body		11	112	8
Floor shift assembly x Body		12	122	9
Control cable clamp x Engine mounting insulator		12	122	9
Differential gear lube apply tube x Transaxle housing		9.8	100	87 in.*lbf
Front planetary gear lock nut		280	3,355	207
Brake apply tube clamp x Transaxle case		5.4	55	48 in.*lbf
Transaxle case No. 1 plug x Transaxle rear cover		7.4	75	65 in.*lbf
Transaxle rear cover x Transaxle case	Bolt A	19	194	14
	Other bolt	25	255	18
Parking lock pawl shaft x Transaxle case		9.8	100	87 in.*lbf
Oil pump assembly x Transaxle case		22	226	16
Transaxle housing x Transaxle case	Bolt A	22	254	16
	Bolt B	29	295	21
	Bolt C	29	295	21
	Bolt D	22	254	16
Automatic transmission case plug x Transaxle housing		7.4	75	65 in.*lbf
Automatic transmission case plug x Transaxle case		7.4	75	65 in.*lbf

Part Tightened		N*m	kgf*cm	ft*lbf
Parking lock pawl bracket x Transaxle case		20	205	15
Manual detent spring x Transaxle case	Bolt A	20	205	15
	Bolt B	12	120	9
Automatic transaxle oil pan sub-assembly x Transaxle case		7.6	77	67 in.*lbf
Speed sensor x Transaxle case		11	112	8
Park/neutral start switch x Control shaft lever		13	130	9
Speedometer driven hole cover sub-assembly x Transaxle case		5.5	56	49 in.*lbf
Oil pump body x Stator shaft assembly		9.8	100	87 in.*lbf
Front differential case x Front differential ring gear		95	969	70

U151E AUTOMATIC TRANSMISSION

SERVICE DATA

Automatic Transaxle Assembly

Line pressure (Wheel locked) AT stall (Throttle valve fully opened)	D position	931 to 1,031 kPa (9.1 to 10.5 kgf*cm^2, 129 to 149 psi)
	R position	1,768 to 1,968 kPa (18.0 to 20.0 kgf/cm^2, 284 to 256 psi)
Engine stall revolution	D positions	2,030 to 2,330 rpm
Time lag	N → D position	Less than 1.2 seconds
	N → R position	Less than 1.5 seconds
Engine idle speed (A/C OFF)	N position	600 to 700 rpm
Drive plate runout	Maximum.	0.20 mm (0.0079 in.)
Differential side oil seal depth		0 +-0.5 mm (0 +-0.020 in.)
Shift point		
D position (Throttle valve fully opened)	1 → 2	50 to 58 km/h (31 to 36 mph)
	2 → 3	99 to 108 km/h (62 to 67 mph)
	3 → 4	161 to 176 km/h (100 to 109 mph)
	4 → 5	239 to 257 km/h (149 to 160 mph)
	5 → 4	230 to 247 km/h (143 to 153 mph)
	4 → 3	154 to 169 km/h (96 to 105 mph)
	3 → 2	94 to 102 km/h (58 to 63 mph)
	2 → 1	35 to 42 km/h (22 to 26 mph)
D position (Throttle valve fully closed)	4 → 5	68 to 75 km/h (42 to 47 mph)
	5 → 4	40 to 47 km/h (25 to 29 mph)
3 position (Throttle valve fully opened)	1 → 2	50 to 58 km/h (31 to 36 mph)
	2 → 3	99 to 108 km/h (62 to 67 mph)
	4 → 3	154 to 169 km/h (96 to 105 mph)
	3 → 2	94 to 102 km/h (58 to 63 mph)
	2 → 1	35 to 42 km/h (22 to 26 mph)
2 position (Throttle valve fully opened)	1 → 2	50 to 58 km/h (31 to 36 mph)
	3 → 2	94 to 102 km/h (58 to 63 mph)
	2 → 1	35 to 42 km/h (22 to 26 mph)
L position (Throttle valve fully opened)	2 → 1	35 to 42 km/h (22 to 26 mph)
Lock-up point		
D position (Throttle valve opening 5 %)	Lock-up ON 5 → 5L	66 to 74 km/h (41 to 46 mph)
	Lock-up OFF 5L → 5	64 to 72 km/h (40 to 45 mph)
	Lock-up ON 4 → 4L	106 to 116 km/h (66 to 72 mph)
	Lock-up OFF 4L → 4	103 to 112 km/h (64 to 70 mph)
	Lock-up ON 3 → 3L	64 to 73 km/h (40 to 45 mph)
	Lock-up OFF 3L → 3	62 to 70 km/h (39 to 43 mph)
Input shaft		
End play	0.262 to 1.244 mm (0.0103 to 0.0490 in.)	

SS

Multiple disc clutch clutch hub		
Inside diameter	STD	23.03 to 23.05 mm (0.9067 to 0.9075 in.)
	Max.	23.09 mm (0.9091 in.)
Underdrive brake		
Return spring free length	13.24 mm (0.5213 in.)	
Pack clearance	1.81 to 2.20 mm (0.0713 to 0.0866 in.)	
Flange thickness	Mark 1	3.0 mm (0.118 in.)
	Mark 2	3.2 mm (0.126 in.)
	Mark 3	3.4 mm (0.134 in.)
	Mark 4	3.1 mm (0.122 in.)
	Mark 5	3.3 mm (0.130 in.)
2nd brake		
Pack clearance	0.62 to 0.91 mm (0.0244 to 0.0358 in.)	
Return spring free length	16.61 mm (0.6539 in.)	
Flange thickness	Mark 1	3.0 mm (0.118 in.)
	Mark 2	3.1 mm (0.122 in.)
	Mark 3	3.2 mm (0.126 in.)
	Mark 4	3.3 mm (0.130 in.)
	Mark 5	3.4 mm (0.134 in.)
	Mark 6	3.5 mm (0.138 in.)
	Mark 7	3.6 mm (0.142 in.)
1st and reverse brake		
Pack clearance	1.16 to 1.35 mm (0.0457 to 0.0531 in.)	
Return spring free length	17.61 mm (0.6933 in.)	
Flange thickness	Mark 1	1.8 mm (0.071 in.)
	Mark 2	1.9 mm (0.075 in.)
	Mark 3	2.0 mm (0.079 in.)
	Mark 4	2.1 mm (0.083 in.)
	Mark 5	2.2 mm (0.087 in.)
	Mark 6	2.3 mm (0.091 in.)
	Mark 7	2.4 mm (0.094 in.)
	Mark 8	2.5 mm (0.098 in.)

OIL PUMP

Body clearance	STD	0.10 to 0.17 mm (0.0039 to 0.0067 in.)
	Max.	0.17 mm (0.0067 in.)
Tip clearance	STD	0.07 to 0.15 mm (0.0028 to 0.0059 in.)
	Max.	0.15 mm (0.0059 in.)
Side clearance	STD	0.02 to 0.05 mm (0.0008 to 0.0020 in.)
	Max.	0.05 mm (0.0020 in.)
Drive gear thickness	Mark A	11.690 to 11.699 mm (0.4602 to 0.4606 in.)
	Mark B	11.700 to 11.709 mm (0.4606 to 0.4610 in.)
	Mark C	11.710 to 11.720 mm (0.4610 to 0.4614 in.)
	Mark D	11.721 to 11.730 mm (0.4615 to 0.4618 in.)
	Mark E	11.731 to 11.740 mm (0.4619 to 0.4622 in.)

Driven gear thickness	Mark A	11.690 to 11.699 mm (0.4602 to 0.4606 in.)
	Mark B	11.700 to 11.709 mm (0.4606 to 0.4610 in.)
	Mark C	11.710 to 11.720 mm (0.4610 to 0.4614 in.)
	Mark D	11.721 to 11.730 mm (0.4615 to 0.4618 in.)
	Mark E	11.731 to 11.740 mm (0.4619 to 0.4622 in.)
Pump body bushing inside diameter	STD	38.113 to 38.138 mm (1.5005 to 1.5015 in.)
	Max.	38.188 mm (1.5035 in.)
Stator shaft bushing inside diameter	STD	21.500 to 21.526 mm (0.8465 to 0.8475 in.)
	Max	21.57 mm (0.8492 in.)

SECOND BRAKE PISTON

Piston return spring free length	16.61 mm (0.6539 in.)

FORWARD CLUTCH

Pack clearance		1.00 to 1.25 mm (0.0394 to 0.4921 in.)
Piston return spring free length		26.74 mm (1.0528 in.)
Flange thickness	No. 1	3.00 mm (0.1181 in.)
	No. 2	3.15 mm (0.1240 in.)
	No. 3	3.30 mm (0.1299 in.)
	No. 4	3.45 mm (0.1358 in.)
	No. 5	3.60 mm (0.1417 in.)

DIRECT CLUTCH

Pack clearance		0.61 to 0.83 mm (0.0240 to 0.0327 in.)
Piston return spring free length		25.91 mm (1.0201 in.)
Flange thickness (Direct clutch)	Mark 1	3.0 mm (0.118 in.)
	Mark 2	3.1 mm (0.122 in.)
	Mark 3	3.2 mm (0.126 in.)
	Mark 4	3.3 mm (0.130 in.)
	Mark 5	3.4 mm (0.134 in.)
	Mark 6	3.5 mm (0.138 in.)
	Mark 7	3.6 mm (0.142 in.)

UNDERDRIVE PLANETARY GEAR

Turning torque (at 60 rpm)	0.50 to 1.42 N*m (5.1 to 14.5 kgf*cm, 4.4 to 12.6 in.*lbf)

UNDERDRIVE CLUTCH

Pack clearance		1.51 to 1.71 mm (0.0594 to 0.0673 in.)
Piston return spring free length		17.14 mm (0.6752 in.)
Flange thickness (Underdrive clutch))	Mark 1	3.0 mm (0.118 in.)
	Mark 2	3.2 mm (0.126 in.)
	Mark 3	3.4 mm (0.134 in.)
	Mark 3	3.6 mm (0.122 in.)
	Mark 3	3.8 mm (0.130 in.)
Underdrive clutch drum bushing inside diameter	STD	37.06 to 37.08 mm (1.4591 to 1.4598 in.)
	Max.	37.13 mm (1.4618 in.)

TRANSMISSION VALVE BODY ASSEMBLY

Valve body assembly installation bolt length	25 mm (0.984 in.) for bolt A
	57.0 mm (2.244 in.) for bolt B
	41 mm (1.614 in.) for bolt C
Detente spring installation bolt length	27 mm (1.063 in.) for bolt A
	16 mm (0.630 in.) for bolt B

DIFFERENTIAL

Side gear backlash		0.05 to 0.20 mm (0.0020 to 0.0079 in.)
Thrust washer thickness	Mark -	1.625 mm (0.0640 in.)
	Mark -	1.725 mm (0.0679 in.)
	Mark -	1.825 mm (0.0719 in.)
Preload (turning torque at 60 rpm))	New bearing	0.20 to 0.69 N*m (2.0 to 7.0 kgf*cm, 1.8 to 6.1 in.*lbf)
	Using bearing	0.10 to 0.35 N*m (1.0 to 3.6 kgf*cm, 0.9 to 3.1 in.*lbf)
Shim thickness	Mark 0	2.00 mm (0.0787 in.)
	Mark 1	2.05 mm (0.0807 in.)
	Mark 2	2.10 mm (0.0827 in.)
	Mark 3	2.15 mm (0.0846 in.)
	Mark 4	2.20 mm (0.0866 in.)
	Mark 5	2.25 mm (0.0886 in.)
	Mark 6	2.30 mm (0.0906 in.)
	Mark 7	2.35 mm (0.0925 in.)
	Mark 8	2.40 mm (0.0945 in.)
	Mark 9	2.45 mm (0.0965 in.)
	Mark A	2.50 mm (0.0984 in.)
	Mark B	2.55 mm (0.1004 in.)
	Mark C	2.60 mm (0.1024 in.)
	Mark D	2.65 mm (0.1043 in.)
	Mark E	2.70 mm (0.1063 in.)
	Mark F	2.75 mm (0.1083 in.)
	Mark G	2.80 mm (0.1102 in.)
	Mark H	2.85 mm (0.1122 in.)
	Mark J	2.025 mm (0.07972 in.)
	Mark K	2.075 mm (0.08169 in.)
	Mark L	2.125 mm (0.08366 in.)
	Mark M	2.175 mm (0.08563 in.)
	Mark N	2.225 mm (0.08760 in.)
	Mark P	2.275 mm (0.08957 in.)
	Mark Q	2.325 mm (0.09154 in.)
	Mark R	2.375 mm (0.09350 in.)
	Mark S	2.425 mm (0.09547 in.)
	Mark T	2.475 mm (0.09744 in.)
	Mark U	2.525 mm (0.09941 in.)
	Mark V	2.575 mm (0.10138 in.)
	Mark W	2.625 mm (0.10335 in.)
	Mark X	2.675 mm (0.10531 in.)
	Mark Y	2.725 mm (0.10728 in.)
	Mark AA	2.775 mm (0.10925 in.)
	Mark AB	2.825 mm (0.11122 in.)

TORQUE SPECIFICATIONS

Automatic Transaxle Assembly

Part Tightened		N*m	kgf*cm	ft*lbf
Park/neutral position switch	Nut	6.9	70	61 in.*lbf
	Bolt	5.4	55	48 in.*lbf
Control shaft lever x Control shaft		13	133	10
Shift control cable x Control shaft lever		15	153	11
Transaxle housing x Engine block	Upper side bolt	64	653	47
	Lower side bolt A	37	377	27
	Lower side bolt B	46	470	34
Torque converter clutch x Drive plate		41	418	30
Flywheel housing under cover x Automatic transaxle		7.8	80	69 in.*lbf
Front engine mounting bracket x Transaxle		64	653	47
Rear engine mounting bracket x Transaxle		45	459	33
Engine mounting bracket LH x Transaxle		64	653	47
Oil filler tube x Transaxle Oil filler tube x Front engine mounting bracket		5.5	56	49 in.*lbf
Control cable bracket No. 1 x Transaxle		12	122	9
Control cable bracket No. 2 x Transaxle		12	122	9
Oil cooler inlet elbow x Transaxle		27	276	20
Oil cooler outlet elbow x Transaxle		27	276	20
Starter x Transaxle		37	377	27
Starter wire x Starter		9.8	100	88 in.*lbf
Speed sensor (NC) x Transaxle		11	112	8
Speed sensor (NT) x Transaxle		11	112	8
Drain plug x Oil pan		47	479	35
Transmission wire x Transaxle		5.4	55	48 in.*lbf
ATF temperature sensor x Valve body		6.6	67	58 in.*lbf
Oil pan x Transaxle		7.8	80	69 in.*lbf
Solenoid valve x Valve body	SL2, DSL, S4	11	110	8
	SL1, SL3	6.6	67	58 in.*lbf
Valve body x Transaxle		11	112	8
Oil strainer x Valve body		11	112	8
Floor shift assembly x Body		12	122	9
Control cable clamp x Engine mounting insulator		12	122	9
Differential gear lube apply tube x Transaxle housing		9.8	100	87 in.*lbf
Front planetary gear lock nut		280	3,355	207
Brake apply tube clamp x Transaxle case		5.4	55	48 in.*lbf
Transaxle case No. 1 plug x Transaxle rear cover		7.4	75	65 in.*lbf
Transaxle rear cover x Transaxle case	Bolt A	19	194	14
	Other bolt	25	255	18
Parking lock pawl shaft x Transaxle case		9.8	100	87 in.*lbf
Oil pump assembly x Transaxle case		22	226	16
Transaxle housing x Transaxle case	Bolt A	22	254	16
	Bolt B	29	295	21
	Bolt C	29	295	21
	Bolt D	22	254	16
Automatic transmission case plug x Transaxle housing		7.4	75	65 in.*lbf

Part Tightened		N*m	kgf*cm	ft*lbf
Automatic transmission case plug x Transaxle case		7.4	75	65 in.*lbf
Parking lock pawl bracket x Transaxle case		20	205	15
Manual detent spring x Transaxle case	Bolt A	20	205	15
	Bolt B	12	120	9
Automatic transaxle oil pan sub-assembly x Transaxle case		7.6	77	67 in.*lbf
Speed sensor x Transaxle case		11	112	8
Park/neutral start switch x Control shaft lever		13	130	9
Speedometer driven hole cover sub-assembly x Transaxle case		5.5	56	49 in.*lbf
Oil pump body x Stator shaft assembly		9.8	100	87 in.*lbf
Front differential case x Front differential ring gear		95	969	70

U151F AUTOMATIC TRANSMISSION

SERVICE DATA

Automatic Transaxle Assembly

Line pressure (Wheel locked) AT stall (Throttle valve fully opened)	D position	931 to 1,031 kPa (9.1 to 10.5 kgf*cm^2, 129 to 149 psi)
	R position	1,768 to 1,968 kPa (18.0 to 20.0 kgf/cm^2, 284 to 256 psi)
Engine stall revolution	D positions	2,030 to 2,330 rpm
Time lag	N → D position	Less than 1.2 seconds
	N → R position	Less than 1.5 seconds
Engine idle speed (A/C OFF)	N position	600 to 700 rpm
Drive plate runout	Maximum.	0.20 mm (0.0079 in.)
Differential side oil seal depth		0 +-0.5 mm (0 +-0.020 in.)
Shift point		
D position (Throttle valve fully opened)	1 → 2	50 to 58 km/h (31 to 36 mph)
	2 → 3	99 to 108 km/h (62 to 67 mph)
	3 → 4	161 to 176 km/h (100 to 109 mph)
	4 → 5	239 to 257 km/h (149 to 160 mph)
	5 → 4	230 to 247 km/h (143 to 153 mph)
	4 → 3	154 to 169 km/h (96 to 105 mph)
	3 → 2	94 to 102 km/h (58 to 63 mph)
	2 → 1	35 to 42 km/h (22 to 26 mph)
D position (Throttle valve fully closed)	4 → 5	68 to 75 km/h (42 to 47 mph)
	5 → 4	40 to 47 km/h (25 to 29 mph)
3 position (Throttle valve fully opened)	1 → 2	50 to 58 km/h (31 to 36 mph)
	2 → 3	99 to 108 km/h (62 to 67 mph)
	4 → 3	154 to 169 km/h (96 to 105 mph)
	3 → 2	94 to 102 km/h (58 to 63 mph)
	2 → 1	35 to 42 km/h (22 to 26 mph)
2 position (Throttle valve fully opened)	1 → 2	50 to 58 km/h (31 to 36 mph)
	3 → 2	94 to 102 km/h (58 to 63 mph)
	2 → 1	35 to 42 km/h (22 to 26 mph)
L position (Throttle valve fully opened)	2 → 1	35 to 42 km/h (22 to 26 mph)
Lock-up point		
D position (Throttle valve opening 5 %)	Lock-up ON 5 → 5L	66 to 74 km/h (41 to 46 mph)
	Lock-up OFF 5L → 5	64 to 72 km/h (40 to 45 mph)
	Lock-up ON 4 → 4L	106 to 116 km/h (66 to 72 mph)
	Lock-up OFF 4L → 4	103 to 112 km/h (64 to 70 mph)
	Lock-up ON 3 → 3L	64 to 73 km/h (40 to 45 mph)
	Lock-up OFF 3L → 3	62 to 70 km/h (39 to 43 mph)
Input shaft		
End play	0.262 to 1.244 mm (0.0103 to 0.0490 in.)	

Multiple disc clutch clutch hub		
Inside diameter	STD	23.03 to 23.05 mm (0.9067 to 0.9075 in.)
	Max.	23.09 mm (0.9091 in.)
Underdrive brake		
Return spring free length	13.24 mm (0.5213 in.)	
Pack clearance	1.81 to 2.20 mm (0.0713 to 0.0866 in.)	
Flange thickness	Mark 1	3.0 mm (0.118 in.)
	Mark 2	3.2 mm (0.126 in.)
	Mark 3	3.4 mm (0.134 in.)
	Mark 4	3.1 mm (0.122 in.)
	Mark 5	3.3 mm (0.130 in.)
2nd brake		
Pack clearance	0.62 to 0.91 mm (0.0244 to 0.0358 in.)	
Return spring free length	16.61 mm (0.6539 in.)	
Flange thickness	Mark 1	3.0 mm (0.118 in.)
	Mark 2	3.1 mm (0.122 in.)
	Mark 3	3.2 mm (0.126 in.)
	Mark 4	3.3 mm (0.130 in.)
	Mark 5	3.4 mm (0.134 in.)
	Mark 6	3.5 mm (0.138 in.)
	Mark 7	3.6 mm (0.142 in.)
1st and reverse brake		
Pack clearance	1.16 to 1.35 mm (0.0457 to 0.0531 in.)	
Return spring free length	17.61 mm (0.6933 in.)	
Flange thickness	Mark 1	1.8 mm (0.071 in.)
	Mark 2	1.9 mm (0.075 in.)
	Mark 3	2.0 mm (0.079 in.)
	Mark 4	2.1 mm (0.083 in.)
	Mark 5	2.2 mm (0.087 in.)
	Mark 6	2.3 mm (0.091 in.)
	Mark 7	2.4 mm (0.094 in.)
	Mark 8	2.5 mm (0.098 in.)

OIL PUMP

Body clearance	STD	0.10 to 0.17 mm (0.0039 to 0.0067 in.)
	Max.	0.17 mm (0.0067 in.)
Tip clearance	STD	0.07 to 0.15 mm (0.0028 to 0.0059 in.)
	Max.	0.15 mm (0.0059 in.)
Side clearance	STD	0.02 to 0.05 mm (0.0008 to 0.0020 in.)
	Max.	0.05 mm (0.0020 in.)
Drive gear thickness	Mark A	11.690 to 11.699 mm (0.4602 to 0.4606 in.)
	Mark B	11.700 to 11.709 mm (0.4606 to 0.4610 in.)
	Mark C	11.710 to 11.720 mm (0.4610 to 0.4614 in.)
	Mark D	11.721 to 11.730 mm (0.4615 to 0.4618 in.)
	Mark E	11.731 to 11.740 mm (0.4619 to 0.4622 in.)

Driven gear thickness	Mark A	11.690 to 11.699 mm (0.4602 to 0.4606 in.)
	Mark B	11.700 to 11.709 mm (0.4606 to 0.4610 in.)
	Mark C	11.710 to 11.720 mm (0.4610 to 0.4614 in.)
	Mark D	11.721 to 11.730 mm (0.4615 to 0.4618 in.)
	Mark E	11.731 to 11.740 mm (0.4619 to 0.4622 in.)
Pump body bushing inside diameter	STD	38.113 to 38.138 mm (1.5005 to 1.5015 in.)
	Max.	38.188 mm (1.5035 in.)
Stator shaft bushing inside diameter	STD	21.500 to 21.526 mm (0.8465 to 0.8475 in.)
	Max	21.57 mm (0.8492 in.)

SECOND BRAKE PISTON

Piston return spring free length	16.61 mm (0.6539 in.)

FORWARD CLUTCH

Pack clearance		1.00 to 1.25 mm (0.0394 to 0.4921 in.)
Piston return spring free length		26.74 mm (1.0528 in.)
Flange thickness	No. 1	3.00 mm (0.1181 in.)
	No. 2	3.15 mm (0.1240 in.)
	No. 3	3.30 mm (0.1299 in.)
	No. 4	3.45 mm (0.1358 in.)
	No. 5	3.60 mm (0.1417 in.)

DIRECT CLUTCH

Pack clearance		0.61 to 0.83 mm (0.0240 to 0.0327 in.)
Piston return spring free length		25.91 mm (1.0201 in.)
Flange thickness (Direct clutch)	Mark 1	3.0 mm (0.118 in.)
	Mark 2	3.1 mm (0.122 in.)
	Mark 3	3.2 mm (0.126 in.)
	Mark 4	3.3 mm (0.130 in.)
	Mark 5	3.4 mm (0.134 in.)
	Mark 6	3.5 mm (0.138 in.)
	Mark 7	3.6 mm (0.142 in.)

UNDERDRIVE PLANETARY GEAR

Turning torque (at 60 rpm)	0.50 to 1.42 N*m (5.1 to 14.5 kgf*cm, 4.4 to 12.6 in.*lbf)

UNDERDRIVE CLUTCH

Pack clearance		1.51 to 1.71 mm (0.0594 to 0.0673 in.)
Piston return spring free length		17.14 mm (0.6752 in.)
Flange thickness (Underdrive clutch))	Mark 1	3.0 mm (0.118 in.)
	Mark 2	3.2 mm (0.126 in.)
	Mark 3	3.4 mm (0.134 in.)
	Mark 3	3.6 mm (0.122 in.)
	Mark 3	3.8 mm (0.130 in.)
Underdrive clutch drum bushing inside diameter	STD	37.06 to 37.08 mm (1.4591 to 1.4598 in.)
	Max.	37.13 mm (1.4618 in.)

TRANSMISSION VALVE BODY ASSEMBLY

Valve body assembly installation bolt length	25 mm (0.984 in.) for bolt A
	57.0 mm (2.244 in.) for bolt B
	41 mm (1.614 in.) for bolt C
Detente spring installation bolt length	27 mm (1.063 in.) for bolt A
	16 mm (0.630 in.) for bolt B

DIFFERENTIAL

Side gear backlash		0.05 to 0.20 mm (0.0020 to 0.0079 in.)
Thrust washer thickness	Mark -	1.625 mm (0.0640 in.)
	Mark -	1.725 mm (0.0679 in.)
	Mark -	1.825 mm (0.0719 in.)
Preload (turning torque at 60 rpm))	New bearing	0.20 to 0.69 N*m (2.0 to 7.0 kgf*cm, 1.8 to 6.1 in.*lbf)
	Using bearing	0.10 to 0.35 N*m (1.0 to 3.6 kgf*cm, 0.9 to 3.1 in.*lbf)
Shim thickness	Mark 0	2.00 mm (0.0787 in.)
	Mark 1	2.05 mm (0.0807 in.)
	Mark 2	2.10 mm (0.0827 in.)
	Mark 3	2.15 mm (0.0846 in.)
	Mark 4	2.20 mm (0.0866 in.)
	Mark 5	2.25 mm (0.0886 in.)
	Mark 6	2.30 mm (0.0906 in.)
	Mark 7	2.35 mm (0.0925 in.)
	Mark 8	2.40 mm (0.0945 in.)
	Mark 9	2.45 mm (0.0965 in.)
	Mark A	2.50 mm (0.0984 in.)
	Mark B	2.55 mm (0.1004 in.)
	Mark C	2.60 mm (0.1024 in.)
	Mark D	2.65 mm (0.1043 in.)
	Mark E	2.70 mm (0.1063 in.)
	Mark F	2.75 mm (0.1083 in.)
	Mark G	2.80 mm (0.1102 in.)
	Mark H	2.85 mm (0.1122 in.)
	Mark J	2.025 mm (0.07972 in.)
	Mark K	2.075 mm (0.08169 in.)
	Mark L	2.125 mm (0.08366 in.)
	Mark M	2.175 mm (0.08563 in.)
	Mark N	2.225 mm (0.08760 in.)
	Mark P	2.275 mm (0.08957 in.)
	Mark Q	2.325 mm (0.09154 in.)
	Mark R	2.375 mm (0.09350 in.)
	Mark S	2.425 mm (0.09547 in.)
	Mark T	2.475 mm (0.09744 in.)
	Mark U	2.525 mm (0.09941 in.)
	Mark V	2.575 mm (0.10138 in.)
	Mark W	2.625 mm (0.10335 in.)
	Mark X	2.675 mm (0.10531 in.)
	Mark Y	2.725 mm (0.10728 in.)
	Mark AA	2.775 mm (0.10925 in.)
	Mark AB	2.825 mm (0.11122 in.)

TORQUE SPECIFICATIONS

Automatic Transaxle Assembly

Part Tightened		N*m	kgf*cm	ft.*lbf
Park/neutral position switch	Nut	6.9	70	61 in.*lbf
	Bolt	5.4	55	48 in.*lbf
Control shaft lever x Control shaft		12.7	130	9
Shift control cable x Control shaft lever		15	153	11
Transaxle housing x Engine block	A bolt	64	653	47
	B bolt	46	470	34
	Lower side bolt	37	377	27
Torque converter clutch x Drive plate		41	418	30
Engine mounting bracket FR x Transaxle		64	653	47
Oil filler tube x Transaxle		5.5	56	49 in.*lbf
Control cable bracket No.1 x Transaxle		12	122	9
Oil cooler tube clamp x Control cable bracket		5.4	55	48 in.*lbf
Oil cooler inlet tube x Transaxle		34	347	25
Oil cooler outlet tube x Transaxle		34	347	25
Starter x Transaxle		37	377	27
Wire harness x Transaxle		13	133	10
Speed sensor (NC) x Transaxle		11	115	8
Speed sensor (NT) x Transaxle		11	112	8
Air cleaner x No. 1 air cleaner inlet		5.0	51	44 in.*lbf
Drain plug x Oil pan		47	479	35
Transmission wire x Transaxle		5.4	55	48 in.*lbf
ATF temperature sensor x Valve body		6.6	67	58 in.*lbf
Oil pan x Transaxle		7.6	77	67 in.*lbf
Solenoid valve x Valve body	Bolt A	6.6	67	58 in.*lbf
	Bolt B	11	110	8
Valve body x Transaxle		10.8	110	8
Oil strainer x Valve body		11	110	8
Floor shift assembly x Body		12	120	9
Control cable x Body		5.0	51	44 in.*lbf
Engine mount bracket RR x Transfer stiffener, plate RH		45	459	34

Automatic Transaxle Unit

Part Tightened		N*m	kgf*cm	ft.*lbf
Differential gear lube apply tube x Transaxle housing		9.8	100	7
Front planetary gear lock nut		268	2,732	198
Brake apply tube clamp x Transaxle case		5.4	55	48 in.*lbf
Transaxle case No. 1 plug x Transaxle rear cover		7.4	75	65 in.*lbf
Transaxle rear cover plate x transaxle rear cover sub-assembly		7.5	76	66 in.*lbf
Transaxle rear cover x Transaxle case	Bolt A	18.6	190	14
	Other bolt	24.5	250	18
Pawl shaft clamp x Transaxle case		9.8	100	7
Oil pump assembly x Transaxle case		22	226	16
Transaxle housing x Transaxle case	Bolt A	22.1	225	16.3
	Bolt B, C	29.4	300	21.7
Transaxle case No. 1 plug x Transaxle housing		7.4	75	65 in.*lbf
Parking lock pawl bracket x Transaxle case		20	205	15
Detent spring x Transaxle case	Bolt A	20	205	15
	Bolt B	12	120	9

Part Tightened	N*m	kgf*cm	ft.*lbf
Solenoid wire retaining bolt x Transaxle housing	5.4	55	48 in.*lbf
Transmission valve body x Transaxle case	11	110	8
ATF temperature sensor clamp x Valve body	6.6	67	58 in.*lbf
Valve body oil strainer x Transmission valve	11	110	8
Automatic transaxle oil pan sub-assembly x Transaxle case	7.8	80	69 in.*lbf
Speed sensor x Transaxle case	11.3	115	8
Transmission revolution sensor x Transaxle case	11.3	115	8
Oil cooler tube union x Transaxle case	27	276	20
Oil cooler tube union x Transaxle case	27	280	20
Speedometer driven hole cover sub-assembly x Transaxle case	7.0	70	61
Oil pump body x Stator shaft assembly	9.8	100	7
Under drive planetary gear x Lock nut	280	2,855	207
Line pressure control solenoid assembly x Transmission valve body assembly	11	110	8
No. 1 clutch control solenoid assembly x Transmission valve body assembly	11	110	8
Automatic transmission 3 way solenoid assembly x Transmission valve body assembly	11	110	8
No. 2 clutch control solenoid assembly x Transmission valve body assembly	11	110	8
No. 2 transmission 3 way solenoid assembly x Transmission valve body assembly	11	110	8
Front differential case x Front differential ring gear	95.1	970	70

U241E AUTOMATIC TRANSAXLE

SERVICE DATA

AUTOMATIC TRANSMISSION ASSEMBLY

Line pressure (Wheel locked) AT stall (Throttle valve fully opened)	D position	931 to 1,031 kPa (9.1 to 10.5 kgf*cm^2, 129 to 149 psi)
	R position	1,768 to 1,968 kPa (18.0 to 20.0 kgf/cm^2, 284 to 256 psi)
Engine stall revolution	D positions	2,150 to 2,450 rpm
Time lag	N → D position	Less than 1.2 seconds
	N → R position	Less than 1.2 seconds
Engine idle speed (A/C OFF)	N position	610 to 710 rpm
Drive plate runout	Maximum.	0.20 mm (0.0079 in.)
Differential oil seal drive in depth	LH side	5.4 to 6.4 mm (0.213 to 0.252 in.)
	RH side	1.5 to 2.5 mm (0.059 to 0.098 in.)
Shift point		
D position (Throttle valve fully opened)	1 → 2	62 to 70 km/h (39 to 43 mph)
	2 → 3	116 to 124 km/h (72 to 77 mph)
	3 → 4	187 to 200 km/h (114 to 124 mph)
	4 → 3	178 to 190 km/h (111 to 118 mph)
	3 → 2	107 to 114 km/h (66 to 71 mph)
	2 → 1	52 to 59 km/h (32 to 37 mph)
D position (Throttle valve fully closed)	3 → 4	42 to 48 km/h (26 to 30 mph)
	4 → 3	19 to 24 km/h (12 to 15 mph)
2 position (Throttle valve fully opened)	1 → 2	62 to 70 km/h (39 to 43 mph)
	3 → 2	116 to 123 km/h (72 to 76 mph)
	2 → 1	34 to 40 km/h (21 to 25 mph)
L position (Throttle valve fully opened)	3 → 2	116 to 123 km/h (72 to 76 mph)
	2 → 1	58 to 64 km/h (36 to 40 mph)
Lock-up point		
D position (Throttle valve opening 5 %)	Lock-up ON 4 → 4L	53 to 60 km/h (33 to 37 mph)
	Lock-up OFF 4L → 4	51 to 58 km/h (32 to 36 mph)
Input shaft		
End play	0.262 to 1.249 mm (0.0103 to 0.0492 in.)	
Multiple disc clutch clutch hub		
Inside diameter	STD	23.025 to 23.045 mm (0.9065 to 0.9073 in.)
	Max.	23.09 mm (0.9091 in.)
Underdrive brake		
Return spring free length	14.04 mm (0.5528 in.)	
Pack clearance	1.81 to 2.20 mm (0.0713 to 0.0866 in.)	
Flange thickness	Mark 1	3.0 mm (0.118 in.)
	Mark 2	3.2 mm (0.126 in.)
	Mark 3	3.4 mm (0.134 in.)
2nd brake		
Pack clearance	0.62 to 0.91 mm (0.0244 to 0.0358 in.)	
Return spring free length	16.61 mm (0.6539 in.)	

Flange thickness	Mark 1	3.0 mm (0.118 in.)
	Mark 2	3.1 mm (0.122 in.)
	Mark 3	3.2 mm (0.126 in.)
	Mark 4	3.3 mm (0.130 in.)
	Mark 5	3.4 mm (0.134 in.)
	Mark 6	3.5 mm (0.138 in.)
	Mark 7	3.6 mm (0.142 in.)
1st and reverse brake		
Pack clearance	1.10 to 1.29 mm (0.0433 to 0.0508 in.)	
Return spring free length	15.51 mm (0.6106 in.)	
Flange thickness	Mark 1	1.8 mm (0.071 in.)
	Mark 2	1.9 mm (0.075 in.)
	Mark 3	2.0 mm (0.079 in.)
	Mark 4	2.1 mm (0.083 in.)
	Mark 5	2.2 mm (0.087 in.)
	Mark 6	2.3 mm (0.091 in.)
	Mark 7	2.4 mm (0.094 in.)
	Mark 8	2.5 mm (0.098 in.)

OIL PUMP

Body clearance	STD	0.10 to 0.17 mm (0.0039 to 0.0067 in.)
	Max.	0.17 mm (0.0067 in.)
Tip clearance	STD	0.07 to 0.15 mm (0.0028 to 0.0059 in.)
	Max.	0.15 mm (0.0059 in.)
Side clearance	STD	0.02 to 0.05 mm (0.0008 to 0.0020 in.)
	Max.	0.05 mm (0.0020 in.)
Drive gear thickness	Mark 1	10.690 to 10.699 mm (0.4209 to 0.4212 in.)
	Mark 2	10.700 to 10.709 mm (0.4213 to 0.4216 in.)
	Mark 3	10.710 to 10.720 mm (0.4217 to 0.4220 in.)
	Mark 4	10.721 to 10.730 mm (0.4221 to 0.4224 in.)
	Mark 5	10.731 to 10.740 mm (0.4225 to 0.4228 in.)
Driven gear thickness	Mark 1	10.690 to 10.699 mm (0.4209 to 0.4212 in.)
	Mark 2	10.700 to 10.709 mm (0.4213 to 0.4216 in.)
	Mark 3	10.710 to 10.720 mm (0.4217 to 0.4220 in.)
	Mark 4	10.721 to 10.730 mm (0.4221 to 0.4224 in.)
	Mark 5	10.731 to 10.740 mm (0.4225 to 0.4228 in.)
Pump body bushing inside diameter	STD	38.113 to 38.138 mm (1.50050 to 1.50149 in.)
	Max.	38.138 mm (1.50149 in.)
Oil seal in depth	STD	0 +- 0.5 mm (0 +- 0.020 in.)
Stator shaft bushing inside diameter	STD	21.500 to 21.526 mm (0.84646 to 0.84748 in.)
	Max	21.526 mm (0.84748 in.)

SECOND BRAKE PISTON

Piston return spring free length	18.99 mm (0.7476 in.)

FORWARD CLUTCH

Pack clearance		1.74 to 2.08 mm (0.0685 to 0.0819 in.)
Piston return spring free length		28.23 mm (1.1102 in.)
Flange thickness	No. 1	3.00 mm (0.1181 in.)
	No. 2	3.15 mm (0.1240 in.)
	No. 3	3.30 mm (0.1299 in.)
	No. 4	3.45 mm (0.1358 in.)
	No. 5	3.60 mm (0.1417 in.)

DIRECT CLUTCH

Pack clearance		0.605 to 0.825 mm (0.02382 to 0.03248 in.)
Piston return spring free length		22.58 mm (0.8898 in.)
Flange thickness (Direct clutch)	Mark 1	3.0 mm (0.118 in.)
	Mark 2	3.1 mm (0.122 in.)
	Mark 3	3.2 mm (0.126 in.)
	Mark 4	3.3 mm (0.130 in.)
	Mark 5	3.4 mm (0.134 in.)
	Mark 6	3.5 mm (0.138 in.)

UNDERDRIVE PLANETARY GEAR

Turning torque (at 60 rpm)	0.10 to 4.41 N*m (1.0 to 45 kgf*cm, 0.9 to 39 in*lbf)

UNDERDRIVE CLUTCH

Pack clearance		1.51 to 1.90 mm (0.0594 to 0.0748 in.)
Piston return spring free length		17.14 mm (0.6752 in.)
	Mark 1	3.0 mm (0.118 in.)
	Mark 2	3.2 mm (0.126 in.)
	Mark 3	3.4 mm (0.134 in.)
U/D clutch drum bushing inside diameter	STD	37.06 to 37.08 mm (1.4591 to 1.4598 in.)
	Max.	37.13 mm (1.4618 in.)

TRANSMISSION VALVE BODY ASSEMBLY

Valve body assembly installation bolt length	25 mm (0.984 in.) for bolt A
	41 mm (1.614 in.) for bolt B
	45 mm (1.771 in.) for bolt C
Detente spring installation bolt length	27 mm (1.063 in.) for bolt A
	16 mm (0.630 in.) for bolt B

DIFFERENTIAL

Side gear backlash		0.05 to 0.20 mm (0.0020 to 0.0070 in.)
Thrust washer thickness	Mark -	1.625 mm (0.0640 in.)
	Mark -	1.725 mm (0.0679 in.)
	Mark -	1.825 mm (0.0719 in.)
Preload (turning torque at 60 rpm))	New bearing	0.20 to 0.69 N*m (2.0 to 7.0 kgf*cm, 1.8 to 6.1 in.*lbf)
	Using bearing	0.10 to 0.35 N*m (1.0 to 3.6 kgf*cm, 0.9 to 3.1 in.*lbf)

Shim thickness	Mark 0	2.00 mm (0.0787 in.)
	Mark 1	2.05 mm (0.0807 in.)
	Mark 2	2.10 mm (0.0827 in.)
	Mark 3	2.15 mm (0.0846 in.)
	Mark 4	2.20 mm (0.0866 in.)
	Mark 5	2.25 mm (0.0886 in.)
	Mark 6	2.30 mm (0.0906 in.)
	Mark 7	2.35 mm (0.0925 in.)
	Mark 8	2.40 mm (0.0945 in.)
	Mark 9	2.45 mm (0.0965 in.)
	Mark A	2.50 mm (0.0984 in.)
	Mark B	2.55 mm (0.1004 in.)
	Mark C	2.60 mm (0.1024 in.)
	Mark D	2.65 mm (0.1043 in.)
	Mark E	2.70 mm (0.1063 in.)
	Mark F	2.75 mm (0.1083 in.)
	Mark G	2.80 mm (0.1102 in.)
	Mark H	2.85 mm (0.1122 in.)

WIPER AND WASHER

TORQUE SPECIFICATIONS

Part Tightened	N*m	kgf*cm	ft* lbf
Wiper motor x Wiper link	5.4	55	48 in* lbf
Wiper link x Body	5.5	56	49 in* lbf
Wiper arm x Wiper link	21	214	23
Rear wiper motor x Body	5.5	56	49 in* lbf
Rear wiper motor x Rare wiper arm	5.5	56	49 in* lbf

COMPONENTS

(2006/01-)

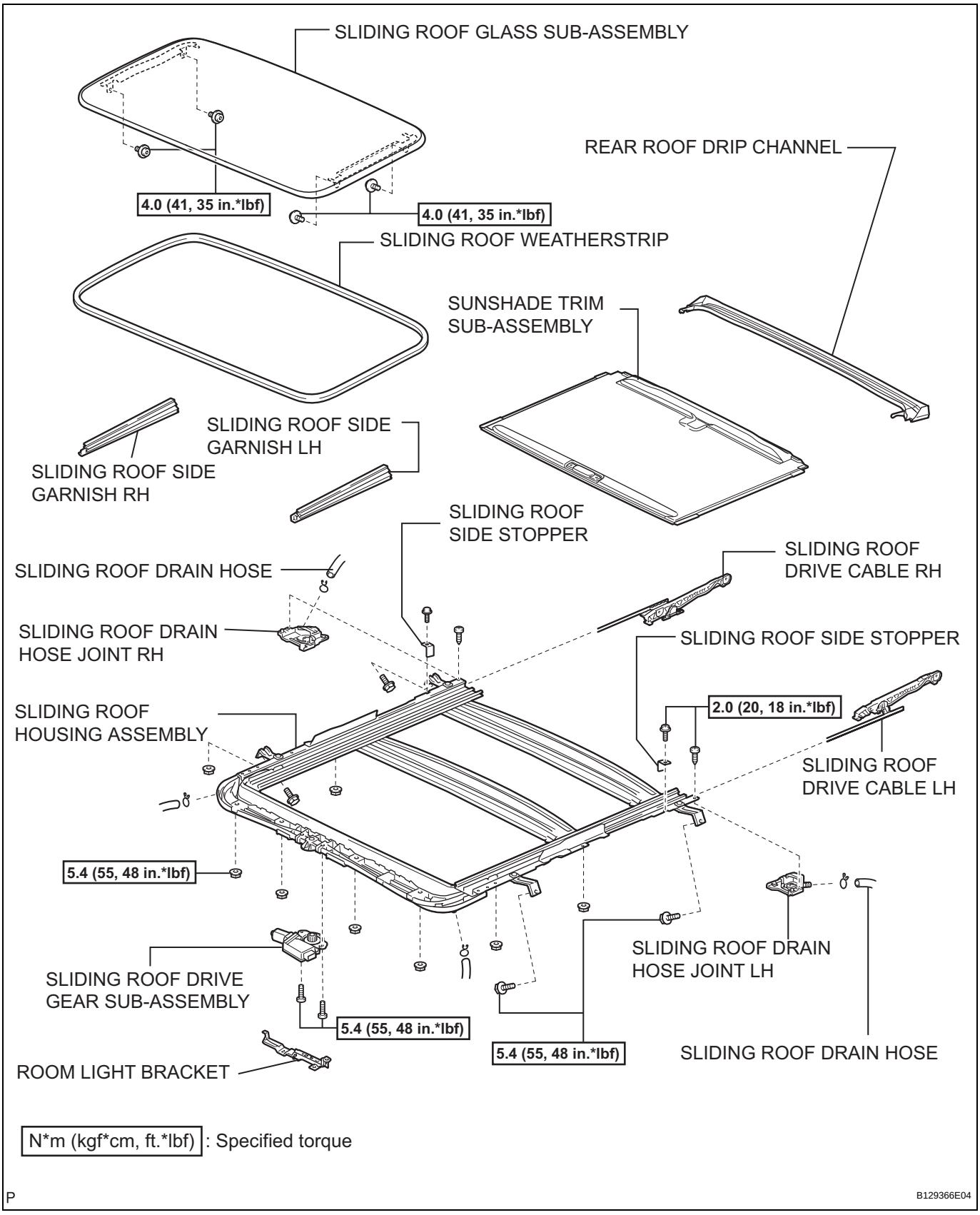

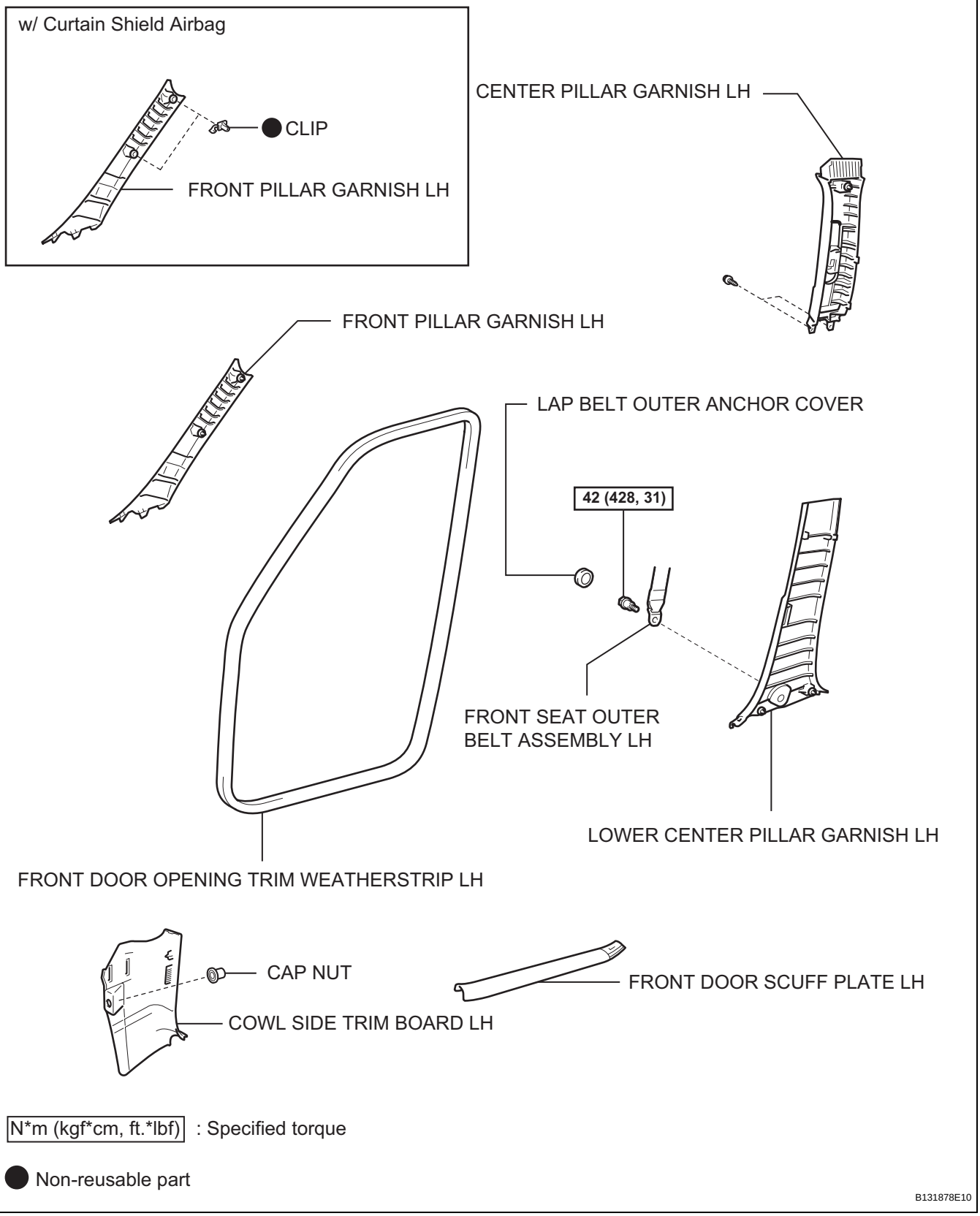

N*m (kgf*cm, ft.*lbf) : Specified torque

● Non-reusable part

B131878E10

RF

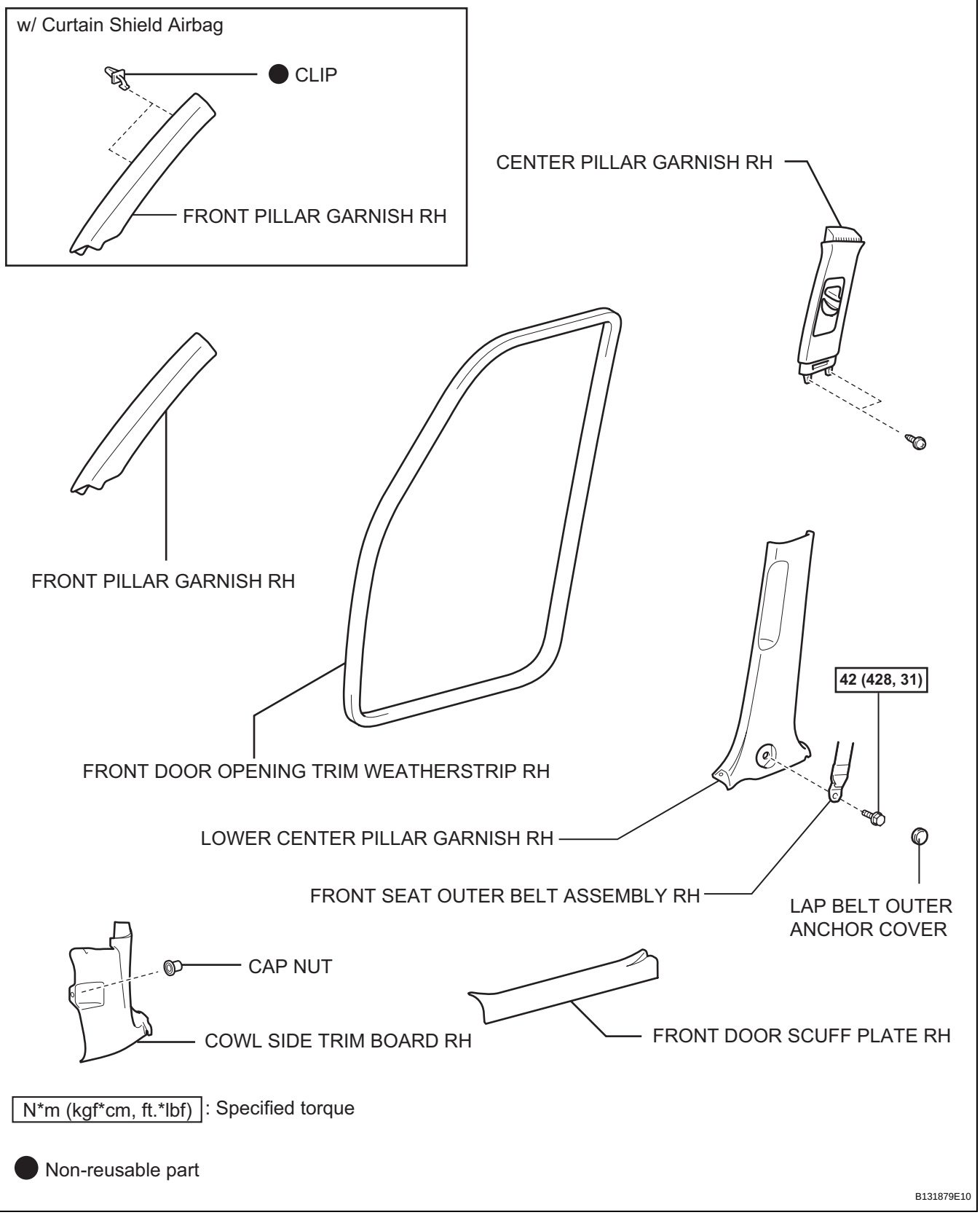
w/ Curtain Shield Airbag
CLIP
FRONT PILLAR GARNISH RH
CENTER PILLAR GARNISH RH
FRONT PILLAR GARNISH RH
FRONT DOOR OPENING TRIM WEATHERSTRIP RH
42 (428, 31)
LOWER CENTER PILLAR GARNISH RH
FRONT SEAT OUTER BELT ASSEMBLY RH
LAP BELT OUTER ANCHOR COVER
CAP NUT
COWL SIDE TRIM BOARD RH
FRONT DOOR SCUFF PLATE RH
N*m (kgf*cm, ft.*lbf) : Specified torque
Non-reusable part
B131879E10

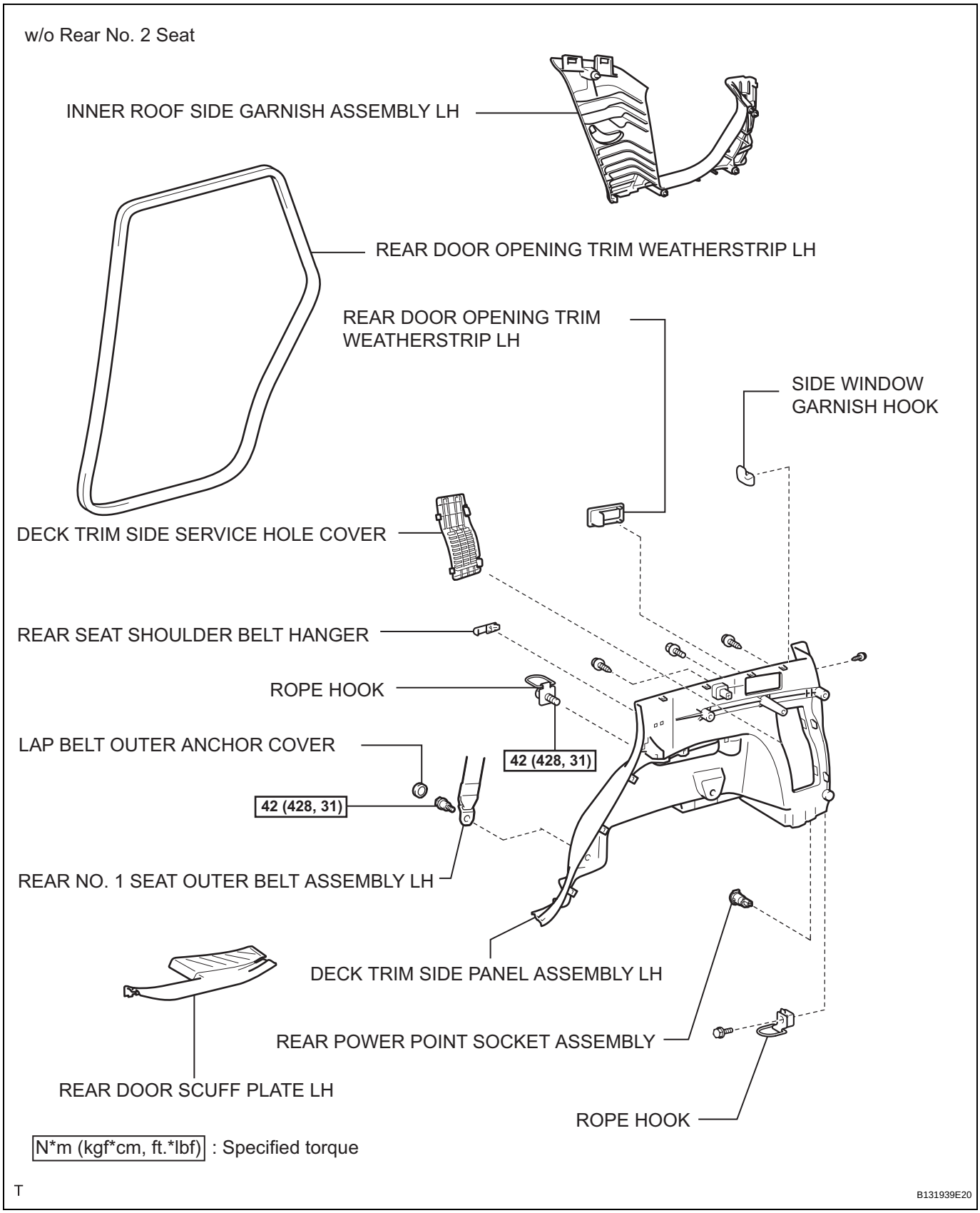
w/o Rear No. 2 Seat
INNER ROOF SIDE GARNISH ASSEMBLY LH
REAR DOOR OPENING TRIM WEATHERSTRIP LH
REAR DOOR OPENING TRIM WEATHERSTRIP LH
SIDE WINDOW GARNISH HOOK
DECK TRIM SIDE SERVICE HOLE COVER
REAR SEAT SHOULDER BELT HANGER
ROPE HOOK
42 (428, 31)
LAP BELT OUTER ANCHOR COVER
42 (428, 31)
REAR NO. 1 SEAT OUTER BELT ASSEMBLY LH
DECK TRIM SIDE PANEL ASSEMBLY LH
REAR POWER POINT SOCKET ASSEMBLY
REAR DOOR SCUFF PLATE LH
ROPE HOOK
N*m (kgf*cm, ft.*lbf) : Specified torque
T
B131939E20

RF

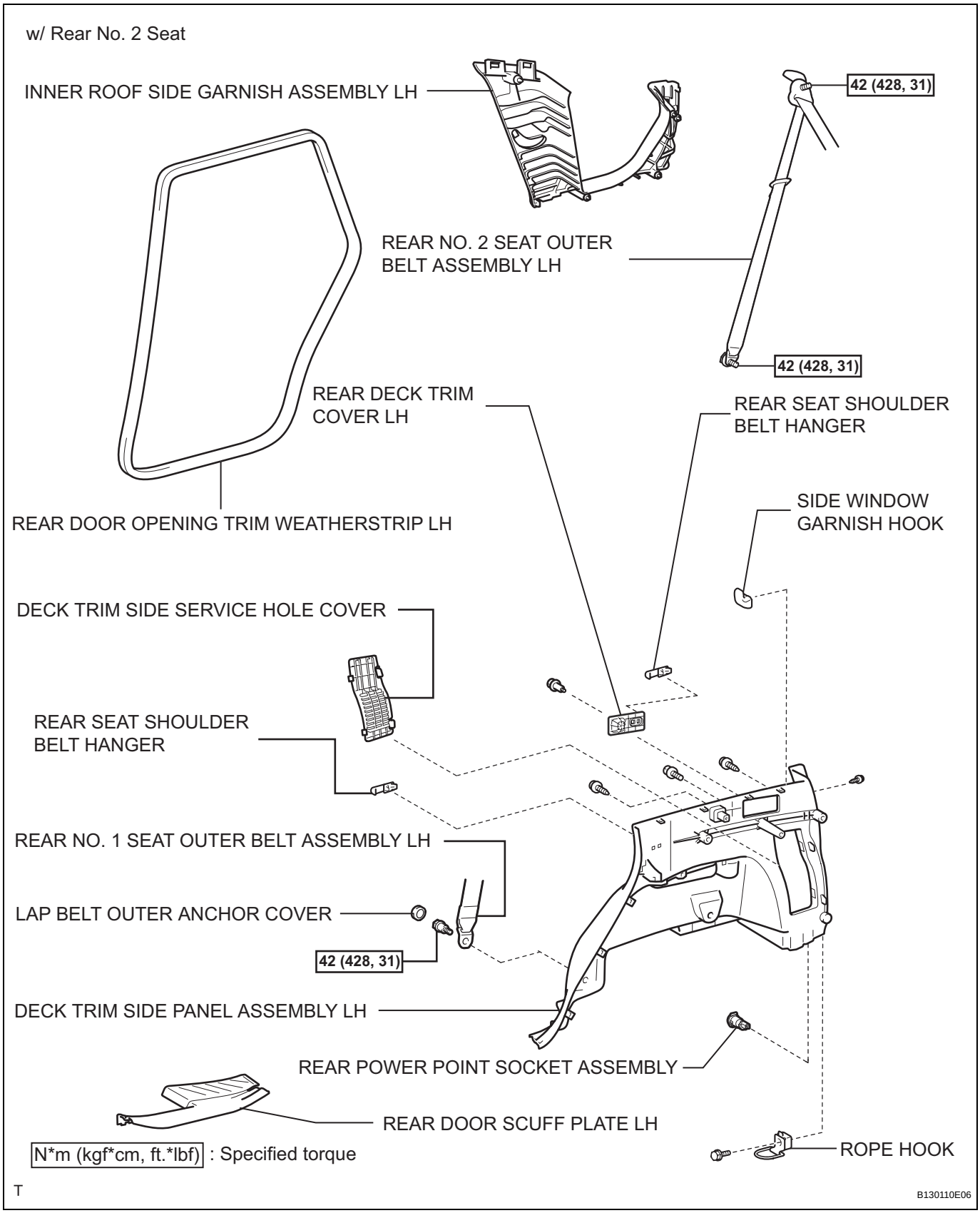
w/ Rear No. 2 Seat
INNER ROOF SIDE GARNISH ASSEMBLY LH
42 (428, 31)
REAR NO. 2 SEAT OUTER BELT ASSEMBLY LH
42 (428, 31)
REAR DECK TRIM COVER LH
REAR SEAT SHOULDER BELT HANGER
REAR DOOR OPENING TRIM WEATHERSTRIP LH
SIDE WINDOW GARNISH HOOK
DECK TRIM SIDE SERVICE HOLE COVER
REAR SEAT SHOULDER BELT HANGER
REAR NO. 1 SEAT OUTER BELT ASSEMBLY LH
LAP BELT OUTER ANCHOR COVER
42 (428, 31)
DECK TRIM SIDE PANEL ASSEMBLY LH
REAR POWER POINT SOCKET ASSEMBLY
REAR DOOR SCUFF PLATE LH
ROPE HOOK
N*m (kgf*cm, ft.*lbf) : Specified torque
T
B130110E06

w/o Rear No. 2 Seat

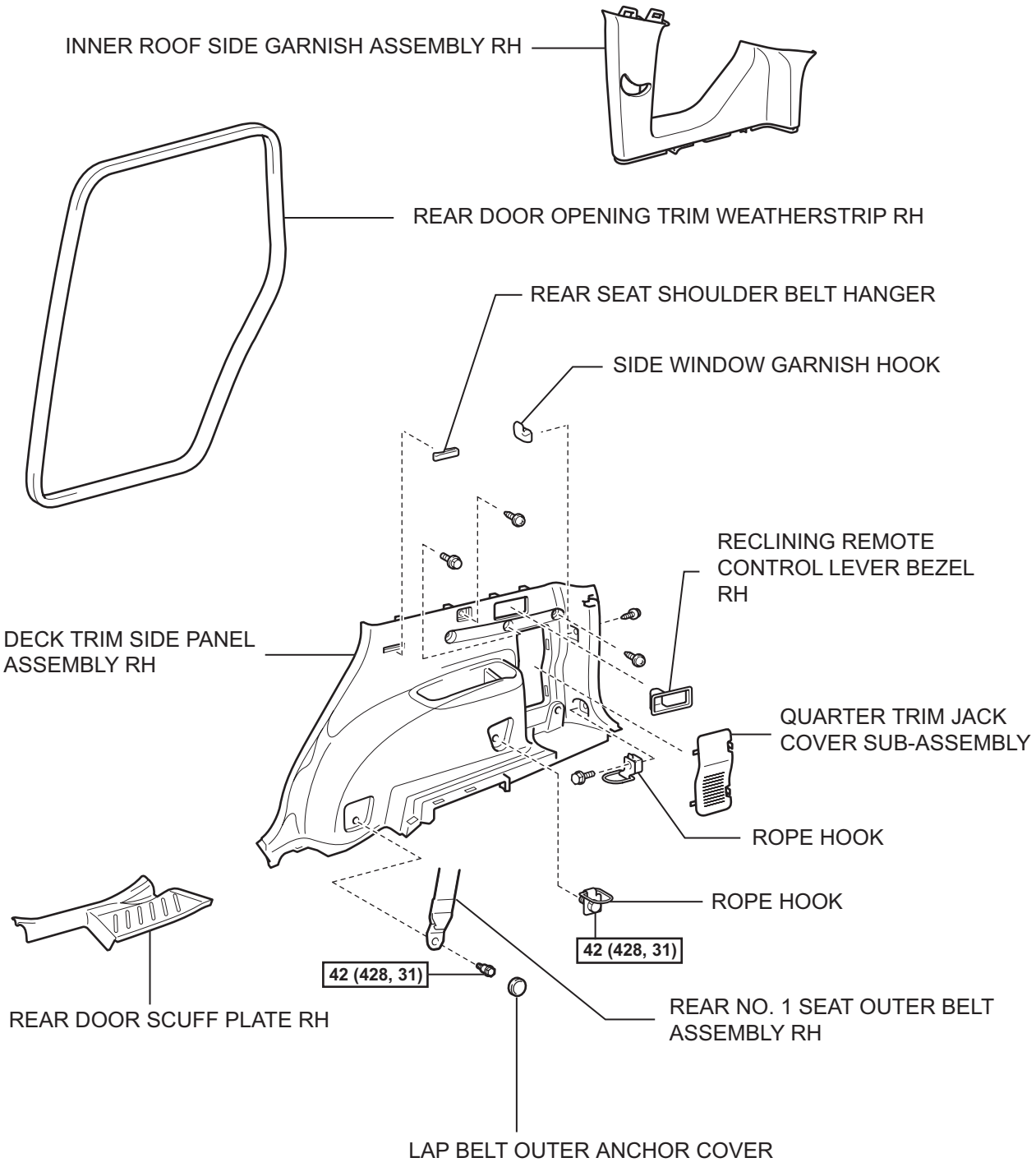

N*m (kgf*cm, ft.*lbf) : Specified torque

T

B131940E18

RF

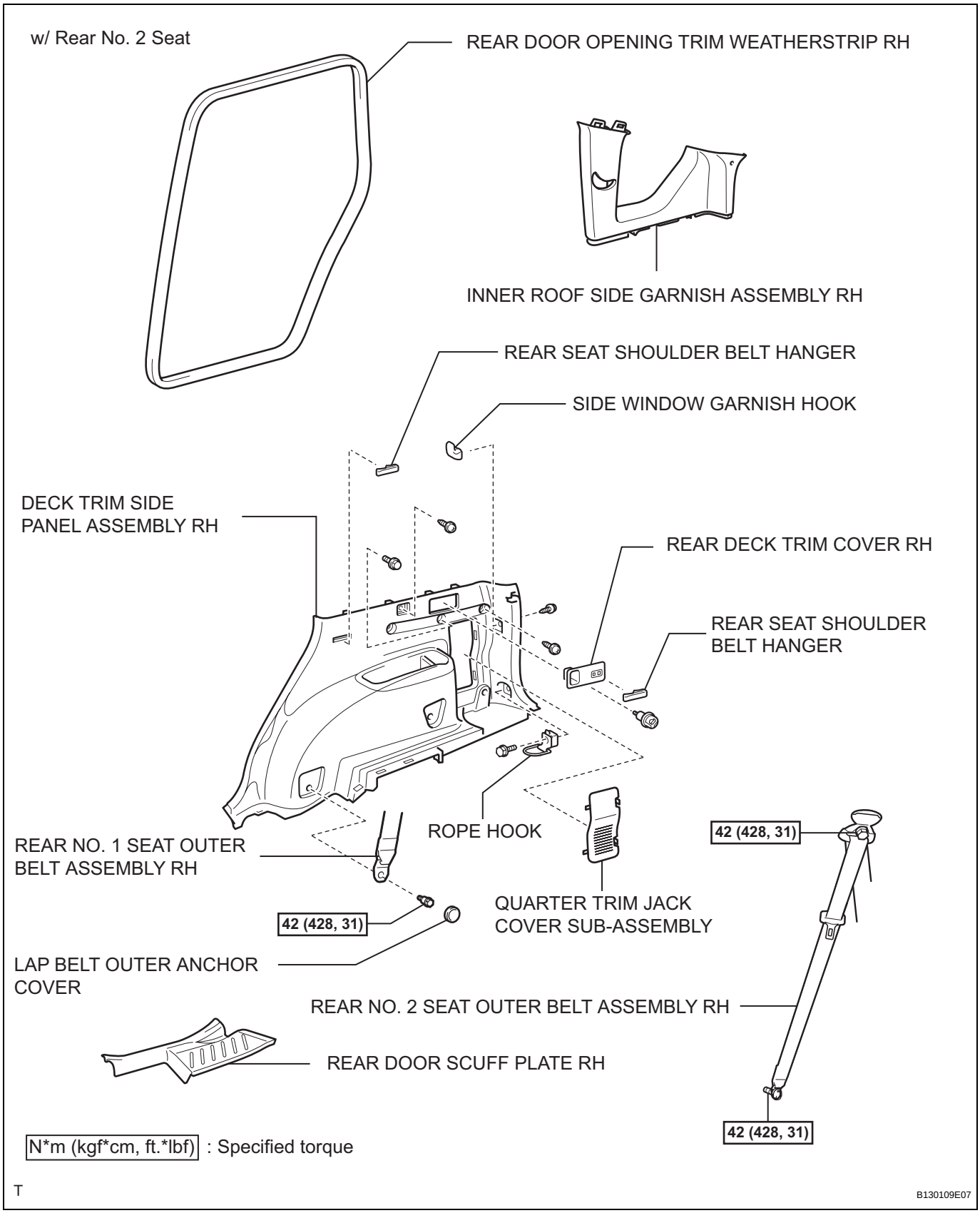
w/ Rear No. 2 Seat
REAR DOOR OPENING TRIM WEATHERSTRIP RH
INNER ROOF SIDE GARNISH ASSEMBLY RH
REAR SEAT SHOULDER BELT HANGER
SIDE WINDOW GARNISH HOOK
DECK TRIM SIDE PANEL ASSEMBLY RH
REAR DECK TRIM COVER RH
REAR SEAT SHOULDER BELT HANGER
ROPE HOOK
REAR NO. 1 SEAT OUTER BELT ASSEMBLY RH
42 (428, 31)
QUARTER TRIM JACK COVER SUB-ASSEMBLY
LAP BELT OUTER ANCHOR COVER
REAR NO. 2 SEAT OUTER BELT ASSEMBLY RH
REAR DOOR SCUFF PLATE RH
42 (428, 31)
42 (428, 31)
N*m (kgf*cm, ft.*lbf) : Specified torque
T
B130109E07

w/o Rear No. 2 Seat

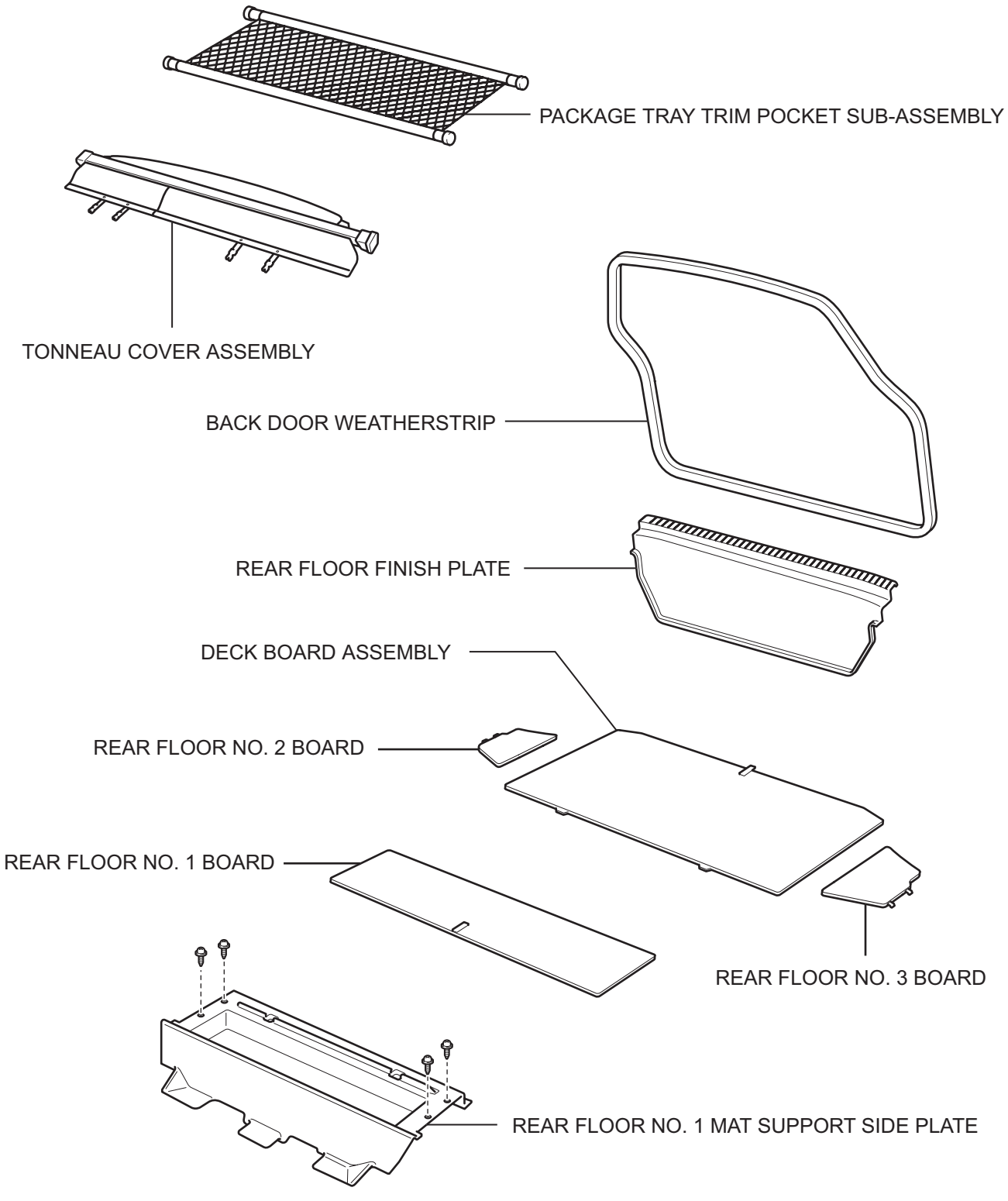

T

B130111E22

RF

w/ Rear No. 2 Seat

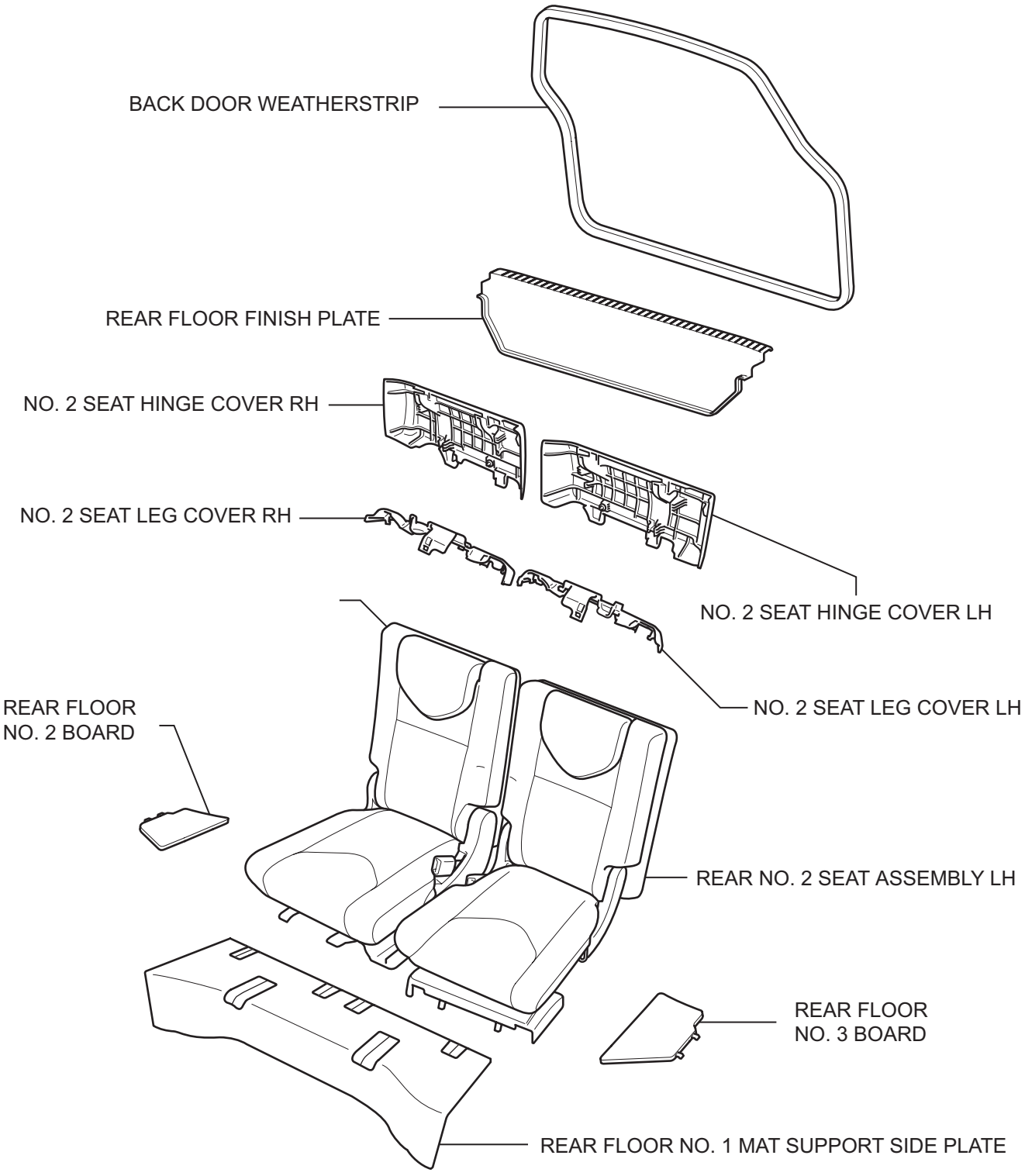

T

B130112E12

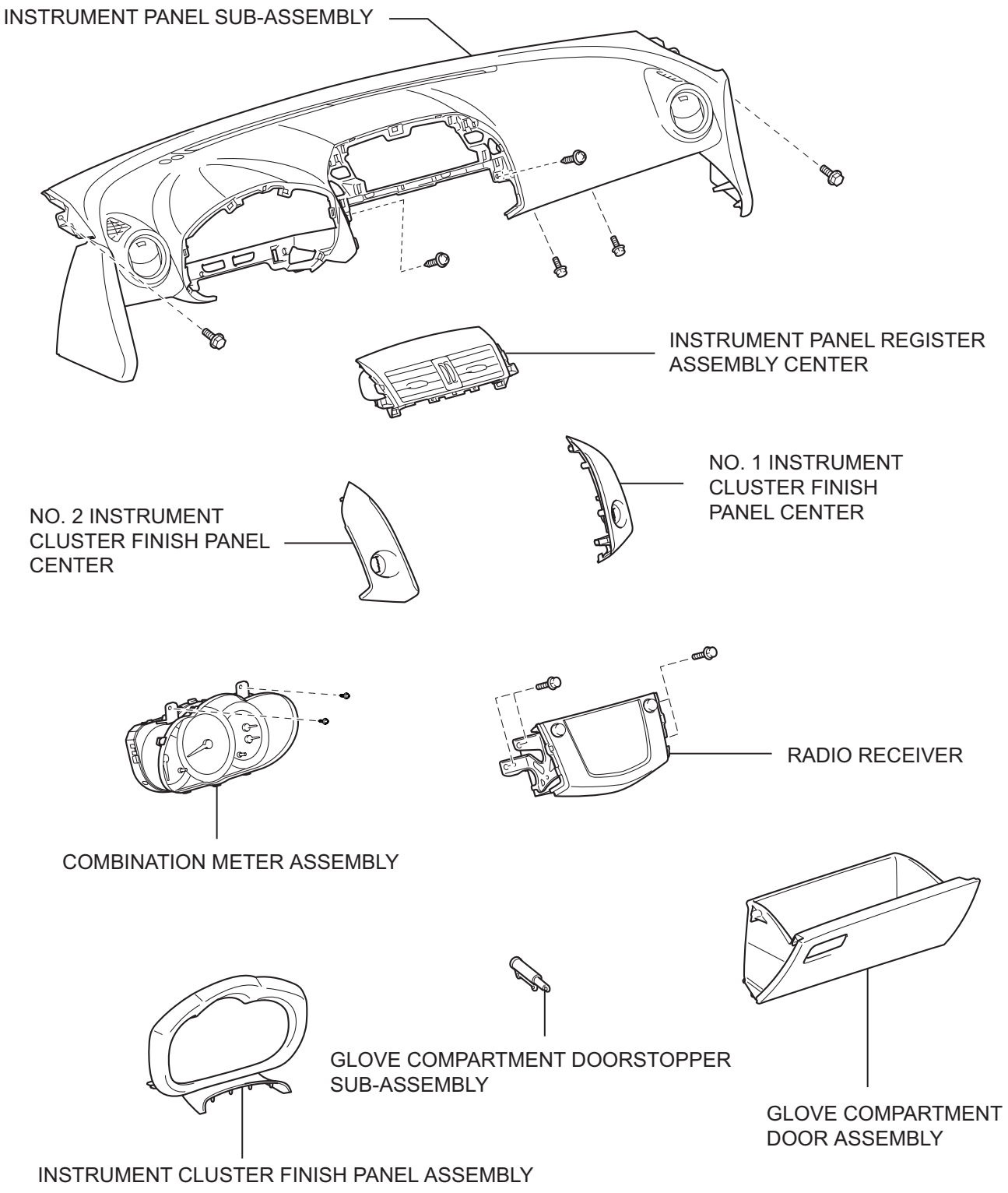
INSTRUMENT PANEL SUB-ASSEMBLY
INSTRUMENT PANEL REGISTER ASSEMBLY CENTER
NO. 1 INSTRUMENT CLUSTER FINISH PANEL CENTER
NO. 2 INSTRUMENT CLUSTER FINISH PANEL CENTER
RADIO RECEIVER
COMBINATION METER ASSEMBLY
GLOVE COMPARTMENT DOORSTOPPER SUB-ASSEMBLY
GLOVE COMPARTMENT DOOR ASSEMBLY
INSTRUMENT CLUSTER FINISH PANEL ASSEMBLY
H
B133001E04

RF

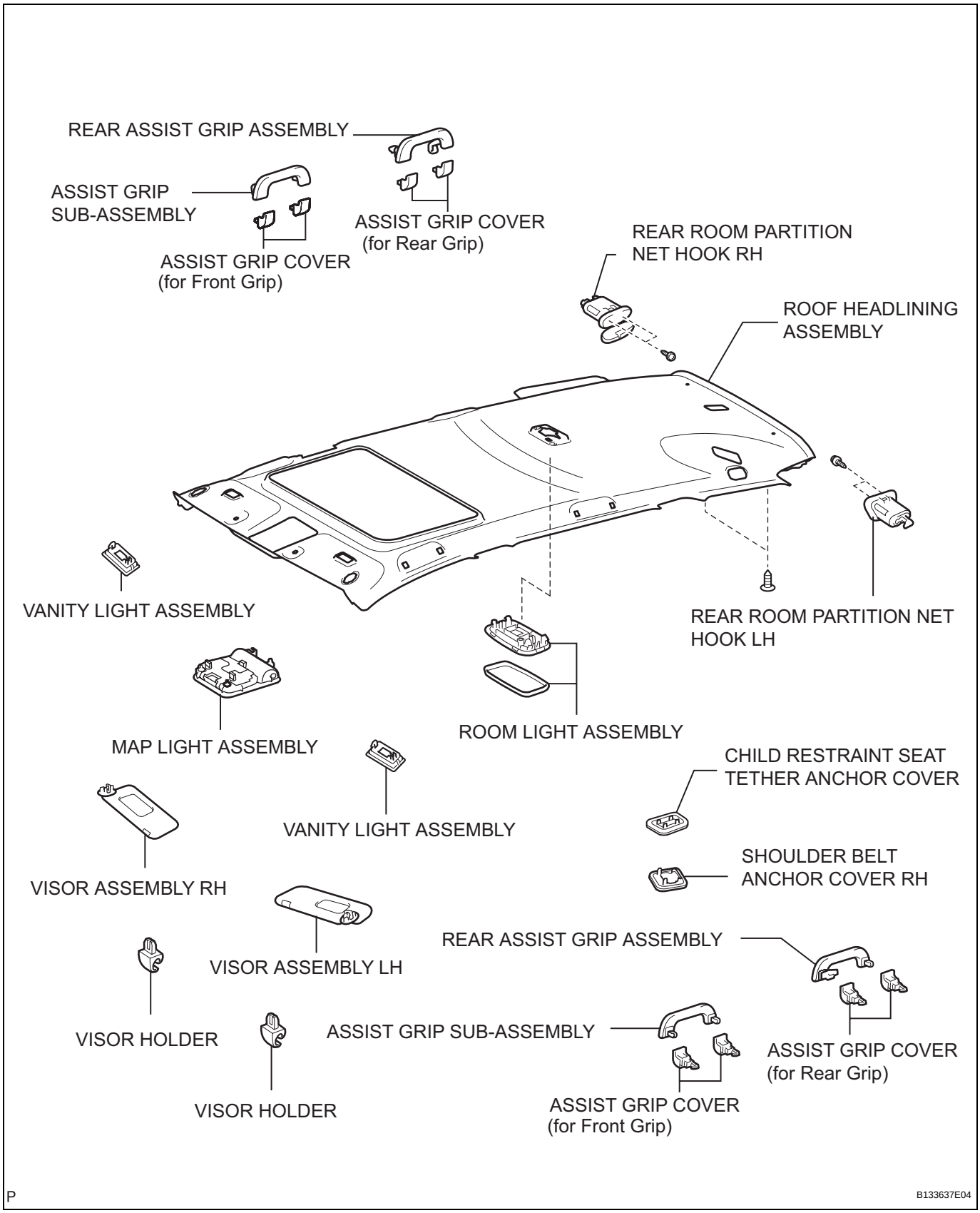
REAR ASSIST GRIP ASSEMBLY
ASSIST GRIP SUB-ASSEMBLY
ASSIST GRIP COVER (for Rear Grip)
ASSIST GRIP COVER (for Front Grip)
REAR ROOM PARTITION NET HOOK RH
ROOF HEADLINING ASSEMBLY
VANITY LIGHT ASSEMBLY
REAR ROOM PARTITION NET HOOK LH
MAP LIGHT ASSEMBLY
ROOM LIGHT ASSEMBLY
CHILD RESTRAINT SEAT TETHER ANCHOR COVER
VANITY LIGHT ASSEMBLY
SHOULDER BELT ANCHOR COVER RH
VISOR ASSEMBLY RH
VISOR ASSEMBLY LH
REAR ASSIST GRIP ASSEMBLY
VISOR HOLDER
ASSIST GRIP SUB-ASSEMBLY
ASSIST GRIP COVER (for Rear Grip)
VISOR HOLDER
ASSIST GRIP COVER (for Front Grip)
P
B133637E04

w/ Television Display

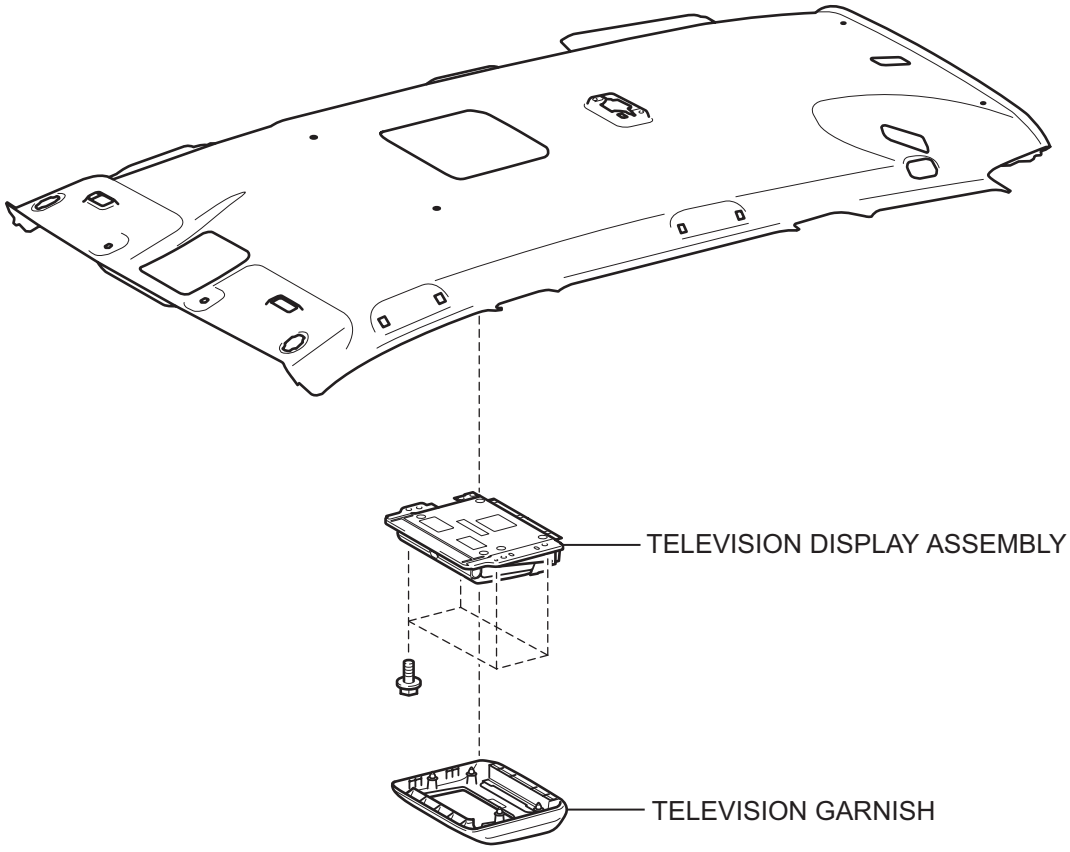

T

B140910E02

REMOVAL

(2005/11-2006/01)

1. **DISCONNECT CABLE FROM NEGATIVE BATTERY TERMINAL**
   CAUTION:
   Wait at least 90 seconds after disconnecting the cable from the negative (-) battery terminal to prevent airbag and seat belt pretensioner activation.
2. **REMOVE ROOF HEADLINING ASSEMBLY**
   (a) Remove the roof headlining (see page IR-26).
3. **REMOVE SLIDING ROOF SIDE GARNISH LH**
   (a) Using a screwdriver, detach the claws and remove the garnish.
   HINT:
   Tape the screwdriver tip before use.

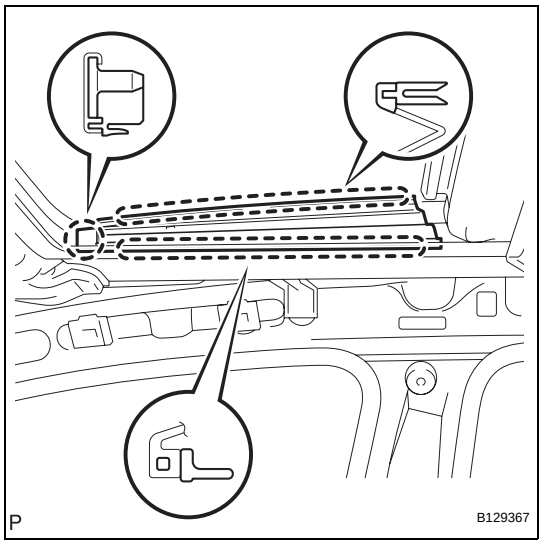

4. **REMOVE SLIDING ROOF SIDE GARNISH RH**
   HINT:
   Use the same procedures described for the LH side.
5. **REMOVE SLIDING ROOF GLASS SUB-ASSEMBLY**
   (a) Using a T25 "torx" driver, remove the 4 screws and glass.
   (b) Pull the glass upward to remove it.

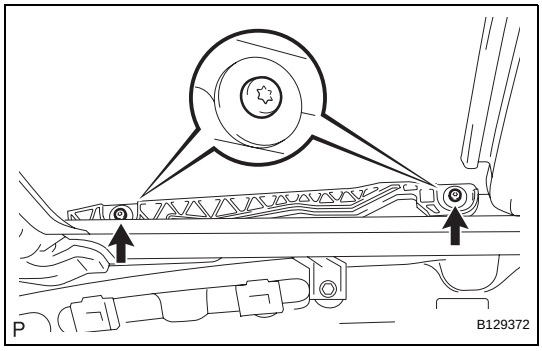

6. **REMOVE SLIDING ROOF WEATHERSTRIP**
7. **DISCONNECT SLIDING ROOF DRAIN HOSE**
   (a) Disconnect the 4 drain hoses.
8. **REMOVE SLIDING ROOF HOUSING ASSEMBLY**
   (a) Remove the 4 bolts, 8 nuts and housing.
   NOTICE:
   Be careful not to damage the curtain shield airbag when removing the housing.

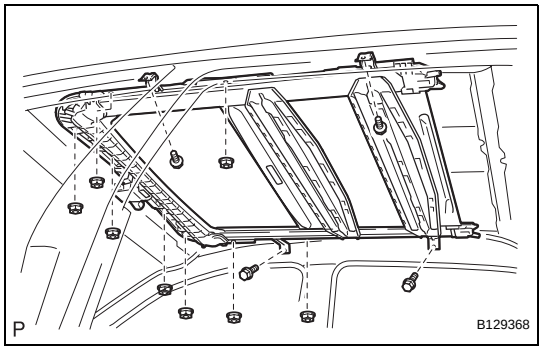

REMOVAL

(2006/01-)

1. **DISCONNECT CABLE FROM NEGATIVE BATTERY TERMINAL**
   CAUTION:
   Wait at least 90 seconds after disconnecting the cable from the negative (-) battery terminal to prevent airbag and seat belt pretensioner activation.
2. **REMOVE ROOF HEADLINING ASSEMBLY**
   (a) Remove the roof headlining (see page IR-37).
3. **REMOVE SLIDING ROOF SIDE GARNISH LH**
   (a) Using a screwdriver, detach the claws and remove the garnish.
   HINT:
   Tape the screwdriver tip before use.
4. **REMOVE SLIDING ROOF SIDE GARNISH RH**
   HINT:
   Use the same procedures described for the LH side.

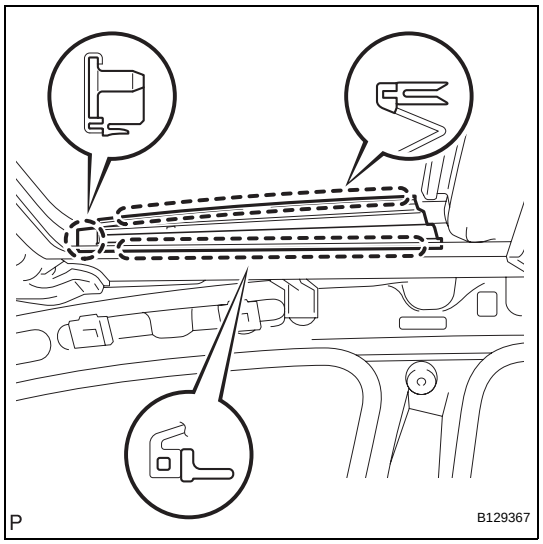

5. **REMOVE SLIDING ROOF GLASS SUB-ASSEMBLY**
   (a) Using a T25 "torx" driver, remove the 4 screws and glass.
   (b) Pull the glass upward to remove it.
6. **REMOVE SLIDING ROOF WEATHERSTRIP**
7. **DISCONNECT SLIDING ROOF DRAIN HOSE**
   (a) Disconnect the 4 drain hoses.

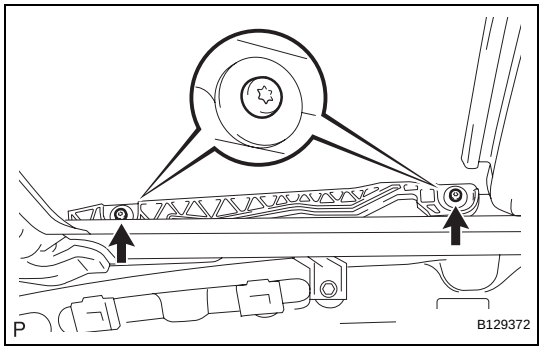

8. **REMOVE SLIDING ROOF HOUSING ASSEMBLY**
   (a) Remove the 4 bolts, 8 nuts and housing.
   NOTICE:
   Be careful not to damage the curtain shield airbag when removing the housing.

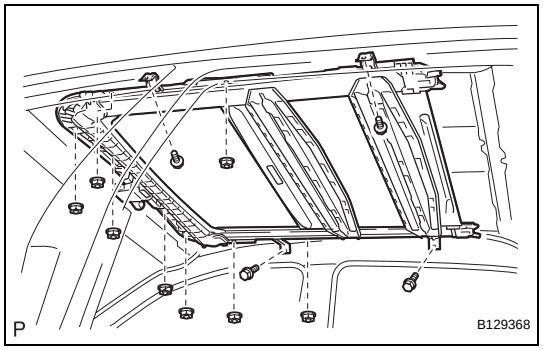

RF

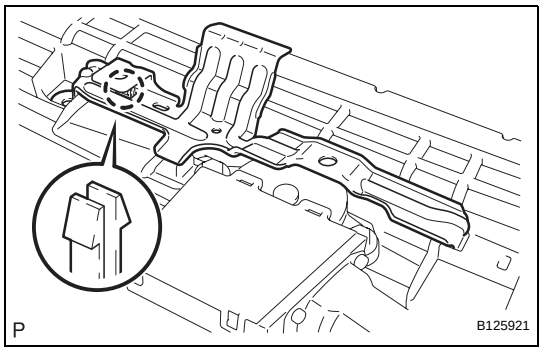

DISASSEMBLY

1. REMOVE SLIDING ROOF DRIVE GEAR SUB-ASSEMBLY

(a) Remove the claw and room light bracket.

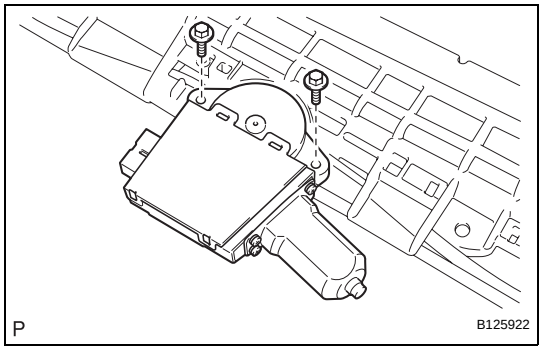

(b) Remove the 2 bolts and drive gear.

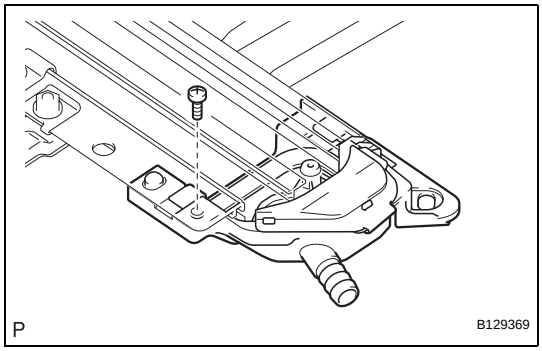

2. REMOVE SLIDING ROOF DRAIN HOSE JOINT LH

(a) Remove the screw and joint.

3. REMOVE SLIDING ROOF DRAIN HOSE JOINT RH

HINT:

Use the same procedures described for the LH side.

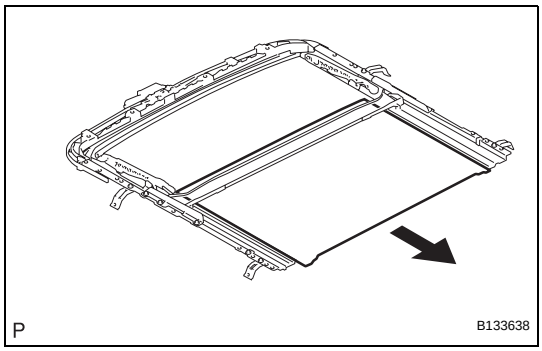

4. REMOVE SUNSHADE TRIM SUB-ASSEMBLY

(a) Slide and remove the sunshade trim sub-assembly.

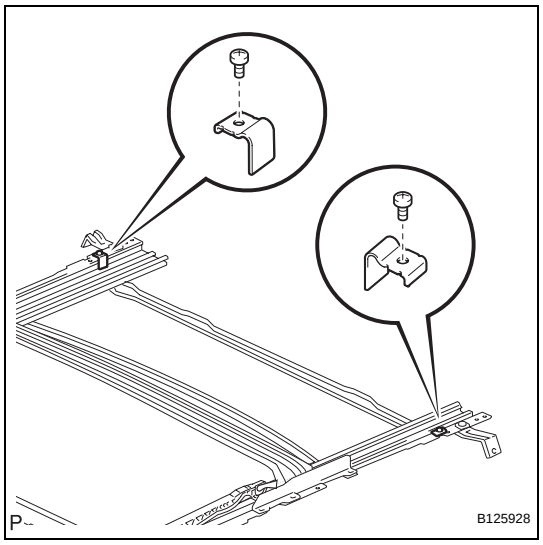

5. REMOVE SLIDING ROOF DRIVE CABLE

NOTICE:

Do not disassemble the sliding roof drive cable sub-assembly except when replacing it.

(a) Remove the 2 screws and 2 sliding roof side stoppers.

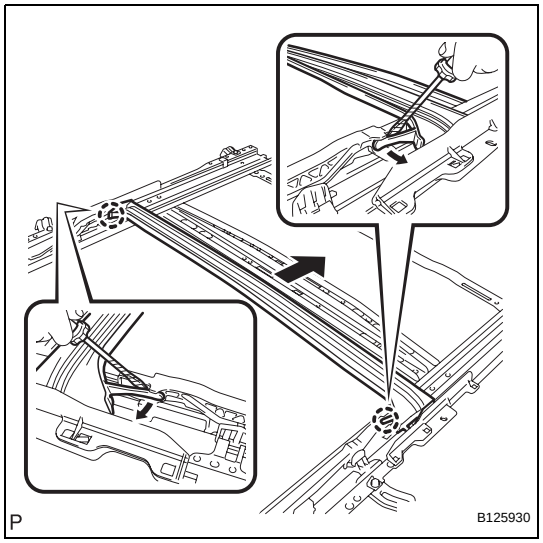

(b) Using a screwdriver, detach the 2 claws. Then slide the drip channel rearward to remove it.
HINT:
Tape the screwdriver tip before use.

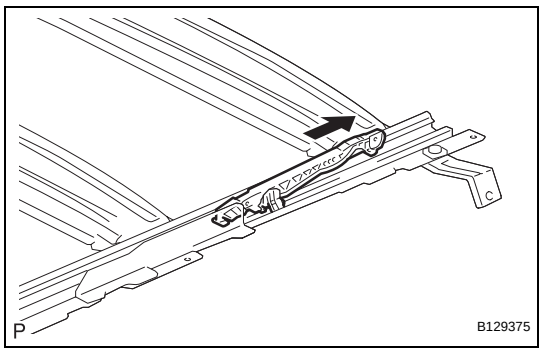

(c) Using a screwdriver, slide the drive cables backward and remove them.
HINT:
- Tape the screwdriver tip before use.

RF

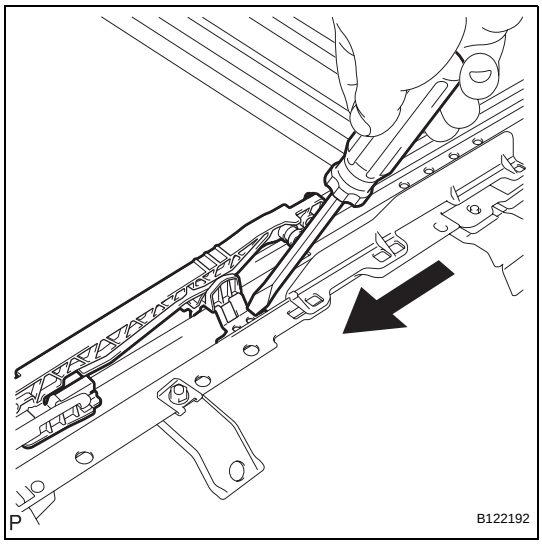

REASSEMBLY

1. INSTALL SLIDING ROOF DRIVE CABLE

(a) Using a screwdriver, slide the sliding roof drive cable sub-assemblies in the direction indicated by the arrow in the illustration to install them.
HINT:
Tape the screwdriver tip before use.

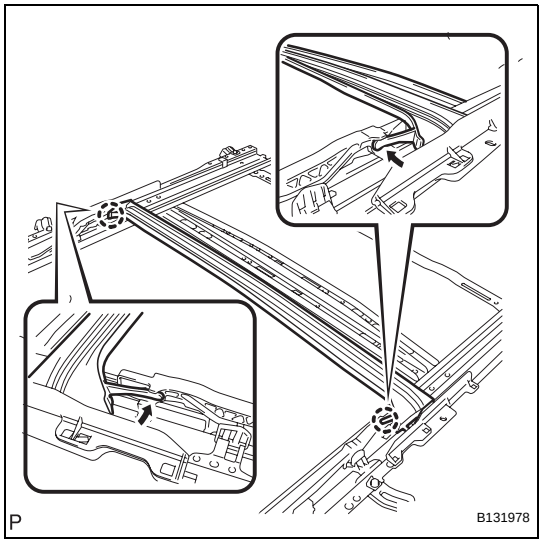

(b) Engage the 2 claws and install the sliding roof drip channel.

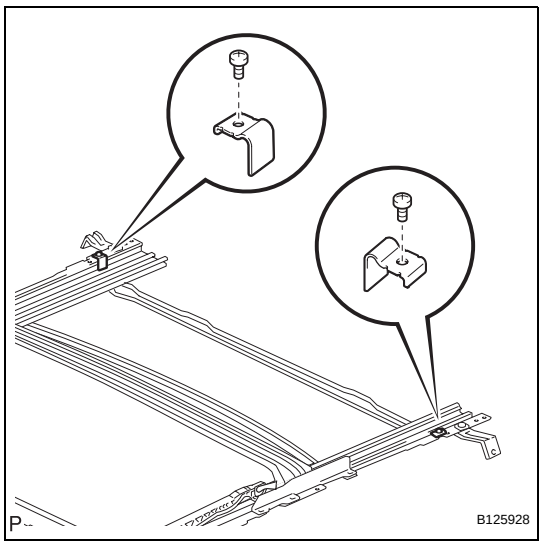

(c) Install the 2 sliding roof side stoppers with the 2 screws.
Torque: 2.0 N*m (20 kgf*cm, 18 in.*lbf)

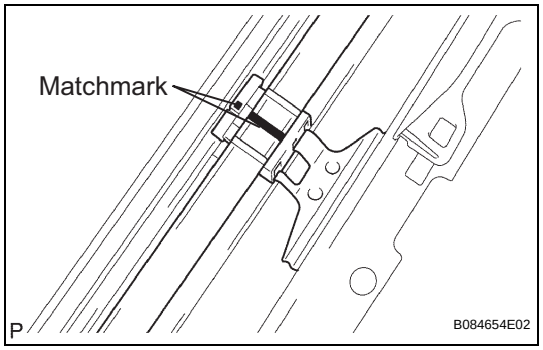

2. ADJUST FULLY CLOSED POSITION

(a) Using a screwdriver, slide the sliding roof drive cable LH and RH to align the matchmarks.
HINT:
Tape the screwdriver tip before use.

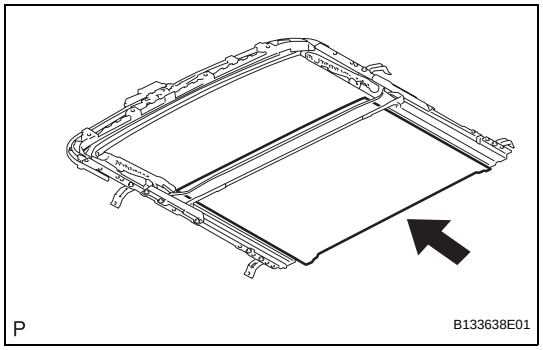

3. INSTALL SUNSHADE TRIM SUB-ASSEMBLY

(a) Insert the sunshade trim into the sliding roof housing.

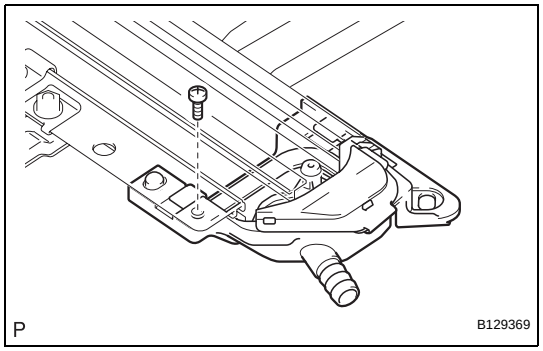

4. INSTALL SLIDING ROOF DRAIN HOSE JOINT LH

(a) Install the joint with the screw.
Torque: 2.0 N*m (20 kgf*cm, 18 in.*lbf)

5. INSTALL SLIDING ROOF DRAIN HOSE JOINT RH

HINT:
Use the same procedures described for the LH side.

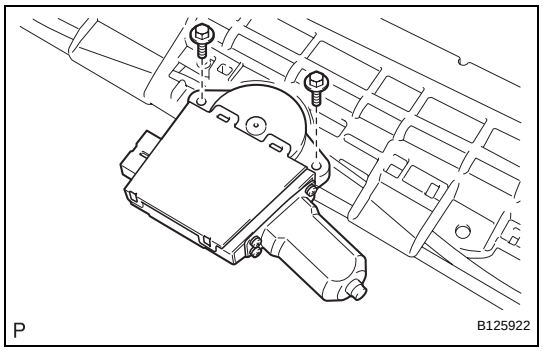

6. INSTALL SLIDING ROOF DRIVE GEAR SUB-ASSEMBLY

(a) Install the drive gear with the 2 bolts.
Torque: 5.4 N*m (55 kgf*cm, 48 in.*lbf)

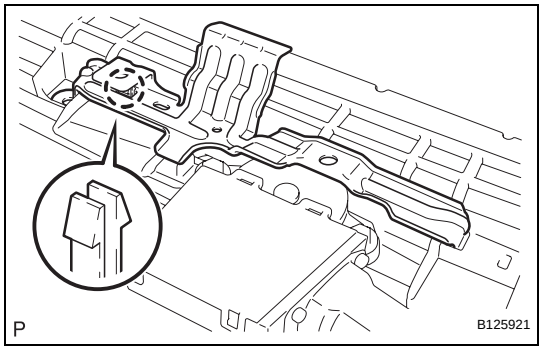

(b) Attach the claw and install the sliding roof drive gear bracket.

INSTALLATION

(2005/11-2006/01)

1. INSTALL SLIDING ROOF WEATHERSTRIP

(a) Install the sliding roof weatherstrip.

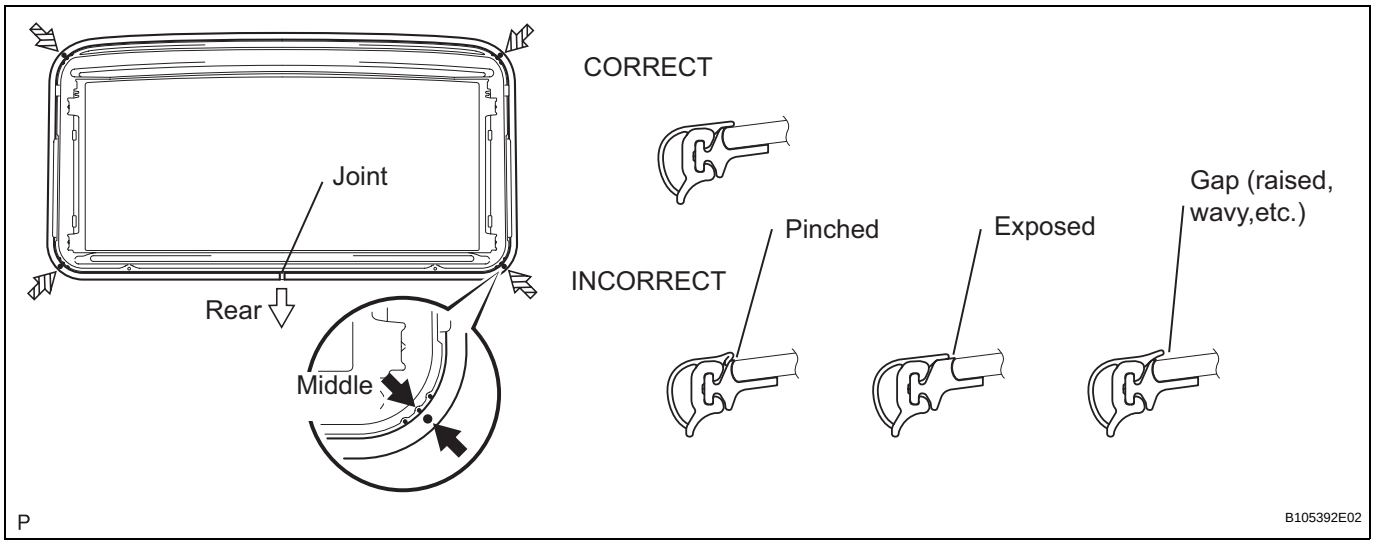

(1) Position the joint of the weatherstrip at the rear center.

(2) Align the marks on the weatherstrip with the middle marks at the corners of the plastic on the edge of the sliding roof panel and install the weatherstrip. Make sure that the marks on the weatherstrip are positioned within the area indicated by the marks at the corners of the plastic on the edge of the sliding roof panel.

(3) Install the lip of the weatherstrip firmly.

2. INSTALL SLIDING ROOF HOUSING ASSEMBLY

(a) Install the housing with the 4 bolts and 8 nuts.
Torque: 5.4 N*m (55 kgf*cm, 48 in.*lbf)

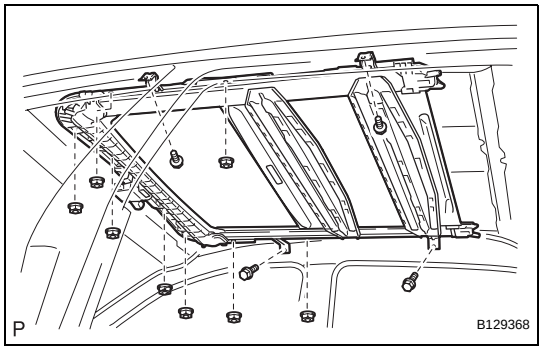

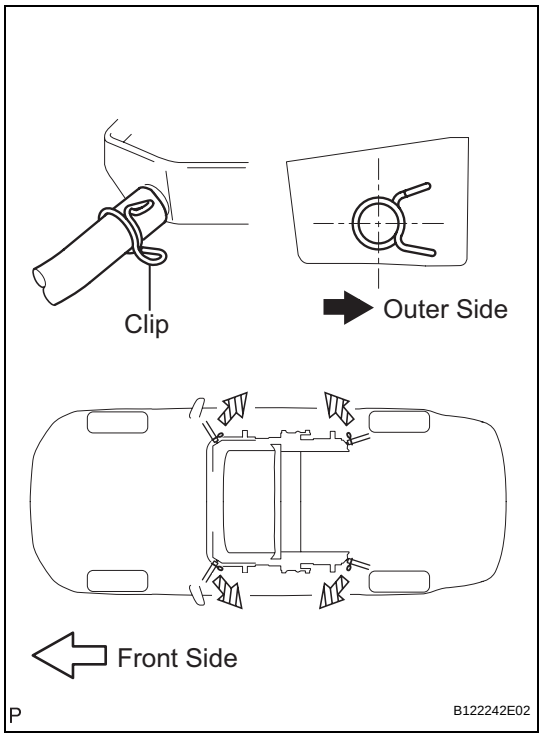

3. CONNECT SLIDING ROOF DRAIN HOSE

(a) Connect the 4 drain hoses.

NOTICE:

The clip must face toward the outside of the vehicle and also be above the lower surface of the sliding roof housing when installing the drain hoses.

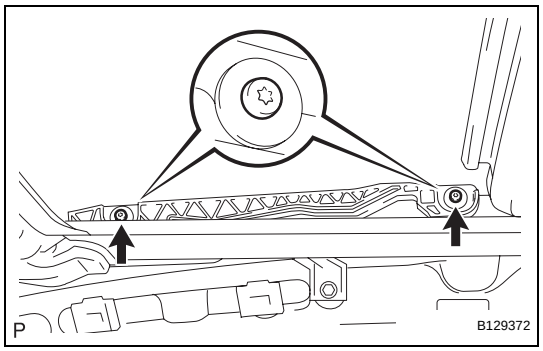

4. INSTALL SLIDING ROOF GLASS SUB-ASSEMBLY

(a) Using a T25 "torx" driver, temporarily install the sliding roof glass sub-assembly with the 4 screws.

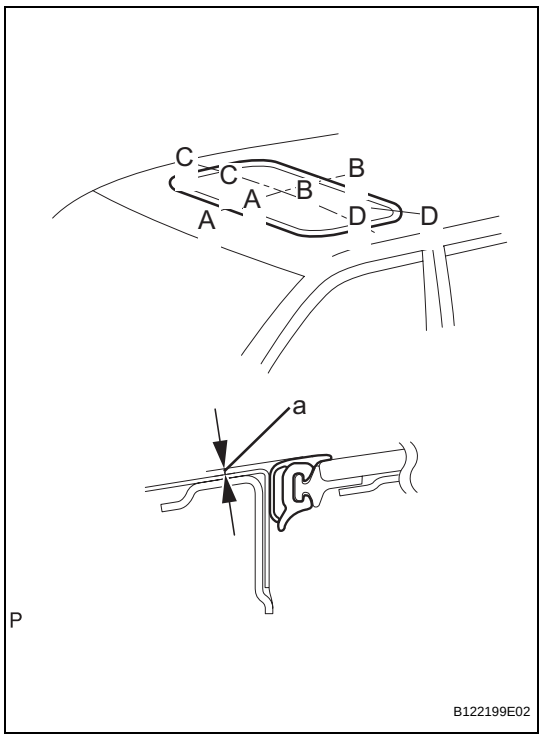

(b) Perform a level check.

(1) Check the difference in level for "a" between the roof panel and the upper surface of the weatherstrip when the sliding roof glass is fully closed.

Standard measurement

Area	Specified Condition
A - A	0 + 1.5 mm (0 + 0.059 in.) 0 - 1.5 mm (0 - 0.059 in.)
B - B	0 + 1.5 mm (0 + 0.059 in.) 0 - 1.5 mm (0 - 0.059 in.)
C - C	0 + 1.5 mm (0 + 0.059 in.) 0 - 1.5 mm (0 - 0.059 in.)
D - D	0 + 1.5 mm (0 + 0.059 in.) 0 - 1.0 mm (0 - 0.039 in.)

HINT:

"+" represents the condition that the glass is above the panel level. "-" represents the condition that the glass is below the panel level.

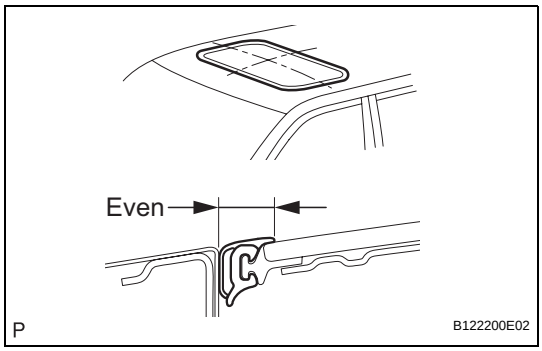

(c) Perform a gap check.
(1) Check the gap between the roof panel and roof glass.
NOTICE:
The gap must be even all around.

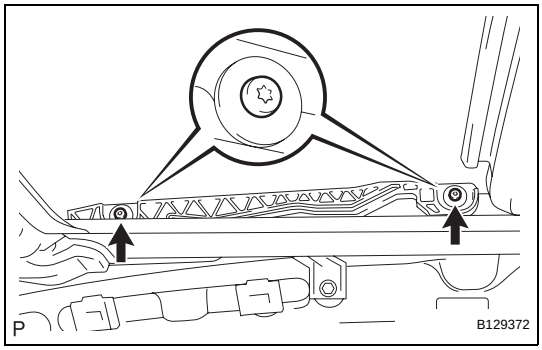

(d) Using a T25 "torx" driver, install the sliding roof glass with the 4 screws.
Torque: 4.0 N*m (41 kgf*cm, 35 in.*lbf)

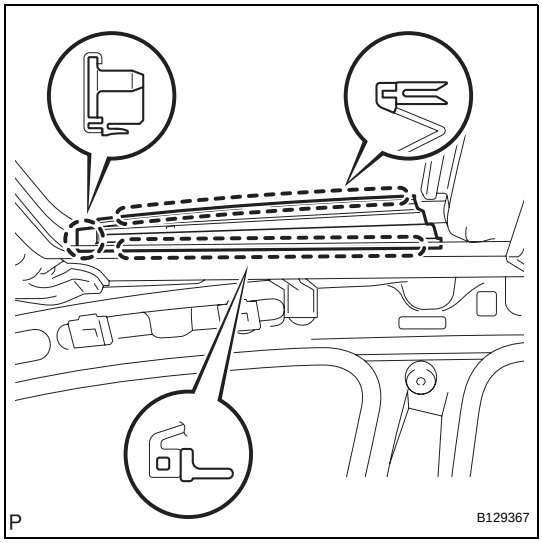

5. INSTALL SLIDING ROOF SIDE GARNISH LH
(a) Attach the claws to install the garnish.

6. INSTALL SLIDING ROOF SIDE GARNISH RH
HINT:
Use the same procedures described for the LH side.

7. CHECK FOR WATER LEAKS
(a) Adjust the sliding roof glass sub-assembly, and check for water leaks.
(b) If there are any leaks, readjust the sliding roof glass sub-assembly.

8. INSTALL ROOF HEADLINING ASSEMBLY
(a) Install the roof headlining (see page IR-49).

9. CONNECT CABLE TO NEGATIVE BATTERY TERMINAL

INSTALLATION

(2006/01-)

1. INSTALL SLIDING ROOF WEATHERSTRIP

(a) Install the sliding roof weatherstrip.

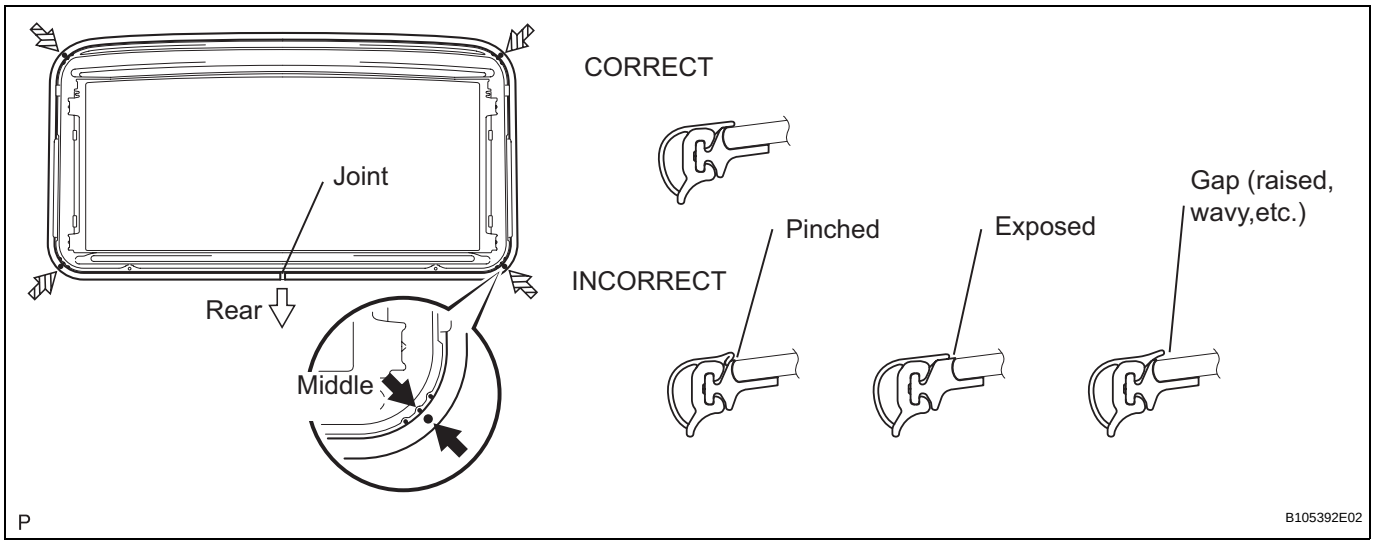

(1) Position the joint of the weatherstrip at the rear center.

(2) Align the marks on the weatherstrip with the middle marks at the corners of the plastic on the edge of the sliding roof panel and install the weatherstrip. Make sure that the marks on the weatherstrip are positioned within the area indicated by the marks at the corners of the plastic on the edge of the sliding roof panel.

(3) Install the lip of the weatherstrip firmly.

2. INSTALL SLIDING ROOF HOUSING ASSEMBLY

(a) Install the housing with the 4 bolts and 8 nuts.
Torque: 5.4 N*m (55 kgf*cm, 48 in.*lbf)

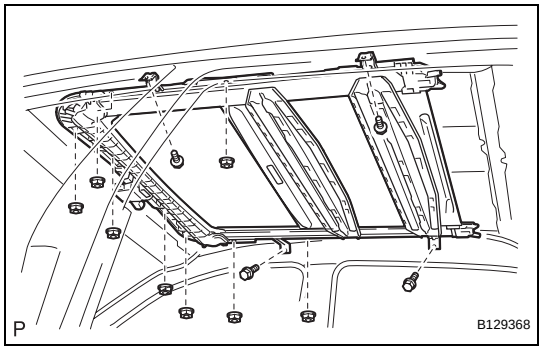

RF

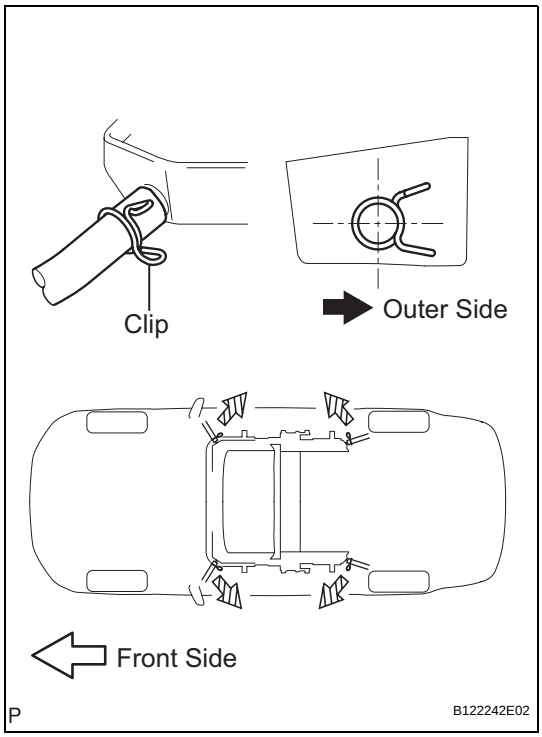

3. CONNECT SLIDING ROOF DRAIN HOSE

(a) Connect the 4 drain hoses.

NOTICE:

The clip must face toward the outside of the vehicle and also be above the lower surface of the sliding roof housing when installing the drain hoses.

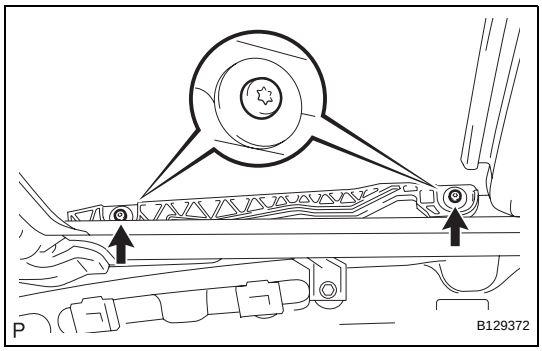

4. INSTALL SLIDING ROOF GLASS SUB-ASSEMBLY

(a) Using a T25 "torx" driver, temporarily install the sliding roof glass sub-assembly with the 4 screws.

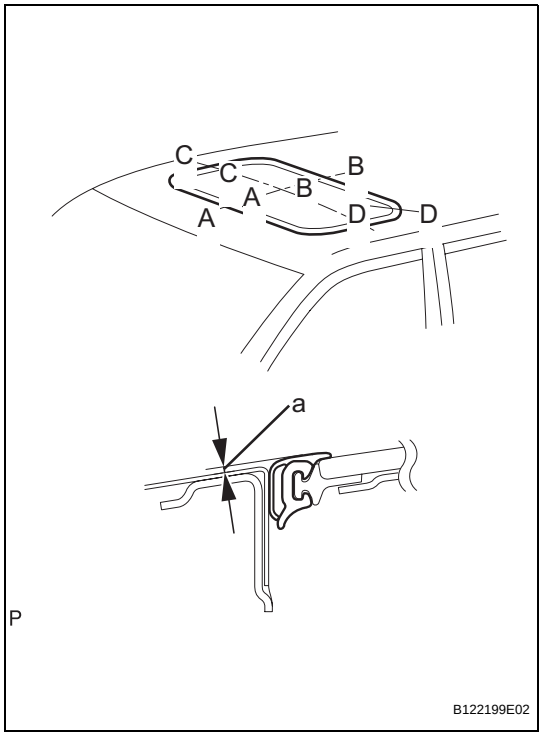

(b) Perform a level check.

(1) Check the difference in level for "a" between the roof panel and the upper surface of the weatherstrip when the sliding roof glass is fully closed.

Standard measurement

Area	Specified Condition
A - A	0 + 1.5 mm (0 + 0.059 in.) 0 - 1.5 mm (0 - 0.059 in.)
B - B	0 + 1.5 mm (0 + 0.059 in.) 0 - 1.5 mm (0 - 0.059 in.)
C - C	0 + 1.5 mm (0 + 0.059 in.) 0 - 1.5 mm (0 - 0.059 in.)
D - D	0 + 1.5 mm (0 + 0.059 in.) 0 - 1.0 mm (0 - 0.039 in.)

HINT:

"+" represents the condition that the glass is above the panel level. "-" represents the condition that the glass is below the panel level.

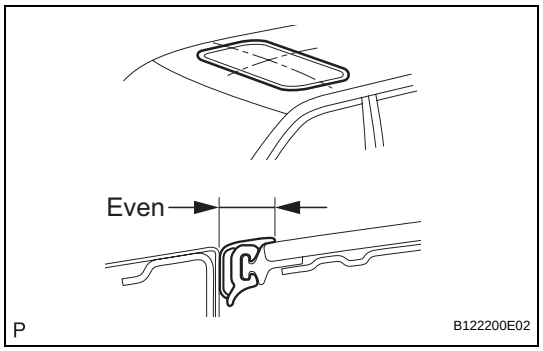

(c) Perform a gap check.
(1) Check the gap between the roof panel and roof glass.
NOTICE:
The gap must be even all around.

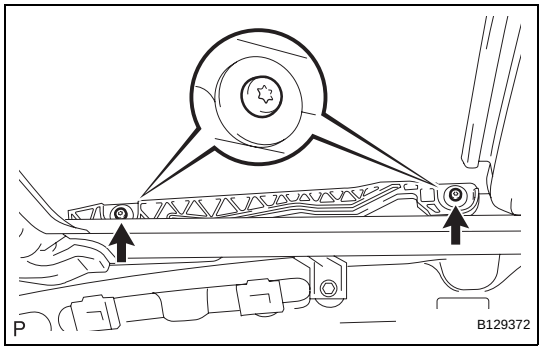

(d) Using a T25 "torx" driver, install the sliding roof glass with the 4 screws.
Torque: 4.0 N*m (41 kgf*cm, 35 in.*lbf)

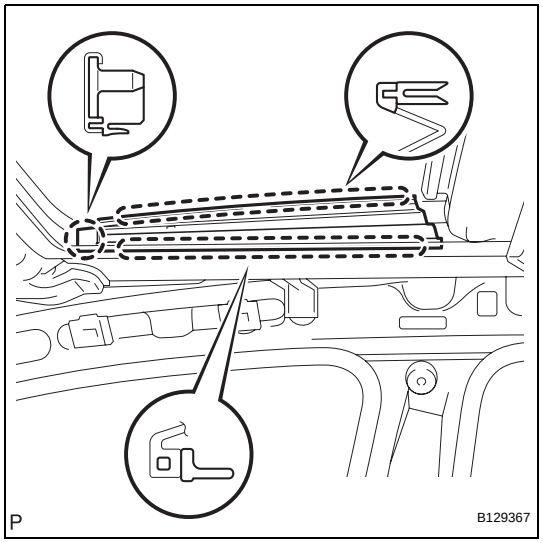

5. INSTALL SLIDING ROOF SIDE GARNISH LH
(a) Attach the claws to install the garnish.

6. INSTALL SLIDING ROOF SIDE GARNISH RH
HINT:
Use the same procedures described for the LH side.

7. CHECK FOR WATER LEAKS
(a) Adjust the sliding roof glass sub-assembly, and check for water leaks.
(b) If there are any leaks, readjust the sliding roof glass sub-assembly.

8. INSTALL ROOF HEADLINING ASSEMBLY
(a) Install the roof headlining (see page IR-59).

9. CONNECT CABLE TO NEGATIVE BATTERY TERMINAL

RF

SLIDING ROOF HOUSING

COMPONENTS

(2005/11-2006/01)

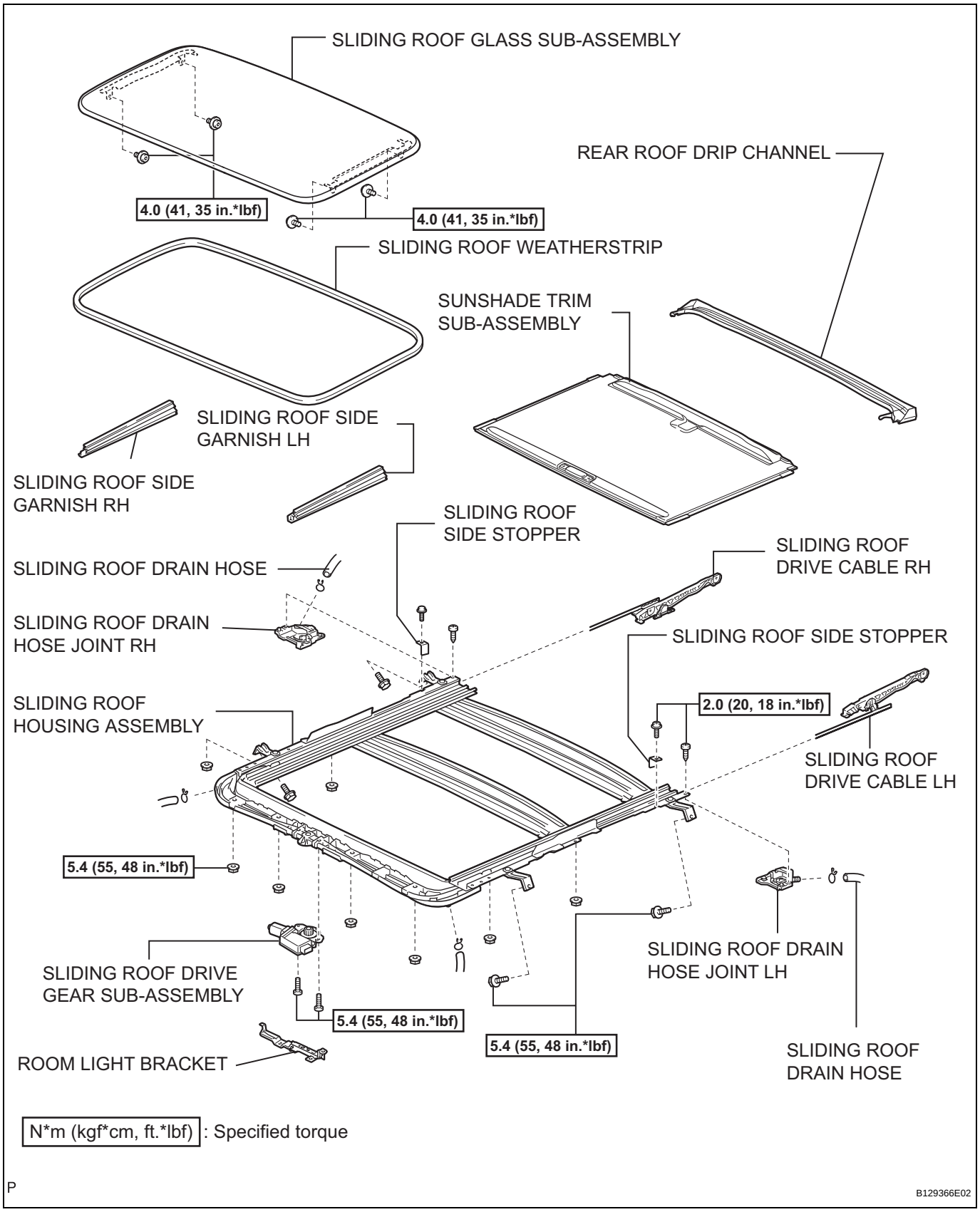

RF

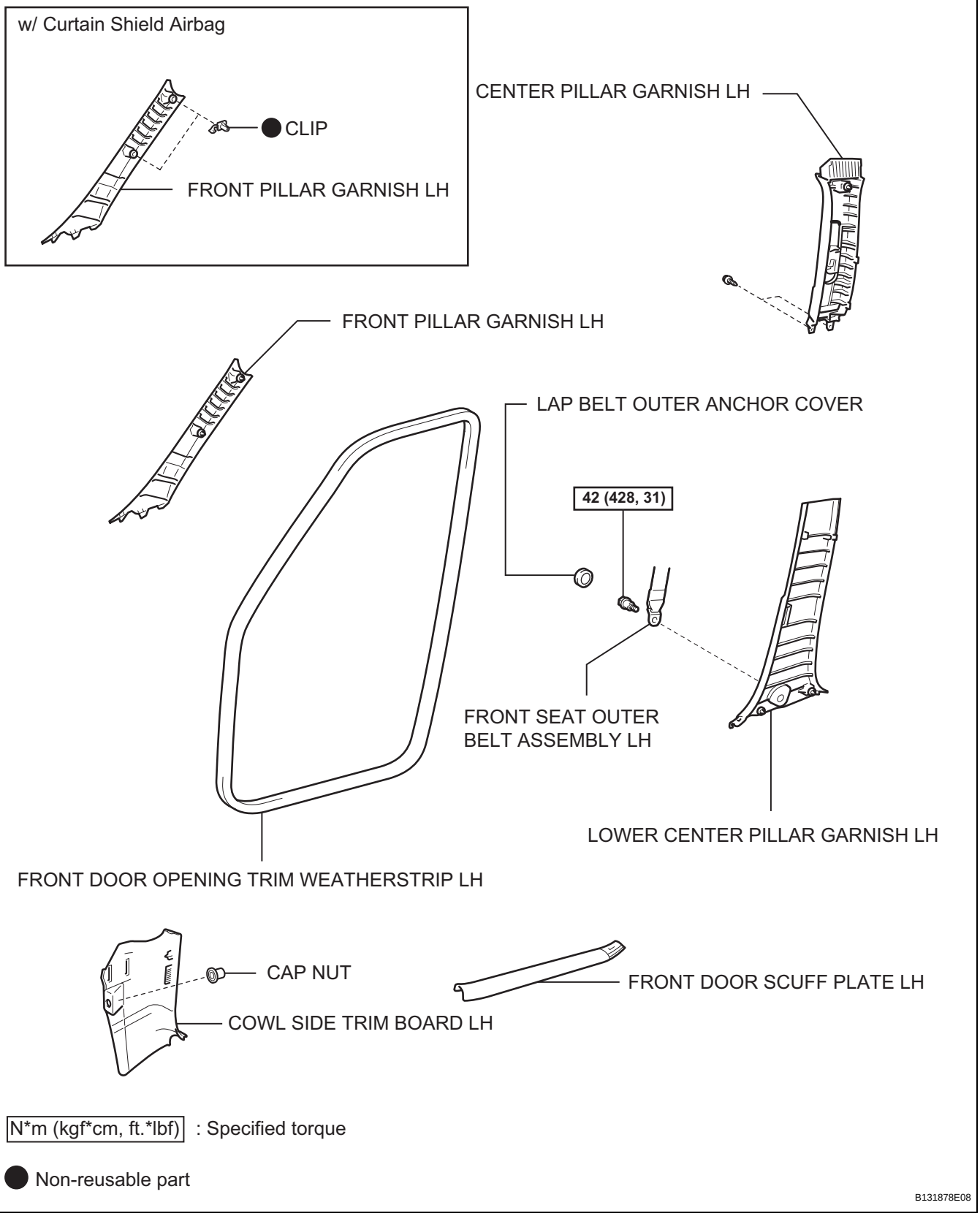
w/ Curtain Shield Airbag
CLIP
FRONT PILLAR GARNISH LH
CENTER PILLAR GARNISH LH
FRONT PILLAR GARNISH LH
LAP BELT OUTER ANCHOR COVER
42 (428, 31)
FRONT SEAT OUTER BELT ASSEMBLY LH
LOWER CENTER PILLAR GARNISH LH
FRONT DOOR OPENING TRIM WEATHERSTRIP LH
CAP NUT
COWL SIDE TRIM BOARD LH
FRONT DOOR SCUFF PLATE LH
N*m (kgf*cm, ft.*lbf) : Specified torque
Non-reusable part
B131878E08

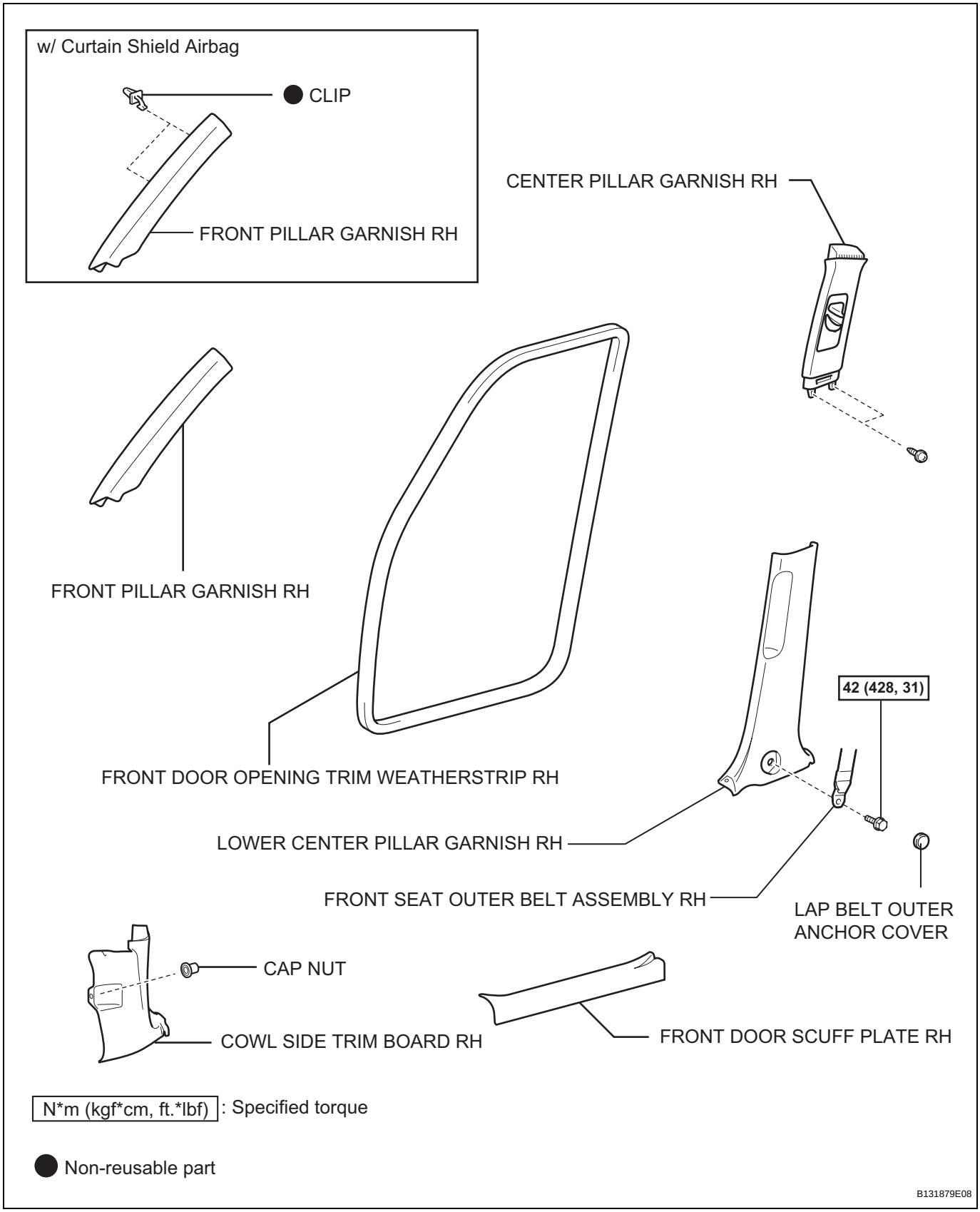
w/ Curtain Shield Airbag
CLIP
FRONT PILLAR GARNISH RH
CENTER PILLAR GARNISH RH
FRONT PILLAR GARNISH RH
FRONT DOOR OPENING TRIM WEATHERSTRIP RH
42 (428, 31)
LOWER CENTER PILLAR GARNISH RH
FRONT SEAT OUTER BELT ASSEMBLY RH
LAP BELT OUTER ANCHOR COVER
CAP NUT
COWL SIDE TRIM BOARD RH
FRONT DOOR SCUFF PLATE RH
N*m (kgf*cm, ft.*lbf) : Specified torque
Non-reusable part
B131879E08

RF

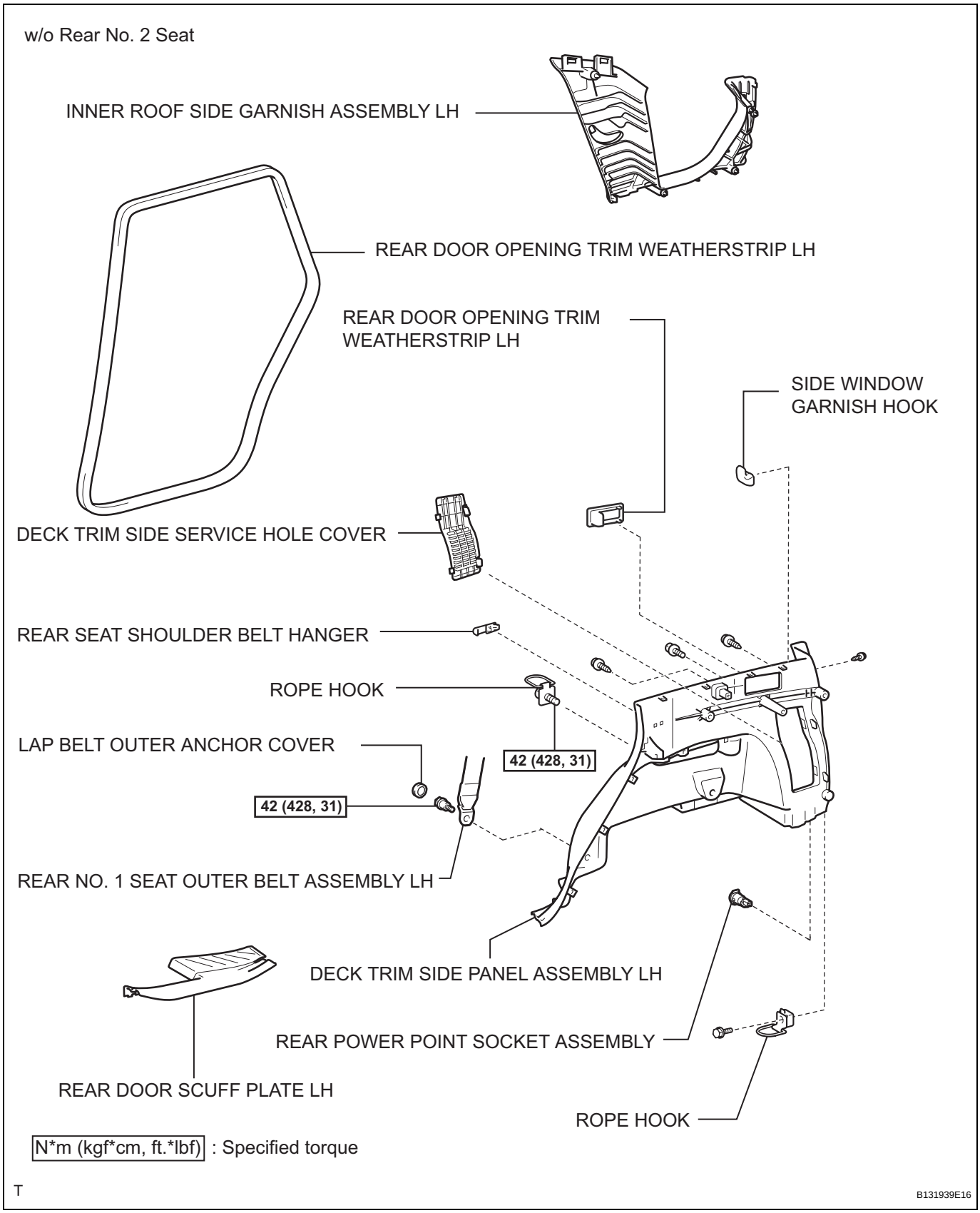
w/o Rear No. 2 Seat
INNER ROOF SIDE GARNISH ASSEMBLY LH
REAR DOOR OPENING TRIM WEATHERSTRIP LH
REAR DOOR OPENING TRIM WEATHERSTRIP LH
SIDE WINDOW GARNISH HOOK
DECK TRIM SIDE SERVICE HOLE COVER
REAR SEAT SHOULDER BELT HANGER
ROPE HOOK
LAP BELT OUTER ANCHOR COVER
42 (428, 31)
42 (428, 31)
REAR NO. 1 SEAT OUTER BELT ASSEMBLY LH
DECK TRIM SIDE PANEL ASSEMBLY LH
REAR POWER POINT SOCKET ASSEMBLY
REAR DOOR SCUFF PLATE LH
ROPE HOOK
N*m (kgf*cm, ft.*lbf) : Specified torque
T
B131939E16

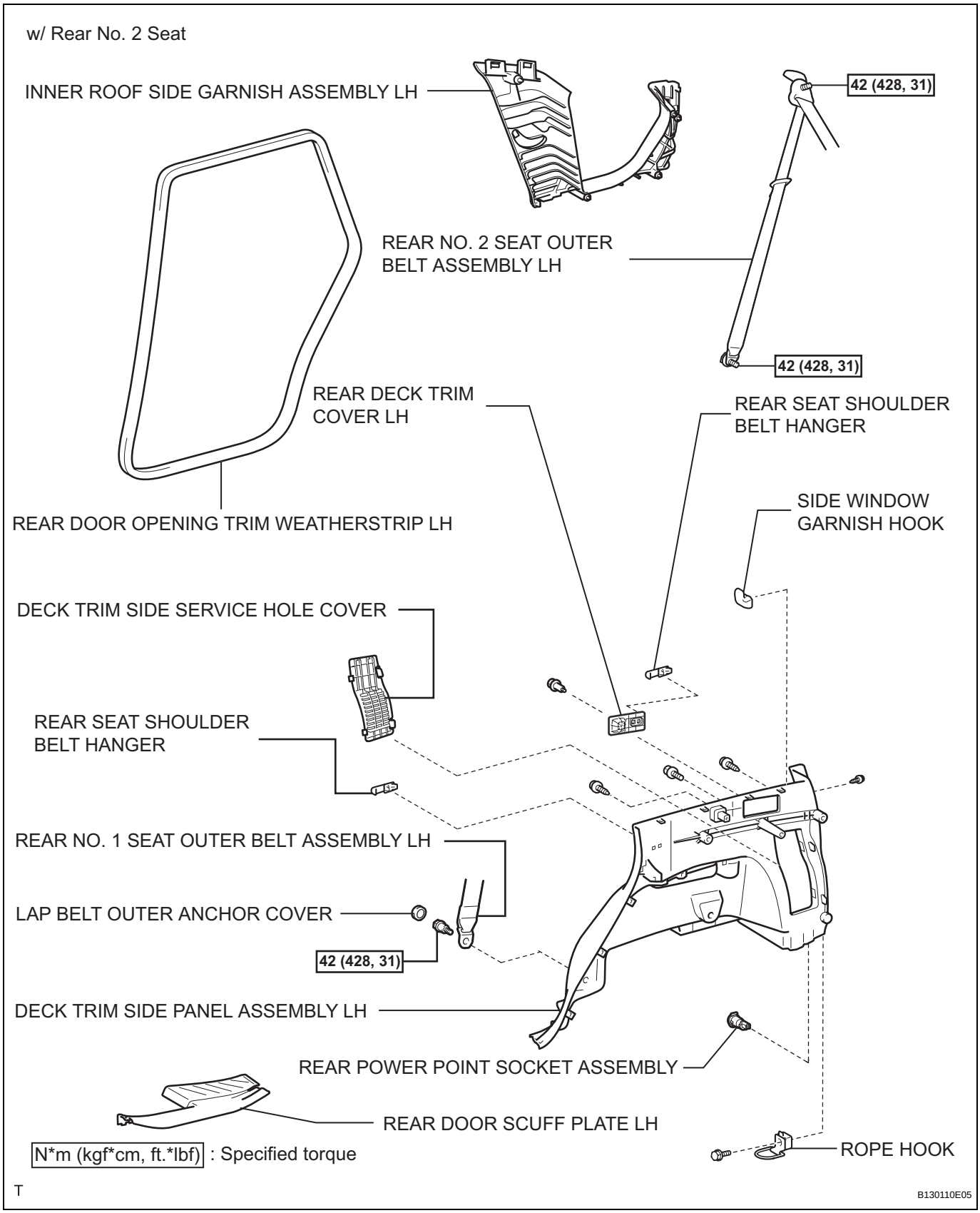
w/ Rear No. 2 Seat
INNER ROOF SIDE GARNISH ASSEMBLY LH
42 (428, 31)
REAR NO. 2 SEAT OUTER BELT ASSEMBLY LH
42 (428, 31)
REAR DECK TRIM COVER LH
REAR SEAT SHOULDER BELT HANGER
REAR DOOR OPENING TRIM WEATHERSTRIP LH
SIDE WINDOW GARNISH HOOK
DECK TRIM SIDE SERVICE HOLE COVER
REAR SEAT SHOULDER BELT HANGER
REAR NO. 1 SEAT OUTER BELT ASSEMBLY LH
LAP BELT OUTER ANCHOR COVER
42 (428, 31)
DECK TRIM SIDE PANEL ASSEMBLY LH
REAR POWER POINT SOCKET ASSEMBLY
REAR DOOR SCUFF PLATE LH
ROPE HOOK
N*m (kgf*cm, ft.*lbf) : Specified torque
T
B130110E05

RF

w/o Rear No. 2 Seat

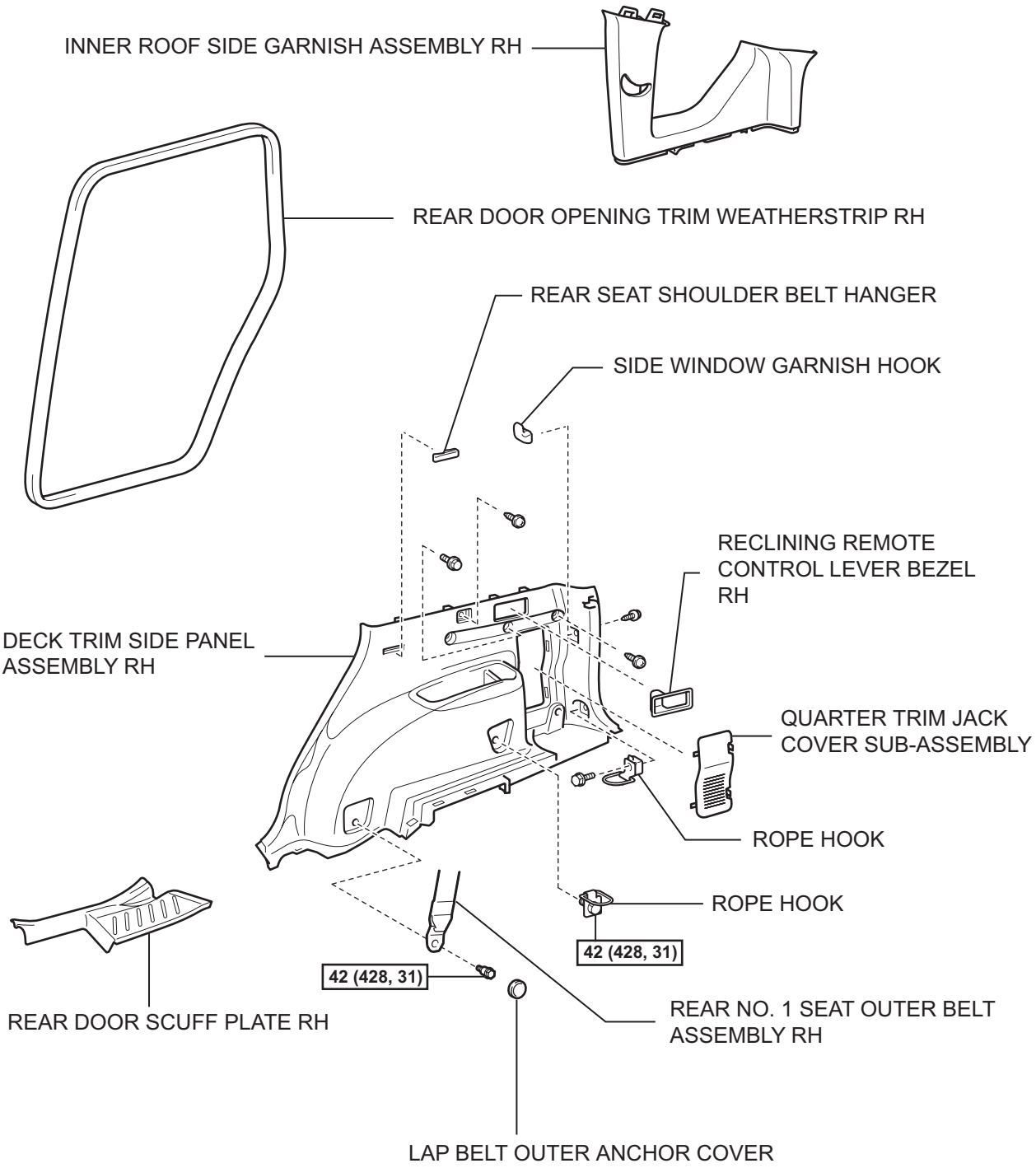

N*m (kgf*cm, ft.*lbf) : Specified torque

T

B131940E15

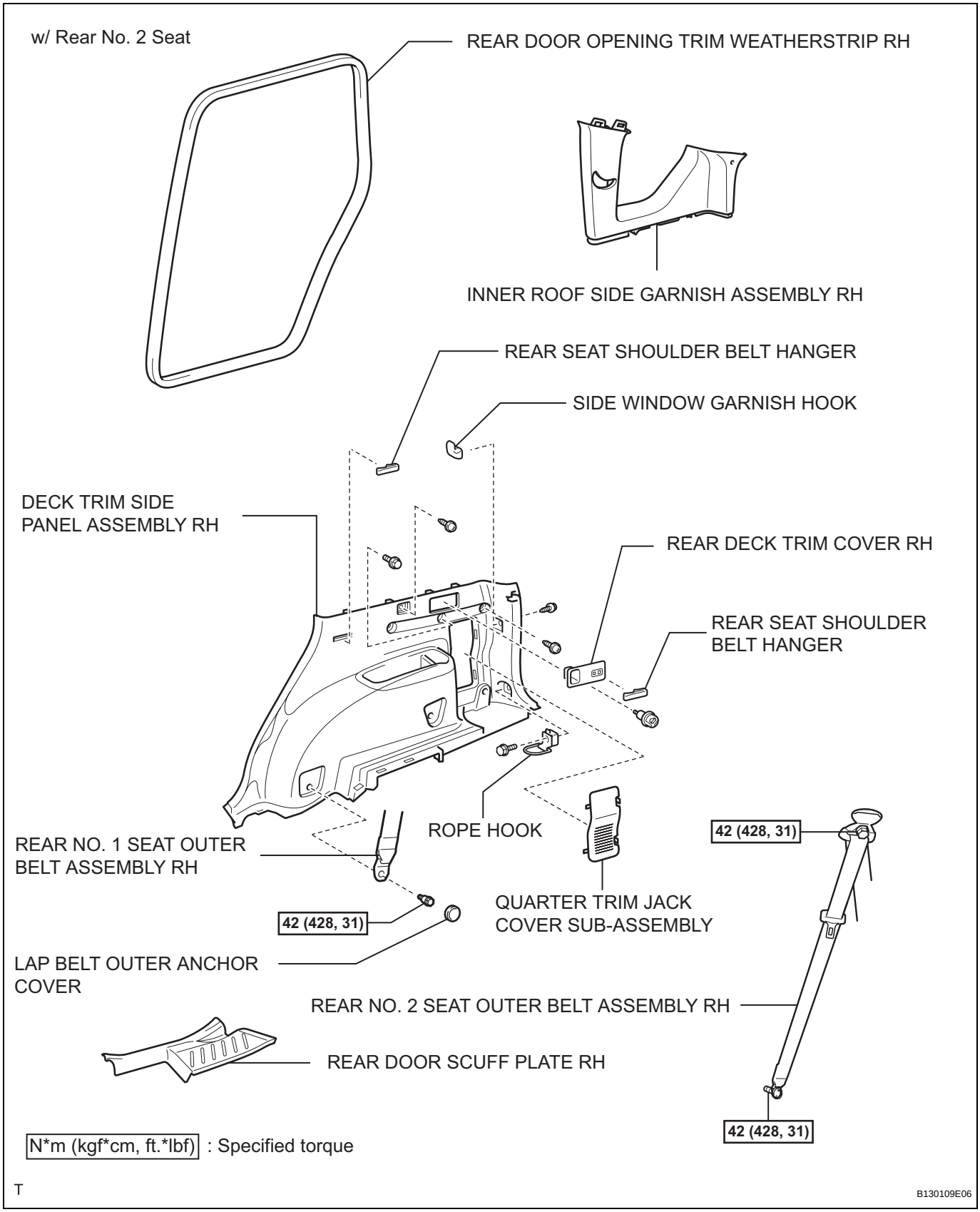
w/ Rear No. 2 Seat
REAR DOOR OPENING TRIM WEATHERSTRIP RH
INNER ROOF SIDE GARNISH ASSEMBLY RH
REAR SEAT SHOULDER BELT HANGER
SIDE WINDOW GARNISH HOOK
DECK TRIM SIDE PANEL ASSEMBLY RH
REAR DECK TRIM COVER RH
REAR SEAT SHOULDER BELT HANGER
ROPE HOOK
REAR NO. 1 SEAT OUTER BELT ASSEMBLY RH
42 (428, 31)
QUARTER TRIM JACK COVER SUB-ASSEMBLY
LAP BELT OUTER ANCHOR COVER
REAR NO. 2 SEAT OUTER BELT ASSEMBLY RH
REAR DOOR SCUFF PLATE RH
42 (428, 31)
42 (428, 31)
N*m (kgf*cm, ft.*lbf) : Specified torque
T
B130109E06

w/o Rear No. 2 Seat

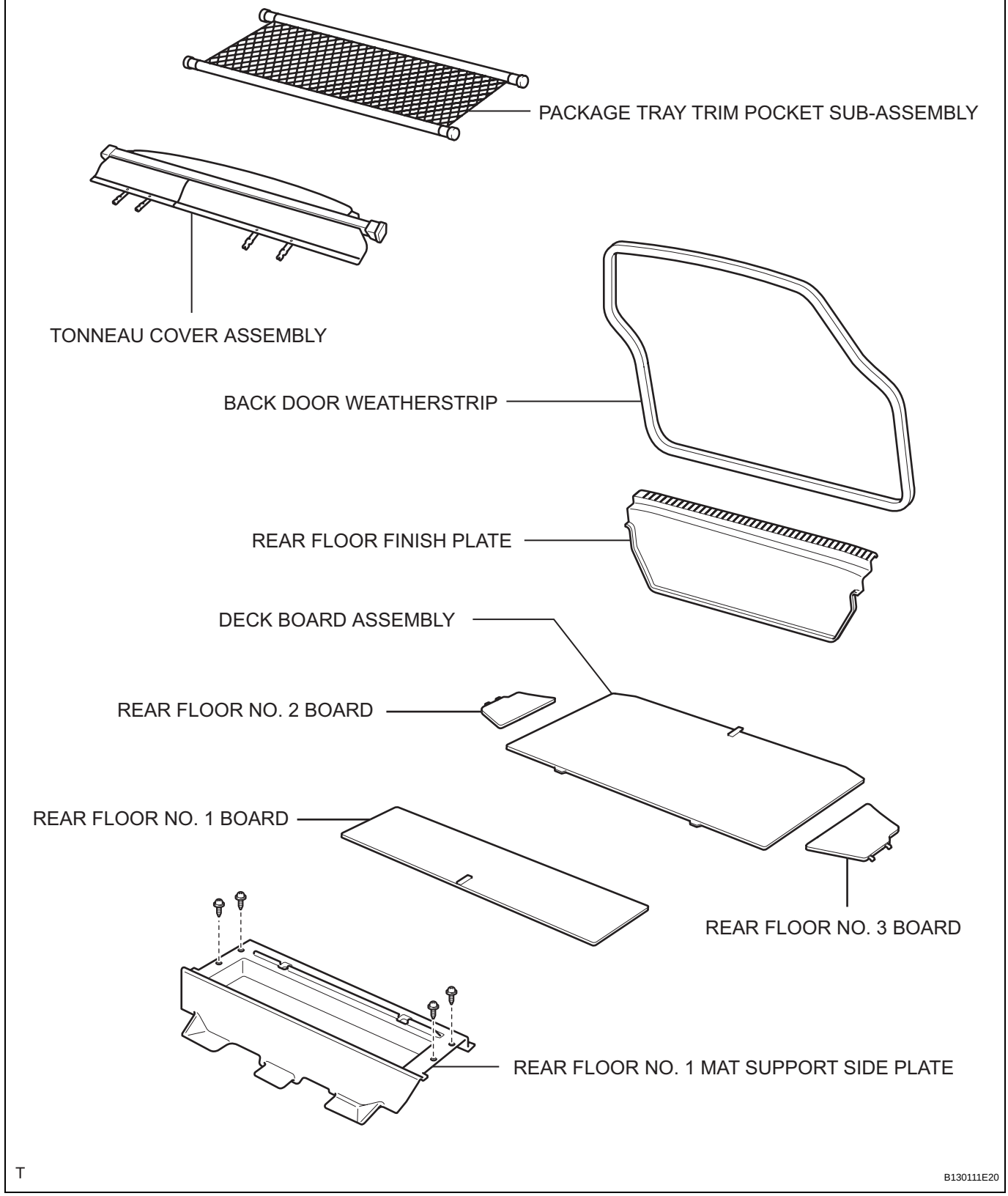

T

B130111E20

w/ Rear No. 2 Seat

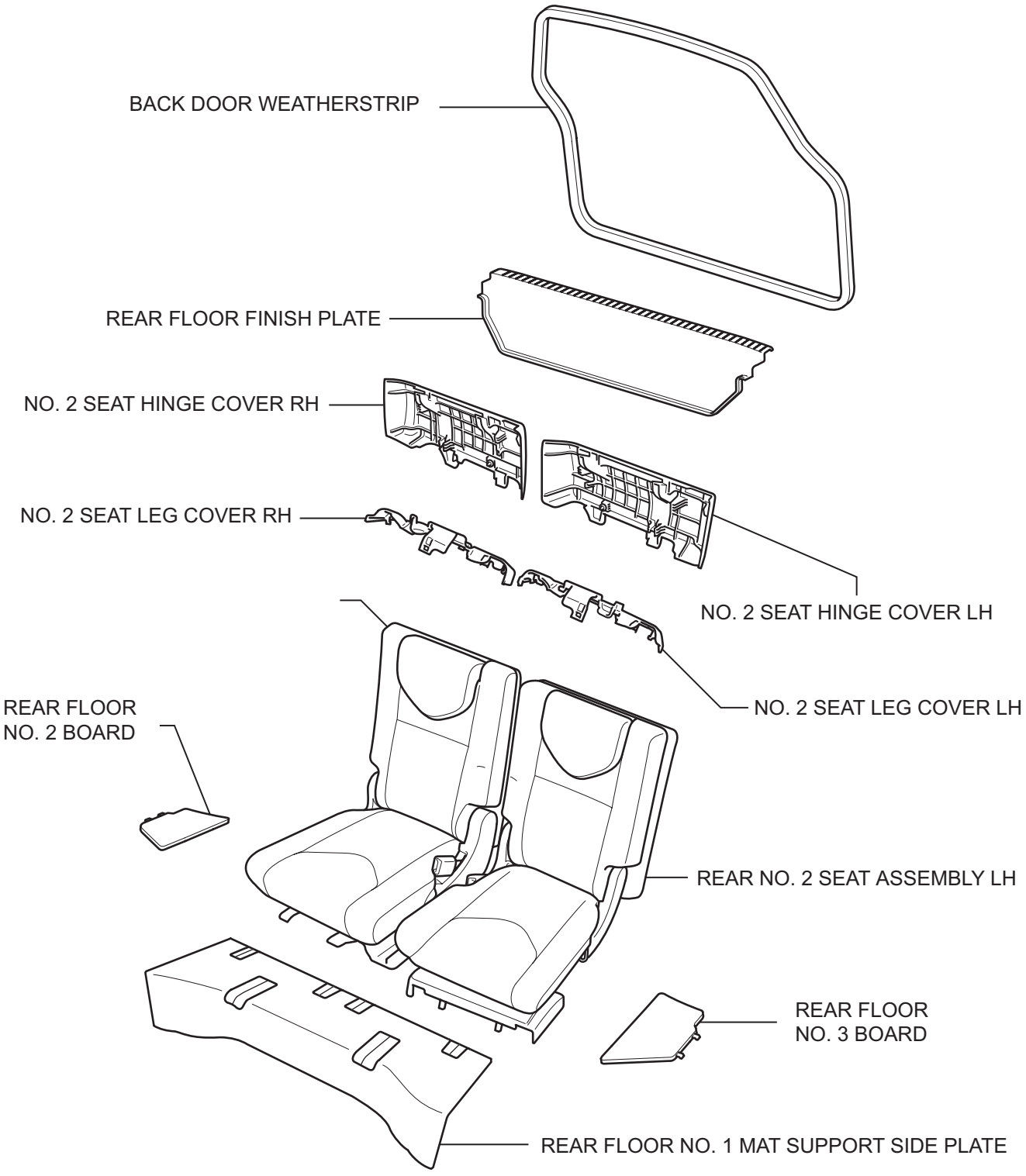

T

B130112E10

RF

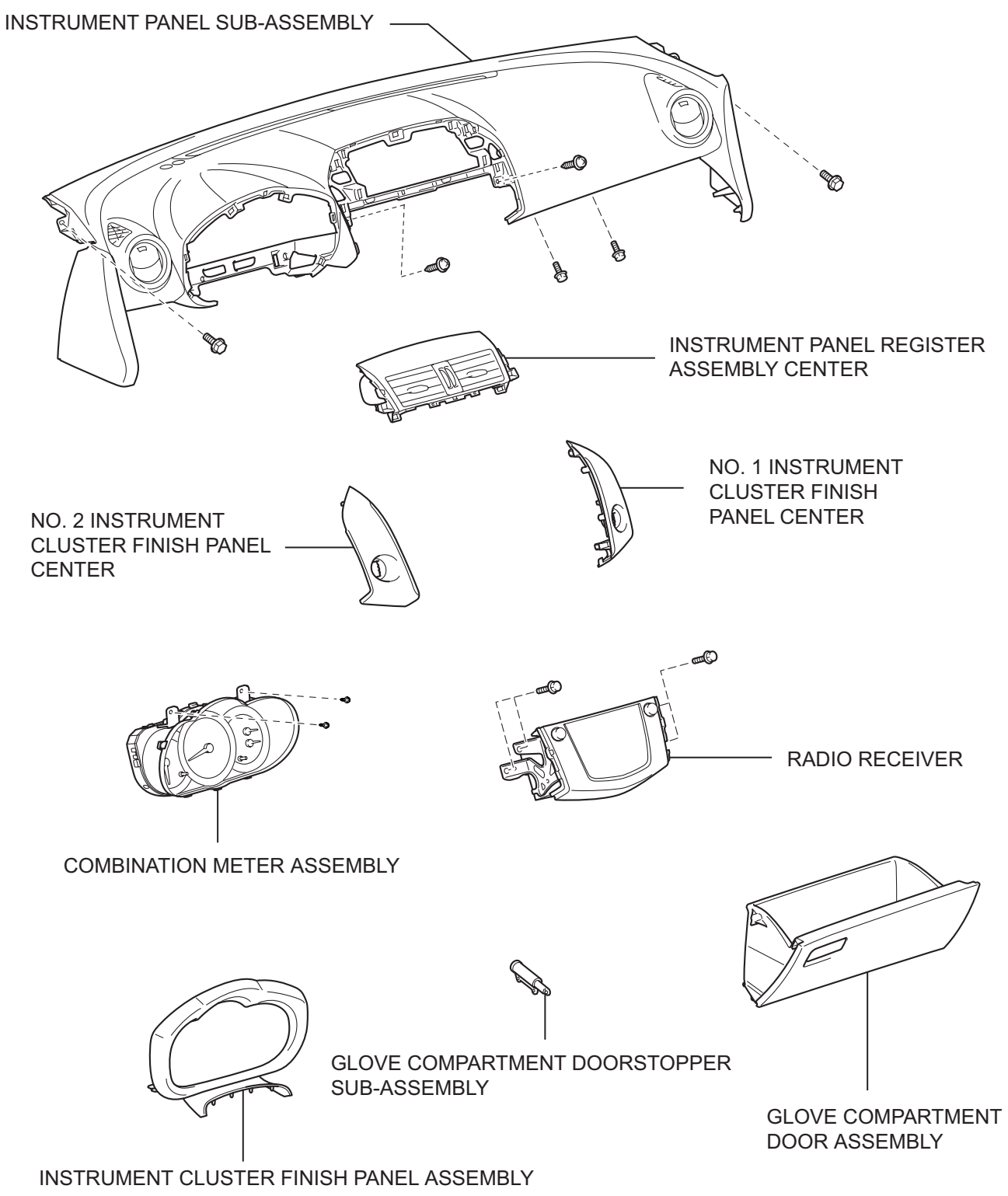
INSTRUMENT PANEL SUB-ASSEMBLY
INSTRUMENT PANEL REGISTER ASSEMBLY CENTER
NO. 1 INSTRUMENT CLUSTER FINISH PANEL CENTER
NO. 2 INSTRUMENT CLUSTER FINISH PANEL CENTER
RADIO RECEIVER
COMBINATION METER ASSEMBLY
GLOVE COMPARTMENT DOORSTOPPER SUB-ASSEMBLY
GLOVE COMPARTMENT DOOR ASSEMBLY
INSTRUMENT CLUSTER FINISH PANEL ASSEMBLY
H
B133001E03

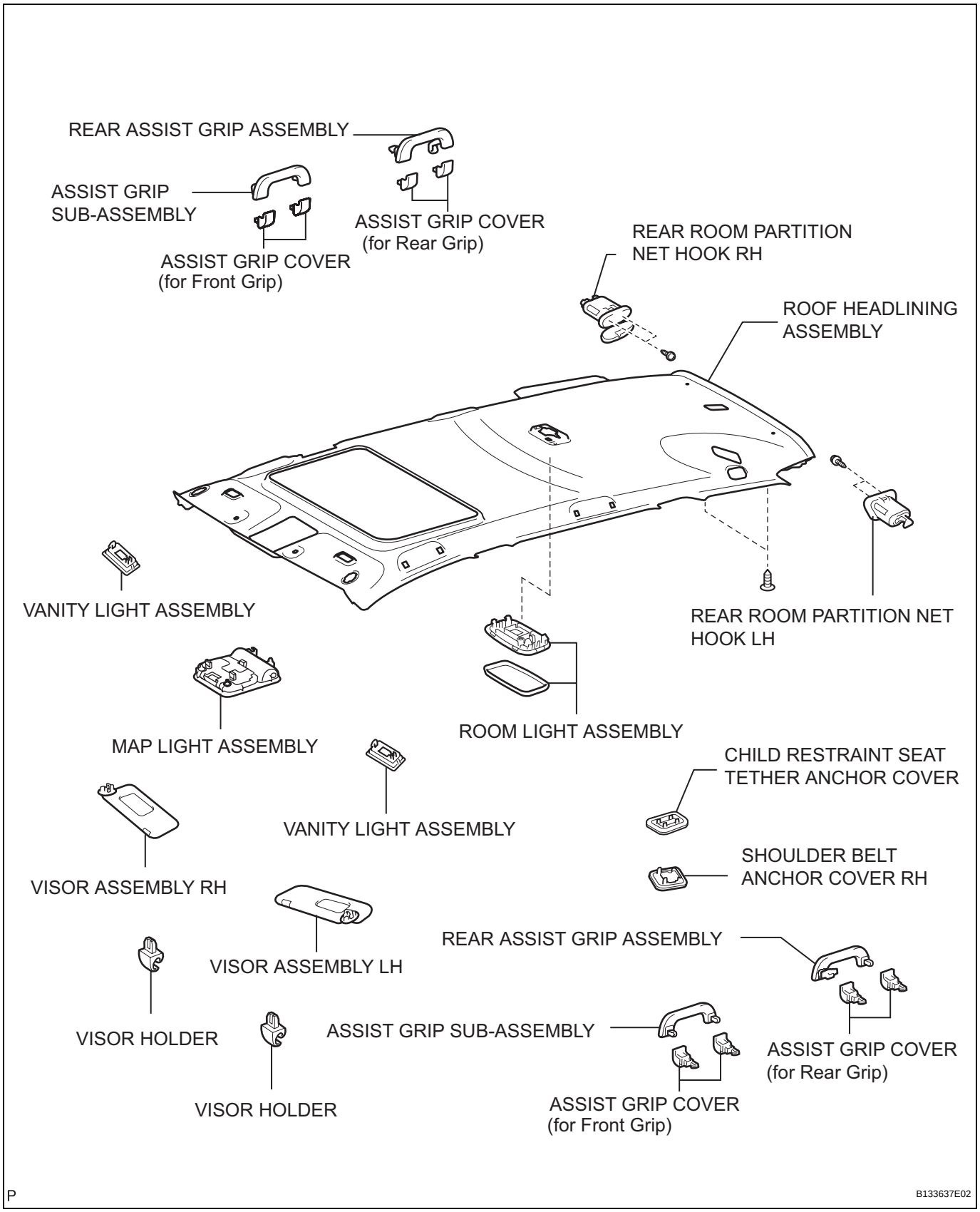
REAR ASSIST GRIP ASSEMBLY
ASSIST GRIP SUB-ASSEMBLY
ASSIST GRIP COVER (for Rear Grip)
ASSIST GRIP COVER (for Front Grip)
REAR ROOM PARTITION NET HOOK RH
ROOF HEADLINING ASSEMBLY
VANITY LIGHT ASSEMBLY
REAR ROOM PARTITION NET HOOK LH
MAP LIGHT ASSEMBLY
ROOM LIGHT ASSEMBLY
CHILD RESTRAINT SEAT TETHER ANCHOR COVER
VANITY LIGHT ASSEMBLY
SHOULDER BELT ANCHOR COVER RH
VISOR ASSEMBLY RH
VISOR ASSEMBLY LH
REAR ASSIST GRIP ASSEMBLY
VISOR HOLDER
ASSIST GRIP SUB-ASSEMBLY
ASSIST GRIP COVER (for Rear Grip)
VISOR HOLDER
ASSIST GRIP COVER (for Front Grip)
P
B133637E02

RF

SLIDING ROOF SWITCH ASSEMBLY

REMOVAL

1. DISCONNECT CABLE FROM NEGATIVE BATTERY TERMINAL

CAUTION:

Wait at least 90 seconds after disconnecting the cable from the negative (-) battery terminal to prevent airbag and seat belt pretensioner activation.

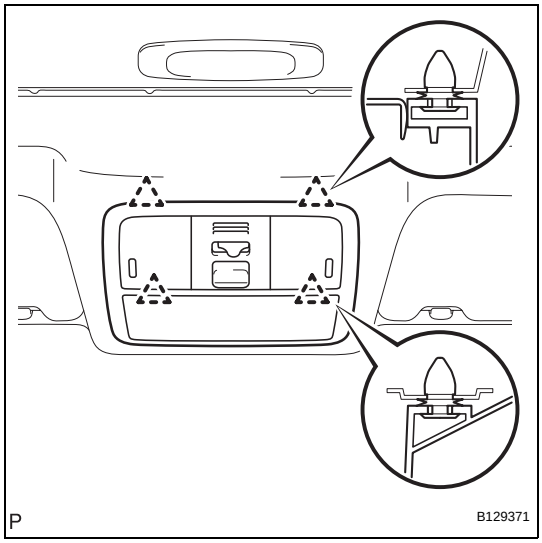

2. REMOVE MAP LIGHT ASSEMBLY

(a) Using a clip remover, detach the 4 clips and remove the light.

HINT:

Tape the clip remover tip before use.

(b) Disconnect the map light connector.

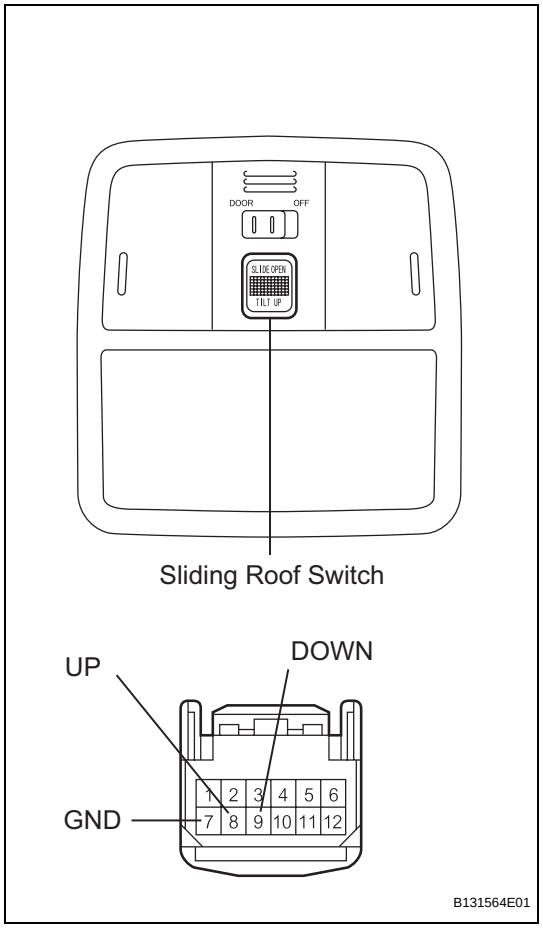

INSPECTION

1. INSPECT MAP LIGHT ASSEMBLY

(a) Measure the resistance of the switch.

Standard resistance

Switch Condition	Tester Connection	Specified Condition
TILT UP	8 (UP) - 7 (GND)	Below 1 Ω
TILT DOWN	9 (DOWN) - 7 (GND)	Below 1 Ω
SLIDE CLOSE	8 (UP) - 7 (GND)	Below 1 Ω
SLIDE OPEN	9 (DOWN) - 7 (GND)	Below 1 Ω

If the result is not as specified, replace the map light assembly.

RF

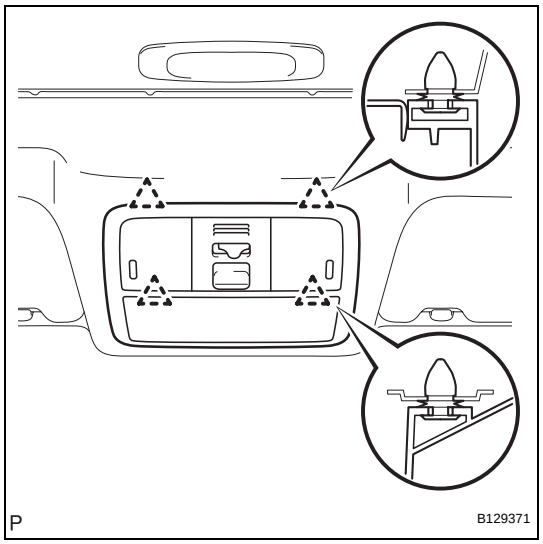

INSTALLATION

1. INSTALL MAP LIGHT ASSEMBLY

(a) Connect the map light connector.

(b) Attach the 4 clips to install the map light.

2. CONNECT CABLE TO NEGATIVE BATTERY TERMINAL

SYSTEM DESCRIPTION

1. GENERAL

This system has the following functions: manual slide open and close; auto slide open and close; manual tilt up and down; auto tilt up and down; jam protection; and key off operation.

2. FUNCTION OF MAIN COMPONENT

Component	Outline
Sliding roof drive gear sub-assembly (Sliding roof ECU)	Sliding roof ECU controls sliding roof motor to rotate forward and backward, which tilts or slides sliding roof glass
Overhead junction block	Output of operation signals from built-in sliding roof switch to sliding roof ECU are handled by overhead junction block

3. SYSTEM OPERATION

The sliding roof has the following features.

Function	Outline
Manual slide open and close	This function causes sliding roof to open (or close) when SLIDE OPEN switch (or TILT UP switch) is pressed for a maximum of 0.3 seconds. Sliding roof stops as soon as switch is released.
Auto slide open and close	This function causes sliding roof to be fully opened (or closed) when SLIDE OPEN switch (or TILT UP switch) is pressed for a minimum of 0.3 seconds
Manual tilt up and down	This function causes sliding roof to tilt up (or tilt down) when TILT UP switch (or SLIDE OPEN switch) is pressed for a maximum of 0.3 seconds
Auto tilt up and down	This function enables sliding roof to tilt up (or down) when TILT UP switch (or SLIDE OPEN switch) is pressed for a minimum of 0.3 seconds.
Jam protection function	The jam protection function automatically stops sliding roof, or stops sliding roof and makes it open halfway (or fully tilts it upward) if a foreign object gets jammed in sliding roof during auto close operation (or auto tilt down operation).
Key off operation	Key off operation function makes it possible to operate sliding roof for approximately 45 seconds after ignition switch is turned off if front doors are not opened

HOW TO PROCEED WITH TROUBLESHOOTING

HINT:

- Use these procedures to troubleshoot the sliding roof system.
- *: Use the intelligent tester.

1 VEHICLE BROUGHT TO WORKSHOP

NEXT

2 INSPECT BATTERY VOLTAGE

RF

Standard voltage:
11 to 14 V

If the voltage is below 11 V, recharge or replace the battery before proceeding.

NEXT

3 INSPECT COMMUNICATION FUNCTION OF MULTIPLEX COMMUNICATION SYSTEM (CAN)*

(a) Using the intelligent tester, check if the Multiplex Communication System (CAN) is functioning normally.

Result

Result	Proceed to
CAN DTC is not output	A
CAN DTC is output	B

B → **Go to CAN COMMUNICATION SYSTEM**

A

4 PROBLEM SYMPTOMS TABLE

Result

Result	Proceed to
Fault is not listed in problem symptoms table	A
Fault is listed in problem symptoms table	B

B → **Go to step 6**

A

5 OVERALL ANALYSIS AND TROUBLESHOOTING

(a) Data List / Active Test (see page RF-7)
(b) Terminals of ECU (see page RF-5)

(c) On-vehicle Inspection (see page RF-9)

NEXT

6	**ADJUST, REPAIR OR REPLACE**

NEXT

7	**CONFIRMATION TEST**

NEXT

END

INITIALIZATION

1. INITIALIZE SLIDING ROOF DRIVE GEAR SUB-ASSEMBLY

NOTICE:

When replacing the sliding roof drive gear, the sliding roof drive gear requires initialization. If a reset is not executed, the following functions do not operate: auto operation and key off operation.

(a) Turn the ignition switch ON.

(b) If the sliding roof is open, close it fully.

(c) By pushing the slide open switch of the slide switch or the up switch of the tilt switch on the personal light, make the sliding roof operate as follows: Tilt up → approximately 1 second → tilt down → slide open → slide closed.

(d) Check that the sliding roof stops at the fully closed position.

(e) Finish the initialization.

(f) Check that the AUTO operation works normally.

NOTICE:

If the following conditions occur while operating, initialization will fail.

- **Ignition switch is turned OFF.**
- **Pushed sliding roof control switch is released while sliding roof is operating.**
- **Vehicle speed is 5 km/h (3 mph) or more.**
- **Communication is cut off.**

HINT:

- If the sliding roof cannot fully close or its position has become misaligned, perform the initialization again.
- If the sliding roof TILT UP switch or SLIDE CLOSE switch is pressed and held until the roof glass has either stopped moving or started moving in the opposite direction, and then the switch is held for another 10 seconds or more, perform the initialization again.
- If the AUTO operation function and jam protection function do not operate after the drive gear has been reset, replace the sliding roof drive gear (sliding roof ECU).

RF

PROBLEM SYMPTOMS TABLE

HINT:
Use the table below to help determine the cause of the problem symptom. The potential causes of the symptoms are listed in order of probability in the "Suspected Area" column of the table. Check each symptom by checking the suspected areas in the order they are listed. Replace parts as necessary.
Inspect the fuses and relays related to this system before inspecting the suspected areas below.

Sliding Roof System

Symptom	Suspected area	See page
Sliding function and tilt function do not operate	Sliding roof ECU power source circuit	RF-25
Either sliding function or tilt function does not operate	Sliding roof control switch circuit	RF-22

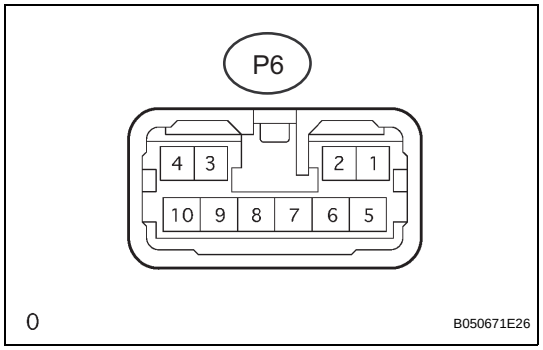

TERMINALS OF ECU

1. CHECK SLIDING ROOF DRIVE GEAR SUB-ASSEMBLY (SLIDING ROOF ECU)

(a) Disconnect the P6 ECU connector.
(b) Measure the resistance and voltage of the wire harness side connector.

Symbols (Terminal No.)	Wiring Color	Terminal Description	Condition	Specified Condition
+B (P6-1) - GND (P6-2)	L - W-B	+B power supply	Always	10 to 14 V
IG (P6-5) - GND (P6-2)	V - W-B	Power supply	Ignition switch OFF	Below 1 V
IG (P6-5) - GND (P6-2)	V - W-B	Power supply	Ignition switch ON	10 to 14 V
DWN (P6-7) - GND (P6-2)	R - W-B	Sliding roof motor open	SLIDE OPEN switch OFF	10 kΩ or higher
DWN (P6-7) - GND (P6-2)	R - W-B	Sliding roof motor open	SLIDE OPEN switch ON	Below 1 Ω
UP (P6-9) - GND (P6-2)	Y - W-B	Sliding roof motor close	TILT UP switch OFF	10 kΩ or higher
UP (P6-9) - GND (P6-2)	Y - W-B	Sliding roof motor close	TILT UP switch ON	Below 1 Ω
GND (P6-2) - Body ground	W-B - Body ground	Ground	Always	Below 1 Ω

(c) Reconnect the P6 ECU connector.
(d) Measure the voltage of the connector.

Symbols (Terminal No.)	Wiring Color	Terminal Description	Condition	Specified Condition
DWN (P6-7) - GND (P6-2)	R - W-B	Sliding roof motor open	Ignition switch ON, sliding roof closed, SLIDE OPEN switch OFF	Below 1 V
DWN (P6-7) - GND (P6-2)	R - W-B	Sliding roof motor open	Ignition switch ON, sliding roof closed, SLIDE OPEN switch ON	10 to 14 V
UP (P6-9) - GND (P6-2)	Y - W-B	Sliding roof motor close	Ignition switch on, sliding roof open, TILT UP switch OFF	Below 1 V
UP (P6-9) - GND (P6-2)	Y - W-B	Sliding roof motor close	Ignition switch on, sliding roof open, TILT UP switch ON	10 to 14 V

If the result is not as specified, the ECU may have a malfunction.

RF

DIAGNOSIS SYSTEM

1. DESCRIPTION

(a) Sliding roof system data and Diagnostic Trouble Codes (DTCs) can be read through the vehicle's Data Link Connector 3 (DLC3). When the system seems to be malfunctioning, use the intelligent tester to check for malfunctions and perform repairs.

2. CHECK DLC3

The vehicle uses the ISO 15765-4 for communication protocol. The terminal arrangement of the DLC3 complies with ISO 15031-03 and matches the ISO 15765-4 format.

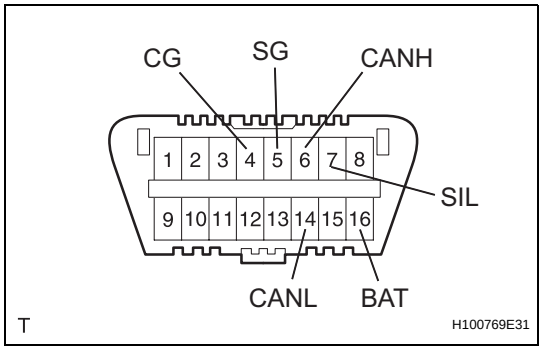

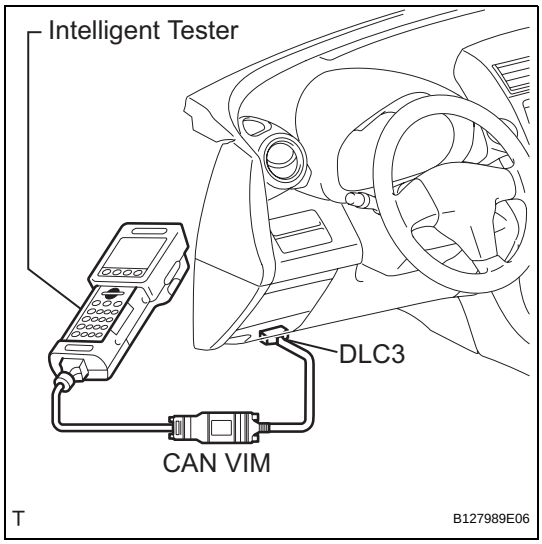

HINT:

Connect the cable of the intelligent tester to the DLC3, turn the ignition switch on and attempt to use the tester. If the display indicates that a communication error has occurred, there is a problem either with the vehicle or with the tester.

- If communication is normal when the tester is connected to another vehicle, inspect the DLC3 of the original vehicle.
- If communication is still not possible when the tester is connected to another vehicle, the problem may be in the tester itself. Consult the Service Department listed in the tester's instruction manual.

Symbols (Terminal No.)	Terminal Description	Condition	Specified Condition
SIL (7) - SG (5)	Bus "+" line	During transmission	Pulse generation
CG (4) - Body ground	Chassis ground	Always	Below 1 Ω
SG (5) - Body ground	Signal ground	Always	Below 1 Ω
BAT (16) - Body ground	Battery positive	Always	11 to 14 V
CANH (6) - CANL (14)	HIGH-level CAN bus line	Ignition switch OFF	54 to 69 Ω
CANH (6) - Body ground	HIGH-level CAN bus line	Ignition switch OFF	1 MΩ or higher
CANH (6) - CG (4)	HIGH-level CAN bus line	Ignition switch OFF	1 MΩ or higher
CANL (14) - Body ground	LOW-level CAN bus line	Ignition switch OFF	1 MΩ or higher
CANL (14) - CG (4)	LOW-level CAN bus line	Ignition switch OFF	1 MΩ or higher

If the result is not as specified, the DLC3 may have a malfunction. Repair or replace the harness and connector.

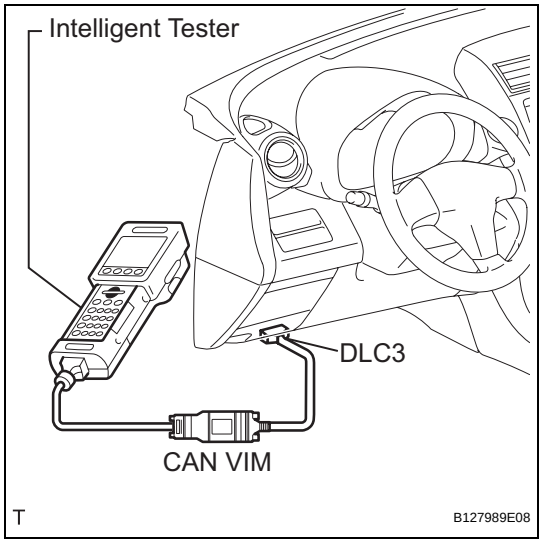

DTC CHECK / CLEAR

1. CHECK DTC

(a) Connect the intelligent tester to the DLC3.
(b) Turn the ignition switch ON and turn the tester ON.
(c) Select the following menu item: Body / Sliding Roof / DTC.
(d) Check the DTC(s).

2. CLEAR DTC

(a) Connect the intelligent tester to the DLC3.
(b) Turn the ignition switch ON and turn the tester ON.
(c) Select the following menu item: Body / Sliding Roof / DTC / Clear.
(d) Press the YES button.
(e) Check that the DTCs are cleared.

DATA LIST / ACTIVE TEST

1. READ DATA LIST

HINT:

Using the intelligent tester's Data List allows switch, sensor, actuator and other item values to be read without removing any parts. Reading the Data List early in troubleshooting is one way to save time.

(a) Connect the intelligent tester to the DLC3.
(b) Turn the ignition switch ON.
(c) Read the Data List according to the display on the tester.

Sliding roof:

Item	Measurement Item / Display (Range)	Normal Condition	Diagnostic Note
CLOSE SW	Slide switch close signal / ON or OFF	ON: TILT UP switch is pressed OFF: TILT UP switch is not pressed	-
OPEN SW	Slide switch open signal / ON or OFF	ON: SLIDE OPEN switch is pressed OFF: SLIDE OPEN switch is not pressed	-
IG (MPX)	Ignition switch signal (MPX signal) / ON or OFF	ON: Ignition switch is ON OFF: Ignition switch is OFF	-
IG (DIRCT SIG)	Ignition switch signal (Direct signal) / ON or OFF	ON: Ignition switch is ON OFF: Ignition switch is OFF	-
KEY OFF PERMS	Key off permission / ON or OFF	ON: Ignition switch is ON OFF: Ignition switch is OFF	-
HALL IC1 STATUS	Sliding roof operating signal / NORMAL or LOCK	NORMAL: Sliding roof motor is operating LOCK: Sliding roof motor is not operating	-
HALL IC1 PULSE	Sliding roof operating signal / LO or HI	LO: Sliding roof motor is not operating HI: Sliding roof motor is operating	-
HALL IC2 STATUS	Sliding roof operating signal / NORMAL or LOCK	NORMAL: Sliding roof motor is operating LOCK: Sliding roof motor is not operating	-
HALL IC2 PULSE	Sliding roof operating signal / LO or HI	LO: Sliding roof motor is not operating HI: Sliding roof motor is operating	-

2. PERFORM ACTIVE TEST

HINT:

Performing the intelligent tester's Active Test allows relay, VSV, actuator and other items to be operated without removing any parts. Performing the Active Test early in troubleshooting is one way to save time. The Data List can be displayed during the Active Test.

(a) Connect the intelligent tester to the DLC3.
(b) Turn the ignition switch ON.

(c) Perform the Active Test according to the display on the tester.

Sliding roof ECU:

Item	Test Details	Diagnostic Note
SLIDE ROOF	Operate sliding roof CLS / UP CLS / UP: Sliding roof CLOSE or UP operation occurs OFF: Sliding roof is not operating	-
SLIDE ROOF	Operate sliding roof OPN / DWN OPN / DWN: Sliding roof OPEN or DOWN operation occurs OFF: Sliding roof is not operating	-

DIAGNOSTIC TROUBLE CODE CHART

Sliding Roof System

DTC No.	Detection Item	Trouble Area	See page
B2341	Sensor (Motor) Failure	1. Sliding Roof Drive Gear Sub-assembly (sliding roof ECU) 2. Overhead Junction Block (sliding roof control switch) 3. Wire Harness	RF-11
B2342	Switch Failure	1. Sliding Roof Drive Gear Sub-assembly (sliding roof ECU) 2. Overhead Junction Block (sliding roof control switch) 3. Wire Harness	RF-15
B2343	Position Initialization Incomplete	1. Sliding Roof Drive Gear Sub-assembly (sliding roof ECU) 2. Overhead Junction Block (sliding roof control switch) 3. Wire Harness	RF-19
B2344	Position Failure	1. Sliding Roof Drive Gear Sub-assembly (sliding roof ECU) 2. Overhead Junction Block (sliding roof control switch) 3. Wire Harness	RF-11

ON-VEHICLE INSPECTION

HINT:
When pressing the switch for 0.3 seconds or less, the roof glass moves but auto operation does not operate.

1. CHECK AUTO OPERATION

(a) Turn the ignition switch ON.
(b) When the roof glass is fully closed, press the SLIDE OPEN switch for 0.3 seconds or more. Check that the roof glass automatically slides until it is fully opened.
(c) When the roof glass is fully tilted up, press the SLIDE OPEN switch for 0.3 seconds or more. Check that the roof glass automatically slides until it is fully tilted down.
(d) When the roof glass is fully open, press the TILT UP switch for 0.3 seconds or more. Check that the roof glass automatically slides until it is fully closed.
(e) When the roof glass is fully closed, press the TILT UP switch for 0.3 seconds or more. Check that the roof glass automatically slides until it is fully tilted up.
(f) When the auto operation is operating, check that pressing any sliding roof control switch stops the roof glass operation.

2. CHECK SLIDING ROOF OPERATION AFTER IGNITION SWITCH IS TURNED OFF

(a) Turn the ignition switch from ON to OFF, and check that the sliding roof operates. Then open the driver side door once, and check that the sliding roof does not operate.
(b) Turn the ignition switch from ON to OFF and wait for approximately 45 seconds. Check that the sliding roof does not operate.
(c) Operate the auto (SLIDE OPEN or TILT UP) operation. While the roof glass is in motion, turn the ignition switch from ON to OFF. Check that the auto operation continues until the roof glass opens or closes fully.

3. CHECK JAM PROTECTION FUNCTION

CAUTION:

- **Do not use a part of your body, for example, your hand, to check the jam protection.**
- **Do not allow anything to become caught in the sliding roof by accident in this procedure.**
- **Perform the inspection from the inside of the vehicle.**

NOTICE:

- **Do not use hard objects, such as a hammer, to avoid damage to the roof.**
- **If the jam protection does not operate, reset the sliding roof drive gear (motor).**

RF

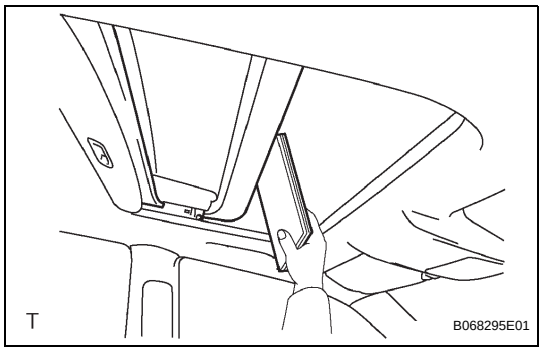

(a) When the sliding roof auto operation is operating and an object is caught between the vehicle body and glass, check that the roof glass opens a distance of 218 mm (8.58 in.) from the point of contact with the object, or opens fully if an opening distance of 218 mm (8.58 in.) is not available.

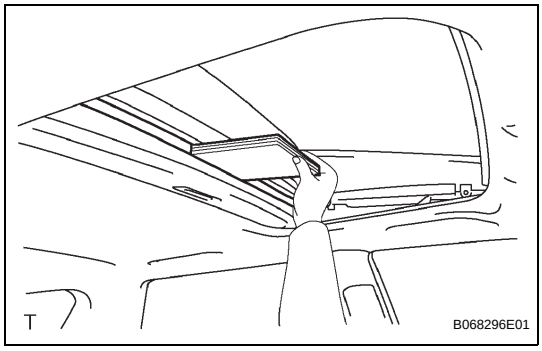

(b) When the TILT UP / DOWN function is operating, and an object is caught between the vehicle body and the roof glass, check that the sliding roof tilts up fully.

DTC	B2341	Sensor (Motor) Failure

DTC	B2344	Position Failure

DESCRIPTION

When the sliding roof drive gear (sliding roof ECU) detects the motor's malfunction, and the sliding roof operation is stopped, DTC B2341 is output. When the sliding roof drive gear (sliding roof ECU) detects the gear's malfunction, and the sliding roof operation is stopped, DTC B2344 is output.

DTC No.	DTC Detection Condition	Trouble Area
B2341	Sensor (motor) Failure	• Sliding roof drive gear sub-assembly (sliding roof ECU) • Overhead junction block (sliding roof control switch) • Wire harness
B2344	Position Failure	• Sliding roof drive gear sub-assembly (sliding roof ECU) • Overhead junction block (sliding roof control switch) • Wire harness

RF

WIRING DIAGRAM

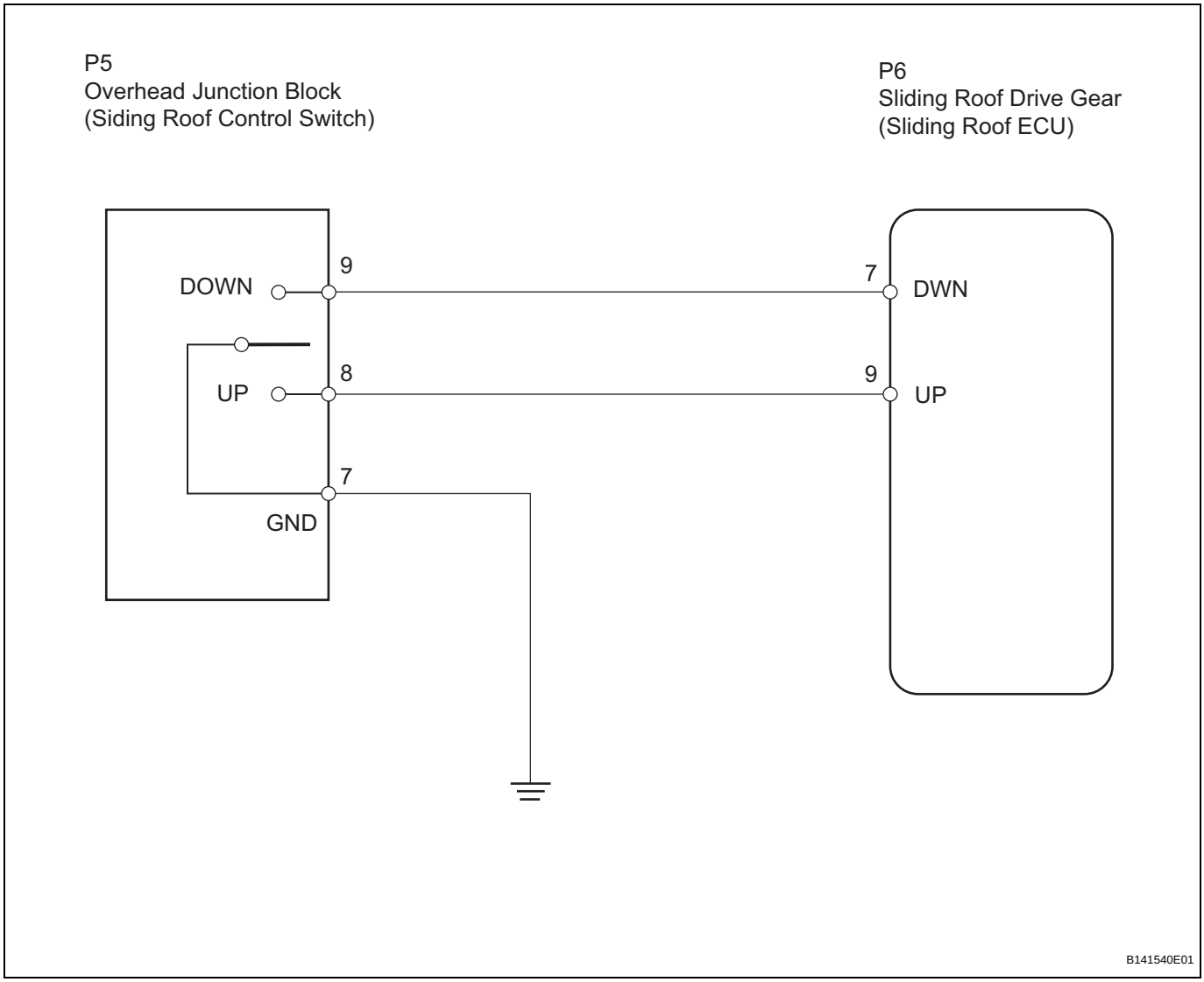

INSPECTION PROCEDURE

1	**CHECK SLIDING ROOF FUNCTION**

(a) Check the auto operation with the SLIDE OPEN and TILT UP switch (see page RF-9).
OK:
Auto operation operates normally with SLIDE OPEN and TILT UP switch.

NG → **Go to step 3**

OK

2	**DELETE DTC**

(a) Delete the DTC (see page RF-7).

NEXT

END

3	**INITIALIZE SLIDING ROOF DRIVE GEAR SUB-ASSEMBLY (SLIDING ROOF ECU)**

(a) Check that the sliding roof drive gear can be initialized (see page RF-4).
OK:
Sliding roof drive gear can be initialized.

NG → **Go to step 6**

OK

4	**CHECK SLIDING ROOF FUNCTION**

(a) Check the auto operation with the SLIDE OPEN and TILT UP switch (see page RF-9).
OK:
Auto operation operates normally with SLIDE OPEN and TILT UP switch.

NG → **REPLACE SLIDING ROOF DRIVE GEAR SUB-ASSEMBLY (SLIDING ROOF ECU)**

OK

5	**DELETE DTC**

(a) Delete the DTC (see page RF-7).

NEXT

END

6 CHECK WIRE HARNESS (SLIDING ROOF DRIVE GEAR - OVERHEAD JUNCTION BLOCK)

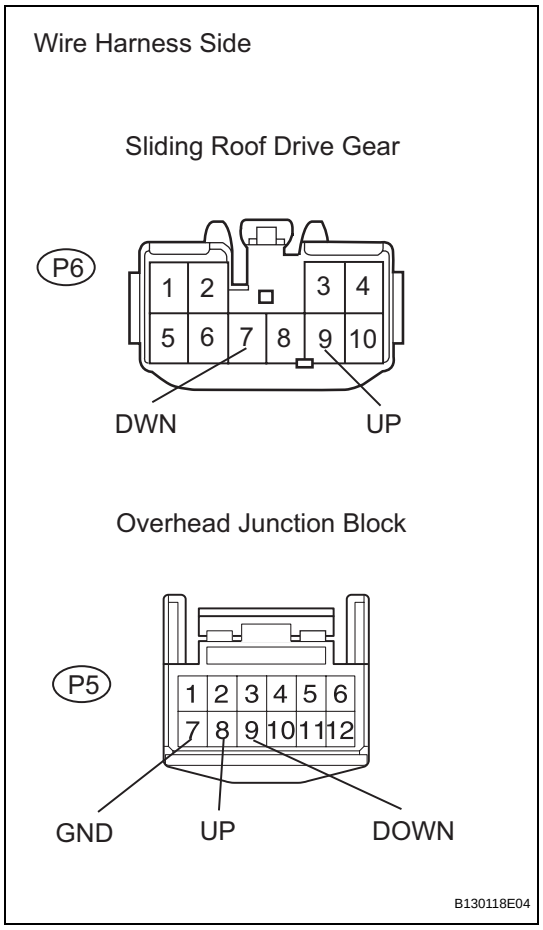

(a) Disconnect the P6 ECU connector.
(b) Disconnect the P5 junction block connector.
(c) Measure the resistance of the wire harness side connectors.

Standard resistance

Tester Connection	Specified Condition
P6-7 (DWN) - P5-9 (DOWN)	Below 1 Ω
P6-9 (UP) - P5-8 (UP)	Below 1 Ω
P6-7 (GND) - body ground	Below 1 Ω
P6-7 (DWN) - Body ground	10 kΩ or higher
P6-9 (UP) - body ground	10 kΩ or higher

RF

NG → **REPAIR OR REPLACE HARNESS AND CONNECTOR**

OK

7	**INSPECT OVERHEAD JUNCTION BLOCK (SLIDING ROOF CONTROL SWITCH)**

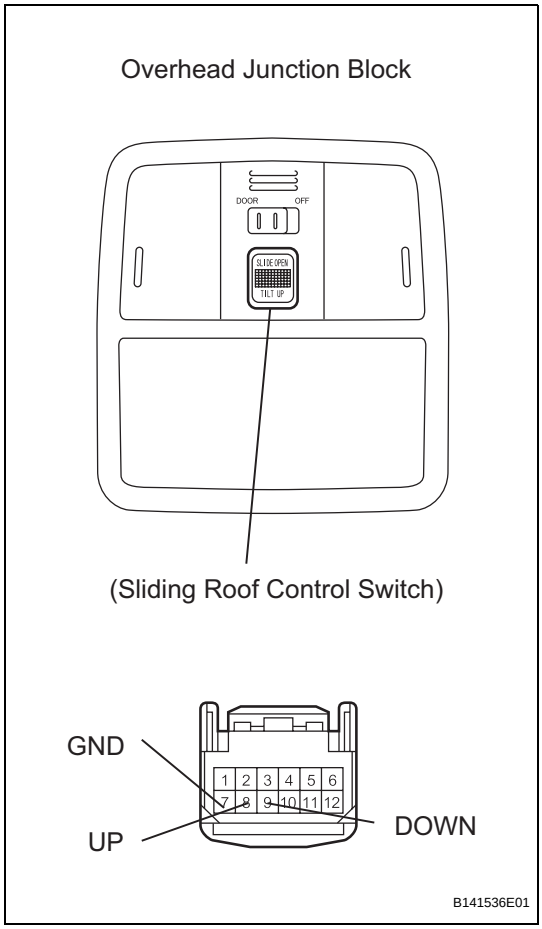

(a) Remove the overhead junction block.
(b) Measure the resistance of the switch.
Standard resistance

Tester Connection	Condition	Specified Condition
8 (UP) - 7 (GND)	TILT UP switch pushed	Below 1 Ω
8 (UP) - 7 (GND)	TILT UP switch not pushed	10 kΩ or higher
9 (DOWN) - 7 (GND)	SLIDE OPEN switch pushed	Below 1 Ω
9 (DOWN) - 7 (GND)	SLIDE OPEN switch not pushed	10 kΩ or higher

NG → **REPLACE OVERHEAD JUNCTION BLOCK (SLIDING ROOF CONTROL SWITCH)**

OK

REPLACE SLIDING ROOF DRIVE GEAR SUB-ASSEMBLY (SLIDING ROOF ECU)

RF

DTC	B2342	Switch Failure

DESCRIPTION

This DTC is output when the sliding roof drive gear (sliding roof ECU) detects that the SLIDE OPEN or TILT UP switch in the overhead junction block is stuck for 30 seconds or more.

DTC No.	DTC Detection Condition	Trouble Area
B2342	Sliding roof drive gear (sliding roof ECU) detects SLIDE OPEN or TILT UP switch in overhead junction block is stuck for 30 seconds or more	• Sliding roof drive gear sub-assembly (sliding roof ECU) • Overhead junction block (sliding roof control switch) • Wire harness

WIRING DIAGRAM

Refer to DTC B2341 (see page RF-11).

INSPECTION PROCEDURE

RF

1	READ VALUE OF INTELLIGENT TESTER (SLIDE OPEN AND TILT UP SWITCH)

(a) Use the Data List to check if the sliding roof control switch is functioning properly.

Sliding roof drive gear

Item	Measurement Item / Range (Display)	Normal Condition	Diagnostic Note
Open Switch Failure (Current)	SLIDE OPEN switch condition (current) / Fail or Not Fail	Fail: SLIDE OPEN switch is stuck Not Fail: SLIDE OPEN switch is not stuck	-
Close Switch Failure (Current)	TILT UP switch condition (current) / Fail or Not Fail	Fail: TILT UP switch is stuck Not Fail: SLIDE OPEN switch is not stuck	-
Open Switch Failure (Past)	SLIDE OPEN switch condition (past) / Fail or Not Fail	Fail: SLIDE OPEN switch was stuck in past Not Fail: SLIDE OPEN switch was not stuck in past	-
Close Switch Failure (past)	TILT UP switch condition (past) / Fail or Not Fail	Fail: TILT UP switch was stuck in past Not Fail: TILT UP switch was not stuck in past	-

OK:
"Not Fail" appears on tester screen.

NG → **Go to step 4**

OK

2	CHECK SLIDING ROOF FUNCTION

(a) Check the auto operation with the SLIDE OPEN and TILT UP switch (see page RF-9).

OK:
Auto operation operates normally with SLIDE OPEN and TILT UP switch.

NG → Go to step 7

OK

3	DELETE DTC

(a) Delete the DTC (see page RF-7).

NEXT

END

4	INSPECT OVERHEAD JUNCTION BLOCK (SLIDING ROOF CONTROL SWITCH)

RF

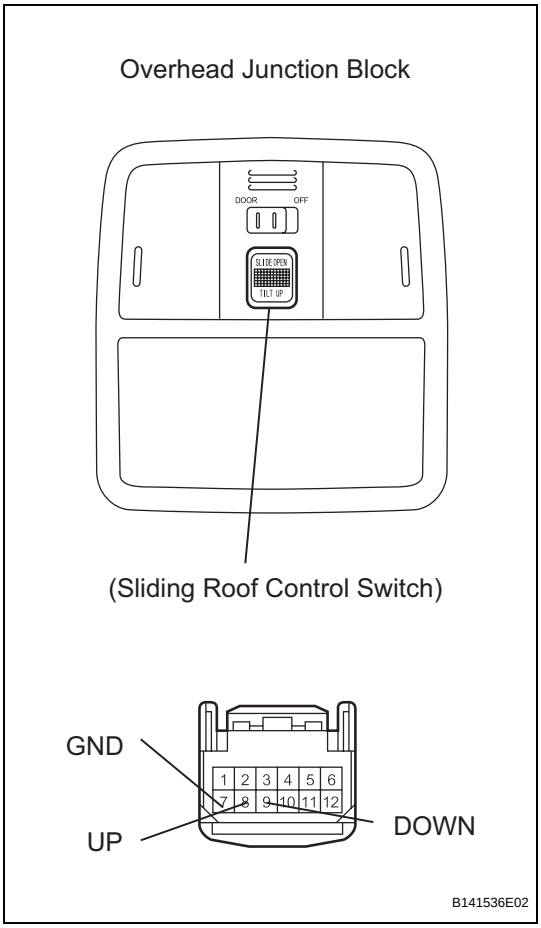

(a) Remove the overhead junction block.
(b) Measure the resistance of the switch.

Standard resistance

Tenter Connection	Condition	Specified Condition
8 (UP) - 7 (GND)	TILT UP switch pushed	Below 1 Ω
8 (UP) - 7 (GND)	TILT UP switch not pushed	10 kΩ or higher
9 (DOWN) - 7 (GND)	SLIDE OPEN switch pushed	Below 1 Ω
9 (DOWN) - 7 (GND)	SLIDE OPEN switch not pushed	10 kΩ or higher

OK → Go to step 10

NG

5	REPLACE OVERHEAD JUNCTION BLOCK (SLIDING ROOF CONTROL SWITCH)

(a) Temporarily replace the overhead junction block (sliding roof control switch) with a new or normally functioning one (see page RF-9).

NEXT

6	DELETE DTC

(a) Delete the DTC (see page RF-7).

NEXT

END

7	INITIALIZE SLIDING ROOF DRIVE GEAR SUB-ASSEMBLY (SLIDING ROOF ECU)

(a) Check that the sliding roof drive gear can be initialized (see page RF-4).
OK:
Sliding roof drive gear can be initialized.

NG → **Go to step 10**

OK

8	CHECK SLIDING ROOF FUNCTION

(a) Check the auto operation with the SLIDE OPEN and TILT OPEN switch (see page RF-9).
OK:
Auto operation operates normally with SLIDE OPEN and TILT UP switch.

NG → **REPLACE SLIDING ROOF DRIVE GEAR SUB-ASSEMBLY (SLIDING ROOF ECU)**

OK

9	DELETE DTC

(a) Delete the DTC (see page RF-7).

NEXT

END

RF

10	CHECK WIRE HARNESS (SLIDING ROOF DRIVE GEAR - OVERHEAD JUNCTION BLOCK)

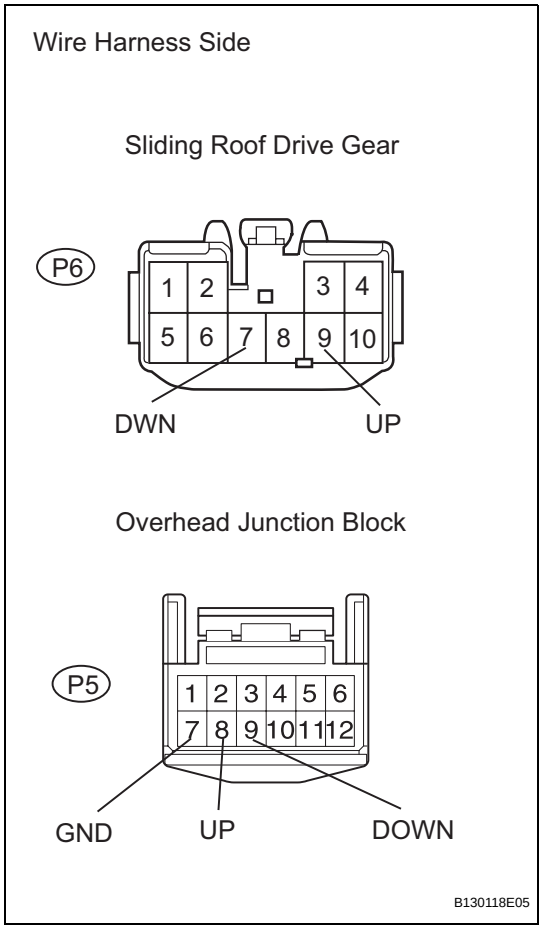

(a) Disconnect the P6 ECU connector.
(b) Disconnect the P5 junction block connector.
(c) Measure the resistance of the wire harness side connector.

Standard resistance

Tester Connection	Specified Condition
P6-7 (DWN) - P5-9 (DOWN)	Below 1 Ω
P6-9 (UP) - P5-8 (UP)	Below 1 Ω
P5-7 (GND) - Body ground	Below 1 Ω
P5-9 (DOWN) - Body ground	10 kΩ or higher
P5-8 (UP) - Body ground	10 kΩ or higher

NG → **REPAIR OR REPLACE HARNESS AND CONNECTOR**

OK

REPLACE SLIDING ROOF DRIVE GEAR SUB-ASSEMBLY (SLIDING ROOF ECU)

RF

DTC	B2343	Position Initialization Incomplete

DESCRIPTION

This DTC is output when the sliding roof drive gear (sliding roof ECU) has not been initialized.

DTC No.	DTC Detection Condition	Trouble Area
B2343	Sliding roof drive gear (sliding roof ECU) has not been initialized	• Sliding roof drive gear sub-assembly (sliding roof ECU) • Overhead junction block (sliding roof control switch) • Wire harness

WIRING DIAGRAM

Refer to DTC B2341 (see page RF-11).

INSPECTION PROCEDURE

1	INITIALIZE SLIDING ROOF DRIVE GEAR SUB-ASSEMBLY (SLIDING ROOF ECU)

(a) Check that the sliding roof drive gear can be initialized (see page RF-4).

OK:

Sliding roof drive gear can be initialized.

NG → **Go to step 3**

OK

2	CHECK SLIDING ROOF FUNCTION

(a) Check the auto operation with the SLIDE OPEN and TILT UP switch (see page RF-9).

OK:

Auto operation operates normally with SLIDE OPEN and TILT UP switch.

NG → **REPLACE SLIDING ROOF DRIVE GEAR SUB-ASSEMBLY (SLIDING ROOF ECU)**

OK

END

3	CHECK WIRE HARNESS (SLIDING ROOF DRIVE GEAR - OVERHEAD JUNCTION BLOCK)

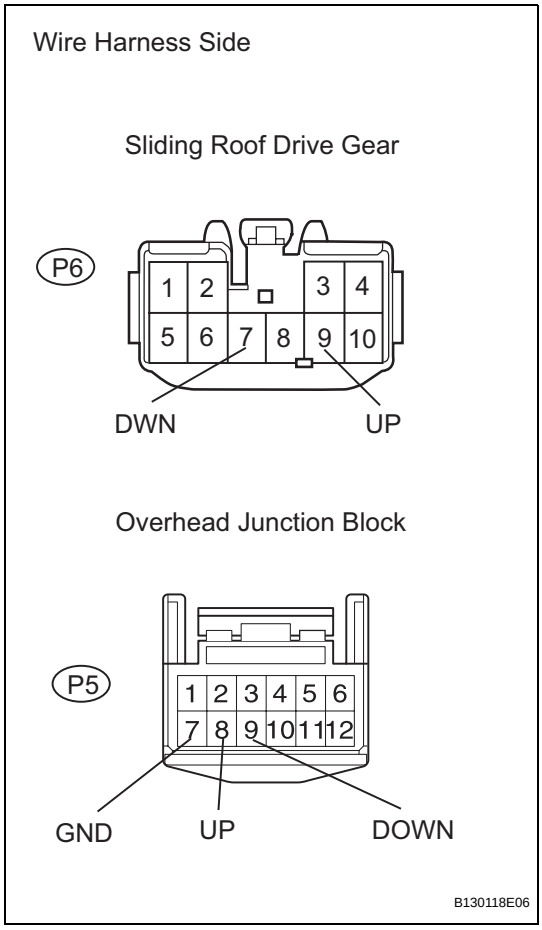

(a) Disconnect the P6 ECU connector.
(b) Disconnect the P5 junction block connector.
(c) Measure the resistance of the wire harness side connectors.

Standard resistance

Tester Connection	Specified Condition
P6-7 (DWN) - P5-9 (DOWN)	Below 1 Ω
P6-9 (UP) - P5-8 (UP)	Below 1 Ω
P5-7 (GND) - Body ground	Below 1 Ω
P5-9 (DOWN) - Body ground	10 kΩ or higher
P5-8 (UP) - Body ground	10 kΩ or higher

NG → **REPAIR OR REPLACE HARNESS AND CONNECTOR**

OK

RF

4	INSPECT OVERHEAD JUNCTION BLOCK (SLIDING ROOF CONTROL SWITCH)

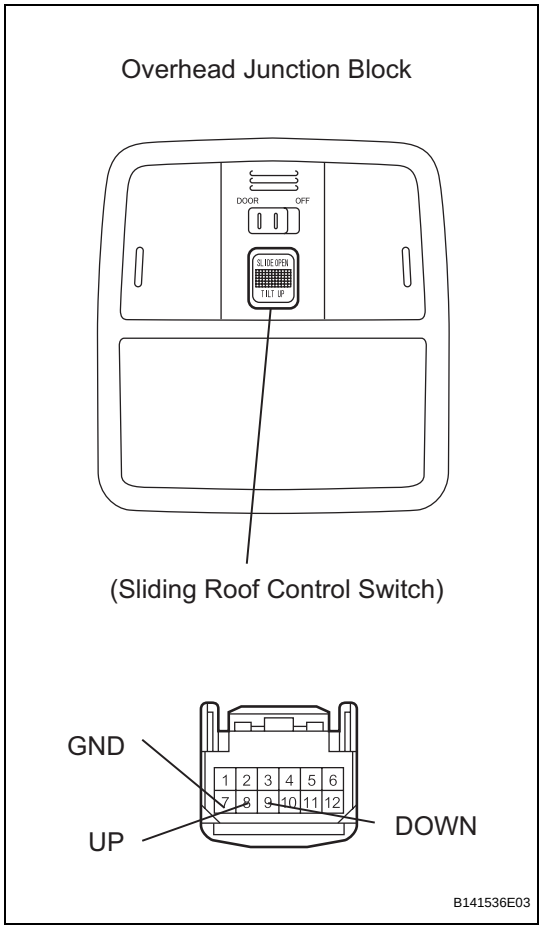

(a) Remove the overhead junction block.
(b) Measure the resistance of the switch.
Standard resistance

Tester Connection	Condition	Specified Condition
8 (UP) - 7 (GND)	TILT UP switch pushed	Below 1 Ω
8 (UP) - 7 (GND)	TILT UP switch not pushed	10 kΩ or higher
9 (DOWN) - 7 (GND)	SLIDE OPEN switch pushed	Below 1 Ω
9 (DOWN) - 7 (GND)	SLIDE OPEN switch not pushed	10 kΩ or higher

NG → **REPLACE OVERHEAD JUNCTION BLOCK (SLIDING ROOF CONTROL SWITCH)**

OK

REPLACE SLIDING ROOF DRIVE GEAR SUB-ASSEMBLY (SLIDING ROOF ECU)

RF

Sliding Roof Control Switch Circuit

DESCRIPTION

If either the sliding function or tilt function does not operate, there may be a malfunction in the sliding roof control switch circuit.

WIRING DIAGRAM

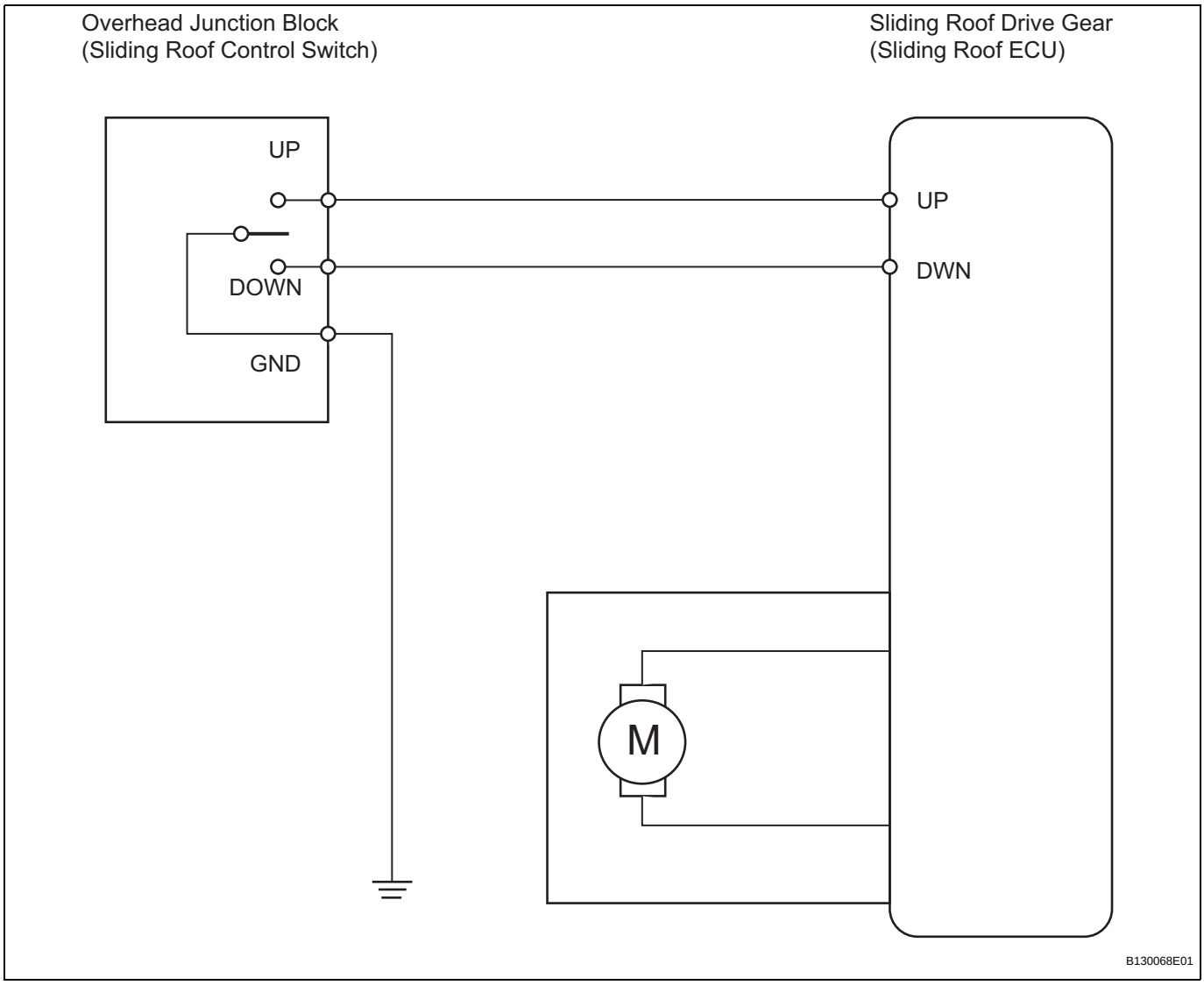

INSPECTION PROCEDURE

1	PERFORM ACTIVE TEST BY INTELLIGENT TESTER (SLIDING ROOF OPERATION)

(a) Select the Active Test, use the intelligent tester to generate a control command, and then check that the sliding roof operates normally.

Sliding roof ECU

Item	Test Details	Diagnostic Note
SLIDE ROOF	Operate sliding roof OPN / DWN OPN / DWN: Sliding roof OPEN / DOWN operation occurs OFF: Sliding roof is not operating	-
SLIDE ROOF	Operate sliding roof CLS / UP CLS / UP: Sliding roof CLOSE / UP operation occurs OFF: Sliding roof is not operating	-

OK:

Sliding roof operates normally.

NG → **REPLACE SLIDING ROOF DRIVE GEAR SUB-ASSEMBLY**

OK

2	READ VALUE OF INTELLIGENT TESTER (SLIDING ROOF CONTROL SWITCH)

(a) Use the Data List to check if the sliding roof switch is functioning properly.

Sliding roof ECU

Item	Measurement Item / Range (Display)	Normal Condition	Diagnostic Note
CLOSE SW	Slide switch close signal / ON or OFF	ON: TILT UP switch is pressed OFF: TILT UP switch is not pressed	-
OPEN SW	Slide switch open signal / ON or OFF	ON: SLIDE OPEN switch is pressed OFF: SLIDE OPEN switch is not pressed	-

OK:

When the switch is operating, the intelligent tester should display as shown in the table.

OK → **REPLACE SLIDING ROOF DRIVE GEAR SUB-ASSEMBLY**

NG

3	**CHECK WIRE HARNESS (OVERHEAD JUNCTION BLOCK - DRIVE GEAR AND BODY GROUND)**

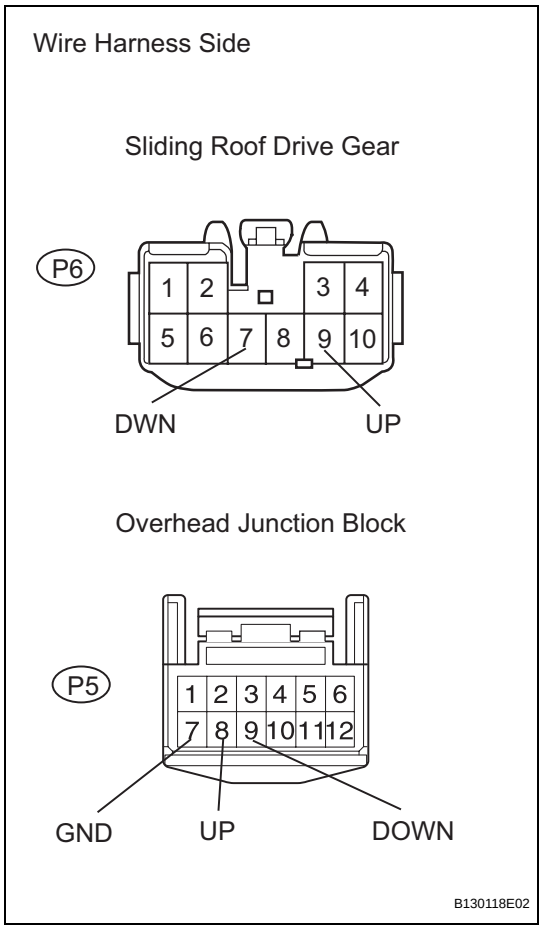

(a) Disconnect the P5 junction block connector.
(b) Disconnect the P6 drive gear connector.
(c) Measure the resistance of the wire harness side connectors.

Standard resistance

Tester Connection	Specified Condition
P6-7 (DWN) - P5-9 (DOWN)	Below 1 Ω
P6-9 (UP) - P5-8 (UP)	Below 1 Ω
P5-7 (GND) - Body ground	Below 1 Ω

NG → **REPAIR OR REPLACE HARNESS AND CONNECTOR**

OK

REPLACE OVERHEAD JUNCTION BLOCK

RF

Sliding Roof ECU Power Source Circuit

DESCRIPTION

If the sliding function and tilt function do not operate, there may be a malfunction in the sliding roof ECU power source circuit.

WIRING DIAGRAM

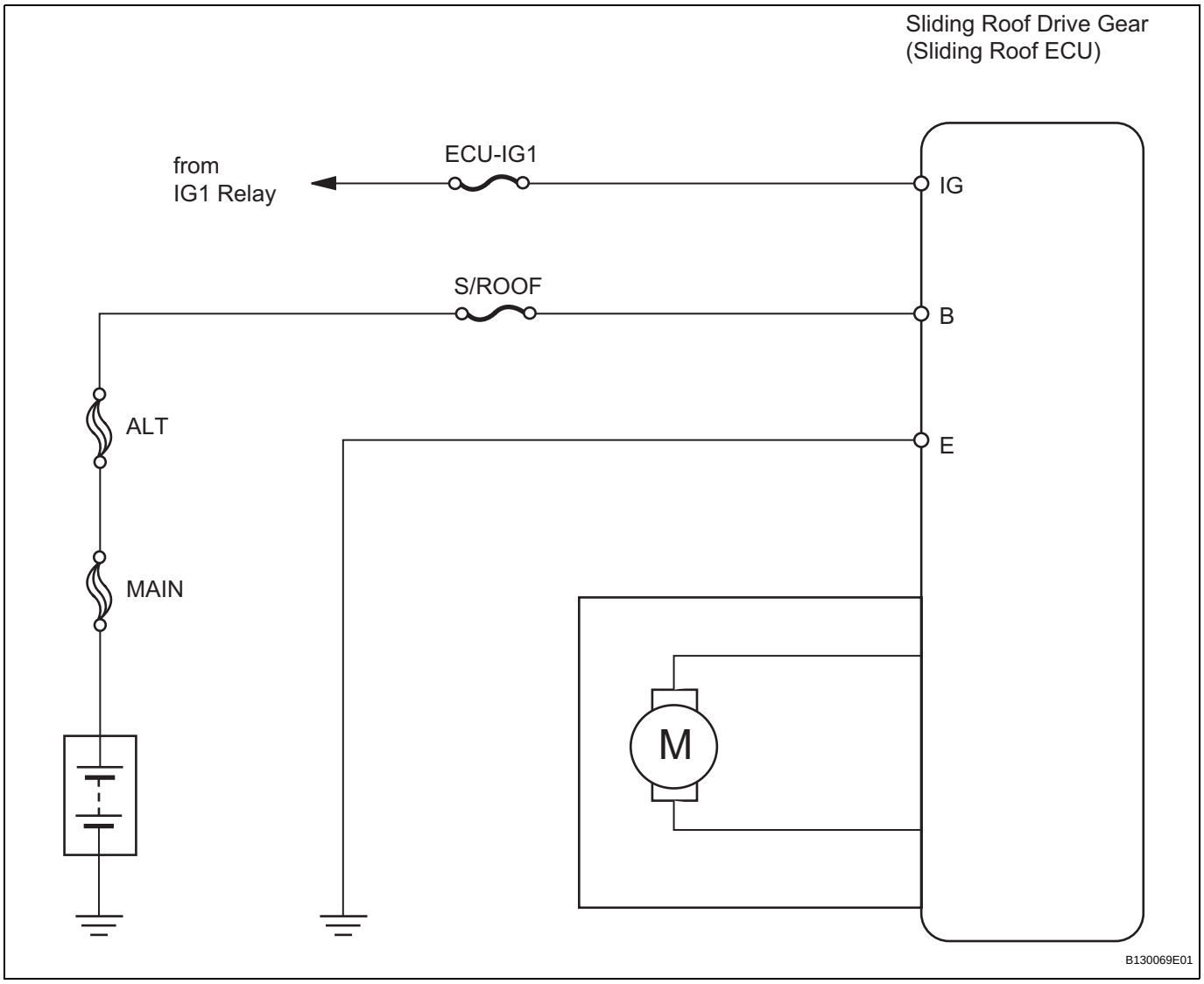

INSPECTION PROCEDURE

1	PERFORM ACTIVE TEST BY INTELLIGENT TESTER (SLIDING ROOF OPERATION)

(a) Select the Active Test, use the intelligent tester to generate a control command, and then check that the sliding roof operates normally.

Sliding roof ECU

Item	Test Details	Diagnostic Note
SLIDE ROOF	Operate sliding roof OPN / DWN OPN / DWN: Sliding roof OPEN / DOWN operation occurs OFF: Sliding roof is not operating	-
SLIDE ROOF	Operate sliding roof CLS / UP CLS / UP: Sliding roof CLOSE / UP operation occurs OFF: Sliding roof is not operating	-

OK:
Sliding roof operates normally.

NG → **REPLACE SLIDING ROOF DRIVE GEAR SUB-ASSEMBLY**

OK

RF

2 INSPECT FUSE (S/ROOF, ECU-IG1)

(a) Remove the S/ROOF and ECU-IG1 fuses from the instrument panel junction block.
(b) Measure the resistance of the fuses.

Standard resistance:
Below 1 Ω

NG → **REPLACE FUSE**

OK

3 CHECK WIRE HARNESS (SLIDING ROOF DRIVE GEAR - BODY GROUND)

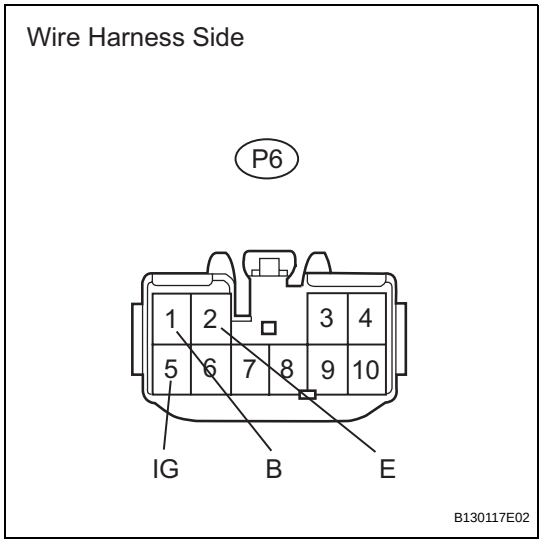

(a) Disconnect the P6 drive gear connector.
(b) Measure the voltage and resistance of the wire harness side connector.

Standard voltage

Tester Connection	Condition	Specified Condition
P6-1 (B) - Body ground	Always	10 to 14 V
P6-5 (IG) - Body ground	Ignition switch OFF	Below 1 V
P6-5 (IG) - Body ground	Ignition switch ON	10 to 14 V

Standard resistance

Tester Connection	Specified Condition
P6-2 (E) - Body ground	Below 1 Ω

NG → **REPAIR OR REPLACE HARNESS AND CONNECTOR**

OK

REPLACE SLIDING ROOF DRIVE GEAR SUB-ASSEMBLY

SLIDING ROOF SYSTEM

PARTS LOCATION

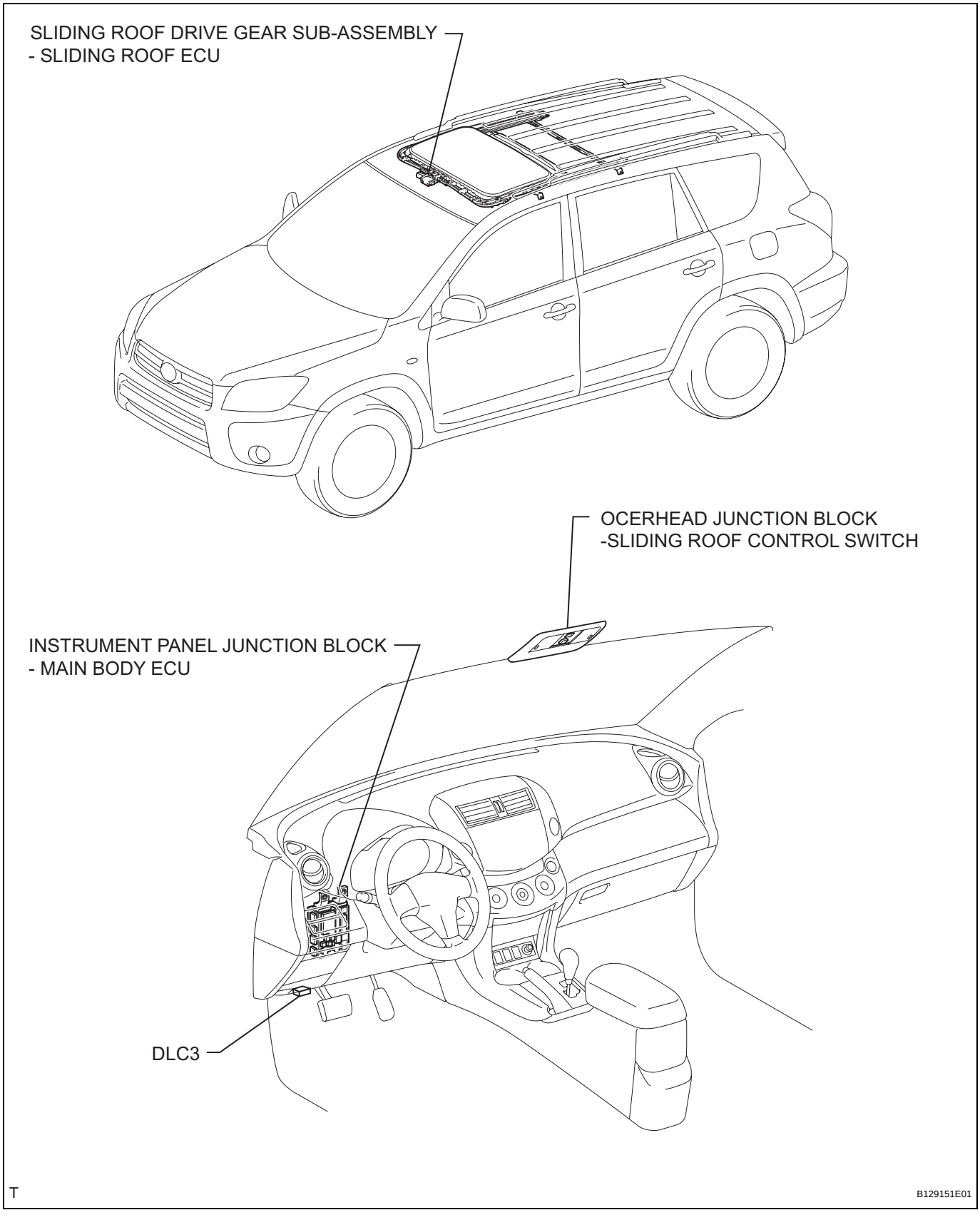

RF

SYSTEM DIAGRAM

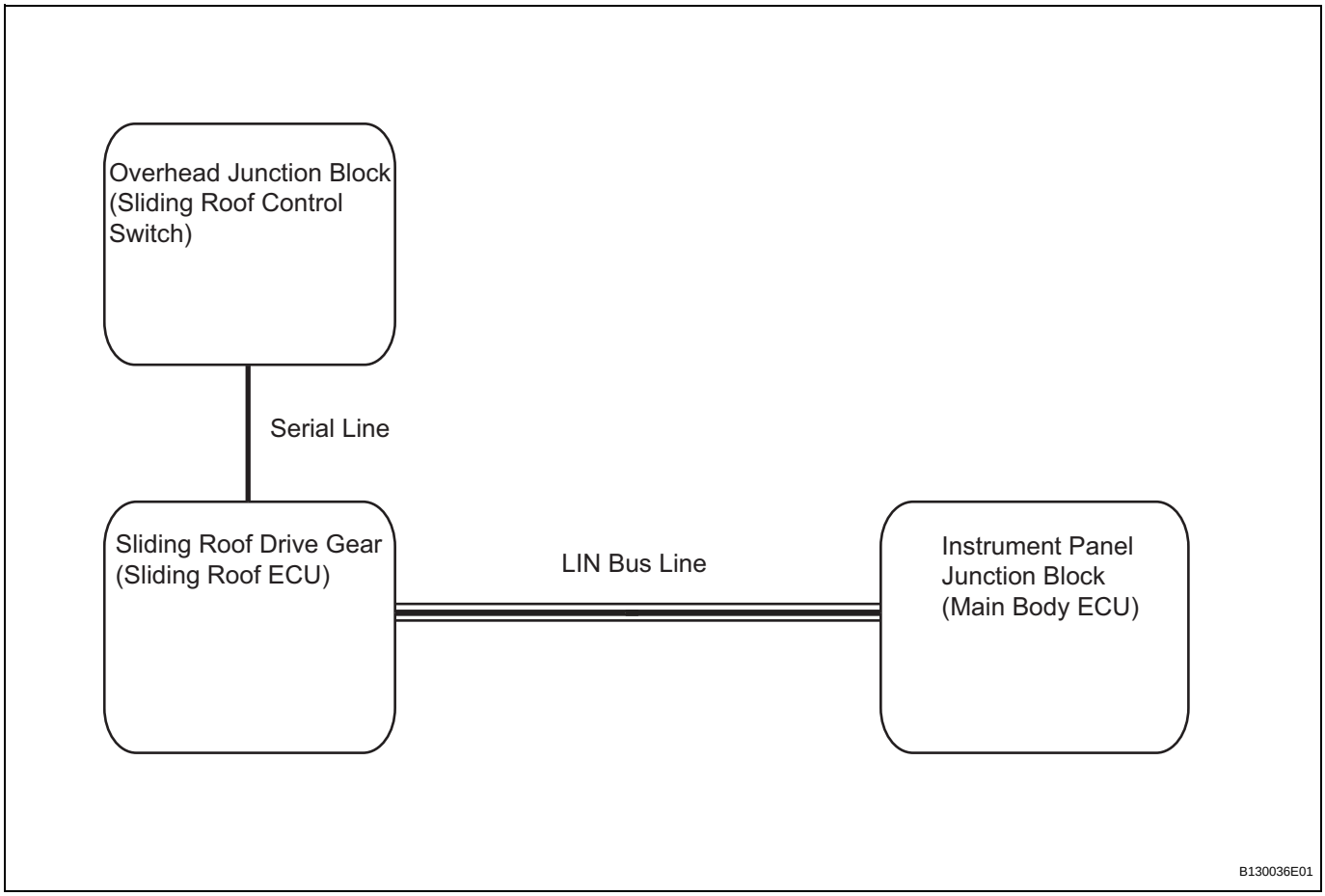

Communication table

Sender	Receiver	Signal	Line
Main Body ECU	Sliding Roof ECU	Key-off operation signal	LIN

REMOVAL

CAUTION:
Some of these service operations affect the SRS airbag system. Read the precautionary notices concerning the SRS airbag system before servicing the steering column (see page RS-1).

1. **PLACE FRONT WHEELS FACING STRAIGHT AHEAD**
2. **DISCONNECT CABLE FROM NEGATIVE BATTERY TERMINAL**
   CAUTION:
   Wait at least 90 seconds after disconnecting the cable from the negative (-) battery terminal to prevent airbag and seat belt pretensioner activation.
3. **REMOVE STEERING PAD (See page RS-336)**
4. **REMOVE STEERING WHEEL ASSEMBLY**
   (a) Remove the nut and place matchmarks on the steering wheel and steering column.

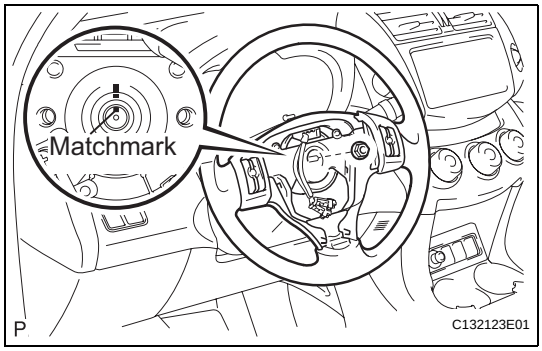

SR

   (b) Using SST, remove the steering wheel.
   SST 09950-50013 (09951-05010, 09952-05010, 09953-05020, 09954-05021)
   NOTICE:
   Apply a small amount of grease to the threads and tip of SST (center bolt) before use.

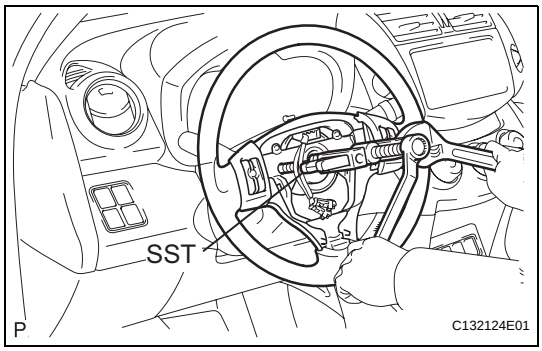

5. **REMOVE STEERING COLUMN COVER**
   (a) Detach the 4 claws, release the tilt lever and remove the lower steering column cover.

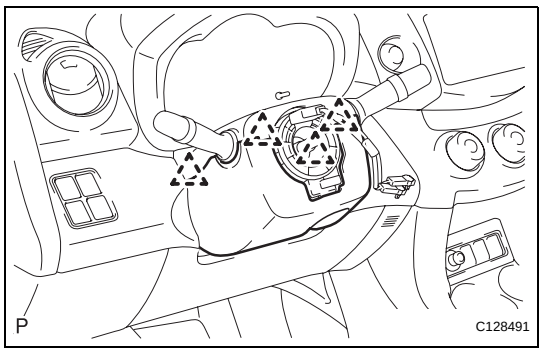

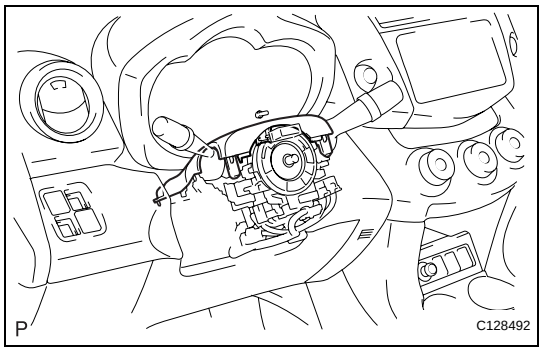

(b) Detach the claw and remove the upper steering column cover.

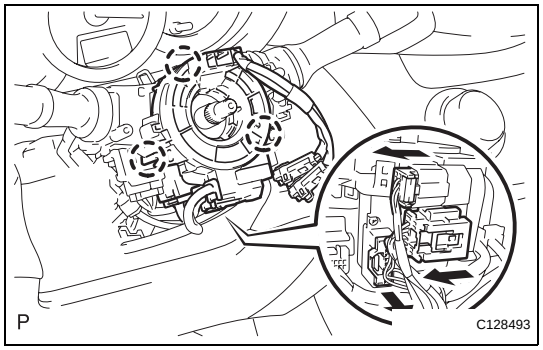

6. REMOVE SPIRAL CABLE SUB-ASSEMBLY

(a) Disconnect all connectors from the turn signal switch with spiral cable.

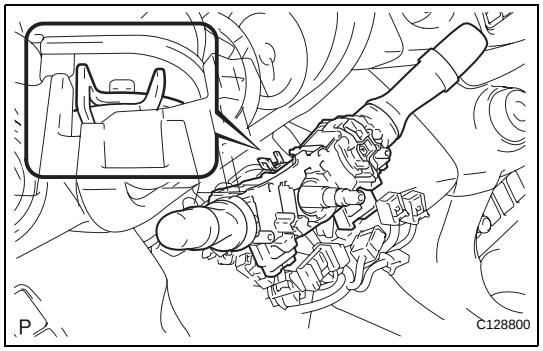

7. REMOVE COMBINATION SWITCH ASSEMBLY

(a) Detach the clamp shown in the illustration and remove the combination switch from the steering column.

8. REMOVE INSTRUMENT PANEL SUB-ASSEMBLY

(a) Remove the instrument panel (see page IP-4).

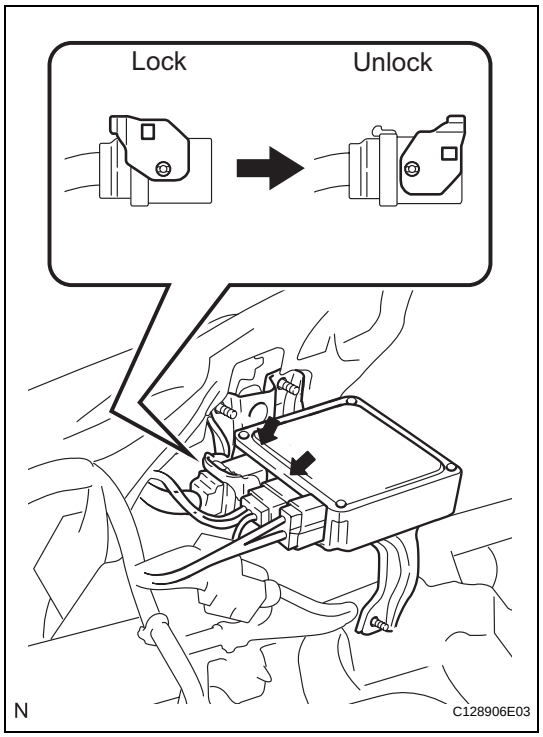

9. DISCONNECT POWER STEERING ECU

(a) Detach the power steering motor wire harness and torque sensor wire harness clamps from the power steering ECU side.

(b) Disconnect the 2 steering column connectors from the power steering ECU.

10. REMOVE LOWER INSTRUMENT PANEL FINISH PANEL (See page IP-20)

SR

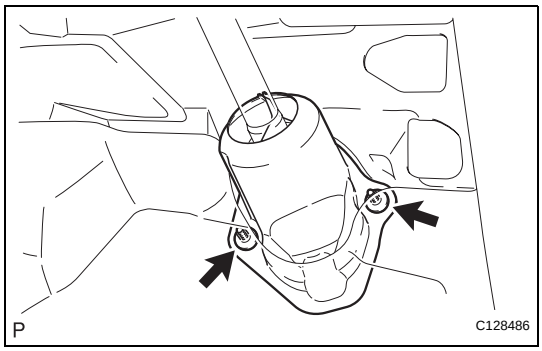

11. REMOVE COLUMN HOLE COVER SILENCER SHEET

(a) Turn back the floor carpet, remove the 2 clips and remove the column hole cover silencer sheet.

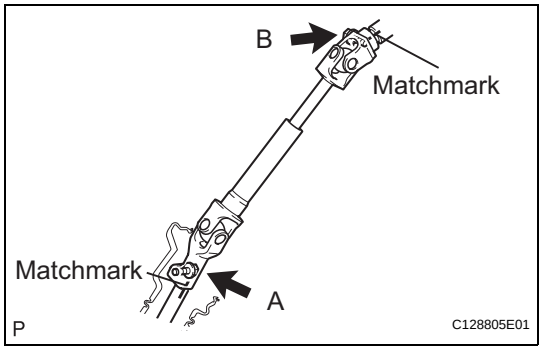

12. REMOVE NO. 2 STEERING INTERMEDIATE SHAFT ASSEMBLY

(a) Place matchmarks on the steering intermediate shaft and steering gear.

(b) Remove bolt A and detach the steering assembly from the steering gear.

(c) Place matchmarks on the steering intermediate shaft and steering column.

(d) Remove bolt B and detach the steering intermediate shaft shaft from the steering column.

13. REMOVE BRAKE PEDAL SUPPORT ASSEMBLY

(a) Remove the brake pedal support (see page BR-12).

14. REMOVE STEERING COLUMN ASSEMBLY

(a) Disconnect all connectors and detach all wire harness clamps from the steering column.

(b) Remove the bolt and 2 nuts and remove the steering column from the instrument panel reinforcement.

SR

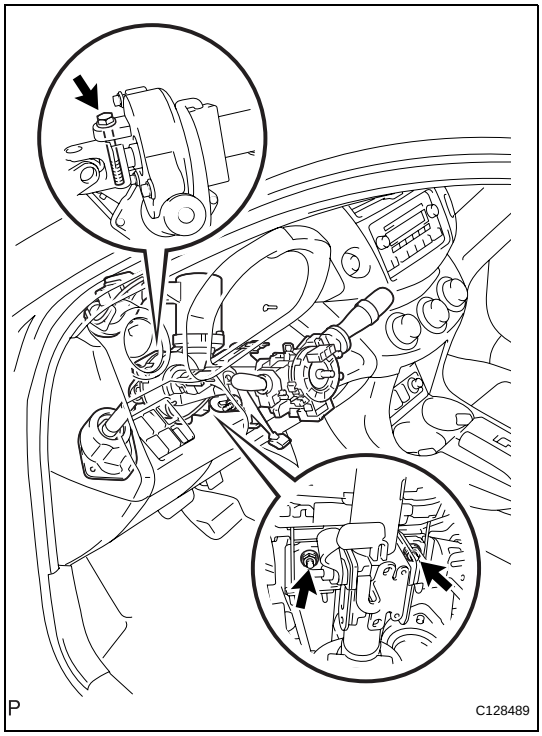

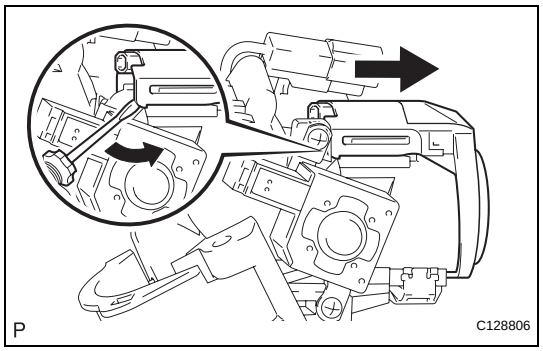

DISASSEMBLY

1. REMOVE TRANSPONDER KEY AMPLIFIER

(a) Detach the 2 claws and slide the transponder key amplifier in the direction shown in the illustration, to detach it from the steering column upper with switch bracket.

2. REMOVE STEERING COLUMN UPPER WITH SWITCH BRACKET ASSEMBLY

(a) Fix the steering post in a vise between aluminum plates.
NOTICE:
Do not overtighten the vise.

(b) Using a drill, drill a hole in each of the steering lock set bolt to insert a screw extractor.

(c) Using a screw extractor, remove the steering lock set bolt and remove the steering column upper with switch bracket and steering column clamp upper.

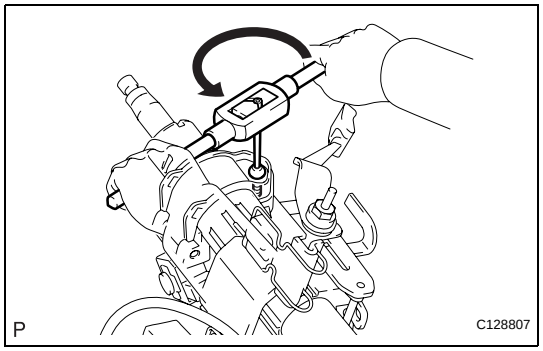

3. REMOVE IGNITION SWITCH LOCK CYLINDER ASSEMBLY

(a) Turn the ignition switch to ON (ACC).

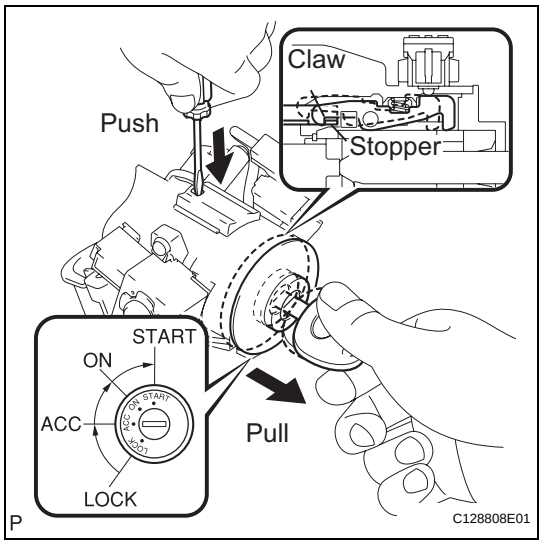

(b) Insert the tip of a screwdriver into the hole in the steering column bracket upper, as shown in the illustration, and pull the ignition switch lock cylinder out until its claw comes into contact with the stopper of the steering column bracket upper.
NOTICE:
Pull the ignition switch lock cylinder assembly out until its claw comes into contact with the stopper of the steering column bracket assembly upper. Otherwise, the following procedure cannot be conducted properly.

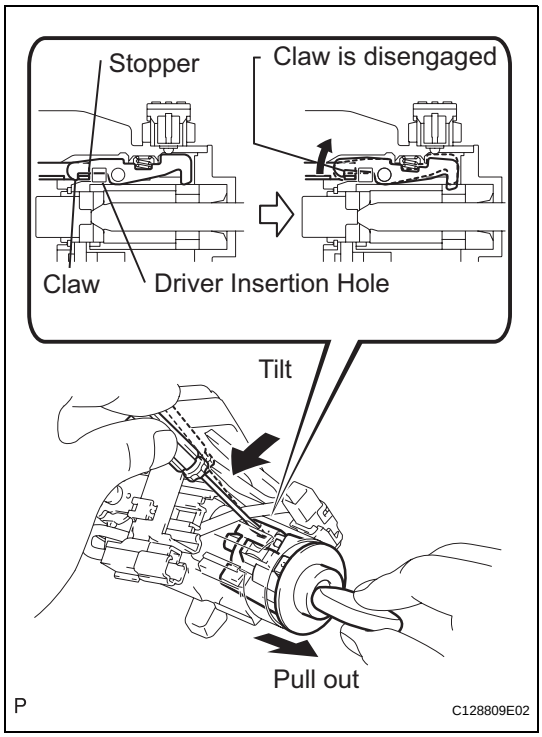

(c) Insert the tip of a screwdriver into the hole in the steering column bracket and tilt it downward, as shown in the illustration, to disengage the claw of the ignition switch lock cylinder. Then pull out the ignition switch lock cylinder.

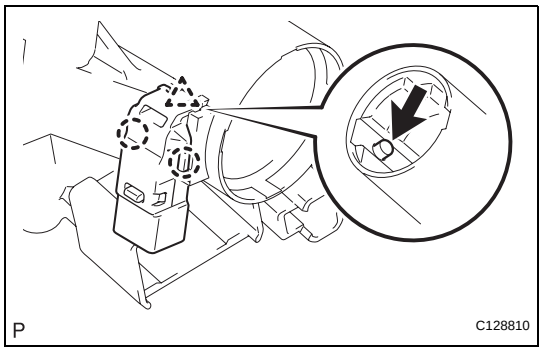

4. REMOVE UNLOCK WARNING SWITCH ASSEMBLY

(a) Push up the unlock warning switch center portion to disengage the 2 claws.
HINT:
Slide the unlock warning switch in the direction shown by the arrow in the illustration to remove it.

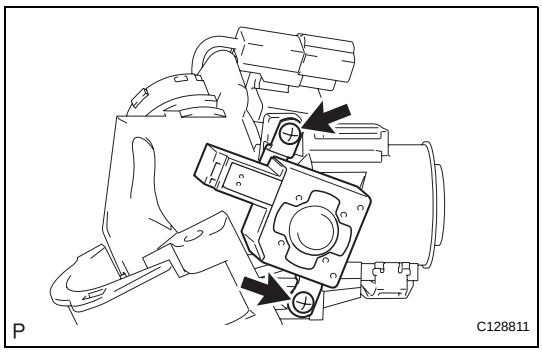

5. REMOVE KEY INTERLOCK SOLENOID

(a) for Automatic Transaxle:
(1) Remove the 2 screws and remove the key interlock solenoid from the steering column bracket upper.

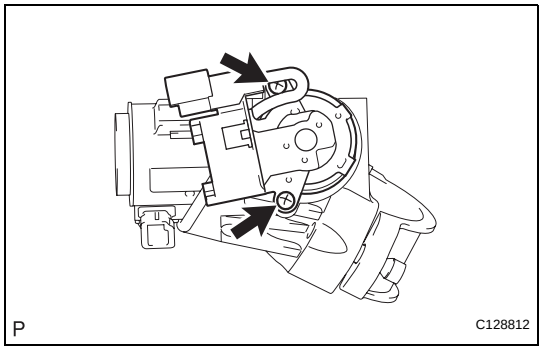

6. REMOVE IGNITION OR STARTER SWITCH ASSEMBLY

(a) Detach the 2 claws and remove the ignition (starter) switch from the steering column bracket upper.

SR

INSPECTION

1. **CHECK TORQUE SENSOR**
   (a) Check the torque sensor (see page PS-19).
2. **CHECK POWER STEERING MOTOR**
   (a) Check the power steering motor (see page PS-22).
3. **CHECK MOTOR ROTATION ANGLE SENSOR**
   (a) Check the motor rotation angle sensor (see page PS-25).

REASSEMBLY

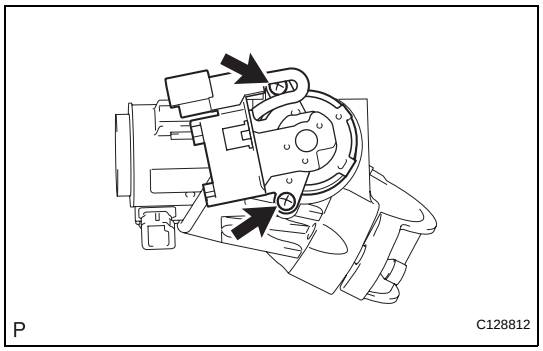

1. **INSTALL IGNITION OR STARTER SWITCH ASSEMBLY**
   (a) Attach the 2 claws to install the ignition switch onto the steering column bracket upper.

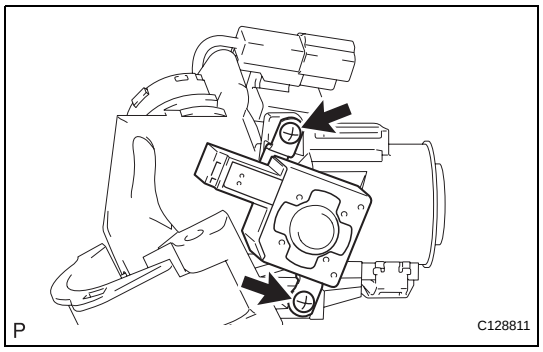

2. **INSTALL KEY INTERLOCK SOLENOID**
   (a) for Automatic Transaxle:
      (1) Install the key interlock solenoid onto the steering column bracket upper with the 2 screws.

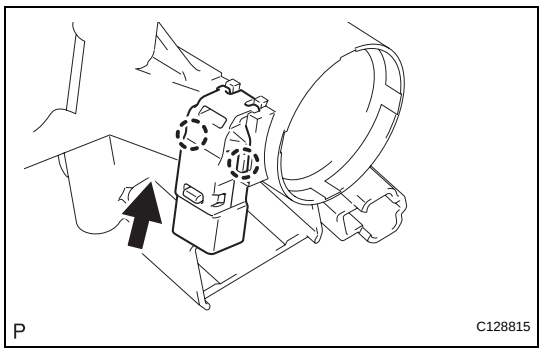

3. **INSTALL UNLOCK WARNING SWITCH ASSEMBLY**
   (a) Attach the 2 claws to install the unlock warning switch onto the steering column bracket upper.
   HINT:
   Slide the unlock warning switch in the direction shown by the arrow in the illustration to install it.
4. **INSTALL IGNITION SWITCH LOCK CYLINDER ASSEMBLY**
   (a) Turn the ignition switch to ON (ACC).

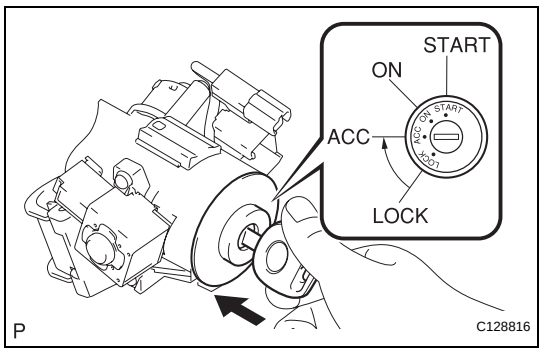

   (b) Install the ignition switch lock cylinder into the steering column bracket upper.
   (c) Make sure that the ignition switch lock cylinder is securely fixed onto the ignition switch lock cylinder.

SR

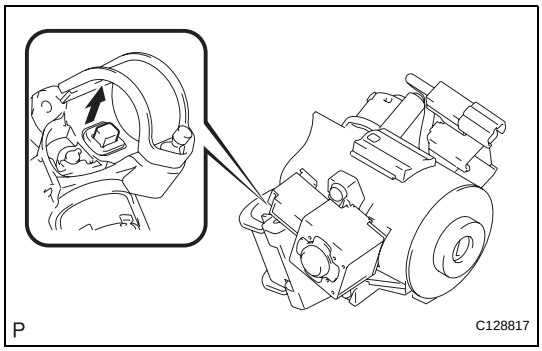

5. INSPECT STEERING LOCK OPERATION

(a) Remove the key and check that the steering lock function is activated.

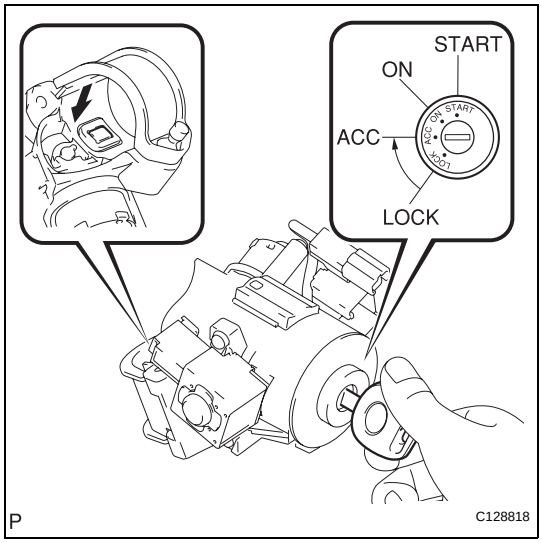

(b) Insert the key, turn the ignition switch ON (ACC) and check that the steering lock function is deactivated.

6. INSTALL STEERING COLUMN UPPER W/ SWITCH BRACKET ASSEMBLY

(a) Fix the steering column assembly in a vise between aluminum plates.

NOTICE:
Do not overtighten the vise.

SR

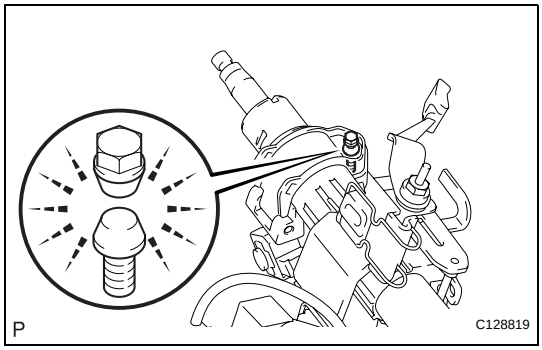

(b) Install the steering column upper with switch bracket and steering column clamp upper with new steering lock set bolt, and then tighten the bolts until their heads come off.

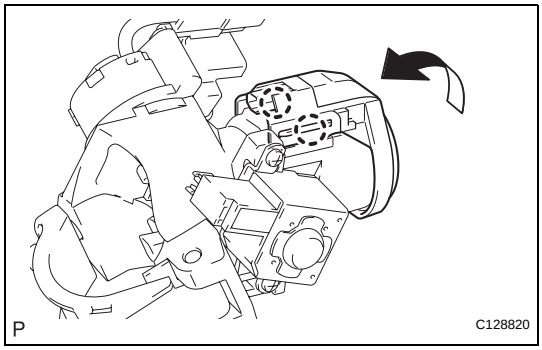

7. INSTALL TRANSPONDER KEY AMPLIFIER

(a) Attach the 2 claws and install the transponder key amplifier onto the steering column upper with the switch bracket.

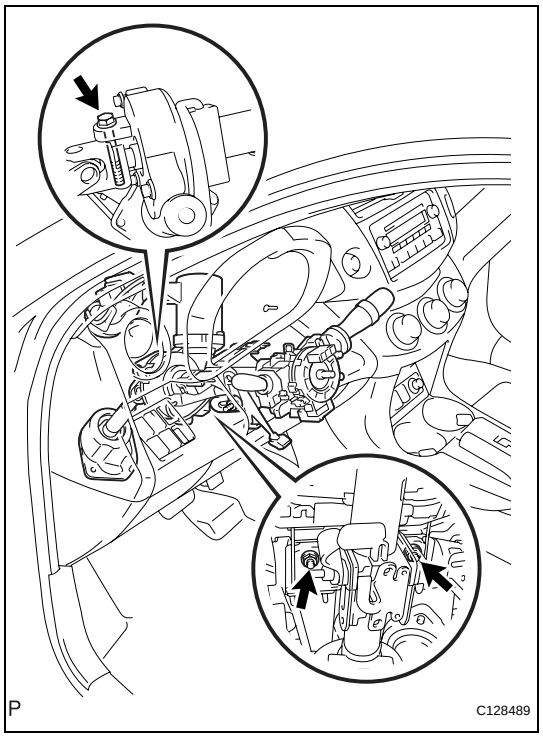

INSTALLATION

1. INSTALL STEERING COLUMN ASSEMBLY

(a) Install the steering column onto the instrument panel reinforcement with the 3 bolts.
Torque: 25 N*m (255 kgf*cm, 18 ft.*lbf)

(b) Connect all the connectors and clamp the wire harnesses onto the steering column bracket.

2. INSTALL BRAKE PEDAL SUPPORT ASSEMBLY

(a) Install the brake pedal support (see page BR-16).

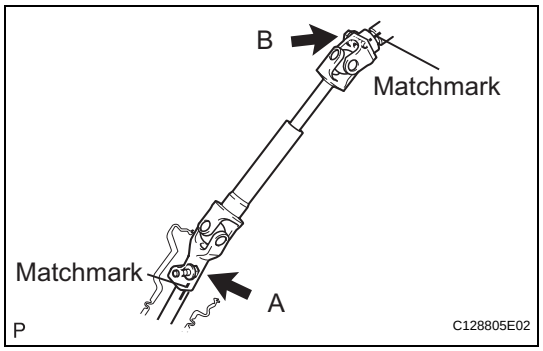

3. INSTALL NO.2 STEERING INTERMEDIATE SHAFT ASSEMBLY

(a) Align the matchmarks on steering intermediate shaft and the steering sliding yoke and temporarily install them with bolt B.
Torque: 35 N*m (360 kgf*cm, 26 ft.*lbf)

(b) Align the matchmarks on the steering sliding yoke and steering gear and install them with bolt A.
Torque: 35 N*m (360 kgf*cm, 26 ft.*lbf)

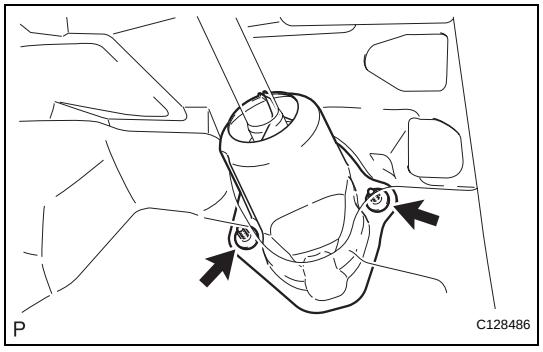

4. INSTALL COLUMN HOLE COVER SILENCER SHEET

(a) Install the column hole cover plate with the 2 clips.

(b) Install the floor carpet.

5. INSTALL LOWER INSTRUMENT PANEL FINISH PANEL (See page IP-25)

SR

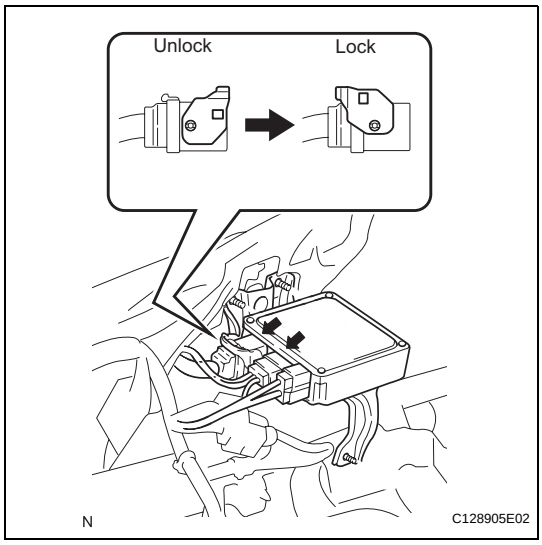

6. CONNECT POWER STEERING ECU

(a) Connect the 2 steering column connectors to the power steering ECU.

(b) Install the power steering motor wire harness and torque sensor wire harness clamps onto the side of the power steering ECU.

(c) Tilt the steering column assembly up and down to make sure that the power steering motor wire harness and torque sensor wire harness do not interfere with any components.

7. INSTALL INSTRUMENT PANEL SUB-ASSEMBLY

(a) Install the instrument panel (see page IP-9).

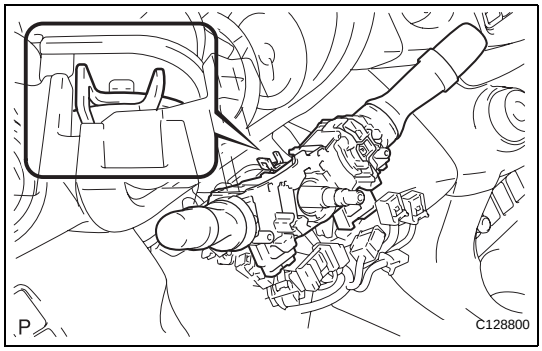

8. INSTALL COMBINATION SWITCH ASSEMBLY

(a) Install the turn signal switch onto the steering column with the clamp.

9. INSTALL SPIRAL CABLE SUB-ASSEMBLY

(a) Install the spiral cable onto the turn signal switch.

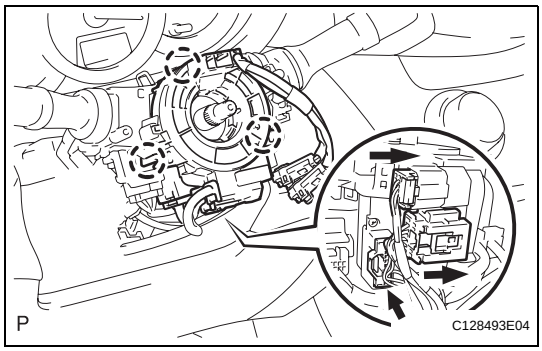

(b) Connect all the connectors to the turn signal switch with spiral cable.

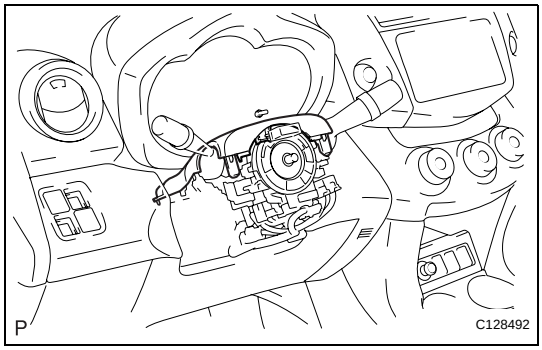

10. INSTALL STEERING COLUMN COVER

(a) Attach the claw to install the upper steering column cover.

SR

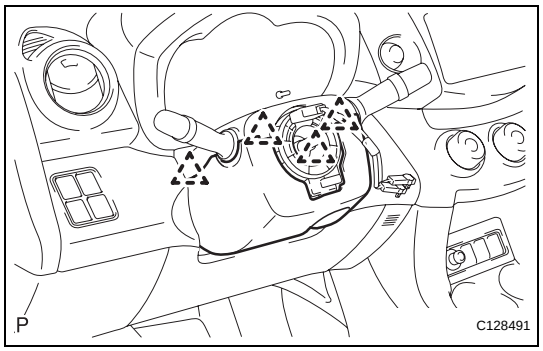

(b) Attach the 4 claws to install the lower steering column cover.

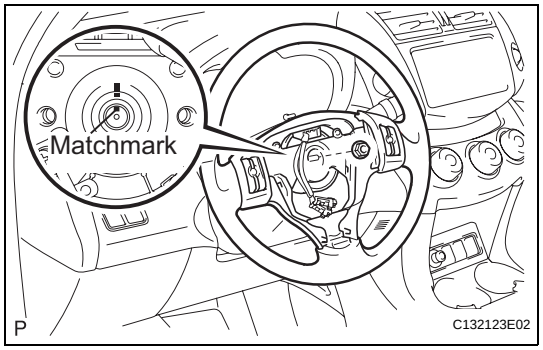

11. INSTALL STEERING WHEEL ASSEMBLY

(a) Align the matchmarks and install the steering wheel onto the steering column.

(b) Install the nut.
Torque: 50 N*m (510 kgf*cm, 37 ft.*lbf)

(c) Connect all the connectors to the spiral cable.

12. INSTALL STEERING PAD (See page RS-336)

13. POSITION FRONT WHEELS FACING STRAIGHT AHEAD

14. CONNECT CABLE TO NEGATIVE BATTERY TERMINAL

15. INSPECT SRS WARNING LIGHT

(a) Inspect the SRS warning light (see page RS-52).

SR

STEERING COLUMN ASSEMBLY

COMPONENTS

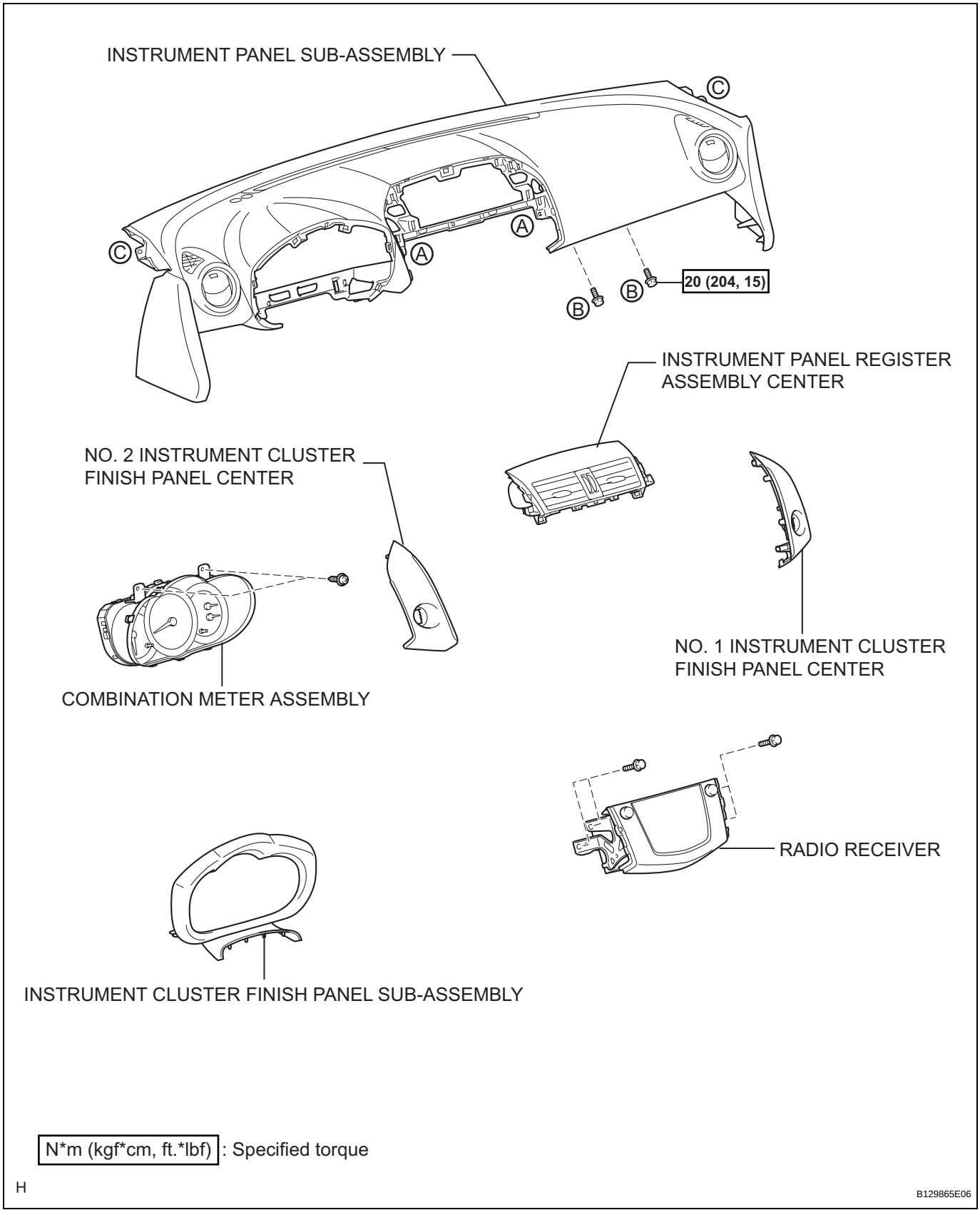

N*m (kgf*cm, ft.*lbf) : Specified torque

H

B129865E06

SR

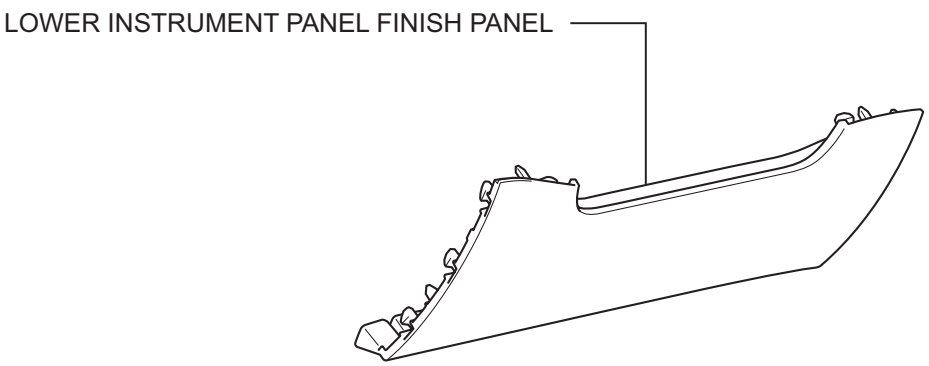

B136109E02

w/ 15-inch Disc Brake

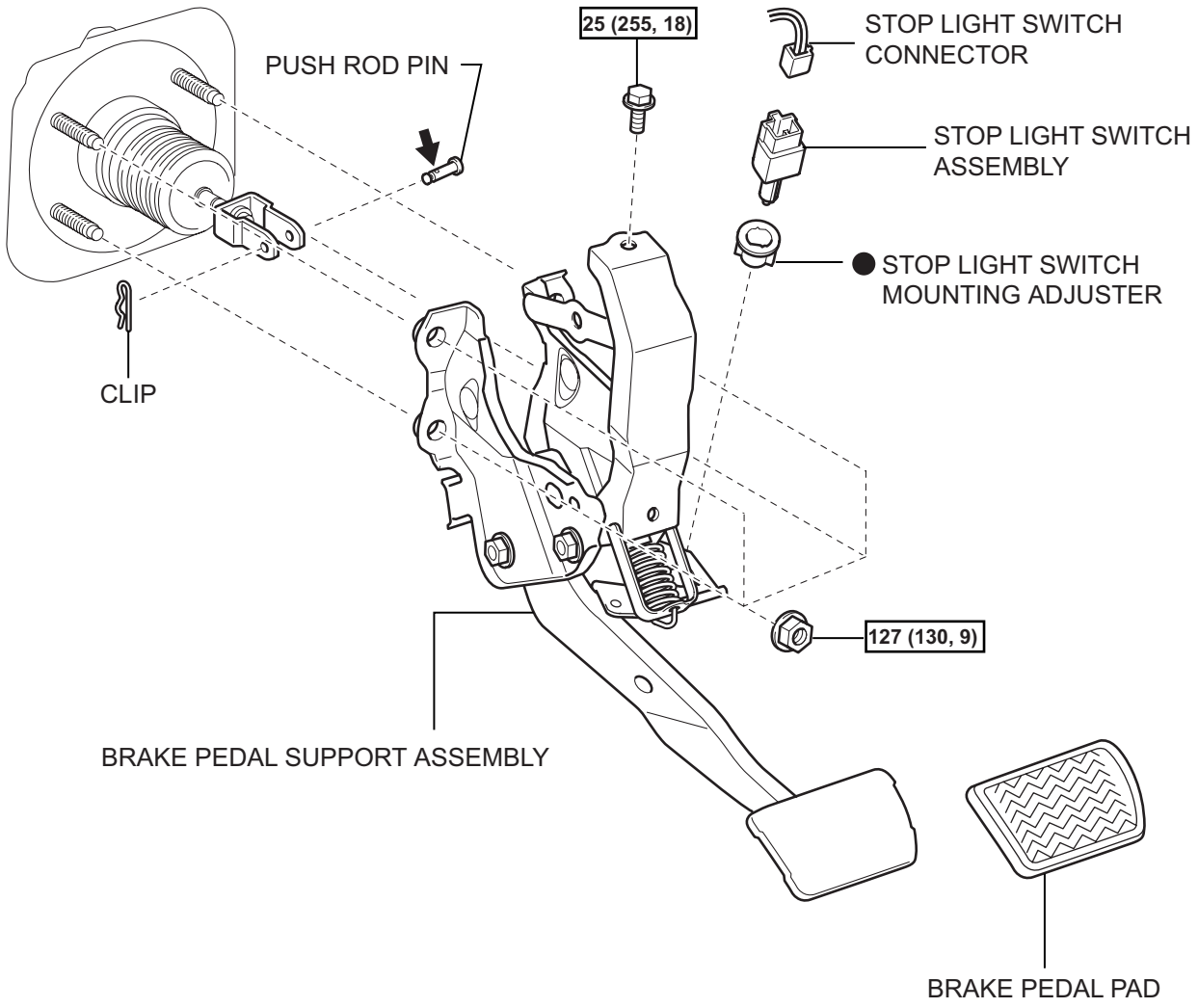

N*m (kgf*cm, ft.*lbf) : Specified torque

● Non-reusable part

⬅ Lithium soap base glycol grease

H

C130671E05

SR

w/ 16-inch Disc Brake

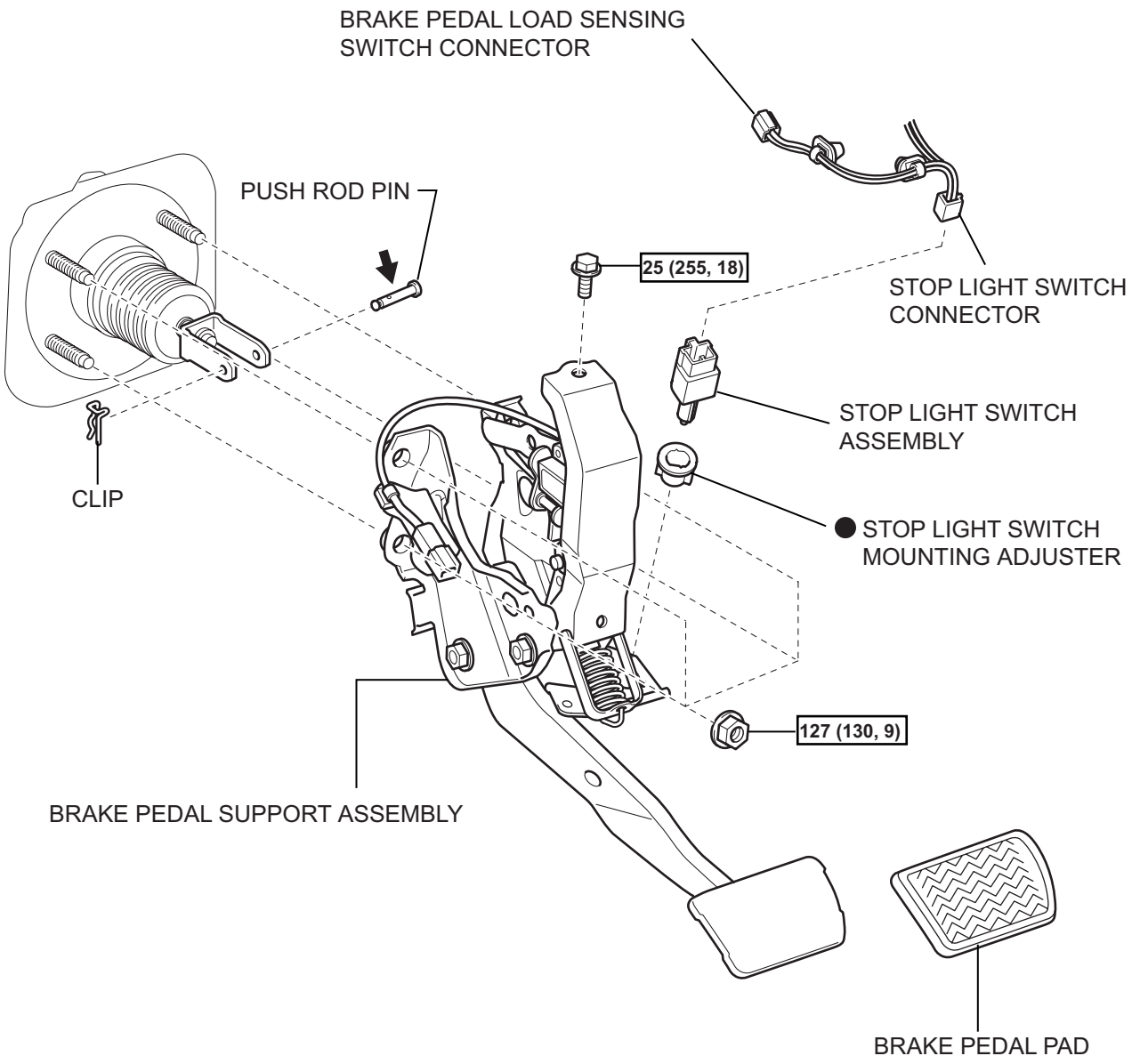

N*m (kgf*cm, ft.*lbf) : Specified torque

● Non-reusable part

⬅ Lithium soap base glycol grease

H

C130670E03

SR

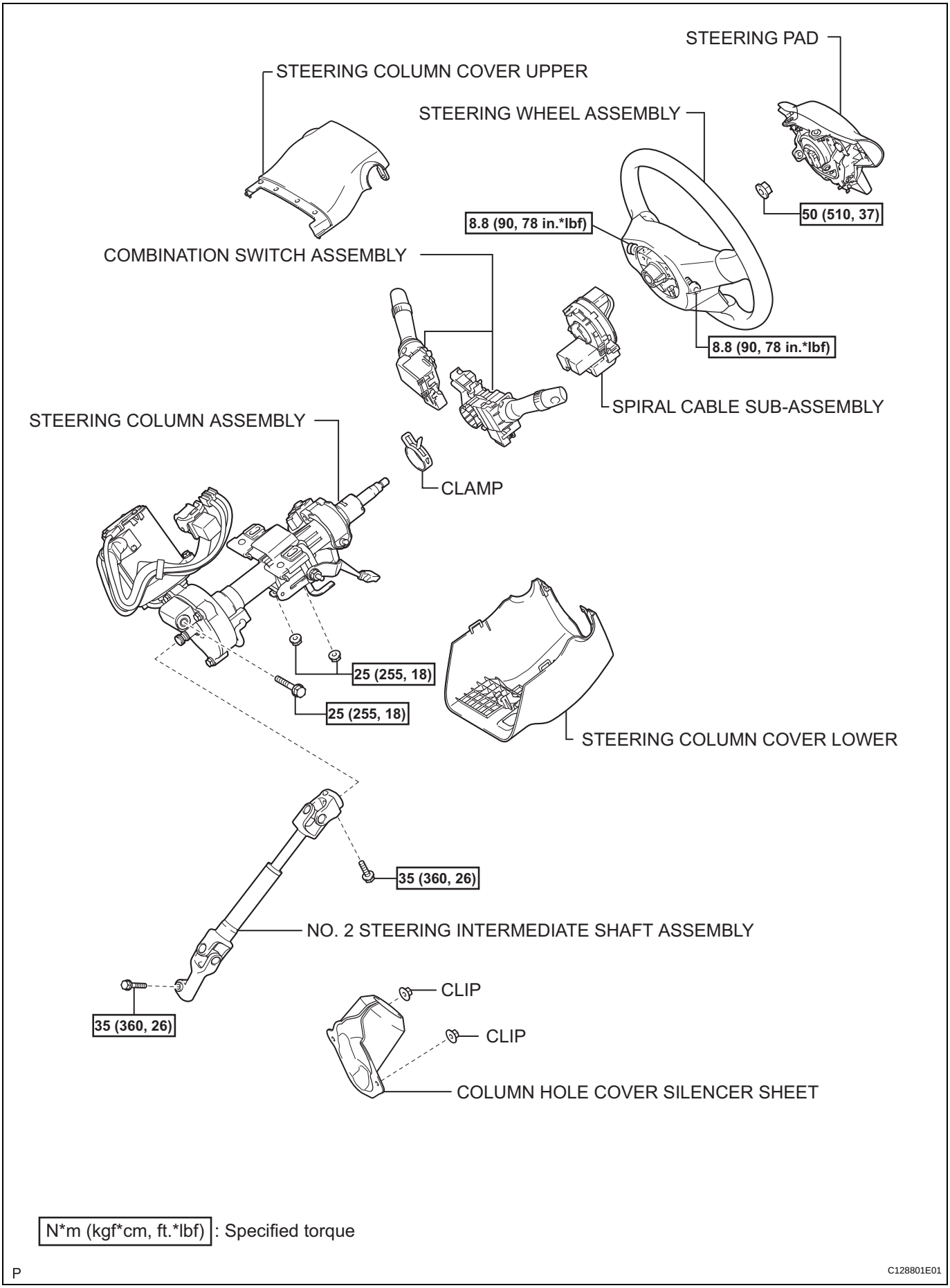

N*m (kgf*cm, ft.*lbf) : Specified torque

P

C128801E01

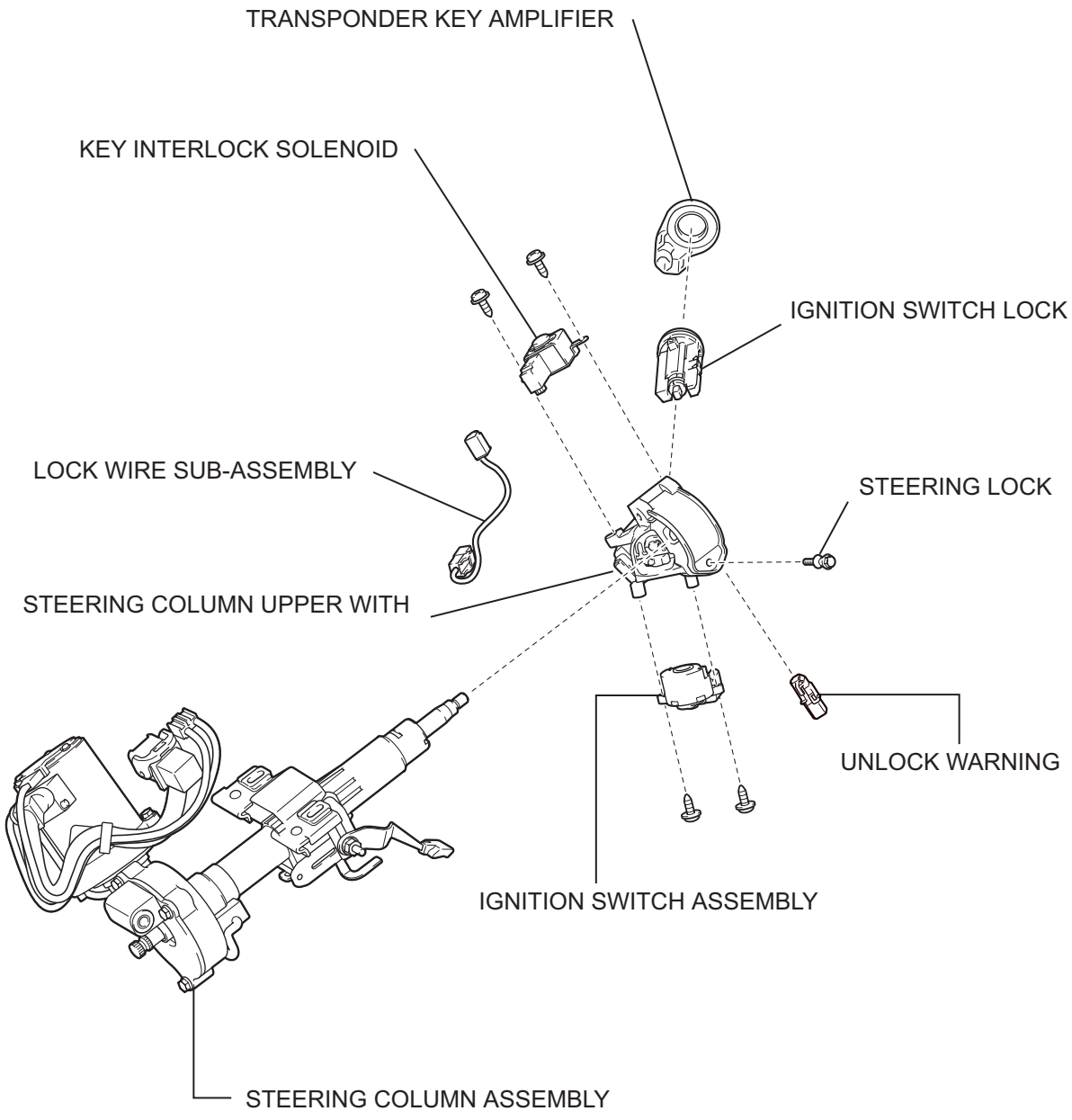
TRANSPONDER KEY AMPLIFIER
KEY INTERLOCK SOLENOID
IGNITION SWITCH LOCK
LOCK WIRE SUB-ASSEMBLY
STEERING LOCK
STEERING COLUMN UPPER WITH
UNLOCK WARNING
IGNITION SWITCH ASSEMBLY
STEERING COLUMN ASSEMBLY
C132679E01

SR

PROBLEM SYMPTOMS TABLE

(2006/01-)
HINT:
Use the table below to help determine the cause of the problem symptom. The potential causes of the symptoms are listed in order of probability in the "Suspected Area" column of the table. Check each symptom by checking the suspected areas in the order they are listed. Replace parts as necessary.

Steering system

Symptom	Suspected Area	See page
Hard steering	1. Front tires (Improperly inflated or unevenly worn)	TW-1
	2. Front wheel alignment (Incorrect)	SP-3
	3. Front suspension (Lower ball joint)	SP-27
	4. Steering intermediate shaft	SR-11
	5. Steering column	SR-11
	6. Steering gear	PS-42
	7. Power steering ECU	PS-46
Poor return	1. Front tires (Improperly inflated or unevenly worn)	TW-1
	2. Front wheel alignment (Incorrect)	SP-3
	3. Steering column	SR-11
	4. Steering gear	PS-42
	5. Power steering ECU	PS-46
No free play or excessive play	1. Steering intermediate shaft	SR-11
	2. Steering gear	PS-42
Knocking (or clunking) sound occurs when steering wheel turned while power steering in operation	1. Steering intermediate shaft	SR-11
	2. Front suspension (Lower ball joint)	SP-27
	3. Front axle hub (Hub bearing)	AH-7
	4. Steering gear	PS-42
Friction sound occurs when steering wheel turned during low speed driving	1. Power steering motor	SR-11
	2. Steering column	SR-11
High-pitched sound (squealing sound) occurs when steering wheel turned slowly with vehicle stopped	1. Power steering motor	SR-11
Steering wheel vibrates and noise occurs when steering wheel turned while vehicle stopped	1. Power steering motor	SR-11
	2. Steering column	SR-11

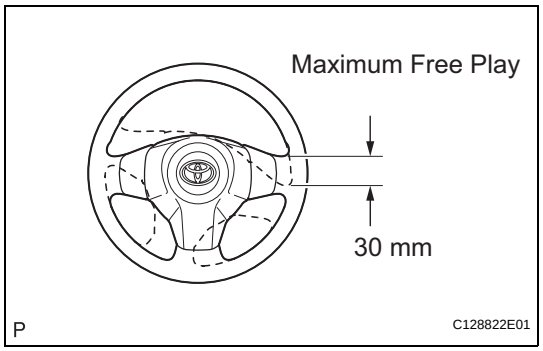

ON-VEHICLE INSPECTION

1. CHECK STEERING WHEEL FREE PLAY

(a) Stop the vehicle and align the tires facing straight ahead.

(b) Turn the steering wheel gently right and left, and check the steering wheel free play.

Maximum free play:
30 mm (1.18 in.)

If the free play exceeds the maximum, replace the steering intermediate shaft sub-assembly or steering gear.

SR

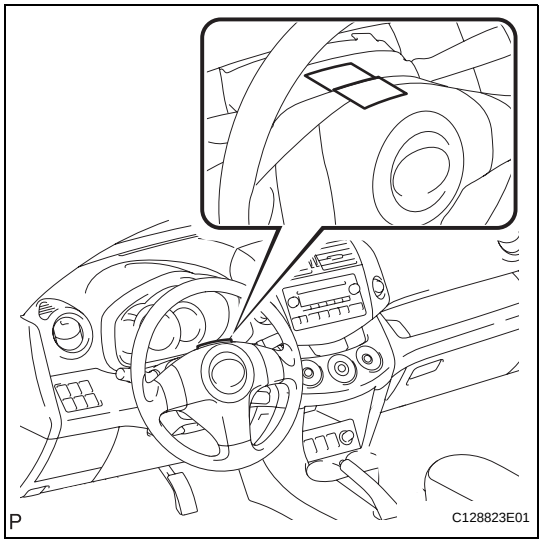

REPAIR

1. CORRECT STEERING OFF CENTER

(a) Check whether the steering wheel is off-center.

(1) Apply masking tape to the top center of the steering wheel and the upper steering column cover.

(2) Drive the vehicle in a straight line for 100 meters at a constant speed of 56 km/h (35 mph), holding the steering wheel to maintain the course.

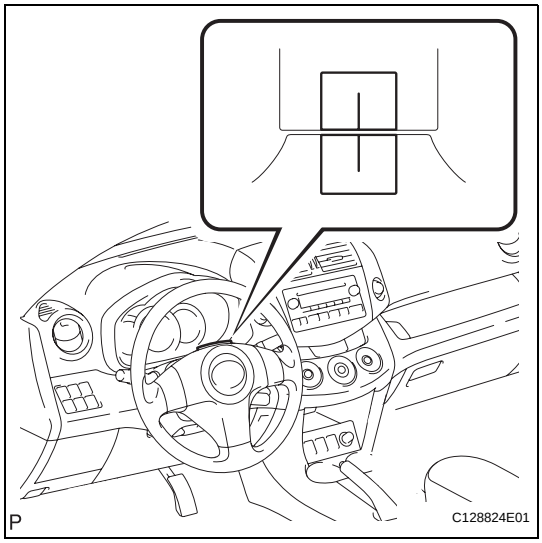

(3) Draw a line on the masking tape, as shown in the illustration.

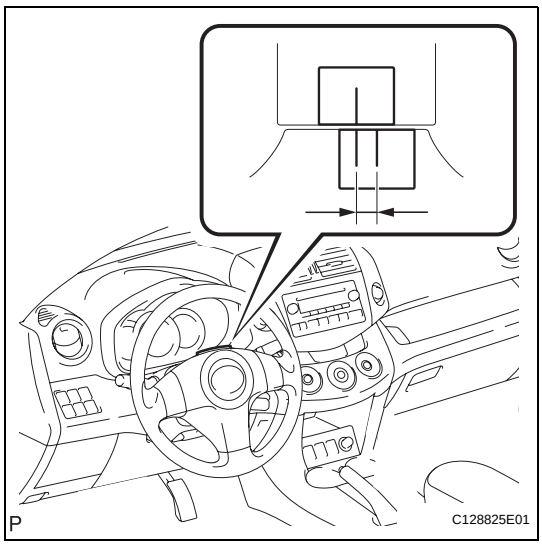

(4) Turn the steering wheel to the center position.
HINT:
Look at the upper surface of the steering wheel, the steering spokes and the SRS airbag line to determine the center position.

(5) Draw another line on the masking tape on the steering wheel, as shown in the illustration.

(6) Measure the distance between the 2 lines on the masking tape on the steering wheel.

(7) Convert the measured distance to the steering angle.
HINT:
- Measured distance of 1 mm (0.04 in.) = Approximately 1 degree steering angle.
- Make a note of the steering angle.

(b) Adjust the steering angle.

SR

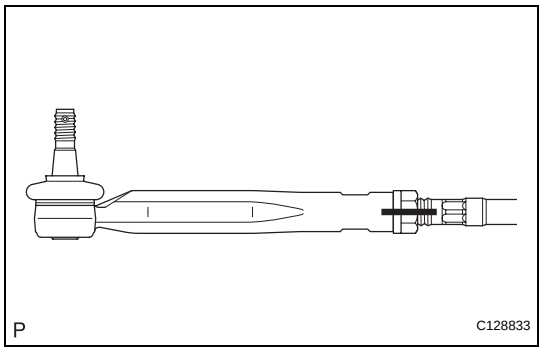

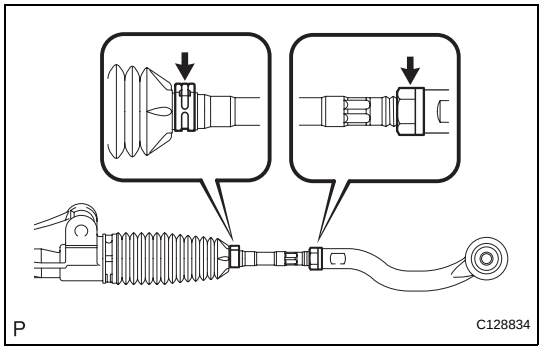

(c) For the following 2steps, carry out the RH and LH procedures separately.
  (1) Draw a line on the tie rod and rack end where it can easily be seen.
  (2) Using a paper gauge, measure the distance between the tie rod end and the rack end screw.
  (3) Remove the RH and LH boot clips from the rack boots.
  (4) Loosen the RH and LH lock nuts.
  (5) Turn the RH and LH rack ends by the same amount (but in opposite directions) in accordance with the steering angle.
  HINT:
  Electronic power steering: 1 turn (360°) of rack end (1.5 mm (0.059 in.) horizontal movement) - 10.8° of steering angle.
  (6) Tighten the RH and LH lock nuts.
  Torque: 88 N*m (897 kgf*cm, 65 ft.*lbf)
  NOTICE:
  Make sure that the difference in length between the RH and LH tie rod ends and rack end screws is less than 1.5 mm (0.059 in.).
  (7) Install the RH and LH boot clips.

STEERING SYSTEM

PRECAUTION

1. HANDLING PRECAUTIONS FOR SRS AIRBAG SYSTEM

(a) Handling precautions for SRS airbag system (see page RS-1).

2. HANDLING PRECAUTIONS FOR STEERING COLUMN

(a) When handling the steering column assembly.

(1) Avoid any impact to the steering column assembly, especially to the motor or the torque sensor. Replace it with a new one if it is dropped or subjected to any severe impacts.

(2) Do not pull the wire harness when moving the steering column assembly.

(3) When the steering column assembly or other steering-related parts have been removed and either reinstalled or replaced, perform steering center point adjustment (zero point calibration).

(b) When disconnecting or reconnecting the connectors.

(1) When disconnecting connectors related to the electronic motor power steering system, turn the ignition switch on (IG) (the engine is stopped), center the steering wheel, turn the ignition switch off, and then disconnect the connectors.

(2) When reconnecting connectors related to the electronic motor power steering system, make sure that the ignition switch is turned off, center the steering wheel and then turn the ignition switch on (IG) (the engine is stopped).

NOTICE:

Do not turn the push start switch on (IG) without the steering wheel being centered.

(3) If the above operations are not carried out correctly, the steering center point (zero point) will deviate, causing a difference in steering effort between right and left turns. If there is a difference in the steering effort between right and left turns, perform the steering center point adjustment (zero point calibration).

PROBLEM SYMPTOMS TABLE

(2005/11-2006/01)
HINT:
Use the table below to help determine the cause of the problem symptom. The potential causes of the symptoms are listed in order of probability in the "Suspected Area" column of the table. Check each symptom by checking the suspected areas in the order they are listed. Replace parts as necessary.

Steering system

Symptom	Suspected Area	See page
Hard steering	1. Front tires (Improperly inflated or unevenly worn)	TW-1
	2. Front wheel alignment (Incorrect)	SP-3
	3. Front suspension (Lower ball joint)	SP-27
	4. Steering intermediate shaft	SR-11
	5. Steering column	SR-11
	6. Steering gear	PS-42
	7. Power steering ECU	PS-46
Poor return	1. Front tires (Improperly inflated or unevenly worn)	TW-1
	2. Front wheel alignment (Incorrect)	SP-3
	3. Steering column	SR-11
	4. Steering gear	PS-42
	5. Power steering ECU	PS-46
No free play or excessive play	1. Steering intermediate shaft	SR-11
	2. Steering gear	PS-42
Knocking (or clunking) sound occurs when steering wheel turned while power steering in operation	1. Steering intermediate shaft	SR-11
	2. Front suspension (Lower ball joint)	SP-27
	3. Front axle hub (Hub bearing)	AH-6
	4. Steering gear	PS-42
Friction sound occurs when steering wheel turned during low speed driving	1. Power steering motor	SR-11
	2. Steering column	SR-11
High-pitched sound (squealing sound) occurs when steering wheel turned slowly with vehicle stopped	1. Power steering motor	SR-11
Steering wheel vibrates and noise occurs when steering wheel turned while vehicle stopped	1. Power steering motor	SR-11
	2. Steering column	SR-11

PARTS LOCATION

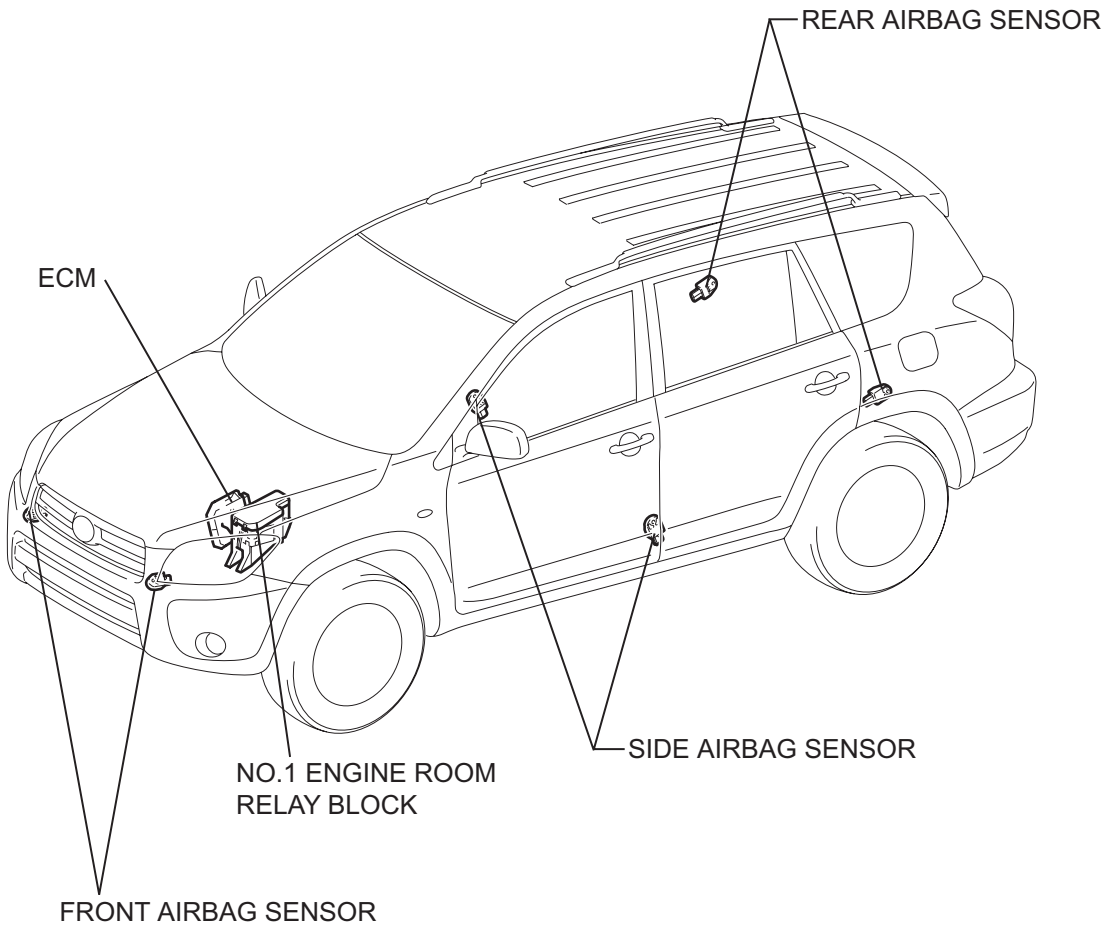

T

C123528E03

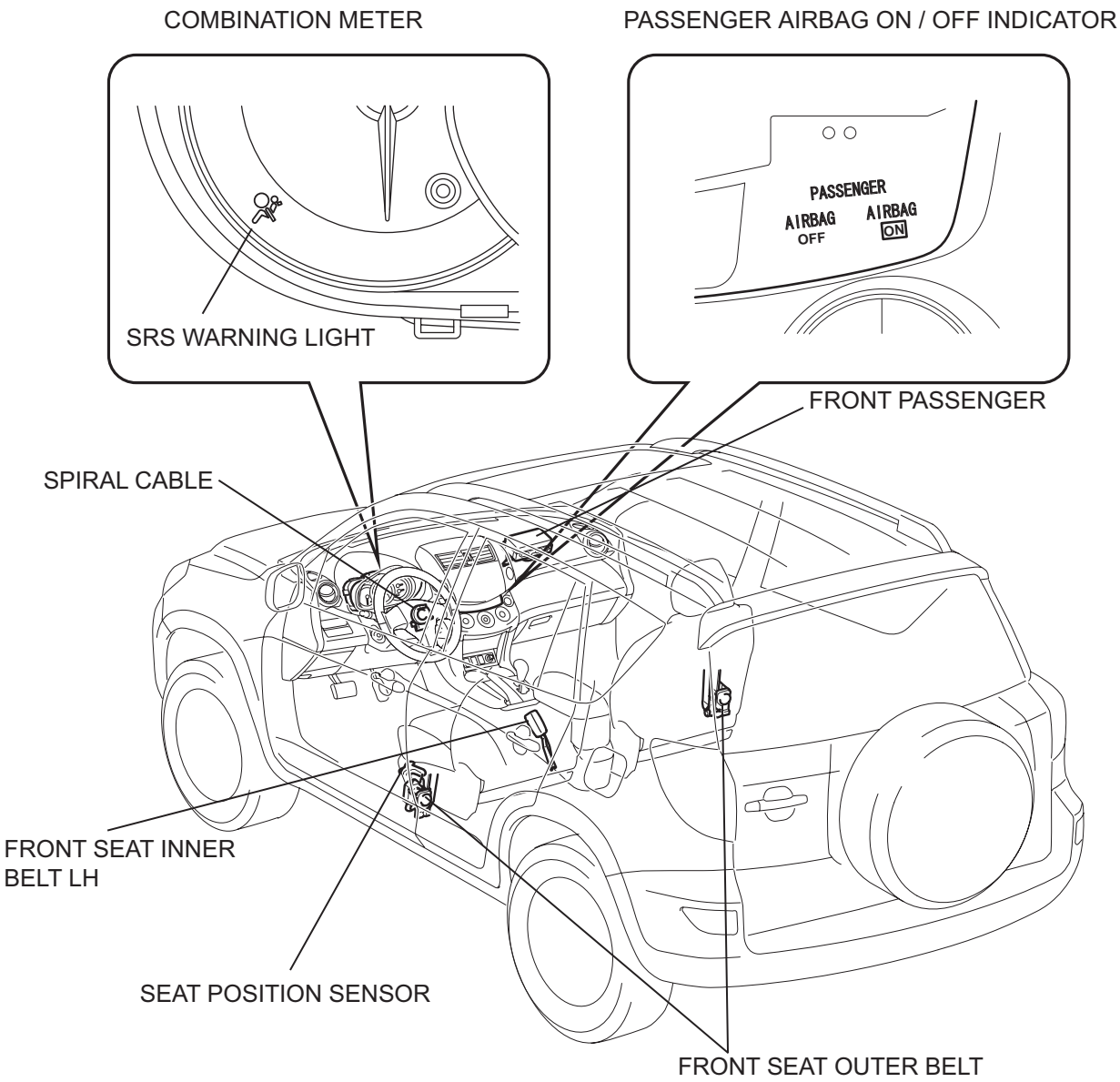

RS

T

C128667E03

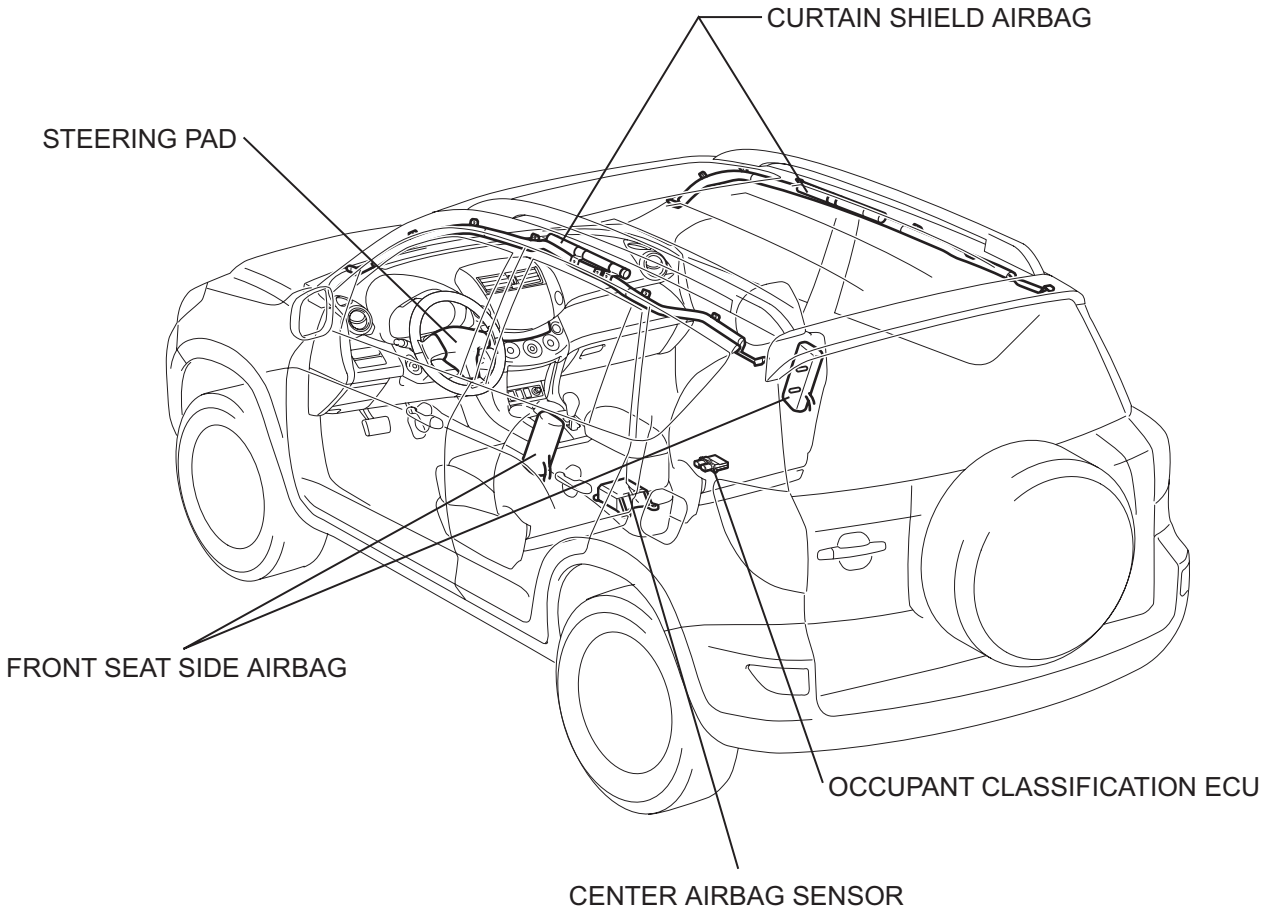

T

C128668E01

RS

SYSTEM DIAGRAM

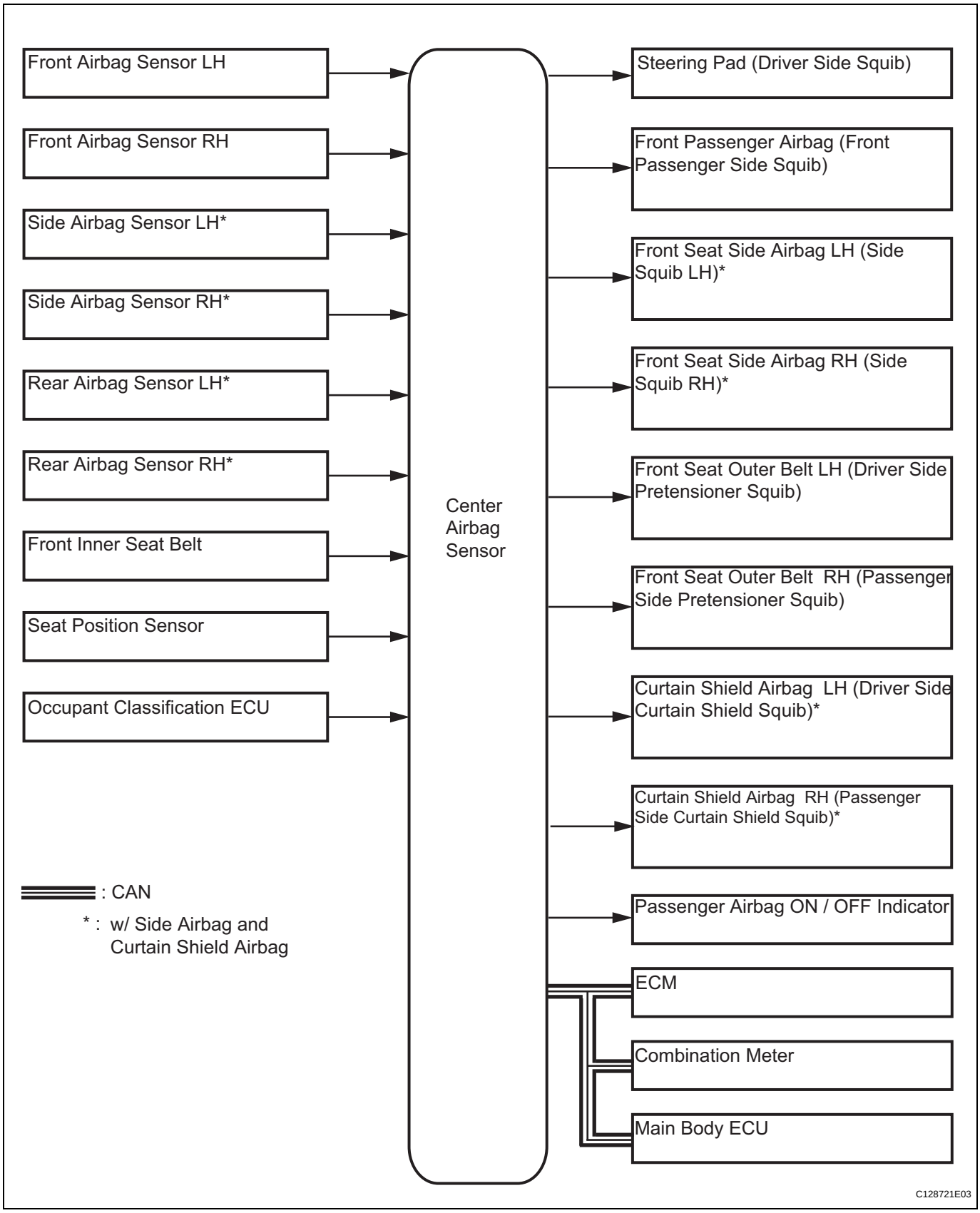

RS

SYSTEM DESCRIPTION

1. GENERAL

(a) In conjunction with an impact absorbing structure for a frontal collision, the SRS (Supplemental Restraint System) driver airbag, front passenger airbag and driver side knee airbag were designed to supplement seat belts in the event of a frontal collision in order to help reduce shock to the head, chest and knee of the driver and front passenger. This system is a 3-sensor type airbag system to detect the impact during a frontal collision using the center airbag sensor and front airbag sensors. It also operates the airbag system and seat belt pretensioner.

(b) In order to detect the extent of the collision during the initial stages of the collision in further detail, the front airbag sensors have been changed from mechanical type to electrical type deceleration sensors. Accordingly, the deployment of the driver airbag and front passenger airbag is controlled in two stages according to the severity of the impact.

(c) In conjunction with an impact absorbing structure for a side collision, the side airbag and curtain shield airbag were designed to help reduce shock to the driver and front passenger in the event of a side collision.

(d) A curtain shield airbag that helps reduce shock to the front and rear seat occupants with a single curtain shield airbag has been adopted. In conjunction with this system, the side airbag sensors have been installed at the bottom of the center pillars and rear airbag sensors have been installed at the bottom of the rear pillars.

(e) In this system, a front side collision is detected by the side airbag sensor in order to simultaneously deploy the side airbag. A rear side collision is detected by the rear airbag sensor and the center airbag sensor in order to deploy the side airbag and curtain shield airbag.

(f) The center airbag sensor sends the airbag deployment signal to the ECM through the CAN (Controller Area Network) to operate the fuel pump control.

2. CONSTRUCTION AND OPERATION

(a) FRONT AIRBAG SENSOR

(1) The front airbag sensors are installed on the right and left radiator supports.

(2) The front airbag sensor consists of the deceleration sensor.

(3) The deceleration sensor is built into the front airbag sensor, and the distortion that is created in the sensor is converted into an electric signal based on the vehicle deceleration rate during a frontal collision. Accordingly, the extent of the initial collision can be detected in detail.

(b) SIDE AIRBAG SENSOR

(1) The side airbag sensors are installed on the bottom of the right and left center pillars.

(2) The side airbag sensor consists of the deceleration sensor and ignition control circuit.

(3) The deceleration sensor is built into the side airbag sensor, and the distortion that is created in the sensor is converted into an electric signal based on the vehicle deceleration rate during a front side collision. Accordingly, the extent of the initial collision can be detected in detail.

(c) REAR AIRBAG SENSOR

(1) The rear airbag sensors are installed on the right and left rear pillars.

(2) The rear airbag sensor consists of the deceleration sensor and ignition control circuit.

(3) The deceleration sensor is built into the rear airbag sensor, and the distortion that is created in the sensor is converted into an electric signal based on the vehicle deceleration rate during a rear side collision. Accordingly, the extent of the initial collision can be detected in detail.

(d) CENTER AIRBAG SENSOR

(1) General

- The center airbag sensor is installed on the center floor under the console box.
- The center airbag sensor consists of the deceleration sensor, safing sensor, electronic safing sensor, ignition control circuit and diagnostic circuit.
- The center airbag sensor receives signals from the deceleration sensor and safing sensor built into the center airbag sensor and front airbag sensor. Then the center airbag sensor determines whether or not the driver airbag, front passenger airbag, driver side knee airbag and seat belt pretensioner should be activated, and diagnoses system malfunctions.
- The center airbag sensor causes the side airbag and the curtain shield airbag to deploy when receiving signals from the side and rear airbag sensor.

- The center airbag sensor receives signals from the deceleration sensor and the electronic safing sensor built into the center airbag sensor and the rear airbag sensor, and determines whether or not the side airbag and curtain shield airbag should be activated, and diagnoses system malfunctions.
- The center airbag sensor sends the airbag deployment signal to ECM through the CAN to operate the fuel pump control.

(2) Deceleration sensor and ignition control circuit
- The deceleration sensor is built into the center airbag sensor.
- The ignition control circuit performs calculations based on the signal output from the deceleration sensors of the center airbag sensor and front airbag sensor. If the calculated values are greater than the specified values, it activates the deployment operation.

(3) Safing sensor
The safing sensor is built into the center airbag sensor. During a frontal collision, the sensor turns on and outputs an ON signal to the center airbag sensor if a deceleration rate greater than the specified value is applied to the safing sensor.

(4) Electronic safing sensor
The electronic safing sensor is built into the center airbag sensor. During a side collision, the sensor turns on and outputs an ON signal to the center airbag sensor if a deceleration rate greater than the specified value is applied to the electronic safing sensor.

(5) Back-up power source
The back-up power source consists of a power supply capacitor and a DC-DC converter. When the power system does not function during a collision, the power supply capacitor discharges and supplies electric power to the system. The DC-DC converter operates as a boosting transformer when the battery voltage falls below a predetermined level.

(6) Diagnostic circuit
This circuit constantly diagnoses system malfunctions. When a malfunction is detected, it lights up the SRS warning light on the telltale light to inform the driver.

(7) Memory circuit
When a malfunction is detected in the diagnostic circuit, it is coded and stored in the memory circuit.

(e) SRS WARNING LIGHT

(1) The SRS warning light is located on the telltale light. It comes on to inform the driver of system trouble when a malfunction is detected in the self-diagnosis of the center airbag sensor. Under normal operating conditions when the ignition switch is turned on, it comes on for approximately 6 seconds and then goes off.

3. DEPLOYMENT CONDITION

When the vehicle collides and the shock is greater than the specified value, the SRS is activated automatically. The center airbag sensor includes the safing sensor and deceleration sensor. The safing sensor was designed to be turned on at a smaller deceleration rate than the deceleration sensor.

(a) The center airbag sensor determines whether or not deployment is necessary based on signals from the deceleration sensor and the front airbag sensor*. If the safing sensor turns on simultaneously, current flows to the squibs to deploy the SRS as shown in the illustration below.

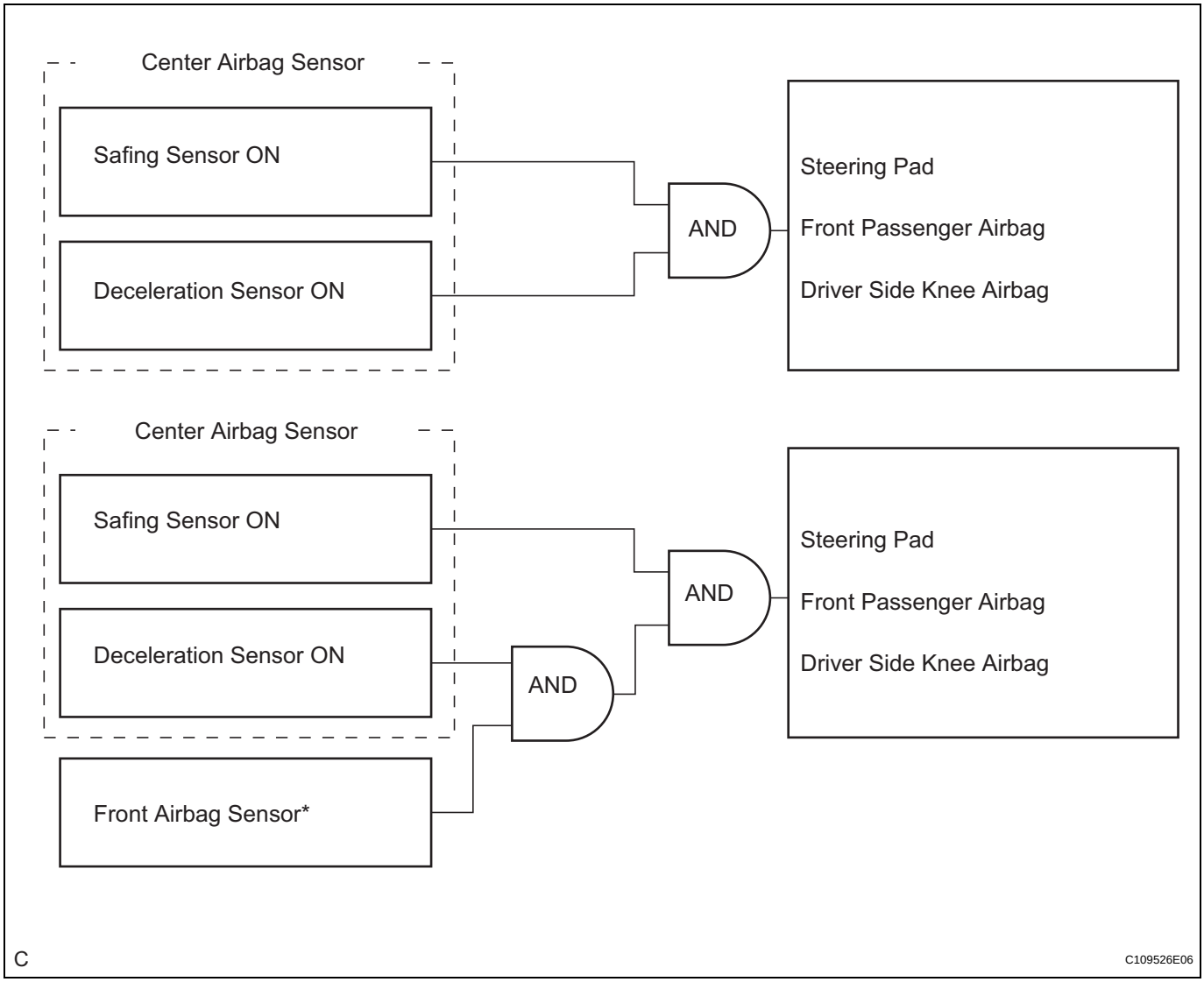

RS

HINT:
* : In case of a frontal collision, the ignition signal could be output with the deceleration sensor ON signal even without a signal from the front airbag sensor.

(b) The center airbag sensor determines whether or not deployment is necessary based on signals from the side airbag sensor. If the safing sensor turns on simultaneously, current flows to the squib to deploy the SRS as shown in the illustration below.

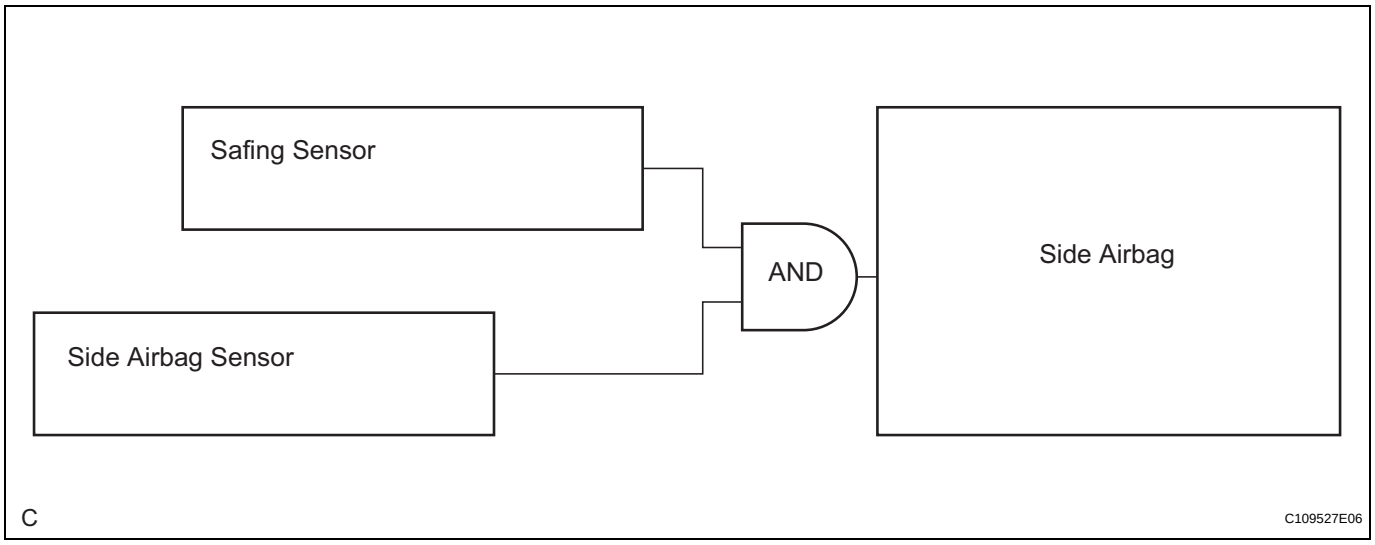

(c) The center airbag sensor determines whether or not deployment is necessary based on signals from the rear airbag sensor. If the safing sensor turns on simultaneously, current flows to the squib to deploy the SRS as shown in the illustration below*.

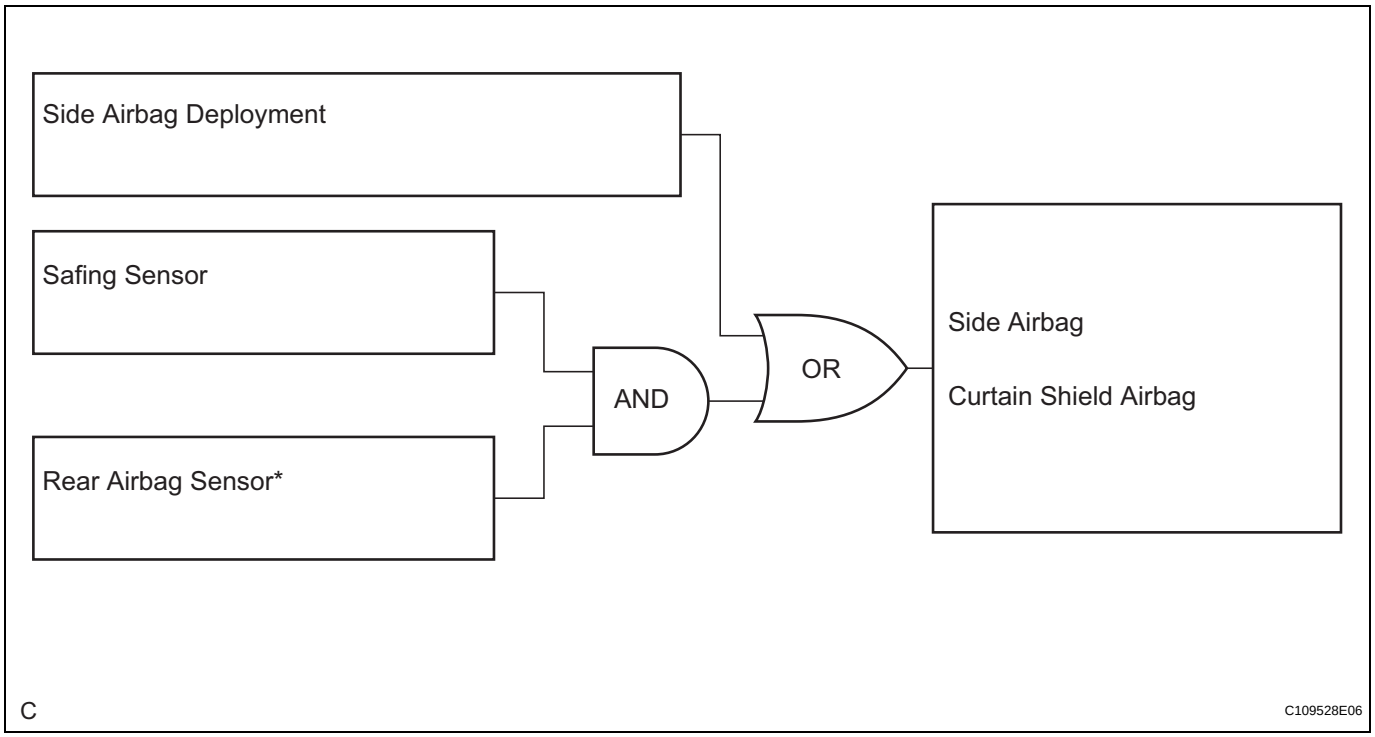

RS

HINT:
*: If the side airbag deploys, the curtain shield airbag will also deploy, regardless of whether the signal is output from the rear airbag sensor.

(d) The center airbag sensor contains a roll rate sensor and roll rate sensor (that determine the inclination angle the vehicle) and a lateral deceleration sensor (that determine the lateral force that is applied to the vehicle). These sensors detect the vehicle's roll angle (a), rotational speed (b), and lateral acceleration speed (c). Based on the information obtained from sensors, the airbag sensor makes an overall judgment of the vehicle's roll angle (a), rotational speed (b), and lateral acceleration speed (c). If the airbag sensor determines that the vehicle has rolled over due to cause other than the side collision, it deploys the right and left curtain shield airbag and the front right and left seat belt pretensioner.

Roll Over Detection

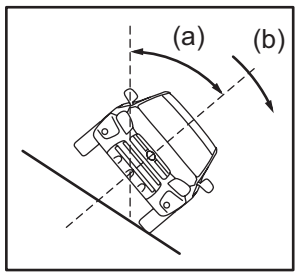

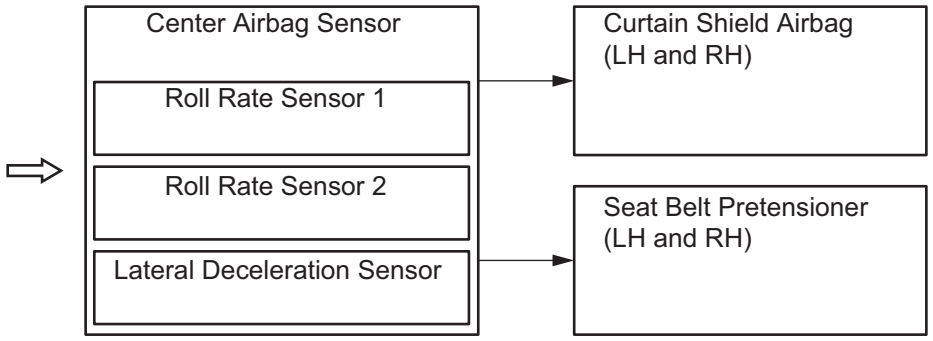

Side Collision and Rollover Detection

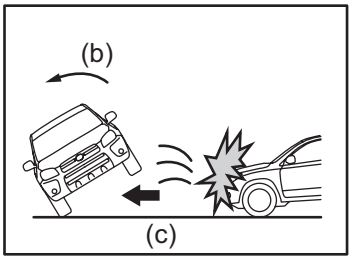

* Activate depending on the condition of the collision.

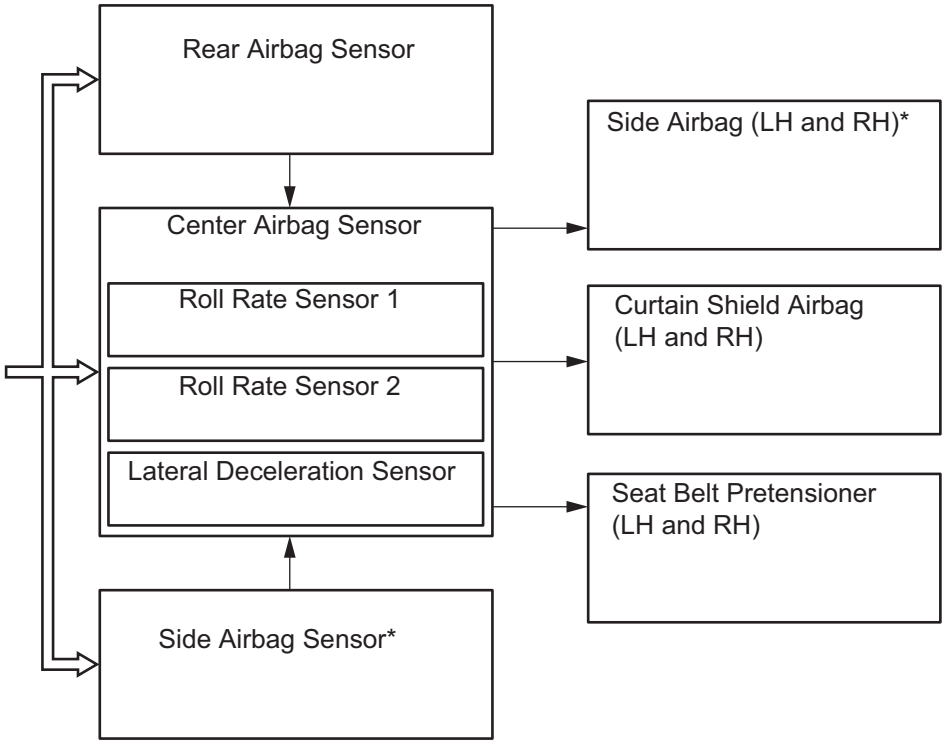

T

C123536E02

RS

HOW TO PROCEED WITH TROUBLESHOOTING

HINT:

- Use these procedures to troubleshoot the supplemental restraint system.
- *: Use the intelligent tester.

1 **VEHICLE BROUGHT TO WORKSHOP**

NEXT

2 **INSPECT BATTERY VOLTAGE***

Standard voltage:
11 to 14 V

If the voltage is below 11 V, recharge or replace the battery before proceeding.

3 **CHECK MULTIPLEX COMMUNICATION SYSTEM***

(a) Check the DTC.

Result

Result	Proceed to
DTC is not output	A
DTC is output	B

B → **CHECK MULTIPLEX COMMUNICATION SYSTEM**

A

4 **CHECK CAN COMMUNICATION SYSTEM**

(a) Check the DTC.

Result

Result	Proceed to
DTC is not output	A
DTC is output	B

B → **CHECK CAN COMMUNICATION CIRCUIT**

A

RS

5	WARNING LIGHT CHECK*

NEXT

6	CHECK FOR DTC (Present and Past DTCs)

(a) Check the DTC.
Result

Result	Proceed to
DTC is not output	A
DTC is output	B

B → PROBLEM SYMPTOMS TABLE

A

7	DTC CHART

NEXT

8	CIRCUIT INSPECTION

NEXT

RS

9	REPAIR*

NEXT

10	CLEAR DTC (Present and Past DTCs)*

NEXT

11	CHECK FOR DTC (Present and Past DTCs)

(a) Check the DTC.
Result

Result	Proceed to
DTC is not output	A
DTC is output	B

B → Go to step 6

A

12	CONFIRMATION TEST

NEXT

END

PROBLEM SYMPTOMS TABLE

HINT:

- Use the table below to help determine the cause of the problem symptom. The potential causes of the symptoms are listed in order of probability in the "Suspected area" column of the table. Check each symptom by checking the suspected areas in the order they are listed. Replace parts as necessary.
- Proceed to the troubleshooting procedures for each circuit in the table below.

Airbag system

Symptom	Suspected area	See page
1. The SRS warning light goes off after the primary check, but comes back on.	SRS Warning Light Remains ON	RS-226
2. With the ignition switch ON, the SRS warning light sometimes comes back on.	SRS Warning Light Remains ON	RS-226
3. The SRS warning light always comes on even when DTC is not output.	SRS Warning Light Remains ON	RS-226
1. With the ignition switch ON, the SRS warning light does not come on.	SRS Warning Light does not Come On	RS-230
1. Although an SRS warning light operates normally, DTC is output.	TC and CG Terminal Circuit	RS-233
2. Although terminals TC and CG of DLC3 are not connected, DTC is output.	TC and CG Terminal Circuit	RS-233

TERMINALS OF ECU

1. CENTER AIRBAG SENSOR ASSEMBLY (w/ Curtain Shield Airbag)

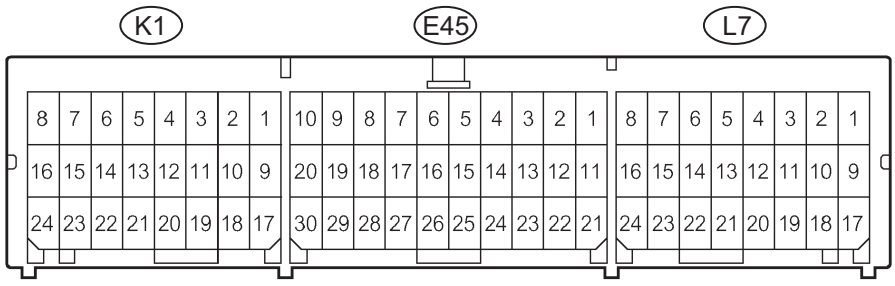

H

C109532E05

Terminal No.	Terminal Symbol	Destination
K1-1	SFD+	Front seat side airbag assembly LH (Side squib LH)
K1-2	SFD-	Front seat side airbag assembly LH (Side squib LH)
K1-3	ICD-	Curtain shield airbag assembly LH (Driver side curtain shield squib)
K1-4	ICD+	Curtain shield airbag assembly LH (Driver side curtain shield squib)
K1-5	PD+	Front seat outer belt assembly LH (Driver side pretensioner squib)
K1-6	PD-	Front seat outer belt assembly LH (Driver side pretensioner squib)
K1-9	DSP+	Seat position sensor
K1-10	DBE+	Front seat inner belt assembly LH
K1-17	DSP-	Seat position sensor
K1-18	DBE-	Front seat inner belt assembly LH
K1-23	BBD-	Side airbag sensor LH
K1-24	BBD+	Side airbag sensor LH
E45-1	P2+	Front passenger airbag (Front passenger side squib 2nd step)
E45-2	P2-	Front passenger airbag (Front passenger side squib 2nd step)
E45-3	P-	Front passenger airbag (Front passenger side squib)
E45-4	P+	Front passenger airbag (Front passenger side squib)
E45-5	D+	Steering pad (Driver side squib)
E45-6	D-	Steering pad (Driver side squib)

Terminal No.	Terminal Symbol	Destination
E45-7	D2-	Steering pad (Driver side squib 2nd step)
E45-8	D2+	Steering pad (Driver side squib 2nd step)
E45-13	CANH	CAN
E45-16	SIL	DLC3
E45-17	P-AB	Front passenger seat belt warning light (Passenger airbag ON/OFF indicator)
E45-21	IG2	IGN fuse
E45-22	CANL	CAN
E45-23	PAON	Front passenger seat belt warning light (Passenger airbag ON/OFF indicator)
E45-25	E1	Ground
E45-26	E2	Ground
E45-27	-SR	Front airbag sensor RH
E45-28	-SL	Front airbag sensor LH
E45-29	+SR	Front airbag sensor RH
E45-30	+SL	Front airbag sensor LH
L7-3	PP-	Front seat outer belt assembly RH (Front passenger side pretensioner squib RH)
L7-4	PP+	Front seat outer belt assembly RH (Front passenger side pretensioner squib RH)
L7-5	ICP+	Curtain shield airbag assembly RH (Curtain shield squib RH)
L7-6	ICP-	Curtain shield airbag assembly RH (Curtain shield squib RH)
L7-7	SFP-	Front seat side airbag assembly RH (Side squib RH)
L7-8	SFP+	Front seat side airbag assembly RH (Side squib RH)
L7-16	FSP+	Occupant classification ECU
L7-17	BBP+	Side airbag sensor RH
L7-18	BBP-	Side airbag sensor RH
L7-24	FSP-	Occupant classification ECU

RS

2. CENTER AIRBAG SENSOR ASSEMBLY (w/o Curtain Shield Airbag)

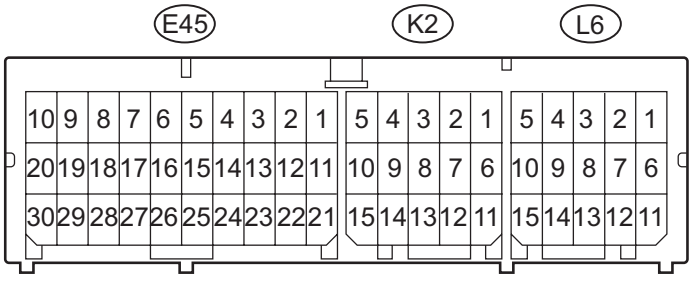

C131032E02

Terminal No.	Terminal Symbol	Destination
E45-1	P2+	Front passenger airbag (Front passenger side squib 2nd step)
E45-2	P2-	Front passenger airbag (Front passenger side squib 2nd step)
E45-3	P-	Front passenger airbag (Front passenger side squib)
E45-4	P+	Front passenger airbag (Front passenger side squib)
E45-5	D+	Steering pad (Driver side squib)
E45-6	D-	Steering pad (Driver side squib)
E45-7	D2-	Steering pad (Driver side squib 2nd step)
E45-8	D2+	Steering pad (Driver side squib 2nd step)
E45-13	CANH	CAN
E45-16	SIL	DLC3
E45-17	P-AB	Front passenger seat belt warning light (Passenger airbag ON/OFF indicator)
E45-21	IG2	IGN fuse
E45-22	CANL	CAN
E45-23	PAON	Front passenger seat belt warning light (Passenger airbag ON/OFF indicator)
E45-25	E1	Ground
E45-26	E2	Ground
E45-27	-SR	Front airbag sensor RH
E45-28	-SL	Front airbag sensor LH
E45-29	+SR	Front airbag sensor RH
E45-30	+SL	Front airbag sensor LH
K2-1	PD-	Front seat outer belt assembly LH (Driver side pretensioner squib)
K2-2	PD+	Front seat outer belt assembly LH (Driver side pretensioner squib)
K2-11	DBE+	Front seat inner belt assembly LH
K2-12	DBE-	Front seat inner belt assembly LH
K2-13	DSP-	Seat position sensor
K2-14	DSP+	Seat position sensor
L6-4	PP+	Front seat outer belt assembly RH (Front passenger side pretensioner squib RH)
L6-5	PP-	Front seat outer belt assembly RH (Front passenger side pretensioner squib RH)
L6-12	FSP+	Occupant classification ECU
L6-13	FSP-	Occupant classification ECU

DIAGNOSIS SYSTEM

1. DESCRIPTION

The center airbag sensor controls the functions of the Supplemental Restraint System (SRS) on the vehicle. Data of the SRS can be read in the Data Link Connector 3 (DLC3) of the vehicle. When the system seems to be malfunctioning, use the intelligent tester to check for a malfunction and perform repairs.

2. CHECK DLC3

(a) The ECU uses ISO 15765-4 for communication. The terminal arrangement of the DLC3 complies with ISO 15031-3 and matches the ISO 15765-4 format.

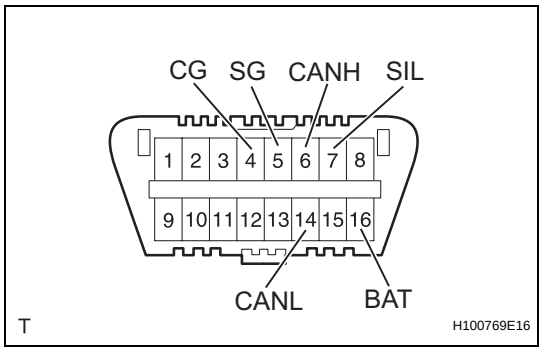

Symbols (Terminal No.)	Terminal Description	Condition	Specified condition
SIL (7) - SG (5)	Bus + line	During transmission	Pulse generation
CG (4) - Body ground	Chassis ground	Always	Below 1 Ω
SG (5) - Body ground	Signal ground	Always	Below 1 Ω
BAT (16) - Body ground	Battery positive	Always	11 to 14 V
CANH (6) - CANL (14)	HIGH-level CAN bus line	Ignition switch OFF*	54 to 69 Ω
CANH (6) - Battery positive	HIGH-level CAN bus line	Ignition switch OFF*	1 MΩ or higher
CANH (6) - CG (4)	HIGH-level CAN bus line	Ignition switch OFF*	200 Ω or higher
CANL (14) - Battery positive	LOW-level CAN bus line	Ignition switch OFF*	1 MΩ or higher
CANL (14) - CG (4)	LOW-level CAN bus line	Ignition switch OFF*	200 Ω or higher

NOTICE:

***: Before measuring the resistance, leave the vehicle as is for at least 1 minute and do not operate the ignition switch, any switches or doors.**

If the result is not as specified, the DLC3 may have a malfunction. Repair or replace the harness and connector.

HINT:

Connect the cable of the intelligent tester (with CAN VIM) to the DLC3, turn the ignition switch ON and attempt to use the tester. If the display indicates that a communication error has occurred, there is a problem either with the vehicle or with the tester.

- If communication is normal when the tester is connected to another vehicle, inspect the DLC3 on the original vehicle.
- If communication is still not possible when the tool is connected to another vehicle, the problem is probably in the tester itself. Consult the Service Department listed in the tester's instruction manual.

3. SYMPTOM SIMULATION

HINT:

The most difficult case in troubleshooting is when no problem symptoms occur. In such a case, a through problem analysis must be carried out. A simulation of the same or similar conditions and environment in which the problem occurred in the customer's vehicle should be carried out. No matter how much skill or experience a technician has, troubleshooting without confirming the problem symptoms will lead to important repairs being overlooked and mistakes or delays.

This leads to a standstill in troubleshooting.

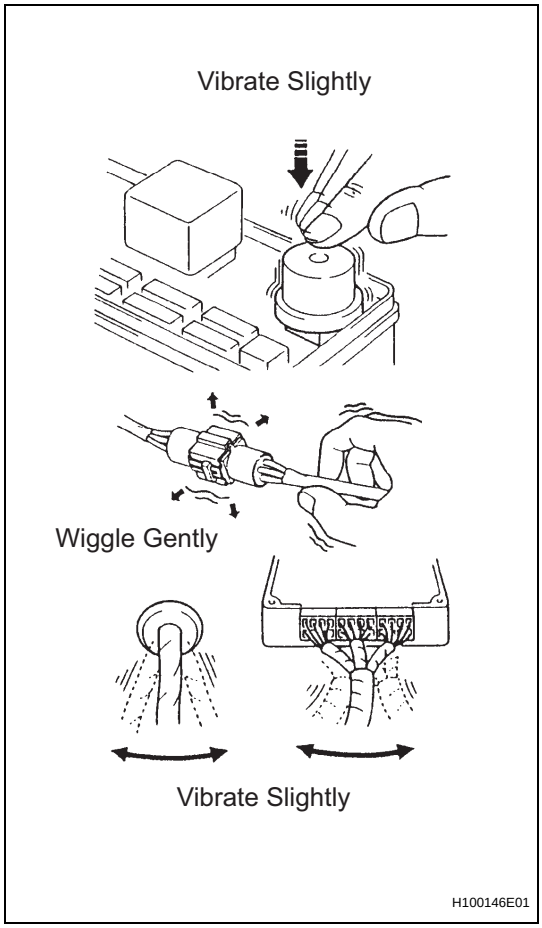

(a) Simulation method: When vibration seems to be the major cause

HINT:

Perform this method only during the primary check period (for approximately 6 seconds after the ignition switch is turned ON).

(1) Use your finger to slightly vibrate the part of the sensor considered to be the problem cause, and check whether the malfunction recurs.

HINT:

Wiggling the relays too strongly may result in open relays.

(2) Gently wiggle the connector.

(3) Slightly shake the wire harness vertically and horizontally.

The connector joint and fulcrum of the vibration are the major areas to be checked thoroughly.

4. FUNCTION OF SRS WARNING LIGHT

(a) Primary check

(1) Turn the ignition switch off. Wait for at least 2 seconds, then turn the ignition switch ON. The SRS warning light comes on for approximately 6 seconds and the SRS airbag system diagnosis (including the seat belt pretensioner) is performed.

HINT:

If any malfunctions are detected during the primary check, the SRS warning light remains on even after the primary check period has elapsed.

(b) Constant check

(1) After the primary check, the center airbag sensor constantly monitors the SRS airbag system for trouble.

HINT:

If any malfunctions are detected during the constant check, the center airbag sensor functions as follows:

- The SRS warning light comes on.

RS

- The SRS warning light goes off, and then comes on again. This blinking pattern indicates a source voltage drop. The SRS warning light goes off 10 seconds after the source voltage returns to normal.

(c) Review

(1) When the airbag system is normal:
The SRS warning light comes on only during the primary check period (for approximately 6 seconds after the ignition switch is turned ON).

(2) When the airbag system malfunctions:
- The SRS warning light blinks after the primary check period has elapsed.
- The SRS warning light goes off after the primary check, but comes on again during the constant check.
- The SRS warning light remains off even after the ignition switch is turned from LOCK to ON. However, if malfunctions such as an open circuit have occurred in the wire harness between the meter and ECU, the warning light comes on 10 seconds after the ignition switch is turned ON.

HINT:
The center airbag sensor keeps the SRS warning light on if any malfunctions have been detected in the airbag system.

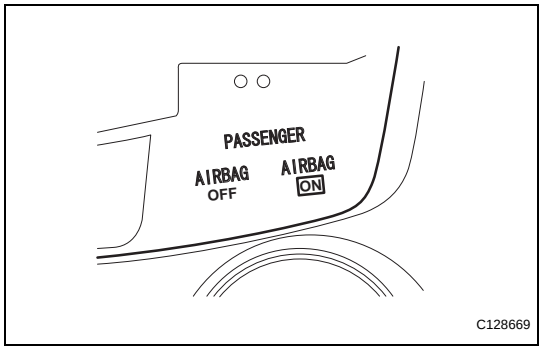

5. FUNCTION OF PASSENGER AIRBAG ON/OFF INDICATOR

(a) Initial check

(1) Turn the ignition switch ON.

(2) The passenger airbag ON / OFF indicator comes on for approximately 4 seconds, then goes off for approximately 2 seconds.

(3) Approximately 6 seconds after the ignition switch is turned ON, the passenger airbag ON / OFF indicator operates in accordance with the conditions listed below.

RS

Condition	ON Indicator	OFF Indicator
Vacant	OFF	OFF
Adult is seated	ON	OFF
Child is seated	OFF	ON
Child restraint system is set	OFF	ON
Front passenger occupant classification system failure	OFF	ON

HINT:
The passenger airbag ON / OFF indicator operates as shown in the timing chart below in order to check the indicator light circuit.

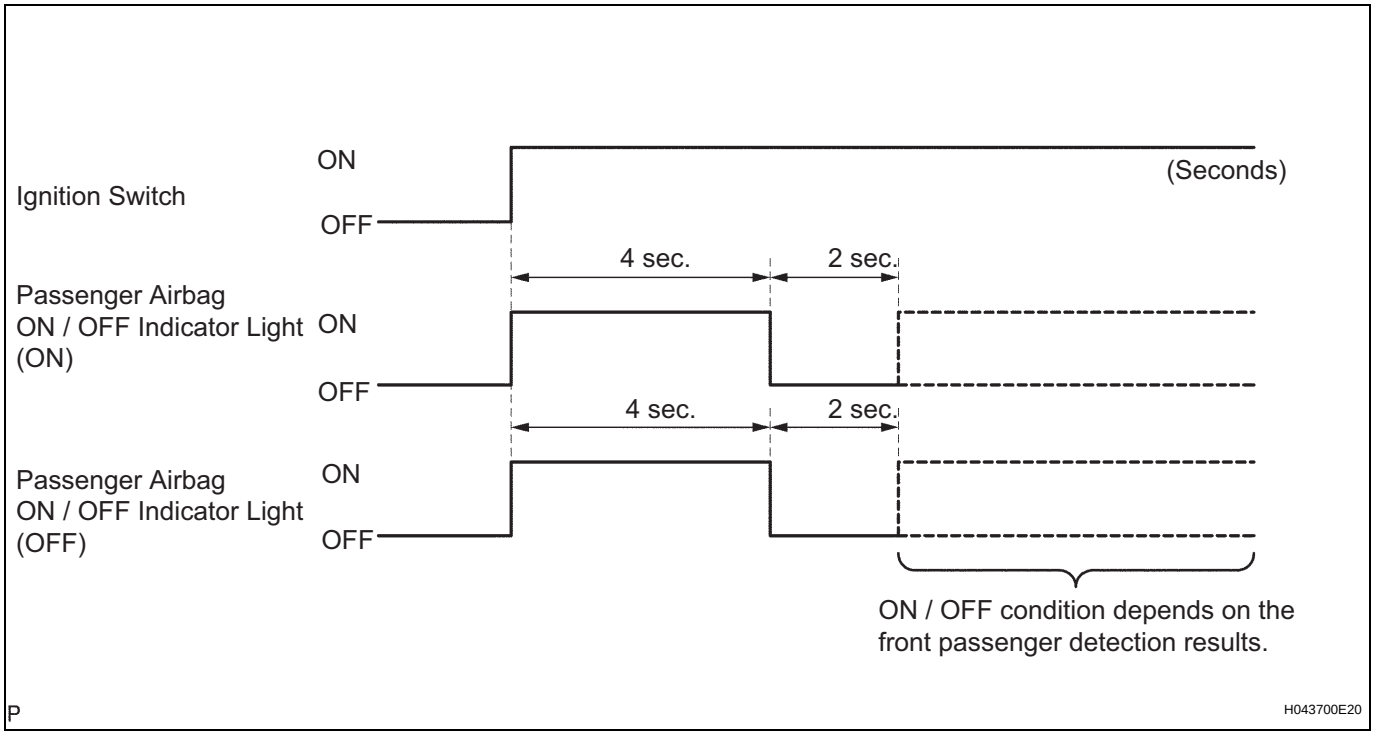

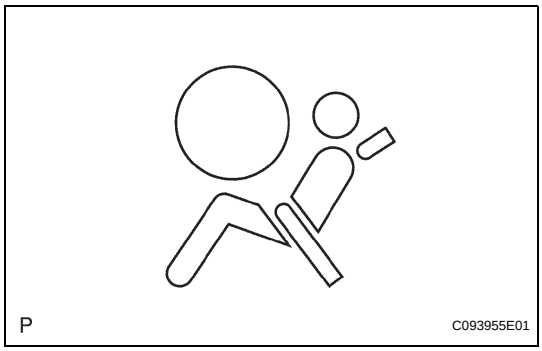

6. SRS WARNING LIGHT CHECK

(a) Turn the ignition switch ON, and check that the SRS warning light comes on for approximately 6 seconds (primary check).

(b) Check that the SRS warning light goes off approximately 6 seconds after the ignition switch is turned ON (constant check).

HINT:

When any of the following symptoms occur, refer to the Problem Symptoms Table (see page RS-34).

- The SRS warning light comes on occasionally after the primary check period has elapsed.
- Even when the SRS warning light comes on, no DTCs are set.
- Even when the ignition switch is turned from OFF to ON, the SRS warning light remains off.

7. ACTIVATION PREVENTION MECHANISM

(a) FUNCTION OF ACTIVATION PREVENTION MECHANISM

(1) An activation prevention mechanism is built into the connector (on the center airbag sensor a side) of the airbag system squib circuit to prevent accidental airbag activation.

(2) This mechanism closes the circuit when the connector is disconnected by bringing the short spring into contact with the terminals and shutting off external electricity to prevent accidental airbag activation.

RS

(b) RELEASE METHOD OF ACTIVATION PREVENTION MECHANISM

(1) To release the activation prevention mechanism, insert a piece of paper, with the same thickness as the male terminal (approximately 0.5 mm [0.020 in.]), between the terminals and the short spring to break the connection.

(2) Refer to the illustrations below concerning connectors to utilize the activation prevention mechanism and its release method.

CAUTION:

Never release the activation prevention mechanism on the squib connector even when inspecting with the squib disconnected.

NOTICE:

- **Do not release the activation prevention mechanism unless specifically directed to do so by the troubleshooting procedure.**
- **To prevent the terminal and the short spring from being damaged, always use a piece of paper that is the same thickness as the male terminal.**

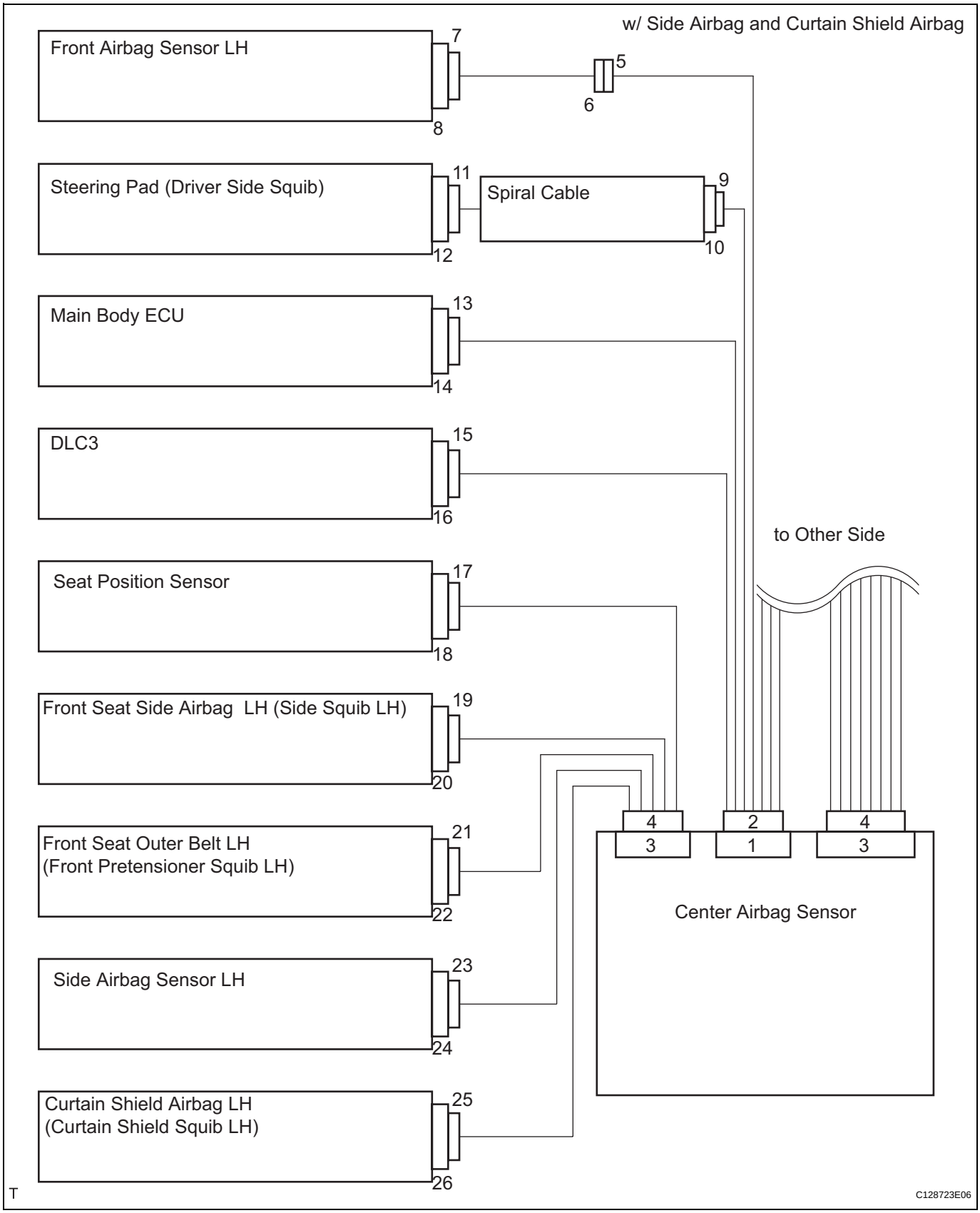
w/ Side Airbag and Curtain Shield Airbag
Front Airbag Sensor LH
7
8
5
6
Steering Pad (Driver Side Squib)
11
12
Spiral Cable
9
10
Main Body ECU
13
14
DLC3
15
16
to Other Side
Seat Position Sensor
17
18
Front Seat Side Airbag LH (Side Squib LH)
19
20
Front Seat Outer Belt LH
(Front Pretensioner Squib LH)
21
22
Side Airbag Sensor LH
23
24
Curtain Shield Airbag LH
(Curtain Shield Squib LH)
25
26
4
3
2
1
4
3
Center Airbag Sensor
C128723E06

RS

T

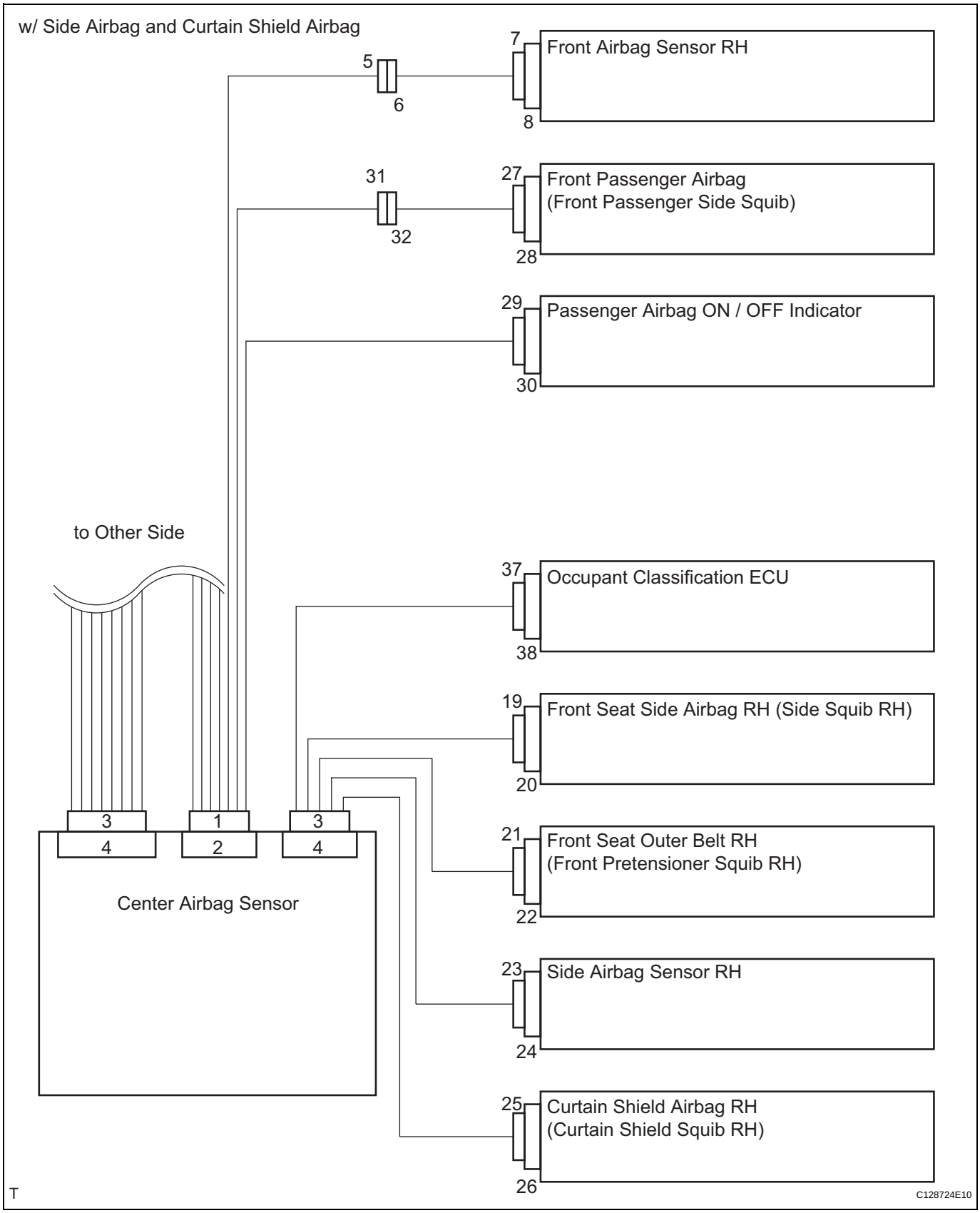
w/ Side Airbag and Curtain Shield Airbag
5
6
7
8
Front Airbag Sensor RH
31
32
27
28
Front Passenger Airbag
(Front Passenger Side Squib)
29
30
Passenger Airbag ON / OFF Indicator
to Other Side
37
38
Occupant Classification ECU
19
20
Front Seat Side Airbag RH (Side Squib RH)
3
4
1
2
3
4
Center Airbag Sensor
21
22
Front Seat Outer Belt RH
(Front Pretensioner Squib RH)
23
24
Side Airbag Sensor RH
25
26
Curtain Shield Airbag RH
(Curtain Shield Squib RH)
T
C128724E10

RS

w/ Side Airbag and Curtain Shield Airbag

Center Airbag Sensor Connector

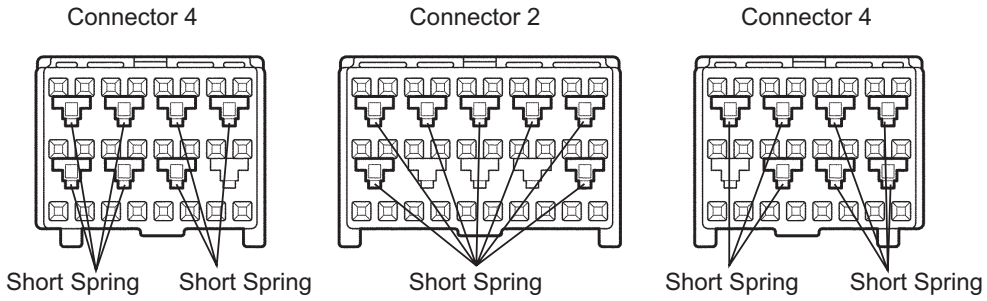

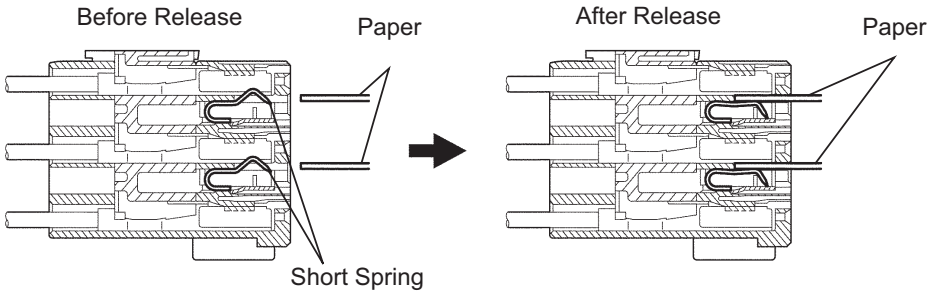

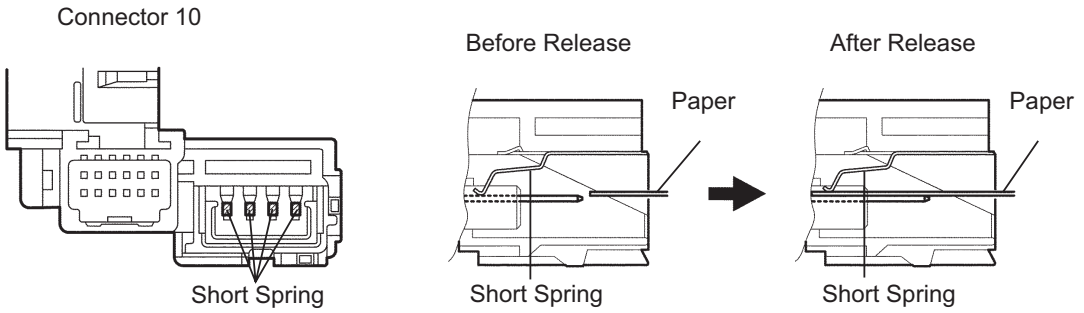

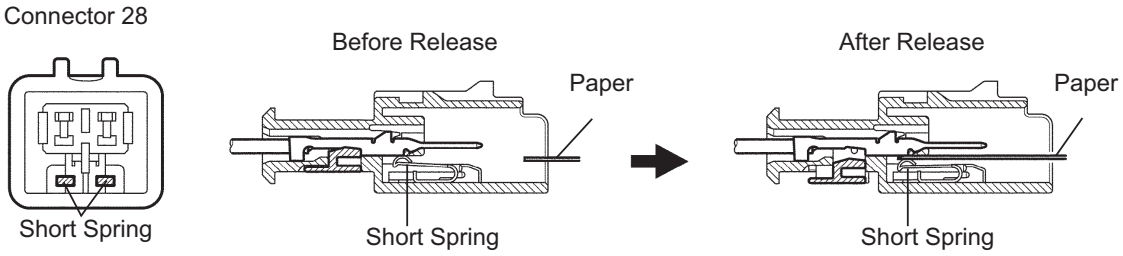

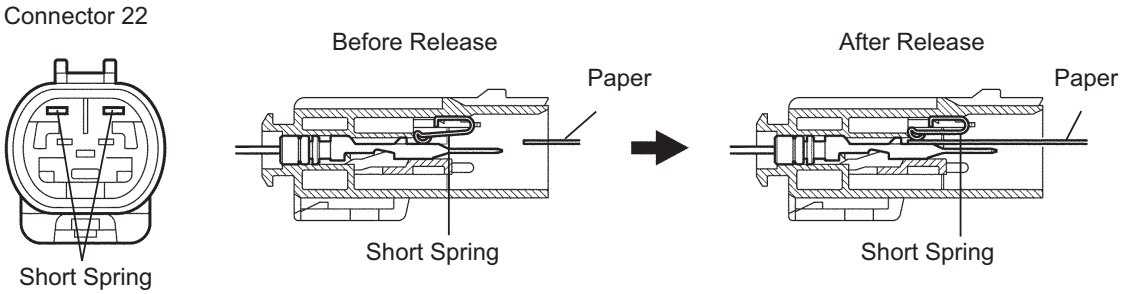

H043421E04

RS

w/o Side Airbag and Curtain Shield Airbag

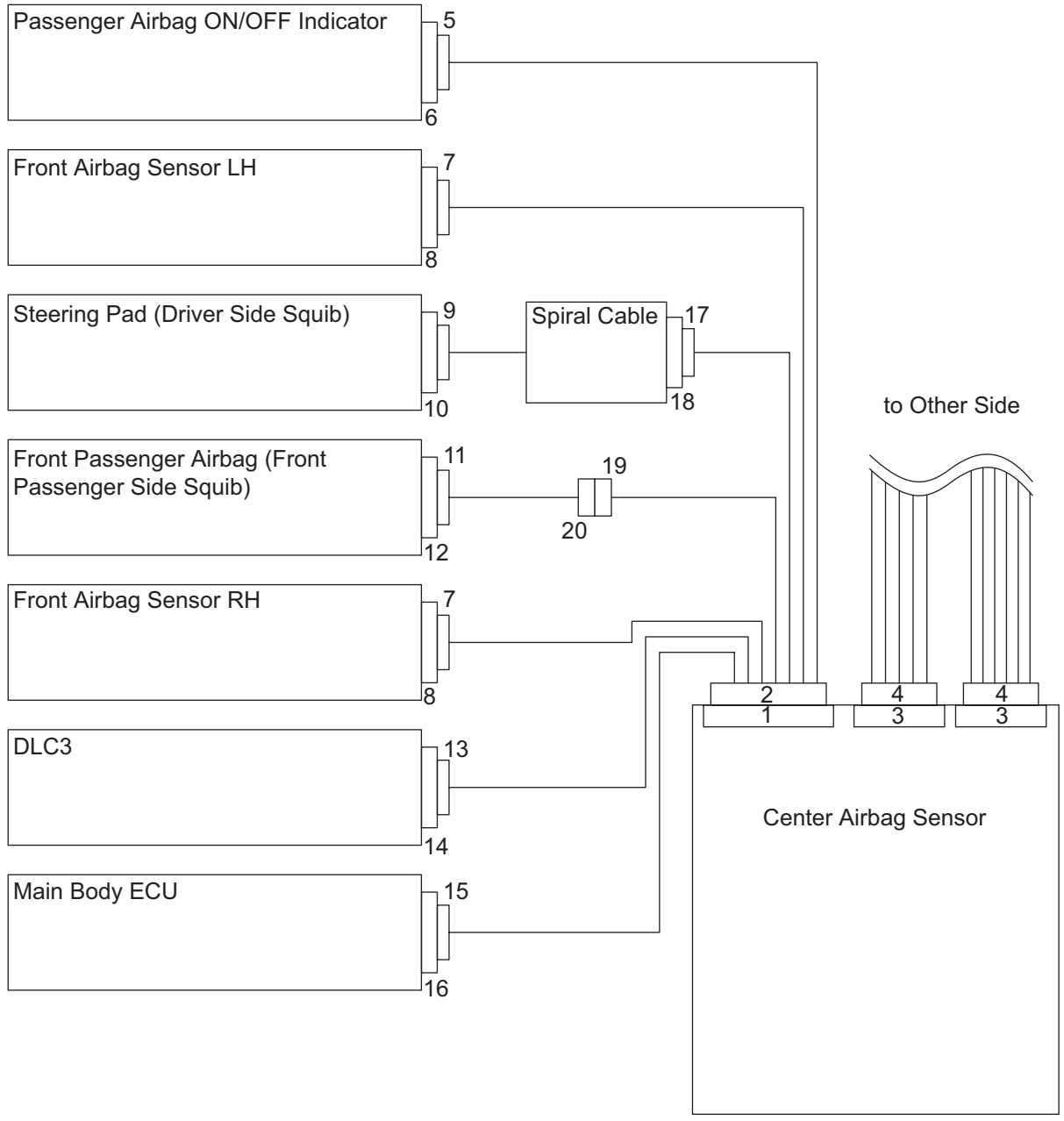

RS

Y

C128726E06

w/o Side Airbag and Curtain Shield Airbag

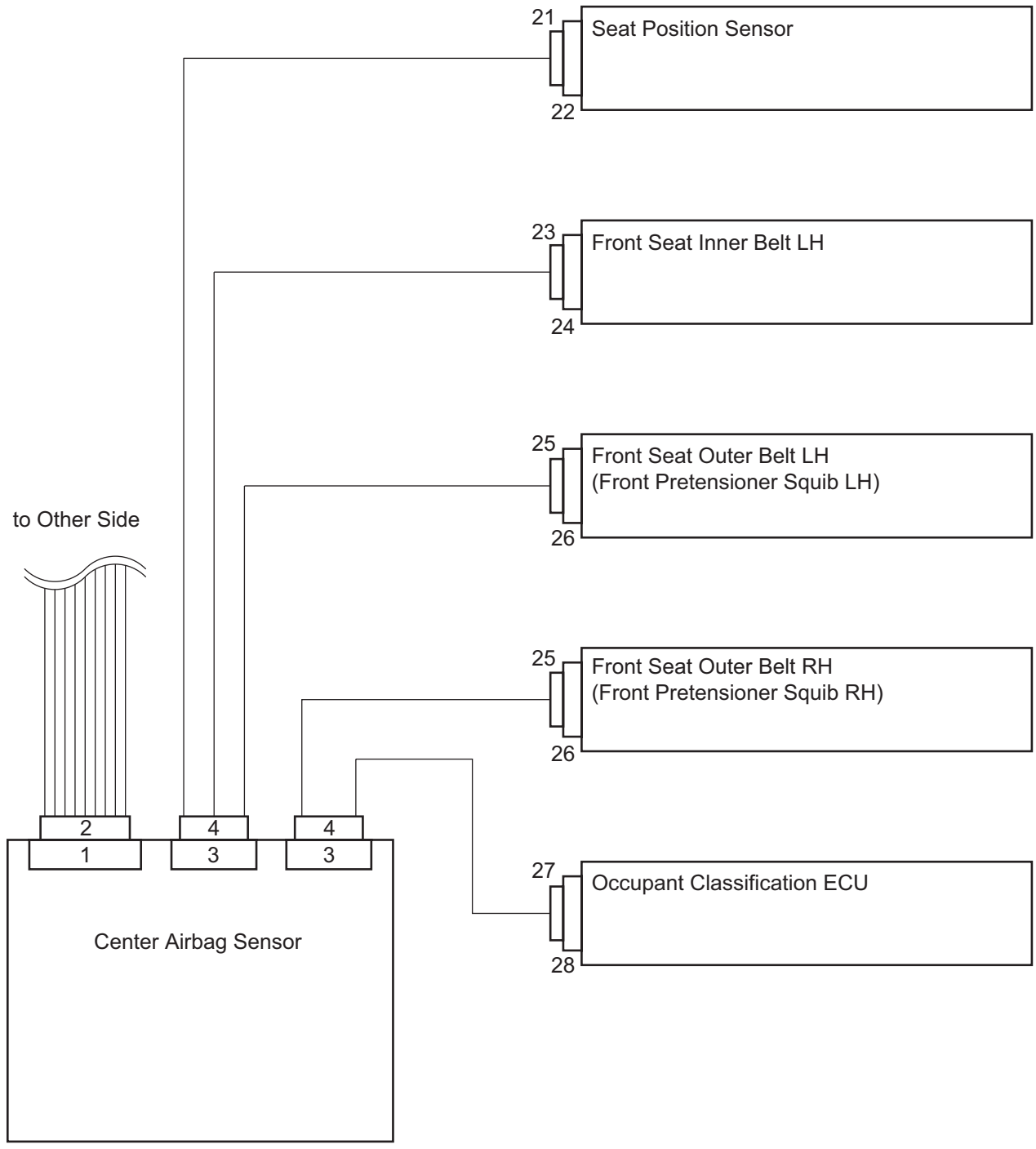

RS

T

C128725E05

w/o Side Airbag and Curtain Shield Airbag

Center Airbag Sensor Connector

Connector 2

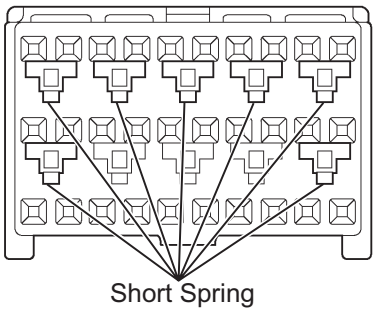

Connector 4

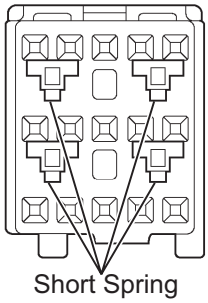

Connector 4

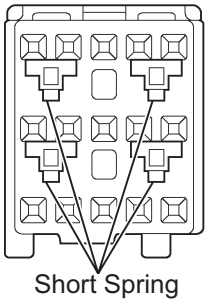

Before Release

After Release

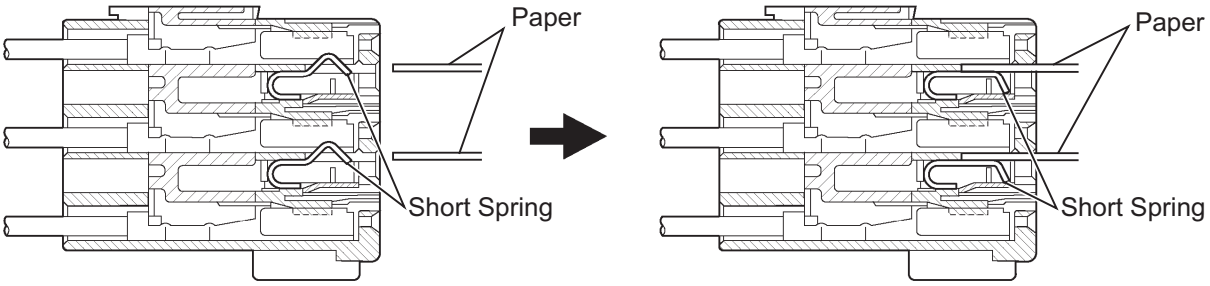

Connector 18

Before Release

After Release

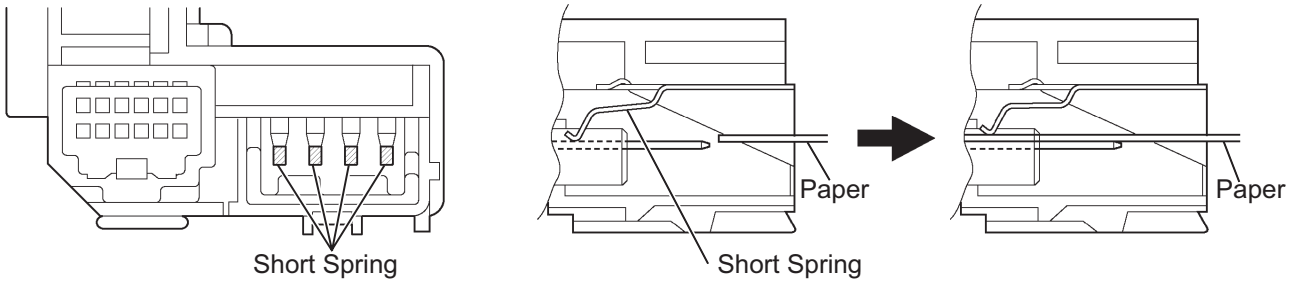

Connector 12

Before Release

After Release

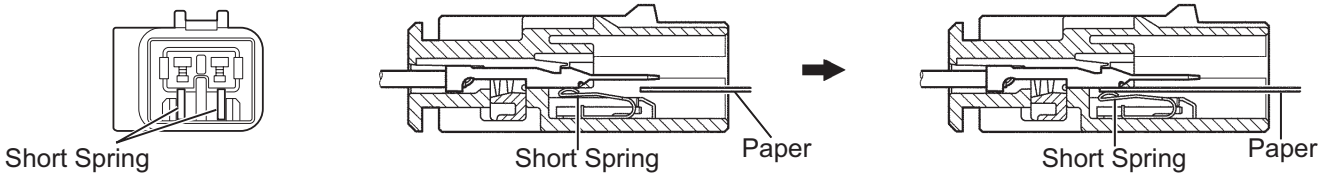

Connector 26

Before Release

After Release

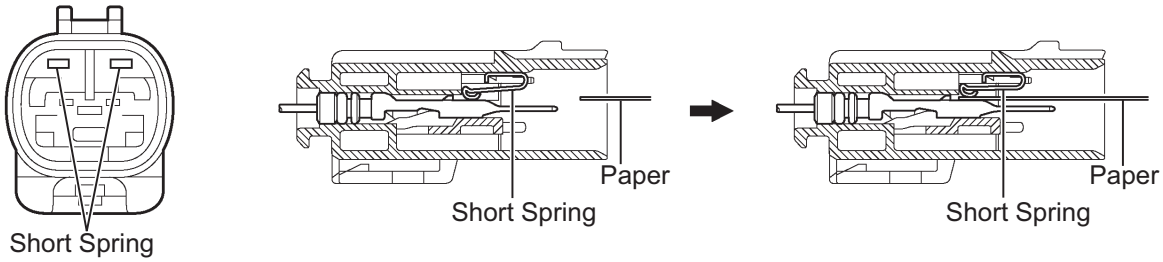

H100199E06

RS

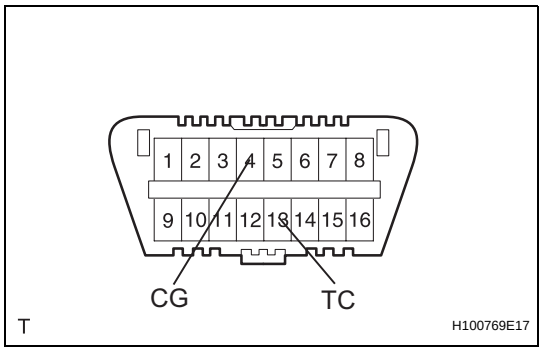

DTC CHECK / CLEAR

1. CHECK DTC (USING SST (CHECK WIRE))

(a) Check the DTCs (Present trouble code).

(1) Turn the ignition switch ON, and wait for approximately 60 seconds.

(2) Using SST, connect terminals 13(TC) and 4(CG) of the DLC3.

SST 09843-18040

NOTICE:

Connect the terminals to the correct positions to avoid a malfunction.

(b) Check the DTCs (Past trouble code)

(1) Using SST, connect terminals TC and 4(CG) of the DLC3.

SST 09843-18040

NOTICE:

Connect the terminals to the correct positions to avoid a malfunction.

(2) Turn the ignition switch ON, and wait for approximately 60 seconds.

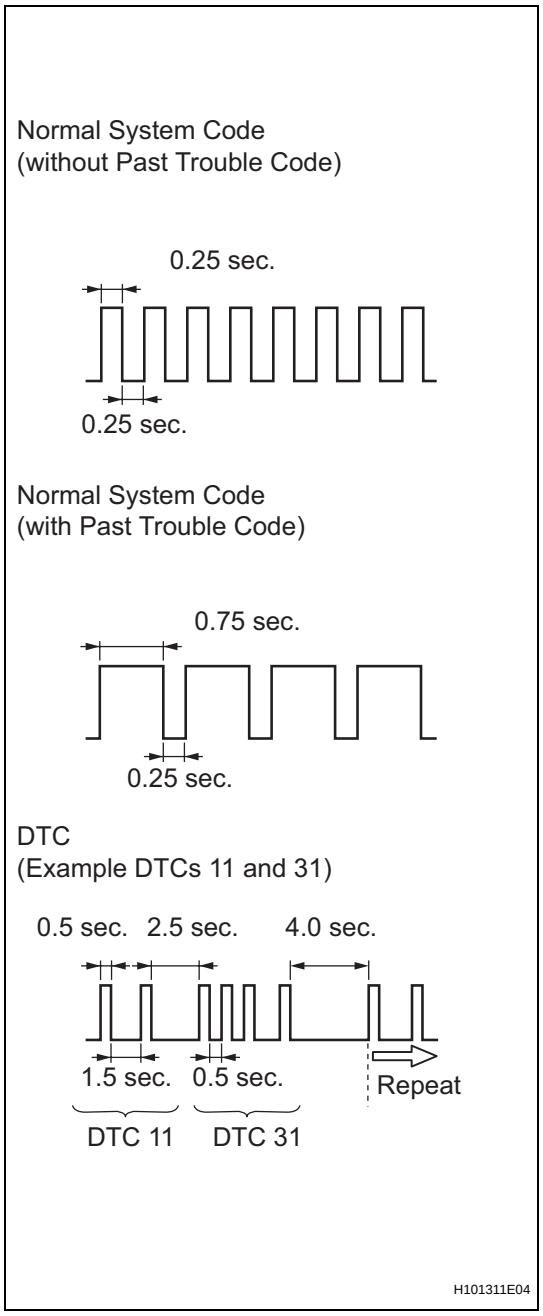

(c) Read the DTCs.

(1) Read the blinking patterns of the DTCs. As examples, the blinking patterns for the normal system code and DTCs 11 and 31 are shown in the illustration to the left.

- Normal system code indication (without past trouble code):
  The light blinks twice per second.
- Normal system code indication (with past trouble code):
  When the past trouble code is stored in the center airbag sensor, the light blinks only once per second.
- Trouble code indication:
  The first blinking indicates the first DTC. The second blinking occurs after a 1.5 second pause.

If there is more than 1 code, there will be a 2.5 second pause between each code. After all codes are shown, there will be a 4.0 second pause, and then they all will be repeated.

HINT:

- If 2 or more malfunctions are found, the indication begins with the smaller numbered code.
- If DTCs are indicated without connecting the terminals, proceed to the "TC and CG Terminal Circuit" procedures (see page RS-233).

2. CLEAR DTC (USING SST (CHECK WIRE))

(a) Clear the DTCs.

(1) When the ignition switch is turned OFF, the DTCs are cleared.

HINT:

Depending on the DTC, the code may not be cleared by turning off the ignition switch. In this case, proceed to the next procedure.

(2) Using SST, connect terminals 13(13(TC)) and 4(CG) of the DLC3, and then turn the ignition switch ON.

SST 09843-18040

(3) Disconnect terminal 13(TC) of the DLC3 within 3 to 10 seconds after the DTCs are output, and check if the SRS warning light comes on after 3 seconds.

(4) Within 2 to 4 seconds after the SRS warning light comes on, connect terminals 13(TC) and 4(CG) of the DLC3.

(5) The SRS warning light should go off within 2 to 4 seconds after connecting terminals 13(TC) and 4(CG) of the DLC3. Then, disconnect terminal 13(TC) within 2 to 4 seconds after the SRS warning light goes off.

RS

(6) The SRS warning light comes on again within 2 to 4 seconds after disconnecting terminal 13(TC). Then, reconnect terminals 13(TC) and 4(CG) within 2 to 4 seconds after the SRS warning light comes on.
(7) Check if the SRS warning light goes off within 2 to 4 seconds after connecting terminals 13(TC) and 4(CG) of the DLC3. Also check if the normal system code is output within 1 second after the SRS warning light goes off.
If DTCs are not cleared, repeat this procedure until the codes are cleared.

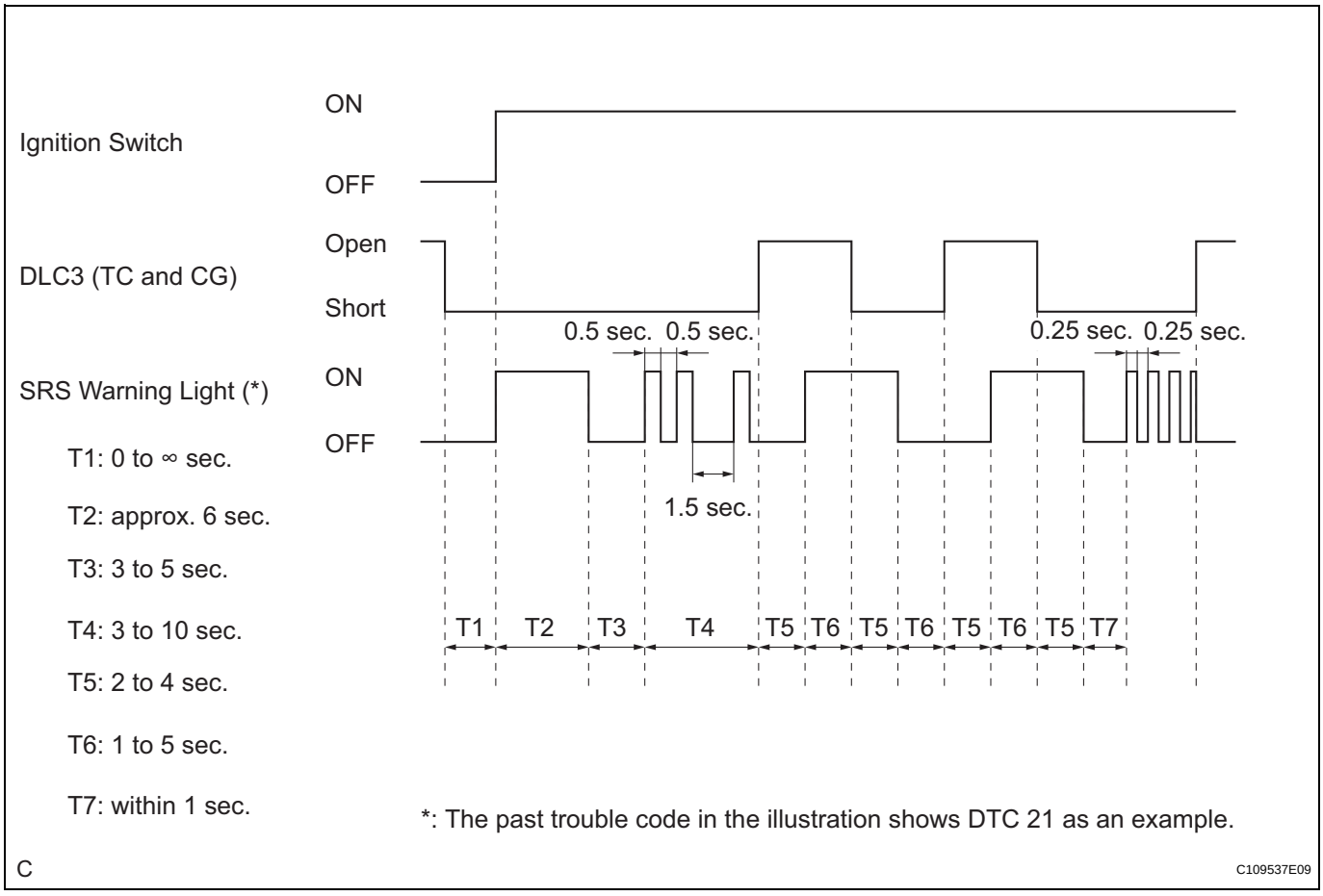

RS

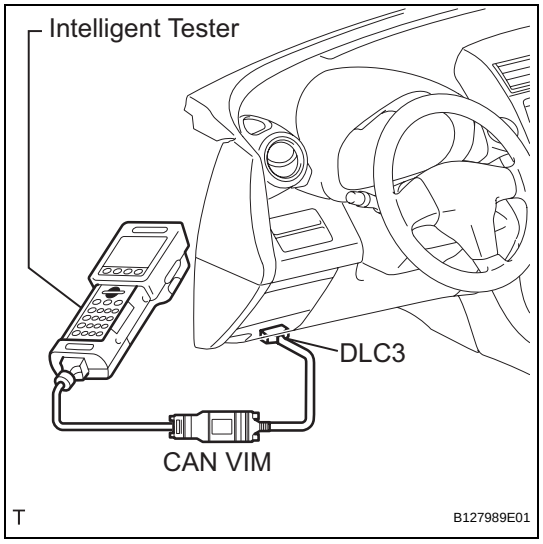

3. CHECK DTC (USING INTELLIGENT TESTER)

(a) Connect the intelligent tester (with CAN VIM) to the DLC3.
(b) Turn the ignition switch ON.
(c) Check the DTCs by following the prompts on the tester screen.
HINT:
Refer to the intelligent tester operator's manual for further details.

4. CLEAR DTC (USING INTELLIGENT TESTER)

(a) Connect the intelligent tester (with CAN VIM) to the DLC3.
(b) Turn the ignition switch ON.
(c) Clear the DTCs by following the prompts on the tester screen.
HINT:
Refer to the intelligent tester operator's manual for further details.

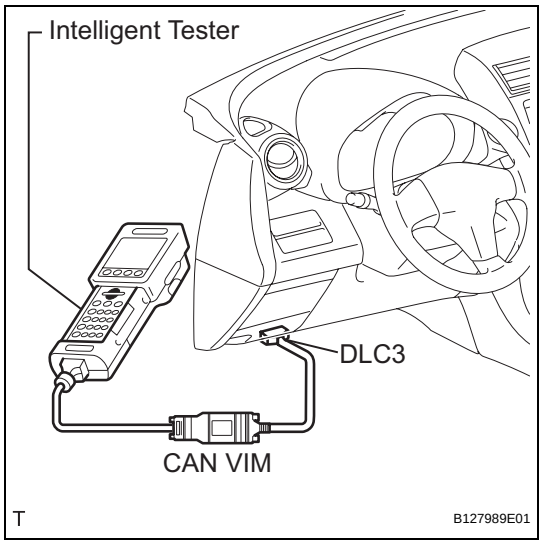

CHECK MODE PROCEDURE

1. CHECK MODE (SIGNAL CHECK)

(a) Connect the intelligent tester (with CAN VIM) to the DLC3.
(b) Turn the ignition switch ON.
(c) Select the "SIGNAL CHECK", and continue checking with the intelligent tester.
NOTICE:
Select the "SIGNAL CHECK" from the "DTC CHECK" screen displayed on the intelligent tester to clear the output DTCs (both present and past).
HINT:
- Check mode is more sensitive to malfunctions than normal mode.
- If the normal system code is output in normal mode even when a sensor signal malfunction is suspected, perform the inspection in check mode.

RS

DATA LIST / ACTIVE TEST

1. READ DATA LIST

HINT:

Using the intelligent tester's Data List allows switch, sensor, actuator and other item values to be read without removing any parts. Reading the Data List early in troubleshooting in one way to save time.

(a) Connect the intelligent tester (with CAN VIM) to the DLC3.

(b) Turn the ignition switch ON.

(c) Read the Data List according to the display on the tester.

Center airbag sensor

Item	Measure Item / Range (Display)	Normal Condition	Diagnostic Note
D SEAT POSITION	Seat position (Driver side)/ FORWARD: Seat position forward BKWARD: Seat position backward FAIL: Failure detected	FORWARD/BKWARD	-
PASSENGER CLASS	Front passenger classification/ NG: Data is not determined OFF: Vacant CHILD: Child (Less than 36 kg [79.37 lb]) seated AF05: Adult (36 to 54 kg [79.37 to 119.05 lb]) seated AM50: Adult (More than 54 kg [119.05 lb]) seated FAIL: Failure detected	NG/OFF/CHILD/AF05/AM50/FAIL	-
D BUCKLE SW	Buckle switch (Driver side)/ UNSET: Seat belt not fastened SET: Seat belt fastened NG: Data not determined	UNSET/SET	-
P BUCKLE SW	Buckle switch (Front passenger side)/ UNSET: Seat belt not fastened SET: Seat belt fastened NG: Data not determined	UNSET/SET	-
DISPLAY TYPE	Display type identification information/ LR: Display indicated by LH/RH DP: Display indicated by Driver/Passenger	DP	-
PAST CODES	Number of past DTCs / Min.: 0, Max.: 255	0	-

DIAGNOSTIC TROUBLE CODE CHART

If a DTC is displayed during the DTC check, check the circuit listed for the DTC in the table below (refer to the appropriate page).

HINT:

- When the SRS warning light remains on and the normal system code is output, a decrease in the source voltage is likely to occur. This malfunction is not stored in the memory of the center airbag sensor. If the power source voltage returns to normal, the SRS warning light will automatically go off.
- When 2 or more DTCs are indicated, the DTC with the lowest number appears first.
- If a DTC is not listed on the DTC chart, the center airbag sensor may have malfunctioned.
- In the case of any malfunctions concerning open circuits, shorts to ground, or shorts to B+ due to squibs, other DTCs may not be set. In this case, repair the malfunction currently indicated and then perform a malfunction diagnosis again.
- Mark in the check mode column:
  -: DTC does not correspond to check mode.
  ○: DTC corresponds to check mode.
- When DTC B1650/32 is set as a result of troubleshooting the Supplemental Restraint System (SRS), perform troubleshooting for the occupant classification system.

Airbag System

DTC No.	Detection Item	Check Mode	SRS Warning Light	See Page
B1000/31	Center Airbag Sensor Assembly Malfunction	-	ON	RS-58
B1602/83	Lost Communication with Front Satellite Sensor Bus RH	-	ON	RS-59
B1603/83	Front Satellite Sensor Bus RH Initialization Incomplete	-	ON	RS-59
B1607/84	Lost Communication with Front Satellite Sensor Bus LH	-	ON	RS-70
B1608/84	Front Satellite Sensor Bus LH Initialization Incomplete	-	ON	RS-70
B1610/13	Front Airbag Sensor RH Circuit Malfunction	-	ON	RS-81
B1612/83	Lost Communication with Front Airbag Sensor RH	-	ON	RS-59
B1613/83	Front Airbag Sensor RH Initialization Incomplete	-	ON	RS-59
B1615/14	Front Airbag Sensor LH Circuit Malfunction	-	ON	RS-83
B1617/84	Lost Communication with Front Airbag Sensor LH	-	ON	RS-70
B1618/84	Front Airbag Sensor LH Initialization Incomplete	-	ON	RS-70
B1620/21	Driver Side - Side Airbag Sensor Circuit Malfunction	-	ON	RS-85

DTC No.	Detection Item	Check Mode	SRS Warning Light	See Page
B1622/81	Lost Communication with Driver Side - Side Airbag Sensor Assembly	-	ON	RS-87
B1623/81	Driver Side - Side Airbag Sensor Assembly Initialization Incomplete	-	ON	RS-92
B1625/22	Front Passenger Side - Side Airbag Sensor Circuit Malfunction	-	ON	RS-100
B1627/82	Lost Communication with Front Passenger Side - Side Airbag Sensor Assembly	-	ON	RS-102
B1628/82	Front Passenger Side - Side Airbag Sensor Assembly Initialization Incomplete	-	ON	RS-107
B1630/23	Driver Side Rear Airbag Sensor Circuit Malfunction	-	ON	RS-115
B1632/81	Lost Communication with Driver Side Curtain Shield Airbag Sensor	-	ON	RS-92
B1633/81	Driver Side Curtain Shield Airbag Sensor Initialization Incomplete	-	ON	RS-92
B1635/24	Front Passenger Side Rear Airbag Sensor Circuit Malfunction	-	ON	RS-117
B1637/82	Lost Communication with Front Passenger Side Curtain Shield Airbag Sensor	-	ON	RS-107
B1638/82	Front Passenger Side Curtain Shield Airbag Sensor Initialization Incomplete	-	ON	RS-107
B1642/81	Lost Communication with Driver Side Satellite Sensor Bus	-	ON	RS-92
B1643/81	Driver Side Satellite Sensor Bus Initialization Incomplete	-	ON	RS-119
B1647/82	Lost Communication with Front Passenger Side Satellite Sensor Bus	-	ON	RS-107
B1648/82	Front Passenger Side Satellite Sensor Bus Initialization Incomplete	-	ON	RS-127
B1650/32	Occupant Classification System Malfunction	-	ON	RS-135
B1653/35	Seat Position Airbag Sensor Circuit Malfunction	-	ON	RS-141
B1655/37	Driver Side Seat Belt Buckle Switch Circuit Malfunction	-	ON	RS-153
B1660/43	Passenger Airbag ON / OFF Indicator Circuit Malfunction	-	ON	RS-161
B1800/51	Short in Driver Side Squib Circuit	○	ON	RS-176

DTC No.	Detection Item	Check Mode	SRS Warning Light	See Page
B1801/51	Open in Driver Side Squib Circuit	O	ON	RS-176
B1802/51	Short to GND in Driver Side Squib Circuit	O	ON	RS-176
B1803/51	Short to B+ in Driver Side Squib Circuit	O	ON	RS-176
B1805/52	Short in Front Passenger Side Squib Circuit	O	ON	RS-181
B1806/52	Open in Front Passenger Side Squib Circuit	O	ON	RS-181
B1807/52	Short to GND in Front Passenger Side Squib Circuit	O	ON	RS-181
B1808/52	Short to B+ in Front Passenger Side Squib Circuit	O	ON	RS-181
B1810/53	Short in Driver Side Squib 2nd Step Circuit	O	ON	RS-186
B1811/53	Open in Driver Side Squib 2nd Step Circuit	O	ON	RS-186
B1812/53	Short to GND in Driver Side Squib 2nd Step Circuit	O	ON	RS-186
B1813/53	Short to B+ in Driver Side Squib 2nd Step Circuit	O	ON	RS-186
B1815/54	Short in Front Passenger Side Squib 2nd Step Circuit	O	ON	RS-191
B1816/54	Open in Front Passenger Side Squib 2nd Step Circuit	O	ON	RS-191
B1817/54	Short to GND in Front Passenger Side Squib 2nd Step Circuit	O	ON	RS-191
B1818/54	Short to B+ in Front Passenger Side Squib 2nd Step Circuit	O	ON	RS-191
B1820/55	Short in Driver Side - Side Squib Circuit	O	ON	RS-196
B1821/55	Open in Driver Side - Side Squib Circuit	O	ON	RS-196
B1822/55	Short to GND in Driver Side - Side Squib Circuit	O	ON	RS-196
B1823/55	Short to B+ in Driver Side - Side Squib Circuit	O	ON	RS-196
B1825/56	Short in Front Passenger Side - Side Squib Circuit	O	ON	RS-201
B1826/56	Open in Front Passenger Side - Side Squib Circuit	O	ON	RS-201
B1827/56	Short to GND in Front Passenger Side - Side Squib Circuit	O	ON	RS-201
B1828/56	Short to B+ in Front Passenger Side - Side Squib Circuit	O	ON	RS-201
B1830/57	Short in Driver Side Curtain Shield Squib Circuit	O	ON	RS-206

DTC No.	Detection Item	Check Mode	SRS Warning Light	See Page
B1831/57	Open in Driver Side Curtain Shield Squib Circuit	O	ON	RS-206
B1832/57	Short to GND in Driver Side Curtain Shield Squib Circuit	O	ON	RS-206
B1833/57	Short to B+ in Driver Side Curtain Shield Squib Circuit	O	ON	RS-206
B1835/58	Short in Front Passenger Side Curtain Shield Squib Circuit	O	ON	RS-210
B1836/58	Open in Front Passenger Side Curtain Shield Squib Circuit	O	ON	RS-210
B1837/58	Short to GND in Front Passenger Side Curtain Shield Squib Circuit	O	ON	RS-210
B1838/58	Short to B+ in Front Passenger Side Curtain Shield Squib Circuit	O	ON	RS-210
B1900/73	Short in Driver Side Front Pretensioner Squib Circuit	O	ON	RS-215
B1901/73	Open in Driver Side Front Pretensioner Squib Circuit	O	ON	RS-215
B1902/73	Short to GND in Driver Side Front Pretensioner Squib Circuit	O	ON	RS-215
B1903/73	Short to B+ in Driver Side Front Pretensioner Squib Circuit	O	ON	RS-215
B1905/74	Short in Front Passenger Side Front Pretensioner Squib Circuit	O	ON	RS-219
B1906/74	Open in Front Passenger Side Front Pretensioner Squib Circuit	O	ON	RS-219
B1907/74	Short to GND in Front Passenger Side Front Pretensioner Squib Circuit	O	ON	RS-219
B1908/74	Short to B+ in Front Passenger Side Front Pretensioner Squib Circuit	O	ON	RS-219

DTC	B1000/31	Center Airbag Sensor Assembly Malfunction

DESCRIPTION

The center airbag sensor consists of the airbag sensor, the safing sensor, the drive circuit, the diagnosis circuit and the ignition control.
If the center airbag sensor receives signals from the airbag sensor, it determines whether or not the SRS should be activated.
DTC B1000/31 is recorded when a malfunction is detected in the center airbag sensor.

DTC No.	DTC Detection Condition	Trouble Area
B1000/31	Center airbag sensor malfunction	Center airbag sensor assembly

HINT:
When a malfunction code is displayed simultaneously with DTC B1000/31, repair the malfunction indicated by this code (except DTC B1000/31) first.

INSPECTION PROCEDURE

1	CHECK CENTER AIRBAG SENSOR ASSEMBLY

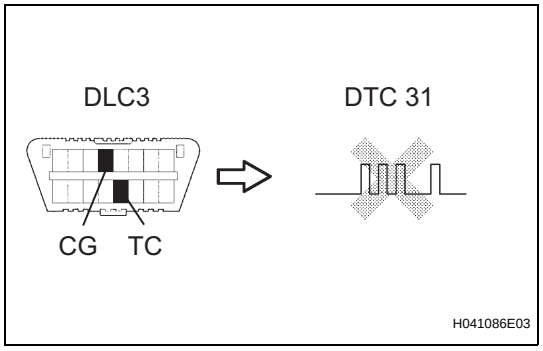

(a) Turn the ignition switch OFF.
(b) Disconnect the cable from the negative (-) battery terminal, and wait for at least 90 seconds.
(c) Connect the cable to the negative (-) battery terminal, and wait for at least 2 seconds.
(d) Turn the ignition switch ON, and wait for at least 60 seconds.
(e) Clear the DTCs (see page RS-49).
(f) Turn the ignition switch OFF.
(g) Turn the ignition switch ON, and wait for at least 60 seconds.
(h) Check the DTCs (see page RS-49).
OK:
DTC B1000/31 is not output.

NG → **REPLACE CENTER AIRBAG SENSOR ASSEMBLY**

OK

USE SIMULATION METHOD TO CHECK

RS

DTC	**B1602/83**	**Lost Communication with Front Satellite Sensor Bus RH**

DTC	**B1603/83**	**Front Satellite Sensor Bus RH Initialization Incomplete**

DTC	**B1612/83**	**Lost Communication with Front Airbag Sensor RH**

DTC	**B1613/83**	**Front Airbag Sensor RH Initialization Incomplete**

DESCRIPTION

The front airbag sensor RH consists of the diagnostic circuit and the frontal deceleration sensor.
If the center airbag sensor receives signals from the frontal deceleration sensor, it determines whether or not the SRS should be activated.
DTC B1602/83, B1603/83, B1612/83 or B1613/83 is recorded when a malfunction is detected in the front airbag sensor RH circuit.

DTC No.	DTC Detection Condition	Trouble Area
B1602/83 B1603/83 B1612/83 B1613/83	When one of following conditions is met: • Center airbag sensor detects line short signal, open signal, short to ground signal or short to B+ signal in the front airbag sensor RH circuit for 2 seconds. • Front airbag sensor RH malfunction • Center airbag sensor malfunction	• Instrument panel wire • Engine room main wire • Front airbag sensor RH • Center airbag sensor

WIRING DIAGRAM

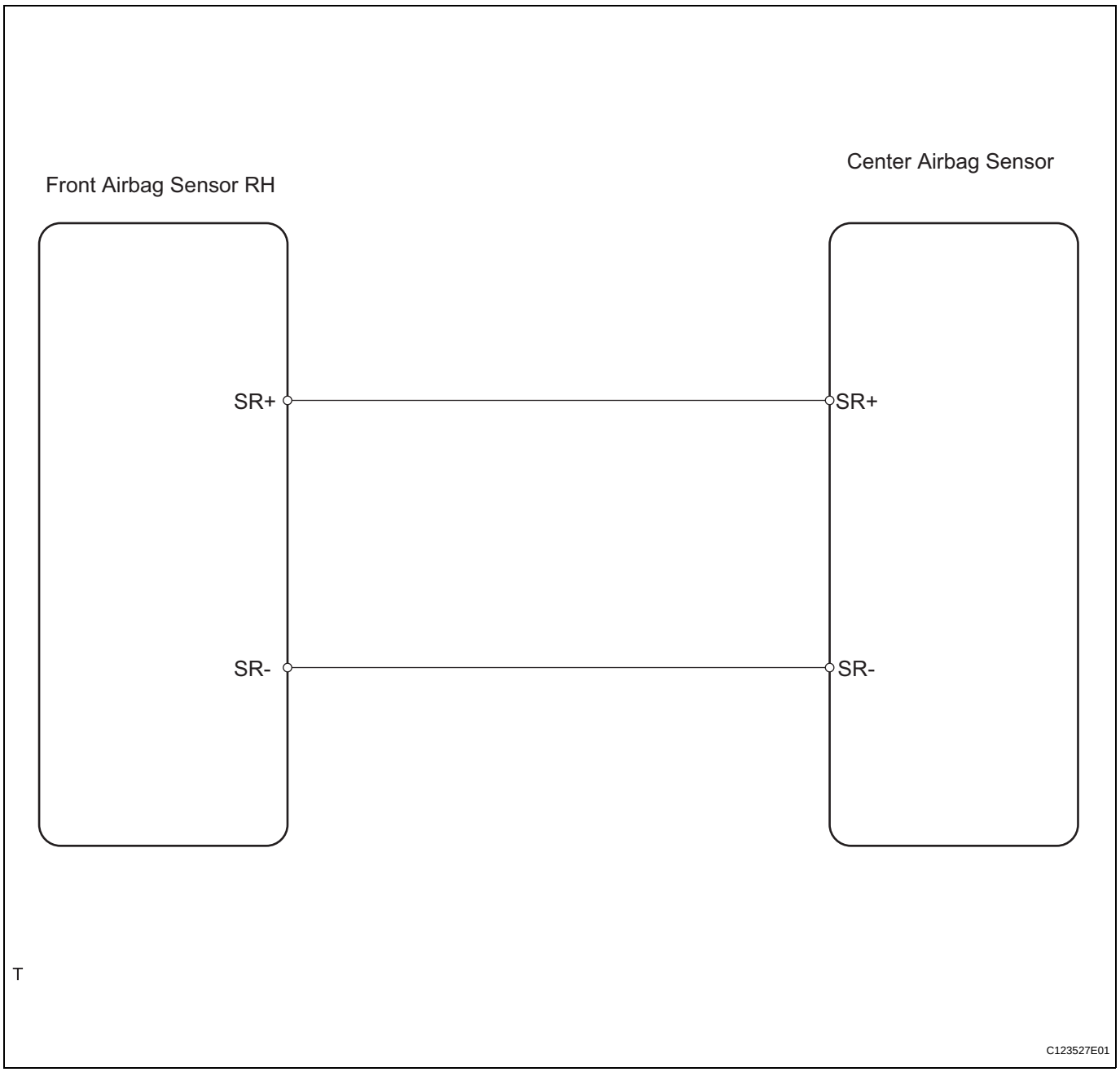

RS

INSPECTION PROCEDURE

1	CHECK CONNECTION OF CONNECTOR

(a) Turn the ignition switch OFF.
(b) Disconnect the cable from the negative (-) battery terminal, and wait for at least 90 seconds.
(c) Check that the connectors are properly connected to the center airbag sensor and the front airbag sensor RH.
OK:
The connectors are connected.

NG	CONNECT CONNECTOR

OK

2	CHECK FRONT AIRBAG SENSOR RH CIRCUIT (OPEN)

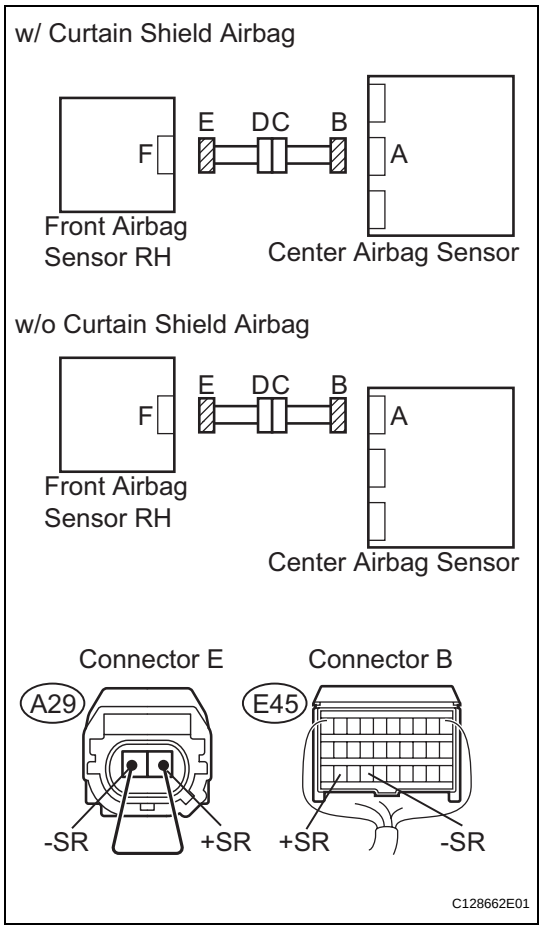

(a) Disconnect the connectors from the center airbag sensor and the front airbag sensor RH.

(b) Using a service wire, connect A29-2 (+SR) and A29-1 (-SR) of connector E.

NOTICE:

Do not forcibly insert a service wire into the terminals of the connector when connecting.

(c) Measure the resistance of the wire harness side connector.

Standard resistance

Tester Connection	Specified Condition
E45-29 (+SR) - E45-27 (-SR)	Below 1 Ω

NG → **Go to step 7**

OK

RS

3	CHECK FRONT AIRBAG SENSOR RH CIRCUIT (SHORT)

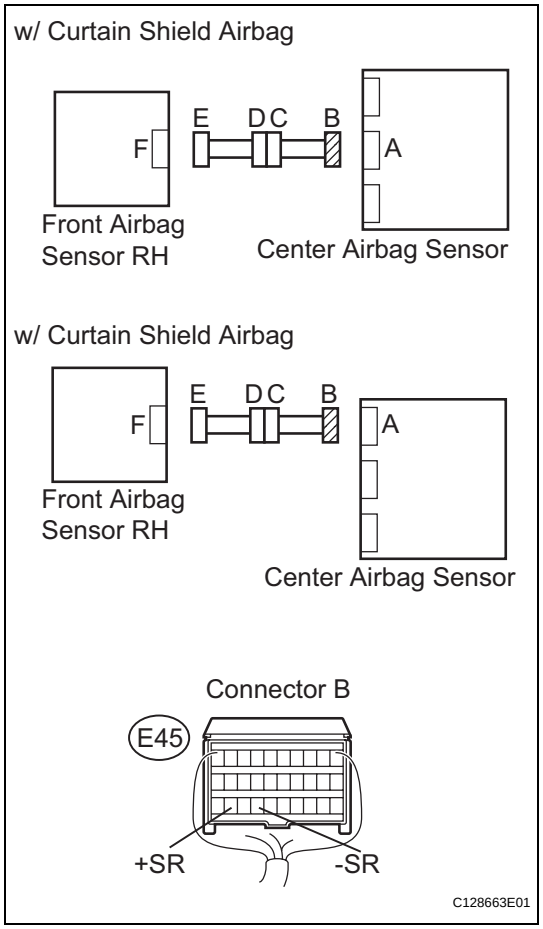

(a) Disconnect the service wire from connector E.
(b) Measure the resistance of the wire harness side connector.

Standard resistance

Tester Connection	Specified Condition
E45-29 (+SR) - E45-27 (-SR)	1 MΩ or higher

NG → **Go to step 8**

OK

RS

4	CHECK FRONT AIRBAG SENSOR RH CIRCUIT (TO B+)

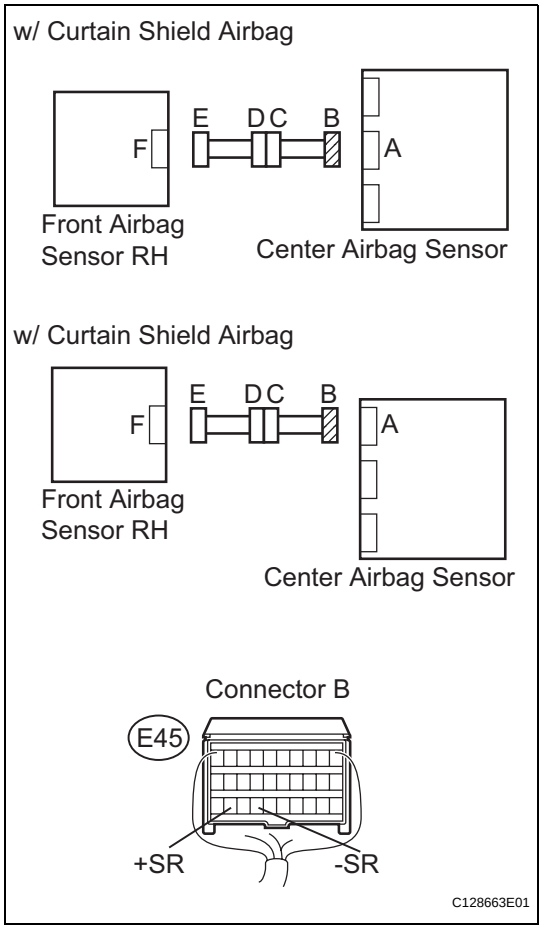

(a) Connect the cable to the negative (-) battery terminal, and wait for at least 2 seconds.
(b) Turn the ignition switch ON.
(c) Measure the voltage of the wire harness side connector.

Standard voltage

Tester Connection	Specified Condition
E45-29 (+SR) -Body ground	Below 1 V
E45-27 (-SR) - Body ground	Below 1 V

NG → **Go to step 9**

OK

RS

5	CHECK FRONT AIRBAG SENSOR RH CIRCUIT (TO GROUND)

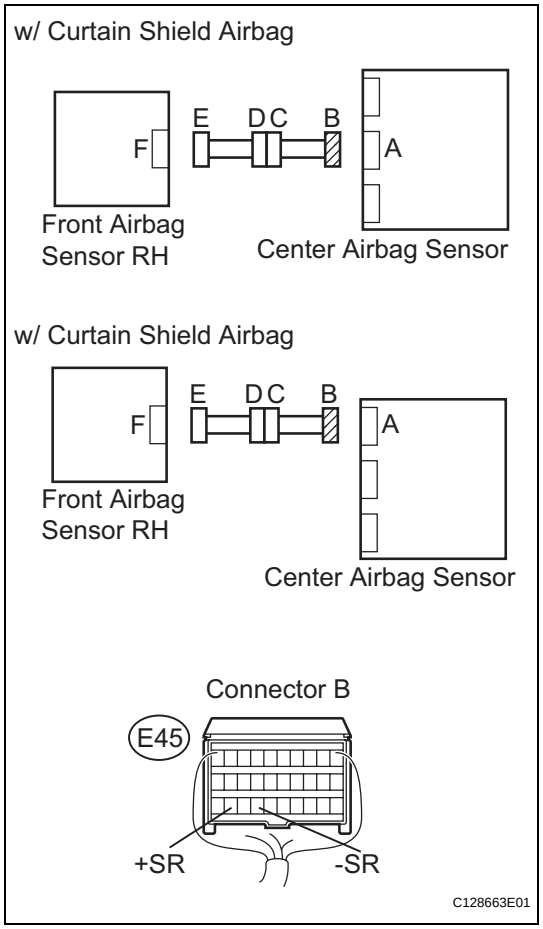

(a) Turn the ignition switch OFF.
(b) Disconnect the cable from the negative (-) battery terminal, and wait for at least 90 seconds.
(c) Measure the resistance of the wire harness side connector.

Standard resistance

Tester Connection	Specified Condition
E45-29 (+SR) - Body ground	1 MΩ or higher
E45-27 (-SR) - Body ground	1 MΩ or higher

NG → **Go to step 10**

OK

RS

6	CHECK FRONT AIRBAG SENSOR RH

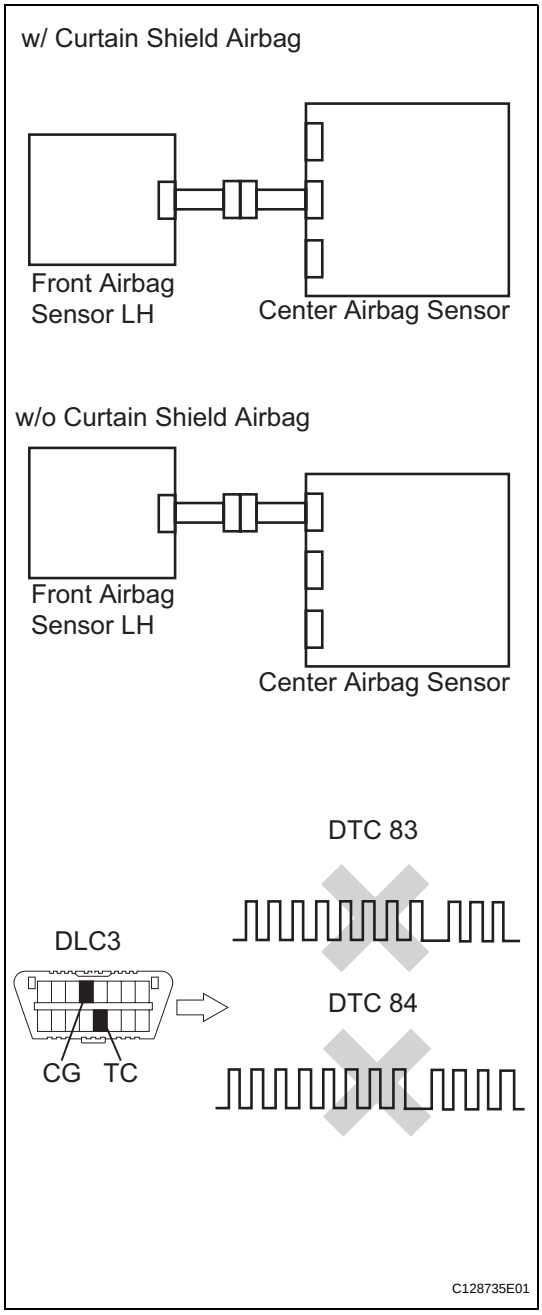

(a) Connect the connectors to the center airbag sensor .
(b) Interchange the front airbag sensor RH and LH, and connect the connectors to them.
(c) Connect the cable to the negative (-) battery terminal, and wait for at least 2 seconds.
(d) Turn the ignition switch ON, and wait for at least 60 seconds.
(e) Clear the DTCs (see page RS-49).
(f) Turn the ignition switch OFF.
(g) Turn the ignition switch ON, and wait for at least 60 seconds.
(h) Check the DTCs (see page RS-49).

Result

Result	Proceed to
DTC B1602/83, B1603/83, B1612/83, B1613/83, B1607/84, B1608/84, B1617/84 and B1618/84 are not output.	A
DTC B1602/83, B1603/83, B1612/83 and B1613/83 are output	B
B1607/84, B1608/84, B1617/84 and B1618/84 are output	C

HINT:
DTCs other than DTC B1602/83, B1603/83, B1612/83, B1613/83, B1607/84, B1608/84, B1617/84 and B1618/84 may be output at this time, but they are not related to this check.

B → **REPLACE CENTER AIRBAG SENSOR ASSEMBLY**

C → **REPLACE FRONT AIRBAG SENSOR RH**

A

USE SIMULATION METHOD TO CHECK

RS

7	CHECK ENGINE ROOM MAIN WIRE (OPEN)

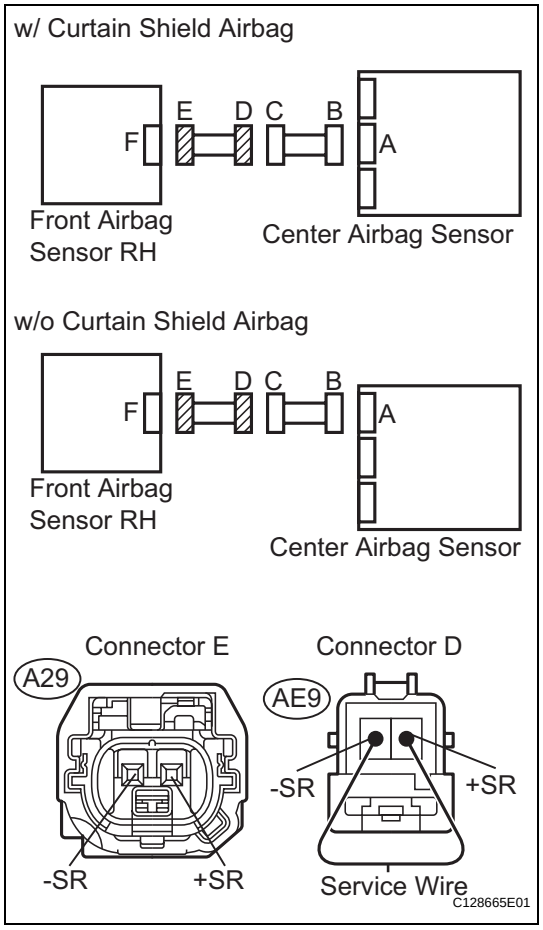

(a) Disconnect the service wire from connector E.
(b) Disconnect the engine room main wire connector from the instrument panel wire.
(c) Using a service wire, connect AE9-2 (+SR) and AE9-1 (-SR) of connector D.
NOTICE:
Do not forcibly insert a service wire into the terminals of the connector when connecting.
(d) Measure the resistance of the wire harness side connector.
Standard resistance

Tester Connection	Specified Condition
A29-2 (+SR) - A29-1 (-SR)	Below 1 Ω

NG → **REPAIR OR REPLACE ENGINE ROOM MAIN WIRE**

OK

REPAIR OR REPLACE INSTRUMENT PANEL WIRE

RS

8	CHECK ENGINE ROOM MAIN WIRE (SHORT)

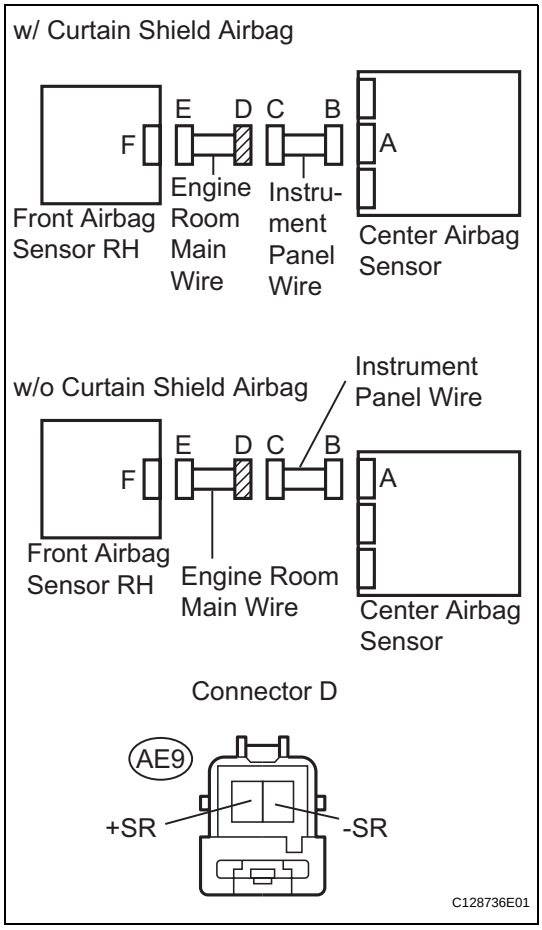

(a) Disconnect the engine room main wire connector from the instrument panel wire.
(b) Disconnect the service wire from connector E.
(c) Measure the resistance of the wire harness side connector.

Standard resistance

Tester Connection	Specified Condition
AE9-1 (+SR) - AE9-2 (-SR)	1 MΩ or higher

NG → **REPAIR OR REPLACE ENGINE ROOM MAIN WIRE**

OK

REPAIR OR REPLACE INSTRUMENT PANEL WIRE

RS

9	CHECK ENGINE ROOM MAIN WIRE (TO B+)

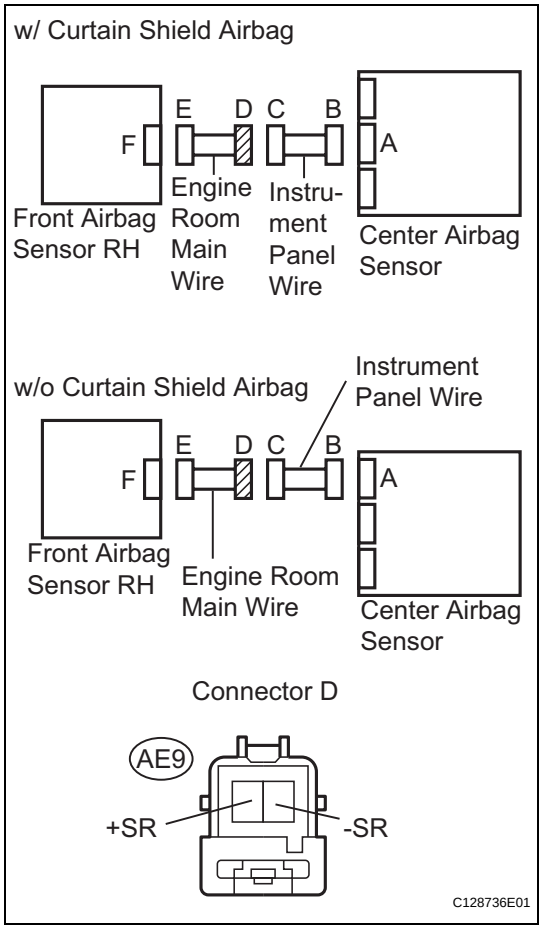

(a) Turn the ignition switch OFF.
(b) Disconnect the cable from the negative (-) battery terminal, and wait for at least 90 seconds.
(c) Disconnect the engine room main wire connector from the instrument panel wire.
(d) Connect the cable to the negative (-) battery terminal, and wait for at least 2 seconds.
(e) Turn the ignition switch ON.
(f) Measure the voltage of the wire harness side connector.
Standard voltage

Tester Connection	Specified Condition
AE9-1 (+SR) - Body ground	Below 1 V
AE9-2 (-SR) - Body ground	Below 1 V

NG → **REPAIR OR REPLACE ENGINE ROOM MAIN WIRE**

OK

REPAIR OR REPLACE INSTRUMENT PANEL WIRE

RS

10	CHECK ENGINE ROOM MAIN WIRE (TO GROUND)

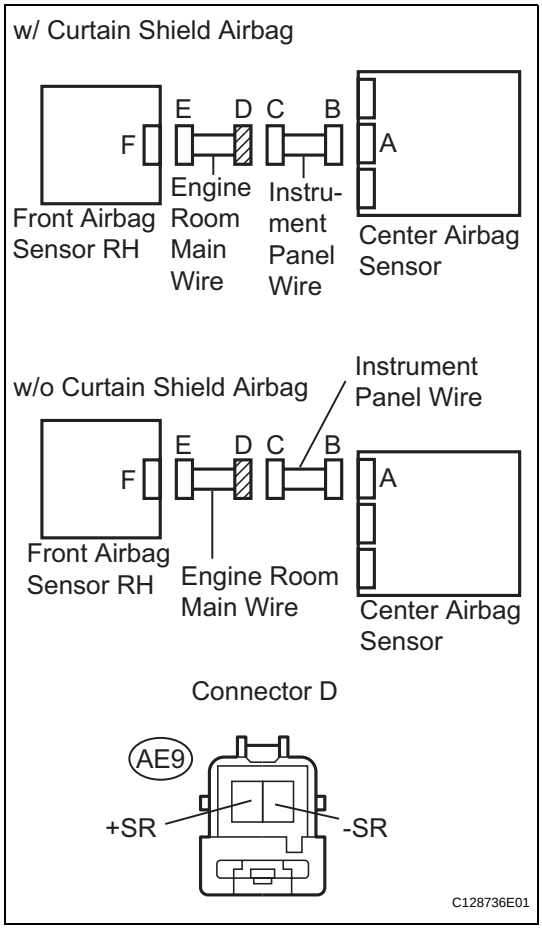

(a) Disconnect the engine room main wire connector from the instrument panel wire.

(b) Measure the resistance of the wire harness side connector.

Standard resistance

Tester Connection	Specified Condition
AE9-1 (+SR) - Body ground	1 MΩ or higher
AE9-2 (-SR) - Body ground	1 MΩ or higher

NG → **REPAIR OR REPLACE ENGINE ROOM MAIN WIRE**

OK

REPAIR OR REPLACE INSTRUMENT PANEL WIRE

RS

DTC	**B1607/84**	**Lost Communication with Front Satellite Sensor Bus LH**

DTC	**B1608/84**	**Front Satellite Sensor Bus LH Initialization Incomplete**

DTC	**B1617/84**	**Lost Communication with Front Airbag Sensor LH**

DTC	**B1618/84**	**Front Airbag Sensor LH Initialization Incomplete**

DESCRIPTION

The front airbag sensor LH consists of the diagnostic circuit and the frontal deceleration sensor.
If the center airbag sensor receives signals from the frontal deceleration sensor, it determines whether or not the SRS should be activated.
DTC B1607/84, B1608/84, B1617/84 or B1618/84 is recorded when a malfunction is detected in the front airbag sensor LH circuit.

DTC No.	DTC Detection Condition	Trouble Area
B1607/84 B1608/84 B1617/84 B1618/84	When one of following conditions is met: • Center airbag sensor detects line short signal, open signal, short to ground signal or short to B+ signal in the front airbag sensor LH circuit for 2 seconds. • Front airbag sensor LH malfunction • Center airbag sensor malfunction	• Instrument panel wire • Engine room main wire • Front airbag sensor LH • Center airbag sensor

WIRING DIAGRAM

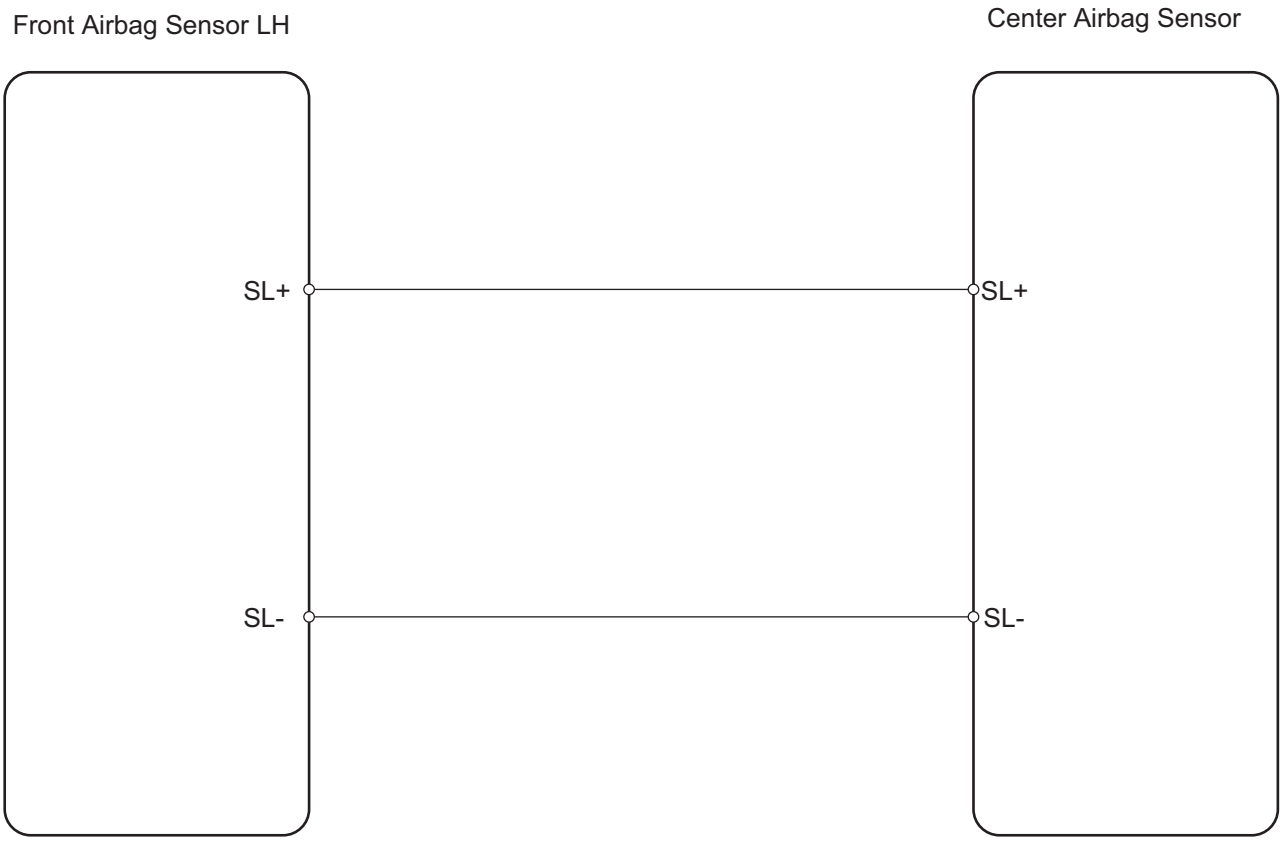

RS

INSPECTION PROCEDURE

1	CHECK CONNECTION OF CONNECTOR

(a) Turn the ignition switch OFF.
(b) Disconnect the cable from the negative (-) terminal, and wait for at least 90 seconds.
(c) Check that the connectors are properly connected to the center airbag sensor and the front airbag sensor LH.
OK:
The connectors are properly connected.

NG → **CONNECT CONNECTOR**

OK

2 CHECK FRONT AIRBAG SENSOR LH CIRCUIT (OPEN)

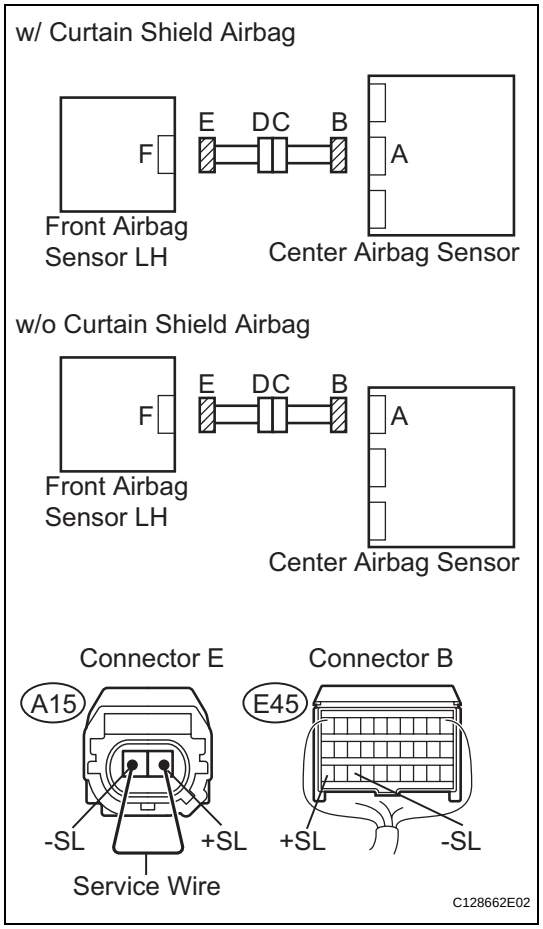

(a) Disconnect the connectors from the center airbag sensor and the front airbag sensor LH.

(b) Using a service wire, connect A15-2 (+SL) and A15-1 (-SL) of connector E.

NOTICE:

Do not forcibly insert a service wire into the terminals of the connector when connecting.

(c) Measure the resistance of the wire harness side connector.

Standard resistance

Tester Connection	Specified Condition
E45-30 (+SL) - E45-28 (-SL)	Below 1 Ω

NG → **Go to step 7**

OK

RS

3	CHECK FRONT AIRBAG SENSOR LH CIRCUIT (SHORT)

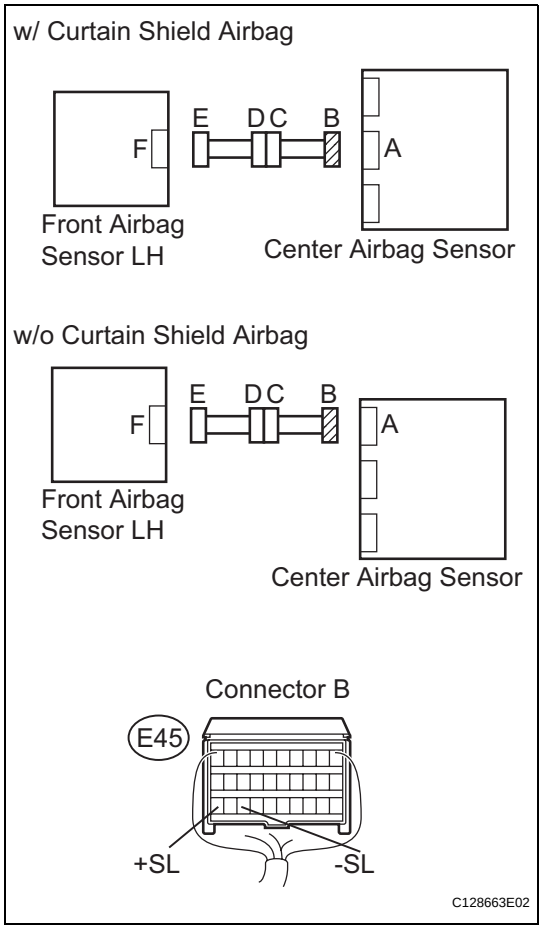

(a) Disconnect the service wire from connector E.
(b) Measure the resistance of the wire harness side connector.

Standard resistance

Tester Connection	Specified Condition
E45-30 (+SL) - E45-28 (-SL)	1 MΩ or higher

NG → **Go to step 8**

OK

RS

4	CHECK FRONT AIRBAG SENSOR LH CIRCUIT (TO B+)

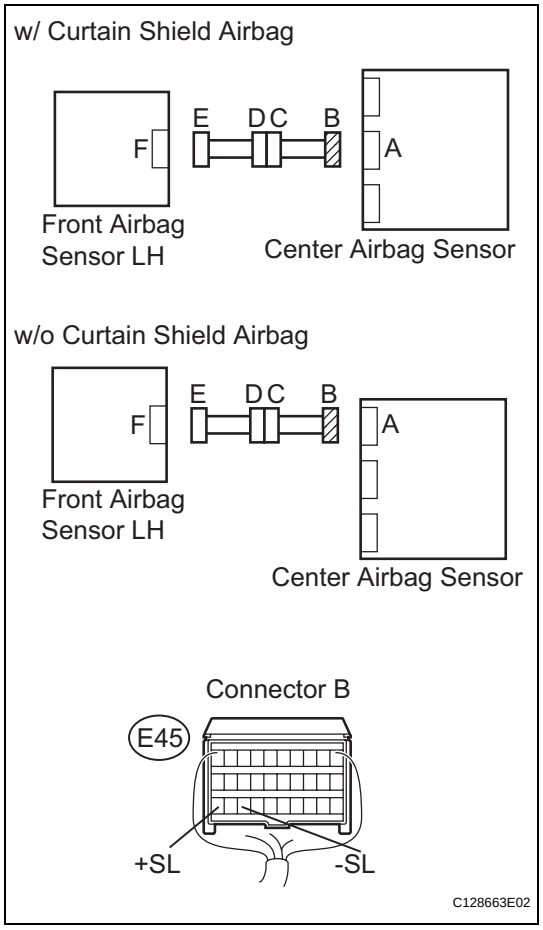

(a) Connect the cable to the negative (-) battery terminal, and wait for at least 2 seconds.
(b) Turn the ignition switch ON.
(c) Measure the voltage of the wire harness side connectors.

Standard voltage

Tester Connection	Specified Condition
E45-30 (+SL) - Body ground	Below 1 V
E45-28 (-SL) - Body ground	Below 1 V

NG → **Go to step 9**

OK

RS

5	CHECK FRONT AIRBAG SENSOR LH CIRCUIT (TO GROUND)

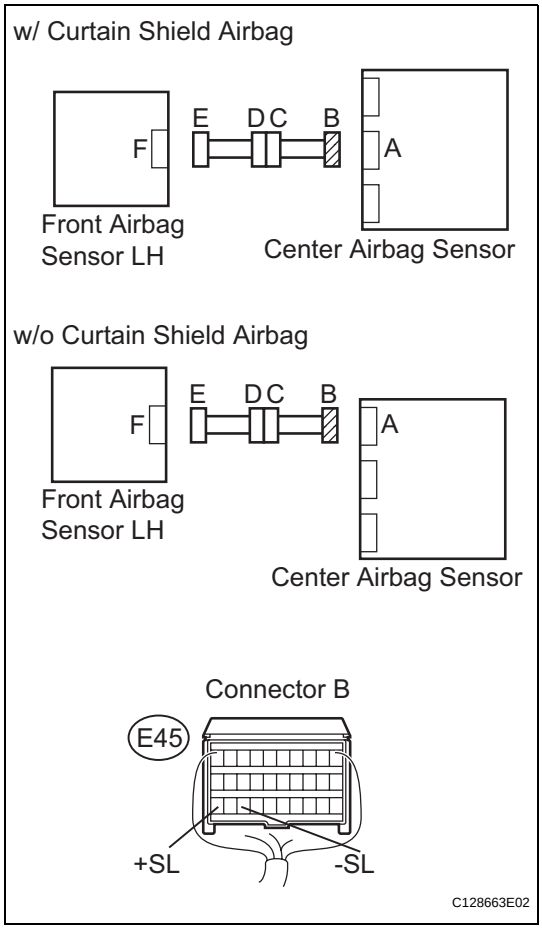

(a) Turn the ignition switch OFF.
(b) Disconnect the cable from the negative (-) battery terminal, and wait for at least 90 seconds.
(c) Measure the resistance of the wire harness side connector.

Standard resistance

Tester Connection	Specified Condition
E45-30 (+SL) - Body ground	1 MΩ or higher
E45-28 (-SL) - Body ground	1 MΩ or higher

NG → **Go to step 10**

OK

RS

6 CHECK FRONT AIRBAG SENSOR LH

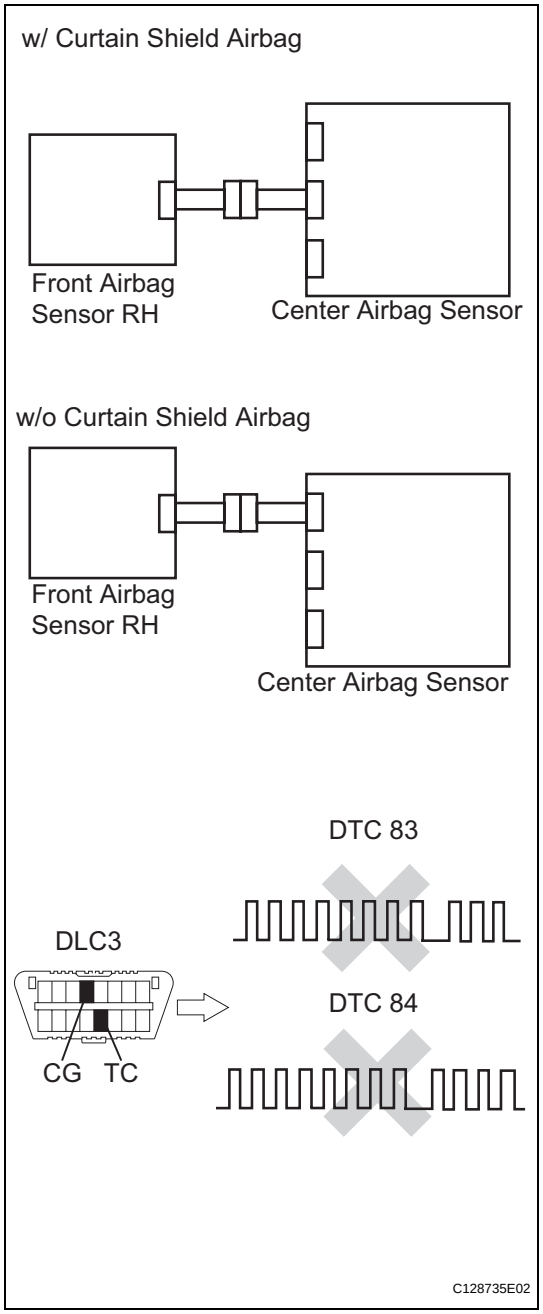

(a) Connect the connectors to the center airbag sensor.
(b) Interchange the front airbag sensor RH and LH, and connect the connectors to them.
(c) Connect the cable to the negative (-) battery terminal, and wait for at least 2 seconds.
(d) Turn the ignition switch ON, and wait for at least 60 seconds.
(e) Clear the DTCs (see page RS-49).
(f) Turn the ignition switch OFF.
(g) Turn the ignition switch ON, and wait for at least 60 seconds.
(h) Check the DTCs (see page RS-49).

Result

Result	Proceed to
DTC B1602/83, B1603/83, B1612/83, B1613/83, B1607/84, B1608/84, B1617/84 and B1618/84 are not output.	A
DTC B1607/84, B1608/84, B1617/84 and B1618/84 are output	B
DTC B1602/83, B1603/83, B1612/83 and B1613/83 are output	C

HINT:
DTCs other than B1602/83, B1603/83, B1612/83, B1613/83, B1607/84, B1608/84, B1617/84 and B1618/84 may be output at this time, but they are not related to this check.

B → **REPLACE CENTER AIRBAG SENSOR ASSEMBLY**

C → **REPLACE FRONT AIRBAG SENSOR LH**

RS

A

USE SIMULATION METHOD TO CHECK

7	CHECK ENGINE ROOM MAIN WIRE (OPEN)

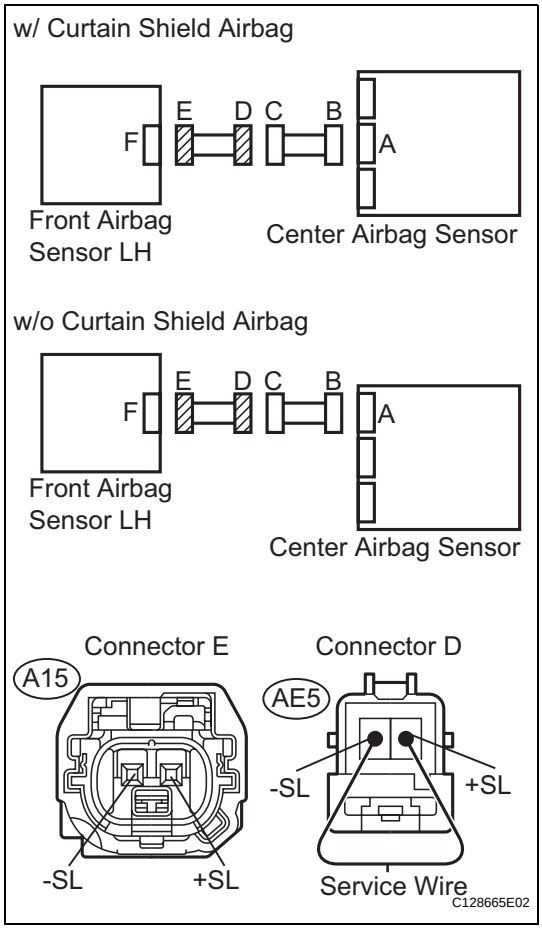

(a) Disconnect the service wire from connector E.
(b) Disconnect the engine room main wire connector from the instrument panel wire.
(c) Using a service wire, connect AE5-1 (+SL) and AE5-2 (-SL) of connector D.
NOTICE:
Do not forcibly insert a service wire into the terminals of the connector when connecting.
(d) Measure the resistance of the wire harness side connector.
Standard resistance

Tester Connection	Specified Condition
A15-2 (+SL) - A15-1 (-SL)	Below 1 Ω

NG → **REPAIR OR REPLACE ENGINE ROOM MAIN WIRE**

OK

REPAIR OR REPLACE INSTRUMENT PANEL WIRE

RS

8	CHECK ENGINE ROOM MAIN WIRE (SHORT)

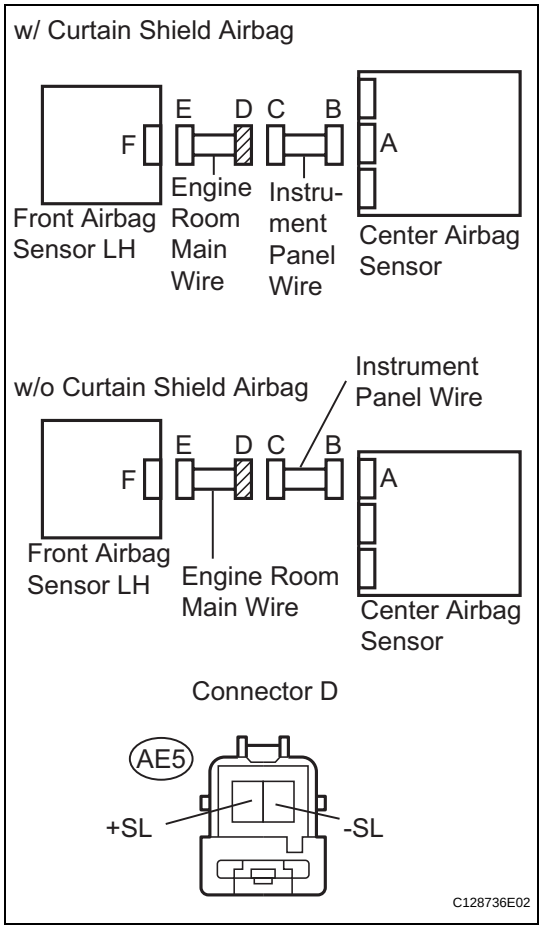

(a) Disconnect the engine room main wire connector from the instrument panel wire.
(b) Measure the resistance of the wire harness side connector.

Standard resistance

Tester Connection	Specified Condition
AE5-1 (+SL) - AE5-2 (-SL)	1 MΩ or higher

NG → **REPAIR OR REPLACE ENGINE ROOM MAIN WIRE**

OK

REPAIR OR REPLACE INSTRUMENT PANEL WIRE

RS

9	CHECK ENGINE ROOM MAIN WIRE (TO B+)

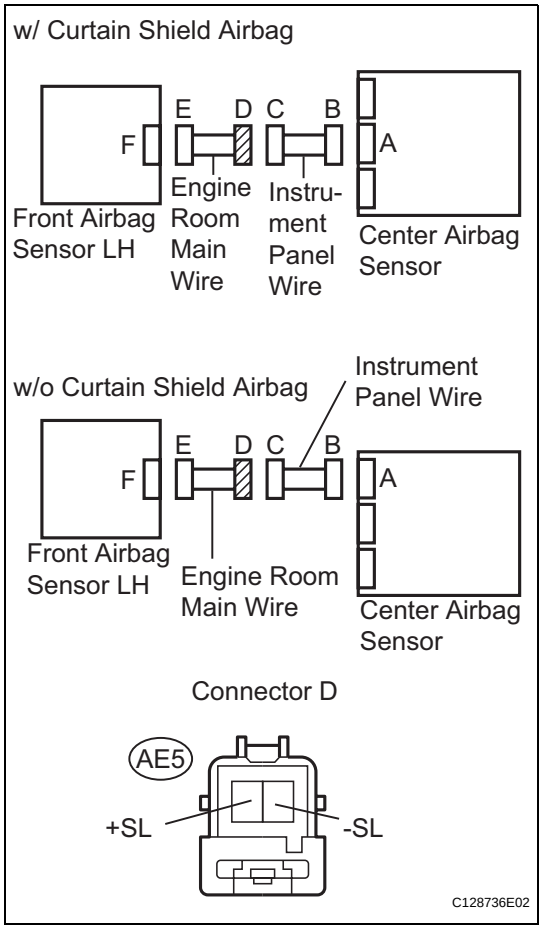

(a) Turn the ignition switch OFF.
(b) Disconnect the cable from the negative (-) battery terminal, and wait for at least 90 seconds.
(c) Disconnect the engine room main wire connector from the instrument panel wire.
(d) Connect the cable to the negative (-) battery terminal, and wait for at least 2 seconds.
(e) Turn the ignition switch ON.
(f) Measure the voltage of the wire harness side connector.
Standard voltage

Tester Connection	Specified Condition
AE5-1 (+SL) - Body ground	Below 1 V
AE5-2 (-SL) - Body ground	Below 1 V

NG → **REPAIR OR REPLACE ENGINE ROOM MAIN WIRE**

OK

REPAIR OR REPLACE INSTRUMENT PANEL WIRE

10 CHECK ENGINE ROOM MAIN WIRE (TO GROUND)

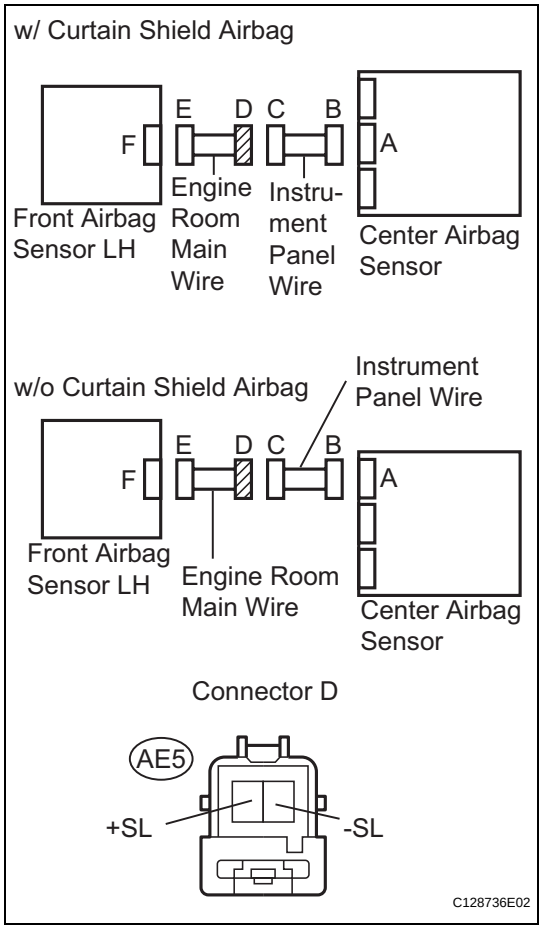

(a) Disconnect the engine room main wire connector from the instrument panel wire.
(b) Measure the resistance of the wire harness side connector.

Standard resistance

Tester Connection	Specified Condition
AE5-1 (+SL) - Body ground	1 MΩ or higher
AE5-2 (-SL) - Body ground	1 MΩ or higher

NG → **REPAIR OR REPLACE ENGINE ROOM MAIN WIRE**

OK

REPAIR OR REPLACE INSTRUMENT PANEL WIRE

RS

DTC	B1610/13	Front Airbag Sensor RH Circuit Malfunction

DESCRIPTION

The front airbag sensor RH consists of the diagnostic circuit, the frontal deceleration sensor, etc.
If the center airbag sensor assembly receives signals from the frontal deceleration sensor, it determines whether or not the SRS should be activated.
DTC B1610/13 is recorded when a malfunction is detected in the front airbag sensor RH circuit.

DTC No.	DTC Detection Condition	Trouble Area
B1610/13	When one of following conditions is met: • Front airbag sensor RH malfunction • Center airbag sensor malfunction	• Engine room main wire • Front airbag sensor RH • Center airbag sensor

WIRING DIAGRAM

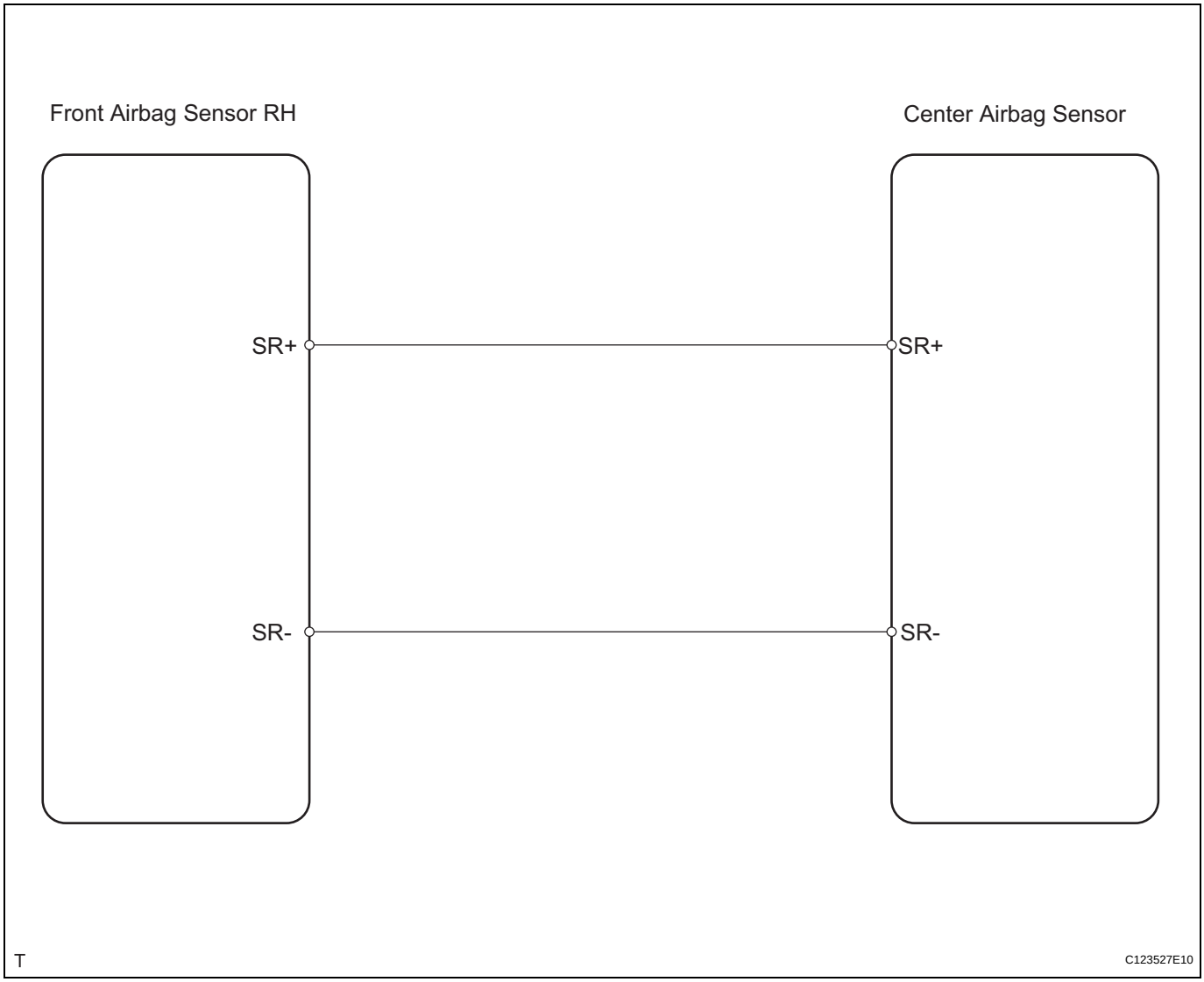

RS

INSPECTION PROCEDURE

1	CHECK FRONT AIRBAG SENSOR RH

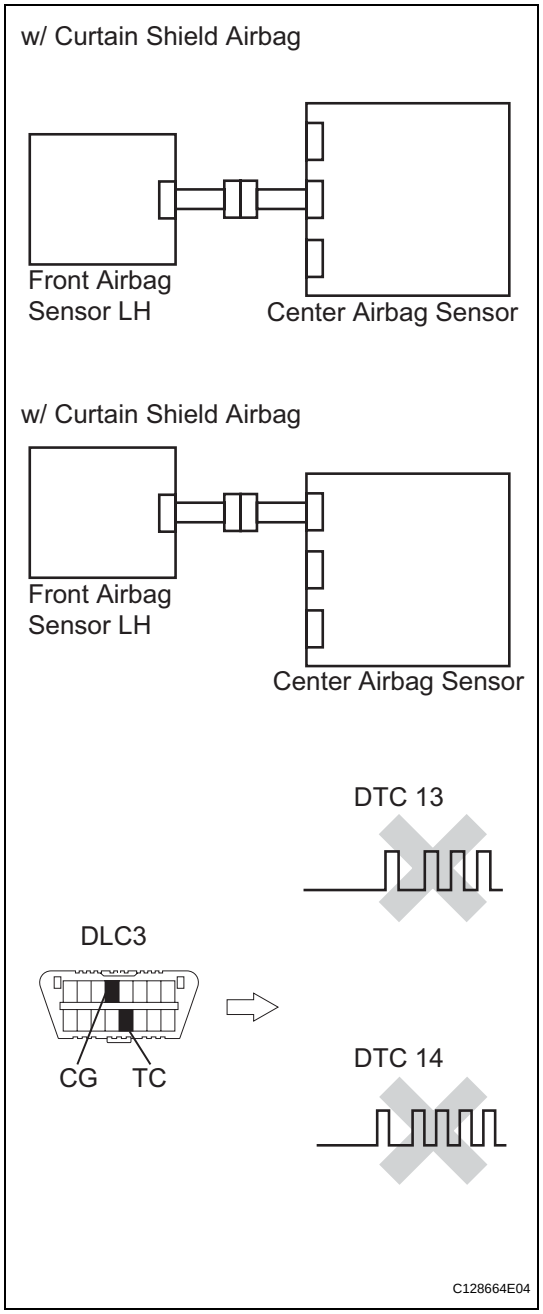

(a) Turn the ignition switch OFF.
(b) Disconnect the cable from the negative (-) battery terminal, and wait for at least 90 seconds.
(c) Interchange the front airbag sensor RH and LH, and connect the connectors to them.
(d) Connect the cable to the negative (-) battery terminal, and wait for at least 2 seconds.
(e) Turn the ignition switch ON, and wait for at least 60 seconds.
(f) Clear the DTCs (see page RS-49).
(g) Turn the ignition switch OFF.
(h) Turn the ignition switch ON, and wait for at least 60 seconds.
(i) Check the DTCs (see page RS-49).

Result

Result	Proceed to
DTC B1610/13 and B1615/14 are not output.	A
DTC B1610/13 is output.	B
DTC B1615/14 is output.	C

HINT:
DTCs other than DTC B1610/13 and B1615/14 may be output at this time, but they are not related to this check.

B → **REPLACE CENTER AIRBAG SENSOR ASSEMBLY**

C → **REPLACE FRONT AIRBAG SENSOR RH**

A

USE SIMULATION METHOD TO CHECK

DTC	B1615/14	Front Airbag Sensor LH Circuit Malfunction

DESCRIPTION

The front airbag sensor LH consists of the diagnostic circuit, the frontal deceleration sensor, etc.
If the center airbag sensor receives signals from the frontal deceleration sensor, it determines whether or not the SRS should be activated.
DTC B1615/14 is recorded when a malfunction is detected in the front airbag sensor LH circuit.

DTC No.	DTC Detection Condition	Trouble Area
B1615/14	When one of following conditions is met: • Front airbag sensor LH malfunction • Center airbag sensor malfunction	• Engine room main wire • Front airbag sensor LH • Center airbag sensor

WIRING DIAGRAM

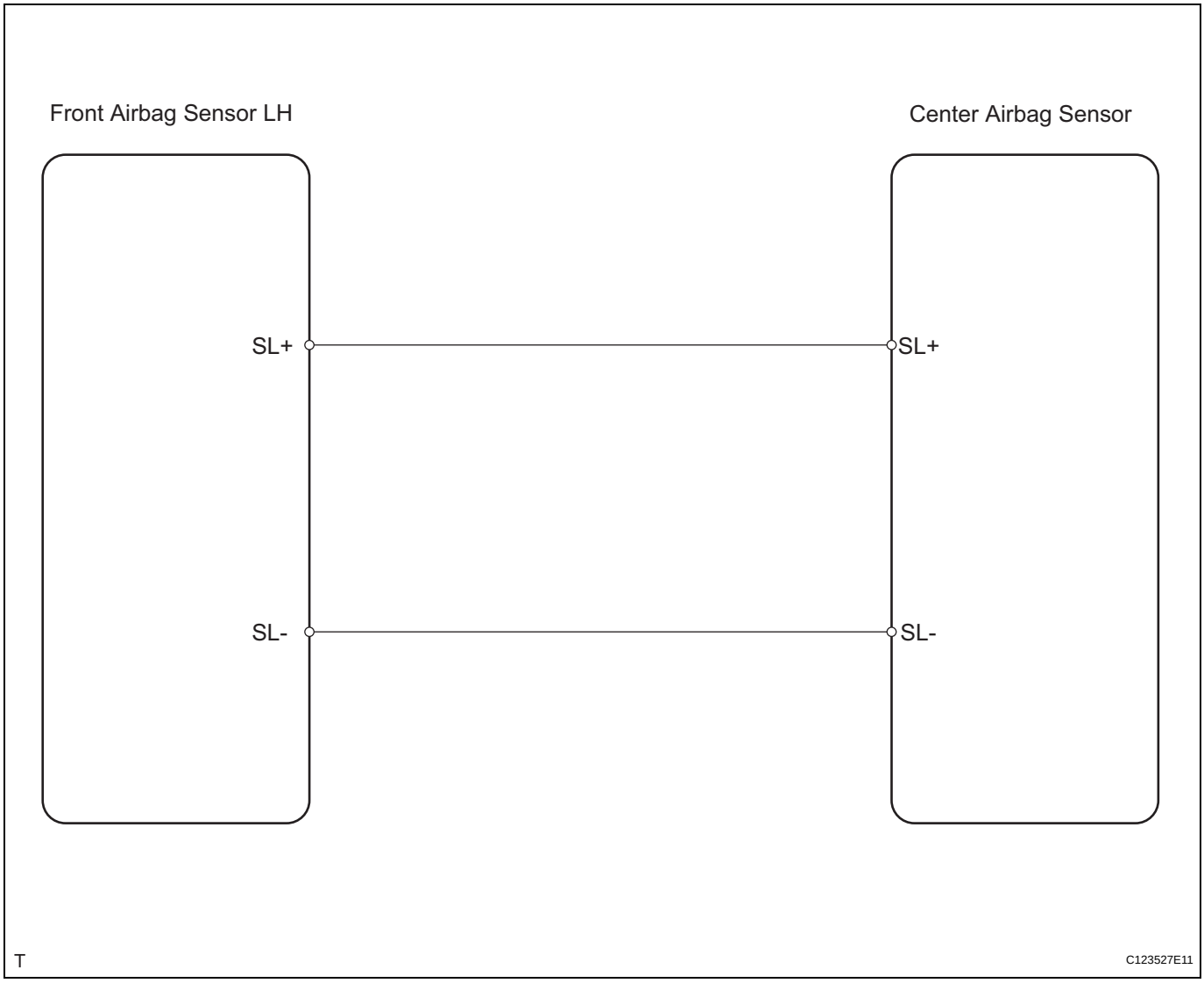

RS

INSPECTION PROCEDURE

1	CHECK FRONT AIRBAG SENSOR LH

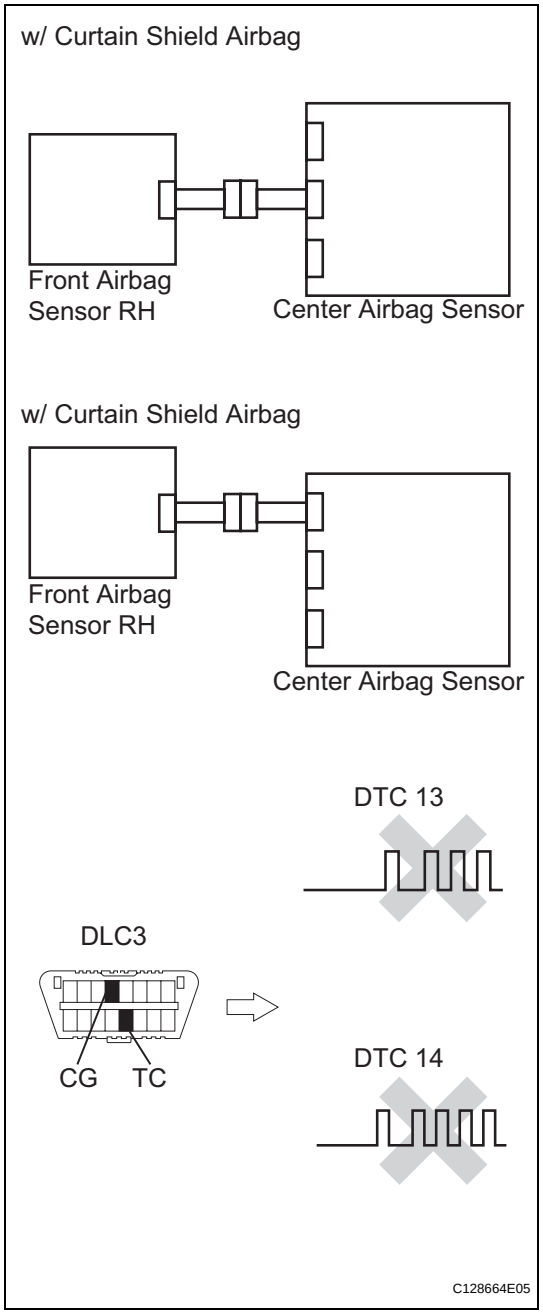

(a) Turn the ignition switch OFF.
(b) Disconnect the cable from the negative (-) battery terminal, and wait for at least 90 seconds.
(c) Interchange the front airbag sensor RH and LH, and connect the connectors to them.
(d) Connect the cable to the negative (-) battery terminal, and wait for at least 2 seconds.
(e) Turn the ignition switch ON, and wait for at least 60 seconds.
(f) Clear the DTCs (see page RS-49).
(g) Turn the ignition switch OFF.
(h) Turn the ignition switch ON, and wait for at least 60 seconds.
(i) Check the DTCs (see page RS-49).

Result

Result	Proceed to
DTC B1610/13 and B1615/14 are not output.	A
DTC B1610/13 is output.	B
DTC B1615/14 is output.	C

HINT:
DTCs other than DTC B1610/13 and B1615/14 may be output at this time, but they are not related to this check.

B	REPLACE FRONT AIRBAG SENSOR LH
C	REPLACE CENTER AIRBAG SENSOR ASSEMBLY

RS

A

USE SIMULATION METHOD TO CHECK

DTC	B1620/21	Driver Side - Side Airbag Sensor Circuit Malfunction

DESCRIPTION

The side airbag sensor LH consists of part including the diagnostic circuit and the lateral deceleration sensor.
When the center airbag sensor receives signals from the lateral deceleration sensor, it determines whether or not the SRS should be activated.
DTC B1620/21 is set when a malfunction is detected in the side airbag sensor LH circuit.

DTC No.	DTC Detection Condition	Trouble Area
B1620/21	When one of following conditions is met: • Side airbag sensor LH malfunction • Center airbag sensor malfunction	• Side airbag sensor LH • Center airbag sensor

WIRING DIAGRAM

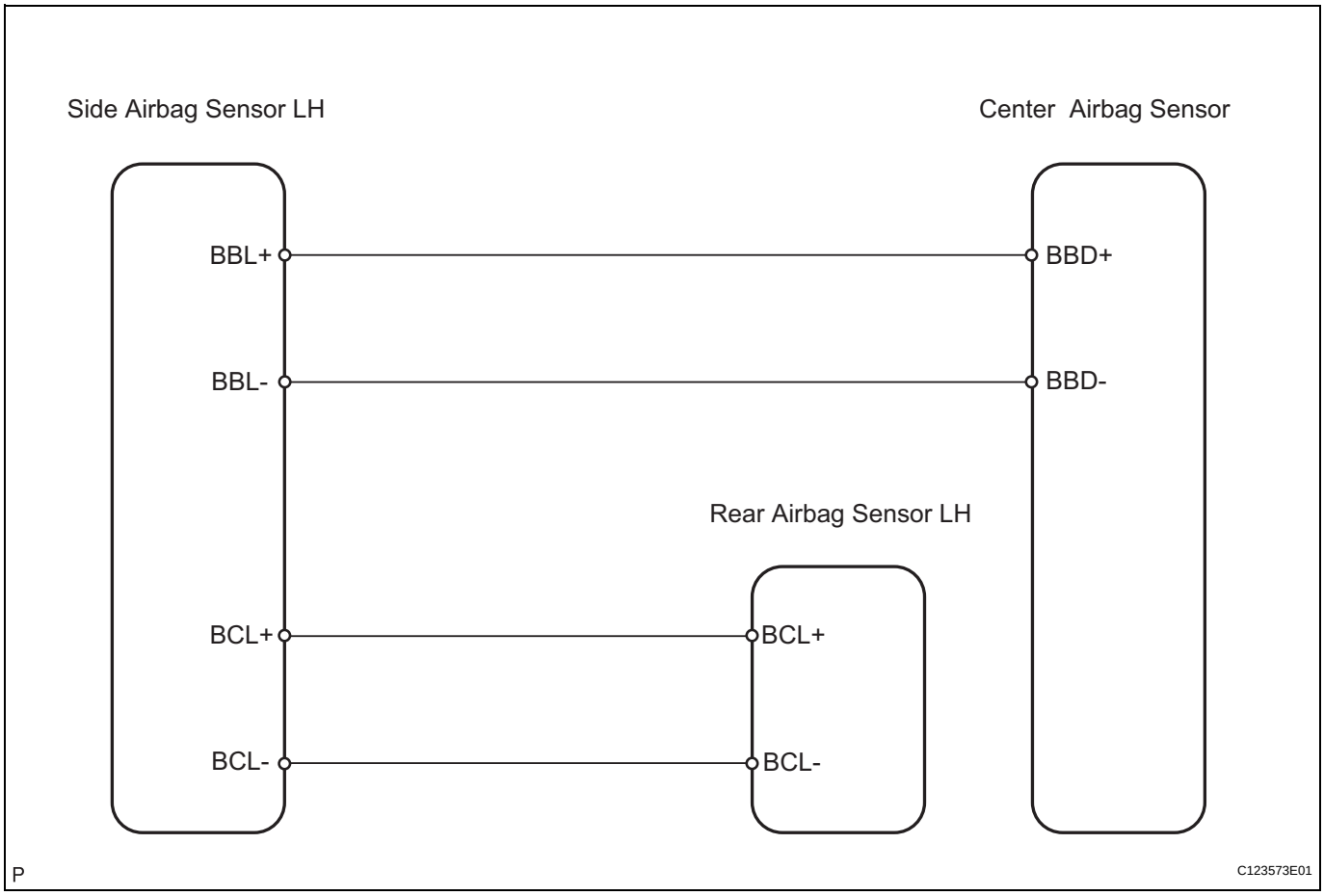

RS

INSPECTION PROCEDURE

1	CHECK SIDE AIRBAG SENSOR LH

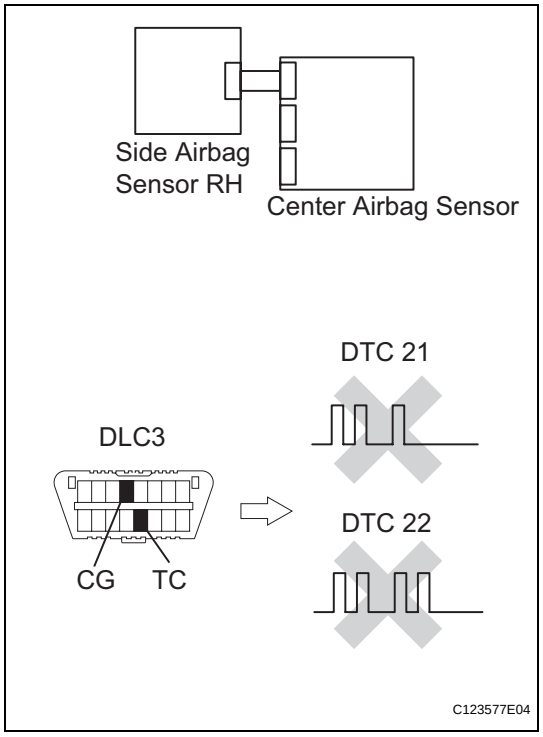

(a) Turn the ignition switch OFF.
(b) Disconnect the cable from the negative (-) battery terminal, and wait for at least 90 seconds.
(c) Interchange the side airbag sensor RH and the side airbag sensor LH, and connect the connectors to them.
(d) Connect the cable to the negative (-) battery terminal, and wait for at least 2 seconds.
(e) Turn the ignition switch ON, and wait for at least 60 seconds.
(f) Clear the DTCs (see page RS-49).
(g) Turn the ignition switch OFF.
(h) Turn the ignition switch ON, and wait for at least 60 seconds.
(i) Check the DTCs (see page RS-49).

Result

Result	Proceed to
DTC B1620/21 and B1625/22 are not output.	A
DTC B1620/21 is output.	B
DTC B1625/22 is output.	C

DTCs other than DTC B1620/21 and B1625/22 may be output at this time, but they are not related to this check.

B → **REPLACE CENTER AIRBAG SENSOR ASSEMBLY**

C → **REPLACE SIDE AIRBAG SENSOR LH**

A

USE SIMULATION METHOD TO CHECK

RS

DTC	B1622/81	Lost Communication with Driver Side - Side Airbag Sensor Assembly

DESCRIPTION

The side airbag sensor LH consists of part including the diagnostic circuit and the lateral deceleration sensor.
When the center airbag sensor receives signals from the lateral deceleration sensor, it determines whether or not the SRS should be activated.
DTC B1622/81 is set when a malfunction is detected in the side airbag sensor LH circuit.

DTC No.	DTC Detection Condition	Trouble Area
B1622/81	When one of following conditions is met: • Center airbag sensor detects line short signal, open signal, short to ground signal or short to B+ signal in side airbag sensor LH circuit for 2 seconds. • Side airbag sensor LH malfunction • Center airbag sensor malfunction	• Floor wire • Side airbag sensor LH • Center airbag sensor

WIRING DIAGRAM

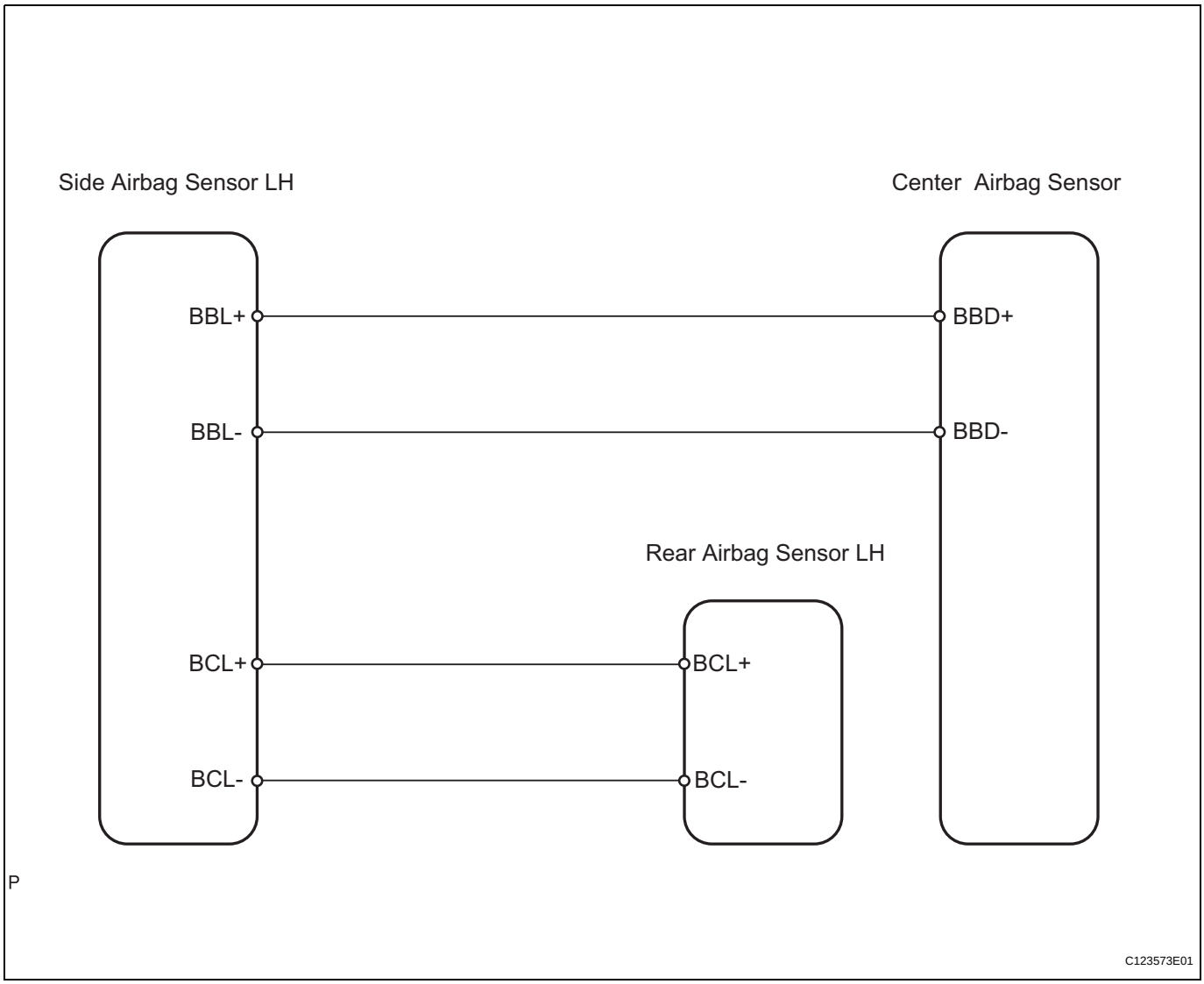

RS

P

INSPECTION PROCEDURE

1	CHECK CONNECTION OF CONNECTOR

(a) Turn the ignition switch OFF.
(b) Disconnect the cable from the negative (-) battery terminal, and wait for at least 90 seconds.
(c) Check that the connectors are properly connected to the center airbag sensor, rear airbag sensor LH and the side airbag sensor LH.
OK:
The connectors are properly connected.

NG → **CONNECT CONNECTOR**

OK

2	CHECK FLOOR WIRE (OPEN)

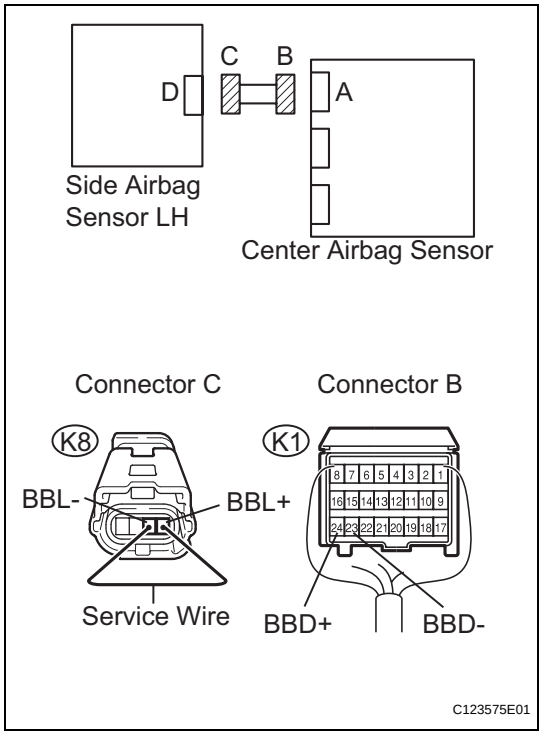

(a) Disconnect the connectors from the center airbag sensor and the side airbag sensor LH.
(b) Using a service wire, connect K8-4 (BBL+) and K8-3 (BBL-) of connector C.
NOTICE:
Do not forcibly insert the service wire into the terminals of the connector when connecting.
(c) Measure the resistance of the wire harness side connector.
Standard resistance

Tester Connection	Specified Condition
K1-24 (BBD+) - K1-23 (BBD-)	Below 1 Ω

NG → **REPAIR OR REPLACE FLOOR WIRE**

OK

RS

3 CHECK FLOOR WIRE (SHORT)

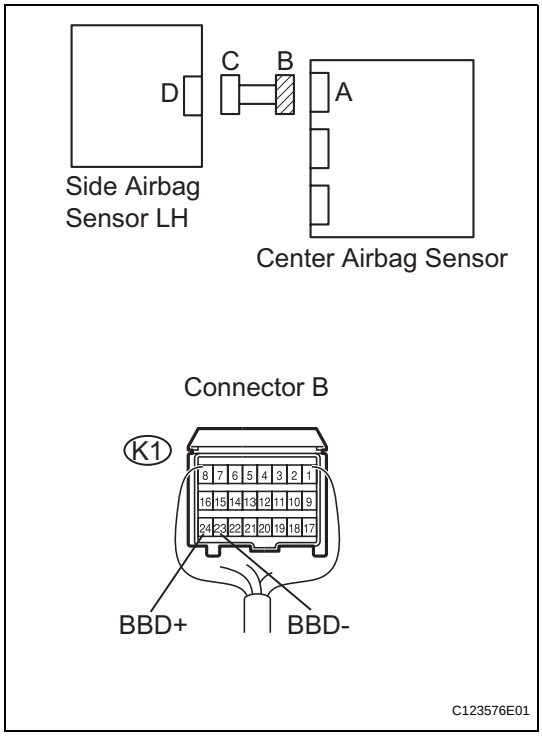

(a) Disconnect the service wire from connector C.
(b) Measure the resistance of the wire harness side connector.
Standard resistance

Tester Connection	Specified Condition
K1-24 (BBD+) - K1-23 (BBD-)	1 MΩ or higher

NG → **REPAIR OR REPLACE FLOOR WIRE**

OK

4 CHECK FLOOR WIRE (TO B+)

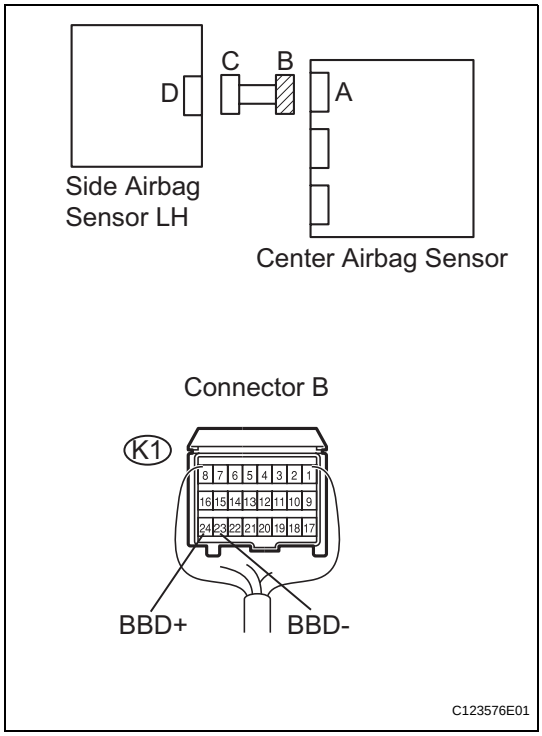

(a) Connect the cable to the negative (-) battery terminal, and wait for at least 2 seconds.
(b) Turn the ignition switch ON.
(c) Measure the voltage of the wire harness side connector.
Standard voltage

Tester Connection	Specified Condition
K1-24 (BBD+) - Body ground	Below 1 V
K1-23 (BBD-) - Body ground	Below 1 V

NG → **REPAIR OR REPLACE FLOOR WIRE**

OK

RS

5 CHECK FLOOR WIRE (TO GROUND)

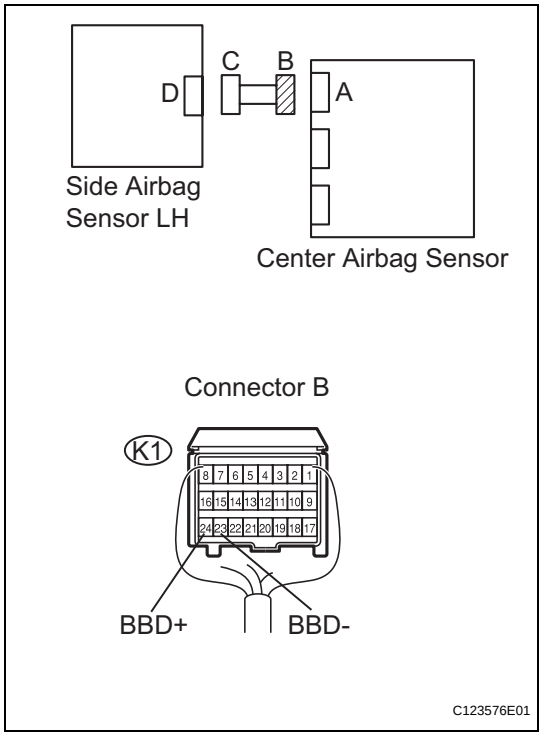

(a) Turn the ignition switch OFF.
(b) Disconnect the cable from the negative (-) battery terminal, and wait for at least 90 seconds.
(c) Measure the resistance of the wire harness side connector.

Standard resistance

Tester Connection	Specified Condition
K1-24 (BBD+) - Body ground	1 MΩ or Higher
K1-23 (BBD-) - Body ground	1 MΩ or Higher

NG → **REPAIR OR REPLACE FLOOR WIRE**

OK

6 CHECK SIDE AIRBAG SENSOR LH

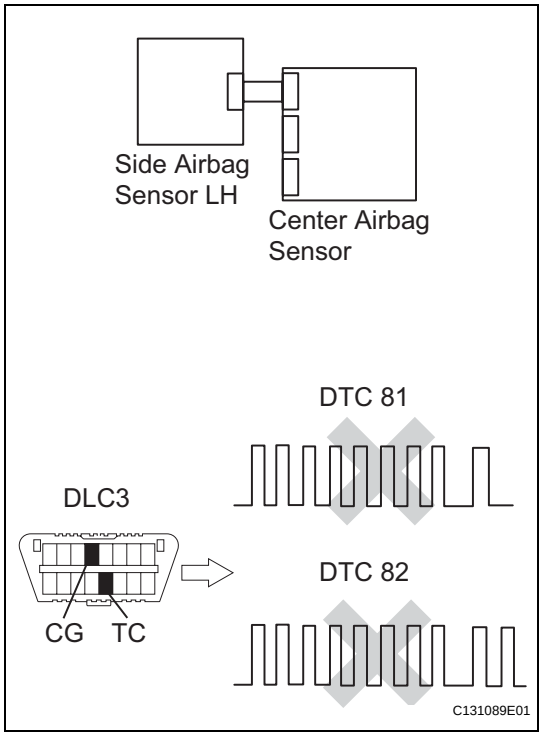

(a) Connect the connectors to the center airbag sensor.
(b) Interchange the side airbag sensor RH with the side airbag sensor LH and connect the connectors to them.
(c) Connect the cable to the negative (-) battery terminal, and wait for at least 2 seconds.
(d) Turn the ignition switch ON, and wait for at least 60 seconds.
(e) Clear the DTCs (see page RS-49).
(f) Turn the ignition switch OFF.
(g) Turn the ignition switch ON, and wait for at least 60 seconds.
(h) Check for DTCs (see page RS-49).

Result

Result	Proceed to
DTC B1622/81 and B1627/82 are not output.	A
DTC B1627/82 is output.	B
DTC B1622/81 is output.	C

HINT:
DTCs other than DTC B1622/81 and B1627/82 may be output at this time, but they are not related to this check.

B → **REPLACE SIDE AIRBAG SENSOR LH**

RS

C → REPLACE CENTER AIRBAG SENSOR ASSEMBLY

A

USE SIMULATION METHOD TO CHECK

DTC	**B1623/81**	**Driver Side - Side Airbag Sensor Assembly Initialization Incomplete**

DTC	**B1632/81**	**Lost Communication with Driver Side Rear Airbag Sensor**

DTC	**B1633/81**	**Driver Side Rear Airbag Sensor Initialization Incomplete**

DTC	**B1642/81**	**Lost Communication with Driver Side Satellite Sensor Bus**

DESCRIPTION

The side airbag sensor LH consists of part including the diagnostic circuit and the lateral deceleration sensor.
When the center airbag sensor receives signals from the lateral deceleration sensor, it determines whether or not the SRS should be activated.
DTC B1623/81, B1632/81, B1633/81 or B1642/81 is set when a malfunction is detected in the side airbag sensor LH circuit.

DTC No.	DTC Detection Condition	Trouble Area
B1623/81 B1632/81 B1633/81 B1642/81	When one of following conditions is met: • Center airbag sensor detects line short signal, open signal, short to ground signal or short to B+ signal in side airbag sensor LH circuit for 2 seconds. • Side airbag sensor LH malfunction • Center airbag sensor malfunction	• Floor wire • Side airbag sensor LH • Center airbag sensor

WIRING DIAGRAM

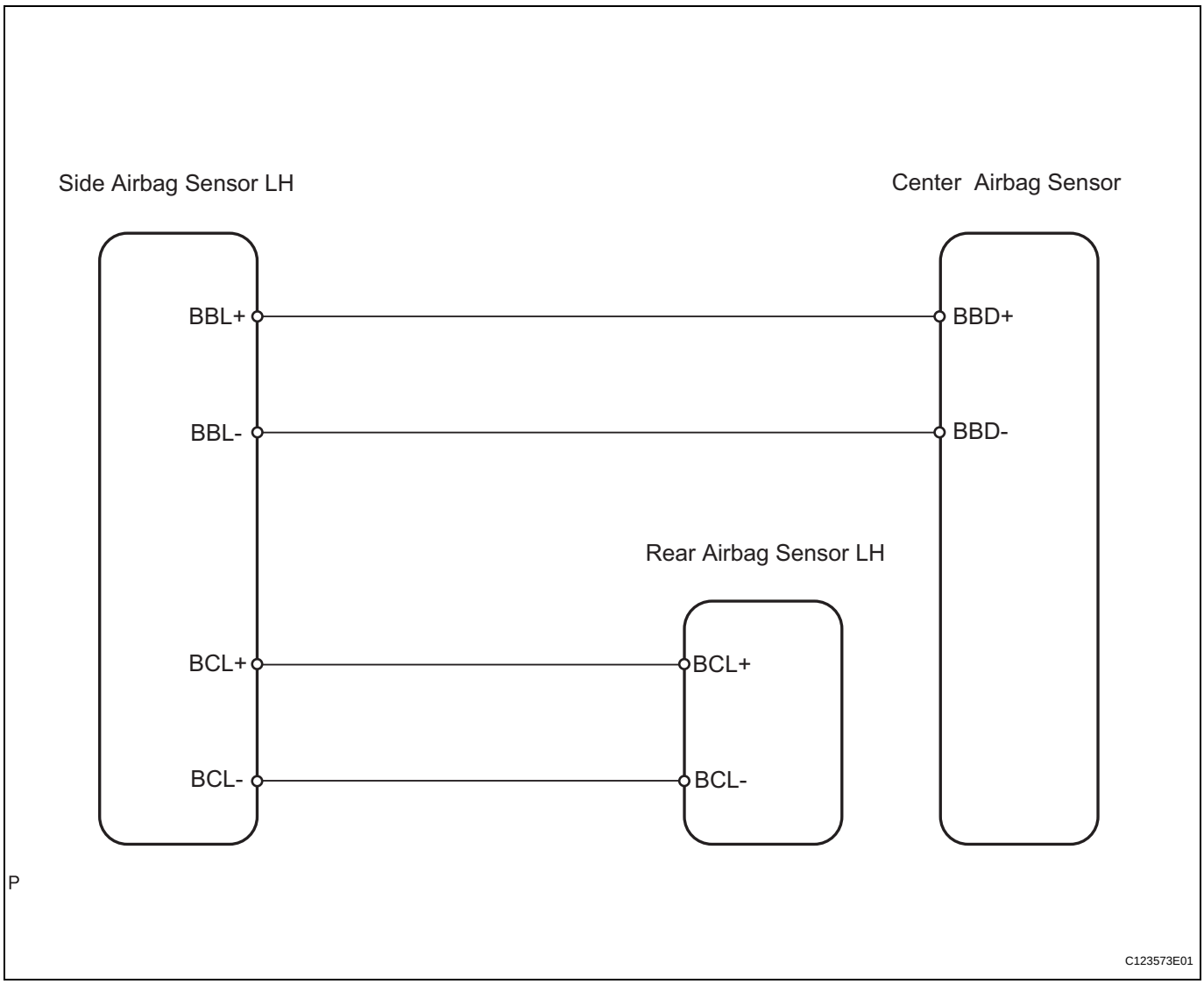

P

RS

INSPECTION PROCEDURE

1	CHECK CONNECTION OF CONNECTOR

(a) Turn the ignition switch OFF.
(b) Disconnect the cable from the negative (-) battery terminal, and wait for at least 90 seconds.
(c) Check that the connectors are properly connected to the center airbag sensor , rear airbag sensor LH and the side airbag sensor LH.
OK:
The connectors are properly connected.

NG → **CONNECT CONNECTOR**

OK

2 CHECK FLOOR WIRE (OPEN)

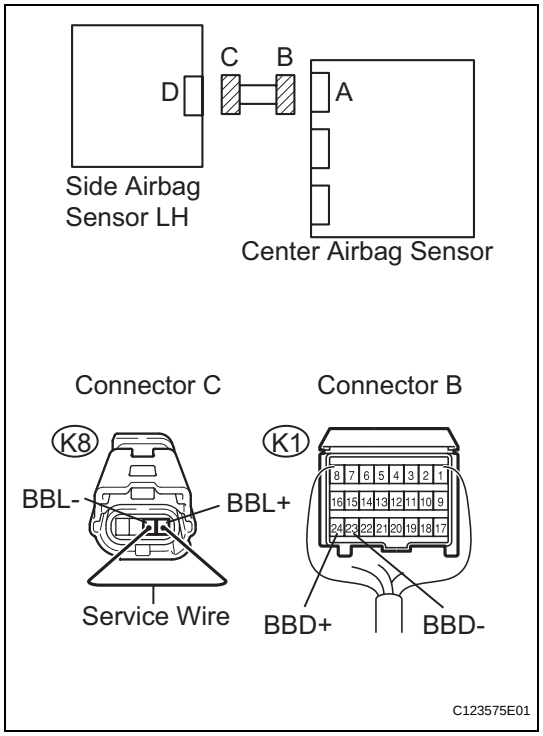

(a) Disconnect the connectors from the center airbag sensor and the side airbag sensor LH.
(b) Using a service wire, connect K8-4 (BBL+) and K8-3 (BBL-) of connector C.
NOTICE:
Do not forcibly insert the service wire into the terminals of the connector when connecting.
(c) Measure the resistance of the wire harness side connector.
Standard resistance

Tester Connection	Specified Condition
K1-24 (BBD+) - K1-23 (BBD-)	Below 1 Ω

NG → **REPAIR OR REPLACE FLOOR WIRE**

OK

3 CHECK FLOOR WIRE (SHORT)

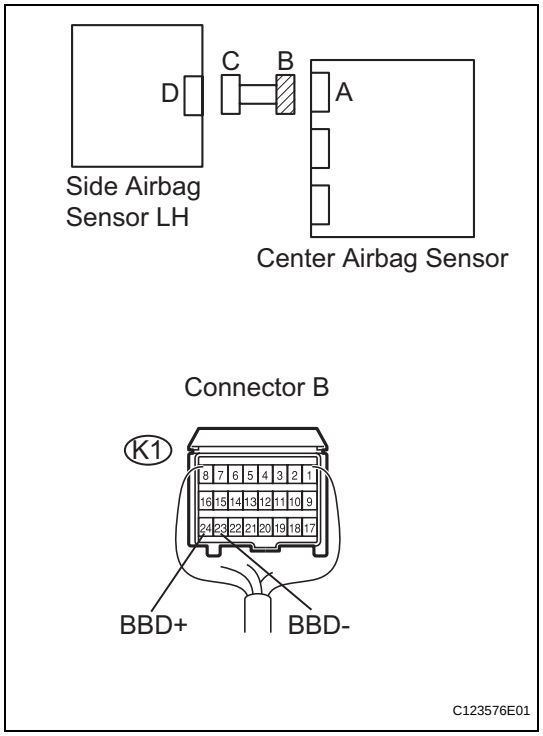

(a) Disconnect the service wire from connector C.
(b) Measure the resistance of the wire harness side connector.
Standard resistance

Tester Connection	Specified Condition
K1-24 (BBD+) - K1-23 (BBD-)	1 MΩ or higher

NG → **REPAIR OR REPLACE FLOOR WIRE**

OK

RS

4 CHECK FLOOR WIRE (TO B+)

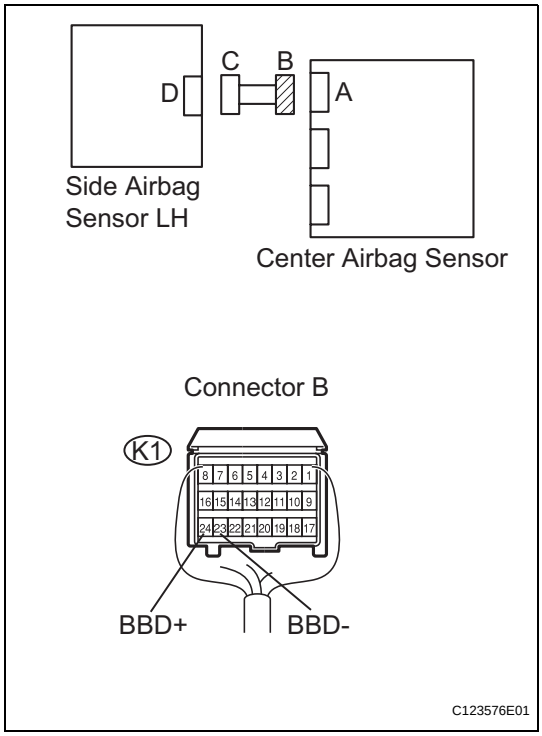

(a) Connect the cable to the negative (-) battery terminal, and wait for at least 2 seconds.
(b) Turn the ignition switch ON.
(c) Measure the voltage of the wire harness side connector.
Standard voltage

Tester Connection	Specified Condition
K1-24 (BBD+) - Body ground	Below 1 V
K1-23 (BBD-) - Body ground	Below 1 V

NG → **REPAIR OR REPLACE FLOOR WIRE**

OK

5 CHECK FLOOR WIRE (TO GROUND)

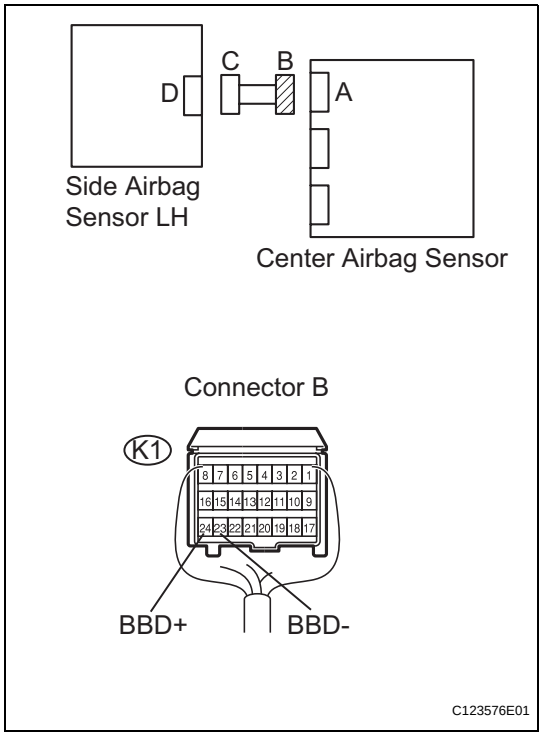

(a) Turn the ignition switch OFF.
(b) Disconnect the cable from the negative (-) battery terminal, and wait for at least 90 seconds.
(c) Measure the resistance of the wire harness side connector.
Standard resistance

Tester Connection	Specified Condition
K1-24 (BBD+) - Body ground	1 MΩ or higher
K1-23 (BBD-) - Body ground	1 MΩ or higher

NG → **REPAIR OR REPLACE FLOOR WIRE**

OK

RS

6 CHECK FLOOR WIRE (OPEN)

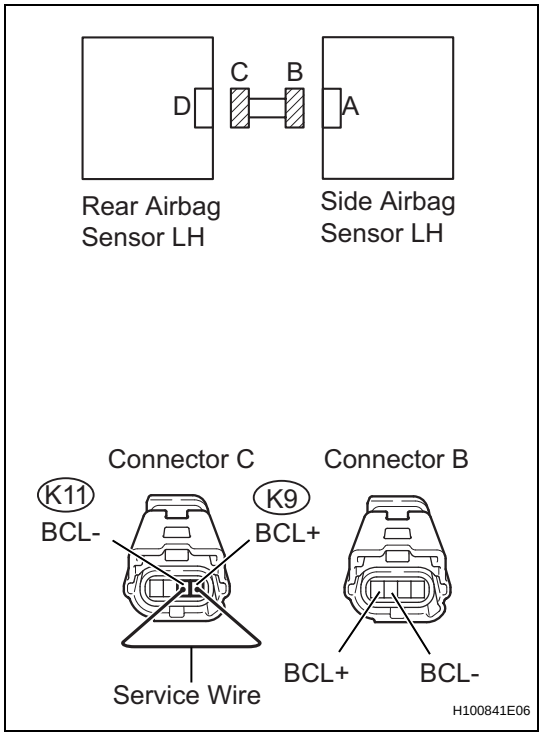

(a) Disconnect the connectors from the side airbag sensor LH and the rear airbag sensor LH.
(b) Using a service wire, connect K11-1 (BCL-) and K11-2 (BCL+) of connector C.
NOTICE:
Do not forcibly insert the service wire into the terminals of the connector when connecting.
(c) Measure the resistance of the wire harness side connector.
Standard resistance

Tester Connection	Specified Condition
K9-1 (BCL+) - K9-2 (BCL-)	Below 1 Ω

NG → **REPAIR OR REPLACE FLOOR WIRE**

OK

7 CHECK FLOOR WIRE (SHORT)

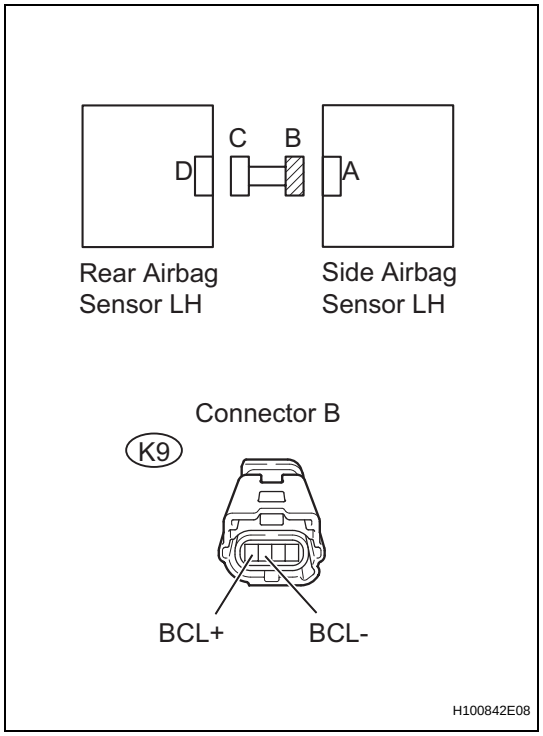

(a) Disconnect the service wire from connector C.
(b) Measure the resistance of the wire harness side connector.
Standard resistance

Tester Connection	Specified Condition
K9-1 (BCL+) - K9-2 (BCL-)	1 MΩ or higher

NG → **REPAIR OR REPLACE FLOOR WIRE**

OK

RS

8 CHECK FLOOR WIRE (TO B+)

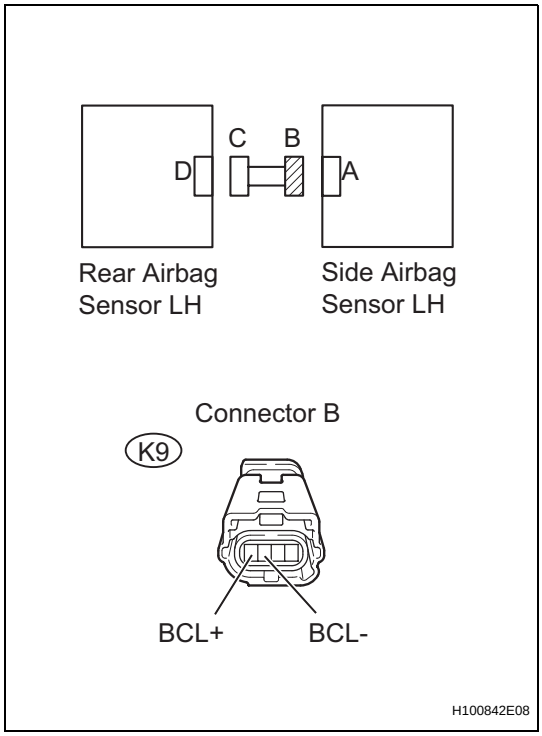

(a) Connect the cable to the negative (-) battery terminal, and wait for at least 2 seconds.
(b) Turn the ignition switch ON.
(c) Measure the voltage of the wire harness side connector.
Standard voltage

Tester Connection	Specified Condition
K9-1 (BCL+) - Body ground	Below 1 V
K9-2 (BCL-) - Body ground	Below 1 V

NG → **REPAIR OR REPLACE FLOOR WIRE**

OK

9 CHECK FLOOR WIRE (TO GROUND)

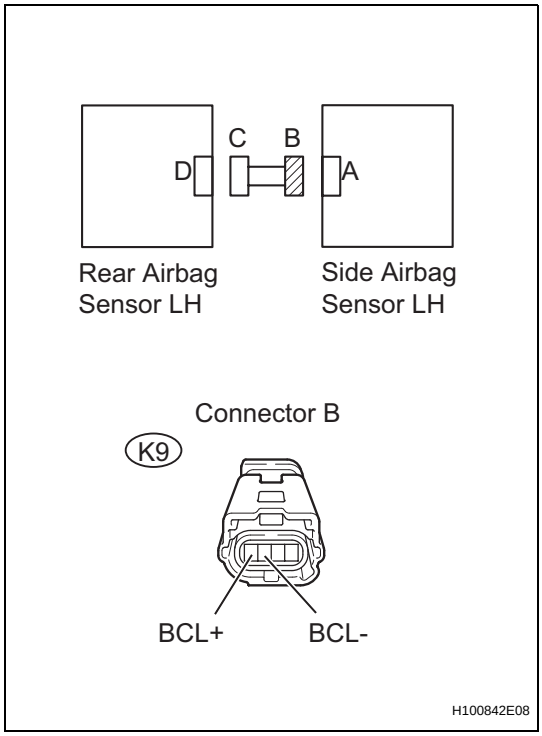

(a) Turn the ignition switch OFF.
(b) Disconnect the cable from the negative (-) battery terminal, and wait for at least 90 seconds.
(c) Measure the resistance of the wire harness side connector.
Standard resistance

Tester Connection	Specified Condition
K9-1 (BCL+) - Body ground	1 MΩ or higher
K9-2 (BCL-) - Body ground	1 MΩ or higher

NG → **REPAIR OR REPLACE FLOOR WIRE**

OK

RS

10 CHECK SIDE AIRBAG SENSOR RH

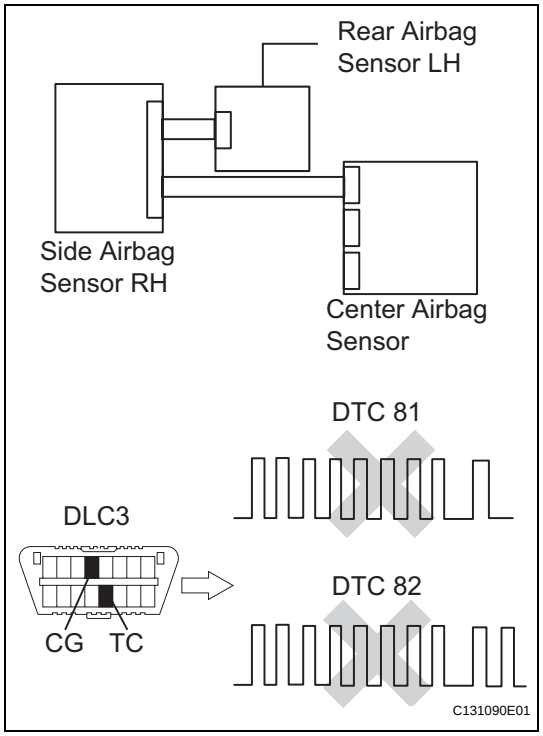

(a) Connect the connectors to the center airbag sensor.
(b) Interchange the side airbag sensor RH with the side airbag sensor LH and connect the connectors to them.
(c) Connect the cable to the negative (-) battery terminal, and wait for at least 2 seconds.
(d) Turn the ignition switch ON, and wait for at least 60 seconds.
(e) Clear the DTCs (see page RS-49).
(f) Turn the ignition switch OFF.
(g) Turn the ignition switch ON, and wait for at least 60 seconds.
(h) Check for DTCs (see page RS-49).

Result

Result	Proceed to
DTC B1623/81, B1632/81, B1633/81, B1642/81, B1628/82, B1637/82, B1638/82 and B1647/82 is not output	A
DTC B1623/81, B1632/81, B1633/81 and B1642/81 are output	B
DTC B1628/82, B1637/82, B1638/82 and B1647/82 are output	C

HINT:
DTCs other than DTC B1623/81, B1632/81, B1633/81, B1642/81, B1628/82, B1637/82, B1638/82 and B1647/82 may be output at this time, but they are not relate to this check.

B → **REPLACE CENTER AIRBAG SENSOR ASSEMBLY**

C → **REPLACE SIDE AIRBAG SENSOR RH**

A

RS

11	CHECK REAR AIRBAG SENSOR RH

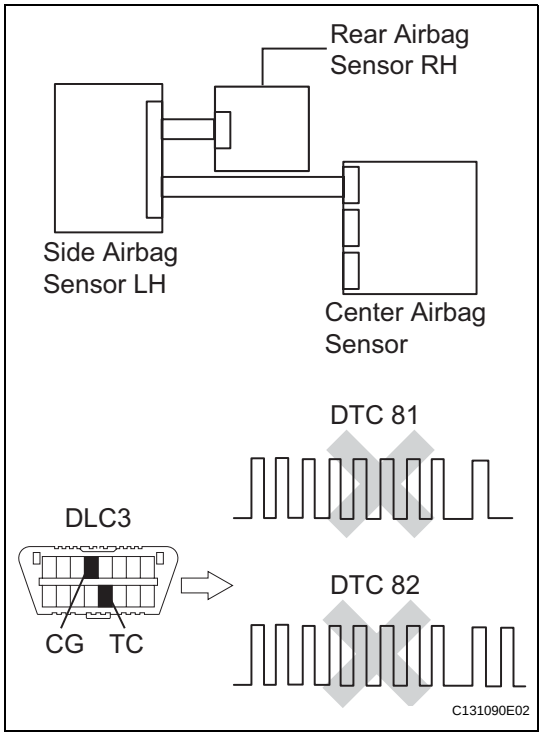

(a) Turn the ignition switch OFF.
(b) Disconnect the cable from the negative (-) battery terminal, and wait for at least 90 seconds.
(c) Interchange the rear airbag sensor RH with the rear airbag sensor LH and connect the connectors to them.
(d) Connect the cable to the negative (-) battery terminal, and wait for at least 2 seconds.
(e) Turn the ignition switch ON, and wait for at least 60 seconds.
(f) Clear the DTCs (see page RS-49).
(g) Turn the ignition switch OFF.
(h) Turn the ignition switch ON, and wait for at least 60 seconds.
(i) Check the DTCs (see page RS-49).

Result

Result	Proceed to
DTC B1623/81, B1632/81, B1633/81, B1642/81, B1628/82, B1637/82, B1638/82 and B1647/82 is not output	A
DTC B1623/81, B1632/81, B1633/81 and B1642/81 are output	B
DTC B1628/82, B1637/82, B1638/82 and B1647/82 are output	C

HINT:
DTCs other than DTC B1623/81, B1632/81, B1633/81, B1642/81, B1628/82, B1637/82, B1638/82 and B1647/82 may be output at this time, but they are not relate to this check.

RS

B → **REPLACE CENTER AIRBAG SENSOR ASSEMBLY**

C → **REPLACE REAR AIRBAG SENSOR RH**

A

USE SIMULATION METHOD TO CHECK

DTC	B1625/22	Front Passenger Side - Side Airbag Sensor Circuit Malfunction

DESCRIPTION

The side airbag sensor RH consists of parts including the diagnostic circuit and the lateral deceleration sensor.
When the center airbag sensor receives signals from the lateral deceleration sensor, it determines whether or not the SRS should be activated.
DTC B1625/22 is set when a malfunction is detected in the side airbag sensor RH circuit.

DTC No.	DTC Detection Condition	Trouble Area
B1625/22	When one of following conditions is met: • Side airbag sensor RH malfunction • Center airbag sensor malfunction	• Side airbag sensor RH • Center airbag sensor

WIRING DIAGRAM

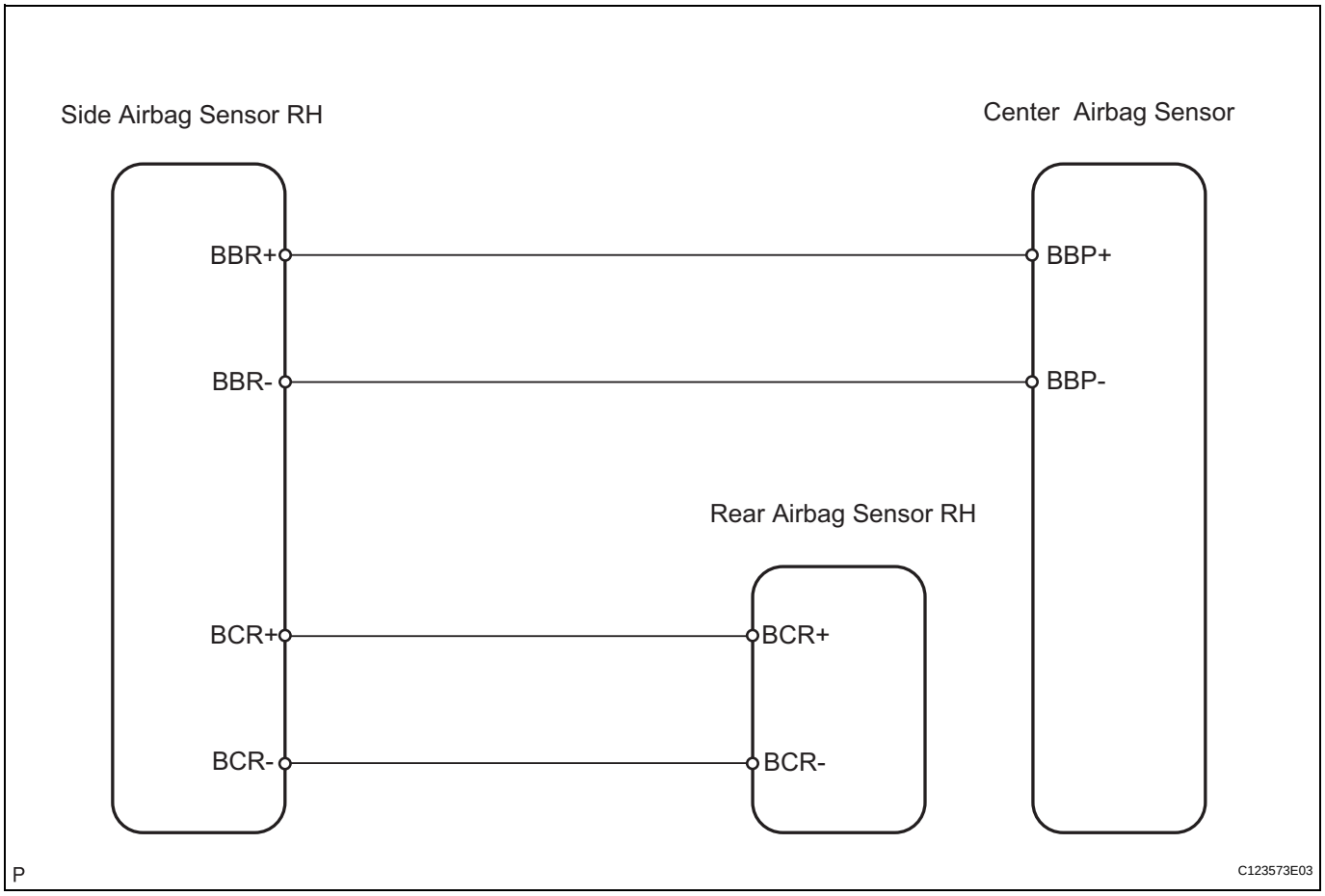

RS

INSPECTION PROCEDURE

1	CHECK SIDE AIRBAG SENSOR RH

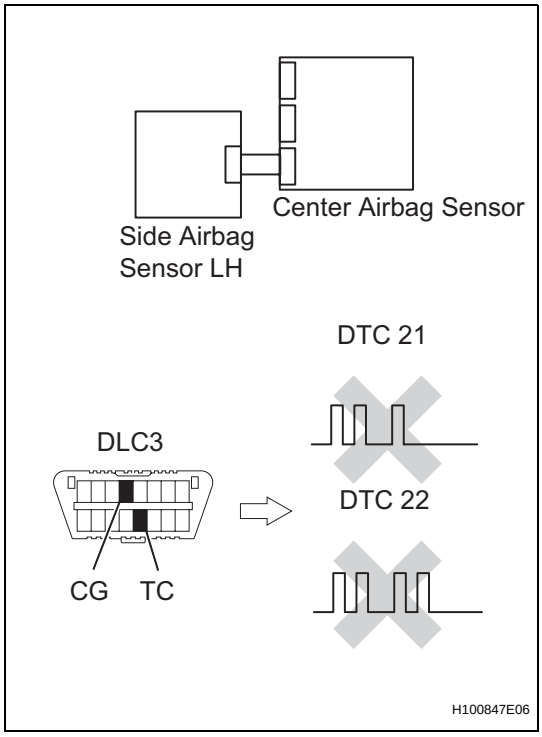

(a) Turn the ignition switch OFF.
(b) Disconnect the cable from the negative (-) battery terminal, and wait for at least 90 seconds.
(c) Interchange the side airbag sensor RH and the side airbag sensor LH, and connect the connectors to them.
(d) Connect the cable to the negative (-) battery terminal, and wait for at least 2 seconds.
(e) Turn the ignition switch ON, and wait for at least 60 seconds.
(f) Clear the DTCs (see page RS-49).
(g) Turn the ignition switch OFF.
(h) Turn the ignition switch ON, and wait for at least 60 seconds.
(i) Check the DTCs (see page RS-49).

Result

Result	Proceed to
DTC B1620/21 and B1625/22 are not output.	A
DTC B1620/21 is output.	B
DTC B1625/22 is output.	C

DTCs other than DTC B1620/21 and B1625/22 may be output at this time, but they are not related to this check.

B → **REPLACE SIDE AIRBAG SENSOR RH**

C → **REPLACE CENTER AIRBAG SENSOR ASSEMBLY**

RS

A

USE SIMULATION METHOD TO CHECK

DTC	B1627/82	Lost Communication with Front Passenger Side - Side Airbag Sensor Assembly

DESCRIPTION

The side airbag sensor RH consists of parts including the diagnostic circuit and the lateral deceleration sensor.
When the center airbag sensor receives signals from the lateral deceleration sensor, it determines whether or not the SRS should be activated.
DTC B1627/82 is set when a malfunction is detected in the side airbag sensor RH circuit.

WIRING DIAGRAM

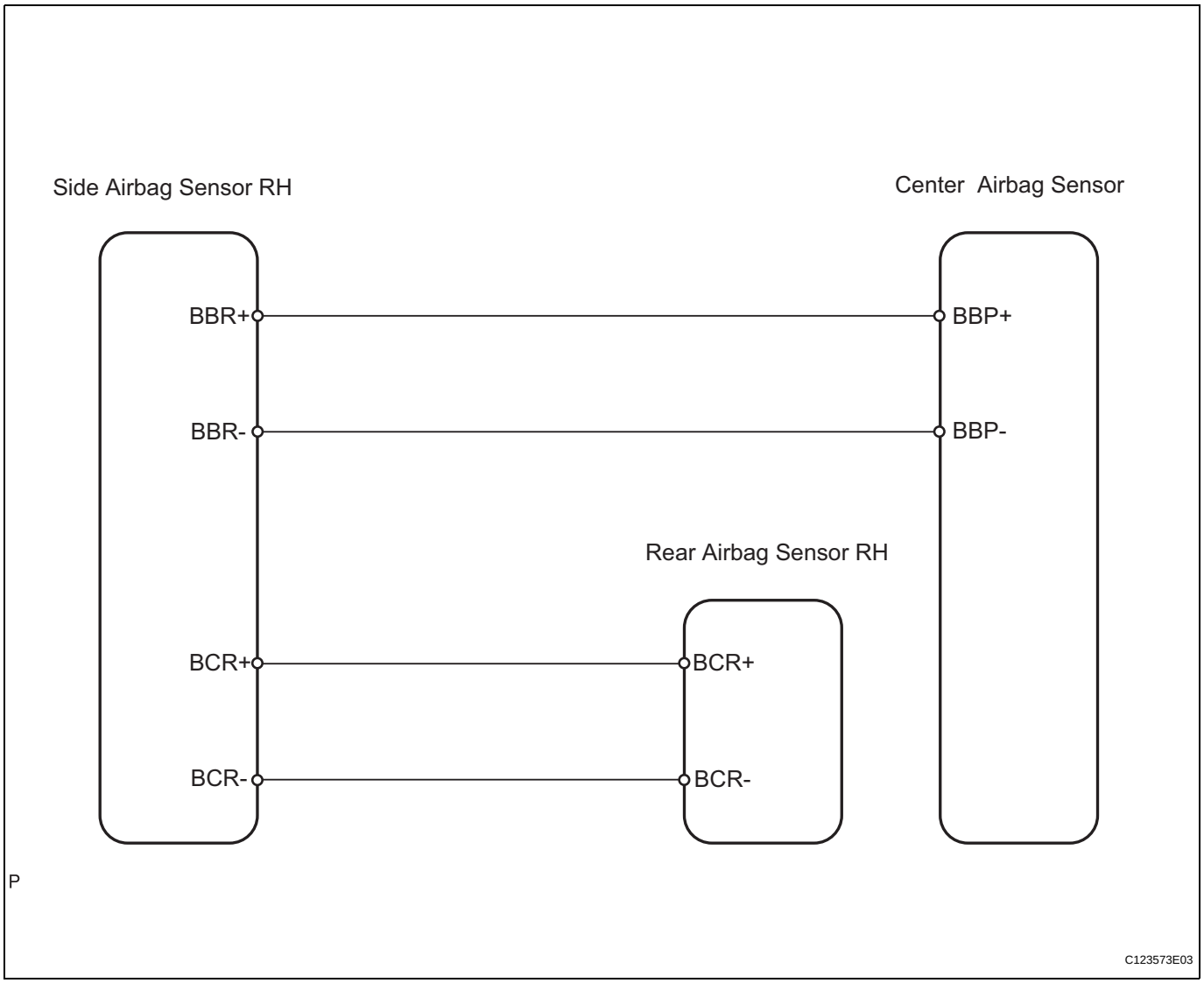

INSPECTION PROCEDURE

1	CHECK CONNECTION OF CONNECTOR

(a) Turn the ignition switch OFF.
(b) Disconnect the cable from the negative (-) battery terminal, and wait for at least 90 seconds.

RS

(c) Check that the connectors are properly connected to the center airbag sensor, rear airbag sensor RH and the side airbag sensor RH.
OK:
The connectors are properly connected.

NG → **CONNECT CONNECTOR**

OK

2 CHECK FLOOR WIRE (OPEN)

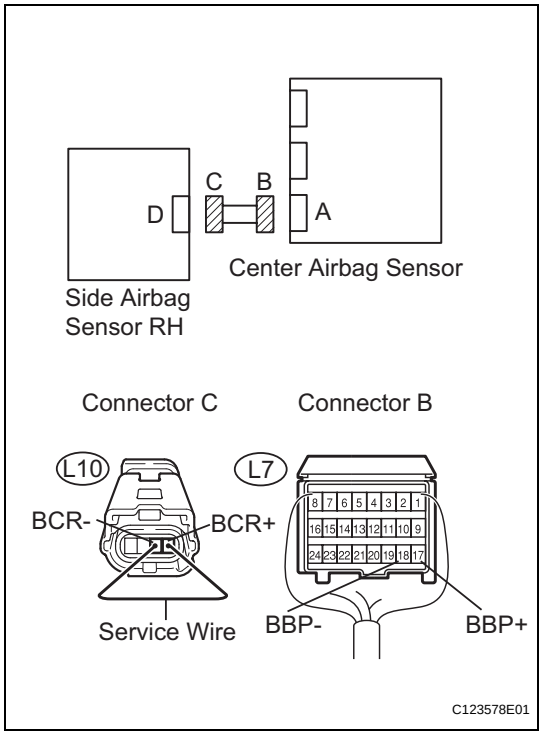

(a) Disconnect the connectors from the center airbag sensor and the side airbag sensor RH.
(b) Using a service wire, connect L10-4 (BBR+) and L10-3 (BBR-) of connector C.
NOTICE:
Do not forcibly insert the service wire into the terminals of the connector when connecting.
(c) Measure the resistance of the wire harness side connectors.
Standard resistance

Tester Connection	Specified Condition
L7-17 (BBP+) - L7-18 (BBP-)	Below 1 Ω

NG → **REPAIR OR REPLACE FLOOR WIRE**

OK

RS

3 CHECK FLOOR WIRE (SHORT)

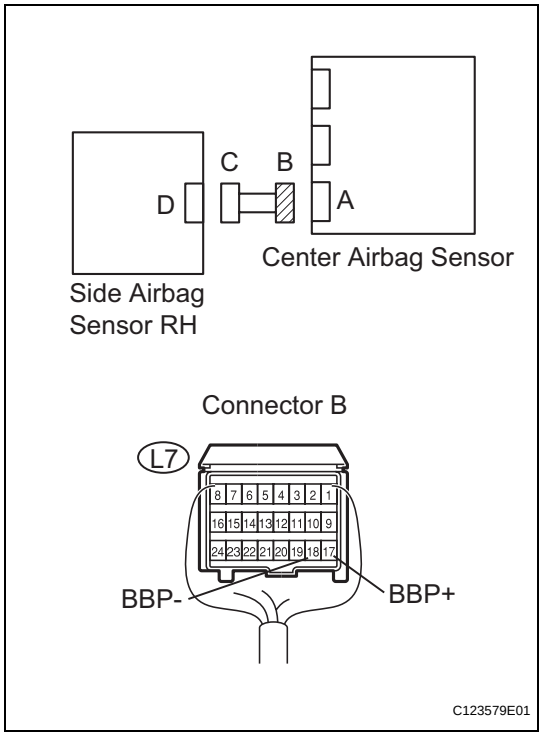

(a) Disconnect the service wire from connector C.
(b) Measure the resistance of the wire harness side connector.
Standard resistance

Tester Connection	Specified Condition
L7-17 (BBP+) - L7-18(BBP-)	1 MΩ or higher

NG → **REPAIR OR REPLACE FLOOR WIRE**

OK

4 CHECK FLOOR WIRE (TO B+)

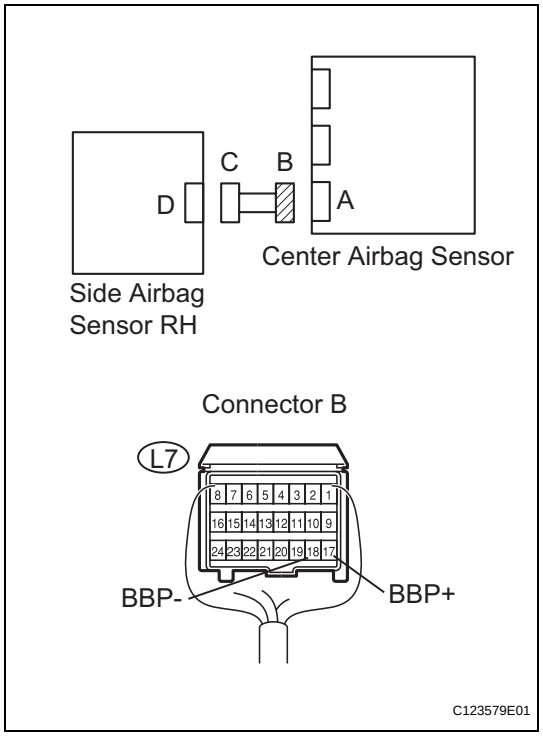

(a) Connect the cable to the negative (-) battery terminal, and wait for at least 2 seconds.
(b) Turn the ignition switch ON.
(c) Measure the voltage of the wire harness side connector.
Standard voltage

Tester Connection	Specified Condition
L7-17 (BBP+) - Body ground	Below 1 V
L7-18 (BBP-) - Body ground	Below 1 V

NG → **REPAIR OR REPLACE FLOOR WIRE**

OK

RS

5 CHECK FLOOR WIRE (TO GROUND)

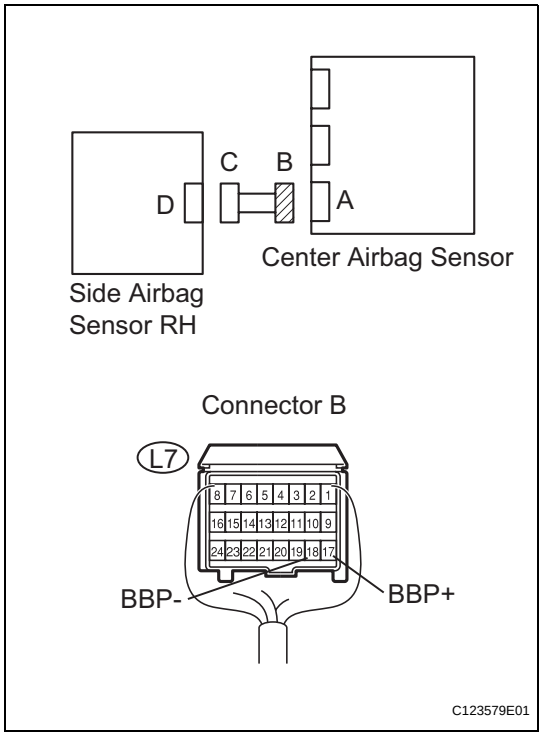

(a) Turn the ignition switch OFF.
(b) Disconnect the cable from the negative (-) battery terminal, and wait for at least 90 seconds.
(c) Measure the resistance of the wire harness side connector.

Standard resistance

Tester Connection	Specified Condition
L7-17 (BBP+) - Body ground	1 MΩ or higher
L7-18 (BBP-) - Body ground	1 MΩ or higher

NG → **REPAIR OR REPLACE FLOOR WIRE**

OK

6 CHECK SIDE AIRBAG SENSOR RH

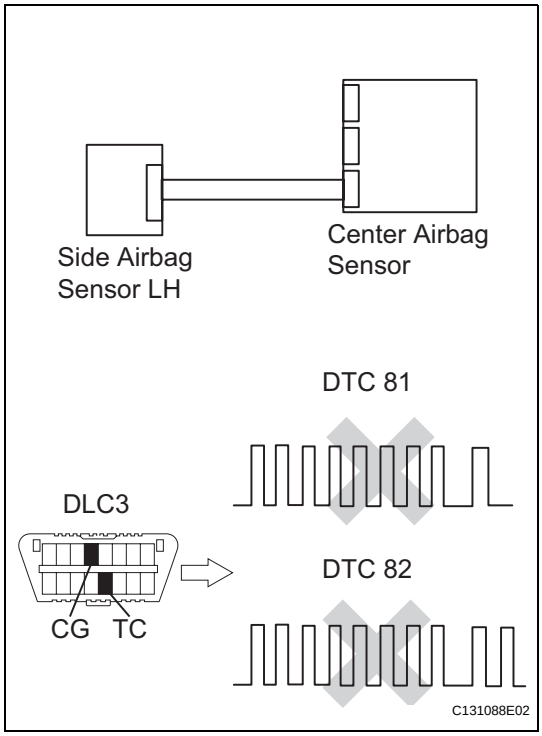

(a) Connect the connectors to the center airbag sensor.
(b) Interchange the side airbag sensor RH with the side airbag sensor LH and connect the connectors to them.
(c) Connect the cable to the negative (-) battery terminal, and wait for at least 2 seconds.
(d) Turn the ignition switch ON, and wait for at least 60 seconds.
(e) Clear the DTCs (see page RS-49).
(f) Turn the ignition switch OFF.
(g) Turn the ignition switch ON, and wait for at least 60 seconds.
(h) Check for DTCs (see page RS-49).

Result

Result	Proceed to
DTC B1622/81 and B1627/82 are not output	A
DTC B1622/81 is output	B
DTC B1627/82 is output	C

HINT:
DTCs other than DTC B1622/81 and B1627/82 may be output at this time, but they are not related to this check.

B → **REPLACE SIDE AIRBAG SENSOR RH**

RS

C → REPLACE CENTER AIRBAG SENSOR ASSEMBLY

A

USE SIMULATION METHOD TO CHECK

DTC	**B1628/82**	**Front Passenger Side - Side Airbag Sensor Assembly Initialization Incomplete**

DTC	**B1637/82**	**Lost Communication with Passenger Side Rear Airbag Sensor**

DTC	**B1638/82**	**Passenger Side Rear Airbag Sensor Initialization Incomplete**

DTC	**B1647/82**	**Lost Communication with Front Passenger Side Satellite Sensor Bus**

DESCRIPTION

The side airbag sensor RH consists of parts including the diagnostic circuit and the lateral deceleration sensor.

When the center airbag sensor receives signals from the lateral deceleration sensor, it determines whether or not the SRS should be activated.

DTC B1628/82, B1637/82, B1638/82 or B1647/82 is set when a malfunction is detected in the side airbag sensor RH circuit.

DTC No.	DTC Detection Condition	Trouble Area
B1628/82 B1637/82 B1638/82 B1647/82	When one of following conditions is met: • Center airbag sensor detects line short signal, open signal, short to ground signal or short to B+ signal in side airbag sensor RH circuit for 2 seconds. • Side airbag sensor RH malfunction • Center airbag sensor malfunction	• Floor wire • Side airbag sensor RH • Center airbag sensor

WIRING DIAGRAM

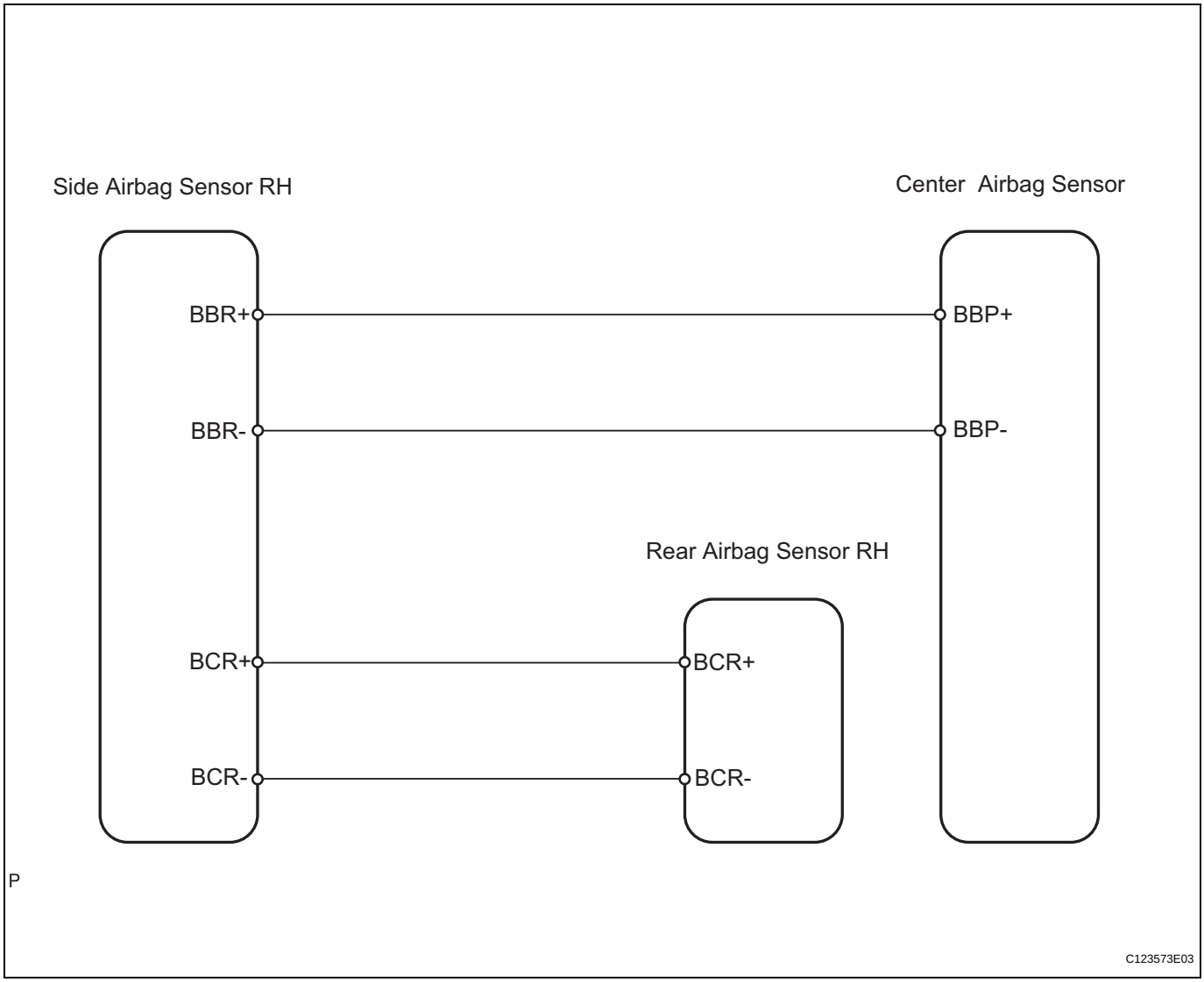

RS

INSPECTION PROCEDURE

1	CHECK CONNECTION OF CONNECTOR

(a) Turn the ignition switch OFF.
(b) Disconnect the cable from the negative (-) battery terminal, and wait for at least 90 seconds.
(c) Check that the connectors are properly connected to the center airbag sensor, rear airbag sensor RH and the side airbag sensor RH.
OK:
The connectors are properly connected.

NG → **CONNECT CONNECTOR**

OK

2 CHECK FLOOR WIRE (OPEN)

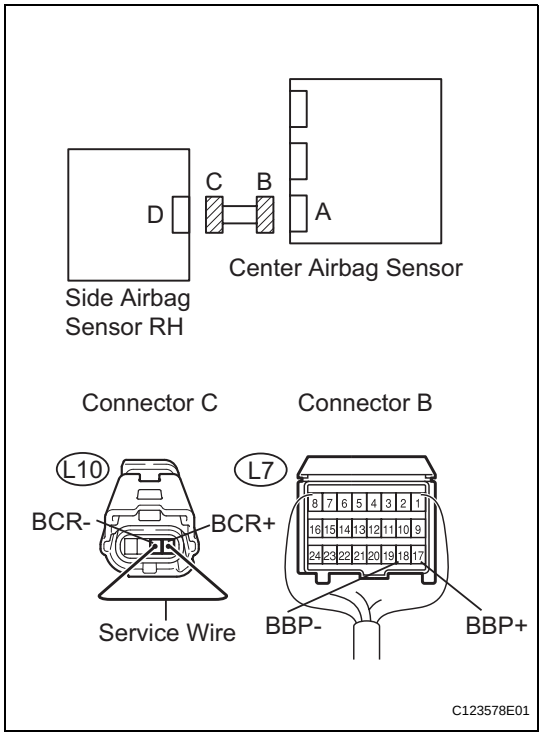

(a) Disconnect the connectors from the center airbag sensor and the side airbag sensor RH.
(b) Using a service wire, connect L10-4 (BBR+) and L10-3 (BBR-) of connector C.
NOTICE:
Do not forcibly insert the service wire into the terminals of the connector when connecting.
(c) Measure the resistance of the wire harness side connector.
Standard resistance

Tester Connection	Specified Condition
L7-17 (BBP+) - L7-18 (BBP-)	Below 1 Ω

NG → **REPAIR OR REPLACE FLOOR WIRE**

OK

3 CHECK FLOOR WIRE (SHORT)

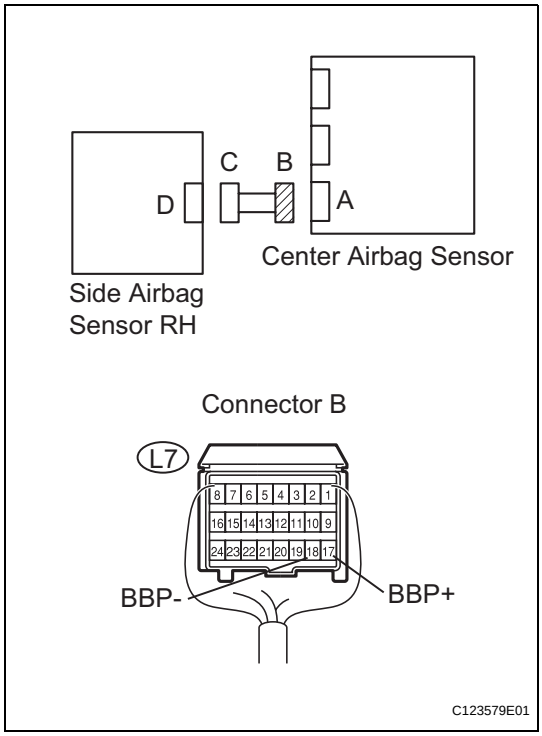

(a) Disconnect the service wire from connector C.
(b) Measure the resistance of the wire harness side connector.
Standard resistance

Tester Connection	Specified Condition
L7-17 (BBP+) - L7-18(BBP-)	1 MΩ or higher

NG → **REPAIR OR REPLACE FLOOR WIRE**

OK

RS

4 CHECK FLOOR WIRE (TO B+)

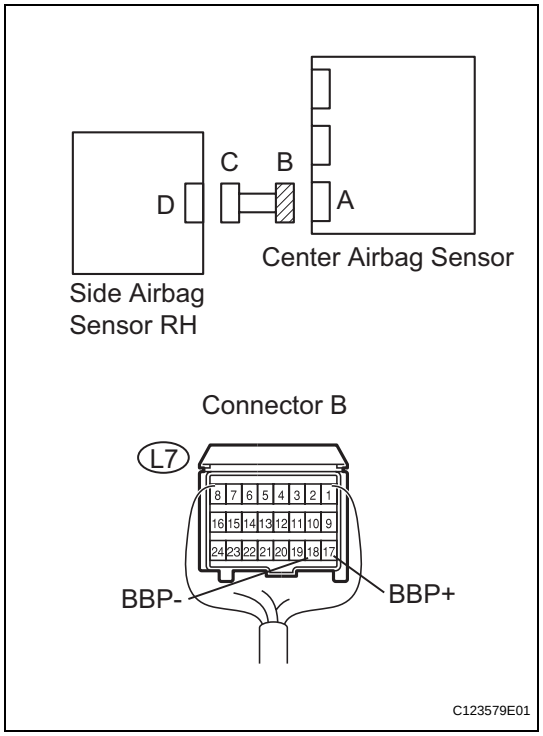

(a) Connect the cable to the negative (-) battery terminal, and wait for at least 2 seconds.
(b) Turn the ignition switch ON.
(c) Measure the voltage of the wire harness side connector.
Standard voltage

Tester Connection	Specified Condition
L7-17 (BBP+) - Body ground	Below 1 V
L7-18 (BBP-) - Body ground	Below 1 V

NG → **REPAIR OR REPLACE FLOOR WIRE**

OK

5 CHECK FLOOR WIRE (TO GROUND)

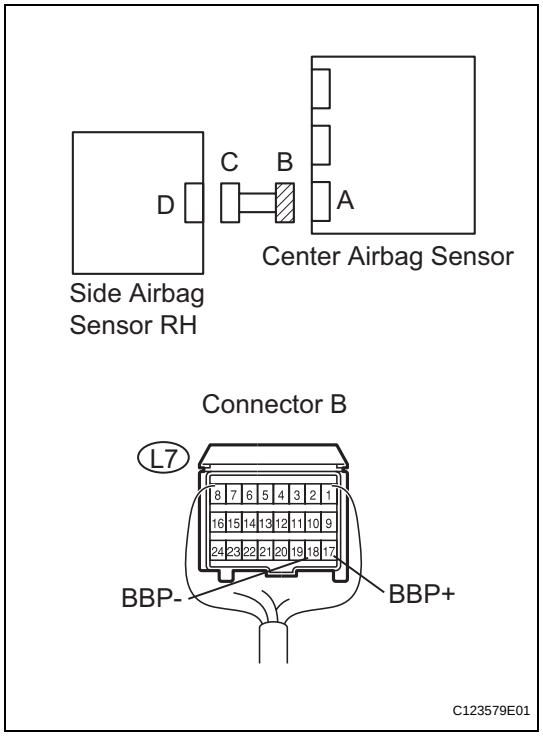

(a) Turn the ignition switch OFF.
(b) Disconnect the cable from the negative (-) battery terminal, and wait for at least 90 seconds.
(c) Measure the resistance of the wire harness side connector.
Standard resistance

Tester Connection	Specified Condition
L7-17 (BBP+) - Body ground	1 MΩ or higher
L7-18 (BBP-) - Body ground	1 MΩ or higher

NG → **REPAIR OR REPLACE FLOOR WIRE**

OK

RS

6 CHECK FLOOR WIRE (OPEN)

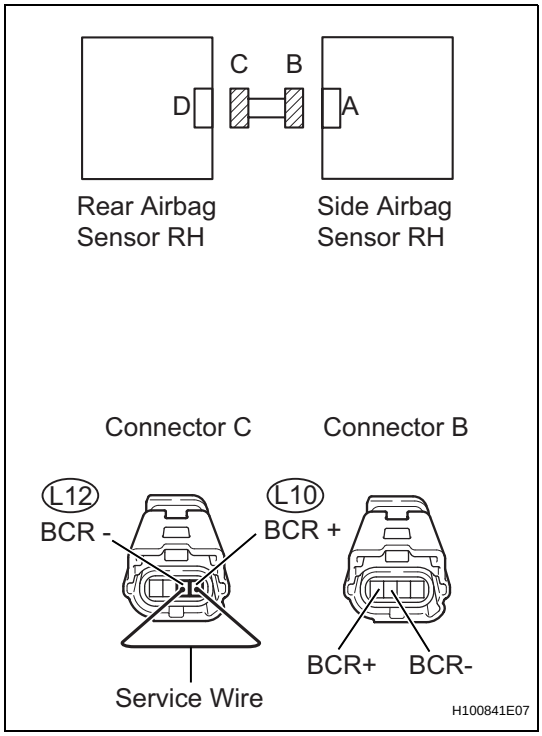

(a) Disconnect the connectors from the side airbag sensor RH and the rear airbag sensor RH.
(b) Using a service wire, connect L12-1 (BCR-) and L12-2 (BCR+) of connector C.
NOTICE:
Do not forcibly insert the service wire into the terminals of the connector when connecting.
(c) Measure the resistance of the wire harness side connector.
Standard resistance

Tester Connection	Specified Condition
L10-1 (BCR+) - L10-2 (BCR-)	Below 1 Ω

NG → **REPAIR OR REPLACE FLOOR WIRE**

OK

7 CHECK FLOOR WIRE (SHORT)

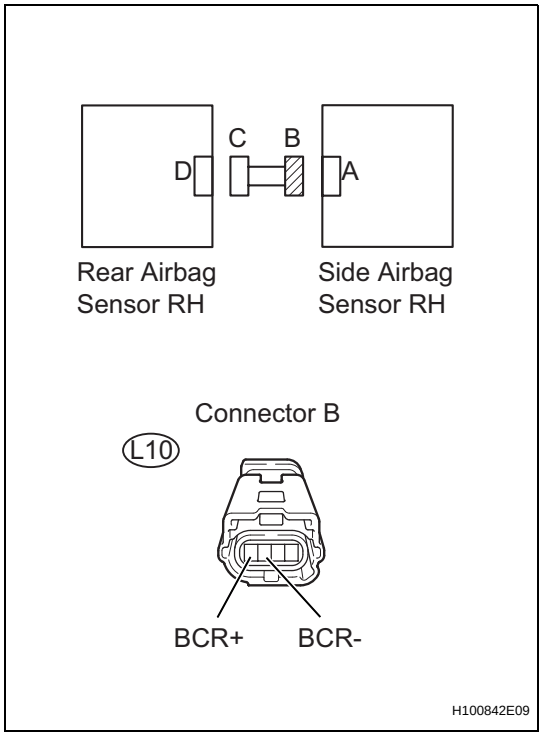

(a) Disconnect the service wire from connector C.
(b) Measure the resistance of the wire harness side connectors.
Standard resistance

Tester Connection	Specified Condition
L10-1 (BCR+) - L10-2 (BCR-)	1 MΩ or higher

NG → **REPAIR OR REPLACE FLOOR WIRE**

OK

RS

8 CHECK FLOOR WIRE (TO B+)

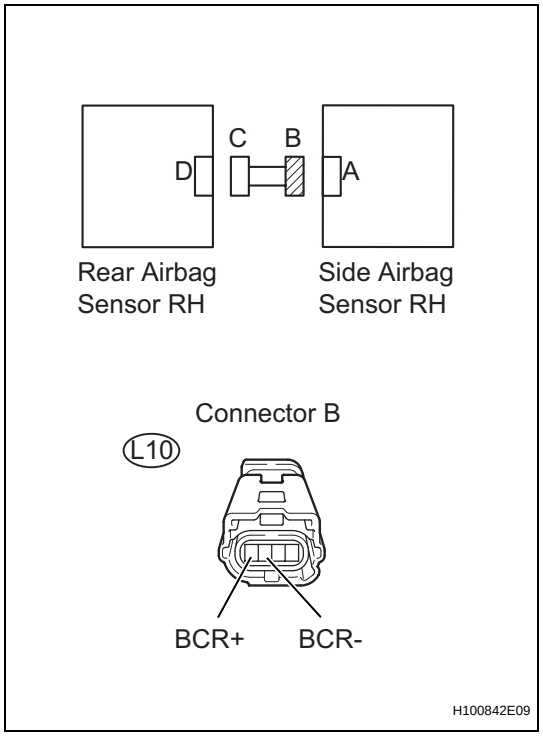

(a) Connect the cable to the negative (-) battery terminal, and wait for at least 2 seconds.
(b) Turn the ignition switch ON.
(c) Measure the voltage of the wire harness side connector.
Standard voltage

Tester Connection	Specified Condition
L10-1 (BCR+) - Body ground	Below 1 V
L10-2 (BCR-) - Body ground	Below 1 V

NG → **REPAIR OR REPLACE FLOOR WIRE**

OK

9 CHECK FLOOR WIRE (TO GROUND)

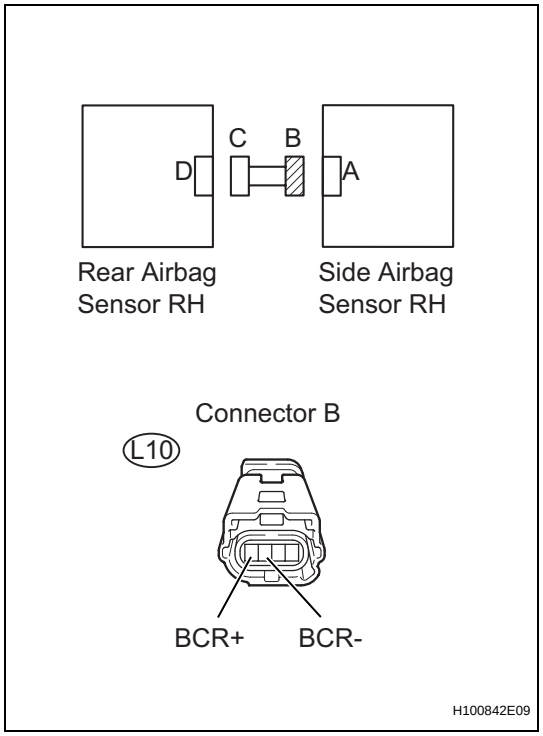

(a) Turn the ignition switch OFF.
(b) Disconnect the cable from the negative (-) battery terminal, and wait for at least 90 seconds.
(c) Measure the resistance of the wire harness side connector.
Standard resistance

Tester Connection	Specified Condition
L10-1 (BCR+) - Body ground	1 MΩ or higher
L10-2 (BCR-) - Body ground	1 MΩ or higher

NG → **REPAIR OR REPLACE FLOOR WIRE**

OK

RS

10 CHECK SIDE AIRBAG SENSOR RH

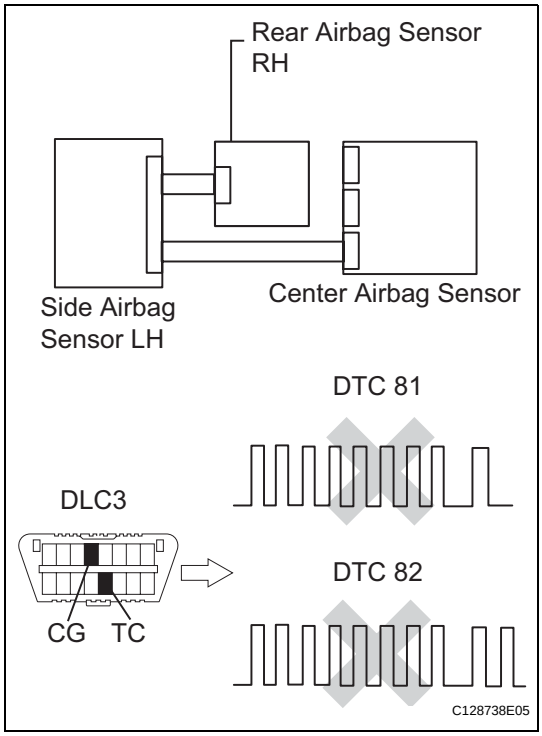

(a) Connect the connectors to the center airbag sensor .
(b) Interchange the side airbag sensor LH with the side airbag sensor RH and connect the connectors to them.
(c) Connect the cable to the negative (-) battery terminal, and wait for at least 2 seconds.
(d) Turn the ignition switch ON, and wait for at least 60 seconds.
(e) Clear the DTCs (see page RS-49).
(f) Turn the ignition switch OFF.
(g) Turn the ignition switch ON, and wait for at least 60 seconds.
(h) Check for DTCs (see page RS-49).

Result

Result	Proceed to
DTC B1623/81, B1632/81, B1633/81, B1642/81, B1628/82, B1637/82, B1638/82 and B1647/82 are not output	A
DTC B1628/82, B1637/82, B1638/82 and B1647/82 are output	B
DTC B1623/81, B1632/81, B1633/81 and B1642/81 are output	C

HINT:
DTCs other than DTC B1623/81, B1632/81, B1633/81, B1642/81, B1628/82, B1637/82, B1638/82 and B1647/82 may be output at this time, but they are not related to this check.

B → **REPLACE CENTER AIRBAG SENSOR ASSEMBLY**

C → **REPLACE SIDE AIRBAG SENSOR RH**

A

RS

11	CHECK REAR AIRBAG SENSOR RH

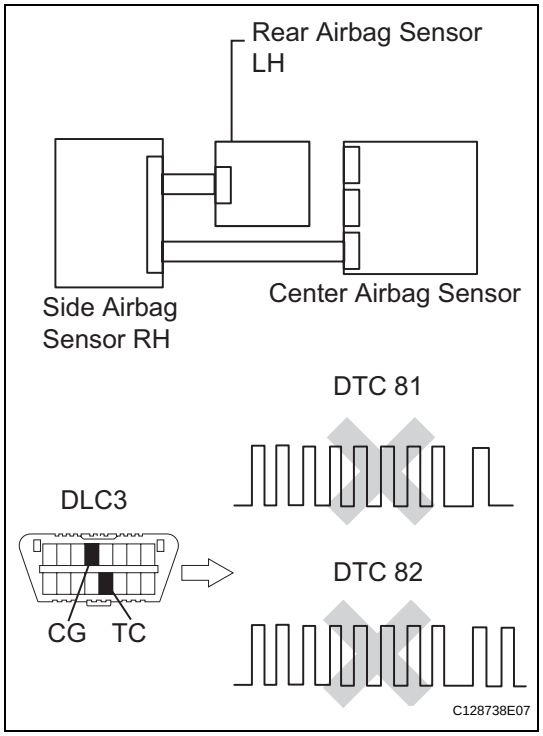

(a) Turn the ignition switch OFF.
(b) Disconnect the cable from the negative (-) battery terminal, and wait for at least 90 seconds.
(c) Interchange the rear airbag sensor RH with the rear airbag sensor LH and connect the connectors to them.
(d) Connect the cable to the negative (-) battery terminal, and wait for at least 2 seconds.
(e) Turn the ignition switch ON, and wait for at least 60 seconds.
(f) Clear the DTCs (see page RS-49).
(g) Turn the ignition switch ON, and wait for at least 60 seconds.
(h) Check the DTCs (see page RS-49).

Result

Result	Proceed to
DTC B1623/81, B1632/81, B1633/81, B1642/81, B1628/82, B1637/82, B1638/82 and B1647/82 are not output	A
DTC B1628/82, B1637/82, B1638/82 and B1647/82 are output	B
DTC B1623/81,B1632/81, B1633/81 and B1642/81 are output	C

HINT:
DTCs other than DTC B1623/81, B1632/81, B1633/81, B1642/81, B1628/82, B1637/82, B1638/82 and B1647/82 may be output at this time, but they are not related to this check.

B → **REPLACE CENTER AIRBAG SENSOR ASSEMBLY**

C → **REPLACE REAR AIRBAG SENSOR RH**

A

USE SIMULATION METHOD TO CHECK

RS

DTC	B1630/23	Driver Side Rear Airbag Sensor Circuit Malfunction

DESCRIPTION

The rear airbag sensor LH consists of parts including the diagnostic circuit and the lateral deceleration sensor.
When the center airbag sensor receives signals from the lateral deceleration sensor, it determines whether or not the SRS should be activated.
DTC B1630/23 is recorded when a malfunction is detected in the rear airbag sensor LH circuit.

DTC No.	DTC Detection Condition	Trouble Area
B1630/23	When one of following conditions is met: • Rear airbag sensor LH malfunction • Center airbag sensor malfunction	• Rear airbag sensor LH • Center airbag sensor

WIRING DIAGRAM

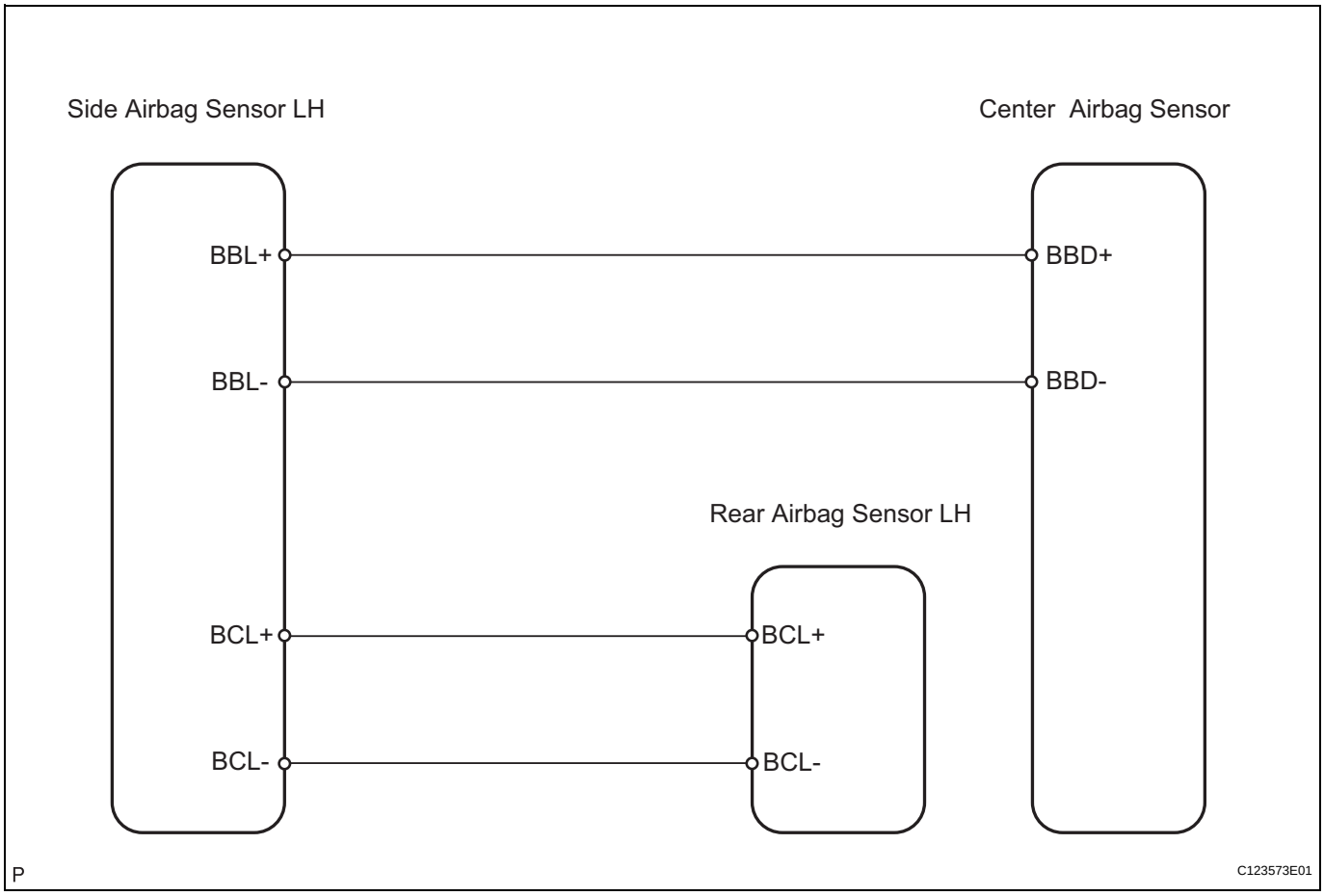

RS

INSPECTION PROCEDURE

1	CHECK REAR AIRBAG SENSOR LH

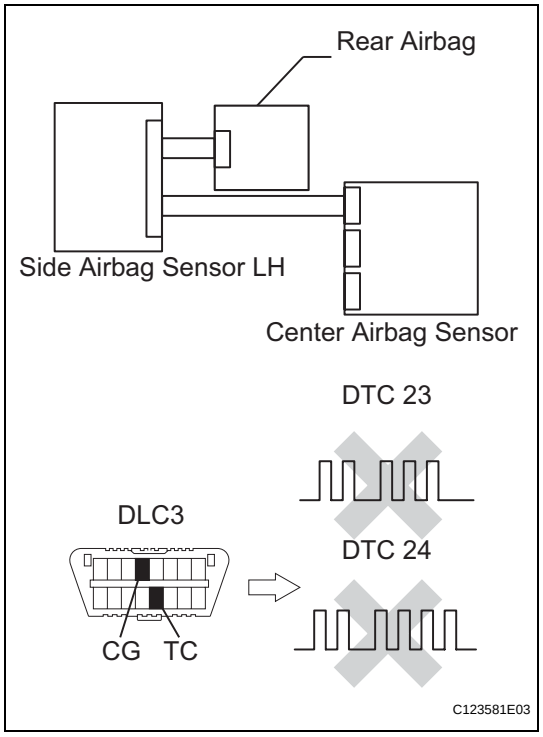

(a) Turn the ignition switch OFF.
(b) Disconnect the cable from the negative (-) battery terminal, and wait for at least 90 seconds.
(c) Interchange the side airbag sensor RH with the side airbag sensor LH and connect the connectors to them.
(d) Connect the cable to the negative (-) battery terminal, and wait for at least 2 seconds.
(e) Turn the ignition switch ON, and wait for at least 60 seconds.
(f) Clear the DTCs (see page RS-49).
(g) Turn the ignition switch OFF.
(h) Turn the ignition switch ON, and wait for at least 60 seconds.
(i) Check the DTCs (see page RS-49).

Result

Result	Proceed to
DTC B1630/23 and B1635/24 are not output.	A
DTC B1630/23 is output.	B
DTC B1635/24 is output.	C

HINT:
DTCs other than DTC B1630/23 and B1635/24 may be output at this time, but they are not related to this check.

B → **REPLACE CENTER AIRBAG SENSOR ASSEMBLY**

C → **REPLACE REAR AIRBAG SENSOR LH**

A

USE SIMULATION METHOD TO CHECK

RS

DTC	B1635/24	Front Passenger Side Rear Airbag Sensor Circuit Malfunction

DESCRIPTION

The rear airbag sensor RH consists of parts including the diagnostic circuit and the lateral deceleration sensor.
When the center airbag sensor receives signals from the lateral deceleration sensor, it determines whether or not the SRS should be activated.
DTC B1635/24 is recorded when a malfunction is detected in the rear airbag sensor RH circuit.

DTC No.	DTC Detection Condition	Trouble Area
B1635/24	When one of following conditions is met: • Rear airbag sensor RH malfunction • Center airbag sensor malfunction	• Rear airbag sensor RH • Center airbag sensor

WIRING DIAGRAM

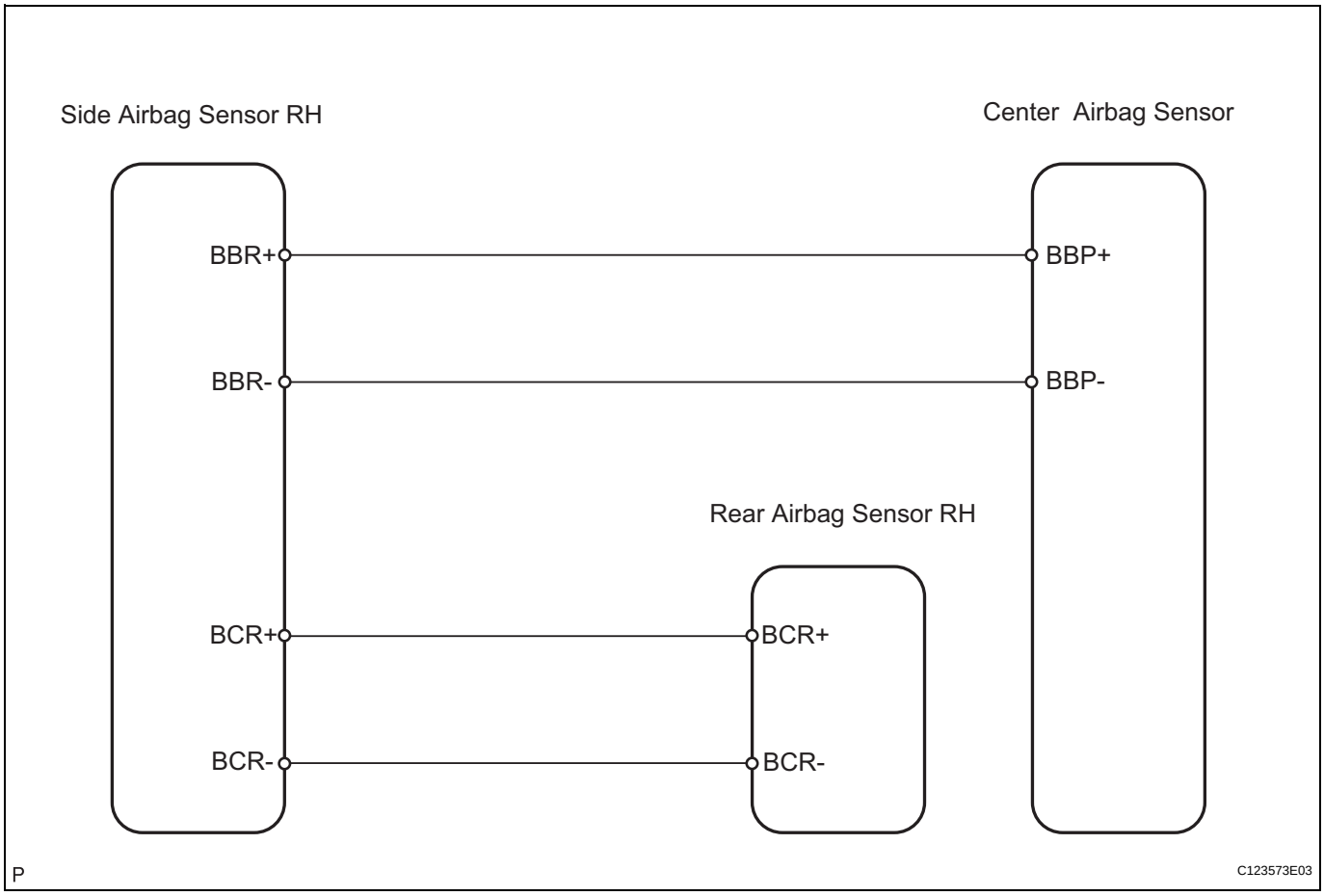

RS

INSPECTION PROCEDURE

1	CHECK REAR AIRBAG SENSOR RH

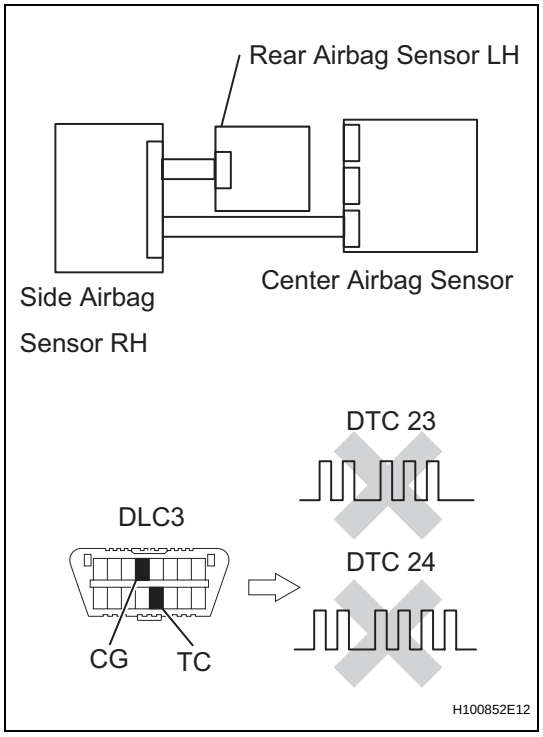

(a) Turn the ignition switch OFF.
(b) Disconnect the cable from the negative (-) battery terminal, and wait for at least 90 seconds.
(c) Interchange the side airbag sensor RH with the side airbag sensor LH and connect the connectors to them.
(d) Connect the cable to the negative (-) battery terminal, and wait for at least 2 seconds.
(e) Turn the ignition switch ON, and wait for at least 60 seconds.
(f) Clear the DTCs (see page RS-49).
(g) Turn the ignition switch OFF.
(h) Turn the ignition switch ON, and wait for at least 60 seconds.
(i) Check the DTCs (see page RS-49).

Result

Result	Proceed to
DTC B1630/23 and B1635/24 are not output.	A
DTC B1630/23 is output.	B
DTC B1635/24 is output.	C

DTCs other than DTC B1630/23 and B1635/24 may be output at this time, but they are not related to this check.

B → **REPLACE REAR AIRBAG SENSOR RH**

C → **REPLACE CENTER AIRBAG SENSOR ASSEMBLY**

A

USE SIMULATION METHOD TO CHECK

RS

DTC	B1643/81	Driver Side Satellite Sensor Bus Initialization Incomplete

DESCRIPTION

The side airbag sensor LH consists of part including the diagnostic circuit and the lateral deceleration sensor.
When the center airbag sensor receives signals from the lateral deceleration sensor, it determines whether or not the SRS should be activated.
DTC B1643/81 is set when a malfunction is detected in the side airbag sensor LH circuit.

DTC No.	DTC Detection Condition	Trouble Area
B1643/81	When one of following conditions is met: • Center airbag sensor detects open circuit signal in side airbag sensor LH circuit for 2 seconds. • Side airbag sensor LH malfunction • Center airbag sensor malfunction	• Floor wire • Side airbag sensor LH • Center airbag sensor

WIRING DIAGRAM

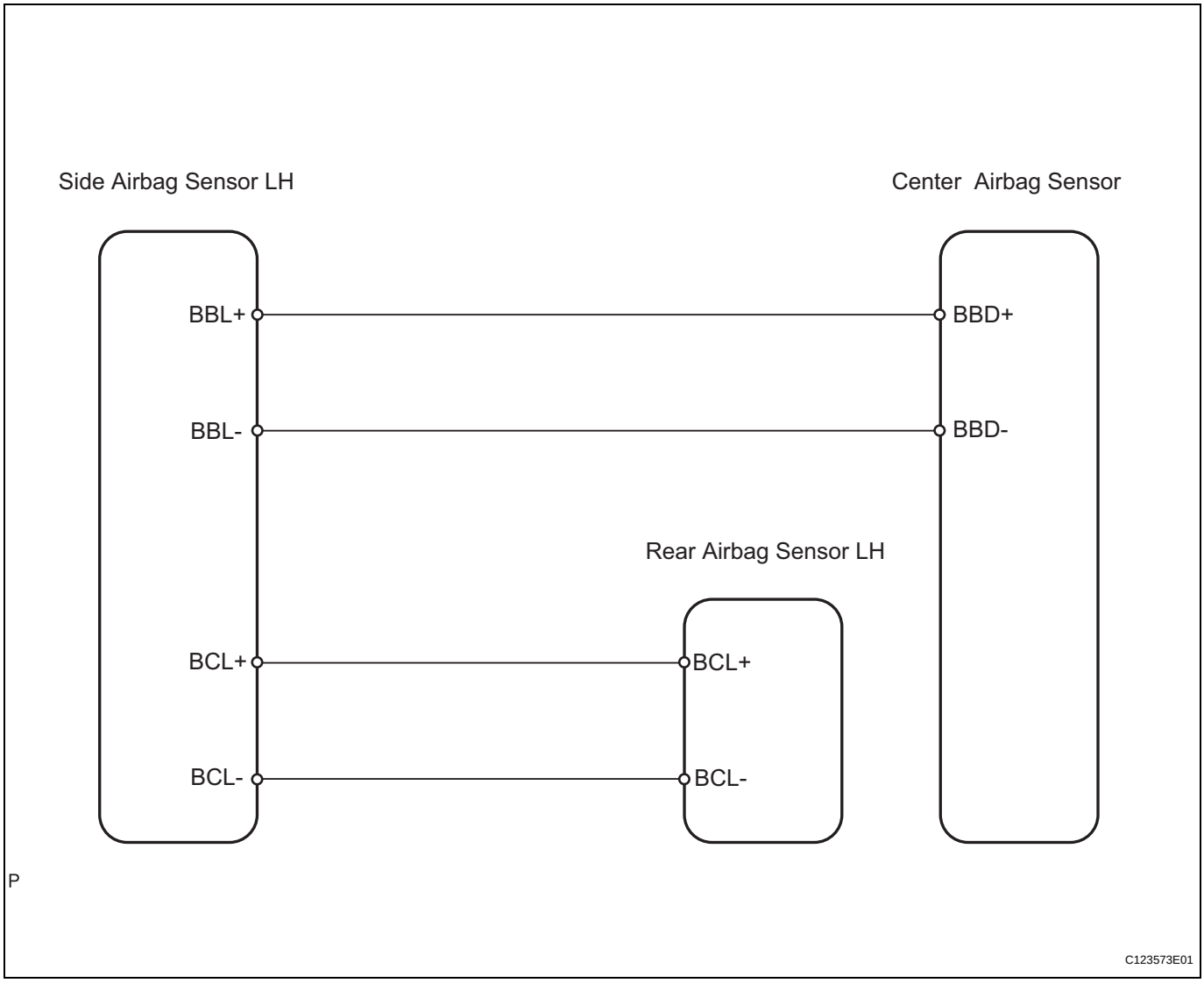

RS

P

INSPECTION PROCEDURE

1	CHECK FOR DTC

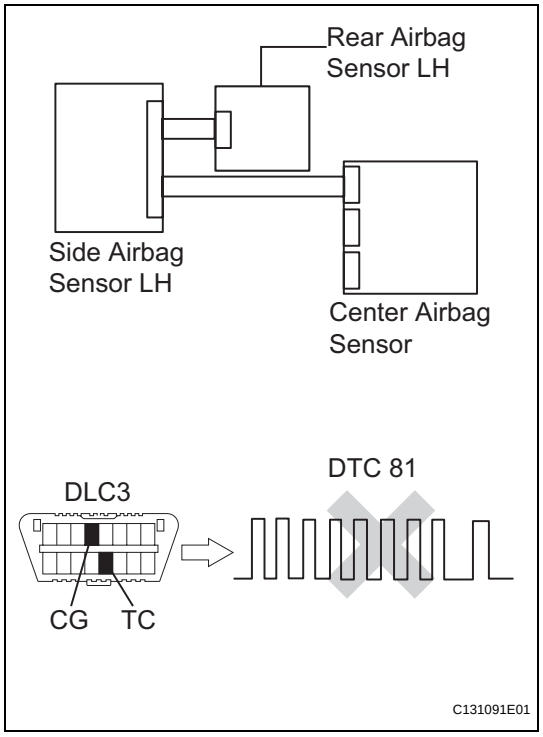

(a) Turn the ignition switch ON, and wait for at least 60 seconds.
(b) Clear the DTCs (see page RS-49).
(c) Turn the ignition switch OFF.
(d) Turn the ignition switch ON, and wait for at least 60 seconds.
(e) Check the DTCs (see page RS-49).

OK:

DTC B1622/81 is not output.
DTC B1632/81 is not output.

HINT:
DTCs other than DTC B1622/81 and B1632/81 may be output at this time, but they are not related to this check.

NG → **GO TO DTC OUTPUT**

OK

2	CHECK CONNECTION OF CONNECTOR

(a) Turn the ignition switch OFF.
(b) Disconnect the cable from the negative (-) terminal battery, and wait for at least 90 seconds.
(c) Check that the connectors are properly connected to the center airbag sensor, rear airbag sensor LH and the side airbag sensor LH.

OK:

The connectors are properly connected.

NG → **CONNECT CONNECTOR**

OK

RS

3 CHECK FLOOR WIRE (OPEN)

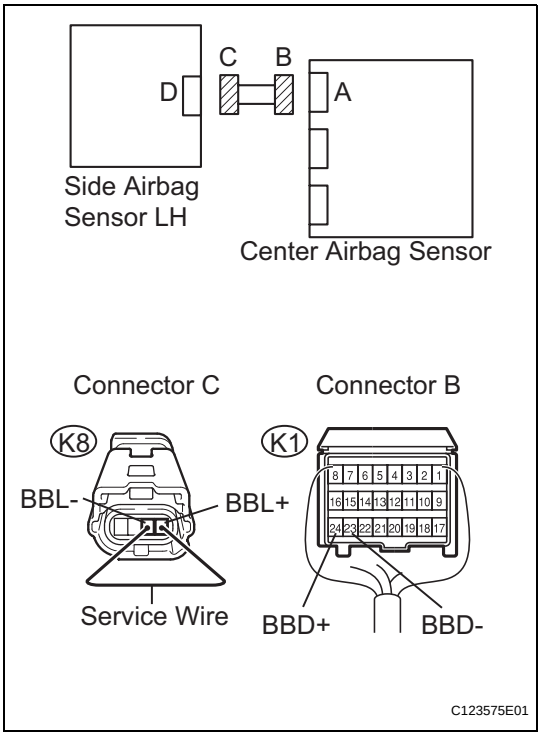

(a) Disconnect the connectors from the center airbag sensor and the side airbag sensor LH.
(b) Using a service wire, connect K8-4 (BBL+) and K8-3 (BBL-) of connector C.
NOTICE:
Do not forcibly insert the service wire into the terminals of the connector when connecting.
(c) Measure the resistance of the wire harness side connector.
Standard resistance

Tester Connection	Specified Condition
K1-24 (BBD+) - K1-23 (BBD-)	Below 1 Ω

NG → **REPAIR OR REPLACE FLOOR WIRE**

OK

4 CHECK FLOOR WIRE (SHORT)

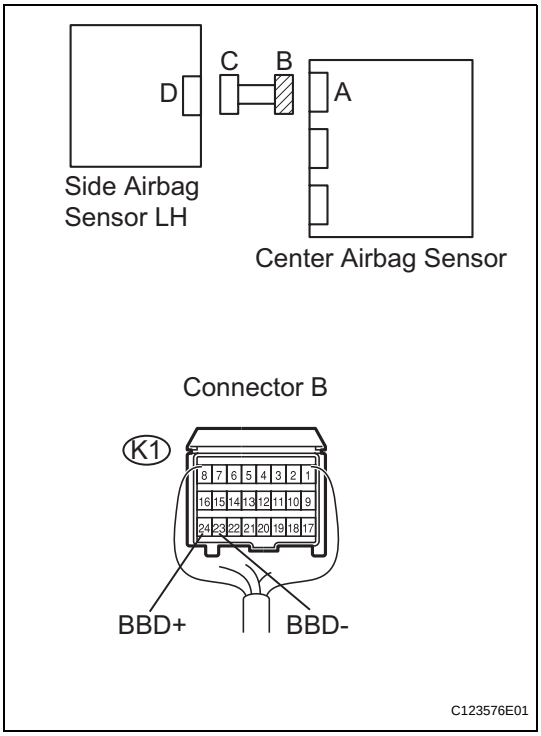

(a) Disconnect the service wire from connector C.
(b) Measure the resistance of the wire harness side connector.
Standard resistance

Tester Connection	Specified Condition
K1-24 (BBD+) - K1-23 (BBD-)	1 MΩ or higher

NG → **REPAIR OR REPLACE FLOOR WIRE**

OK

RS

5 CHECK FLOOR WIRE (TO B+)

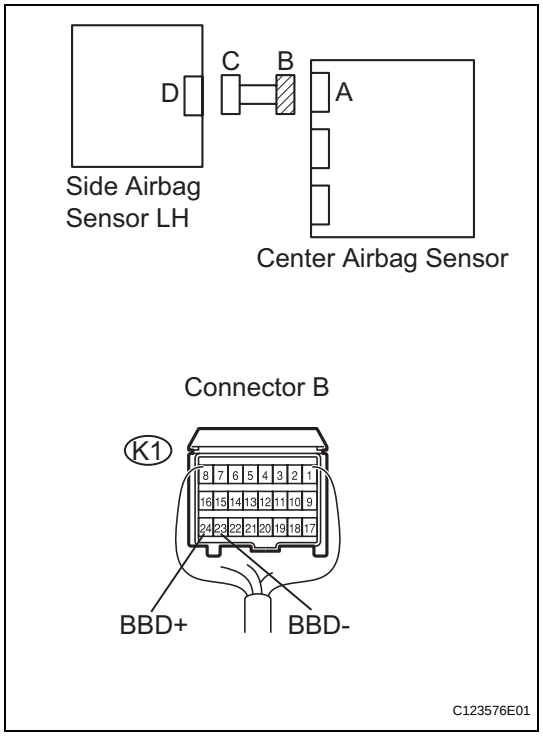

(a) Connect the cable to the negative (-) battery terminal, and wait for at least 2 seconds.
(b) Turn the ignition switch ON.
(c) Measure the voltage of the wire harness side connector.
Standard voltage

Tester Connection	Specified Condition
K1-24 (BBD+) - Body ground	Below 1 V
K1-23 (BBD-) - Body ground	Below 1 V

NG → **REPAIR OR REPLACE FLOOR WIRE**

OK

6 CHECK FLOOR WIRE (TO GROUND)

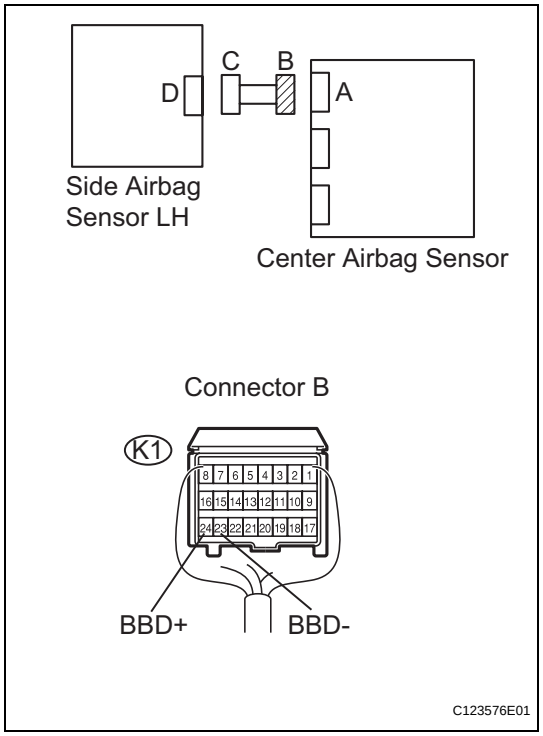

(a) Turn the ignition switch OFF.
(b) Disconnect the cable from the negative (-) battery terminal, and wait for at least 90 seconds.
(c) Measure the resistance of the wire harness side connector.
Standard resistance

Tester Connection	Specified Condition
K1-24 (BBD+) - Body ground	1 MΩ or higher
K1-23 (BBD-) - Body ground	1 MΩ or higher

NG → **REPAIR OR REPLACE FLOOR WIRE**

OK

RS

7 CHECK FLOOR WIRE (OPEN)

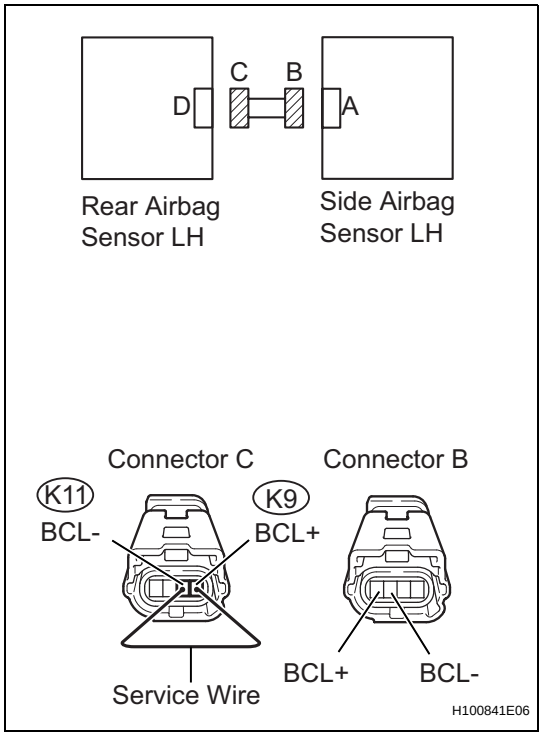

(a) Disconnect the connectors from the side airbag sensor LH and the rear airbag sensor LH.
(b) Using a service wire, connect K11-1 (BCL-) and K11-2 (BCL+) of connector C.
NOTICE:
Do not forcibly insert the service wire into the terminals of the connector when connecting.
(c) Measure the resistance of the wire harness side connector.
Standard resistance

Tester Connection	Specified Condition
K9-1 (BCL+) - K9-2 (BCL-)	Below 1 Ω

NG → **REPAIR OR REPLACE FLOOR WIRE**

OK

8 CHECK FLOOR WIRE (SHORT)

RS

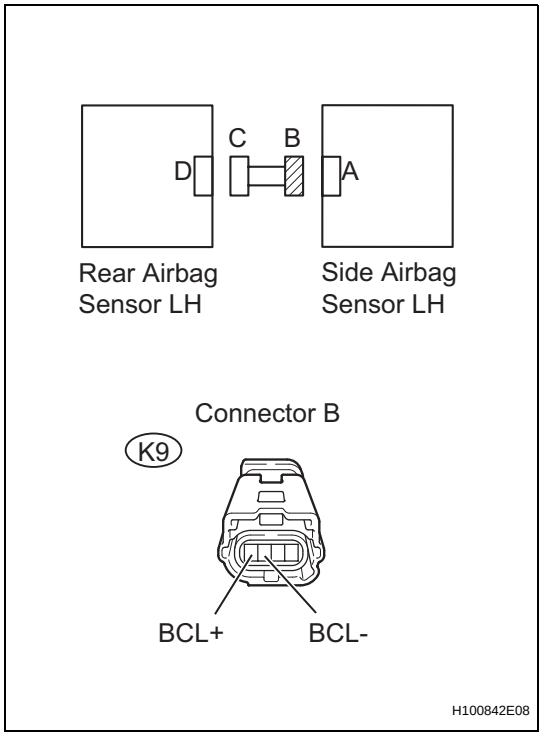

(a) Disconnect the service wire from connector C.
(b) Measure the resistance of the wire harness side connector.
Standard resistance

Tester Connection	Specified Condition
K9-1 (BCL+) - K9-2 (BCL-)	1 MΩ or higher

NG → **REPAIR OR REPLACE FLOOR WIRE**

OK

9 CHECK FLOOR WIRE (TO B+)

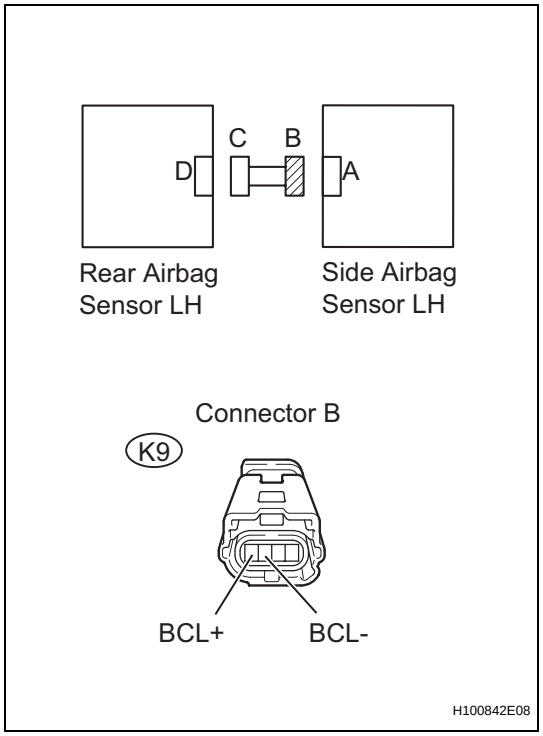

(a) Connect the cable to the negative (-) battery terminal, and wait for at least 2 seconds.
(b) Turn the ignition switch ON.
(c) Measure the voltage of the wire harness side connector.
Standard voltage

Tester Connection	Specified Condition
K9-1 (BCL+) - Body ground	Below 1 V
K9-2 (BCL-) - Body ground	Below 1 V

NG → **REPAIR OR REPLACE FLOOR WIRE**

OK

10 CHECK FLOOR WIRE (TO GROUND)

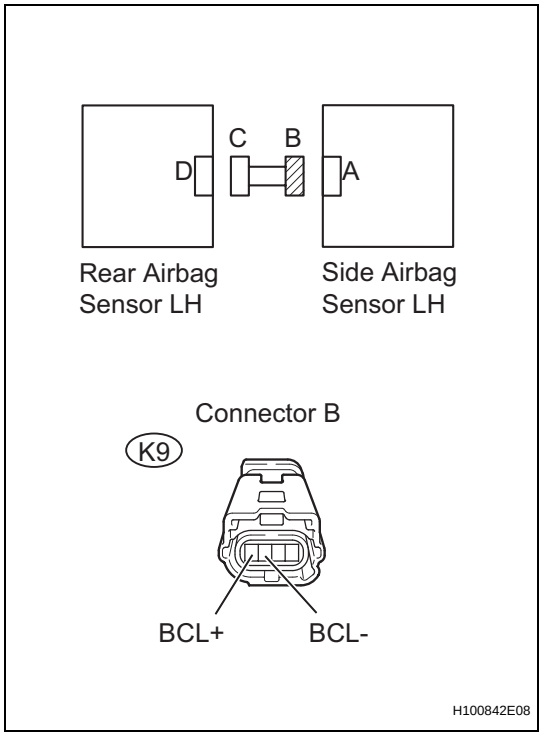

(a) Turn the ignition switch OFF.
(b) Disconnect the cable from the negative (-) battery terminal, and wait for at least 90 seconds.
(c) Measure the resistance of the wire harness side connector.
Standard resistance

Tester Connection	Specified Condition
K9-1 (BCL+) - Body ground	1 MΩ or higher
K9-2 (BCL-) - Body ground	1 MΩ or higher

NG → **REPAIR OR REPLACE FLOOR WIRE**

OK

RS

11	CHECK SIDE AIRBAG SENSOR LH

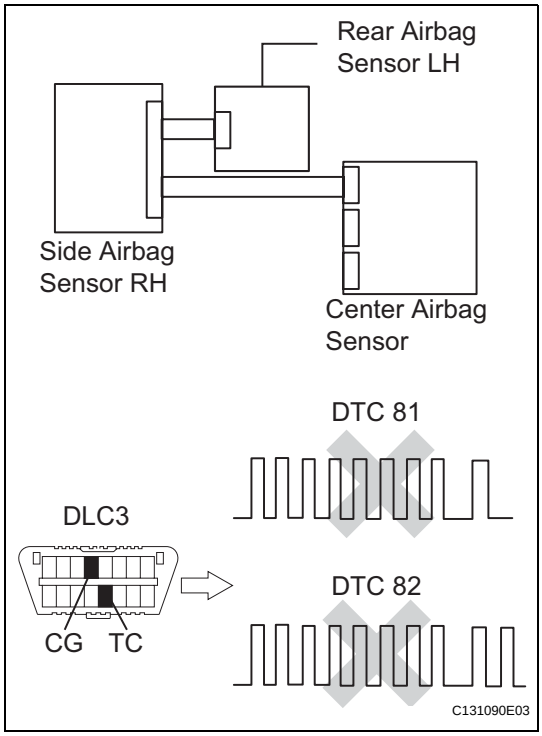

(a) Connect the connectors to the center airbag sensor .
(b) Interchange the side airbag sensor LH with the side airbag sensor RH and connect the connectors to them.
(c) Connect the cable to the negative (-) battery terminal, and wait for at least 2 seconds.
(d) Turn the ignition switch ON, and wait for at least 60 seconds.
(e) Clear the DTCs (see page RS-49).
(f) Turn the ignition switch OFF.
(g) Turn the ignition switch ON, and wait for at least 60 seconds.
(h) Check the DTCs (see page RS-49).

Result

Result	Proceed to
DTC B1643/81 and B1648/82 are not output	A
DTC B1643/81 is output	B
DTC B1648/82 is output	C

HINT:
DTCs other than DTC B1643/81 and B1648/82 may be output at this time, but they are not related to this check.

B → **REPLACE CENTER AIRBAG SENSOR ASSEMBLY**

C → **REPLACE SIDE AIRBAG SENSOR LH**

A

RS

12 CHECK REAR AIRBAG SENSOR LH

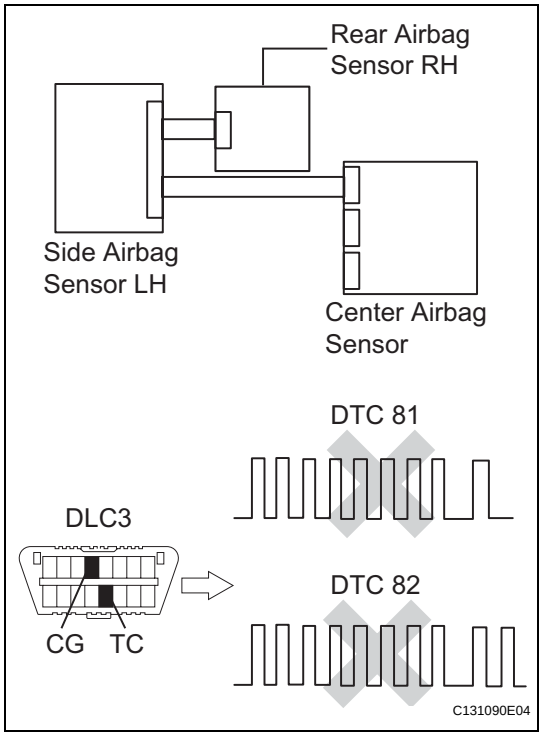

(a) Turn the ignition switch OFF.
(b) Disconnect the cable from the negative (-) terminal battery, and wait for at least 90 seconds.
(c) Interchange the rear airbag sensor LH with the rear airbag sensor RH and connect the connectors to them.
(d) Connect the cable to the negative (-) battery terminal, and wait for at least 2 seconds.
(e) Turn the ignition switch ON, and wait for at least 60 seconds.
(f) Clear the DTCs (see page RS-49).
(g) Turn the ignition switch OFF.
(h) Turn the ignition switch ON, and wait for at least 60 seconds.
(i) Check the DTCs (see page RS-49).

Result

Result	Proceed to
DTC B1643/81 and B1648/82 are not output	A
DTC B1643/81 is output	B
DTC B1648/82 is output	C

HINT:
DTCs other than DTC B1643/81 and B1648/82 may be output at this time, but they are not related to this check.

B → **REPLACE CENTER AIRBAG SENSOR ASSEMBLY**

C → **REPLACE REAR AIRBAG SENSOR LH**

A

USE SIMULATION METHOD TO CHECK

RS

DTC	B1648/82	Front Passenger Side Satellite Sensor Bus Initialization Incomplete

DESCRIPTION

When the center airbag sensor receives signals from the lateral deceleration sensor, it determines whether or not the SRS should be activated.
DTC B1648/82 is recorded when a malfunction is detected in the rear airbag sensor RH circuit.

DTC No.	DTC Detection Condition	Trouble Area
B1648/82	When one of following conditions is met: • Center airbag sensor detects line short signal, open signal, short to ground signal or short to B+ signal in rear airbag sensor RH circuit for 2 seconds. • Rear airbag sensor RH malfunction • Center airbag sensor malfunction	• Floor wire • Rear airbag sensor RH • Center airbag sensor

WIRING DIAGRAM

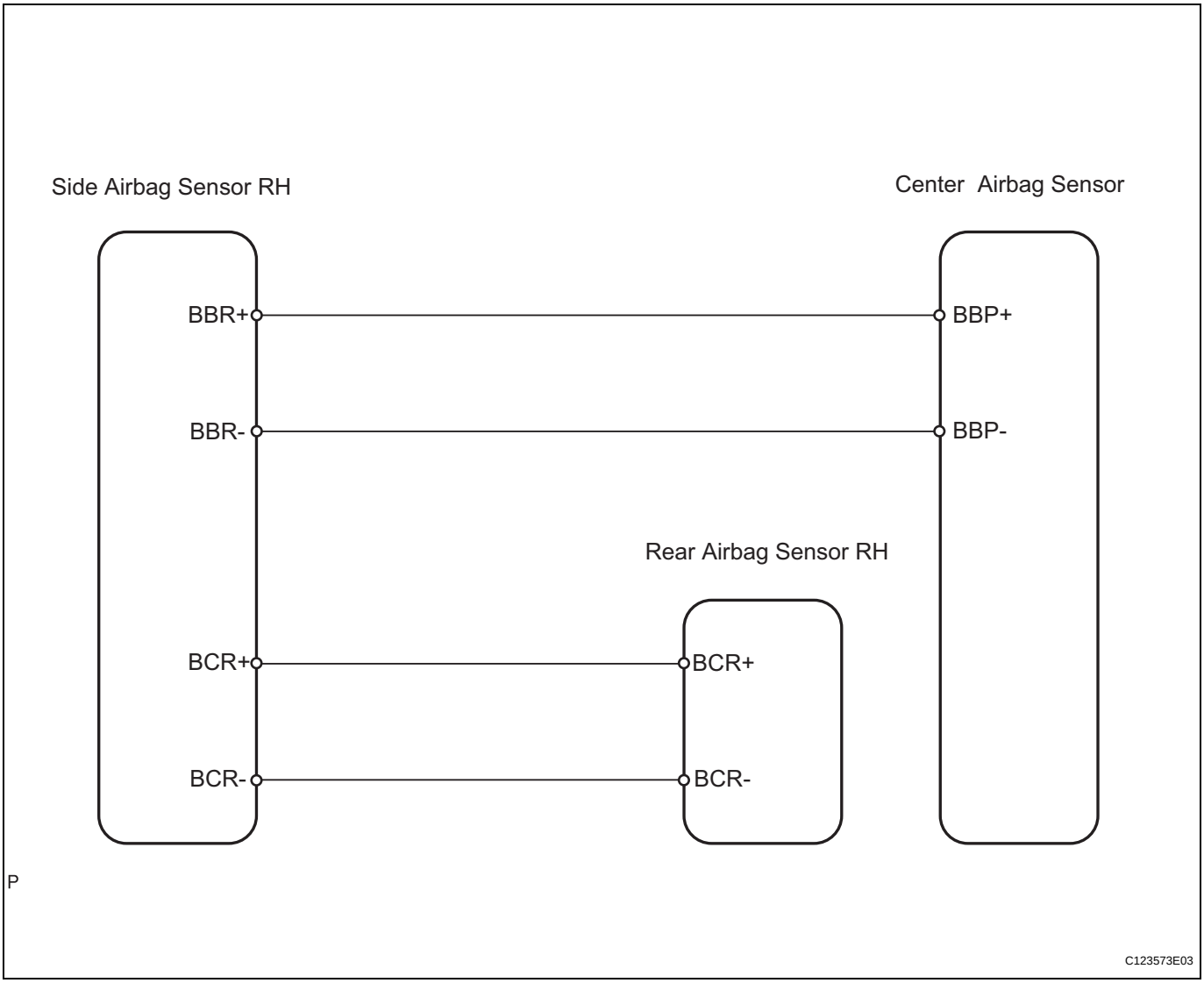

RS

INSPECTION PROCEDURE

1 CHECK FOR DTC

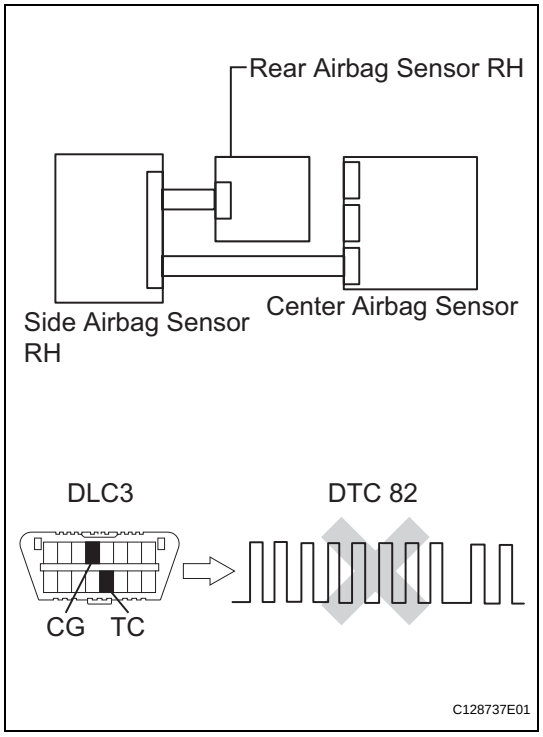

(a) Turn the ignition switch ON, and wait for at least 60 seconds.
(b) Clear the DTCs (see page RS-49).
(c) Turn the ignition switch OFF.
(d) Turn the ignition switch ON, and wait for at least 60 seconds.
(e) Check the DTCs (see page RS-49).
OK:
DTC B1627/82 is not output.
DTC B1637/82 is not output.
HINT:
DTCs other than DTC B1627/82 and B1637/82 may be output at this time, but they are not related to this check.

NG → **GO TO DTC OUTPUT**

OK

2 CHECK CONNECTION OF CONNECTOR

(a) Turn the ignition switch OFF.
(b) Disconnect the cable from the negative (-) battery terminal, and wait for at least 90 seconds.
(c) Check that the connectors are properly connected to the center airbag sensor, rear airbag sensor RH and the side airbag sensor RH.
OK:
The connectors are properly connected.

NG → **CONNECT CONNECTOR**

OK

RS

3 CHECK FLOOR WIRE (OPEN)

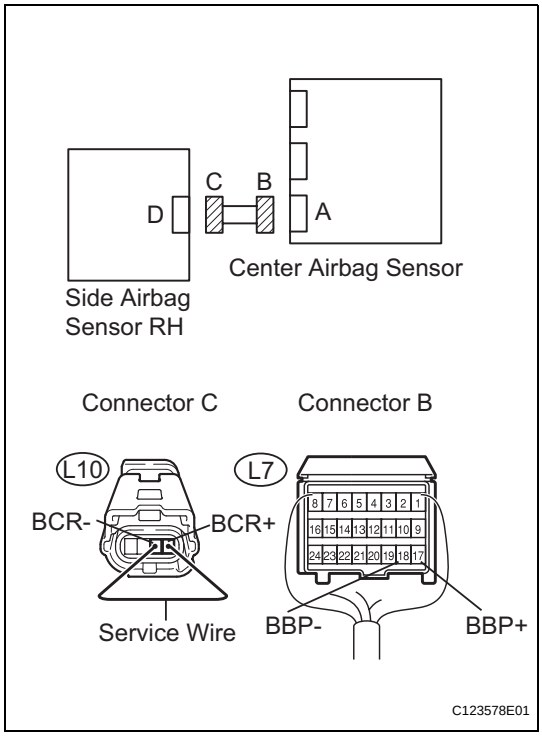

(a) Disconnect the connectors from the center airbag sensor and the side airbag sensor RH.
(b) Using a service wire, connect L10-4 (BBR+) and L10-3 (BBR-) of connector C.
NOTICE:
Do not forcibly insert the service wire into the terminals of the connector when connecting.
(c) Measure the resistance of the wire harness side connector.
Standard resistance

Tester Connection	Specified Condition
L7-17 (BBP+) - L7-18 (BBP-)	Below 1 Ω

NG → **REPAIR OR REPLACE FLOOR WIRE**

OK

4 CHECK FLOOR WIRE (SHORT)

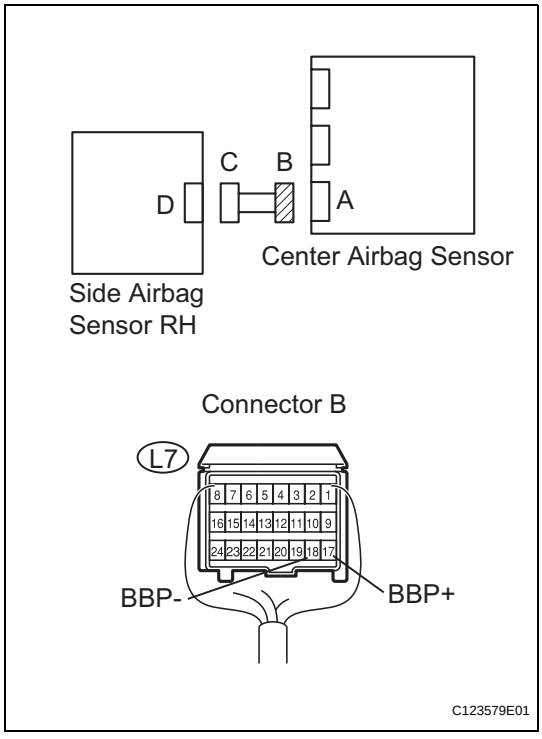

(a) Disconnect the service wire from connector C.
(b) Measure the resistance of the wire harness side connector.
Standard resistance

Tester Connection	Specified Condition
L7-17 (BBP+) - L7-18(BBP-)	1 MΩ or higher

NG → **REPAIR OR REPLACE FLOOR WIRE**

OK

RS

5 CHECK FLOOR WIRE (TO B+)

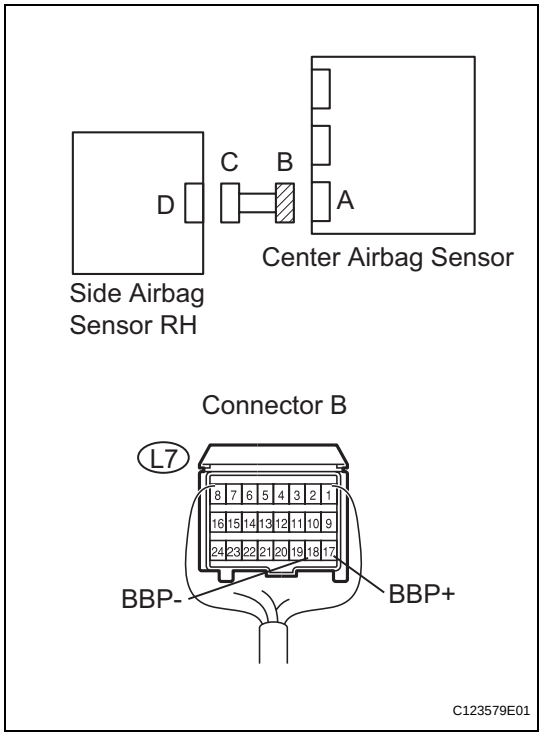

(a) Connect the cable to the negative (-) battery terminal, and wait for at least 2 seconds.
(b) Turn the ignition switch ON.
(c) Measure the voltage of the wire harness side connector.
Standard voltage

Tester Connection	Specified Condition
L7-17 (BBP+) - Body ground	Below 1 V
L7-18 (BBP-) - Body ground	Below 1 V

NG → **REPAIR OR REPLACE FLOOR WIRE**

OK

6 CHECK FLOOR WIRE (TO GROUND)

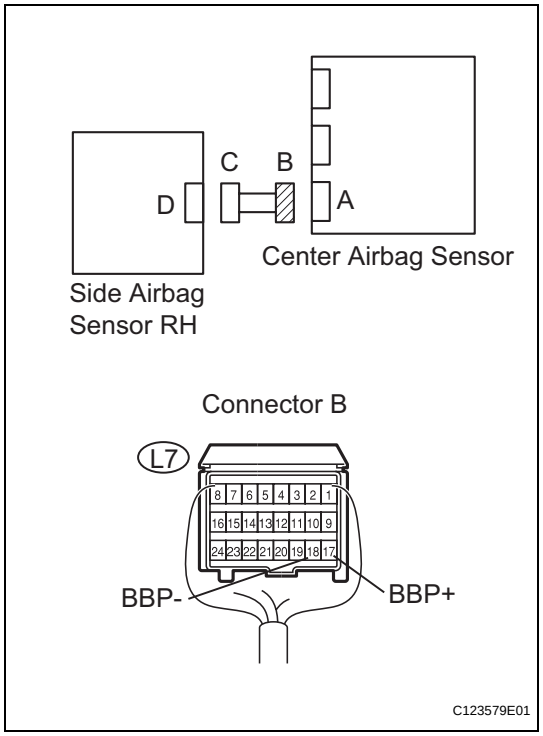

(a) Turn the ignition switch OFF.
(b) Disconnect the cable from the negative (-) battery terminal, and wait for at least 90 seconds.
(c) Measure the resistance of the wire harness side connector.
Standard resistance

Tester Connection	Specified Condition
L7-17 (BBP+) - Body ground	1 MΩ or higher
L7-18 (BBP-) - Body ground	1 MΩ or higher

NG → **REPAIR OR REPLACE FLOOR WIRE**

OK

RS

7 CHECK FLOOR WIRE (OPEN)

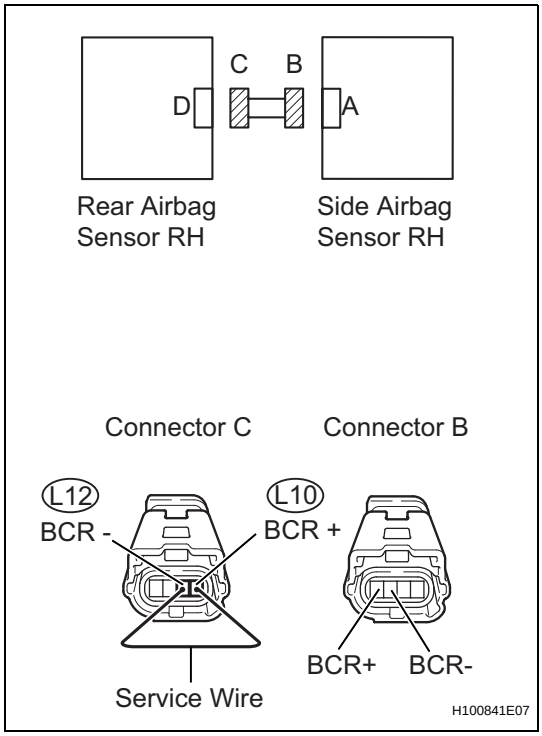

(a) Disconnect the connectors from the side airbag sensor RH and the rear airbag sensor RH.
(b) Using a service wire, connect L12-1 (BCR-) and L12-2 (BCR+) of connector C.
NOTICE:
Do not forcibly insert the service wire into the terminals of the connector when connecting.
(c) Measure the resistance of the wire harness side connector.
Standard resistance

Tester Connection	Specified Condition
L10-1 (BCR+) - L10-2 (BCR-)	Below 1 Ω

NG → **REPAIR OR REPLACE FLOOR WIRE**

OK

8 CHECK FLOOR WIRE (SHORT)

RS

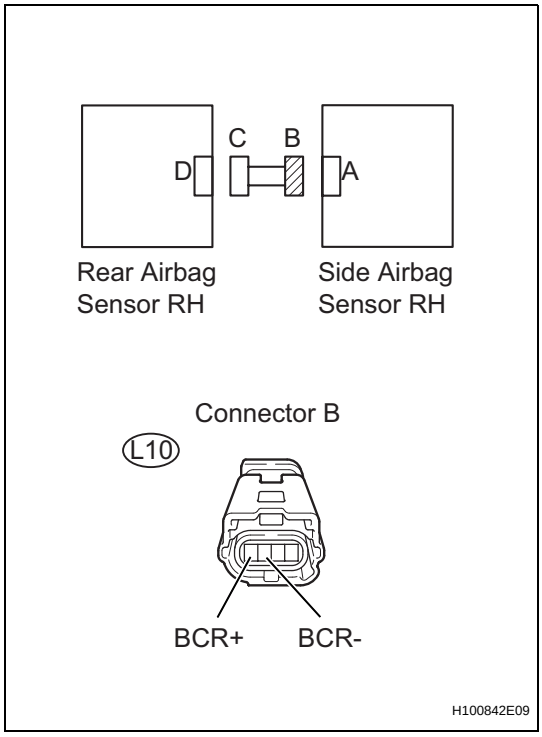

(a) Disconnect the service wire from connector C.
(b) Measure the resistance of the wire harness side connector.
Standard resistance

Tester Connection	Specified Condition
L10-1 (BCR+) - L10-2 (BCR-)	1 MΩ or higher

NG → **REPAIR OR REPLACE FLOOR WIRE**

OK

9 CHECK FLOOR WIRE (TO B+)

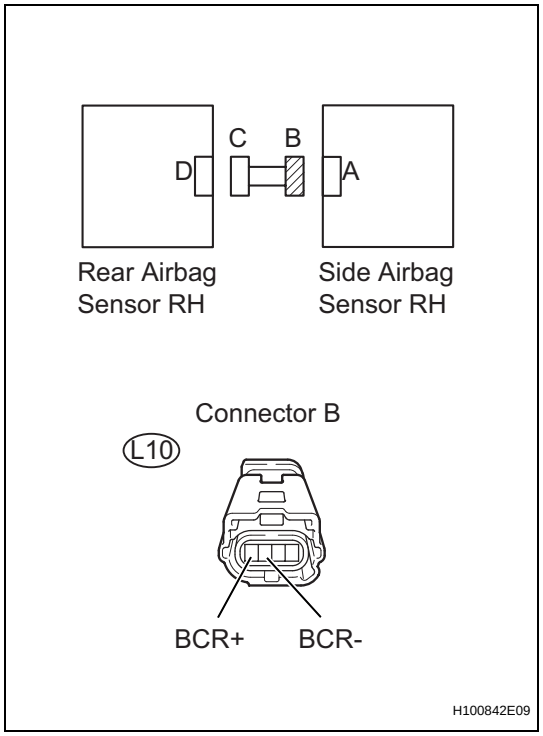

(a) Connect the cable to the negative (-) battery terminal, and wait for at least 2 seconds.
(b) Turn the ignition switch ON.
(c) Measure the voltage of the wire harness side connector.
Standard voltage

Tester Connection	Specified Condition
L10-1 (BCR+) - Body ground	Below 1 V
L10-2 (BCR-) - Body ground	Below 1 V

NG → **REPAIR OR REPLACE FLOOR WIRE**

OK

10 CHECK FLOOR WIRE (TO GROUND)

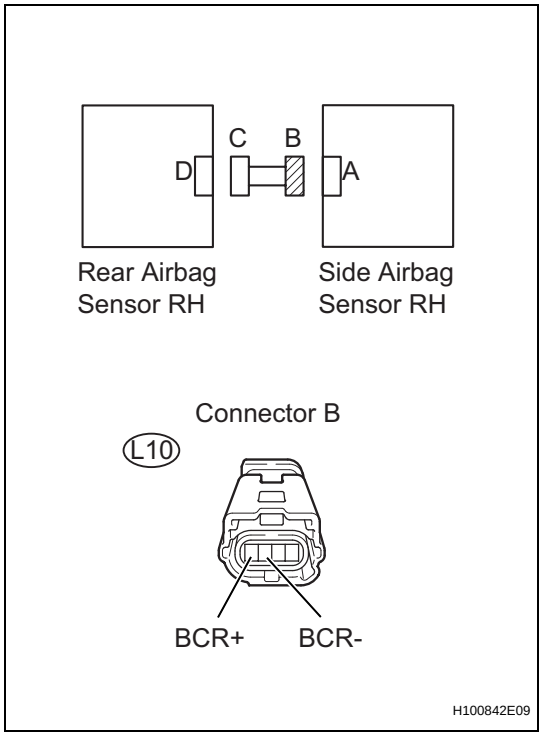

(a) Turn the ignition switch OFF.
(b) Disconnect the cable from the negative (-) battery terminal, and wait for at least 90 seconds.
(c) Measure the resistance of the wire harness side connector.
Standard resistance

Tester Connection	Specified Condition
L10-1 (BCR+) - Body ground	1 MΩ or higher
L10-2 (BCR-) - Body ground	1 MΩ or higher

NG → **REPAIR OR REPLACE FLOOR WIRE**

OK

RS

11 CHECK SIDE AIRBAG SENSOR RH

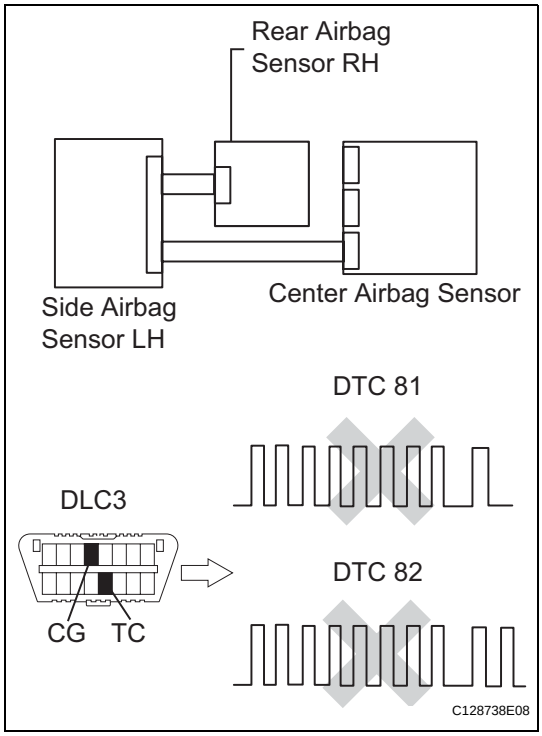

(a) Connect the connectors to the center airbag sensor.
(b) Interchange the side airbag sensor RH with the side airbag sensor LH and connect the connectors to them.
(c) Connect the cable to the negative (-) battery terminal, and wait for at least 2 seconds.
(d) Turn the ignition switch ON, and wait for at least 60 seconds.
(e) Clear the DTCs (see page RS-49).
(f) Turn the ignition switch OFF.
(g) Turn the ignition switch ON, and wait for at least 60 seconds.
(h) Check for DTCs (see page RS-49).

Result

Result	Proceed to
DTC B1643/81 and B1648/82 are not output	A
DTC B1648/82 is output	B
DTC B1643/81 is output	C

HINT:
DTCs other than DTC B1643/81 or B1648/82 may be output at this time, but they are not related to this check.

B → **REPLACE CENTER AIRBAG SENSOR ASSEMBLY**

C → **REPLACE SIDE AIRBAG SENSOR RH**

A

RS

12 CHECK REAR AIRBAG SENSOR RH

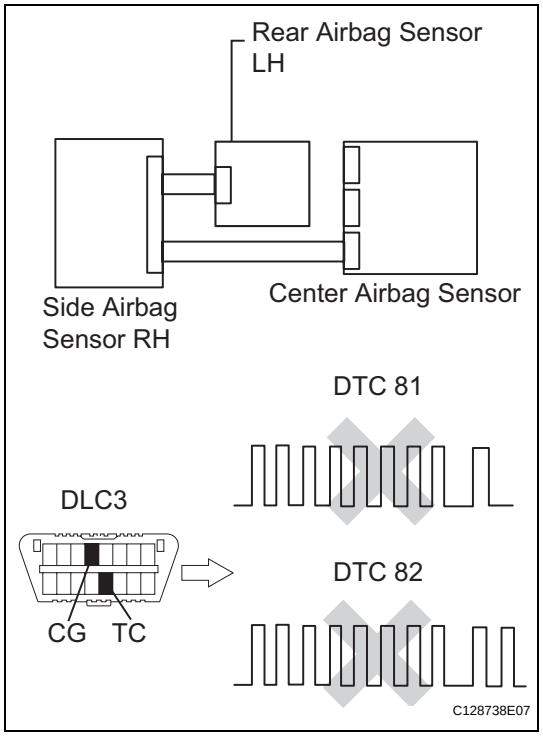

(a) Turn the ignition switch OFF.
(b) Disconnect the cable from the negative (-) battery terminal, and wait for at least 90 seconds.
(c) Interchange the rear airbag sensor LH with the rear airbag sensor RH and connect the connectors to them.
(d) Connect the cable to the negative (-) battery terminal, and wait for at least 2 seconds.
(e) Turn the ignition switch ON, and wait for at least 60 seconds.
(f) Clear the DTCs (see page RS-49).
(g) Turn the ignition switch OFF.
(h) Turn the ignition switch ON, and wait for at least 60 seconds.
(i) Check the DTCs (see page RS-49).

Result

Result	Proceed to
DTC B1643/81 and B1648/82 are not output	A
DTC B1648/82 is output	B
DTC B1643/81 is output	C

B → **REPLACE CENTER AIRBAG SENSOR ASSEMBLY**

C → **REPLACE REAR AIRBAG SENSOR RH**

A

USE SIMULATION METHOD TO CHECK

RS

DTC	B1650/32	Occupant Classification System Malfunction

DESCRIPTION

The occupant classification system circuit consists of the center airbag sensor and the occupant classification system.

When the center airbag sensor receives signals from the occupant classification ECU, it determines whether or not the front passenger airbag, front seat side airbag RH and seat belt pretensioner RH should be operated.

DTC B1650/32 is set when a malfunction is detected in the occupant classification system circuit.

DTC No.	DTC Detection Condition	Trouble Area
B1650/32	When one of following conditions is met: • Occupant classification system malfunction • Center airbag sensor detects line short signal, open signal, short to ground signal or short to B+ signal in occupant classification system circuit for 2 seconds • Center airbag sensor malfunction	• Floor wire • Occupant classification system • Center airbag sensor

WIRING DIAGRAM

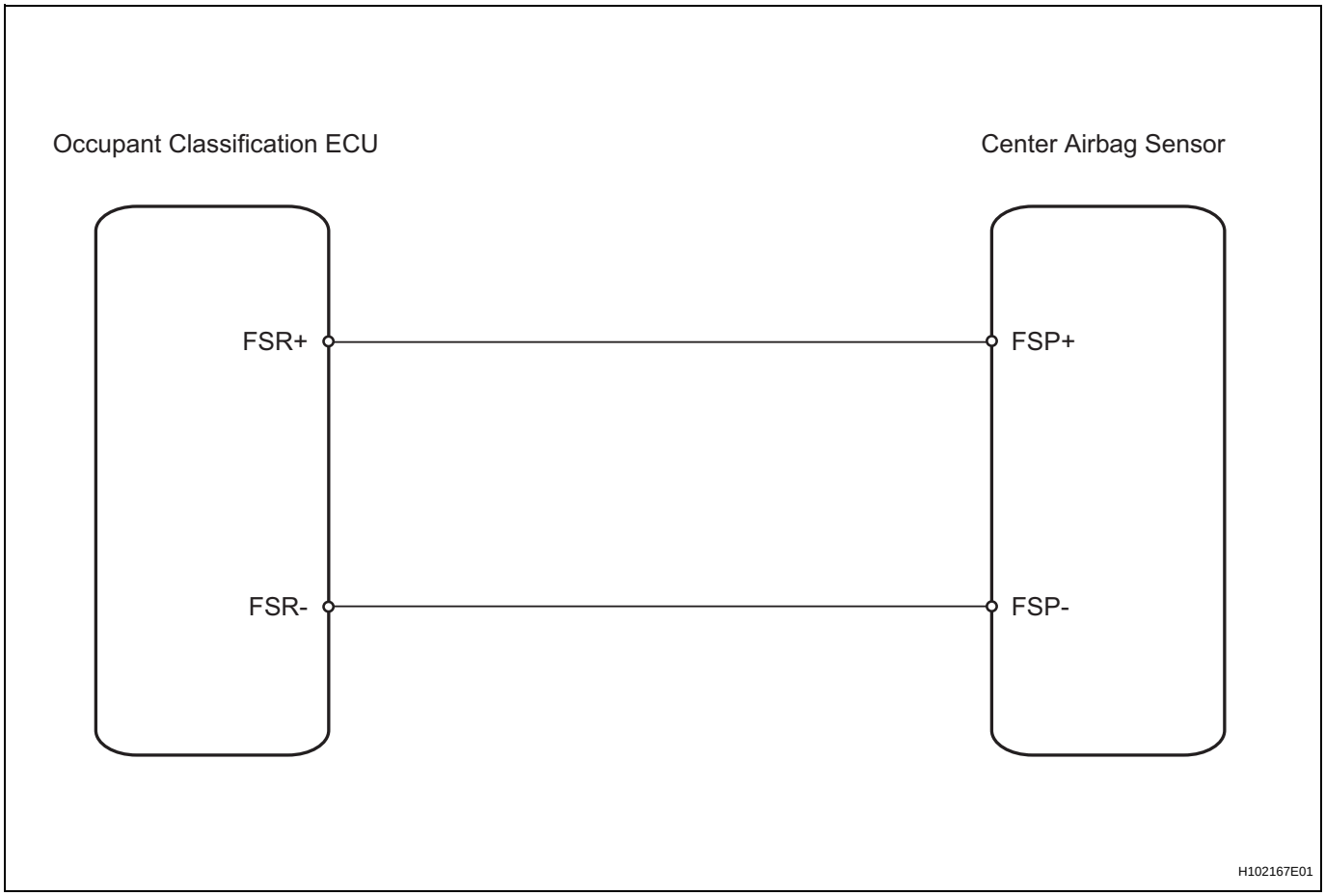

RS

INSPECTION PROCEDURE

1 CHECK FOR DTC (CENTER AIRBAG SENSOR)

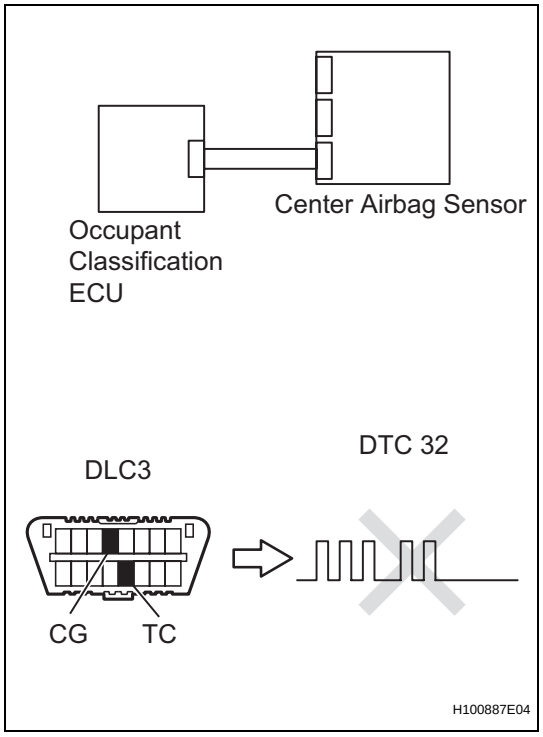

(a) Turn the ignition switch ON, and wait for at least 60 seconds.
(b) Clear the DTCs (see page RS-49).
(c) Turn the ignition switch OFF.
(d) Turn the ignition switch ON, and wait for at least 60 seconds.
(e) Check for DTCs (see page RS-49).

OK:

DTC B1650/32 is not output.

HINT:
DTCs other than B1650/32 may be output at this time, but they are not related to this check.

OK → **USE SIMULATION METHOD TO CHECK**

NG

2 CHECK FOR DTC (OCCUPANT CLASSIFICATION ECU)

(a) Turn the ignition switch ON, and wait for at least 10 seconds.
(b) Using the intelligent tester (with CAN VIM), check for DTCs of the occupant classification ECU (see page RS-249).

OK:

DTC is not output.

NG → **GO TO DTC CHART**

OK

3 CHECK CONNECTION OF CONNECTOR

(a) Turn the ignition switch OFF.
(b) Disconnect the cable from the negative (-) battery terminal, and wait for at least 90 seconds.
(c) Check that the connectors are properly connected to the center airbag sensor and the occupant classification ECU.

OK:

The connectors are properly connected.

RS

NG → CONNECT CONNECTOR

OK

4	CHECK FLOOR WIRE (OPEN)

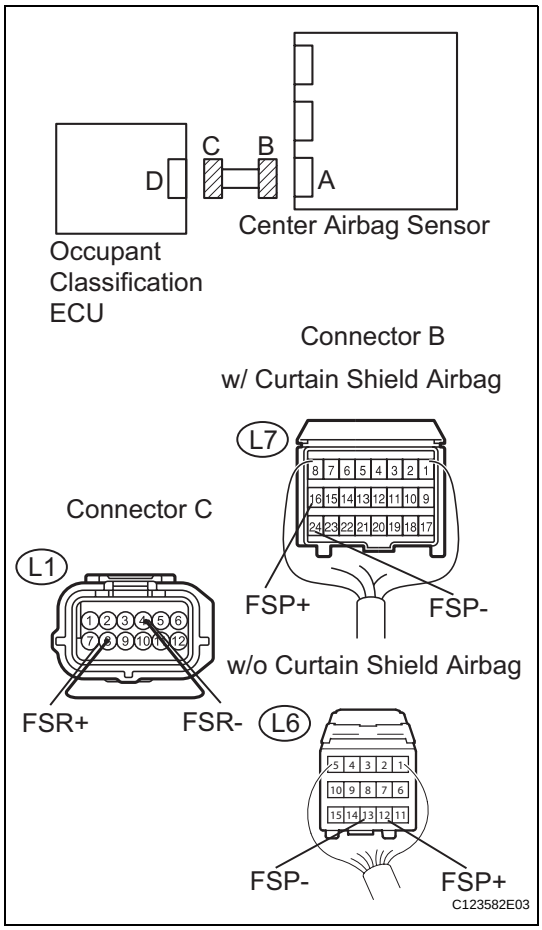

(a) Disconnect the connectors from the center airbag sensor and occupant classification ECU.

(b) Using a service wire, connect L1-8 (FSR+) and L1-4 (FSR-) of connector C.

NOTICE:

Do not forcibly insert the service wire into the terminals of the connector when connecting.

(c) Measure the resistance of the wire harness side connector.

Standard resistance:

w/ Curtain shield airbag

Tester Connection	Specified Condition
L7-16 (FSP+) - L7-24 (FSP-)	Below 1 Ω

w/o Curtain shield airbag

Tester Connection	Specified Condition
L6-12 (FSP+) - L6-13 (FSP-)	Below 1 Ω

NG → REPAIR OR REPLACE FLOOR WIRE

OK

RS

5 CHECK FLOOR WIRE (SHORT)

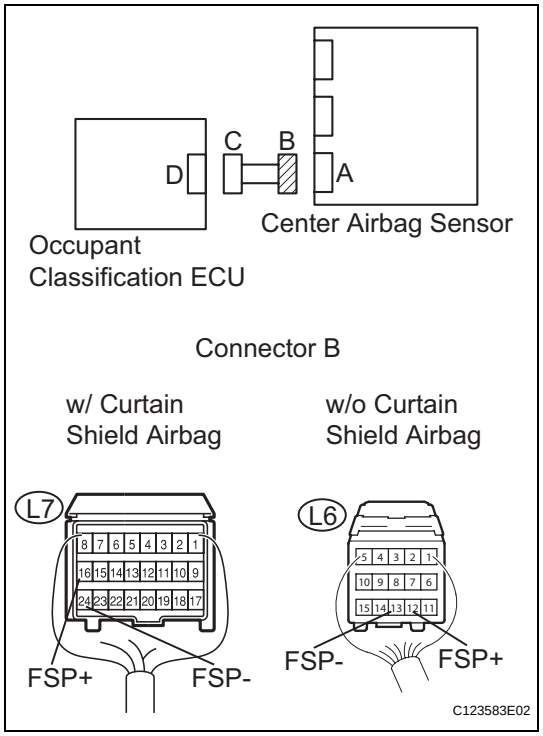

(a) Disconnect the service wire from connector C.
(b) Measure the resistance of the wire harness side connector.
Standard resistance:
w/ Curtain shield airbag

Tester Connection	Specified Condition
L7-16 (FSP+) - L7-24 (FSP-)	1 MΩ or higher

w/o Curtain shield airbag

Tester Connection	Specified Condition
L6-12 (FSP+) - L6-13 (FSP-)	1 MΩ or higher

NG → **REPAIR OR REPLACE FLOOR WIRE**

OK

6 CHECK FLOOR WIRE (TO B+)

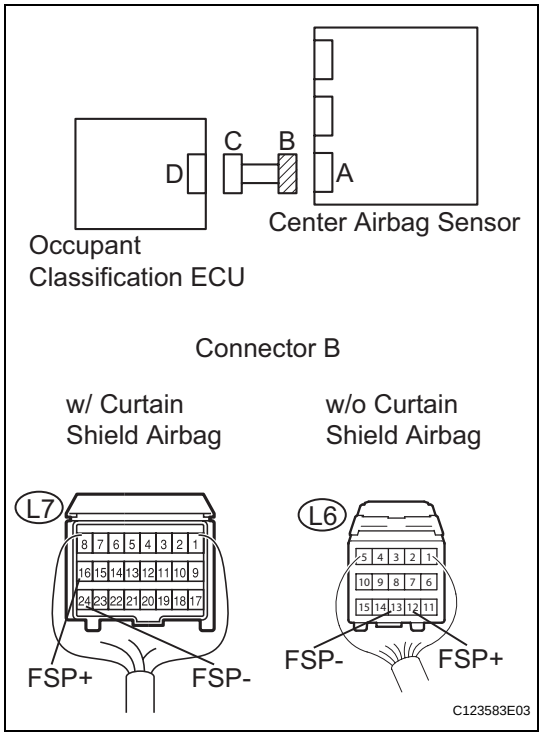

(a) Connect the cable to the negative (-) battery terminal, and wait for at least 2 seconds.
(b) Turn the ignition switch ON.
(c) Measure the voltage of the wire harness side connector.
Standard voltage:
w/ Curtain shield airbag

Tester Connection	Specified Condition
L7-16 (FSP+) - Body ground	Below 1 V
L7-24 (FSP-) - Body ground	Below 1 V

w/o Curtain shield airbag

Tester Connection	Specified Condition
L6-12 (FSP+) - Body ground	Below 1 V
L6-13 (FSP-) - Body ground	Below 1 V

NG → **REPAIR OR REPLACE FLOOR WIRE**

OK

RS

7 CHECK FLOOR WIRE (TO GROUND)

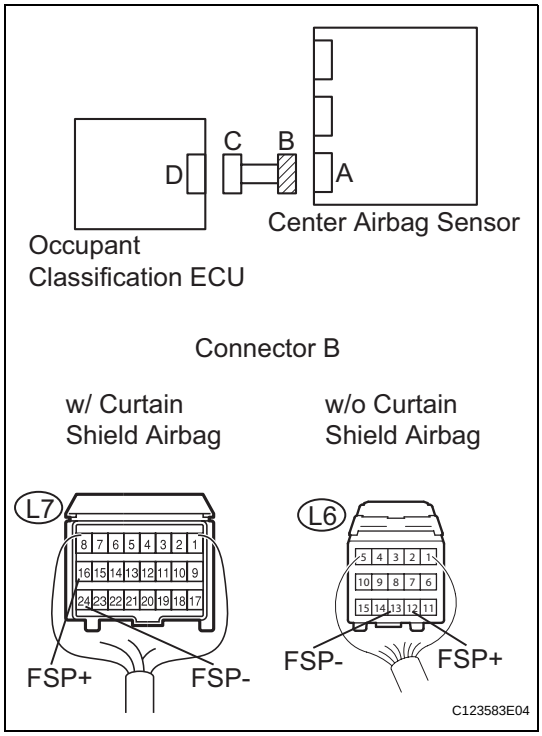

(a) Turn the ignition switch OFF.
(b) Disconnect the cable from the negative (-) battery terminal, and wait for at least 90 seconds.
(c) Measure the resistance of the wire harness side connector.
Standard resistance:
w/ Curtain shield airbag

Tester Connection	Specified Condition
L7-16 (FSP+) - Body ground	1 MΩ or higher
L7-24 (FSP-) - Body ground	1 MΩ or higher

w/o Curtain shield airbag

Tester Connection	Specified Condition
L6-12 (FSP+) - Body ground	1 MΩ or higher
L6-13 (FSP-) - Body ground	1 MΩ or higher

NG → **REPAIR OR REPLACE FLOOR WIRE**

OK

8 CHECK CENTER AIRBAG SENSOR ASSEMBLY

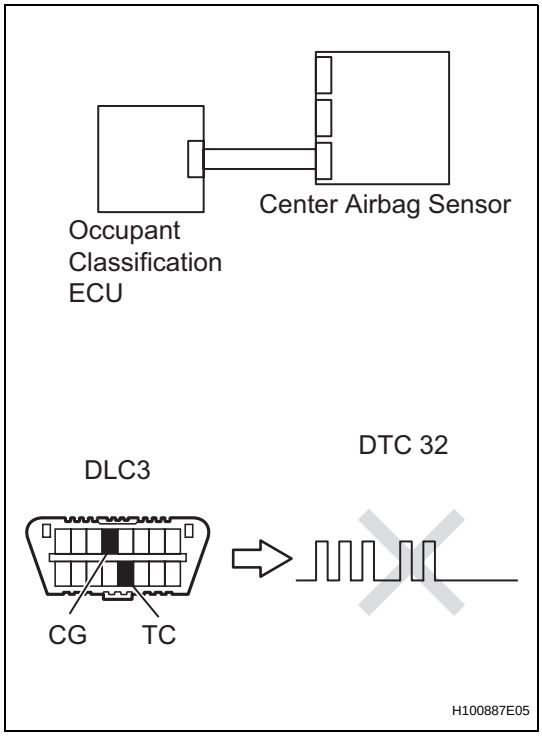

(a) Replace the center airbag sensor (see page RS-374).
HINT:
Perform the inspection using parts from a normal vehicle when possible.
(b) Connect the connectors to the center airbag sensor.
(c) Connect the cable to the negative (-) battery terminal, and wait for at least 2 seconds.
(d) Turn the ignition switch ON, and wait for at least 60 seconds.
(e) Clear the DTCs (see page RS-49).
(f) Turn the ignition switch OFF.
(g) Turn the ignition switch ON, and wait for at least 60 seconds.
(h) Check for DTCs (see page RS-49).
OK:
DTC B1650/32 is not output.
HINT:
DTCs other than B1650/32 may be output at this time, but they are not related to this check.

OK → **USE SIMULATION METHOD TO CHECK**

NG

RS

9	REPLACE OCCUPANT CLASSIFICATION ECU

(a) Turn the ignition switch OFF.
(b) Disconnect the cable from the negative (-) battery terminal, and wait for at least 90 seconds.
(c) Replace the occupant classification ECU (see page RS-392).

NEXT

10	PERFORM ZERO POINT CALIBRATION

(a) Connect the cable to the negative (-) battery terminal, and wait for at least 2 seconds.
(b) Turn the ignition switch ON.
(c) Using the intelligent tester, perform the zero point calibration (see page RS-241).
OK:
COMPLETED is displayed on the tester.

NEXT

11	PERFORM SENSITIVITY CHECK

(a) Using the intelligent tester, perform the sensitivity check (see page RS-241).
Standard value:
27 to 33 kg (59.52 to 72.75 lb)

NEXT

RS

END

DTC	B1653/35	Seat Position Airbag Sensor Circuit Malfunction

DESCRIPTION

The seat position sensor circuit consists of the center airbag sensor and the seat position sensor.
DTC B1653/35 is recorded when a malfunction is detected in the seat position sensor circuit.

DTC No.	DTC Detection Condition	Trouble Area
B1653/35	When one of following conditions is met: • Center airbag sensor detects line short signal, open signal, short to ground signal or short to B+ signal in seat position sensor circuit for 2 seconds. • Seat position sensor malfunction • Center airbag sensor malfunction	• Floor wire • Front seat inner belt LH • Seat position sensor • Center airbag sensor

WIRING DIAGRAM

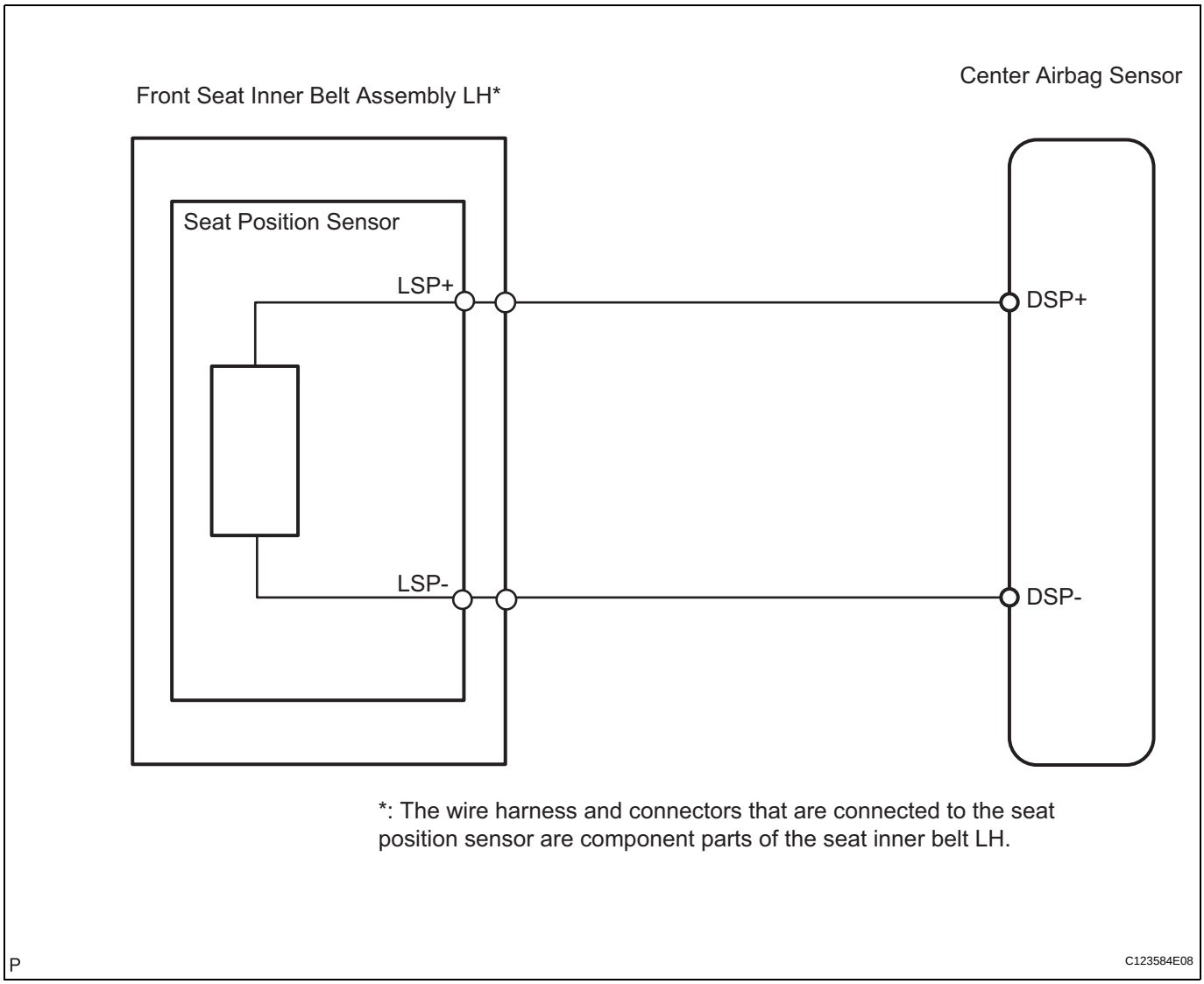

RS

INSPECTION PROCEDURE

1	CHECK FOR DTC

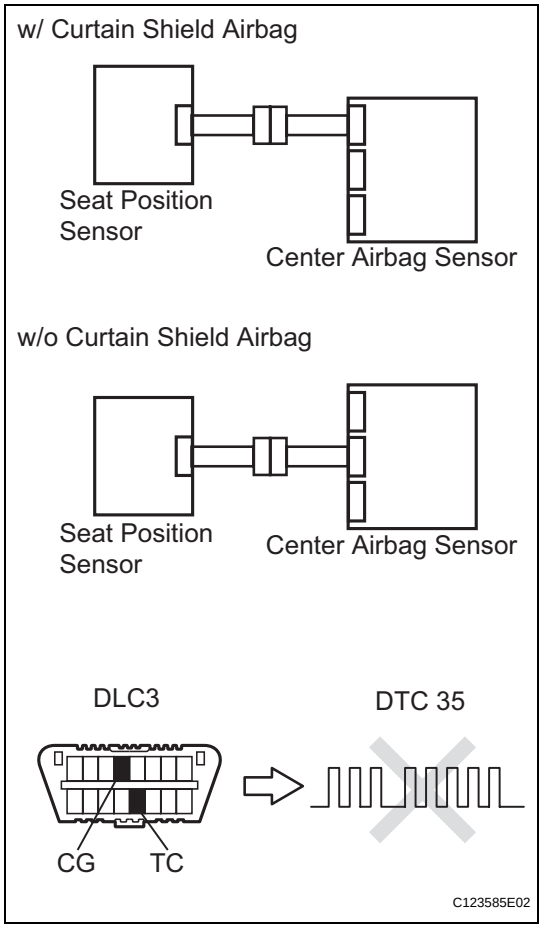

(a) Turn the ignition switch ON, and wait for at least 60 seconds.
(b) Clear the DTCs (see page RS-49).
(c) Turn the ignition switch OFF.
(d) Turn the ignition switch ON, and wait for at least 60 seconds.
(e) Check the DTCs (see page RS-49).

OK:

DTC B1653/35 is not output.

HINT:

DTCs other than DTC B1653/35 may be output at this time, but they are not related to this check.

OK → **USE SIMULATION METHOD TO CHECK**

NG

2	CHECK CONNECTION OF CONNECTOR

(a) Turn the ignition switch OFF.
(b) Disconnect the cable from the negative (-) battery terminal, and wait for at least 90 seconds.
(c) Check that the connectors are properly connected to the center airbag sensor and the seat position sensor.

OK:

The connectors are properly connected.

NG → **CONNECT CONNECTOR**

OK

RS

3	CHECK SEAT POSITION SENSOR CIRCUIT (OPEN)

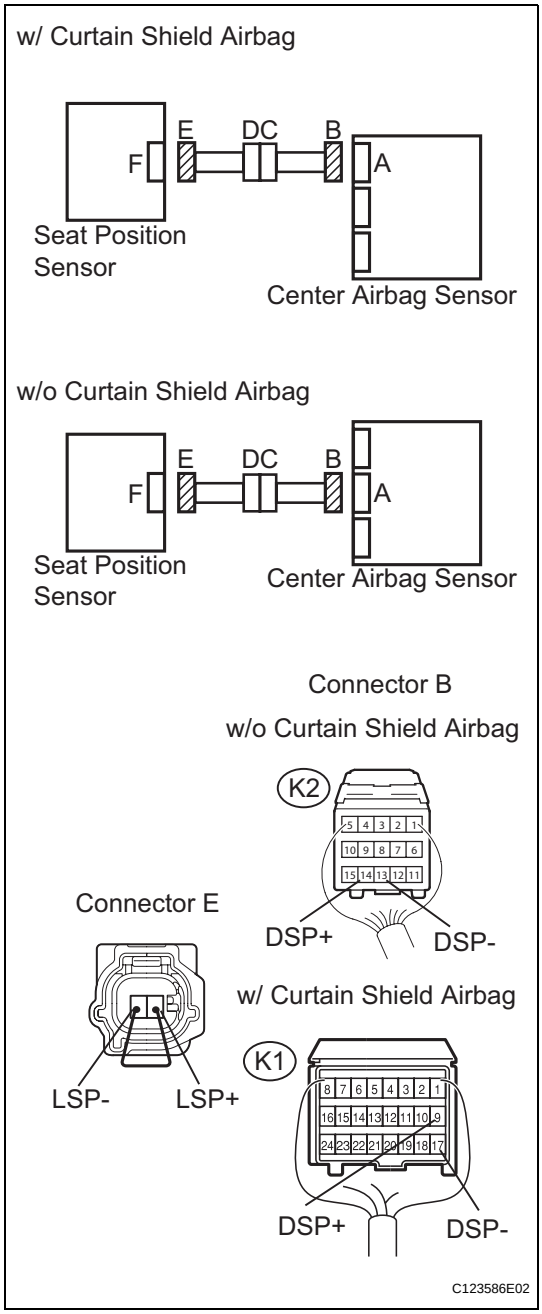

(a) Disconnect the connectors from the center airbag sensor and the seat position sensor.

(b) Using a service wire, connect 2 and 1 of connector E.

NOTICE:

Do not forcibly insert the service wire into the terminals of the connector when connecting.

(c) Measure the resistance of the wire harness side connector.

Standard resistance:

w/o Curtain shield airbag

Tester Connection	Specified Condition
K2-14 (DSP+) - K2-13 (DSP-)	Below 1 Ω

w/ Curtain shield airbag

Tester Connection	Specified Condition
K1-9 (DSP+) - K1-17 (LSP-)	Below 1 Ω

NG → **Go to step 10**

OK

RS

4	CHECK SEAT POSITION SENSOR CIRCUIT (SHORT)

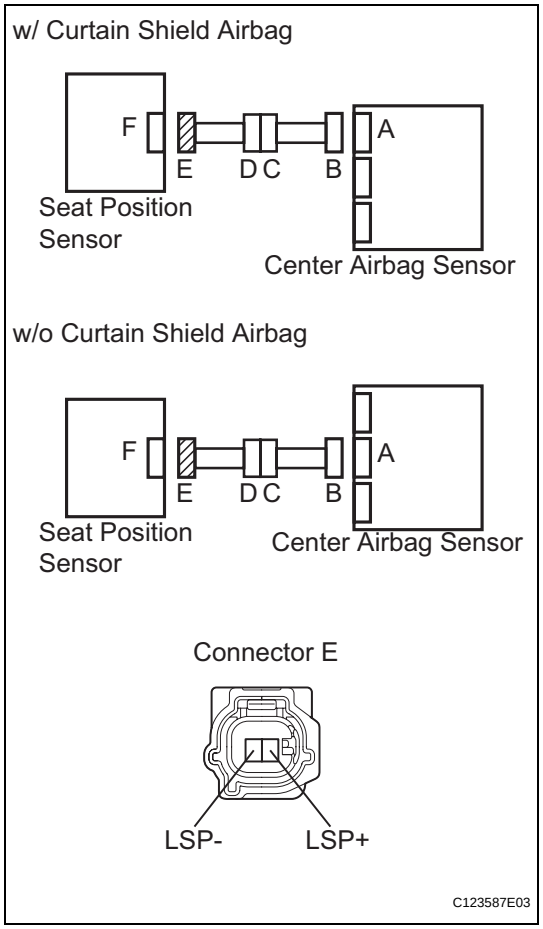

(a) Disconnect the service wire from connector E.
(b) Measure the resistance of the wire harness side connector.

Standard resistance

Tester Connection	Specified Condition
2 (LSP+) - 1 (LSP-)	1 MΩ or higher

NG → **Go to step 11**

OK

RS

5	CHECK SEAT POSITION SENSOR CIRCUIT (TO B+)

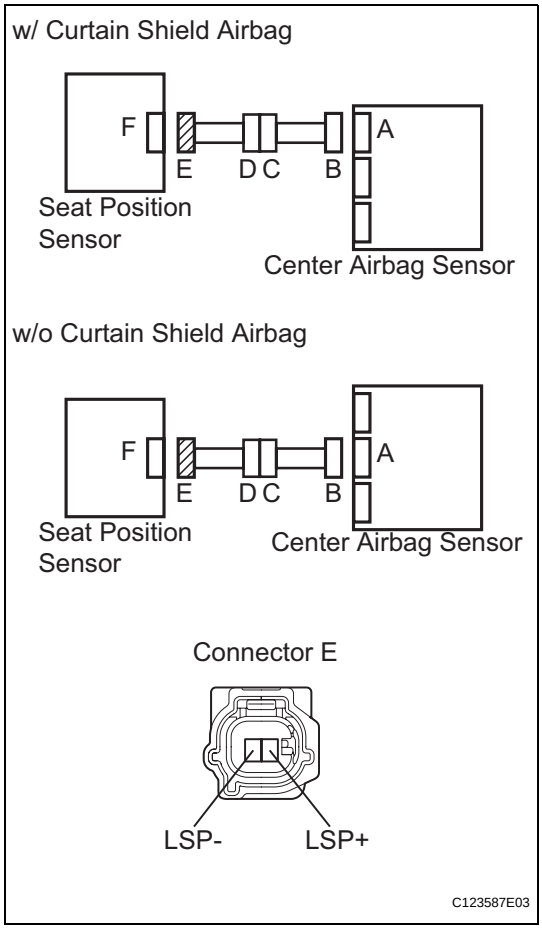

(a) Connect the cable to the negative (-) battery terminal, and wait for at least 2 seconds.
(b) Turn the ignition switch ON.
(c) Measure the voltage of the wire harness side connector.

Standard voltage

Tester Connection	Specified Condition
2 (LSP+) - Body ground	Below 1 V
1 (LSP-) - Body ground	Below 1 V

NG → **Go to step 12**

OK

RS

6	CHECK SEAT POSITION SENSOR CIRCUIT (TO GROUND)

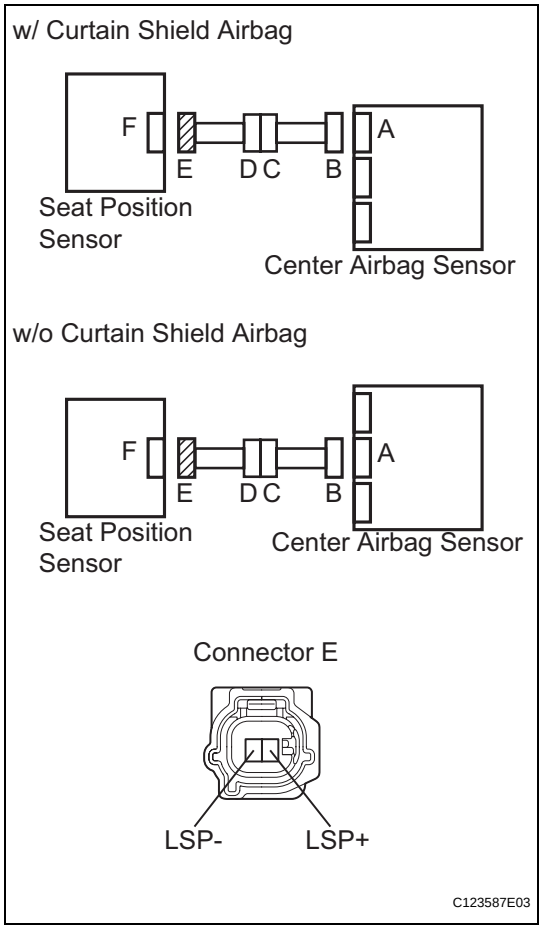

(a) Turn the ignition switch OFF.
(b) Disconnect the cable from the negative (-) battery terminal, and wait for at least 90 seconds.
(c) Measure the voltage of the wire harness side connector.
Standard resistance

Tester Connection	Specified Condition
2 (LSP+) - Body ground	1 MΩ or higher
1 (LSP-) - Body ground	1 MΩ or higher

NG → **Go to step 13**

OK

RS

7	CHECK SEAT POSITION SENSOR

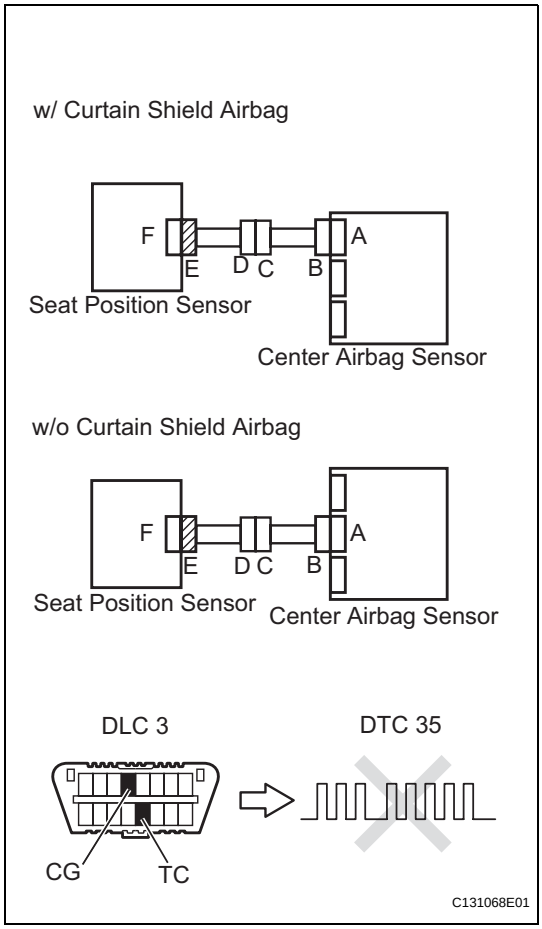

(a) Connect the connectors to the center airbag sensor and the seat position sensor.
(b) Connect the cable to the negative (-) battery terminal, and wait for at least 2 seconds.
(c) Turn the ignition switch ON, and wait for at least 60 seconds.
(d) Clear the DTCs (see page RS-49).
(e) Turn the ignition switch OFF.
(f) Turn the ignition switch ON, and wait for at least 60 seconds.
(g) Check the DTCs (see page RS-49).
OK:
DTC B1653/35 is not output.
HINT:
DTCs other than DTC B1653/35 may be output at this time, but they are not related to this check.

OK → **USE SIMULATION METHOD TO CHECK**

NG

8	REPLACE SEAT POSITION SENSOR

(a) Turn the ignition switch OFF.
(b) Disconnect the cable from the negative (-) battery terminal, and wait for at least 90 seconds.
(c) Replace the seat position sensor (see page RS-389).
HINT:
Perform the inspection using parts from a normal vehicle if possible.

NEXT

9	CHECK CENTER AIRBAG SENSOR ASSEMBLY

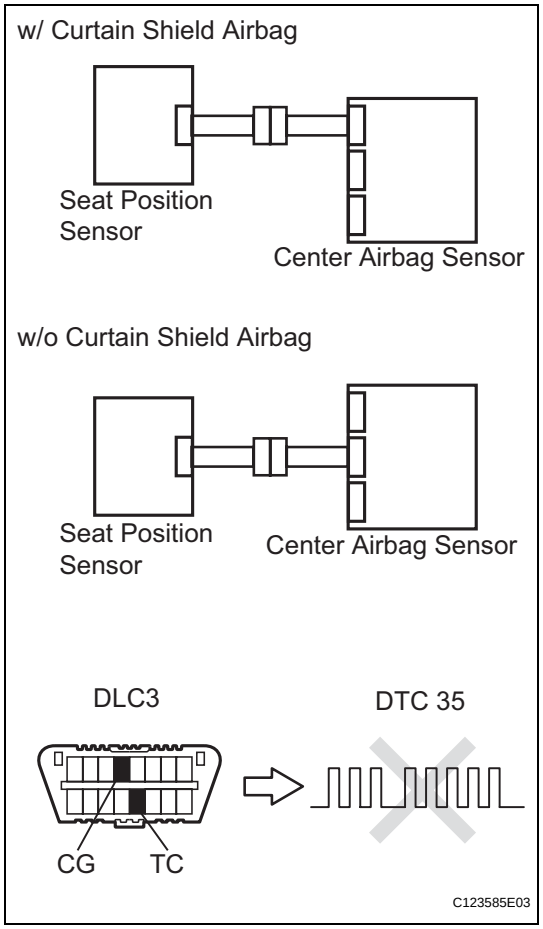

(a) Connect the cable to the negative (-) battery terminal, and wait for at least 2 seconds.
(b) Turn the ignition switch ON, and wait for at least 60 seconds.
(c) Clear the DTCs (see page RS-49).
(d) Turn the ignition switch OFF.
(e) Turn the ignition switch ON, and wait for at least 60 seconds.
(f) Check the DTCs (see page RS-49).

OK:

DTC B1653/35 is not output.

HINT:

DTCs other than DTC B1653/35 may be output at this time, but they are not related to this check.

NG → **REPLACE CENTER AIRBAG SENSOR ASSEMBLY**

OK

END

RS

10	CHECK FLOOR WIRE (OPEN)

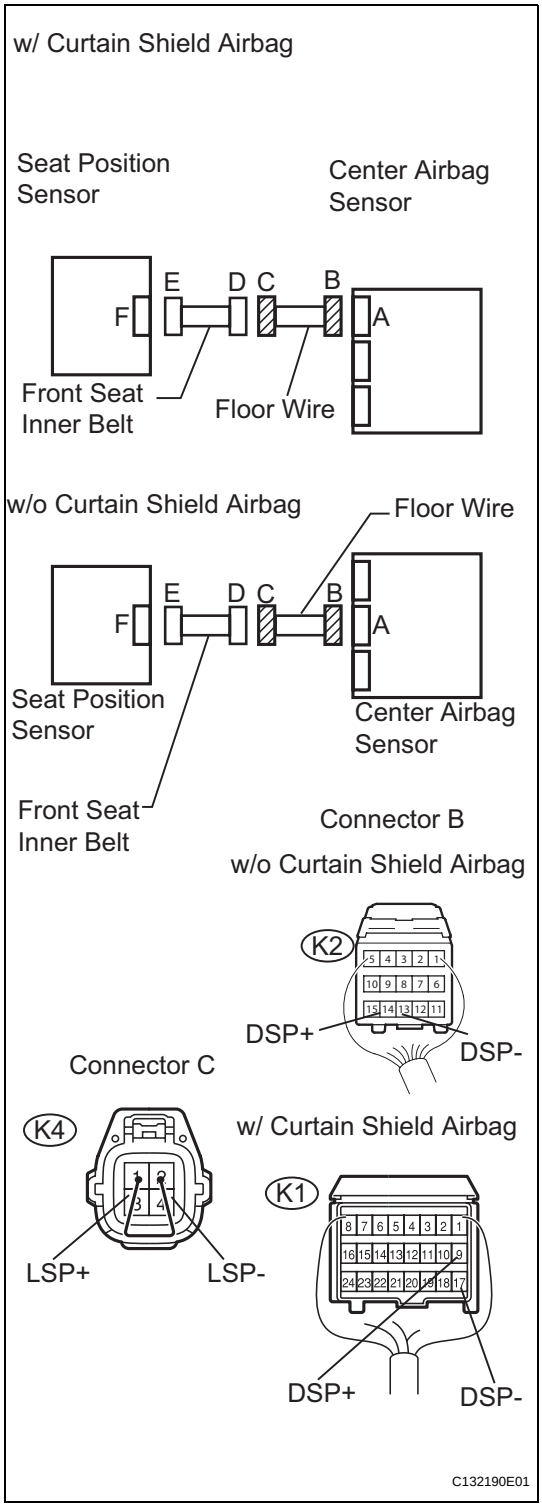

(a) Disconnect the front seat inner belt connector from the flow wire.

(b) Using a service wire, connect K4-1 (LSP+) and K4-2 (LSP-) of connector C.

NOTICE:

Do not forcibly insert the service wire into the terminals of the connector when connecting.

(c) Measure the resistance of the wire harness side connectors.

Standard resistance:

w/o Curtain shield airbag

Tester Connection	Specified Condition
K2-14 (DSP+) - K2-13 (DSP-)	Below 1 Ω

w/ Curtain shield airbag

Tester Connection	Specified Condition
K1-9 (DSP+) - K1-17 (DSP-)	Below 1 Ω

NG → **REPAIR OR REPLACE FLOOR WIRE**

OK

REPLACE FRONT SEAT INNER BELT ASSEMBLY LH

RS

11	CHECK FLOOR WIRE (SHORT)

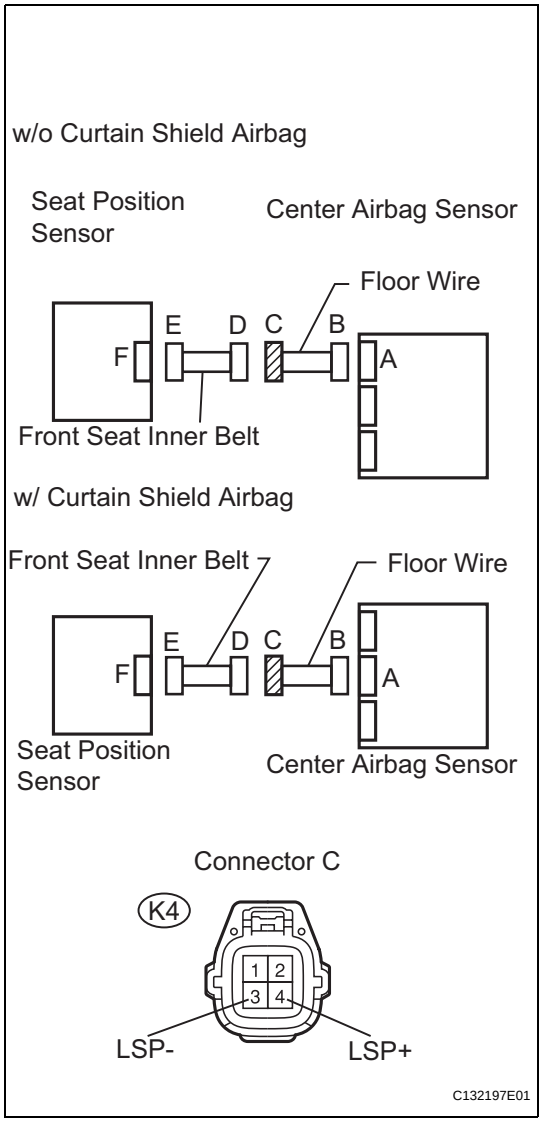

(a) Disconnect the front seat inner belt connector from the floor wire.
(b) Measure the resistance of the wire harness side connector.

Standard resistance

Tester Connection	Specified Condition
K4-2 (LSP+) - K4-1 (LSP-)	1 MΩ or higher

NG → **REPAIR OR REPLACE FLOOR WIRE**

OK

REPLACE FRONT SEAT INNER BELT ASSEMBLY LH

RS

12	CHECK FLOOR WIRE (TO B+)

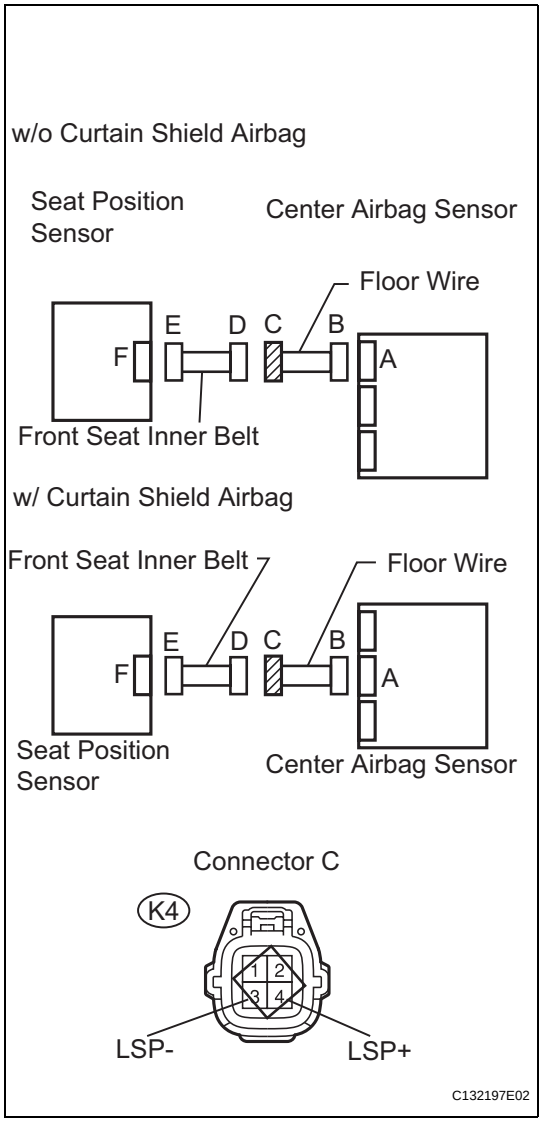

(a) Turn the ignition switch OFF.
(b) Disconnect the cable from the negative (-) battery terminal, and wait for at least 90 seconds.
(c) Disconnect the front seat inner belt connector from the floor wire.
(d) Connect the cable to the negative (-) battery terminal, and wait for at least 2 seconds.
(e) Turn the ignition switch ON.
(f) Measure the voltage of the wire harness side connectors.

Standard voltage

Tester Connection	Specified Condition
K4-2 (LSP+) - Body ground	Below 1 V
K4-1 (LSP-) - Body ground	Below 1 V

NG → **REPAIR OR REPLACE FLOOR WIRE**

OK

REPLACE FRONT SEAT INNER BELT ASSEMBLY LH

RS

13 CHECK FLOOR WIRE (TO GROUND)

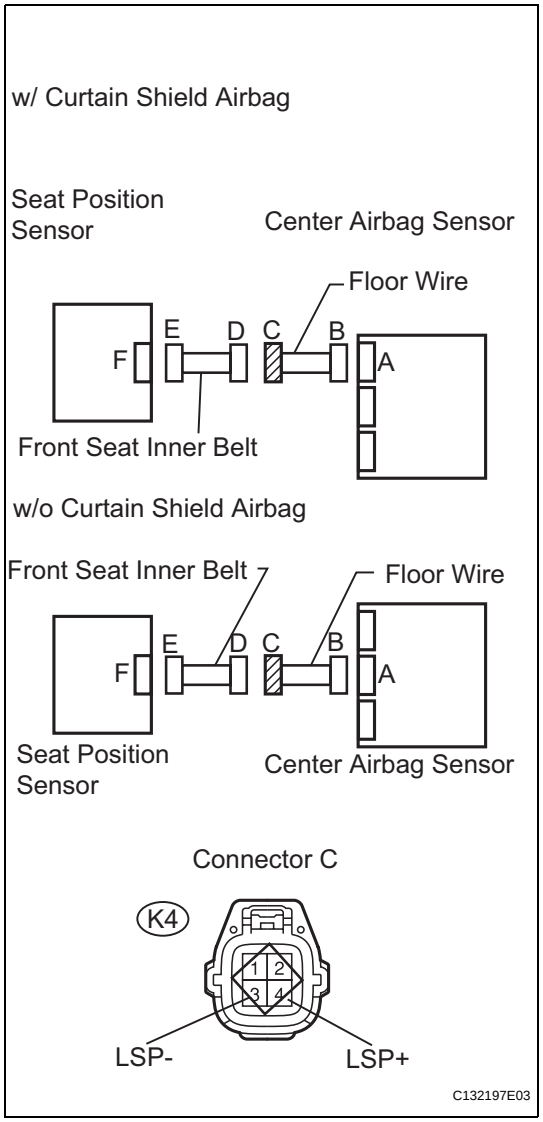

(a) Disconnect the front seat inner belt connector from the floor wire.
(b) Measure the resistance of the wire harness side connectors.

Standard resistance

Tester Connection	Specified Condition
K4-2 (LSP+) - Body ground	1 MΩ or higher
K4-1 (LSP-) - Body ground	1 MΩ or higher

NG → **REPAIR OR REPLACE FLOOR WIRE**

OK

REPLACE FRONT SEAT INNER BELT ASSEMBLY LH

RS

DTC	B1655/37	Driver Side Seat Belt Buckle Switch Circuit Malfunction

DESCRIPTION

The driver side seat belt buckle switch circuit consists of the center airbag sensor and the front seat inner belt LH.

DTC B1655/37 is recorded when a malfunction is detected in the driver side seat belt buckle switch circuit.

DTC No.	DTC Detection Condition	Trouble Area
B1655/37	When one of following conditions is met: • Center airbag sensor detects line short signal, open signal, short to ground signal or short to B+ signal in driver side seat belt buckle switch LH circuit for 2 seconds. • Front seat inner belt LH malfunction • Center airbag sensor malfunction	• Floor wire • Front seat inner belt LH • Center airbag sensor

WIRING DIAGRAM

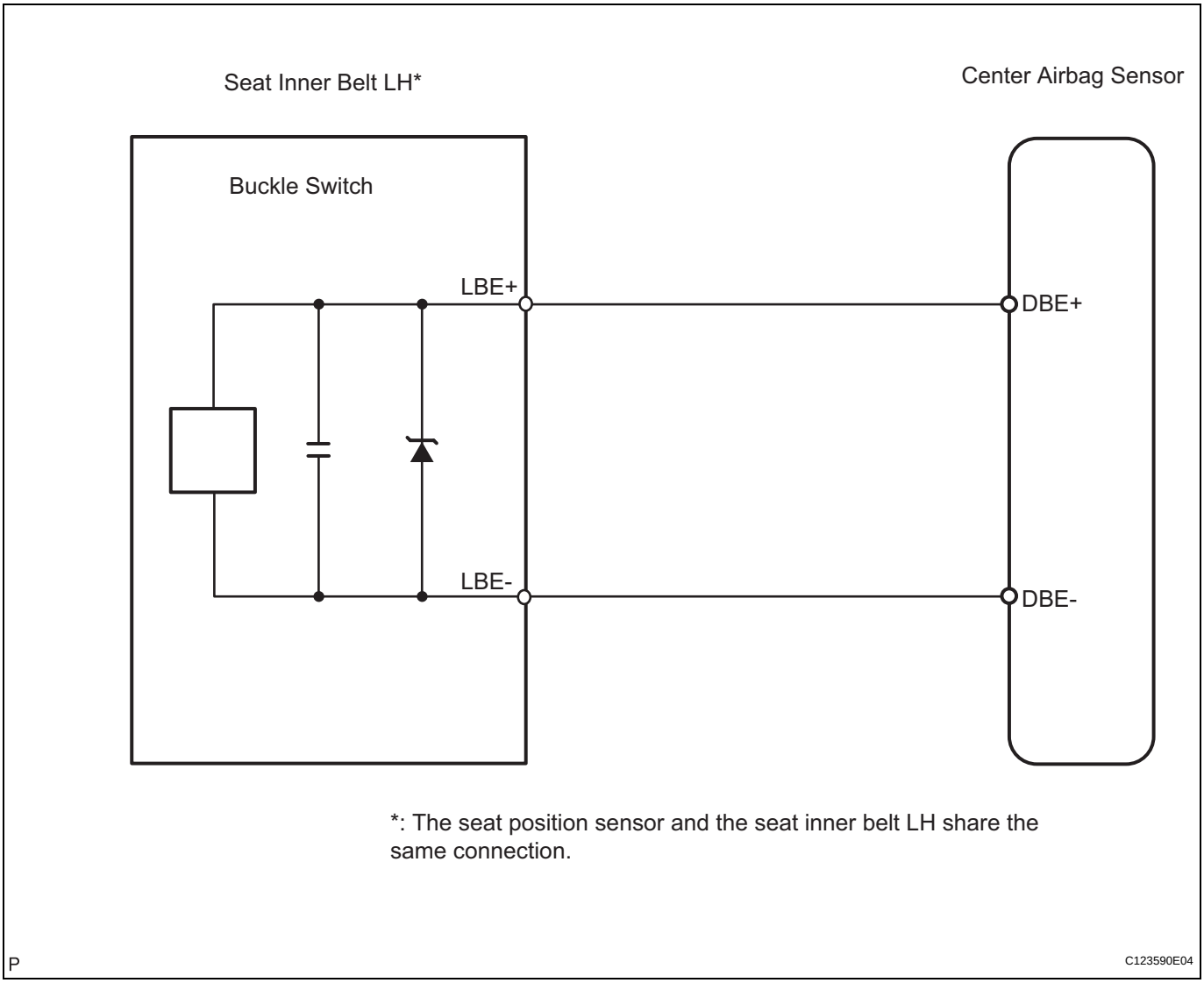

RS

INSPECTION PROCEDURE

1	CHECK FOR DTC

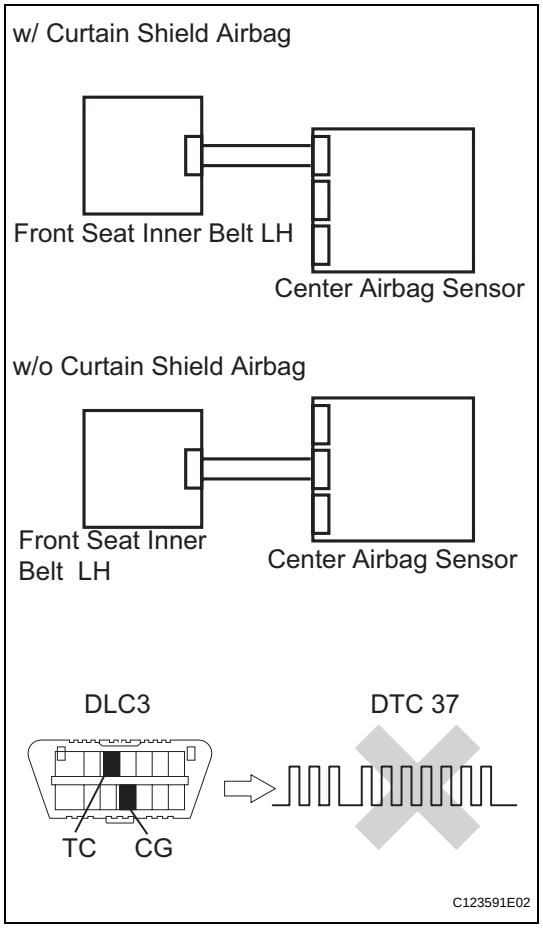

(a) Turn the ignition switch ON, and wait for at least 60 seconds.
(b) Clear the DTCs (see page RS-49).
(c) Turn the ignition switch OFF.
(d) Turn the ignition switch ON, and wait for at least 60 seconds.
(e) Check the DTCs (see page RS-49).

OK:

DTC B1655/37 is not output.

HINT:

DTCs other than DTC B1655/37 may be output at this time, but they are not related to this check.

OK → **USE SIMULATION METHOD TO CHECK**

NG

2	CHECK CONNECTION OF CONNECTOR

(a) Turn the ignition switch OFF.
(b) Disconnect the cable from the negative (-) battery terminal, and wait for at least 90 seconds.
(c) Check that the connectors are properly connected to the center airbag sensor and the front seat inner belt LH.

OK:

The connectors are properly connected.

NG → **CONNECT CONNECTOR**

OK

RS

3	CHECK FLOOR WIRE (OPEN)

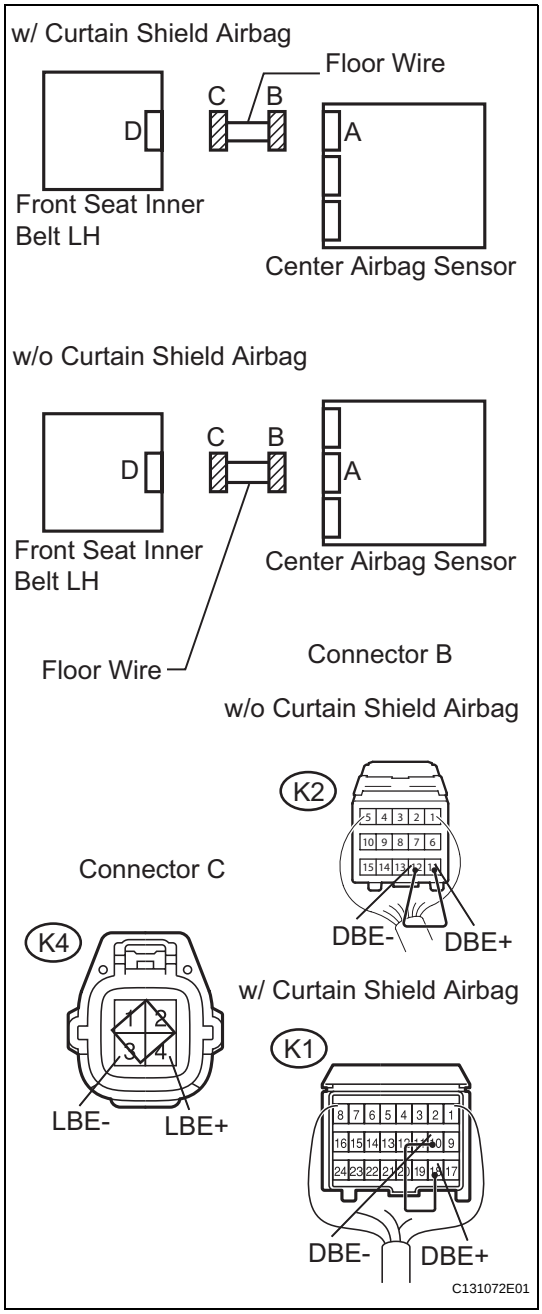

(a) Disconnect the connectors from the center airbag sensor and the front seat inner belt LH.

(b) Using a service wire, connect K2-11 (LBE+) and K2-12 (LBE-) (w/o Curtain shield airbag), or K1-10 (DBE+) and K1-18 (DBE-) (w/Curtain shield airbag) of connector B.

NOTICE:

Do not forcibly insert the service wire into the terminals of the connector when connecting.

(c) Measure the resistance of the wire harness side connector.

Standard resistance

Tester Connection	Specified Condition
K4-4 (LBE+) - K4-3 (LBE-)	Below 1 Ω

NG → **REPAIR OR REPLACE FLOOR WIRE**

OK

RS

4	CHECK FLOOR WIRE (SHORT)

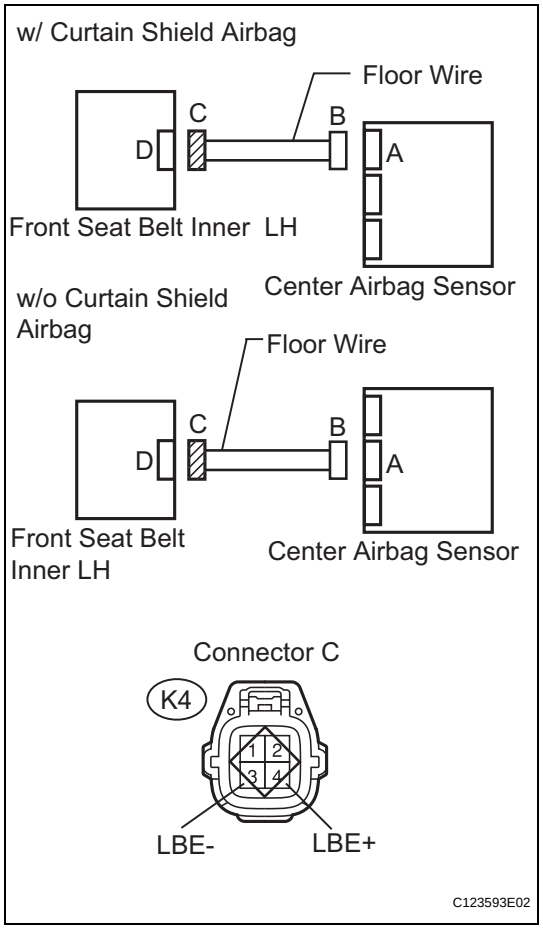

(a) Disconnect the service wire from connector B.
(b) Measure the resistance of the wire harness side connectors.

Standard resistance

Tester Connection	Specified Condition
K4-4 (LBE+) - K4-3 (LBE-)	1 MΩ or higher

NG → **REPAIR OR REPLACE FLOOR WIRE**

OK

RS

5	CHECK FLOOR WIRE (TO B+)

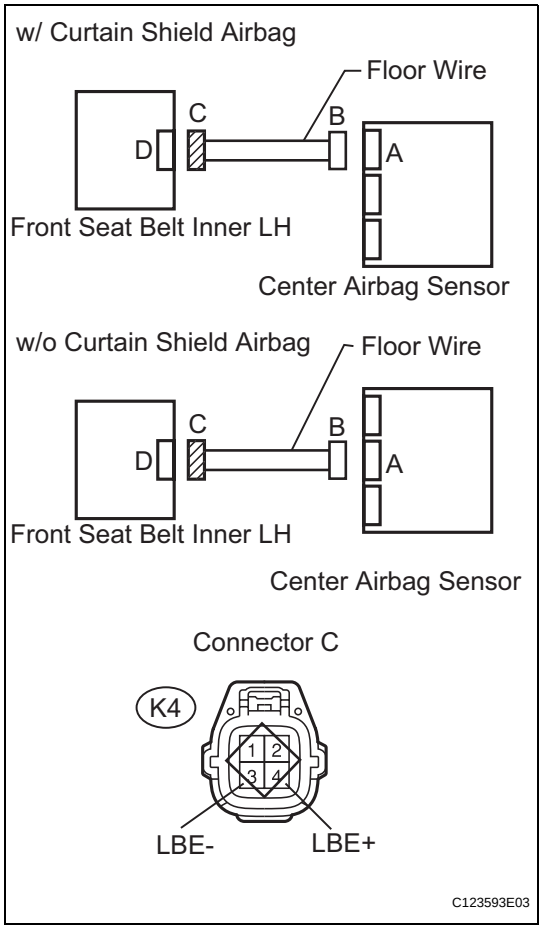

(a) Connect the cable to the negative (-) battery terminal, and wait for at least 2 seconds.
(b) Turn the ignition switch ON.
(c) Measure the voltage of the wire harness side connector.

Standard voltage

Tester Connection	Specified Condition
K4-4 (LBE+) - Body ground	Below 1 V
K4-3 (LBE-) - Body ground	Below 1 V

NG → **REPAIR OR REPLACE FLOOR WIRE**

OK

RS

6	CHECK FLOOR WIRE (TO GROUND)

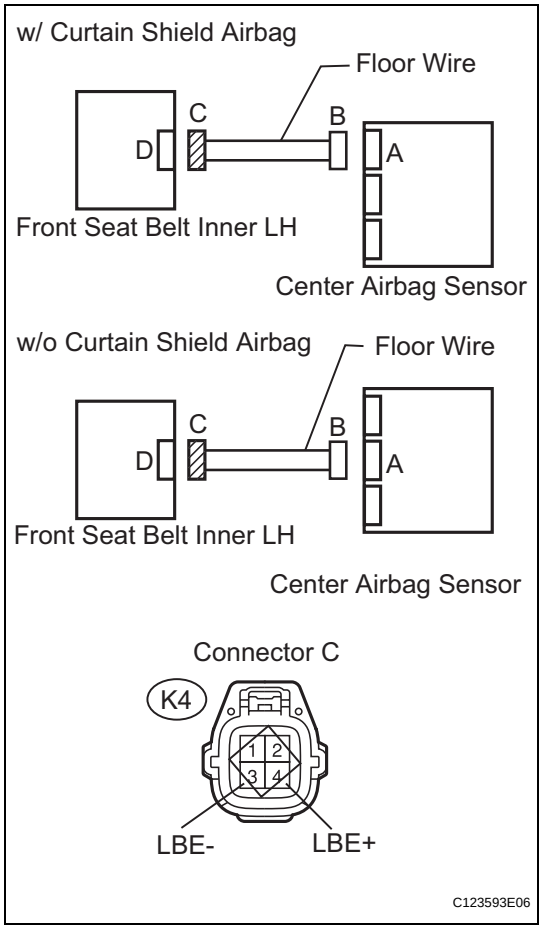

(a) Turn the ignition switch OFF.
(b) Disconnect the cable from the negative (-) battery terminal, and wait for at least 90 seconds.
(c) Measure the resistance of the wire harness side connectors.

Standard resistance

Tester Connection	Specified Condition
K4-4 (LBE+) - Body ground	1 MΩ or higher
K4-3 (LBE-) - Body ground	1 MΩ or higher

NG → **REPAIR OR REPLACE FLOOR WIRE**

OK

RS

7	CHECK FRONT SEAT INNER BELT ASSEMBLY LH

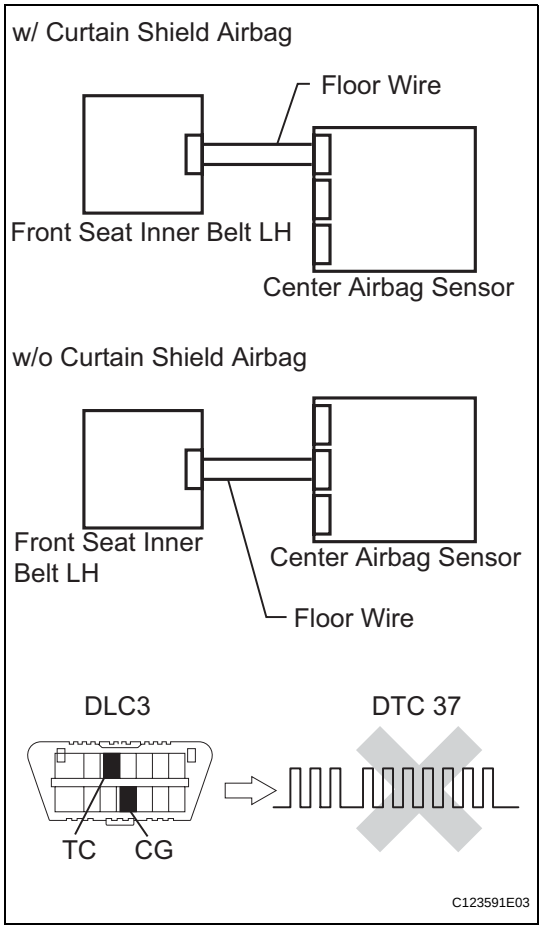

(a) Connect the connector to the center airbag sensor and the front seat inner belt LH.
(b) Connect the negative (-) terminal cable to the battery, and wait for at least 2 seconds.
(c) Turn the ignition switch ON, and wait for at least 60 seconds.
(d) Clear the DTCs (see page RS-49).
(e) Turn the ignition switch OFF.
(f) Turn the ignition switch ON, and wait for at least 60 seconds.
(g) Check the DTCs (see page RS-49).
OK:
DTC B1655/37 is not output.
HINT:
DTCs other than DTC B1655/37 may be output at this time, but they are not related to this check.

OK → **USE SIMULATION METHOD TO CHECK**

NG

8	REPLACE FRONT SEAT INNER BELT ASSEMBLY LH

(a) Turn the ignition switch OFF.
(b) Disconnect the cable from the negative (-) battery terminal, and wait for at least 90 seconds.
(c) Replace the front seat inner belt LH (see page SB-21).
HINT:
Perform the inspection using parts from a normal vehicle if possible.

NEXT

9	CHECK CENTER AIRBAG SENSOR ASSEMBLY

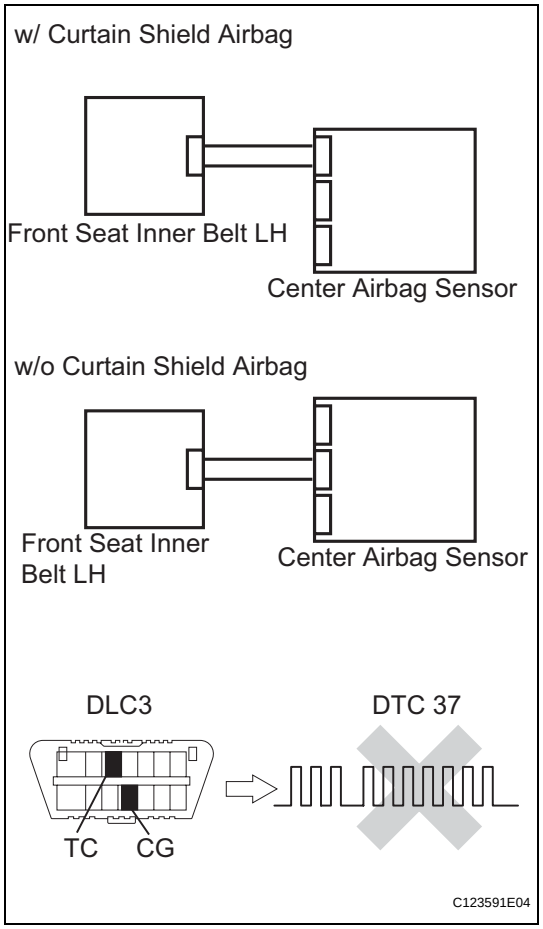

(a) Connect the cable to the negative (-) battery terminal, and wait for at least 2 seconds.
(b) Turn the ignition switch ON, and wait for at least 60 seconds.
(c) Clear the DTCs (see page RS-49).
(d) Turn the ignition switch OFF.
(e) Turn the ignition switch ON, and wait for at least 60 seconds.
(f) Check the DTCs (see page RS-49).

OK:

DTC B1655/37 is not output.

HINT:

DTCs other than DTC B1655/37 may be output at this time, but they are not related to this check.

NG → **REPLACE CENTER AIRBAG SENSOR ASSEMBLY**

OK

END

RS

DTC	B1660/43	Passenger Airbag ON / OFF Indicator Circuit Malfunction

DESCRIPTION

The passenger airbag ON / OFF indicator circuit consists of the center airbag sensor and the heater control panel*1 or *2.
This circuit indicates the operation condition of the front passenger airbag, the front passenger side airbag and passenger side seat belt pretensioner.
DTC B1660/43 is set when a malfunction is detected in the passenger airbag ON / OFF indicator circuit.

DTC No.	DTC Detection Condition	Trouble Area
B1660/43	When one of following conditions is met: • Center airbag sensor detects line short signal, open signal, short to ground signal or short to B+ signal in passenger airbag ON / OFF indicator circuit for 2 seconds • Front passenger seat belt warning light malfunction • Center airbag sensor malfunction	• Instrument panel wire • Front passenger airbag ON / OFF indicator light • Center airbag sensor

HINT:
- *1: for Automatic Air Conditioning System
- *2: for Manual Air Conditioning System

WIRING DIAGRAM

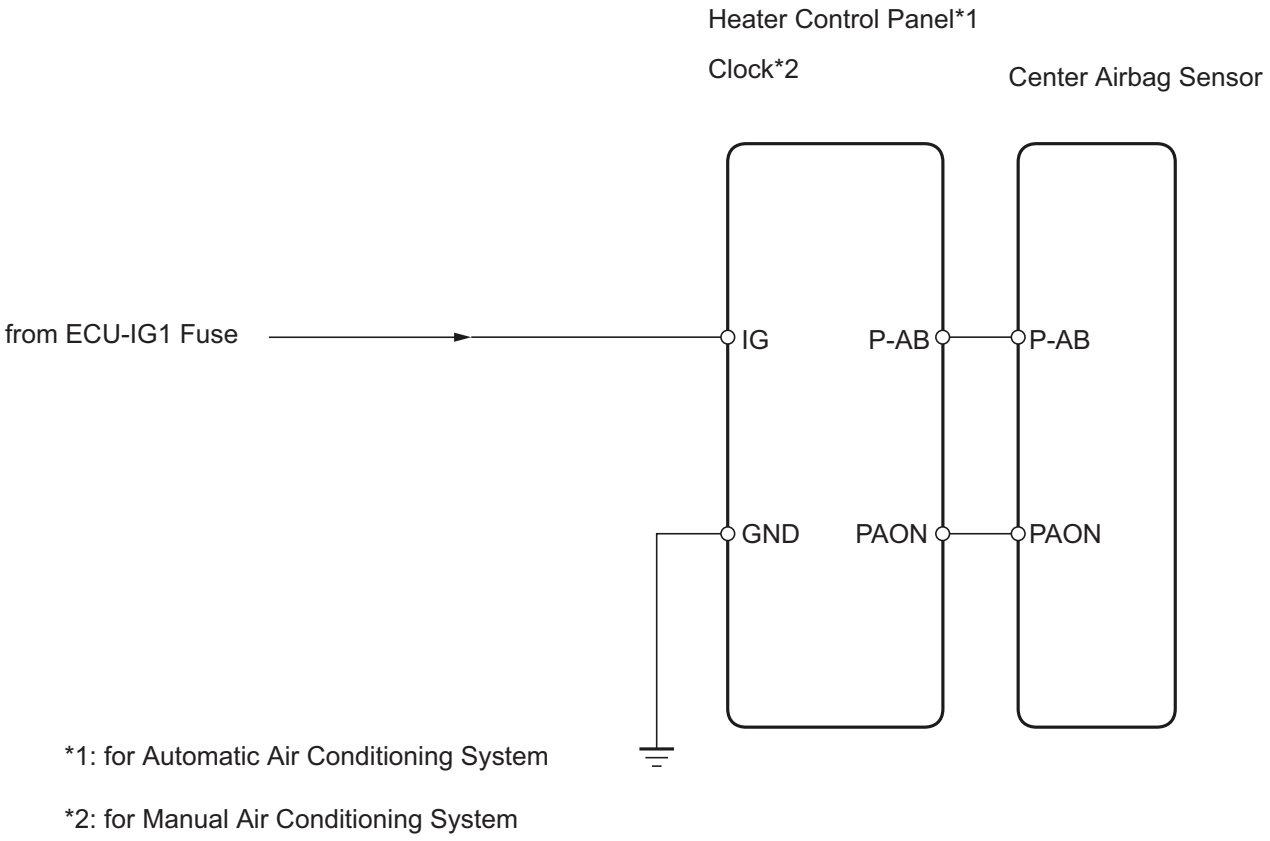

RS

INSPECTION PROCEDURE

1	**CHECK PASSENGER AIRBAG ON/OFF INDICATOR OPERATION**

(a) Turn the ignition switch ON.
(b) Check the passenger airbag ON / OFF indicator operation.

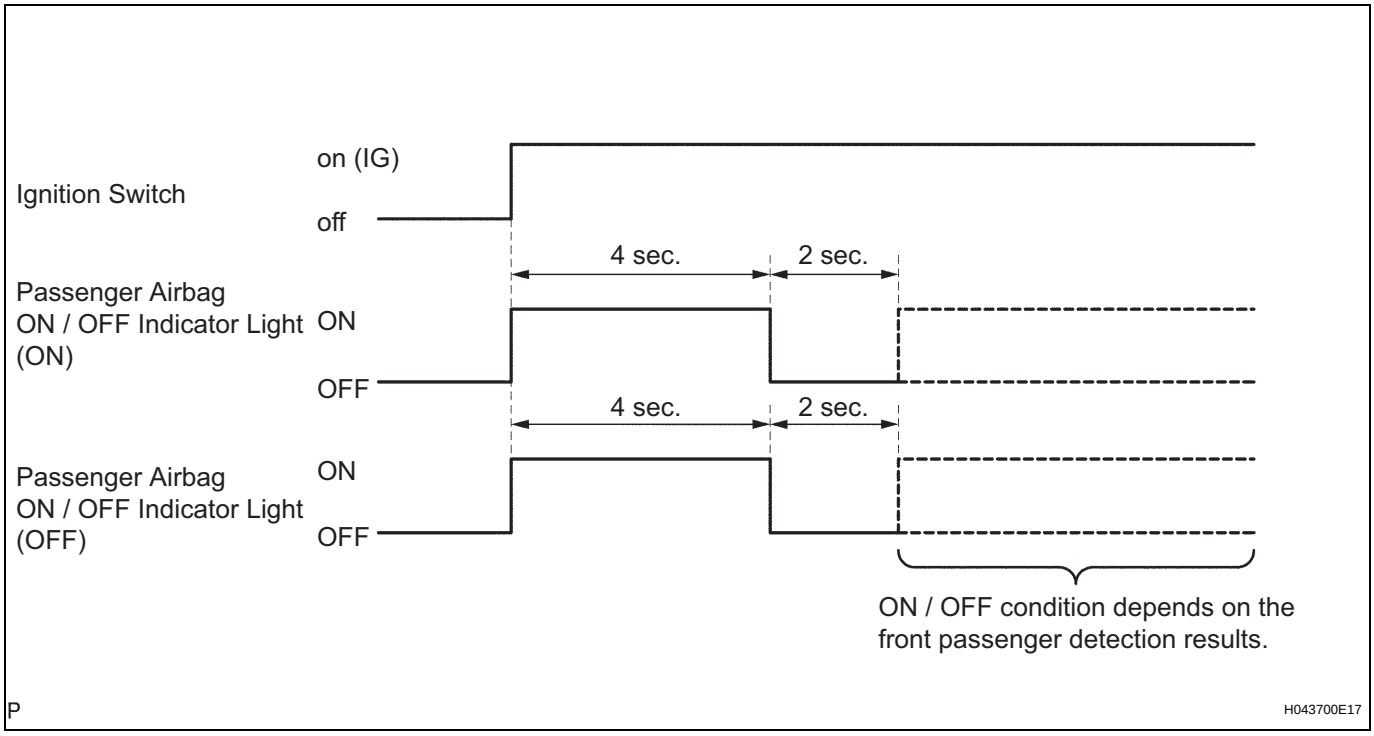

Result

ON / OFF Indicator Illumination	Proceed to
Always ON	A
OFF	B

B → **Go to step 8**

A

RS

2 CHECK CONNECTION OF CONNECTOR

(a) Turn the ignition switch OFF.
(b) Disconnect the cable from the negative (-) battery terminal, and wait for at least 90 seconds.
(c) Check that the connectors are properly connected to the center airbag sensor and the front passenger seat belt warning light.
OK:
The connectors are properly connected.

NG → **CONNECT CONNECTOR**

OK

3	CHECK FRONT PASSENGER AIRBAG ON/OFF INDICATOR LIGHT

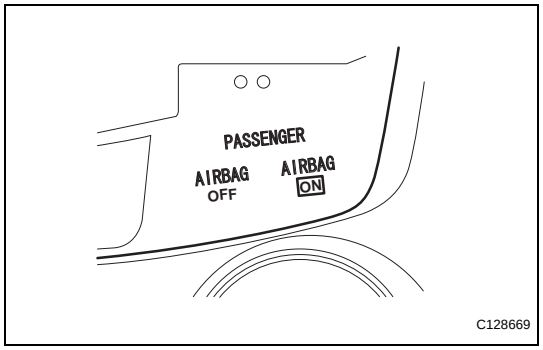

(a) Turn the ignition switch OFF.
(b) Disconnect the cable from the negative (-) battery terminal, and wait for at least 90 seconds.
(c) Disconnect the connector from the center airbag sensor.
(d) Connect the cable to the negative (-) battery terminal, and wait for at least 2 seconds.
(e) Turn the ignition switch ON.
(f) Check the passenger airbag ON / OFF indicator operation.

OK:

Neither ON nor OFF passenger airbag ON / OFF indicator comes on.

OK → **Go to step 14**

NG

RS

4	CHECK INSTRUMENT PANEL WIRE (FOR OPEN)

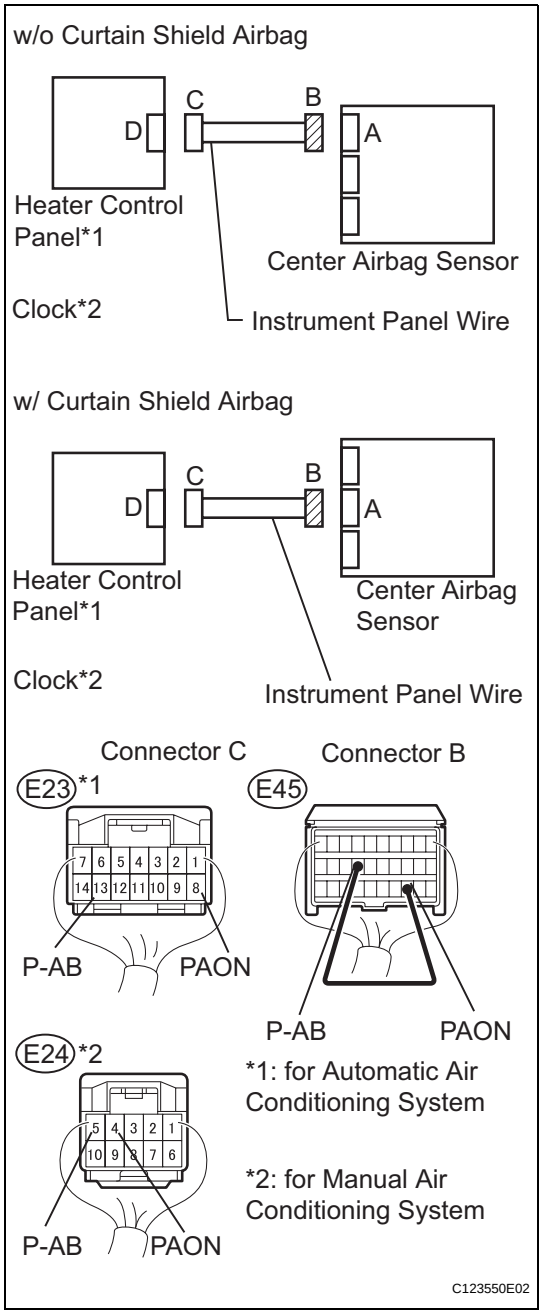

(a) Turn the ignition switch OFF.
(b) Disconnect the cable from the negative (-) battery terminal, and wait for at least 90 seconds.
(c) Disconnect the connector from the front passenger airbag ON / OFF indicator light.
(d) Using a service wire, connect E45-23 (PAON) and E45-17 (P-AB) of connector B.
NOTICE:
Do not forcibly insert the service wire into the terminals of the connector when connecting.
(e) Measure the resistance of the wire harness side connectors.
Standard resistance

Tester Connection	Specified Condition
E23-5 (PAON) - E23-13 (P-AB)*1	Below 1 Ω
E22-4 (PAON) - E22-9 (P-AB)*2	Below 1 Ω

HINT:
*1: for Automatic Air Conditioning System
*2: for Manual Air Conditioning System

NG → **REPAIR OR REPLACE INSTRUMENT PANEL WIRE**

OK

RS

5	CHECK INSTRUMENT PANEL WIRE (FOR SHORT)

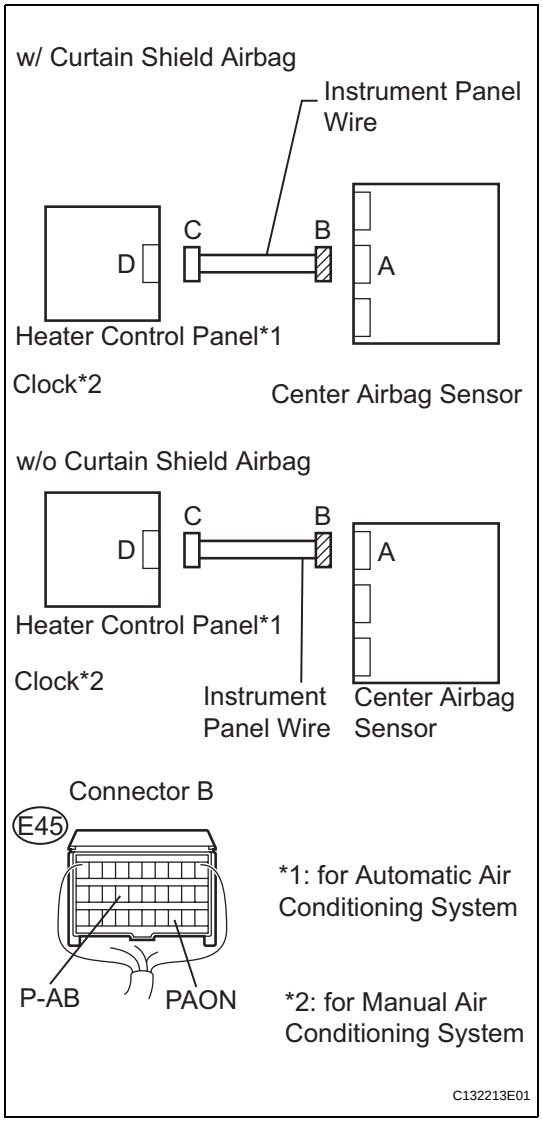

(a) Disconnect the service wire from connector B.
(b) Measure the resistance of the wire harness side connectors.

Standard resistance

Tester Connection	Specified Condition
E45-17 (P-AB) - E45-23 (PAON)	1 MΩ or higher

NG → **REPAIR OR REPLACE INSTRUMENT PANEL WIRE**

OK

RS

6	CHECK INSTRUMENT PANEL WIRE (TO B+)

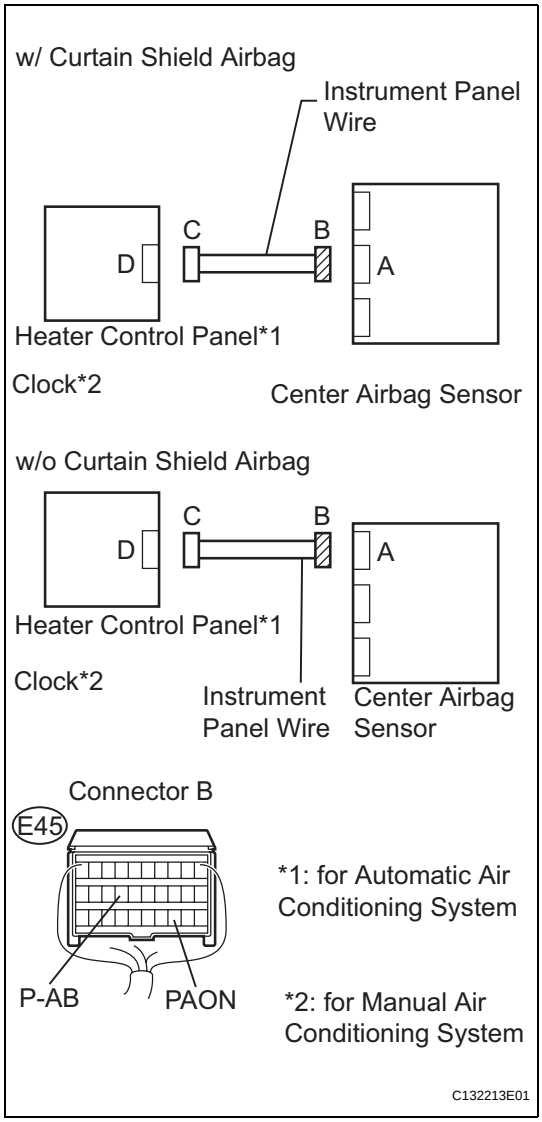

(a) Connect the cable to the negative (-) battery terminal, and wait for at least 2 seconds.
(b) Turn the ignition switch ON.
(c) Measure the voltage of the wire harness side connectors.

Standard voltage

Tester Connection	Specified Condition
E45-23 (PAON) - Body ground	Below 1 V
E45-17 (P-AB) - Body ground	Below 1 V

NG → **REPAIR OR REPLACE INSTRUMENT PANEL WIRE**

OK

RS

7 CHECK INSTRUMENT PANEL WIRE (TO GROUND)

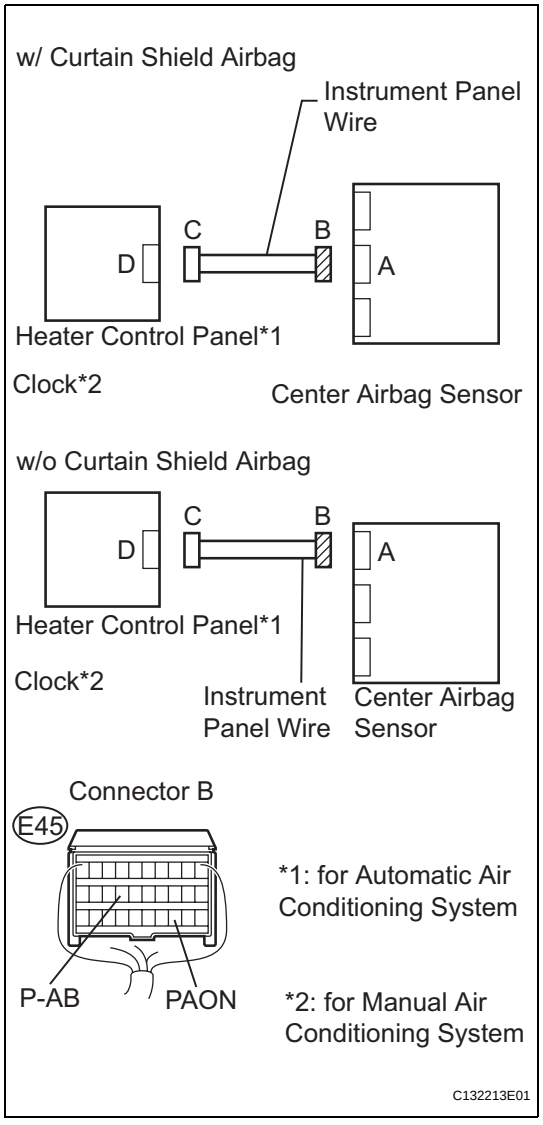

(a) Turn the ignition switch OFF.
(b) Disconnect the cable from the negative (-) battery terminal, and wait for at least 90 seconds.
(c) Measure the resistance of the wire harness side connectors.

Standard resistance

Tester Connection	Specified Condition
E45-17 (P-AB) -Body ground	1 MΩ or higher
E45-23 (PAON) -Body ground	1 MΩ or higher

NG → **REPAIR OR REPLACE INSTRUMENT PANEL WIRE**

OK

REPLACE FRONT PASSENGER AIRBAG ON/OFF INDICATOR LIGHT

8 CHECK CONNECTION OF CONNECTOR

(a) Turn the ignition switch OFF.
(b) Disconnect the cable from the negative (-) battery terminal, and wait for at least 90 seconds.
(c) Check that the connectors are properly connected to the center airbag sensor and the heater control panel*1 or clock*2.

OK:

The connectors are properly connected.

RS

NG → CONNECT CONNECTOR

OK

9 CHECK INSTRUMENT PANEL WIRE (FOR OPEN)

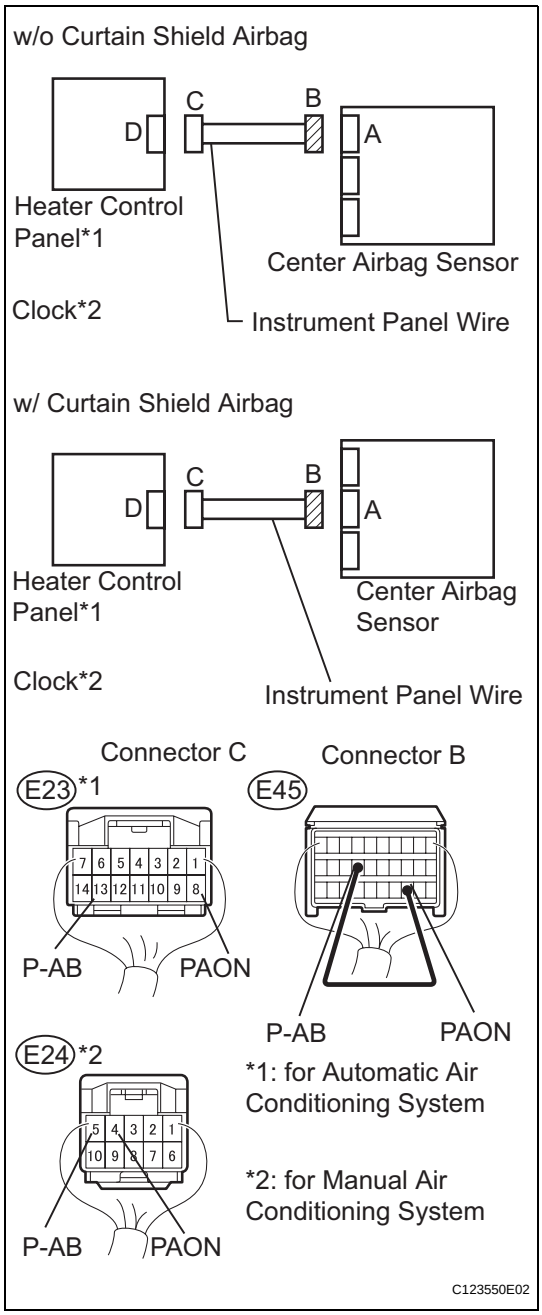

(a) Disconnect the connector from the front passenger airbag ON / OFF indicator light

(b) Using a service wire, connect E45-23 (PAON) and E45-17 (P-AB) of connector B.

NOTICE:

Do not forcibly insert the service wire into the terminals of the connector when connecting.

(c) Measure the resistance of the wire harness side connectors.

Standard resistance

Tester Connection	Specified Condition
E23-5 (PAON) - E23-13(P-AB)*1	Below 1 Ω
E22-4 (PAON) - E22-9(P-AB)*2	Below 1 Ω

HINT:

*1: for Automatic Air Conditioning System

*2: for Manual Air Conditioning System

NG → REPAIR OR REPLACE INSTRUMENT PANEL WIRE

OK

RS

10 CHECK INSTRUMENT PANEL WIRE (FOR SHORT)

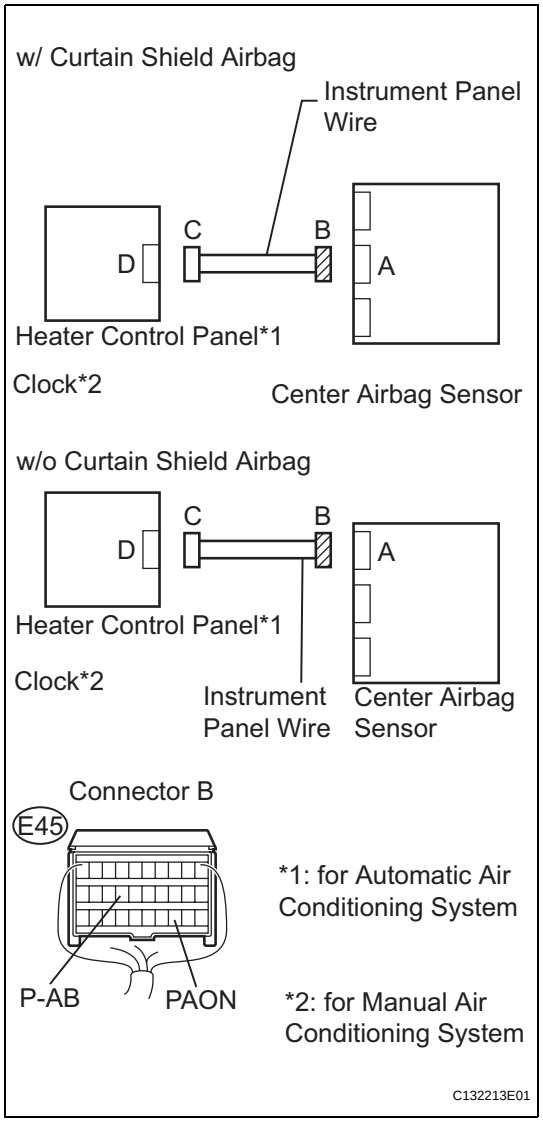

(a) Disconnect the service wire from connector B.
(b) Measure the resistance of the wire harness side connector.

Standard resistance

Tester Connection	Specified Condition
E45-17 (P-AB) - E45-23 (PAON)	1 MΩ or higher

NG → **REPAIR OR REPLACE INSTRUMENT PANEL WIRE**

OK

RS

11	CHECK INSTRUMENT PANEL WIRE (TO B+)

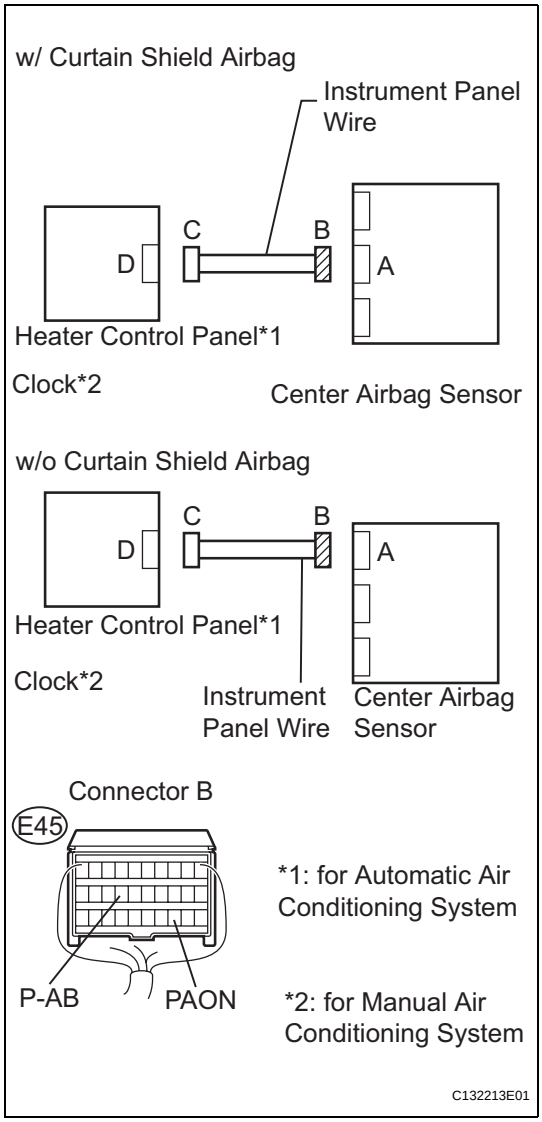

(a) Connect the cable to the negative (-) battery terminal, and wait for at least 2 seconds.
(b) Turn the ignition switch ON.
(c) Measure the voltage of the wire harness side connector.

Standard voltage

Tester Connection	Specified Condition
E45-23 (PAON) - Body ground	Below 1 V
E45-17 (P-AB) - Body ground	Below 1 V

NG → **REPAIR OR REPLACE INSTRUMENT PANEL WIRE**

OK

RS

12 CHECK INSTRUMENT PANEL WIRE (TO GROUND)

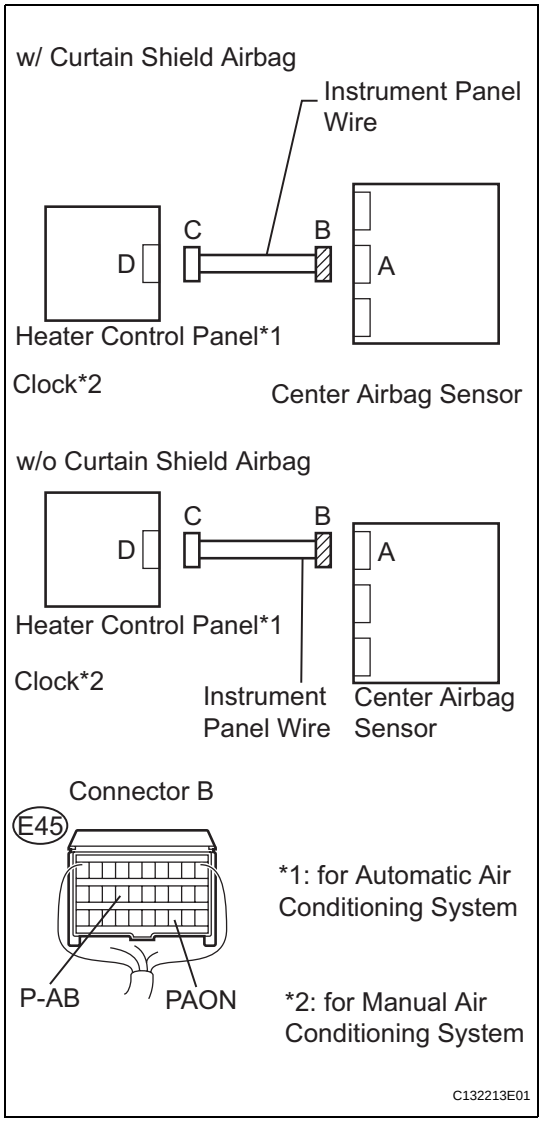

(a) Turn the ignition switch OFF.
(b) Disconnect the cable from the negative (-) battery terminal, and wait for at least 90 seconds.
(c) Measure the resistance of the wire harness side connector.

Standard resistance

Tester Connection	Specified Condition
E45-17 (P-AB) - Body ground	1 MΩ or higher
E45-23 (PAON) - Body ground	1 MΩ or higher

NG → **REPAIR OR REPLACE INSTRUMENT PANEL WIRE**

OK

RS

13	CHECK WIRE HARNESS (POWER SOURCE)

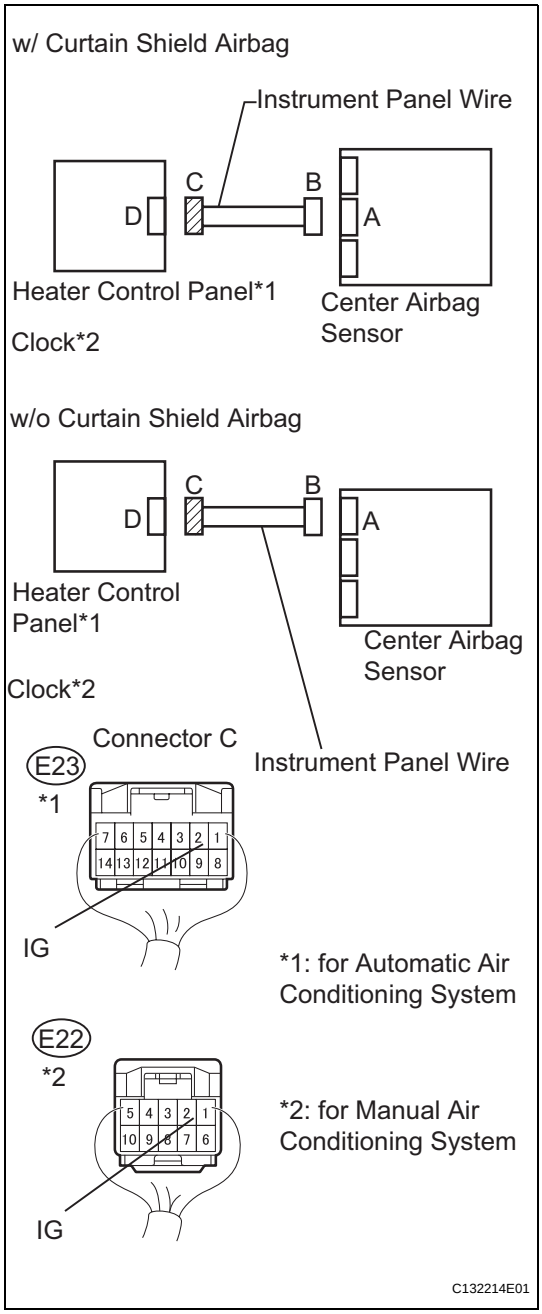

OK

(a) Connect the cable to the negative (-) battery terminal, and wait for at least 2 seconds.
(b) Turn the ignition switch ON.
(c) Measure the voltage of the wire harness side connector.

Standard voltage

Tester Connection	Specified Condition
E23-2 (IG+) - Body ground*1	10 to 14 V
E22-2 (IG+) - Body ground*2	10 to 14 V

HINT:
*1: for Automatic Air Conditioning System
*2: for Manual Air Conditioning System

NG → **REPAIR OR REPLACE POWER SOURCE CIRCUIT**

RS

14	CHECK FRONT PASSENGER AIRBAG ON/OFF INDICATOR LIGHT

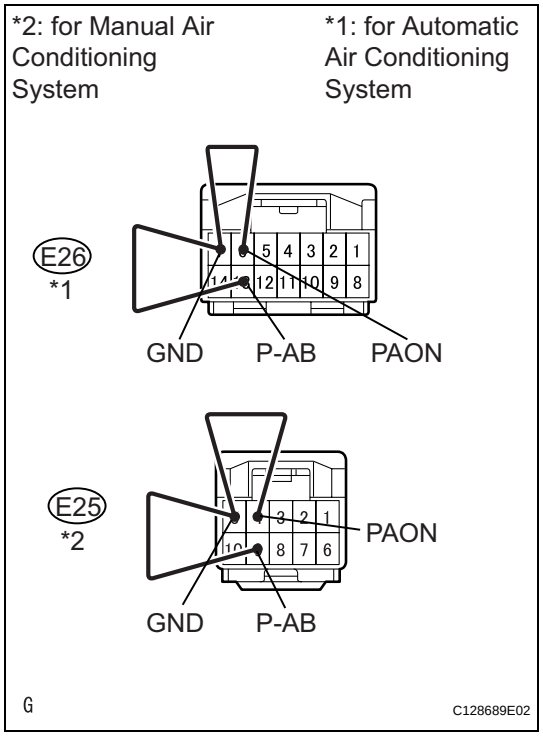

(a) Turn the ignition switch OFF.
(b) Disconnect the cable from the negative (-) battery terminal, and wait for at least 90 seconds.
(c) Disconnect the connector from the heater control panel*1 or clock sub-assembly*2.
(d) Connect the cable to the negative (-) battery terminal, and wait for at least 2 seconds.
(e) Using a service wire, connect E23-6*1 E22-4*2 (PAON) and E23-7*1 E22-5*2 (GND) of the heater control panel *1 or clock*2.
HINT:
*1: for Automatic Air Conditioning System
*2: for Manual Air Conditioning System
(f) Using a service wire, connect E23-13*1 E22-9*2 (P-AB) and E23-7 *1 E22-5*2 (GND) of the heater control panel *1 or clock*2.
HINT:
*1: for Automatic Air Conditioning System
*2: for Manual Air Conditioning System
(g) Turn the ignition switch ON.
(h) Check the passenger airbag ON / OFF indicator operation.
OK:
Front passenger airbag ON / OFF indicator comes on

NG → **REPLACE FRONT PASSENGER AIRBAG ON/OFF INDICATOR LIGHT**

OK

RS

15	CHECK CENTER AIRBAG SENSOR ASSEMBLY

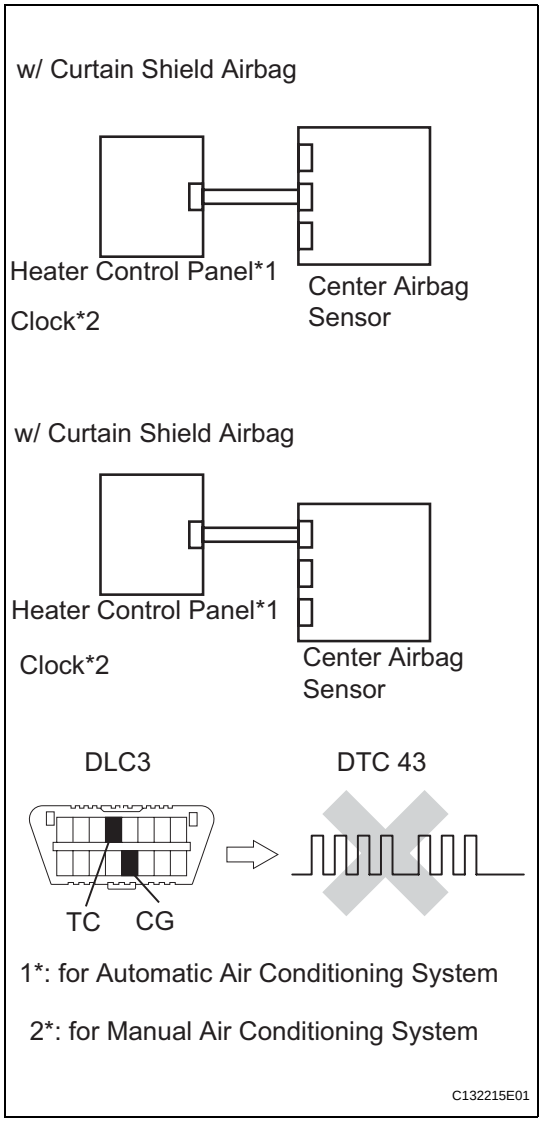

(a) Turn the ignition switch OFF.
(b) Disconnect the cable from the negative (-) battery terminal, and wait for at least 90 seconds.
HINT:
*1: for Automatic Air Conditioning System
*2: for Manual Air Conditioning System
(c) Connect the connector to the center airbag sensor.
(d) Connect the connector to the heater control panel*1 or clock*2.
(e) Connect the cable to the negative (-) battery terminal, and wait for at least 2 seconds.
(f) Turn the ignition switch ON, and wait for at least 60 seconds.
(g) Clear the DTCs (see page RS-49).
(h) Turn the ignition switch OFF.
(i) Turn the ignition switch ON, and wait for at least 60 seconds.
(j) Check for DTCs (see page RS-49).
OK:
DTC B1660/43 is not output.
HINT:
DTCs other than B1660/43 may be output at this time, but they are not related to this check.

NG → **REPLACE CENTER AIRBAG SENSOR ASSEMBLY**

OK

USE SIMULATION METHOD TO CHECK

RS

DTC	B1800/51	Short in Driver Side Squib Circuit

DTC	B1801/51	Open in Driver Side Squib Circuit

DTC	B1802/51	Short to GND in Driver Side Squib Circuit

DTC	B1803/51	Short to B+ in Driver Side Squib Circuit

DESCRIPTION

The driver side squib circuit consists of the center airbag sensor, the spiral cable and the steering pad. The circuit instructs the SRS to deploy when the deployment conditions are met.
These DTCs are recorded when a malfunction is detected in the driver side squib circuit.

DTC No.	DTC Detection Condition	Trouble Area
B1800/51	Center airbag sensor receives a line short signal 5 times in the driver side squib circuit during primary check.	• Instrument panel wire • Spiral cable • Steering pad (Driver side squib) • Center airbag sensor
B1801/51	Center airbag sensor receives an open signal in the driver side squib circuit for 2 seconds.	• Instrument panel wire • Spiral cable • Steering pad (Driver side squib) • Center airbag sensor
B1802/51	Center airbag sensor receives a short to ground signal in the driver side squib circuit for 0.5 seconds.	• Instrument panel wire • Spiral cable • Steering pad (Driver side squib) • Center airbag sensor
B1803/51	Center airbag sensor receives a short to B+ signal in the driver side squib circuit for 0.5 seconds.	• Instrument panel wire • Spiral cable • Steering pad (Driver side squib) • Center airbag sensor

WIRING DIAGRAM

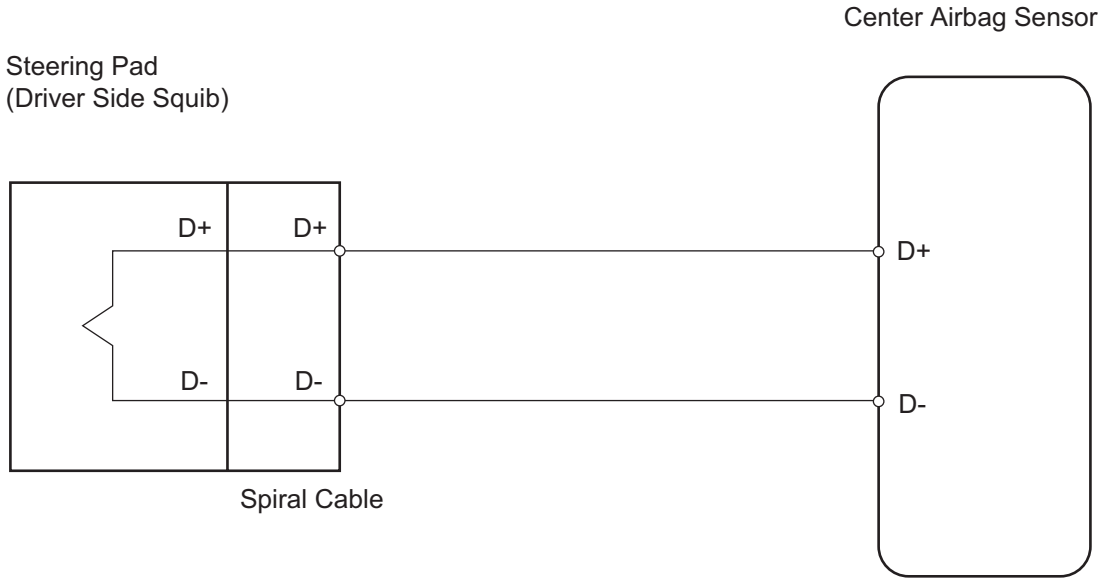

RS

T

H101253E07

INSPECTION PROCEDURE

HINT:

- Perform the simulation method by selecting the "CHECK MODE" (signal check) with the intelligent tester (see page RS-52).
- After selecting the "CHECK MODE" (signal check), perform the simulation method by wiggling each connector of the airbag system or driving the vehicle on a city or rough road (see page RS-52).

1	CHECK STEERING PAD (DRIVER SIDE SQUIB)

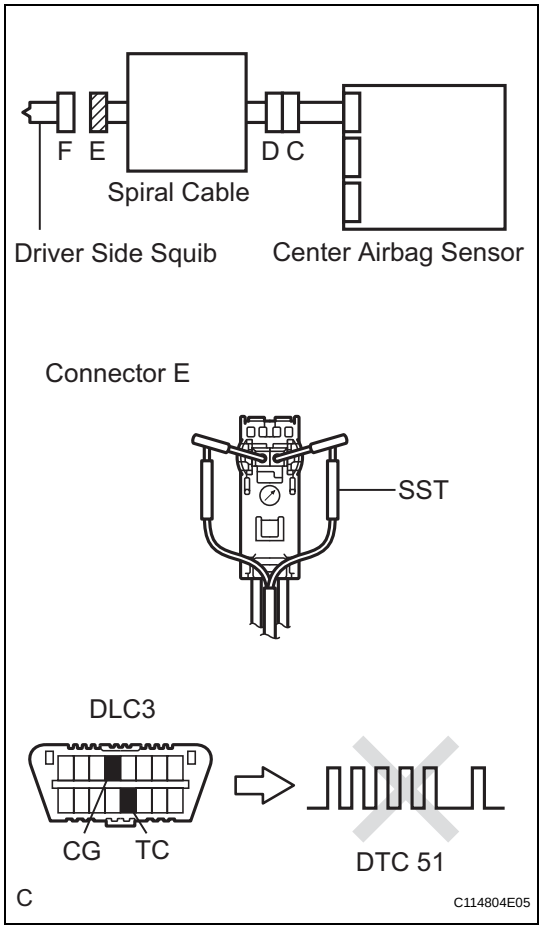

(a) Turn the ignition switch OFF.
(b) Disconnect the cable from the negative (-) battery terminal, and wait for at least 90 seconds.
(c) Disconnect the connectors from the steering pad.
(d) Connect the white wire side of SST (resistance 2.1 Ω) to connector E.
CAUTION:
Never connect a tester to the steering pad (driver side squib) for measurement, as this may lead to a serious injury due to airbag deployment.
NOTICE:
- **Do not forcibly insert SST into the terminals of the connector when connecting.**
- **Insert SST straight into the terminals of the connector.**

SST 09843-18060

(e) Connect the cable to the negative (-) battery terminal, and wait for at least 2 seconds.
(f) Turn the ignition switch on (IG), and wait for at least 60 seconds.
(g) Clear the DTCs (see page RS-49).
(h) Turn the ignition switch OFF.
(i) Turn the ignition switch ON, and wait for at least 60 seconds.
(j) Check the DTCs (see page RS-49).
OK:
DTC B1800, B1801, B1802, B1803 or 51 is not output.
HINT:
DTCs other than DTC B1800, B1801, B1802, B1803 or 51 may be output at this time, but they are not related to this check.

RS

OK → **REPLACE STEERING PAD**

NG

2	CHECK CONNECTOR

(a) Turn the ignition switch OFF.
(b) Disconnect the cable from the negative (-) battery terminal, and wait for at least 90 seconds.
(c) Disconnect SST from the spiral cable.
(d) Check that the spiral cable connectors (on the steering pad side) are not damaged.
OK:
Lock button is not disengaged, and claw of lock is not deformed or damaged.

NG → **REPLACE SPIRAL CABLE**

OK

3	CHECK DRIVER SIDE SQUIB CIRCUIT

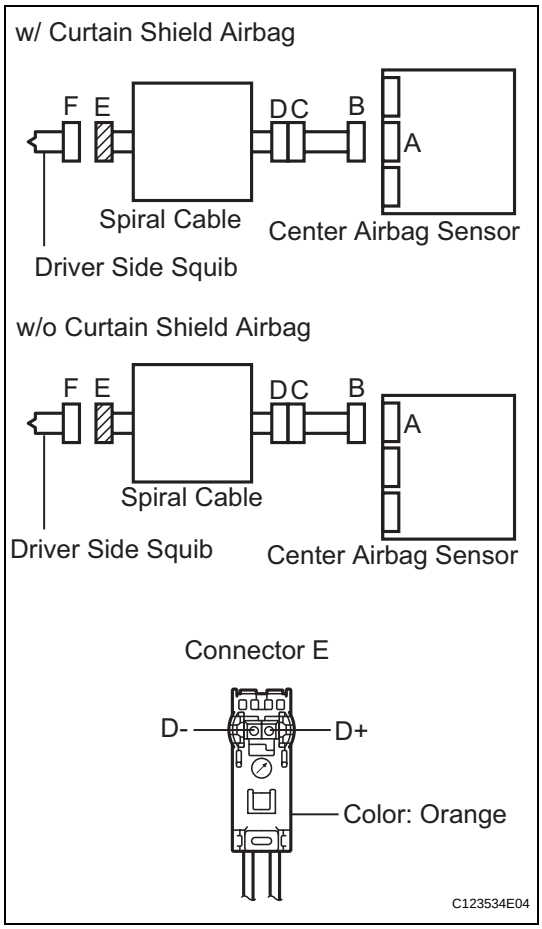

(a) Disconnect the connectors from the center airbag sensor.
(b) Connect the cable to the negative (-) battery terminal, and wait for at least 2 seconds.
(c) Turn the ignition switch ON.
(d) Measure the voltage of the wire harness side connector.

Standard voltage

Tester Connection	Specified Condition
D+ - Body ground	Below 1 V
D- - Body ground	Below 1 V

(e) Turn the ignition switch OFF.
(f) Disconnect the cable from the negative (-) battery terminal, and wait for at least 90 seconds.
(g) Measure the resistance of the wire harness side connector.

Standard resistance

Tester Connection	Specified Condition
D+ - D-	Below 1 Ω
D+ - Body ground	1 MΩ or higher
D- - Body ground	1 MΩ or higher

(h) Release the activation prevention mechanism built into connector B (see page RS-37).
(i) Measure the resistance of the wire harness side connector.

Standard resistance

Tester Connection	Specified Condition
D+ - D-	1 MΩ or higher

OK → **REPLACE CENTER AIRBAG SENSOR ASSEMBLY**

NG

RS

4	CHECK INSTRUMENT PANEL WIRE

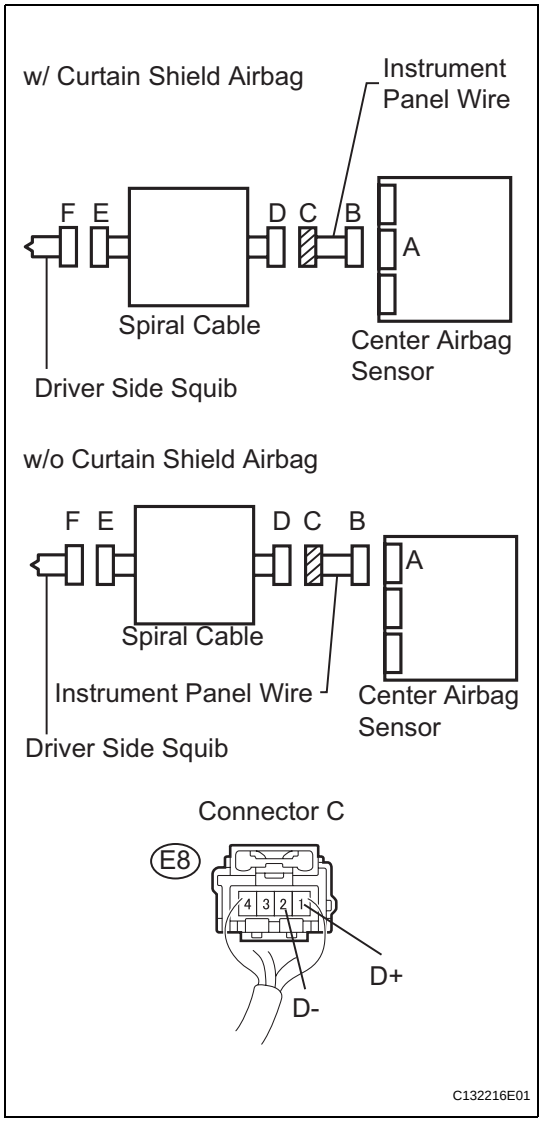

(a) Restore the released activation prevention mechanism of connector B to its original position.
(b) Disconnect the instrument panel wire connector from the spiral cable.
(c) Connect the cable to the negative (-) battery terminal, and wait for at least 2 seconds.
(d) Turn the ignition switch ON.
(e) Measure the voltage of the wire harness side connector.

Standard voltage

Tester Connection	Specified Condition
E8-1 (D+) - Body ground	Below 1 V
E8-2 (D-) - Body ground	Below 1 V

(f) Turn the ignition switch OFF.
(g) Disconnect the cable from the negative (-) battery terminal, and wait for at least 90 seconds.
(h) Measure the resistance of the wire harness side connector.

Standard resistance

Tester Connection	Specified Condition
E8-1 (D+) - E8-2 (D-)	Below 1 Ω
E8-1 (D+) - Body ground	1 MΩ or higher
E8-2 (D-) - Body ground	1 MΩ or higher

(i) Release the activation prevention mechanism built into connector B (see page RS-52).
(j) Measure the resistance of the wire harness side connector.

Standard resistance

Tester Connection	Specified Condition
E8-1 (D+) - E8-2 (D-)	1 MΩ or higher

RS

NG → **REPAIR OR REPLACE INSTRUMENT PANEL WIRE**

OK

REPLACE SPIRAL CABLE

DTC	B1805/52	Short in Front Passenger Side Squib Circuit

DTC	B1806/52	Open in Front Passenger Side Squib Circuit

DTC	B1807/52	Short to GND in Front Passenger Side Squib Circuit

DTC	B1808/52	Short to B+ in Front Passenger Side Squib Circuit

DESCRIPTION

The front passenger side squib circuit consists of the center airbag sensor and the front passenger airbag. The circuit instructs the SRS to deploy when the deployment conditions are met.
These DTCs are recorded when a malfunction is detected in the front passenger side squib circuit.

DTC No.	DTC Detection Condition	Trouble Area
B1805/52	Center airbag sensor receives a line short signal 5 times in the front passenger side squib circuit during primary check.	• No. 1 Instrument panel wire • No. 2 Instrument panel wire • Front passenger airbag (Front passenger side squib) • Center airbag sensor
B1806/52	Center airbag sensor assembly receives an open circuit signal in the front passenger side squib circuit for 2 seconds.	• No. 1 Instrument panel wire • No. 2 Instrument panel wire • Front passenger airbag (Front passenger side squib) • Center airbag sensor
B1807/52	Center airbag sensor receives a short to ground signal in the front passenger side squib circuit for 0.5 seconds.	• No. 1 Instrument panel wire • No. 2 Instrument panel wire • Front passenger airbag (Front passenger side squib) • Center airbag sensor
B1808/52	Center airbag sensor receives a short to B+ signal in the front passenger side squib circuit for 0.5 seconds.	• No. 1 Instrument panel wire • No. 2 Instrument panel wire • Front passenger airbag (Front passenger side squib) • Center airbag sensor

WIRING DIAGRAM

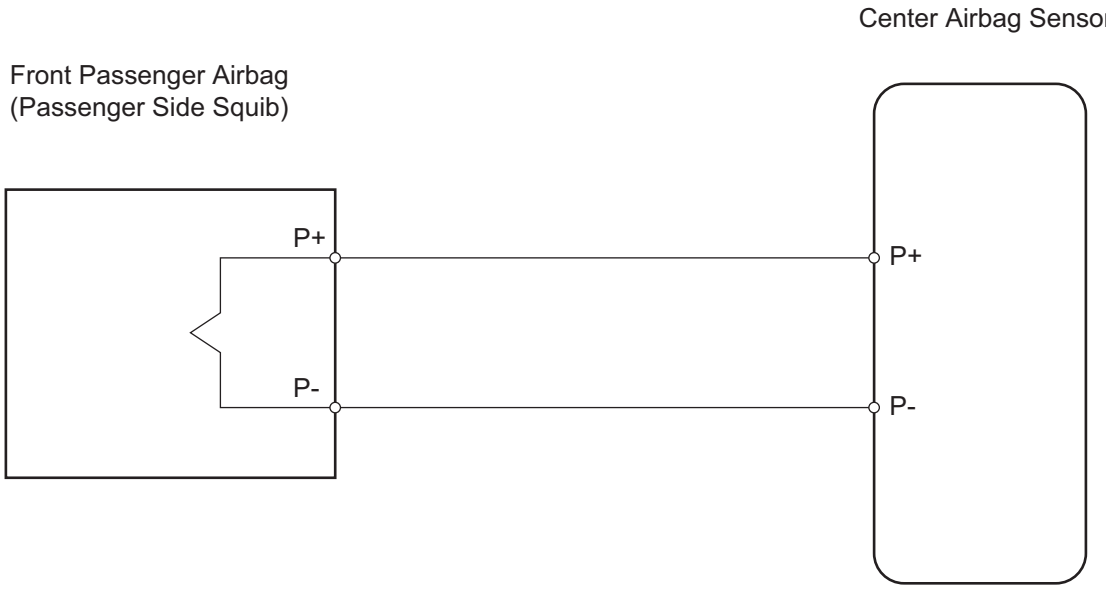

RS

INSPECTION PROCEDURE

HINT:

- Perform the simulation method by selecting the "CHECK MODE" (signal check) with the intelligent tester (see page RS-52).
- After selecting the "CHECK MODE" (signal check), perform the simulation method by wiggling each connector of the airbag system or driving the vehicle on a city or rough road (see page RS-52).

1	CHECK FRONT PASSENGER AIRBAG ASSEMBLY (FRONT PASSENGER SIDE SQUIB)

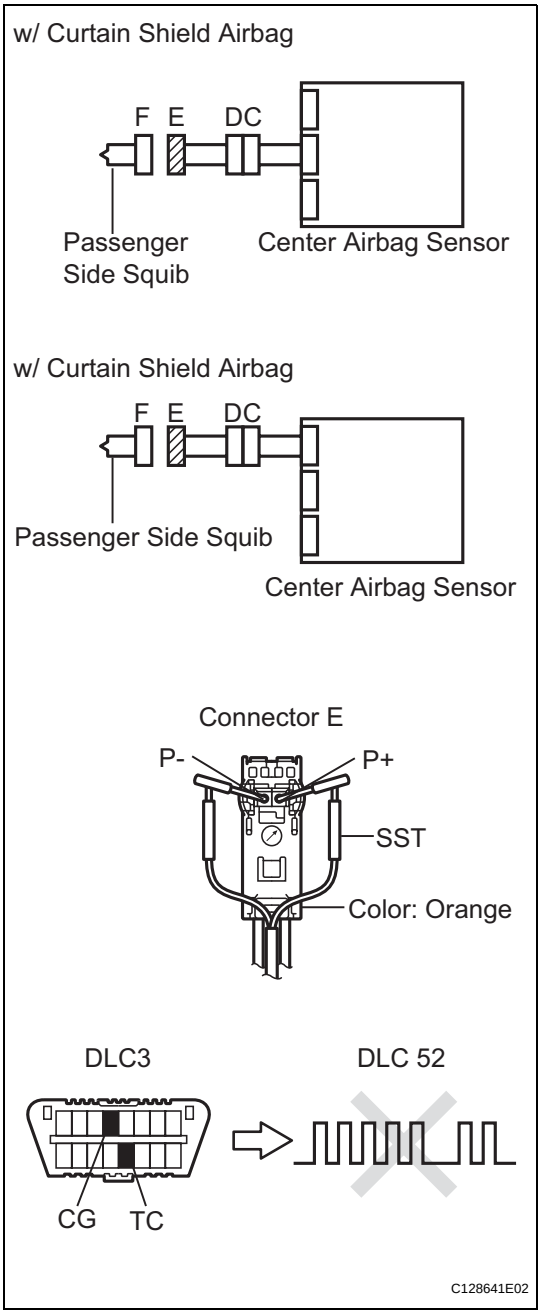

(a) Turn the ignition switch OFF.
(b) Disconnect the cable from the negative (-) battery terminal, and wait for at least 90 seconds.
(c) Disconnect the connectors from the front passenger airbag.
(d) Connect the white wire side of SST (resistance 2.1 Ω) to the instrument panel wire connector E.

CAUTION:
Never connect a tester to the front passenger airbag (front passenger side squib) for measurement, as this may lead to a serious injury due to airbag deployment.

NOTICE:
- **Do not forcibly insert SST into the terminals of the connector when connecting.**
- **Insert SST straight into the terminals of the connector.**

SST 09843-18060

(e) Connect the cable to the negative (-) battery terminal, and wait for at least 2 seconds.
(f) Turn the ignition switch ON, and wait for at least 60 seconds.
(g) Clear the DTCs (see page RS-49).
(h) Turn the ignition switch OFF.
(i) Turn the ignition switch ON, and wait for at least 60 seconds.
(j) Check the DTCs (see page RS-49).

OK:
DTC B1805, B1806, B1807, B1808 or 52 is not output.

HINT:
DTCs other than DTC B1805, B1806, B1807, B1808 or 52 may be output at this time, but they are not related to this check.

OK → **REPLACE FRONT PASSENGER AIRBAG ASSEMBLY**

NG

2	CHECK CONNECTOR

(a) Turn the ignition switch OFF.
(b) Disconnect the cable from the negative (-) battery terminal, and wait for at least 90 seconds.
(c) Disconnect SST from the instrument panel wire.
(d) Check that the instrument panel wire connectors (on the front passenger side airbag) are not damaged.

RS

OK:
Lock button is not disengaged, and claw of lock is not deformed or damaged.

NG → **Go to step 4**

OK

3 CHECK INSTRUMENT PANEL WIRE

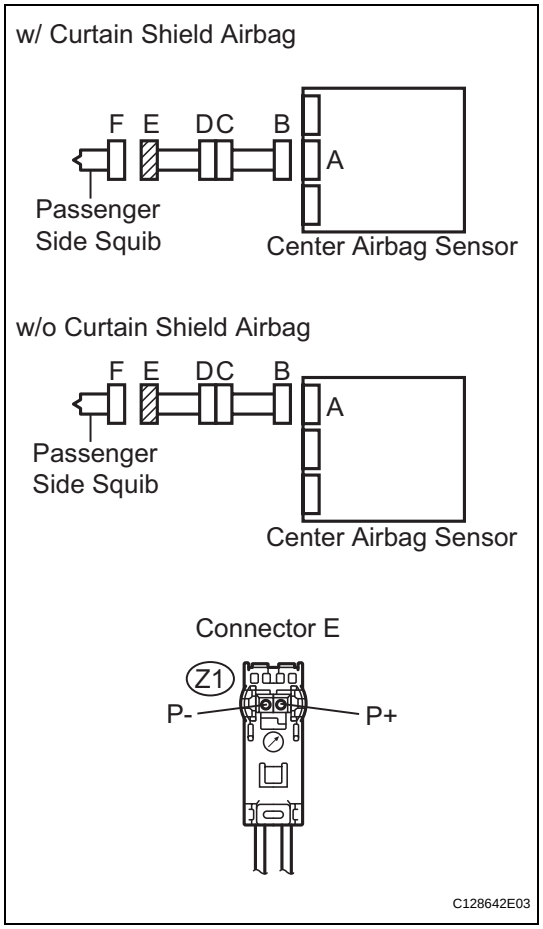

(a) Disconnect the connector from the center airbag sensor.
(b) Connect the cable to the negative (-) battery terminal, and wait for at least 2 seconds.
(c) Turn the ignition switch ON.
(d) Measure the voltage of the wire harness side connector.
Standard voltage

Tester Connection	Specified Condition
Z1-1 (P+) - Body ground	Below 1 V
Z1-2 (P-) - Body ground	Below 1 V

(e) Turn the ignition switch OFF.
(f) Disconnect the cable from the negative (-) battery terminal, and wait for at least 90 seconds.
(g) Measure the resistance of the wire harness side connector.
Standard resistance

Tester Connection	Specified Condition
Z1-1 (P+) - Z1-2 (P-)	Below 1 Ω
Z1-1 (P+) - Body ground	1 MΩ or higher
Z1-2 (P-) - Body ground	1 MΩ or higher

(h) Release the activation prevention mechanism built into connector B (see page RS-37).
(i) Measure the resistance of the wire harness side connector.
Standard resistance

Tester Connection	Specified Condition
Z1-1 (P+) - Z1-2 (P-)	1 MΩ or higher

OK → **REPLACE CENTER AIRBAG SENSOR ASSEMBLY**

NG

RS

4	CHECK NO. 2 INSTRUMENT PANEL WIRE

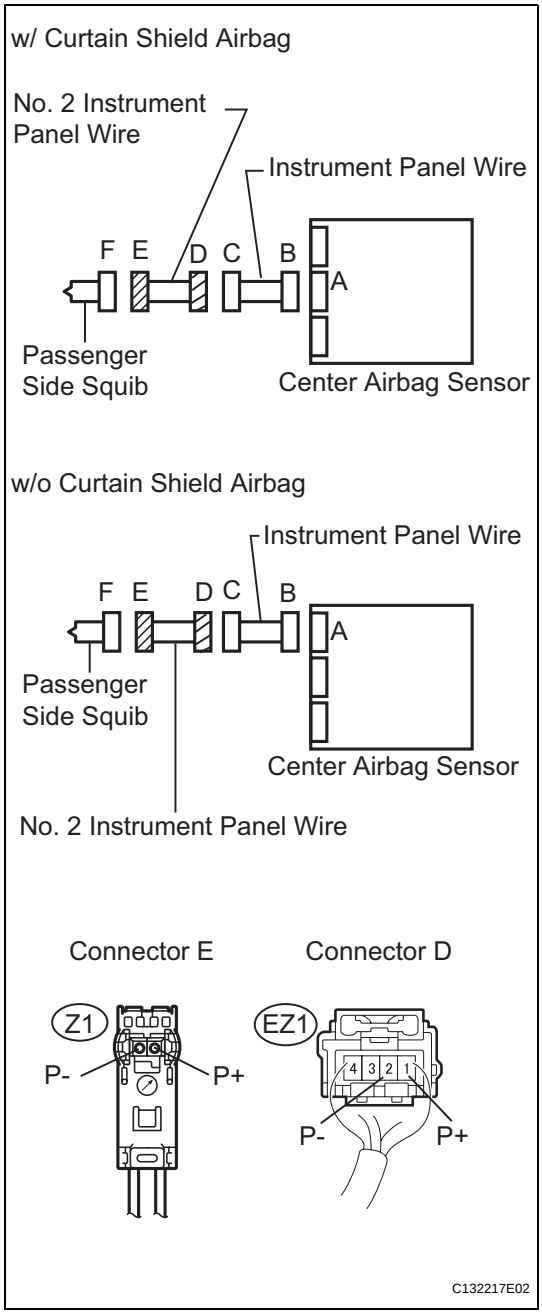

(a) Disconnect the No. 2 floor wire connector from the floor wire.
(b) Connect the cable to the negative (-) battery terminal, and wait for at least 2 seconds.
(c) Turn the ignition switch ON.
(d) Measure the voltage of the wire harness side connector.

Standard voltage

Tester Connection	Specified Condition
Z1-1 (P+) - Body ground	Below 1 V
Z1-2 (P-) - Body ground	Below 1 V

(e) Turn the ignition switch OFF.
(f) Disconnect the cable from the negative (-) battery terminal, and wait for at least 90 seconds.
(g) Measure the resistance of the wire harness side connector.

Standard resistance

Tester Connection	Specified Condition
Z1-2 (P-) - EZ1-2	Below 1 Ω
Z1-1 (P+) - EZ1-1	Below 1 Ω
Z1-2 (P-) - Z1-1 (P+)	1 MΩ or higher
Z1-2 (P-) - Body ground	1 MΩ or higher
Z1-1 (P+) - Body ground	1 MΩ or higher

NG → **REPAIR OR REPLACE NO. 2 INSTRUMENT PANEL WIRE**

OK

REPAIR OR REPLACE INSTRUMENT PANEL WIRE

RS

DTC	B1810/53	Short in Driver Side Squib 2nd Step Circuit

DTC	B1811/53	Open in Driver Side Squib 2nd Step Circuit

DTC	B1812/53	Short to GND in Driver Side Squib 2nd Step Circuit

DTC	B1813/53	Short to B+ in Driver Side Squib 2nd Step Circuit

DESCRIPTION

The driver side squib 2nd step circuit consists of the center airbag sensor, the spiral cable and the steering pad.
The circuit instructs the SRS to deploy when the deployment conditions are met.
These DTCs are recorded when a malfunction is detected in the driver side squib 2nd step circuit.

DTC No.	DTC Detection Condition	Trouble Area
B1810/53	Center airbag sensor receives a line short signal 5 times in the driver side squib 2nd step circuit during primary check.	• Instrument panel wire • Spiral cable • Steering pad (Driver side squib 2nd step) • Center airbag sensor
B1811/53	Center airbag sensor receives an open signal in the driver side squib 2nd step circuit for 2 seconds.	• Instrument panel wire • Spiral cable • Steering pad (Driver side squib 2nd step) • Center airbag sensor
B1812/53	Center airbag sensor assembly receives a short circuit to ground signal in the driver side 2nd step circuit for 0.5 seconds.	• Instrument panel wire • Spiral cable • Steering pad (Driver side squib 2nd step) • Center airbag sensor
B1813/53	Center airbag sensor assembly receives a short circuit to B+ signal in the driver side squib 2nd step circuit for 0.5 seconds.	• Instrument panel wire • Spiral cable • Steering pad (Driver side squib 2nd step) • Center airbag sensor

WIRING DIAGRAM

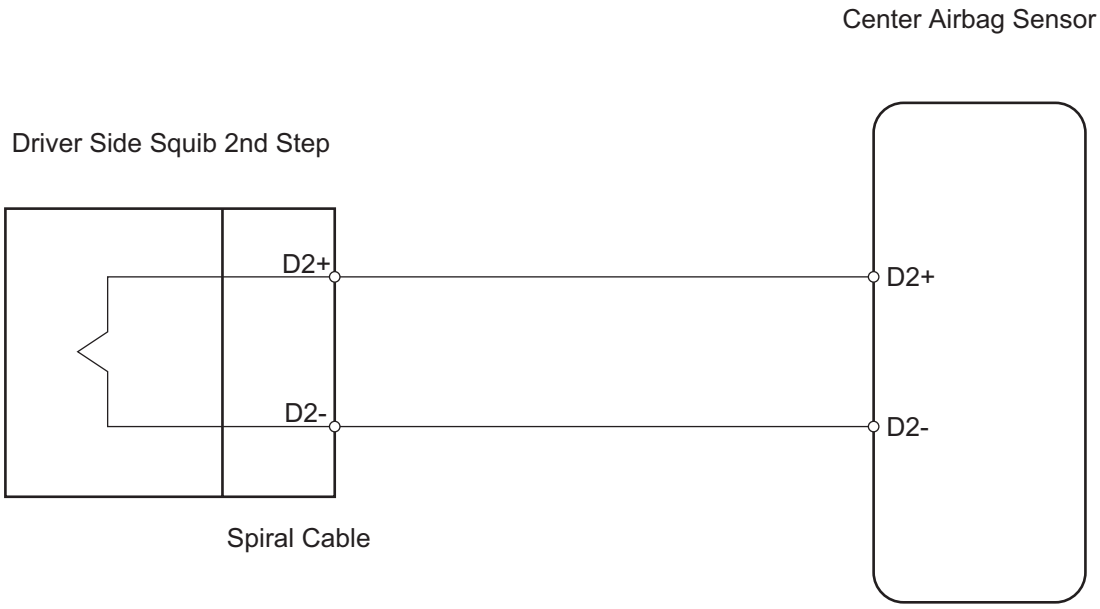

RS

INSPECTION PROCEDURE

HINT:

- Perform the simulation method by selecting the "CHECK MODE" (signal check) with the intelligent tester (see page RS-52).
- After selecting the "CHECK MODE" (signal check), perform the simulation method by wiggling each connector of the airbag system or driving the vehicle on a city or rough road (see page RS-52).

1	CHECK STEERING PAD (DRIVER SIDE SQUIB 2ND STEP)

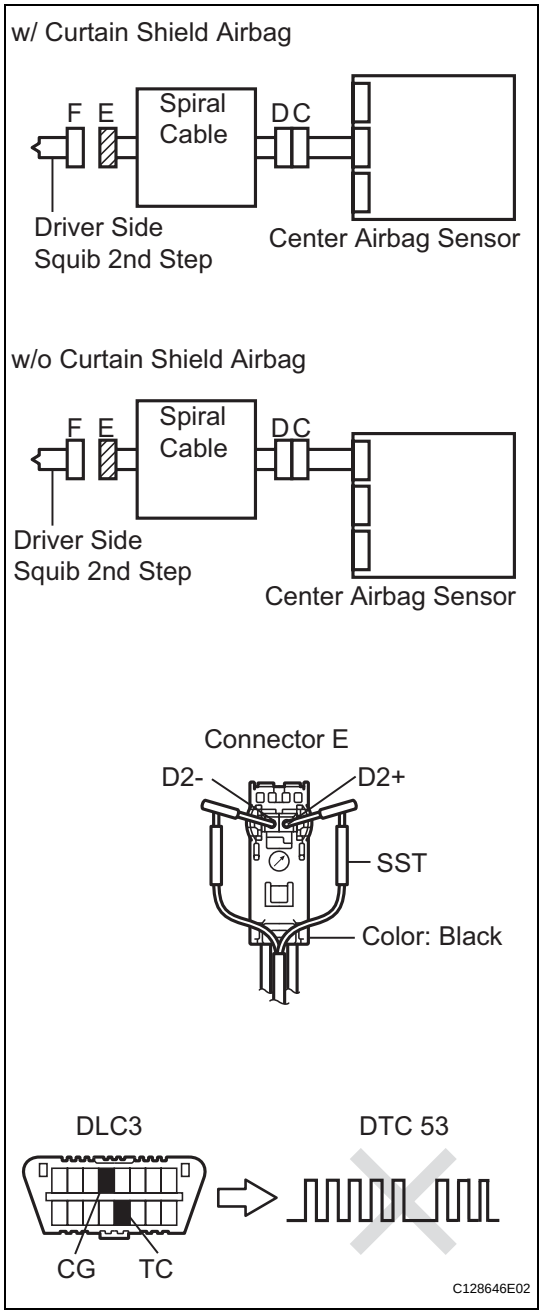

(a) Turn the ignition switch OFF.
(b) Disconnect the cable from the negative (-) battery terminal, and wait for at least 90 seconds.
(c) Disconnect the connectors from the steering pad.
(d) Connect the white wire side of SST to the spiral cable connector E.

CAUTION:
Never connect a tester to the steering pad (driver side squib 2nd step) for measurement, as this may lead to a serious injury due to airbag deployment.
NOTICE:
- **Do not forcibly insert SST into the terminals of the connector when connecting.**
- **Insert SST straight into the terminals of the connector.**

SST 09843-18060

(e) Connect the cable to the negative (-) battery terminal, and wait for at least 2 seconds.
(f) Turn the ignition switch ON, and wait for at least 60 seconds.
(g) Clear the DTCs (see page RS-49).
(h) Turn the ignition switch OFF.
(i) Turn the ignition switch ON, and wait for at least 60 seconds.
(j) Check the DTCs (see page RS-49).

OK:
DTC B1810, B1811, B1812, B1813 or 53 is not output.

HINT:
DTCs other than DTC B1810, B1811, B1812, B1813 or 53 may be output at this time, but they are not related to this check.

OK → **REPLACE STEERING PAD**

NG

2	CHECK CONNECTOR

(a) Turn the ignition switch OFF.
(b) Disconnect the cable from the negative (-) battery terminal, and wait for at least 90 seconds.
(c) Disconnect SST from the spiral cable.
(d) Check that the spiral cable connector (on the steering pad side) is not damaged.

RS

OK:
Lock button is not disengaged, and claw of lock is not deformed or damaged.

NG → **REPLACE SPIRAL CABLE**

OK

3 CHECK DRIVER SIDE SQUIB 2ND STEP CIRCUIT

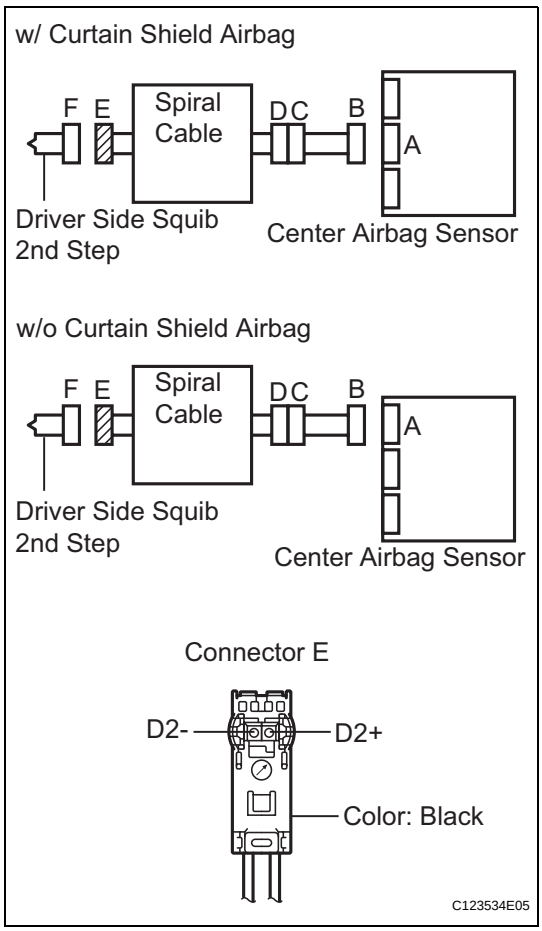

(a) Disconnect the connector from the center airbag sensor.
(b) Connect the cable to the negative (-) battery terminal, and wait for at least 2 seconds.
(c) Turn the ignition switch ON.
(d) Measure the voltage of the wire harness side connector.
Standard voltage

Tester Connection	Specified Condition
D2+ - Body ground	Below 1 V
D2- - Body ground	Below 1 V

(e) Turn the ignition switch OFF.
(f) Disconnect the cable from the negative (-) battery terminal, and wait for at least 90 seconds.
(g) Measure the resistance of the wire harness side connector.
Standard resistance

Tester Connection	Specified Condition
D2+ - D2-	Below 1 Ω
D2+ - Body ground	1 MΩ or higher
D2- - Body ground	1 MΩ or higher

(h) Release the activation prevention mechanism built into connector B (see page RS-37).
(i) Measure the resistance of the wire harness side connector.
Standard resistance

Tester Connection	Specified Condition
D2+ - D2-	1 MΩ or higher

OK → **REPLACE CENTER AIRBAG SENSOR ASSEMBLY**

OK

RS

4	CHECK INSTRUMENT PANEL WIRE

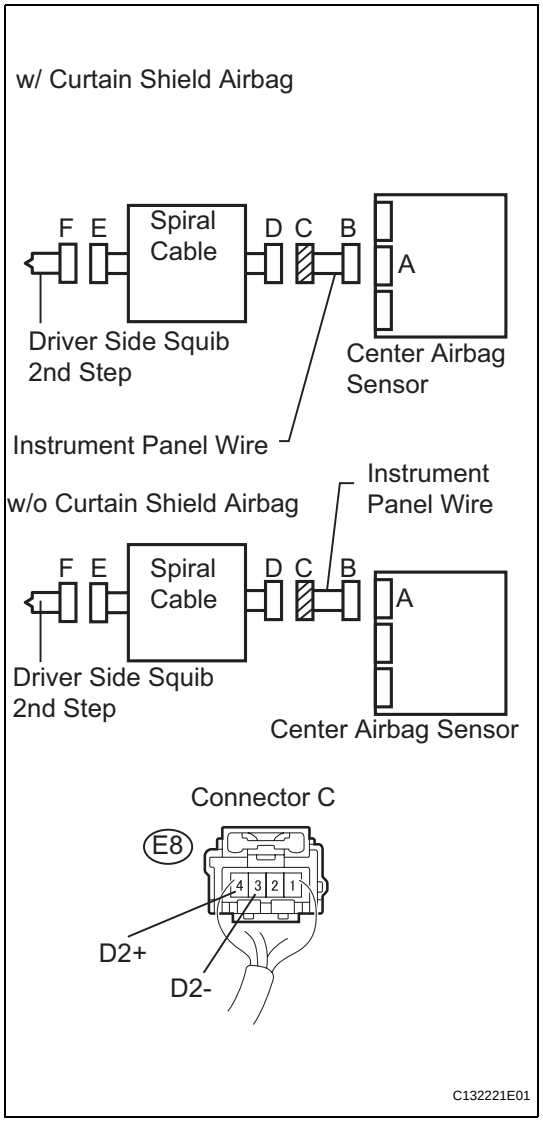

(a) Restore the released activation prevention mechanism of connector B to its original position.
(b) Disconnect the instrument panel wire connector from the spiral cable.
(c) Connect the cable to the negative (-) battery terminal, and wait for at least 2 seconds.
(d) Turn the ignition switch ON.
(e) Measure the voltage of the wire harness side connector.

Standard voltage

Tester Connection	Specified Condition
E8-4 (D2+) - Body ground	Below 1 V
E8-3 (D2-) - Body ground	Below 1 V

(f) Turn the ignition switch OFF.
(g) Disconnect the cable from the negative (-) battery terminal, and wait for at least 90 seconds.
(h) Measure the resistance of the wire harness side connector.

Standard resistance

Tester Connection	Specified Condition
E8-4 (D2+) - E8-3 (D2-)	Below 1 Ω
E8-4 (D2+) - Body ground	1 MΩ or higher
E8-3 (D2-) - Body ground	1 MΩ or higher

(i) Release the activation prevention mechanism built into connector B (see page RS-37).
(j) Measure the resistance of the wire harness side connector.

Standard resistance

Tester Connection	Specified Condition
E8-4 (D2+) - E8-3 (D2-)	1 MΩ or higher

RS

NG → **REPAIR OR REPLACE INSTRUMENT PANEL WIRE ASSEMBLY**

OK

REPLACE SPIRAL CABLE

DTC	**B1815/54**	**Short in Front Passenger Side Squib 2nd Step Circuit**

DTC	**B1816/54**	**Open in Front Passenger Side Squib 2nd Step Circuit**

DTC	**B1817/54**	**Short to GND in Front Passenger Side Squib 2nd Step Circuit**

DTC	**B1818/54**	**Short to B+ in Front Passenger Side Squib 2nd Step Circuit**

DESCRIPTION

The front passenger side squib 2nd step circuit consists of the center airbag sensor and the front passenger airbag.
The circuit instructs the SRS to deploy when the deployment conditions are met.
These DTCs are recorded when a malfunction is detected in the front passenger side squib 2nd step circuit.

DTC No.	DTC Detection Condition	Trouble Area
B1815/54	Center airbag sensor receives a line short signal 5 times in the front passenger side squib 2nd step circuit during primary check.	• Instrument panel wire • Front passenger airbag (Front passenger side squib 2nd step) • Center airbag sensor
B1816/54	Center airbag sensor receives an open signal in the front passenger side squib 2nd step circuit for 2 seconds.	• Instrument panel wire • Front passenger airbag (Front passenger side squib 2nd step) • Center airbag sensor
B1817/54	Center airbag sensor receives a short to ground signal in the front passenger side squib 2nd step circuit for 0.5 seconds.	• Instrument panel wire • Front passenger airbag (Front passenger side squib 2nd step) • Center airbag sensor
B1818/54	Center airbag sensor receives a short to B+ signal in the front passenger side squib 2nd step circuit for 0.5 seconds.	• Instrument panel wire • Front passenger airbag (Front passenger side squib 2nd step) • Center airbag sensor

WIRING DIAGRAM

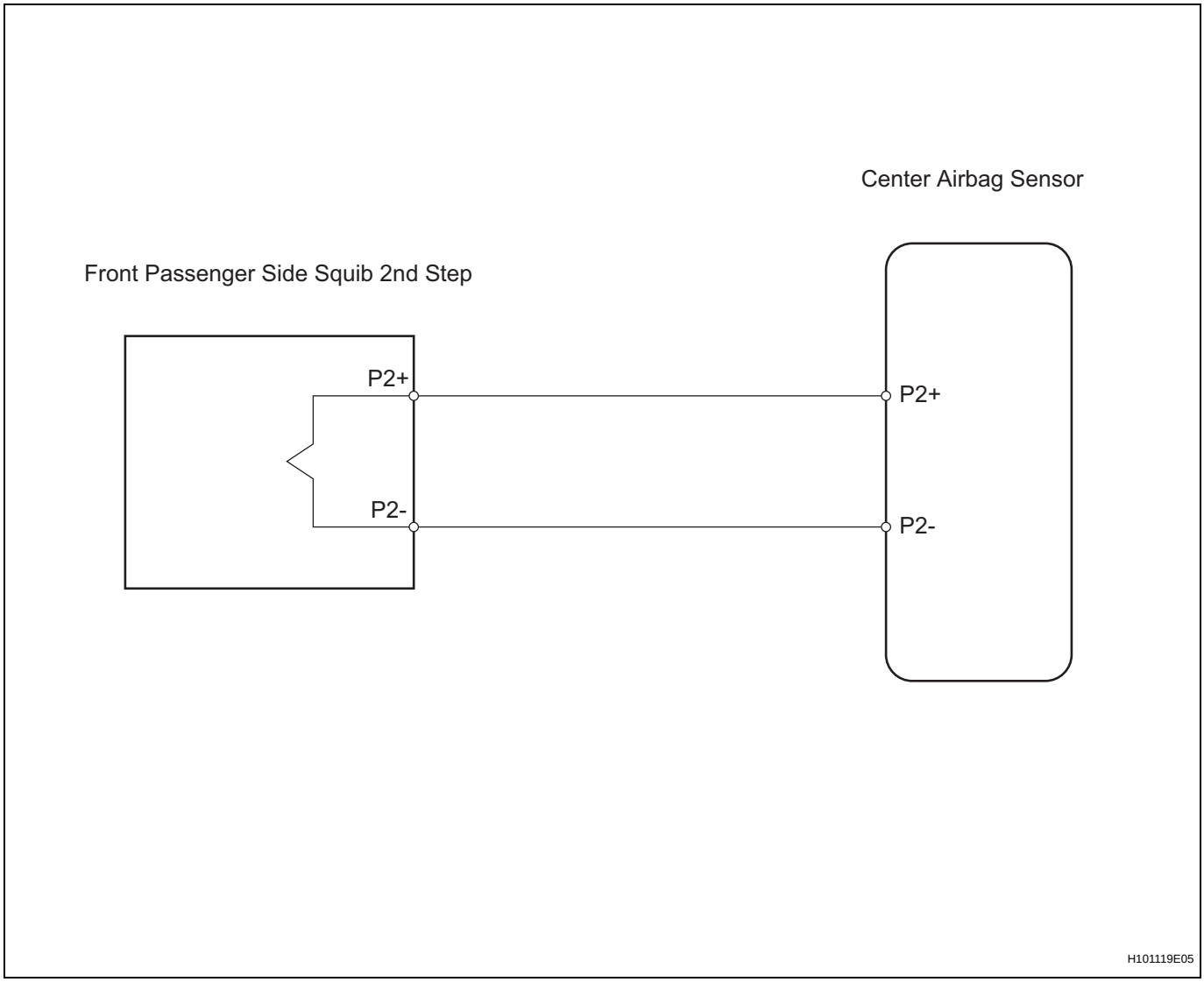

RS

INSPECTION PROCEDURE

HINT:

- Perform the simulation method by selecting the "CHECK MODE" (signal check) with the intelligent tester (see page RS-52).
- After selecting the "CHECK MODE" (signal check), perform the simulation method by wiggling each connector of the airbag system or driving the vehicle on a city or rough road (see page RS-52).

1	CHECK FRONT PASSENGER AIRBAG ASSEMBLY (FRONT PASSENGER SIDE SQUIB 2ND STEP)

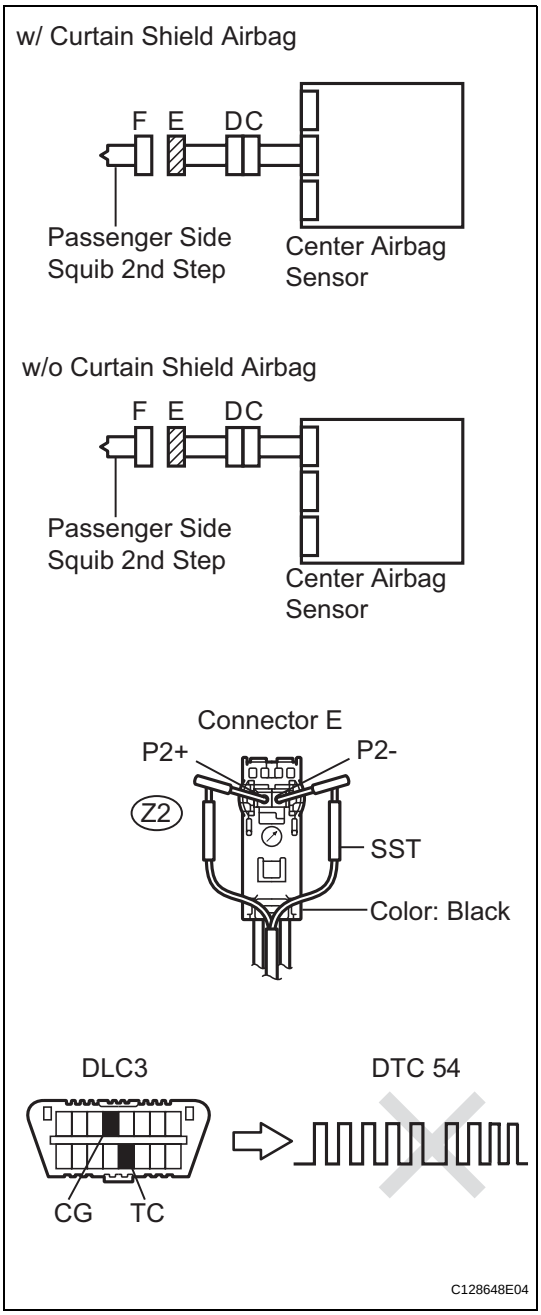

(a) Turn the ignition switch OFF.
(b) Disconnect the cable from the negative (-) battery terminal, and wait for at least 90 seconds.
(c) Disconnect the connector from the front passenger airbag.
(d) Connect the white wire side of SST to the instrument panel wire connector E.

CAUTION:
Never connect a tester to the front passenger airbag (front passenger side squib 2nd step) for measurement, as this may lead to a serious injury due to airbag deployment.

NOTICE:
- **Do not forcibly insert SST into the terminals of the connector when connecting.**
- **Insert SST straight into the terminals of the connector.**

SST 09843-18060

(e) Connect the cable to the negative (-) battery terminal, and wait for at least 2 seconds.
(f) Turn the ignition switch ON, and wait for at least 60 seconds.
(g) Clear the DTCs (see page RS-49).
(h) Turn the ignition switch OFF.
(i) Turn the ignition switch ON, and wait for at least 60 seconds.
(j) Check the DTCs (see page RS-49).

OK:
DTC B1815, B1816, B1817, B1818 or 54 is not output.

HINT:
DTCs other than DTC B1815, B1816, B1817, B1818 and 54 may be output at this time, but they are not related to this check.

OK → **REPLACE FRONT PASSENGER AIRBAG ASSEMBLY**

NG

2	CHECK CONNECTOR

(a) Turn the ignition switch OFF.
(b) Disconnect the cable from the negative (-) battery terminal, and wait for at least 90 seconds.
(c) Disconnect SST (resistance 2.1 Ω) from the instrument panel wire.
(d) Check that the instrument panel wire connectors (on the front passenger side airbag) are not damaged.

RS

OK:
Lock button is not disengaged, and claw of lock is not deformed or damaged.

NG → **REPLACE INSTRUMENT PANEL WIRE**

OK

3 CHECK INSTRUMENT PANEL WIRE

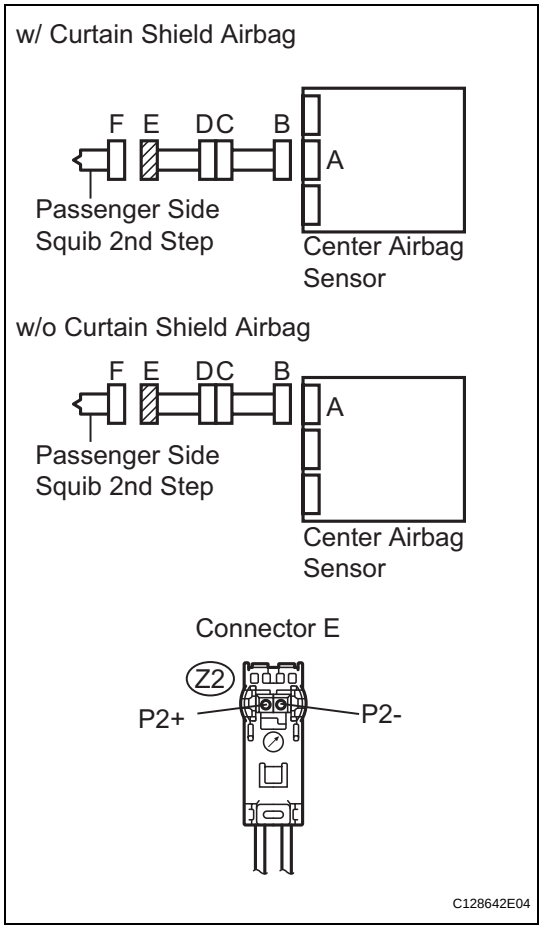

(a) Disconnect the connector from the center airbag sensor.
(b) Connect the cable to the negative (-) battery terminal, and wait for at least 2 seconds.
(c) Turn the ignition switch ON.
(d) Measure the voltage of the wire harness side connector.
Standard voltage

Tester Connection	Specified Condition
Z2-2 (P2+) - Body ground	Below 1 V
Z2-1 (P2-) - Body ground	Below 1 V

(e) Turn the ignition switch OFF.
(f) Disconnect the cable from the negative (-) battery terminal, and wait for at least 90 seconds.
(g) Measure the resistance of the wire harness side connector.
Standard resistance

Tester Connection	Specified Condition
Z2-2 (P2+) - Z2-1 (P2-)	Below 1 Ω
Z2-2 (P2+) - Body ground	1 MΩ or higher
Z2-1 (P2-) - Body ground	1 MΩ or higher

(h) Release the activation prevention mechanism built into connector B (see page RS-37).
(i) Measure the resistance of the wire harness side connector.
Standard resistance

Tester Connection	Specified Condition
Z2-2 (P2+) - Z2-1 (P2-)	1 MΩ or higher

OK → **REPLACE CENTER AIRBAG SENSOR ASSEMBLY**

NG

RS

4	CHECK NO. 2 INSTRUMENT PANEL WIRE

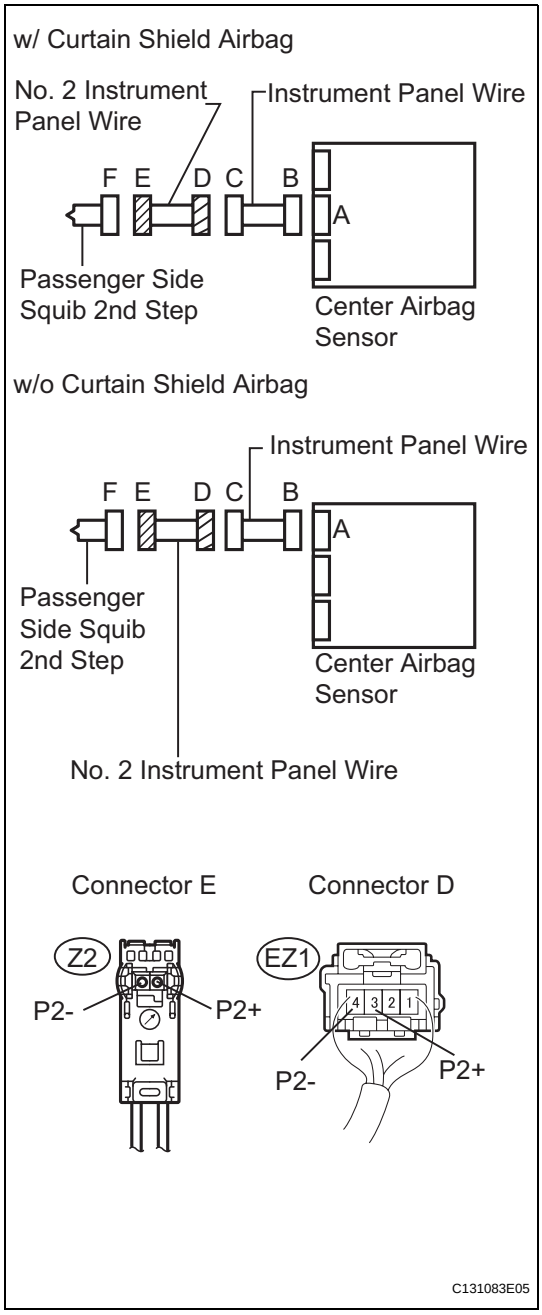

(a) Disconnect the No. 2 instrument panel wire connector from the instrument panel wire.
(b) Connect the cable to the negative (-) battery terminal, and wait for at least 2 seconds.
(c) Turn the ignition switch ON.
(d) Measure the voltage of the wire harness side connector.

Standard voltage

Tester Connection	Specified Condition
Z2-2 (P2+) - Body ground	Below 1 V
Z2-1 (P2-) - Body ground	Below 1 V

(e) Turn the ignition switch OFF.
(f) Disconnect the cable from the negative (-) battery terminal, and wait for at least 90 seconds.
(g) Measure the resistance of the wire harness side connector.

Standard resistance

Tester Connection	Specified Condition
Z2-2 (P2+) - EZ1-3	Below 1 Ω
Z2-1 (P2-) - EZ1-4	Below 1 Ω
Z2-2 (P2+) - Z2-1 (P2-)	Below 1 Ω
Z2-2 (P2+) - Body ground	1 MΩ or higher
Z2-1 (P2-) - Body ground	1 MΩ or higher

NG → **REPAIR OR REPLACE NO. 2 INSTRUMENT PANEL WIRE**

OK

REPAIR OR REPLACE INSTRUMENT PANEL WIRE

RS

DTC	B1820/55	Short in Front Driver Side - Side Squib Circuit

DTC	B1821/55	Open in Front Driver Side - Side Squib Circuit

DTC	B1822/55	Short to GND in Front Driver Side - Side Squib Circuit

DTC	B1823/55	Short to B+ in Front Driver Side - Side Squib Circuit

DESCRIPTION

The driver side - side squib circuit consists of the center airbag sensor and the front seat side airbag LH. This circuit instructs the SRS to deploy when the deployment conditions are met.
These DTCs are recorded when a malfunction is detected in the driver side - side squib circuit.

DTC No.	DTC Detection Condition	Trouble Area
B1820/55	Center airbag sensor receives a line short signal 5 times in the driver side - side squib circuit during primary check.	• Floor wire • No. 1 seat airbag wire • Front seat side airbag LH (Driver side - side squib) • Center airbag sensor
B1821/55	Center airbag sensor receives an open signal in the driver side - side squib circuit for 2 seconds.	• Floor wire • No. 1 seat airbag wire • Front seat side airbag LH (Driver side - side squib) • Center airbag sensor
B1822/55	Center airbag sensor receives a short to ground signal in the driver side - side squib circuit for 0.5 seconds.	• Floor wire • No. 1 seat airbag wire • Front seat side airbag LH (Driver side - side squib) • Center airbag sensor
B1823/55	Center airbag sensor receives a short to B+ signal in the driver side - side squib circuit for 0.5 seconds.	• Floor wire • No. 1 seat airbag wire • Front seat side airbag LH (Driver side - side squib) • Center airbag sensor

WIRING DIAGRAM

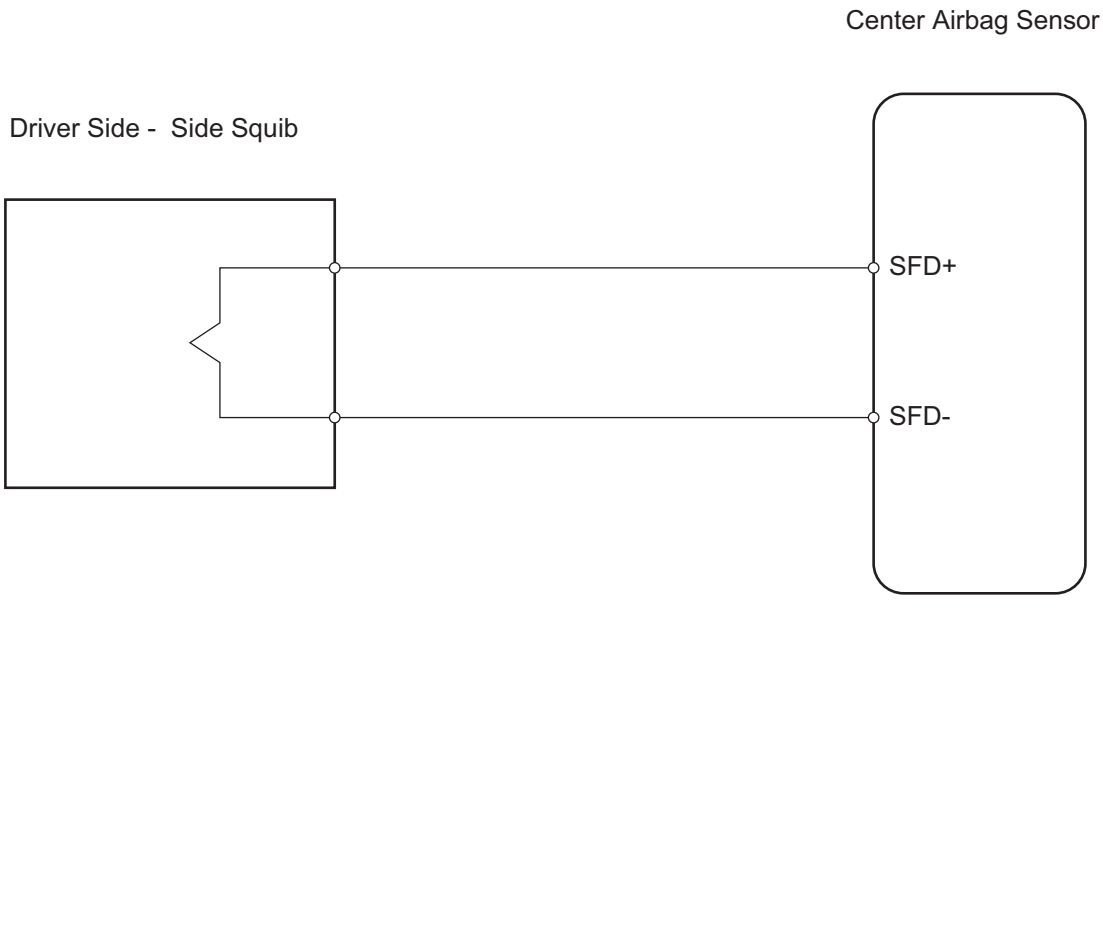

RS

INSPECTION PROCEDURE

HINT:

- Perform the simulation method by selecting the "CHECK MODE" (signal check) with the intelligent tester (see page RS-52).
- After selecting the "CHECK MODE" (signal check), perform the simulation method by wiggling each connector of the airbag system or driving the vehicle on a city or rough road (see page RS-52).

1	CHECK FRONT SEAT SIDE AIRBAG ASSEMBLY LH (DRIVER SIDE - SIDE SQUIB)

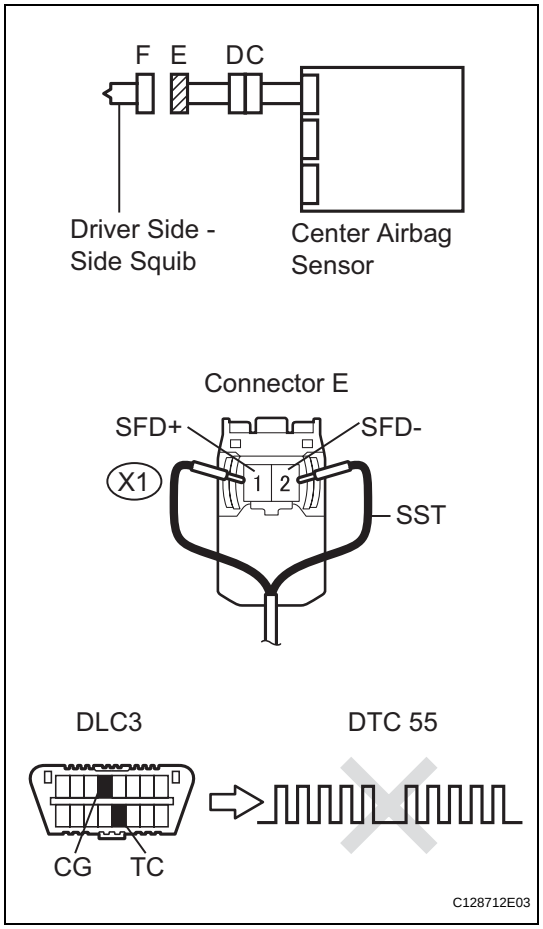

(a) Turn the ignition switch OFF.
(b) Disconnect the cable from the negative (-) battery terminal, and wait for at least 90 seconds.
(c) Disconnect the connector from the front seat side airbag LH.
(d) Connect the black wire side of SST to connector E.
CAUTION:
Never connect a tester to the front seat side airbag LH (driver side - side squib) for measurement, as this may lead to a serious injury due to airbag deployment.
NOTICE:
- **Do not forcibly insert SST into the terminals of the connector when connecting.**
- **Insert SST straight into the terminals of the connector.**

SST 09843-18060

(e) Connect the cable to the negative (-) battery terminal, and wait for at least 2 seconds.
(f) Turn the ignition switch ON, and wait for at least 60 seconds.
(g) Clear the DTCs (see page RS-49).
(h) Turn the ignition switch OFF.
(i) Turn the ignition switch ON, and wait for at least 60 seconds.
(j) Check the DTCs (see page RS-49).
OK:
DTC B1820, B1821, B1822, B1823 or 55 is not output.
HINT:
DTCs other than DTC B1820, B1821, B1822, B1823 or 55 may be output at this time, but they are not related to this check.

OK → **REPLACE FRONT SEAT ASSEMBLY LH**

NG

2	CHECK CONNECTOR

(a) Turn the ignition switch OFF.
(b) Disconnect the cable from the negative (-) battery terminal, and wait for at least 90 seconds.
(c) Disconnect SST from the No. 1 seat airbag wire.
(d) Check that the floor wire connectors (on the driver side - side squib) are not damaged.
OK:
Lock button is not disengaged, and claw of lock is not deformed or damaged.

NG → **REPLACE FLOOR WIRE**

RS

OK

3	CHECK FLOOR WIRE (DRIVER SIDE - SIDE SQUIB CIRCUIT)

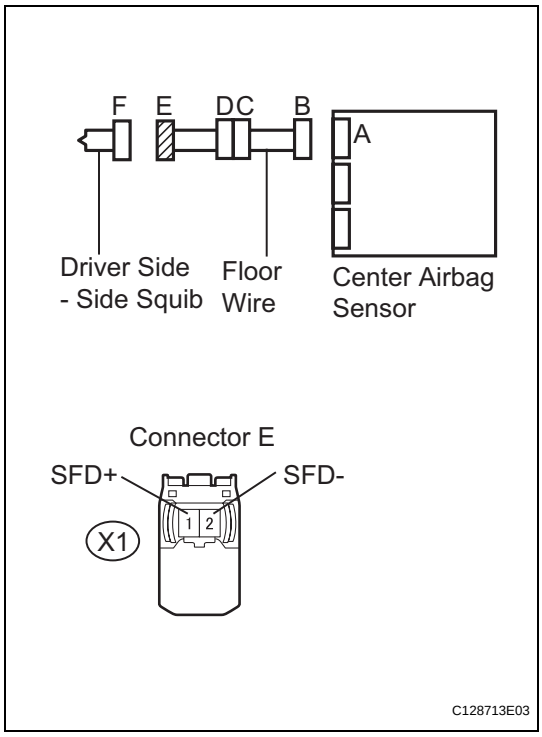

(a) Disconnect the connector from the center airbag sensor.
(b) Connect the cable to the negative (-) battery terminal, and wait for at least 2 seconds.
(c) Turn the ignition switch ON.
(d) Measure the voltage of the wire harness side connector.

Standard voltage

Tester Connection	Specified Condition
X1-1 (SFD-) - Body ground	Below 1 V
X1-2 (SFD+) - Body ground	Below 1 V

(e) Turn the ignition switch OFF.
(f) Disconnect the cable from the negative (-) battery terminal, and wait for at least 90 seconds.
(g) Measure the resistance of the wire harness side connector.

Standard resistance

Tester Connection	Specified Condition
X1-1 (SFD-) - X1-2 (SFD+)	Below 1 Ω
X1-1 (SFL-) - Body ground	1 MΩ or higher
X1-2 (SFL+) - Body ground	1 MΩ or higher

(h) Release the activation prevention mechanism built into connector B (see page RS-37).
(i) Measure the resistance of the wire harness side connector.

Standard resistance

Tester Connection	Specified Condition
X1-1 (SFD-) - X1-2 (SFD+)	1 MΩ or higher

RS

OK → REPLACE CENTER AIRBAG SENSOR ASSEMBLY

NG

4	CHECK NO. 1 SEAT AIRBAG WIRE

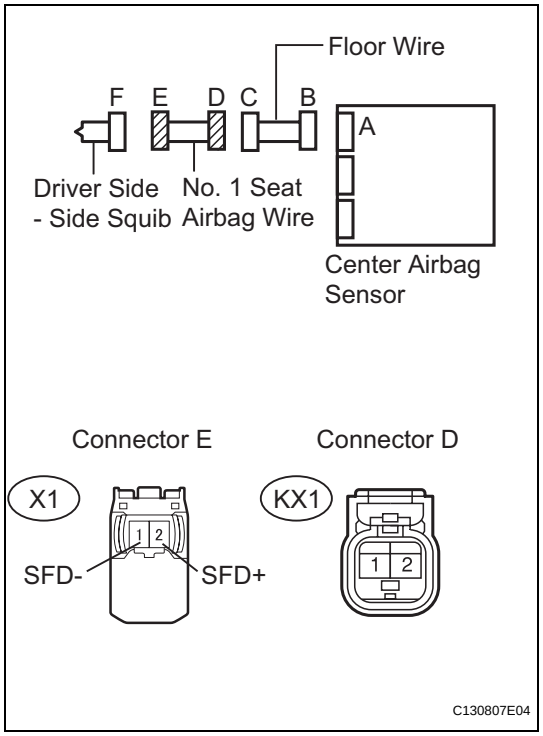

(a) Disconnect the No. 1 seat airbag wire connector from the floor wire.
(b) Connect the cable to the negative (-) battery terminal, and wait for at least 2 seconds.
(c) Turn the ignition switch ON.
(d) Measure the voltage of the wire harness side connector.

Standard voltage

Tester Connection	Specified Condition
X1-1 (SFD-) - Body ground	Below 1 V
X1-2 (SFD+) - Body ground	Below 1 V

(e) Turn the ignition switch OFF.
(f) Disconnect the cable from the negative (-) battery terminal, and wait for at least 90 seconds.
(g) Measure the resistance of the wire harness side connector.

Standard resistance

Tester Connection	Specified Condition
X1-2 (SFD+) - KX1-2	Below 1 Ω
X1-1 (SFD-) - KX1-1	Below 1 Ω
X1-2 (SFD+) - X1-1 (SFD-)	1 MΩ or higher
X1-2 (SFD+) - Body ground	1 MΩ or higher
X1-1 (SFD-) - Body ground	1 MΩ or higher

NG → **REPAIR OR REPLACE NO. 1 SEAT AIRBAG WIRE**

OK

REPAIR OR REPLACE FLOOR WIRE

RS

DTC	B1825/56	Short in Front Passenger Side - Side Squib Circuit

DTC	B1826/56	Open in Front Passenger Side - Side Squib Circuit

DTC	B1827/56	Short to GND in Front Passenger Side - Side Squib Circuit

DTC	B1828/56	Short to B+ in Front Passenger Side - Side Squib Circuit

DESCRIPTION

The front passenger side - side squib circuit consists of the center airbag sensor and the front seat side airbag RH.

The circuit instructs the SRS to deploy when the deployment conditions are met.

These DTCs are recorded when a malfunction is detected in the front passenger side - side squib circuit.

DTC No.	DTC Detection Condition	Trouble Area
B1825/56	The center airbag sensor receives a line short signal 5 times in the front passenger side - side squib circuit during primary check.	• No. 2 floor wire • No. 2 seat airbag wire • Front seat side airbag RH (Front passenger side - side squib) • Center airbag sensor
B1826/56	Center airbag sensor receives an open signal in the front passenger side - side squib circuit for 2 seconds.	• No. 2 floor wire • No. 2 seat airbag wire • Front seat side airbag RH (Front passenger side - side squib) • Center airbag sensor
B1827/56	Center airbag sensor receives a short to ground signal in the front passenger side - side squib circuit for 0.5 seconds.	• No. 2 floor wire • No. 2 seat airbag wire • Front seat side airbag RH (Front passenger side - side squib) • Center airbag sensor
B1828/56	Center airbag sensor receives a short to B+ signal in the front passenger side - side squib circuit for 0.5 seconds.	• No. 2 floor wire • No. 2 seat airbag wire • Front seat side airbag RH (Front passenger side - side squib) • Center airbag sensor

WIRING DIAGRAM

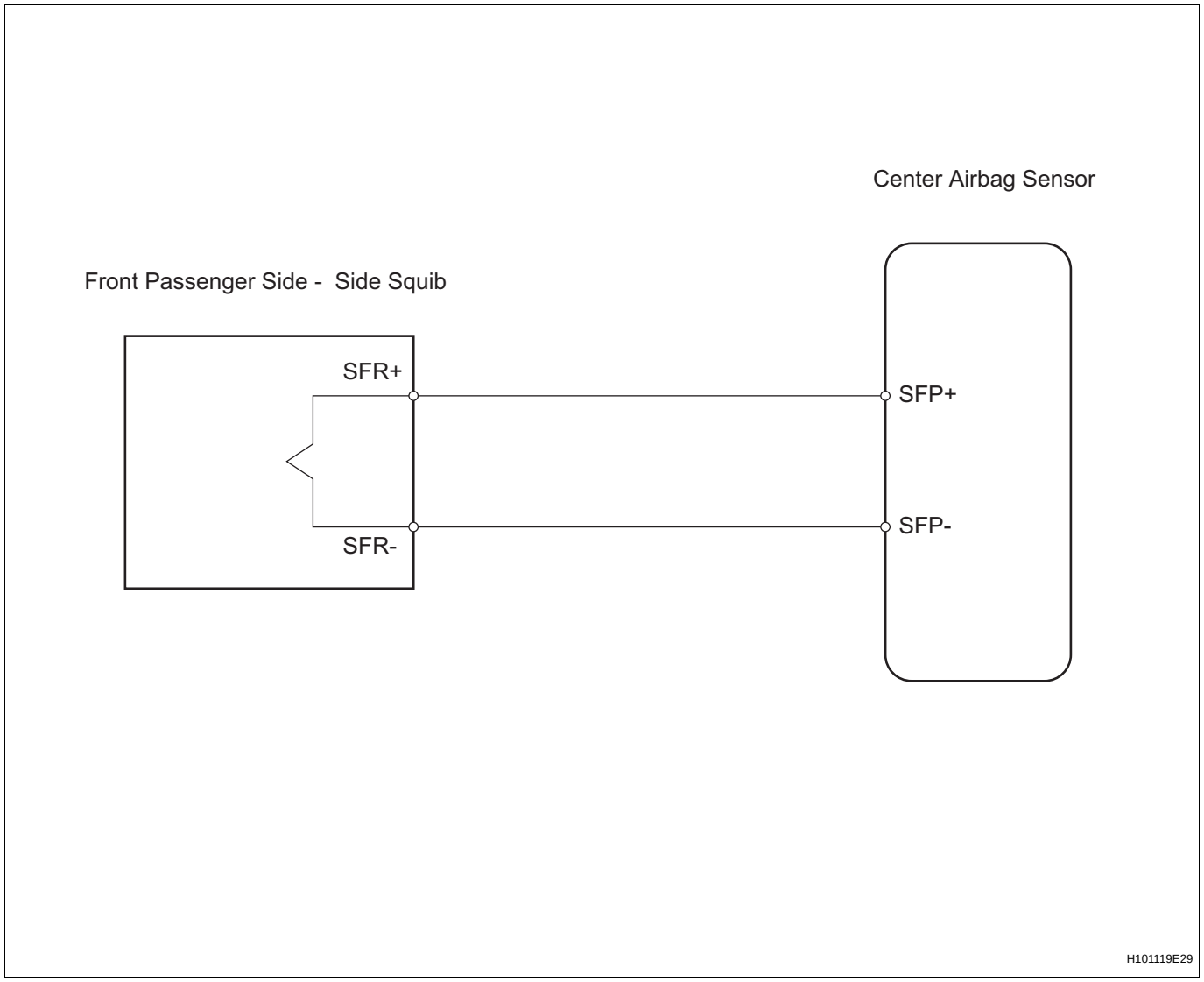

RS

INSPECTION PROCEDURE

HINT:

- Perform the simulation method by selecting the "CHECK MODE" (signal check) with the intelligent tester (see page RS-52).
- After selecting the "CHECK MODE" (signal check), perform the simulation method by wiggling each connector of the airbag system or driving the vehicle on a city or rough road (see page RS-52).

1	CHECK FRONT SEAT SIDE AIRBAG ASSEMBLY RH (FRONT PASSENGER SIDE - SIDE SQUIB)

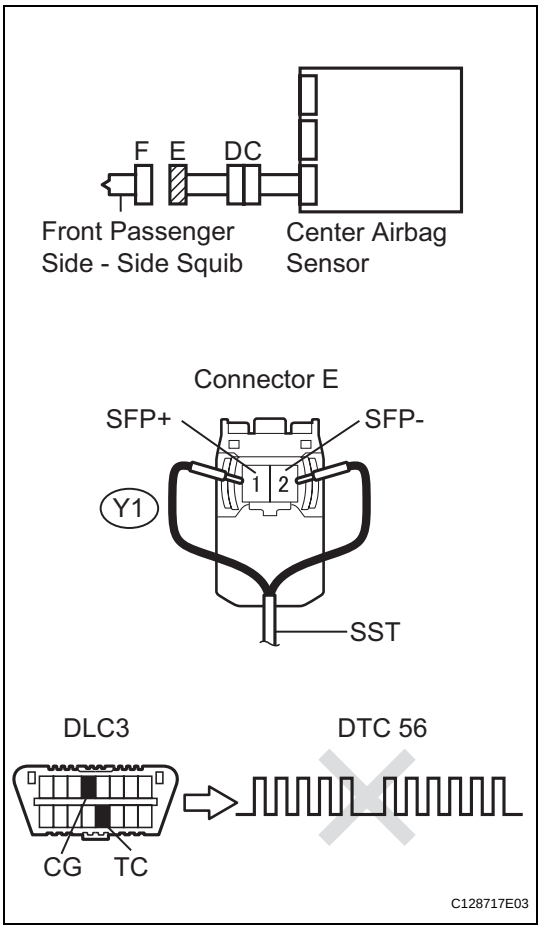

(a) Turn the ignition switch OFF.
(b) Disconnect the cable from the negative (-) battery terminal, and wait for at least 90 seconds.
(c) Disconnect the connector from the front seat side airbag RH.
(d) Connect the black wire side of SST to connector C.
CAUTION:
Never connect a tester to the front seat side airbag RH (front passenger side - side squib) for measurement, as this may lead to a serious injury due to airbag deployment.
NOTICE:
- **Do not forcibly insert SST into the terminals of the connector when connecting.**
- **Insert SST straight into the terminals of the connector.**

SST 09843-18060

(e) Connect the cable to the negative (-) battery terminal, and wait for at least 2 seconds.
(f) Turn the ignition switch ON, and wait for at least 60 seconds.
(g) Clear the DTCs (see page RS-49).
(h) Turn the ignition switch OFF.
(i) Turn the ignition switch ON, and wait for at least 60 seconds.
(j) Check the DTCs (see page RS-49).
OK:
DTC B1825, B1826, B1827, B1828 or 56 is not output.
HINT:
DTCs other than DTC B1825, B1826, B1827, B1828 or 56 may be output at this time, but they are not related to this check.

OK → **REPLACE FRONT SEAT ASSEMBLY RH**

NG

2	CHECK CONNECTOR

(a) Turn the ignition switch OFF.
(b) Disconnect the cable from the negative (-) battery terminal, and wait for at least 90 seconds.
(c) Disconnect SST from connector E.
(d) Check that the No. 2 seat airbag wire connectors (on the front passenger side - side squib) are not damaged.
OK:
Lock button is not disengaged, and claw of lock is not deformed or damaged.

RS

NG → REPLACE FLOOR WIRE NO.2

OK

3 CHECK NO. 2 FLOOR WIRE (FRONT PASSENGER SIDE - SIDE SQUIB CIRCUIT)

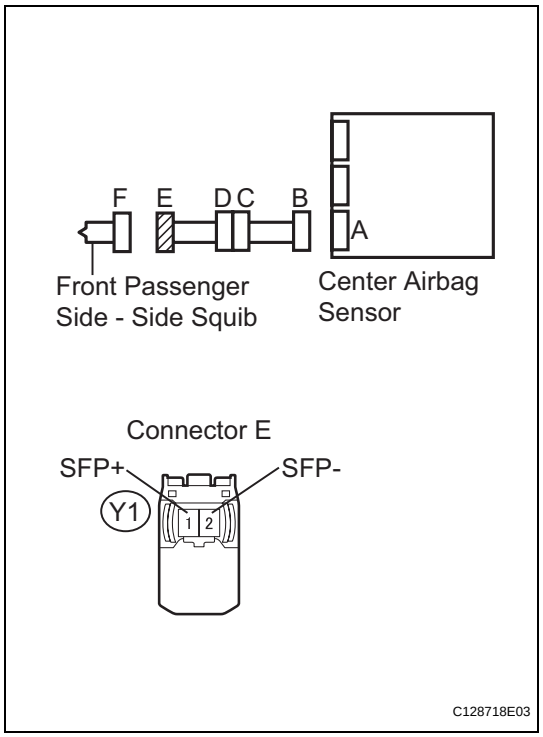

(a) Disconnect the connector from the center airbag sensor.
(b) Connect the cable to the negative (-) battery terminal, and wait for at least 2 seconds.
(c) Turn the ignition switch ON.
(d) Measure the voltage of the wire harness side connector.

Standard voltage

Tester Connection	Specified Condition
Y1-1 (SFP+) - Body ground	Below 1 V
Y1-2 (SFP-) - Body ground	Below 1 V

(e) Turn the ignition switch OFF.
(f) Disconnect the cable from the negative (-) battery terminal, and wait for at least 90 seconds.
(g) Measure the resistance of the wire harness side connector.

Standard resistance

Tester Connection	Specified Condition
Y1-1 (SFP+) - Y1-2 (SFP-)	Below 1 Ω
Y1-1 (SFP+) - Body ground	1 MΩ or higher
Y1-2 (SFP-) - Body ground	1 MΩ or higher

(h) Release the activation prevention mechanism built into connector B (see page RS-37).
(i) Measure the resistance of the wire harness side connector.

Standard resistance

Tester Connection	Specified Condition
Y1-1 (SFP+) - Y1-2 (SFP-)	1 MΩ or higher

OK → REPLACE CENTER AIRBAG SENSOR ASSEMBLY

NG

RS

4	CHECK NO. 2 SEAT AIRBAG WIRE

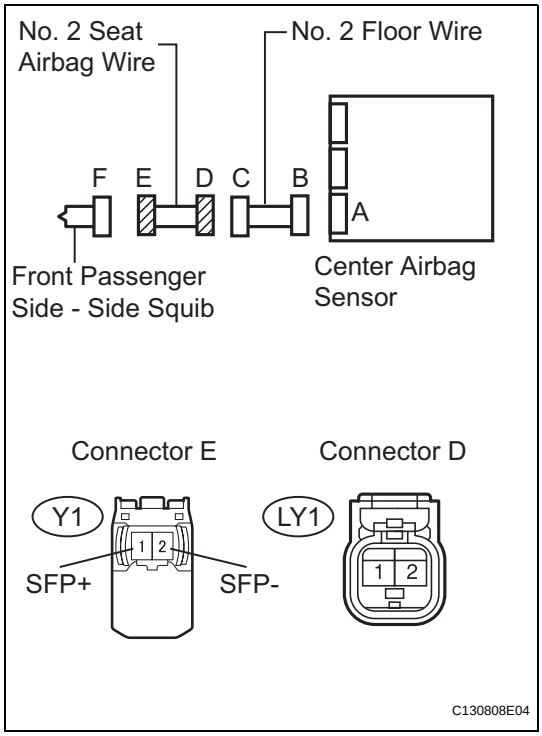

(a) Disconnect the No. 2 seat airbag wire from the No. 2 floor wire.
(b) Connect the cable to the negative (-) battery terminal, and wait for at least 2 seconds.
(c) Turn the ignition switch OFF.
(d) Measure the voltage of the wire harness side connector.

Standard voltage

Tester Connection	Specified Condition
Y1-1 (SFP+) - Body ground	Below 1 V
Y1-2 (SFP-) - Body ground	Below 1 V

(e) Turn the ignition switch OFF.
(f) Disconnect the cable from the negative (-) battery terminal, and wait for at least 90 seconds.
(g) Measure the resistance of the wire harness side connector.

Standard resistance

Tester Connection	Specified Condition
Y1-1 (SFP+) - LY1-1	Below 1 Ω
Y1-2 (SFP-) - LY1-2	Below 1 Ω
Y1-1 (SFP+) - Y1-2 (SFP-)	1 MΩ or higher
Y1-1 (SFP+) - Body ground	1 MΩ or higher
Y1-2 (SFP-)) - Body ground	1 MΩ or higher

NG → **REPAIR OR REPLACE NO. 2 SEAT AIRBAG WIRE**

OK

REPAIR OR REPLACE NO. 2 FLOOR WIRE

RS

DTC	B1830/57	Short in Driver Side Curtain Shield Squib Circuit

DTC	B1831/57	Open in Driver Side Curtain Shield Squib Circuit

DTC	B1832/57	Short to GND in Driver Side Curtain Shield Squib Circuit

DTC	B1833/57	Short to B+ in Driver Side Curtain Shield Squib Circuit

DESCRIPTION

The driver side curtain shield squib circuit consists of the center airbag sensor and the curtain shield airbag LH.
The circuit instructs the SRS to deploy when the deployment conditions are met.
These DTCs are recorded when a malfunction is detected in the driver side curtain shield squib circuit.

DTC No.	DTC Detection Condition	Trouble Area
B1830/57	Center airbag sensor receives a line short signal 5 times in the driver side curtain shield squib circuit during primary check.	• Floor wire • Curtain shield airbag LH (Driver side curtain shield squib) • Center airbag sensor
B1831/57	Center airbag sensor receives an open signal in the driver side curtain shield squib circuit for 2 seconds.	• Floor wire • Curtain shield airbag LH (Driver side curtain shield squib) • Center airbag sensor
B1832/57	Center airbag sensor receives a short to ground signal in the driver side curtain shield squib circuit for 0.5 seconds.	• Floor wire • Curtain shield airbag LH (Driver side curtain shield squib) • Center airbag sensor
B1833/57	Center airbag sensor receives a short to B+ signal in the driver side curtain shield squib circuit for 0.5 seconds.	• Floor wire • Curtain shield airbag LH (Driver side curtain shield squib) • Center airbag sensor

WIRING DIAGRAM

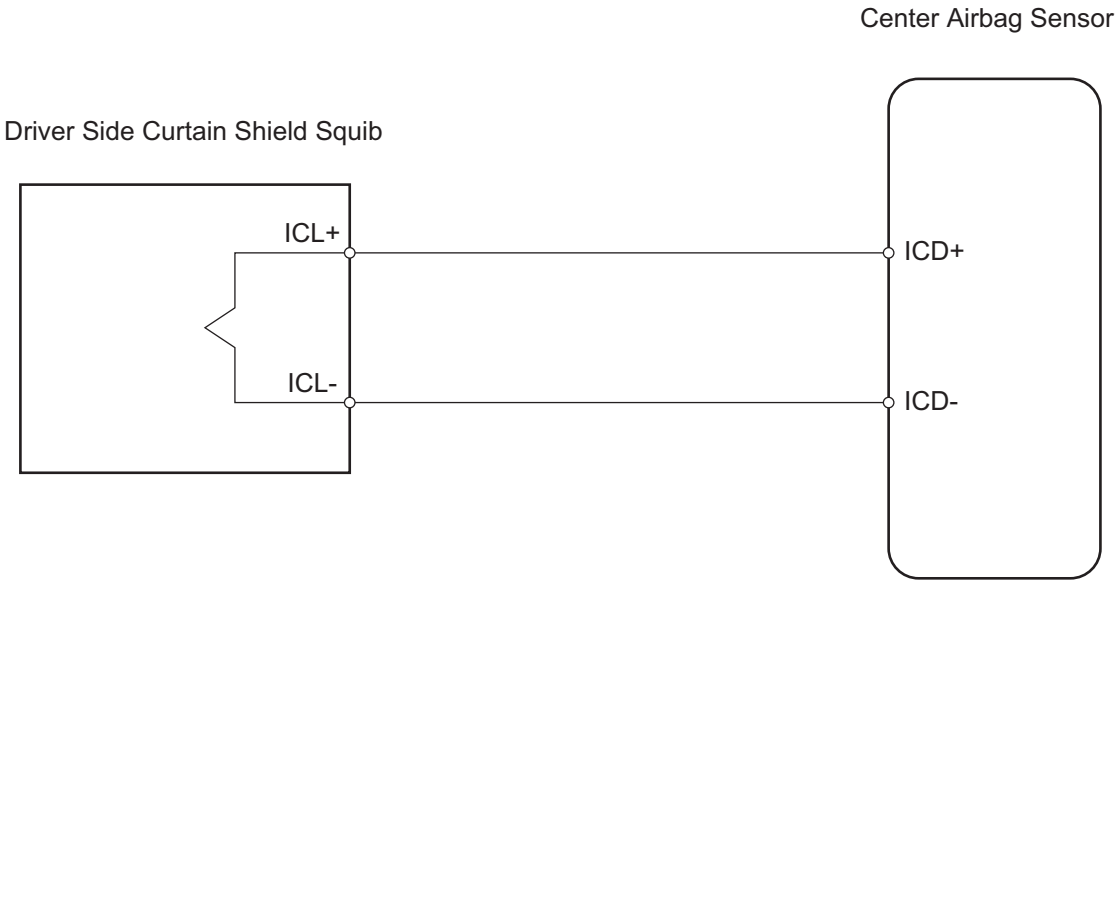

RS

INSPECTION PROCEDURE

HINT:

- Perform the simulation method by selecting the "CHECK MODE" (signal check) with the intelligent tester (see page RS-49).
- After selecting the "CHECK MODE" (signal check), perform the simulation method by wiggling each connector of the airbag system or driving the vehicle on a city or rough road (see page RS-49).

1	CHECK CURTAIN SHIELD AIRBAG ASSEMBLY LH (DRIVER SIDE CURTAIN SHIELD SQUIB)

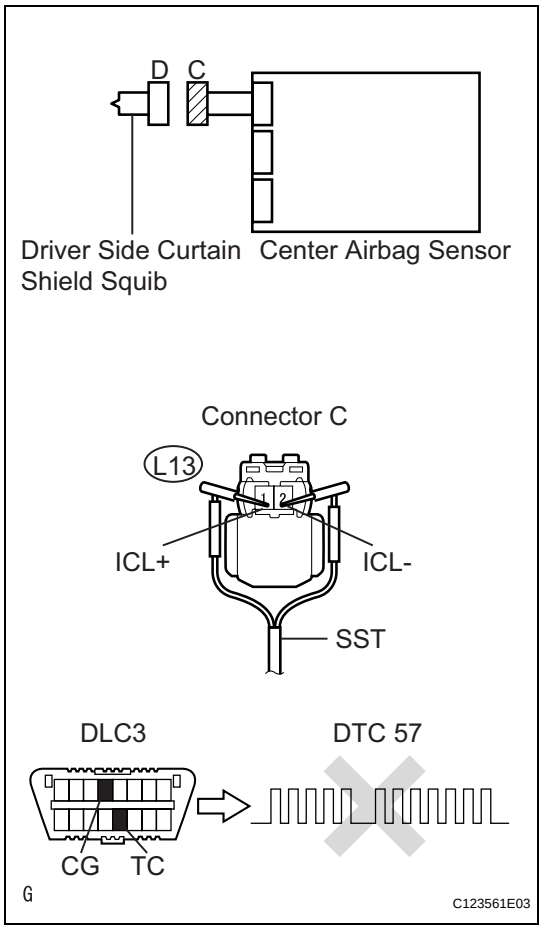

(a) Turn the ignition switch OFF.
(b) Disconnect the cable from the negative (-) battery terminal, and wait for at least 90 seconds.
(c) Disconnect the connector from the curtain shield airbag LH.
(d) Connect the white wire side of SST (resistance 2.1 Ω) to connector C.

CAUTION:
Never connect a tester to the curtain shield airbag LH (driver side curtain shield squib) for measurement, as this may lead to a serious injury due to airbag deployment.

NOTICE:
- **Do not forcibly insert SST into the terminals of the connector when connecting.**
- **Insert SST straight into the terminals of the connector.**

SST 09843-18060

(e) Connect the cable to the negative (-) battery terminal, and wait for at least 2 seconds.
(f) Turn the ignition switch ON, and wait for at least 60 seconds.
(g) Clear the DTCs (see page RS-49).
(h) Turn the ignition switch OFF.
(i) Turn the ignition switch ON, and wait for at least 60 seconds.
(j) Check the DTCs (see page RS-49).

OK:
DTC B1830, B1831, B1832, B1833 or 57 is not output.

HINT:
DTCs other than DTC B1830, B1831, B1832, B1833 or 57 may be output at this time, but they are not related to this check.

OK → **REPLACE CURTAIN SHIELD AIRBAG ASSEMBLY LH**

NG

2	CHECK CONNECTOR

(a) Turn the ignition switch OFF.
(b) Disconnect the cable from the negative (-) battery terminal, and wait for at least 90 seconds.
(c) Disconnect SST from connector C.
(d) Check that the floor wire connector (on the curtain shield LH side) is not damaged.

RS

OK:
Lock button is not disengaged, and claw of lock is not deformed or damaged.

NG → **REPAIR OR REPLACE FLOOR WIRE**

OK

3 CHECK FLOOR WIRE (DRIVER SIDE CURTAIN SHIELD SQUIB CIRCUIT)

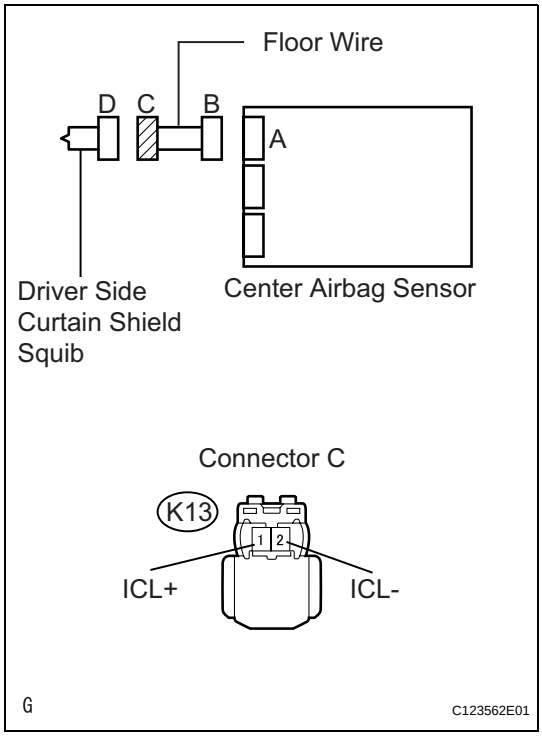

(a) Disconnect the connector from the center airbag sensor.
(b) Connect the cable to the negative (-) battery terminal, and wait for at least 2 seconds.
(c) Turn the ignition switch ON.
(d) Measure the voltage of the wire harness side connector.
Standard voltage

Tester Connection	Specified Condition
K13-1 (ICL+) - Body ground	Below 1 V
K13-2 (ICL-) - Body ground	Below 1 V

(e) Turn the ignition switch OFF.
(f) Disconnect the cable from the negative (-) battery terminal, and wait for at least 90 seconds.
(g) Measure the resistance of the wire harness side connector.
Standard resistance

Tester Connection	Specified Condition
K13-1 (ICL+) - K13-2 (ICL-)	Below 1 Ω
K13-1 (ICL+) - Body ground	1 MΩ or higher
K13-2 (ICL-) - Body ground	1 MΩ or higher

(h) Release the activation prevention mechanism built into connector B (see page RS-37).
(i) Measure the resistance of the wire harness side connector.
Standard resistance

Tester Connection	Specified Condition
K13-1 (ICL+) - K13-2 (ICL-)	1 MΩ or higher

NG → **REPAIR OR REPLACE FLOOR WIRE**

OK

REPLACE CENTER AIRBAG SENSOR ASSEMBLY

RS

DTC	B1835/58	Short in Front Passenger Side Curtain Shield Squib Circuit

DTC	B1836/58	Open in Front Passenger Side Curtain Shield Squib Circuit

DTC	B1837/58	Short to GND in Front Passenger Side Curtain Shield Squib Circuit

DTC	B1838/58	Short to B+ in Front Passenger Side Curtain Shield Squib Circuit

DESCRIPTION

The front passenger side curtain shield squib circuit consists of the center airbag sensor and the curtain shield airbag RH.

The circuit instructs the SRS to deploy when the deployment conditions are met.

These DTCs are recorded when a malfunction is detected in the front passenger side curtain shield squib circuit.

DTC No.	DTC Detection Condition	Trouble Area
B1835/58	Center airbag sensor receives a line short circuit signal 5 times in the front passenger side curtain shield squib circuit during primary check.	• No. 2 floor wire • Curtain shield airbag RH (Front passenger side curtain shield squib) • Center airbag sensor
B1836/58	Center airbag sensor receives an open signal in the front passenger side curtain shield squib circuit for 2 seconds.	• No. 2 floor wire • Curtain shield airbag RH (Front passenger side curtain shield squib) • Center airbag sensor
B1837/58	Center airbag sensor receives a short to ground signal in the front passenger side curtain shield squib circuit for 0.5 seconds.	• No. 2 floor wire • Curtain shield airbag RH (Front passenger side curtain shield squib) • Center airbag sensor
B1838/58	Center airbag sensor receives a short to B+ signal in the front passenger side curtain shield squib circuit for 0.5 seconds.	• No. 2 floor wire • Curtain shield airbag RH (Front passenger side curtain shield squib) • Center airbag sensor

WIRING DIAGRAM

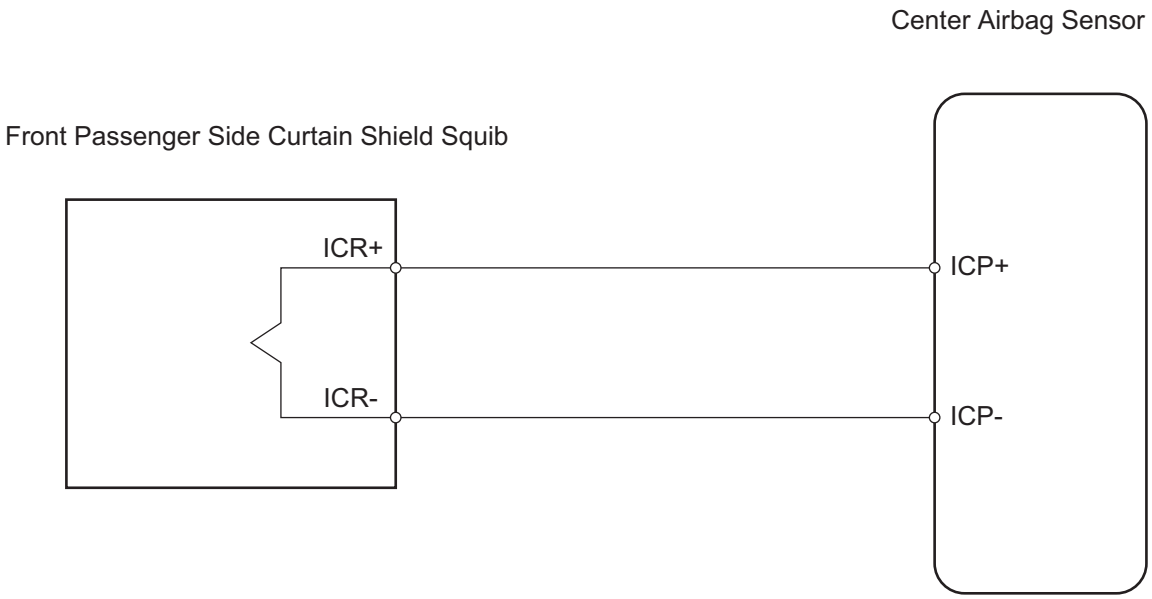

RS

INSPECTION PROCEDURE

HINT:

- Perform the simulation method by selecting the "CHECK MODE" (signal check) with the intelligent tester (see page RS-52).
- After selecting the "CHECK MODE" (signal check), perform the simulation method by wiggling each connector of the airbag system or driving the vehicle on a city or rough road (see page RS-52).

1	CHECK CURTAIN SHIELD AIRBAG ASSEMBLY RH (FRONT PASSENGER SIDE CURTAIN SHIELD SQUIB)

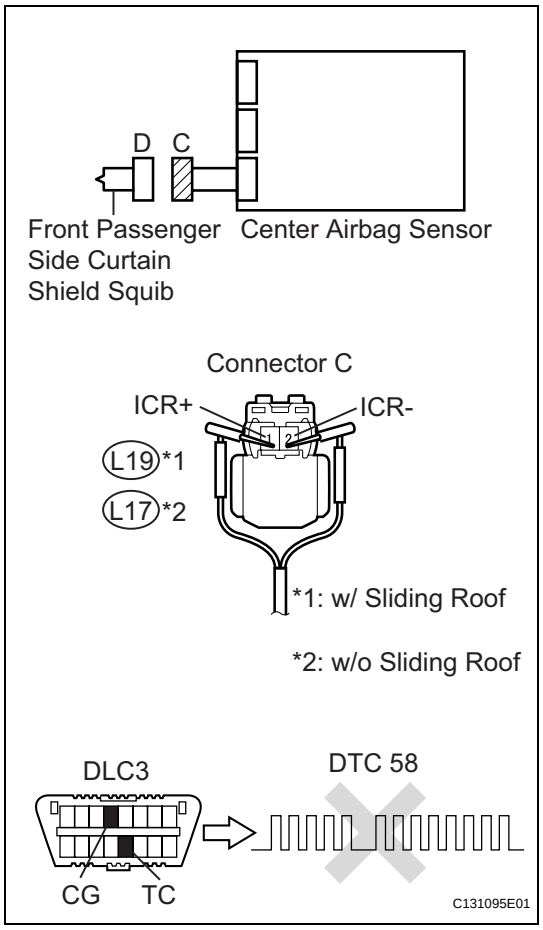

(a) Turn the ignition switch OFF.
(b) Disconnect the cable from the negative (-) battery terminal, and wait for at least 90 seconds.
(c) Disconnect the connectors from the curtain shield airbag RH.
(d) Connect the white wire side of SST to connector C.

CAUTION:
Never connect a tester to the curtain shield airbag RH (front passenger side curtain shield squib) for measurement, as this may lead to a serious injury due to airbag deployment.

NOTICE:
- **Do not forcibly insert SST into the terminals of the connector when connecting.**
- **Insert SST straight into the terminals of the connector.**

SST 09843-18060

(e) Connect the cable to the negative (-) battery terminal, and wait for at least 2 seconds.
(f) Turn the ignition switch ON, and wait for at least 60 seconds.
(g) Clear the DTCs (see page RS-49).
(h) Turn the ignition switch OFF.
(i) Turn the ignition switch ON, and wait for at least 60 seconds.
(j) Check the DTCs (see page RS-49).

OK:
DTC B1835, B1836, B1837, B1838 or 58 is not output.

HINT:
DTCs other than DTC B1835, B1836, B1837, B1838 or 58 may be output at this time, but they are not related to this check.

OK → **REPLACE CURTAIN SHIELD AIRBAG ASSEMBLY RH**

NG

2	CHECK CONNECTOR

(a) Turn the ignition switch OFF.
(b) Disconnect the cable from the negative (-) battery terminal, and wait for at least 90 seconds.
(c) Disconnect SST from connector C.
(d) Check that the floor wire connector (on the curtain shield airbag RH side) is not damaged.

OK:
Lock button is not disengaged, and claw of lock is not deformed or damaged.

RS

NG → REPAIR OR REPLACE FLOOR WIRE

OK

3	CHECK FLOOR WIRE NO.2 (FRONT PASSENGER SIDE CURTAIN SHIELD SQUIB CIRCUIT)

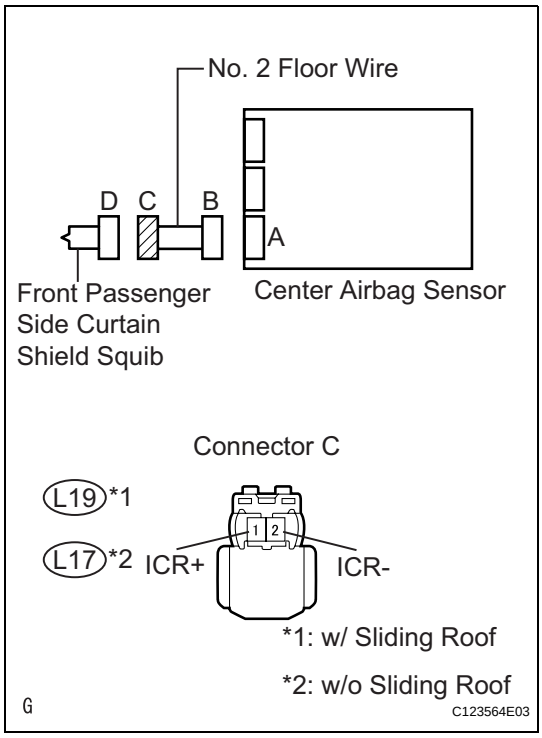

(a) Disconnect the connectors from the center airbag sensor.
(b) Connect the cable to the negative (-) battery terminal, and wait for at least 2 seconds.
(c) Turn the ignition switch ON.
(d) Measure the voltage of the wire harness side connector.

Standard voltage:

w/ Sliding Roof

Tester Connection	Specified Condition
L19-1 (ICR+) - Body ground	Below 1 V
L19-2 (ICR-) - Body ground	Below 1 V

w/o Sliding Roof

Tester Connection	Specified Condition
L17-1 (ICR+) - Body ground	Below 1 V
L17-2 (ICR-) - Body ground	Below 1 V

(e) Turn the ignition switch OFF.
(f) Disconnect the cable from the negative (-) battery terminal, and wait for at least 90 seconds.
(g) Measure the resistance of the wire harness side connector.

Standard resistance:

w/ Sliding Roof

Tester Connection	Specified Condition
L19-1 (ICR+) - L19-2 (ICR-)	Below 1 Ω
L19-1 (ICR+) - Body ground	1 MΩ or higher
L19-2 (ICR-) - Body ground	1 MΩ or higher

w/o Sliding Roof

Tester Connection	Specified Condition
L17-1 (ICR+) - L17-2 (ICR-)	Below 1 Ω
L17-1 (ICR+) - Body ground	1 MΩ or higher
L17-2 (ICR-) - Body ground	1 MΩ or higher

(h) Release the activation prevention mechanism built into connector B (see page RS-37).
(i) Measure the resistance of the wire harness side connector.

Standard resistance:

w/ Sliding Roof

Tester Connection	Specified Condition
L19-1 (ICR+) - L19-2 (ICR-)	1 MΩ or higher

w/o Sliding Roof

RS

Tester Connection	Specified Condition
L17-1 (ICR+) - L17-2 (ICR-)	1 MΩ or higher

NG → REPAIR OR REPLACE FLOOR WIRE

OK

REPLACE CENTER AIRBAG SENSOR ASSEMBLY

DTC	B1900/73	Short in Front Driver Side Pretensioner Squib Circuit

DTC	B1901/73	Open in Front Driver Side Pretensioner Squib Circuit

DTC	B1902/73	Short to GND in Front Driver Side Pretensioner Squib Circuit

DTC	B1903/73	Short to B+ in Front Driver Side Pretensioner Squib Circuit

DESCRIPTION

The driver side front pretensioner squib circuit consists of the center airbag sensor and the front seat outer belt LH.
This circuit instructs the SRS to deploy when the deployment conditions are met.
These DTCs are recorded when a malfunction is detected in the front pretensioner squib circuit.

DTC No.	DTC Detection Condition	Trouble Area
B1900/73	Center airbag sensor receives a line short signal 5 times in the driver side front pretensioner squib circuit during primary check.	• Floor wire • Front seat outer belt LH (Driver side front pretensioner squib) • Center airbag sensor
B1901/73	Center airbag sensor receives an open signal in the driver side front pretensioner squib circuit for 2 seconds.	• Floor wire • Front seat outer belt LH (Driver side front pretensioner squib) • Center airbag sensor
B1902/73	Center airbag sensor receives a short to ground signal in the driver side front pretensioner squib circuit for 0.5 seconds.	• Floor wire • Front seat outer belt LH (Driver side front pretensioner squib) • Center airbag sensor
B1903/73	Center airbag sensor receives a short circuit to B+ signal in the driver side front pretensioner squib circuit for 0.5 seconds.	• Floor wire • Front seat outer belt LH (Driver side front pretensioner squib) • Center airbag sensor

WIRING DIAGRAM

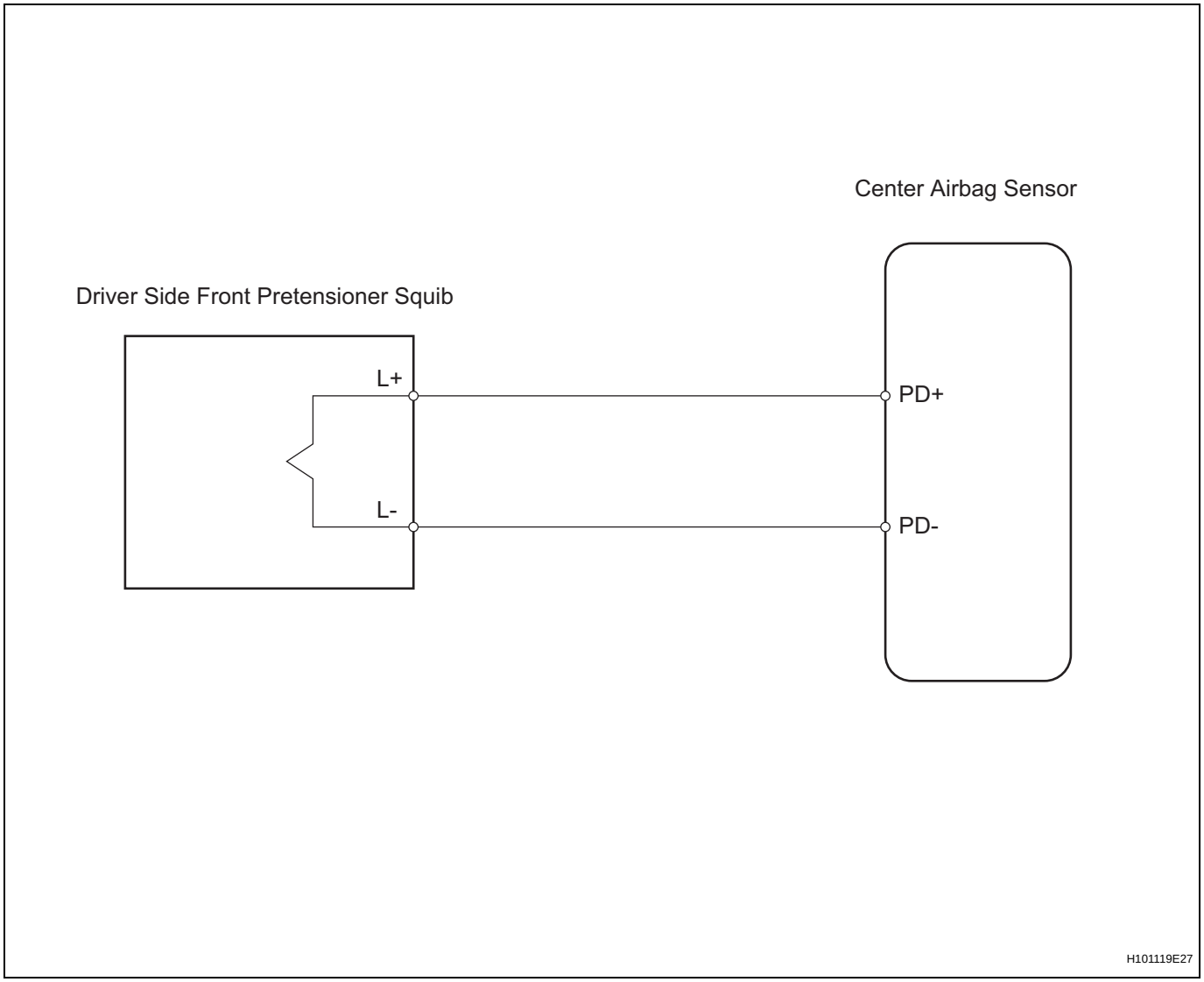

RS

INSPECTION PROCEDURE

HINT:

- Perform the simulation method by selecting the "CHECK MODE" (signal check) with the intelligent tester (see page RS-52).
- After selecting the "CHECK MODE" (signal check), perform the simulation method by wiggling each connector of the airbag system or driving the vehicle on a city or rough road (see page RS-52).

1	CHECK FRONT SEAT OUTER BELT ASSEMBLY LH (DRIVER SIDE FRONT PRETENSIONER SQUIB)

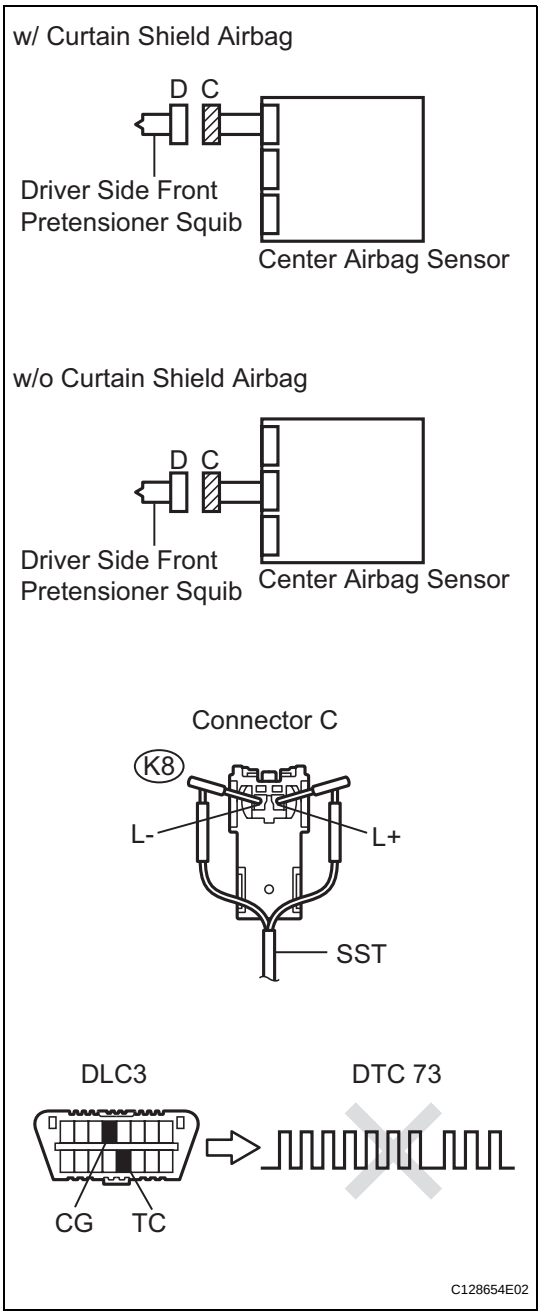

(a) Turn the ignition switch OFF.
(b) Disconnect the cable from the negative (-) battery terminal, and wait for at least 90 seconds.
(c) Disconnect the connectors from the front seat outer belt LH.
(d) Connect the white wire side of SST to connector C.
CAUTION:
Never connect a tester to the front seat outer belt LH (driver side front pretensioner squib) for measurement, as this may lead to a serious injury due to airbag deployment.
NOTICE:
- **Do not forcibly insert SST into the terminals of the connector when connecting.**
- **Insert SST straight into the terminals of the connector.**

SST 09843-18060

(e) Connect the cable to the negative (-) battery terminal, and wait for at least 2 seconds.
(f) Turn the ignition switch ON, and wait for at least 60 seconds.
(g) Clear the DTCs (see page RS-49).
(h) Turn the ignition switch OFF.
(i) Turn the ignition switch ON, and wait for at least 60 seconds.
(j) Check the DTCs (see page RS-49).
OK:
DTC B1900, B1901, B1902, B1903 or 73 is not output.
HINT:
DTCs other than DTC B1900, B1901, B1902, B1903 or 73 may be output at this time, but they are not related to this check.

OK → **REPLACE FRONT SEAT OUTER BELT ASSEMBLY LH**

NG

2	CHECK CONNECTOR

(a) Turn the ignition switch OFF.
(b) Disconnect the cable from the negative (-) battery terminal, and wait for at least 90 seconds.
(c) Disconnect SST from connector C.
(d) Check that the floor wire connector (on the driver side front seat outer belt) is not damaged.

OK:
The lock button is not disengaged, or the claw of the lock is not deformed or damaged.

NG → **REPAIR OR REPLACE FLOOR WIRE**

OK

3 CHECK FLOOR WIRE (DRIVER SIDE FRONT PRETENSIONER SQUIB CIRCUIT)

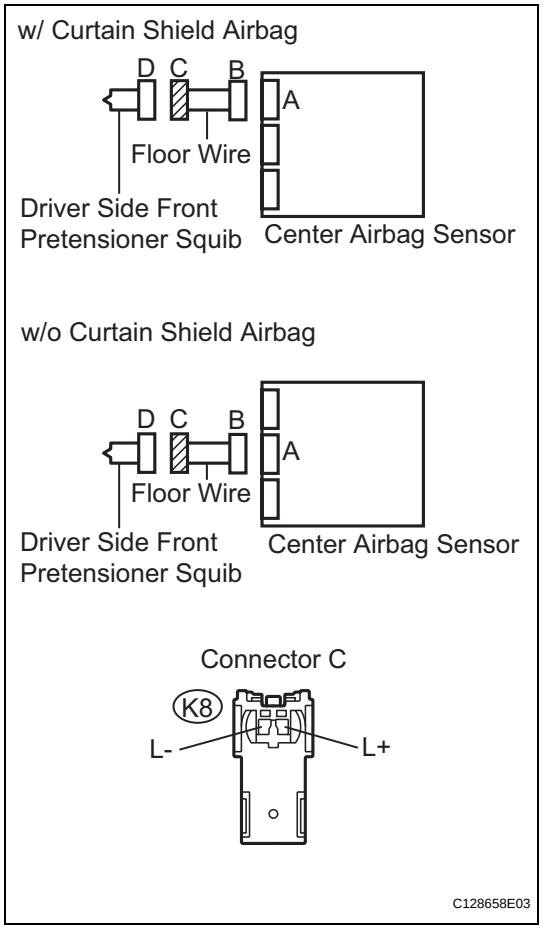

(a) Disconnect the connector from the center airbag sensor.
(b) Connect the cable to the negative (-) battery terminal, and wait for at least 2 seconds.
(c) Turn the ignition switch ON.
(d) Measure the voltage of the wire harness side connector.
Standard voltage

Tester Connection	Specified Condition
K8-1 (L+) - Body ground	Below 1 V
K8-2 (L-) - Body ground	Below 1 V

(e) Turn the ignition switch OFF.
(f) Disconnect the cable from the negative (-) battery terminal, and wait for at least 90 seconds.
(g) Measure the resistance of the wire harness side connector.
Standard resistance

Tester Connection	Specified Condition
K8-1 (L+) - K8-2 (L-)	Below 1 Ω
K8-1 (L+) - Body ground	1 MΩ or higher
K8-2 (L-) - Body ground	1 MΩ or higher

(h) Release the activation prevention mechanism built into connector B (see page RS-37).
(i) Measure the resistance of the wire harness side connector.
Standard resistance

Tester Connection	Specified Condition
K8-1 (L+) - K8-2 (L-)	1 MΩ or higher

NG → **REPAIR OR REPLACE FLOOR WIRE**

OK

REPLACE CENTER AIRBAG SENSOR ASSEMBLY

RS

DTC	B1905/74	Short in Front Passenger Side Pretensioner Squib Circuit

DTC	B1906/74	Open in Front Passenger Side Pretensioner Squib Circuit

DTC	B1907/74	Short to GND in Front Passenger Side Pretensioner Squib Circuit

DTC	B1908/74	Short to B+ in Front Passenger Side Front Pretensioner Squib Circuit

DESCRIPTION

The front passenger side front pretensioner squib circuit consists of the center airbag sensor and the front seat outer belt RH.

This circuit instructs the SRS to deploy when the deployment conditions are met.

These DTCs are recorded when a malfunction is detected in the front passenger side front pretensioner squib circuit.

DTC No.	DTC Detection Condition	Trouble Area
B1905/74	Center airbag sensor receives a line short signal 5 times in the front passenger side front pretensioner squib circuit during primary check.	• No. 2 floor wire • Front seat outer belt RH (Front passenger side front pretensioner squib) • Center airbag sensor
B1906/74	Center airbag sensor receives an open signal in the front passenger side front pretensioner squib circuit for 2 seconds.	• No. 2 floor wire • Front seat outer belt RH (Front passenger side front pretensioner squib) • Center airbag sensor
B1907/74	Center airbag sensor receives a short to ground signal in the front passenger side front pretensioner squib circuit for 0.5 seconds.	• No. 2 floor wire • Front seat outer belt RH (Front passenger side front pretensioner squib) • Center airbag sensor
B1908/74	Center airbag sensor receives a short to B+ signal in the front passenger side front pretensioner squib circuit for 0.5 seconds.	• No. 2 floor wire • Front seat outer belt RH (Front passenger side front pretensioner squib) • Center airbag sensor

WIRING DIAGRAM

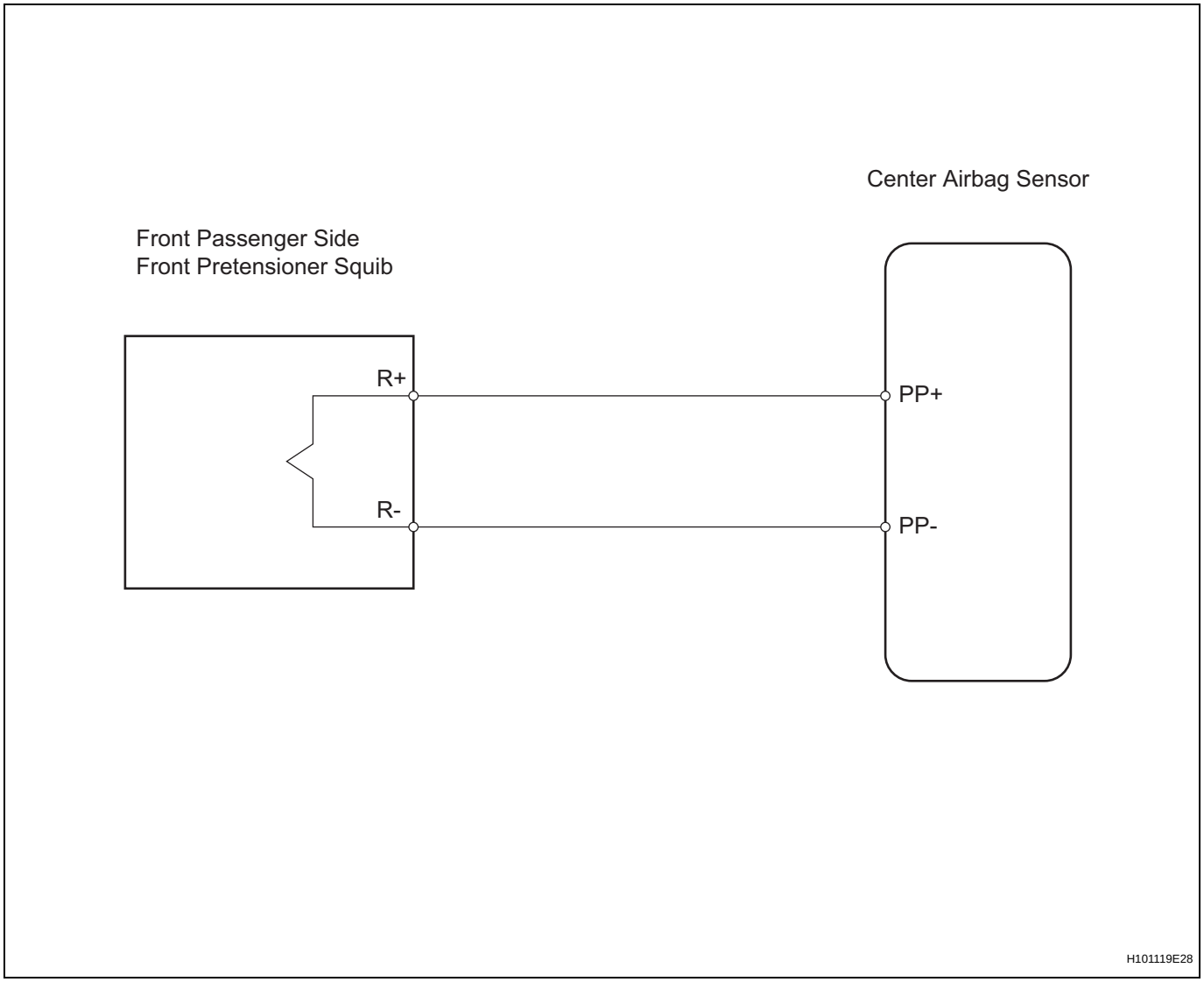

RS

INSPECTION PROCEDURE

HINT:

- Perform the simulation method by selecting the "CHECK MODE" (signal check) with the intelligent tester (see page RS-52).
- After selecting the "CHECK MODE" (signal check), perform the simulation method by wiggling each connector of the airbag system or driving the vehicle on a city or rough road (see page RS-52).

1	CHECK FRONT SEAT OUTER BELT ASSEMBLY RH (FRONT PASSENGER SIDE FRONT PRETENSIONER SQUIB)

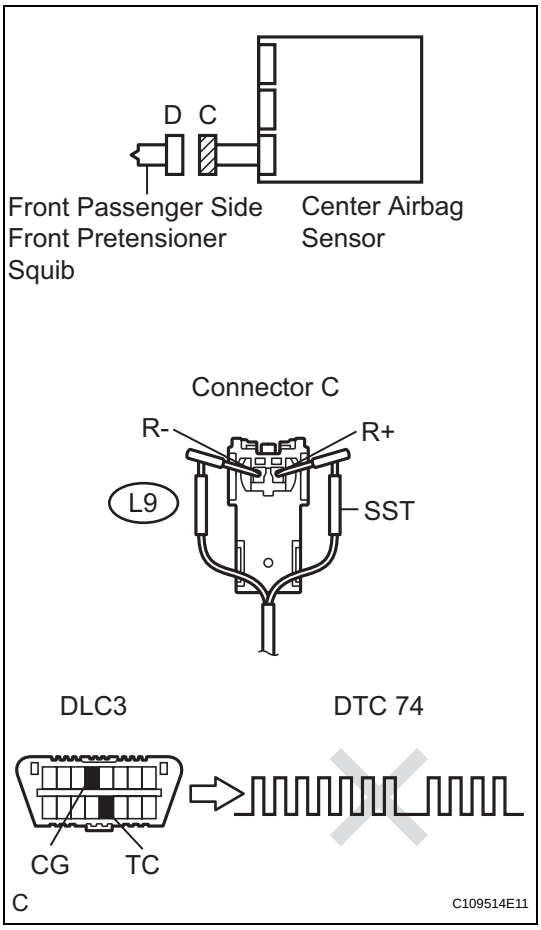

(a) Turn the ignition switch OFF.
(b) Disconnect the cable from the negative (-) battery terminal, and wait for at least 90 seconds.
(c) Disconnect the connectors from the front seat outer belt RH.
(d) Connect the white wire side of SST to connector C.
CAUTION:
Never connect a tester to the front seat outer belt RH (front passenger side front pretensioner squib) for measurement, as this may lead to a serious injury due to airbag deployment.
NOTICE:
- **Do not forcibly insert SST into the terminals of the connector when connecting.**
- **Insert SST straight into the terminals of the connector.**

SST 09843-18060

(e) Connect the cable to the negative (-) battery terminal, and wait for at least 2 seconds.
(f) Turn the ignition switch ON, and wait for at least 60 seconds.
(g) Clear the DTCs (see page RS-49).
(h) Turn the ignition switch OFF.
(i) Turn the ignition switch ON, and wait for at least 60 seconds.
(j) Check the DTCs (see page RS-49).
OK:
DTC B1905, B1906, B1907, B1908 or 74 is not output.
HINT:
DTCs other than DTC B1905, B1906, B1907, B1908 or 74 may be output at this time, but they are not related to this check.

OK → **REPLACE FRONT SEAT OUTER BELT ASSEMBLY RH**

NG

2	CHECK CONNECTOR

(a) Turn the ignition switch OFF.
(b) Disconnect the cable from the negative (-) battery terminal, and wait for at least 90 seconds.
(c) Disconnect SST from connector C.
(d) Check that the floor wire connector (on the front seat outer belt RH side) is not damaged.
OK:
Lock button is not disengaged, or the claw of the lock is not deformed or damaged.

RS

NG → REPAIR OR REPLACE NO. 2 FLOOR WIRE

OK

3	CHECK FLOOR WIRE (FRONT PASSENGER SIDE FRONT PRETENSIONER SQUIB CIRCUIT)

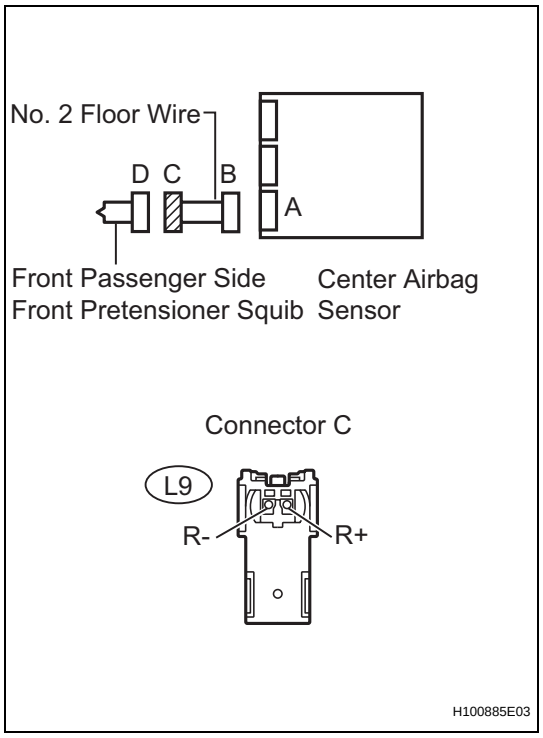

(a) Disconnect the connectors from the center airbag sensor.
(b) Connect the cable to the negative (-) battery terminal, and wait for at least 2 seconds.
(c) Measure the voltage of the wire harness side connector.
Standard voltage

Tester Connection	Specified Condition
L9-1 (R+) - Body ground	Below 1 V
L9-2 (R-) - Body ground	Below 1 V

(d) Turn the ignition switch OFF.
(e) Disconnect the cable from the negative (-) battery terminal, and wait for at least 90 seconds.
(f) Measure the resistance of the wire harness side connector.
Standard resistance

Tester Connection	Specified Condition
L9-1 (R+) - L9-2 (R-)	Below 1 Ω
L9-1 (R+) - Body ground	1 MΩ or higher
L9-2 (R-) - Body ground	1 MΩ or higher

(g) Release the activation prevention mechanism built into connector B (see page RS-37).
(h) Measure the resistance of the wire harness side connector.
Standard resistance

Tester Connection	Specified Condition
L9-1 (R+) - L9-2 (R-)	1 MΩ or higher

NG → REPAIR OR REPLACE NO. 2 FLOOR WIRE

OK

REPLACE CENTER AIRBAG SENSOR ASSEMBLY

RS

Source Voltage Drop

DESCRIPTION

The SRS is equipped with a voltage-increase circuit (DC-DC converter) in the center airbag sensor in case the source voltage drops.
When the source voltage drops, the voltage-increase circuit (DC-DC converter) functions to increase the voltage of the SRS to a normal working level.
A malfunction in this circuit is displayed differently from other codes, in the fact that no DTCs are recorded. With a normal system code present, the source voltage drop is indicated when the SRS warning light comes on.
A malfunction in this circuit is not recorded in the center airbag sensor .
The SRS warning light automatically goes off when the source voltage returns to normal.

WIRING DIAGRAM

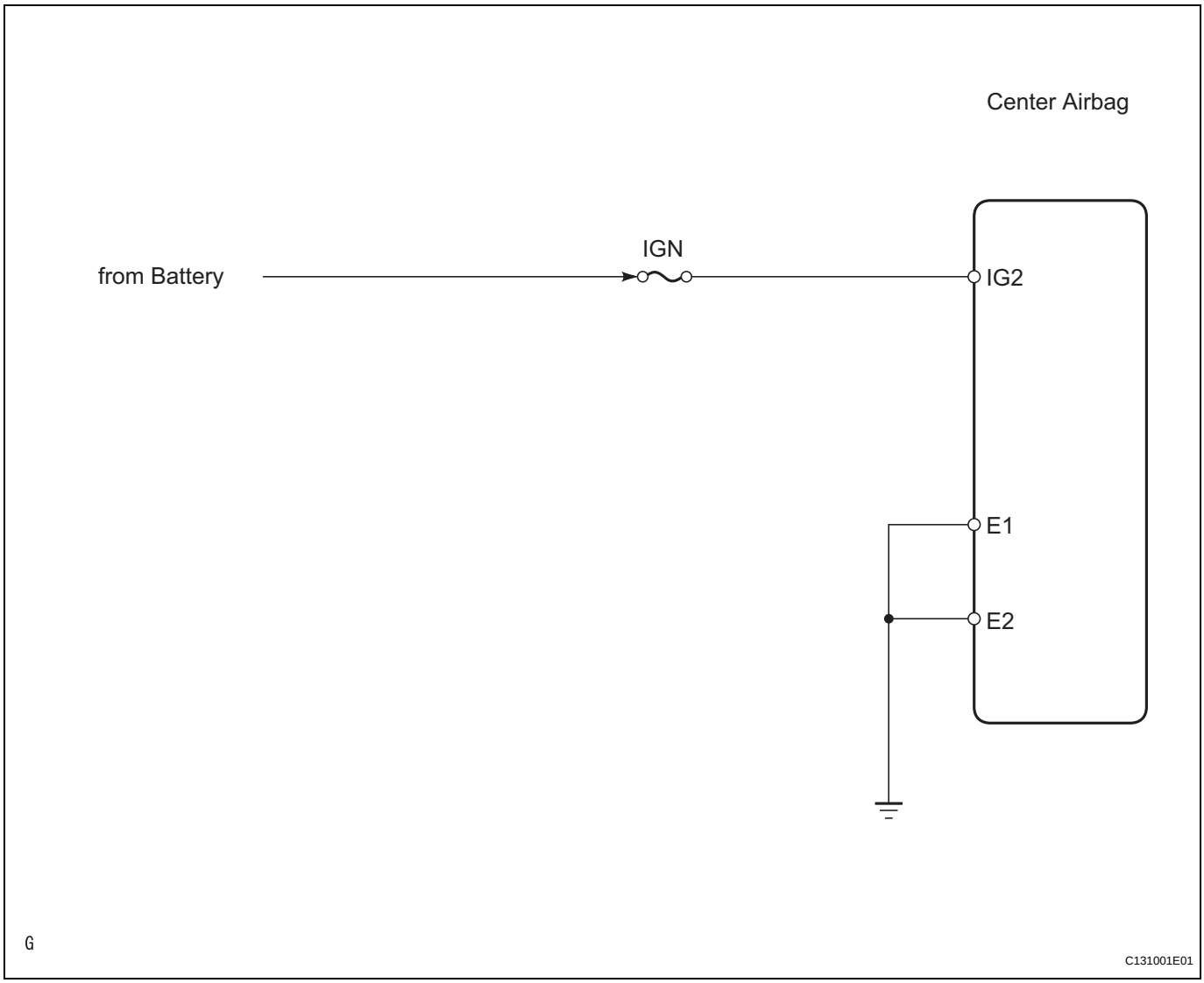

INSPECTION PROCEDURE

1 CHECK WIRE HARNESS (CENTER AIRBAG SENSOR ASSEMBLY - BATTERY)

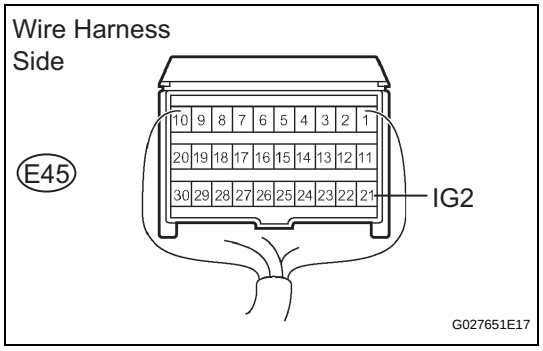

(a) Turn the ignition switch OFF.
(b) Disconnect the negative (-) terminal cable from the battery, and wait for at least 90 seconds.
(c) Disconnect the E45 connector from the center airbag sensor .
(d) Connect the negative (-) terminal cable to the battery, and wait for at least 2 seconds.
(e) Measure the voltage of the wire harness side connectors.

Standard voltage

Tester Connection	Specified Condition
E45-21 (IG2) - Body ground	11 to 14 V

NG → **REPAIR OR REPLACE HARNESS AND CONNECTOR, CHARGING SYSTEM AND BATTERY**

OK

2 CHECK WIRE HARNESS (CENTER AIRBAG SENSOR ASSEMBLY - BODY GROUND)

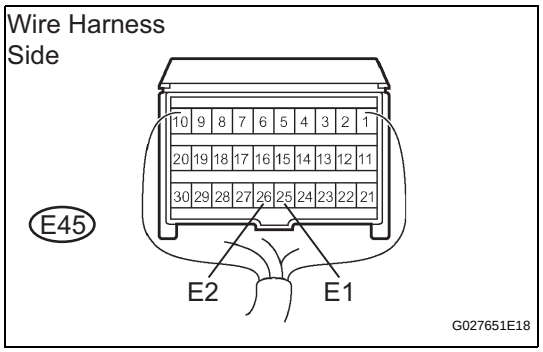

(a) Measure the resistance of the wire harness side connectors.

Standard resistance

Tester Connection	Specified Condition
E45-25 (E1) - Body ground	Below 1 Ω
E45-26 (E2) - Body ground	Below 1 Ω

NG → **REPAIR OR REPLACE HARNESS AND CONNECTOR**

OK

3 CHECK SRS WARNING LIGHT

(a) Turn the ignition switch OFF.
(b) Disconnect the negative (-) terminal cable from the battery, and wait for at least 90 seconds.
(c) Connect the E45 center airbag sensor connector.
(d) Connect the negative (-) terminal cable to the battery, and wait for at least 2 seconds.
(e) Turn the ignition switch ON, and wait for at least 6 seconds.
(f) Operate all components of the electrical system (defogger, wiper, headlight, heater, blower, etc.) and check that the SRS warning light does not come on.

RS

OK:
SRS warning light does not come on.

NG → **REPLACE CENTER AIRBAG SENSOR ASSEMBLY**

OK

END

SRS Warning Light Remains ON

DESCRIPTION

The SRS warning light is located on the combination meter.
When the SRS is normal, the SRS warning light comes on for approximately 6 seconds after the ignition switch is turned from OFF to ON, and then goes off automatically.
If there is a malfunction in the SRS, the SRS warning light comes on to inform the driver of a problem.
When terminals TC and CG of the DLC3 are connected, the DTC is displayed by blinking the SRS warning light.
The SRS is equipped with a voltage-increase circuit (DC-DC converter) in the center airbag sensor in case the source voltage drops.
When the battery voltage drops, the voltage-increase circuit (DC-DC converter) functions to increase the voltage of the SRS to normal voltage.
A malfunction in this circuit is not recorded in the center airbag sensor . The SRS warning light automatically goes off when the source voltage returns to normal.
The signal to illuminate the SRS warning light is transmitted from the center airbag sensor to the combination meter through the multiplex communication system.

WIRING DIAGRAM

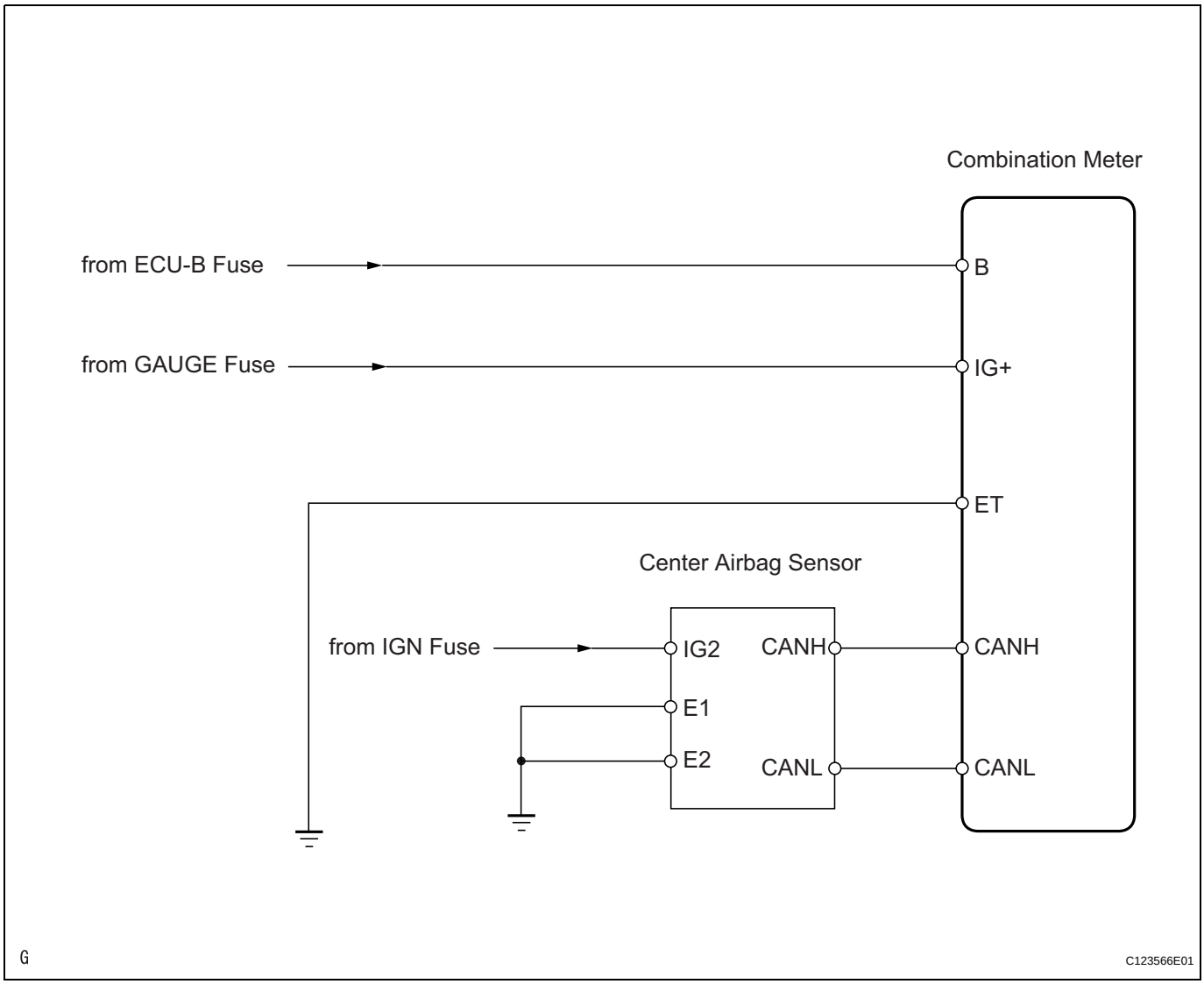

RS

INSPECTION PROCEDURE

1	CHECK BATTERY

(a) Measure the voltage of the battery.
Standard voltage:
11 to 14 V

NG → **CHECK AND REPLACE BATTERY OR CHARGING SYSTEM**

OK

2	CHECK CONNECTOR

(a) Turn the ignition switch OFF.
(b) Disconnect the negative (-) terminal cable from the battery, and wait for at least 90 seconds.
(c) Check that the connectors are properly connected to the center airbag sensor and combination meter.
OK:
The connectors are properly connected.

NG → **CONNECT CONNECTOR**

OK

3	CHECK WIRE HARNESS (SOURCE VOLTAGE OF CENTER AIRBAG SENSOR ASSEMBLY)

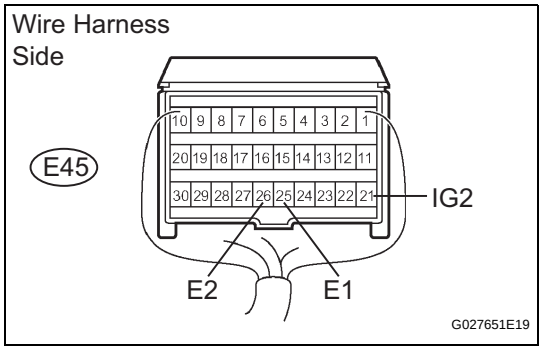

(a) Disconnect the E45 connector from the center airbag sensor .
(b) Connect the negative (-) terminal cable to the battery, and wait for at least 2 seconds.
(c) Turn the ignition switch ON.
(d) Operate all components of the electrical system (defogger, wipers, headlight, heater blower, etc.).
(e) Measure the voltage of the wire harness side connectors.
Standard voltage

Tester Connection	Specified Condition
E45-21 (IG2) - Body ground	10 to 14 V

(f) Turn the ignition switch OFF.
(g) Measure the resistance of the wire harness side connectors.
Standard resistance

Tester Connection	Specified Condition
E45-25 (E1) - Body ground	Below 1 Ω
E45-26 (E2) - Body ground	Below 1 Ω

NG → **REPAIR OR REPLACE WIRE HARNESS**

OK

4	CHECK WIRE HARNESS (SOURCE VOLTAGE OF COMBINATION METER)

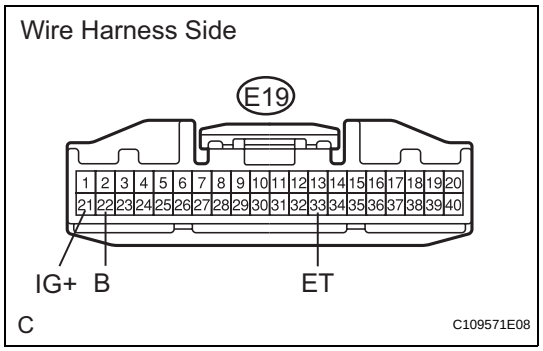

(a) Disconnect the negative (-) terminal cable from the battery, and wait for at least 90 seconds.
(b) Disconnect the E19 connector from the combination meter.
(c) Connect the negative (-) terminal cable to the battery, and wait for at least 2 seconds.
(d) Turn the ignition switch ON.
(e) Measure the voltage of the wire harness side connectors.

Standard voltage

Tester Connection	Condition	Specified Condition
E19-21 (IG+) - Body ground	Ignition switch ON	10 to 14 V
E19-22 (B) - Body ground	Always	10 to 14 V

(f) Turn the ignition switch OFF.
(g) Measure the resistance of the wire harness side connectors.

Standard resistance

Tester Connection	Specified Condition
E19-33 (ET) - Body ground	Below 1 Ω

NG → **REPAIR OR REPLACE WIRE HARNESS**

OK

RS

5	CHECK SRS WARNING LIGHT

(a) Turn the ignition switch OFF.
(b) Disconnect the negative (-) terminal cable from the battery, and wait for at least 90 seconds.
(c) Connect the E19 connector to the combination meter.
(d) Connect the negative (-) terminal cable to the battery, and wait for at least 2 seconds.
(e) Turn the ignition switch ON.
(f) Check the SRS warning light condition.

OK:

After the primary check period, SRS warning light goes off for approximately 10 seconds, and turning it on is continued.

HINT:
The primary check period shows approximately 6 seconds after the ignition switch is ON.

NG → **GO TO COMBINATION METER SYSTEM**

OK

REPLACE CENTER AIRBAG SENSOR ASSEMBLY

SRS Warning Light does not Come ON

DESCRIPTION

The SRS warning light is located on the combination meter.
When the SRS is normal, the SRS warning light comes on for approximately 6 seconds after the ignition switch is turned from OFF to ON, and then goes off automatically.
If there is a malfunction in the SRS, the SRS warning light comes on to inform the driver of a problem.
When terminals TC and CG of the DLC3 are connected, the DTC is displayed by blinking the SRS warning light.
The SRS is equipped with a voltage-increase circuit (DC-DC converter) in the center airbag sensor in case the source voltage drops.
When the battery voltage drops, the voltage-increase circuit (DC-DC converter) functions to increase the voltage of the SRS to normal voltage.
A malfunction in this circuit is not recorded in the center airbag sensor . The SRS warning light automatically goes off when the source voltage returns to normal.
The signal to illuminate the SRS warning light is transmitted from the center airbag sensor to the combination meter through the multiplex communication system.

WIRING DIAGRAM

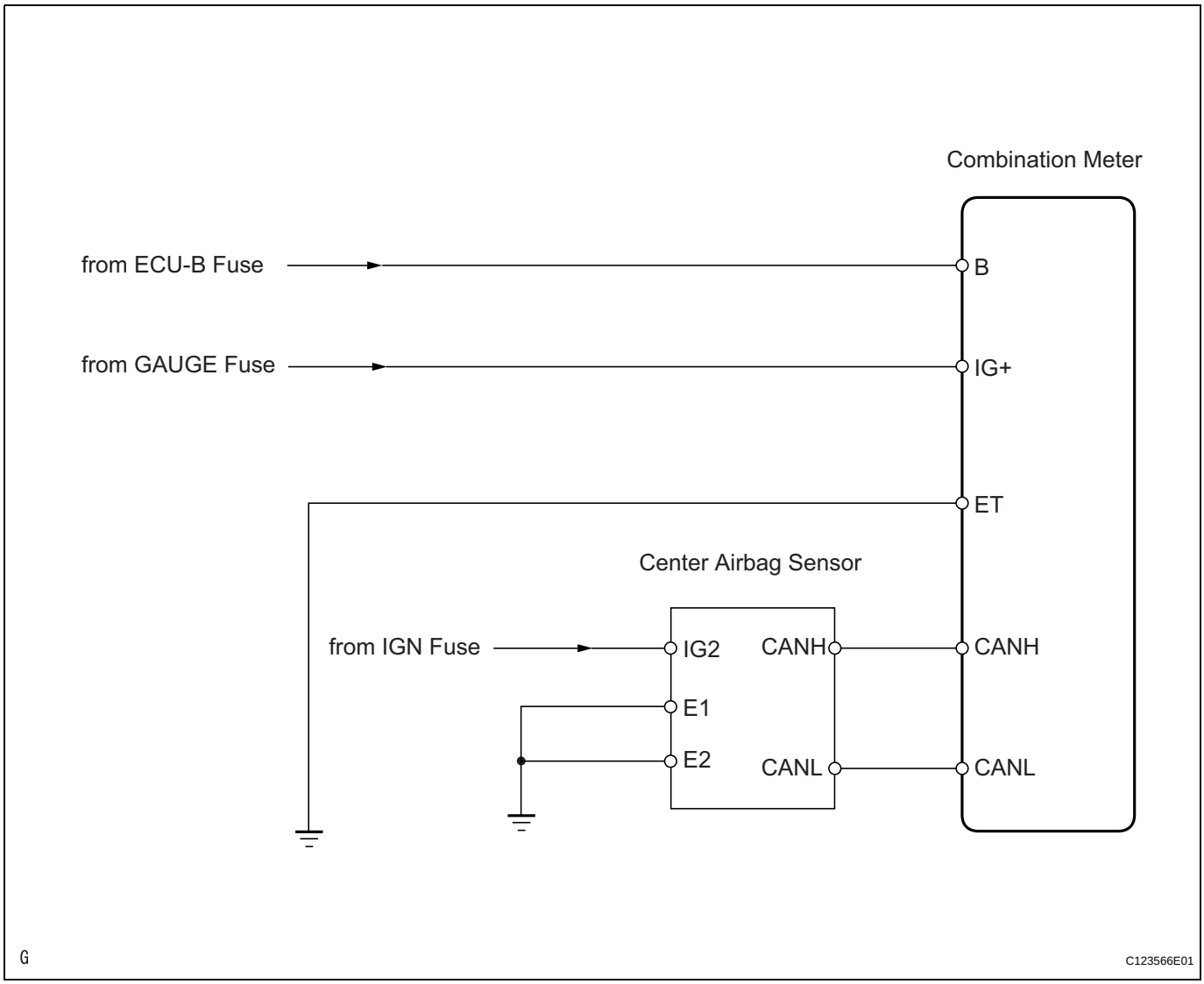

RS

INSPECTION PROCEDURE

1	CHECK BATTERY

(a) Measure the voltage of the battery.
Standard voltage:
11 to 14 V

NG → **CHECK AND REPLACE BATTERY OR CHARGING SYSTEM**

OK

2	CHECK CONNECTORS

(a) Turn the ignition switch OFF.
(b) Disconnect the negative (-) terminal cable from the battery, and wait for at least 90 seconds.
(c) Check that the E19 connectors are properly connected to the center airbag sensor and the combination meter.
OK:
The connectors are properly connected.

NG → **CONNECT CONNECTORS, THEN GO TO STEP 1**

OK

3	CHECK WIRE HARNESS (SOURCE VOLTAGE OF COMBINATION METER)

RS

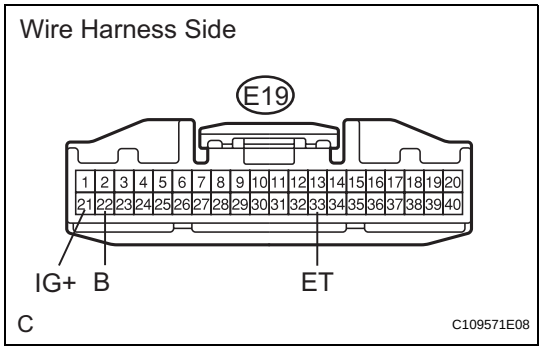

(a) Turn the ignition switch OFF.
(b) Disconnect the negative (-) terminal cable from the battery, and wait for at least 90 seconds.
(c) Disconnect the connector from the combination meter.
(d) Connect the negative (-) terminal cable to the battery, and wait for at least 2 seconds.
(e) Turn the ignition switch ON.
(f) Measure the voltage of the wire harness side connectors.
Standard voltage

Tester Connection	Condition	Specified Condition
E19-21 (IG+) - Body ground	Ignition switch ON	10 to 14 V
E19-22 (B) - Body ground	Always	10 to 14 V

(g) Turn the ignition switch OFF.
(h) Measure the resistance of the wire harness side connectors.
Standard resistance

Tester Connection	Specified Condition
E19-33 (ES) - Body ground	Below 1 Ω

NG → REPAIR OR REPLACE WIRE HARNESS

OK

4	CHECK SRS WARNING LIGHT

(a) Turn the ignition switch OFF.
(b) Disconnect the negative (-) terminal cable from the battery, and wait for at least 90 seconds.
(c) Connect the E19 connector to the combination meter.
(d) Connect the negative (-) terminal cable to the battery, and wait for at least 2 seconds.
(e) Turn the ignition switch ON.
(f) Check the SRS warning light condition.
OK:
The SRS warning light does not come on.

NG → GO TO COMBINATION METER SYSTEM

OK

REPLACE CENTER AIRBAG SENSOR ASSEMBLY

TC and CG Terminal Circuit

DESCRIPTION

DTC output mode is set by connecting terminals TC and CG of the DLC3.
The DTCs are displayed by blinking the SRS warning light.
HINT:

- Make sure that DTC B1281 has not been output. If DTC B1281 has been output, refer to the multiplex communication system.
- When each warning light keeps blinking, a ground short in the wiring of terminal TC of the DLC3 or an internal ground short in each ECU is suspected.

WIRING DIAGRAM

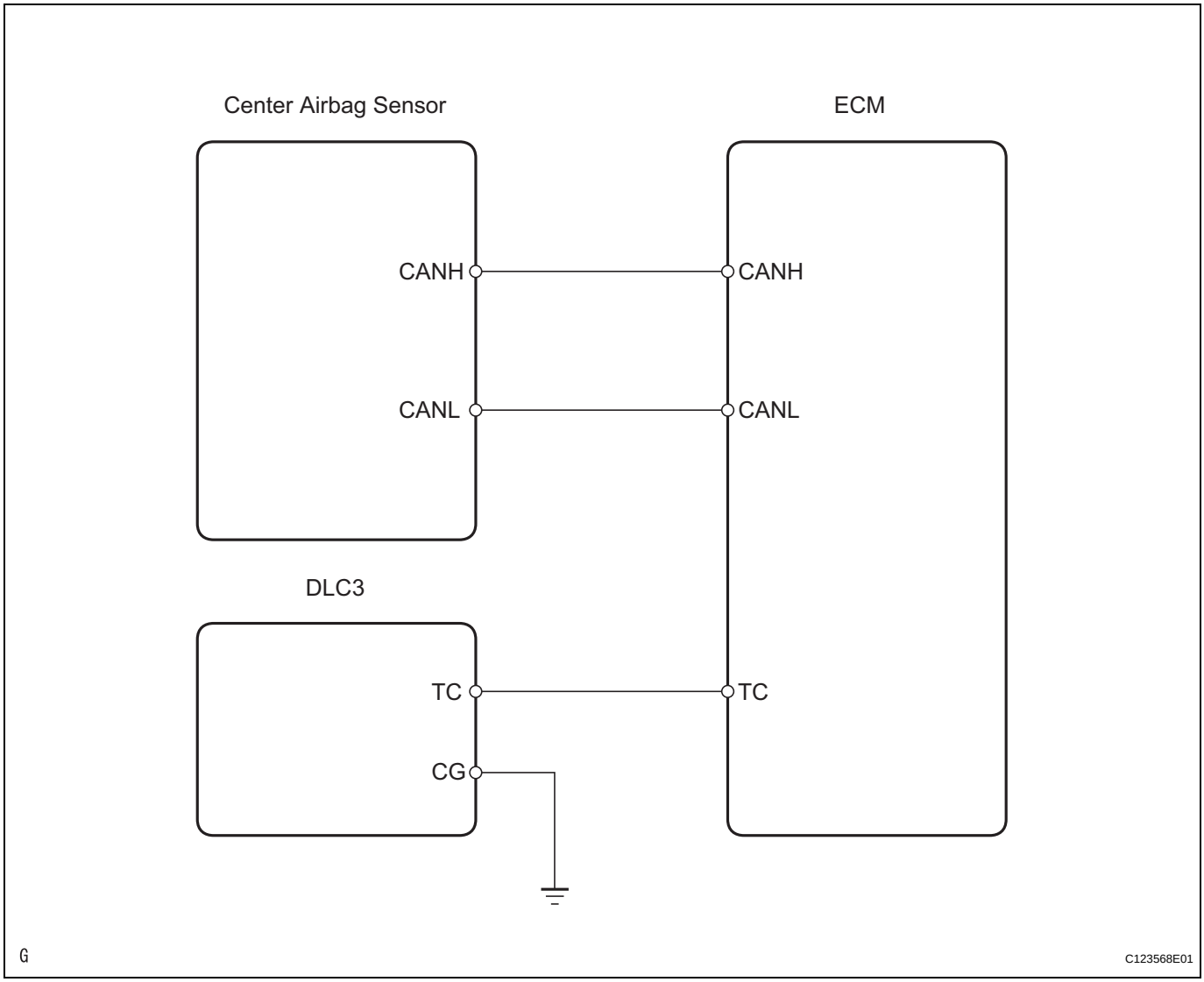

INSPECTION PROCEDURE

1 CHECK WIRE HARNESS (DLC3 - ECM)

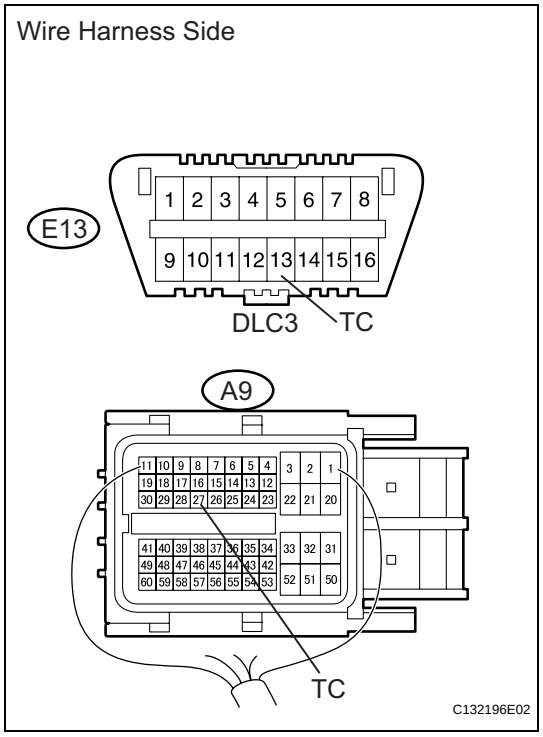

(a) Turn the ignition switch OFF.
(b) Disconnect the A9 connectors from the center airbag sensor .
(c) Measure the resistance of the wire harness side connectors.
Standard resistance

Tester Connection	Specified Condition
E13-13 (TC) - A9-27 (TC)	Below 1 Ω

NG → **REPLACE CENTER AIRBAG SENSOR ASSEMBLY**

OK

2 CHECK WIRE HARNESS (CG OF DLC3 - BODY GROUND)

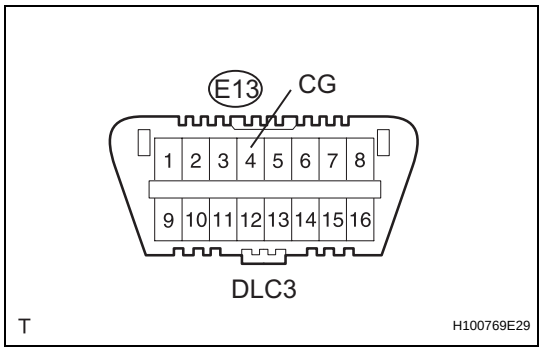

(a) Measure the resistance of the wire harness side connectors.
Standard resistance

Tester connection	Specified condition
E13-4 (CG) - Body ground	Below 1 Ω

NG → **REPAIR OR REPLACE WIRE HARNESS**

OK

RS

3	CHECK WIRE HARNESS (TC OF ECM)

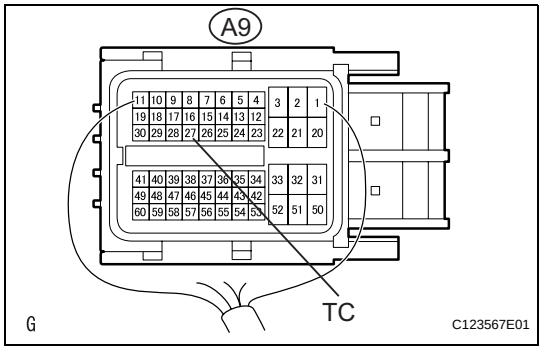

(a) Measure the resistance of the wire harness side connector.

Standard resistance

Tester Connection	Specified Condition
A9-3 (TC) - Body ground	1 MΩ or higher

NG → **REPAIR OR REPLACE WIRE HARNESS**

OK

4	REPLACE ECM

(a) Replace the ECM.
(b) Check the DTC of the ECM (see page ES-35).

Result

Result	Proceed to
DTC output mode is set (except center airbag sensor).	A
Normal system code is output.	B
DTC is output.	C

B → **END**

C → **GO TO INSPECTION PROCEDURE OF DTC OUTPUT**

A

REPAIR OR REPLACE WIRE HARNESS OR EACH ECU

RS

AIRBAG SYSTEM

PRECAUTION

CAUTION:

- **The vehicle is equipped with a Supplemental Restraint System (SRS), which consists of a steering pad, front passenger airbag, curtain shield airbag, front seat side airbag, seat belt pretensioner, center airbag sensor, front airbag sensor, side airbag sensor, rear airbag sensor, occupant classification ECU and seat position airbag sensor. Failure to carry out service procedures in the correct sequence could cause SRS parts to unexpectedly deploy and possibly lead to serious injuries. Furthermore, if a mistake is made when servicing SRS parts, they may fail to operate when required. Before performing servicing (including installation/removal, inspection and replacement of parts), be sure to read the following precautions.**
- **Before starting work, wait at least 90 seconds after the ignition switch is turned OFF and after the cable of the negative (-) battery terminal is disconnected. (SRS parts are equipped with a backup power source. If work is started within 90 seconds of turning the ignition switch OFF and disconnecting the cable from the negative (-) battery terminal, SRS parts may deploy.)**
  (The SRS is equipped with a back-up power source, so if work is started within 90 seconds of disconnecting the negative (-) terminal cable of the battery, the SRS may be deployed).
- **Do not expose SRS parts directly to hot air or flames.**

NOTICE:

- **Malfunction symptoms of SRS parts are difficult to confirm. DTCs are the most important source of information when troubleshooting. During troubleshooting, always confirm DTCs before disconnecting the cable from the negative (-) battery terminal.**
- **For minor collisions where SRS parts do not deploy, always inspect the SRS parts.**
- **Before repair work, remove airbag sensors as necessary if any kind of impact is likely to occur to an airbag sensor during the operation.**
- **Never use SRS parts from another vehicle. When replacing SRS parts, replace them with new ones.**
- **Never disassemble or attempt to repair SRS parts.**
- **If an SRS part has been dropped, or if there are any cracks, dents or other defects in the case, bracket or connector, replace the SRS part with a new one.**
- **Use an ohmmeter/voltmeter with high impedance (10 kΩ/V minimum) for troubleshooting the electrical circuits.**

- **Information labels are attached to the periphery of SRS parts. Follow the cautions and instructions on the labels.**
- **After work on SRS parts is completed, perform the SRS warning light check (see page RS-37).**
- **When the cable is disconnected from the negative (-) battery terminal, the memory settings of each system will be cleared. Because of this, be sure to write down the settings of each system before starting work. When work is finished, reset the settings of each system as before. Never use a backup power supply from outside the vehicle to avoid erasing the memory in a system.**
- **If the vehicle is equipped with a mobile communication system, refer to the precautions in the INTRODUCTION section (see page IN-5).**

HINT:

In the airbag system, the center airbag sensor, front airbag sensor LH and RH, side airbag sensor LH and RH, and rear airbag sensor LH and RH are collectively referred to as the airbag sensors.

1. HANDLING PRECAUTIONS FOR AIRBAG SENSORS

(a) Before starting the following operations, wait for at least 90 seconds after disconnecting the negative (-) terminal cable from the battery:
  (1) Replacement of the airbag sensors
  (2) Adjustment of the front/rear doors of the vehicle equipped with the side airbags and curtain shield airbags (fitting adjustment)

(b) When connecting or disconnecting the airbag sensor connectors, ensure that each sensor is installed in the vehicle.

(c) Do not use airbag sensors which have been dropped during the operation or transportation.

(d) Do not disassemble the airbag sensors.

2. INSPECTION PROCEDURE FOR VEHICLE INVOLVED IN ACCIDENT

(a) When the airbag has not deployed, confirm the DTCs by checking the SRS warning light. If there is any malfunction in the SRS airbag system, perform troubleshooting.

(b) When any of the airbags have deployed, replace the airbag sensors and check the installation condition.

3. SRS CONNECTOR

(a) SRS connectors are located as shown in the following illustration.

(1) w/ Front seat side airbag and curtain shield airbag

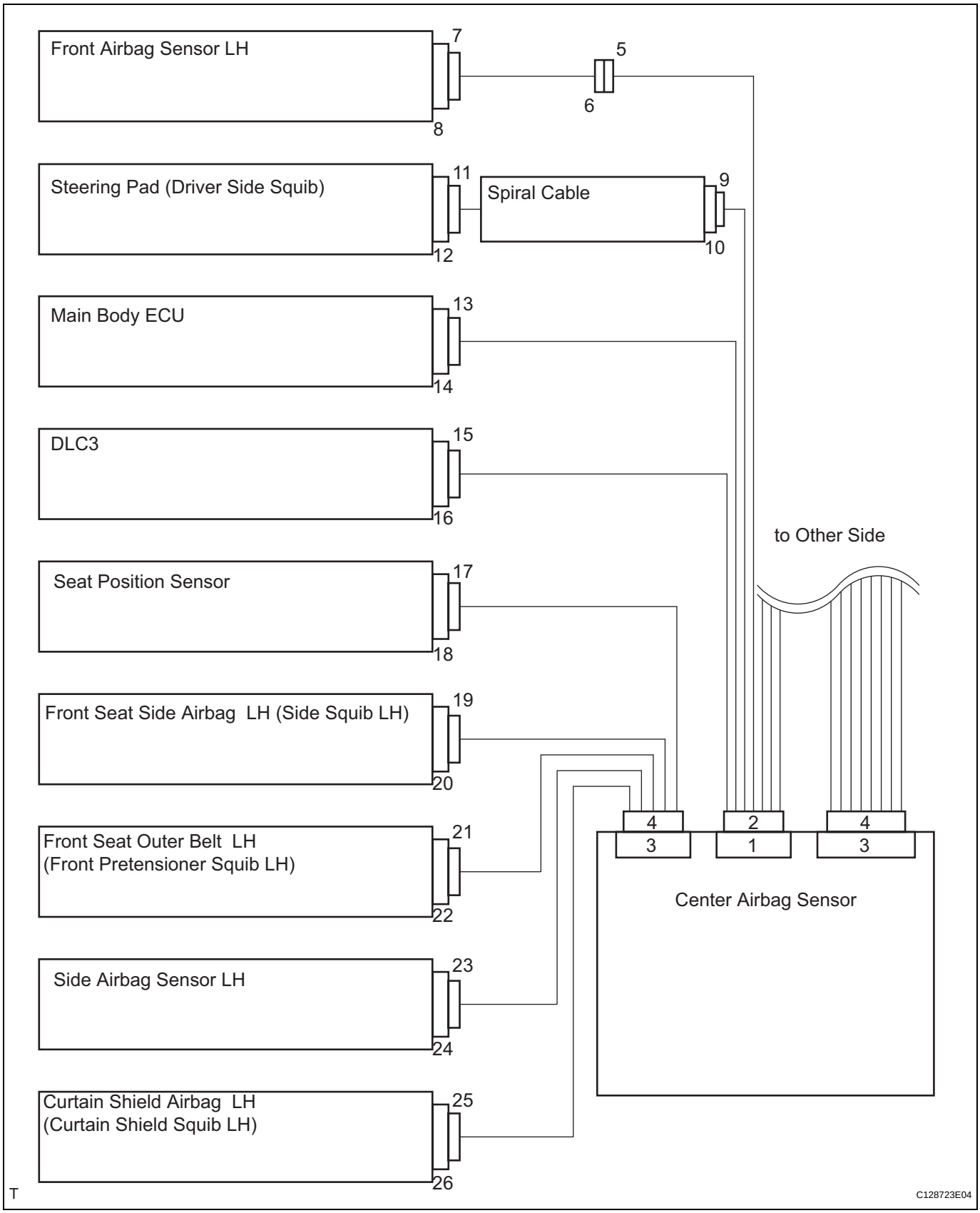

RS

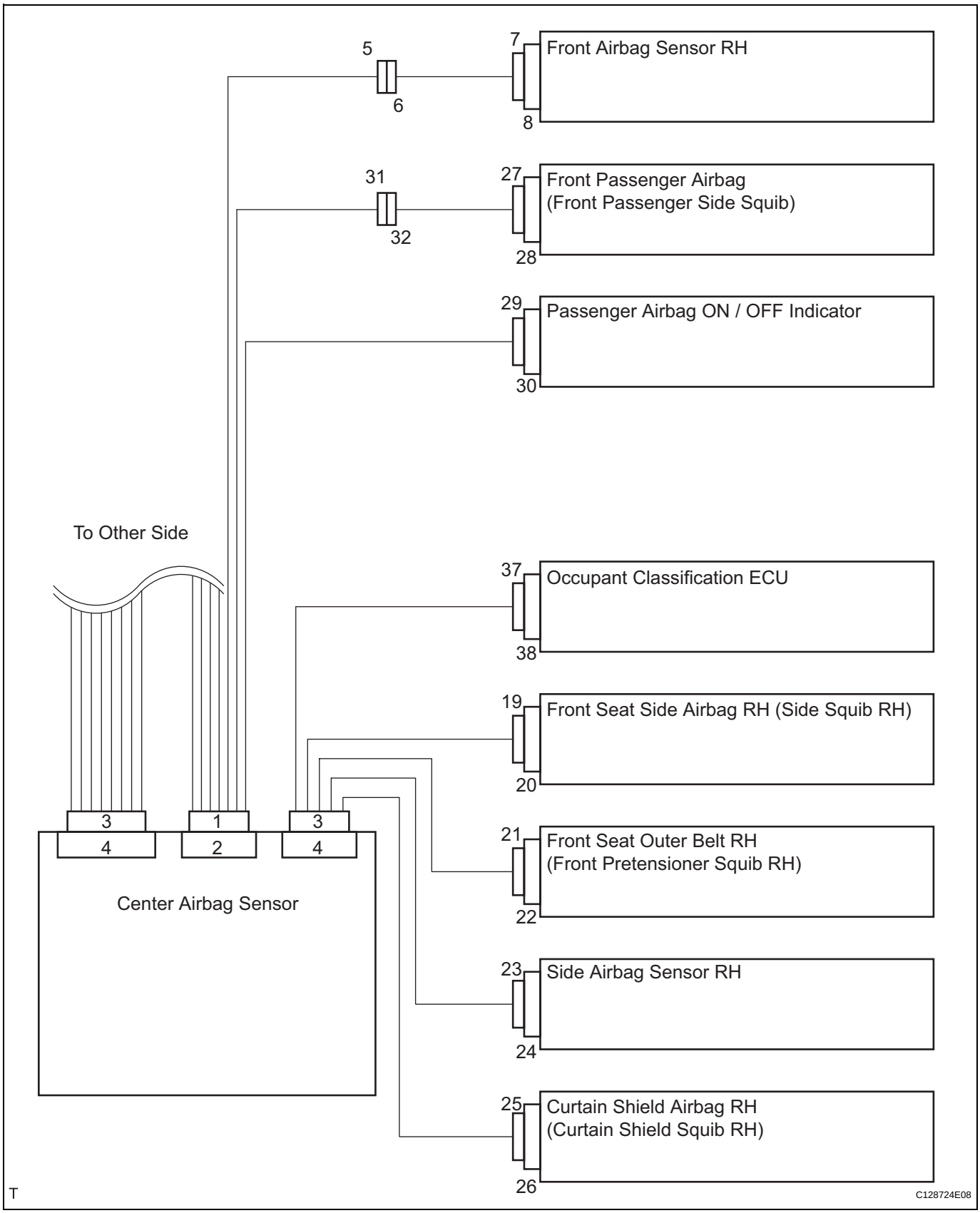

No.	Item	Application
(1)	Terminal Twin-Lock Mechanism	Connectors 1, 3, 5, 7, 9, 13, 23, 31, 37
(2)	Activation Prevention Mechanism	Connectors 1, 3, 8, 12, 22, 26, 28
(3)	Half Connection Prevention Mechanism	Connectors 6, 7, 9, 23, 32

No.	Item	Application
(4)	Connector Position Assurance Mechanism	Connector 6, 23
(5)	Connector Lock Mechanism (1)	Connectors 11, 21, 25, 27
(6)	Connector Lock Mechanism (2)	Connectors 1, 3
(7)	Improper Connection Prevention Lock Mechanism	Connectors 2, 4

(2) w/o Front seat side airbag and curtain shield airbag

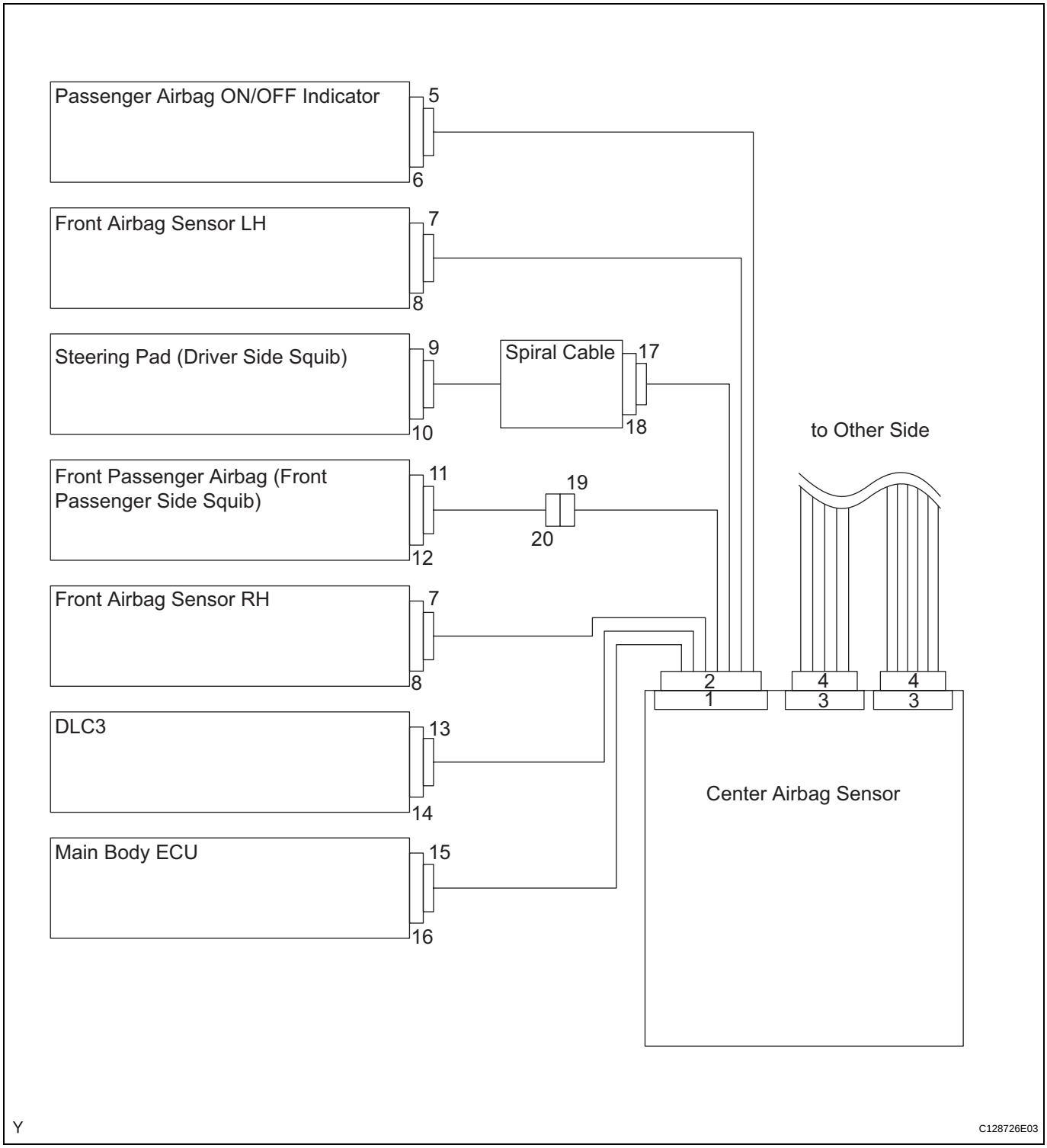

RS

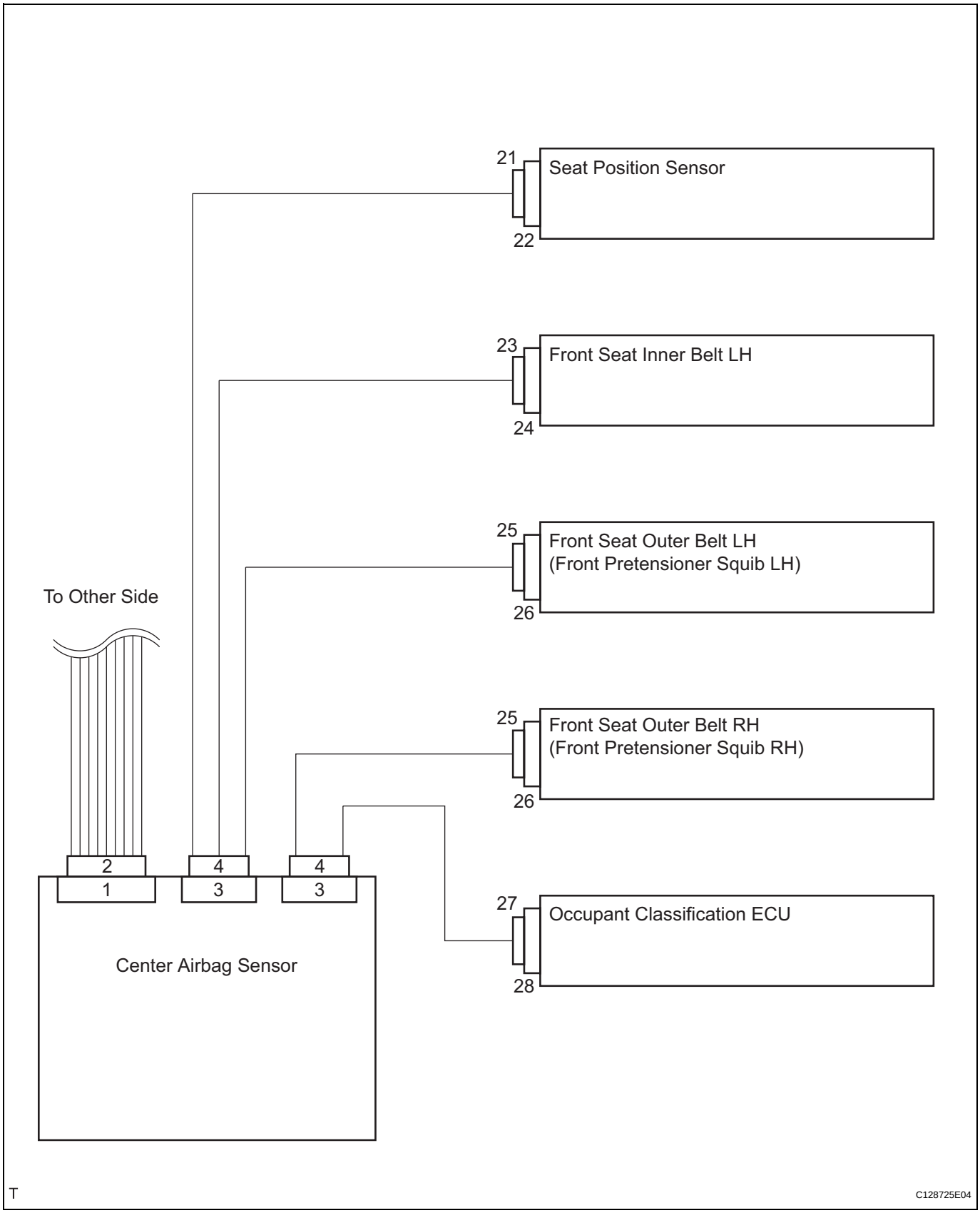

RS

No.	Item	Application
(1)	Terminal Twin-Lock Mechanism	Connectors 2, 4, 7, 15, 17, 19, 27
(2)	Activation Prevention Mechanism	Connectors 2, 4, 8, 10, 12, 26
(3)	Half Connection Prevention Mechanism	Connectors 7, 17

No.	Item	Application
(4)	Connector Position Assurance Mechanism	Connector 7
(5)	Connector Lock Mechanism (1)	Connectors 9, 11, 25
(6)	Connector Lock Mechanism (2)	Connectors 1, 3
(7)	Improper Connection Prevention Lock Mechanism	Connectors 2, 4

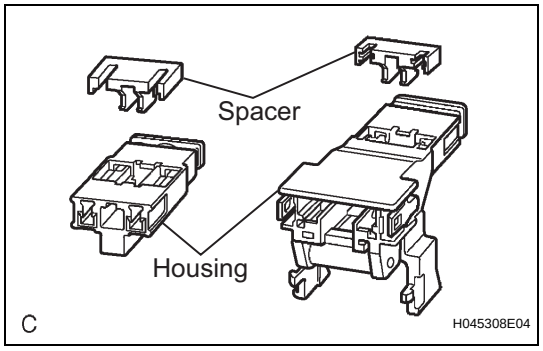

(b) All connectors in the SRS except the seat position sensor connector and the occupant classification ECU connector are colored yellow to distinguish them from other connectors. Some connectors have special functions, and are specially designed for the SRS. These connectors use durable gold-plated terminals, and are placed in the locations shown above to ensure high reliability.

(1) Terminal twin-lock mechanism:
Each connector is a two-piece component consisting of a housing and a spacer. This design enables the terminal to be locked securely by two locking devices (the retainer and the lance) to prevent the terminals from becoming disconnected.

(2) Activation prevention mechanism:
Each connector contains a short spring plate. When the connector is disconnected, the short spring plate creates a short circuit by automatically connecting the positive (+) and negative (-) terminals of the squib.

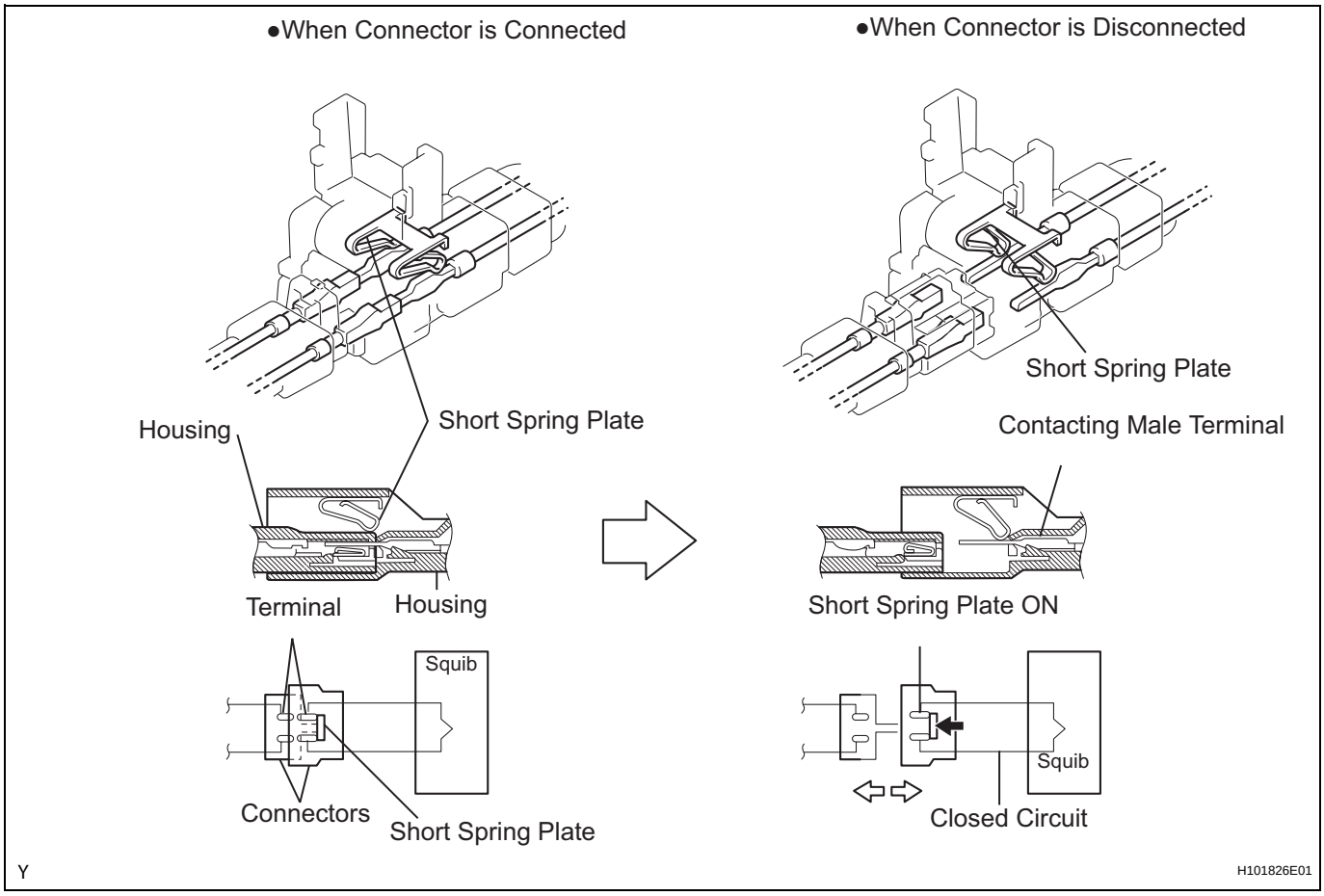

(3) Half connection prevention mechanism:
If the connector is not completely connected, the connector is disconnected by the spring operation so that no continuity exists.

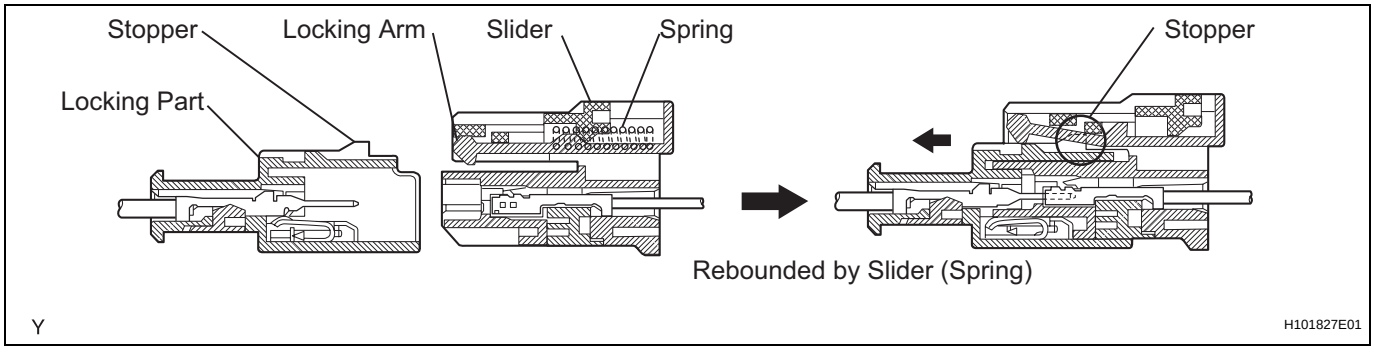

(4) Connector position assurance mechanism:
The CPA (yellow part) slides, which completes the connector engagement, only when the housing lock (white part) is completely engaged.

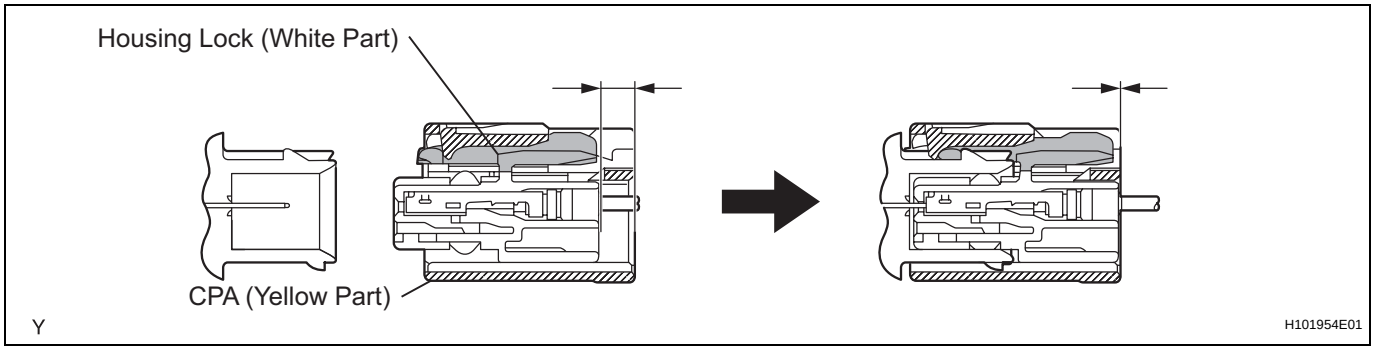

(5) Connector lock mechanism (1):
Locking the connector lock button connects the connector.

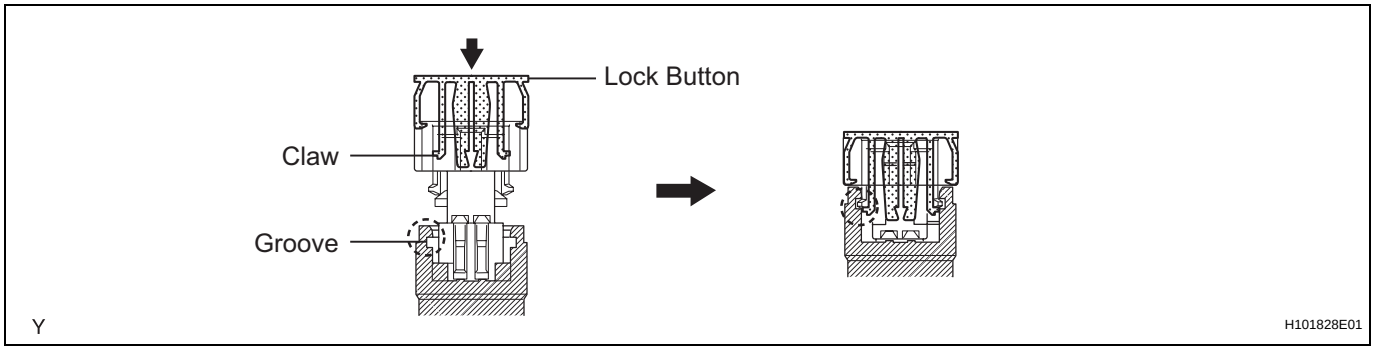

(6) Connector lock mechanism (2):
Both the primary lock with holder lances and the secondary lock with a retainer prevent the connectors from becoming disconnected.

RS

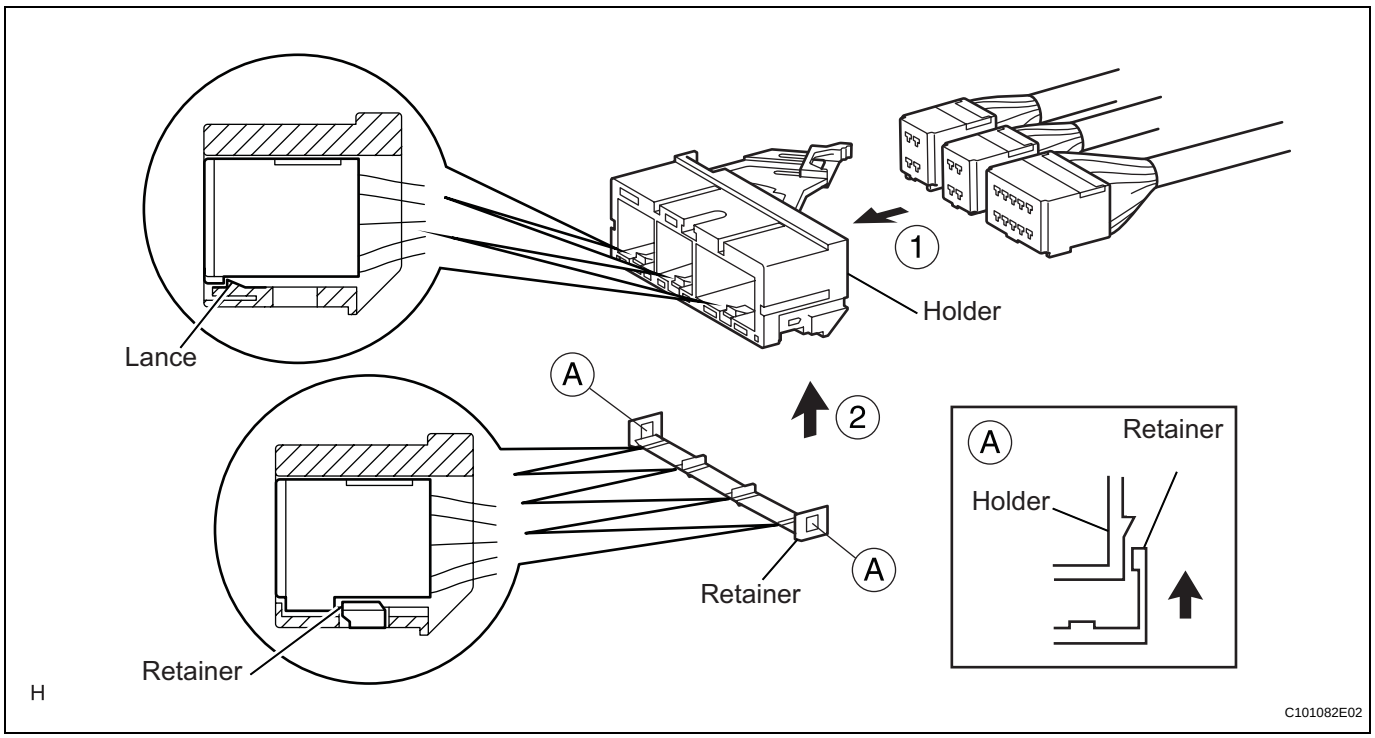

(7) Improper connection prevention lock mechanism:
When connecting the holder, the lever is pushed into the end by rotating around the A axis to lock the holder securely.

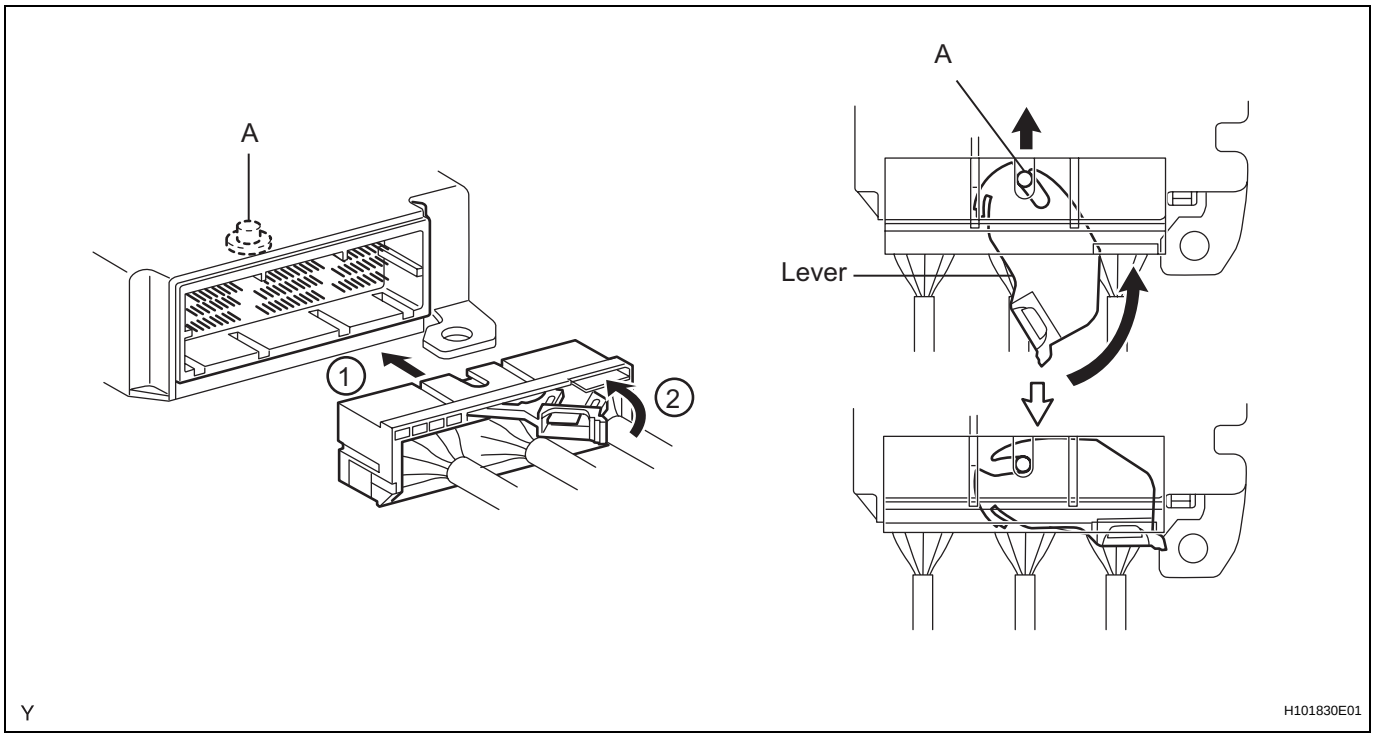

4. DISCONNECTION OF CONNECTORS FOR STEERING PAD, FRONT PASSENGER AIRBAG ASSEMBLY (SQUIB SIDE), CURTAIN SHIELD AIRBAG ASSEMBLY AND FRONT SEAT OUTER BELT ASSEMBLY

HINT:
Tape the screwdriver tip before use.

(a) Release the lock button (yellow part) of the connector using a screwdriver.

RS

(b) Insert the screwdriver tip between the connector and the base, and then raise the connector.

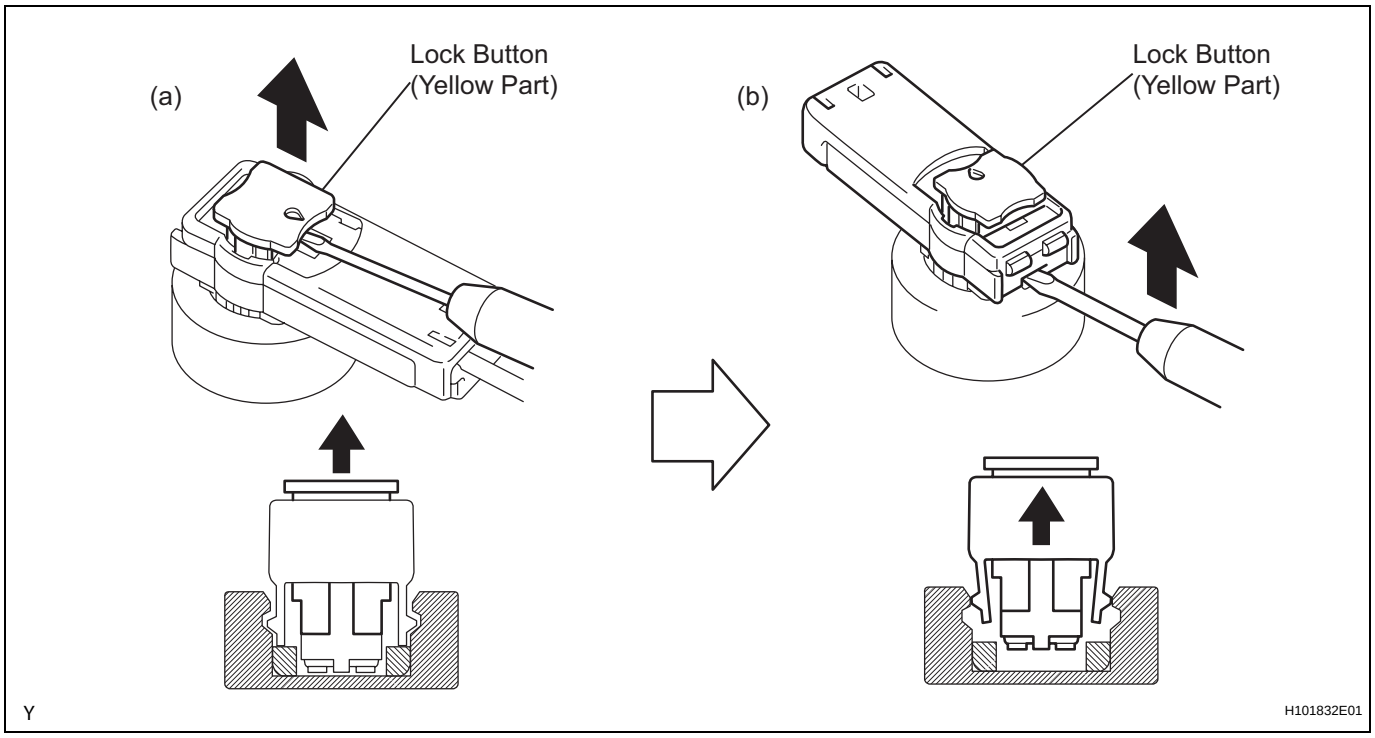

5. CONNECTION OF CONNECTORS FOR STEERING PAD, FRONT PASSENGER AIRBAG ASSEMBLY (SQUIB SIDE), CURTAIN SHIELD AIRBAG ASSEMBLY AND FRONT SEAT OUTER BELT ASSEMBLY

(a) Connect the connector.

RS

(b) Push the lock button (yellow part) of the connector down securely. (When locking, a click sound can be heard.)

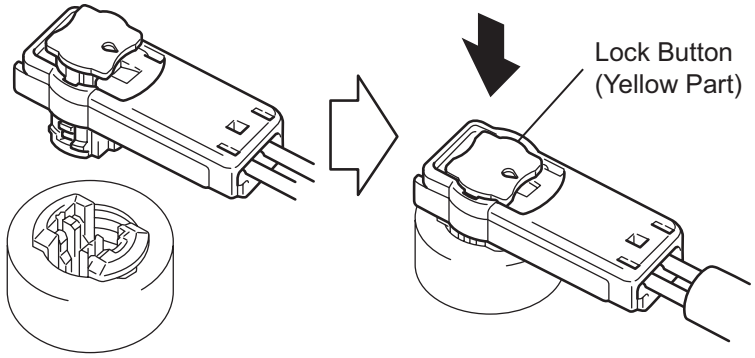

Y H101833E01

6. DISCONNECTION OF CONNECTORS FOR FRONT PASSENGER AIRBAG ASSEMBLY (INSTRUMENT PANEL WIRE SIDE)

(a) Place a finger on the slider, slide the slider to release the lock, and then disconnect the connector.

RS

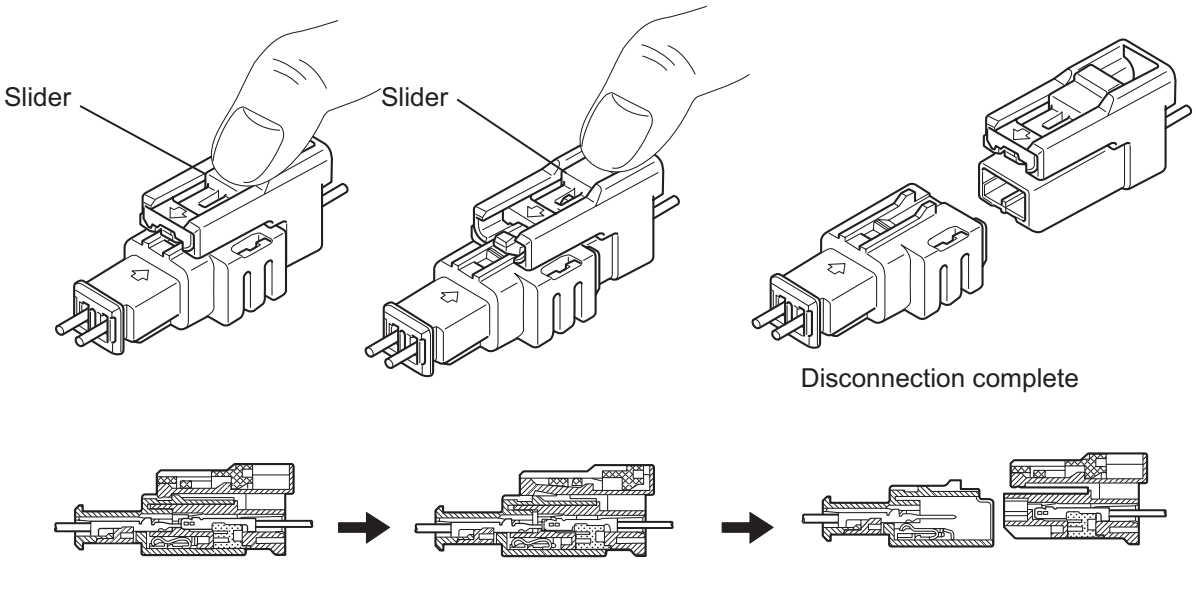

Y H101836E01

7. CONNECTION OF CONNECTORS FOR FRONT PASSENGER AIRBAG ASSEMBLY (INSTRUMENT PANEL WIRE SIDE)

(a) Connect the connector as shown in the illustration. (When locking, make sure that the slider returns to its original position and a click sound can be heard.)
HINT:
When connecting, the slider slides. Do not touch the slider while connecting, as this may result in an insecure fit.

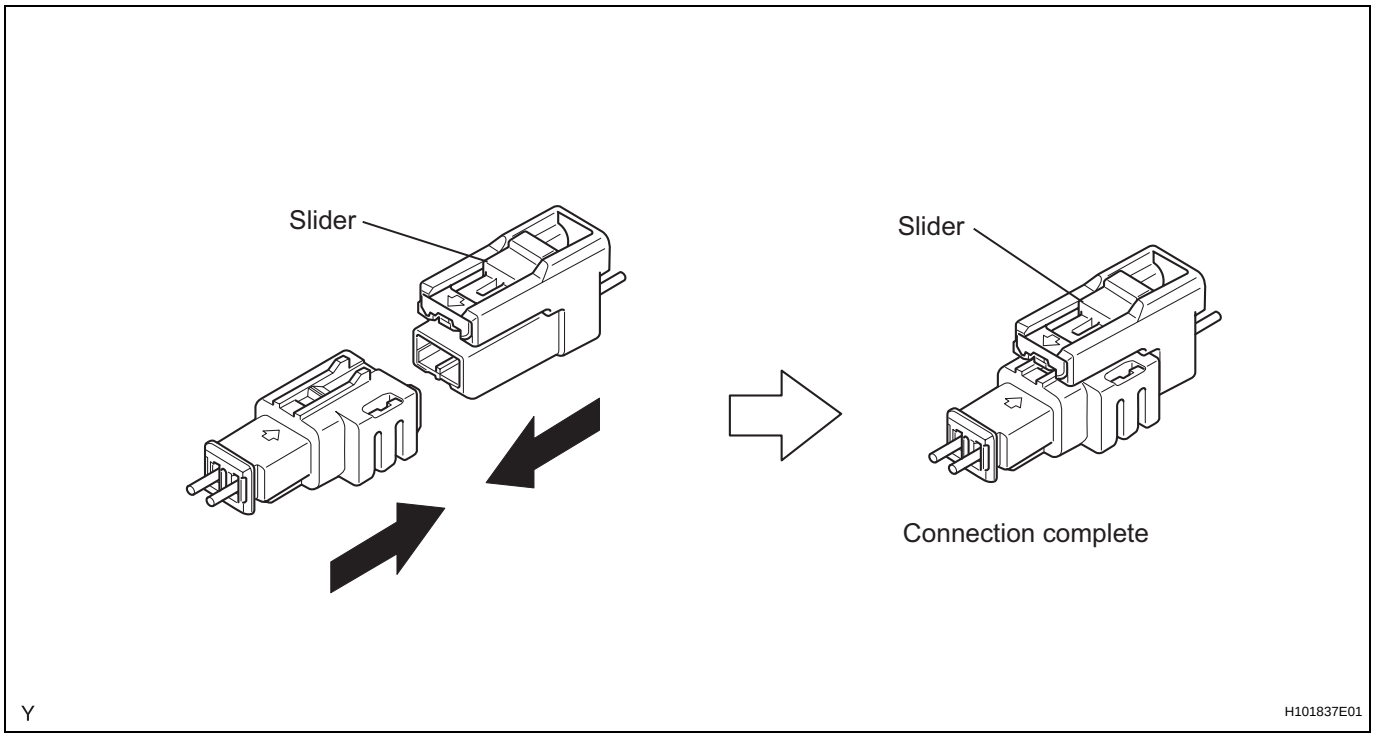

8. DISCONNECTION OF CONNECTORS FOR FRONT SEAT SIDE AIRBAG ASSEMBLY

(a) Place a finger on the slider, slide the slider to release the lock, and then disconnect the connector.

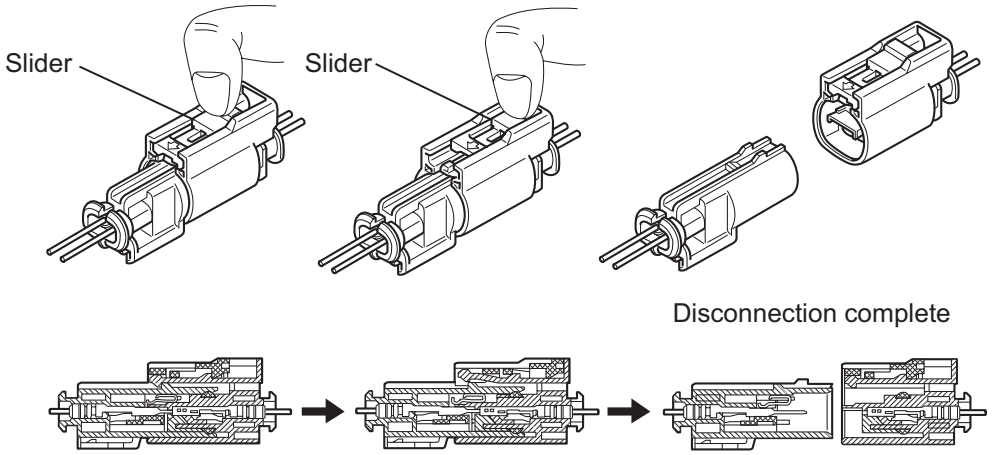

Y H101834E01

9. CONNECTION OF CONNECTORS FOR FRONT SEAT SIDE AIRBAG ASSEMBLY

(a) Connect the connector as shown in the illustration. (When locking, make sure that the slider returns to its original position and a click sound can be heard.)
HINT:
When connecting, the slider slides. Do not touch the slider while connecting, as this may result in an insecure fit.

RS

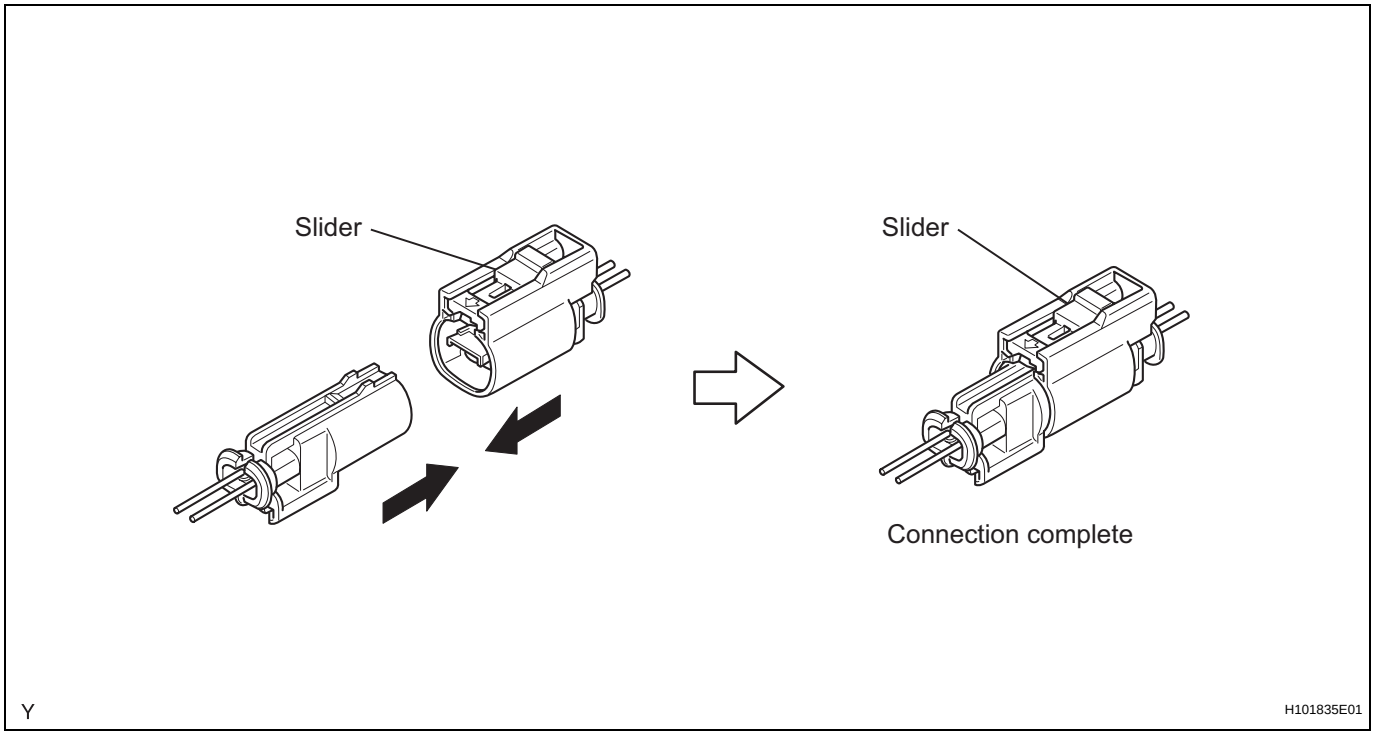

10. DISCONNECTION OF CONNECTORS FOR CENTER AIRBAG SENSOR ASSEMBLY

(a) Pull the lever by pushing part A as shown in the illustration and disconnect the holder (with connectors).

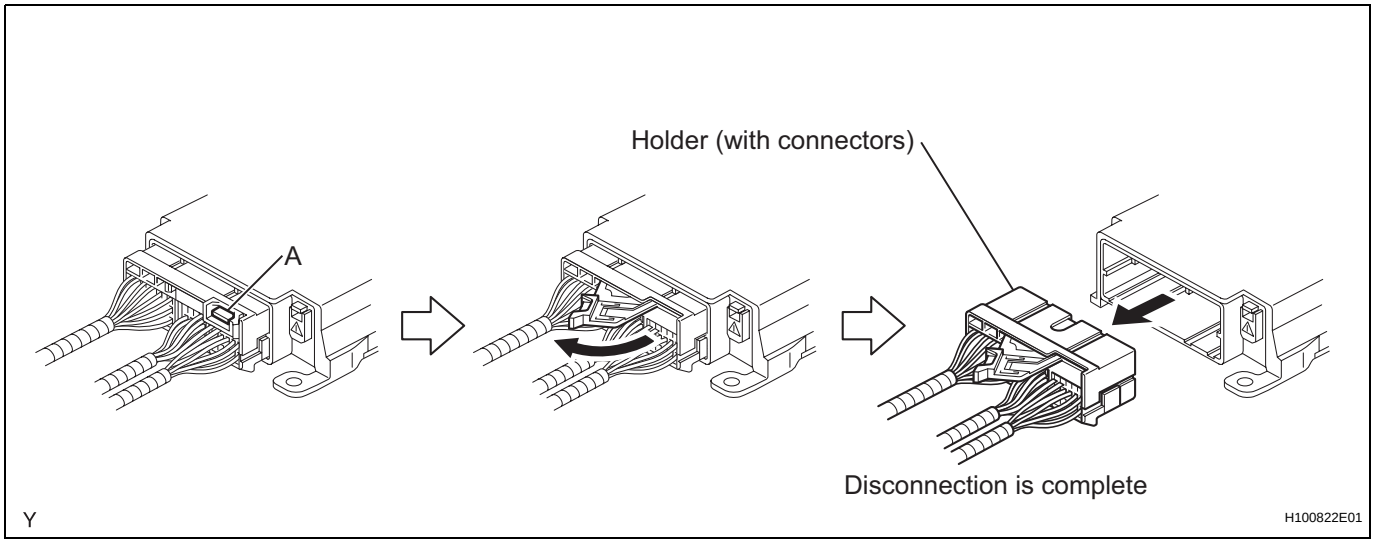

HINT:
Perform the following procedures when replacing the holder.

RS

(b) Remove the holder.
(1) Using a screwdriver, unlock the retainer.

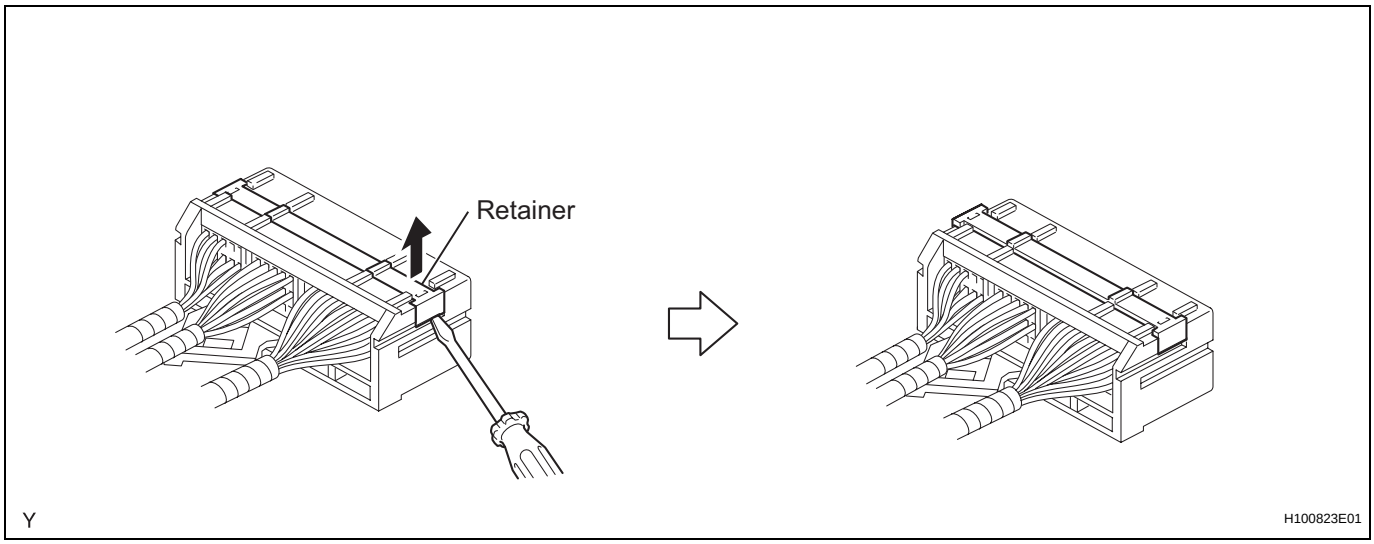

(2) Release the fitting lances and remove the holder.

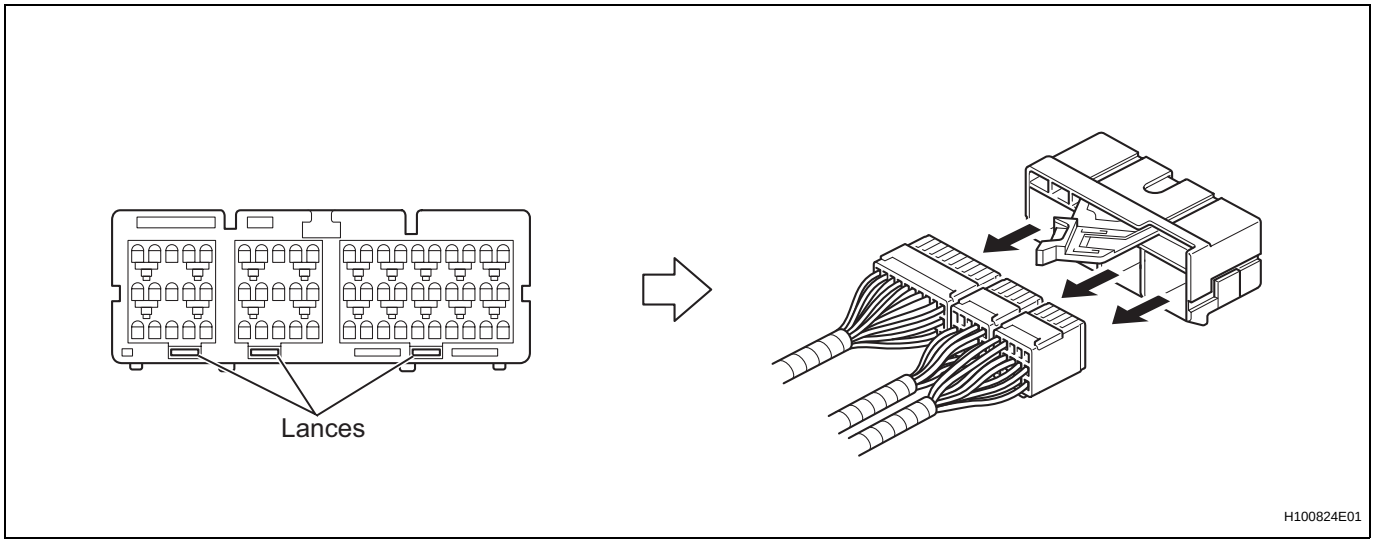

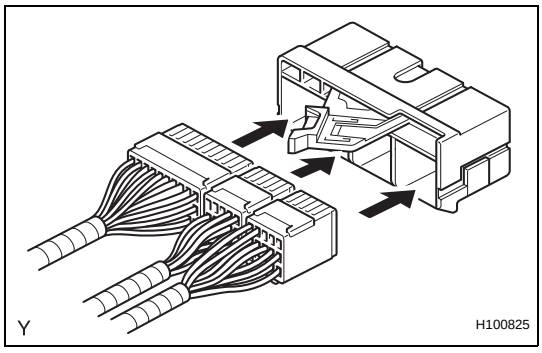

(c) Install the holder.
(1) Install the connectors into the holder. (When locking, a click sound can be heard.)
HINT:
The retainer is locked when the holder is connected.

11. CONNECTION OF CONNECTORS FOR CENTER AIRBAG SENSOR ASSEMBLY

(a) Firmly insert the holder (with connectors) into the center airbag sensor until it cannot be pushed any further.

(b) Push the lever to connect the holder (with connectors). (When locking, a click sound can be heard.)
HINT:
The holder slides into the center airbag sensor when it is being connected. Do not hold the holder while connecting, as it may result in an insecure fit.

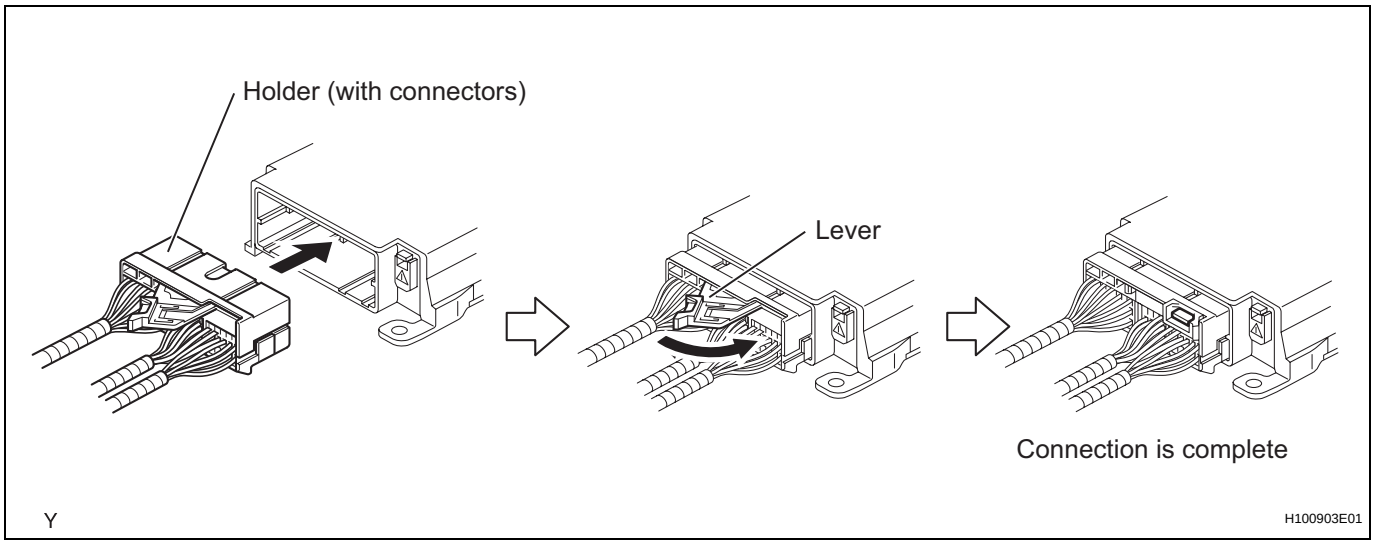

12. DISCONNECTION OF CONNECTORS FOR FRONT AIRBAG SENSOR

(a) Push down the housing lock (white part) and slide the CPA (yellow part). (At this time, the connector cannot be disconnected.)

(b) Push down the housing lock (white part) again and disconnect the connector.
HINT:
Do not push down part A shown in the illustration when disconnecting.

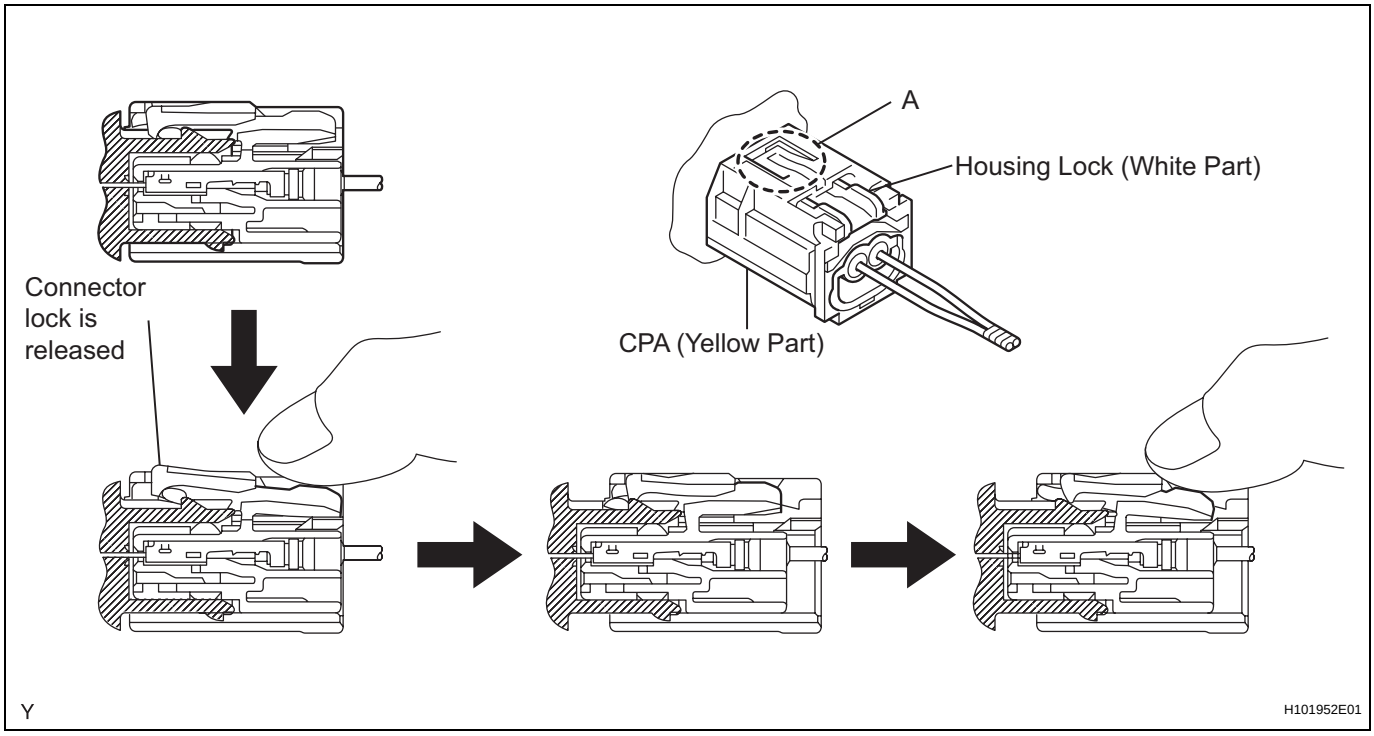

(c) After disconnecting the connector, check that the position of the housing lock (white part) is as shown in the illustration.

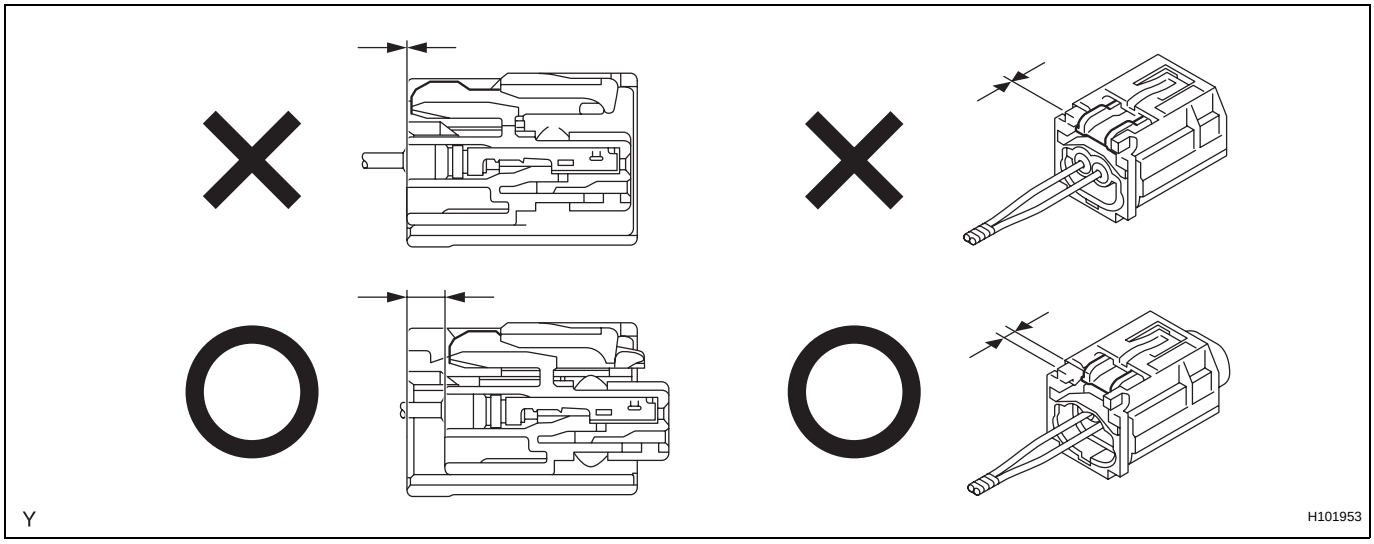

13. CONNECTION OF CONNECTORS FOR FRONT AIRBAG SENSOR

(a) Before connecting the connectors, check that the position of the housing lock (white part) is as shown in the illustration.

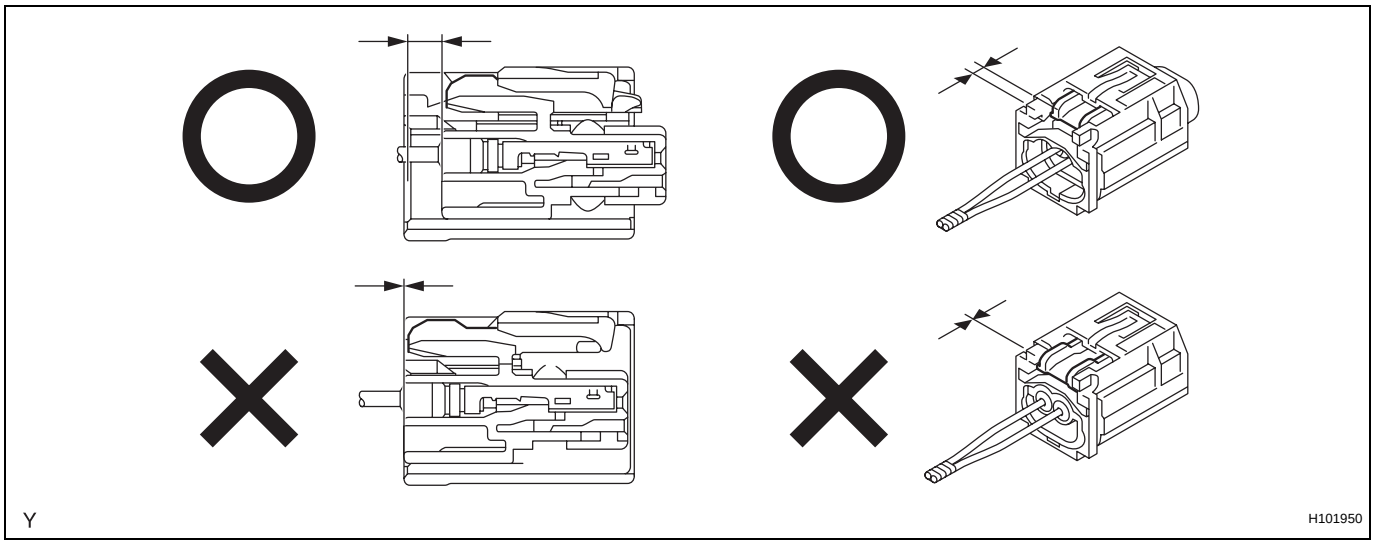

(b) Be sure to engage the connectors until they are locked. (When locking, make sure that a click sound can be heard.)
HINT:
When connecting them, the housing lock (white part) slides. Do not hold the housing lock (white part) and part A, as it may result in an insecure fit.

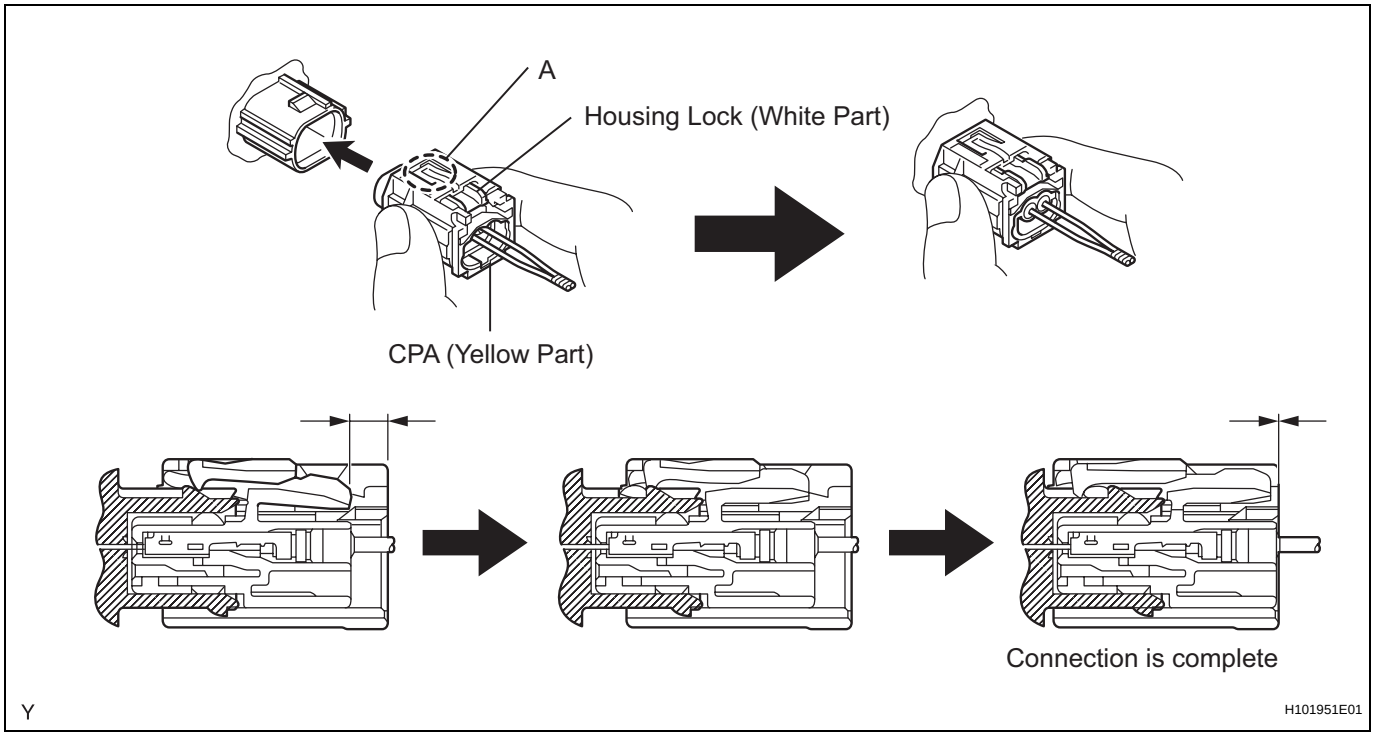

RS

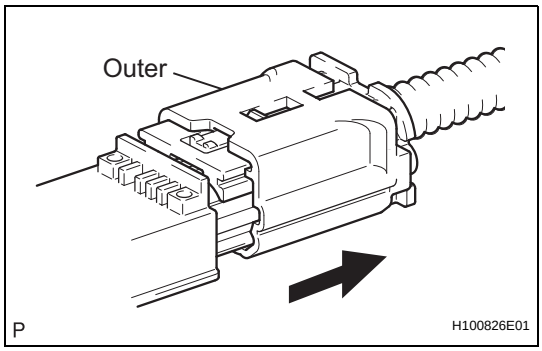

14. DISCONNECTION OF CONNECTORS FOR SIDE AIRBAG SENSOR AND REAR AIRBAG SENSOR

(a) While holding both sides of the outer connector locking sleeve, slide the outer in the direction shown by the arrow.

(b) When the connector lock is released, the connectors are disconnected.
HINT:
Be sure to hold both outer flanks. Holding the top and bottom sides will make disconnection difficult.

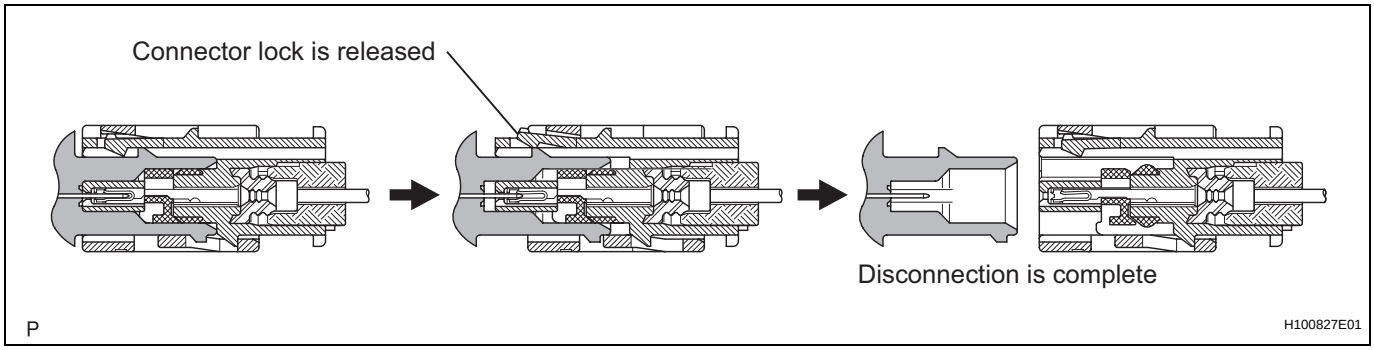

15. CONNECTION OF CONNECTORS FOR SIDE AIRBAG SENSOR AND REAR AIRBAG SENSOR

(a) Connect the connector as shown in the illustration (When locking, make sure that the outer returns to its original position and a click sound can be heard).
HINT:
When connecting, the outer slides. Do not hold the outer while connecting, as it may result in an insecure fit.

RS

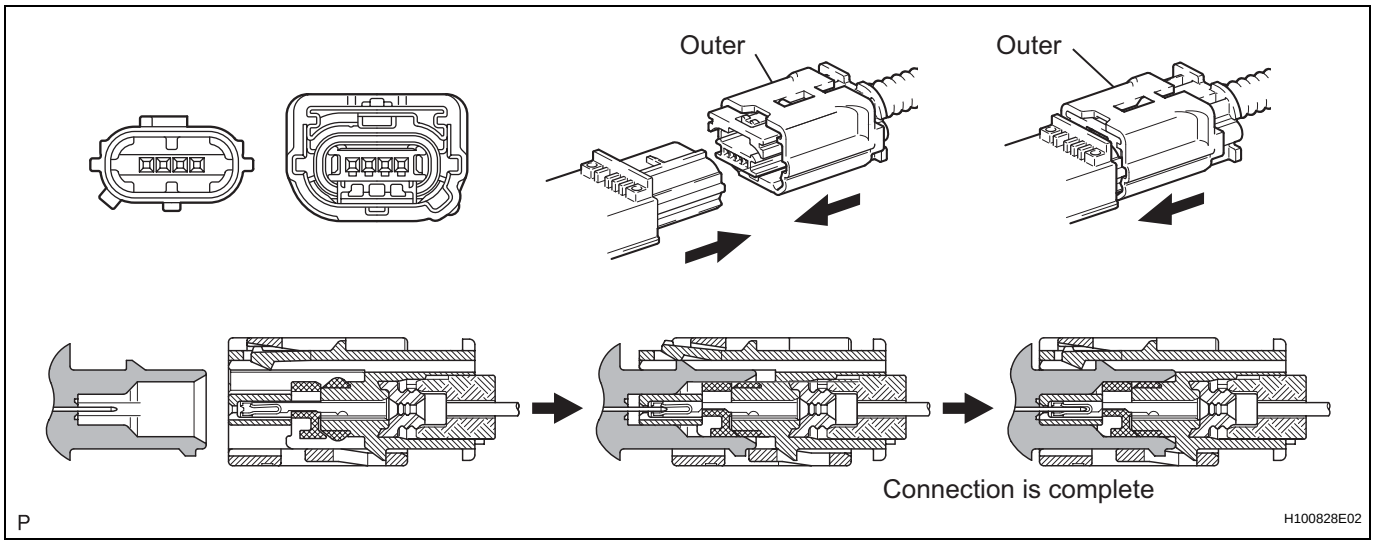

REMOVAL

CAUTION:
Be sure to read the precautionary notices concerning the SRS airbag system before servicing it (see page RS-1).

1. **DISCONNECT CABLE FROM NEGATIVE BATTERY TERMINAL**
   CAUTION:
   Wait at least 90 seconds after disconnecting the cable from the negative (-) battery terminal to prevent airbag and seat belt pretensioner activation.
2. **REMOVE NO. 1 CONSOLE UPPER PANEL GARNISH (See page IP-17)**
3. **REMOVE NO. 2 CONSOLE UPPER PANEL GARNISH (See page IP-18)**
4. **REMOVE UPPER CONSOLE PANEL SUB-ASSEMBLY (See page IP-18)**
5. **REMOVE SWITCH BASE (See page IP-18)**
6. **REMOVE CONSOLE CUP HOLDER BOX (See page IP-18)**
7. **REMOVE UPPER REAR CONSOLE PANEL SUB-ASSEMBLY (See page IP-19)**
8. **REMOVE CONSOLE REAR END PANEL (See page IP-19)**
9. **REMOVE NO. 1 INSTRUMENT PANEL BRACKET COVER INNER LH (See page IP-19)**
10. **REMOVE NO. 1 INSTRUMENT PANEL BRACKET COVER INNER RH (See page IP-19)**
11. **REMOVE REAR CONSOLE BOX ASSEMBLY (See page IP-20)**
12. **REMOVE CENTER AIRBAG SENSOR ASSEMBLY**
    (a) Disconnect the airbag sensor connectors.
    (b) Remove the 3 bolts and airbag sensor.

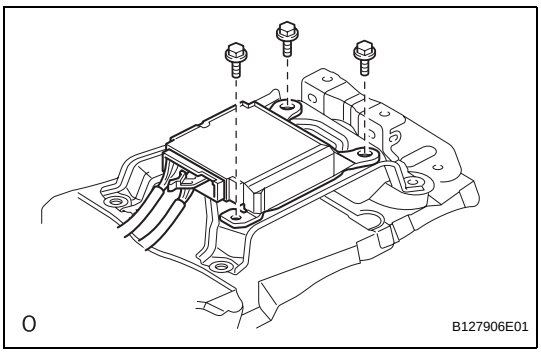

RS

INSTALLATION

CAUTION:
Be sure to read the precautionary notices concerning the SRS airbag system before servicing it (see page RS-1).

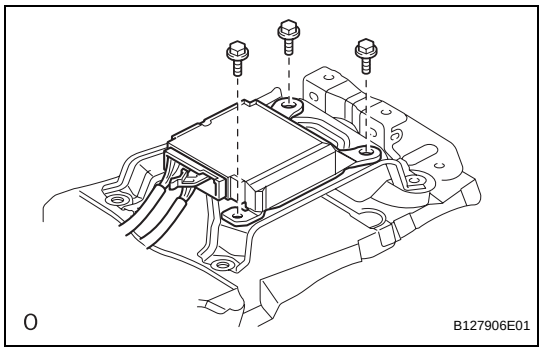

1. **INSTALL CENTER AIRBAG SENSOR ASSEMBLY**
   (a) Install the airbag sensor with the 3 bolts.
   Torque: 17.5 N*m (179 kgf*cm, 13 ft.*lbf)
   NOTICE:
   - **If the airbag sensor has been dropped, or there are any cracks, dents or other defects in the case, bracket or connector, replace it with a new one.**
   - **When installing the airbag sensor, be careful that the SRS wiring does not interfere with other parts and that it is not pinched between other parts.**

   (b) Connect the airbag sensor connectors.
2. **INSTALL REAR CONSOLE BOX ASSEMBLY (See page IP-26)**
3. **INSTALL NO. 1 INSTRUMENT PANEL BRACKET COVER INNER LH (See page IP-26)**
4. **INSTALL NO. 1 INSTRUMENT PANEL BRACKET COVER INNER RH (See page IP-26)**
5. **INSTALL CONSOLE REAR END PANEL (See page IP-26)**
6. **INSTALL UPPER REAR CONSOLE PANEL SUB-ASSEMBLY (See page IP-27)**
7. **INSTALL CONSOLE CUP HOLDER BOX (See page IP-27)**
8. **INSTALL SWITCH BASE (See page IP-27)**
9. **INSTALL UPPER CONSOLE PANEL SUB-ASSEMBLY (See page IP-27)**
10. **INSTALL NO. 2 CONSOLE UPPER PANEL GARNISH (See page IP-28)**
11. **INSTALL NO. 1 CONSOLE UPPER PANEL GARNISH (See page IP-28)**
12. **CONNECT CABLE TO NEGATIVE BATTERY TERMINAL**
13. **CHECK SRS WARNING LIGHT**
    (a) Check the SRS warning light (see page RS-34).

CENTER AIRBAG SENSOR ASSEMBLY

COMPONENTS

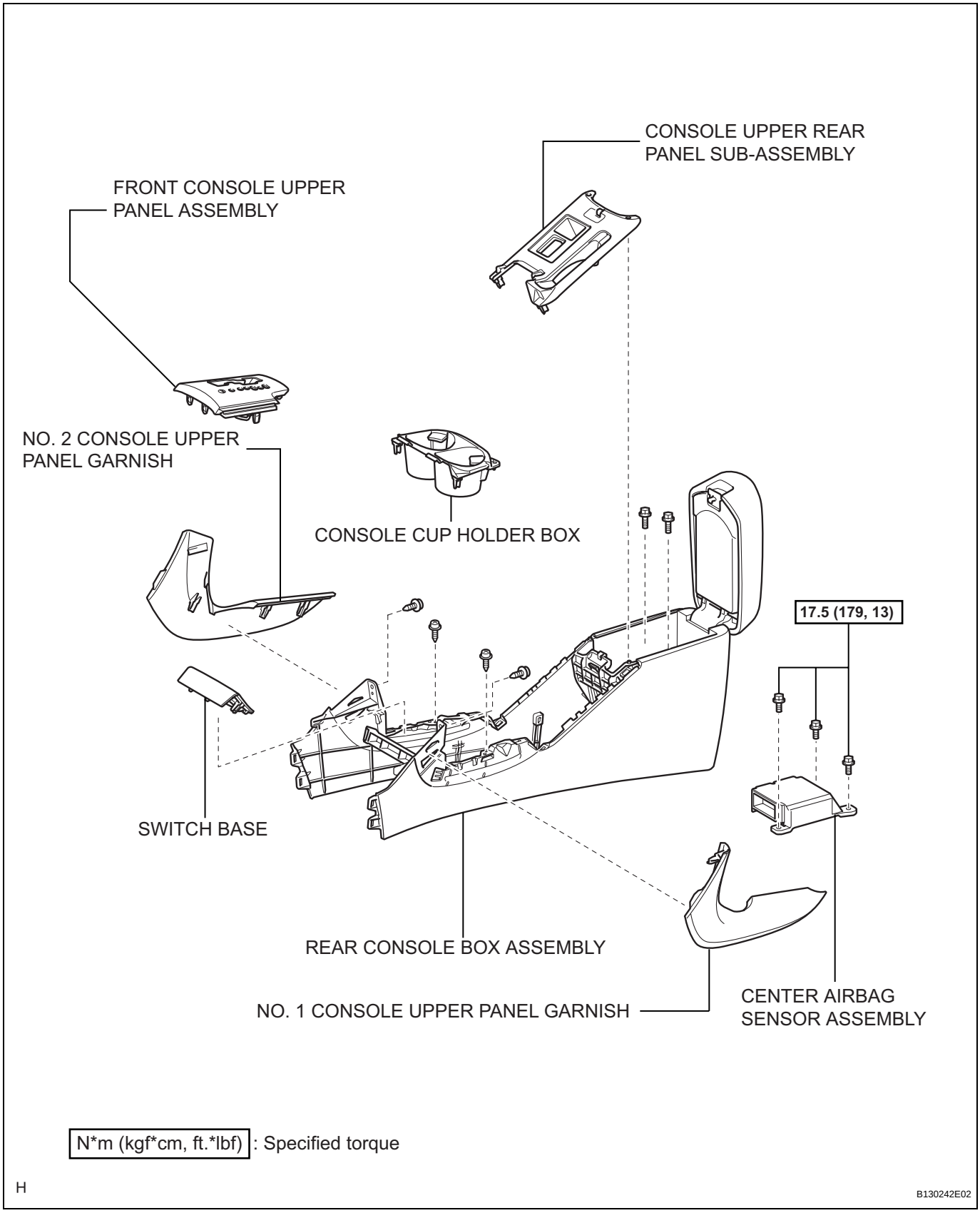

RS

ON-VEHICLE INSPECTION

1. **CHECK CENTER AIRBAG SENSOR ASSEMBLY (VEHICLE NOT INVOLVED IN COLLISION AND AIRBAG NOT DEPLOYED)**
   (a) Perform a diagnostic system check (see page RS-49).

2. **CHECK CENTER AIRBAG SENSOR ASSEMBLY (VEHICLE INVOLVED IN COLLISION AND AIRBAG NOT DEPLOYED)**
   (a) Perform a diagnostic system check (see page RS-49).

3. **CHECK CENTER AIRBAG SENSOR ASSEMBLY (VEHICLE INVOLVED IN COLLISION AND AIRBAG DEPLOYED)**
   (a) Replace the center airbag sensor.
   CAUTION:
   For removal and installation of the center airbag sensor, be sure to follow the correct procedures.

REMOVAL

HINT:

- Use the same procedures for the RH side and LH side.
- The procedures listed below are for the LH side.

CAUTION:
Be sure to read the precautionary notices concerning the SRS airbag system before servicing it (see page RS-1).

1. **DISCONNECT CABLE FROM NEGATIVE BATTERY TERMINAL**
   CAUTION:
   Wait at least 90 seconds after disconnecting the cable from the negative (-) battery terminal to prevent airbag and seat belt pretensioner activation.
2. **REMOVE ROOF HEADLINING ASSEMBLY (See page IR-37)**
3. **REMOVE CURTAIN SHIELD AIRBAG ASSEMBLY LH**

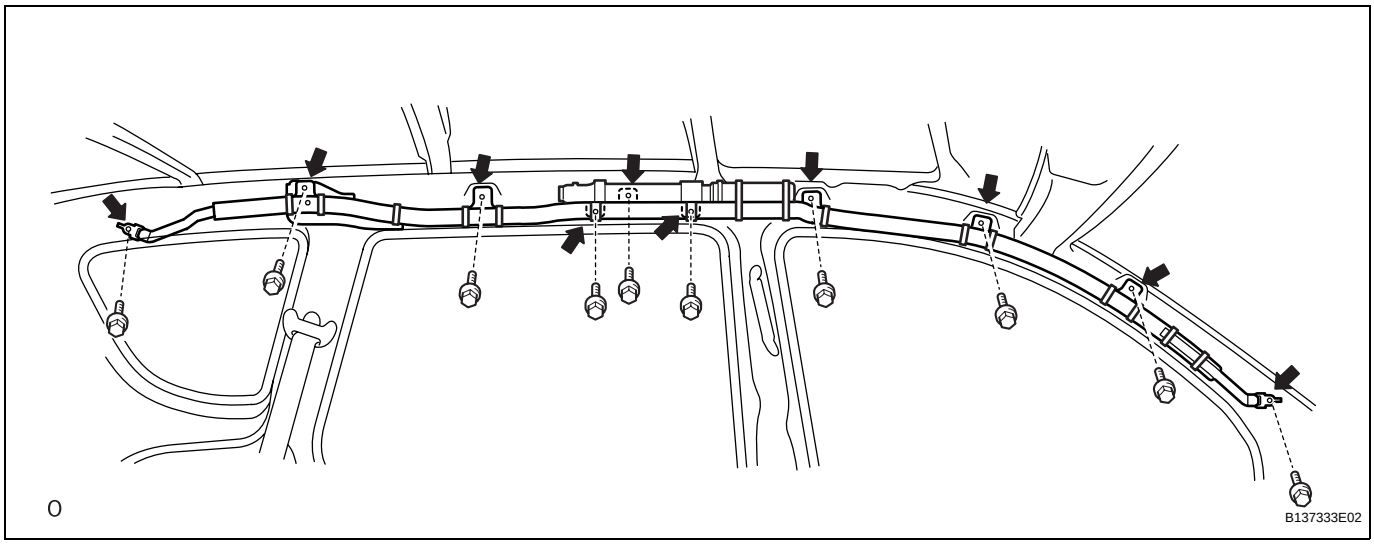

RS

(a) Disconnect the connector.
NOTICE:
When handling the airbag connector, take care not to damage the airbag wire harness.
(b) Remove the 10 bolts and curtain shield airbag.

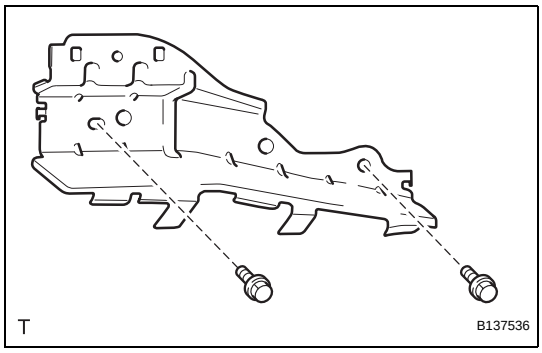

4. **REMOVE ROOF SIDE RAIL BRACKET LH**
   (a) Remove the 2 bolts and bracket.

INSTALLATION

CAUTION:
Be sure to read the precautionary notices concerning the SRS airbag system before servicing it (see page RS-1).

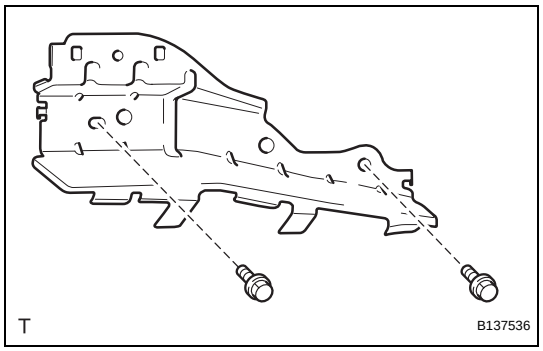

1. **INSTALL ROOF SIDE RAIL BRACKET LH**
   (a) Install the bracket with the 2 bolts.
   Torque: 14 N*m (143 kgf*cm, 10 ft.*lbf)

2. **INSTALL CURTAIN SHIELD AIRBAG ASSEMBLY LH**

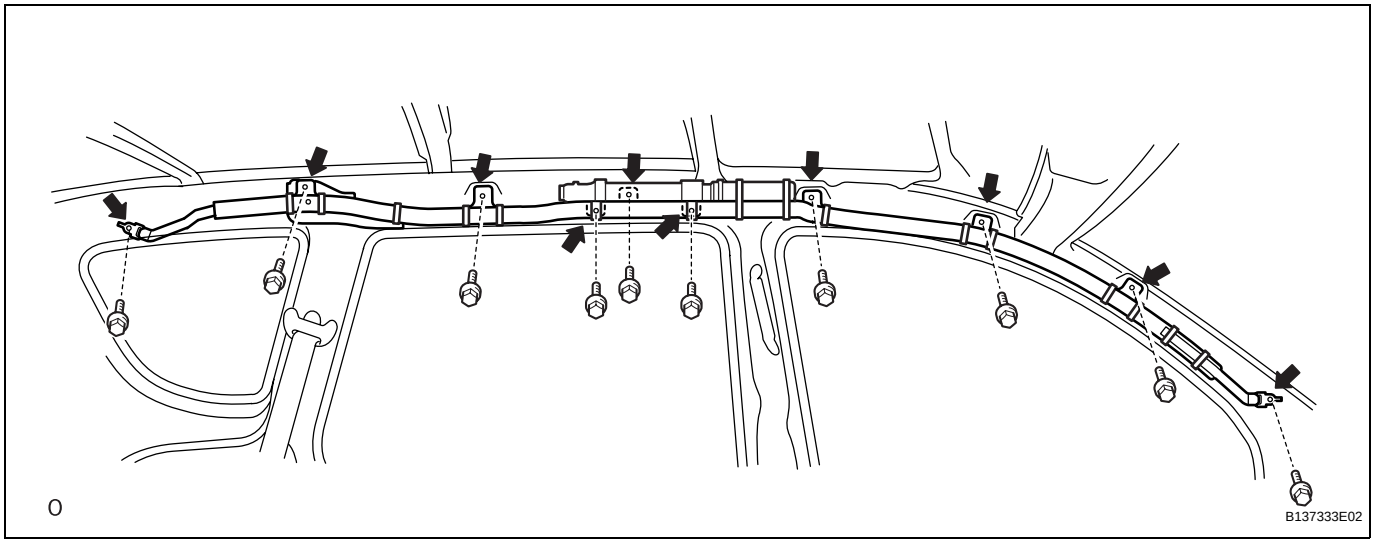

   (a) Install the curtain shield airbag with the 10 bolts.
   Torque: 14 N*m (143 kgf*cm, 10 ft.*lbf)
   NOTICE:
   Do not twist the curtain shield airbag when installing it.
   (b) Connect the connector.
   NOTICE:
   When handling the airbag connector, take care not to damage the airbag wire harness.

3. **INSTALL ROOF HEADLINING ASSEMBLY (See page IR-50)**

4. **CONNECT CABLE TO NEGATIVE BATTERY TERMINAL**

5. **CHECK SRS WARNING LIGHT**
   (a) Check the SRS warning light (see page RS-34).

RS

DISPOSAL

HINT:
When scrapping a vehicle equipped with an SRS or disposing of the curtain shield airbag assembly, be sure to deploy the airbag first in accordance with the procedure described below. If any abnormality occurs with the airbag deployment, contact the SERVICE DEPT. of TOYOTA MOTOR SALES, U.S.A., INC.

CAUTION:

- **Never dispose of a curtain shield airbag assembly that has an undeployed airbag.**
- **The airbag produces an exploding sound when it is deployed, so perform the operation outdoors and where it will not create a nuisance to nearby residents.**
- **When deploying the airbag, always use the specified SST (SRS airbag deployment tool). Perform the operation in a place away from electrical noise.**
- **When deploying the airbag, perform the operation at least 10 m (33 ft.) away from the curtain shield airbag assembly.**
- **The curtain shield airbag assembly becomes extremely hot when the airbag is deployed, so do not touch it for at least 30 minutes after deployment.**
- **Use gloves and safety glasses when handling a curtain shield airbag assembly with a deployed airbag.**
- **Do not apply water to a curtain shield airbag assembly with a deployed airbag.**
- **Always wash your hands with water after completing the operation.**

1. DISPOSE OF CURTAIN SHIELD AIRBAG ASSEMBLY (WHEN INSTALLED IN VEHICLE)

HINT:
Prepare a battery as the power source to deploy the airbag.

(a) Check if SST is functioning properly.
(b) Follow the "Precaution" (see page RS-1).
(c) Disconnect the cable from the negative battery terminal. Wait for 90 seconds after disconnecting the cable to prevent the airbag from deploying.
(d) Remove the roof headlining assembly (see page IR-37).
(e) Install SST.
(1) Disconnect the connector from the curtain shield airbag assembly.
NOTICE:
When handling the airbag connector, take care not to damage the airbag wire harness.

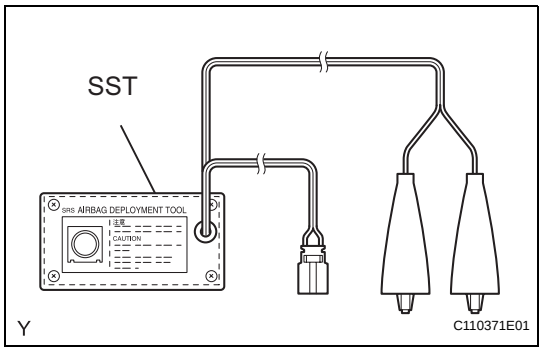

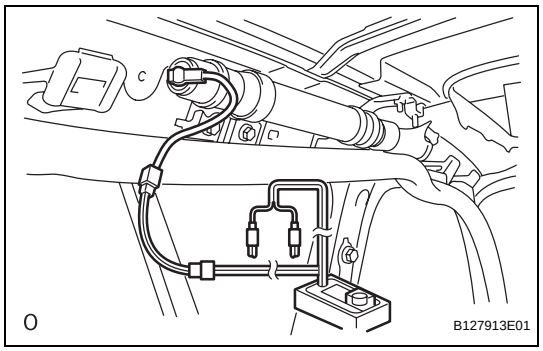

(2) After connecting SST to each other, connect them to the curtain shield airbag assembly.
SST 09082-00700, 09082-00802 (09082-10801, 09082-20801)
NOTICE:
To avoid damaging the SST connector and wire harness, do not lock the secondary lock of the twin lock.

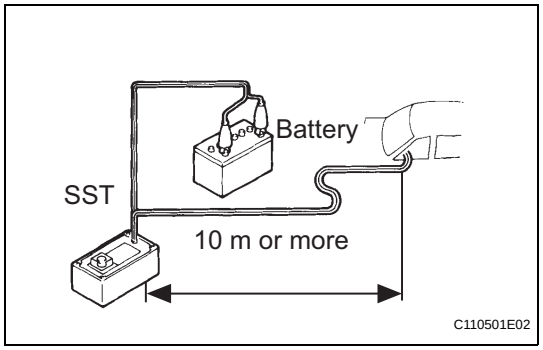

(3) Move the SST at least 10 m (33 ft.) away from the vehicle rear side window.
(4) Maintaining enough clearance for the SST wire harness in the rear side window, close all doors and windows of the vehicle.
NOTICE:
Take care not to damage the SST wire harness.
(5) Connect the SST's red clip to the battery positive (+) terminal and the black clip to the battery negative (-) terminal.

(f) Deploy the airbag.
(1) Check that no one is inside the vehicle or within a 10 m (33 ft.) radius of the vehicle.
(2) Press the SST activation switch and deploy the airbag.
CAUTION:
- **When deploying the airbag, make sure that no one is near the vehicle.**
- **The curtain shield airbag becomes extremely hot when the airbag is deployed, so do not touch it for at least 30 minutes after deployment.**
- **Use gloves and safety glasses when handling a curtain shield airbag with a deployed airbag.**
- **Do not apply water to a curtain shield airbag with a deployed airbag.**
- **Always wash your hands with water after completing the operation.**

HINT:
The airbag is deployed as the LED of the SST activation switch comes on.

2. DISPOSE OF CURTAIN SHIELD AIRBAG ASSEMBLY (WHEN NOT INSTALLED IN VEHICLE)
NOTICE:
- **When disposing of the curtain shield airbag, never use the customer's vehicle to deploy the airbag.**
- **Be sure to follow the procedure detailed below when deploying the airbag.**

RS

HINT:
Prepare a battery as the power source to deploy the airbag.

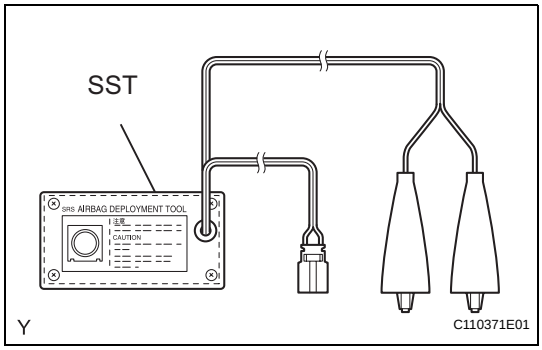

(a) Check if SST is functioning properly.
(b) Remove the curtain shield airbag (see page RS-360).
CAUTION:
When removing the curtain shield airbag, work must be started 90 seconds after the ignition switch is turned off and the negative (-) terminal cable is disconnected from the battery.

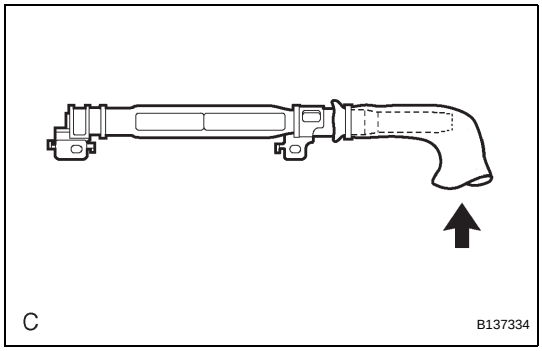

(c) Cut off the deployment section of the curtain shield airbag.

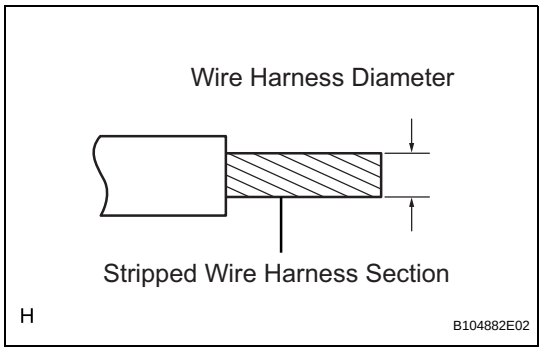

(d) Using a service-purpose wire harness for the vehicle, tie down the curtain shield airbag to the tire.
Wire harness:
Stripped wire harness section
1.25 mm^2 or more (0.0019 $in.^2$ or more)
CAUTION:
If the wire harness is too thin or an alternative object is used to tie down the curtain shield airbag, it may be snapped due to the shock when the airbag is deployed. Always use a wire harness for vehicle use with an area of at least 1.25 mm^2 (0.0019 $in.^2$).
HINT:
To calculate the area of the stripped wire harness section:
Area = 3.14 x $(Diameter)^2/4$

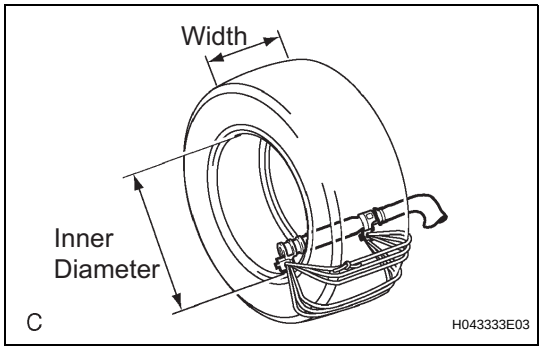

(1) Position the curtain shield airbag assembly inside the tire as shown in the illustration.
Tire size:
Width minimum:
185 mm (7.28 in.)
Inner diameter minimum:
360 mm (14.17 in.)
CAUTION:
Make sure that the wire harness is tight. If there is slack in the wire harness, the curtain shield airbag may become loose due to the shock when the airbag is deployed.

RS

NOTICE:
Use a disc wheel (with tire) that you are planning to throw away, as the airbag deployment will damage the disc wheel.

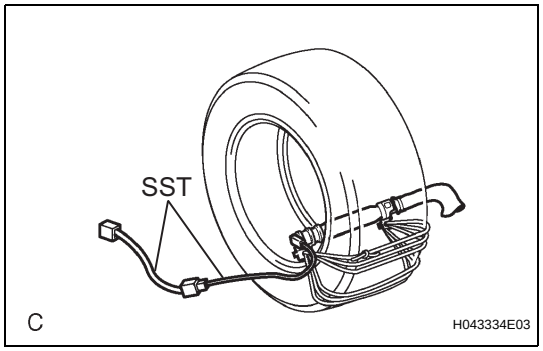

(e) Install SST.
(1) After connecting SST to each other, connect them to the curtain shield airbag.
SST 09082-00802 (09082-10801, 09082-20801)

(f) Place the tires.
CAUTION:
Do not place the deployment direction of the curtain shield airbag assembly facing toward the ground.

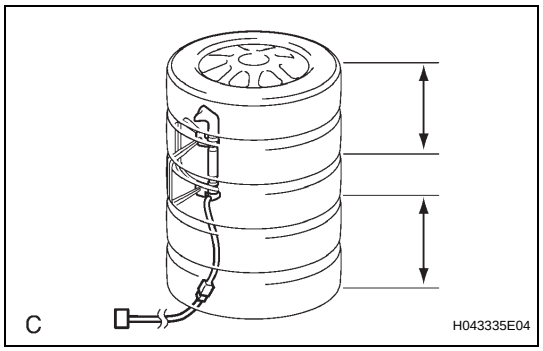

(1) Place at least 2 tires under the tire to which the curtain shield airbag assembly is tied.
(2) Place at least 2 tires over the tire to which the curtain shield airbag is tied. The top tire should have the disc wheel installed.
NOTICE:
Do not place the SST connector under the tire because it could be damaged.

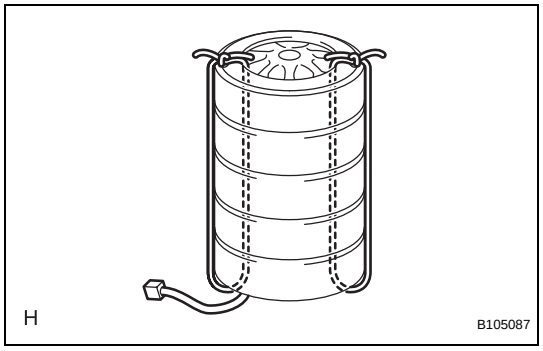

(3) Tie the tires together with 2 wire harnesses.
CAUTION:
Make sure that the wire harnesses are tight. Looseness in the wire harness may result in the tires coming free due to the shock when the airbag is deployed.

RS

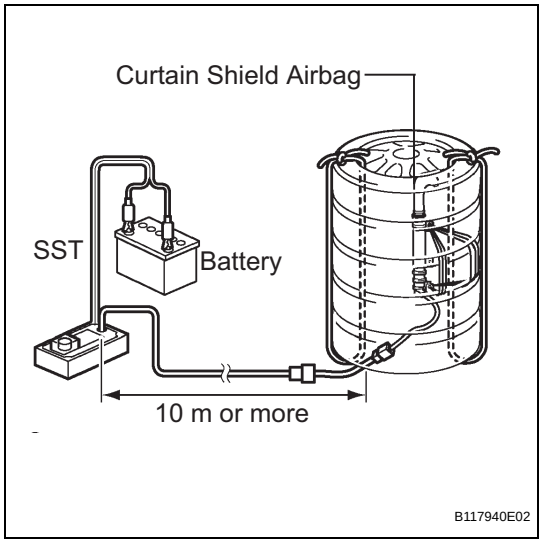

(g) Install SST.
(1) Connect the SST connector.
SST 09082-00700
NOTICE:
To avoid damaging the SST connector and wire harness, do not lock the secondary lock of the twin lock. Also, secure some slack for the SST wire harness inside the tire.

(h) Deploy the airbag.
(1) Connect the SST's red clip to the battery positive (+) terminal and the black clip to the battery negative (-) terminal.
(2) Check that no one is within a 10 m (33 ft) radius of the tire to which the curtain shield airbag is tied.

(3) Press the SST activation switch and deploy the airbag.
CAUTION:
When deploying the airbag, make sure that no one is near the tire.
HINT:
The airbag is deployed as the LED of the SST activation switch comes on.

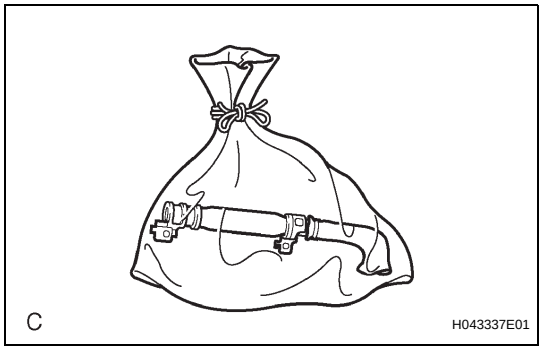

(i) Dispose of the curtain shield airbag.
CAUTION:
- **The curtain shield airbag becomes extremely hot when the airbag is deployed, so do not touch it for at least 30 minutes after deployment.**
- **Use gloves and safety glasses when handling a curtain shield airbag with a deployed airbag.**
- **Do not apply water to a curtain shield airbag with a deployed airbag.**
- **Always wash your hands with water after completing the operation.**

(1) Remove the curtain shield airbag from the tire.
(2) Place the curtain shield airbag in a plastic bag, tie it tightly and dispose of it in the same way as other general parts.

CURTAIN SHIELD AIRBAG ASSEMBLY

COMPONENTS

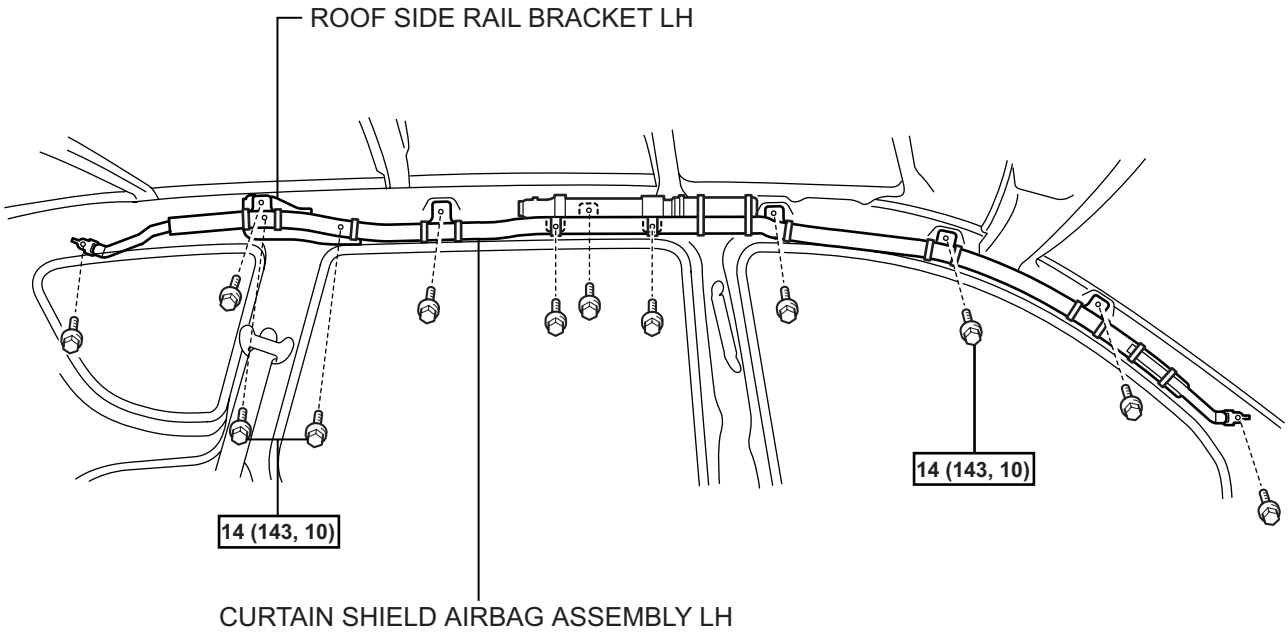

N*m (kgf*cm, ft.*lbf) : Specified torque

O

B137327E01

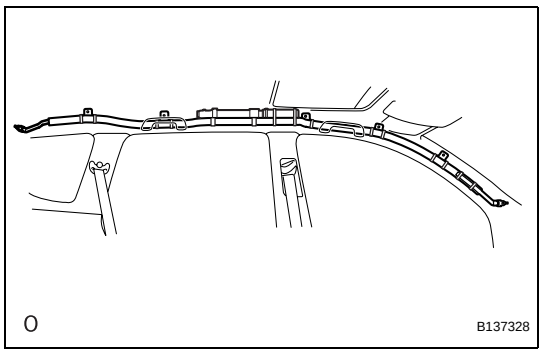

O

B137328

ON-VEHICLE INSPECTION

1. **CHECK CURTAIN SHIELD AIRBAG ASSEMBLY (VEHICLE NOT INVOLVED IN COLLISION)**
   (a) Perform a diagnostic system check (see page RS-49).
   (b) With the curtain shield airbag assembly installed on the vehicle, perform a visual check. If any of the defects mentioned below are present, replace the curtain shield airbag with a new one:
   Cuts, minute cracks or marked discoloration on the curtain shield airbag assembly.

If any of the defects mentioned above are present, replace the curtain shield airbag with a new one.

CAUTION:

For removal and installation of the curtain shield airbag, be sure to follow the correct procedure.

2. CHECK CURTAIN SHIELD AIRBAG ASSEMBLY (VEHICLE INVOLVED IN COLLISION AND AIRBAG HAS NOT DEPLOYED)

(a) Perform a diagnostic system check (see page RS-49).

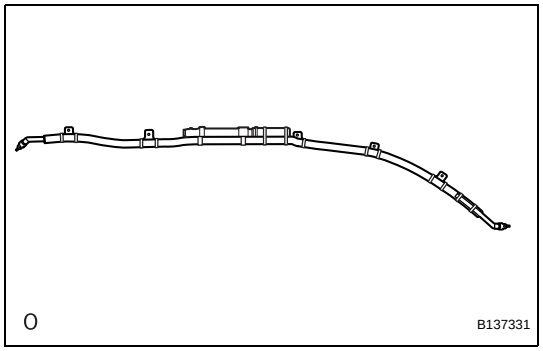

(b) With the curtain shield airbag removed from the vehicle, perform a visual check. If there are any defects as mentioned below, replace the curtain shield airbag with a new one:

- Cuts, minute cracks or marked discoloration on the curtain shield airbag.
- Cracks or other damage to the connectors.

CAUTION:

For removal and installation procedures of the curtain shield airbag, be sure to follow the correct procedure.

REMOVAL

CAUTION:
Be sure to read the precautionary notices concerning the SRS airbag system before servicing it (see page RS-1).

1. **DISCONNECT CABLE FROM NEGATIVE BATTERY TERMINAL**
   CAUTION:
   Wait at least 90 seconds after disconnecting the cable from the negative (-) battery terminal to prevent airbag and seat belt pretensioner activation.
2. **REMOVE RADIATOR SUPPORT OPENING COVER**
3. **REMOVE FRONT AIRBAG SENSOR LH**
   (a) Disconnect the sensor connector.
   (b) Remove the bolt and sensor.

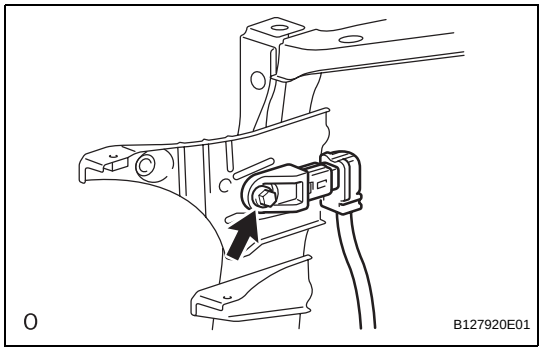

4. **REMOVE FRONT AIRBAG SENSOR RH**
   (a) Disconnect the sensor connector.
   (b) Remove the bolt and sensor.

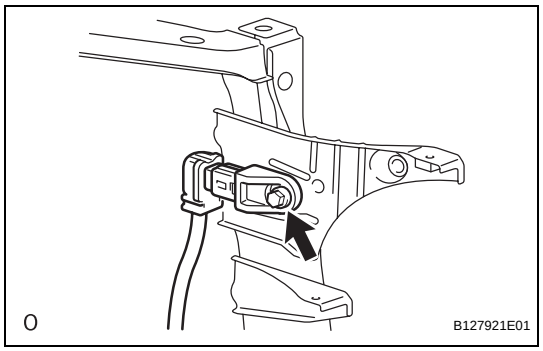

RS

INSTALLATION

CAUTION:
Be sure to read the precautionary notices concerning the SRS airbag system before servicing it (see page RS-1).

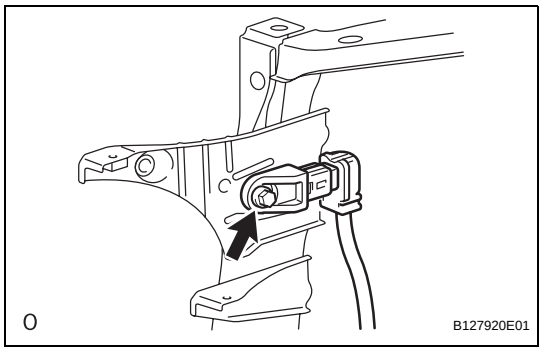

1. INSTALL FRONT AIRBAG SENSOR LH

(a) Install the sensor with the bolt.
Torque: 9.0 N*m (92 kgf*cm, 80 in.*lbf)
NOTICE:
- **If the airbag sensor has been dropped, or there are any cracks, dents or other defects in the case or connector, replace it with a new one.**
- **When installing the airbag sensor, make sure that the SRS wiring does not interfere with other parts and is not pinched between other parts.**

(b) Check that there is no free play in the installation parts of the sensor.

(c) Connect the sensor connector.

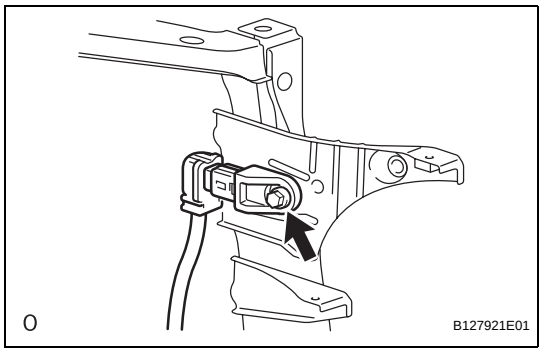

2. INSTALL FRONT AIRBAG SENSOR RH

(a) Install the sensor with the bolt.
Torque: 9.0 N*m (92 kgf*cm, 80 in.*lbf)
NOTICE:
- **If the airbag sensor has been dropped, or there are any cracks, dents or other defects in the case or connector, replace it with a new one.**
- **When installing the airbag sensor, make sure that the SRS wiring does not interfere with other parts and is not pinched between other parts.**

(b) Check that there is no free play in the installation parts of the sensor.

(c) Connect the sensor connector.

3. INSTALL RADIATOR SUPPORT OPENING COVER

4. CONNECT CABLE TO NEGATIVE BATTERY TERMINAL

5. CHECK SRS WARNING LIGHT

(a) Check the SRS warning light (see page RS-34).

RS

FRONT AIRBAG SENSOR

COMPONENTS

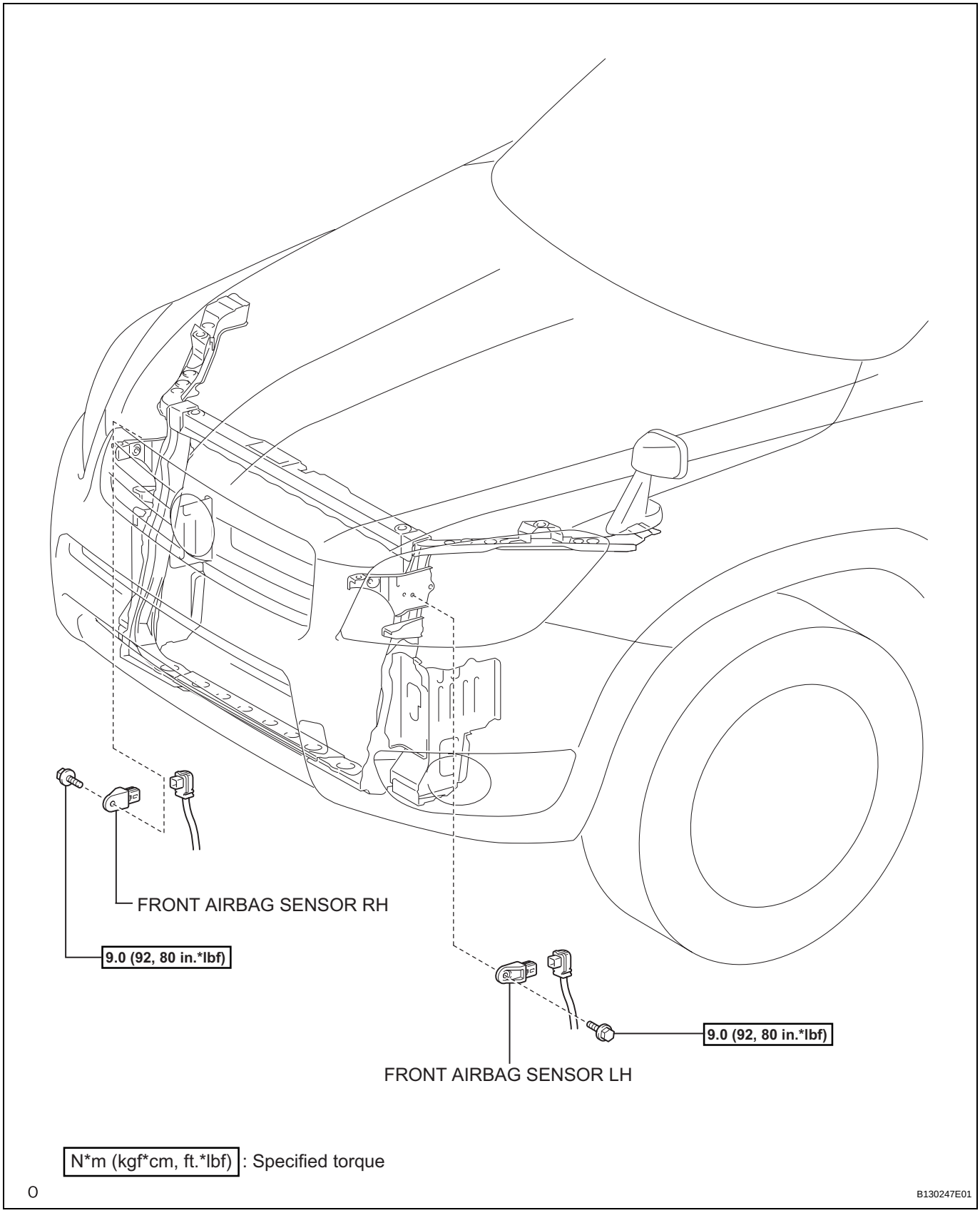

RS

ON-VEHICLE INSPECTION

1. **CHECK FRONT AIRBAG SENSOR (VEHICLE NOT INVOLVED IN COLLISION AND AIRBAG NOT DEPLOYED)**
   (a) Perform a diagnostic system check (see page RS-49).

2. **CHECK FRONT AIRBAG SENSOR (VEHICLE INVOLVED IN COLLISION AND AIRBAG HAS NOT DEPLOYED)**
   (a) Perform a diagnostic system check (see page RS-49).
   (b) If the front fender of the vehicle or its periphery are damaged, perform a visual check:
   - Check for cracks, dents or chips in the case.
   - Check for cracks, dents, chips and scratches in the connector.
   - Check for peeling off of the label or damage to the serial number.

   If any of the defects mentioned above are present, replace the front airbag sensor with a new one.

3. **CHECK FRONT AIRBAG SENSOR (VEHICLE INVOLVED IN COLLISION AND AIRBAG HAS DEPLOYED)**
   (a) Replace the front airbag sensor.
   CAUTION:
   For removal and installation of the front airbag sensor, be sure to follow the correct procedures.
   HINT:
   If the airbags have deployed, replace the front airbag sensor on the side in which the collision occurred. Replace both if necessary.

REMOVAL

CAUTION:
Be sure to read the precautionary notices concerning the SRS airbag system before servicing it (see page RS-1).

1. **DISCONNECT CABLE FROM NEGATIVE BATTERY TERMINAL**
   CAUTION:
   Wait at least 90 seconds after disconnecting the cable from the negative (-) battery terminal to prevent airbag and seat belt pretensioner activation.
2. **REMOVE GLOVE COMPARTMENT DOOR ASSEMBLY (See page IP-20)**
3. **REMOVE FRONT PASSENGER AIRBAG ASSEMBLY**
   (a) Detach the wire harness clamp from bracket.
   (b) Disconnect the connector from the airbag.
   NOTICE:
   When handling the airbag connector, do not damage the airbag wire harness.
   (c) Remove the 2 bolts from the reinforcement.
   (d) Remove the instrument panel upper (see page IP-6).

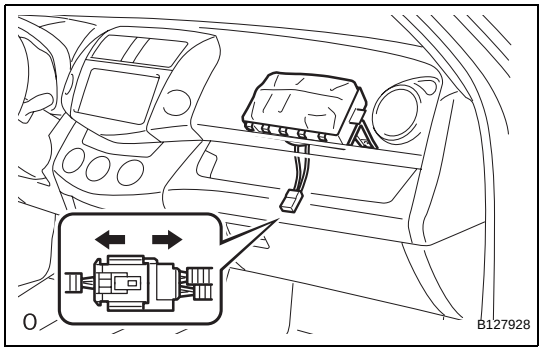

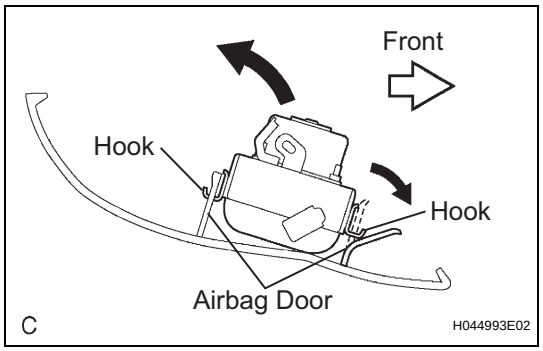

   (e) Release the front side airbag door from the front side hook by slightly bending it and lift out the front passenger airbag rearward.
   (f) Release the rear side airbag door from the other hook and remove the front passenger airbag.

RS

INSTALLATION

CAUTION:
Be sure to read the precautionary notices concerning the SRS airbag system before servicing it (see page RS-1).

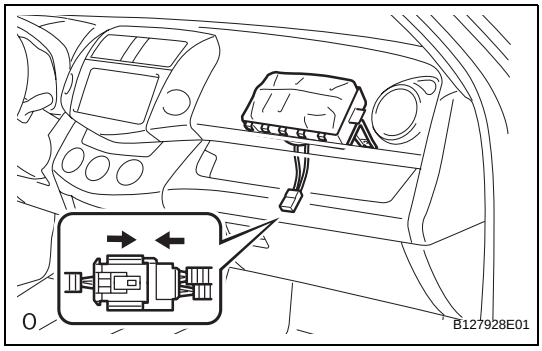

1. **INSTALL FRONT PASSENGER AIRBAG ASSEMBLY**
   (a) Attach the rear side hook of the front passenger airbag to the rear side airbag door.
   (b) Bend the front side hook so that it attaches to the front side airbag door.
   (c) Install the instrument panel upper (see page IP-9).
   (d) Install the 2 bolts to the reinforcement.
   Torque: 20 N*m (203 kgf*cm, 14 ft.*lbf)
   (e) Connect the connector to the airbag.
   NOTICE:
   When handling the airbag connector, do not damage the airbag wire harness.
   (f) Attach the wire harness clamp to the bracket.
2. **INSTALL GLOVE COMPARTMENT DOOR ASSEMBLY (See page IP-9)**
3. **CONNECT CABLE TO NEGATIVE BATTERY TERMINAL**
4. **CHECK SRS WARNING LIGHT**
   (a) Check the SRS warning light (see page RS-34).

DISPOSAL

HINT:
When scrapping a vehicle equipped with an SRS or disposing of the front passenger side knee airbag, be sure to deploy the airbag first in accordance with the procedure described below. If any abnormality occurs with the airbag deployment, contact the SERVICE DEPT. of TOYOTA MOTOR SALES, U.S.A., INC.

CAUTION:

- **Never dispose of a front passenger airbag with an unactivated airbag.**
- **The airbag produces a loud, exploding sound when it activates. Perform the operation where it will not be a nuisance to people nearby.**
- **When activating the airbag, always use the specified SST (SRS airbag deployment tool).**
- **Perform procedures in a place away from electrical interference.**
- **When activating the airbag, stand at least 10 m (33 ft.) away from the airbag.**
- **The airbag becomes very hot when it is deployed. Do not touch it for at least 30 minutes after activation.**
- **Use gloves and safety glasses when handling a deployed airbag.**
- **Do not apply water to a deployed airbag.**
- **Always wash your hands with water after completing the operation.**

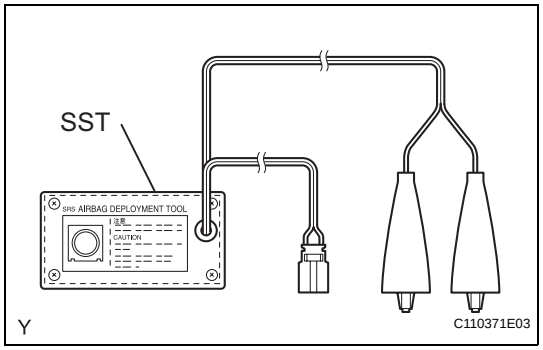

1. DISPOSE OF FRONT PASSENGER AIRBAG ASSEMBLY TOGETHER WITH VEHICLE

HINT:
Prepare a battery as the power source to deploy the airbag.

(a) Check if SST is functioning properly.
SST 09082-00700

(1) Connect the SST's red clip to the positive (+) battery terminal and the black clip to the negative (-) battery terminal.
HINT:
The yellow connector will be used to connect to another SST in a later step.

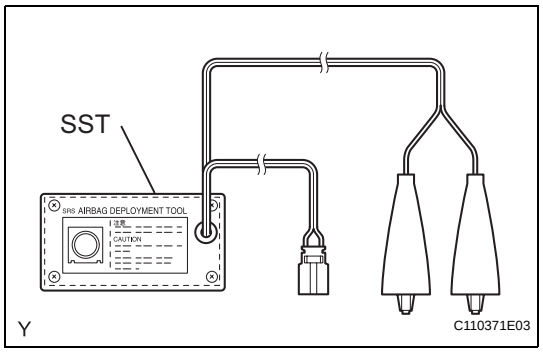

(2) Press the SST activation switch, and check that the LED of the SST activation switch illuminates.
CAUTION:
If the LED illuminates when the activation switch is not pressed, SST may have a malfunction, in which case that SST should not be used.

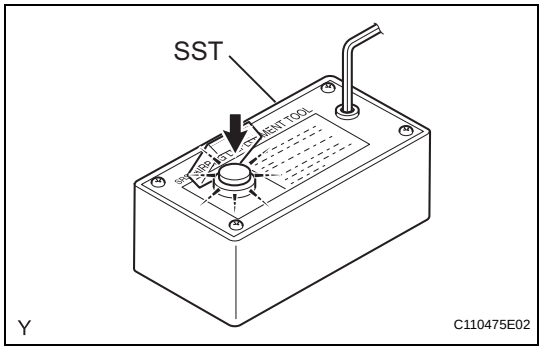

(3) Disconnect SST from the battery.

(b) Follow the "Precaution" (see page RS-1).

RS

(c) Disconnect the cable from the negative (-) battery terminal.
CAUTION:
Wait at least 90 seconds after disconnecting the cable from the negative (-) battery terminal to prevent airbag and seat belt pretensioner activation.

(d) Remove the glove compartment door (see page IP-6).

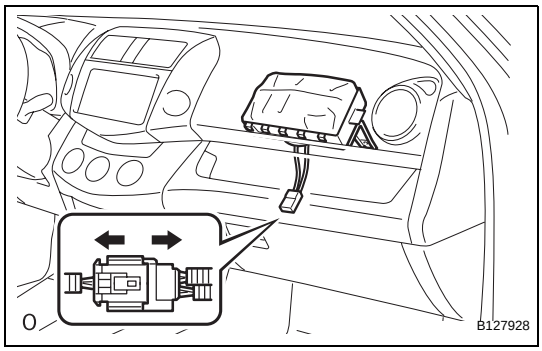

(e) Install SST.
(1) Disconnect the front passenger airbag connector.
NOTICE:
When handling the airbag connector, do not damage the airbag wire harness.

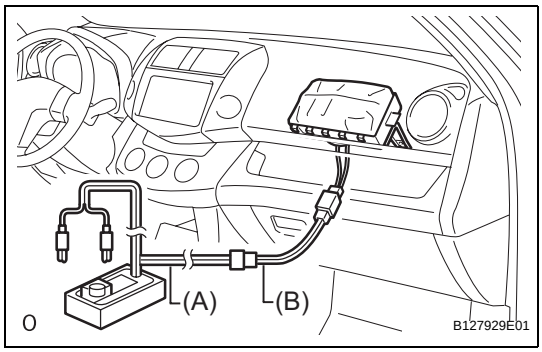

(2) Connect SST (A) to SST (B). Then connect SST (B)'s connector to the cable.
SST 09082-00700, 09082-00780
NOTICE:
To avoid damaging the SST connector and wire harness, do not lock the secondary lock of the twin lock.

RS

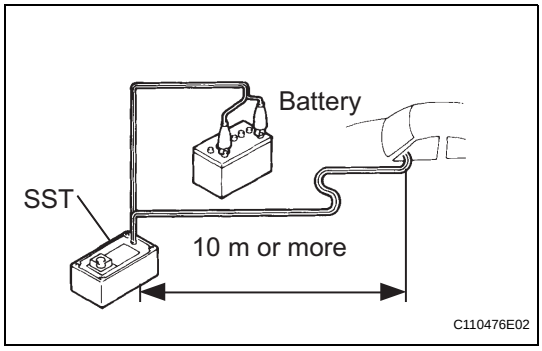

(3) Move SST at least 10 m (33 ft.) away from the front side window.
(4) Maintaining enough clearance for the SST wire harness in the front side window, close all doors and windows of the vehicle.
NOTICE:
Take care not to damage the SST wire harness.
(5) Connect the SST's red clip to the positive (+) battery terminal and the black clip to the negative (-) battery terminal.

(f) Deploy the airbag.
(1) Check that no one is inside the vehicle or within a 10 m (33 ft.) radius of the vehicle.
(2) Press the SST activation switch and deploy the airbag.
CAUTION:
- **When deploying the airbag, make sure that no one is near the vehicle.**
- **The airbag becomes extremely hot when it is deployed. Do not touch it for at least 30 minutes after deployment.**

- **Use gloves and safety glasses when handling a deployed airbag.**
- **Do not apply water to a deployed airbag.**
- **Always wash your hands with water after completing the operation.**

HINT:
The airbag is deployed as the SST activation switch LED illuminates.

2. DISPOSE OF ONLY FRONT PASSENGER AIRBAG ASSEMBLY

NOTICE:

- **When disposing of the airbag, never use the customer's vehicle to deploy the airbag.**
- **Be sure to follow the procedure detailed below when deploying the airbag.**

HINT:
Prepare a battery as the power source to deploy the airbag.

(a) Check if SST is functioning properly.
SST 09082-00700

(1) Connect the SST's red clip to the positive (+) battery terminal and the black clip to the negative (-) battery terminal.
HINT:
The yellow connector will be used to connect to another SST in a later step.

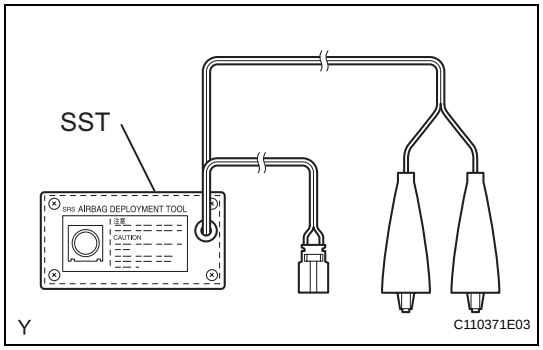

(2) Press the SST activation switch, and check that the LED of the SST activation switch illuminates.
CAUTION:
If the LED illuminates when the activation switch is not pressed, SST may have a malfunction, in which case that SST should not be used.

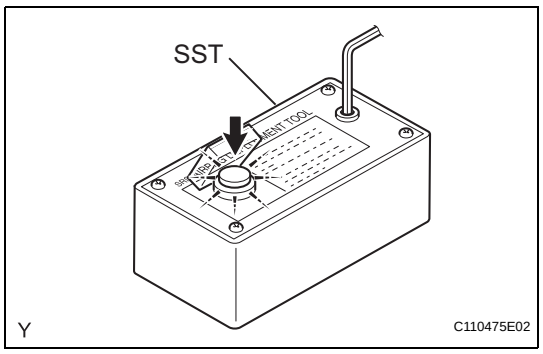

(3) Disconnect SST from the battery.

(b) Remove the front passenger airbag (see page RS-350).
CAUTION:

- **When removing the airbag, work must be started 90 seconds after the ignition switch is turned OFF and after the cable is disconnected from the negative (-) battery terminal.**
- **When storing the airbag, keep the airbag deployment side facing upward.**

RS

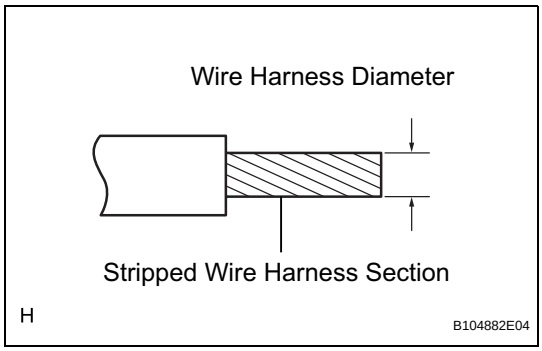

(c) Using service wire harnesses for the vehicle, tie down the airbag to a tire.

Wire harness:

Stripped wire harness section

1.25 mm^2 or more (0.0019 in.^{2} or more)

NOTICE:

Use a tire that you are planning to throw away, as the airbag deployment may damage the tire.

CAUTION:

Do not use wire harnesses that are too thin or any other substitute items to tie down the front passenger airbag. They may snap when the airbag deploys. Always use vehicle wire harnesses that have an area of at least 1.25 mm^2 (0.0019 in.^{2}).

HINT:

To calculate the area of the stripped wire harness section:

Area = 3.14 x Diameter^2 /4

(1) Position the airbag inside the tire so that the brackets contact the tire.

Tire size:

Width minimum:

185 mm (7.28 in.)

Inner diameter minimum:

360 mm (14.17 in.)

(2) Wind 3 wire harnesses at least twice around the airbag brackets and tire.

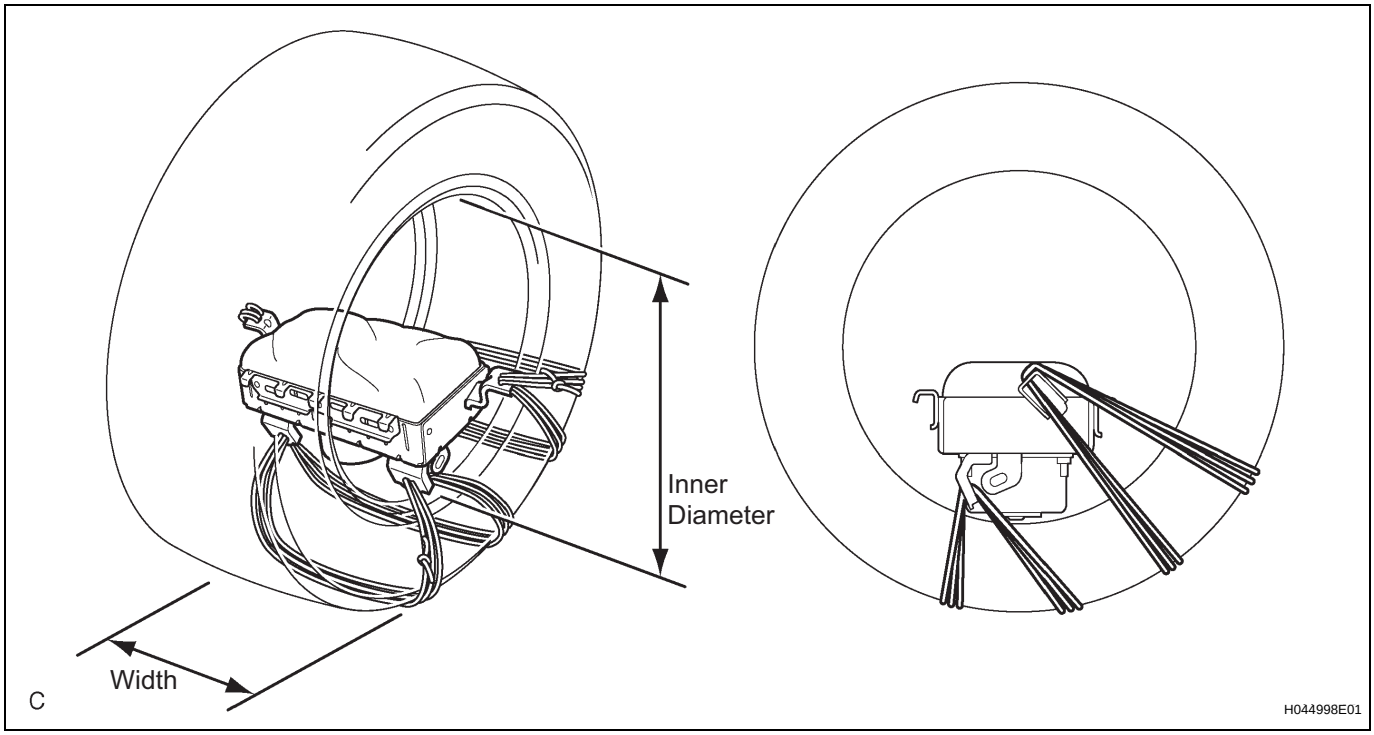

CAUTION:

- **Tightly wind the wire harnesses around the brackets so that there is no slack.**

- **Make sure that the wire harnesses are tight. If there is slack in a wire harness, the airbag may come loose when it is deployed.**
- **Always tie down the airbag with the airbag deployment side facing inside the tire.**

(d) Install SST.
(1) Connect the SST connector to the airbag.
SST 09082-00780

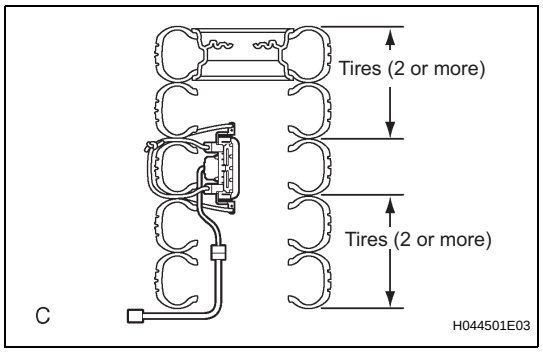

(e) Place the tires.
(1) Place at least 2 tires under the tire to which the airbag is tied.
(2) Place at least 2 tires on top of the tire to which the airbag is tied. The top tire should have a disc wheel installed.
NOTICE:
- **Do not place the SST connector under the tire as the connector may be damaged.**
- **Use a disc wheel that you are planning to throw away, as the airbag deployment will damage the disc wheel.**
- **Use tires that you are planning to throw away, as the airbag deployment may damage the tires.**

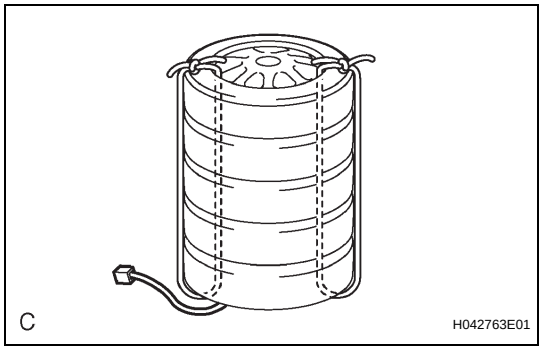

(3) Tie the tires together with 2 wire harnesses.
CAUTION:
Make sure that the wire harnesses are tight. If there is slack in a wire harness, the tires may come loose when the airbag is deployed.

RS

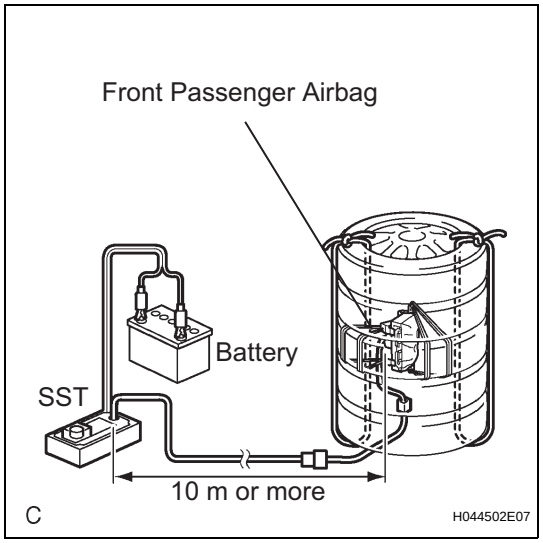

(f) Install SST.
(1) Connect the SST connector.
SST 09082-00700
NOTICE:
To avoid damaging the SST connector and wire harness, do not lock the secondary lock of the twin lock. Also, secure some slack for the SST wire harness inside the tire.

(g) Deploy the airbag.
(1) Connect the SST's red clip to the positive (+) battery terminal and the black clip to the negative (-) battery terminal.
(2) Check that no one is within a 10 m (33 ft.) radius of the airbag.

(3) Press the SST activation switch and deploy the airbag.
CAUTION:
When deploying the airbag, make sure that no one is near the tires.
HINT:
The airbag is deployed as the SST activation switch LED illuminates.

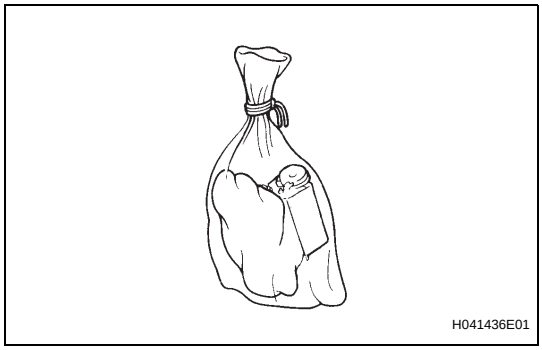
H041436E01

(h) Dispose of the airbag.
CAUTION:
- **The airbag becomes extremely hot when it is deployed. Do not touch it for at least 30 minutes after deployment.**
- **Use gloves and safety glasses when handling a deployed airbag.**
- **Do not apply water to a deployed airbag.**
- **Always wash your hands with water after completing the operation.**

(1) Remove the airbag from the tire.
(2) Place the airbag in a plastic bag, tie it tightly and dispose of it in the same way as other general parts.

FRONT PASSENGER AIRBAG ASSEMBLY

COMPONENTS

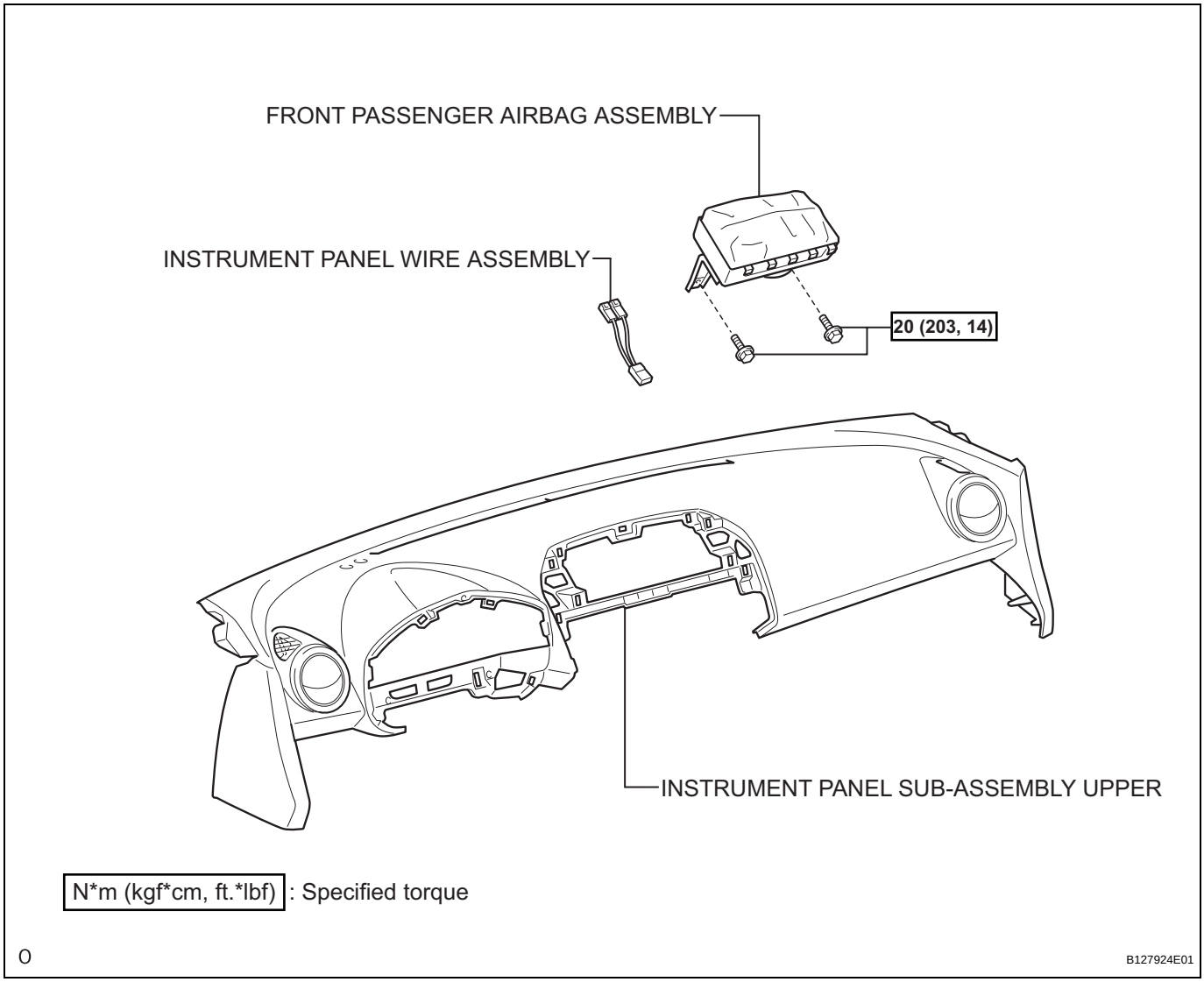

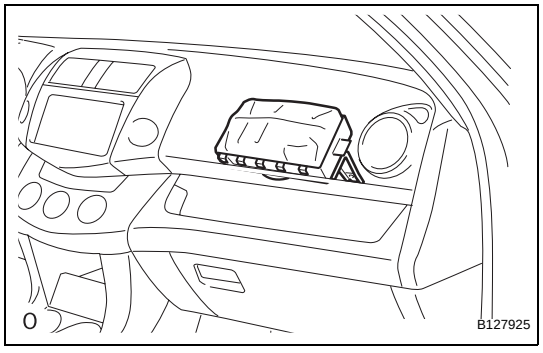

ON-VEHICLE INSPECTION

1. **CHECK FRONT PASSENGER AIRBAG ASSEMBLY (VEHICLE NOT INVOLVED IN COLLISION AND AIRBAG NOT DEPLOYED)**
   (a) Perform a diagnostic system check (see page RS-49).
   (b) With the front passenger airbag installed on the vehicle, perform a visual check:
   Check for cuts, cracks or discoloration on the front passenger airbag surface and in the grooved portion.
   If any of the defects mentioned above are present, replace the front passenger airbag with a new one.
   CAUTION:
   For removal and installation of the front passenger airbag, be sure to follow the correct procedures.

RS

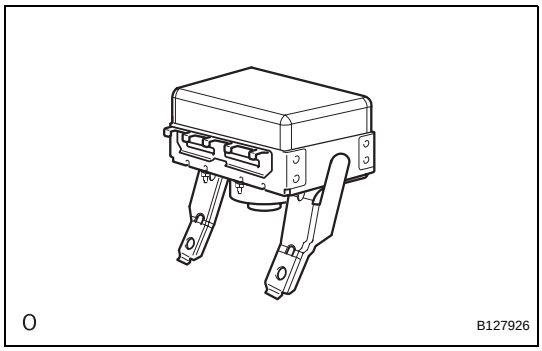

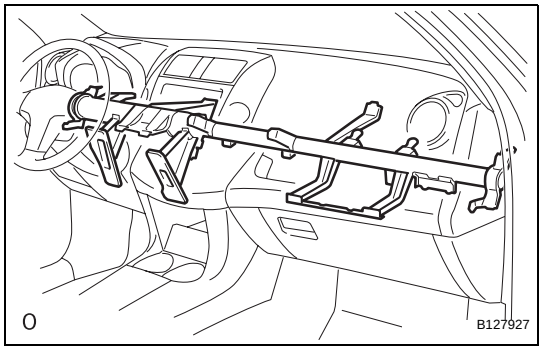

2. CHECK FRONT PASSENGER AIRBAG ASSEMBLY (VEHICLE INVOLVED IN COLLISION AND AIRBAG NOT DEPLOYED)

(a) Perform a diagnostic system check (see page RS-49).

(b) With the front passenger airbag removed from the vehicle, perform a visual check:

- Check for cuts, cracks or discoloration on the front passenger airbag.
- Check for cracks or other damage on the connectors.
- Check for deformation or cracks on the instrument panel and instrument panel reinforcement.

If any of the defects mentioned above are present, replace the front passenger airbag with a new one.

CAUTION:

For removal and installation of the front passenger airbag, be sure to follow the correct procedures.

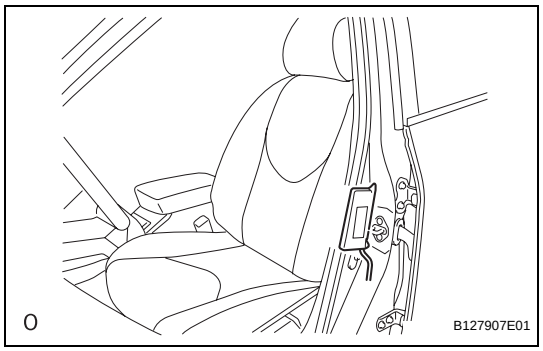

FRONT SEAT SIDE AIRBAG ASSEMBLY

ON-VEHICLE INSPECTION

1. CHECK FRONT SEAT SIDE AIRBAG ASSEMBLY (VEHICLE NOT INVOLVED IN COLLISION)

(a) Perform a diagnostic system check (see page RS-49).

(b) With the front seat side airbag installed on the vehicle, perform a visual check. If any of the defects mentioned below are present, replace the front seat with a new one:

Cuts, minute cracks or marked discoloration on the front seat side airbag or around the front seat side airbag.

2. CHECK FRONT SEAT SIDE AIRBAG ASSEMBLY (VEHICLE INVOLVED IN COLLISION AND AIRBAG HAS NOT DEPLOYED)

(a) Perform a diagnostic system check (see page RS-49).

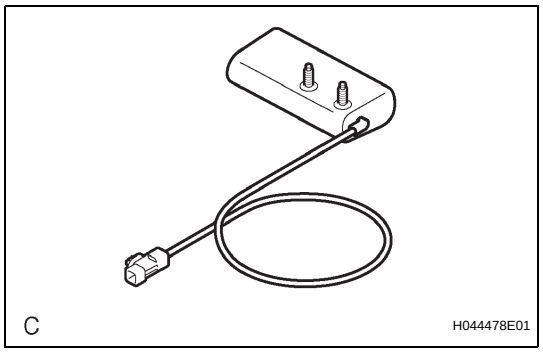

(b) With the front seat side airbag removed from the vehicle, perform a visual check.

- Cuts, minute cracks or marked discoloration on the front seat side airbag.
- Cracks or other damage to the wire harness or connector.

If any of the defects mentioned above are present, replace the front seat with a new one.

CAUTION:

For removal and installation procedures of the front seat side airbag, be sure to follow the correct procedure.

RS

DISPOSAL

HINT:
When scrapping a vehicle equipped with SRS or disposing of the front seat side airbag, be sure to deploy the airbag first in accordance with the procedure described below. If any abnormality occurs with the airbag deployment, contact the SERVICE DEPT. of TOYOTA MOTOR SALES, U.S.A., INC.

CAUTION:

- **Never dispose of a front seat side airbag assembly that has an undeployed airbag.**
- **The airbag produces an exploding sound when it is deployed, so perform the operation outdoors and where it will not create a nuisance to nearby residents.**
- **When deploying the airbag, always use the specified SST (SRS airbag deployment tool). Perform the operation in a place away from electrical noise.**
- **When deploying the airbag, perform the operation at least 10 m (33 ft.) away from the airbag.**
- **The front seat side airbag becomes extremely hot when the airbag is deployed, so do not touch it for at least 30 minutes after deployment.**
- **Use gloves and safety glasses when handling a front seat side airbag with a deployed airbag.**
- **Do not apply water to a front seat side airbag with a deployed airbag.**
- **Always wash your hands with water after completing the operation.**

1. DISPOSE OF FRONT SEAT SIDE AIRBAG ASSEMBLY (WHEN INSTALLED IN VEHICLE)

HINT:
Prepare a battery as the power source to deploy the airbag.

(a) Check if SST is functioning properly.
SST 09082-00700, 09082-00750

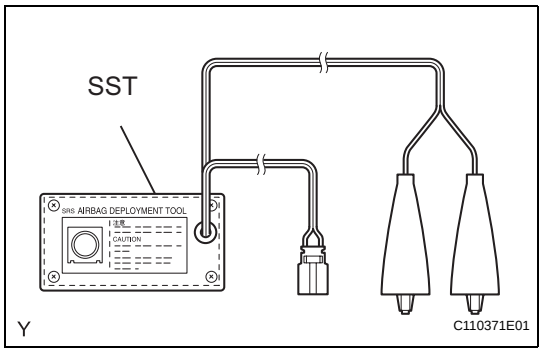

(1) Connect the SST's red clip to the positive (+) battery terminal and the black clip to the negative (-) battery terminal.
HINT:
The yellow connector will be used to connect to another SST in a later step.

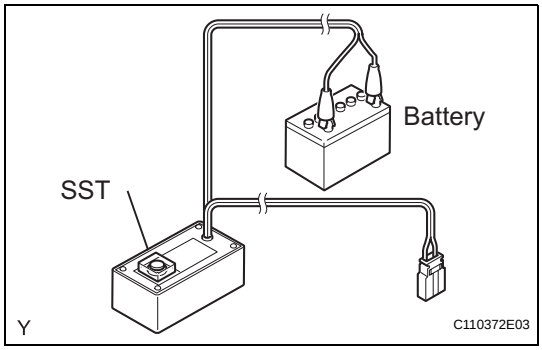

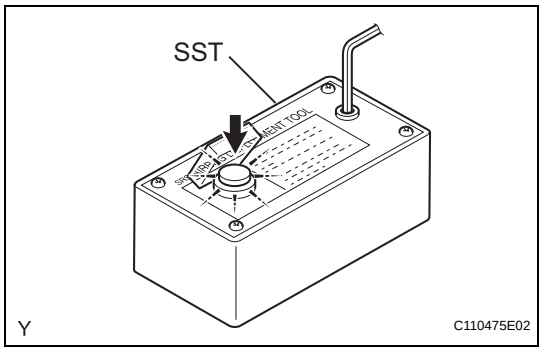

(2) Press the SST activation switch, and check that the LED of the SST activation switch illuminates.
CAUTION:
If the LED illuminates when the activation switch is not pressed, SST may have a malfunction, in which case that SST should not be used.
(3) Disconnect SST from the battery.

(b) Follow the "Precaution" (see page RS-1).

(c) Disconnect the cable from the negative (-) battery terminal.
CAUTION:
Wait at least 90 seconds after disconnecting the cable from the negative (-) battery terminal to prevent airbag and seat belt pretensioner activation.

(d) Manual seat:
Remove the front seat (see page SE-11).
Power seat:
Remove the front seat (see page SE-27).
HINT:
Keep the front seat in the cabin.

(e) Install SST.
(1) Disconnect the connector (yellow colored one) from the front seat side airbag.
NOTICE:
When handling the airbag connector, take care not to damage the airbag wire harness.

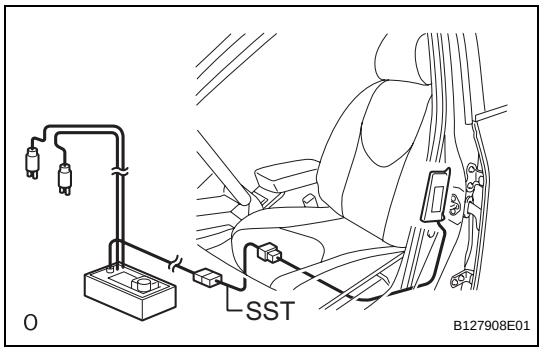

(2) Connect the SST connector to the front seat side airbag connector.
NOTICE:
To avoid damaging the SST connector and wire harness, do not lock the secondary lock of the twin lock.
(3) Manual seat:
Install the front seat (see page SE-22).
Power seat:
Install the front seat (see page SE-37).

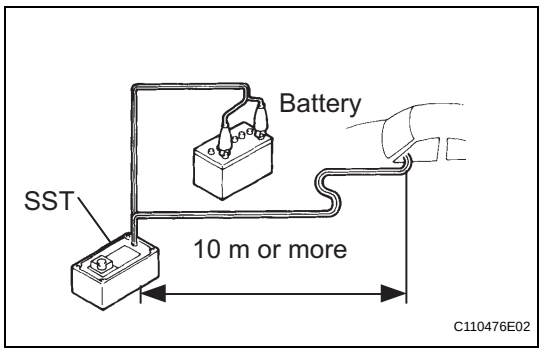

(4) Move the SST at least 10 m (33 ft.) away from the vehicle front side window.
(5) Maintaining enough clearance for the SST wire harness in the front side window, close all doors and windows of the vehicle.
NOTICE:
Take care not to damage the SST wire harness.
(6) Connect the SST's red clip to the battery positive (+) terminal and the black clip to the battery negative (-) terminal.

(f) Deploy the airbag.
(1) Check that no one is inside the vehicle or within a 10 m (33 ft.) radius of the vehicle.

RS

(2) Press the SST activation switch and deploy the airbag.

CAUTION:

- **When deploying the airbag, make sure that no one is near the vehicle.**
- **The front seat side airbag becomes extremely hot when the airbag is deployed, so do not touch it for at least 30 minutes after deployment.**
- **Use gloves and safety glasses when handling a front seat side airbag with a deployed airbag.**
- **Do not apply water to a front seat side airbag with a deployed airbag.**
- **Always wash your hands with water after completing the operation.**

HINT:

The airbag is deployed as the LED of the SST activation switch comes on.

2. DISPOSE OF FRONT SEAT SIDE AIRBAG ASSEMBLY (WHEN NOT INSTALLED IN VEHICLE)

NOTICE:

- **When disposing of the front seat side airbag, never use the customer's vehicle to deploy the airbag.**
- **Be sure to follow the procedure detailed below when deploying the airbag.**

HINT:

Prepare a battery as the power source to deploy the airbag.

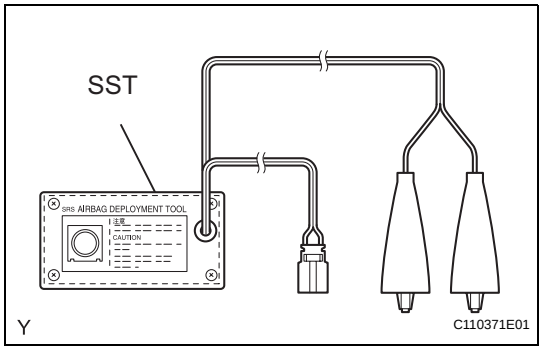

(a) Check if SST is functioning properly.

(b) Remove the front seat side airbag.

(1) Manual seat:

Remove the front seat (see page SE-11).

Power seat:

Remove the front seat (see page SE-27).

(2) Remove the 2 nuts and front seat side airbag from the seatback.

CAUTION:

- **When removing the front seat side airbag, work must be started 90 seconds after the ignition switch is turned off and the negative (-) terminal cable is disconnected from the battery.**
- **When storing the front seat side airbag, keep the airbag deployment side facing upward.**

RS

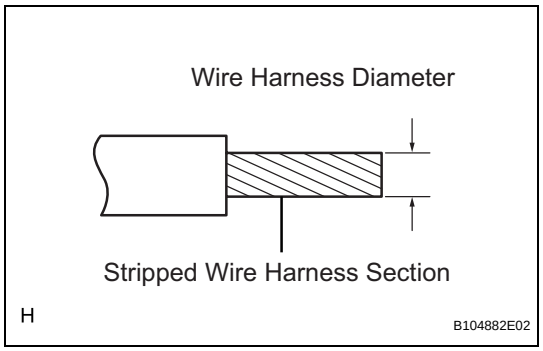

(c) Using a service-purpose wire harness for the vehicle, tie down the front seat side airbag to the tire.

Wire harness:

Stripped wire harness section

1.25 mm^2 or more (0.0019 in.^{2} or more)

HINT:

To calculate the area of the stripped wire harness section:

Area = 3.14 x (Diameter)^2/4

CAUTION:

If the wire harness is too thin or an alternative object is used to tie down the front seat side airbag, it may be snapped by the shock when the airbag is deployed. Always use a wire harness for vehicle use with an area of at least 1.25 mm^2 (0.0019 in.^{2}).

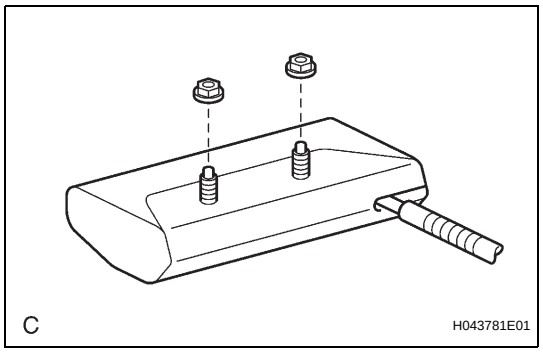

(1) Install the 2 nuts to the front seat side airbag assembly.

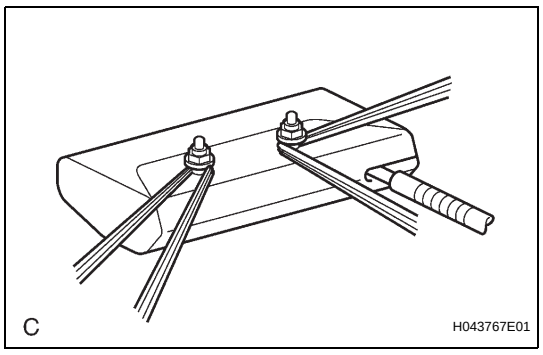

(2) Wind the wire harness around the stud bolts of the front seat side airbag as shown in the illustration.

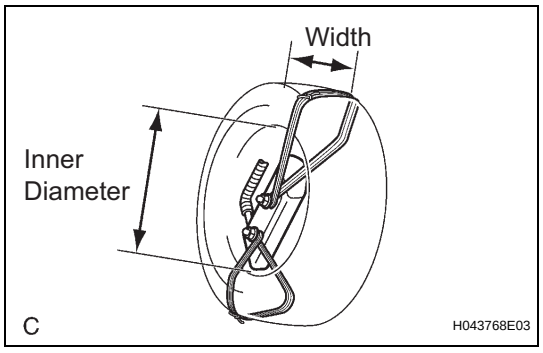

(3) Position the front seat side airbag inside the tire.

Tire size:

Width minimum:

185 mm (7.28 in.)

Inner diameter minimum:

360 mm (14.17 in.)

CAUTION:

- **Make sure that the wire harness is tight. If there is slack in a wire harness, the front seat side airbag may become loose due to the shock when the airbag is deployed.**

RS

- **Always tie down the front seat side airbag with the airbag deployment direction facing inside the tire.**

NOTICE:
Use a disc wheel (with tire) that you are planning to throw away, as the airbag deployment will damage the disc wheel.

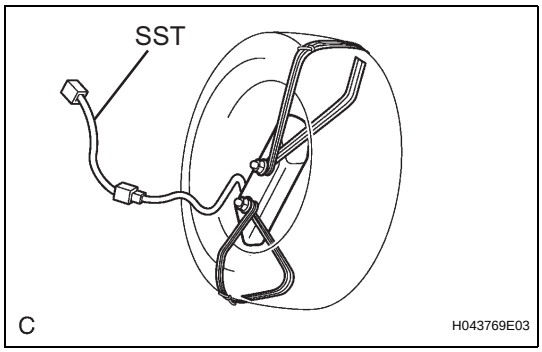

(d) Install SST.
(1) Connect the SST connector to the front seat side airbag connector.
SST 09082-00750

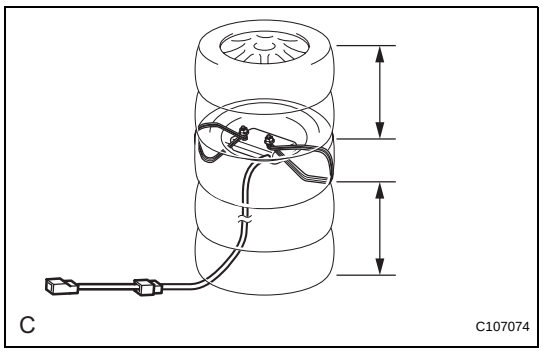

(e) Place the tires.
(1) Place at least 2 tires under the tire to which the front seat side airbag is tied.
(2) Place at least 2 tires over the tire to which the front seat side airbag is tied. The top tire should have the disc wheel installed.
NOTICE:
Do not place the SST connector under the tire because it could be damaged.

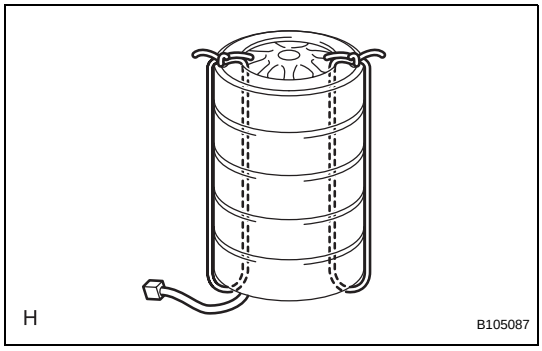

(3) Tie the tires together with 2 wire harnesses.
CAUTION:
Make sure that the wire harnesses are tight. Looseness in the wire harness may result in the tires coming free due to the shock when the airbag is deployed.

RS

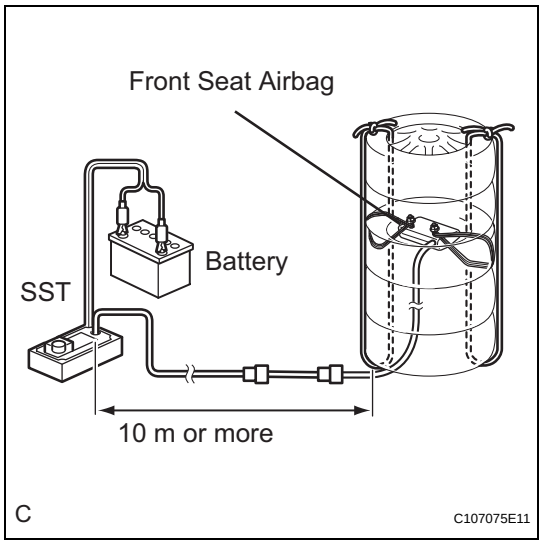

(f) Install SST.
  (1) Connect the SST connector.
  SST 09082-00700
  NOTICE:
  To avoid damaging the SST connector and wire harness, do not lock the secondary lock of the twin lock. Also, secure some slack for the SST wire harness inside the tire.

(g) Deploy the airbag.
  (1) Connect the SST's red clip to the battery positive (+) terminal and the black clip to the battery negative (-) terminal.
  (2) Check that no one is within a 10 m (33 ft.) radius of the tire to which the front seat side airbag is tied.
  (3) Press the SST activation switch and deploy the airbag.
  CAUTION:
  When deploying the airbag, make sure that no one is near the tire.
  HINT:
  The airbag is deployed as the LED of the SST activation switch comes on.

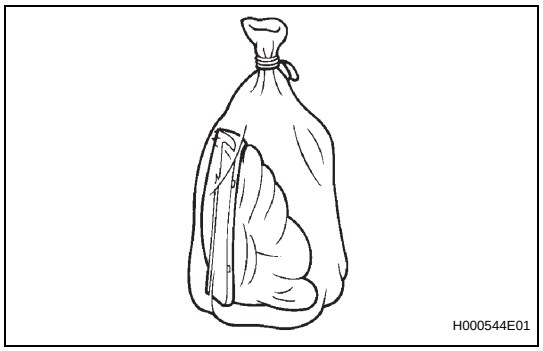

(h) Dispose of the front seat side airbag.
  CAUTION:
  - **The front seat side airbag becomes extremely hot when the airbag is deployed, so do not touch it for at least 30 minutes after deployment.**
  - **Use gloves and safety glasses when handling a front seat side airbag with a deployed airbag.**
  - **Do not apply water to a front seat side airbag assembly with a deployed airbag.**
  - **Always wash your hands with water after completing the operation.**
  (1) Remove the front seat side airbag from the tire.
  (2) Place the front seat side airbag in a plastic bag, tie it tightly and dispose of it in the same way as other general parts.

REMOVAL

1. DISCONNECT CABLE FROM NEGATIVE BATTERY TERMINAL

CAUTION:

Wait at least 90 seconds after disconnecting the cable from the negative (-) battery terminal to prevent airbag and seat belt pretensioner activation.

2. REMOVE FRONT SEAT ASSEMBLY (for Manual Seat) (See page SE-11)

3. REMOVE OCCUPANT CLASSIFICATION ECU

(a) Disconnect the 2 connectors from the occupant classification ECU.

(b) Using a screwdriver, remove the occupant classification ECU.

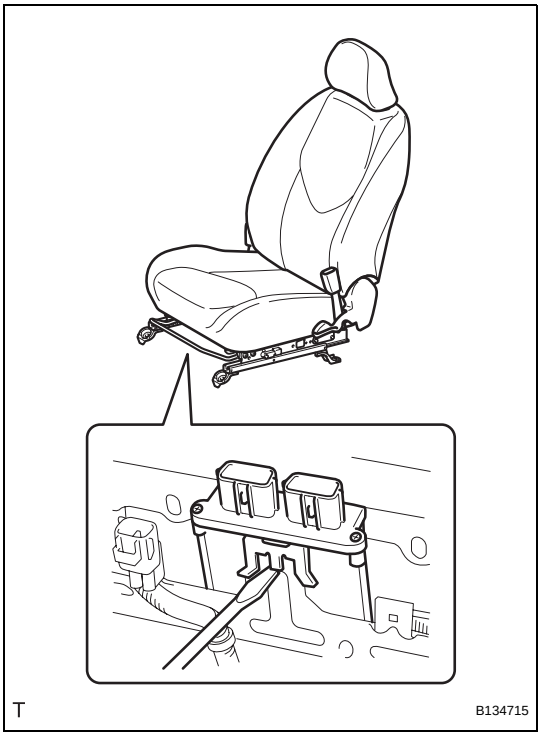

T B134715

INSTALLATION

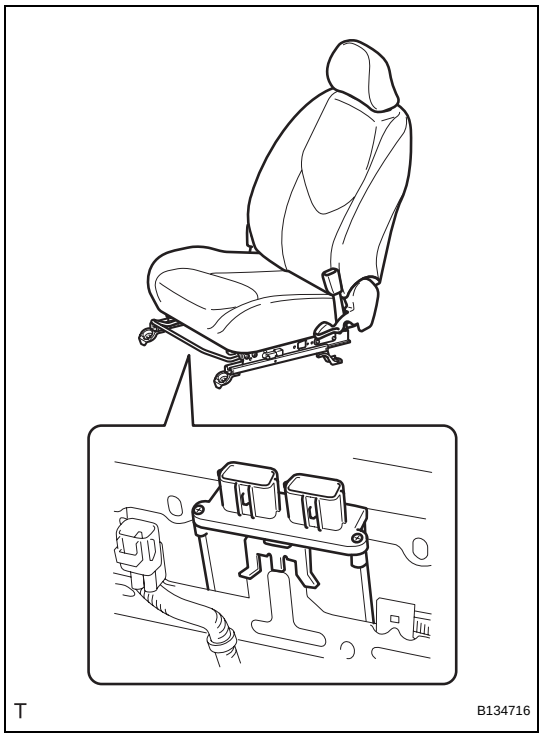

1. INSTALL OCCUPANT CLASSIFICATION ECU

(a) Check that the ignition switch is off.

(b) Check that the negative battery (-) terminal is disconnected.

CAUTION:

After disconnecting the negative battery terminal, wait for at least 90 seconds before starting the operation.

(c) Install the occupant classification ECU.

(d) Connect the 2 connectors to the occupant classification ECU.

NOTICE:

- **If the occupant classification ECU has been dropped, or there are any cracks, dents or other defects in the case or connector, replace it with a new one.**
- **When installing the occupant classification ECU, be careful that the SRS wiring does not interfere with other parts and that it is not pinched between other parts.**

2. INSTALL FRONT SEAT ASSEMBLY (for Manual Seat) (See page SE-23)

3. CONNECT CABLE TO NEGATIVE BATTERY TERMINAL

4. INSPECT SLIDE ADJUSTER LOCK (for Manual Seat)

5. INSPECT SEAT HEATER OPERATION (w/ Seat Heater System)

6. INSPECT SRS WARNING LIGHT

(a) Inspect the SRS warning light (see page RS-245).

OCCUPANT CLASSIFICATION ECU

COMPONENTS



RS

T

B134714E01

ON-VEHICLE INSPECTION

1. INSPECT OCCUPANT CLASSIFICATION ECU (VEHICLE NOT INVOLVED IN COLLISION)

(a) Perform a diagnostic system check (see page RS-236).

2. INSPECT OCCUPANT CLASSIFICATION ECU (VEHICLE INVOLVED IN COLLISION)

(a) Perform a diagnostic system check (see page RS-236).

(b) Even if the airbag was not deployed, check if there is any damage to the occupant classification ECU. If there are any defects as mentioned below, replace the occupant classification ECU with a new one:

- Cracks, dents or chips on the case.
- Cracks or other damage to the connector.

CAUTION:
Be sure to follow the correct removal and installation procedures.

SYSTEM DIAGRAM

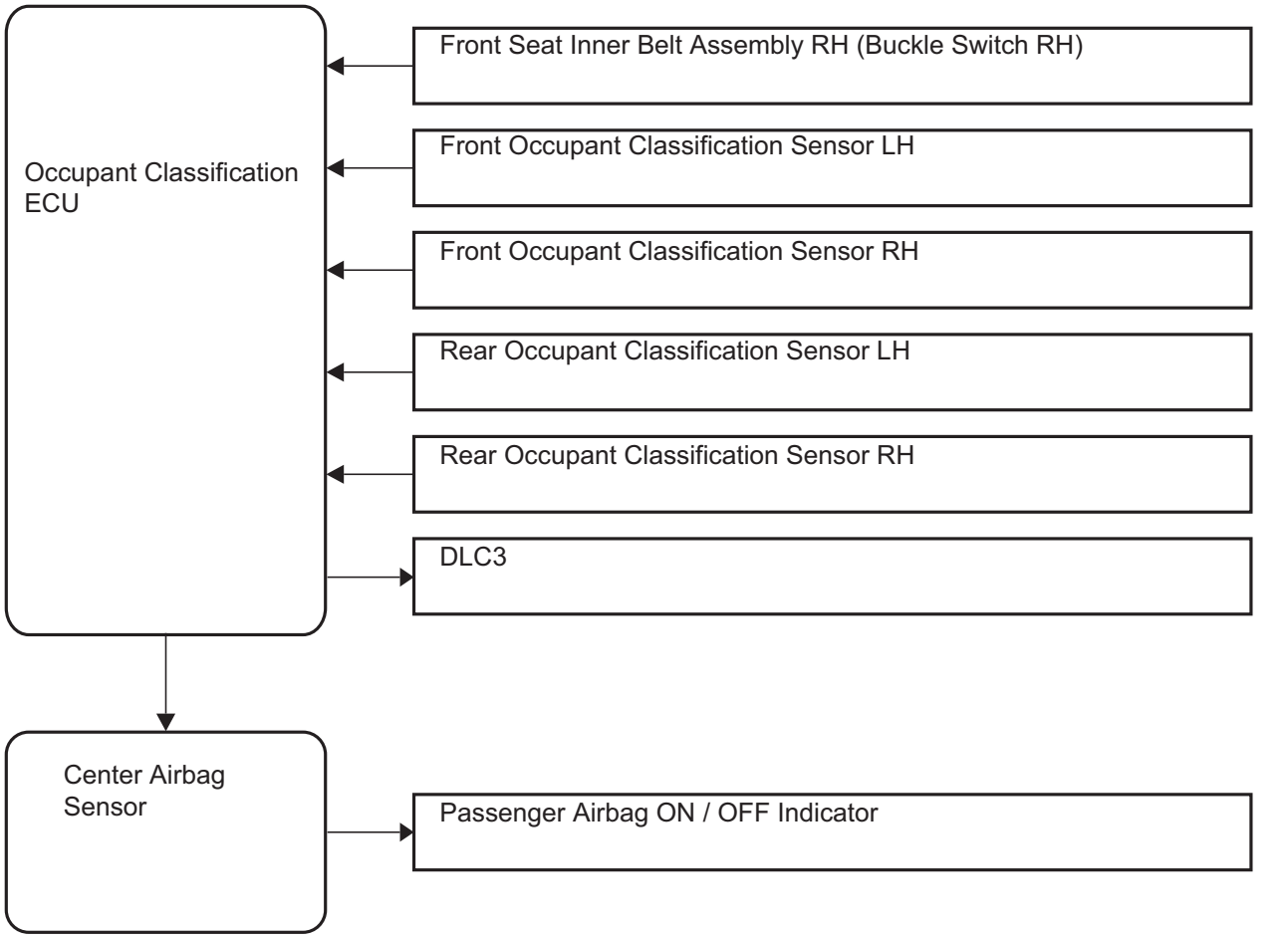

SYSTEM DESCRIPTION

1. GENERAL

(a) The front passenger occupant classification system judges whether the front passenger seat is occupied or not in accordance with the seat belt buckle status; and whether the seat is occupied by an adult or child (with child seat) in accordance with the load that is applied to the front passenger seat. Thus, when appropriate, it restricts the deployment of the front passenger airbag, front passenger side airbag, and the front passenger seat belt pretensioner. In addition, the system informs the driver of the result of the judgment through the use of the airbag ON/OFF indicator.

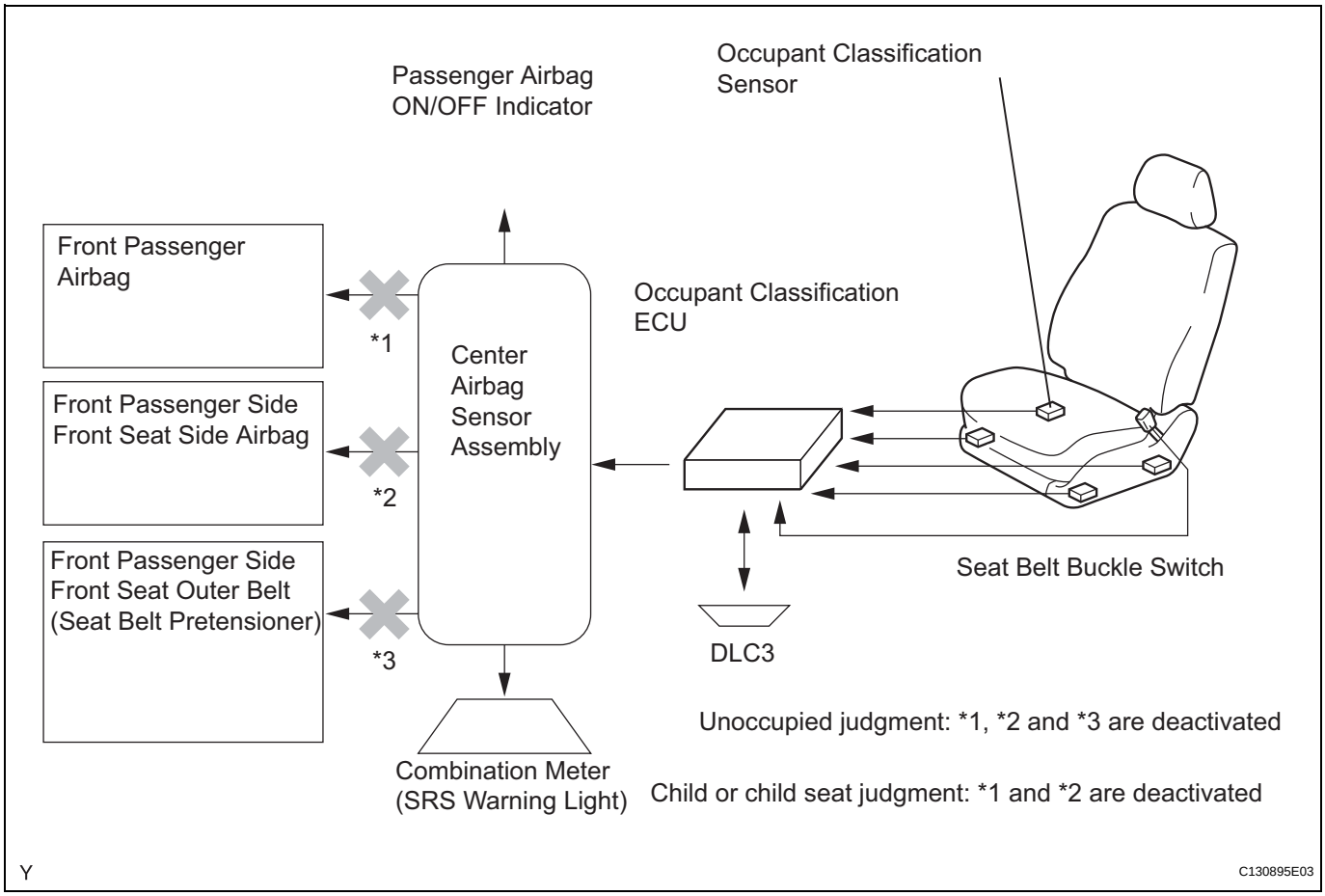

2. MAIN COMPONENTS

Component	Description
Occupant Classification Sensor	Outputs voltages to occupant classification ECU in accordance with load applied to sensor
Occupant Classification ECU	Constantly monitors weight of front passenger seat load, and judges occupancy condition in accordance with signals from occupant classification sensors and seat belt buckle switch
Passenger Airbag ON/OFF Indicator	Passenger airbag ON indicator illuminates when front passenger and front passenger side airbags activated. Airbag OFF indicator illuminates when front passenger and front passenger side airbags deactivated.
Seat Belt Buckle Switch	Detects whether seat belt is fastened and outputs appropriate signals to occupant classification ECU

HOW TO PROCEED WITH TROUBLESHOOTING

HINT:

- Use the following procedures to troubleshoot the occupant classification system.
- *: Use the intelligent tester.

1	VEHICLE BROUGHT TO WORKSHOP

NEXT

2	PASSENGER AIRBAG ON/OFF INDICATOR CHECK

NEXT

3	DTC CHECK (Present and Past DTC)*

(a) Check for DTCs (see page RS-249).

Result

Result	Proceed to
DTC is output.	A
DTC is not output.	B

B → GO TO PROBLEM SYMPTOMS TABLE

A

RS

4	DTC CHART

NEXT

5	REPAIR OR REPLACEMENT

NEXT

6	DTC CLEARANCE (Present and Past DTCs)*

(a) Clear the DTCs (see page RS-249).

NEXT

7	DTC CHECK (Present and Past DTCs)*

(a) Check for DTCs (see page RS-249).

Result

Result	Proceed to
DTC is not output.	A
DTC is output.	B

B → Go to step 5

A

8 PROBLEM SYMPTOMS SIMULATION

(a) Check the passenger airbag ON/OFF indicator condition (see page RS-246).

Result

Result	Proceed to
Passenger airbag ON/OFF indicator is operating normally.	A
Passenger airbag ON/OFF indicator (OFF) is not operating normally.	B

B → Go to step 5

A

9 CONFIRMATION TEST

NEXT

END

INITIALIZATION

1. ZERO POINT CALIBRATION

NOTICE:

Make sure that the front passenger seat is not occupied before performing the operation.

HINT:

Perform the zero point calibration and sensitivity check if any of the following conditions apply.

- The occupant classification ECU is replaced.
- Accessories (seat cover etc.) are installed.
- The front passenger seat is removed from the vehicle.
- The passenger airbag ON/OFF indicator (OFF) comes on when the front passenger seat is not occupied.
- The vehicle is brought to the workshop for repair due to an accident or a collision.

(a) Zero point calibration and sensitivity check procedures:

HINT:

Make sure that the zero point calibration has finished normally, and then perform the sensitivity check.

(1) Adjust the seat position in accordance with the table below.

Adjustment Item	Position
Slide Direction	Rearmost position
Reclining Angle	Upright position
Headrest Height	Lowest position
Lifter Height	Lowest position

(2) Connect the intelligent tester (with CAN VIM) to the DLC3.

(3) Turn the ignition switch ON.

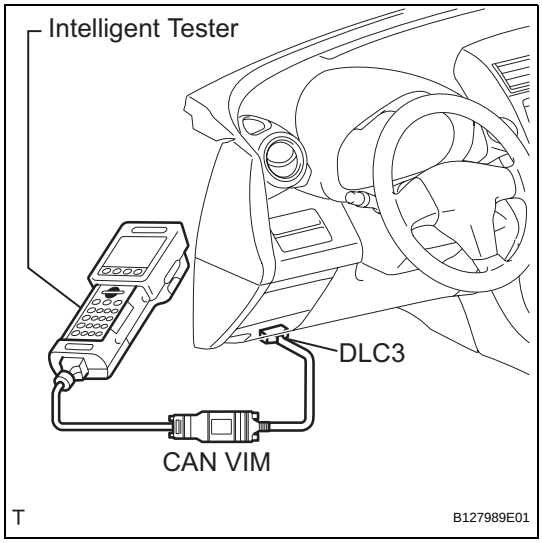

RS

(4) Perform the zero point calibration by following the prompts on the tester screen.

ZERO POINT CALIBRATION PROCEDURE

1: DIAGNOSIS - 1: OBD/MOBD - MODEL YEAR - MODEL SELECTION - 9: OCCUPANT DETECT
Refer to the following screen flowchart.

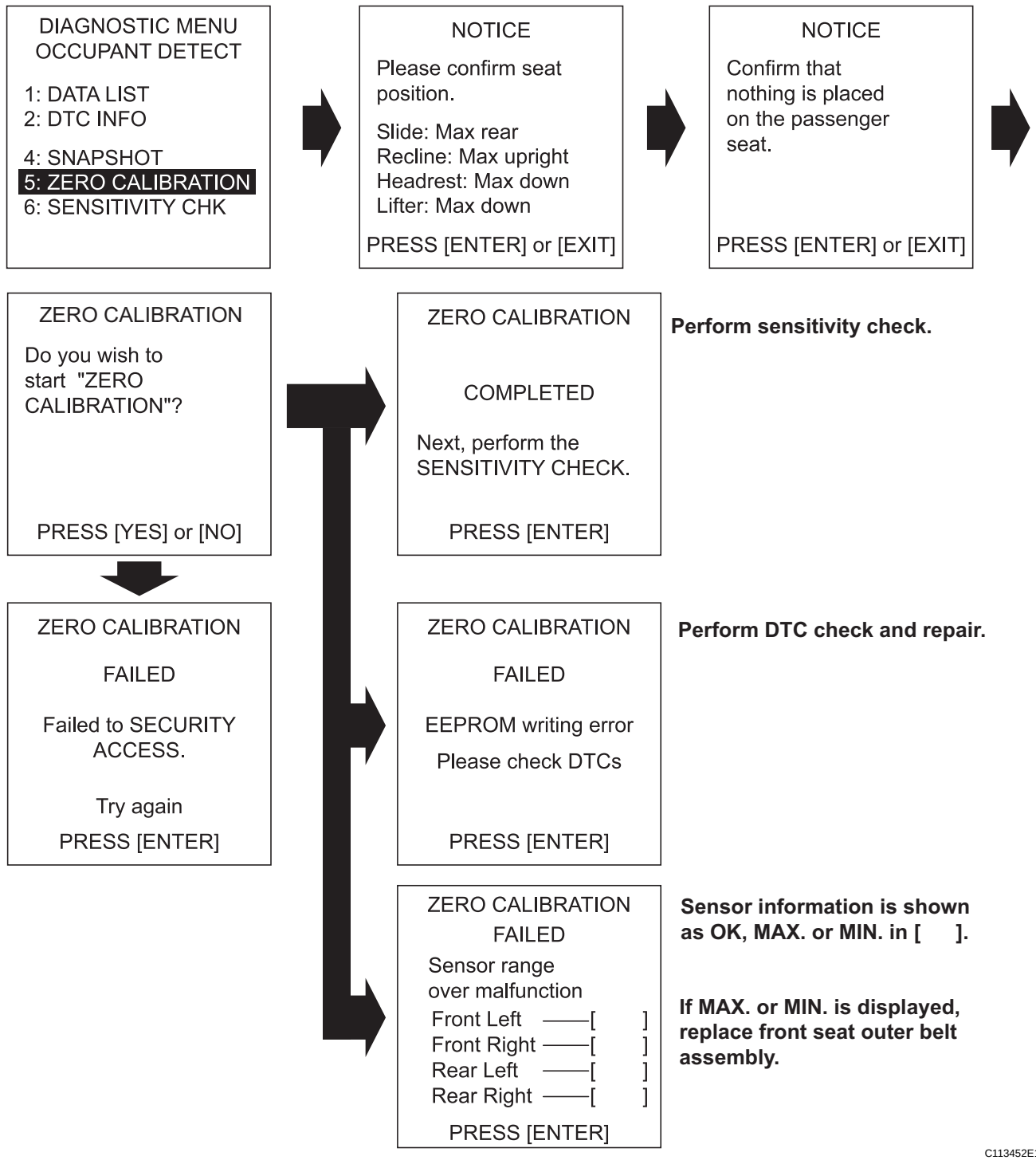

HINT:
Refer to the intelligent tester operator's manual for further details.

RS

OK:
COMPLETED is displayed.

(5) Perform the sensitivity check by following the prompts on the tester screen.
(6) Confirm that the beginning sensor reading is within the standard range.
Standard range:
-3.2 to 3.2 kg (-7 to 7 lb)
(7) Place a 30 kg (66.14 lb) weight (e.g. a lead mass) onto the front passenger seat.
(8) Confirm that the sensitivity is within the standard range.

SENSITIVITY CHECK PROCEDURE

1: DIAGNOSIS ⟶ 1: OBD/MOBD ⟶ MODEL YEAR ⟶ MODEL SELECTION ⟶ 9: OCCUPANT DETECT



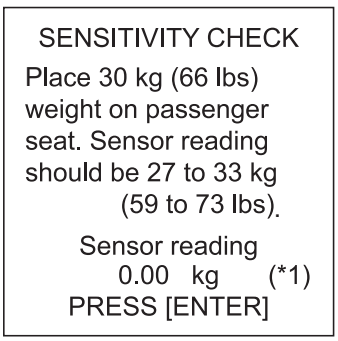

*1: The unit can be changed by entering the following menu items on an intelligent tester.

[Unit Selection Screen]

1: DIAGNOSIS ⟶ 9: SETUP ⟶ 4: UNIT CONVERSION

⟶ WEIGHT (kg = lbs)

C C130896E02

Standard range:
27 to 33 kg (59.52 to 72.75 lb)

HINT:

- When performing the sensitivity check, use a solid metal weight (the check result may not be accurate if a liquid weight is used).

- If the sensitivity deviates from the standard range, retighten the bolts of the front passenger seat taking care not to deform the seat rail. After performing this procedure, if the sensitivity is not within the standard range, replace the front seat assembly RH.
- If the zero point calibration has not finished normally, replace the front seat assembly RH.

PROBLEM SYMPTOMS TABLE

HINT:

- Use the table below to help determine the cause of the problem symptom. The potential causes of the symptoms are listed in order of probability in the "Suspected Area" column of the table. Check each symptom by checking the suspected areas in the order they are listed. Replace parts as necessary.
- Proceed to the troubleshooting procedures for each circuit in the table below.

Occupant classification ECU

Symptom	Suspected area	See page
The front passenger seat condition differs from the indication of the passenger airbag ON/OFF indicator (DTC is not output).	Trouble in Passenger Airbag ON/OFF Indicator	RS-328

TERMINALS OF ECU

1. CHECK OCCUPANT CLASSIFICATION ECU

(a) Measure the voltage of the connector.

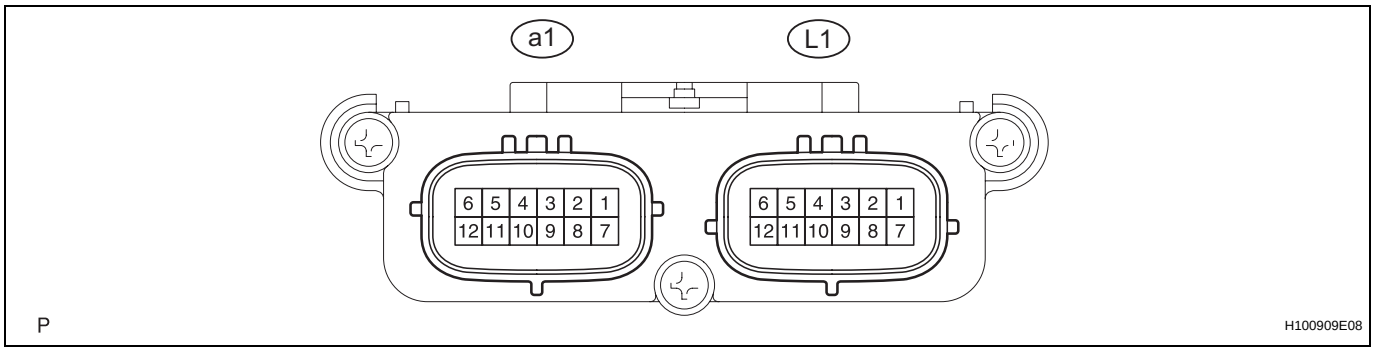

Symbols (Terminal No.)	Wiring Color	Terminal Description	Condition	Specified Condition
+B (L1-1) - GND (L1-3)	R - W - B	+B power source	Always	10 to 14 V
DIA (L1-2) - GND (L1-3)	W - W - B	Diagnosis (DLC3)	Ignition switch ON	Pulse generation
GND (L1-3) - Body ground	W-B - Body ground	Ground	Always	Below 1 Ω
FSR- (L1-4) - GND (L1-3)	O - W - B	Center airbag sensor communication line	Always	Below 1 Ω
BGND (L1-5) - GND (L1-3)	BR - W - B	Passenger side buckle switch ground line	Always	Below 1 Ω
IG (L1-7) - GND (L1-3)	B - W - B	IG power source	Ignition switch ON	10 to 14 V
FSR+ (L1-8) - FSR- (L1-4)	V - O	Center airbag sensor communication line	Ignition switch ON	Pulse generation
BSW (L1-9) - BGND (L1-5)	GR - BR	Passenger side buckle switch line	Buckle switch ON Buckle switch OFF	Pulse generation
SGD1 (a1-1) - GND (L1-3)	G - W-B	Front occupant classification sensor LH ground line	Always	Below 1 Ω
SGD2 (a1-2) - GND (L1-3)	O - W-B	Front occupant classification sensor RH ground line	Always	Below 1 Ω
SGD3 (a1-3) - GND (L1-3)	W - W-B	Rear occupant classification sensor LH ground line	Always	Below 1 Ω
SGD4 (a1-4) - GND (L1-3)	BR - W-B	Rear occupant classification sensor RH ground line	Always	Below 1 Ω
SVC1 (a1-11) - SGD1 (a1-1)	R - G	Front occupant classification sensor LH power supply line	Ignition switch ON, a load is applied to front occupant classification sensor LH	4.5 to 5.1 V
SVC2 (a1-12) - SGD2 (a1-2)	W - O	Front occupant classification sensor RH power supply line	Ignition switch ON, a load is applied to front occupant classification sensor RH	4.5 to 5.1 V
SVC3 (a1-5) - SGD3 (a1-3)	GR - W	Rear occupant classification sensor LH power supply line	Ignition switch ON, a load is applied to rear occupant classification sensor LH	4.5 to 5.1 V
SVC4 (a1-6) - SGD4 (a1-4)	V - BR	Rear occupant classification sensor RH power supply line	Ignition switch ON, a load is applied to rear occupant classification sensor RH	4.5 to 5.1 V
SIG1 (a1-7) - SGD1 (a1-1)	SB - G	Front occupant classification sensor LH signal line	Ignition switch ON, a load is applied to front occupant classification sensor LH	0.2 to 4.7 V

Symbols (Terminal No.)	Wiring Color	Terminal Description	Condition	Specified Condition
SIG2 (a1-8) - SGD2 (a1-2)	L - O	Front occupant classification sensor RH signal line	Ignition switch ON, a load is applied to front occupant classification sensor RH	0.2 to 4.7 V
SIG3 (a1-9) - SGD3 (a1-3)	Y - W	Rear occupant classification sensor LH signal line	Ignition switch ON, a load is applied to rear occupant classification sensor LH	0.2 to 4.7 V
SIG4 (a1-10) - SGD4 (a1-4)	R - BR	Rear occupant classification sensor RH signal line	Ignition switch ON, a load is applied to rear occupant classification sensor RH	0.2 to 4.7 V

DIAGNOSIS SYSTEM

1. DESCRIPTION

The occupant classification ECU controls the functions of the occupant classification system on the vehicle. Data of the occupant classification system can be read in the Data Link Connector 3 (DLC3) of the vehicle. When the system seems to be malfunctioning, use the intelligent tester to check for a malfunction and perform repairs.

2. CHECK DLC3

The ECU uses ISO 15765-4 for communication. The terminal arrangement of the DLC3 complies with ISO 15031-3 and matches the ISO 15765-4 format.

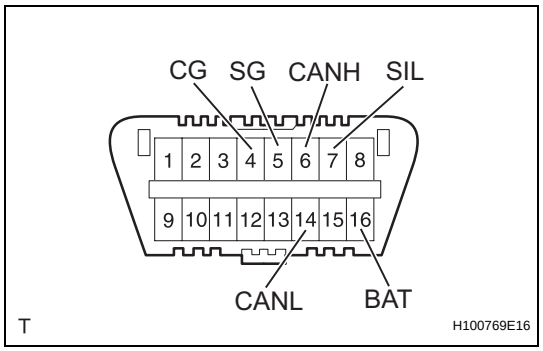

Symbols (Terminal No.)	Terminal Description	Condition	Specified Condition
SIL (7) - SG (5)	Bus + line	During transmission	Pulse generation
CG (4) - Body ground	Chassis ground	Always	Below 1 Ω
SG (5) - Body ground	Signal ground	Always	Below 1 Ω
BAT (16) - Body ground	Battery positive	Always	11 to 14 V
CANH (6) - CANL (14)	HIGH-level CAN bus line	Ignition switch OFF*	54 to 69 Ω
CANH (6) - Battery positive	HIGH-level CAN bus line	Ignition switch OFF*	1 MΩ or higher
CANH (6) - CG (4)	HIGH-level CAN bus line	Ignition switch OFF*	200 Ω or higher
CANL (14) - Battery positive	LOW-level CAN bus line	Ignition switch OFF*	1 MΩ or higher
CANL (14) - CG (4)	LOW-level CAN bus line	Ignition switch OFF*	200 Ω or higher

NOTICE:

***: Before measuring the resistance, leave the vehicle as is for at least 1 minute and do not operate the ignition switch, any switches or doors.**

If the result is not as specified, the DLC3 may have a malfunction. Repair or replace the harness and connector.

HINT:

Connect the cable of the intelligent tester (with CAN VIM) to the DLC3, turn the ignition switch ON and attempt to use the tester. If the display indicates that a communication error has occurred, there is a problem either with the vehicle or with the tester.

- If communication is normal when the tester is connected to another vehicle, inspect the DLC3 on the original vehicle.
- If communication is still not possible when the tool is connected to another vehicle, the problem is probably in the tester itself. Consult the Service Department listed in the tester's instruction manual.

3. SYMPTOM SIMULATION

HINT:

The most difficult case in troubleshooting is when no symptoms occur. In such cases, a thorough customer problem analysis must be carried out. A simulation of the same or similar conditions and environment in which the problem occurred in the customer's vehicle should be carried out. No matter how much skill or experience a technician has, troubleshooting without confirming the problem symptoms will lead to important repairs being overlooked and mistakes or delays.

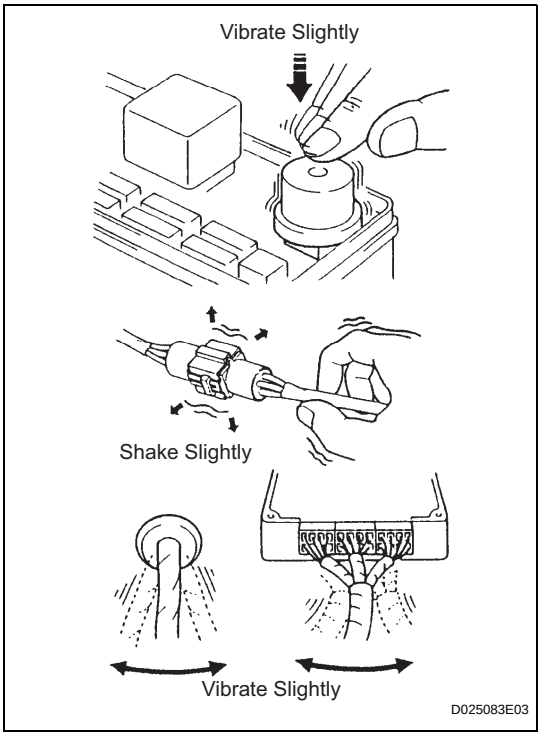

(a) Vibration method:

When vibration seems to be the major cause.

HINT:

Perform the simulation method only during the primary check period (for approximately 6 seconds after the ignition switch is turned ON).

(1) Slightly vibrate the part of the sensor considered to be the cause of the problem with your fingers and check whether the malfunction occurs.

HINT:

Shaking the relays too strongly may result in open relays.

(2) Slightly shake the connector vertically and horizontally.

(3) Slightly shake the wire harness vertically and horizontally.

The connector joint and fulcrum of the vibration are the major areas to be checked thoroughly.

(b) Simulation method for DTC B1795:

Turn the ignition switch from the LOCK to the ON position, hold the position for 10 seconds, and then turn it back to the LOCK position again 50 times in a row.

HINT:

DTC B1795 is output if the occupant classification ECU receives the ignition switch LOCK-ON-LOCK signal 50 times in a row when a malfunction occurs in the power circuit for the occupant classification system.

4. FUNCTION OF PASSENGER AIRBAG ON/OFF INDICATOR

(a) Initial check

(1) Turn the ignition switch ON.

(2) The passenger airbag ON/OFF indicator (ON and OFF) comes on for approximately 4 seconds, then goes off for approximately 2 seconds.

RS

(3) Approximately 6 seconds after the ignition switch is turned to the ON position, the passenger airbag ON/OFF indicator will be ON/OFF depending on the conditions listed below.

Condition	ON Indicator	OFF Indicator
Vacant	OFF	OFF
Adult is seated	ON	OFF
Child is seated	OFF	ON
Child restraint system is set	OFF	ON
Front passenger occupant classification system failure	OFF	ON

HINT:

- The passenger airbag ON/OFF indicator operates based on the timing chart below in order to check the indicator light circuit.

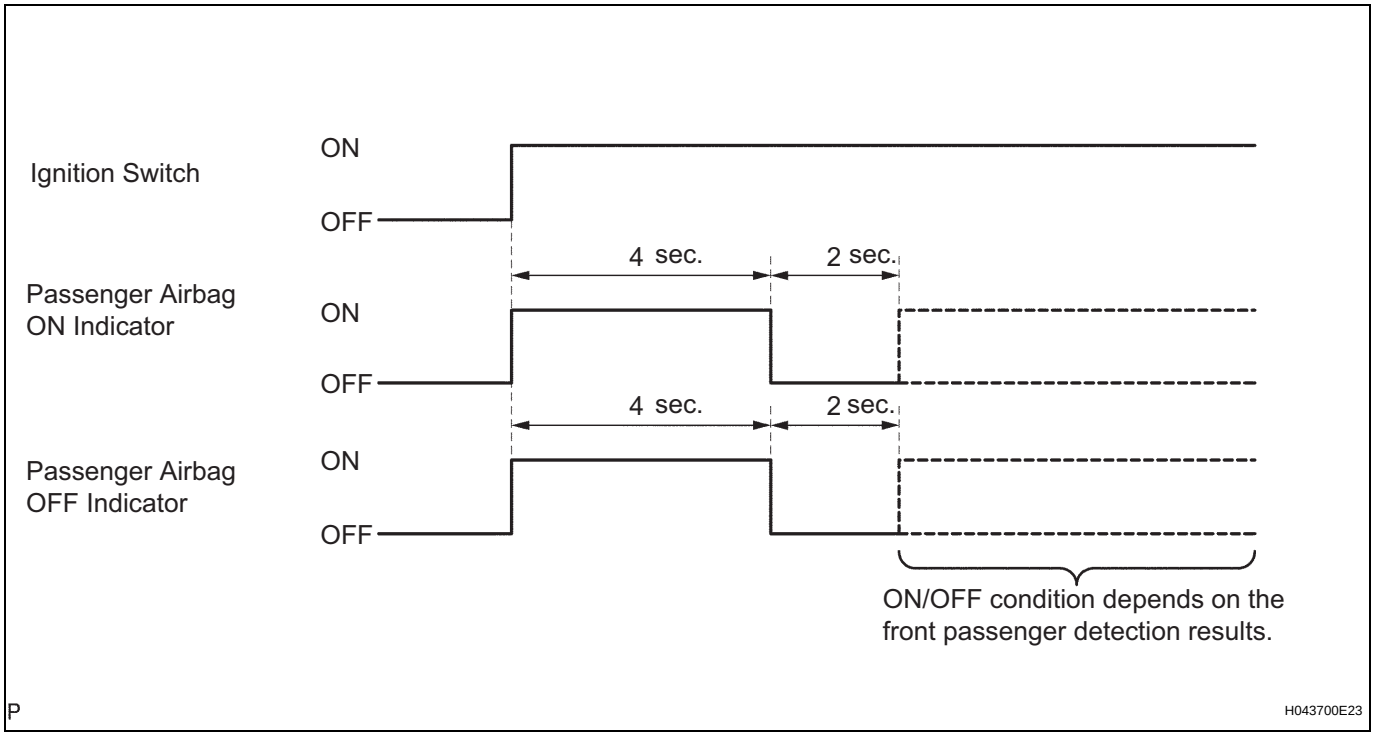

- When the occupant classification system has trouble, both the SRS warning light and the passenger airbag OFF indicator (OFF) come on. In this case, check the DTCs in the airbag system first.

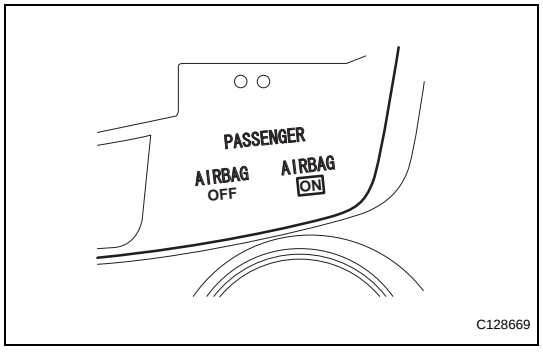

5. CHECK PASSENGER AIRBAG ON/OFF INDICATOR

(a) Turn the ignition switch ON.

(b) Check that the passenger airbag ON/OFF indicators come on for approximately 4 seconds, then go off for approximately 2 seconds.

HINT:

Refer to the table in the previous step regarding the passenger airbag ON/OFF indicator when approximately 6 seconds have elapsed after the ignition switch is turned to the ON position.

RS

DTC CHECK / CLEAR

1. CHECK DTC

HINT:

- When DTC B1650/23 is detected as a result of troubleshooting for the airbag system, troubleshoot the occupant classification system.
- Use the intelligent tester (with CAN VIM) to read and clear DTCs, otherwise the DTCs cannot be read and cleared.

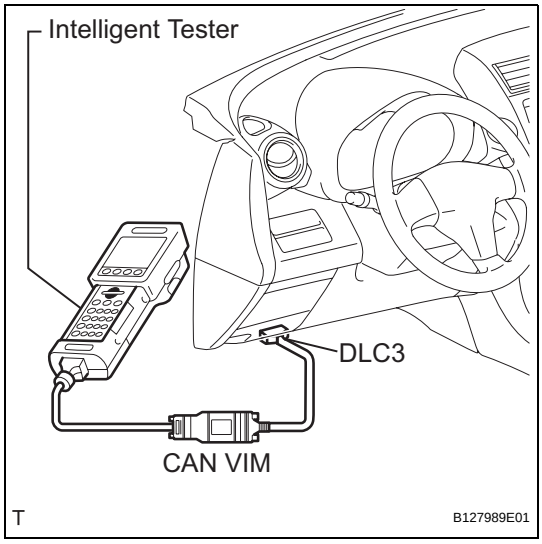

(a) Connect the intelligent tester (with CAN VIM) to the DLC3.
(b) Turn the ignition switch ON.
(c) Check for DTCs by following the prompts on the tester screen.
HINT:
Refer to the intelligent tester operator's manual for further details.

2. Clear DTC

(a) Connect the intelligent tester (with CAN VIM) to the DLC3.
(b) Turn the ignition switch ON.
(c) Clear the DTCs by following the prompts on the tester screen.
HINT:
Refer to the intelligent tester operator's manual for further details.

DATA LIST / ACTIVE TEST

HINT:
Using the intelligent tester's DATA LIST allows switch, sensor, actuator and other item values to be read without removing any parts. Reading the DATA LIST early in troubleshooting is one way to save time.

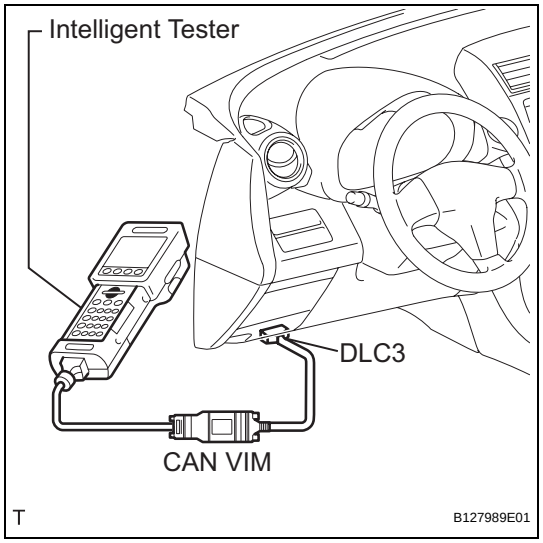

1. DATA LIST FOR OCCUPANT CLASSIFICATION ECU

(a) Connect the intelligent tester (with CAN VIM) to the DLC3.
(b) Turn the ignition switch ON.
(c) Read the DATA LIST on the tester's screen.

Occupant classification ECU

Item	Measurement Item/ Range (Display)	Normal Condition	Diagnostic Note
IG SW	Ignition switch condition/ ON: Ignition switch ON OFF: Ignition switch OFF	ON/OFF	-
P BUCKLE SW	Buckle switch (Front passenger side)/ UNSET: Front passenger side seat belt is unfastened SET: Front passenger side seat belt is fastened NG: Front passenger side seat belt is malfunctioning	UNSET/SET	-
Front passenger CLASS	Front passenger classification/ AF05: Adult (36 to 54 kg (79.37 to 119.05 lb)) is seated AM50: Adult (more than 54 kg (119.05 lb)) is seated CHILD: Child (less than 36 kg (79.37 lb)) is seated CRS: Child restraint system and front passenger side buckle switch ON, then 7 to 36 kg (15.43 to 79.37 lb) is set OFF: Vacant	AF05/AM50/CHILD/CRS/OFF	-
SENS RANGE INF	Sensor range information/ OK: The sensor value is within the range NG: The sensor value is outside the range	OK	-
FL SENS RANGE	Front left sensor range information/ OK: Sensor range is -17 to 27 kg (-37.48 to 59.52 lb) Min.: Less than -17 kg (-37.48 lb) Max.: More than 27 kg (59.52 lb)	OK	-

Item	Measurement Item/ Range (Display)	Normal Condition	Diagnostic Note
FR SENS RANGE	Front right sensor range information/ OK: Sensor range is -17 to 27 kg (-37.48 to 59.52 lb) Min.: Less than -17 kg (-37.48 lb) Max.: More than 27 kg (59.52 lb)	OK	-
RL SENS RANGE	Rear left sensor range information/ OK: Sensor range is -17 to 37 kg (-37.48 to 81.57 lb) Min.: Less than -17 kg (-37.48 lb) Max.: More than 37 kg (81.57 lb)	OK	-
RR SENS RANGE	Rear right sensor range information/ OK: Sensor range is -17 to 37 kg (-37.48 to 81.57 lb) Min.: Less than -17 kg (-37.48 lb) Max.: More than 37 kg (81.57 lb)	OK	-
FL SENS VOL	Front left sensor voltage/ Min.: 0 V Max.: 19.8 V	0 to 4.7 V	-
FR SENS VOL	Front right sensor voltage/ Min.: 0 V Max.: 19.8 V	0 to 4.7 V	-
RL SENS VOL	Rear left sensor voltage/ Min.: 0 V Max.: 19.8 V	0 to 4.7 V	-
RR SENS VOL	Rear right sensor voltage/ Min.: 0 V Max.: 19.8 V	0 to 4.7 V	-
FL SENS WEIGHT	Front left sensor weight information/ Min.: -17 kg (-37.48 lb) Max.: 27 kg (59.52 lb)	-17 to 27 kg (-37.48 to 59.52 lb)	-
FR SENS WEIGHT	Front right sensor weight information/ Min.: -17 kg (-37.48 lb) Max.: 27 kg (59.52 lb)	-17 to 27 kg (-37.48 to 59.52 lb)	-
RL SENS WEIGHT	Rear left sensor weight information/ Min.: -17 kg (-37.48 lb) Max.: 37 kg (81.57 lb)	-17 to 37 kg (-37.48 to 81.57 lb)	-
RR SENS WEIGHT	Rear right sensor weight information/ Min.: -17 kg (-37.48 lb) Max.: 37 kg (81.57 lb)	-17 to 37 kg (-37.48 to 81.57 lb)	-
TOTAL WEIGHT	Total weight information/ Min.: -68 kg (-149.91 lb) Max.: 128 kg (282.19 lb)	-68 to 128 kg (-149.91 to 282.19 lb)	-
#PRESENT CODES	Number of present DTCs Min.: 0, Max.: 255	0	-
#PAST CODES	Number of past DTCs Min.: 0, Max.: 255	0	-

DIAGNOSTIC TROUBLE CODE CHART

If a trouble code is displayed during the DTC check, check the circuit listed for the code in the table below (proceed to the page listed for that circuit).

Occupant classification system

DTC No.	Detection Item	Trouble Area	See page
B1771	Passenger Side Buckle Switch Circuit Malfunction	1. Floor wire 2. Front seat inner belt assembly (Buckle switch RH) 3. Occupant classification ECU	RS-254
B1780	Front Occupant Classification Sensor LH Circuit Malfunction	1. Front seat wire RH 2. Front seat assembly RH (Front occupant classification sensor RH) 3. Occupant classification ECU	RS-260
B1781	Front Occupant Classification Sensor RH Circuit Malfunction	1. Front seat wire RH 2. Front seat assembly RH (Front occupant classification sensor RH) 3. Occupant classification ECU	RS-267
B1782	Rear Occupant Classification Sensor LH Circuit Malfunction	1. Front seat wire RH 2. Front seat assembly RH (Rear occupant classification sensor LH) 3. Occupant classification ECU	RS-274
B1783	Rear Occupant Classification Sensor RH Circuit Malfunction	1. Front seat wire RH 2. Front seat assembly RH (Rear occupant classification sensor RH) 3. Occupant classification ECU	RS-281
B1785	Front Occupant Classification Sensor LH Collision Detection	1. Front seat assembly RH (Front occupant classification sensor LH) 2. Occupant classification ECU	RS-288
B1786	Front Occupant Classification Sensor RH Collision Detection	1. Front seat assembly RH (Front occupant classification sensor RH) 2. Occupant classification ECU	RS-292
B1787	Rear Occupant Classification Sensor LH Collision Detection	1. Front seat assembly RH (Rear occupant classification sensor LH) 2. Occupant classification ECU	RS-296
B1788	Rear Occupant Classification Sensor RH Collision Detection	1. Front seat assembly RH (Rear occupant classification sensor RH) 2. Occupant classification ECU	RS-300
B1790	Center Airbag Sensor Assembly Communication Circuit Malfunction	1. Floor wire 2. Occupant classification ECU 3. Center airbag sensor assembly	RS-304
B1793	Occupant Classification Sensor Power Supply Circuit Malfunction	1. Front seat wire RH 2. Front seat assembly RH (Occupant classification sensors) 3. Occupant classification ECU	RS-311
B1794	Open in Occupant Classification ECU Battery Positive Line	1. Wire harness 2. Occupant classification ECU	RS-319
B1795	Occupant Classification ECU Malfunction	1. Battery 2. ECU-B Fuse 3. No. 2 floor wire 4. Front seat inner belt RH 5. Occupant classification ECU	RS-323

DTC No.	Detection Item	Trouble Area	See page
B1796	Sleep Operation Failure of Occupant Classification ECU	Occupant classification ECU	RS-326

DTC	B1771	Passenger Side Buckle Switch Circuit Malfunction

DESCRIPTION

The passenger side buckle switch circuit consists of the occupant classification ECU and the front seat inner belt RH.
DTC B1771 is recorded when a malfunction is detected in the passenger side buckle switch circuit.
Troubleshoot DTC B1771 first when DTCs B1771 and B1795 are output simultaneously.

DTC No.	DTC Detection Condition	Trouble Area
B1771	When one of following conditions is met: • Occupant classification ECU detects line short signal, open signal, short to ground signal or short to B+ signal in the passenger side buckle switch circuit for 2 seconds • Passenger side buckle switch malfunction • Occupant classification ECU malfunction	• Floor wire • Front seat inner belt RH (Buckle switch RH) • Occupant classification ECU

WIRING DIAGRAM

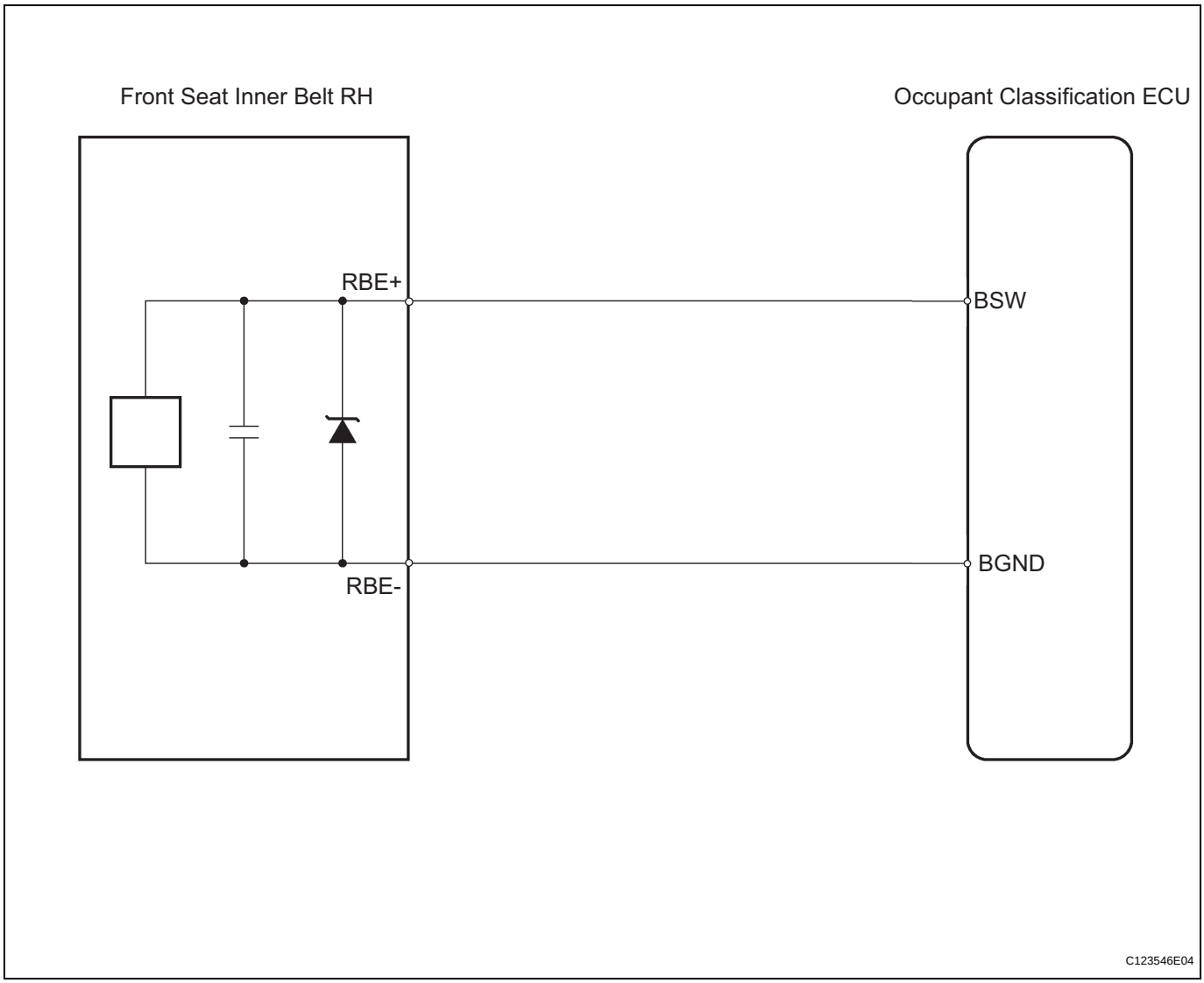

RS

INSPECTION PROCEDURE

HINT:

- If troubleshooting (wire harness inspection) is difficult to perform, remove the front passenger seat installation bolts to see the undersurface of the seat cushion.
- In the above case, hold the seat so that it does not tip over. Holding the seat for a long period of time may cause a problem, such as seat rail deformation. Hold the seat up only for as long as necessary.

1	CHECK FOR DTC

(a) Turn the ignition switch ON.
(b) Clear the DTCs (see page RS-249).
HINT:
First clear DTCs stored in the occupant classification ECU and then in the center airbag sensor.
(c) Turn the ignition switch OFF.
(d) Turn the ignition switch ON.
(e) Check the DTCs (see page RS-249).
OK:
DTC B1771 is not output.
HINT:
DTCs other than DTC B1771 may be output at this time, but they are not related to this check.

OK → **USE SIMULATION METHOD TO CHECK**

NG

2	CHECK CONNECTION OF CONNECTOR

(a) Turn the ignition switch OFF.
(b) Disconnect the cable from the negative (-) battery terminal, and wait for at least 90 seconds.
(c) Check that the connectors are properly connected to the occupant classification ECU and the front seat inner belt RH.
OK:
The connectors are properly connected.

NG → **CONNECT CONNECTOR**

OK

RS

3 CHECK FLOOR WIRE (TO B+)

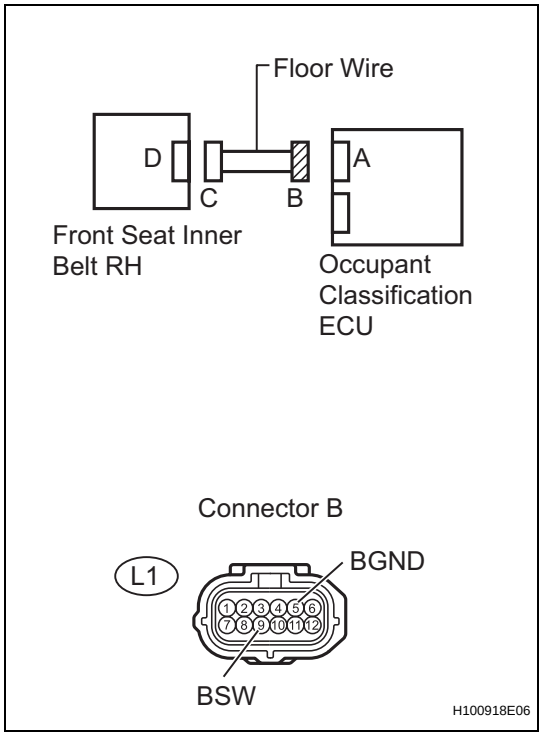

(a) Disconnect the connectors from the occupant classification ECU and the front seat inner belt RH.
(b) Connect the cable to the negative (-) battery terminal, and wait for at least 2 seconds.
(c) Turn the ignition switch ON.
(d) Measure the voltage of the wire harness side connector.
Standard voltage

Tester Connection	Specified Condition
L1-9 (BSW) - Body ground	Below 1 V
L1-5 (BGND) - Body ground	Below 1 V

NG → **REPAIR OR REPLACE FLOOR WIRE**

OK

4 CHECK FLOOR WIRE (FOR OPEN)

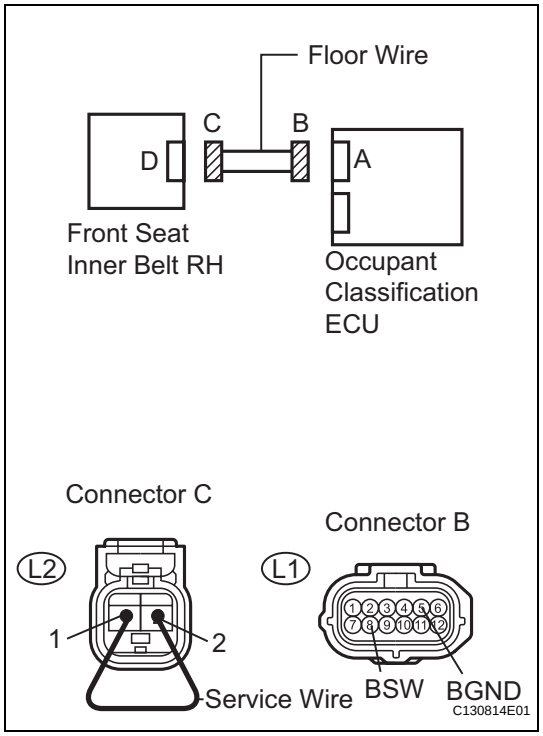

(a) Turn the ignition switch OFF.
(b) Disconnect the cable from the negative (-) battery terminal, and wait for at least 90 seconds.
(c) Using a service wire, connect terminals L2-2 and L2-1 of connector C.
NOTICE:
Do not forcibly insert a service wire into the terminals of the connector when connecting them.
(d) Measure the resistance of the wire harness side connectors.
Standard resistance

Tester Connection	Specified Condition
L1-9 (BSW) - L1-5 (BGND)	Below 1 Ω

NG → **REPAIR OR REPLACE FLOOR WIRE**

OK

RS

5 CHECK FLOOR WIRE (FOR SHORT)

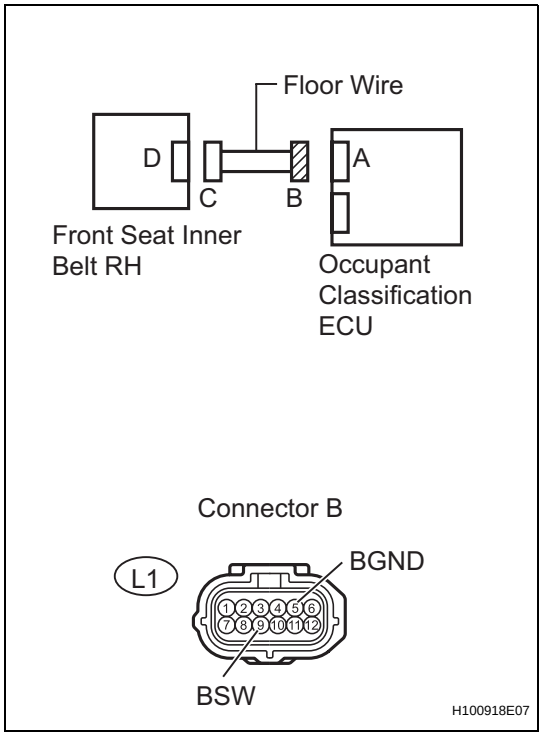

(a) Disconnect the service wire from connector C.
(b) Measure the resistance of the wire harness side connector.

Standard resistance

Tester Connection	Specified Condition
L1-9 (BSW) - L1-5 (BGND)	1 MΩ or higher

NG → **REPAIR OR REPLACE FLOOR WIRE**

OK

6 CHECK FLOOR WIRE (TO GROUND)

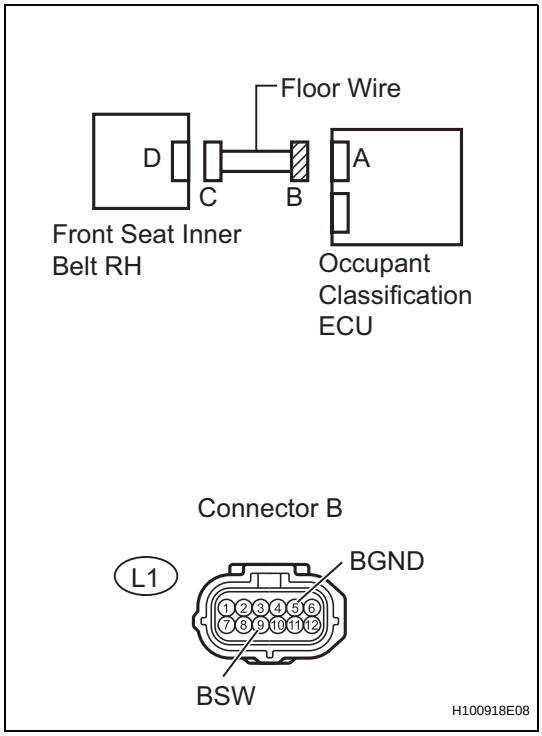

(a) Measure the resistance of the wire harness side connector.

Standard resistance

Tester Connection	Specified Condition
L1-9 (BSW) - Body ground	1 MΩ or higher
L1-5 (BGND) - Body ground	1 MΩ or higher

NG → **REPAIR OR REPLACE FLOOR WIRE**

OK

RS

7	CHECK FOR DTC

(a) Connect the connectors to the occupant classification ECU and the front seat inner belt RH.
(b) Connect the cable to the negative (-) battery terminal, and wait for at least 2 seconds.
(c) Turn the ignition switch ON.
(d) Clear the DTCs (see page RS-249).
HINT:
First clear DTCs stored in the occupant classification ECU and then in the center airbag sensor.
(e) Turn the ignition switch OFF.
(f) Turn the ignition switch ON.
(g) Check the DTCs (see page RS-249).
OK:
DTC B1771 is not output.
HINT:
DTCs other than DTC B1771 may be output at this time, but they are not related to this check.

OK → **USE SIMULATION METHOD TO CHECK**

NG

8	REPLACE FRONT SEAT INNER BELT ASSEMBLY RH

(a) Turn the ignition switch OFF.
(b) Disconnect the cable from the negative (-) battery terminal, and wait for at least 90 seconds.
(c) Replace the front seat inner belt RH (see page SB-21).
HINT:
Perform the inspection using parts from a normal vehicle if possible.
(d) Connect the cable to the negative (-) battery terminal, and wait for at least 2 seconds.
(e) Turn the ignition switch ON.
(f) Clear the DTCs (see page RS-249).
HINT:
First clear DTCs stored in the occupant classification ECU and then in the center airbag sensor.
(g) Turn the ignition switch OFF.
(h) Turn the ignition switch ON.
(i) Check the DTCs (see page RS-249).
OK:
DTC B1771 is not output.
HINT:
DTCs other than DTC B1771 may be output at this time, but they are not related to this check.

OK → **END**

NG

9	REPLACE OCCUPANT CLASSIFICATION ECU

(a) Turn the ignition switch OFF.
(b) Disconnect the cable from the negative (-) battery terminal, and wait for at least 90 seconds.
(c) Replace the occupant classification ECU (see page RS-392).

NEXT

10	PERFORM ZERO POINT CALIBRATION

(a) Connect the cable to the negative (-) battery terminal, and wait for at least 2 seconds.
(b) Connect the intelligent tester (with CAN VIM) to the DLC3.
(c) Turn the ignition switch ON.
(d) Using the intelligent tester, perform the zero point calibration (see page RS-241).
OK:
COMPLETED is displayed.

NEXT

11	PERFORM SENSITIVITY CHECK

(a) Using the intelligent tester, perform the sensitivity check (see page RS-241).
Standard value:
27 to 33 kg (59.52 to 72.75 lb)

RS

NEXT

END

DTC	B1780	Front Occupant Classification Sensor LH Circuit Malfunction

DESCRIPTION

The front occupant classification sensor LH circuit consists of the occupant classification ECU and the front occupant classification sensor LH.
DTC B1780 is recorded when a malfunction is detected in the front occupant classification sensor LH circuit.

DTC No.	DTC Detection Condition	Trouble Area
B1780	When one of following conditions is met: • Occupant classification ECU detects line short signal, open signal, short to ground signal or short to B+ signal in the front occupant classification sensor LH circuit for 2 seconds • Front occupant classification sensor LH malfunction • Occupant classification ECU malfunction	• Front seat wire RH • Front seat RH (Front occupant classification sensor LH) • Occupant classification ECU

WIRING DIAGRAM

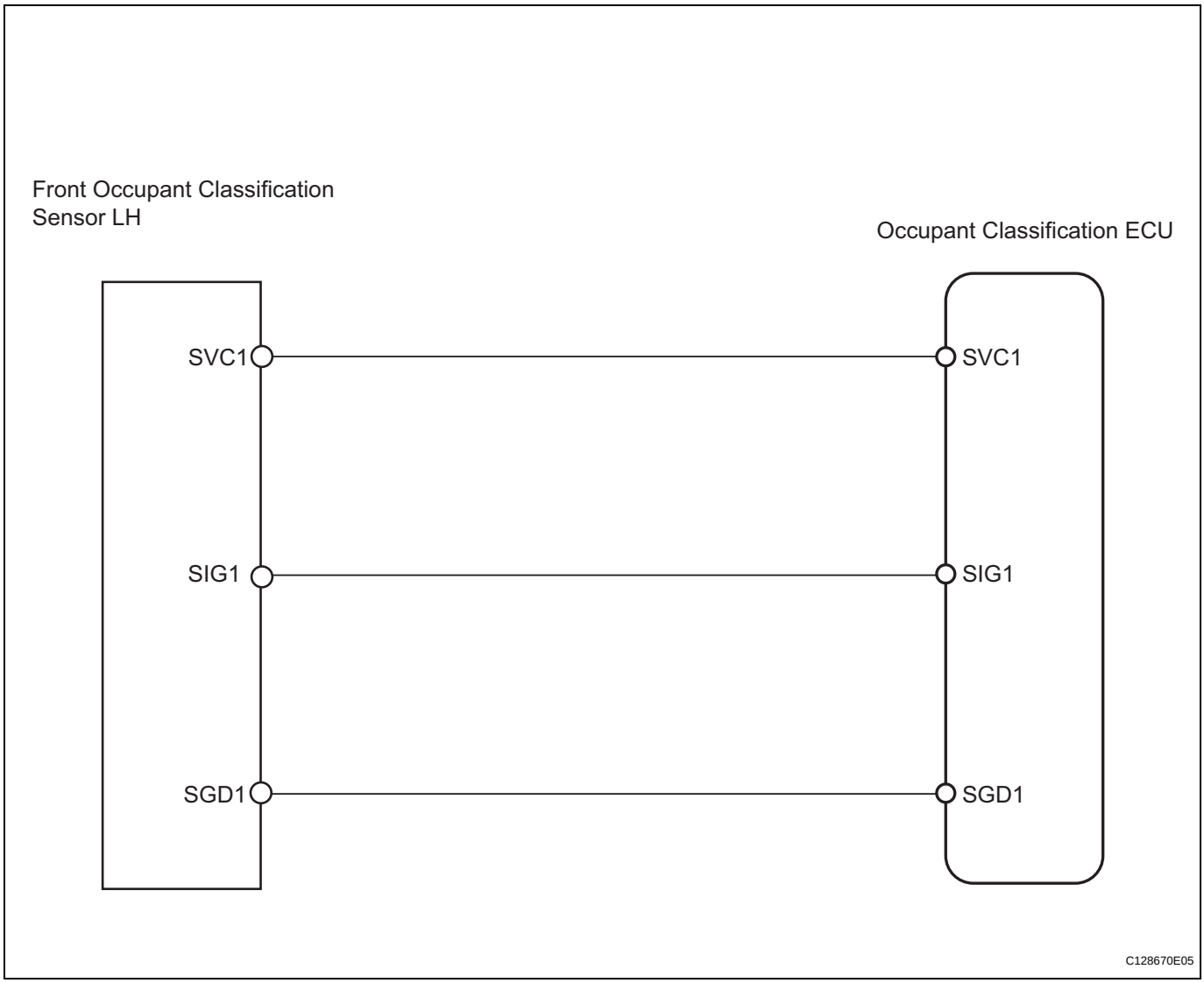

RS

INSPECTION PROCEDURE

HINT:

- If troubleshooting (wire harness inspection) is difficult to perform, remove the front passenger seat installation bolts to see the undersurface of the seat cushion.
- In the above case, hold the seat so that it does not tip over. Holding the seat for a long period of time may cause a problem, such as seat rail deformation. Hold the seat up only for as long as necessary.

1	CHECK FOR DTC

(a) Turn the ignition switch ON.
(b) Clear the DTCs (see page RS-249).
HINT:
First clear DTCs stored in the occupant classification ECU and then in the center airbag sensor.
(c) Turn the ignition switch OFF.
(d) Turn the ignition switch ON.
(e) Check the DTCs (see page RS-249).
OK:
DTC B1780 is not output.
HINT:
DTCs other than DTC B1780 may be output at this time, but they are not related to this check.

OK → **USE SIMULATION METHOD TO CHECK**

NG

2	CHECK CONNECTION OF CONNECTOR

(a) Turn the ignition switch OFF.
(b) Disconnect the cable from the negative (-) battery terminal, and wait for at least 90 seconds.
(c) Check that the connectors are properly connected to the occupant classification ECU and the front occupant classification sensor LH.
OK:
The connectors are properly connected.

NG → **CONNECT CONNECTOR**

OK

3 CHECK FRONT SEAT WIRE RH (TO B+)

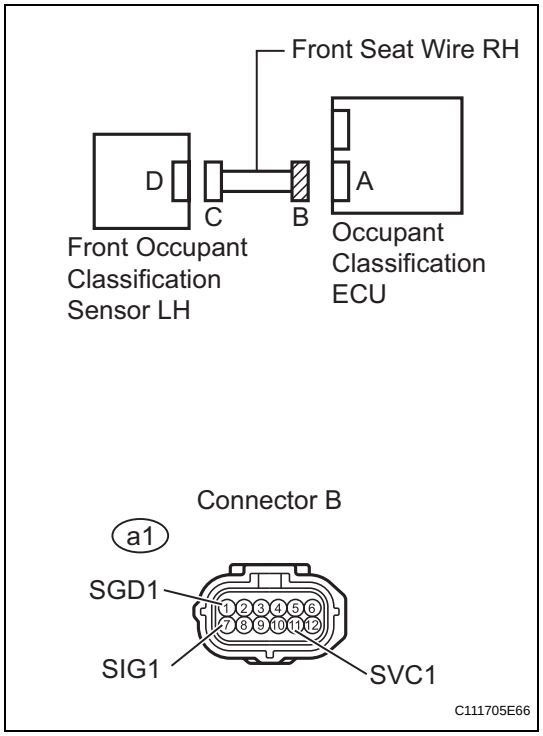

(a) Disconnect the connectors from the occupant classification ECU and the front occupant classification sensor LH.
(b) Connect the cable to the negative (-) battery terminal, and wait for at least 2 seconds.
(c) Turn the ignition switch ON.
(d) Measure the voltage of the wire harness side connector.
Standard voltage

Tester Connection	Specified Condition
a1-1 (SGD1) - Body ground	Below 1 V
a1-7 (SIG1) - Body ground	Below 1 V
a1-11 (SVC1) - Body ground	Below 1 V

NG → **REPAIR OR REPLACE FRONT SEAT WIRE RH**

OK

4 CHECK FRONT SEAT WIRE RH (FOR OPEN)

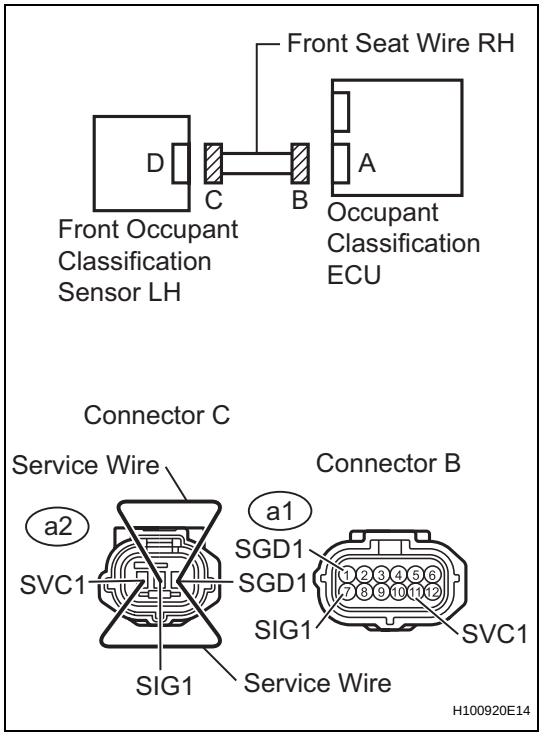

(a) Turn the ignition switch OFF.
(b) Disconnect the cable from the negative (-) battery terminal, and wait for at least 90 seconds.
(c) Using a service wire, connect terminals a2-1 (SVC1) and a2-3 (SGD1), and connect terminals a2-2 (SIG1) and a2-3 (SGD1) of connector C.
NOTICE:
Do not forcibly insert a service wire into the terminals of the connector when connecting them.
(d) Measure the resistance of the wire harness side connector.
Standard resistance

Tester Connection	Specified Condition
a1-7 (SIG1) - a1-1 (SGD1)	Below 1 Ω
a1-11 (SVC1) - a1-1 (SGD1)	Below 1 Ω

NG → **REPAIR OR REPLACE FRONT SEAT WIRE RH**

OK

RS

5 CHECK FRONT SEAT WIRE RH (FOR SHORT)

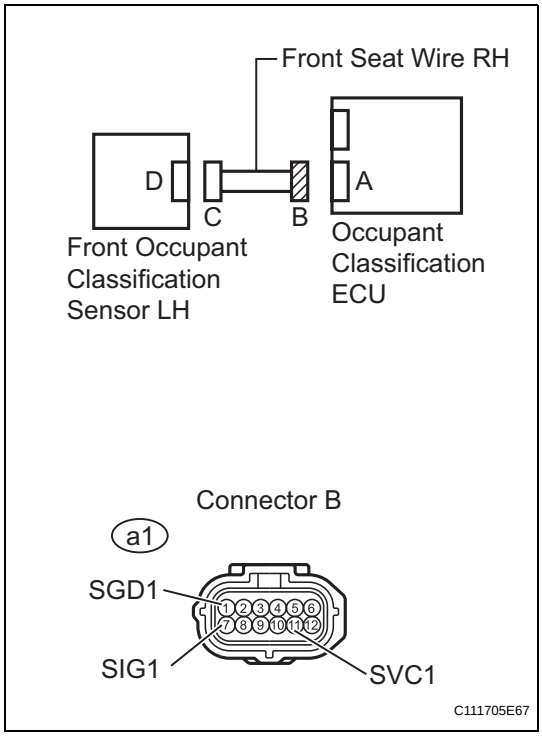

(a) Disconnect the service wire from connector C.
(b) Measure the resistance of the wire harness side connector.

Standard resistance

Tester Connection	Specified Condition
a1-7 (SIG1) - a1-1 (SGD1)	1 MΩ or higher
a1-11 (SVC1) - a1-1 (SGD1)	1 MΩ or higher
a1-7 (SIG1) - a1-11 (SVC1)	1 MΩ or higher

NG → **REPAIR OR REPLACE FRONT SEAT WIRE RH**

OK

6 CHECK FRONT SEAT WIRE RH (TO GROUND)

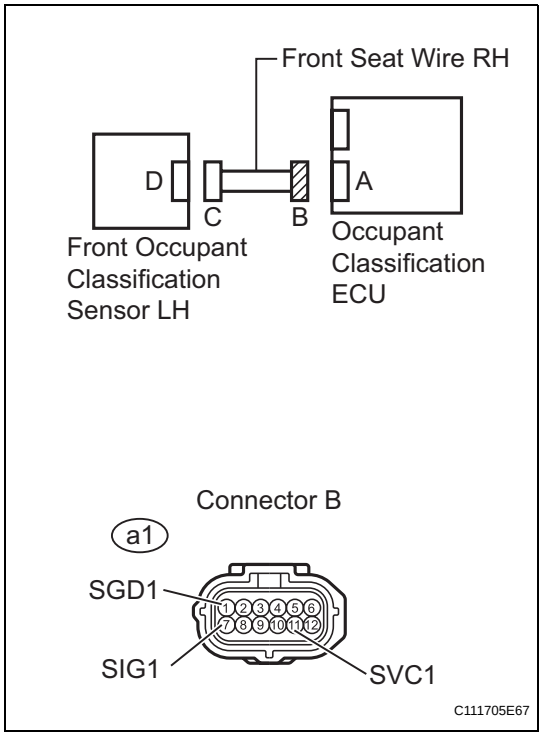

(a) Measure the resistance of the wire harness side connector.

Standard resistance

Tester Connection	Specified Condition
a1-1 (SGD1) - Body ground	1 MΩ or higher
a1-7 (SIG1) - Body ground	1 MΩ or higher
a1-11 (SVC1) - Body ground	1 MΩ or higher

NG → **REPAIR OR REPLACE FRONT SEAT WIRE RH**

OK

RS

7	CHECK FOR DTC

(a) Connect the connectors to the occupant classification ECU and the front occupant classification sensor LH.
(b) Connect the cable to the negative (-) battery terminal, and wait for at least 2 seconds.
(c) Turn the ignition switch ON.
(d) Clear the DTCs (see page RS-249).
HINT:
First clear DTCs stored in the occupant classification ECU and then in the center airbag sensor.
(e) Turn the ignition switch OFF.
(f) Turn the ignition switch ON.
(g) Check the DTCs (see page RS-249).
OK:
DTC B1780 is not output.
HINT:
DTCs other than DTC B1780 may be output at this time, but they are not related to this check.

OK	USE SIMULATION METHOD TO CHECK

NG

8	REPLACE OCCUPANT CLASSIFICATION ECU

(a) Turn the ignition switch OFF.
(b) Disconnect the cable from the negative (-) battery terminal, and wait for at least 90 seconds.
(c) Replace the occupant classification ECU (see page RS-392).
HINT:
Perform the inspection using parts from a normal vehicle if possible.

NEXT

9	PERFORM ZERO POINT CALIBRATION

(a) Connect the cable to the negative (-) battery terminal, and wait for at least 2 seconds.
(b) Connect the intelligent tester (with CAN VIM) to the DLC3.
(c) Turn the ignition switch ON.
(d) Using the intelligent tester, perform the zero point calibration (see page RS-241).
OK:
COMPLETED is displayed.

NG	Go to step 12

OK

RS

10	PERFORM SENSITIVITY CHECK

(a) Using the intelligent tester, perform the sensitivity check (see page RS-241).
Standard values:
27 to 33 kg (59.52 to 72.75 lb)

NG → **Go to step 12**

OK

11	CHECK FOR DTC

(a) Connect the cable to the negative (-) battery terminal, and wait for at least 2 seconds.
(b) Turn the ignition switch ON.
(c) Clear the DTCs (see page RS-249).
HINT:
First clear DTCs stored in the occupant classification ECU and then in the center airbag sensor.
(d) Turn the ignition switch OFF.
(e) Turn the ignition switch ON.
(f) Check the DTCs (see page RS-249).
OK:
DTC B1780 is not output.
HINT:
Codes other than DTC B1780 may be output at this time, but they are not related to this check.

OK → **END**

RS

NG

12	REPLACE FRONT SEAT ASSEMBLY RH

(a) Turn the ignition switch OFF.
(b) Disconnect the cable from the negative (-) battery terminal, and wait for at least 90 seconds.
(c) Replace the front seat RH (see page SE-11).

NEXT

13	PERFORM ZERO POINT CALIBRATION

(a) Connect the cable to the negative (-) battery terminal, and wait for at least 2 seconds.
(b) Connect the intelligent tester to the DLC3.
(c) Turn the ignition switch ON.
(d) Using the intelligent tester, perform the zero point calibration (see page RS-241).
OK:
COMPLETED is displayed.

NEXT

14	PERFORM SENSITIVITY CHECK

(a) Using the intelligent tester, perform the sensitivity check (see page RS-241).
Standard value:
27 to 33 kg (59.52 to 72.75 lb)

NEXT

END

DTC	B1781	Front Occupant Classification Sensor RH Circuit Malfunction

DESCRIPTION

The front occupant classification sensor RH circuit consists of the occupant classification ECU and the front occupant classification sensor RH.
DTC B1781 is recorded when a malfunction is detected in the front occupant classification sensor RH circuit.

DTC No.	DTC Detection Condition	Trouble Area
B1781	When one of following conditions is met: • Occupant classification ECU detects line short signal, open signal, short to ground signal or short to B+ signal in the front occupant classification sensor RH circuit for 2 seconds • Front occupant classification sensor RH malfunction • Occupant classification ECU malfunction	• Front seat wire RH • Front seat RH (Front occupant classification sensor RH) • Occupant classification ECU

WIRING DIAGRAM

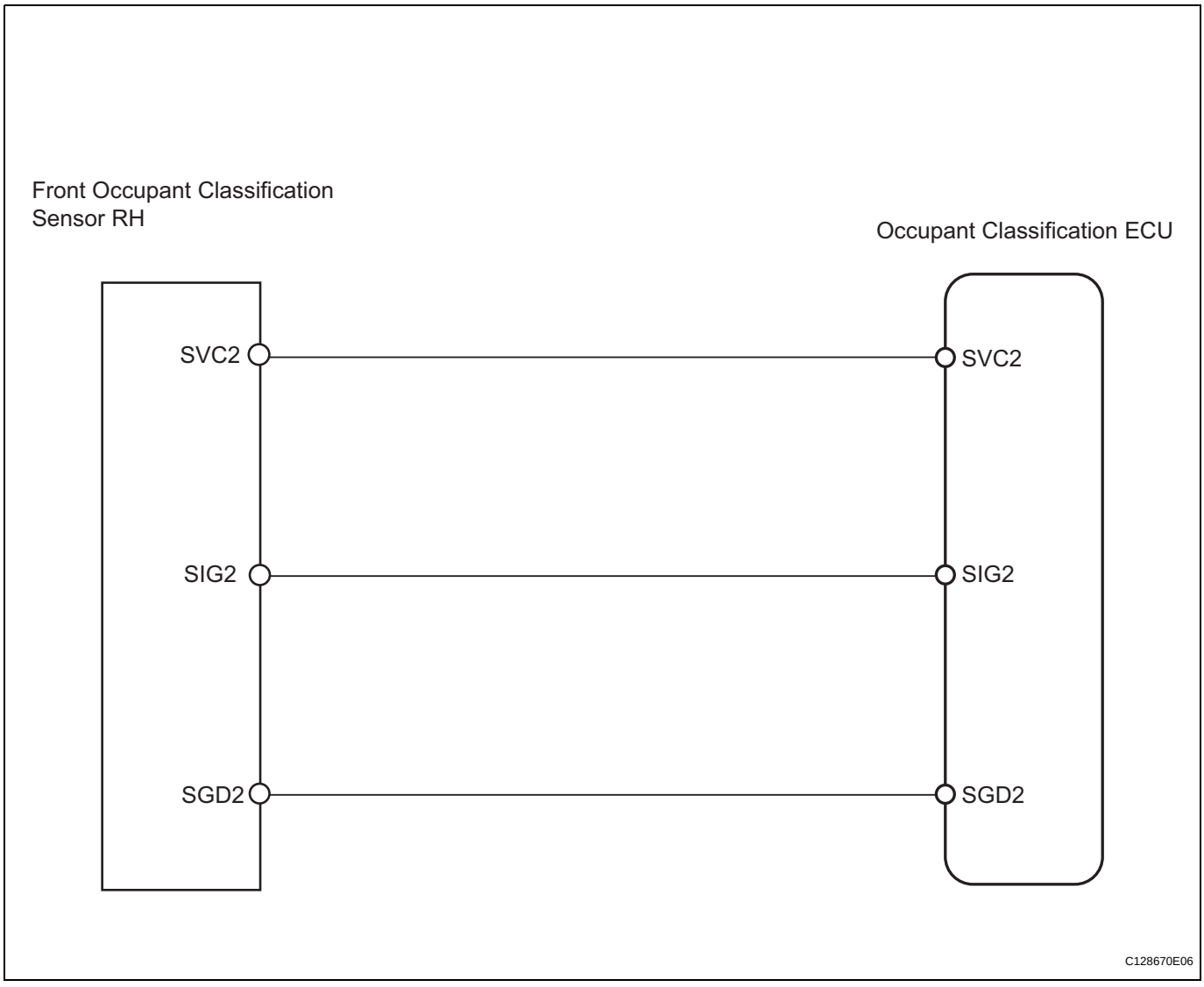

RS

INSPECTION PROCEDURE

HINT:

- If troubleshooting (wire harness inspection) is difficult to perform, remove the front passenger seat installation bolts to see the undersurface of the seat cushion.
- In the above case, hold the seat so that it does not tip over. Holding the seat for a long period of time may cause a problem, such as seat rail deformation. Hold the seat up only for as long as necessary.

1	CHECK FOR DTC

(a) Turn the ignition switch ON.
(b) Clear the DTCs (see page RS-249).
HINT:
First clear DTCs stored in the occupant classification ECU and then in the center airbag sensor.
(c) Turn the ignition switch OFF.
(d) Turn the ignition switch ON.
(e) Check the DTCs (see page RS-249).
OK:
DTC B1781 is not output.
HINT:
DTCs other than DTC B1781 may be output at this time, but they are not related to this check.

OK → **USE SIMULATION METHOD TO CHECK**

NG

2	CHECK CONNECTION OF CONNECTOR

(a) Turn the ignition switch OFF.
(b) Disconnect the cable from the negative (-) battery terminal, and wait for at least 90 seconds.
(c) Check that the connectors are properly connected to the occupant classification ECU and the front occupant classification sensor RH.
OK:
The connectors are properly connected.

NG → **CONNECT CONNECTOR**

OK

RS

3 CHECK FRONT SEAT WIRE RH (TO B+)

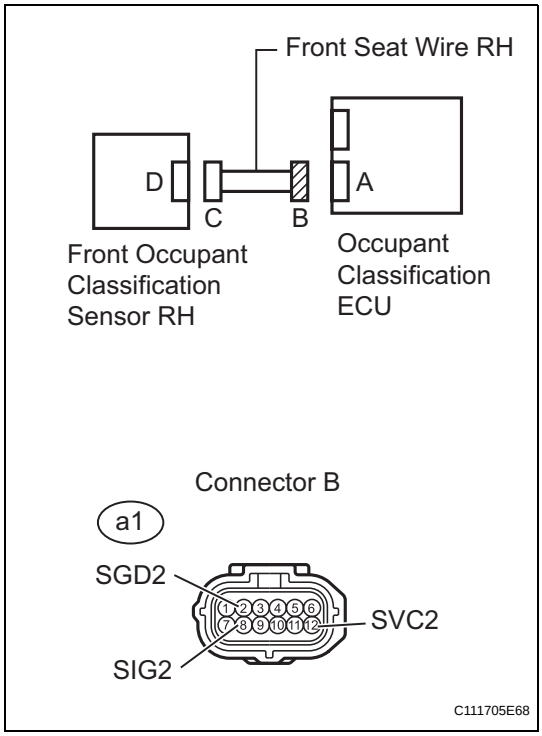

(a) Disconnect the connectors from the occupant classification ECU and the front occupant classification sensor RH.
(b) Connect the cable to the negative (-) battery terminal, and wait for at least 2 seconds.
(c) Turn the ignition switch ON.
(d) Measure the voltage of the wire harness side connector.
Standard voltage

Tester Connection	Specified Condition
a1-2 (SGD2) - Body ground	Below 1 V
a1-8 (SIG2) - Body ground	Below 1 V
a1-12 (SVC2) - Body ground	Below 1 V

NG → **REPAIR OR REPLACE FRONT SEAT WIRE RH**

OK

4 CHECK FRONT SEAT WIRE RH (FOR OPEN)

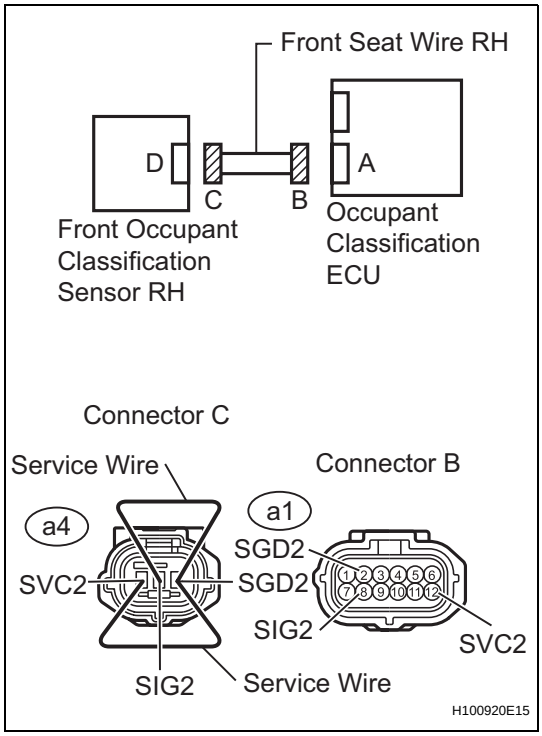

(a) Turn the ignition switch OFF.
(b) Disconnect the cable from the negative (-) battery terminal, and wait for at least 90 seconds.
(c) Using a service wire, connect terminals a4-1 (SVC2) and a4-3 (SGD2), and connect terminals a4-2 (SIG2) and a4-3 (SGD2) of connector C.
NOTICE:
Do not forcibly insert a service wire into the terminals of the connector when connecting them.
(d) Measure the resistance of the wire harness side connector.
Standard resistance

Tester Connection	Specified Condition
a1-8 (SIG2) - a1-2 (SGD2)	Below 1 Ω
a1-12 (SVC2) - a1-2 (SGD2)	Below 1 Ω

NG → **REPAIR OR REPLACE FRONT SEAT WIRE RH**

OK

RS

5 CHECK FRONT SEAT WIRE RH (FOR SHORT)

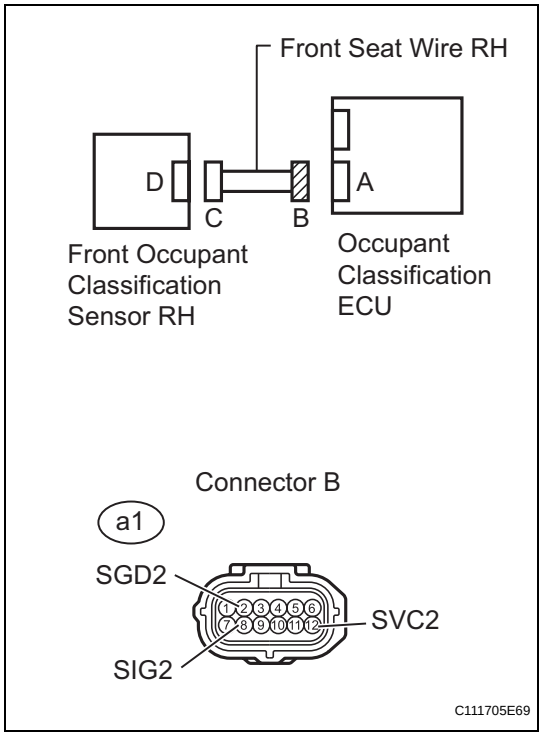

(a) Disconnect the service wire from connector C.
(b) Measure the resistance of the wire harness side connector.

Standard resistance

Tester Connection	Specified Condition
a1-8 (SIG2) - a1-2 (SGD2)	1 MΩ or higher
a1-12 (SVC2) - a1-2 (SGD2)	1 MΩ or higher
a1-8 (SIG2) - a1-12 (SVC2)	1 MΩ or higher

NG → **REPAIR OR REPLACE FRONT SEAT WIRE RH**

OK

6 CHECK FRONT SEAT WIRE RH (TO GROUND)

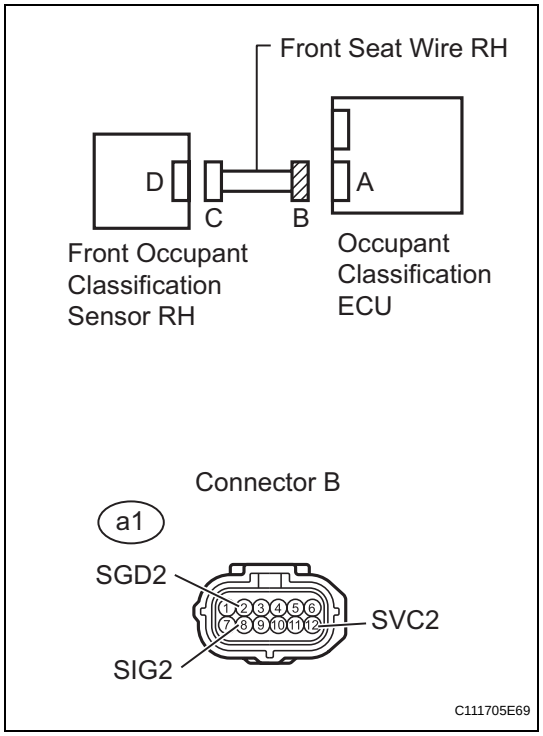

(a) Measure the resistance of the wire harness side connector.

Standard resistance

Tester Connection	Specified Condition
a1-2 (SGD2) - Body ground	1 MΩ or higher
a1-8 (SIG2) - Body ground	1 MΩ or higher
a1-12 (SVC2) - Body ground	1 MΩ or higher

NG → **REPAIR OR REPLACE FRONT SEAT WIRE RH**

OK

RS

7	CHECK FOR DTC

(a) Connect the connectors to the occupant classification ECU and the front occupant classification sensor RH.
(b) Connect the cable to the negative (-) battery terminal, and wait for at least 2 seconds.
(c) Turn the ignition switch ON.
(d) Clear the DTCs (see page RS-249).
HINT:
First clear DTCs stored in the occupant classification ECU and then in the center airbag sensor.
(e) Turn the ignition switch OFF.
(f) Turn the ignition switch ON.
(g) Check the DTCs (see page RS-249).
OK:
DTC B1781 is not output.
HINT:
DTCs other than DTC B1781 may be output at this time, but they are not related to this check.

OK → **USE SIMULATION METHOD TO CHECK**

NG

8	REPLACE OCCUPANT CLASSIFICATION ECU

(a) Turn the ignition switch OFF.
(b) Disconnect the cable from the negative (-) battery terminal, and wait for at least 90 seconds.
(c) Replace the occupant classification ECU (see page RS-392).
HINT:
Perform the inspection using parts from a normal vehicle if possible.

NEXT

9	PERFORM ZERO POINT CALIBRATION

(a) Connect the cable to the negative (-) battery terminal, and wait for at least 2 seconds.
(b) Connect the intelligent tester to the DLC3.
(c) Turn the ignition switch ON.
(d) Using the intelligent tester, perform the zero point calibration (see page RS-241).
OK:
COMPLETED is displayed.

NG → **Go to step 12**

OK

RS

10	PERFORM SENSITIVITY CHECK

(a) Using the intelligent tester, perform the sensitivity check (see page RS-241).
Standard value:
27 to 33 kg (59.52 to 72.75 lb)

NG → **Go to step 12**

OK

11	CHECK FOR DTC

(a) Connect the cable to the negative (-) battery terminal, and wait for at least 2 seconds.
(b) Turn the ignition switch ON.
(c) Clear the DTCs (see page RS-249).
HINT:
First clear DTCs stored in the occupant classification ECU and then in the center airbag sensor assembly.
(d) Turn the ignition switch OFF.
(e) Turn the ignition switch ON.
(f) Check the DTCs (see page RS-249).
OK:
DTC B1781 is not output.
HINT:
DTCs other than DTC B1781 may be output at this time, but they are not related to this check.

OK → **END**

NG

12	REPLACE FRONT SEAT ASSEMBLY RH

(a) Turn the ignition switch OFF.
(b) Disconnect the cable from the negative (-) battery terminal, and wait for at least 90 seconds.
(c) Replace the front seat RH (see page SE-8).

NEXT

13	PERFORM ZERO POINT CALIBRATION

(a) Connect the cable to the negative (-) battery terminal, and wait for at least 2 seconds.
(b) Connect the intelligent tester to the DLC3.
(c) Turn the ignition switch ON.
(d) Using the intelligent tester, perform the zero point calibration (see page RS-241).
OK:
COMPLETED is displayed.

NEXT

14	PERFORM SENSITIVITY CHECK

(a) Using the intelligent tester, perform the sensitivity check (see page RS-241).
Standard value:
27 to 33 kg (59.52 to 72.75 lb)

NEXT

END

DTC	B1782	Rear Occupant Classification Sensor LH Circuit Malfunction

DESCRIPTION

The rear occupant classification sensor LH circuit consists of the occupant classification ECU and the rear occupant classification sensor LH.
DTC B1782 is recorded when a malfunction is detected in the rear occupant classification sensor LH circuit.

DTC No.	DTC Detection Condition	Trouble Area
B1782	When one of following conditions is met: • Occupant classification ECU detects line short signal, open signal, short to ground signal or short to B+ signal in the rear occupant classification sensor LH circuit for 2 seconds • Rear occupant classification sensor LH malfunction • Occupant classification ECU malfunction	• Front seat wire RH • Front seat RH (Rear occupant classification sensor LH) • Occupant classification ECU

WIRING DIAGRAM

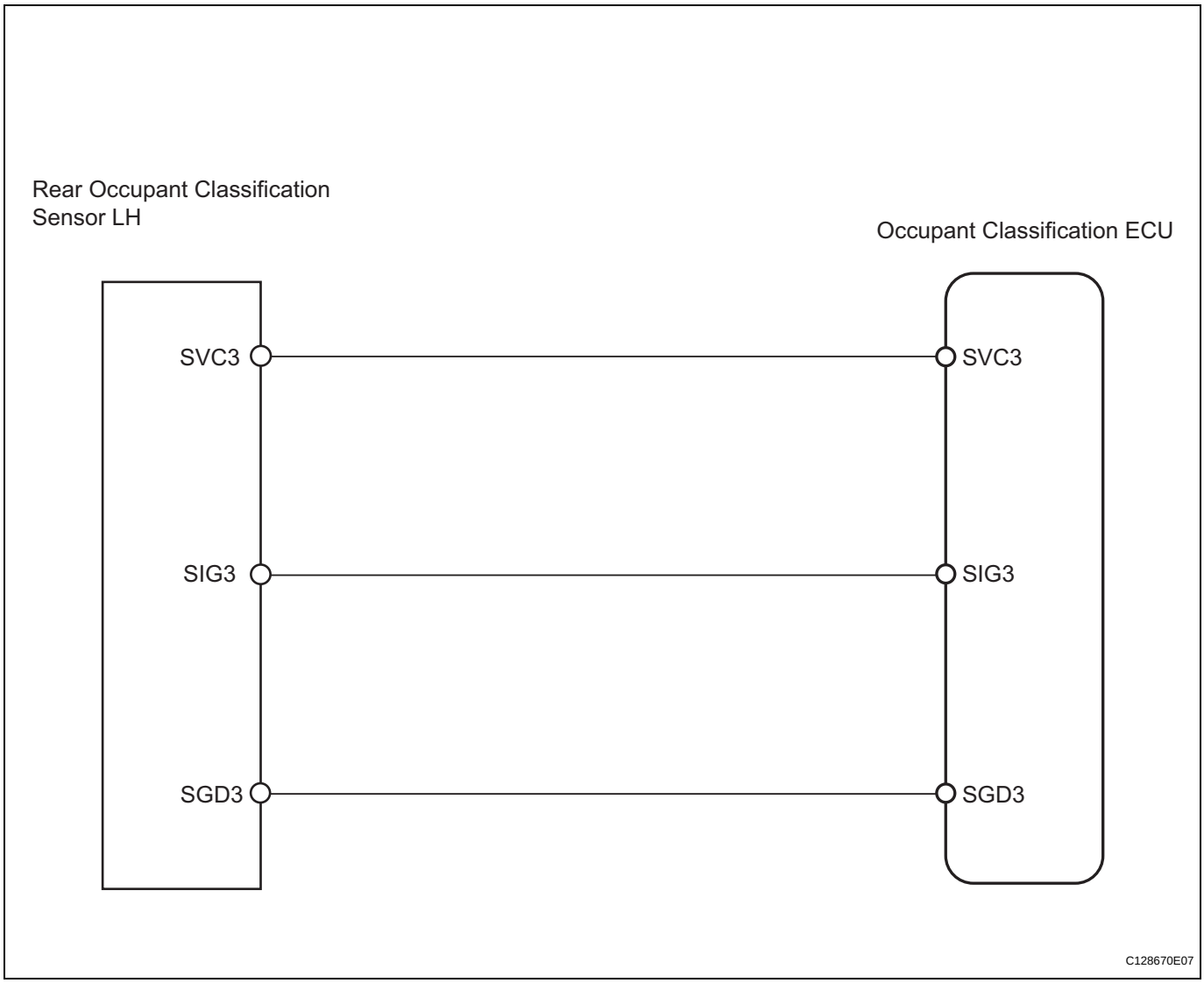

RS

INSPECTION PROCEDURE

HINT:

- If troubleshooting (wire harness inspection) is difficult to perform, remove the front passenger seat installation bolts to see the undersurface of the seat cushion.
- In the above case, hold the seat so that it does not tip over. Holding the seat for a long period of time may cause a problem, such as seat rail deformation. Hold the seat up only for as long as necessary.

1	CHECK FOR DTC

(a) Turn the ignition switch ON.
(b) Clear the DTCs (see page RS-249).
HINT:
First clear DTCs stored in the occupant classification ECU and then in the center airbag sensor.
(c) Turn the ignition switch OFF.
(d) Turn the ignition switch ON.
(e) Check the DTCs (see page RS-249).
OK:
DTC B1782 is not output.
HINT:
DTCs other than DTC B1782 may be output at this time, but they are not related to this check.

OK → **USE SIMULATION METHOD TO CHECK**

NG

2	CHECK CONNECTION OF CONNECTOR

(a) Turn the ignition switch OFF.
(b) Disconnect the cable from the negative (-) battery terminal, and wait for at least 90 seconds.
(c) Check that the connectors are properly connected to the occupant classification ECU and the rear occupant classification sensor LH.
OK:
The connectors are properly connected.

NG → **CONNECT CONNECTOR**

OK

RS

3 CHECK FRONT SEAT WIRE RH (TO B+)

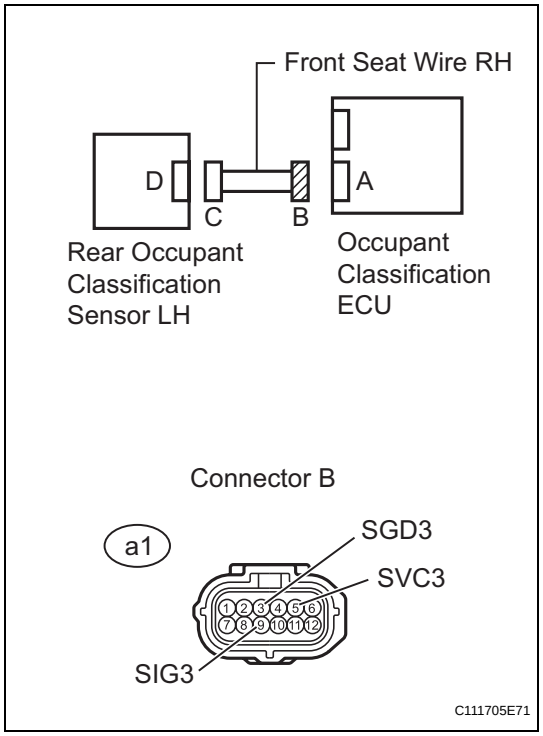

(a) Disconnect the connectors from the occupant classification ECU and the rear occupant classification sensor LH.
(b) Connect the cable to the negative (-) battery terminal, and wait for at least 2 seconds.
(c) Turn the ignition switch ON.
(d) Measure the voltage of the wire harness side connector.

Standard voltage

Tester Connection	Specified Condition
a1-3 (SGD3) - Body ground	Below 1 V
a1-5 (SVC3) - Body ground	Below 1 V
a1-9 (SIG3) - Body ground	Below 1 V

NG → **REPAIR OR REPLACE FRONT SEAT WIRE RH**

OK

4 CHECK FRONT SEAT WIRE RH (FOR OPEN)

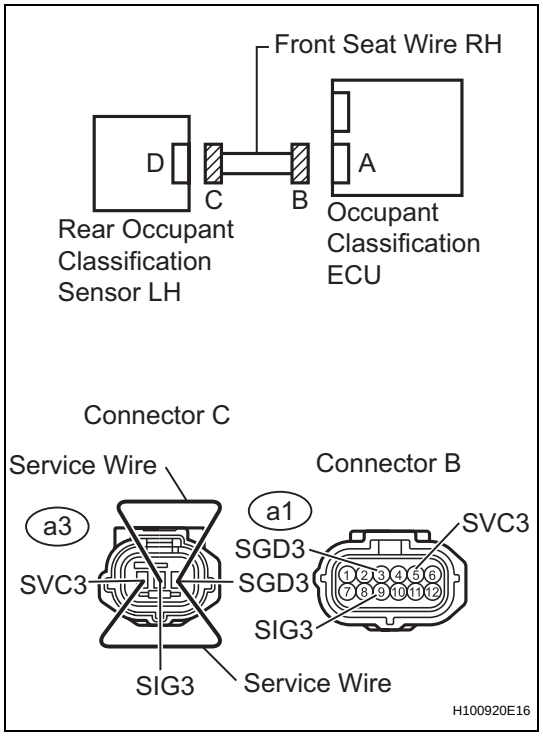

(a) Turn the ignition switch OFF.
(b) Disconnect the cable from the negative (-) battery terminal, and wait for at least 90 seconds.
(c) Using a service wire, connect terminals a3-1 (SVC3) and a3-3 (SGD3), and connect terminals a3-2 (SIG3) and a3-3 (SGD3) of connector C.

NOTICE:
Do not forcibly insert a service wire into the terminals of the connector when connecting them.

(d) Measure the resistance of the wire harness side connector.

Standard resistance

Tester Connection	Specified Condition
a1-5 (SVC3) - a1-3 (SGD3)	Below 1 Ω
a1-9 (SIG3) - a1-3 (SGD3)	Below 1 Ω

NG → **REPAIR OR REPLACE FRONT SEAT WIRE RH**

OK

RS

5 CHECK FRONT SEAT WIRE RH (FOR SHORT)

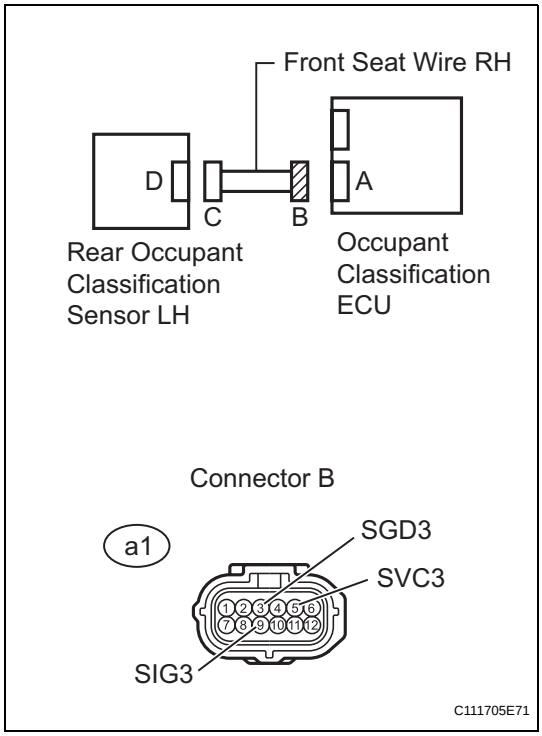

(a) Disconnect the service wire from connector C.
(b) Measure the resistance of the wire harness side connector.

Standard resistance

Tester Connection	Specified Condition
a1-5 (SVC3) - a1-3 (SGD3)	1 MΩ or higher
a1-9 (SIG3) - a1-3 (SGD3)	1 MΩ or higher
a1-5 (SVC3) - a1-9 (SIG3)	1 MΩ or higher

NG → **REPAIR OR REPLACE FRONT SEAT WIRE RH**

OK

6 CHECK FRONT SEAT WIRE RH (TO GROUND)

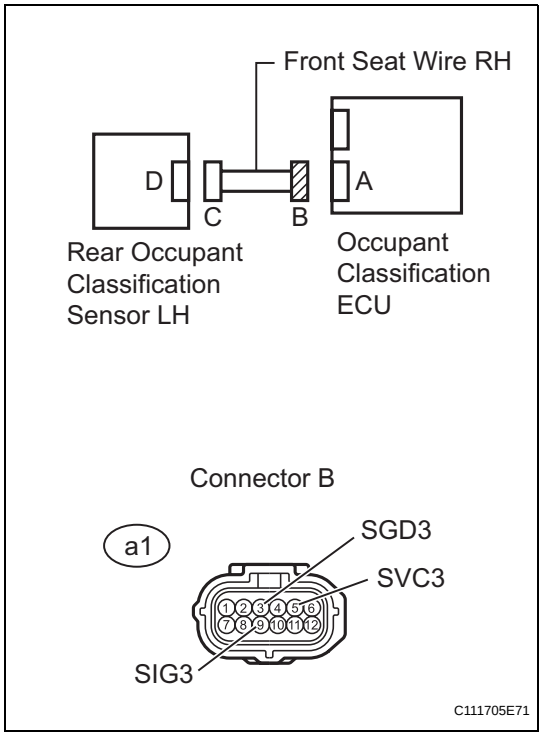

(a) Measure the resistance of the wire harness side connector.

Standard resistance

Tester Connection	Specified Condition
a1-3 (SGD3) - Body ground	1 MΩ or higher
a1-5 (SVC3) - Body ground	1 MΩ or higher
a1-9 (SIG3) - Body ground	1 MΩ or higher

NG → **REPAIR OR REPLACE FRONT SEAT WIRE RH**

OK

RS

7	CHECK FOR DTC

(a) Connect the connectors to the occupant classification ECU and the rear occupant classification sensor LH.
(b) Connect the cable to the negative (-) battery terminal, and wait for at least 2 seconds.
(c) Turn the ignition switch ON.
(d) Clear the DTCs (see page RS-249).
HINT:
First clear DTCs stored in the occupant classification ECU and then in the center airbag sensor.
(e) Turn the ignition switch OFF.
(f) Turn the ignition switch ON.
(g) Check the DTCs (see page RS-249).
OK:
DTC B1782 is not output.
HINT:
DTCs other than DTC B1782 may be output at this time, but they are not related to this check.

OK → **USE SIMULATION METHOD TO CHECK**

NG

8	REPLACE OCCUPANT CLASSIFICATION ECU

(a) Turn the ignition switch OFF.
(b) Disconnect the cable from the negative (-) battery terminal, and wait for at least 90 seconds.
(c) Replace the occupant classification ECU (see page RS-392).
HINT:
Perform the inspection using parts from a normal vehicle if possible.

NEXT

9	PERFORM ZERO POINT CALIBRATION

(a) Connect the cable to the negative (-) battery terminal, and wait for at least 2 seconds.
(b) Connect the intelligent tester to the DLC3.
(c) Turn the ignition switch ON.
(d) Using the intelligent tester, perform the zero point calibration (see page RS-241).
OK:
COMPLETED is displayed.

NG → **Go to step 12**

OK

RS

10	PERFORM SENSITIVITY CHECK

(a) Using the intelligent tester, perform the sensitivity check (see page RS-241).
Standard value:
27 to 33 kg (59.52 to 72.75 lb)

NG → **Go to step 12**

OK

11	CHECK FOR DTC

(a) Connect the cable to the negative (-) battery terminal, and wait for at least 2 seconds.
(b) Turn the ignition switch ON.
(c) Clear the DTCs (see page RS-249).
HINT:
First clear DTCs stored in the occupant classification ECU and then in the center airbag sensor.
(d) Turn the ignition switch OFF.
(e) Turn the ignition switch ON.
(f) Check the DTCs (see page RS-249).
OK:
DTC B1782 is not output.
HINT:
DTCs other than DTC B1782 may be output at this time, but they are not related to this check.

OK → **END**

RS

NG

12	REPLACE FRONT SEAT ASSEMBLY RH

(a) Turn the ignition switch OFF.
(b) Disconnect the cable from the negative (-) battery terminal, and wait for at least 90 seconds.
(c) Replace the front seat assembly RH (see page SE-8).

NEXT

13	PERFORM ZERO POINT CALIBRATION

(a) Connect the negative (-) terminal cable to the battery, and wait for at least 2 seconds.
(b) Connect the intelligent tester to the DLC3.
(c) Turn the ignition switch ON.
(d) Using the intelligent tester, perform the zero point calibration (see page RS-241).
OK:
COMPLETED is displayed.

NEXT

14	PERFORM SENSITIVITY CHECK

(a) Using the intelligent tester, perform the sensitivity check (see page RS-241).
Standard value:
27 to 33 kg (59.52 to 72.75 lb)

NEXT

END

DTC	B1783	Rear Occupant Classification Sensor RH Circuit Malfunction

DESCRIPTION

The rear occupant classification sensor RH circuit consists of the occupant classification ECU and the rear occupant classification sensor RH.
DTC B1783 is recorded when a malfunction is detected in the rear occupant classification sensor RH circuit.

DTC No.	DTC Detection Condition	Trouble Area
B1783	When one of following conditions is met: • Occupant classification ECU detects line short signal, open signal, short to ground signal or short to B+ signal in the rear occupant classification sensor RH circuit for 2 seconds • Rear occupant classification sensor RH malfunction • Occupant classification ECU malfunction	• Front seat wire RH • Front seat RH (Rear occupant classification sensor RH) • Occupant classification ECU

WIRING DIAGRAM

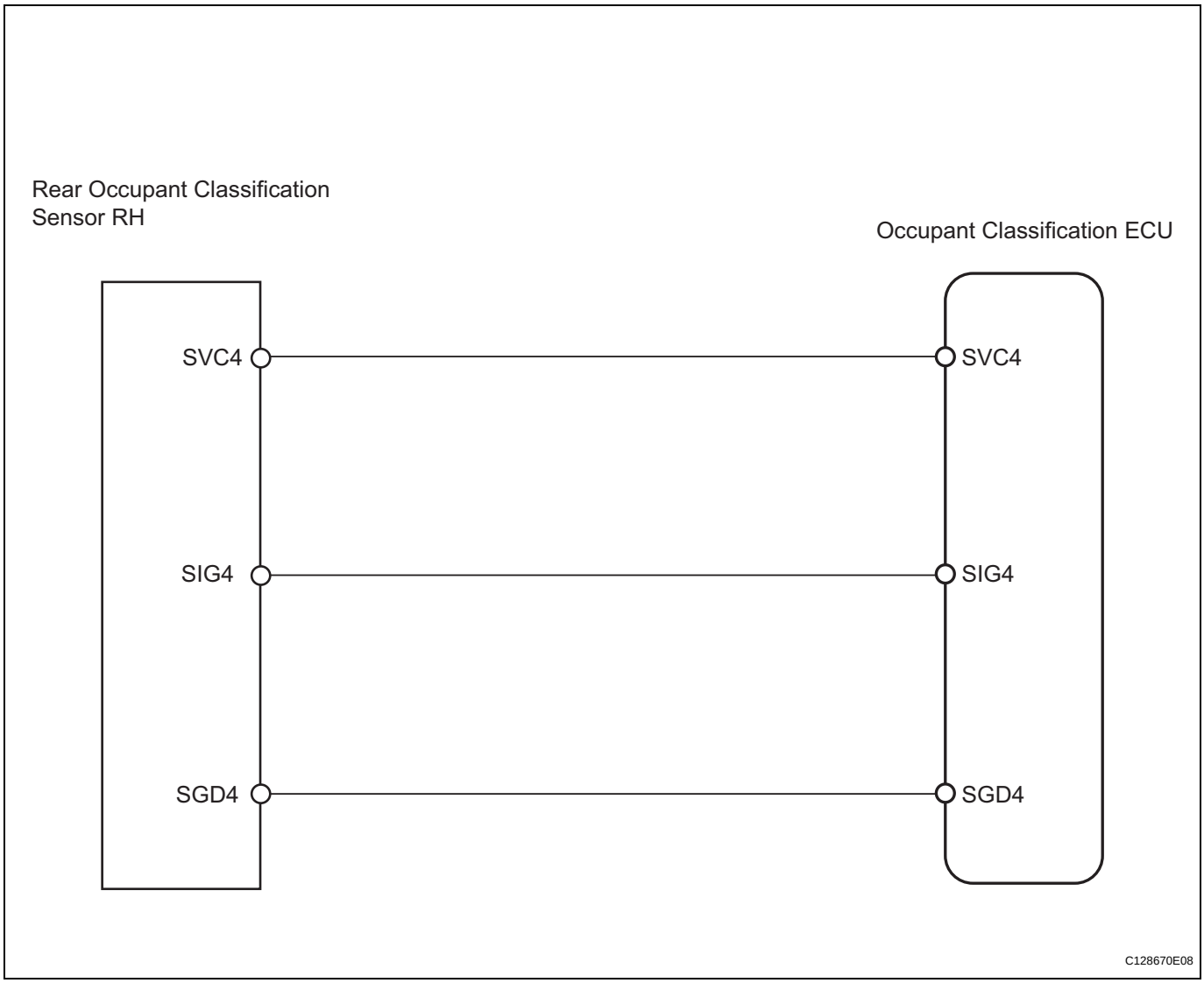

RS

INSPECTION PROCEDURE

HINT:

- If troubleshooting (wire harness inspection) is difficult to perform, remove the front passenger seat installation bolts to see the undersurface of the seat cushion.
- In the above case, hold the seat so that it does not tip over. Holding the seat for a long period of time may cause a problem, such as seat rail deformation. Hold the seat up only for as long as necessary.

1	CHECK DTC

(a) Turn the ignition switch ON.
(b) Clear the DTCs (see page RS-249).
HINT:
First clear DTCs stored in the occupant classification ECU and then in the center airbag sensor.
(c) Turn the ignition switch OFF.
(d) Turn the ignition switch ON.
(e) Check the DTCs (see page RS-249).
OK:
DTC B1783 is not output.
HINT:
DTCs other than DTC B1783 may be output at this time, but they are not related to this check.

OK → **USE SIMULATION METHOD TO CHECK**

NG

2	CHECK CONNECTION OF CONNECTOR

(a) Turn the ignition switch OFF.
(b) Disconnect the cable from the negative (-) battery terminal, and wait for at least 90 seconds.
(c) Check that the connectors are properly connected to the occupant classification ECU and the rear occupant classification sensor RH.
OK:
The connectors are properly connected.

NG → **CONNECT CONNECTOR**

OK

RS

3 CHECK FRONT SEAT WIRE RH (TO B+)

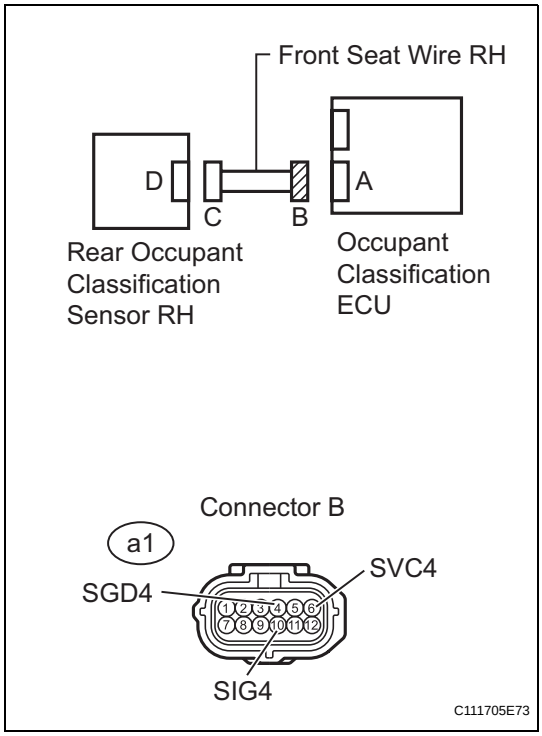

(a) Disconnect the connectors from the occupant classification ECU and the rear occupant classification sensor RH.
(b) Connect the cable to the negative (-) battery terminal, and wait for at least 2 seconds.
(c) Turn the ignition switch ON.
(d) Measure the voltage of the wire harness side connector.

Standard voltage

Tester Connection	Specified Condition
a1-4 (SGD4) - Body ground	Below 1 V
a1-6 (SVC4) - Body ground	Below 1 V
a1-10 (SIG4) - Body ground	Below 1 V

NG → **REPAIR OR REPLACE FRONT SEAT WIRE RH**

OK

4 CHECK FRONT SEAT WIRE RH (FOR OPEN)

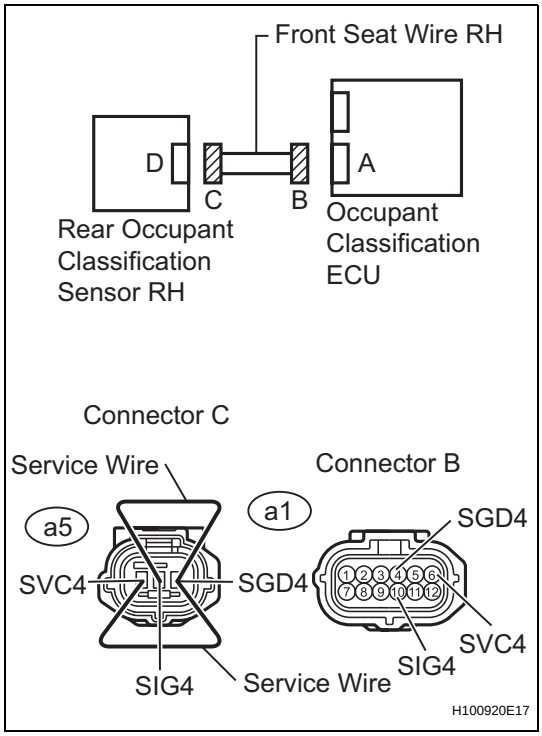

(a) Turn the ignition switch OFF.
(b) Disconnect the cable from the negative (-) battery terminal, and wait for at least 90 seconds.
(c) Using a service wire, connect terminals a5-1 (SVC4) and a5-3 (SGD4), and connect terminals a5-2 (SIG4) and a5-3 (SGD4) of connector C.

NOTICE:
Do not forcibly insert a service wire into the terminals of the connector when connecting them.

(d) Measure the resistance of the wire harness side connector.

Standard resistance

Tester Connection	Specified Condition
a1-6 (SVC4) - a1-4 (SGD4)	Below 1 Ω
a1-10 (SIG4) - a1-4 (SGD4)	Below 1 Ω

NG → **REPAIR OR REPLACE FRONT SEAT WIRE RH**

OK

RS

5 CHECK FRONT SEAT WIRE RH (FOR SHORT)

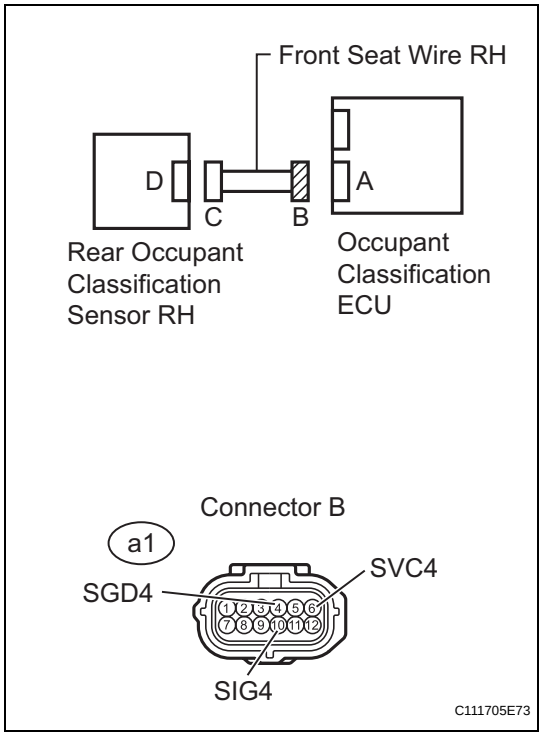

(a) Disconnect the service wire from connector C.
(b) Measure the resistance of the wire harness side connector.

Standard resistance

Tester Connection	Specified Condition
a1-6 (SVC4) - a1-4 (SGD4)	1 MΩ or higher
a1-10 (SIG4) - a1-4 (SGD4)	1 MΩ or higher
a1-6 (SVC4) - a1-10 (SIG4)	1 MΩ or higher

NG → **REPAIR OR REPLACE FRONT SEAT WIRE RH**

OK

6 CHECK FRONT SEAT WIRE RH (TO GROUND)

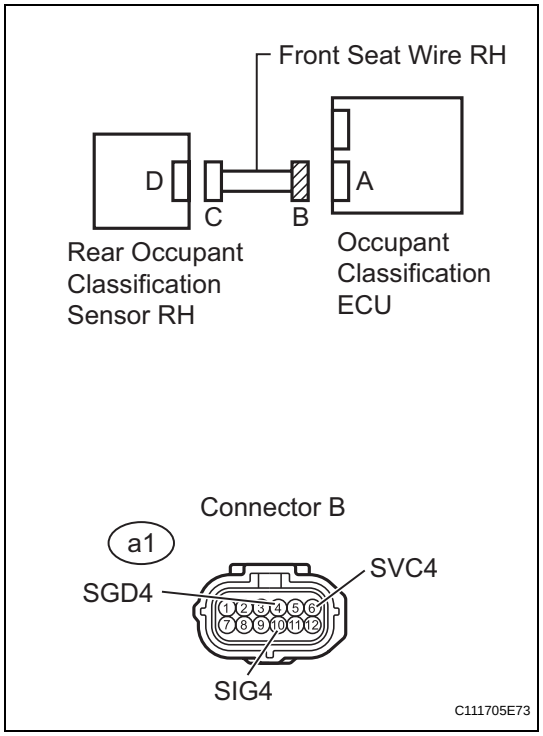

(a) Measure the resistance of the wire harness side connector.

Standard resistance

Tester Connection	Specified Condition
a1-4 (SGD4) - Body ground	1 MΩ or higher
a1-6 (SVC4) - Body ground	1 MΩ or higher
a1-10 (SIG4) - Body ground	1 MΩ or higher

NG → **REPAIR OR REPLACE FRONT SEAT WIRE RH**

OK

RS

7	CHECK FOR DTC

(a) Connect the connectors to the occupant classification ECU and the rear occupant classification sensor RH.
(b) Connect the cable to the negative (-) battery terminal, and wait for at least 2 seconds.
(c) Turn the ignition switch ON.
(d) Clear the DTCs (see page RS-249).
HINT:
First clear DTCs stored in the occupant classification ECU and then in the center airbag sensor.
(e) Turn the ignition switch OFF.
(f) Turn the ignition switch ON.
(g) Check the DTCs (see page RS-249).
OK:
DTC B1783 is not output.
HINT:
DTCs other than DTC B1783 may be output at this time, but they are not related to this check.

OK	USE SIMULATION METHOD TO CHECK

NG

8	REPLACE OCCUPANT CLASSIFICATION ECU

(a) Turn the ignition switch OFF.
(b) Disconnect the cable from the negative (-) battery terminal, and wait for at least 90 seconds.
(c) Replace the occupant classification ECU (see page RS-392).
HINT:
Perform the inspection using parts from a normal vehicle if possible.

NEXT

9	PERFORM ZERO POINT CALIBRATION

(a) Connect the cable to the negative (-) battery terminal, and wait for at least 2 seconds.
(b) Connect the intelligent tester to the DLC3.
(c) Turn the ignition switch ON.
(d) Using the intelligent tester, perform the zero point calibration (see page RS-241).
OK:
COMPLETED is displayed.

NG	Go to step 12

OK

RS

10	PERFORM SENSITIVITY CHECK

(a) Using the intelligent tester, perform the sensitivity check (see page RS-241).
Standard value:
27 to 33 kg (59.52 to 72.75 lb)

NG → **Go to step 12**

OK

11	CHECK FOR DTC

(a) Connect the cable to the negative (-) battery terminal, and wait for at least 2 seconds.
(b) Turn the ignition switch ON.
(c) Clear the DTCs (see page RS-249).
HINT:
First clear DTCs stored in the occupant classification ECU and then in the center airbag sensor.
(d) Turn the ignition switch OFF.
(e) Turn the ignition switch ON.
(f) Check the DTCs (see page RS-249).
OK:
DTC B1783 is not output.
HINT:
DTCs other than DTC B1783 may be output at this time, but they are not related to this check.

OK → **END**

NG

12	REPLACE FRONT SEAT ASSEMBLY RH

(a) Turn the ignition switch OFF.
(b) Disconnect the cable from the negative (-) battery terminal, and wait for at least 90 seconds.
(c) Replace the front seat RH (see page SE-8).

NEXT

13	PERFORM ZERO POINT CALIBRATION

(a) Connect the cable to the negative (-) battery terminal, and wait for at least 2 seconds.
(b) Connect the intelligent tester to the DLC3.
(c) Turn the ignition switch ON.
(d) Using the intelligent tester, perform the zero point calibration (see page RS-241).
OK:
COMPLETED is displayed.

NEXT

14	PERFORM SENSITIVITY CHECK

(a) Using the intelligent tester, perform the sensitivity check (see page RS-241).
Standard value:
27 to 33 kg (59.52 to 72.75 lb)

NEXT

END

DTC	B1785	Front Occupant Classification Sensor LH Collision Detection

DESCRIPTION

DTC B1785 is output when the occupant classification ECU receives a collision detection signal sent by the front occupant classification sensor LH when an accident occurs.
DTC B1785 is also output when the front seat RH is subjected to a strong impact, even if an actual accident does not occur.
However, when the occupant classification ECU outputs a collision detection signal, even if the vehicle is not in a collision, DTC B1785 can be cleared by performing the zero point calibration and sensitivity check.
Therefore, when DTC B1785 is output, first perform the zero point calibration and sensitivity check.

DTC No.	DTC Detection Condition	Trouble Area
B1785	When one of following conditions is met: • Front seat RH malfunction • Occupant classification ECU malfunction • Front occupant classification sensor LH detects large load	• Occupant classification ECU • Front seat RH (Front occupant classification sensor LH)

WIRING DIAGRAM

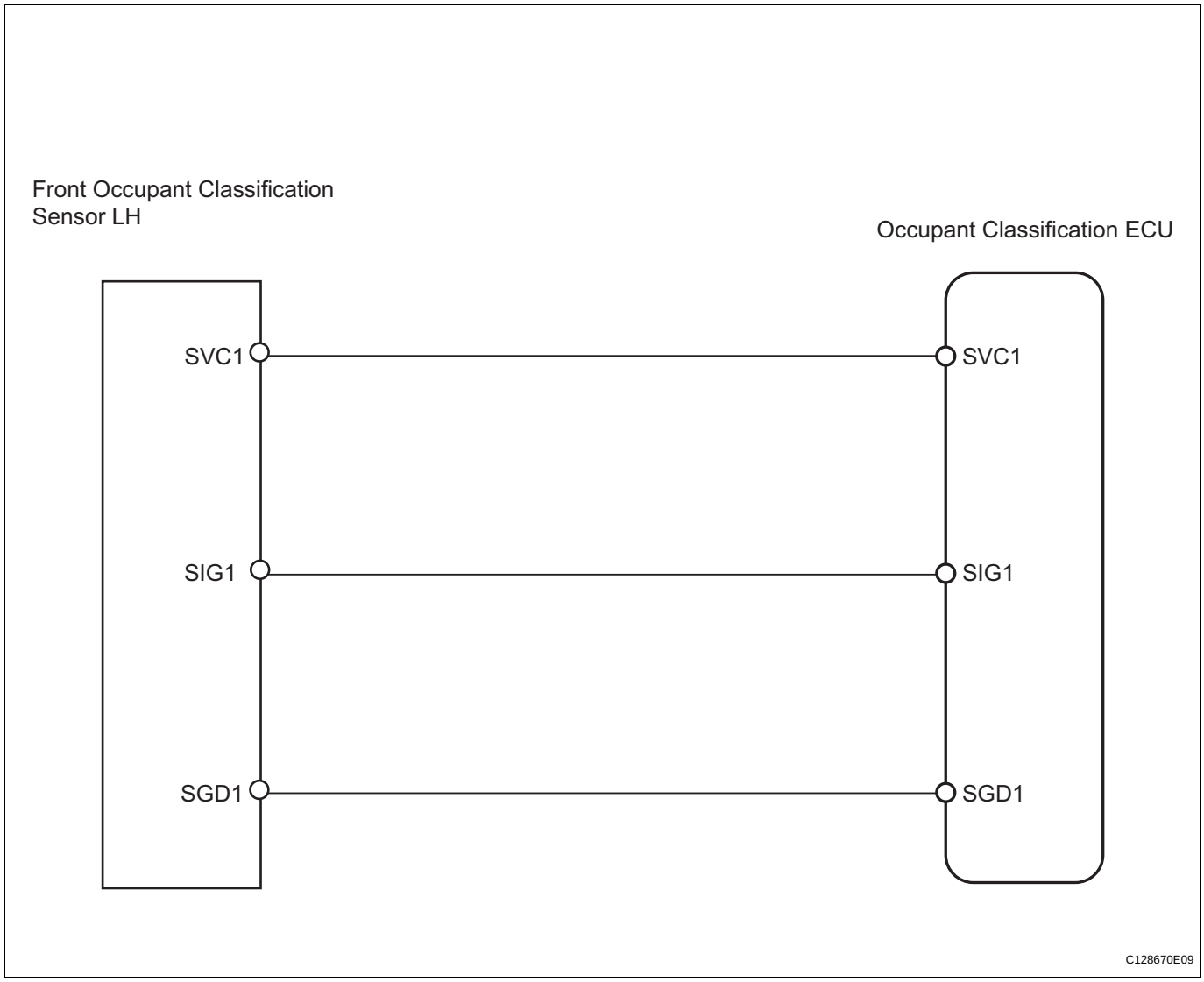

RS

INSPECTION PROCEDURE

1 PERFORM ZERO POINT CALIBRATION

(a) Connect the intelligent tester (with CAN VIM) to the DLC3.
(b) Turn the ignition switch ON.
(c) Using the intelligent tester, perform the zero point calibration (see page RS-241).
OK:
COMPLETED is displayed.

NG → **Go to step 4**

OK

2 PERFORM SENSITIVITY CHECK

(a) Using the intelligent tester, perform the sensitivity check (see page RS-241).
Standard value:
27 to 33 kg (59.52 to 72.75 lb)

NG → **Go to step 4**

OK

3 CHECK FOR DTC

(a) Turn the ignition switch ON.
(b) Clear the DTCs (see page RS-249).
HINT:
First clear DTCs stored in the occupant classification ECU and then in the center airbag sensor.
(c) Turn the ignition switch OFF.
(d) Turn the ignition switch ON.
(e) Check the DTCs (see page RS-249).
OK:
DTC B1785 is not output.
HINT:
DTCs other than DTC B1785 may be output at this time, but they are not related to this check.

OK → **USE SIMULATION METHOD TO CHECK**

NG

4 REPLACE FRONT SEAT ASSEMBLY RH

(a) Turn the ignition switch OFF.
(b) Disconnect the cable from the negative (-) battery terminal, and wait for at least 90 seconds.

RS

(c) Replace the front seat RH (see page SE-8).
HINT:
Perform the inspection using parts from a normal vehicle if possible.

NEXT

5	PERFORM ZERO POINT CALIBRATION

(a) Connect the cable to the negative (-) battery terminal, and wait for at least 2 seconds.
(b) Connect the intelligent tester (with CAN VIM) to the DLC3.
(c) Turn the ignition switch ON.
(d) Using the intelligent tester, perform the zero point calibration (see page RS-241).
OK:
COMPLETED is displayed.

NG → **Go to step 8**

OK

6	PERFORM SENSITIVITY CHECK

(a) Using the intelligent tester, perform the sensitivity check (see page RS-241).
Standard value:
27 to 33 kg (59.52 to 72.75 lb)

NG → **Go to step 8**

OK

RS

7	CHECK FOR DTC

(a) Turn the ignition switch ON.
(b) Clear the DTCs (see page RS-249).
HINT:
First clear DTCs stored in the occupant classification ECU and then in the center airbag sensor.
(c) Turn the ignition switch OFF.
(d) Turn the ignition switch ON.
(e) Check the DTCs (see page RS-249).
OK:
DTC B1785 is not output.
HINT:
DTCs other than DTC B1785 may be output at this time, but they are not related to this check.

OK → **USE SIMULATION METHOD TO CHECK**

NG

8	REPLACE OCCUPANT CLASSIFICATION ECU

(a) Turn the ignition switch OFF.
(b) Disconnect the cable from the negative (-) battery terminal, and wait for at least 90 seconds.
(c) Replace the occupant classification ECU (see page SE-8).

NEXT

9	PERFORM ZERO POINT CALIBRATION

(a) Connect the cable to the negative (-) battery terminal, and wait for at least 2 seconds.
(b) Connect the intelligent tester to the DLC3.
(c) Turn the ignition switch ON.
(d) Using the intelligent tester, perform the zero point calibration (see page RS-241).
OK:
COMPLETED is displayed.

NEXT

10	PERFORM SENSITIVITY CHECK

(a) Using the intelligent tester, perform the sensitivity check (see page RS-241).
Standard value:
27 to 33 kg (59.52 to 72.75 lb)

RS

NEXT

END

DTC	B1786	Front Occupant Classification Sensor RH Collision Detection

DESCRIPTION

DTC B1786 is output when the occupant classification ECU receives a collision detection signal sent by the front occupant classification sensor RH when an accident occurs.
DTC B1786 is also output when the front seat assembly RH is subjected to a strong impact, even if an actual accident does not occur.
However, when the occupant classification ECU outputs a collision detection signal, even if the vehicle is not in a collision, DTC B1786 can be cleared by performing the zero point calibration and sensitivity check.
Therefore, when DTC B1786 is output, first perform the zero point calibration and sensitivity check.

DTC No.	DTC Detection Condition	Trouble Area
B1786	When one of following conditions is met: • Front seat RH malfunction • Occupant classification ECU malfunction • Front occupant classification sensor RH detects large load	• Occupant classification ECU • Front seat RH (Front occupant classification sensor RH)

WIRING DIAGRAM

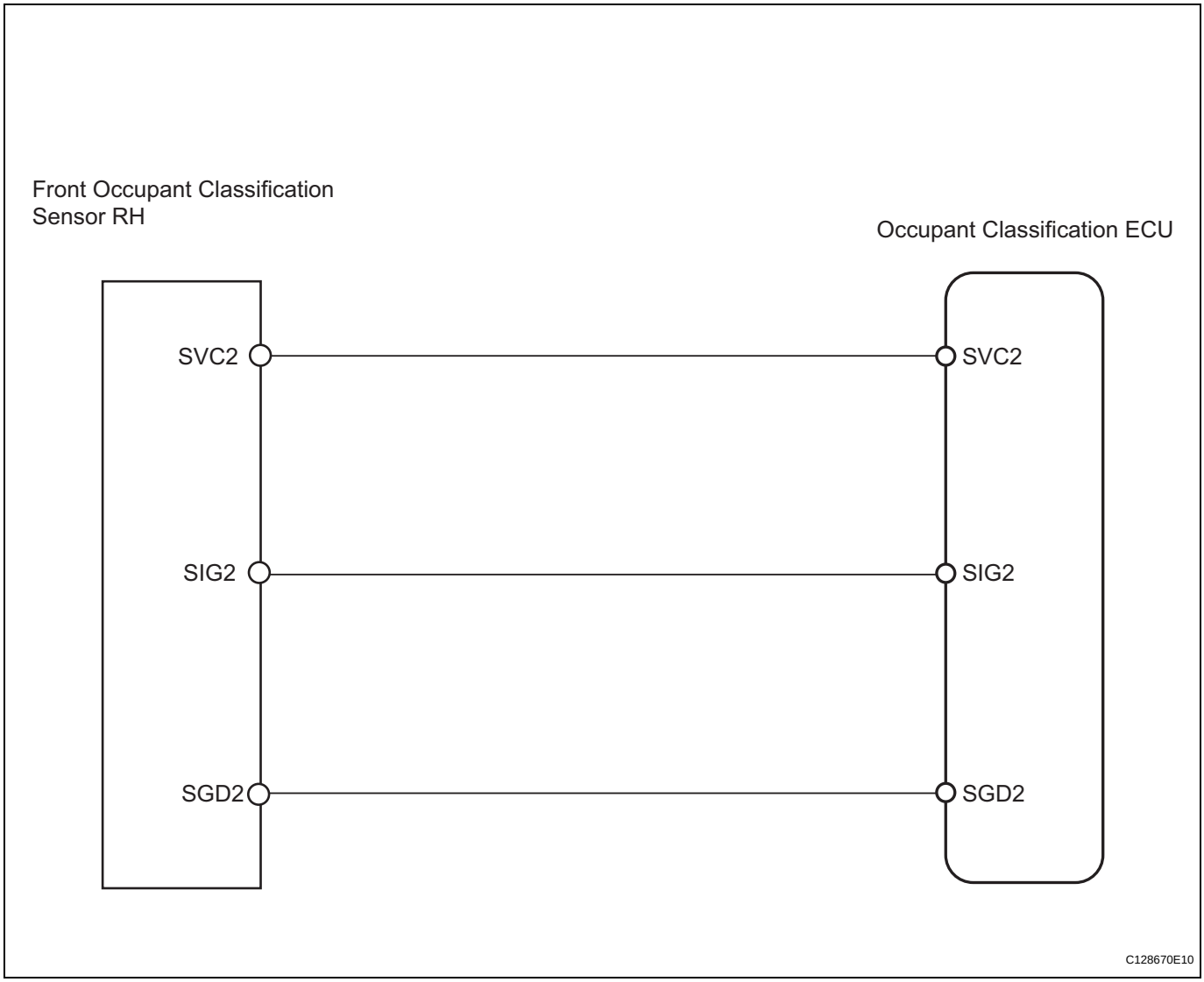

RS

INSPECTION PROCEDURE

1 PERFORM ZERO POINT CALIBRATION

(a) Connect the intelligent tester to the DLC3.
(b) Turn the ignition switch ON.
(c) Using the intelligent tester, perform the zero point calibration (see page RS-241).
OK:
COMPLETED is displayed.

NG → **Go to step 4**

OK ↓

2 PERFORM SENSITIVITY CHECK

(a) Using the intelligent tester, perform the sensitivity check (see page RS-241).
Standard value:
27 to 33 kg (59.52 to 72.75 lb)

NG → **Go to step 4**

OK ↓

3 CHECK FOR DTC

(a) Turn the ignition switch ON.
(b) Clear the DTCs (see page RS-249).
HINT:
First clear DTCs stored in the occupant classification ECU and then in the center airbag sensor.
(c) Turn the ignition switch OFF.
(d) Turn the ignition switch ON.
(e) Check the DTCs (see page RS-249).
OK:
DTC B1786 is not output.
HINT:
DTCs other than DTC B1786 may be output at this time, but they are not related to this check.

OK → **USE SIMULATION METHOD TO CHECK**

NG ↓

4 REPLACE FRONT SEAT ASSEMBLY RH

(a) Turn the ignition switch OFF.
(b) Disconnect the cable from the negative (-) battery terminal, and wait for at least 90 seconds.
(c) Replace the front seat RH (see page SE-8).

HINT:
Perform the inspection using parts from a normal vehicle if possible.

NEXT

5	PERFORM ZERO POINT CALIBRATION

(a) Connect the cable to the negative (-) battery terminal, and wait for at least 2 seconds.
(b) Connect the intelligent tester to the DLC3.
(c) Turn the ignition switch ON.
(d) Using the intelligent tester, perform the zero point calibration (see page RS-241).
OK:
COMPLETED is displayed.

NG → **Go to step 8**

OK

6	PERFORM SENSITIVITY CHECK

(a) Using the intelligent tester, perform the sensitivity check (see page RS-241).
Standard value:
27 to 33 kg (59.52 to 72.75 lb)

NG → **Go to step 8**

OK

7	CHECK FOR DTC

(a) Turn the ignition switch ON.
(b) Clear the DTCs (see page RS-249).
HINT:
First clear DTCs stored in the occupant classification ECU and then in the center airbag sensor.
(c) Turn the ignition switch OFF.
(d) Turn the ignition switch ON.
(e) Check the DTCs (see page RS-249).
OK:
DTC B1786 is not output.
HINT:
DTCs other than DTC B1786 may be output at this time, but they are not related to this check.

OK → **USE SIMULATION METHOD TO CHECK**

NG

RS

8	REPLACE OCCUPANT CLASSIFICATION ECU

(a) Turn the ignition switch OFF.
(b) Disconnect the cable from the negative (-) battery terminal, and wait for at least 90 seconds.
(c) Replace the occupant classification ECU (see page RS-392).

NEXT

9	PERFORM ZERO POINT CALIBRATION

(a) Connect the cable to the negative (-) battery terminal, and wait for at least 2 seconds.
(b) Connect the intelligent tester to the DLC3.
(c) Turn the ignition switch ON.
(d) Using the intelligent tester, perform the zero point calibration (see page RS-241).
OK:
COMPLETED is displayed.

NEXT

10	PERFORM SENSITIVITY CHECK

(a) Using the intelligent tester, perform the sensitivity check (see page RS-241).
Standard value:
27 to 33 kg (59.52 to 72.75 lb)

RS

NEXT

END

DTC	B1787	Rear Occupant Classification Sensor LH Collision Detection

DESCRIPTION

DTC B1787 is output when the occupant classification ECU receives a collision detection signal sent by the rear occupant classification sensor LH when an accident occurs.
DTC B1787 is also output when the front seat assembly RH is subjected to a strong impact, even if an actual accident does not occur.
However, when the occupant classification ECU outputs a collision detection signal, even if the vehicle is not in a collision, DTC B1787 can be cleared by performing the zero point calibration and sensitivity check.
Therefore, when DTC B1787 is output, first perform the zero point calibration and sensitivity check.

DTC No.	DTC Detection Condition	Trouble Area
B1787	When one of following conditions is met: • Front seat RH malfunction • Occupant classification ECU malfunction • Rear occupant classification sensor LH detects large load	• Occupant classification ECU • Front seat RH (Rear occupant classification sensor LH)

WIRING DIAGRAM

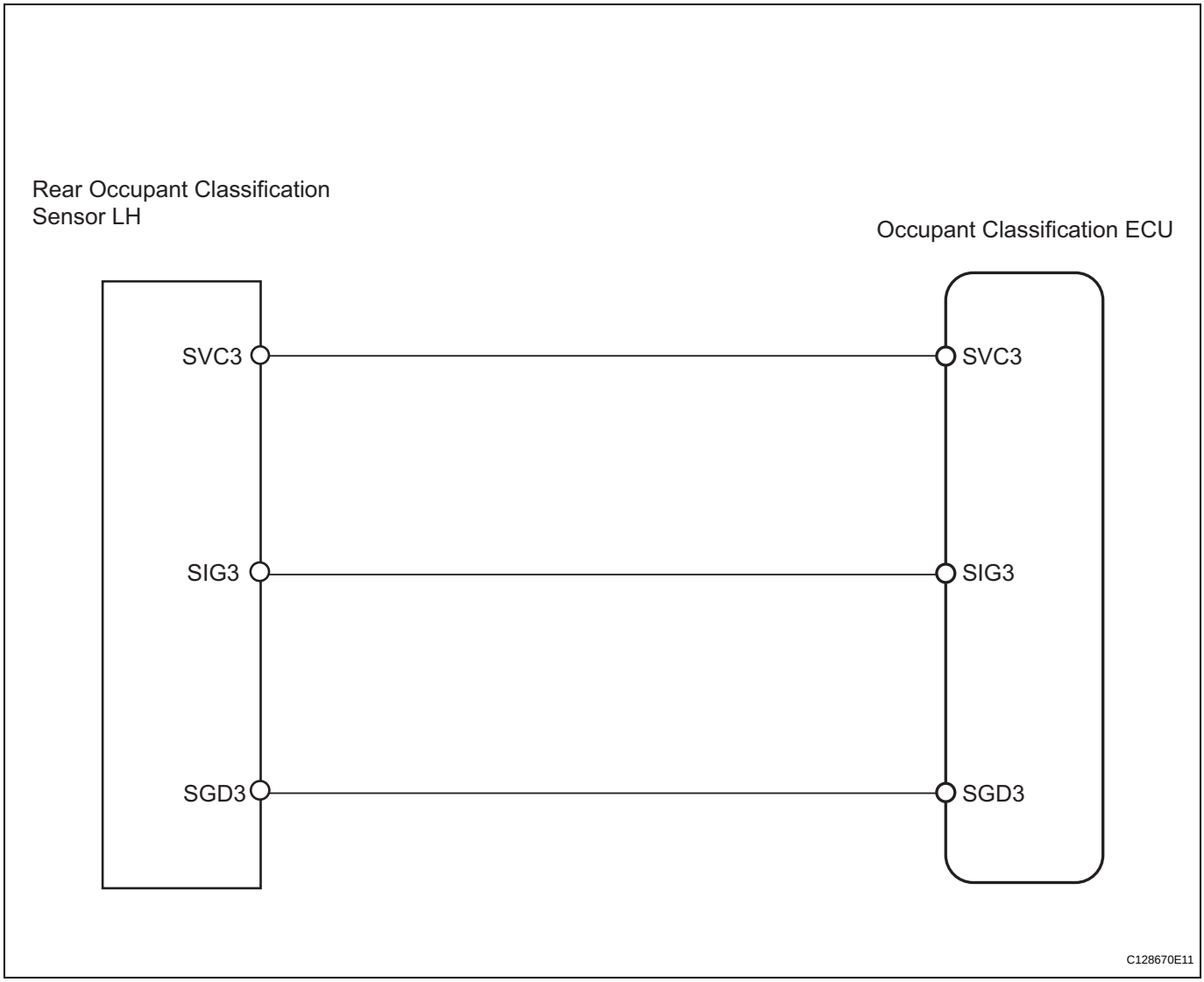

RS

INSPECTION PROCEDURE

1 PERFORM ZERO POINT CALIBRATION

(a) Connect the intelligent tester to the DLC3.
(b) Turn the ignition switch ON.
(c) Using the intelligent tester, perform the zero point calibration (see page RS-241).
OK:
COMPLETED is displayed.

NG → **Go to step 4**

OK

2 PERFORM SENSITIVITY CHECK

(a) Using the intelligent tester, perform the sensitivity check (see page RS-241).
Standard value:
27 to 33 kg (59.52 to 72.75 lb)

NG → **Go to step 4**

OK

3 CHECK FOR DTC

(a) Turn the ignition switch ON.
(b) Clear the DTCs (see page RS-249).
HINT:
First clear DTCs stored in the occupant classification ECU and then in the center airbag sensor.
(c) Turn the ignition switch OFF.
(d) Turn the ignition switch ON.
(e) Check the DTCs (see page RS-249).
OK:
DTC B1787 is not output.
HINT:
DTCs other than DTC B1787 may be output at this time, but they are not related to this check.

OK → **USE SIMULATION METHOD TO CHECK**

NG

4 REPLACE FRONT SEAT ASSEMBLY RH

(a) Turn the ignition switch OFF.
(b) Disconnect the cable from the negative (-) battery terminal, and wait for at least 90 seconds.
(c) Replace the front seat RH (see page SE-27).

HINT:
Perform the inspection using parts from a normal vehicle if possible.

NEXT

5	PERFORM ZERO POINT CALIBRATION

(a) Connect the cable to the negative (-) battery terminal, and wait for at least 2 seconds.
(b) Connect the intelligent tester to the DLC3.
(c) Turn the ignition switch ON.
(d) Using the intelligent tester, perform the zero point calibration (see page RS-241).
OK:
COMPLETED is displayed.

NG → **Go to step 8**

OK

6	PERFORM SENSITIVITY CHECK

(a) Using the intelligent tester, perform the sensitivity check (see page RS-241).
Standard value:
27 to 33 kg (59.52 to 72.75 lb)

NG → **Go to step 8**

OK

7	CHECK FOR DTC

(a) Turn the ignition switch ON.
(b) Clear the DTCs (see page RS-249).
HINT:
First clear DTCs stored in the occupant classification ECU and then in the center airbag sensor.
(c) Turn the ignition switch OFF.
(d) Turn the ignition switch ON.
(e) Check the DTCs (see page RS-249).
OK:
DTC B1787 is not output.
HINT:
DTCs other than DTC B1787 may be output at this time, but they are not related to this check.

OK → **USE SIMULATION METHOD TO CHECK**

NG

RS

8	REPLACE OCCUPANT CLASSIFICATION ECU

(a) Turn the ignition switch OFF.
(b) Disconnect the cable from the negative (-) battery terminal, and wait for at least 90 seconds.
(c) Replace the occupant classification ECU (see page RS-250).

NEXT

9	PERFORM ZERO POINT CALIBRATION

(a) Connect the cable to the negative (-) battery terminal, and wait for at least 2 seconds.
(b) Connect the intelligent tester to the DLC3.
(c) Turn the ignition switch ON.
(d) Using the intelligent tester, perform the zero point calibration (see page RS-241).
OK:
COMPLETED is displayed.

NEXT

10	PERFORM SENSITIVITY CHECK

(a) Using the intelligent tester, perform the sensitivity check (see page RS-241).
Standard value:
27 to 33 kg (59.52 to 72.75 lb)

RS

NEXT

END

DTC	B1788	Rear Occupant Classification Sensor RH Collision Detection

DESCRIPTION

DTC B1788 is output when the occupant classification ECU receives a collision detection signal sent by the rear occupant classification sensor RH when an accident occurs.
DTC B1788 is also output when the front seat RH is subjected to a strong impact, even if an actual accident does not occur.
However, when the occupant classification ECU outputs a collision detection signal, even if the vehicle is not in a collision, DTC B1788 can be cleared by performing the zero point calibration and sensitivity check.
Therefore, when DTC B1788 is output, first perform the zero point calibration and sensitivity check.

DTC No.	DTC Detection Condition	Trouble Area
B1788	When one of following conditions is met: • Front seat RH malfunction • Occupant classification ECU malfunction • Rear occupant classification sensor RH detects large load	• Occupant classification ECU • Front seat RH (Rear occupant classification sensor RH)

WIRING DIAGRAM

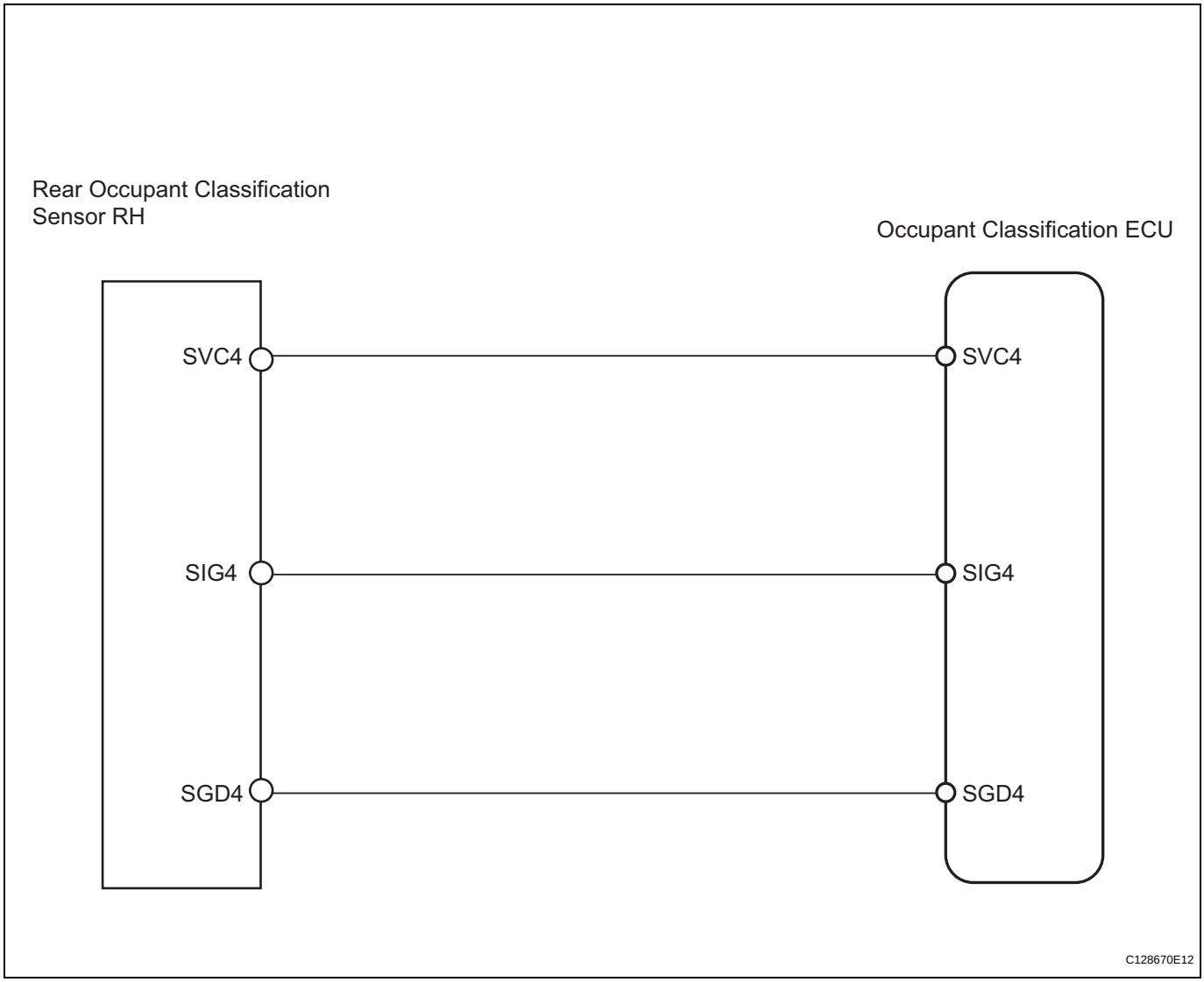

RS

INSPECTION PROCEDURE

1 PERFORM ZERO POINT CALIBRATION

(a) Connect the intelligent tester to the DLC3.
(b) Turn the ignition switch ON.
(c) Using the intelligent tester, perform the zero point calibration (see page RS-241).
OK:
COMPLETED is displayed.

NG → **Go to step 4**

OK

2 PERFORM SENSITIVITY CHECK

(a) Using the intelligent tester, perform the sensitivity check (see page RS-241).
Standard value:
27 to 33 kg (59.52 to 72.75 lb)

NG → **Go to step 4**

OK

3 CHECK FOR DTC

(a) Turn the ignition switch ON.
(b) Clear the DTCs (see page RS-249).
HINT:
First clear DTCs stored in the occupant classification ECU and then in the center airbag sensor.
(c) Turn the ignition switch OFF.
(d) Turn the ignition switch ON.
(e) Check the DTCs (see page RS-249).
OK:
DTC B1788 is not output.
HINT:
DTCs other than DTC B1788 may be output at this time, but they are not related to this check.

OK → **USE SIMULATION METHOD TO CHECK**

NG

4 REPLACE FRONT SEAT ASSEMBLY RH

(a) Turn the ignition switch OFF.
(b) Disconnect the cable from the negative (-) battery terminal, and wait for at least 90 seconds.
(c) Replace the front seat RH (see page SE-8).

HINT:
Perform the inspection using parts from a normal vehicle if possible.

NEXT

5	PERFORM ZERO POINT CALIBRATION

(a) Connect the cable to the negative (-) battery terminal, and wait for at least 2 seconds.
(b) Connect the intelligent tester to the DLC3.
(c) Turn the ignition switch ON.
(d) Using the intelligent tester, perform the zero point calibration (see page RS-241).
OK:
COMPLETED is displayed.

NG → **Go to step 8**

OK

6	PERFORM SENSITIVITY CHECK

(a) Using the intelligent tester, perform the sensitivity check (see page RS-241).
Standard value:
27 to 33 kg (59.52 to 72.75 lb)

NG → **Go to step 8**

OK

7	CHECK FOR DTC

(a) Turn the ignition switch ON.
(b) Clear the DTCs (see page RS-249).
HINT:
First clear DTCs stored in the occupant classification ECU and then in the center airbag sensor.
(c) Turn the ignition switch OFF.
(d) Turn the ignition switch ON.
(e) Check the DTCs (see page RS-249).
OK:
DTC B1788 is not output.
HINT:
DTCs other than DTC B1788 may be output at this time, but they are not related to this check.

OK → **USE SIMULATION METHOD TO CHECK**

NG

RS

8	REPLACE OCCUPANT CLASSIFICATION ECU

(a) Turn the ignition switch OFF.
(b) Disconnect the cable from the negative (-) battery terminal, and wait for at least 90 seconds.
(c) Replace the occupant classification ECU (see page RS-392).

NEXT

9	PERFORM ZERO POINT CALIBRATION

(a) Connect the cable to the negative (-) battery terminal, and wait for at least 2 seconds.
(b) Connect the intelligent tester to the DLC3.
(c) Turn the ignition switch ON.
(d) Using the intelligent tester, perform the zero point calibration (see page RS-241).
OK:
COMPLETED is displayed.

NEXT

10	PERFORM SENSITIVITY CHECK

(a) Using the intelligent tester, perform the sensitivity check (see page RS-241).
Standard value:
27 to 33 kg (59.52 to 72.75 lb)

RS

NEXT

END

DTC	B1790	Center Airbag Sensor Assembly Communication Circuit Malfunction

DESCRIPTION

The center airbag sensor communication circuit consists of the occupant classification ECU and the center airbag sensor.
DTC B1790 is recorded when a malfunction is detected in the center airbag sensor communication circuit.

DTC No.	DTC Detection Condition	Trouble Area
B1790	When one of following conditions is met: • Occupant classification ECU detects line short circuit signal, open circuit signal, short circuit to ground signal or short circuit to B+ signal in the center airbag sensor assembly communication circuit for 2 seconds • Center airbag sensor malfunction • Occupant classification ECU malfunction	• Floor wire • Occupant classification ECU • Center airbag sensor

WIRING DIAGRAM

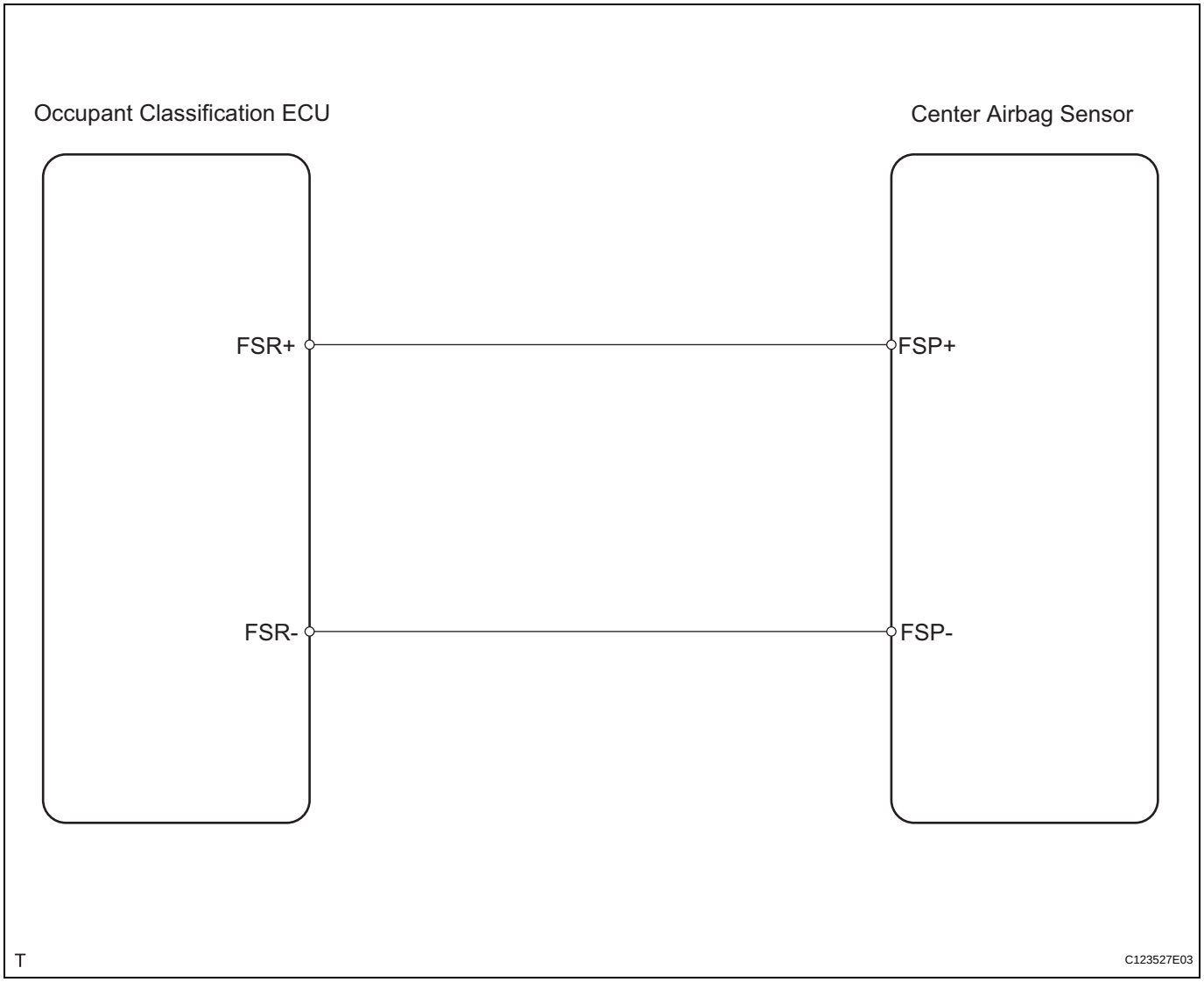

RS

INSPECTION PROCEDURE

HINT:

- If troubleshooting (wire harness inspection) is difficult to perform, remove the front passenger seat installation bolts to see the undersurface of the seat cushion.
- In the above case, hold the seat so that it does not tip over. Holding the seat for a long period of time may cause a problem, such as seat rail deformation. Hold the seat up only for as long as necessary.

1	CHECK FOR DTC

(a) Turn the ignition switch ON.
(b) Clear the DTCs (see page RS-249).
HINT:
First clear DTCs stored in the occupant classification ECU and then in the center airbag sensor.
(c) Turn the ignition switch OFF.
(d) Turn the ignition switch ON.
(e) Check the DTCs (see page RS-249).
OK:
DTC B1790 is not output.
HINT:
DTCs other than DTC B1790 may be output at this time, but they are not related to this check.

OK → **USE SIMULATION METHOD TO CHECK**

NG

2	CHECK CONNECTION OF CONNECTOR

(a) Turn the ignition switch OFF.
(b) Disconnect the cable from the negative (-) battery terminal, and wait for at least 90 seconds.
(c) Check that the connectors are properly connected to the occupant classification ECU and the center airbag sensor.
OK:
The connectors are properly connected.

NG → **CONNECT CONNECTOR**

OK

RS

3	CHECK FLOOR WIRE (TO B+)

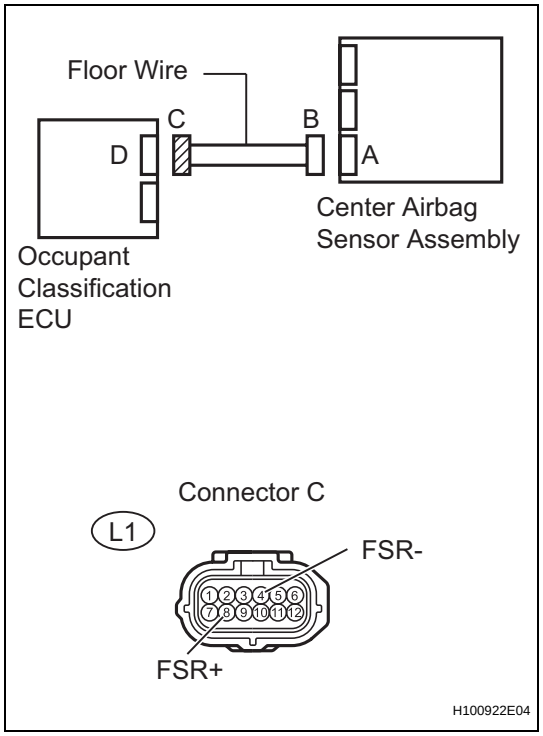

(a) Disconnect the connectors from the occupant classification ECU and the center airbag sensor.
(b) Connect the cable to the negative (-) battery terminal, and wait for at least 2 seconds.
(c) Turn the ignition switch ON.
(d) Measure the voltage of the wire harness side connector.

Standard voltage

Tester Connection	Specified Condition
L1-8 (FSR+) - Body ground	Below 1 V
L1-4 (FSR-) - Body ground	Below 1 V

NG → **REPAIR OR REPLACE FLOOR WIRE**

OK

RS

4	CHECK FLOOR WIRE (FOR OPEN)

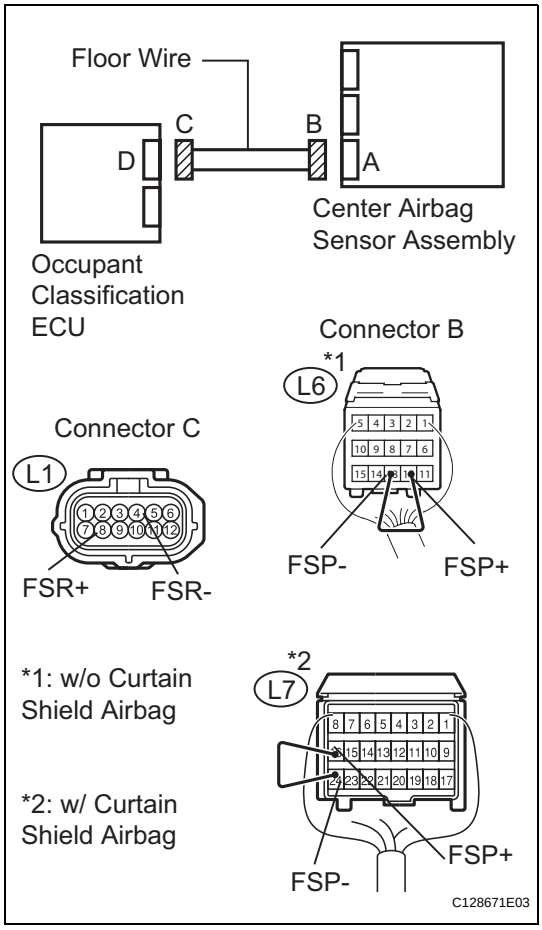

(a) Turn the ignition switch OFF.

(b) Disconnect the cable from the negative (-) battery terminal, and wait for at least 90 seconds.

(c) Using a service wire, connect terminals L6-12 (FSP+) *1 and L6-13 (FSP-) *1 or L7-16 (FSP+) *2 and L7-24 (FSP-) *2 of connector B.

NOTICE:

Do not forcibly insert a service wire into the terminals of the connector when connecting them.

(d) Measure the resistance of the wire harness side connector.

Standard resistance

Tester Connection	Specified Condition
L1-8 (FSR+) - L1-4 (FSR-)	Below 1 Ω

HINT:

*1: w/o Curtain shield airbag

*2: w/ Curtain shield airbag

NG → **REPAIR OR REPLACE FLOOR WIRE**

OK

RS

5 CHECK FLOOR WIRE (FOR SHORT)

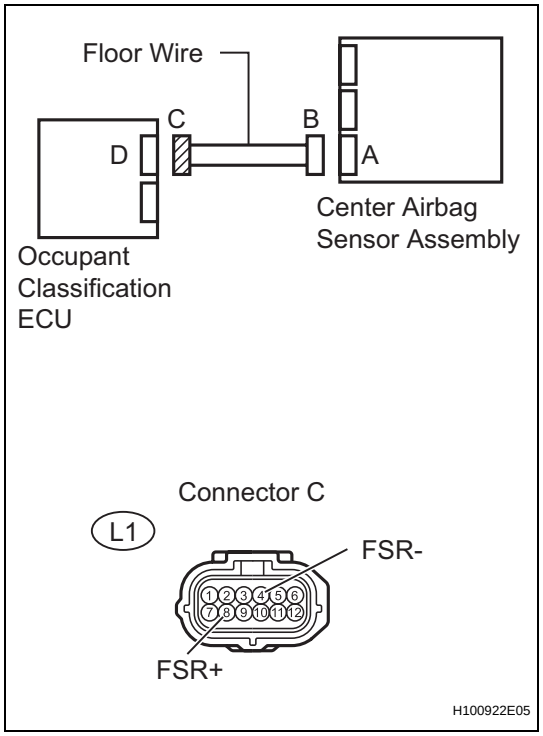

(a) Disconnect the service wire from connector B.
(b) Measure the resistance of the wire harness side connector.

Standard resistance

Tester Connection	Specified Condition
L1-8 (FSR+) - L1-4 (FSR-)	1 MΩ or higher

NG → **REPAIR OR REPLACE FLOOR WIRE**

OK

6 CHECK FLOOR WIRE (TO GROUND)

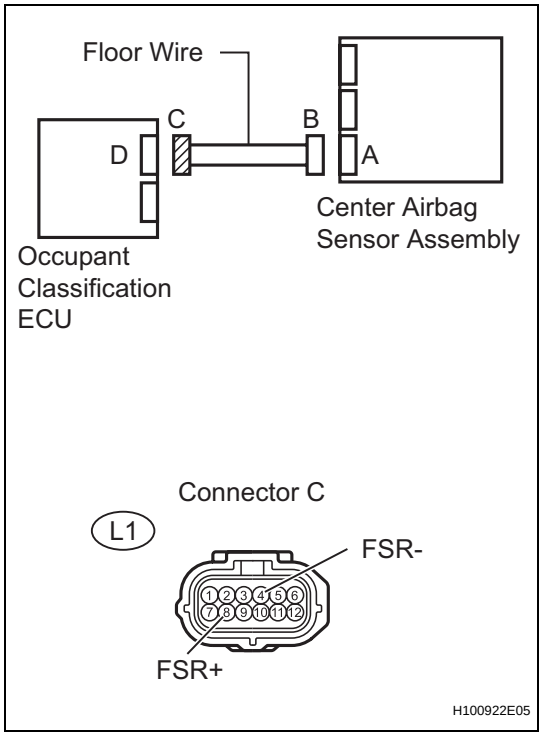

(a) Measure the resistance of the wire harness side connector.

Standard resistance

Tester Connection	Specified Condition
L1-8 (FSR+) - Body ground	1 MΩ or higher
L1-4 (FSR-) - Body ground	1 MΩ or higher

NG → **REPAIR OR REPLACE FLOOR WIRE**

OK

RS

7	CHECK FOR DTC

(a) Connect the connectors to the occupant classification ECU and the center airbag sensor.
(b) Connect the cable to the negative (-) battery terminal, and wait for at least 2 seconds.
(c) Turn the ignition switch ON.
(d) Clear the DTCs (see page RS-249).
HINT:
First clear DTCs stored in the occupant classification ECU and then in the center airbag sensor.
(e) Turn the ignition switch OFF.
(f) Turn the ignition switch ON.
(g) Check the DTCs (see page RS-249).
OK:
DTC B1790 is not output.
HINT:
DTCs other than DTC B1790 may be output at this time, but they are not related to this check.

OK	USE SIMULATION METHOD TO CHECK

NG

8	REPLACE OCCUPANT CLASSIFICATION ECU

(a) Turn the ignition switch OFF.
(b) Disconnect the cable from the negative (-) battery terminal, and wait for at least 90 seconds.
(c) Replace the occupant classification ECU (see page RS-392).
HINT:
Perform the inspection using parts from a normal vehicle if possible.

NEXT

9	PERFORM ZERO POINT CALIBRATION

(a) Connect the cable to the negative (-) battery terminal, and wait for at least 2 seconds.
(b) Connect the intelligent tester (with CAN VIM) to the DLC3.
(c) Turn the ignition switch ON.
(d) Using the intelligent tester, perform the zero point calibration (see page RS-241).
OK:
COMPLETED is displayed.

NEXT

RS

10	PERFORM SENSITIVITY CHECK

(a) Using the intelligent tester, perform the sensitivity check (see page RS-241).
Standard value:
27 to 33 kg (59.52 to 72.75 lb)

NEXT

11	CHECK FOR DTC

(a) Turn the ignition switch ON.
(b) Clear the DTCs (see page RS-249).
HINT:
First clear DTCs stored in the occupant classification ECU and then in the center airbag sensor.
(c) Turn the ignition switch OFF.
(d) Turn the ignition switch ON.
(e) Check the DTCs (see page RS-249).
OK:
DTC B1790 is not output.
HINT:
DTCs other than DTC B1790 may be output at this time, but they are not related to this check.

NG → **REPLACE CENTER AIRBAG SENSOR ASSEMBLY**

OK

END

DTC	B1793	Occupant Classification Sensor Power Supply Circuit Malfunction

DESCRIPTION

The occupant classification sensor power supply circuit consists of the occupant classification ECU and the occupant classification sensors.
DTC B1793 is recorded when a malfunction is detected in the occupant classification sensor power supply circuit.

DTC No.	DTC Detection Condition	Trouble Area
B1793	When one of following conditions is met: • Occupant classification ECU detects line short circuit signal, open circuit signal, short circuit to ground signal or short circuit to B+ signal in the occupant classification sensor power supply circuit for 2 seconds • Occupant classification ECU malfunction	• Front seat wire RH • Front seat RH (Occupant classification sensors) • Occupant classification ECU

WIRING DIAGRAM

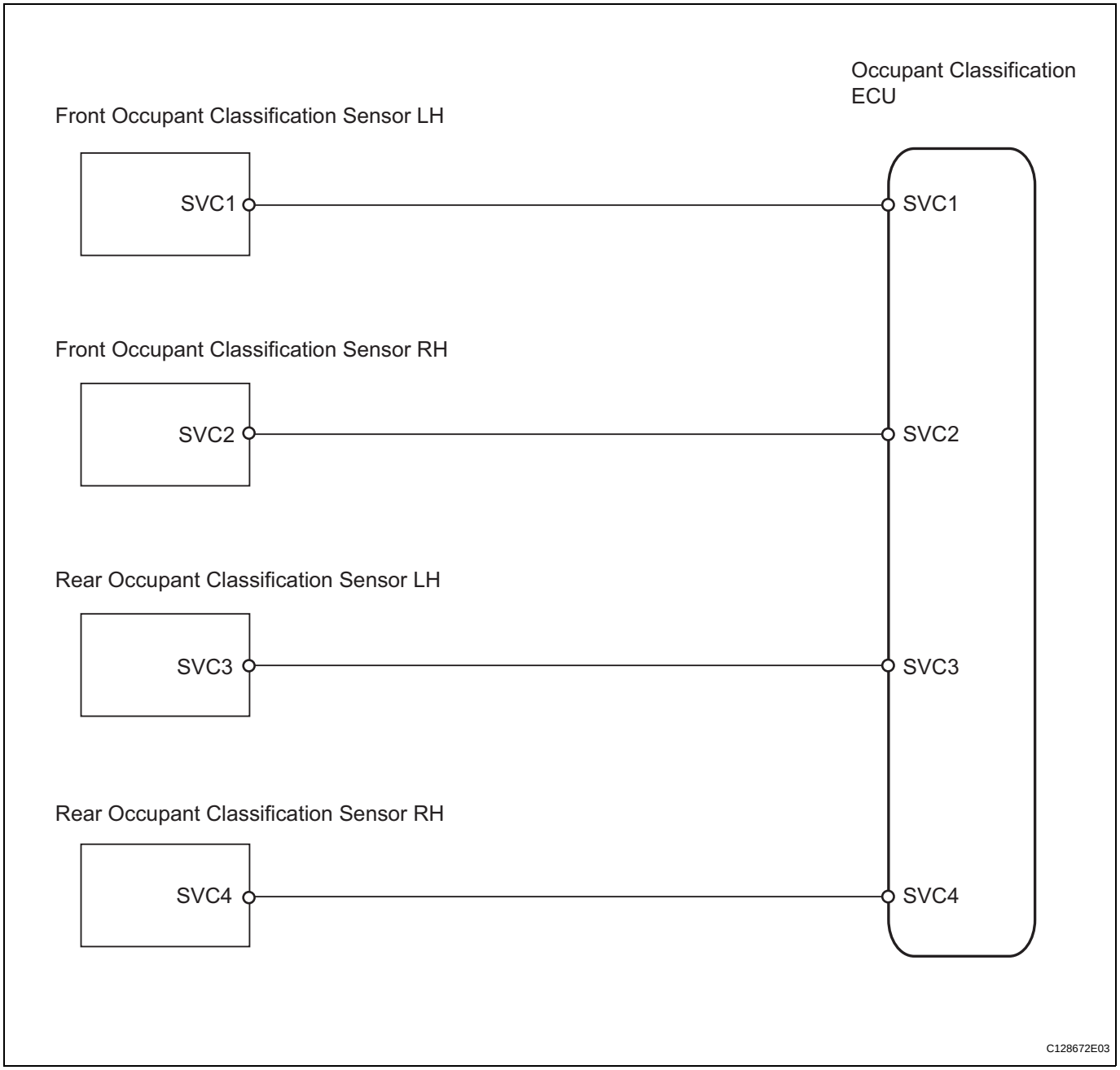

INSPECTION PROCEDURE

HINT:

- If troubleshooting (wire harness inspection) is difficult to perform, remove the front passenger seat installation bolts to see the undersurface of the seat cushion.
- In the above case, hold the seat so that it does not tip over. Holding the seat for a long period of time may cause a problem, such as seat rail deformation. Hold the seat up only for as long as necessary.

1	**CHECK FOR DTC**

(a) Turn the ignition switch ON.
(b) Clear the DTCs (see page RS-249).

RS

HINT:
First clear DTCs stored in the occupant classification ECU and then in the center airbag sensor.

(c) Turn the ignition switch OFF.
(d) Turn the ignition switch ON.
(e) Check the DTCs (see page RS-249).
OK:
DTC B1793 is not output.
HINT:
DTCs other than DTC B1793 may be output at this time, but they are not related to this check.

OK	**USE SIMULATION METHOD TO CHECK**

NG

2 CHECK CONNECTION OF CONNECTOR

(a) Turn the ignition switch OFF.
(b) Disconnect the cable from the negative (-) battery terminal, and wait for at least 90 seconds.
(c) Check that the connectors are properly connected to the occupant classification ECU and the occupant classification sensors.
OK:
The connectors are properly connected.

NG	**CONNECT CONNECTOR**

OK

3 CHECK FRONT SEAT WIRE RH (TO B+)

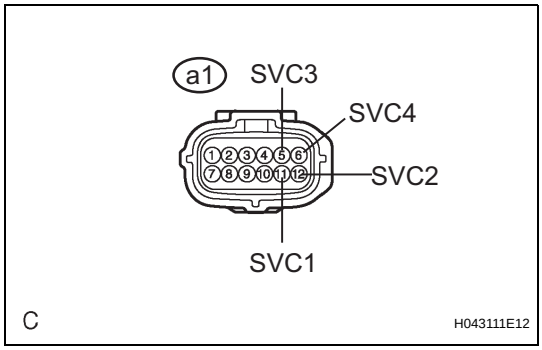

(a) Disconnect the connectors from the occupant classification ECU and the 4 occupant classification sensors.
(b) Connect the negative (-) terminal cable to the battery, and wait for at least 2 seconds.
(c) Turn the ignition switch ON.
(d) Measure the voltage of the wire harness side connector.
Standard voltage

Tester Connection	Specified Condition
a1-11 (SVC1) - Body ground	Below 1 V
a1-12 (SVC2) - Body ground	Below 1 V
a1-5 (SVC3) - Body ground	Below 1 V
a1-6 (SVC4) - Body ground	Below 1 V

NG	**REPAIR OR REPLACE FRONT SEAT WIRE RH**

OK

4	CHECK FRONT SEAT WIRE RH (TO GROUND)

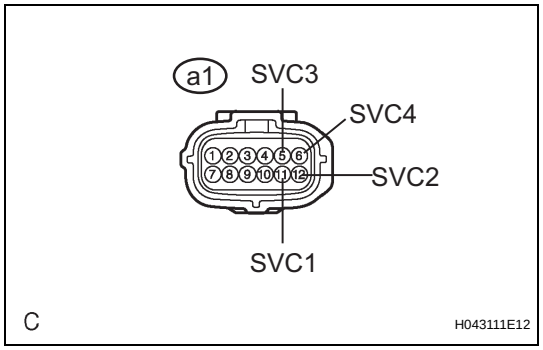

(a) Turn the ignition switch OFF.
(b) Disconnect the cable from the negative (-) battery terminal, and wait for at least 90 seconds.
(c) Measure the resistance of the wire harness side connector.

Standard resistance

Tester Connection	Specified Condition
a1-11 (SVC1) - Body ground	1 MΩ or higher
a1-12 (SVC2) - Body ground	1 MΩ or higher
a1-5 (SVC3) - Body ground	1 MΩ or higher
a1-6 (SVC4) - Body ground	1 MΩ or higher

NG → **REPAIR OR REPLACE FRONT SEAT WIRE RH**

OK

RS

5 CHECK FRONT SEAT WIRE RH (FOR OPEN)

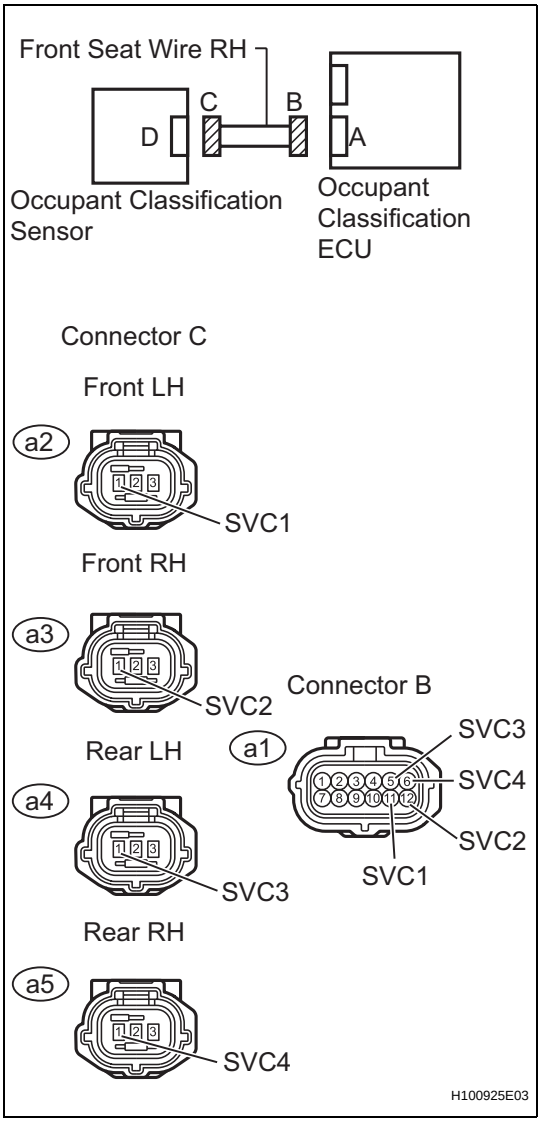

(a) Measure the resistance of the wire harness side connectors.

Standard resistance

Tester Connection	Specified Condition
a1-11 (SVC1) - a2-1 (SVC1)	Below 1 Ω
a1-12 (SVC2) - a3-1 (SVC2)	Below 1 Ω
a1-5 (SVC3) - a4-1 (SVC3)	Below 1 Ω
a1-6 (SVC4) - a5-1 (SVC4)	Below 1 Ω

NG → **REPAIR OR REPLACE FRONT SEAT WIRE RH**

OK

6 CHECK FRONT SEAT WIRE RH (FOR SHORT)

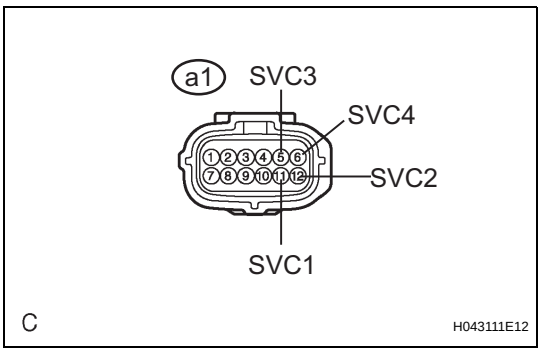

(a) Measure the resistance of the wire harness side connector.

Standard resistance

Tester Connection	Specified Condition
a1-5 (SVC3) - a1-6 (SVC4)	1 MΩ or higher
a1-6 (SVC4) - a1-11 (SVC1)	1 MΩ or higher
a1-11 (SVC1) - a1-12 (SVC2)	1 MΩ or higher
a1-12 (SVC2) - a1-5 (SVC3)	1 MΩ or higher
a1-12 (SVC2) - a1-6 (SVC4)	1 MΩ or higher
a1-11 (SVC1) - a1-5 (SVC3)	1 MΩ or higher

RS

NG → **REPAIR OR REPLACE FRONT SEAT WIRE RH**

OK

7	CHECK FOR DTC

(a) Connect the connectors to the occupant classification ECU and the 4 occupant classification sensors.
(b) Connect the cable to the negative (-) battery terminal, and wait for at least 2 seconds.
(c) Turn the ignition switch ON.
(d) Clear the DTCs (see page RS-249).
HINT:
First clear DTCs stored in the occupant classification ECU and then in the center airbag sensor.
(e) Turn the ignition switch OFF.
(f) Turn the ignition switch ON.
(g) Check the DTCs (see page RS-249).
OK:
DTC B1793 is not output.
HINT:
DTCs other than DTC B1793 may be output at this time, but they are not related to this check.

OK → **USE SIMULATION METHOD TO CHECK**

NG

8	REPLACE OCCUPANT CLASSIFICATION ECU

(a) Turn the ignition switch OFF.
(b) Disconnect the cable from the negative (-) battery terminal, and wait for at least 90 seconds.
(c) Replace the occupant classification ECU (see page RS-392).
HINT:
Perform the inspection using parts from a normal vehicle if possible.

NEXT

9	PERFORM ZERO POINT CALIBRATION

(a) Connect the cable to the negative (-) battery terminal, and wait for at least 2 seconds.
(b) Connect the intelligent tester to the DLC3.
(c) Turn the ignition switch ON.
(d) Using the intelligent tester, perform the zero point calibration (see page RS-241).
OK:
COMPLETED is displayed.

NG → Go to step 12

OK

10	PERFORM SENSITIVITY CHECK

(a) Using the intelligent tester, perform the sensitivity check (see page RS-241).
Standard value:
27 to 33 kg (59.52 to 72.75 lb)

NG → Go to step 12

OK

11	CHECK FOR DTC

(a) Connect the negative (-) terminal cable to the battery, and wait for at least 2 seconds.
(b) Turn the ignition switch ON.
(c) Clear the DTCs (see page RS-249).
HINT:
First clear DTCs stored in the occupant classification ECU and then in the center airbag sensor.
(d) Turn the ignition switch OFF.
(e) Turn the ignition switch ON.
(f) Check the DTCs (see page RS-249).
OK:
DTC B1793 is not output.
HINT:
DTCs other than DTC B1793 may be output at this time, but they are related to this check.

OK → END

NG

12	REPLACE FRONT SEAT ASSEMBLY RH

(a) Turn the ignition switch OFF.
(b) Disconnect the cable from the negative (-) battery terminal, and wait for at least 90 seconds.
(c) Replace the front seat RH (see page SE-8).

NEXT

13	PERFORM ZERO POINT CALIBRATION

(a) Connect the cable to the negative (-) battery terminal, and wait for at least 2 seconds.
(b) Connect the intelligent tester to the DLC3.
(c) Turn the ignition switch ON.

RS

(d) Using the intelligent tester, perform the zero point calibration (see page RS-241).
OK:
COMPLETED is displayed.

NEXT

14	PERFORM SENSITIVITY CHECK

(a) Using the intelligent tester, perform the sensitivity check (see page RS-241).
Standard value:
27 to 33 kg (59.52 to 72.75 lb)

NEXT

END

DTC	B1794	Open in Occupant Classification ECU Battery Positive Line

DESCRIPTION

DTC B1794 is set when a malfunction is detected in the occupant classification ECU battery positive line.

DTC No.	DTC Detection Condition	Trouble Area
B1794	When one of following conditions is met: • Occupant classification ECU circuit malfunction • Occupant classification ECU malfunction • Occupant classification ECU detects short circuit to ground signal in passenger side buckle switch circuit for 2 seconds	• Wire harness • Occupant classification ECU

WIRING DIAGRAM

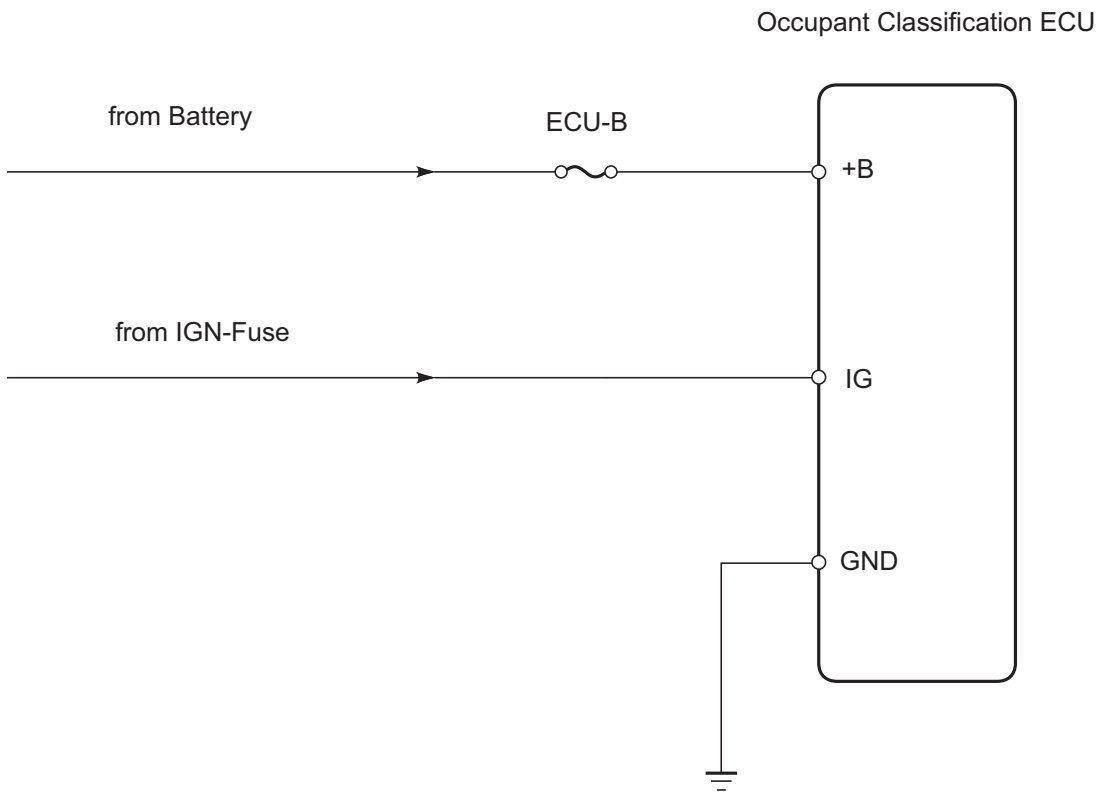

T

C128674E05

RS

INSPECTION PROCEDURE

1	CHECK FOR DTC

(a) Turn the ignition switch ON.
(b) Clear the DTCs (see page RS-249).
HINT:
First clear DTCs stored in the occupant classification ECU and then in the center airbag sensor.
(c) Turn the ignition switch OFF, and wait for at least 10 seconds.
(d) Turn the ignition switch ON.
(e) Check the DTCs (see page RS-249).
OK:
DTC B1794 is not output.
HINT:
DTCs other than B1794 may be output at this time, but they are not related to this check.

OK → **USE SIMULATION METHOD TO CHECK**

NG

2	CHECK CONNECTION OF CONNECTOR

(a) Turn the ignition switch OFF.
(b) Disconnect the cable from the negative (-) battery terminal, and wait for at least 90 seconds.
(c) Check that the connectors are properly connected to the occupant classification ECU.
OK:
The connectors are properly connected.

NG → **CONNECT CONNECTOR**

OK

3	CHECK WIRE HARNESS (SOURCE VOLTAGE)

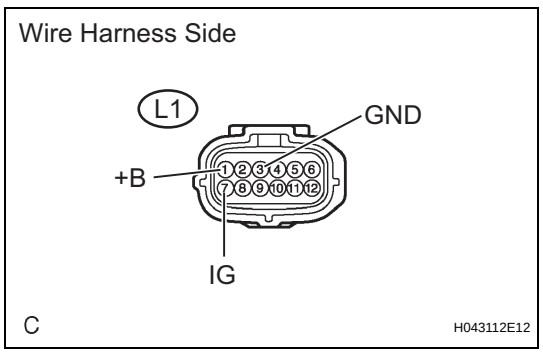

(a) Turn the ignition switch OFF.
(b) Disconnect the cable from the negative (-) battery terminal, and wait for at least 90 seconds.
(c) Disconnect the L1 connector from the occupant classification ECU.
(d) Connect the cable to the negative (-) battery terminal, and wait for at least 2 seconds.
(e) Measure the voltage of the wire harness side connector.
Standard voltage

Tester Connection	Condition	Specified Condition
L1-1 (+B) - Body ground	Always	10 to 14 V
L1-7 (IG) - Body ground	Ignition switch ON	10 to 14 V

RS

(f) Measure the resistance of the wire harness side connector.

Standard resistance

Tester Connection	Specified Condition
L1-3 (GND) - Body ground	Below 1 Ω

NG → **REPAIR OR REPLACE HARNESS AND CONNECTOR (BATTERY - OCCUPANT CLASSIFICATION ECU)**

OK

4	CHECK FOR DTC

(a) Turn the ignition switch OFF.
(b) Disconnect the cable from the negative (-) battery terminal, and wait for at least 90 seconds.
(c) Connect the connectors to the occupant classification ECU.
(d) Connect the cable to the negative (-) battery terminal, and wait for at least 2 seconds.
(e) Turn the ignition switch ON.
(f) Clear the DTCs (see page RS-249).
HINT:
First clear DTCs stored in the occupant classification ECU and then in the center airbag sensor.
(g) Turn the ignition switch OFF, and wait for at least 10 seconds.
(h) Turn the ignition switch ON.
(i) Using the intelligent tester, check for DTCs of the occupant classification ECU (see page RS-249).
OK:
DTC B1794 is not output.
HINT:
DTCs other than B1794 may be output at this time, but they are not related to this check.

OK → **USE SIMULATION METHOD TO CHECK**

NG

5	REPLACE OCCUPANT CLASSIFICATION ECU

(a) Turn the ignition switch OFF.
(b) Disconnect the cable from the negative (-) battery terminal, and wait for at least 90 seconds.
(c) Replace the occupant classification ECU (see page RS-392).
HINT:
Perform the inspection using parts from a normal vehicle when possible.

NEXT

6	PERFORM ZERO POINT CALIBRATION

(a) Connect the cable to the negative (-) battery terminal, and wait for at least 2 seconds.
(b) Connect the intelligent tester (with CAN VIM) to the DLC3.
(c) Turn the ignition switch ON.
(d) Using the intelligent tester, perform the zero point calibration (see page RS-241).
OK:
COMPLETED is displayed.

NEXT

7	PERFORM SENSITIVITY CHECK

(a) Using the intelligent tester, perform the sensitivity check (see page RS-241).
Standard value:
27 to 33 kg (59.52 to 72.75 lb)

NEXT

END

DTC	B1795	Occupant Classification ECU Malfunction

DESCRIPTION

DTC B1795 is recorded when a malfunction is detected in the occupant classification ECU.
Troubleshoot DTC B1771 first when DTC B1771 and B1795 are output simultaneously.

DTC No.	DTC Detection Condition	Trouble Area
B1795	When one of following conditions is met: • The occupant classification ECU receives the ignition switch OFF to ON signal 50 times in a row when a malfunction occurs in the power circuit for the occupant classification ECU (OFF to ON to OFF should be counted as 1 time). • Occupant classification ECU circuit malfunction • The occupant classification ECU receives a short circuit to ground signal in the passenger side buckle switch circuit for 2 seconds. • Occupant classification ECU malfunction	• Battery • ECU-B fuse • Floor wire No.2 • Front seat inner belt RH • Occupant classification ECU

WIRING DIAGRAM

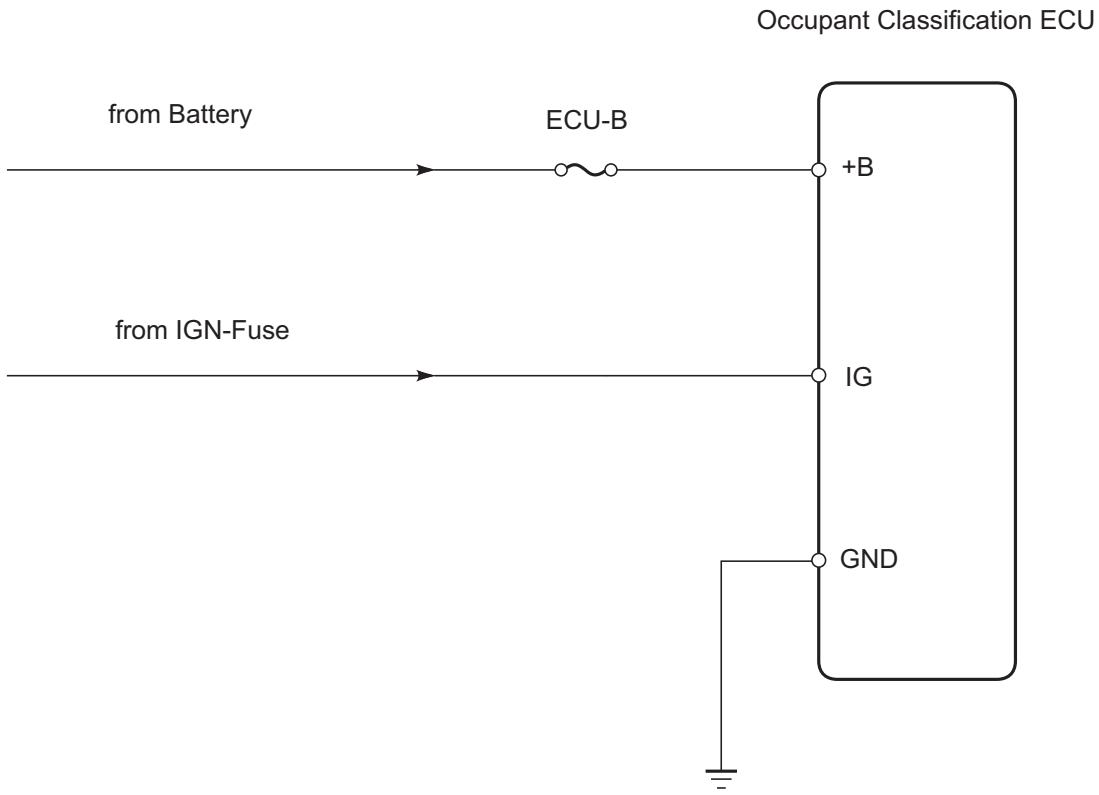

T

C128674E05

RS

INSPECTION PROCEDURE

1 CHECK FOR DTC

(a) Turn the ignition switch ON, and wait for at least 10 seconds.
(b) Check the DTCs (see page RS-249).
Result

Result	Proceed to
DTC B1795 is output.	A
DTC B1771 and B1795 are output.	B

HINT:
DTCs other than DTC B1771 and B1795 may be output at this time, but they are not related to this check.

B → **GO TO DTC B1771**

A

2 CHECK FUSE (ECU-B)

(a) Check the ECU-B fuse from the instrument panel junction block.
(b) Measure the resistance of the fuse.
Standard resistance:
Below 1 Ω

NG → **REPLACE FUSE**

OK

RS

3 CHECK WIRE HARNESS (SOURCE VOLTAGE)

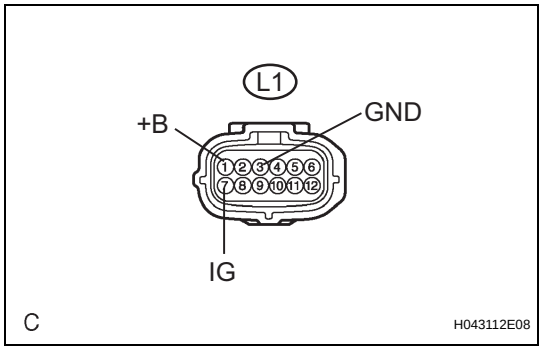

(a) Turn the ignition switch OFF.
(b) Disconnect the cable from the negative (-) battery terminal, and wait for at least 90 seconds.
(c) Disconnect the No. 2 floor wire connector from the occupant classification ECU.
(d) Connect the negative (-) terminal cable to the battery, and wait for at least 2 seconds.
(e) Measure the voltage of the wire harness side connector.
Standard voltage

Tester Connection	Condition	Specified Condition
L1-1 (+B) - Body ground	Always	10 to 14 V
L1-7 (IG) - Body ground	Ignition switch ON	10 to 14 V

(f) Turn the ignition switch OFF.
(g) Measure the resistance of the wire harness side connector.
Standard resistance

Tester Connection	Specified Condition
L1-3 (GND) - Body ground	Below 1 Ω

NG → **REPAIR OR REPLACE WIRE HARNESS**

OK

4	**REPLACE OCCUPANT CLASSIFICATION ECU**

(a) Turn the ignition switch OFF.
(b) Disconnect the cable from the negative (-) battery terminal, and wait for at least 90 seconds.
(c) Replace the occupant classification ECU (see page RS-392).
HINT:
Perform the inspection using parts from a normal vehicle if possible.

NEXT

5	**PERFORM ZERO POINT CALIBRATION**

(a) Connect the cable to the negative (-) battery terminal, and wait for at least 2 seconds.
(b) Connect the intelligent tester to the DLC3.
(c) Turn the ignition switch ON.
(d) Using the intelligent tester, perform the zero point calibration (see page RS-241).
OK:
COMPLETED is displayed.

NEXT

RS

6	**PERFORM SENSITIVITY CHECK**

(a) Using the intelligent tester, perform the sensitivity check (see page RS-241).
Standard value:
27 to 33 kg (59.52 to 72.75 lb)

NEXT

END

DTC	B1796	Sleep Operation Failure of Occupant Classification ECU

DESCRIPTION

During sleep mode, the occupant classification ECU reads the condition of each sensor while the ignition switch is OFF.
In this mode, if the occupant classification ECU detects an internal malfunction, DTC B1796 is output.

DTC No.	DTC Detection Condition	Trouble Area
B1796	Occupant classification ECU malfunction	Occupant classification ECU

INSPECTION PROCEDURE

1 CHECK FOR DTC

(a) Turn the ignition switch ON.
(b) Clear the DTCs (see page RS-249).
HINT:
First clear DTCs stored in the occupant classification ECU and then in the center airbag sensor assembly.
(c) Turn the ignition switch OFF, and wait for at least 2 seconds.
(d) Turn the ignition switch ON.
(e) Check the DTCs (see page RS-249).
OK:
DTC B1796 is not output.
HINT:
DTCs other than DTC B1796 may be output at this time, but they are not related to this check.

OK → **USE SIMULATION METHOD TO CHECK**

NG

2 REPLACE OCCUPANT CLASSIFICATION ECU

(a) Turn the ignition switch OFF.
(b) Disconnect the cable from the negative (-) battery terminal, and wait for at least 90 seconds.
(c) Replace the occupant classification ECU (see page RS-392).
HINT:
Perform the inspection using parts from a normal vehicle if possible.

NEXT

3 PERFORM ZERO POINT CALIBRATION

(a) Connect the cable to the negative (-) battery terminal, and wait for at least 2 seconds.
(b) Connect the intelligent tester to the DLC3.

(c) Turn the ignition switch ON.
(d) Using the intelligent tester, perform the zero point calibration (see page RS-241).
OK:
COMPLETED is displayed.

NEXT

4	PERFORM SENSITIVITY CHECK

(a) Using the intelligent tester, perform the sensitivity check (see page RS-241).
Standard value:
27 to 33 kg (59.52 to 72.75 lb)

NEXT

END

Trouble in Passenger Airbag ON / OFF Indicator

DESCRIPTION

The occupant classification system detects the front passenger seat condition and then indicates whether the front passenger airbag is activated or not through the passenger airbag ON / OFF indicator illumination.

The passenger airbag ON / OFF indicator illumination changes depending on the front passenger seat condition as shown in the table below.

Front Passenger Seat Condition	ON Indicator	OFF Indicator
Adult is seated	ON	OFF
Child is seated	OFF	ON
Vacant	OFF	OFF
Occupant classification system failure	OFF	ON

WIRING DIAGRAM

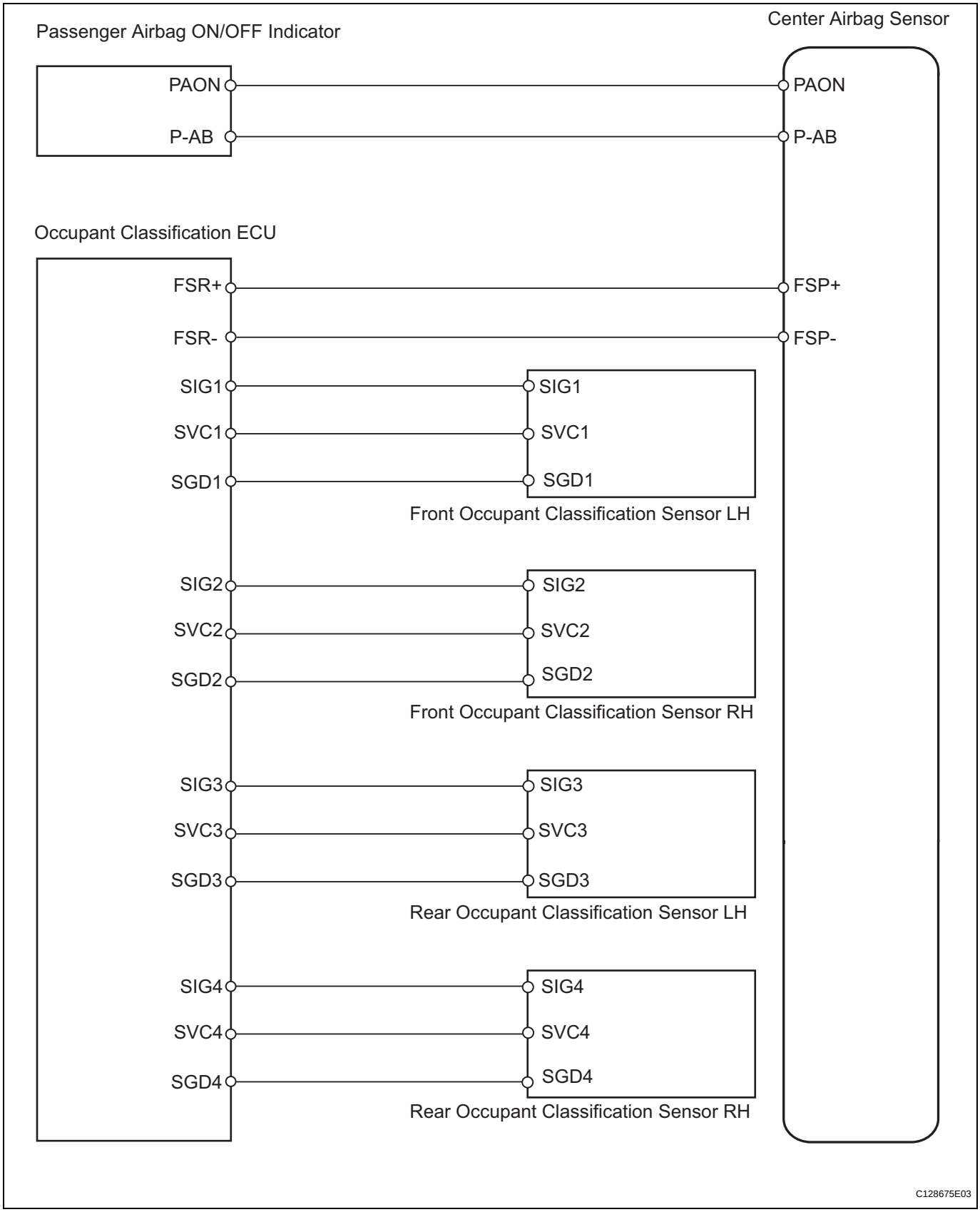

RS

INSPECTION PROCEDURE

1 CHECK SRS WARNING LIGHT

(a) Turn the ignition switch ON, and check the SRS warning light condition.
OK:
The SRS warning light does not come on.

NG → **Go to step 9**

OK

2 CHECK PASSENGER AIRBAG ON/OFF INDICATOR CONDITION

(a) Turn the ignition switch ON.
(b) Check if the passenger airbag ON / OFF indicator correctly indicates the front passenger seat condition.

OK

Front Passenger Seat Condition	ON Indicator	OFF Indicator
Adult is seated	ON	OFF
Child is seated	OFF	ON
Vacant	OFF	OFF
Occupant classification system failure	OFF	ON

OK → **END**

NG

3 PERFORM ZERO POINT CALIBRATION

(a) Turn the ignition switch OFF.
(b) Connect the intelligent tester (with CAN VIM) to the DLC3.
(c) Turn the ignition switch ON.
(d) Using the intelligent tester, perform the zero point calibration (see page RS-241).
OK:
COMPLETED is displayed.

NG → **Go to step 5**

OK

4 PERFORM SENSITIVITY CHECK

(a) Using the intelligent tester, perform the sensitivity check (see page RS-241).
Standard value:
27 to 33 kg (59.52 to 72.75 lb)

NG → **Go to step 5**

RS

OK

END

5	RETIGHTEN FRONT SEAT ASSEMBLY RH BOLT

(a) Turn the ignition switch OFF.
(b) Loosen the 4 installation bolts of the front seat RH.
(c) Tighten the 4 installation bolts of the front seat RH to the specified torque (see page SE-22).
Torque:
37 N*m{ 377 kgf*cm , 27 ft.*lbf }

NG → **Go to step 8**

OK

6	PERFORM ZERO POINT CALIBRATION

(a) Connect the intelligent tester (with CAN VIM) to the DLC3.
(b) Turn the ignition switch ON.
(c) Using the intelligent tester, perform the zero point calibration (see page RS-241).
OK:
COMPLETED is displayed.

NG → **Go to step 8**

OK

RS

7	PERFORM SENSITIVITY CHECK

(a) Using the intelligent tester, perform the sensitivity check (see page RS-241).
Standard value:
27 to 33 kg (59.52 to 72.75 lb)

NG → **Go to step 8**

OK

8	CHECK CONNECTOR

(a) Turn the ignition switch OFF.
(b) Disconnect the cable from the negative (-) battery terminal, and wait for at least 90 seconds.
(c) Check that the connectors are properly connected to the occupant classification ECU and the 4 occupant classification sensors.

OK:

The connectors are connected.

(d) Disconnect the connectors from the occupant classification ECU and the 4 occupant classification sensors.

(e) Check that the connectors are not damaged or deformed.

OK:

The connectors are normal.

NG → **REPAIR OR REPLACE WIRE HARNESS AND CONNECTOR**

OK

9	CHECK FOR DTC

(a) Connect the connectors to the occupant classification ECU and the 4 occupant classification sensors.

(b) Connect the cable to the negative (-) battery terminal, and wait for at least 2 seconds.

(c) Turn the ignition switch ON, and wait for at least 60 seconds.

(d) Turn the ignition switch OFF.

(e) Clear the DTCs (see page RS-249).

(f) Turn the ignition switch ON, and wait for at least 60 seconds.

(g) Check the DTCs (see page RS-249).

OK:

DTC is not output.

NG → **REPLACE CENTER AIRBAG SENSOR ASSEMBLY**

OK

10	REPLACE OCCUPANT CLASSIFICATION ECU

(a) Turn the ignition switch OFF.

(b) Disconnect the cable from the negative (-) battery terminal, and wait for at least 90 seconds.

(c) Replace the occupant classification ECU (see page RS-392).

HINT:

Perform the inspection using parts from a normal vehicle if possible.

NEXT

11	PERFORM ZERO POINT CALIBRATION

(a) Connect the cable to the negative (-) battery terminal, and wait for at least 2 seconds.

(b) Connect the intelligent tester (with CAN VIM) to the DLC3.
(c) Turn the ignition switch ON.
(d) Using the intelligent tester, perform the zero point calibration (see page RS-241).
OK:
COMPLETED is displayed.

NEXT

12	PERFORM SENSITIVITY CHECK

(a) Using the intelligent tester, perform the sensitivity check (see page RS-241).
Standard value:
27 to 33 kg (59.52 to 72.75 lb)

NEXT

END

OCCUPANT CLASSIFICATION SYSTEM

PRECAUTION

1. INSPECTION PROCEDURE FOR VEHICLE INVOLVED IN ACCIDENT

(a) Perform the zero point calibration and sensitivity check if any of the following conditions apply.

- The occupant classification ECU is replaced.
- Accessories (seat cover etc.) are installed.
- The front passenger seat is removed from the vehicle.
- The passenger airbag ON/OFF indicator (OFF) comes on when the front passenger seat is not occupied.
- The vehicle is brought to the workshop for repair due to an accident or a collision.

NOTICE:

When a vehicle involved in an accident is brought into the workshop for repair, check the flatness of the floor where the front passenger seat is mounted. If the flatness is not within +-3.0 mm (+-0.118 in.), adjust it to the specified range.

PARTS LOCATION

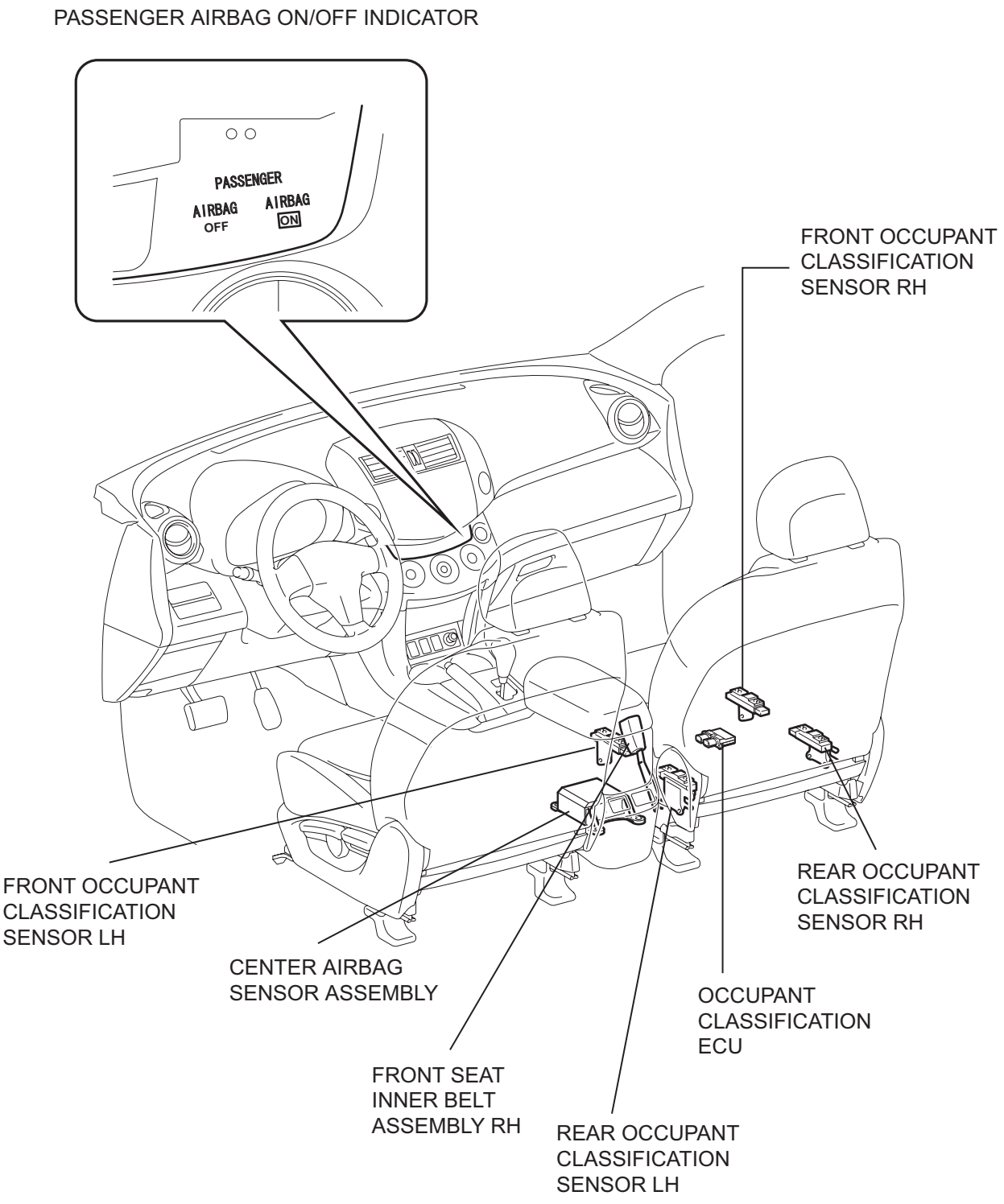

RS

REMOVAL

HINT:

- Use the same procedures for the RH side and LH side.
- The procedures listed below are for the LH side.

CAUTION:
Be sure to read the precautionary notices concerning the SRS airbag system before servicing it (see page RS-1).

1. **DISCONNECT CABLE FROM NEGATIVE BATTERY TERMINAL**
   CAUTION:
   Wait at least 90 seconds after disconnecting the cable from the negative (-) battery terminal to prevent airbag and seat belt pretensioner activation.
2. **REMOVE REAR DOOR SCUFF PLATE LH (See page IR-26)**
3. **REMOVE REAR DOOR OPENING TRIM WEATHERSTRIP LH**
4. **REMOVE PACKAGE TRAY TRIM POCKET SUB-ASSEMBLY (w/o Rear No. 2 Seat)**
5. **REMOVE TONNEAU COVER ASSEMBLY (w/o Rear No. 2 Seat)**
6. **REMOVE REAR FLOOR NO. 1 BOARD (w/o Rear No. 2 Seat)**
7. **REMOVE DECK BOARD ASSEMBLY (w/o Rear No. 2 Seat)**
8. **REMOVE NO. 2 SEAT HINGE COVER LH (w/ Rear No. 2 Seat) (See page SE-109)**
9. **REMOVE NO. 2 SEAT HINGE COVER RH (w/ Rear No. 2 Seat) (See page IR-30)**
10. **REMOVE NO. 2 SEAT LEG COVER LH (w/ Rear No. 2 Seat) (See page SE-109)**
11. **REMOVE NO. 2 SEAT LEG COVER RH (w/ Rear No. 2 Seat) (See page IR-30)**
12. **REMOVE REAR NO. 2 SEAT ASSEMBLY LH (w/ Rear No. 2 Seat) (See page SE-110)**
13. **REMOVE REAR NO. 2 SEAT ASSEMBLY RH (w/ Rear No. 2 Seat) (See page SE-110)**
14. **REMOVE REAR FLOOR NO. 2 BOARD**
15. **REMOVE REAR FLOOR NO. 3 BOARD**
16. **REMOVE REAR NO. 1 FLOOR MAT SUPPORT SIDE PLATE (See page IR-31)**
17. **REMOVE BACK DOOR WEATHERSTRIP**
18. **REMOVE REAR FLOOR FINISH PLATE**
19. **REMOVE REAR DECK TRIM COVER (w/ Rear No. 2 Seat)**

20. REMOVE RECLINING REMOTE CONTROL LEVER BEZEL LH (w/o Rear No. 2 Seat)

21. DISCONNECT REAR NO. 1 SEAT OUTER BELT ASSEMBLY LH (See page SB-48)

22. DISCONNECT REAR NO. 2 SEAT OUTER BELT ASSEMBLY LH (w/ Rear No. 2 Seat) (See page SB-48)

23. REMOVE DECK TRIM SIDE PANEL ASSEMBLY LH (w/o Rear No. 2 Seat) (See page IR-32)

24. REMOVE DECK TRIM SIDE PANEL ASSEMBLY LH (w/ Rear No. 2 Seat) (See page IR-32)

25. REMOVE AIRBAG SENSOR REAR LH

(a) Disconnect the connector.

(b) Remove the bolt and airbag sensor.

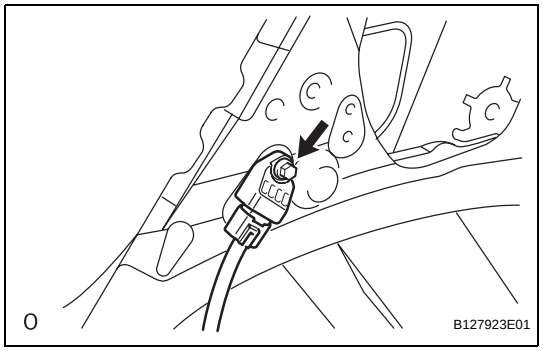

RS

INSTALLATION

HINT:

- Use the same procedures for the RH side and LH side.
- The procedures listed below are for the LH side.

CAUTION:

Be sure to read the precautionary notices concerning the SRS airbag system before servicing it (see page RS-1).

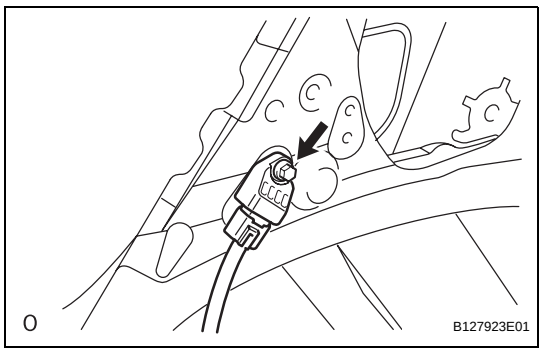

1. **INSTALL AIRBAG SENSOR REAR LH**
   (a) Install the airbag sensor with the bolt.
   Torque: 9.0 N*m (92 kgf*cm, 80 in.*lbf)
   NOTICE:
   - **If the airbag sensor has been dropped, or there are any cracks, dents or other defects in the case, bracket or connector, replace it with a new one.**
   - **When installing the airbag sensor, be careful that the SRS wiring does not interfere with other parts and that it is not pinched between other parts.**
2. **INSTALL DECK TRIM SIDE PANEL ASSEMBLY LH (w/ Rear No. 2 Seat) (See page IR-53)**
3. **INSTALL DECK TRIM SIDE PANEL ASSEMBLY LH (w/ o Rear No. 2 Seat) (See page IR-52)**
4. **CONNECT REAR NO. 2 SEAT OUTER BELT ASSEMBLY LH (w/ Rear No. 2 Seat)**
5. **CONNECT REAR NO. 1 SEAT OUTER BELT ASSEMBLY LH (See page SB-51)**
6. **INSTALL RECLINING REMOTE CONTROL LEVER BEZEL LH (w/o Rear No. 2 Seat)**
7. **INSTALL REAR FLOOR FINISH PLATE (See page IR-55)**
8. **INSTALL REAR NO. 1 FLOOR MAT SUPPORT SIDE PLATE (See page IR-55)**
9. **INSTALL REAR FLOOR NO. 3 BOARD**
10. **INSTALL REAR FLOOR NO. 2 BOARD**
11. **INSTALL REAR NO. 2 SEAT ASSEMBLY LH (w/ Rear No. 2 Seat) (See page SE-121)**
12. **INSTALL REAR NO. 2 SEAT ASSEMBLY RH (w/ Rear No. 2 Seat) (See page IR-55)**
13. **INSTALL NO. 2 SEAT LEG COVER LH (w/ Rear No. 2 Seat) (See page SE-123)**
14. **INSTALL NO. 2 SEAT LEG COVER RH (w/ Rear No. 2 Seat) (See page IR-56)**
15. **INSTALL NO. 2 SEAT HINGE COVER LH (w/ Rear No. 2 Seat) (See page SE-123)**
16. **INSTALL NO. 2 SEAT HINGE COVER RH (w/ Rear No. 2 Seat) (See page IR-56)**

17. **INSTALL DECK BOARD ASSEMBLY (w/o Rear No. 2 Seat)**
18. **INSTALL REAR FLOOR NO. 1 BOARD (w/o Rear No. 2 Seat)**
19. **INSTALL TONNEAU COVER ASSEMBLY (w/o Rear No. 2 Seat)**
20. **REMOVE PACKAGE TRAY TRIM POCKET SUB-ASSEMBLY (w/o Rear No. 2 Seat)**
21. **INSTALL REAR DOOR OPENING TRIM WEATHERSTRIP LH**
22. **INSTALL REAR DOOR SCUFF PLATE LH (See page IR-57)**
23. **CONNECT CABLE TO NEGATIVE BATTERY TERMINAL**
24. **CHECK SRS WARNING LIGHT**
    (a) Check the SRS warning light (see page RS-34).

REAR AIRBAG SENSOR

COMPONENTS

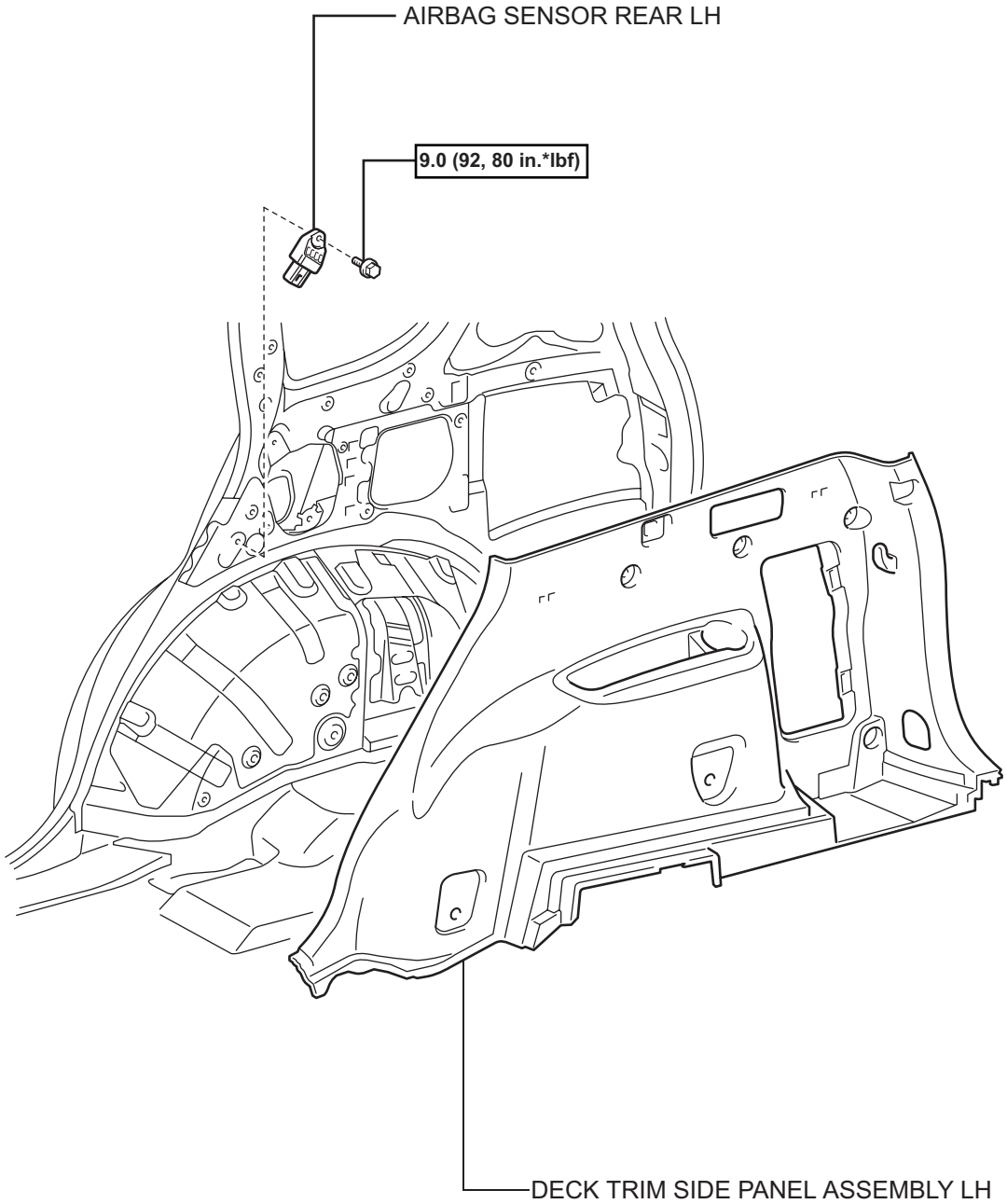

N*m (kgf*cm, ft.*lbf) : Specified torque

O

B127922E01

RS

ON-VEHICLE INSPECTION

1. **CHECK REAR AIRBAG SENSOR (VEHICLE NOT INVOLVED IN COLLISION)**
   (a) Perform a diagnostic system check (see page RS-49).

2. **CHECK REAR AIRBAG SENSOR (VEHICLE INVOLVED IN COLLISION AND AIRBAG HAS NOT DEPLOYED)**
   (a) Perform a diagnostic system check (see page RS-49).
   (b) When the quarter panel of the vehicle or its periphery is damaged, check if there is any damage to the rear airbag sensor. If there are any defects as mentioned below, replace the rear airbag sensor with a new one:
   - Cracks, dents or chips on the sensor housing.
   - Cracks or other damage to the connector.
   - Peeling off of the label or damage to the serial number.

   CAUTION:
   For removal and installation procedures of the rear airbag sensor, be sure to following the correct procedure.

3. **CHECK REAR AIRBAG SENSOR (VEHICLE INVOLVED IN COLLISION AND AIRBAG HAS DEPLOYED)**
   (a) Replace the rear airbag sensor.
   CAUTION:
   - **For removal and installation procedures of the rear airbag sensor, be sure to follow the correct procedure.**
   - **If the airbags have deployed, replace the side airbag sensor on the side in which the collision occurred. Replace both if necessary.**

REMOVAL

CAUTION:
Be sure to read the precautionary notices concerning the SRS airbag system before servicing it (see page RS-1).

1. **DISCONNECT CABLE FROM NEGATIVE BATTERY TERMINAL**
   CAUTION:
   Wait at least 90 seconds after disconnecting the cable from the negative (-) battery terminal to prevent airbag and seat belt pretensioner activation.
2. **REMOVE FRONT SEAT ASSEMBLY (for Manual Seat) (See page SE-11)**
3. **REMOVE FRONT SEAT ASSEMBLY (for Power Seat) (See page SE-27)**
4. **REMOVE SEAT POSITION AIRBAG SENSOR**
   (a) Remove the seat slide position sensor protector from the seat position sensor.
   (b) Using a T30 "torx" socket, remove the "torx" screw and seat position sensor.
   (c) Disconnect the connector.

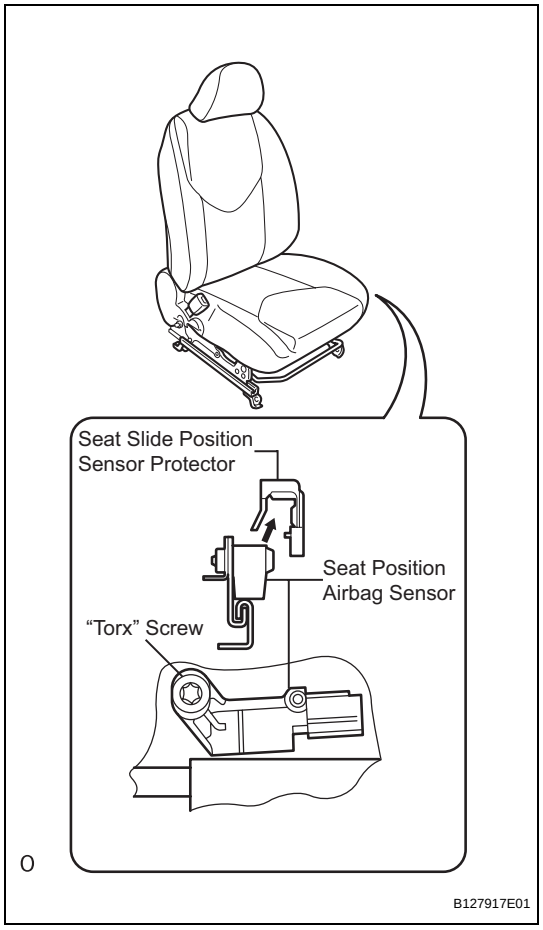

RS

INSTALLATION

CAUTION:
Be sure to read the precautionary notices concerning the SRS airbag system before servicing it (see page RS-1).

1. INSTALL SEAT POSITION AIRBAG SENSOR

(a) Using a 1 mm (0.039 in.) feeler gauge, install the seat position sensor.

NOTICE:

- **If the seat position sensor has been dropped, or there are any cracks, dents or other defects in the case or connector, replace the seat position sensor with a new one.**
- **When installing the seat position sensor, be careful that the SRS wiring does not interfere with other parts and that it is not pinched between other parts.**

HINT:
Be sure that the clearance between the seat position sensor and the seat rail is within 0.6 mm to 1.4 mm (0.023 to 0.055 in.).

(b) Using a T30 "torx" socket, tighten the "torx" screw to install the seat position sensor.
Torque: 8.0 N*m (82 kgf*cm, 71 in.*lbf)

(c) Make sure that the clearance between the seat position sensor and the seat rail is within 0.6 mm to 1.4 mm (0.023 to 0.055 in.).

(d) Connect the connector.

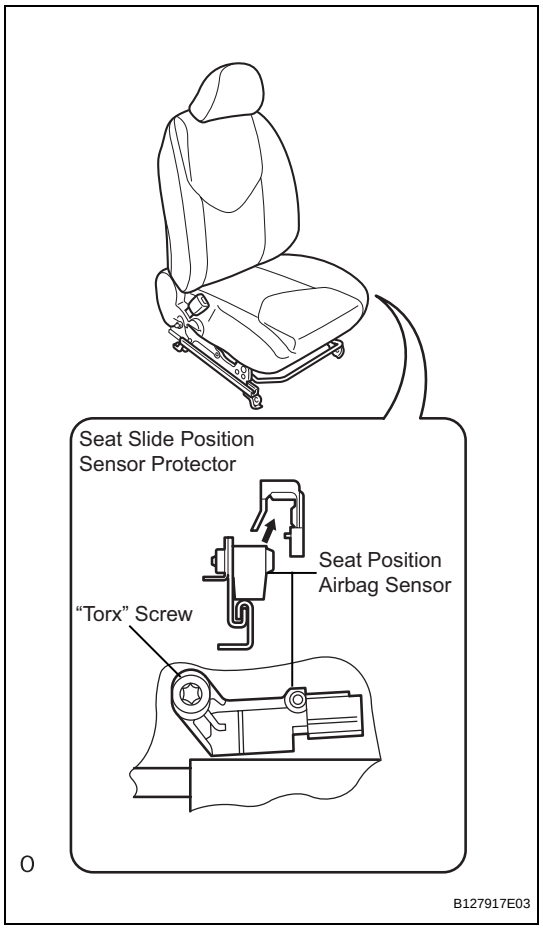

(e) Install the seat slide position sensor protector to the seat position sensor.

2. **INSTALL FRONT SEAT ASSEMBLY (for Manual Seat) (See page SE-22)**

3. **INSTALL FRONT SEAT ASSEMBLY (for Power Seat) (See page SE-37)**

4. **CONNECT CABLE TO NEGATIVE BATTERY TERMINAL**

5. **CHECK SRS WARNING LIGHT**
   (a) Check the SRS warning light (see page RS-34).

RS

SEAT POSITION SENSOR

COMPONENTS

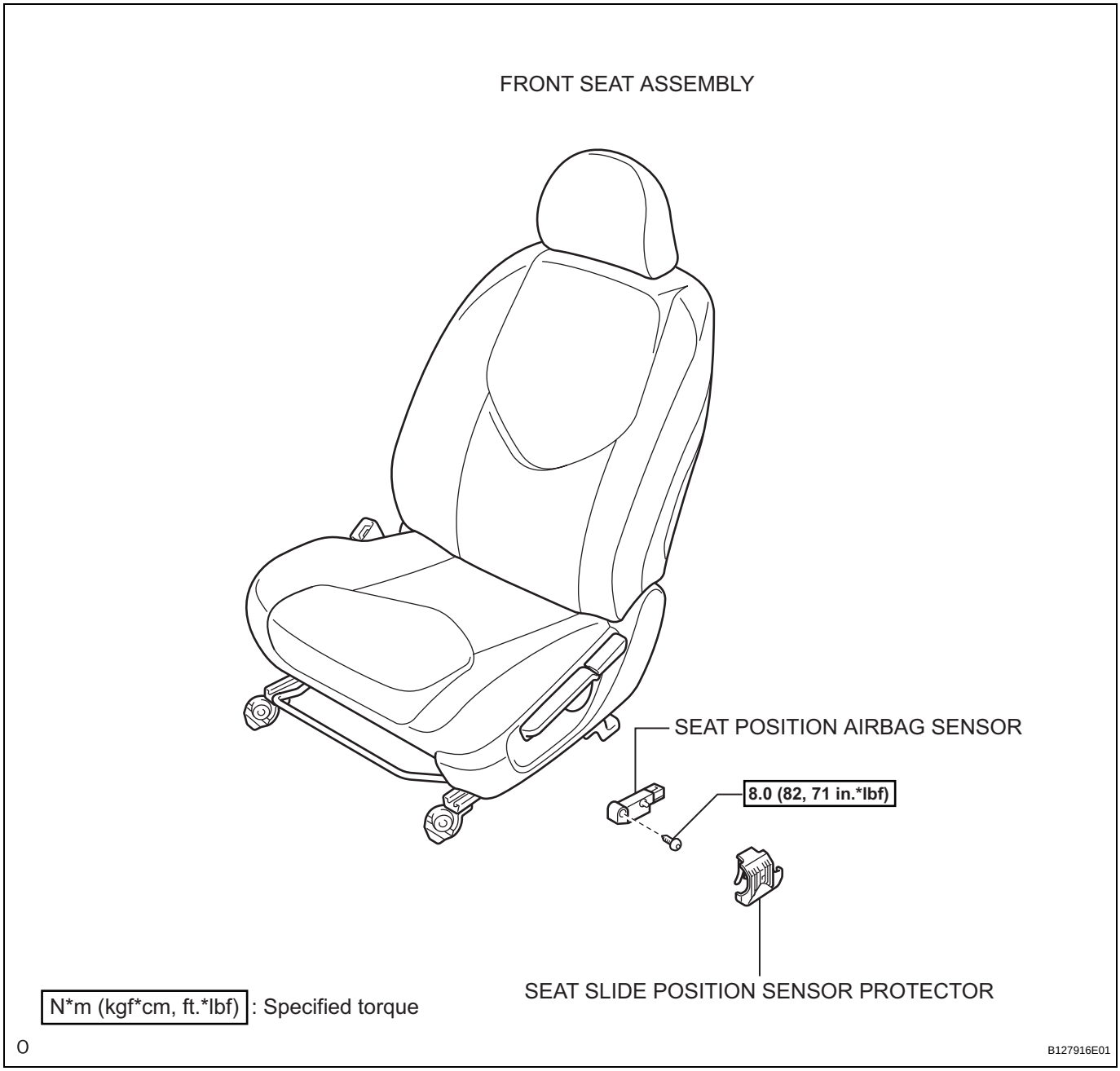

RS

ON-VEHICLE INSPECTION

1. CHECK SEAT POSITION SENSOR (VEHICLE NOT INVOLVED IN COLLISION)

(a) Perform a diagnostic system check (see page RS-49).

2. CHECK SEAT POSITION SENSOR (VEHICLE INVOLVED IN COLLISION)

(a) Perform a diagnostic system check (see page RS-49).

(b) Even if the airbag was not deployed, check if there is any damage to the seat position sensor.
If there are any defects as mentioned below, replace the seat position sensor with a new one:

- Cracks, dents or chips on the sensor housing.
- Cracks or other damage to the connector.

CAUTION:
For removal and installation procedures of the seat position sensor, be sure to follow the correct procedure.

REMOVAL

CAUTION:
Be sure to read the precautionary notices concerning the SRS airbag system before servicing it (see page RS-1).
HINT:
- Use the same procedures for the RH side and LH side.
- The procedures listed below are for the LH side.

1. **DISCONNECT CABLE FROM NEGATIVE BATTERY TERMINAL**
   CAUTION:
   Wait at least 90 seconds after disconnecting the cable from the negative (-) battery terminal to prevent airbag and seat belt pretensioner activation.
2. **REMOVE FRONT DOOR SCUFF PLATE LH (See page IR-26)**
3. **REMOVE REAR DOOR SCUFF PLATE LH (See page IR-57)**
4. **REMOVE CENTER PILLAR GARNISH LOWER LH (See page SB-27)**
5. **REMOVE SIDE AIRBAG SENSOR ASSEMBLY LH**
   (a) Disconnect the connector.
   (b) Remove the bolt and sensor.

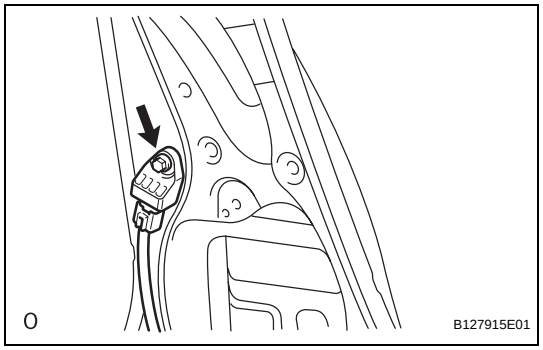

RS

INSTALLATION

HINT:

- Use the same procedures for the RH side and LH side.
- The procedures listed below are for the LH side.

CAUTION:
Be sure to read the precautionary notices concerning the SRS airbag system before servicing it (see page RS-1).

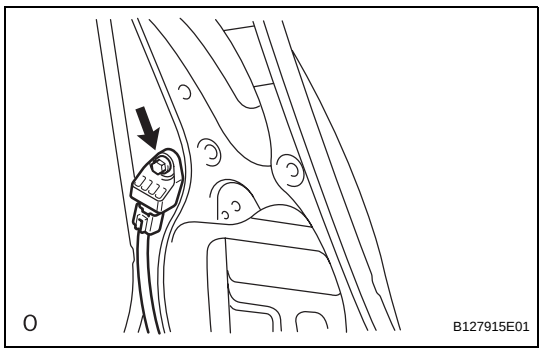

1. INSTALL SIDE AIRBAG SENSOR ASSEMBLY LH

(a) Install the sensor with the bolt.
Torque: 9.0 N*m (92 kgf*cm, 82 in.*lbf)
NOTICE:
- **If the airbag sensor has been dropped, or there are any cracks, dents or other defects in the case, bracket or connector, replace it with a new one.**
- **When installing the airbag sensor, be careful that the SRS wiring does not interfere with other parts and that it is not pinched between other parts.**

(b) Check that there is no looseness in the installation parts of the sensor.

(c) Connect the connector.

2. INSTALL CENTER PILLAR GARNISH LOWER LH (See page SB-31)

3. INSTALL REAR DOOR SCUFF PLATE LH (See page IR-57)

4. INSTALL FRONT DOOR SCUFF PLATE LH (See page IR-59)

5. CONNECT CABLE TO NEGATIVE BATTERY TERMINAL

6. CHECK SRS WARNING LIGHT

(a) Check the SRS warning light (see page RS-34).

SIDE AIRBAG SENSOR

COMPONENTS

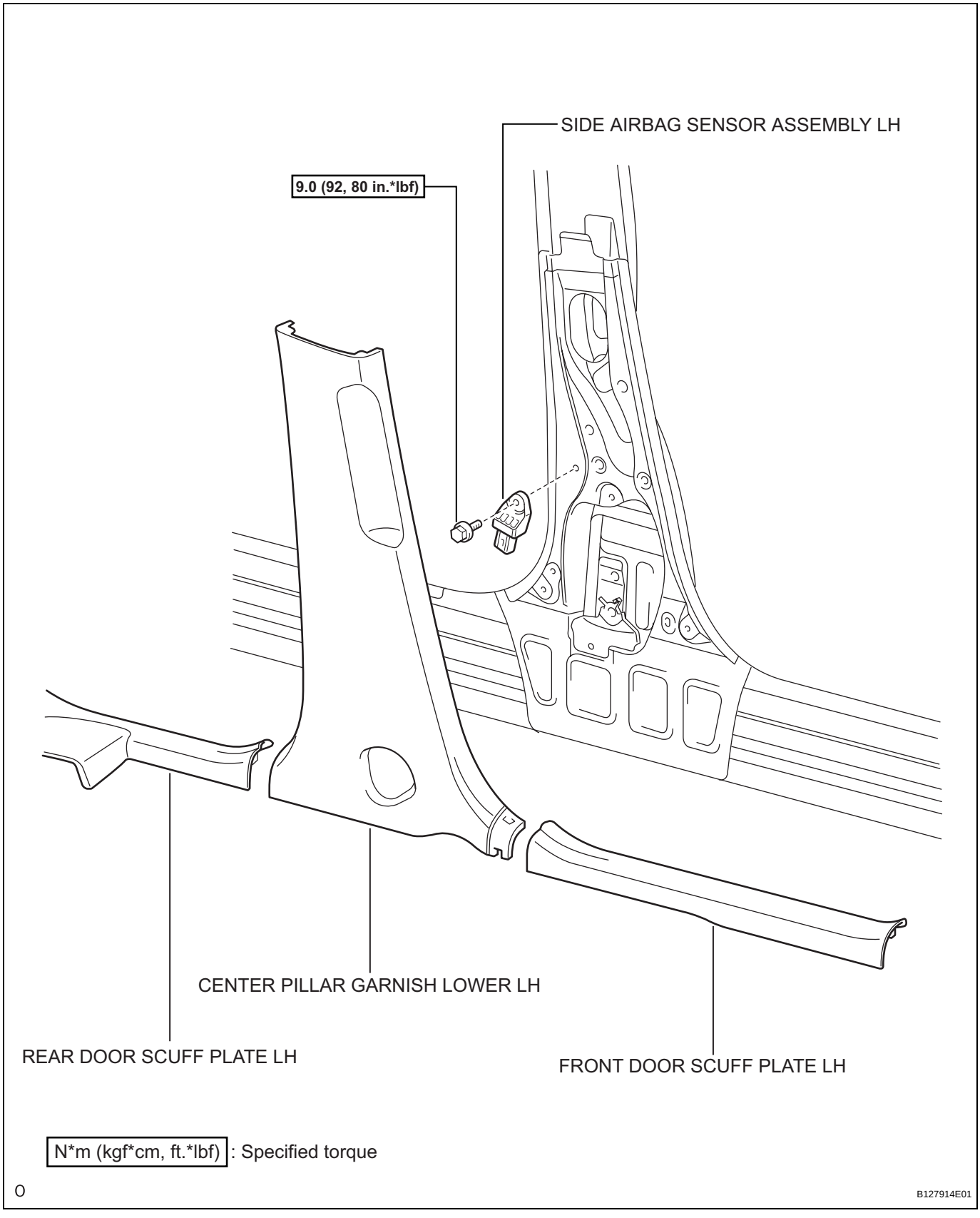

RS

ON-VEHICLE INSPECTION

1. **CHECK SIDE AIRBAG SENSOR (VEHICLE NOT INVOLVED IN COLLISION)**
   (a) Perform a diagnostic system check (see page RS-49).

2. **CHECK SIDE AIRBAG SENSOR (VEHICLE INVOLVED IN COLLISION AND AIRBAG HAS NOT DEPLOYED)**
   (a) Perform a diagnostic system check (see page RS-49).
   (b) When the center pillar of the vehicle or its area is damaged, check if there is any damage to the side airbag sensor. If there are any defects as mentioned below, replace the side airbag sensor with a new one:
   - Cracks, dents or chips on the sensor housing.
   - Cracks or other damage to the connector.
   - Peeling off of the label or damage to the serial number.

   CAUTION:
   For removal and installation procedures of the side airbag sensor, be sure to follow the correct procedure.

3. **CHECK SIDE AIRBAG SENSOR (VEHICLE INVOLVED IN COLLISION AND AIRBAG HAS DEPLOYED)**
   (a) Replace the side airbag sensor.
   CAUTION:
   - **For removal and installation procedures of the side airbag sensor, be sure to follow the correct procedure.**
   - **If the airbags have deployed, replace the side airbag sensor on the side in which the collision occurred. Replace both if necessary.**

INSPECTION

1. INSPECT SPIRAL CABLE SUB-ASSEMBLY

(a) Check that there are no scratches or cracks on its connector, and/or that the cable does not have cracks, dents or chipping.

INSTALLATION

CAUTION:
Be sure to read the precautionary notices concerning the SRS airbag system before servicing it (see page RS-1).

1. INSTALL SPIRAL CABLE SUB-ASSEMBLY

(a) Check that the front wheels are facing straight ahead.

(b) Set the turn signal switch to the neutral position.
NOTICE:
Make sure that the turn signal switch is in the neutral position, as the pin of the turn signal switch may be snapped.

(c) Install the spiral cable.

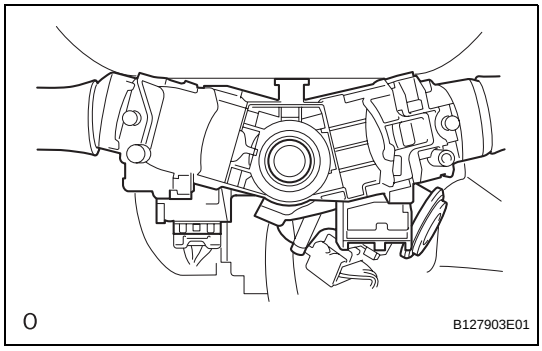

NOTICE:
When replacing the spiral cable with a new one, remove the lock pin before installing the steering wheel.

(d) Connect the connectors to the spiral cable.
NOTICE:
When handling the airbag connector, do not damage the airbag wire harness.

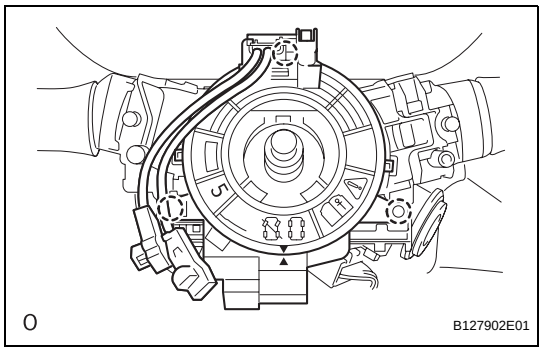

(e) Attach the 4 clips to the column cover (upper).

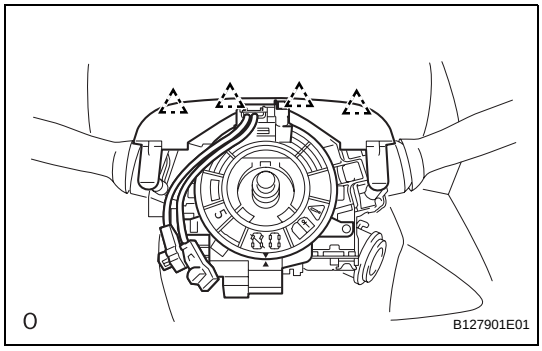

RS

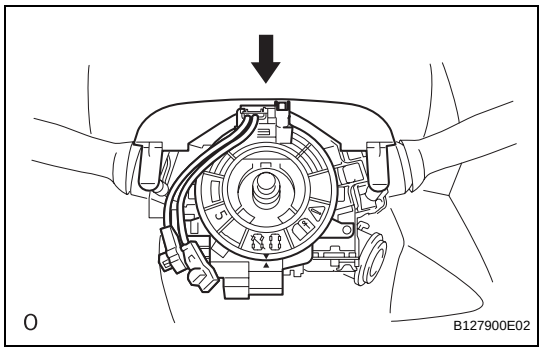

(f) Install the steering column cover (upper).

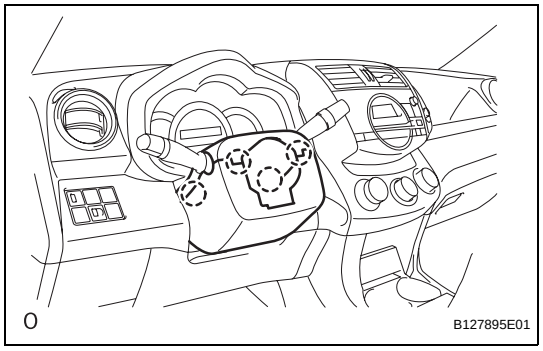

2. INSTALL STEERING COLUMN COVER (LOWER)

(a) Attach the 4 claws.

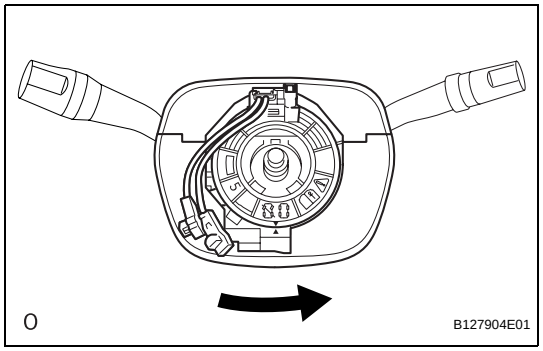

3. POSITION SPIRAL CABLE

(a) Slowly rotate the spiral cable counterclockwise by hand until it feels firm.

NOTICE:

Do not use the airbag wire harness to turn the spiral cable.

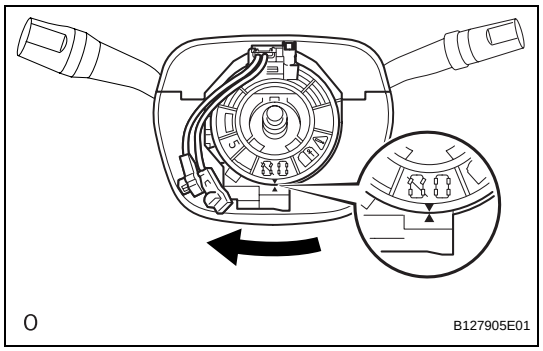

(b) Rotate the spiral cable clockwise approximately 2.5 turns to align the marks.

NOTICE:

Do not use the airbag wire harness to turn the spiral cable.

HINT:

The spiral cable will rotate approximately 2.5 turns to the left and right from the center.

4. INSTALL STEERING WHEEL ASSEMBLY (See page SR-21)

5. INSTALL STEERING PAD ASSEMBLY (See page RS-336)

6. CONNECT CABLE TO NEGATIVE BATTERY TERMINAL

7. INSPECT STEERING PAD ASSEMBLY (See page RS-337)

8. CHECK SRS WARNING LIGHT

(a) Check the SRS warning light (see page RS-34).

9. INSPECT STEERING WHEEL POSITION

SPIRAL CABLE

COMPONENTS

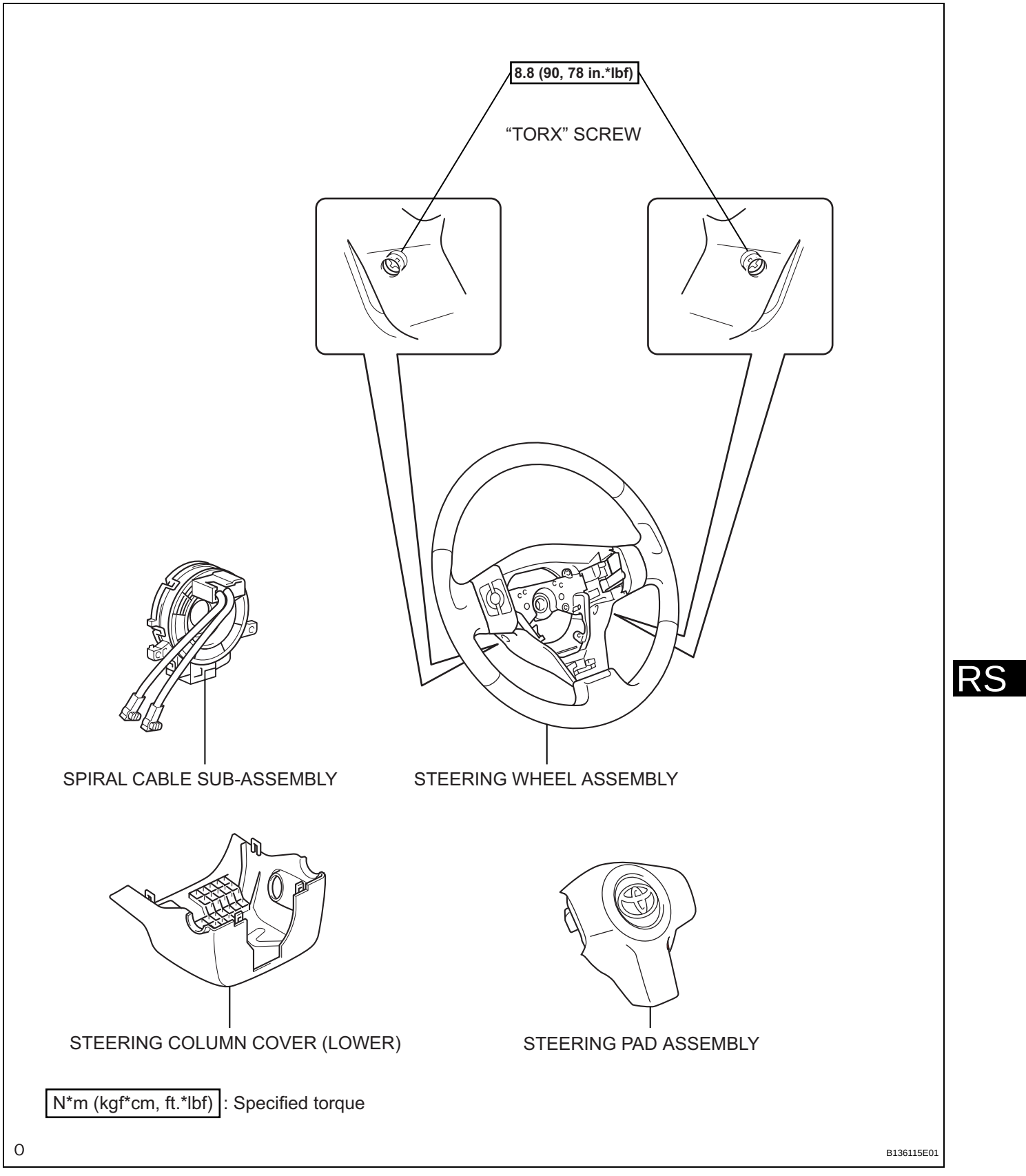

RS

REMOVAL

CAUTION:
Be sure to read the precautionary notices concerning the SRS airbag system before servicing it (see page RS-1).

1. **DISCONNECT CABLE FROM NEGATIVE BATTERY TERMINAL**
   CAUTION:
   Wait at least 90 seconds after disconnecting the cable from the negative (-) battery terminal to prevent airbag and seat belt pretensioner activation.
2. **REMOVE STEERING PAD ASSEMBLY (See page RS-336)**
3. **PLACE FRONT WHEELS FACING STRAIGHT AHEAD**
4. **REMOVE STEERING WHEEL ASSEMBLY (See page SR-12)**
5. **REMOVE STEERING COLUMN COVER (LOWER) (See page SR-12)**
6. **REMOVE SPIRAL CABLE SUB-ASSEMBLY**
   (a) Rise the steering column cover (upper).
   NOTICE:
   When handling the airbag connector, do not damage the airbag wire harness.

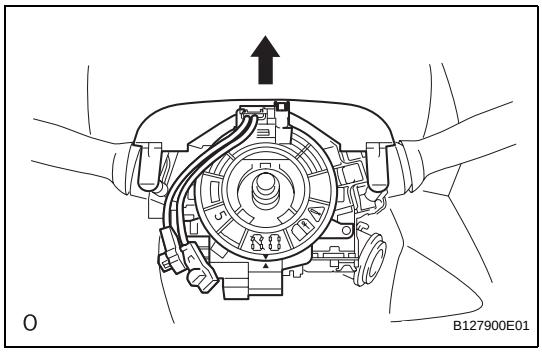

(b) Detach the 4 clips and remove the column cover (upper).

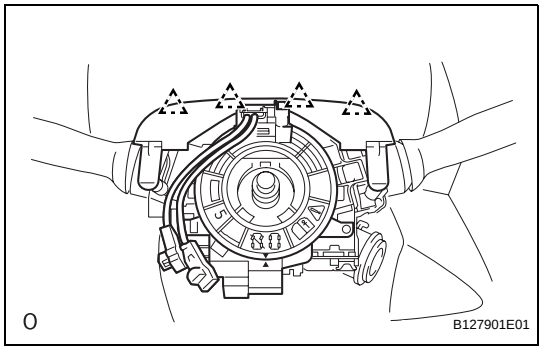

(c) Detach the 3 claws and remove the spiral cable.

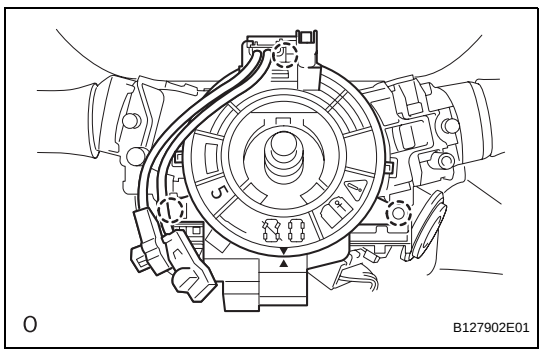

RS

REMOVAL

CAUTION:
Be sure to read the precautionary notices concerning the SRS airbag system before servicing it (see page RS-1).

1. **DISCONNECT CABLE FROM NEGATIVE BATTERY TERMINAL**
   CAUTION:
   Wait at least 90 seconds after disconnecting the cable from the negative (-) battery terminal to prevent airbag and seat belt pretensioner activation.

2. **REMOVE STEERING PAD ASSEMBLY**
   (a) Straighten the front wheels.
   (b) Using a T30 "torx" driver, loosen the 2 screws until the groove along each screw circumference catches on the screw case.

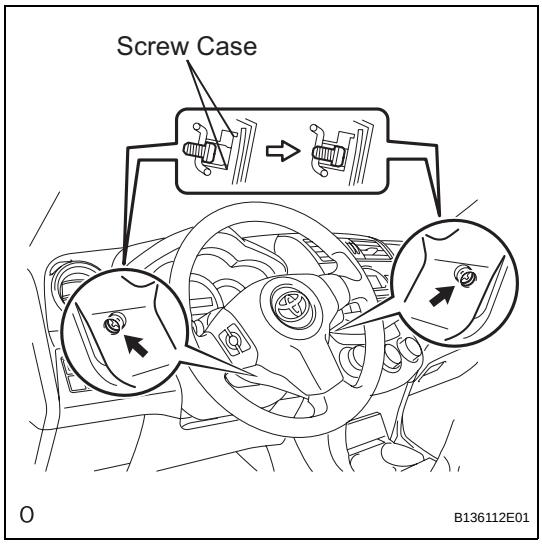

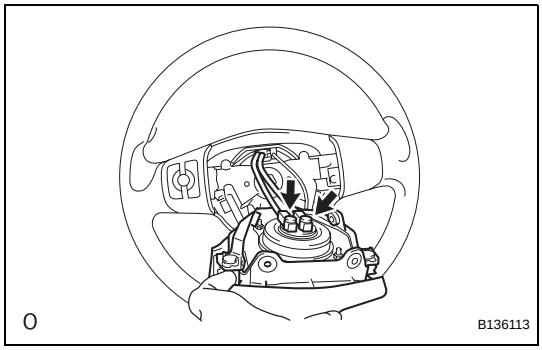

   (c) Pull out the steering pad from the steering wheel and support the steering pad with one hand as shown in the illustration.
   NOTICE:
   When removing the steering pad, do not pull the airbag wire harness.
   (d) Using a screwdriver, disconnect the 2 airbag connectors.
   CAUTION:
   When handling the airbag connector, do not damage the airbag wire harness.
   (e) Disconnect the horn connector and remove the steering pad.

RS

INSTALLATION

CAUTION:
Be sure to read the precautionary notices concerning the SRS airbag system before servicing it (see page RS-1).

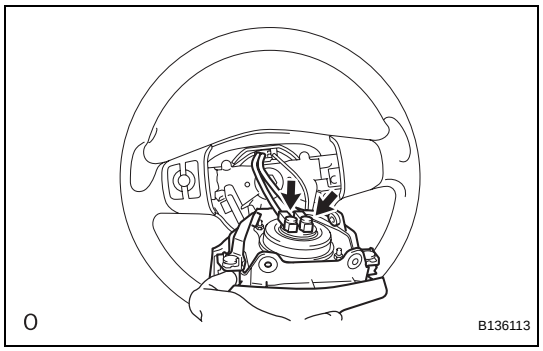

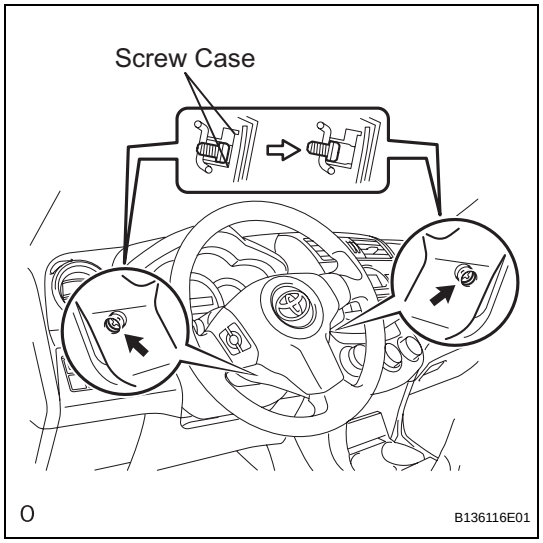

1. INSTALL STEERING PAD ASSEMBLY

(a) Support the steering pad with one hand as shown in the illustration.

(b) Connect the 2 airbag connectors.
NOTICE:
When handling the airbag connector, do not damage the airbag wire harness.

(c) Connect the horn connector.

(d) Install the steering pad after confirming that the circumference grooves of the screws are caught on the screw case.

(e) Using a T30 "torx" driver, install the 2 screws.
Torque: 8.8 N*m (90 kgf*cm, 78 in.*lbf)

2. CONNECT CABLE TO NEGATIVE BATTERY TERMINAL

3. INSPECT STEERING PAD ASSEMBLY

(a) Check for cuts, cracks or discoloration on the steering pad outer surface and in the grooved portion.

(b) Check that the horn sounds.

4. CHECK SRS WARNING LIGHT

(a) Check the SRS warning light (see page RS-34).

DISPOSAL

HINT:
When scrapping a vehicle equipped with an SRS or disposing of the steering pad, be sure to deploy the airbag first in accordance with the procedure described below. If any abnormality occurs with the airbag deployment, contact the SERVICE DEPT. of TOYOTA MOTOR SALES, U.S.A., INC.

CAUTION:

- **Never dispose of a steering pad with an unactivated airbag.**
- **The airbag produces a loud, exploding sound when it activates. Perform the operation where it will not be a nuisance to people nearby.**
- **When activating the airbag, always use the specified SST (SRS airbag deployment tool).**
- **Perform procedures in a place away from electrical interference.**
- **When activating the airbag, stand at least 10 m (33 ft.) away from the steering pad.**
- **The steering pad becomes very hot when the airbag is deployed. Do not touch it for at least 30 minutes after activation.**
- **Use gloves and safety glasses when handling a steering pad with a deployed airbag.**
- **Do not apply water to a steering pad with a deployed airbag.**
- **Always wash your hands with water after completing the operation.**

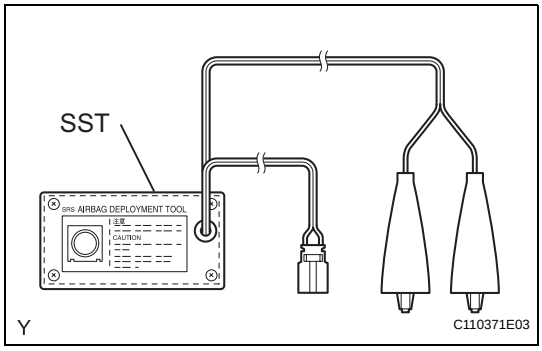

1. DISPOSE OF STEERING PAD ASSEMBLY TOGETHER WITH VEHICLE

SST 09082-00700, 09082-00780, 09950-50013 (09951-05010, 09952-05010, 09953-05020, 09954-05021)

HINT:
Prepare a battery as the power source to deploy the airbag.

(a) Check if SST is functioning properly.
SST 09082-00700

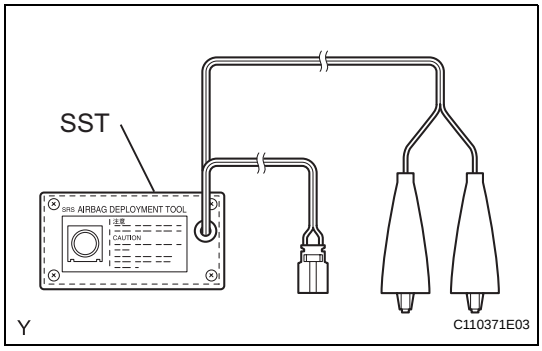

RS

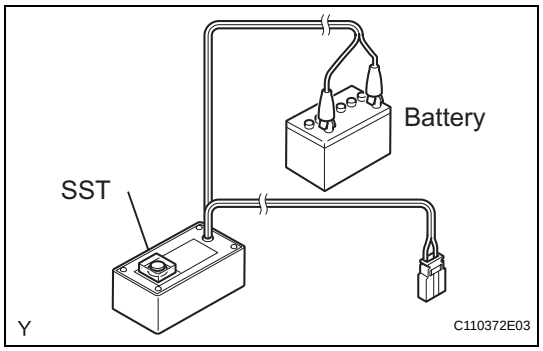

(1) Connect the SST's red clip to the positive (+) battery terminal and the black clip to the negative (-) battery terminal.
HINT:
The yellow connector will be used to connect to another SST in a later step.

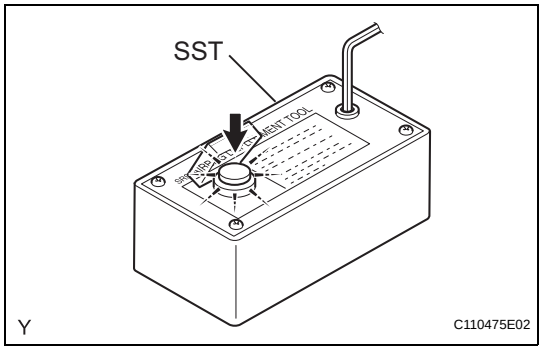

(2) Press the SST activation switch, and check that the LED of the SST activation switch illuminates.
CAUTION:
If the LED illuminates when the activation switch is not pressed, SST may have a malfunction, in which case that SST should not be used.

(3) Disconnect SST from the battery.

(b) Follow the "Precaution" (see page RS-1).

(c) Disconnect the cable from the negative (-) battery terminal.
CAUTION:
Wait at least 90 seconds after disconnecting the cable from the negative (-) battery terminal to prevent airbag and seat belt pretensioner activation.

(d) Remove the steering column cover (lower).

(1) Remove the steering pad (see page RS-336).

(2) Remove the steering wheel set nut.

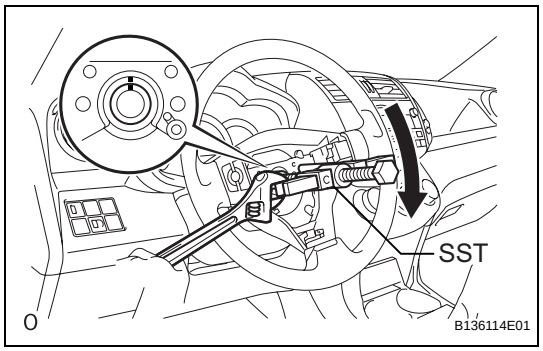

(3) Put matchmarks on the steering wheel and main shaft.

(4) Using SST, remove the steering wheel.
SST 09950-50013 (09951-05010, 09952-05010, 09953-05020, 09954-05021)

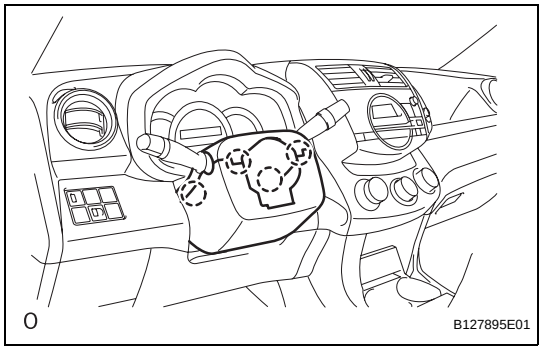

(5) Detach the 4 claws.

RS

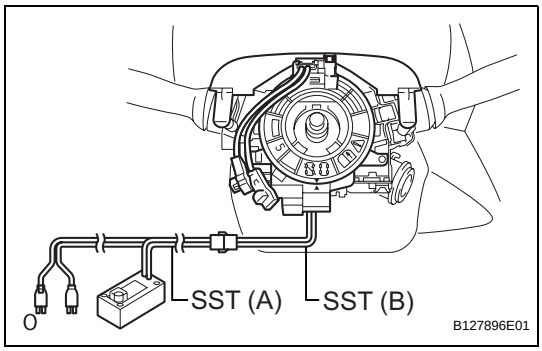

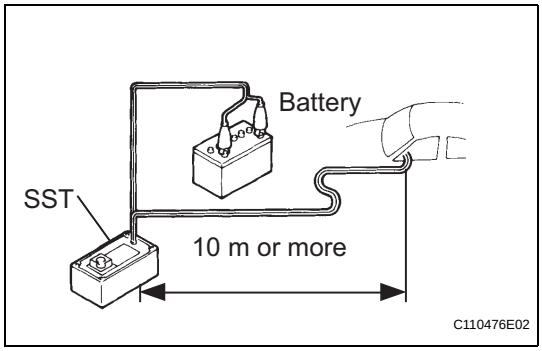

(e) Install SST.

CAUTION:

Check that there is no free play in the steering wheel and steering pad.

(1) Disconnect the yellow airbag connector from the spiral cable.

NOTICE:

When handling the airbag connector, do not damage the airbag wire harness.

(2) Connect SST (A) to SST (B). Then connect SST (B)'s connector to the spiral cable.

SST 09082-00700, 09082-00780

NOTICE:

To avoid damaging the SST connector and wire harness, do not lock the secondary lock of the twin lock.

(3) Move SST at least 10 m (33 ft.) away from the front side window.

(4) Maintaining enough clearance for the SST wire harness in the front side window, close all doors and windows of the vehicle.

NOTICE:

Take care not do damage the SST wire harness.

(5) Connect the SST's red clip to the positive (+) battery terminal and the black clip to the negative (-) battery terminal.

(f) Deploy the airbag.

(1) Check that no one is inside the vehicle or within a 10 m (33 ft.) radius of the vehicle.

(2) Press the SST activation switch and deploy the airbag.

CAUTION:

- **When deploying the airbag, make sure that no one is near the vehicle.**
- **The steering pad becomes extremely hot when the airbag is deployed. Do not touch it for at least 30 minutes after deployment.**
- **Use gloves and safety glasses when handling a steering pad with a deployed airbag.**
- **Do not apply water to a steering pad with a deployed airbag.**
- **Always wash your hands with water after completing the operation.**

HINT:

The airbag is deployed as the SST activation switch LED illuminates.

2. DISPOSE OF ONLY STEERING PAD ASSEMBLY

NOTICE:

- **When disposing of the steering pad, never use the customer's vehicle to deploy the airbag.**

RS

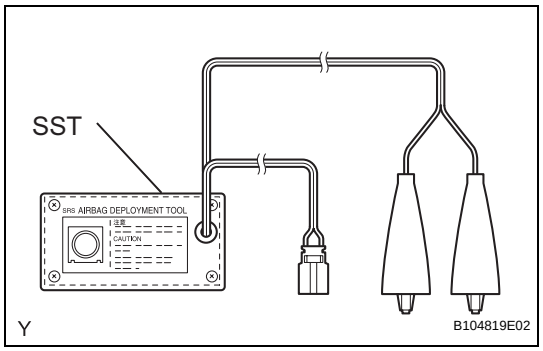

- **Be sure to follow the procedure detailed below when deploying the airbag.**

HINT:
Prepare a battery as the power source to deploy the airbag.

(a) Check if SST is functioning properly (see previous step).

(b) Remove the steering pad (see page RS-336).
CAUTION:
- **When removing the steering pad, work must be started 90 seconds after the ignition switch is turned OFF and after the cable is disconnected from the negative (-) battery terminal.**
- **When storing the steering pad, keep the airbag deployment side facing upward.**

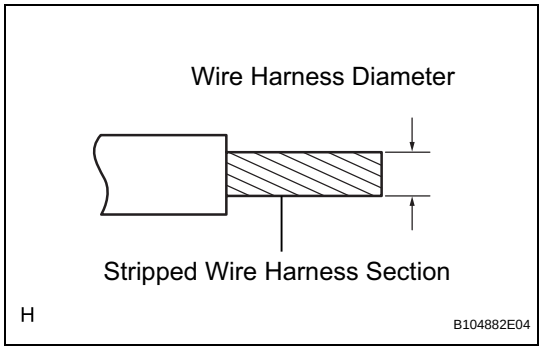

(c) Using service wire harnesses for the vehicle, tie down the steering pad to a disc wheel (with tire).
Wire harness:
Stripped wire harness section
1.25 mm^2 or more (0.0019 $in.^2$ or more)
NOTICE:
Use a disc wheel (with tire) that you are planning to throw away, as the airbag deployment will damage the disc wheel.
CAUTION:
Do not use wire harnesses that are too thin or any other substitute items to tie down the steering pad. They may snap when the airbag deploys. Always use vehicle wire harnesses that have an area of at least 1.25 mm^2 or more (0.0019 $in.^2$).
HINT:
To calculate the area of the stripped wire harness section:
Area = 3.14 x $Diameter^2/4$

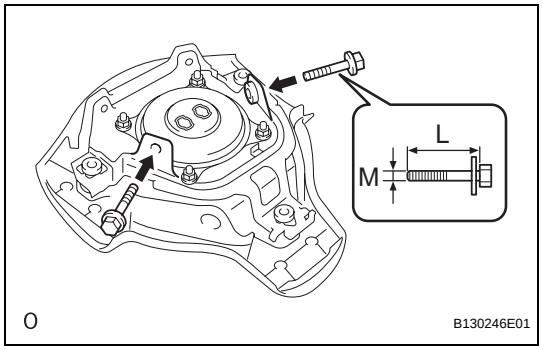

(1) Install the 2 bolts with washers into the 2 bolt holes of the steering pad.
Bolt:
L:
35.0 mm (1.378 in.)
M:
6.0 mm (0.236 in.)
Pitch:
1.0 mm (0.039 in.)
NOTICE:
- **Tighten the bolts by hand until they become difficult to turn.**
- **Do not tighten the bolts excessively.**

RS

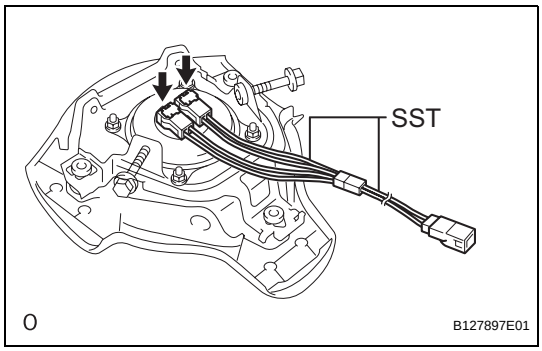

(2) After connecting SST to each other, connect them to the steering pad.
SST 09082-00802 (09082-10801, 09082-30801)

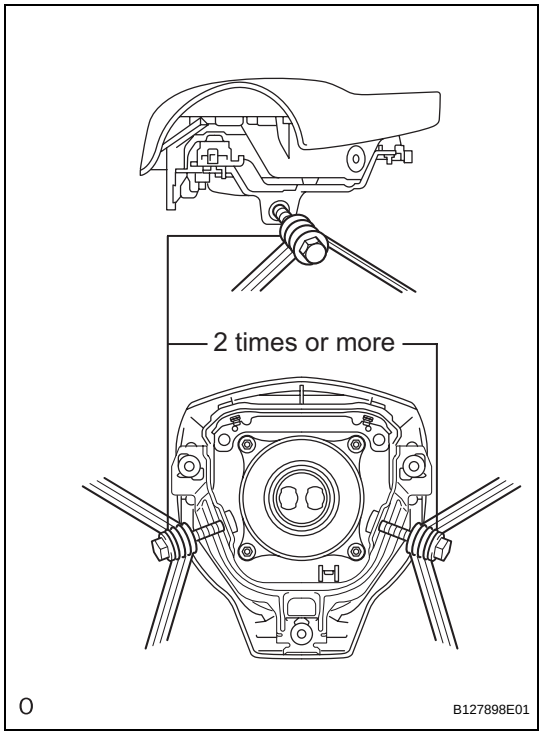

(3) Wind 3 wire harnesses at least twice around the bolts installed on the left and right sides of the steering pad.
CAUTION:
- **Tightly wind the wire harnesses around the bolts so that there is no slack.**
- **Make sure that the wire harnesses are tight. If there is slack in a wire harness, the steering pad may come loose when the airbag is deployed.**

RS

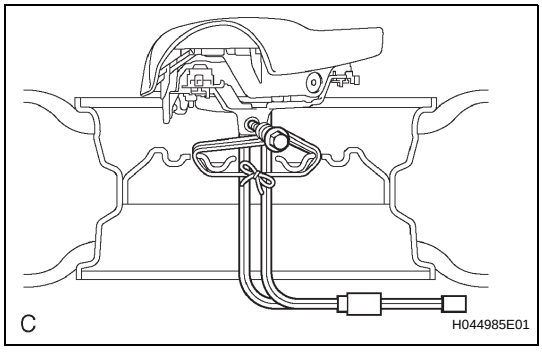

(4) Face the airbag deployment side of the steering pad upward. Separately tie the left and right sides of the steering pad to a disc wheel through the hub nut holes. Position the SST connector so that it hangs downward through the hub hole in the disc wheel.
CAUTION:
- **Make sure that the wire harnesses are tight. If there is slack in a wire harness, the steering pad may come loose when the airbag is deployed.**
- **Always tie down the steering pad with the airbag deployment side facing upward.**

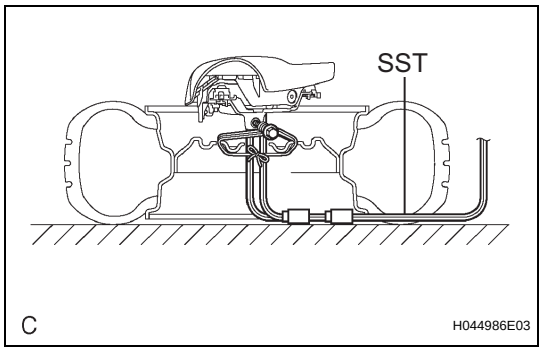

(d) Install SST.

CAUTION:

Place the tire with disc wheel and steering pad on a level surface.

(1) Connect the connector of SST.

SST 09082-00700

NOTICE:

To avoid damaging the SST connector and wire harness, do not lock the secondary lock of the twin lock. Also, secure some slack for the SST wire harness inside the disc wheel.

(2) Move SST at least 10 m (33 ft.) away from the steering pad.

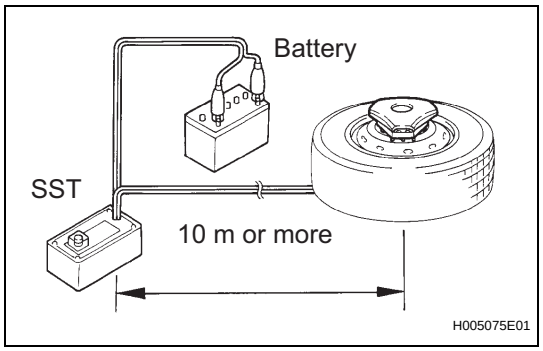

(e) Cover the steering pad with a cardboard box or tires.

(1) Covering method using a cardboard box:
Cover the steering pad with the cardboard box and place weights of at least 19 kg (43 lb) on the cardboard box in 4 places.

Cardboard box size:

X minimum = 460 mm (18.11 in.)

Y minimum = 650 mm (25.59 in.)

NOTICE:

- **When dimension Y of the cardboard box exceeds the tire dimension, X should be the following size.**

  X minimum = 460 mm (18.11 in.) + width of tire
- **If using a cardboard box which is smaller than the specified size, the cardboard box will break during airbag deployment.**

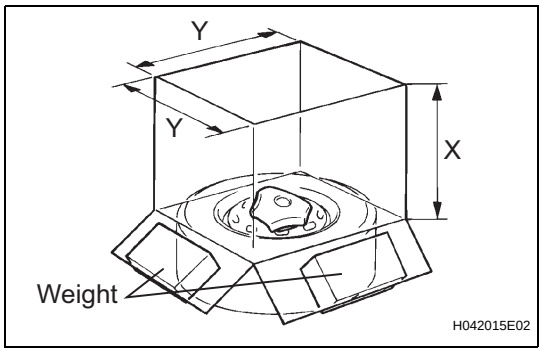

RS

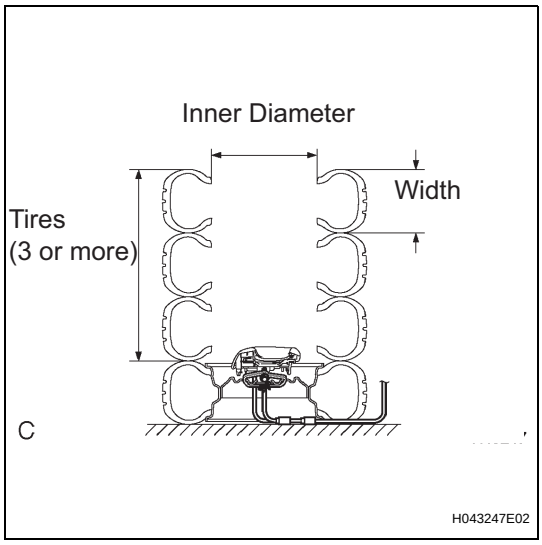

(2) Covering method using tires:
Place at least 3 tires (without disc wheels) on top of the tire (with disc wheel and steering pad).
Tire size:
Width minimum:
185 mm (7.28 in.)
Inner diameter minimum:
360 mm (14.17 in.)
CAUTION:
Do not use tires with disc wheels to cover the tire (with disc wheel and steering pad).
NOTICE:
- **Use tires that you are planning to throw away, as the airbag deployment may damage the tires.**
- **Do not place the SST connector under the tire as the connector may be damaged.**

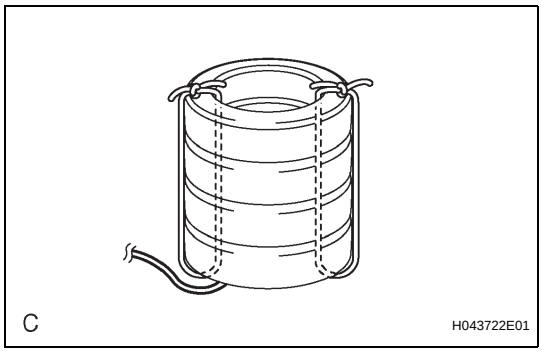

(3) Tie the tires together with 2 wire harnesses.
CAUTION:
Make sure that the wire harnesses are tight. If there is slack in a wire harness, the tires may come loose when the airbag is deployed.

(f) Deploy the airbag.
(1) Connect the SST's red clip to the positive (+) battery terminal and the black clip to the negative (-) battery terminal.
(2) Check that no one is within a 10 m (33 ft.) radius of the steering pad.
(3) Press the SST activation switch and deploy the airbag.
CAUTION:
When deploying the airbag, make sure that no one is near the tires.
HINT:
The airbag is deployed as the SST activation switch LED illuminates.

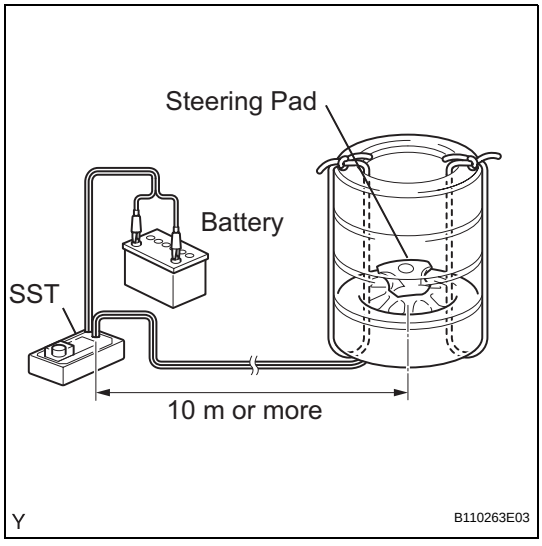

RS

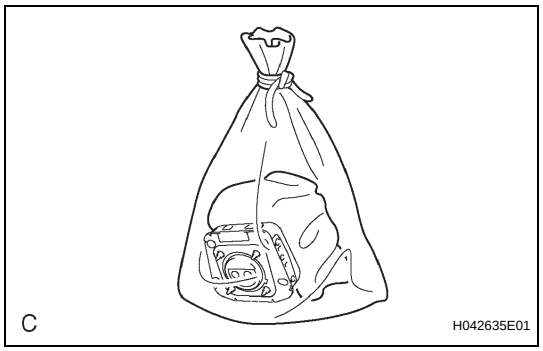

(g) Dispose of the steering pad.
CAUTION:
- **The steering pad becomes extremely hot when the airbag is deployed. Do not touch it for at least 30 minutes after deployment.**
- **Do not apply water to a steering pad with a deployed airbag.**
- **Always wash your hands with water after completing the operation.**

(1) Remove the steering pad from the disc wheel.
(2) Place the steering pad in a plastic bag, tie it tightly and dispose of it in the same way as other general parts.

STEERING PAD

COMPONENTS

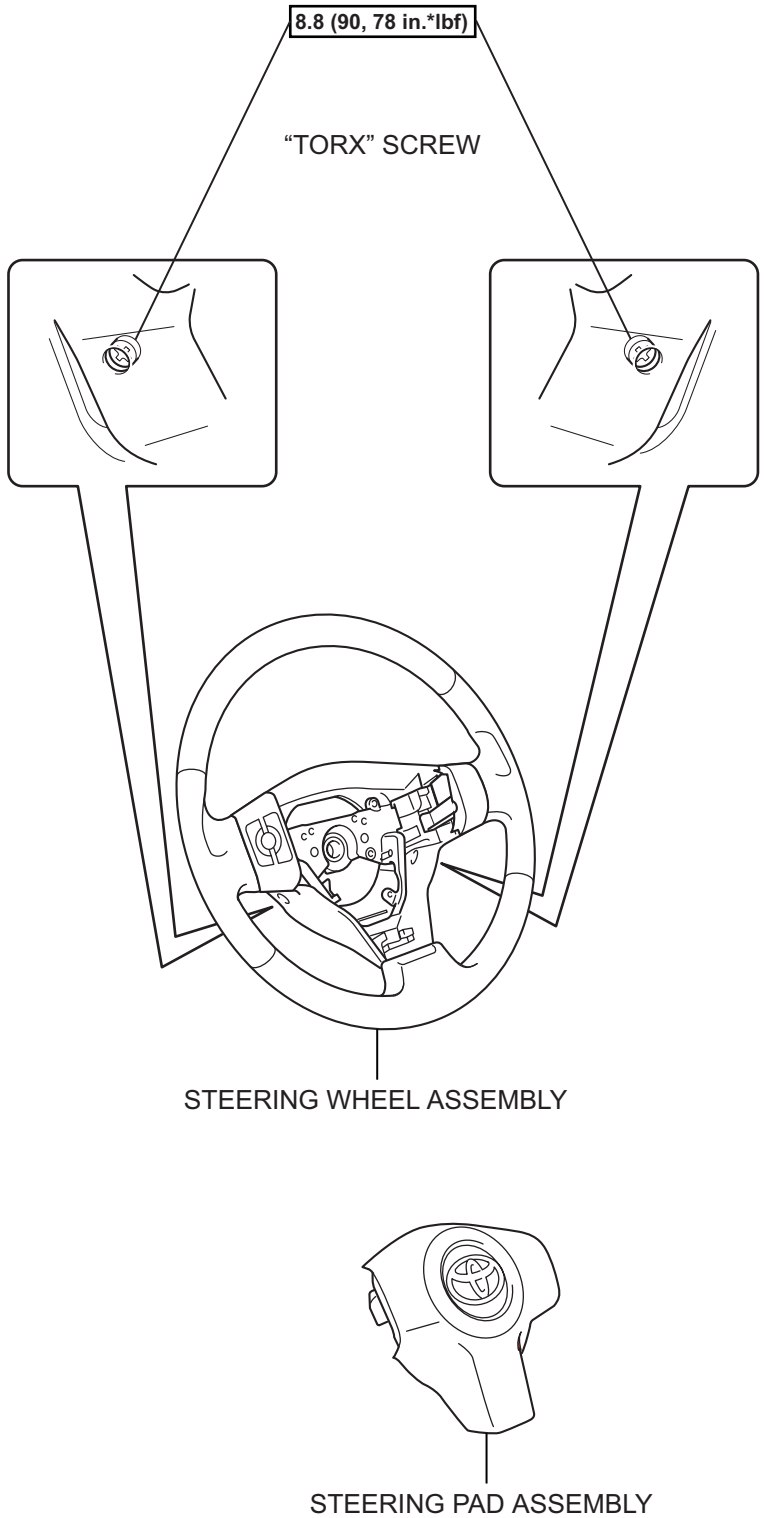

N*m (kgf*cm, ft.*lbf) : Specified torque

O

B136110E01

RS

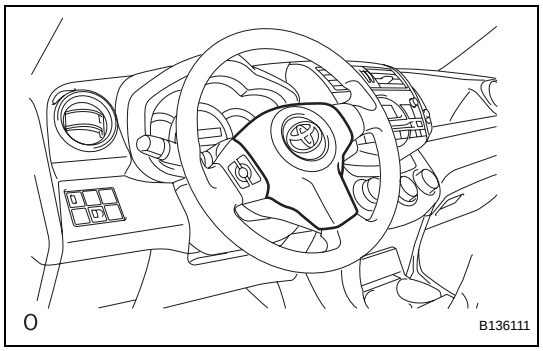

ON-VEHICLE INSPECTION

1. CHECK STEERING PAD ASSEMBLY (VEHICLE NOT INVOLVED IN COLLISION AND AIRBAG NOT DEPLOYED)

(a) Perform a diagnostic system check (see page RS-49).

(b) With the steering pad (with airbag) installed on the vehicle, perform a visual check:
Check for cuts, cracks or discoloration on the steering pad outer surface and in the grooved portion.
If any of the defects mentioned above are present, replace the steering pad with a new one.
CAUTION:
For removal and installation of the steering pad, be sure to follow the correct procedure.

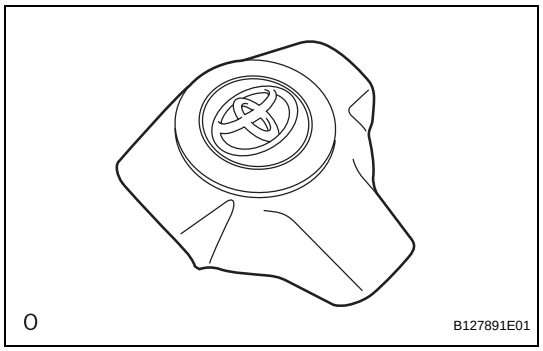

2. CHECK STEERING PAD ASSEMBLY (VEHICLE INVOLVED IN COLLISION AND AIRBAG NOT DEPLOYED)

(a) Perform a diagnostic system check (see page RS-49).

(b) With the steering pad (with airbag) removed from the vehicle, perform a visual check:
- Check for cuts, cracks or discoloration on the steering pad outer surface and in the grooved portion.
- Check for cuts and cracks in the wire harness, and chipping on the connectors.
- Check for deformation on the steering wheel.
- Check for deformation of the steering pad contact plates.

If any of the defects mentioned above are present, replace the steering pad with a new one.
CAUTION:
For removal and installation of the steering pad, be sure to follow the correct procedure.
HINT:
- If the steering pad contact plates are deformed, never repair them. Always replace the steering pad with a new one.
- There should be no interference between the steering pad and steering wheel, and the clearance should be uniform all the way around when the new steering pad is installed on the steering wheel.

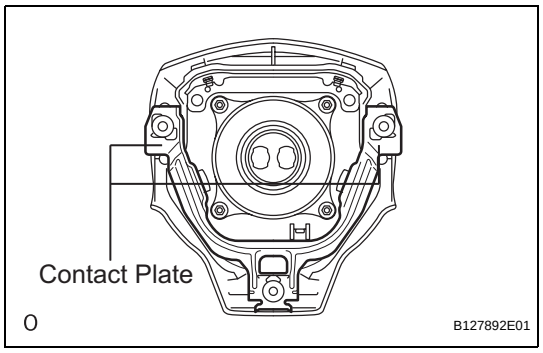

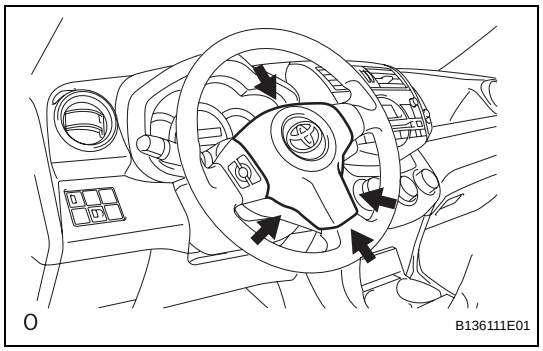

RS

INSTALLATION

HINT:

- Use the same procedures for the RH side and LH side.
- The procedures listed below are for the LH side.

1. **INSTALL FRONT LOWER BALL JOINT ASSEMBLY LH**
   (a) Install the ball joint with the 2 bolts and nut to the lower arm.
   Torque: 92 N*m (938 kgf*cm, 68 ft.*lbf)
   (b) Install the lower ball joint with the nut to the steering knuckle.
   Torque: 133 N*m (1,360 kgf*cm, 98 ft.*lbf)
   (c) Install a new cotter pin.
   If the holes for the cotter pin are not aligned, tighten the nut further up to 60°.
2. **INSTALL STEERING KNUCKLE WITH AXLE HUB (See page AH-9)**
3. **CONNECT FRONT SUSPENSION LOWER NO. 1 ARM SUB-ASSEMBLY LH (See page AH-10)**
4. **CONNECT TIE ROD END SUB-ASSEMBLY LH (See page PS-45)**
5. **INSTALL FRONT DISC (See page BR-43)**
6. **INSTALL FRONT DISC BRAKE CYLINDER ASSEMBLY LH (See page BR-46)**
7. **INSTALL FRONT AXLE HUB NUT (See page AH-10)**
8. **INSTALL FRONT SPEED SENSOR LH (See page BC-193)**
9. **INSTALL FRONT WHEEL**
   Torque: 103 N*m (1,050 kgf*cm, 76 ft.*lbf)
10. **INSPECT AND ADJUST FRONT WHEEL ALIGNMENT**
    (a) Inspect and adjust the front wheel alignment (see page SP-3).

FRONT LOWER BALL JOINT

COMPONENTS

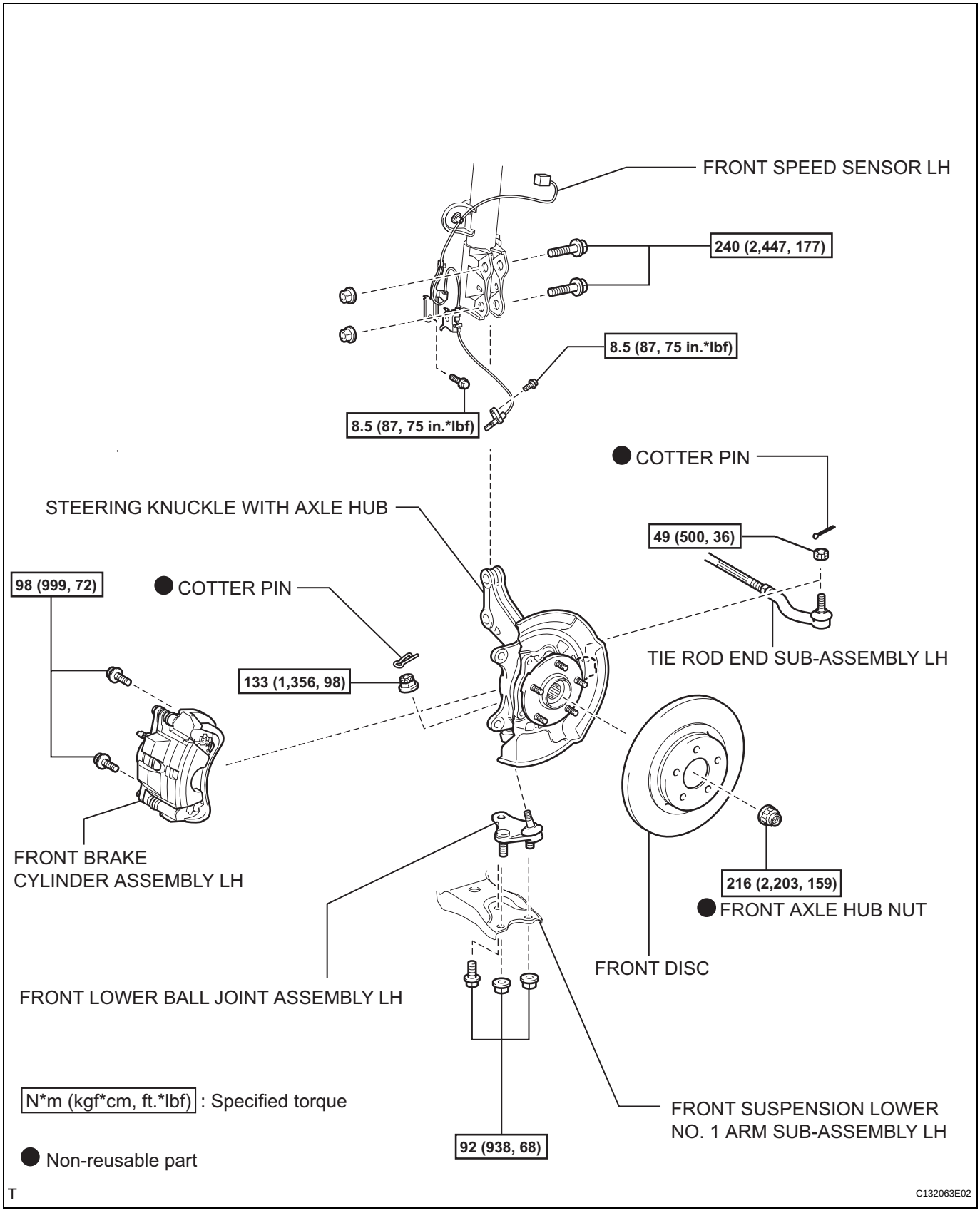

REMOVAL

HINT:

- Use the same procedures for the RH side and LH side.
- The procedures listed below are for the LH side.

1. **REMOVE FRONT WHEEL**
2. **REMOVE FRONT SPEED SENSOR LH (for 2WD) (See page BC-191)**
3. **REMOVE FRONT BRAKE CYLINDER ASSEMBLY LH (See page BR-40)**
4. **REMOVE FRONT DISC (See page BR-42)**
5. **REMOVE FRONT AXLE HUB NUT (See page AH-6)**
6. **DISCONNECT FRONT SUSPENSION LOWER NO. 1 ARM SUB-ASSEMBLY LH (See page AH-7)**
7. **DISCONNECT TIE ROD END SUB-ASSEMBLY LH (See page PS-42)**
8. **REMOVE STEERING KNUCKLE WITH AXLE HUB (See page AH-7)**
9. **REMOVE FRONT LOWER BALL JOINT ASSEMBLY LH**
   (a) Remove the cotter pin and nut.
   (b) Using SST, remove the lower ball joint.
   SST 09628-62011

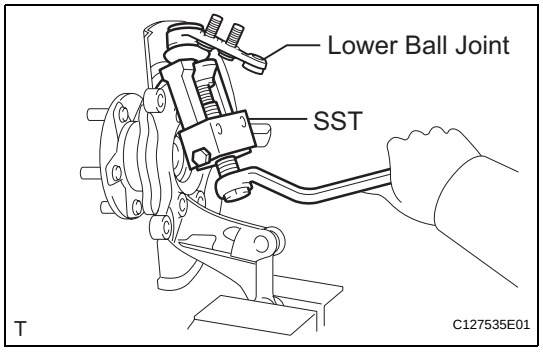

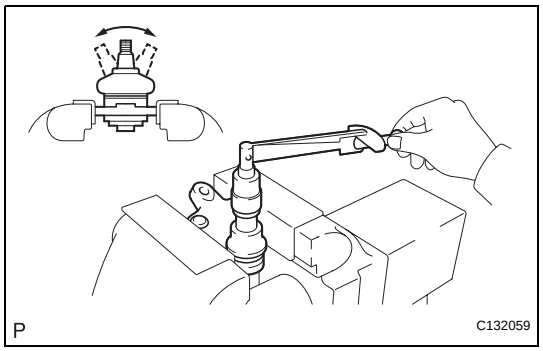

INSPECTION

1. **INSPECT FRONT LOWER BALL JOINT ASSEMBLY LH**
   (a) As shown in the illustration, move the ball joint stud back and forth 5 times before installing the nut.
   (b) Using a torque wrench, turn the nut continuously at a rate of 3 to 5 seconds per turn and take the torque reading on the fifth turn.
   Standard turning torque:
   0.98 to 3.43 N*m (10 to 35 kgf*cm, 9 to 30 in.*lbf) or less
   (c) Check for any cracks and grease leaks on the ball joint dust cover.

DISASSEMBLY

HINT:
- Use the same procedures for the RH side and LH side.
- The procedures listed below are for the LH side.

1. REMOVE FRONT SUSPENSION SUPPORT PLATE LH
(a) Remove the plate from the shock absorber.

2. REMOVE FRONT SUSPENSION SUPPORT DUST COVER LH
(a) Using a screwdriver, remove the dust cover from the suspension support.
HINT:
Tape the screwdriver tip before use.

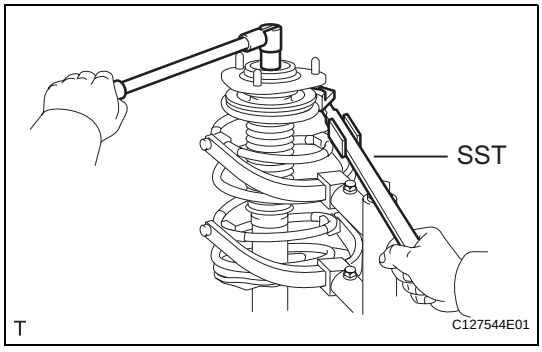

3. REMOVE FRONT SUPPORT TO FRONT SHOCK ABSORBER NUT
(a) Install 2 nuts and 2 bolts to the bracket at the lower portion of the shock absorber and secure it with a vise.
(b) Using SST, compress the coil spring.
SST 09727-30021 (09727-00010, 09727-00021, 09727-00031)
HINT:
To prevent the coil spring from being damaged, wind vinyl tape on the coil spring.
NOTICE:
- **When holding the shock absorber with the coil spring removed, do not hold it by the spring lower seat. Also, do not knock the spring lower seat.**
- **Do not use an impact wrench which will damage SST.**

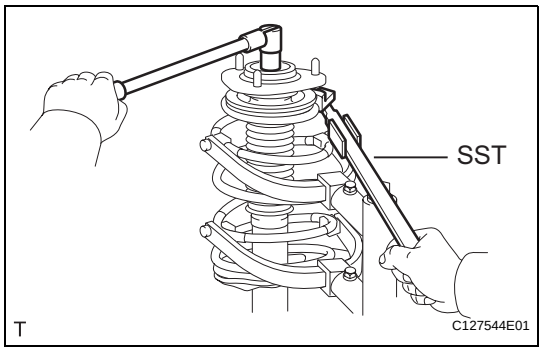

(c) Using SST to hold the spring upper seat, remove the nut.
SST 09729-22031

4. REMOVE FRONT SUSPENSION SUPPORT SUB-ASSEMBLY LH
(a) Remove the suspension support from the shock absorber.

5. REMOVE FRONT SUSPENSION SUPPORT LH DUST SEAL
(a) Remove the dust seal from the shock absorber.

6. REMOVE FRONT COIL SPRING SEAT UPPER LH
(a) Remove the seat upper from the shock absorber.

7. REMOVE FRONT COIL SPRING INSULATOR UPPER LH
(a) Remove the insulator upper from the shock absorber.

8. REMOVE FRONT SPRING BUMPER LH
(a) Disengage the spring bumper from the spring seat.

9. REMOVE FRONT COIL SPRING LH

(a) Remove the coil spring from the shock absorber.

(b) Remove SST from the coil spring.

10. REMOVE FRONT COIL SPRING INSULATOR LOWER LH

(a) Remove the insulator lower from the shock absorber.

INSPECTION

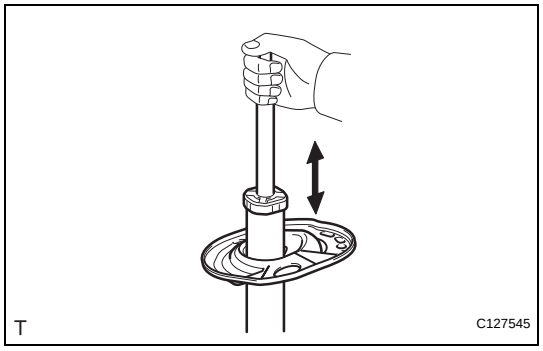

1. INSPECT FRONT SHOCK ABSORBER ASSEMBLY LH

(a) Compress and extend the shock absorber rod 4 times or more. Check that there is no abnormal resistance or unusual sound during the operation. If there is any abnormality, replace the shock absorber assembly with a new one.

NOTICE:

When disposing of the shock absorber, see DISPOSAL (see page SP-13).

REASSEMBLY

HINT:
- Use the same procedures for the RH side and LH side.
- The procedures listed below are for the LH side.

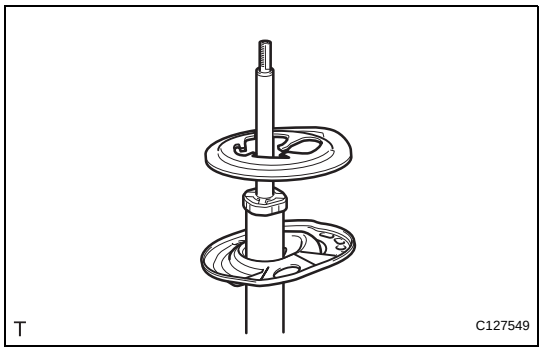

1. INSTALL FRONT COIL SPRING INSULATOR LOWER LH
(a) Install the insulator lower to the shock absorber.

2. INSTALL FRONT SPRING BUMPER LH
(a) Engage the spring bumper to the spring seat.

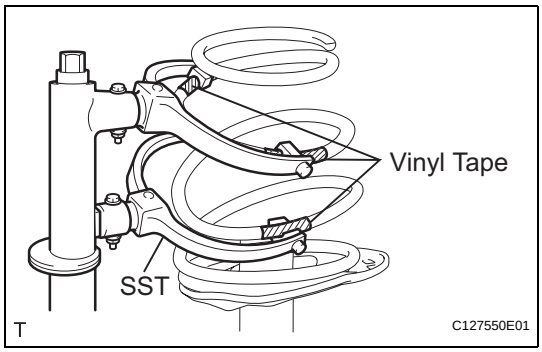

3. INSTALL FRONT COIL SPRING LH
(a) Using SST, compress the coil spring.
SST 09727-30021 (09727-00010, 09727-00021, 09727-00031)
HINT:
To prevent the coil spring from being damaged, wind vinyl tape around the coil spring.
NOTICE:
Do not use an impact wrench which will damage SST.
(b) Install the coil spring to the shock absorber.
HINT:
Fit the lower end of the coil spring to the gap of the lower spring seat.

4. INSTALL FRONT COIL SPRING INSULATOR UPPER LH
(a) Install the insulator upper to the shock absorber.

5. INSTALL FRONT COIL SPRING SEAT UPPER LH
(a) Install the seat upper to the shock absorber.

6. INSTALL FRONT SUSPENSION SUPPORT LH DUST SEAL
(a) Install the dust seal to the shock absorber.

7. INSTALL FRONT SUSPENSION SUPPORT SUB-ASSEMBLY LH
(a) Install the suspension support to the shock absorber.

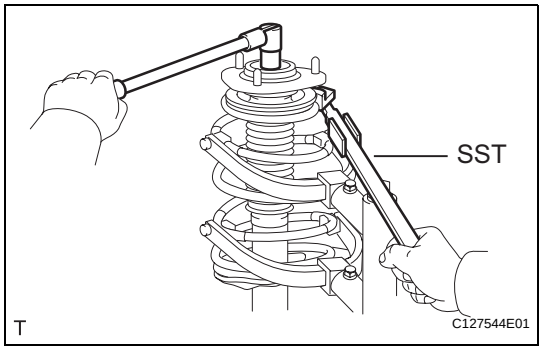

8. INSTALL FRONT SUPPORT TO FRONT SHOCK ABSORBER NUT
(a) Using SST to hold the spring upper seat, install a new nut.
SST 09729-22031
Torque: 47 N*m (475 kgf*cm, 34 ft.*lbf)
(b) Remove SST.
SST 09727-30021 (09727-00010, 09727-00021, 09727-00031)

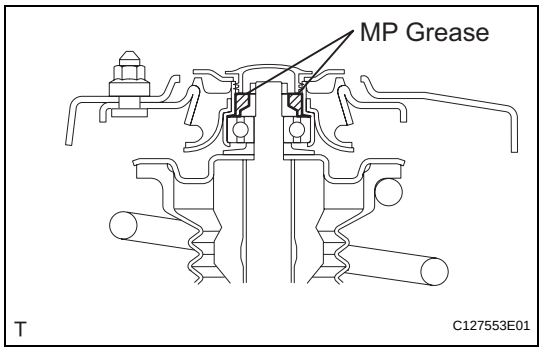

(c) Pack the suspension support with MP grease.

9. INSTALL FRONT SUSPENSION SUPPORT DUST COVER LH

(a) Install the dust cover to the shock absorber.

10. INSTALL FRONT SUSPENSION SUPPORT PLATE LH

(a) Install the support plate to the shock absorber with coil spring.

INSTALLATION

HINT:
- Use the same procedures for the RH side and LH side.
- The procedures listed below are for the LH side.

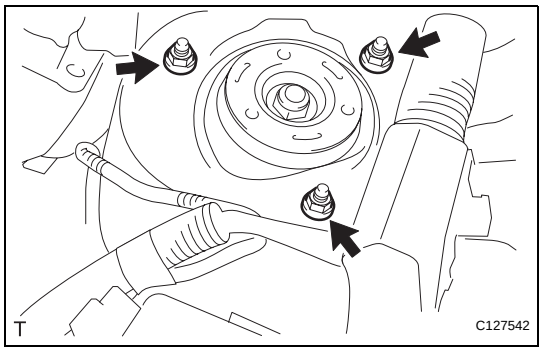

1. INSTALL FRONT SHOCK ABSORBER WITH COIL SPRING LH

(a) Install the front shock absorber with coil spring (upper side) with the 3 nuts.
Torque: 50 N*m (510 kgf*cm, 37 ft.*lbf)

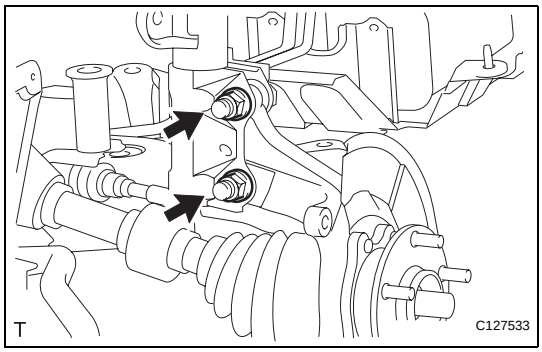

(b) Install the front shock absorber with coil spring to the steering knuckle with the 2 bolt and 2 nuts.
Torque: 240 N*m (2,447 kgf*cm, 177 ft.*lbf)
NOTICE:
Do not tighten the bolts.

2. CONNECT FRONT STABILIZER LINK ASSEMBLY LH (See page SP-31)

3. CONNECT FRONT SPEED SENSOR LH (See page BC-193)

4. INSTALL FRONT WHEEL
Torque: 103 N*m (1,050 kgf*cm, 76 ft.*lbf)

5. STABILIZE SUSPENSION
(a) Lower the vehicle.
(b) Press down on the vehicle several times to stabilize the suspension.

6. INSPECT AND ADJUST FRONT WHEEL ALIGNMENT
(a) Inspect and adjust the front wheel alignment (see page SP-3).

DISPOSAL

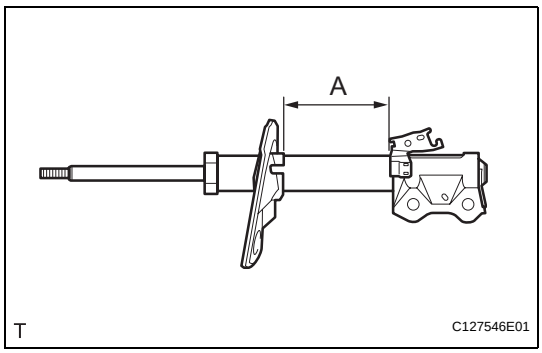

1. DISPOSE OF FRONT SHOCK ABSORBER ASSEMBLY LH

(a) Fully extend the shock absorber piston rod, and clamp it in a vise at an angle.
(b) Using a drill or similar tool, gradually make a hole in area A to discharge the gas inside of the absorber.
CAUTION:
As metal debris may be blown outward by the gas, you must
- Wear protective glasses.
- Cover the area being cut.

NOTICE:
The gas is colorless and harmless.

DISASSEMBLY

HINT:
- Use the same procedures for the RH side and LH side.
- The procedures listed below are for the LH side.

1. REMOVE FRONT SUSPENSION SUPPORT PLATE LH
(a) Remove the plate from the shock absorber.

2. REMOVE FRONT SUSPENSION SUPPORT DUST COVER LH
(a) Using a screwdriver, remove the dust cover from the suspension support.
HINT:
Tape the screwdriver tip before use.

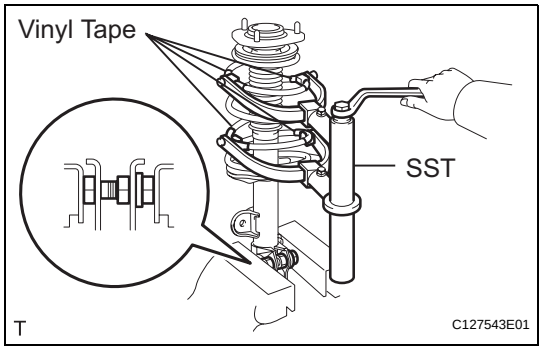

3. REMOVE FRONT SUPPORT TO FRONT SHOCK ABSORBER NUT
(a) Install 2 nuts and 2 bolts to the bracket at the lower portion of the shock absorber and secure it with a vise.
(b) Using SST, compress the coil spring.
SST 09727-30021 (09727-00010, 09727-00021, 09727-00031)
HINT:
To prevent the coil spring from being damaged, wind vinyl tape on the coil spring.
NOTICE:
- **When holding the shock absorber with the coil spring removed, do not hold it by the spring lower seat. Also, do not knock the spring lower seat.**
- **Do not use an impact wrench which will damage SST.**

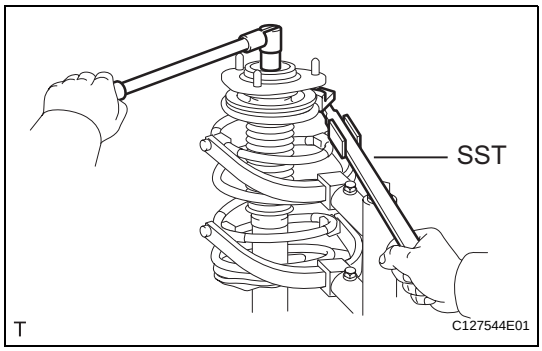

(c) Using SST to hold the suspension support, remove the nut.
SST 09729-22031

4. REMOVE COLLAR
(a) Remove the collar from the suspension support.

5. REMOVE FRONT SUSPENSION SUPPORT SUB-ASSEMBLY LH
(a) Remove the suspension support from the shock absorber.

6. REMOVE STRUT MOUNTING BEARING LH
(a) Remove the mounting bearing from the suspension support.
NOTICE:
- **When removing the bearing, the suspension support may become stuck. Use a screwdriver or equivalent to remove the bearing.**
- **Make sure not to use excessive force when removing the bearing as it may come apart.**

7. REMOVE FRONT COIL SPRING INSULATOR UPPER LH

(a) Remove the insulator upper from the shock absorber.

8. REMOVE FRONT SPRING BUMPER LH

(a) Remove the spring bumper from the shock absorber.

9. REMOVE FRONT COIL SPRING LH

(a) Remove the coil spring from the shock absorber.

(b) Remove SST from the coil spring.

10. REMOVE FRONT COIL SPRING INSULATOR LOWER LH

(a) Remove the insulator lower from the shock absorber.

INSPECTION

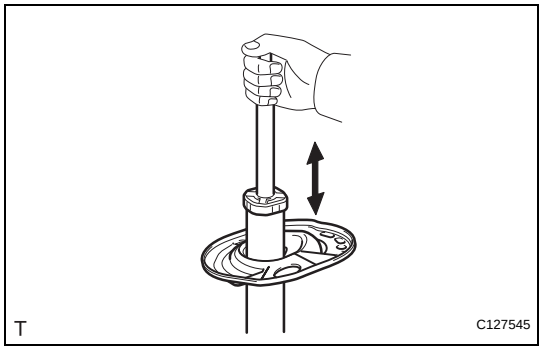

1. INSPECT FRONT SHOCK ABSORBER ASSEMBLY LH

(a) Compress and extend the shock absorber rod 4 times or more. Check that there is no abnormal resistance or unusual sound during the operation. If there is any abnormality, replace the shock absorber assembly with a new one.

NOTICE:

When disposing of the shock absorber, see DISPOSAL (see page SP-19).

SP

REASSEMBLY

HINT:
- Use the same procedures for the RH side and LH side.
- The procedures listed below are for the LH side.

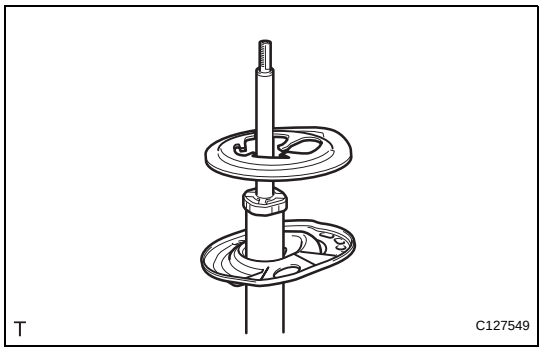

1. INSTALL FRONT COIL SPRING INSULATOR LOWER LH
(a) Install the insulator lower to the shock absorber.

2. INSTALL FRONT SPRING BUMPER LH
(a) Install the spring bumper to the shock absorber.

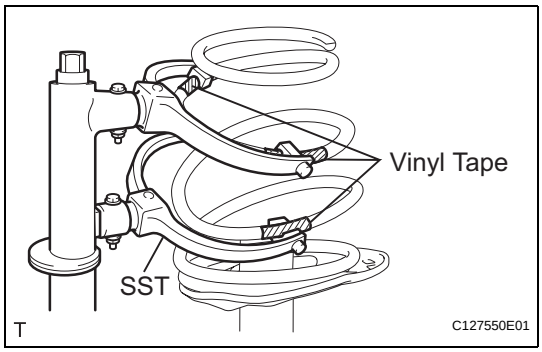

3. INSTALL FRONT COIL SPRING LH
(a) Using SST, compress the coil spring.
SST 09727-30021 (09727-00010, 09727-00021, 09727-00031)
HINT:
To prevent the coil spring from being damaged, wind vinyl tape around the coil spring.
NOTICE:
Do not use an impact wrench which will damage SST.
(b) Install the coil spring to the shock absorber.
HINT:
Fit the lower end of the coil spring to the gap of the lower spring seat.

4. INSTALL FRONT COIL SPRING INSULATOR UPPER LH
(a) Install the insulator upper to the shock absorber.

5. INSTALL STRUT MOUNTING BEARING LH
(a) Install the mounting bearing to the insulator upper.

6. INSTALL COLLAR
(a) Install the collar to the suspension support side.

7. INSTALL FRONT SUSPENSION SUPPORT SUB-ASSEMBLY LH
(a) Install the suspension support to the shock absorber.

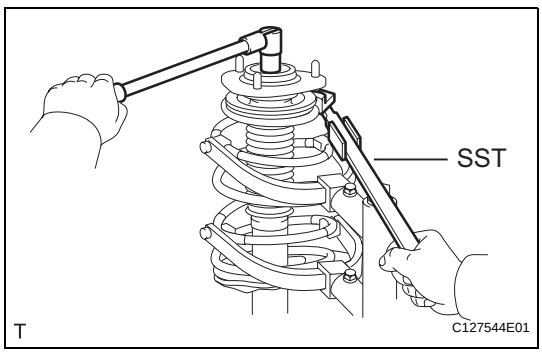

8. REMOVE FRONT SUPPORT TO FRONT SHOCK ABSORBER NUT
(a) Using SST to hold the spring upper seat, install a new nut.
SST 09729-22031
(b) Remove SST.
SST 09727-30021 (09727-00021, 09727-00031)
NOTICE:
When removing SST, make sure that the suspension support is not in an inclined position, as the bearing may come apart.

9. INSTALL FRONT SUSPENSION SUPPORT DUST COVER LH

(a) Install the dust cover to the shock absorber.

10. INSTALL FRONT SUSPENSION SUPPORT PLATE LH

(a) Install the support plate to the shock absorber with coil spring.

INSTALLATION

HINT:
- Use the same procedures for the RH side and LH side.
- The procedures listed below are for the LH side.

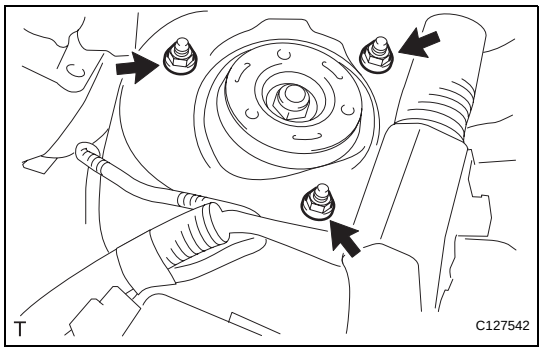

1. **INSTALL FRONT SHOCK ABSORBER WITH COIL SPRING**
   (a) Install the front shock absorber with coil spring (upper side) with the 3 nuts.
   Torque: 50 N*m (510 kgf*cm, 37 ft.*lbf)

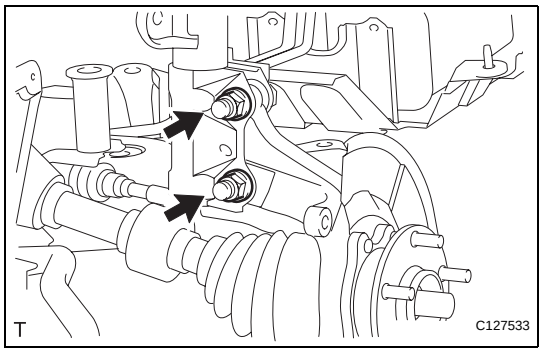

   (b) Install the front shock absorber with coil spring to the steering knuckle with the 2 bolt and 2 nuts.
   Torque: 240 N*m (2,447 kgf*cm, 177 ft.*lbf)
   NOTICE:
   Do not tighten the bolts.

2. **INSTALL FRONT STABILIZER LINK ASSEMBLY LH (See page SP-31)**

3. **INSTALL FRONT SPEED SENSOR LH (See page BC-193)**

4. **INSTALL FRONT WHEEL**
   Torque: 103 N*m (1,050 kgf*cm, 76 ft.*lbf)

5. **STABILIZE SUSPENSION**
   (a) Lower the vehicle.
   (b) Press down on the vehicle several times to stabilize the suspension.

6. **INSPECT AND ADJUST FRONT WHEEL ALIGNMENT**
   (a) Inspect and adjust the front wheel alignment (see page SP-3).

DISPOSAL

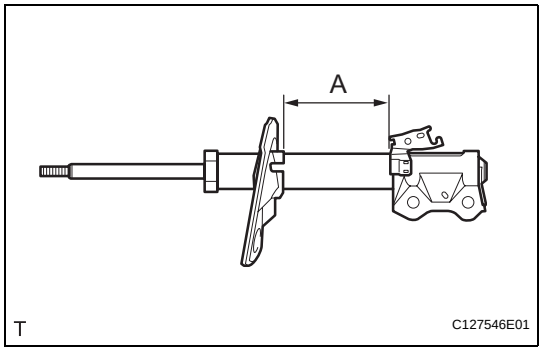

1. **DISPOSE OF FRONT SHOCK ABSORBER ASSEMBLY LH**
   (a) Fully extend the shock absorber piston rod, and clamp it in a vise at an angle.
   (b) Using a drill or similar tool, gradually make a hole in area A to discharge the gas inside of the absorber.
   CAUTION:
   As metal debris may be blown outward by the gas, you must.
   - Wear protective glasses.
   - Cover the area being cut.

   NOTICE:
   The gas is colorless and harmless.

FRONT SHOCK ABSORBER WITH COIL SPRING

COMPONENTS

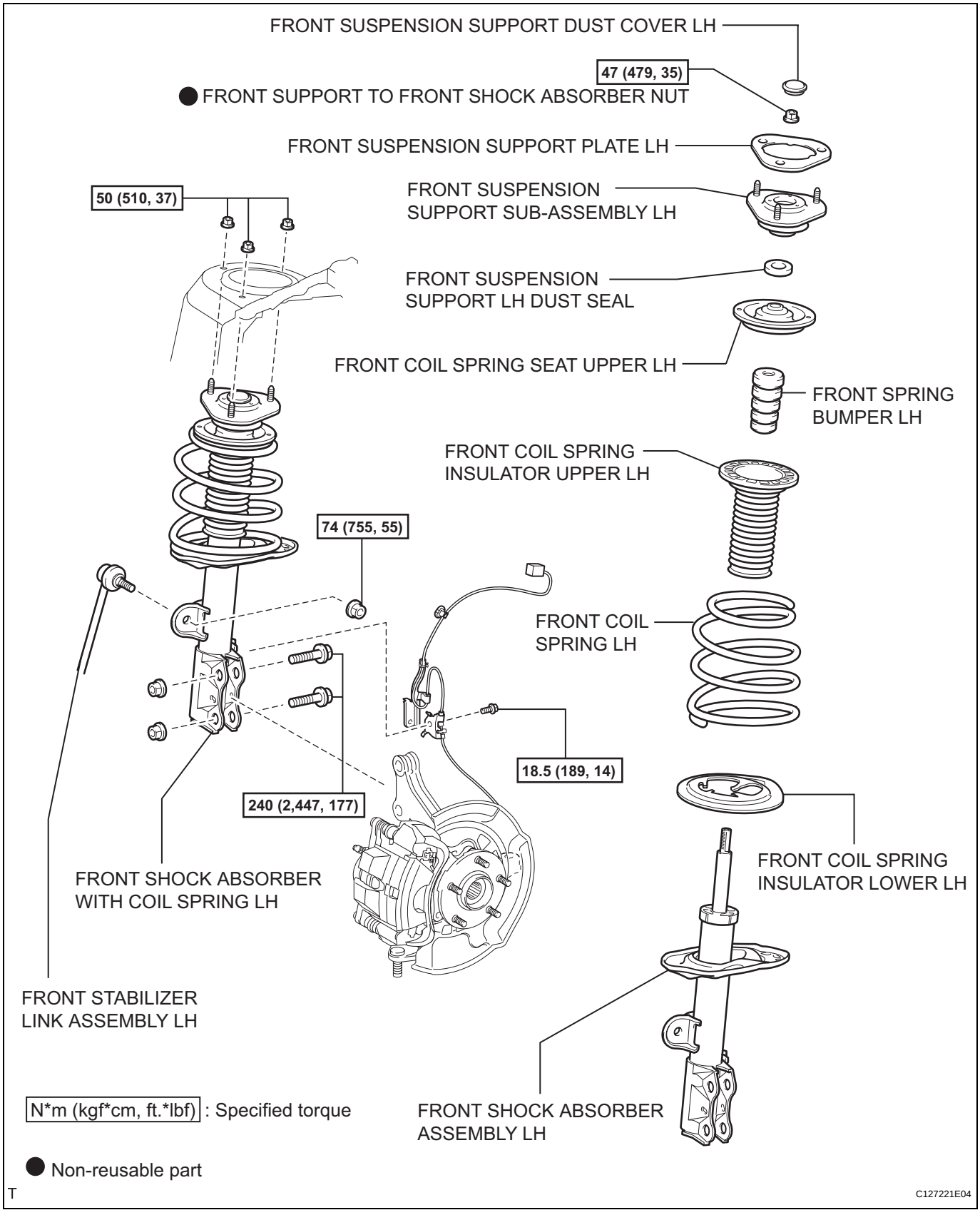

REMOVAL

HINT:

- Use the same procedures for the RH side and LH side.
- The procedures listed below are for the LH side.

1. REMOVE FRONT WHEEL

2. DISCONNECT FRONT SPEED SENSOR LH

3. DISCONNECT FRONT STABILIZER LINK ASSEMBLY LH

4. REMOVE FRONT SHOCK ABSORBER WITH COIL SPRING LH

(a) Remove the 2 bolts and 2 nuts, and disconnect the shock absorber from the steering knuckle.

HINT:

While fixing the nuts in place, loosen and remove the bolts.

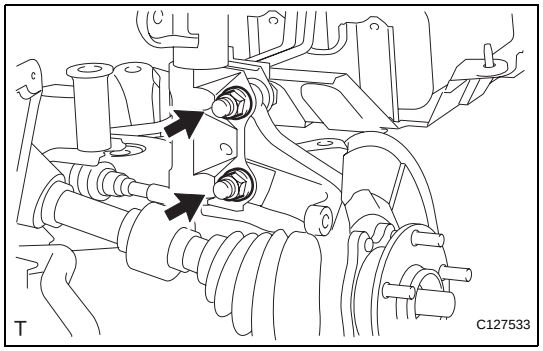

(b) Remove the 3 nuts and shock absorber with coil spring.

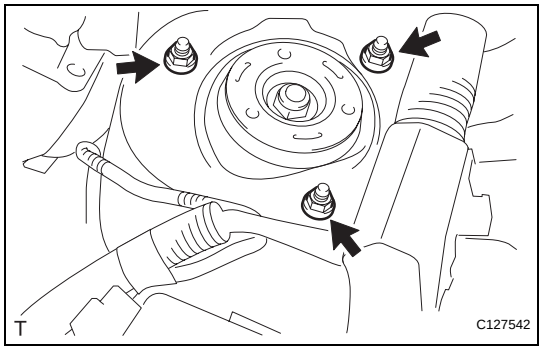

SP

FRONT SHOCK ABSORBER WITH COIL SPRING (for Sport Package)

COMPONENTS

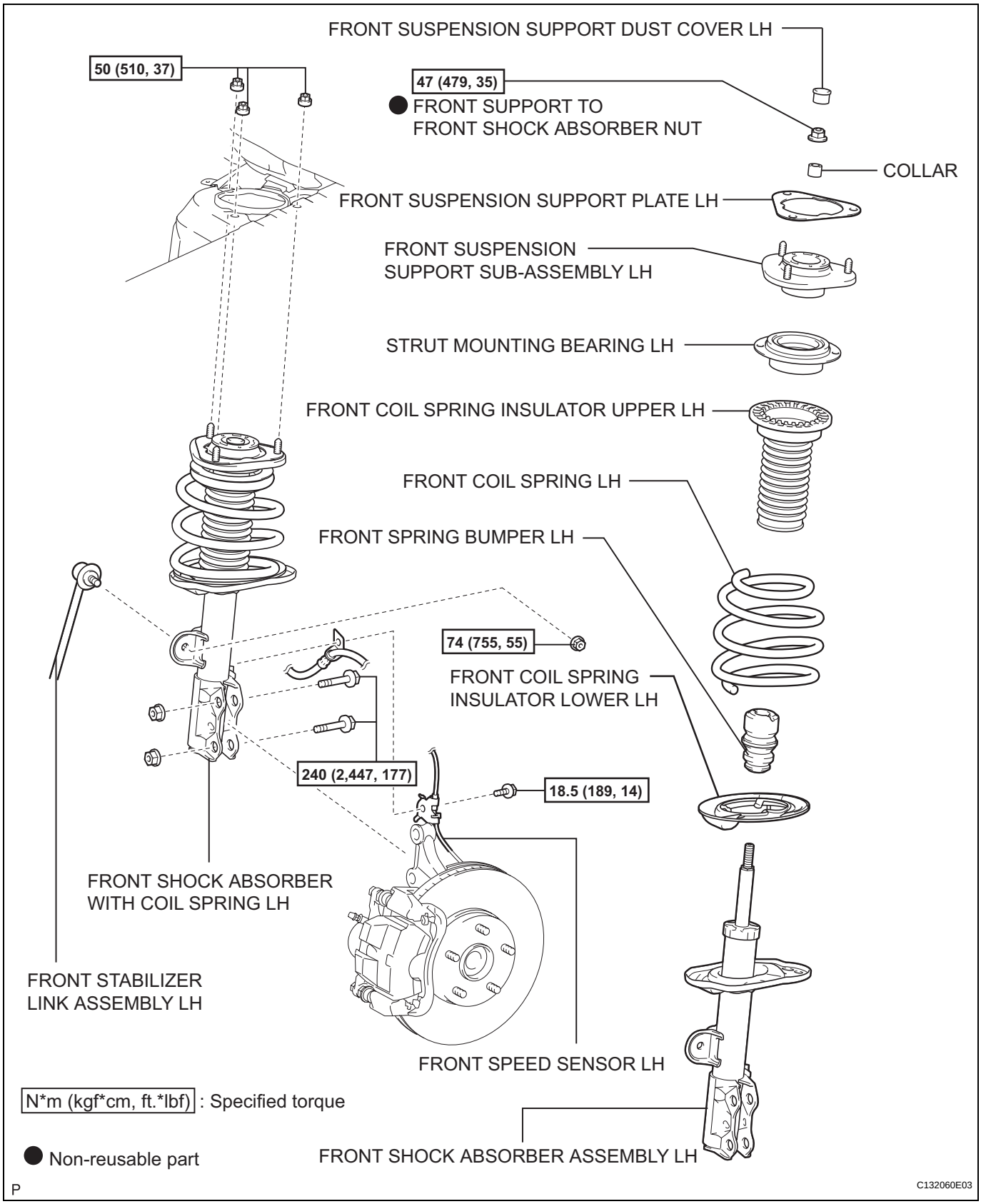

REMOVAL

HINT:

- Use the same procedures for the RH side and LH side.
- The procedures listed below are for the LH side.

1. **REMOVE FRONT WHEEL**
2. **REMOVE FRONT SPEED SENSOR LH (See page BC-191)**
3. **REMOVE FRONT STABILIZER LINK ASSEMBLY LH (See page SP-30)**
4. **REMOVE FRONT SHOCK ABSORBER WITH COIL SPRING LH**
   (a) Remove the 2 bolts and 2 nuts, and disconnect the shock absorber from the steering knuckle.
   HINT:
   While fixing the nuts in place, loosen and remove the bolts.

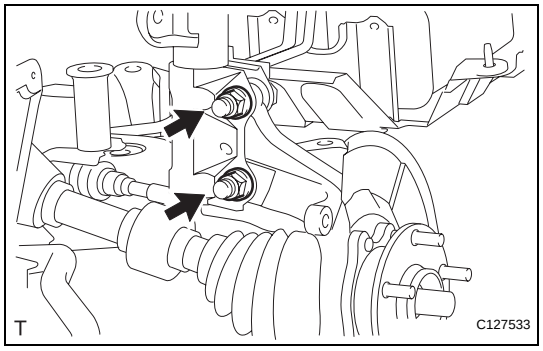

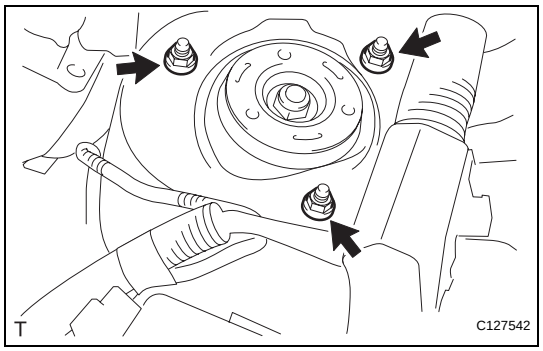

   (b) Remove the 3 nuts and shock absorber with coil spring.

SP

DISASSEMBLY

HINT:
- Use the same procedures for the RH side and LH side.
- The procedures listed below are for the LH side.

1. REMOVE FRONT SUSPENSION SUPPORT PLATE LH
(a) Remove the plate from the shock absorber.

2. REMOVE FRONT SUSPENSION SUPPORT DUST COVER LH
(a) Using a screwdriver, remove the dust cover from the suspension support.
HINT:
Tape the screwdriver tip before use.

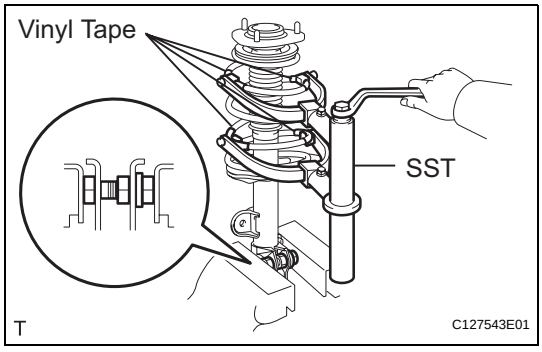

3. REMOVE FRONT SUPPORT TO FRONT SHOCK ABSORBER NUT
(a) Install 2 nuts and 2 bolts to the bracket at the lower portion of the shock absorber and secure it with a vise.
(b) Using SST, compress the coil spring.
SST 09727-30021 (09727-00010, 09727-00021, 09727-00031)
HINT:
To prevent the coil spring from being damaged, wind vinyl tape on the coil spring.
NOTICE:
- **When holding the shock absorber with the coil spring removed, do not hold it by the spring lower seat. Also, do not knock the spring lower seat.**
- **Do not use an impact wrench which will damage SST.**

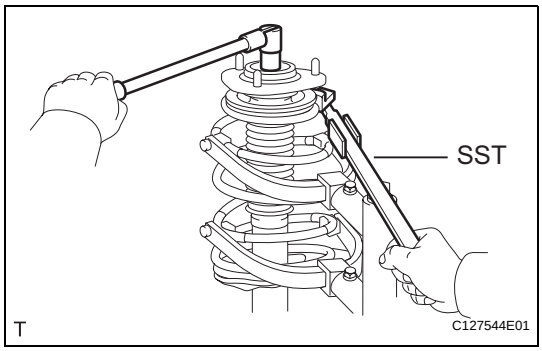

(c) Using SST to hold the suspension support, remove the nut.
SST 09729-22031

4. REMOVE COLLAR
(a) Remove the collar from the suspension support.

5. REMOVE FRONT SUSPENSION SUPPORT SUB-ASSEMBLY LH
(a) Remove the suspension support from the shock absorber.

6. REMOVE STRUT MOUNTING BEARING LH
(a) Remove the mounting bearing from the suspension support.
NOTICE:
- **When removing the bearing, the suspension support may become stuck. Use a screwdriver or equivalent to remove the bearing.**
- **Make sure not to use excessive force when removing the bearing as it may come apart.**

7. REMOVE FRONT COIL SPRING INSULATOR UPPER LH

(a) Remove the insulator upper from the shock absorber.

8. REMOVE FRONT SPRING BUMPER LH

(a) Remove the spring bumper from the shock absorber.

9. REMOVE FRONT COIL SPRING LH

(a) Remove the coil spring from the shock absorber.

(b) Remove SST from the coil spring.

10. REMOVE FRONT COIL SPRING INSULATOR LOWER LH

(a) Remove the insulator lower from the shock absorber.

INSPECTION

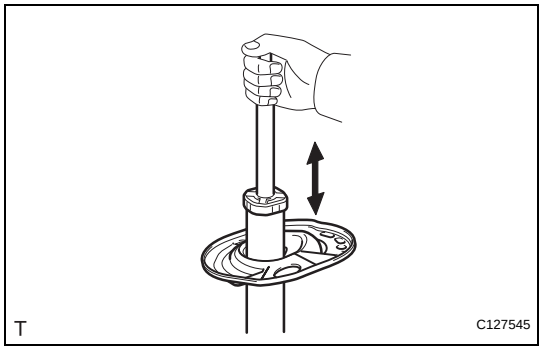

1. INSPECT FRONT SHOCK ABSORBER ASSEMBLY LH

(a) Compress and extend the shock absorber rod 4 times or more. Check that there is no abnormal resistance or unusual sound during the operation. If there is any abnormality, replace the shock absorber assembly with a new one.

NOTICE:

When disposing of the shock absorber, see DISPOSAL (see page SP-19).

SP

REASSEMBLY

HINT:
- Use the same procedures for the RH side and LH side.
- The procedures listed below are for the LH side.

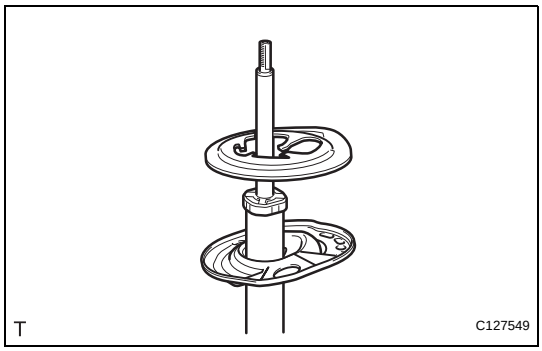

1. INSTALL FRONT COIL SPRING INSULATOR LOWER LH
(a) Install the insulator lower to the shock absorber.

2. INSTALL FRONT SPRING BUMPER LH
(a) Install the spring bumper to the shock absorber.

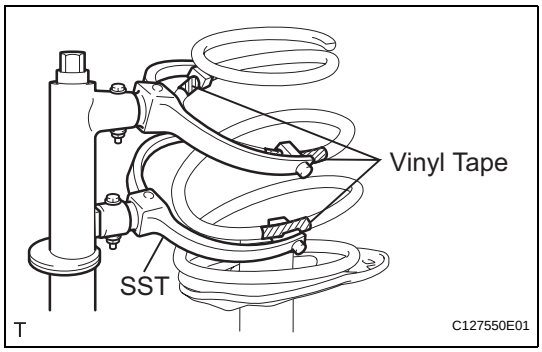

3. INSTALL FRONT COIL SPRING LH
(a) Using SST, compress the coil spring.
SST 09727-30021 (09727-00010, 09727-00021, 09727-00031)
HINT:
To prevent the coil spring from being damaged, wind vinyl tape around the coil spring.
NOTICE:
Do not use an impact wrench which will damage SST.
(b) Install the coil spring to the shock absorber.
HINT:
Fit the lower end of the coil spring to the gap of the lower spring seat.

4. INSTALL FRONT COIL SPRING INSULATOR UPPER LH
(a) Install the insulator upper to the shock absorber.

5. INSTALL STRUT MOUNTING BEARING LH
(a) Install the mounting bearing to the insulator upper.

6. INSTALL COLLAR
(a) Install the collar to the suspension support side.

7. INSTALL FRONT SUSPENSION SUPPORT SUB-ASSEMBLY LH
(a) Install the suspension support to the shock absorber.

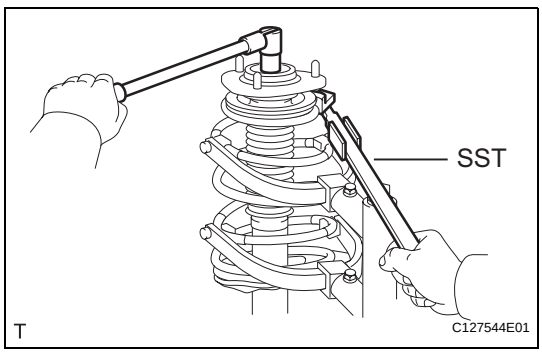

8. REMOVE FRONT SUPPORT TO FRONT SHOCK ABSORBER NUT
(a) Using SST to hold the spring upper seat, install a new nut.
SST 09729-22031
(b) Remove SST.
SST 09727-30021 (09727-00021, 09727-00031)
NOTICE:
When removing SST, make sure that the suspension support is not in an inclined position, as the bearing may come apart.

9. INSTALL FRONT SUSPENSION SUPPORT DUST COVER LH

(a) Install the dust cover to the shock absorber.

10. INSTALL FRONT SUSPENSION SUPPORT PLATE LH

(a) Install the support plate to the shock absorber with coil spring.

INSTALLATION

HINT:
- Use the same procedures for the RH side and LH side.
- The procedures listed below are for the LH side.

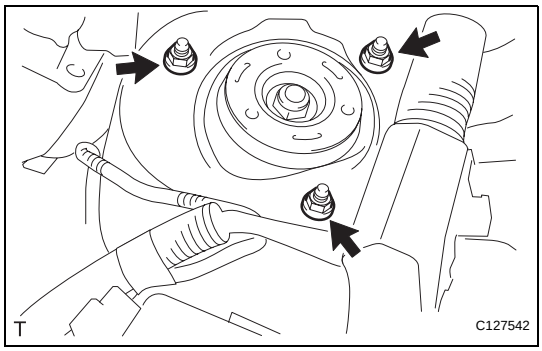

1. **INSTALL FRONT SHOCK ABSORBER WITH COIL SPRING**
   (a) Install the front shock absorber with coil spring (upper side) with the 3 nuts.
   Torque: 50 N*m (510 kgf*cm, 37 ft.*lbf)

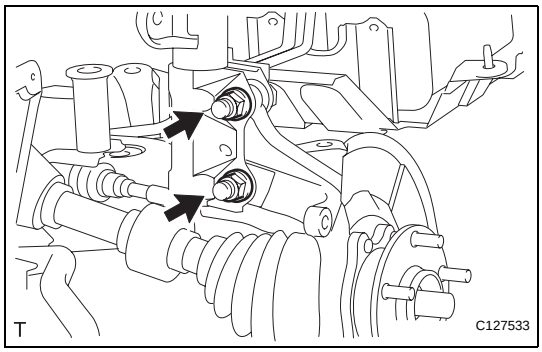

   (b) Install the front shock absorber with coil spring to the steering knuckle with the 2 bolt and 2 nuts.
   Torque: 240 N*m (2,447 kgf*cm, 177 ft.*lbf)
   NOTICE:
   Do not tighten the bolts.

2. **INSTALL FRONT STABILIZER LINK ASSEMBLY LH (See page SP-31)**

3. **INSTALL FRONT SPEED SENSOR LH (See page BC-193)**

4. **INSTALL FRONT WHEEL**
   Torque: 103 N*m (1,050 kgf*cm, 76 ft.*lbf)

5. **STABILIZE SUSPENSION**
   (a) Lower the vehicle.
   (b) Press down on the vehicle several times to stabilize the suspension.

6. **INSPECT AND ADJUST FRONT WHEEL ALIGNMENT**
   (a) Inspect and adjust the front wheel alignment (see page SP-3).

DISPOSAL

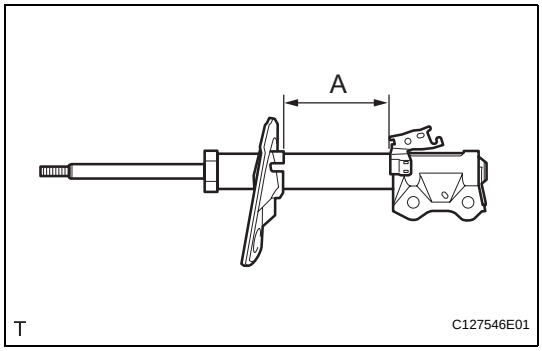

1. **DISPOSE OF FRONT SHOCK ABSORBER ASSEMBLY LH**
   (a) Fully extend the shock absorber piston rod, and clamp it in a vise at an angle.
   (b) Using a drill or similar tool, gradually make a hole in area A to discharge the gas inside of the absorber.
   CAUTION:
   As metal debris may be blown outward by the gas, you must.
   - Wear protective glasses.
   - Cover the area being cut.

   NOTICE:
   The gas is colorless and harmless.

FRONT SHOCK ABSORBER WITH COIL SPRING (for Sport Package)

COMPONENTS

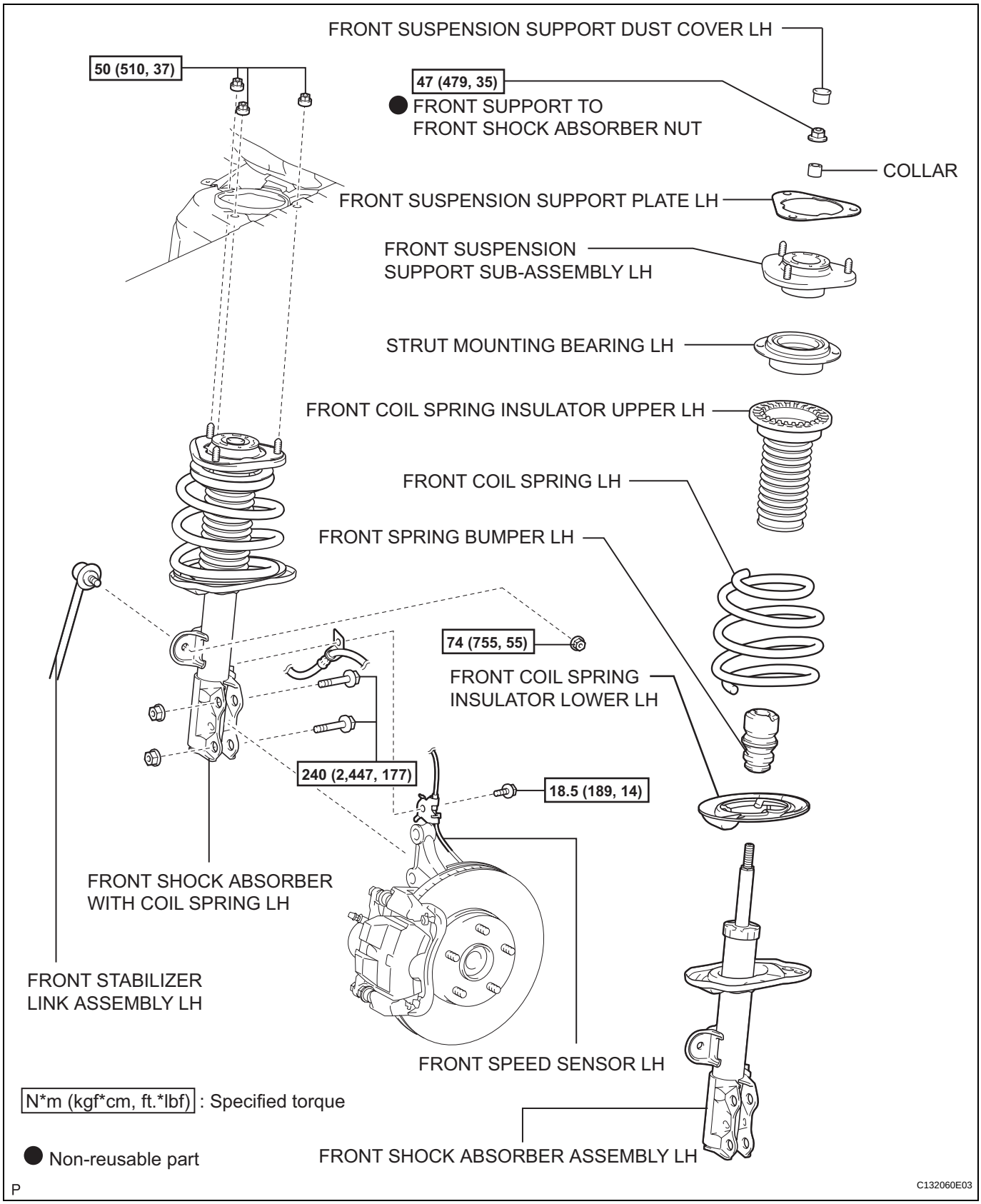

REMOVAL

HINT:

- Use the same procedures for the RH side and LH side.
- The procedures listed below are for the LH side.

1. **REMOVE FRONT WHEEL**
2. **REMOVE FRONT SPEED SENSOR LH (See page BC-191)**
3. **REMOVE FRONT STABILIZER LINK ASSEMBLY LH (See page SP-30)**
4. **REMOVE FRONT SHOCK ABSORBER WITH COIL SPRING LH**
   (a) Remove the 2 bolts and 2 nuts, and disconnect the shock absorber from the steering knuckle.
   HINT:
   While fixing the nuts in place, loosen and remove the bolts.

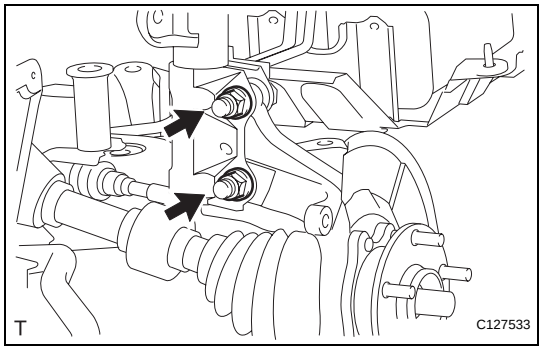

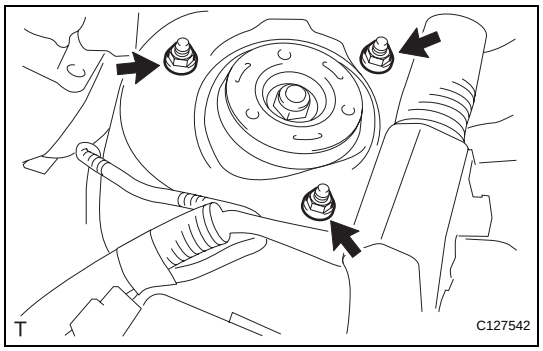

   (b) Remove the 3 nuts and shock absorber with coil spring.

SP

FRONT STABILIZER BAR

COMPONENTS

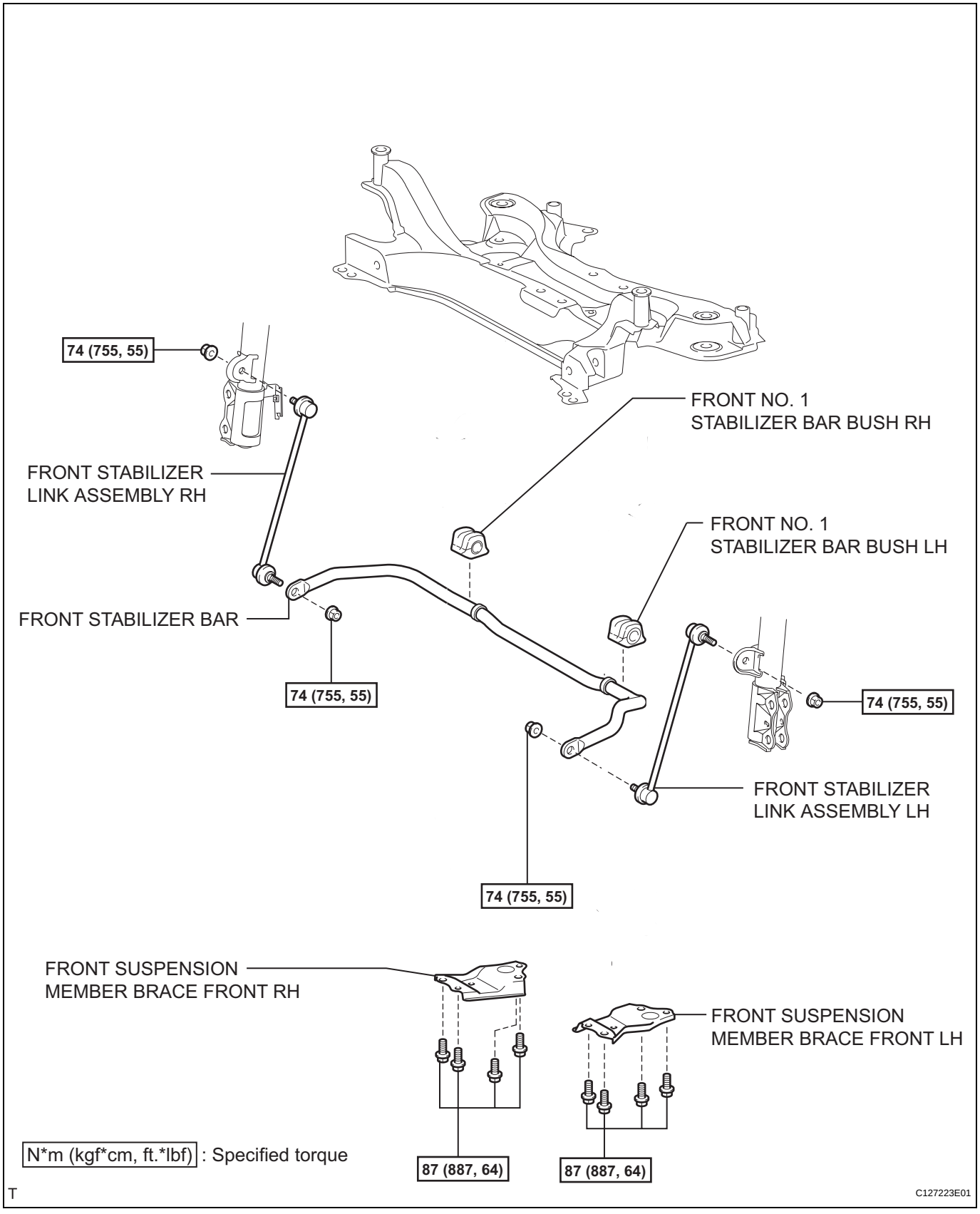

SP

REMOVAL

1. REMOVE FRONT WHEEL

2. REMOVE FRONT STABILIZER LINK ASSEMBLY LH

(a) Remove the 2 nuts and stabilizer link.

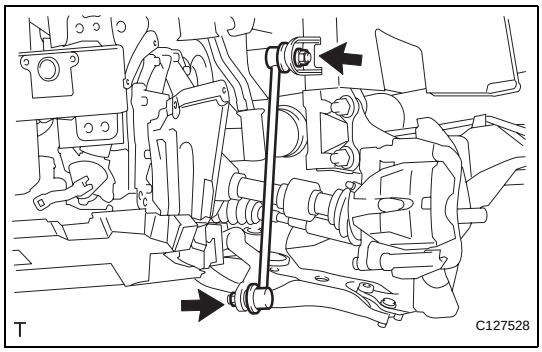

3. REMOVE FRONT STABILIZER LINK ASSEMBLY RH

HINT:

Use the same procedures described for the LH side.

4. REMOVE FRONT SUSPENSION MEMBER BRACE FRONT LH

(a) Remove the 4 bolts and member brace from the corssmember.

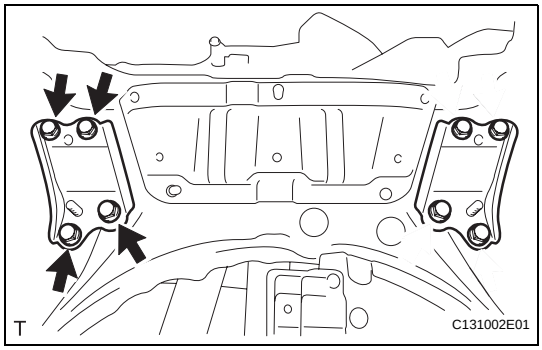

5. REMOVE FRONT SUSPENSION MEMBER BRACE FRONT RH

HINT:

Use the same procedures described for the LH side.

6. REMOVE FRONT STABILIZER BAR

(a) Remove the stabilizer bar from the crossmember.

7. REMOVE FRONT NO. 1 STABILIZER BAR BUSH LH

(a) Remove the bush from the stabilizer bar.

8. REMOVE FRONT NO. 1 STABILIZER BAR BUSH RH

HINT:

Use the same procedures described for the LH side.

INSPECTION

1. INSPECT FRONT STABILIZER LINK ASSEMBLY LH

(a) As shown in the illustration, move the ball joint stud back and forth 5 times before installing the nut.

(b) Using a torque wrench, turn the nut continuously at a rate of 3 to 5 seconds per turn and take the torque reading on the fifth turn.

Turning torque:

0.05 to 1.96 N*m, (0.5 to 20 kgf*cm, 0.4 to 17 in.*lbf) or less

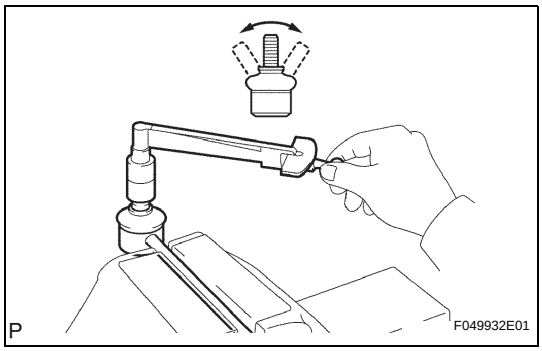

(c) Check for any cracks and grease leaks on the ball joint dust cover.

INSTALLATION

1. INSTALL FRONT NO. 1 STABILIZER BAR BUSH LH

(a) Install the bush.

HINT:

- Install each bush to the inner side of each bush stopper on the stabilizer bar.
- Install each bush with its slit facing the vehicle rear side.

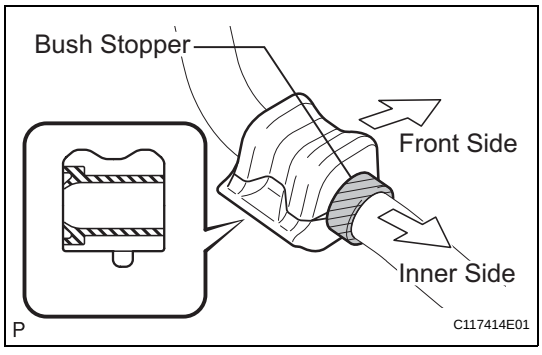

2. **REMOVE FRONT NO. 1 STABILIZER BAR BUSH RH**
   HINT:
   Use the same procedures described for the LH side.

3. **INSTALL FRONT STABILIZER BAR**
   (a) Install the stabilizer bar to the crossmember.

4. **INSTALL FRONT SUSPENSION MEMBER BRACE FRONT LH**
   (a) Install the member brace with the 4 bolt to the suspension member.
   Torque: 87 N*m (887 kgf*cm, 64 ft.*lbf)

5. **INSTALL FRONT SUSPENSION MEMBER BRACE FRONT RH**
   HINT:
   Use the same procedures described for the LH side.

6. **INSTALL FRONT STABILIZER LINK ASSEMBLY LH**
   (a) Install the link with the 2 nut.
   Torque: 74 N*m (755 kgf*cm, 55 ft.*lbf)

7. **INSTALL FRONT STABILIZER LINK ASSEMBLY RH**
   HINT:
   Use the same procedures described for the LH side.

8. **INSTALL FRONT WHEEL**
   Torque: 103 N*m (1,050 kgf*cm, 76 ft.*lbf)

9. **STABILIZE SUSPENSION (See page SP-12)**

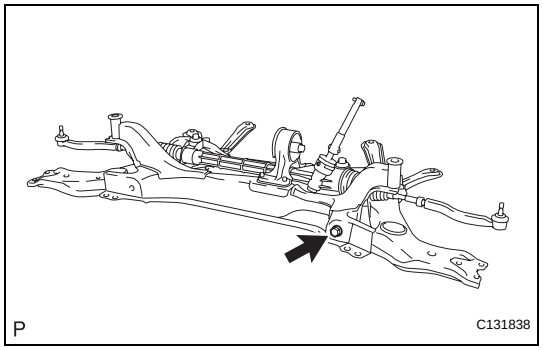

INSTALLATION

1. TEMPORARILY INSTALL FRONT SUSPENSION LOWER NO. 1 ARM LH

(a) Temporarily install the lower arm with the bolt and nut to the front side.

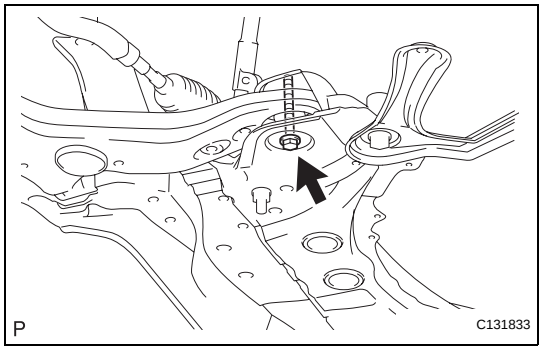

(b) Temporarily install the lower arm with the bolt and nut to the rear side.

2. TEMPORARILY INSTALL FRONT SUSPENSION NO. 1 LOWER ARM SUB-ASSEMBLY RH

HINT:

Use the same procedures described for the LH side.

3. CONNECT FRONT CROSSMEMBER SUB-ASSEMBLY

(a) Slowly raise the crossmember jack, and connect the crossmember to the body.

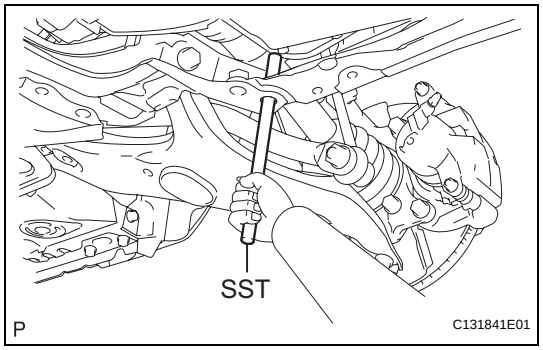

(b) Using SST, align the holes of the suspension member and body.
SST 09670-00020

(c) Perform the procedure above on the other side.

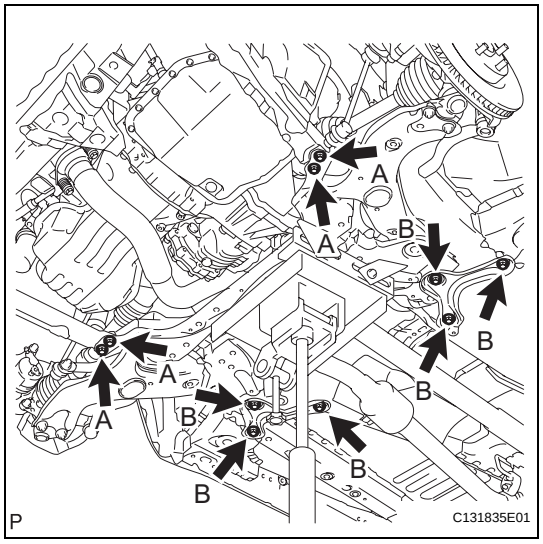

(d) Install the member reinforcement with the 4 bolts labeled A.

(e) Install the suspension member brace with the 6 bolts labeled B.

SP

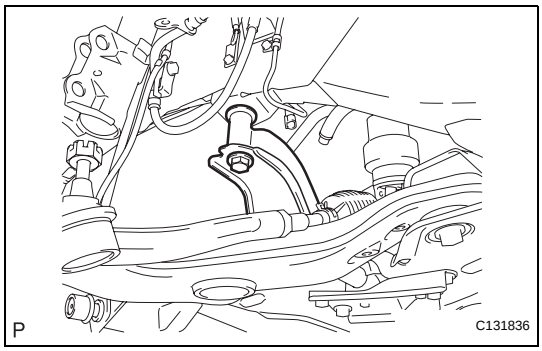

(f) Install the suspension member with the bolt to the body.
(g) Perform the procedure above on the other side.

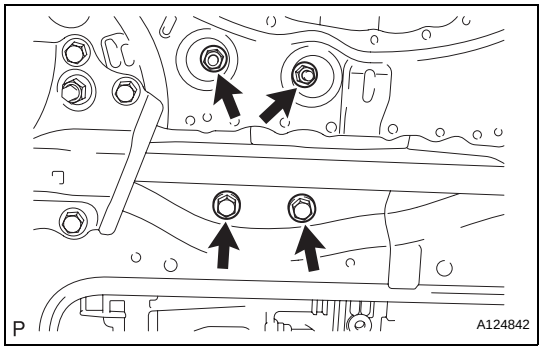

(h) Install the engine mounting insulator rear with the 2 nuts and 2 bolts.

4. INSTALL FRONT STABILIZER LINK ASSEMBLY LH (See page SP-30)

5. CONNECT FRONT SUSPENSION LOWER NO. 1 ARM SUB-ASSEMBLY LH

(a) Connect the lower arm with the 2 bolts and nut to the ball joint.
Torque: 92 N*m (938 kgf*cm, 68 ft.*lbf)

6. INSTALL FRONT WHEEL
Torque: 103 N*m (1,050 kgf*cm, 76 ft.*lbf)

7. STABILIZE SUSPENSION (See page SP-12)

8. TIGHTEN FRONT CROSS MEMBER SUB-ASSEMBLY

(a) Tighten the bolts and nuts.
Torque: 87 N*m (887 kgf*cm, 64 ft.*lbf) for bolt A
93 N*m (948 kgf*cm, 69 ft.*lbf) for bolt B
145 N*m (1,479 kgf*cm, 107 ft.*lbf) for body
95 N*m (969 kgf*cm, 70 ft.*lbf) for engine mounting insulator

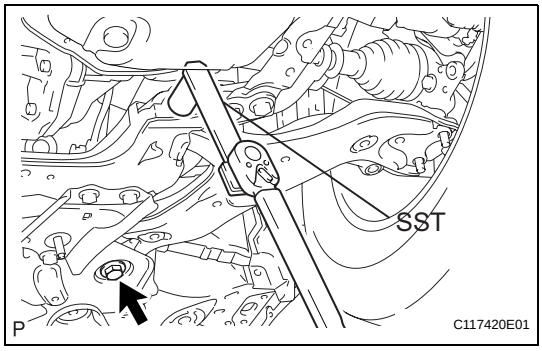

9. TIGHTEN FRONT SUSPENSION LOWER NO. 1 ARM SUB-ASSEMBLY LH

(a) Using SST, and tighten the bolt on the front side.
SST 09961-01270
Torque: 223 N*m (2,376 kgf*cm, 172 ft.*lbf) for use without SST
175 N*m (1,785 kgf*cm, 129 ft.*lbf) for use with SST
NOTICE:
Do not tighten the nut.
(b) Fix the nut in place and tighten the bolt on the rear side.
Torque: 223 N*m (2,376 kgf*cm, 172 ft.*lbf)
NOTICE:
Do not tighten the nut.

10. TIGHTEN FRONT SUSPENSION LOWER NO. 1 ARM SUB-ASSEMBLY RH
HINT:
Use the same procedures described for the LH side.

11. INSTALL HOOD SUB-ASSEMBLY (See page ED-7)

12. INSPECT AND ADJUST HOOD SUB-ASSEMBLY

(a) Inspect and adjust the hood (see page ED-5).

13. INSPECT AND ADJUST FRONT WHEEL ALIGNMENT

(a) Inspect and adjust the front wheel alignment (see page SP-3).

FRONT SUSPENSION LOWER NO. 1 ARM

COMPONENTS

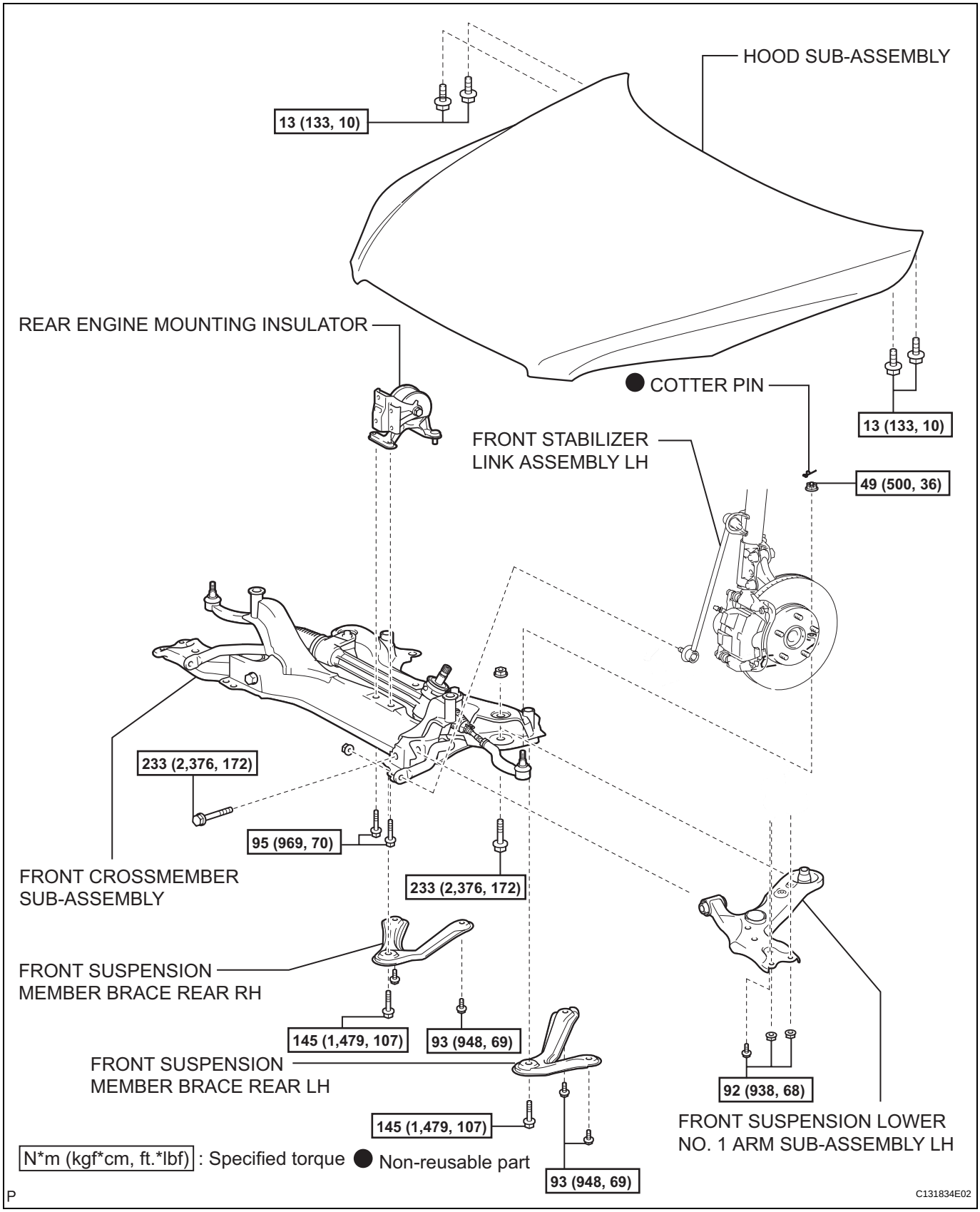

REMOVAL

1. REMOVE FRONT WHEEL

2. REMOVE HOOD SUB-ASSEMBLY

(a) Remove the hood (see page ED-4).

3. SUSPEND ENGINE ASSEMBLY

(a) Install the No. 1 and No. 2 engine hangers with the bolts as shown in the illustration.
Torque: 38 N*m (387 kgf*cm, 28 ft.*lbf)
Parts No.

Item	Part No.
No. 1 Engine hanger	12281-28010
No. 2 Engine hanger	12282-28010
Bolt	91512-61020

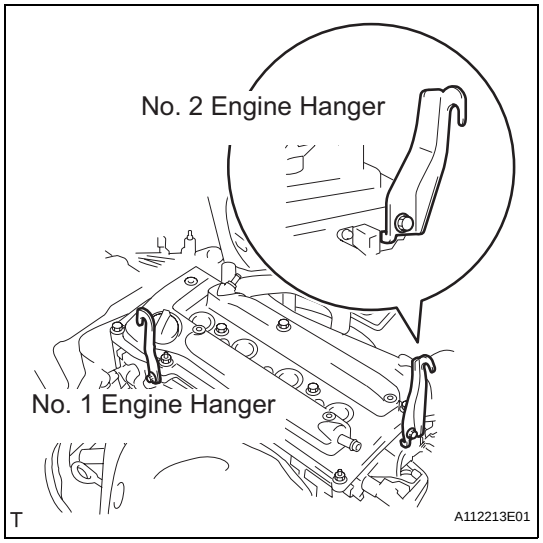

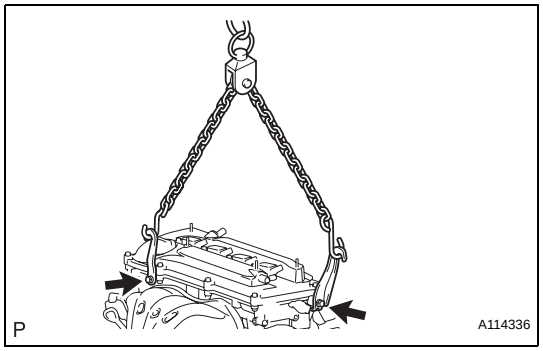

(b) Attach the sling device and the engine with the chain block.

4. DISCONNECT FRONT STABILIZER LINK ASSEMBLY LH (See page SP-30)

5. DISCONNECT FRONT STABILIZER LINK ASSEMBLY RH

(a) Use the same procedure described for the LH side.

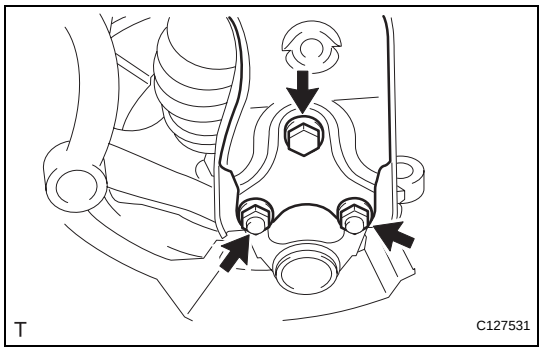

6. DISCONNECT FRONT SUSPENSION LOWER NO. 1 ARM SUB-ASSEMBLY LH

(a) Remove the 2 nuts and bolt, and disconnect the lower arm from the ball joint.

7. DISCONNECT FRONT SUSPENSION LOWER NO. 1 ARM SUB-ASSEMBLY RH

HINT:
Use the same procedures described for the LH side.

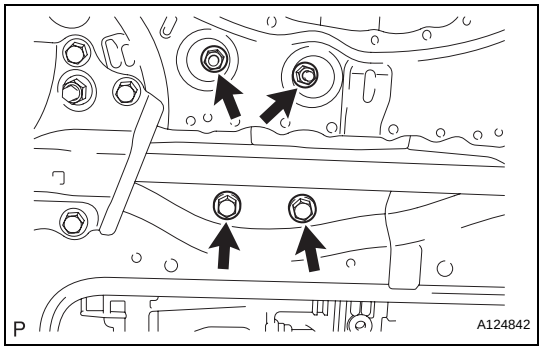

8. DISCONNECT FRONT CROSSMEMBER SUB-ASSEMBLY

(a) Remove the 2 nuts, 2 bolts and engine mounting insulator rear.

SP

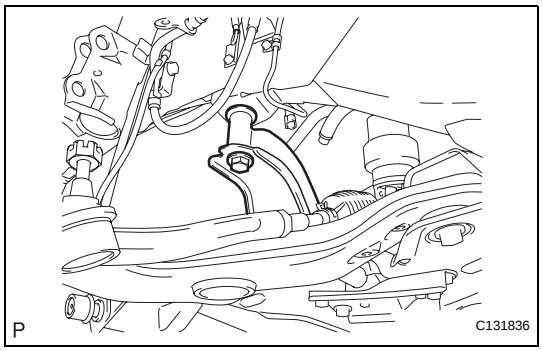

(b) Remove the bolt from the suspension member.

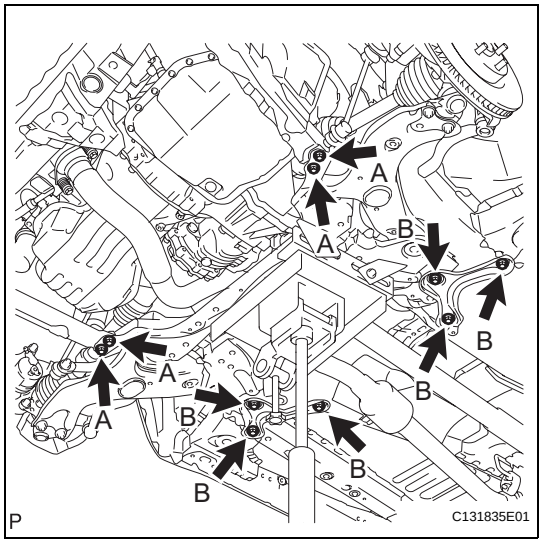

(c) Support the crossmember with the jack.
(d) Remove the bolts labeled A.
  (1) Remove the 4 bolts from the member reinforcement.
(e) Remove the bolts labeled B.
  (1) Remove the 6 bolts from the member brace.
(f) Slowly lower the jack, and disconnect the crossmember from the vehicle.

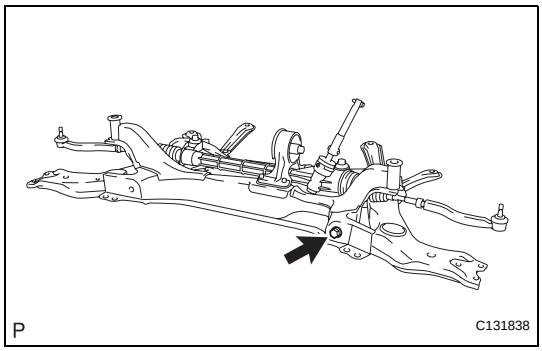

9. REMOVE FRONT SUSPENSION LOWER NO. 1 ARM SUB-ASSEMBLY LH

(a) Remove the bolt and nut from the suspension member (front side).

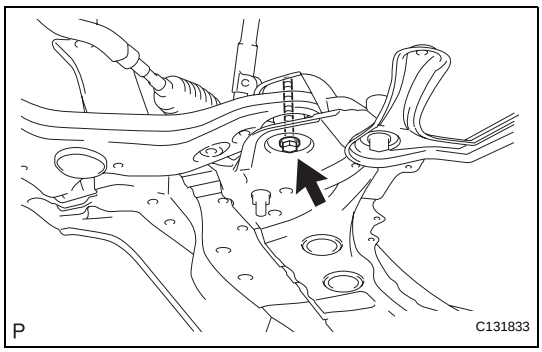

(b) Remove the bolt and nut from the suspension member (rear side). Then remove the lower arm.

10. REMOVE FRONT SUSPENSION LOWER NO. 1 ARM SUB-ASSEMBLY RH

HINT:
Use the same procedures described for the LH side.

FRONT WHEEL ALIGNMENT

ADJUSTMENT

1. INSPECT TIRES

(a) Inspect the tires (see page TW-1).

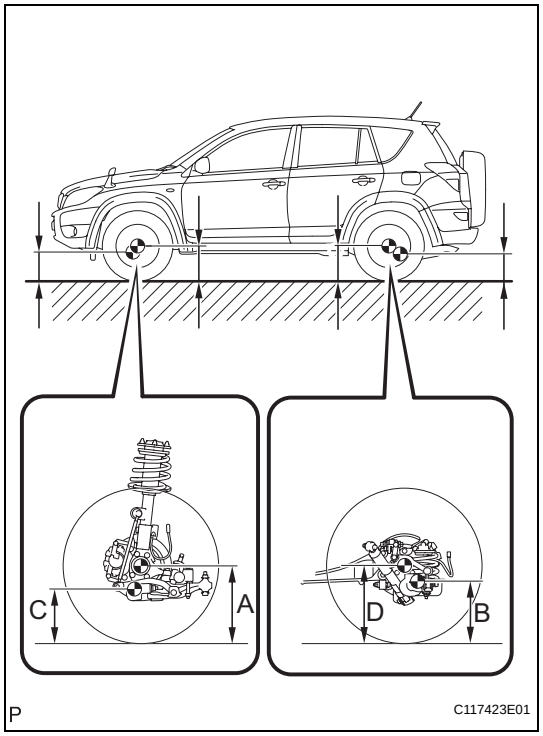

2. MEASURE VEHICLE HEIGHT

NOTICE:

Before inspecting the wheel alignment, adjust the vehicle height to the specification.

(a) Press down on the vehicle several times to stabilize the suspension, and measure the vehicle height.

(b) Measure the front vehicle height.

(1) Measure the distance from the ground to the center of the lower suspension arm front mounting bolt.

(c) Measure the rear vehicle height.

(1) Rear Measure the distance from the ground to the center of the body side No. 2 suspension arm mounting bolt.

Standard vehicle height (unloaded vehicle)

Tire Size	Front C - A	Rear D - B
215/70R16	89 mm (3.50 in.)	57 mm (2.24 in.)
225/65R17 235/55R18	97 mm (3.82 in.)	65 mm (2.56 in.)
225/65R17*	97 mm (3.82 in.)	54 mm (2.13 in.)

HINT:

- *: w/ 3rd seat.
- If the vehicle height is not as specified, press down on the vehicle several times to stabilize the suspension. Then measure the vehicle height again.

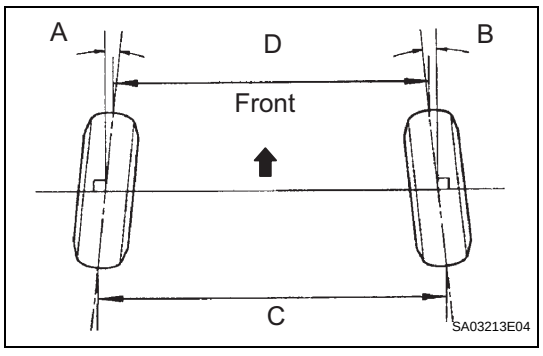

3. INSPECT TOE-IN

Standard toe-in (unloaded vehicle)

Tire Size	Front A + B Rear C - D
215/70R16 225/65R17 235/55R18	A + B: 0°05' +-10' (0.08°+-0.16°) C - D: 1.0 +-2.0 mm (0.04 +-0.08 in.)

If the toe-in is not as specified, adjust it at the rack ends.

SP

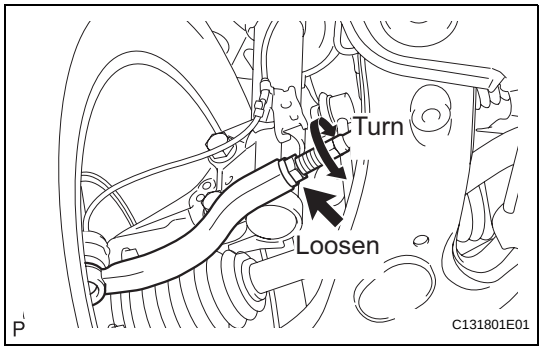

4. ADJUST TOE-IN

(a) Remove the boot clips.
(b) Loosen the tie rod end lock nuts.
(c) Turn the right and left rack ends by an equal amount to adjust the toe-in to the center value.

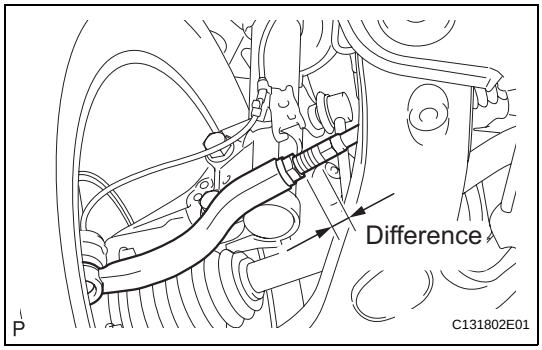

(d) Make sure that the length of the right and left rack ends are approximately the same.
Standard difference:
1.5 mm (0.059 in.) or less
(e) Tighten the tie rod end lock nuts.
Torque: 55.5 N*m (566 kgf*cm, 41 ft.*lbf)
(f) Place the boots on the seats and install the clips.
HINT:
Make sure that the boots are not twisted.

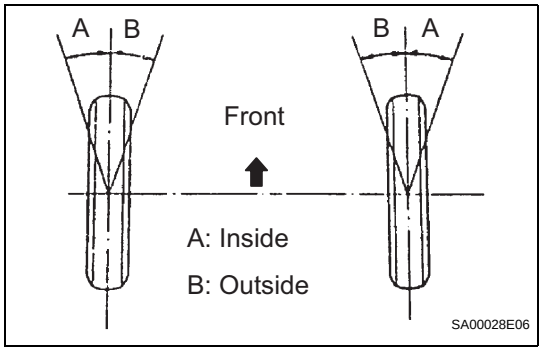

5. INSPECT WHEEL ANGLE

(a) Turn the steering wheel to the left and right full lock positions, and measure the turning angle.
Standard wheel angle (unloaded vehicle)

Tire Size	Inside Wheel Angle	Outside Wheel Angle (Reference)
215/70R16	38°55' (36°55' to 40°55') (38.9°{36.9° to 40.9°})	32°20' (32.3°)
225/65R17 235/55R18	35°50' (33°55' to 37°55') (35.8°{33.8° to 37.9°})	30°29' (30.5°)

If the angles are not as specified, check and adjust the right and left rack end lengths.

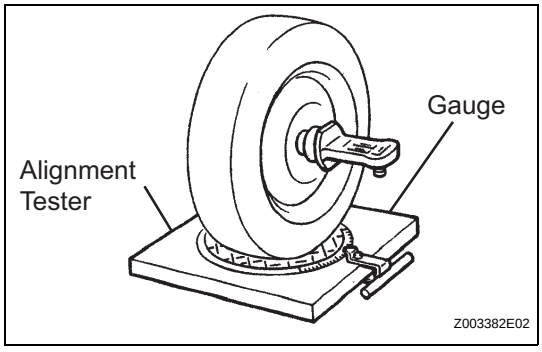

6. INSPECT CAMBER, CASTER AND STEERING AXIS INCLINATION

(a) Install the camber-caster-kingpin gauge or place the front wheels on the center of the wheel alignment tester.
(b) Inspect the camber, caster and steering axis inclination.
Standard camber inclination (unloaded vehicle)

Tire Size	Camber Inclination
215/70R16	-0°08' +-45' (-0.13°+-0.75°)
225/65R17 235/55R18	-0°11' +-45' (-0.18°+-0.75°)

Standard caster inclination (unloaded vehicle)

Tire Size	Caster Inclination
215/70R16	5°43' +-45' (5.72°+-0.75°)
225/65R17 235/55R18	5°50' +-45' (5.83°+-0.75°)
225/65R17*	5°37' +-45' (5.62°+-0.75°)

SP

HINT:
*: w/ 3rd seat

Standard steering axis inclination (unloaded vehicle)

Tire Size	Steering Axis Inclination
215/70R16	11°16' +-30' (11.27°+-0.50°)
225/65R17 235/55R18	11°26' +-30' (11.43°+-0.50°)

7. ADJUST CAMBER AND CASTER

NOTICE:

After the camber has been adjusted, inspect the toe-in.

(a) Remove the front wheel.

(b) Remove the 2 nuts on the lower side of the shock absorber.

(c) Coat the threads of the nuts with engine oil.

(d) Temporarily install the 2 nuts.

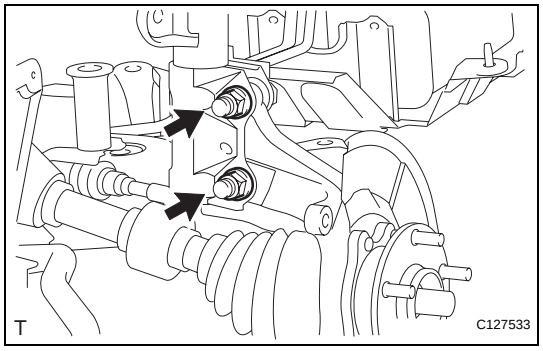

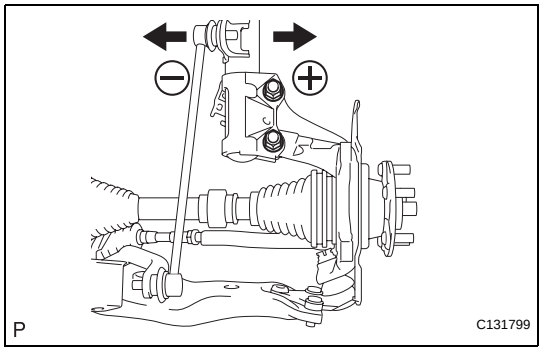

(e) Adjust the camber by pushing or pulling the lower side of the shock absorber in the direction where the camber adjustment is required.

(f) Tighten the 2 nuts.
Torque: 240 N*m (2,447 kgf*cm, 177 ft.*lbf)

(g) Install the front wheel.
Torque: 103 N*m (1,050 kgf*cm, 76 ft.*lbf)

(h) Check the camber.
If the measured value is not within the specified range, calculate the required adjustment amount using the formula below.

SP

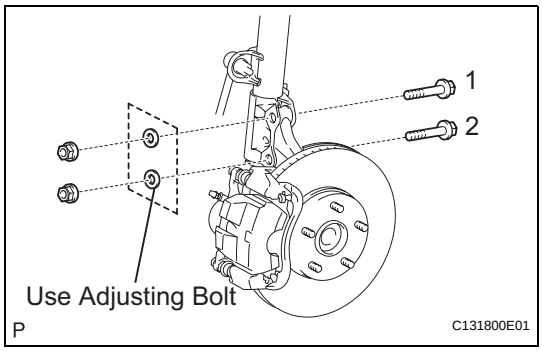

If the camber is not within the specification, estimate how much additional camber adjustment will be required and select the camber adjusting bolt using the following table.

Bolt / Adjusting Value	Set Bolt		Adjusting Bolt					
	90105-17008		90105-17009		90105-17010		90105-17011	
			1 Dot		2 Dots		3 Dots	
	11		•11		•11•		•11••	
	1	2	1	2	1	2	1	2
15'	●			●				
30'	●					●		
45'	●							●
1°00'			●					●
1°15'					●			●
1°30'							●	●

P
C131803E01

(i) Repeat the steps mentioned above. When temporarily installing the 2 nuts, replace 1 or 2 selected bolts.
HINT:
Replace 1 bolt at a time when replacing 2 bolts.

INSTALLATION

HINT:

- Use the same procedures for the RH side and LH side.
- The procedures listed below are for the LH side.

1. INSTALL REAR COIL SPRING INSULATOR LOWER LH

(a) Install the insulator lower to the suspension No. 2 arm.

2. REMOVE REAR COIL SPRING LH

(a) Install the coil spring to the suspension No. 2 arm.

3. INSTALL REAR COIL SPRING INSULATOR UPPER LH

(a) Align the stopper part of the insulator upper with the coil spring tip, and install the insulator upper.

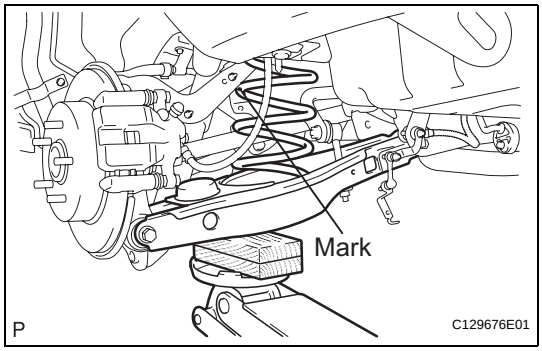

4. TEMPORARILY INSTALL REAR SUSPENSION NO. 2 ARM ASSEMBLY LH

(a) Slowly raise the suspension No. 2 arm with a jack, and connect the suspension No. 2 arm to the axle carrier.

(b) Install the bolt and nut.

NOTICE:
Install the arm so that the coil spring's distinguishing mark is on the outer side of the vehicle.

5. INSTALL REAR STABILIZER LINK ASSEMBLY LH (See page SP-50)

6. CONNECT NO. 2 PARKING BRAKE CABLE ASSEMBLY (See page PB-9)

7. INSTALL SKID CONTROL SENSOR WIRE (for 2WD) (See page BC-201)

8. INSTALL REAR SPEED SENSOR LH (for 4WD) (See page BC-206)

9. INSTALL REAR WHEEL
Torque: 103 N*m (1,050 kgf*cm, 76 ft.*lbf)

10. STABILIZE SUSPENSION (See page SP-37)

11. TIGHTEN REAR SUSPENSION NO. 2 ARM ASSEMBLY LH (See page SP-46)

12. CHECK SPEED SENSOR SIGNAL

(a) Check the speed sensor signal (see page BC-44).

13. INSPECT AND ADJUST REAR WHEEL ALIGNMENT

(a) Inspect and adjust the rear wheel alignment (see page SP-7).

REAR COIL SPRING

COMPONENTS

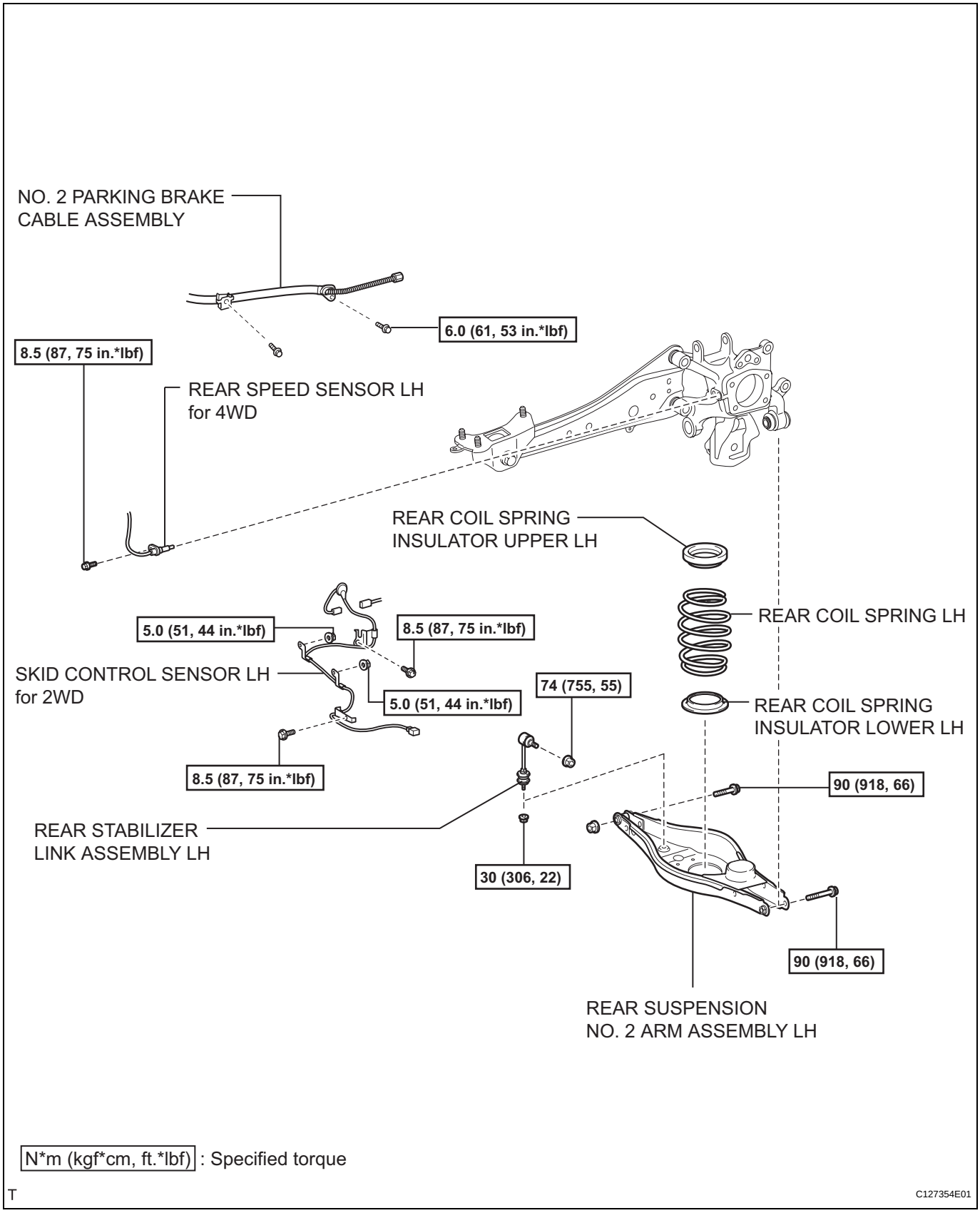

N*m (kgf*cm, ft.*lbf) : Specified torque

T

C127354E01

REMOVAL

HINT:

- Use the same procedures for the RH side and LH side.
- The procedures listed below are for the LH side.

1. **REMOVE REAR WHEEL**
2. **REMOVE SKID CONTROL SENSOR WIRE (for 2WD) (See page BC-198)**
3. **REMOVE REAR SPEED SENSOR LH (for 4WD) (See page BC-205)**
4. **DISCONNECT NO. 2 PARKING BRAKE CABLE ASSEMBLY (See page PB-8)**
5. **DISCONNECT REAR STABILIZER LINK ASSEMBLY LH (See page SP-50)**
6. **DISCONNECT REAR SUSPENSION NO. 2 ARM SUB-ASSEMBLY LH**
   (a) Loosen the bolt from the suspension member side.
   NOTICE:
   Do not remove the bolt and nut. Only loosen them.

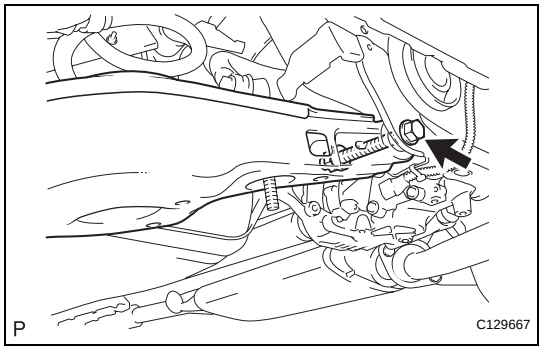

   (b) Support the No. 2 suspension arm LH with a jack.
   NOTICE:
   Place a wooden or rubber block between the jack and arm.

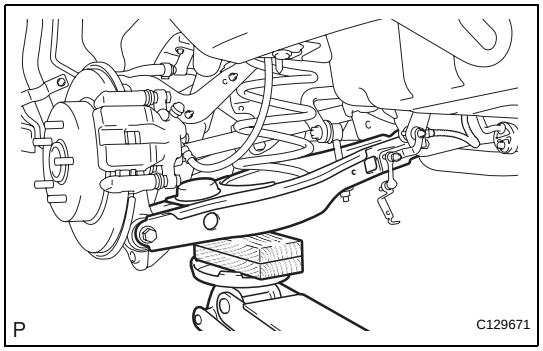

   (c) Remove the bolt and nut from the axle carrier side.
   (d) Slowly lower the jack, and disconnect the No. 2 suspension arm from the axle carrier.

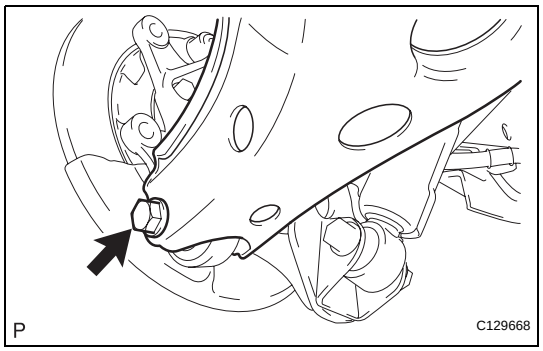

7. **REMOVE REAR COIL SPRING INSULATOR UPPER LH**
   (a) Remove the insulator upper from the coil spring.
8. **REMOVE REAR COIL SPRING LH**
   (a) Remove the coil spring from the suspension No. 2 arm
9. **REMOVE REAR COIL SPRING INSULATOR LOWER LH**
   (a) Remove the insulator lower from the suspension No. 2 arm.

SP

INSTALLATION

HINT:

- Use the same procedures for the RH side and LH side.
- The procedures listed below are for the LH side.

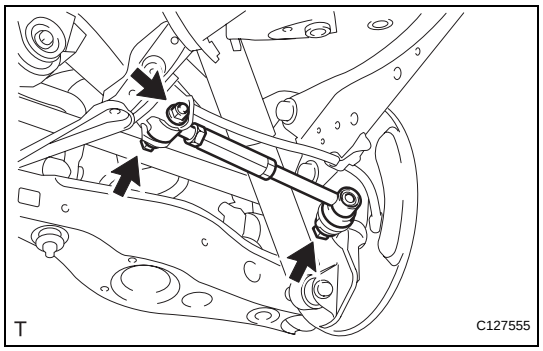

1. TEMPORARILY TIGHTEN REAR NO. 1 SUSPENSION ARM ASSEMBLY LH

(a) Temporarily install the suspension arm with the bolt and 2 nuts to the suspension member and axle carrier.

2. INSTALL REAR WHEEL

(a) Install the wheel.
Torque: 103 N*m (1,050 kgf*cm, 76 ft.*lbf)

3. TIGHTEN REAR NO. 1 SUSPENSION ARM ASSEMBLY LH

(a) Install the nut and 2 bolts.
Torque: 90 N*m (918 kgf*cm, 66 ft.*lbf) for bolt
100 N*m (1,020 kgf*cm, 74 ft.*lbf) for nut
NOTICE:
For the nut on the rear suspension member side, do not tighten the nut.

4. INSPECT AND ADJUST REAR WHEEL ALIGNMENT

(a) Inspect and adjust the rear wheel alignment (see page SP-7).

SP

REAR NO. 1 SUSPENSION ARM

COMPONENTS

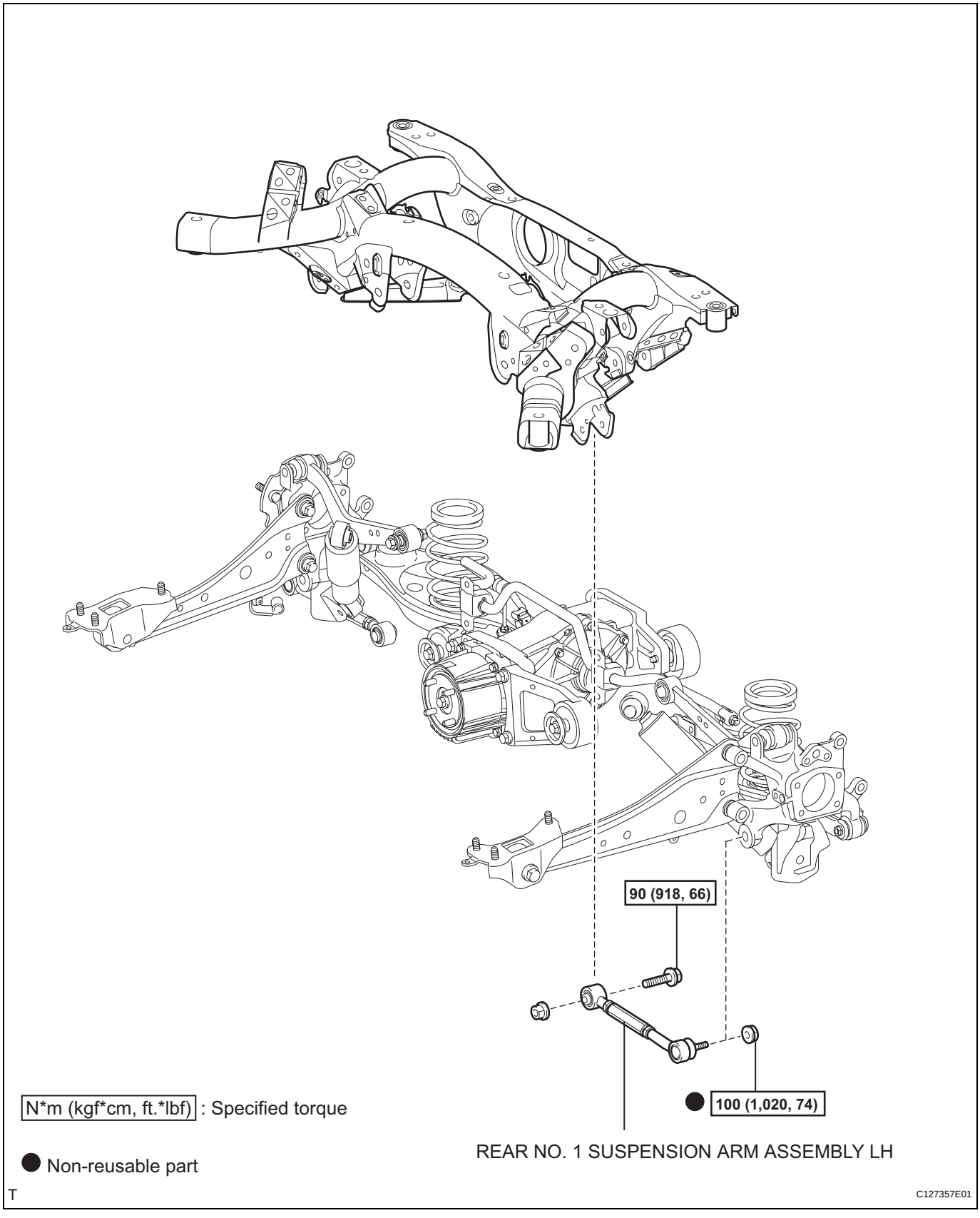

REMOVAL

HINT:
- Use the same procedures for the RH side and LH side.
- The procedures listed below are for the LH side.

1. REMOVE REAR WHEEL

2. REMOVE REAR NO. 1 SUSPENSION ARM ASSEMBLY LH

(a) Support the No. 2 suspension arm LH.

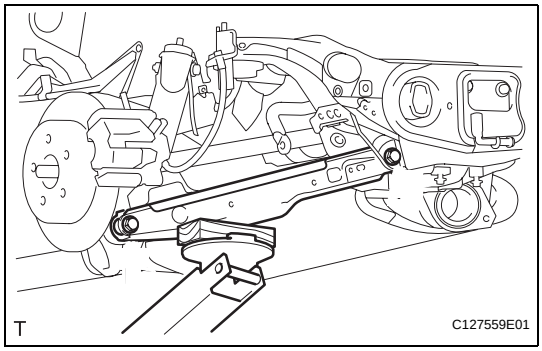

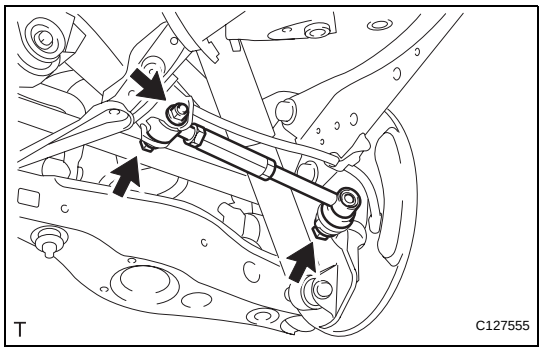

(b) Remove the bolt and 2 nuts from the suspension member and axle carrier.
HINT:
While fixing the nut in place, loosen and remove the bolt from the suspension member side.

(c) Using SST, disconnect the suspension arm from the axle carrier.
SST 09610-20012
NOTICE:
Do not damage the dust cover.

INSPECTION

1. INSPECT REAR NO. 1 SUSPENSION ARM ASSEMBLY LH

(a) As shown in the illustration, move the ball joint stud back and forth 5 times before installing the nut.

(b) Using a torque wrench, turn the nut continuously at a rate of 2 to 4 seconds per turn and take the torque reading on the fifth turn.
Standard turning torque:
3.4 N*m (35 kgf*cm, 30 in.*lbf)

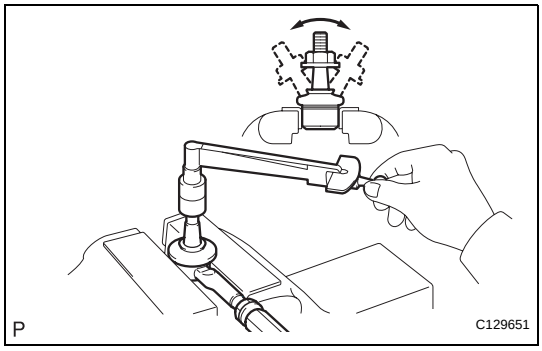

(c) Check for any cracks and grease leaks on the ball joint dust cover.

INSTALLATION

HINT:

- Use the same procedures for the RH side and LH side.
- The procedures listed below are for the LH side.

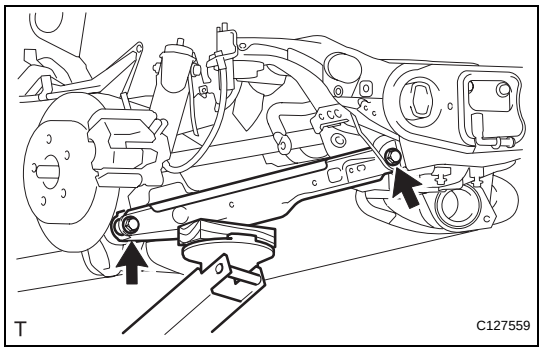

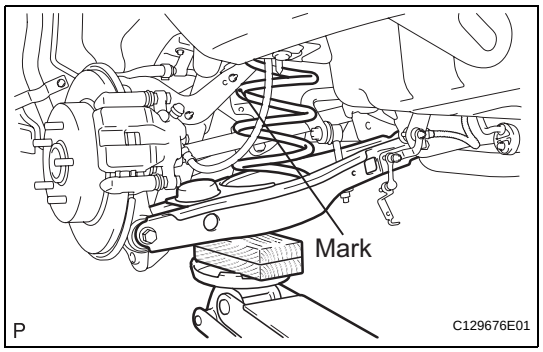

1. **TEMPORARILY INSTALL REAR NO. 2 SUSPENSION ARM ASSEMBLY LH**
   (a) Temporarily install the No. 2 suspension arm with the bolt and nut to the suspension member.
2. **INSTALL REAR COIL SPRING INSULATOR LOWER LH (See page SP-34)**
3. **INSTALL REAR COIL SPRING LH (See page SP-34)**
4. **INSTALL REAR COIL SPRING INSULATOR UPPER LH (See page SP-34)**
5. **INSTALL REAR NO. 2 SUSPENSION ARM ASSEMBLY LH**
   (a) Slowly raise the jack, and install the No. 2 suspension arm to the axle carrier.
   NOTICE:
   Install the arm so that the coil spring's distinguishing mark is on the outer side of the vehicle.
6. **INSTALL REAR STABILIZER LINK ASSEMBLY LH (See page SP-52)**
7. **CONNECT SKID CONTROL SENSOR WIRE (for 2WD) (See page BC-198)**
8. **CONNECT REAR SPEED SENSOR LH (for 4WD) (See page BC-205)**
9. **CONNECT NO. 2 PARKING BRAKE CABLE ASSEMBLY (See page PB-8)**
10. **INSTALL REAR WHEEL**
    (a) Install the wheel.
    Torque: 103 N*m (1,050 kgf*cm, 76 ft.*lbf)
11. **STABILIZE SUSPENSION (See page SP-37)**
12. **TIGHTEN REAR NO. 2 SUSPENSION ARM ASSEMBLY LH**
    (a) Install the 2 nuts and 2 bolts.
    Torque: 90 N*m (918 kgf*cm, 66 ft.*lbf)
    NOTICE:
    Do not tighten the nuts.
13. **INSPECT AND ADJUST REAR WHEEL ALIGNMENT**
    (a) Inspect and adjust the rear wheel alignment (see page SP-7).

SP

REAR NO. 2 SUSPENSION ARM

COMPONENTS

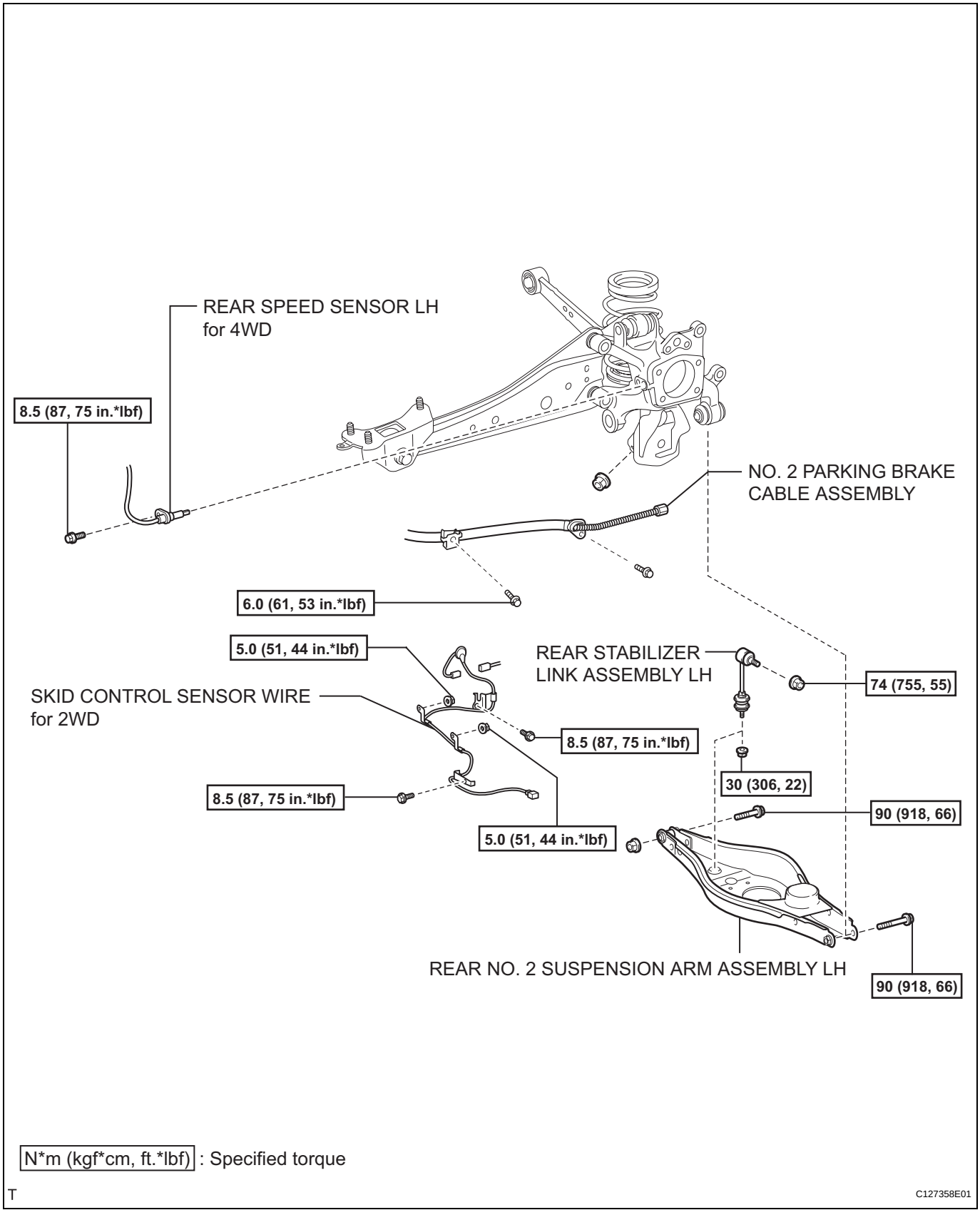

N*m (kgf*cm, ft.*lbf) : Specified torque

T

C127358E01

REMOVAL

HINT:

- Use the same procedures for the RH side and LH side.
- The procedures listed below are for the LH side.

1. **REMOVE REAR WHEEL**
2. **DISCONNECT NO. 2 PARKING BRAKE CABLE ASSEMBLY (See page PB-8)**
3. **DISCONNECT SKID CONTROL SENSOR WIRE (for 2WD) (See page BC-198)**
4. **DISCONNECT REAR SPEED SENSOR LH (for 4WD) (See page BC-205)**
5. **DISCONNECT REAR STABILIZER LINK ASSEMBLY LH (See page SP-50)**
6. **DISCONNECT REAR NO. 2 SUSPENSION ARM ASSEMBLY LH**

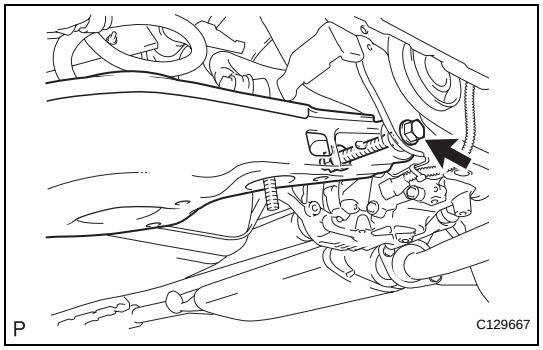

(a) Loosen the bolt from the suspension member side.
NOTICE:
Do not remove the bolt and nut. Only loosen them.

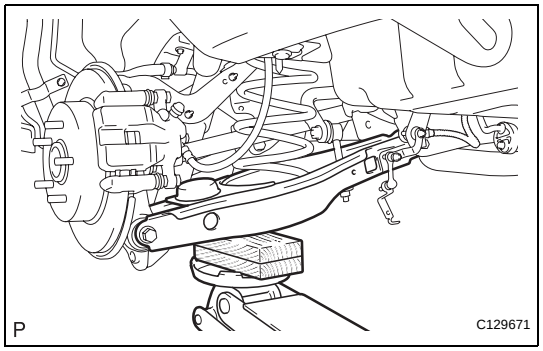

(b) Support the No. 2 suspension arm LH with a jack.
NOTICE:
Place a wooden or rubber block between the jack and the arm.

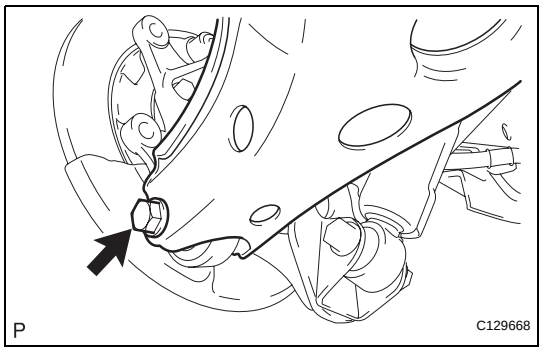

(c) Remove the bolt and nut from the axle carrier side.
(d) Slowly lower the jack, and disconnect the No. 2 suspension arm from the axle carrier.

7. **REMOVE REAR COIL SPRING INSULATOR UPPER LH (See page SP-33)**
8. **REMOVE REAR COIL SPRING LH (See page SP-33)**
9. **REMOVE REAR COIL SPRING INSULATOR LOWER LH (See page SP-33)**

SP

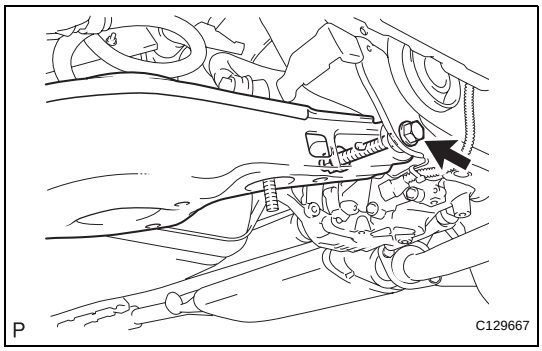

10. REMOVE REAR NO. 2 SUSPENSION ARM ASSEMBLY LH

(a) Remove the bolt, nut and suspension arm from the suspension member.

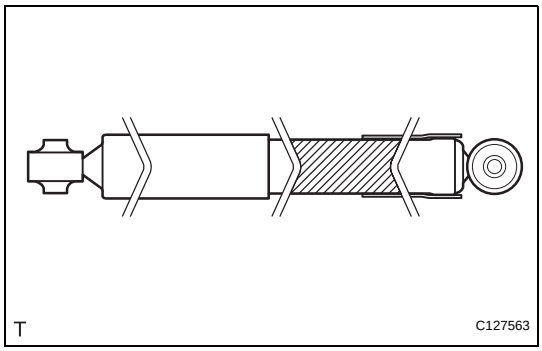

DISPOSAL

1. DISPOSE OF REAR SHOCK ABSORBER ASSEMBLY LH

(a) Fully extend the shock absorber rod, and clamp it in a vise at an angle.

(b) Using a drill, make a hole near the center of the cylinder in the hatched area shown in the illustration to discharge the gas inside.

CAUTION:

As metal debris may be blown outward by the gas, you must:

- **Wear protective glasses.**
- **Cover the area being cut.**

NOTICE:

The gas is colorless, odorless and harmless.

REAR SHOCK ABSORBER

COMPONENTS

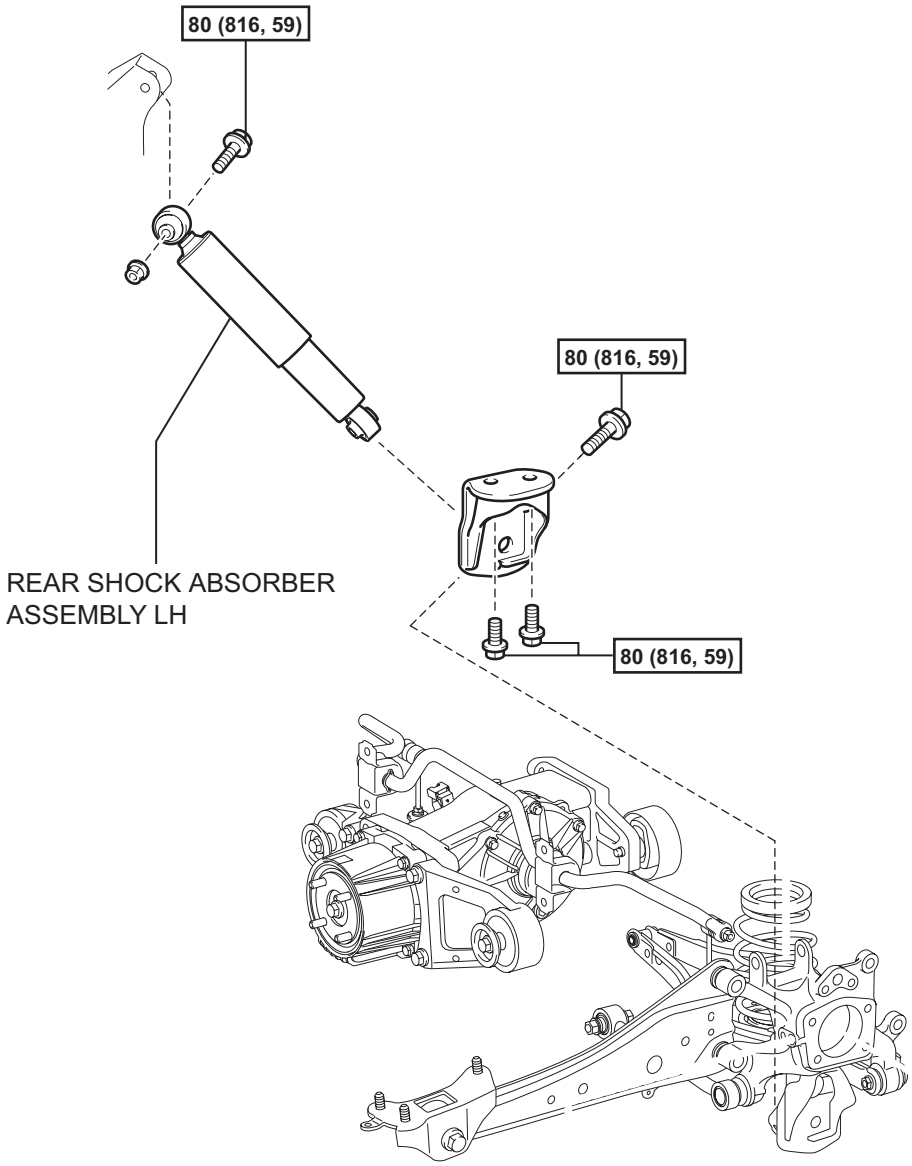

N*m (kgf*cm, ft.*lbf) : Specified torque

T

C127355E01

SP

REMOVAL

HINT:
- Use the same procedures for the RH side and LH side.
- The procedures listed below are for the LH side.

1. REMOVE REAR WHEEL

2. REMOVE REAR SHOCK ABSORBER ASSEMBLY LH

(a) Support the No. 2 suspension arm LH with a jack.
NOTICE:
Place a wooden or rubber block between the jack and arm.

(b) Remove the bolt and 2 nuts from the suspension member and axle carrier.

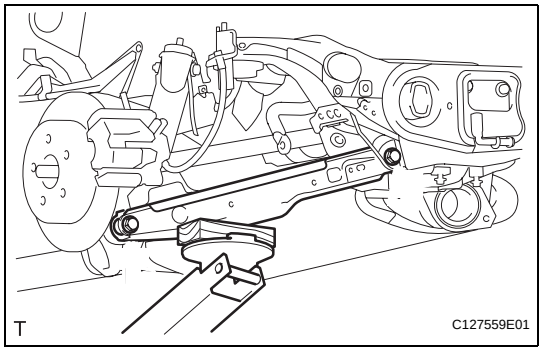

(c) Remove the 2 bolts and disconnect the shock absorber with the bracket.

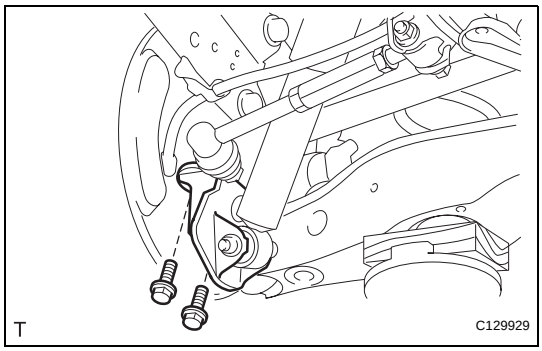

(d) Remove the nut and bolt from the shock absorber upper side.

(e) Remove the shock absorber from the vehicle.

(f) Remove the nut and bolt from the bracket.
HINT:
While fixing the nut in place, loosen and remove the bolt.

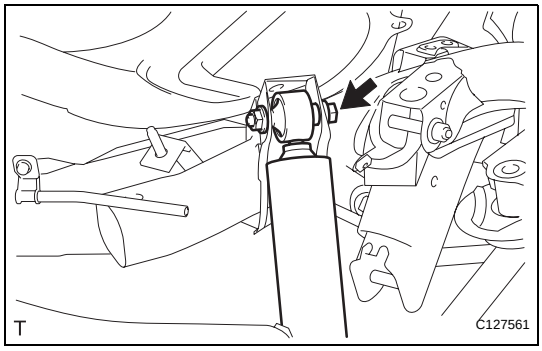

INSPECTION

1. INSPECT REAR SHOCK ABSORBER ASSEMBLY LH

(a) Compress and extend the shock absorber rod, and check that there is no abnormal resistance or unusual sound during operation.
If there is any abnormality, replace the shock absorber with a new one.
NOTICE:
When disposing of the shock absorber, see DISPOSAL (see page SP-37).

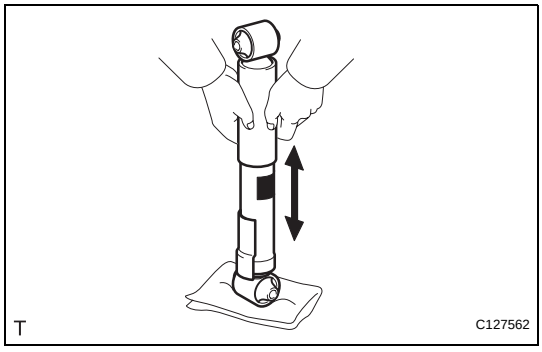

INSTALLATION

HINT:

- Use the same procedures for the RH side and LH side.
- The procedures listed below are for the LH side.

1. TEMPORARILY INSTALL REAR SHOCK ABSORBER ASSEMBLY LH

(a) Temporarily install the bracket to the shock absorber with the bolt and nut.
NOTICE:
Fix the nut in place and temporarily install the bolt.

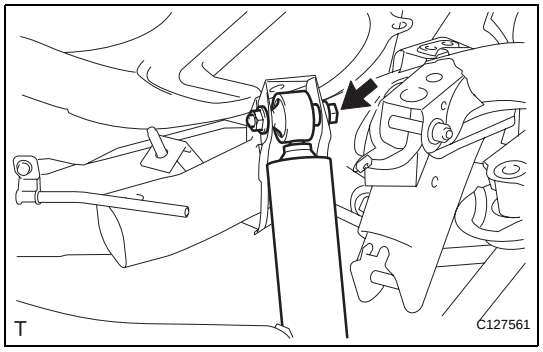

(b) Temporarily install the shock absorber upper side to the suspension member with the bolt and nut.
NOTICE:
Fix the nut in place and temporarily install the bolt.

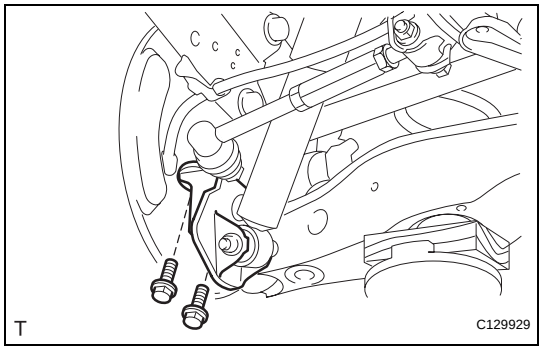

(c) Install the shock absorber with the 2 bolts to the axle carrier.
Torque: 80 N*m (816 kgf*cm, 59 ft.*lbf)

(d) Temporarily install the suspension arm with the bolt and 2 nuts to the suspension member and axle carrier.

2. TEMPORARILY INSTALL REAR UPPER CONTROL ARM ASSEMBLY LH (See page SP-40)

3. INSTALL REAR WHEEL
Torque: 103 N*m (1,050 kgf*cm, 76 ft.*lbf)

4. STABILIZE SUSPENSION

(a) Lower the vehicle.

(b) Press down on the vehicle several times to stabilize the suspension.

5. TIGHTEN REAR SHOCK ABSORBER ASSEMBLY LH

(a) Fix the nut in place and tighten the bolt.
Torque: 80 N*m (816 kgf*cm, 59 ft.*lbf)

6. INSPECT AND ADJUST REAR WHEEL ALIGNMENT

(a) Inspect and adjust the rear wheel alignment (see page SP-7).

SP

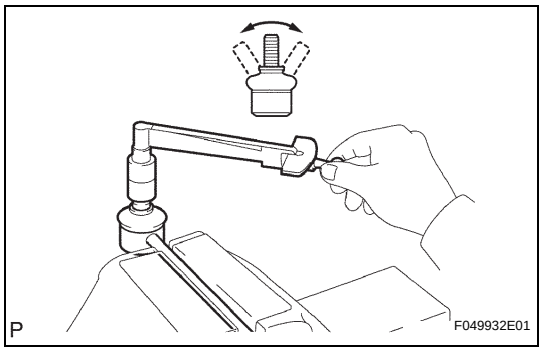

INSPECTION

1. INSPECT REAR STABILIZER LINK ASSEMBLY LH

(a) As shown in the illustration, move the ball joint stud back and forth 5 times before installing the nut.

(b) Using a torque wrench, turn the nut continuously at a rate of 3 to 5 seconds per turn and take the torque reading on the fifth turn.

Turning torque:

0.05 to 1.96 N*m, (0.5 to 20 kgf*cm, 0.4 to 17 in.*lbf) or less

(c) Check for any cracks and grease leaks on the ball joint dust cover.

INSTALLATION

HINT:
- Use the same procedures for the RH side and LH side.
- The procedures listed below are for the LH side.

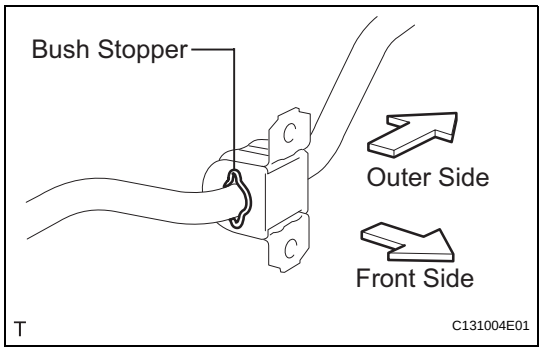

1. **INSTALL REAR STABILIZER BUSH**
   (a) Install the 2 bushes.
   HINT:
   - Install each bush to the outer side of the bush stopper on each stabilizer bar.
   - Install each bush with its slit facing the vehicle front side.

2. **INSTALL REAR STABILIZER BAR**
   (a) Install the stabilizer bar to the vehicle.
   NOTICE:
   When installing the stabilizer bar, make sure not to damage the sensor wires, brake hoses, etc.

3. **INSTALL REAR NO. 1 STABILIZER BAR BRACKET**
   (a) Install the bracket with the 2 nuts.
   Torque: 60 N*m (612 kgf*cm, 44 ft.*lbf)

4. **INSTALL REAR COIL SPRING INSULATOR LOWER LH (See page SP-34)**

5. **INSTALL REAR COIL SPRING LH (See page SP-34)**

6. **INSTALL REAR COIL SPRING INSULATOR UPPER LH (See page SP-34)**

7. **INSTALL REAR COIL SPRING INSULATOR LOWER RH**
   HINT:
   Use the same procedures described for the LH side.

8. **INSTALL REAR COIL SPRING RH**
   HINT:
   Use the same procedures described for the LH side.

9. **INSTALL REAR COIL SPRING INSULATOR UPPER RH**
   HINT:
   Use the same procedures described for the LH side.

10. **TEMPORARILY INSTALL REAR NO. 2 SUSPENSION ARM ASSEMBLY LH (See page SP-46)**

11. **TEMPORARILY INSTALL REAR NO. 2 SUSPENSION ARM ASSEMBLY RH**
    HINT:
    Use the same procedures described for the LH side.

SP

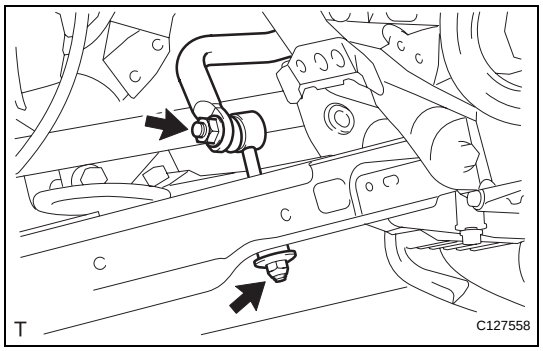

12. INSTALL REAR STABILIZER LINK ASSEMBLY LH

(a) Install the stabilizer link with the 2 nuts.

Torque: 74 N*m (755 kgf*cm, 55 ft.*lbf) for stabilizer bar
30 N*m (306 kgf*cm, 22 ft.*lbf) for suspension No. 2 arm

13. INSTALL REAR STABILIZER LINK ASSEMBLY RH

HINT:
Use the same procedures described for the LH side.

14. INSTALL REAR WHEEL

Torque: 103 N*m (1,050 kgf*cm, 76 ft.*lbf)

15. STABILIZE SUSPENSION (See page SP-37)

16. TIGHTEN REAR NO. 2 SUSPENSION ARM ASSEMBLY LH (See page SP-46)

17. TIGHTEN REAR NO. 2 SUSPENSION ARM ASSEMBLY RH

HINT:
Use the same procedures described for the LH side.

18. INSPECT AND ADJUST REAR WHEEL ALIGNMENT

(a) Inspect and adjust the rear wheel alignment (see page SP-7).

19. CHECK SPEED SENSOR SIGNAL

(a) Check the speed sensor signal (see page BC-44).

SP

REAR STABILIZER BAR

COMPONENTS

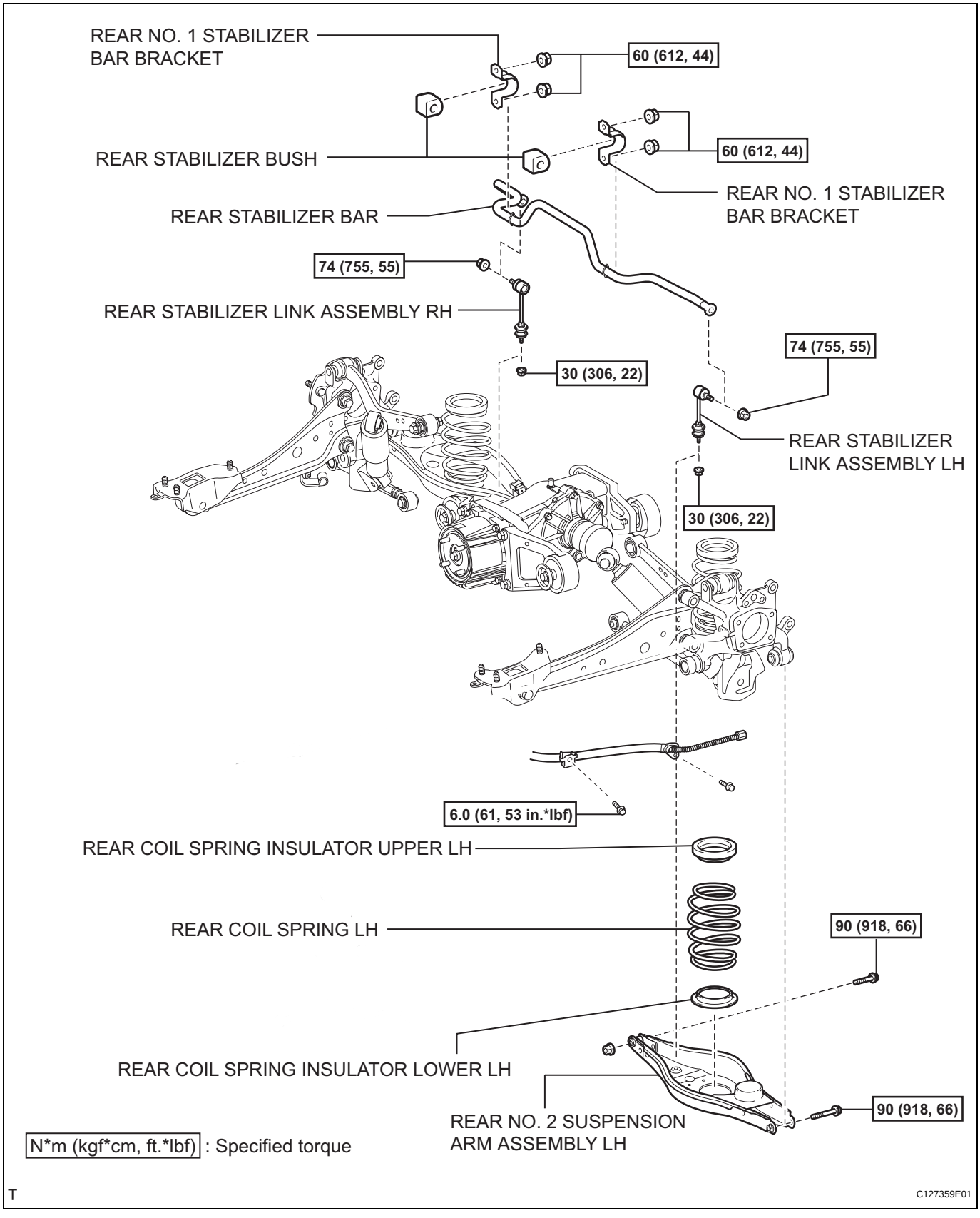

SP

REMOVAL

HINT:
- Use the same procedures for the RH side and LH side.
- The procedures listed below are for the LH side.

1. **REMOVE REAR WHEEL**

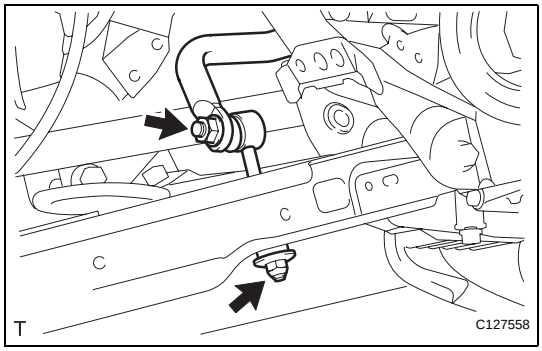

2. **REMOVE REAR STABILIZER LINK ASSEMBLY LH**
   (a) Remove the nut and disconnect the link from the suspension No. 2 arm.
   (b) Remove the nut and link from the stabilizer bar.

3. **REMOVE REAR STABILIZER LINK ASSEMBLY RH**
   HINT:
   Use the same procedures described for the LH side

4. **REMOVE REAR NO. 2 SUSPENSION ARM ASSEMBLY LH (See page SP-45)**

5. **REMOVE REAR NO. 2 SUSPENSION ARM ASSEMBLY RH**
   HINT:
   Use the same procedures described for the LH side

6. **REMOVE REAR COIL SPRING INSULATOR UPPER LH (See page SP-33)**

7. **REMOVE REAR COIL SPRING LH (See page SP-33)**

8. **REMOVE REAR COIL SPRING INSULATOR LOWER LH (See page SP-33)**

9. **REMOVE REAR COIL SPRING INSULATOR UPPER RH**
   HINT:
   Use the same procedures described for the LH side

10. **REMOVE REAR COIL SPRING RH**
    HINT:
    Use the same procedures described for the LH side

11. **REMOVE REAR COIL SPRING INSULATOR LOWER RH**
    HINT:
    Use the same procedures described for the LH side

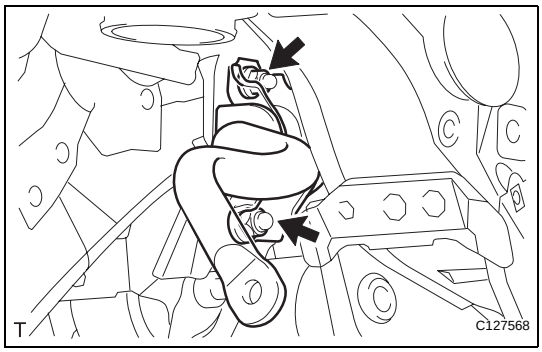

12. **REMOVE REAR NO. 1 STABILIZER BAR BRACKET**
    (a) Remove the 2 nuts and bracket.
    HINT:
    Use the same procedures for the other side.

13. **REMOVE REAR STABILIZER BAR**
    (a) Remove the stabilizer bar from the vehicle.
    NOTICE:
    When removing the stabilizer bar from the vehicle, make sure not to damage the sensor wire, brake hose, etc.

14. **REMOVE REAR STABILIZER BUSH**
    (a) Remove the 2 stabilizer bushes from the stabilizer bar.

INSTALLATION

HINT:

- Use the same procedures for the RH side and LH side.
- The procedures listed below are for the LH side.

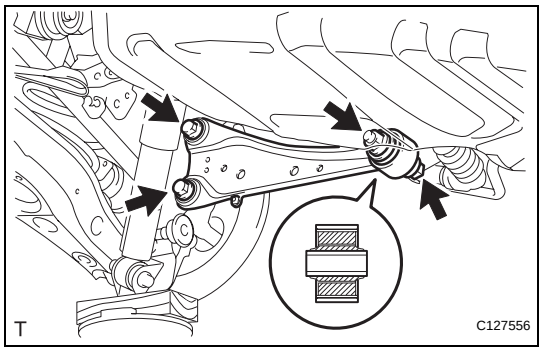

1. **TEMPORARILY TIGHTEN REAR TRAILING ARM ASSEMBLY LH**
   (a) Temporarily install the trailing arm with the 3 bolts and nut to the axle carrier and suspension arm bracket.
   HINT:
   While fixing the nut in place, tighten the bolt.

2. **INSTALL NO. 2 PARKING BRAKE CABLE ASSEMBLY (See page PB-9)**

3. **INSTALL REAR WHEEL**
   Torque: 103 N*m (1,050 kgf*cm, 76 ft.*lbf)

4. **TIGHTEN REAR TRAILING ARM ASSEMBLY LH**
   (a) Tighten the 3 bolts and nut.
   Torque: 200 N*m (2,039 kgf*cm, 148 ft.*lbf) for axle carrier
   150 N*m (1,530 kgf*cm, 111 ft.*lbf) for suspension arm bracket

5. **INSPECT AND ADJUST REAR WHEEL ALIGNMENT**
   (a) Inspect and adjust the rear wheel alignment (see page SP-7).

SP

REAR TRAILING ARM

COMPONENTS

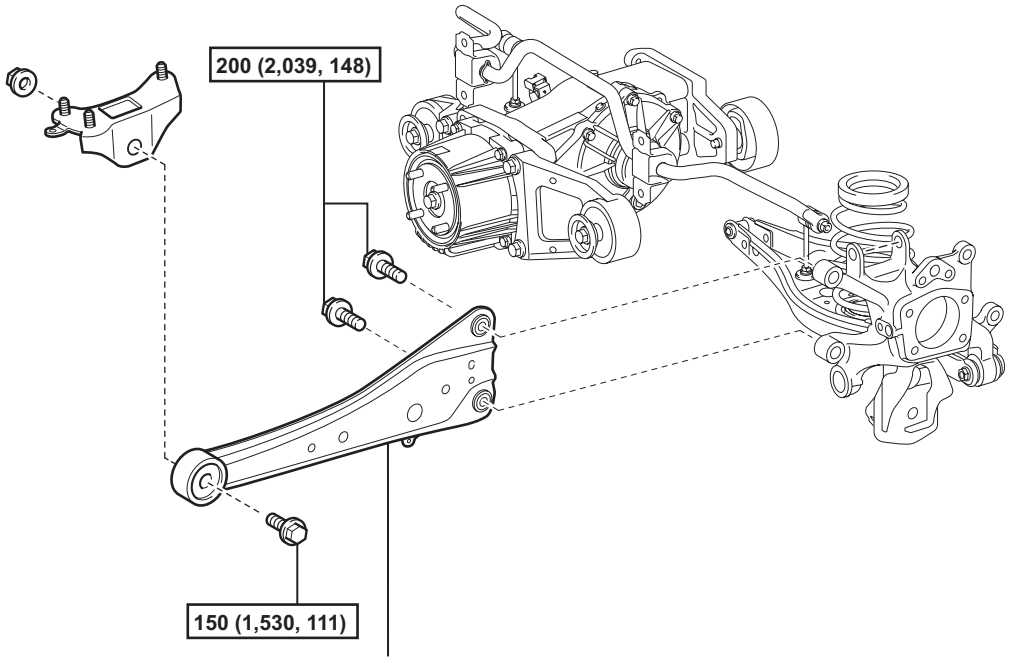

REAR TRAILING ARM ASSEMBLY LH

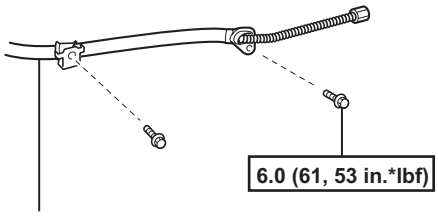

NO. 2 PARKING BRAKE
CABLE ASSEMBLY

N*m (kgf*cm, ft.*lbf) : Specified torque

T

C129928E01

SP

REMOVAL

HINT:

- Use the same procedures for the RH side and LH side.
- The procedures listed below are for the LH side.

1. REMOVE REAR WHEEL

2. DISCONNECT NO. 2 PARKING BRAKE CABLE ASSEMBLY (See page PB-8)

3. REMOVE REAR TRAILING ARM ASSEMBLY LH

(a) Remove the 3 bolts, nut and trailing arm from the axle carrier and suspension arm bracket.

HINT:

While fixing the nut in place, loosen and remove the bolt.

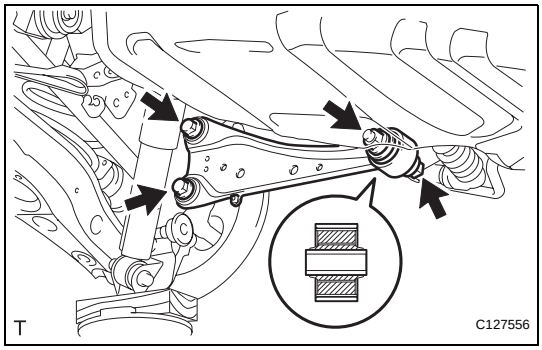

INSTALLATION

HINT:

- Use the same procedures for the RH side and LH side.
- The procedures listed below are for the LH side.

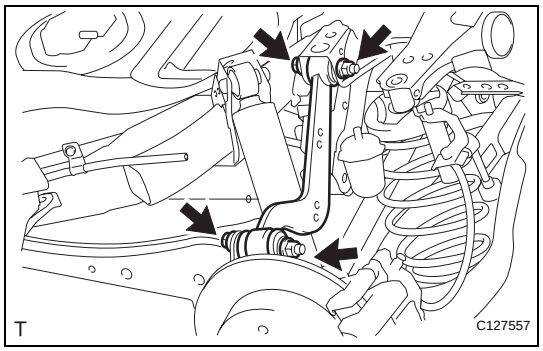

1. **TEMPORARILY INSTALL REAR UPPER CONTROL ARM LH**
   (a) Temporarily install the control arm with the 2 bolts and 2 nut.
   HINT:
   Fix the nuts in place and temporarily tighten the bolts.

2. **CONNECT SKID CONTROL SENSOR WIRE (for 2WD) (See page BC-201)**

3. **CONNECT REAR SPEED SENSOR LH (for 4WD) (See page BC-206)**

4. **INSTALL REAR WHEEL**
   (a) Install the wheel.
   Torque: 103 N*m (1,050 kgf*cm, 76 ft.*lbf)

5. **TIGHTEN REAR UPPER CONTROL ARM ASSEMBLY LH**
   (a) Fix the 2 nuts in place and tighten the 2 bolts.
   Torque: 90 N*m (918 kgf*cm, 66 ft.*lbf)

SP

REAR UPPER CONTROL ARM

COMPONENTS

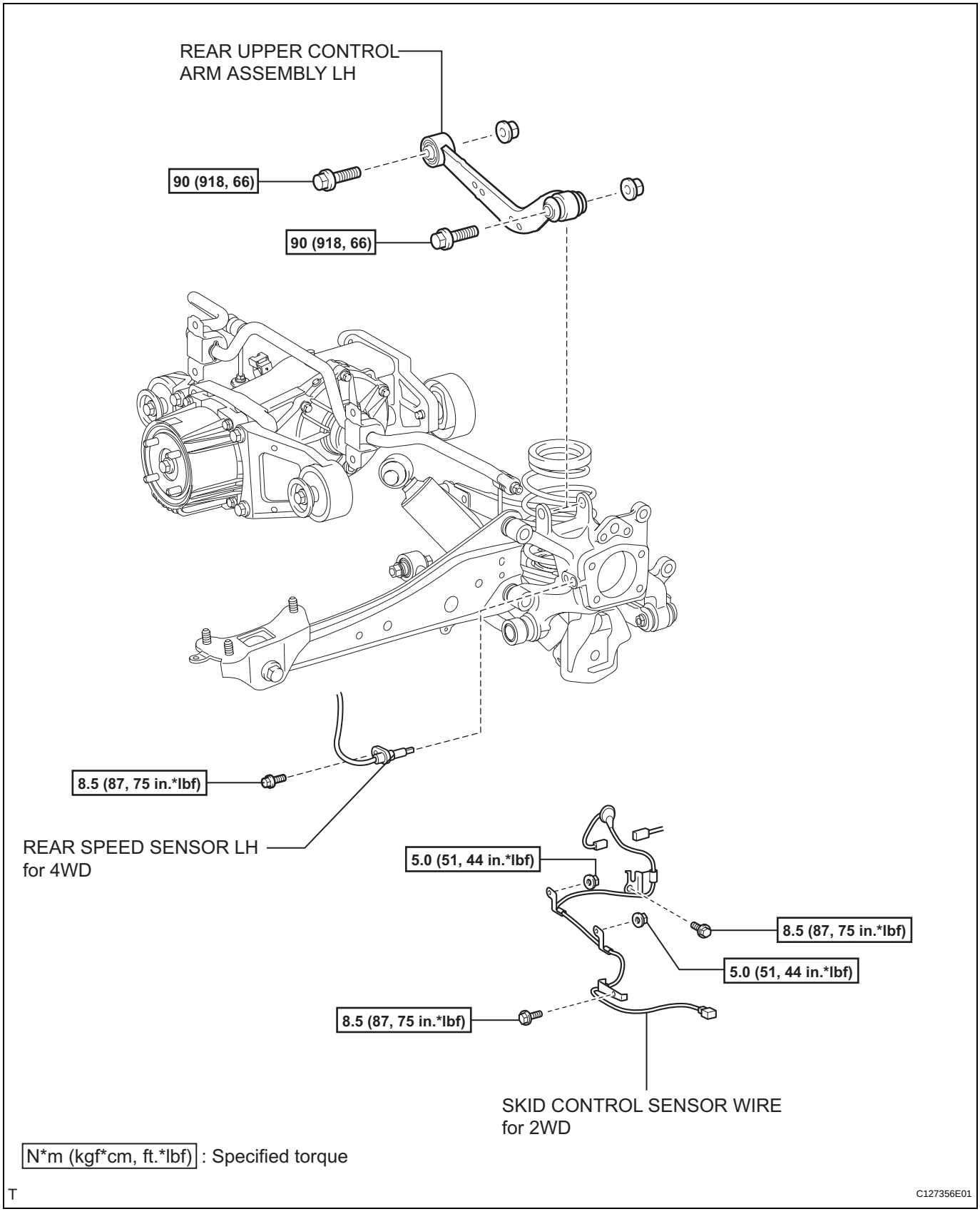

SP

REMOVAL

HINT:

- Use the same procedures for the RH side and LH side.
- The procedures listed below are for the LH side.

1. REMOVE REAR WHEEL

2. DISCONNECT SKID CONTROL SENSOR WIRE (for 2WD) (See page BC-198)

3. DISCONNECT REAR SPEED SENSOR LH (for 4WD) (See page BC-205)

4. REMOVE REAR UPPER CONTROL ARM ASSEMBLY LH

(a) Support the No. 2 suspension arm.

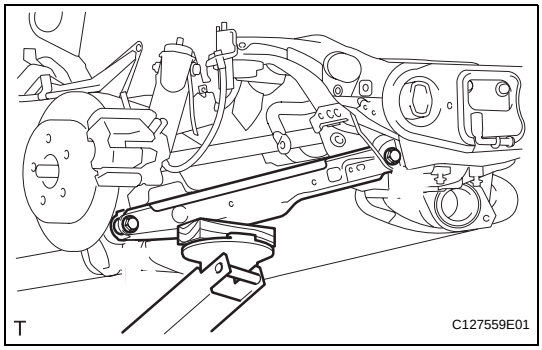

(b) Remove the 2 bolts and 2 nuts, and disconnect the upper control arm.

NOTICE:
When removing the bolts, hold the nuts in place.

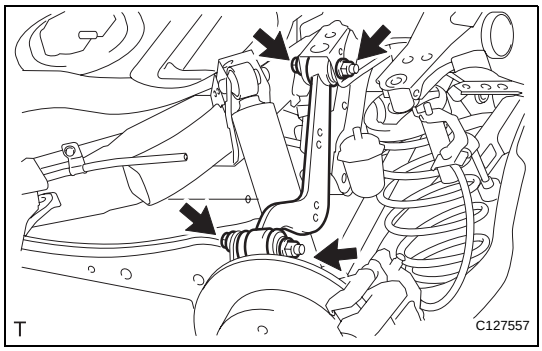

REAR WHEEL ALIGNMENT

ADJUSTMENT

1. INSPECT TIRE

(a) Inspect the tire (see page TW-1).

2. MEASURE VEHICLE HEIGHT

(a) Measure the vehicle height (see page SP-3).

3. INSPECT TOE-IN

Standard toe-in

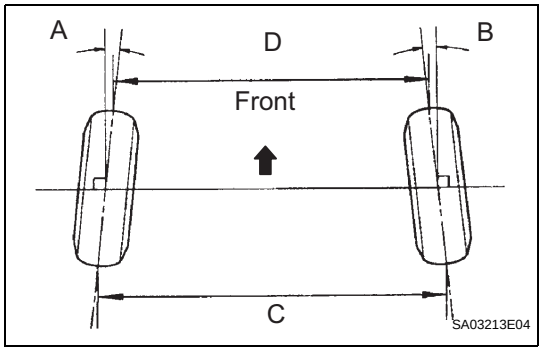

Item	Specified Condition
Toe-in (total)	A + B: 0°11' +-10' (0.18° +-0.17°) C - D: 2.3 +-1 mm (0.09 +-0.04 in.)

If the toe-in is not within the specified range, inspect the suspension parts and replace them if necessary.

4. INSPECT CAMBER

(a) Install the camber-caster-kingpin gauge or set the vehicle on the wheel alignment tester.

(b) Inspect the camber.

Standard camber

Item		Specified Condition
Camber Right-left error	Tire Size: 215/70R16	-0°55' +-45' (-0.92 +-0.75°) 30' (0.5°) or less
	Tire Size: 225/65R17 Tire Size: 235/55R18	-1°04' +-45' (-1.07 +-0.75°) 30' (0.5°) or less
	Tire Size: 225/65R17*	-0°52' +-45' (-0.87 +-0.75°) 30' (0.5°) or less

HINT:

- *: w/ 3rd seat
- Camber is not adjustable. If the measurement is not within the specified range, inspect the suspension parts for damage and/or wear, and replace them if necessary.

SP

SUSPENSION SYSTEM

PROBLEM SYMPTOMS TABLE

HINT:
Use the table below to help determine the cause of the problem symptom. The potential causes of the symptoms are listed in order of probability in the "Suspected area" column of the table. Check each symptom by checking the suspected areas in the order they are listed. Replace parts as necessary.

Suspension system

Symptom	Suspected area	See page
Vehicle/pulls	1. Tire (worn or improperly inflated)	TW-1
	2. Front wheel alignment (incorrect)	SP-3
	3. Rear wheel alignment (incorrect)	SP-7
	4. Steering linkage (loose or worn)	-
	5. Front hub bearing (worn)	AH-6
	6. Rear hub bearing (worn)	AH-15
	7. Steering gear (out of adjustment or broken)	PS-44
	8. Suspension parts (worn)	-
Bottoming	1. Vehicle (overloaded)	-
	2. Front coil spring (weak)	SP-9
	3. Front coil spring for sports package (weak)	SP-15
	4. Rear coil spring (weak)	SP-33
	5. Front shock absober (worn)	SP-10
	6. Front shock absober for sports package (worn)	SP-17
	7. Rear shock absorber (worn)	SP-36
Sway/pitches	1. Tire (worn or improperly inflated)	TW-1
	2. Front stabilizer bar (bent or broken)	SP-30
	3. Rear stabilizer bar (bent or broken)	SP-51
	4. Front shock absober (worn)	SP-10
	5. Front shock absober for sports package (worn)	SP-17
	6. Rear shock absorber (worn)	SP-36
Wheel shimy	1. Tire (worn or improperly inflated)	TW-1
	2. Wheel (out of balance)	TW-1
	3. Front shock absober (worn)	SP-10
	4. Front shock absober for sports package (worn)	SP-17
	5. Rear shock absorber (worn)	SP-36
	6. Front wheel alignment (incorrect)	SP-3
	7. Rear wheel alignment (incorrect)	SP-7
	8. Front lower ball joint (worn)	SP-27
	9. Front hub bearing (worn)	AH-6
	10. Rear hub bearing (worn)	AH-15
	11. Steering linkage (loose or worn)	-
	12. Steering gear (out of adjustment or broken)	PS-44

Symptom	Suspected area	See page
Abnormal tire wear	1, Tire (worn or improperly inflated)	TW-1
	2. Front wheel alignment (incorrect)	SP-3
	3. Rear wheel alignment (incorrect)	SP-7
	4. Front shock absober (worn)	SP-10
	5. Front shock absober for sports package (worn)	SP-17
	6. Rear shock absorber (worn)	SP-36
	7. Suspension parts (worn)	-

TIRE AND WHEEL SYSTEM

INSPECTION

1. INSPECT TIRE

(a) Check the tires for wear and proper inflation pressure.
Standard cold tire inflation pressure:
220 kPa (2.2 kgf/cm^2, 32 psi)

(b) Using a dial indicator, check the runout of the tires.
Standard tire runout:
1.0 mm (0.039 in.) or less

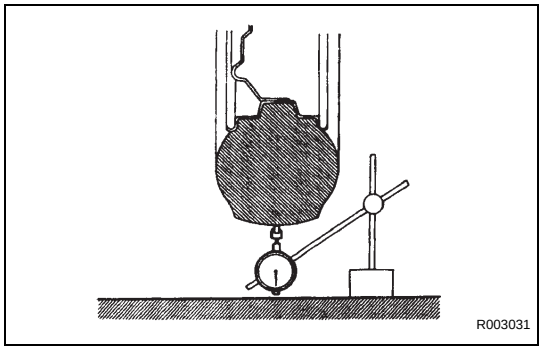

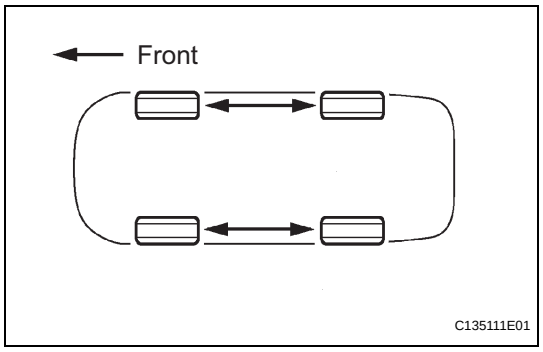

2. ROTATE TIRE

HINT:
See the illustration for tire rotation.

3. INSPECT WHEEL BALANCE

(a) Check and adjust the off-the-car balance.
Standard imbalance after adjustment:
8.0 g (0.018 lb) or less

4. CHECK FRONT AXLE HUB BEARING (See page AH-6)

5. CHECK BEARING BACKLASH AND AXLE HUB DEVIATION (See page AH-16)

TIRE PRESSURE WARNING ECU

COMPONENTS

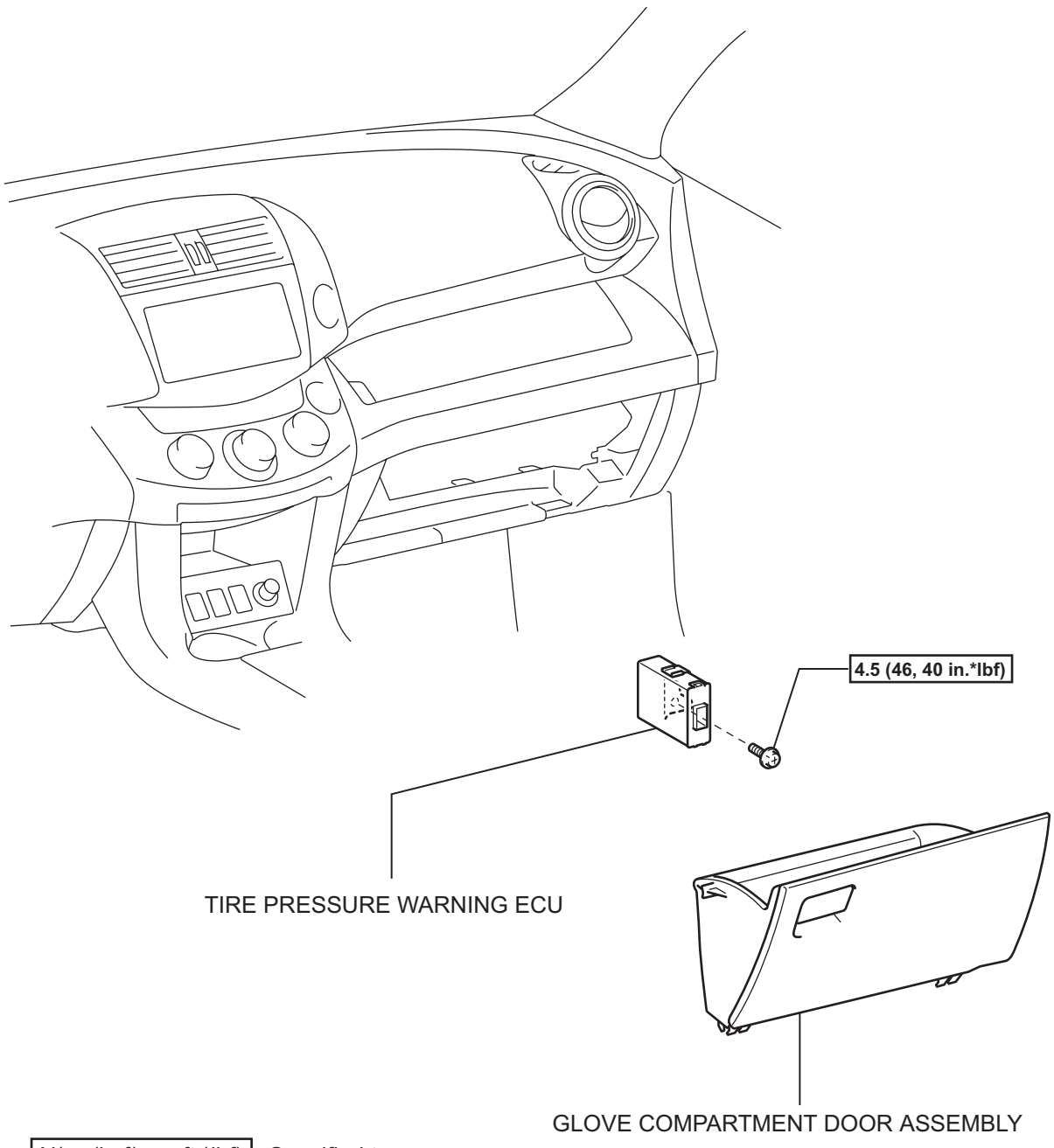

N*m (kgf*cm, ft.*lbf) : Specified torque

C128866E01

REMOVAL

1. **DISCONNECT CABLE FROM NEGATIVE BATTERY TERMINAL**
   CAUTION:
   Wait at least 90 seconds after disconnecting the cable from the negative (-) battery terminal to prevent airbag and seat belt pretensioner activation.
2. **REMOVE GLOVE COMPARTMENT DOOR ASSEMBLY (See page IP-20)**
3. **REMOVE TIRE PRESSURE WARNING ECU**
   (a) Disconnect the connector.
   (b) Remove the bolt and ECU.

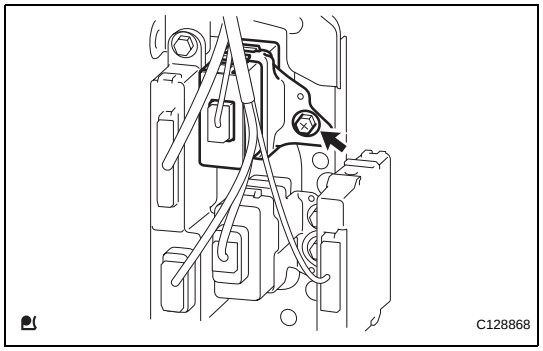

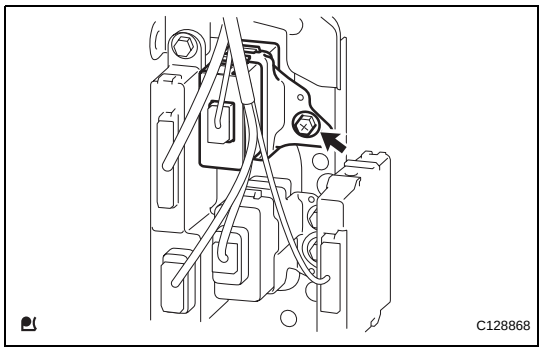

INSTALLATION

1. **INSTALL TIRE PRESSURE WARNING ECU**
   (a) Install the ECU with the bolt.
   Torque: 4.5 N*m (46 kgf*cm, 40 in.*lbf)
   (b) Connect the connector.
2. **INSTALL GLOVE COMPARTMENT DOOR ASSEMBLY (See page IP-25)**
3. **CONNECT CABLE TO NEGATIVE BATTERY TERMINAL**
4. **REGISTER TRANSMITTER ID (See page TW-10)**
5. **INSPECT TIRE PRESSURE WARNING SYSTEM**

REMOVAL

1. **DISCONNECT CABLE FROM NEGATIVE BATTERY TERMINAL**
   CAUTION:
   Wait at least 90 seconds after disconnecting the cable from the negative (-) battery terminal to prevent airbag and seat belt pretensioner activation.
2. **REMOVE REAR DOOR SCUFF PLATE RH (See page IR-29)**
3. **REMOVE PACKAGE TRAY TRIM POCKET SUB-ASSEMBLY (w/o Rear No. 2 Seat)**
4. **REMOVE TONNEAU COVER ASSEMBLY (w/o Rear No. 2 Seat)**
5. **REMOVE REAR FLOOR NO. 1 BOARD (w/o Rear No. 2 Seat)**
6. **REMOVE DECK BOARD ASSEMBLY (w/o Rear No. 2 Seat)**
7. **REMOVE NO. 2 SEAT HINGE COVER LH (w/ Rear No. 2 Seat) (See page SE-109)**
8. **REMOVE NO. 2 SEAT HINGE COVER RH (w/ Rear No. 2 Seat) (See page IR-30)**
9. **REMOVE NO. 2 SEAT LEG COVER LH (w/ Rear No. 2 Seat) (See page SE-109)**
10. **REMOVE NO. 2 SEAT LEG COVER RH (w/ Rear No. 2 Seat) (See page IR-30)**
11. **REMOVE REAR NO. 2 SEAT ASSEMBLY LH (w/ Rear No. 2 Seat) (See page SE-110)**
12. **REMOVE REAR NO. 2 SEAT ASSEMBLY RH (w/ Rear No. 2 Seat) (See page IR-30)**
13. **REMOVE REAR FLOOR NO. 3 BOARD**
14. **REMOVE REAR FLOOR NO. 2 BOARD**
15. **REMOVE REAR FLOOR NO. 1 MAT SUPPORT SIDE PLATE (See page IR-31)**
16. **REMOVE REAR FLOOR FINISH PLATE (See page IR-31)**
17. **REMOVE REAR DECK TRIM COVER RH (w/ Rear No. 2 Seat) (See page IR-31)**
18. **REMOVE RECLINING REMOTE CONTROL LEVER BEZEL RH (w/o Rear No. 2 Seat) (See page SE-80)**
19. **REMOVE TETHER ANCHOR BRACKET SUB-ASSEMBLY (w/o Rear No. 2 Seat) (See page IR-32)**
20. **REMOVE DECK TRIM SIDE PANEL ASSEMBLY RH (w/o Rear No. 2 Seat) (See page IR-33)**
21. **REMOVE DECK TRIM SIDE PANEL ASSEMBLY RH (w/ Rear No. 2 Seat) (See page IR-34)**

22. **REMOVE INNER ROOF SIDE GARNISH ASSEMBLY RH (See page IR-35)**

23. **REMOVE TIRE PRESSURE WARNING ANTENNA AND RECEIVER**
    (a) Disconnect the connector.
    (b) Remove the bolt and receiver.

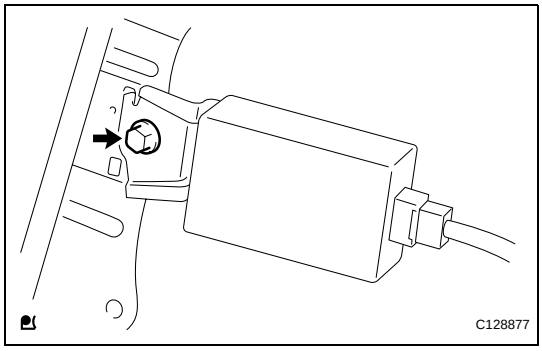

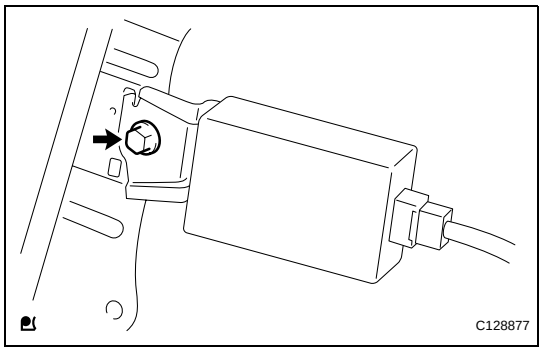

INSTALLATION

1. **INSTALL TIRE PRESSURE WARNING ANTENNA AND RECEIVER**
    (a) Install the receiver with the bolt.
    Torque: 7.5 N*m (76 kgf*cm, 66 in.*lbf)
    (b) Connect the connector.

2. **INSTALL INNER ROOF SIDE GARNISH ASSEMBLY RH (See page IR-52)**

3. **INSTALL DECK TRIM SIDE PANEL ASSEMBLY RH (w/o Rear No. 2 Seat) (See page IR-53)**

4. **INSTALL DECK TRIM SIDE PANEL ASSEMBLY RH (w/ Rear No. 2 Seat) (See page IR-54)**

5. **INSTALL TETHER ANCHOR BRACKET SUB-ASSEMBLY (w/o Rear No. 2 Seat) (See page IR-54)**

6. **INSTALL RECLINING REMOTE CONTROL LEVER BEZEL RH (w/o Rear No. 2 Seat) (See page SE-105)**

7. **INSTALL REAR DECK TRIM COVER RH (w/ Rear No. 2 Seat) (See page IR-55)**

8. **INSTALL REAR FLOOR FINISH PLATE (See page IR-55)**

9. **INSTALL REAR FLOOR NO. 1 MAT SUPPORT SIDE PLATE (See page IR-55)**

10. **INSTALL REAR FLOOR NO. 2 BOARD**

11. **INSTALL REAR FLOOR NO. 3 BOARD**

12. **INSTALL REAR NO. 2 SEAT ASSEMBLY LH (w/ Rear No. 2 Seat) (See page SE-121)**

13. **INSTALL REAR NO. 2 SEAT ASSEMBLY RH (w/ Rear No. 2 Seat) (See page IR-55)**

14. **INSTALL NO. 2 SEAT LEG COVER LH (w/ Rear No. 2 Seat) (See page SE-123)**

TW

15. INSTALL NO. 2 SEAT LEG COVER RH (w/ Rear No. 2 Seat) (See page IR-56)
16. INSTALL NO. 2 SEAT HINGE COVER LH (w/ Rear No. 2 Seat) (See page SE-123)
17. INSTALL NO. 2 SEAT HINGE COVER RH (w/ Rear No. 2 Seat) (See page IR-56)
18. INSTALL DECK BOARD ASSEMBLY (w/o Rear No. 2 Seat)
19. INSTALL REAR FLOOR NO. 1 BOARD (w/o Rear No. 2 Seat)
20. INSTALL TONNEAU COVER ASSEMBLY (w/o Rear No. 2 Seat)
21. INSTALL PACKAGE TRAY TIRM POCKET SUB-ASSEMBLY (w/o Rear No. 2 Seat)
22. INSTALL REAR DOOR SCUFF PLATE RH (See page IR-57)
23. CONNECT CABLE TO NEGATIVE BATTERY TERMINAL
24. REGISTER TRANSMITTER ID (See page TW-10)
25. INSPECT TIRE PRESSURE WARNING SYSTEM

TIRE PRESSURE WARNING RECEIVER (w/ Antenna)

COMPONENTS

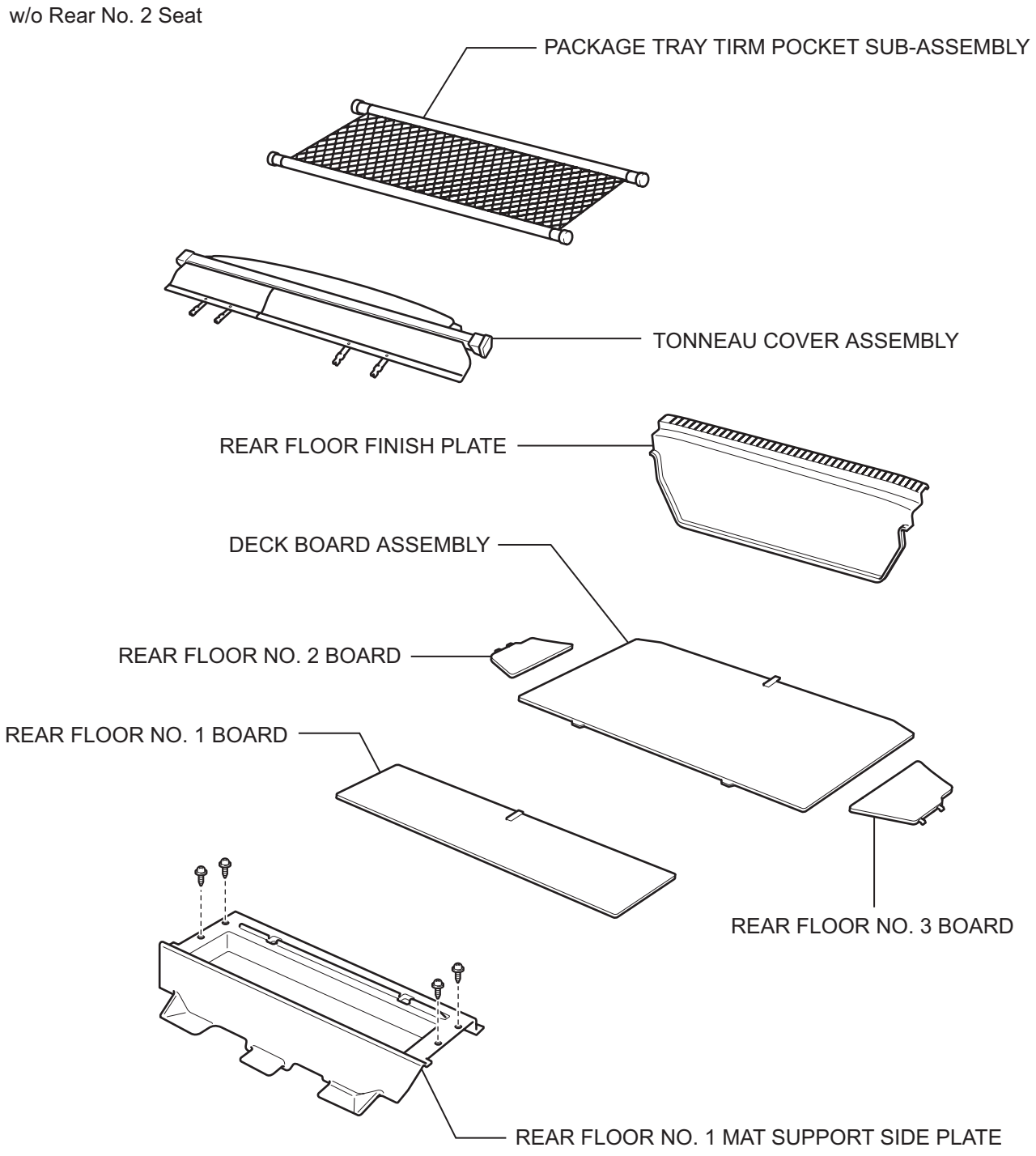

TW

w/ Rear No. 2 Seat

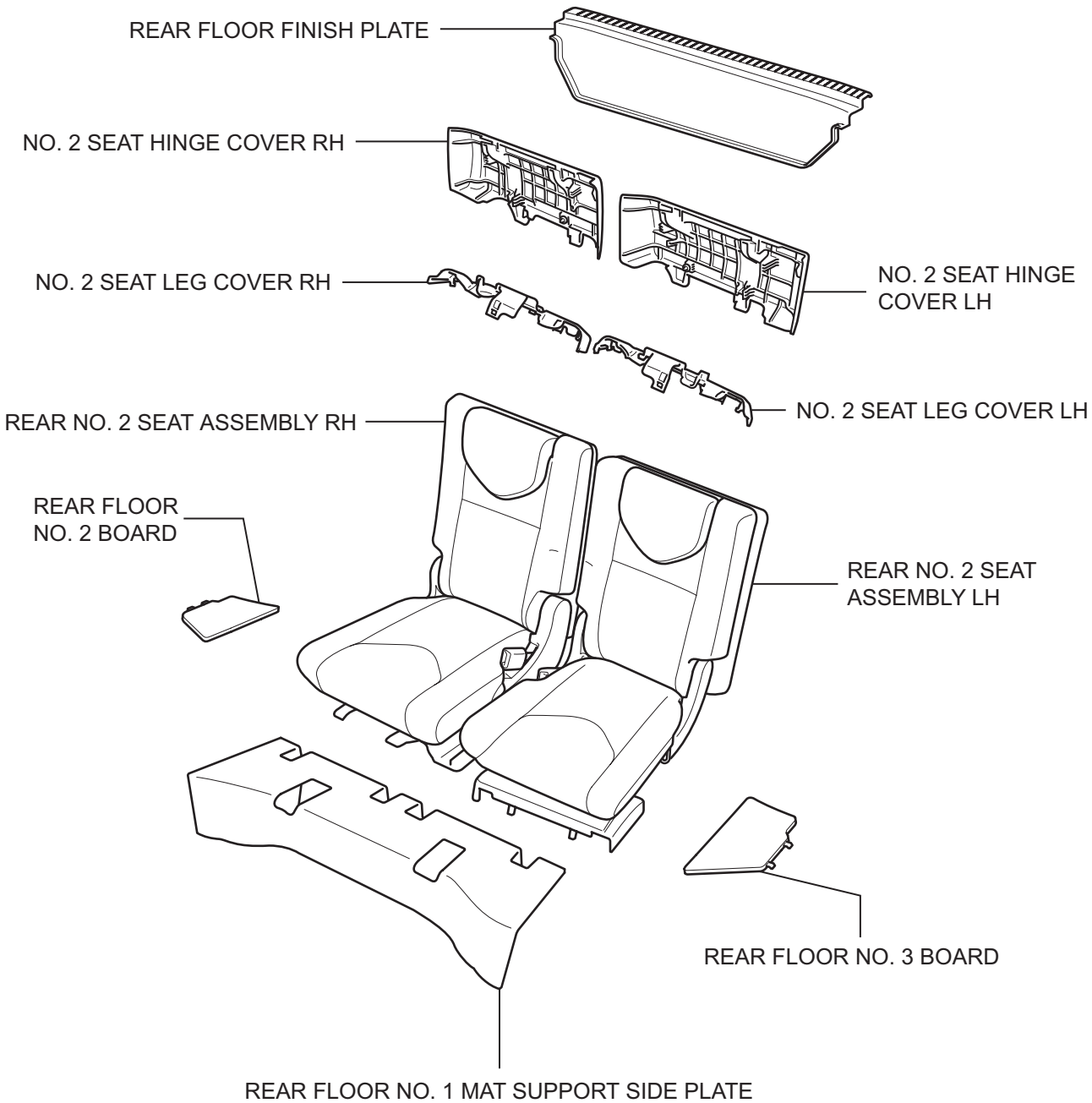

TW

T

C130267E01

w/o Rear No. 2 Seat

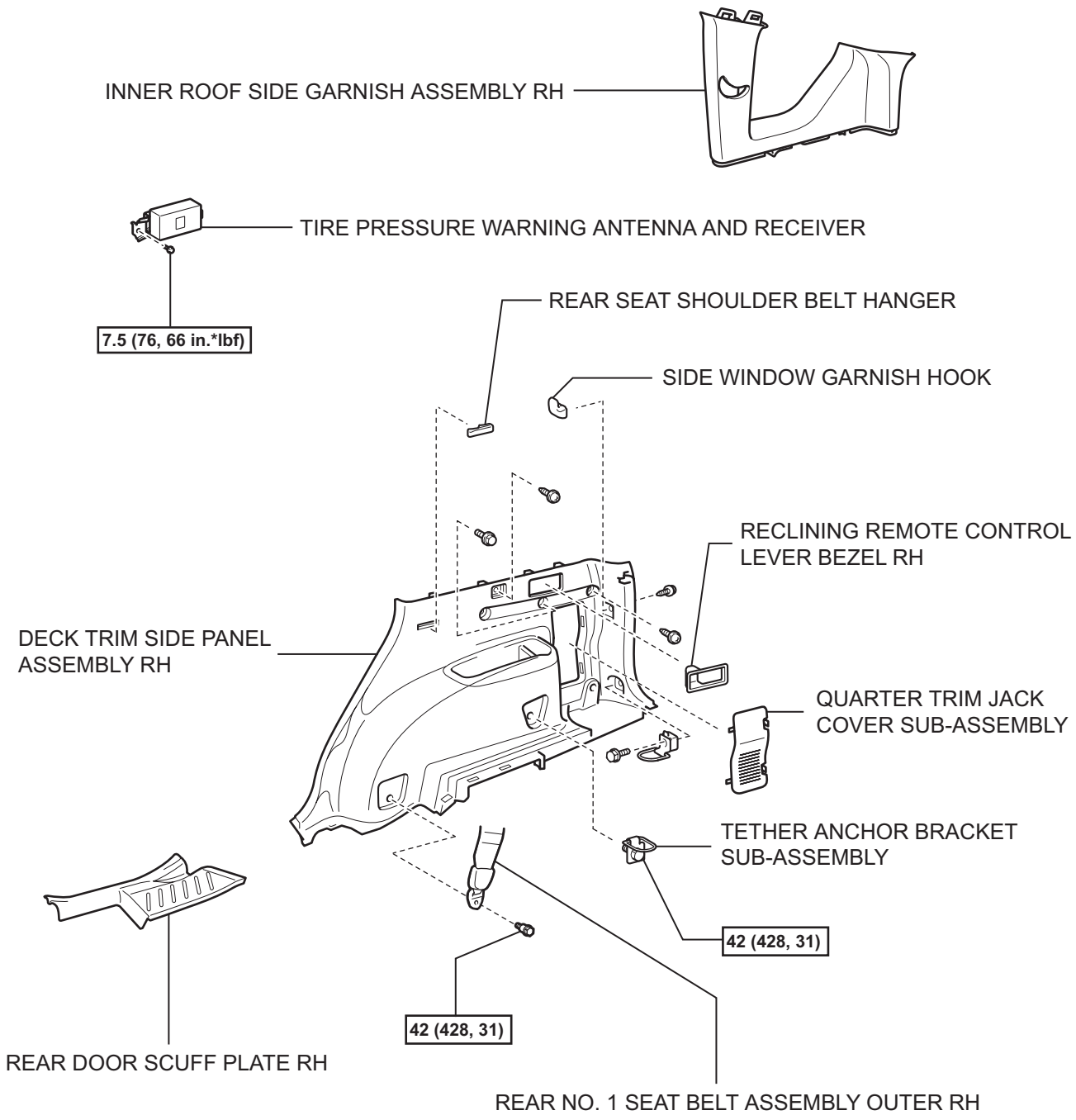

N*m (kgf*cm, ft.*lbf) : Specified torque

T

C130268E01

TW

w/ Rear No. 2 Seat

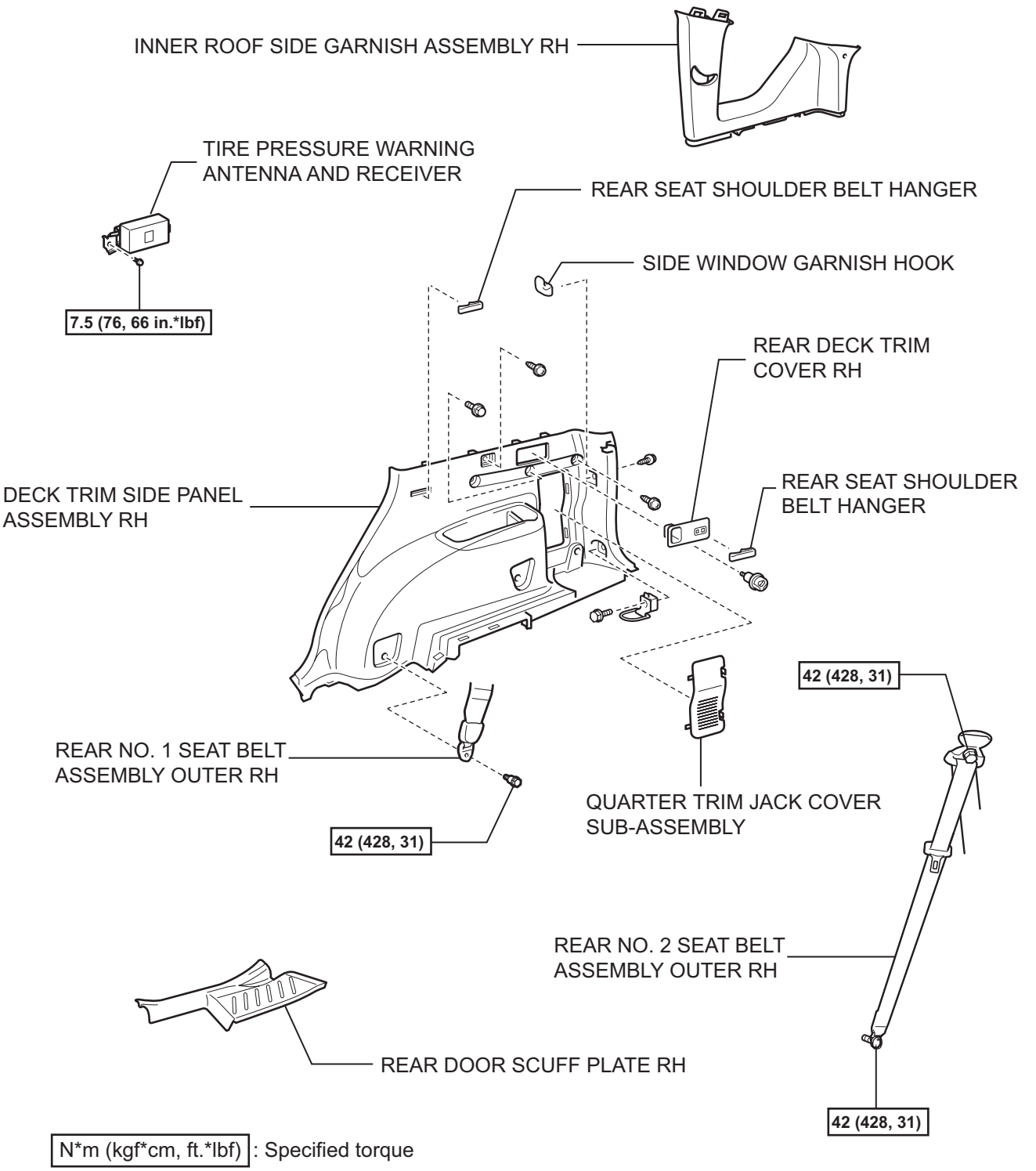

N*m (kgf*cm, ft.*lbf) : Specified torque

C130269E01

PARTS LOCATION

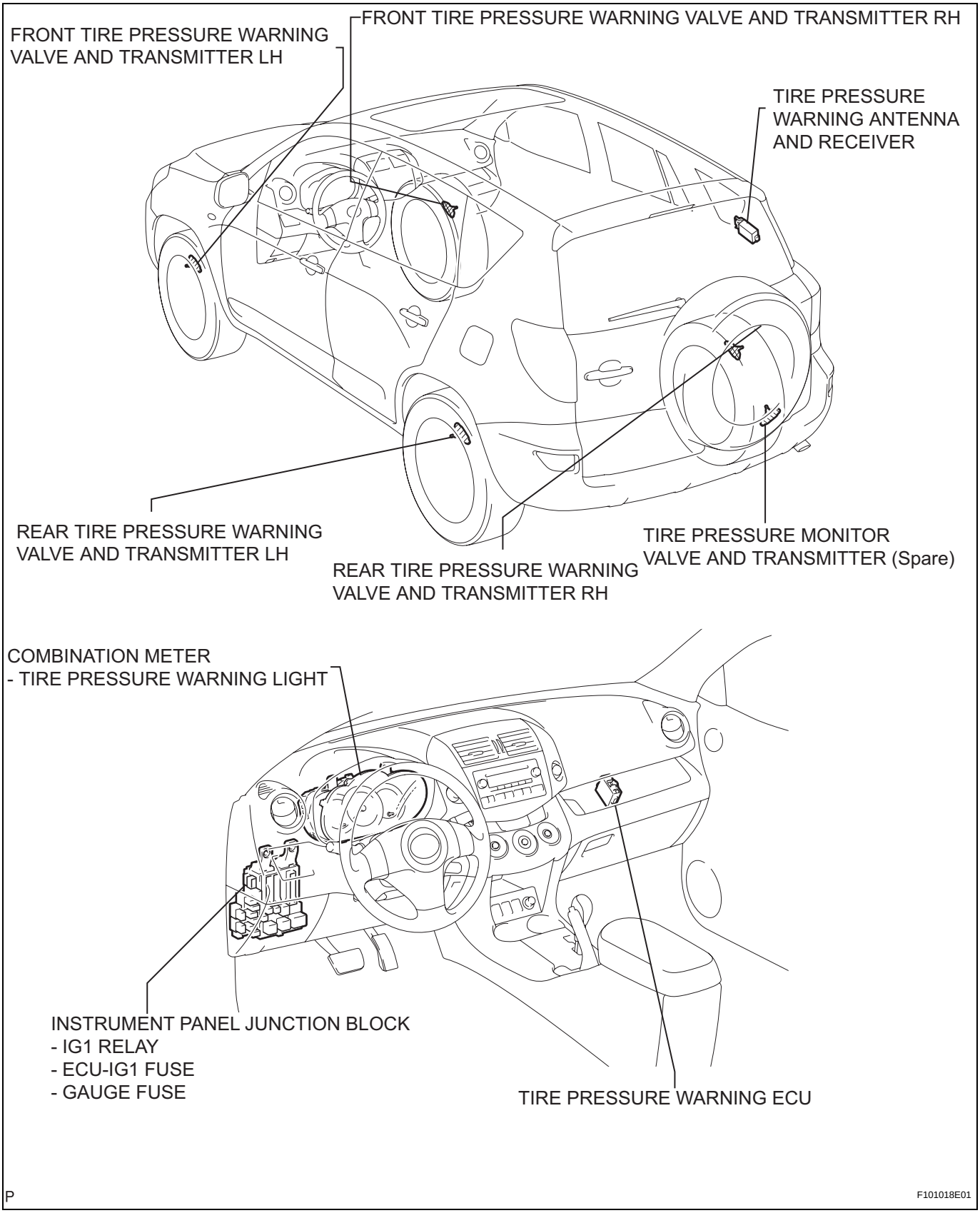

TW

SYSTEM DIAGRAM

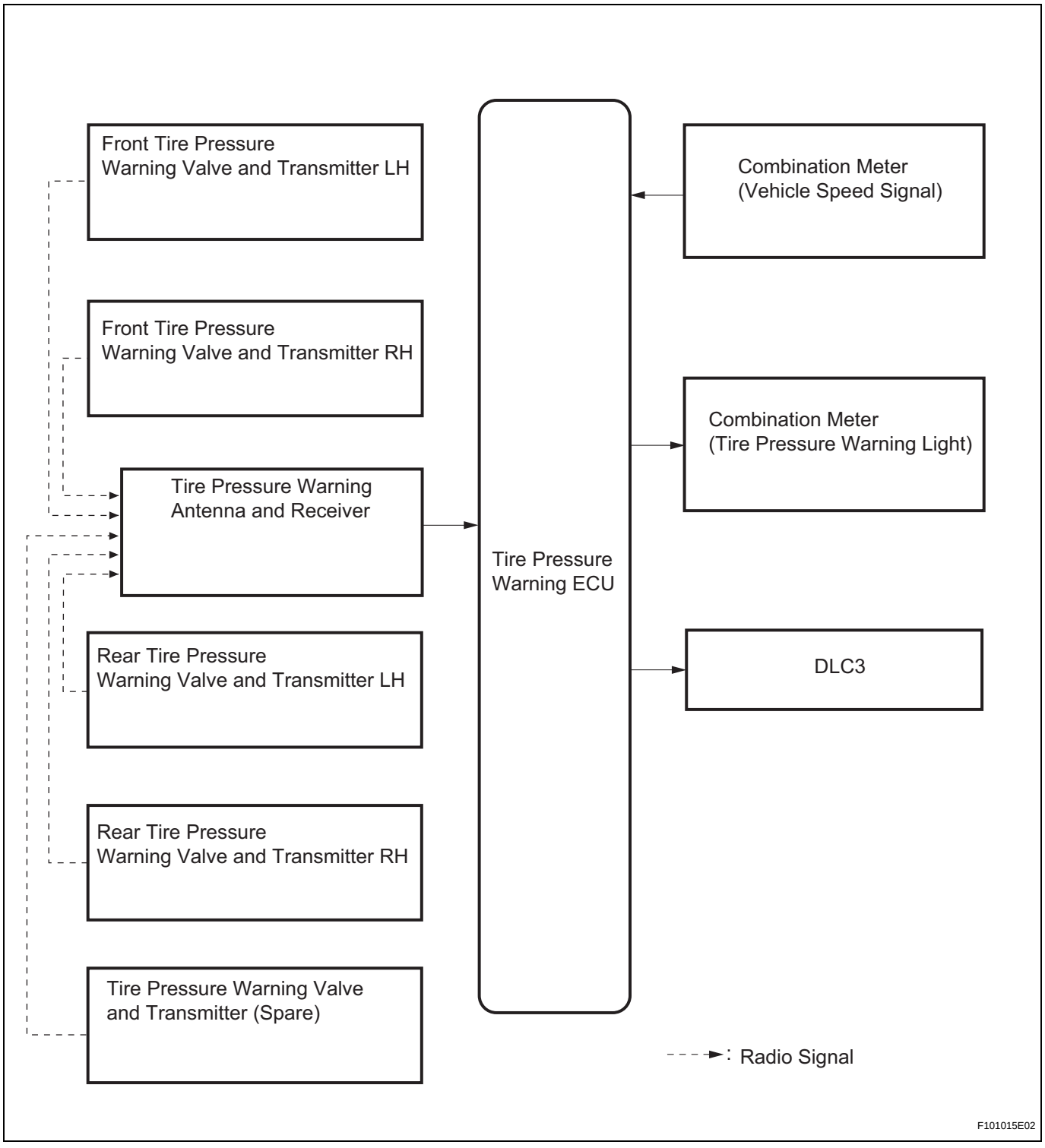

TW

SYSTEM DESCRIPTION

1. DESCRIPTION OF SYSTEM

(a) A tire pressure warning antenna and receiver is equipped with a tire pressure sensor and a transmitter and is installed in each tire wheel. The sensor measures the tire pressure and internal temperature of the tire. Then the measured value and transmitter ID are transmitted to the tire pressure monitor receiver on the body as radio waves, which are sent to the tire pressure warning ECU. If the transmitter ID has already been registered, the ECU compares the measured air pressure value with the standard value. When the value is less than the standard value registered in the tire pressure warning ECU, the warning light in the combination meter turns on.

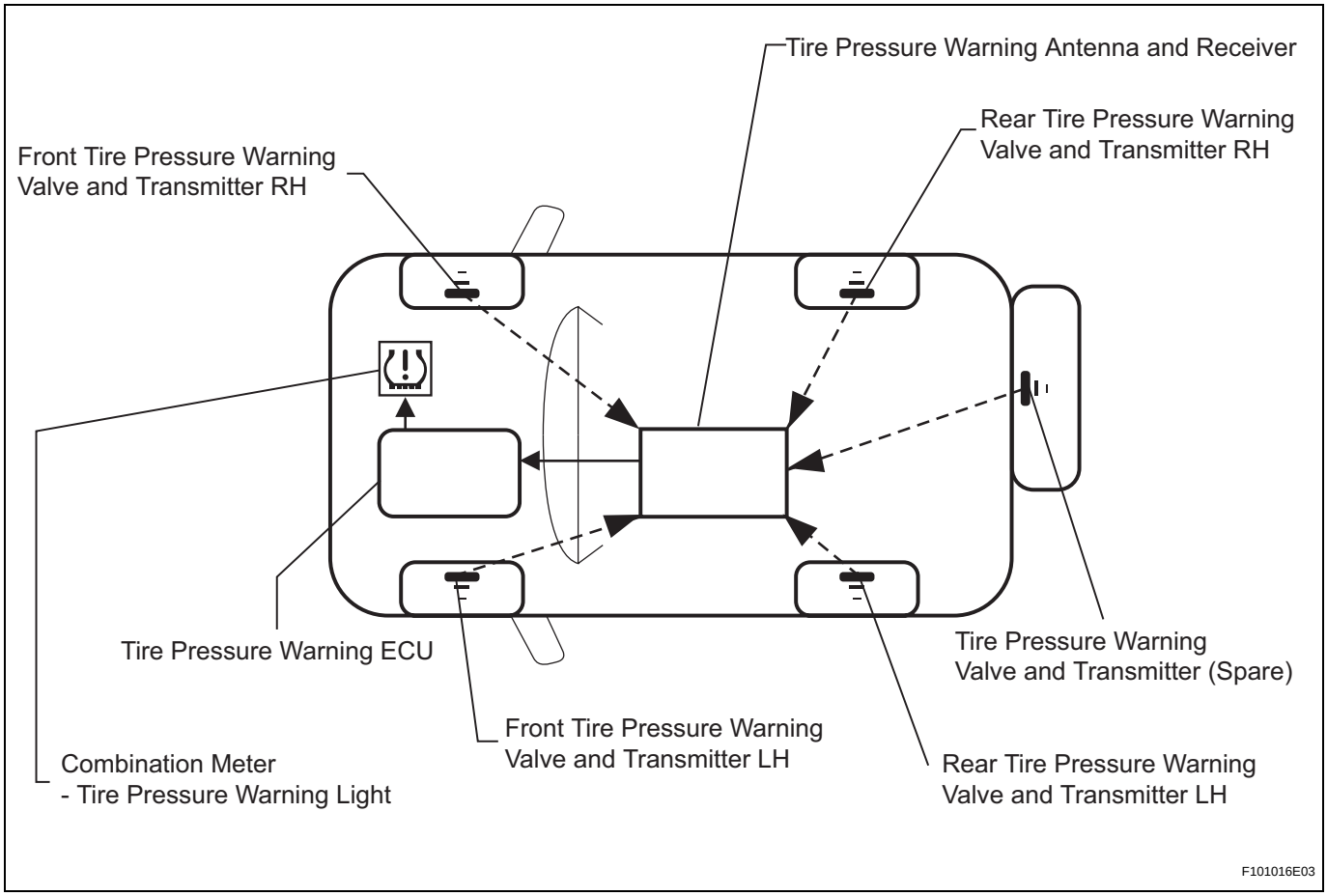

2. WHEN TIRE PRESSURE WARNING LIGHT IS LIT

(a) When the tire pressure warning light does not turn off, or when it turns on during driving, check the tire pressure. If the tire pressure warning light turns on within several hours after adjusting the tire pressure, the tire may have a slow air leak.

(b) Under the following conditions, the system may not function properly;
- Areas, facilities or devices that use similar radio frequencies are located in the vicinity of the vehicle.
- Devices using similar radio frequencies are used in the vehicle.
- Large amounts of snow or ice are stuck to the vehicle, especially on the wheels and around the wheel houses.
- The battery of the transmitter is depleted.
- Tires and wheels without tire pressure warning valves and transmitters are used.
- Snow tires and tire chains are used.
- If wheels other than the specified ones are used, the system may not function properly because different radio waves are transmitted from the tire pressure warning valve and transmitter.
- Depending on the tire type, the tire pressure warning valve and transmitter may not function properly even though the specified wheels are used.
- The system may not function properly if it is initialized with tire pressures which are not the specified values.

(c) The average life of the grommet of the tire pressure warning antenna and receiver is approximately 5 years, at which time it must be replaced. Retighten the valve nut if the valve is leaking air, if it is less than 5 years old, and there is no problem with the grommets.

(d) After removing and installing the ECU or a sensor, output a diagnosis code and check that it is a normal code.

3. FUNCTION OF COMPONENTS

Components	Function
Tire pressure warning antenna and receiver	• Combined as a single unit with a disc wheel air valve, it measures tire pressure and temperature, and transmits an ID number for measurement value and identification • Battery is built into valve
Tire pressure warning antenna and receiver	Receives necessary signals from tire pressure warning antenna and receiver and transmits them to tire pressure warning ECU
Tire pressure warning ECU	• Receives signal from receiver and identifies it as vehicle's own signal. • If measurement value is equal to or lower than specified value, it transmits a signal so that the air pressure warning light on combination meter turns on.
Tire pressure warning light	Located in the combination meter, it informs driver of lowered tire air pressure and system failure

HOW TO PROCEED WITH TROUBLESHOOTING

HINT:

- Use these procedures to troubleshoot the tire pressure warning system.
- *: Use the intelligent tester.

1 VEHICLE BROUGHT TO WORKSHOP

NEXT

2 INSPECT BATTERY VOLTAGE

Standard voltage:
11 to 14 V

If the voltage is below 11 V, recharge or replace the battery before proceeding.

NEXT

3 CHECK INDICATOR LIGHT

(a) Check the indicator light (see page TW-17).

NEXT

4 CHECK DTC*

(a) Check for DTC (see page TW-20).
(b) Clear the DTC (see page TW-20).
(c) Recheck for DTC (see page TW-20).

Result

Result	Proceed to
DTC reoccurs	A
DTC does not reoccur	B

B → **Go to step 6**

A

5 DTC CHART

(a) Check for tire pressure warning system DTC output (see page TW-22).

NEXT

6 **PROBLEM SYMPTOM CONFIRMATION**

NEXT

7 **PROBLEM SYMPTOMS TABLE**

Result

Result	Proceed to
Fault is not listed in problem symptoms table	A
Fault is listed in problem symptoms table	B

B → **Go to step 9**

A

8 **OVERALL ANALYSIS AND TROUBLESHOOTING***

(a) Terminals of ECU (see page TW-16).
(b) DATA LIST/ACTIVE TEST (see page TW-21).

NEXT

9 **REPAIR OR REPLACE**

NEXT

10 **CONFIRMATION TEST**

NEXT

END

REGISTRATION

1. IN CASE OF TIRE PRESSURE WARNING ECU REPLACEMENT

(a) Read ID stored in the old ECU using the intelligent tester.

2. IN CASE OF TIRE PRESSURE WARNING VALVE AND TRANSMITTER AND/OR TIRE PRESSURE WARNING ECU REPLACEMENT

(a) Read the ID written on the tire pressure monitor valve.

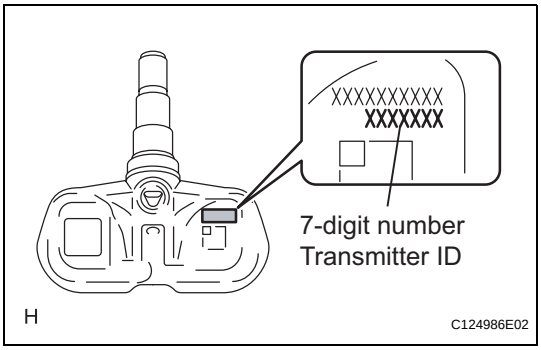

3. REGISTER TRANSMITTER ID

NOTICE:

It is necessary to register the transmitter ID in the tire pressure warning ECU when replacing the tire pressure warning valve and transmitter and/or tire pressure warning ECU.

(a) Prepare all of the transmitter ID data before starting registration.

HINT:

- Read the registered transmitter IDs that are stored in the ECU using the intelligent tester and make a note of them.
- If reading stored transmitter IDs is impossible due to malfunctions of components such as the tire pressure warning antenna and receiver, remove the tires from the wheels and check the IDs located on the tire pressure warning valves and transmitters (see page TW-60).
- When replacing the tire pressure warning valves and transmitters, make a note of the IDs written on the tire pressure warning valves and transmitters.

(b) Connect the intelligent tester (with CAN VIM) to the DLC3.

(c) Turn the ignition switch ON.

(d) *1: Read and write down the ID (ID1 to ID5) by using the DATA LIST.

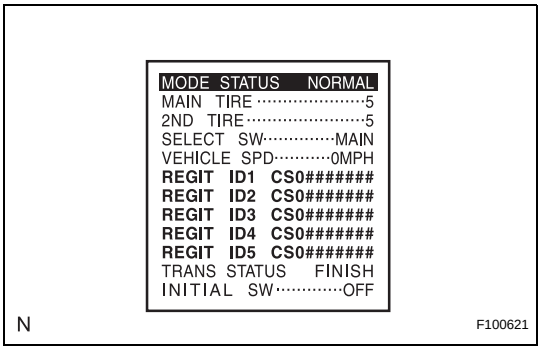

TW

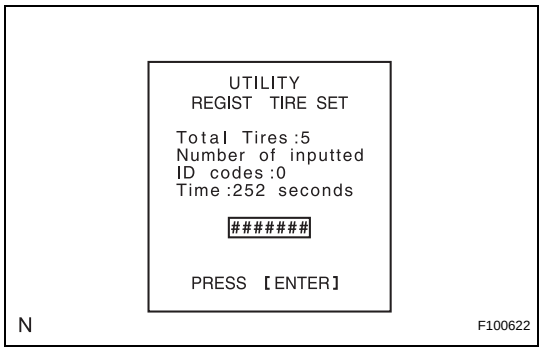

(e) *2: Select REGIST TIRE SET following the intelligent tester screen (UTILITY - REGIST TIRE SET).

(f) *3: Select the registration mode "MAIN".

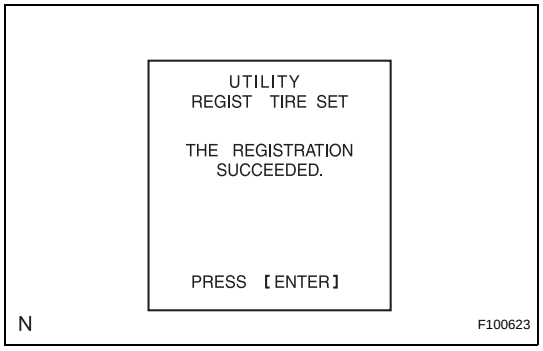

(g) Input the ID (ID1 to ID5) using the intelligent tester and transmit it to the tire pressure warning ECU.

(h) Set the ID transmission condition to "ID Registration is complete".

Registration Procedure

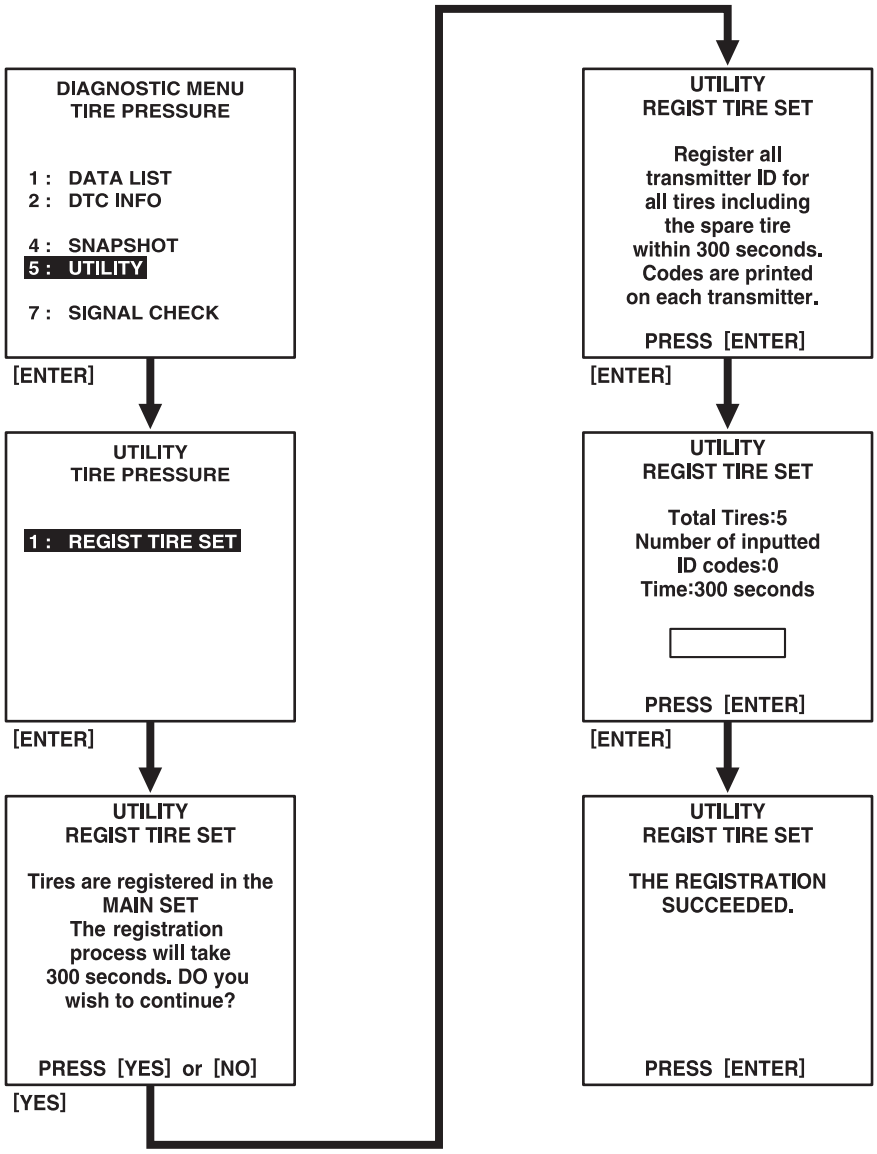

F101083E01

HINT:

- The previously registered IDs will be deleted from the memory when the registration is completed.
- If the operations of *1 to *3 are not completed within 5 minutes, the mode will return to normal operation mode.

4. CONFIRMATION OF TRANSMITTER ID REGISTRATION

(a) Set the tire pressure of all wheels (including the spare tire) to the specified value.

Standard pressure:

220 kPa (2.2 kgf/cm^2, 32 psi)

(b) Connect the intelligent tester (with CAN VIM) to the DLC3.
(c) Turn the ignition switch ON.
(d) Select "SIGNAL CHECK" mode on the intelligent tester (with CAN VIM) (see page TW-12).
(e) Confirm that the transmitter IDs and tire pressure data for all the tires are displayed on the intelligent tester screen.

NOTICE:

- **It may take up to 1 minute to update the tire pressure data.**
- **If the IDs have not been registered, DTC C2171/71 is set in the tire pressure warning ECU after approximately 60 minutes.**

TEST MODE PROCEDURE

1. TEST MODE CHECK

HINT:

- When entering the TEST MODE, the tire pressure warning ECU sets all the test DTCs first. After completing the test mode for each inspection item, the DTCs that are determined normal by the tire pressure warning ECU will be erased.
  The DTCs for other inspection items may not be erased when only a certain signal is inspected.
- When the test mode returns back to the normal mode, all the test DTCs will be erased.

(a) Make sure that the ignition switch is OFF.

(b) Connect the intelligent tester (with CAN VIM) to the DLC3.

(c) Turn the ignition switch ON.

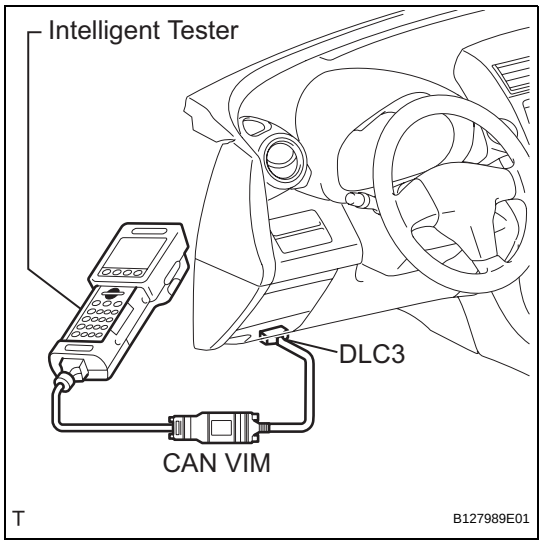

(d) Select TEST MODE on the intelligent tester.

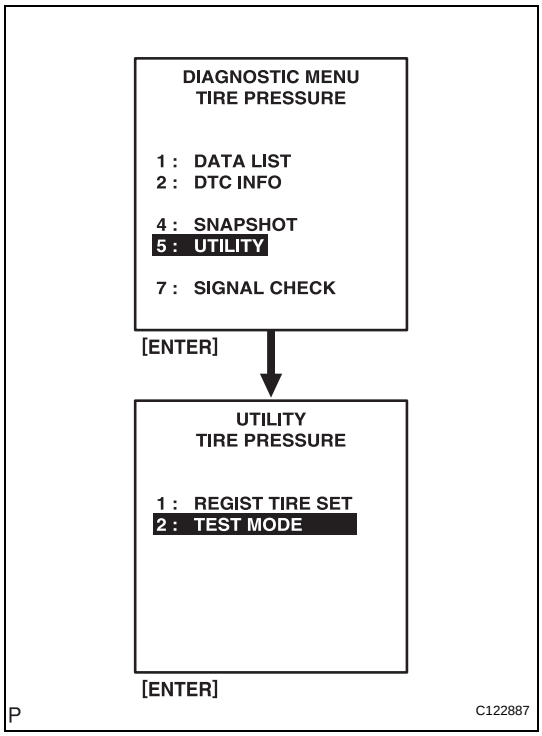

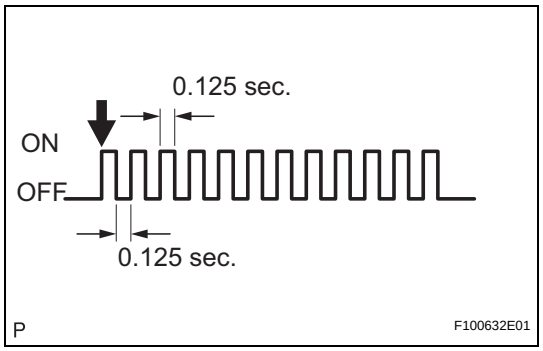

(e) Confirm that the tire pressure warning light in the combination meter blinks at 0.125 second intervals.

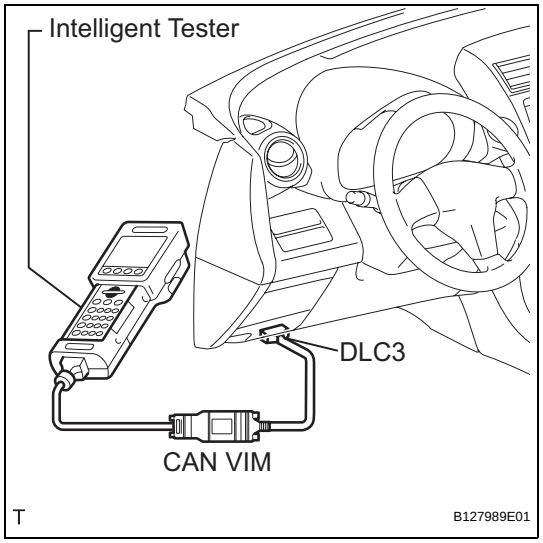

2. PERFORM SIGNAL CHECK

HINT:

- When entering the signal check, the tire pressure warning ECU sets all the signal check DTCs first. After completing the signal check for each inspection item, the DTCs that are determined normal by the tire pressure warning ECU will be erased. The DTCs for other inspection items may not be erased when only a certain signal is inspected.
- When the signal check returns back to normal mode, all the signal check DTCs will be erased.

(a) Make sure that the ignition switch is OFF.
(b) Connect the intelligent tester (with CAN VIM) to the DLC3.
(c) Turn the ignition switch ON.
(d) Select SIGNAL CHECK on the intelligent tester.
(e) Drive the vehicle at 12 mph (20 km/h) or more for 10 seconds or more .

(f) Loosen the valve core and rapidly reduce the pressure (above 40 kPa / 30 seconds or more).

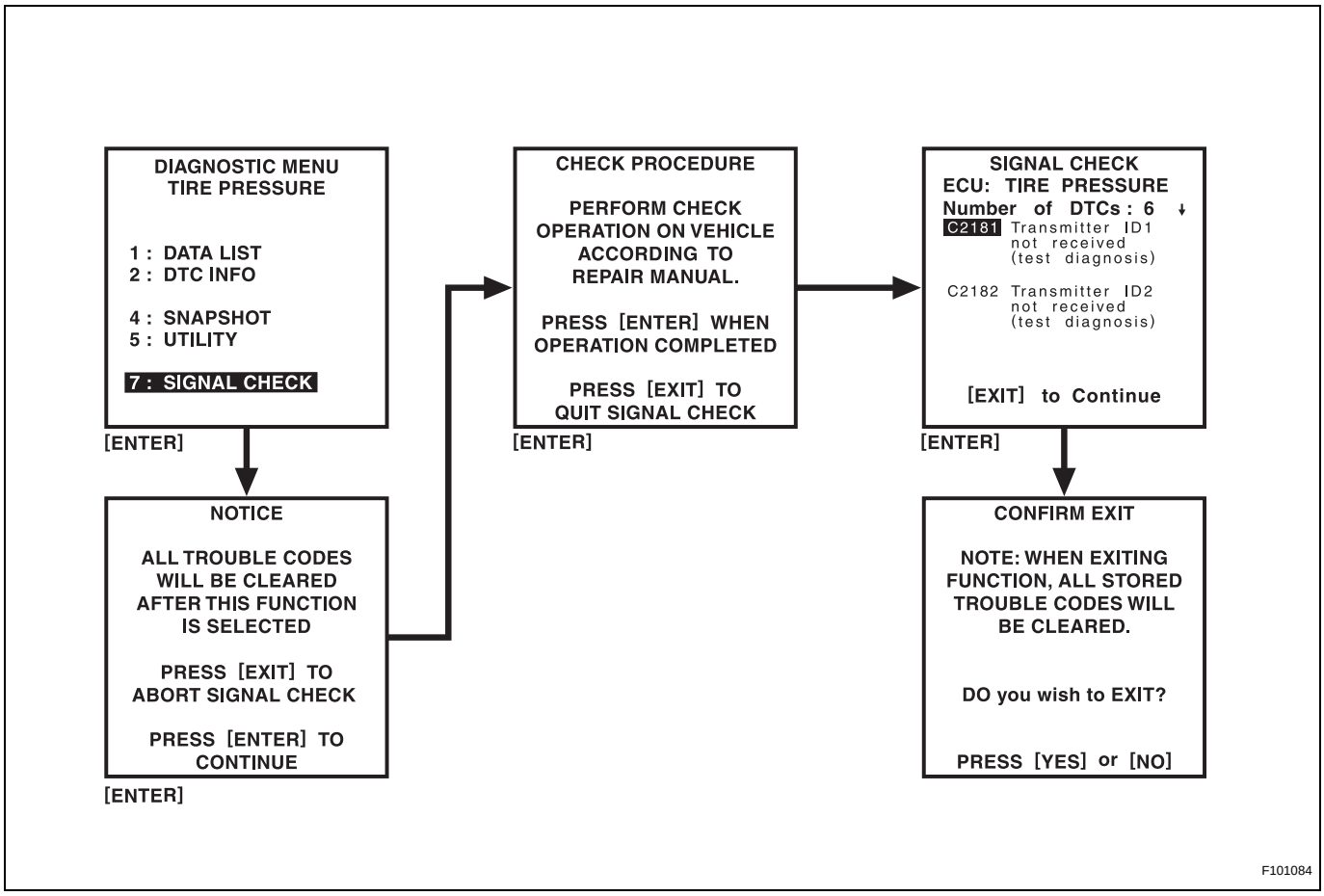

HINT:
The transmitter ID can be transmitted by rapidly reducing the tire pressure.

(g) Result

HINT:
After the signal check is completed, check for a DTC and signal check DTC to confirm the system status.

Condition	Procedure
SIGNAL CHECK DTC is output	Repair faulty part and enter SIGNAL CHECK again
SIGNAL CHECK DTCs are cleared	No problem

(h) End of SIGNAL CHECK

After completing test mode (SIGNAL CHECK), turn the ignition switch OFF and disconnect the tester.

DTC of SIGNAL CHECK (TEST DIAGNOSIS) function:

If a malfunction code is displayed during the test mode DTC check, check the circuit listed for that code. For details of each code, refer to the "see page" of the "DTC No." in the chart.

DTC No.	Detection Item	Trouble Area	See page
C2181/81	Transmitter ID1 not received	• Tire pressure warning valve and transmitter • Tire pressure warning antenna and receiver • Tire pressure warning ECU • Wire harness	TW-28
C2182/82	Transmitter ID2 not received	• Tire pressure warning valve and transmitter • Tire pressure warning antenna and receiver • Tire pressure warning ECU • Wire harness	TW-28
C2183/83	Transmitter ID3 not received	• Tire pressure warning valve and transmitter • Tire pressure warning antenna and receiver • Tire pressure warning ECU • Wire harness	TW-28
C2184/84	Transmitter ID4 not received	• Tire pressure warning valve and transmitter • Tire pressure warning antenna and receiver • Tire pressure warning ECU • Wire harness	TW-28
C2185/85	Transmitter ID5 not received	• Tire pressure warning valve and transmitter • Tire pressure warning antenna and receiver • Tire pressure warning ECU • Wire harness	TW-28
C2191/91	Vehicle speed signal error	• Vehicle speed sensor • Tire pressure warning ECU • Combination meter • Wire harness	TW-44

PROBLEM SYMPTOMS TABLE

HINT:

- Use the table below to help determine the cause of the problem symptom. The potential causes of the symptoms are listed in order of probability in the "Suspected area" column of the table. Check each symptom by checking the suspected areas in the order they are listed. Replace parts as necessary.
- Inspect the fuses and relays related to this system before inspecting the suspected areas below.

Tire pressure warning system

Symptom	Suspected area	See page
Tire pressure warning system does not operate	1. ECU power source circuit	TW-49
	2. TC and CG terminal circuit	TW-51
	3. Tire pressure warning valve and transmitter	TW-60
	4. Combination meter	ME-52
	5. Tire pressure warning antenna and receiver	TW-53
	6. Tire pressure warning ECU	TW-64
DTC check cannot be completed	1. ECU Power source circuit	TW-49
	2. TC and CG terminal circuit	TW-51
	3. Tire pressure warning ECU	TW-64
Tire pressure warning light malfunctions (Does not turn on)	1. ECU Power source circuit	TW-49
	2. Tire pressure warning light circuit	TW-47
	3. Combination meter	ME-52
	4. Tire pressure warning ECU	TW-64
Tire pressure warning light malfunctions (Remains on)	1. Tire pressure check	TW-2
	2. Tire pressure warning ECU connector poorly connected	-
	3. Tire pressure warning light circuit	TW-47
	4. Combination meter	ME-52
	5. Tire pressure warning ECU	TW-64
Tire pressure warning light malfunctions (Blinking)	1. Check DTC	TW-20
	2. TC and CG terminal circuit	TW-51
	3. Test mode (SIGNAL CHECK)	TW-12
	4. Tire pressure warning ECU	TW-64

TERMINALS OF ECU

1. CHECK TIRE PRESSURE WARNING ECU

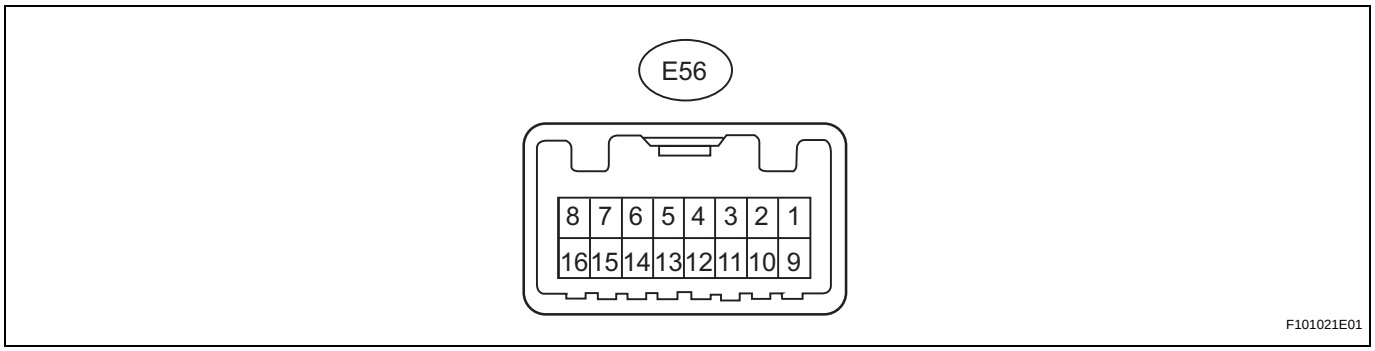

(a) Disconnect the E56 ECU connector.
(b) Measure the voltage and resistance of the wire harness side connector.

Symbols (Terminal No.)	Wiring Color	Terminal Description	Condition	Specified Condition
IG (E56-2) - GND (E56-11)	L - W-B	IG power source	Ignition switch ON	10 to 14 V
			Ignition switch OFF	Below 1 V
GND (E56-11) - Body ground	W-B - Body ground	Ground	Always	Below 1 Ω

If the result is not as specified, there may be a malfunction on the wire harness side.

(c) Reconnect the E56 ECU connector.
(d) Measure the voltage of the connector.

Symbols (Terminal No.)	Wiring Color	Terminal Description	Condition	Specified Condition
SPD (E56-3) - GND (E56-11)	V - W-B	Vehicle speed signal	Vehicle is running	Pulse generation
SIL (E56-4) - GND (E56-11)	W - W-B	Diagnosis tester communication line	Ignition switch ON, when communication is not performed with a tester	8 to 15 V
IND (E56-6) - GND (E56-11)	P - W-B	Tire pressure warning light output signal	Ignition switch ON, tire pressure warning light ON	Below 1 V
RDA (E56-7) - GND (E56-11)	G - W-B	Tire pressure monitor receiver signal	Ignition switch ON, tire pressure monitor receiver is not connected	9 to 16 V
RFSV (E56-8) - GND (E56-11)	R - W-B	Tire pressure monitor receiver power source	Ignition switch ON	4.5 to 5.5 V
TC (E56-12) - GND (E56-11)	G - W-B	TC terminal	When terminal TC is not connected	8 to 15 V
GND2 (E56-16) - Body ground	Y - Body ground	Tire pressure monitor receiver ground	Always	Below 1 V

If the result is not as specified, the ECU may have a malfunction.

TW

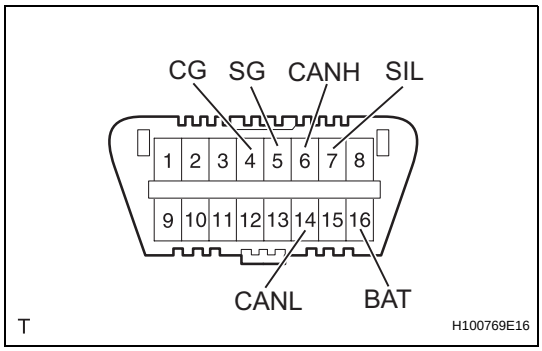

DIAGNOSIS SYSTEM

1. CHECK DLC3

The ECM uses ISO 15765-4 for communication. The terminal arrangement of the DLC3 complies with SAE J1962 and matches the ISO 15765-4 format.

Symbols (Terminals No.)	Terminal Description	Condition	Specified Condition
SIL (7) - SG (5)	Bus '+' line	During transmission	Pulse generation
CG (4) - Body ground	Chassis ground	Always	Below 1 Ω
SG (5) - Body ground	Signal ground	Always	Below 1 Ω
BAT (16) - Body ground	Battery ground	Always	11 to 14 V
CANH (6) - CANL (14)	HIGH-level CAN bus line	Ignition switch OFF	54 to 69 Ω
CANH (6) - Body ground	HIGH-level CAN bus line	Ignition switch OFF	1 MΩ or higher
CANH (6) - CG (4)	HIGH-level CAN bus line	Ignition switch OFF	1 MΩ or higher
CANL (14) - Body ground	LOW-level CAN bus line	Ignition switch OFF	1 MΩ or higher
CANH (6) - CG (4)	LOW-level CAN bus line	Ignition switch OFF	1 MΩ or higher

TW

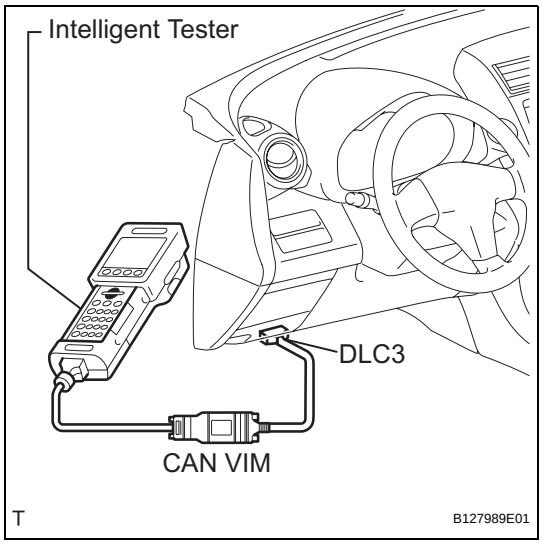

If the result is not as specified, the DLC3 may have a malfunction. Repair or replace the harness and connector.

HINT:

Connect the cable of the intelligent tester (with CAN VIM) to the DLC3, turn the ignition switch ON and attempt to use the tester. If the display indicates that a communication error has occurred, there is a problem wither with the vehicle or with the tester.

- If communication is normal when the tester is connected to another vehicle, inspect the DLC3 on the original vehicle.
- If communication is still not possible when the tool is connected to another vehicle, the problem is probably in the tester itself. So consult the Service Department listed in the tester's instruction manual.

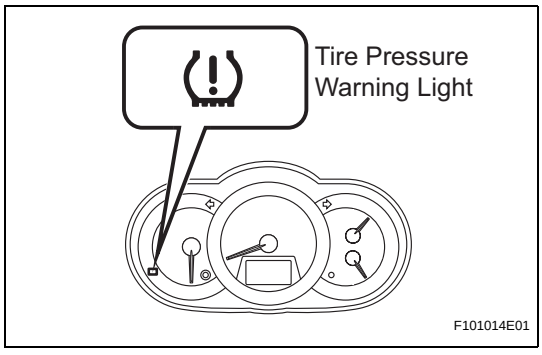

2. DIAGNOSIS SYSTEM

(a) Warning light

(1) The tire pressure warning light blinks when there is a malfunction in the tire pressure warning system.

NOTICE:

When the malfunction has been corrected, the tire pressure warning light does not turn on.

(b) DTCs (Normal mode)

(1) DTCs are memorized in the tire pressure warning ECU. These DTCs can be read by checking the blinks of the tire pressure warning light or by using the intelligent tester (see page TW-20).

(c) Test mode
(1) By switching from normal mode to test mode (input signal check), you can inspect the tire pressure monitor receiver, each tire pressure warning valve and transmitter and vehicle speed sensor (see page TW-12).

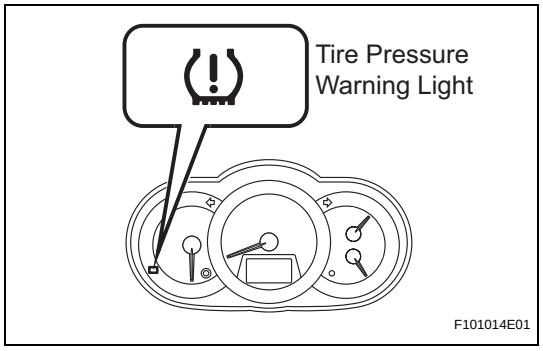

3. CHECK TIRE PRESSURE WARNING LIGHT

(a) Turn the ignition switch ON.
(b) Check that the tire pressure warning light turns on for 3 seconds.
If the warning check result is not normal, proceed to the troubleshooting for the tire pressure warning light circuit.

Trouble Area	See page
Tire pressure warning light circuit	TW-47

4. TIRE PRESSURE WARNING LIGHT CHART

HINT:
The table below indicates the state of the tire pressure warning light after the ignition switch is turned ON.

TW

	Immediately after turning the ignition switch ON	Always					
	Warning light output pattern						
	Turns on for 3 seconds	Turns off	Turns on	Flashes for 1 minute and then illuminates (*1)	Blinks (*2)	Blinks (*3)	Output DTC
Normal	○	○					
Low tire pressure	○		○				
System fail	○			○			
Test mode	○				○		
ECU connector poorly connected	○			○			
TC ground (DTC is output)	○						○
TC ground (DTC is not output)	○		○				

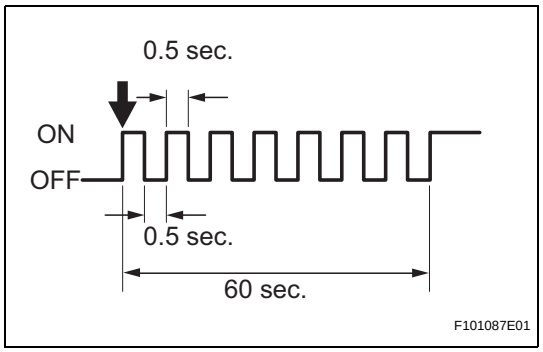

*1: Turns on and turns off repeatedly at 0.5 second intervals.

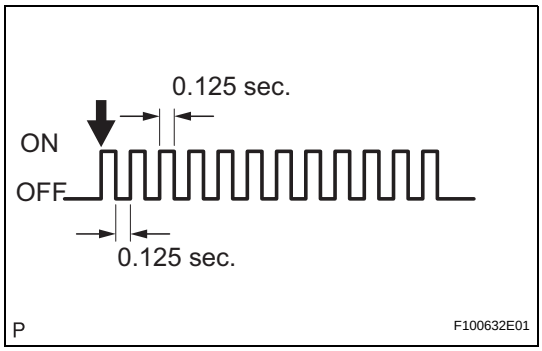

*2: Turns on and turns off repeatedly at 0.125 second intervals.

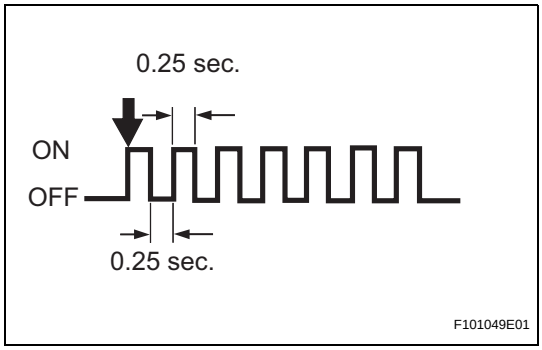

*3: Turns on and turns off repeatedly at 0.25 second intervals.

TW

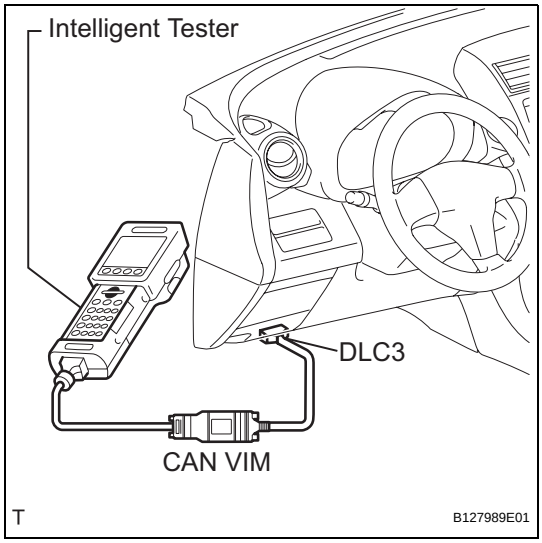

DTC CHECK / CLEAR

1. DTC CHECK (USING INTELLIGENT TESTER)

(a) Connect the intelligent tester (with CAN VIM) to the DLC3.

(b) Turn the ignition switch ON.

(c) Read the DTCs following the prompts on the tester screen.

HINT:

Refer to the intelligent tester operator's manual for further details.

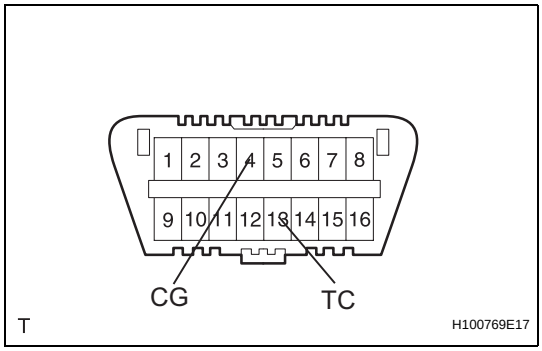

2. CHECK DTC (USING SST CHECK WIRE)

(a) Using SST, connect terminals 13 (TC) and 4 (CG) of the DLC3.

SST 09843-18040

(b) Turn the ignition switch ON.

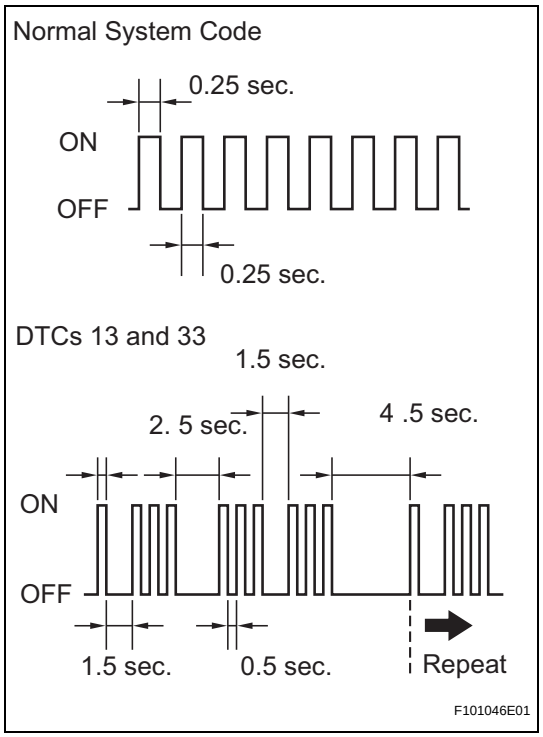

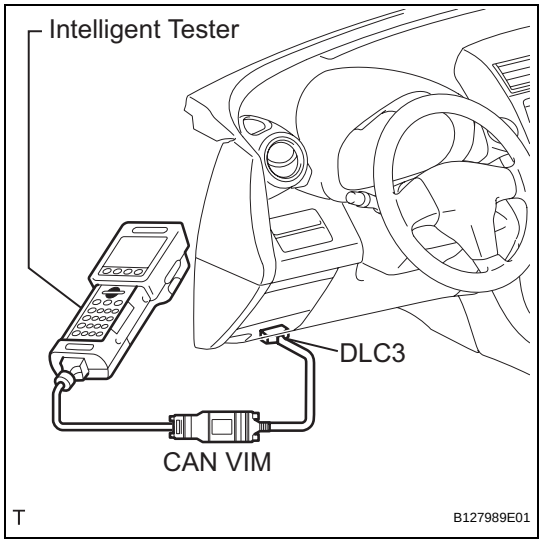

(c) Read and record any DTCs from the tire pressure warning light on the combination meter. Refer to the illustration for examples of a normal system code and DTCs 13 and 33.
HINT:
- If the tire pressure warning light does not blink to indicate any DTCs or the normal system code, inspect the tire pressure warning light circuit or 13 (TC) and 4 (CG) terminal circuits.

Trouble Area	See procedure
Tire pressure warning light circuit	TW-47
TC and CG terminal circuit	TW-51

- If 2 or more malfunctions are indicated at the same time, the lowest numbered DTC is displayed first.

(d) Refer to the Diagnostic Trouble Code Chart for DTC information (see page TW-22).
(e) After completing the check, turn the ignition switch OFF and remove SST from the DLC3.

3. CLEAR DTC (USING INTELLIGENT TESTER)
HINT:
After repairing the malfunctions, clear the DTCs.

(a) Connect the intelligent tester (with CAN VIM) to the DLC3.
(b) Turn the ignition switch ON.
(c) Erase the DTCs following the prompts on the tester screen.
HINT:
Refer to the intelligent tester operator's manual for further details.

TW

DATA LIST / ACTIVE TEST

1. READ DATA LIST

HINT:

Using the intelligent tester's DATA LIST allows switch, actuator and other item values to be read without removing any parts. Reading the Data List early in troubleshooting is one way to save time.

(a) Connect the intelligent tester (with CAN VIM) to the DLC3.

(b) Turn the ignition switch ON.

(c) Read the DATA LIST according to the display on the tester.

Tire pressure warning ECU

Item	Measurement item/ Range (Display)	Normal Condition	Diagnostic Note
MODE STATUS	Tire pressure warning system mode / NORMAL or REG 2nd or REG M or TEST	NORMAL: Normal mode TEST: Test mode REG 2nd: 2nd registration REG M: Main registration TEST: Test mode	-
MAIN TIRE	Number of main tire IDs to be registered / 0 or 1 or 2 or 3 or 4 or 5	0 to 5 should be displayed	-
VEHICLE SPEED	Vehicle speed reading / min.: 0 km/h (0 mph), max.: 255 km/h (158 mph)	Actual vehicle speed	Speed indicated on the combination meter
REGIT ID1 CODE	Registered ID1 code / min.: 0, max.: FFFFFFF	The ID No. registered in transmitter ID1 is displayed	-
REGIT ID2 CODE	Registered ID2 code / min.: 0, max.: FFFFFFF	The ID No. registered in transmitter ID2 is displayed	-
REGIT ID3 CODE	Registered ID3 code / min.: 0, max.: FFFFFFF	The ID No. registered in transmitter ID3 is displayed	-
REGIT ID4 CODE	Registered ID4 code / min.: 0, max.: FFFFFFF	The ID No. registered in transmitter ID4 is displayed	-
REGIT ID5 CODE	Registered ID5 code / min.: 0, max.: FFFFFFF	The ID No. registered in transmitter ID5 is displayed	-
TRANS STATUS	ID code transmission status / FINISH or NOW	FINISH or NOW	-
TIREPRESS1	ID1 tire pressure / min.: 0 kPa (0 kgf/cm^2, 0 psi) max.: 637.5 kPa (6.48 kgf/cm^2, 92.2 psi)	Actual tire pressure	-
TIREPRESS2	ID2 tire pressure / min.: 0 kPa (0 kgf/cm^2, 0 psi) max.: 637.5 kPa (6.48 kgf/cm^2, 92.2 psi)	Actual tire pressure	-
TIREPRESS3	ID3 tire pressure / min.: 0 kPa (0 kgf/cm^2, 0 psi) max.: 637.5 kPa (6.48 kgf/cm^2, 92.2 psi)	Actual tire pressure	-
TIREPRESS4	ID4 tire pressure / min.: 0 kPa (0 kgf/cm^2, 0 psi) max.: 637.5 kPa (6.48 kgf/cm^2, 92.2 psi)	Actual tire pressure	-
TIREPRESS5	ID5 tire pressure / min.: 0 kPa (0 kgf/cm^2, 0 psi) max.: 637.5 kPa (6.48 kgf/cm^2, 92.2 psi)	Actual tire pressure	-

Item	Measurement item/ Range (Display)	Normal Condition	Diagnostic Note
TIRE TEMP1	ID1 temperature in tire / min.: -40°C (-40°F) max.: 215°C (419°F)	Actual tire temperature	-
TIRE TEMP2	ID2 temperature in tire / min.: -40°C (-40°F) max.: 215°C (419°F)	Actual tire temperature	-
TIRE TEMP3	ID3 temperature in tire / min.: -40°C (-40°F) max.: 215°C (419°F)	Actual tire temperature	-
TIRE TEMP4	ID4 temperature in tire / min.: -40°C (-40°F) max.: 215°C (419°F)	Actual tire temperature	-
TIRE TEMP5	ID5 temperature in tire / min.: -40°C (-40°F) max.: 215°C (419°F)	Actual tire temperature	-
BATT VOLT1	ID1 battery voltage / OVER or LESS	OVER	-
BATT VOLT2	ID2 battery voltage / OVER or LESS	OVER	-
BATT VOLT3	ID3 battery voltage / OVER or LESS	OVER	-
BATT VOLT4	ID4 battery voltage / OVER or LESS	OVER	-
BATT VOLT5	ID5 battery voltage / OVER or LESS	OVER	-
# CODES	Number of DTC recorded/ min.: 0 max.: 255	Min.: 0 Max.: -	-

DIAGNOSTIC TROUBLE CODE CHART

HINT:
If a trouble code is displayed during the DTC check, check the circuit listed for that code in the table below. Then proceed to the appropriate page.

Tire pressure warning system

DTC No.	Detection Item	Trouble Area	See page
C2111/11	Transmitter ID1 Operation Stop	- Tire pressure warning valve and transmitter - Tire pressure warning ECU	TW-25
C2112/12	Transmitter ID2 Operation Stop	- Tire pressure warning valve and transmitter - Tire pressure warning ECU	TW-25
C2113/13	Transmitter ID3 Operation Stop	- Tire pressure warning valve and transmitter - Tire pressure warning ECU	TW-25
C2114/14	Transmitter ID4 Operation Stop	- Tire pressure warning valve and transmitter - Tire pressure warning ECU	TW-25
C2115/15	Transmitter ID5 Operation Stop	- Tire pressure warning valve and transmitter - Tire pressure warning ECU	TW-25
C2121/21	No Signal from Transmitter ID1 in Main Mode	- Tire pressure warning valve and transmitter - Tire pressure antenna and receiver - Tire pressure warning ECU - Wire harness	TW-28
C2122/22	No Signal from Transmitter ID2 in Main Mode	- Tire pressure warning valve and transmitter - Tire pressure antenna and receiver - Tire pressure warning ECU - Wire harness	TW-28
C2123/23	No Signal from Transmitter ID3 in Main Mode	- Tire pressure warning valve and transmitter - Tire pressure antenna and receiver - Tire pressure warning ECU - Wire harness	TW-28
C2124/24	No Signal from Transmitter ID4 in Main Mode	- Tire pressure warning valve and transmitter - Tire pressure antenna and receiver - Tire pressure warning ECU - Wire harness	TW-28
C2125/25	No Signal from Transmitter ID5 in Main Mode	- Tire pressure warning valve and transmitter - Tire pressure antenna and receiver - Tire pressure warning ECU - Wire harness	TW-28
C2141/41	Transmitter ID1 Error	- Tire pressure warning valve and transmitter	TW-34
C2142/42	Transmitter ID2 Error	- Tire pressure warning valve and transmitter	TW-34
C2143/43	Transmitter ID3 Error	- Tire pressure warning valve and transmitter	TW-34
C2144/44	Transmitter ID4 Error	- Tire pressure warning valve and transmitter	TW-34
C2145/45	Transmitter ID5 Error	- Tire pressure warning valve and transmitter	TW-34

DTC No.	Detection Item	Trouble Area	See page
C2165/65	Abnormal Temperature Inside ID1 Tire	- Tire - Tire pressure warning valve and transmitter	TW-36
C2166/66	Abnormal Temperature Inside ID2 Tire	- Tire - Tire pressure warning valve and transmitter	TW-36
C2167/67	Abnormal Temperature Inside ID3 Tire	- Tire - Tire pressure warning valve and transmitter	TW-36
C2168/68	Abnormal Temperature Inside ID4 Tire	- Tire - Tire pressure warning valve and transmitter	TW-36
C2169/69	Abnormal Temperature Inside ID5 Tire	- Tire - Tire pressure warning valve and transmitter	TW-36
C2171/71	Transmitter ID not Registered in Main Mode	- Tire pressure warning ECU	TW-39
C2176/76	Receiver Error	- Tire pressure warning and receiver - Tire pressure warning ECU - Wire harness	TW-41
C2181/81	Transmitter ID1 not Received (Test Mode DTC)	- Tire pressure warning valve and transmitter - Tire pressure antenna and receiver - Tire pressure warning ECU - Wire harness	TW-28
C2182/82	Transmitter ID2 not Received (Test Mode DTC)	- Tire pressure warning valve and transmitter - Tire pressure antenna and receiver - Tire pressure warning ECU - Wire harness	TW-28
C2183/83	Transmitter ID3 not Received (Test Mode DTC)	- Tire pressure warning valve and transmitter - Tire pressure antenna and receiver - Tire pressure warning ECU - Wire harness	TW-28
C2184/84	Transmitter ID4 not Received (Test Mode DTC)	- Tire pressure warning valve and transmitter - Tire pressure antenna and receiver - Tire pressure warning ECU - Wire harness	TW-28
C2185/85	Transmitter ID5 not Received (Test Mode DTC)	- Tire pressure warning valve and transmitter - Tire pressure antenna and receiver - Tire pressure warning ECU - Wire harness	TW-28
C2191/91	Vehicle Speed Signal Error (Test Mode DTC)	- Vehicle speed sensor - Tire pressure warning ECU - Combination meter - Wire harness	TW-44

DTC	C2111/11	Transmitter ID1 Operation Stop

DTC	C2112/12	Transmitter ID2 Operation Stop

DTC	C2113/13	Transmitter ID3 Operation Stop

DTC	C2114/14	Transmitter ID4 Operation Stop

DTC	C2115/15	Transmitter ID5 Operation Stop

DESCRIPTION

The tire pressure warning valve and transmitter that is installed in the tires and wheels measures the air pressure of the tires. The measured values are transmitted to the tire pressure warning receiver on the body as radio waves and then sent to the tire pressure warning ECU. The ECU compares the measured air pressure values with the air pressure threshold. When the measured air pressure values are less than this threshold, the warning light in the combination meter turns on.

The tire pressure warning ECU stores a DTC when the tire pressure monitor valve stops transmitting signals. At this time, forcibly transmit the signals by releasing the tire pressure rapidly. The stored DTC is cleared when the signal transmission is resumed.

DTC No	DTC Detection Condition	Trouble Area
C2111/11 C2112/12 C2113/13 C2114/14 C2115/15	Tire pressure monitor valve stops transmitting signals	• Tire pressure warning valve and transmitter • Tire pressure warning ECU

HINT:

It is necessary to perform the procedure to identify the tire pressure monitor valve that is malfunctioning because it cannot be identified by the output DTC.

WIRING DIAGRAM

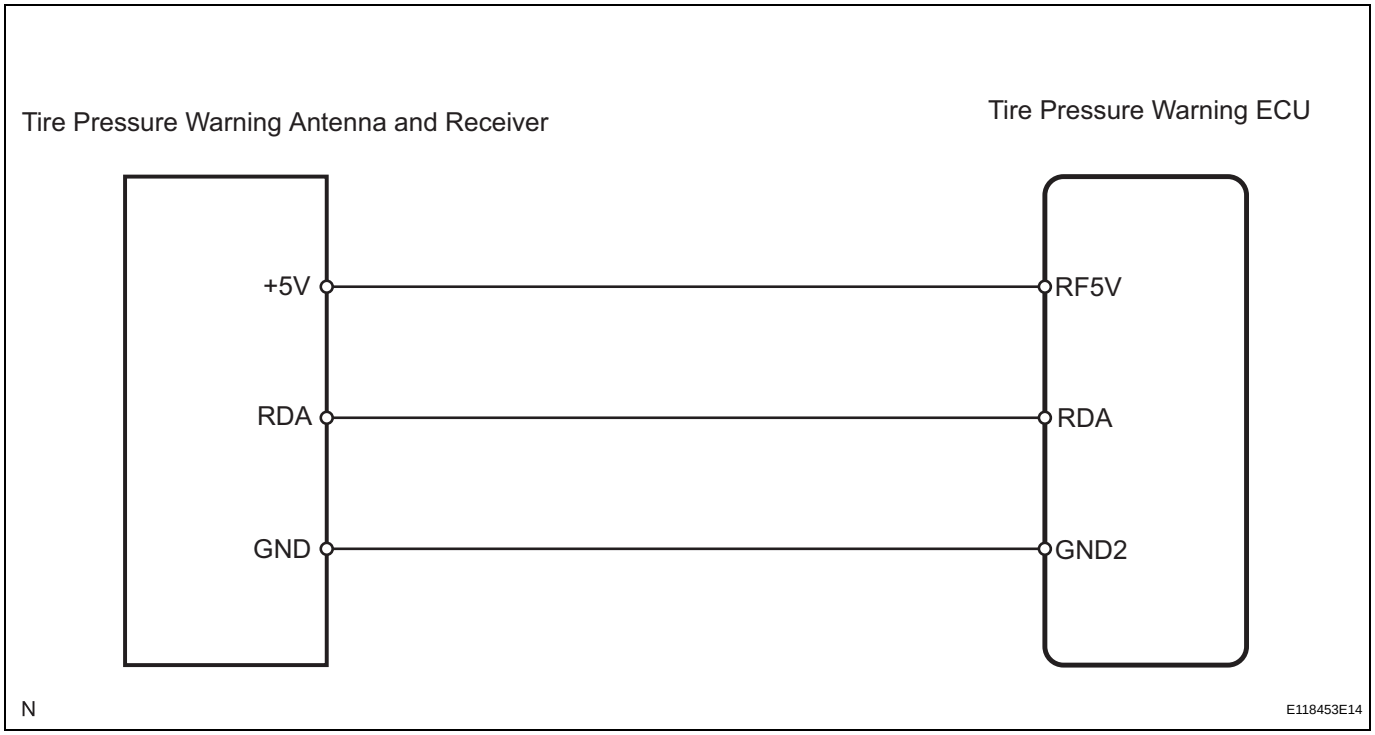

INSPECTION PROCEDURE

NOTICE:

It is necessary to register an ID code after replacing the tire pressure warning antenna and receiver and/or the tire pressure warning ECU (see page TW-9).

1	PERFORM FORCED TRANSMISSION OF TRANSMITTER ID OF ALL WHEELS

(a) Set the pressure of each tire to the specified value.
Standard pressure:
220 kPa (2.2 kgf/cm^2, 32 psi)
(b) Connect the intelligent tester (with CAN VIM) to the DLC3.
(c) Turn the ignition switch ON.
(d) Select TIREPRESS by following the prompts displayed on the intelligent tester.

Tire pressure warning ECU

Item	Measurement item / Range (Display)	Normal Condition	Diagnostic Note
TIREPRESS1	ID1 tire pressure / min.: 0 kPa (0 kgf/cm^2, 0 psi), max.: 637.5 kPa (6.48 kgf/cm^2, 92.2 psi)	Actual tire pressure	-
TIREPRESS2	ID2 tire pressure / min.: 0 kPa (0 kgf/cm^2, 0 psi), max.: 637.5 kPa (6.48 kgf/cm^2, 92.2 psi)	Actual tire pressure	-
TIREPRESS3	ID3 tire pressure / min.: 0 kPa (0 kgf/cm^2, 0 psi), max.: 637.5 kPa (6.48 kgf/cm^2, 92.2 psi)	Actual tire pressure	-

Item	Measurement item / Range (Display)	Normal Condition	Diagnostic Note
TIREPRESS4	ID4 tire pressure / min.: 0 kPa (0 kgf/cm^2, 0 psi), max.: 637.5 kPa (6.48 kgf/cm^2, 92.2 psi)	Actual tire pressure	-
TIREPRESS5	ID5 tire pressure / min.: 0 kPa (0 kgf/cm^2, 0 psi), max.: 637.5 kPa (6.48 kgf/cm^2, 92.2 psi)	Actual tire pressure	-

(e) Rapidly release the pressure from each wheel by approximately 40 kPa (0.4 kgf/cm^2, 5.8 psi) for 30 seconds or more.

(1) Check that each tire pressure data displayed on the intelligent tester screen changes.

OK:

The tire pressure data displayed on the intelligent tester screen changes with the value of the tire pressure.

NOTICE:

- **It may take up to 1 minute to display the updated tire pressure data.**
- **When the TIREPRESS data (IDs 1 to 5) changes, reset the tire pressure of the tires to the specified value, rotate the tires 90 to 270° and recheck.**

(2) After confirming that the tire pressure data displayed on the intelligent tester screen has changed, set the pressure of each tire to the specified value.

Standard pressure:

220 kPa (2.2 kgf/cm^2, 32 psi)

HINT:

If the tire pressure data displayed on the intelligent tester screen has not changed after rechecking, go to the troubleshooting procedures of DTCs C2121/21 to C2125/25 which indicate transmission or reception malfunctions (see page TW-28).

NG → **CHECK OTHER PROBLEM (MALFUNCTION IN TRANSMISSION OR RECEPTION FUNCTION)**

OK

END

DTC	C2121/21	No Signal from Transmitter ID1 in Main Mode
DTC	C2122/22	No Signal from Transmitter ID2 in Main Mode
DTC	C2123/23	No Signal from Transmitter ID3 in Main Mode
DTC	C2124/24	No Signal from Transmitter ID4 in Main Mode
DTC	C2125/25	No Signal from Transmitter ID5 in Main Mode
DTC	C2181/81	Transmitter ID1 not Received (Test Mode DTC)
DTC	C2182/82	Transmitter ID2 not Received (Test Mode DTC)
DTC	C2183/83	Transmitter ID3 not Received (Test Mode DTC)
DTC	C2184/84	Transmitter ID4 not Received (Test Mode DTC)
DTC	C2185/85	Transmitter ID5 not Received (Test Mode DTC)

DESCRIPTION

The tire pressure warning valve and transmitter constantly sends radio waves to the tire pressure warning ECU.

Under the following conditions, the tire pressure warning antenna and receiver is unable to receive the signals from the tire pressure warning valve and transmitter, and a DTC is output.

- Areas, facilities, or devices that use similar radio frequencies are located in the vicinity of the vehicle.
- Devices using similar radio frequencies are used in the vehicle.

DTCs C2121/21 to C2125/25 can only be deleted by the tester. DTCs C2181/81 to C2185/85 can be deleted when the transmitter sends a forced transmission signal or the test mode ends. DTCs C2181/81 to C2185/85 are output only in the test mode.

DTC No.	DTC Detection Condition	Trouble Area
C2121/21 C2122/22 C2123/23 C2124/24 C2125/25	These DTCs are detected when no signals are received for 51 minutes or more, after a vehicle speed of 5 mph (8 km/h) or more is detected and no signals are received for 12 minutes or more	• Tire pressure warning valve and transmitter • Tire pressure warning antenna and receiver • Tire pressure warning ECU • Wire harness
C2181/81 C2182/82 C2183/83 C2184/84 C2185/85	Malfunction in transmission / reception circuit	• Tire pressure warning valve and transmitter • Tire pressure warning antenna and receiver • Tire pressure warning ECU • Wire harness

HINT:

When no signals are received for 60 minutes or more, a DTC is output.

It is necessary to perform the procedure to identify the tire pressure warning valve and transmitter that is malfunctioning because it cannot be identified by the output DTC.

WIRING DIAGRAM

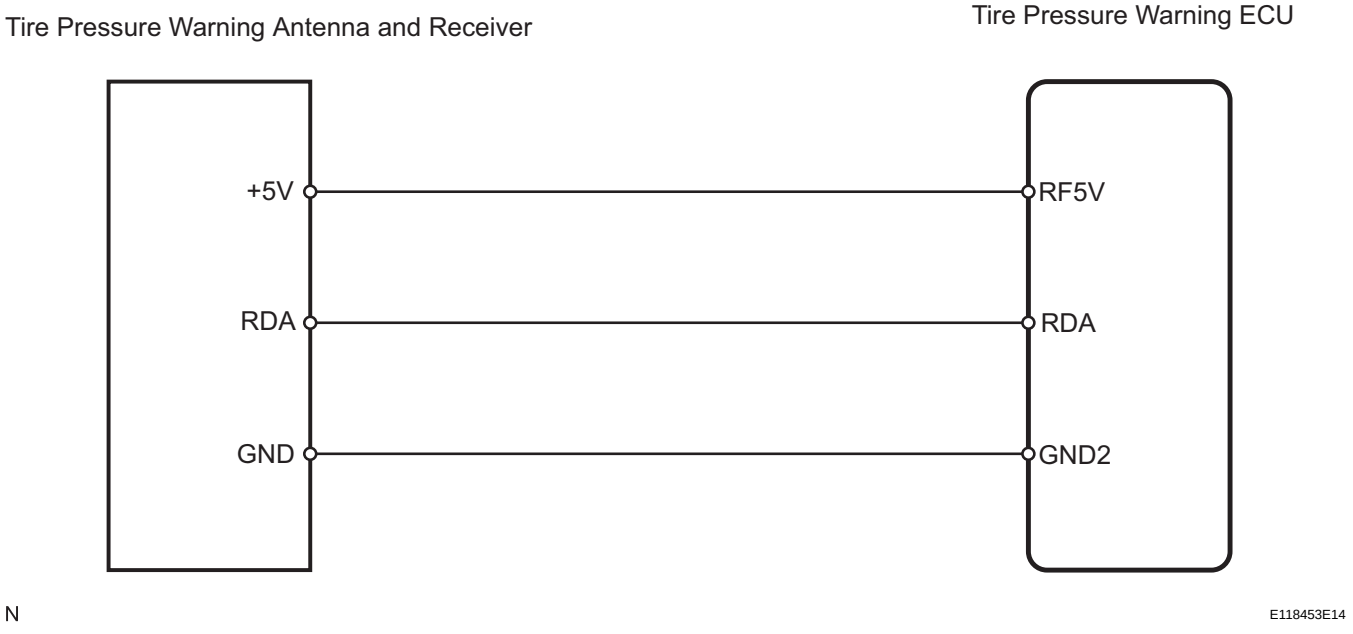

TW

INSPECTION PROCEDURE

NOTICE:

It is necessary to register an ID code after replacing the tire pressure warning valve and transmitter and/or the tire pressure warning ECU (see page TW-9).

1	IDENTIFY TRANSMITTER (CORRESPONDING TO DTC)

(a) Set the pressure of each tire to the specified value.
Standard pressure:
220 kPa (2.2 kgf/cm^2, 32 psi)
(b) Connect the intelligent tester (with CAN VIM) to the DLC3.
(c) Turn the ignition switch ON.
(d) Select TIREPRESS by following the prompts displayed on the intelligent tester.

Tire pressure warning ECU

Item	Measurement Item / Range (Display)	Normal Condition	Diagnostic Note
TIREPRESS1	ID1 tire pressure/ minimum: 0 kPa (0 kgf/cm^2, 0 psi) maximum: 637.5 kPa (6.5 kgf/cm^2, 92.5 psi)	Actual tire pressure	-
TIREPRESS2	ID2 tire pressure/ minimum: 0 kPa (0 kgf/cm^2, 0 psi) maximum: 637.5 kPa (6.5 kgf/cm^2, 92.5 psi)	Actual tire pressure	-
TIREPRESS3	ID3 tire pressure/ minimum: 0 kPa (0 kgf/cm^2, 0 psi) maximum: 637.5 kPa (6.5 kgf/cm^2, 92.5 psi)	Actual tire pressure	-

Item	Measurement Item / Range (Display)	Normal Condition	Diagnostic Note
TIREPRESS4	ID4 tire pressure/ minimum: 0 kPa (0 kgf/cm^2, 0 psi) maximum: 637.5 kPa (6.5 kgf/ cm^2, 92.5 psi)	Actual tire pressure	-
TIREPRESS5	ID5 tire pressure/ minimum: 0 kPa (0 kgf/cm^2, 0 psi) maximum: 637.5 kPa (6.5 kgf/ cm^2, 92.5 psi)	Actual tire pressure	-

(e) Rapidly release the tire pressure from any tire by 40 kPa (0.4 kgf/cm^2, 5.8 psi) for 30 seconds or more.
HINT:
- Identify the malfunctioning tire pressure warning valve and transmitter by rapidly releasing the tire pressures from each tire.
- Record which TIREPRESS data (ID1 to ID5) corresponds to each tire.

(f) Check the DATA LIST.

Result

Condition	Detection Condition
One of TIREPRESS data (ID1 to ID5) changed	Normal
No TIREPRESS data changed	Transmitter corresponding to DTC

NOTICE:
- **It may take up to 1 minute to display the updated tire pressure data.**
- **When the TIREPRESS data (IDs 1 to 5) changes, reset the tire pressure of the tires to the specified value, rotate the tires 90 to 270° and recheck.**
- **When the transmitter is normal, record the tire location and the transmitter ID.**

(g) When the TIREPRESS data (IDs 1 to 5) changes, repeat the same procedure on the rest of the tires (one by one) to identify which tire pressure warning valve and transmitter the DTC corresponds to.

(h) Set the pressure of each tire to the specified value.
Standard pressure:
220 kPa (2.2 kgf/cm^2, 32 psi)

(i) Check all transmitters of the tires.
Result

Result	Detection Condition
One or more of transmitters abnormal	A
All abnormal	B
All normal	C

B	Go to step 3
C	END

A

2	CHECK TIRE PRESSURE WARNING VALVE AND TRANSMITTER

(a) Select REGIT ID CODE by following the prompts displayed on the intelligent tester.

Tire pressure warning ECU

Item	Measurement Item / Range (Display)	Normal Condition	Diagnostic Note
REGIT ID1 CODE	Registered ID1 code/ minimum: 0 maximum: FFFFFFF	The ID No. registered in transmitter ID1 is display	-
REGIT ID2 CODE	Registered ID2 code/ minimum: 0 maximum: FFFFFFF	The ID No. registered in transmitter ID2 is display	-
REGIT ID3 CODE	Registered ID3 code/ minimum: 0 maximum: FFFFFFF	The ID No. registered in transmitter ID3 is display	-
REGIT ID4 CODE	Registered ID4 code/ minimum: 0 maximum: FFFFFFF	The ID No. registered in transmitter ID4 is display	-
REGIT ID5 CODE	Registered ID5 code/ minimum: 0 maximum: FFFFFFF	The ID No. registered in transmitter ID5 is display	-

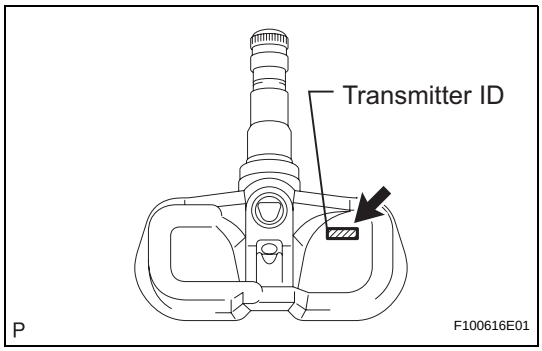

(b) Remove the tire pressure warning valve and transmitter and check its ID number (see page TW-61).

(c) Check whether the recorded transmitter ID and the actual transmitter ID match.

Result

Result	Detection Condition
Unmatched	A
Matched	B

B → REPLACE TIRE PRESSURE WARNING VALVE AND TRANSMITTER

A

PERFORM REGISTRATION (TRANSMITTER ID)

3 CHECK WIRE HARNESS (ECU - RECEIVER)

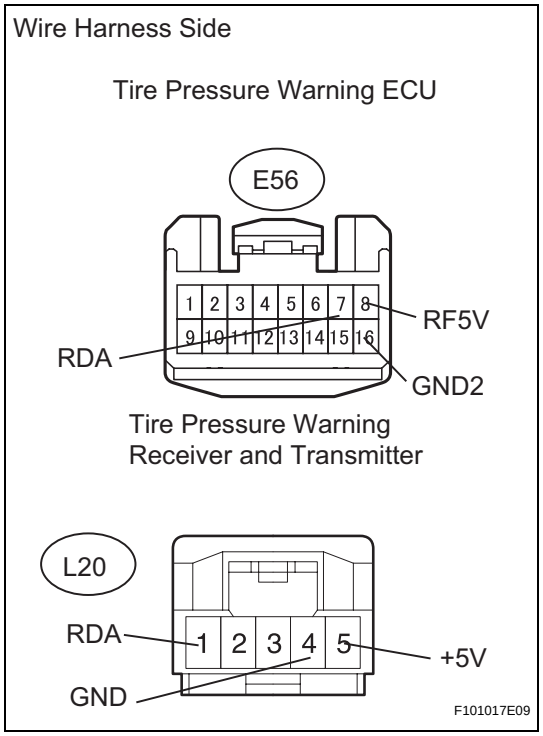

(a) Disconnect the E56 ECU connector.
(b) Disconnect the L20 receiver connector.
(c) Measure the resistance of the wire harness side connectors.

Standard resistance

Tester Connection	Specified Condition
E56-8 (RF5V) - L20-5 (+5V)	Below 1 Ω
E56-7 (RDA) - L20-1 (RDA)	
E56-16 (GND2) - L20-4 (GND)	

NG → **REPAIR OR REPLACE HARNESS AND CONNECTOR**

OK

4 READ VALUE OF INTELLIGENT TESTER (TIRE PRESSURE)

(a) Check the DATA LIST tire pressure valve.

Tire pressure warning ECU

Item	Measurement Item / Range (Display)	Normal Condition	Diagnostic Note
TIREPRESS1	ID1 tire pressure/ minimum: 0 kPa (0 kgf/cm^2, 0 psi) maximum: 637.5 kPa (6.5 kgf/cm^2, 92.5 psi)	Actual tire pressure	-
TIREPRESS2	ID2 tire pressure/ minimum: 0 kPa (0 kgf/cm^2, 0 psi) maximum: 637.5 kPa (6.5 kgf/cm^2, 92.5 psi)	Actual tire pressure	-
TIREPRESS3	ID3 tire pressure/ minimum: 0 kPa (0 kgf/cm^2, 0 psi) maximum: 637.5 kPa (6.5 kgf/cm^2, 92.5 psi)	Actual tire pressure	-
TIREPRESS4	ID4 tire pressure/ minimum: 0 kPa (0 kgf/cm^2, 0 psi) maximum: 637.5 kPa (6.5 kgf/cm^2, 92.5 psi)	Actual tire pressure	-
TIREPRESS5	ID5 tire pressure/ minimum: 0 kPa (0 kgf/cm^2, 0 psi) maximum: 637.5 kPa (6.5 kgf/cm^2, 92.5 psi)	Actual tire pressure	-

OK:
All tire pressure readings are equal to the actual tire pressure.
NOTICE:
It may take up to 1 minute to display the updated tire pressure data.

OK → **END**

NG

5 CHECK ID CODE (TIRE PRESSURE WARNING VALVE AND TRANSMITTER)

(a) Select REGIT ID CODE by following the prompts displayed on the intelligent tester.

Tire pressure warning ECU

Item	Measurement Item / Range (Display)	Normal Condition	Diagnostic Note
REGIT ID1 CODE	Registered ID1 code/ minimum: 0 maximum: FFFFFFF	The ID No. registered in transmitter ID1 is display	-
REGIT ID2 CODE	Registered ID2 code/ minimum: 0 maximum: FFFFFFF	The ID No. registered in transmitter ID2 is display	-
REGIT ID3 CODE	Registered ID3 code/ minimum: 0 maximum: FFFFFFF	The ID No. registered in transmitter ID3 is display	-
REGIT ID4 CODE	Registered ID4 code/ minimum: 0 maximum: FFFFFFF	The ID No. registered in transmitter ID4 is display	-
REGIT ID5 CODE	Registered ID5 code/ minimum: 0 maximum: FFFFFFF	The ID No. registered in transmitter ID5 is display	-

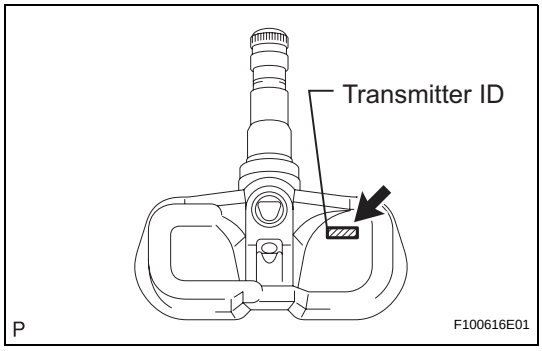

(b) Remove the tire pressure monitor valve and transmitter check its ID number (see page TW-61).
(c) Check whether the recorded transmitter ID and the actual transmitter ID match.
Result

Result	Detection Condition
Unmatched	A
Matched	B

B → **REPLACE TIRE PRESSUREWARNING RECEIVER AND TRANSMITTER**

A

PERFORM REGISTRATION (TRANSMITTER ID)

DTC	C2141/41	Transmitter ID1 Error

DTC	C2142/42	Transmitter ID2 Error

DTC	C2143/43	Transmitter ID3 Error

DTC	C2144/44	Transmitter ID4 Error

DTC	C2145/45	Transmitter ID5 Error

DESCRIPTION

DTC No.	DTC Detection Condition	Trouble Area
C2141/41 C2142/42 C2143/43 C2144/44 C2145/45	If an "ERROR" signal is received 3 times consecutively, tire pressure monitor valve will be judged as defective and this DTC will be output. This will happen in situations where inflation pressure is outside range 0 to 537.5 kPa (0 to 5.27 kgf/cm^2, 0 psi to 77.7 psi), temperature inside tire is outside specified range -40 to 215°C (-40 to 419 °F), or an error occurs in tire pressure monitor valve.	Tire pressure warning valve and transmitter

HINT:
It is necessary to perform the procedure to identify the tire pressure monitor valve that is malfunctioning because it cannot be identified by the output DTC.

INSPECTION PROCEDURE

NOTICE:
It is necessary to register an ID code after replacing the tire pressure warning valve and transmitter and/or the tire pressure warning ECU (see page TW-9).

1	IDENTIFY TRANSMITTER (CORRESPONDING TO DTC)

(a) Set the pressure of each tire to the specified value.
Standard pressure:
220 kPa (2.2 kgf /cm^2, 32 psi)
(b) Connect the intelligent tester (with CAN VIM) to the DLC3.
(c) Turn the ignition switch ON.
(d) Select TIREPRESS by following the prompts displayed on the intelligent tester.

Tire pressure warning ECU

Item	Measurement Item / Range (Display)	Normal Condition	Diagnostic Note
TIREPRESS1	ID1 tire pressure/ minimum: 0 kPa (0 kgf/cm^2, 0 psi) maximum: 637.5 kPa (6.5 kgf/ cm^2, 92.5 psi)	Actual tire pressure	-
TIREPRESS2	ID2 tire pressure/ minimum: 0 kPa (0 kgf/cm^2, 0 psi) maximum: 637.5 kPa (6.5 kgf/ cm^2, 92.5 psi)	Actual tire pressure	-

Item	Measurement Item / Range (Display)	Normal Condition	Diagnostic Note
TIREPRESS3	ID3 tire pressure/ minimum: 0 kPa (0 kgf/cm^2, 0 psi) maximum: 637.5 kPa (6.5 kgf/ cm^2, 92.5 psi)	Actual tire pressure	-
TIREPRESS4	ID4 tire pressure/ minimum: 0 kPa (0 kgf/cm^2, 0 psi) maximum: 637.5 kPa (6.5 kgf/ cm^2, 92.5 psi)	Actual tire pressure	-
TIREPRESS5	ID5 tire pressure/ minimum: 0 kPa (0 kgf/cm^2, 0 psi) maximum: 637.5 kPa (6.5 kgf/ cm^2, 92.5 psi)	Actual tire pressure	-

NOTICE:
It may take up to 1 minute to display the updated data.

(e) Rapidly release the tire pressure from any tire by 40 kPa (0.4 kgf/cm^2, 5.8 psi) for 30 seconds or more.
HINT:
- Identify the malfunctioning tire pressure warning valve and transmitter by rapidly releasing the tire pressures from each tire.
- Record which TIREPRESS data (ID1 to ID5) corresponds to each tire.

(f) Check the DATA LIST.

Result

Condition	Detection Condition
One of TIREPRESS data (ID1 to ID5) changed	Normal
None of TIREPRESS data changed	Transmitter corresponding to DTC

NOTICE:
- **When the TIREPRESS data (IDs 1 to 5) changes, reset the tire pressure of the tires to the specified value, rotate the tires 90 to 270° and recheck.**
- **When the transmitter is normal, record the tire location and the transmitter ID.**

(g) When one of the TIREPRESS data (IDs 1 to 5) changes, repeat the same procedure on the rest of the tires one by one to identify which tire pressure warning valve and transmitter the DTC corresponds to.

(h) When the TIREPRESS data (IDs 1 to 5) has been changed, identify the malfunctioning tire pressure warning valve and transmitter by using recorded ID numbers and the output DTC.

(i) Set the pressure of each tire to the specified value.
Standard pressure:
220 kPa (2.2 kgf /cm^2, 32 psi)

NEXT

REPLACE TIRE PRESSURE WARNING VALVE AND TRANSMITTER

DTC	C2165/65	Abnormal Temperature Inside ID1 Tire

DTC	C2166/66	Abnormal Temperature Inside ID2 Tire

DTC	C2167/67	Abnormal Temperature Inside ID3 Tire

DTC	C2168/68	Abnormal Temperature Inside ID4 Tire

DTC	C2169/69	Abnormal Temperature Inside ID5 Tire

DESCRIPTION

The tire pressure warning valve and transmitter measures tire internal temperature as well as tire pressure, and transmits the information to the tire pressure monitor receiver along with the transmitter ID. If the measured temperature is out of the specified range, the tire pressure warning ECU recognizes it as a malfunction, outputs DTCs, and blinks the tire pressure warning light.

DTC No.	DTC Detection Condition	Trouble Area
C2165/65 C2166/66 C2167/67 C2168/68 C2169/69	Tire internal temperature is outside -40 to 120°C (-40 to 246°F)	• Tire • Tire pressure warning valve and transmitter

TW

HINT:
It is necessary to perform the procedure to identify the tire pressure warning valve and transmitter that is malfunctioning because it cannot be identified by the output DTC.

INSPECTION PROCEDURE

NOTICE:
It is necessary to register an ID code after replacing the tire pressure warning valve and transmitter and/or the tire pressure warning ECU (see page TW-9).

1	IDENTIFY TRANSMITTER (CORRESPONDING TO DTC)

(a) Set the pressure of each tire to the specified value.
Standard pressure:
220 kPa (2.2 kgf/cm^2, 32 psi)
(b) Connect the intelligent tester (with CAN VIM) to the DLC3.
(c) Turn the ignition switch ON.
(d) Select TIREPRESS by following the prompts displayed on the intelligent tester.

Tire pressure warning ECU

Item	Measurement item / Range (Display)	Normal Condition	Diagnostic Note
TIREPRESS1	ID1 tire pressure / min.: 0 kPa (0 kgf/cm^2, 0 psi), max.: 637.5 kPa (6.48 kgf/cm^2, 92.2 psi)	Actual tire pressure	-
TIREPRESS2	ID2 tire pressure / min.: 0 kPa (0 kgf/cm^2, 0 psi), max.: 637.5 kPa (6.48 kgf/cm^2, 92.2 psi)	Actual tire pressure	-

Item	Measurement item / Range (Display)	Normal Condition	Diagnostic Note
TIREPRESS3	ID3 tire pressure / min.: 0 kPa (0 kgf/cm^2, 0 psi), max.: 637.5 kPa (6.48 kgf/cm^2, 92.2 psi)	Actual tire pressure	-
TIREPRESS4	ID4 tire pressure / min.: 0 kPa (0 kgf/cm^2, 0 psi), max.: 637.5 kPa (6.48 kgf/cm^2, 92.2 psi)	Actual tire pressure	-
TIREPRESS5	ID5 tire pressure / min.: 0 kPa (0 kgf/cm^2, 0 psi), max.: 637.5 kPa (6.48 kgf/cm^2, 92.2 psi)	Actual tire pressure	-

(e) Rapidly release the tire pressure from any tire by 40 kPa (0.4 kgf/cm^2, 5.8 psi) for 30 seconds or more.
HINT:
- Identify the malfunctioning tire pressure warning valve and transmitter by rapidly releasing the tire pressures from each tire.
- Record which TIREPRESS data (ID1 to ID5) corresponds to each tire.

(f) Check the DATA LIST.

TW

Result

Condition	Detection Condition
One of TIREPRESS data (ID1 to ID5) changed	Normal
No TIREPRESS data changed	Transmitter corresponding to DTC

NOTICE:
- **It may take up to 1 minute to display the updated data.**
- **When the TIREPRESS data (IDs 1 to 5) changes, reset the tire pressure of the tires to the specified value, rotate the tires 90 to 270° and recheck..**
- **When the transmitter is normal, record the tire location and the transmitter ID.**

(g) When one of the TIREPRESS data (IDs 1 to 5) changes, repeat the same procedure on the rest of the tires (one by one) to identify which tire pressure warning valve and transmitter the DTC corresponds to.

(h) When the TIREPRESS data (IDs 1 to 5) has been changed, identify the malfunctioning tire pressure warning valve and transmitter by using recorded ID numbers and output DTC.

(i) Set the pressure of each tire to the specified value.
Standard pressure:
220 kPa (2.2 kgf/cm^2, 32 psi)

NEXT

2	CHECK TIRE

(a) Check that the tire is not punctured, and there is no indication of air pressure drop.
OK:
Tire is normal.

NG → **REPLACE TIRE AND TIRE PRESSURE WARNING VALVE AND TRANSMITTER**

OK

REPLACE TIRE PRESSURE WARNING VALVE AND TRANSMITTER

DTC	C2171/71	Transmitter ID not Registered in Main Mode

DESCRIPTION

DTC No.	DTC Detection Condition	Trouble Area
C2171/71	Transmitter ID code is not registered (when an ID code is unregistered for 51 minutes or more)	Tire pressure warning ECU

INSPECTION PROCEDURE

NOTICE:

It is necessary to register an ID code after replacing the tire pressure warning valve and transmitter and/or the tire pressure monitor ECU (see page TW-9).

HINT:

Set the tire pressure to the specified value.

Standard pressure:

220 kPa (2.2 kgf/cm^2, 32 psi)

TW

1	READ VALUE OF INTELLIGENT TESTER (REGISTERED ID CODES)

(a) Check the DATA LIST for proper functioning of the registered ID codes.

Tire pressure warning ECU

Item	Measurement item/ Range (Display)	Normal Condition	Diagnostic Note
REGIT ID1 CODE	Registered ID1 code / min.: 0, max.: FFFFFFF	The ID No. registered in the transmitter ID1 is displayed	-
REGIT ID2 CODE	Registered ID2 code / min.: 0, max.: FFFFFFF	The ID No. registered in the transmitter ID2 is displayed	-
REGIT ID3 CODE	Registered ID3 code / min.: 0, max.: FFFFFFF	The ID No. registered in the transmitter ID3 is displayed	-
REGIT ID4 CODE	Registered ID4 code / min.: 0, max.: FFFFFFF	The ID No. registered in the transmitter ID4 is displayed	-
REGIT ID5 CODE	Registered ID5 code / min.: 0, max.: FFFFFFF	The ID No. registered in the transmitter ID5 is displayed	-

OK:

The registered transmitter ID codes are displayed on the intelligent tester screen.

OK → **REPLACE TIRE PRESSURE WARNING ECU**

NG

2	PERFORM REGISTRATION (TRANSMITTER ID)

(a) Register the transmitter IDs for all the wheels (see page TW-9).

(b) Set the pressure of each tire to the specified value.

Standard pressure:

220 kPa (2.2 kgf/cm^2, 32 psi)

NEXT

3	READ VALUE OF INTELLIGENT TESTER (TIRE PRESSURE)

(a) Check the DATA LIST tire pressure value.

Tire pressure warning ECU

Item	Measurement item/ Range (Display)	Normal Condition	Diagnostic Note
TIREPRESS1	ID1 tire pressure / min.: 0 kPa (0 kgf/cm^2, 0 psi), max.: 637.5 kPa (6.48 kgf/cm^2, 92.2 psi)	Actual tire pressure	-
TIREPRESS2	ID3 tire pressure / min.: 0 kPa (0 kgf/cm^2, 0 psi), max.: 637.5 kPa (6.48 kgf/cm^2, 92.2 psi)	Actual tire pressure	-
TIREPRESS3	ID3 tire pressure / min.: 0 kPa (0 kgf/cm^2, 0 psi), max.: 637.5 kPa (6.48 kgf/cm^2, 92.2 psi)	Actual tire pressure	-
TIREPRESS4	ID4 tire pressure / min.: 0 kPa (0 kgf/cm^2, 0 psi), max.: 637.5 kPa (6.48 kgf/cm^2, 92.2 psi)	Actual tire pressure	-
TIREPRESS5	ID5 tire pressure / min.: 0 kPa (0 kgf/cm^2, 0 psi), max.: 637.5 kPa (6.48 kgf/cm^2, 92.2 psi)	Actual tire pressure	-

OK:
All tire pressure readings are equal to the actual tire pressure.
NOTICE:
It may take up to 1 minute to display the tire pressure data.

NG → **REPLACE TIRE PRESSURE WARNING ECU**

OK

END

TW

DTC	C2176/76	Receiver Error

DESCRIPTION

DTC No.	DTC Detection Condition	Trouble Area
C2176/76	DTC is stored when either of following is detected: • Malfunction in tire pressure warning ECU internal circuit. • Terminal RF5V is shorted to ground.	• Tire pressure warning antenna and receiver • Tire pressure warning ECU • Wire harness

WIRING DIAGRAM

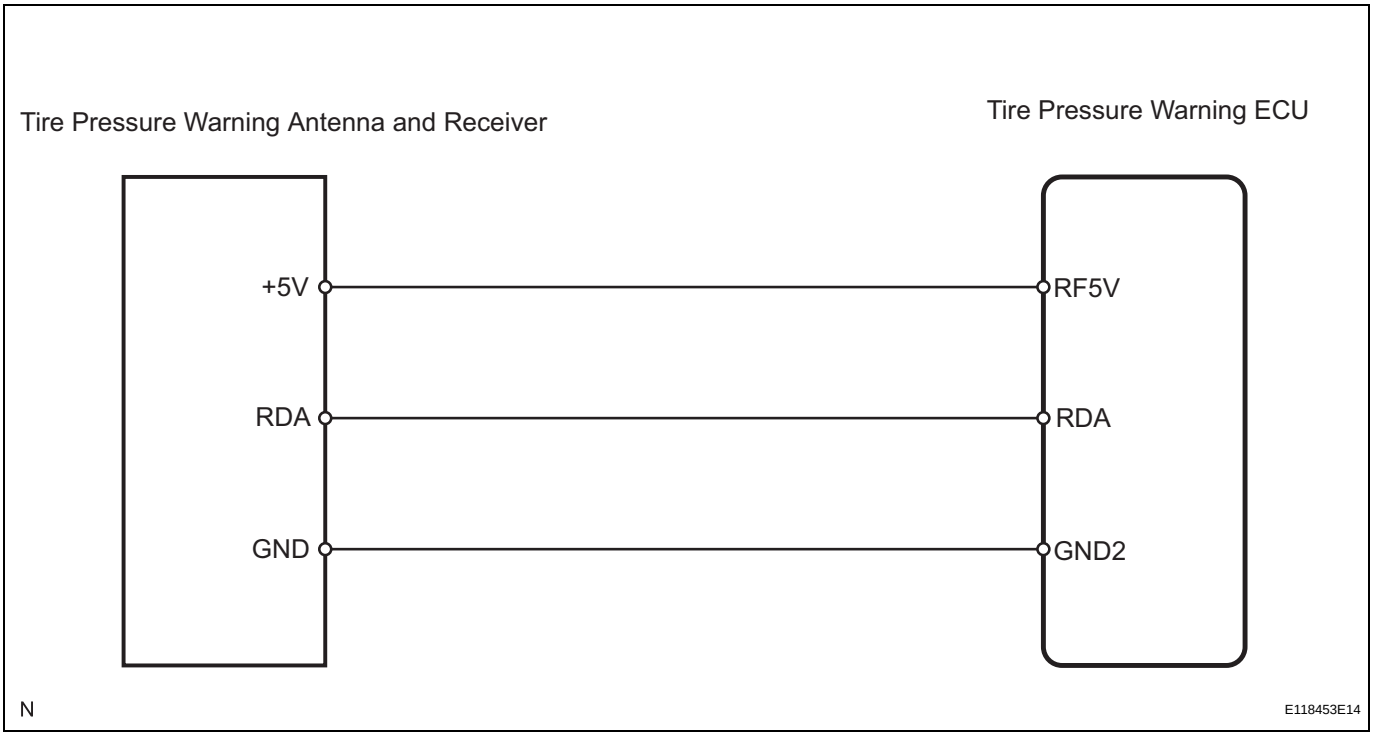

INSPECTION PROCEDURE

NOTICE:

It is necessary to register an ID code after replacing the tire pressure warning valve abd transmitter and/or the tire pressure warning ECU (see page TW-9).

HINT:

Set the tire pressure to the specified value.

Standard pressure:

220 kPa (2.2 kgf/cm^2, 32 psi)

1 CHECK TIRE PRESSURE WARNING ECU

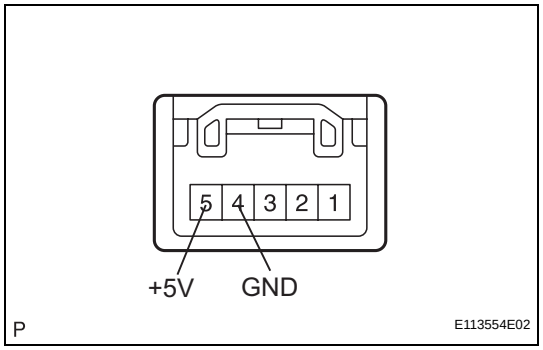

(a) Measure the voltage of the connector.
Standard voltage

Tester Connection	Switch Condition	Specified Condition
L20-5 (+5V) - L20-4 (GND)	Ignition switch ON	4.5 to 5.5 V

NG → **Go to step 5**

OK

2 CHECK WIRE HARNESS (ECU - RECEIVER)

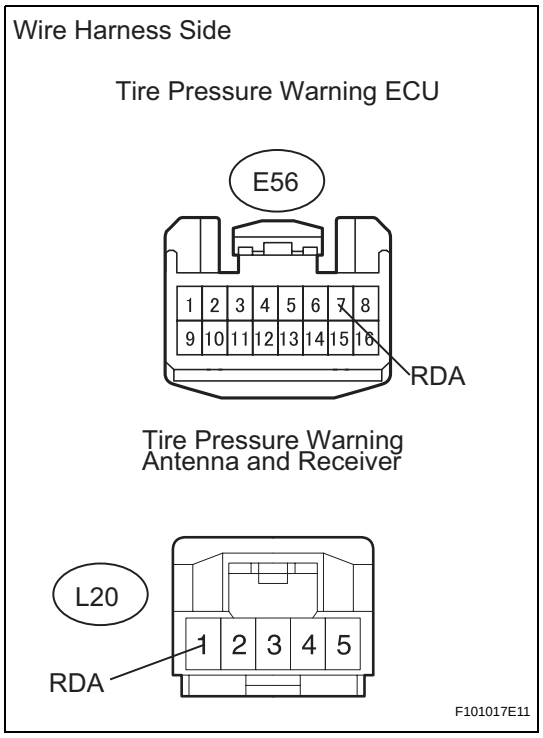

(a) Disconnect the E56 ECU connector.
(b) Disconnect the L20 receiver connector.
(c) Measure the resistance of the wire harness side connectors.
Standard resistance

Tester Connection	Specified Condition
E56-7 (RDA) - L20-1 (RDA)	Below 1 Ω

NG → **REPAIR OR REPLACE HARNESS AND CONNECTOR**

OK

3 REPLACE TIRE PRESSURE WARNING ANTENNA AND RECEIVER

NEXT

4 CHECK DTC

(a) Check for DTC (see page TW-20).
OK:
DTC is not output.

TW

HINT:
- It is necessary to register an ID when replacing the tire pressure warning ECU (see page TW-9).
- Read ID on the DATA LIST before removing the tire pressure warning ECU. Register the ID in the new tire pressure warning ECU.

NG → **REPLACE TIRE PRESSURE WARNING ECU**

OK

END

5 CHECK WIRE HARNESS (ECU - RECEIVER)

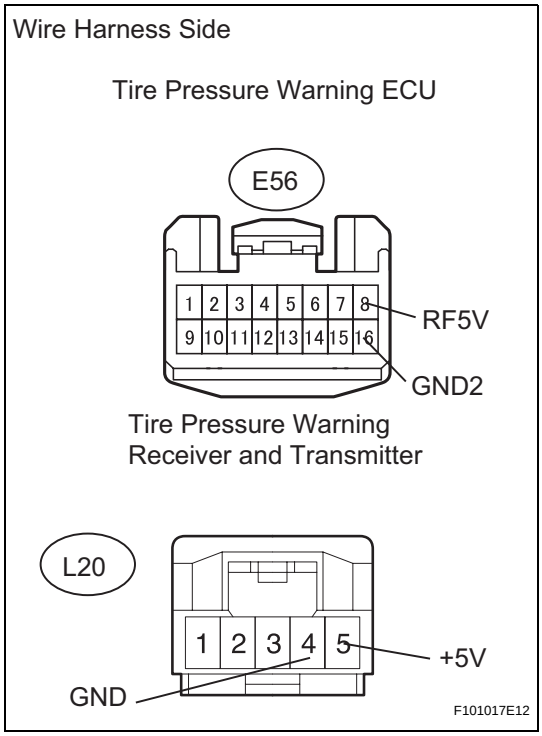

(a) Disconnect the E56 ECU connector.
(b) Disconnect the L22 receiver connector.
(c) Measure the resistance of the wire harness side connectors.

Standard resistance

Tester Connection	Specified Condition
E56-8 (GND2) - L20-4 (GND)	Below 1 Ω
E56-8 (RF5V) - L20-5 (+5V)	

NG → **REPAIR OR REPLACE HARNESS AND CONNECTOR**

OK

REPLACE TIRE PRESSURE WARNING ECU

DTC	C2191/91	Vehicle Speed Signal Error (Test Mode DTC)

DESCRIPTION

The tire pressure warning ECU receives a speed signal from the combination meter. This DTC is stored upon entering test mode, and cleared when a vehicle speed signal of 12 mph (20 km/h) is detected for 3 seconds or more. The DTC is output only in test mode.

DTC No.	DTC Detection Condition	Trouble Area
C2191/91	Speed sensor circuit malfunction	• Vehicle speed sensor • Tire pressure warning ECU • Combination meter • Wire harness

WIRING DIAGRAM



TW

INSPECTION PROCEDURE

NOTICE:

It is necessary to register an ID code after replacing the tire pressure warning valve and transmitter and/or the tire pressure warning ECU (see page TW-9).

1	READ VALUE OF INTELLIGENT TESTER (VEHICLE SPEED)

(a) Check the DATA LIST for proper functioning of the vehicle speed signal.

Tire pressure warning ECU

Item	Measurement item / Range(Display)	Normal Condition	Diagnostic Note
VEHICLE SPEED	Vehicle speed reading / Min.: 0 km/h (0 mph) Max.: 255 km/h (158 mph)	Actual vehicle speed	Speed indicated on the combination meter

OK:
Indicates actual speed.

OK → **REPLACE TIRE PRESSURE WARNING ECU**

NG

2	CHECK WIRE HARNESS (ECU - METER)

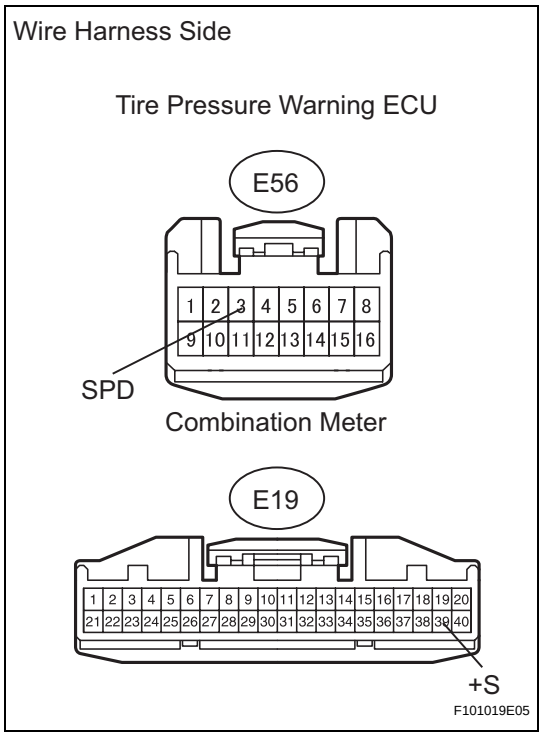

(a) Disconnect the E56 ECU connector.
(b) Disconnect the E19 meter connector.
(c) Measure the resistance of the wire harness side connectors.

Standard resistance

Tester Connection	Specified Condition
E56-3 (SPD) - E19-39 (+S)	Below 1 Ω
E56-3 (SPD) - Body ground	10 kΩ or higher

NG → **REPAIR OR REPLACE HARNESS AND CONNECTOR**

OK

TW

3	CHECK TIRE PRESSURE WARNING ECU

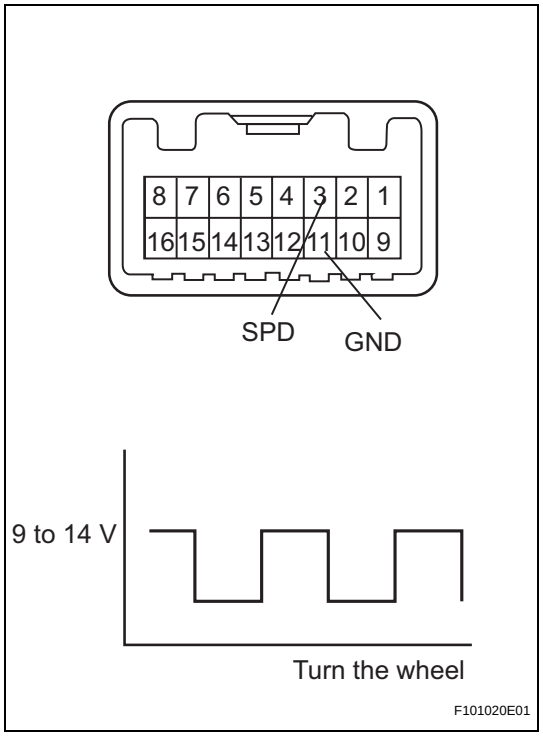

(a) Measure the voltage of the connector.
Standard voltage

Tester Connection	Condition	Specified Condition
E56-3 (SPD) - E56-11 (GND)	While driving vehicle	Pulse generation

HINT:
As the vehicle speed (wheel revolution speed) increases, a cycle of the waveform narrows.

NG → **GO TO METER / GAUGE SYSTEM**

OK

REPLACE TIRE PRESSURE WARNING ECU

Tire Pressure Warning Light Circuit

DESCRIPTION

If the tire pressure warning ECU detects trouble, the tire pressure warning light turns on and tire pressure monitor is canceled at the same time. At this time, the ECU records a DTC in memory.
Connect terminals TC and CG of the DLC3 to make the tire pressure warning light blink and output the DTC.

WIRING DIAGRAM

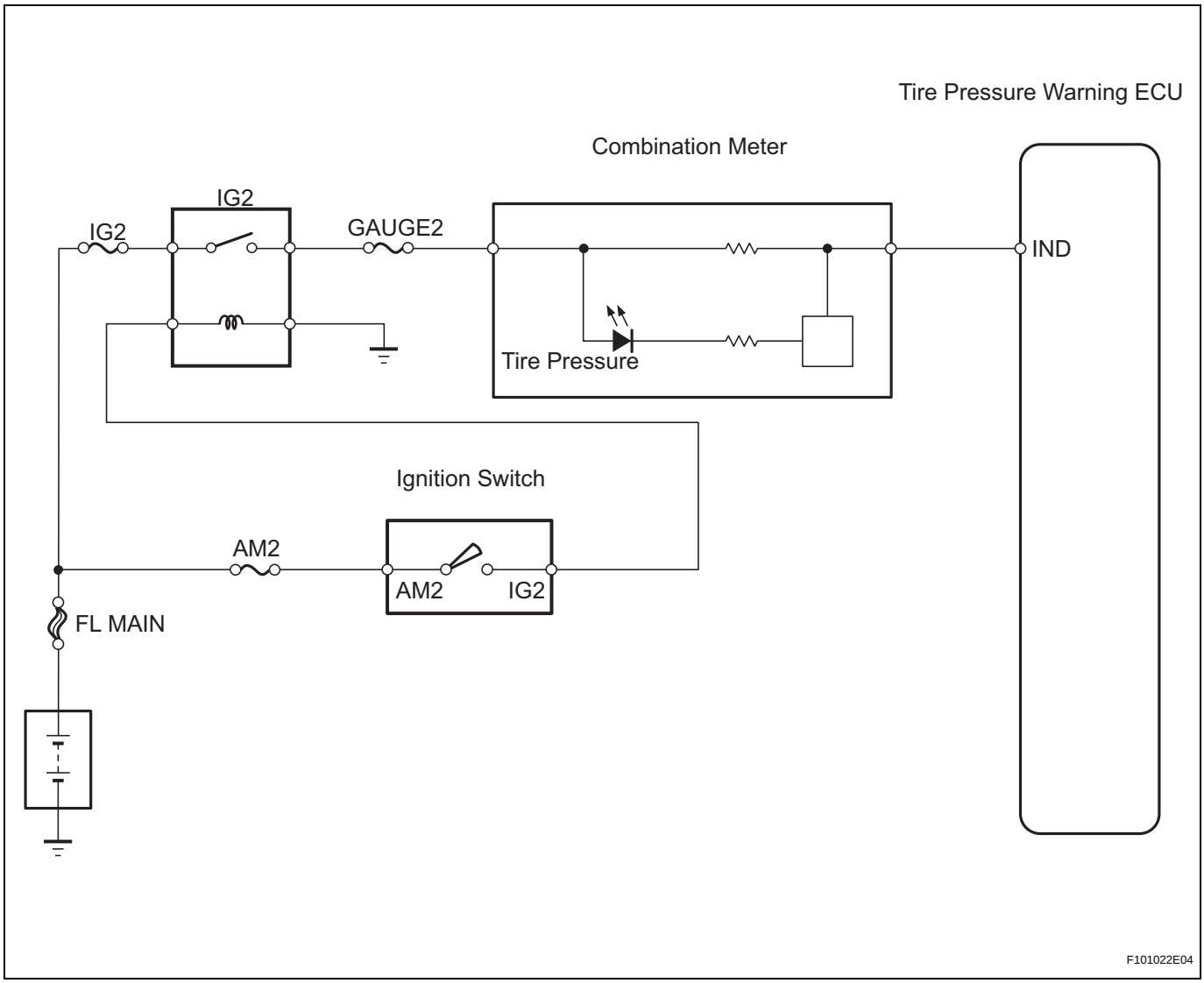

INSPECTION PROCEDURE

NOTICE:
It is necessary to register an ID code after replacing the tire pressure monitor valve and/or the tire pressure warning ECU (see page TW-9).

1	**INSPECT FUSE (GAUGE)**

(a) Remove the GAUGE fuse from the instrument panel junction block.

(b) Measure the resistance of the fuse.

Standard resistance:

Below 1 Ω

NG → **REPLACE FUSE**

OK

2 CHECK TIRE PRESSURE WARNING LIGHT CIRCUIT

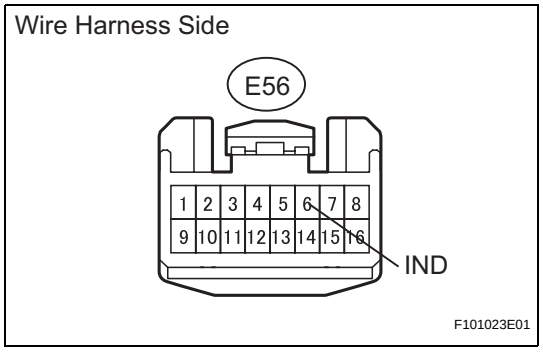

(a) Disconnect the E56 ECU connector.

(b) Using a service wire, connect E56-6 (IND) on the wire harness side and body ground.

(c) Turn the ignition switch ON.

(d) Check that the tire pressure warning light turns on.

OK:

Tire pressure warning light turns on.

OK → **PROCEED TO NEXT CIRCUIT INSPECTION SHOWN IN PROBLEM SYMPTOMS TABLE**

NG

3 CHECK WIRE HARNESS (ECU - METER)

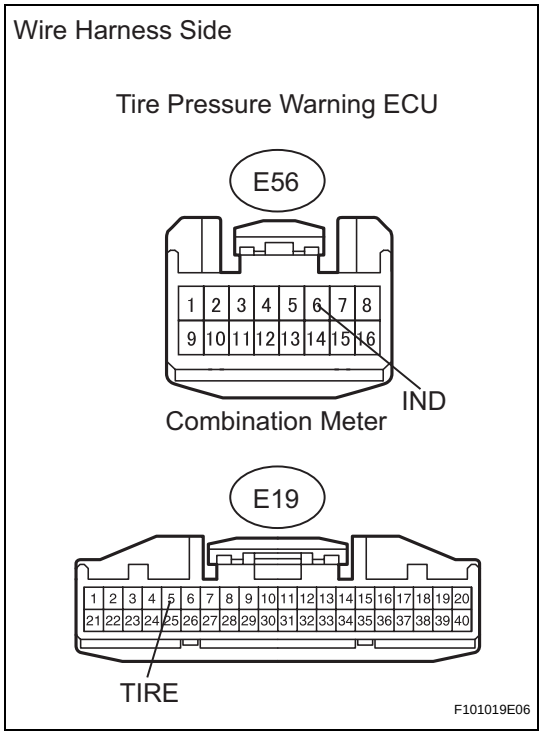

(a) Disconnect the E56 ECU connector.

(b) Disconnect the E19 meter connector.

(c) Measure the resistance of the wire harness side connectors.

Standard resistance

Tester Connection	Specified Condition
E56-6 (IND) - E19-5 (TIRE)	Below 1 Ω

NG → **REPAIR OR REPLACE HARNESS AND CONNECTOR**

OK

PROCEED TO NEXT CIRCUIT INSPECTION SHOWN IN PROBLEM SYMPTOMS TABLE

TW

ECU Power Source Circuit

DESCRIPTION

This is the power source for the tire pressure warning ECU.

WIRING DIAGRAM

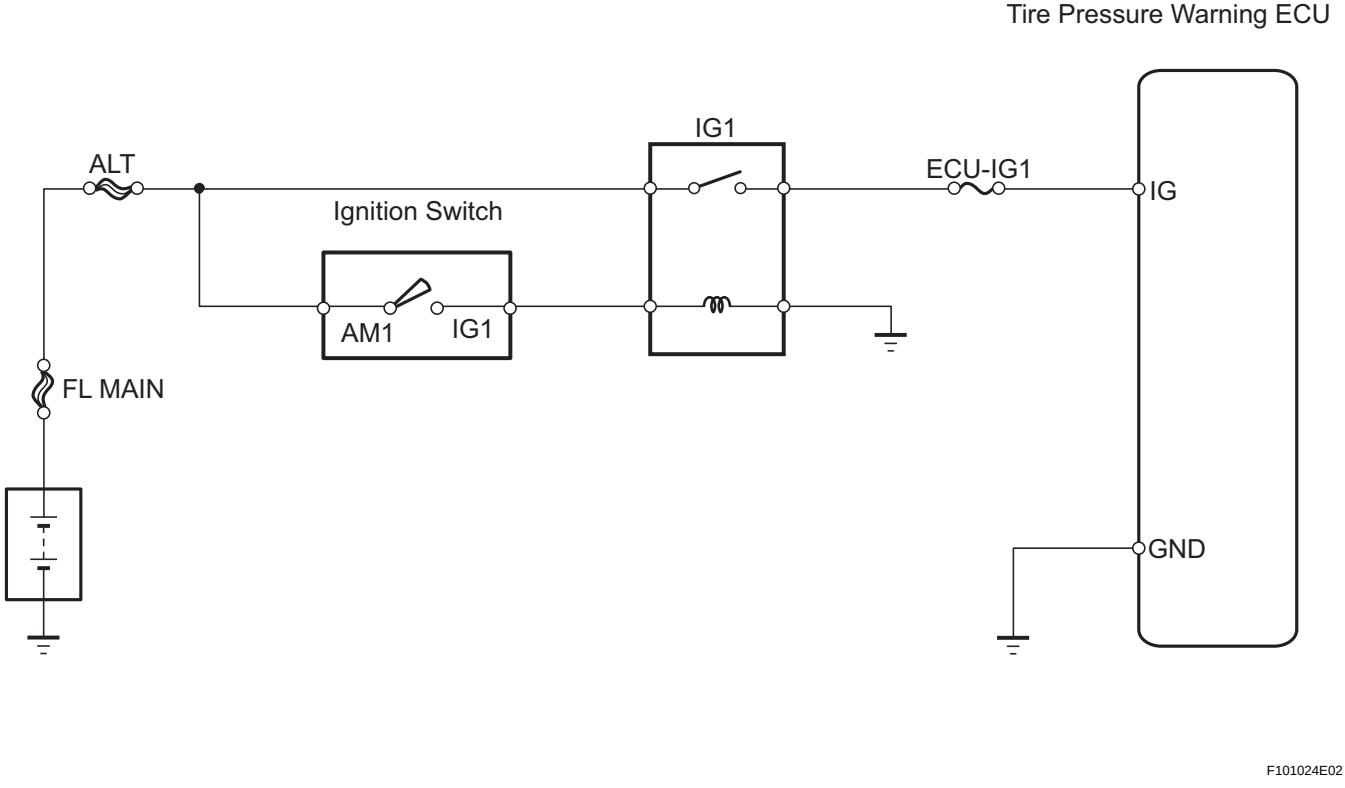

INSPECTION PROCEDURE

NOTICE:

It is necessary to register an ID code after replacing the tire pressure monitor valve and/or the tire pressure warning ECU (see page TW-9).

1	**INSPECT FUSE (ECU-IG1)**

(a) Remove the ECU-IG1 fuse from the instrument panel junction block.

(b) Measure the resistance of the fuse.

Standard resistance:

Below 1 Ω

NG → **REPLACE FUSE**

OK

2 INSPECT IG1 RELAY

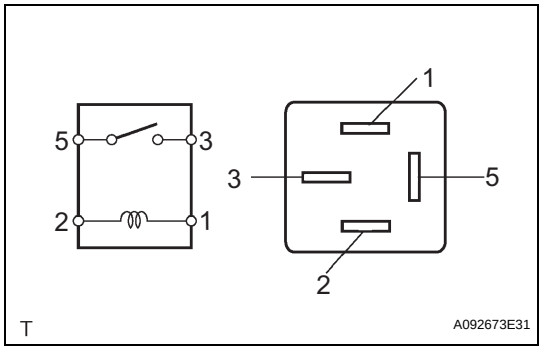

(a) Remove the IG1 relay from the instrument panel junction block.
(b) Measure the resistance of the relay.
Standard resistance

Tester Connection	Specified Condition
3 - 5	10 kΩ or higher
	Below 1 Ω (When battery voltage is applied to terminals 1 and 2)

NG → **REPLACE IG1 RELAY**

OK

3 INSPECT WIRE HARNESS (ECU - BATTERY AND BODY GROUND)

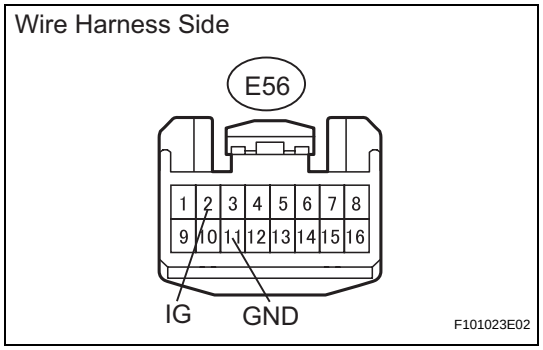

(a) Disconnect the E56 ECU connector.
(b) Measure the voltage of the wire harness side connector.
Standard voltage

Tester Connection	Switch Condition	Specified Condition
E56-2 (IG) - Body ground	Ignition switch ON	10 to 14 V
	Ignition switch OFF	Below 1 V

(c) Measure the resistance of the wire harness side connector.
Standard resistance

Tester Connection	Specified Condition
E56-11 (GND) - Body ground	Below 1 Ω

NG → **REPAIR OR REPLACE HARNESS AND CONNECTOR**

OK

PROCEED TO NEXT CIRCUIT INSPECTION SHOWN IN PROBLEM SYMPTOMS TABLE

TW

TC and CG Terminal Circuit

DESCRIPTION

DTC output mode is set by connecting terminals 13 (TC) and 4 (CG) of the DLC3. The DTCs are indicated by the blinking of the tire pressure warning light.

WIRING DIAGRAM

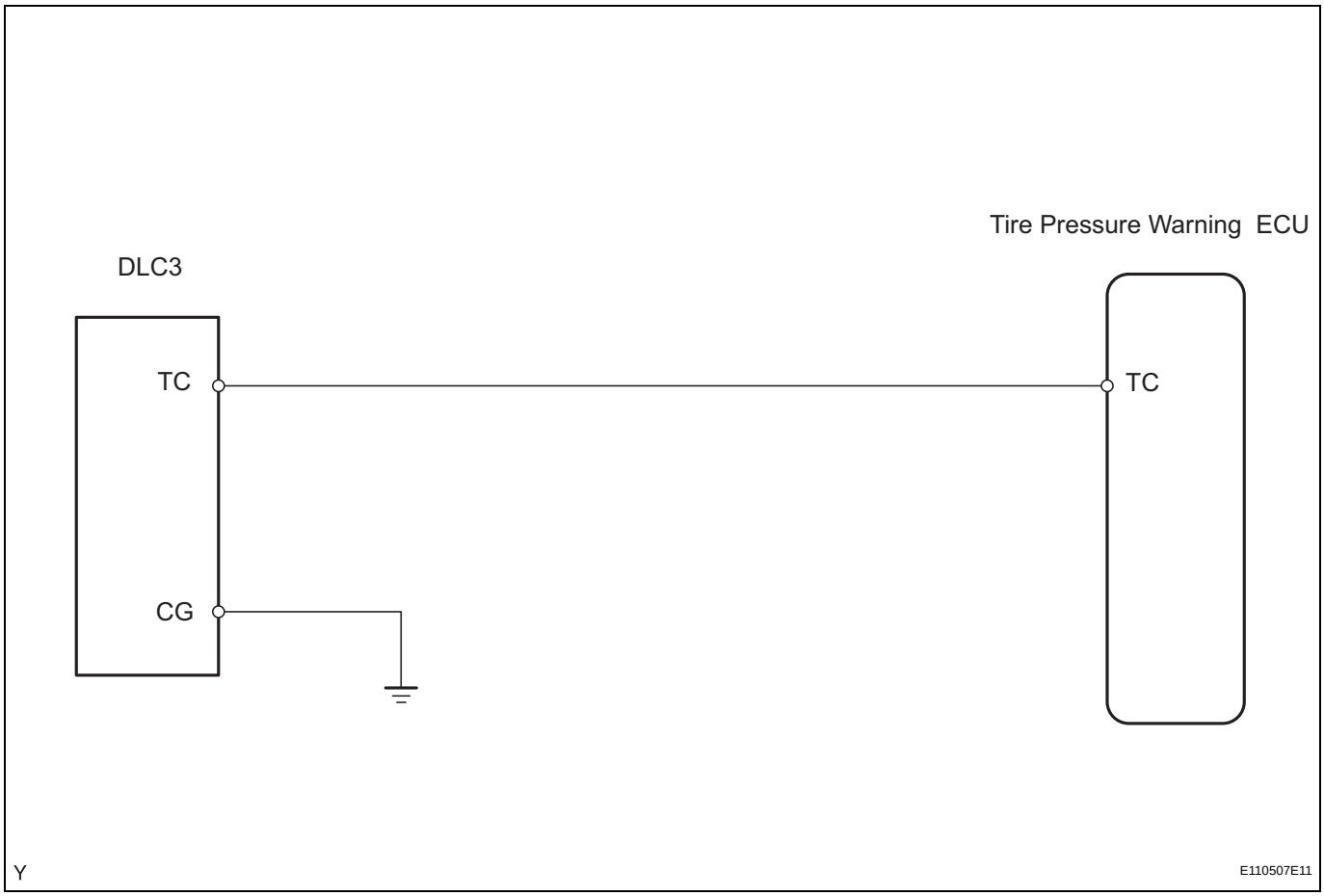

HINT:
When each warning light continues blinking, a ground short in the wiring of terminal TC of the DLC3 or an internal ground short in each ECU may have occurred.

INSPECTION PROCEDURE

NOTICE:
It is necessary to register an ID code after replacing the tire pressure monitor valve and/or the tire pressure warning ECU (see page TW-9).

1	CHECK WIRE HARNESS (DLC3 - ECU)

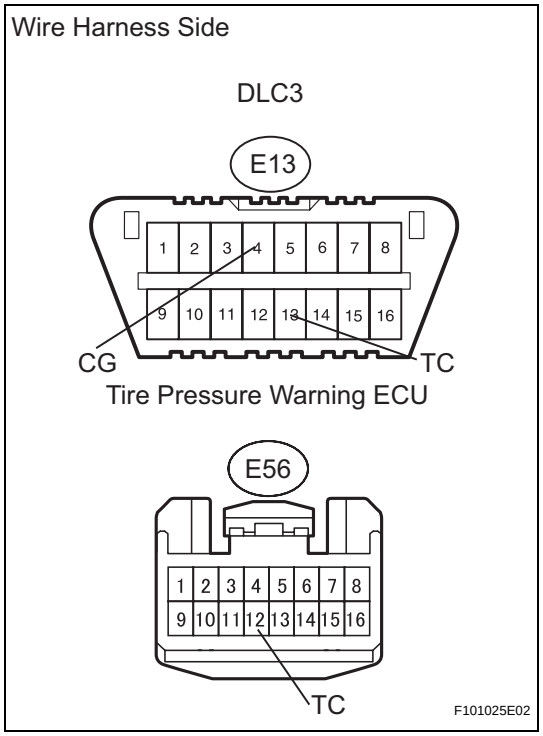

(a) Disconnect the E13 DLC3 connector.
(b) Disconnect the E56 ECU connector.
(c) Measure the resistance of the wire harness side connectors.

Standard resistance

Tester Connection	Specified Condition
E56-12 (TC) - E13-13 (TC)	Below 1 Ω
E13-4 (CG) - Body ground	

NG → **REPAIR OR REPLACE HARNESS AND CONNECTOR**

OK

PROCEED TO NEXT CIRCUIT INSPECTION SHOWN IN PROBLEM SYMPTOMS TABLE

TW

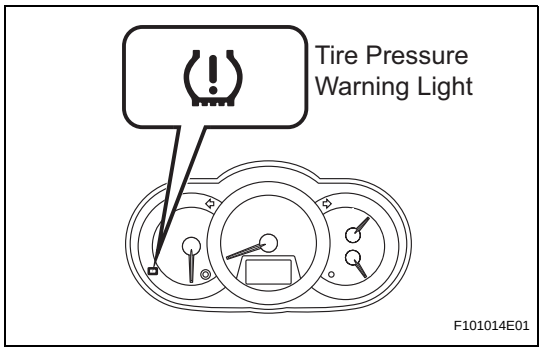

TIRE PRESSURE WARNING SYSTEM

PRECAUTION

1. TIRE PRESSURE WARNING SYSTEM PRECAUTION

(a) When the tire pressure warning light turns on, immediately check the tire pressure of the tire and adjust it to the specified value. (When the tire pressure warning light circuit is open, the tire pressure warning light flashes for 1 minute and then illuminates.)

NOTICE:

Check the spare tire as well since this system monitors the pressure of all tires.

Standard pressure:

220 kPa (2.2 kgf/cm^2, 32 psi)

(b) When the tire pressure warning light blinks, there is a malfunction in the system. Check for DTCs.

(c) It is necessary to register the transmitter ID in the tire pressure warning ECU after replacing the tire pressure warning valve and transmitter and/or tire pressure warning ECU (see page TW-9).

(d) When replacing the tire pressure warning ECU:

(1) Using the DATA LIST, read the transmitter IDs registered in the ECU and make a note of them before removing the tire pressure warning ECU.

(2) Register the transmitter IDs after installing a new tire pressure warning ECU.

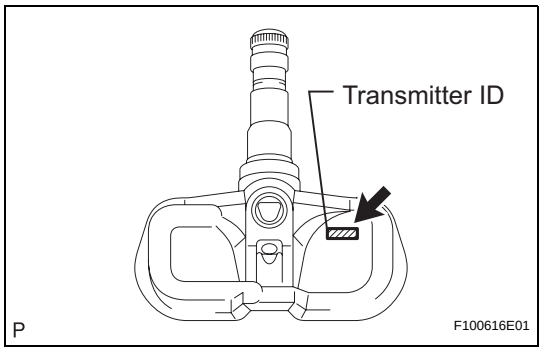

(e) When replacing the tire pressure warning valve and transmitter:

(1) Take a note of the 7 digit number (transmitter ID) written on the tire pressure warning valve and transmitter when replacing it. Register the transmitter IDs in the tire pressure warning ECU after replacing the tire pressure warning valve and transmitter and installing the tires and wheels on the vehicle.

NOTICE:

The transmitter ID written on the tire pressure warning valve and transmitter will be unable to be read after installing it on the tire and wheel.

2. IN CASE OF TIRE AND WHEEL REPLACEMENT

(a) When tires and wheels are replaced, always be sure to register the transmitter ID correctly.

3. FAIL-SAFE FUNCTION

(a) When a system malfunction occurs in the tire pressure warning system, the tire pressure warning light blinks and informs the driver of the system failure.

(b) The result of this diagnosis is stored in the tire pressure warning ECU.

(c) Precautions about the tire pressure:
- The tire pressure decreases naturally.
- In winter, tire pressure may decrease due to low ambient temperature (tire pressure decreases by approximately 10 kPa (0.2 kgf/cm^2, 1.45 psi) for every 10°C (50°F) drop in the ambient temperature).
  Therefore, the tire pressure warning is more likely to operate if the tire pressure are not adjusted appropriately.
  If the daily temperature variation is large, adjust the tires to a higher pressure suitable to cold conditions.
  This will reduce the likelihood of an incorrect tire pressure warning operation.

DISPOSAL

1. DISPOSE OF TIRE PRESSURE WARNING VALVE SUB-ASSEMBLY

HINT:

The tire pressure warning valve is powered by a lithium battery. When disposing of the tire pressure sensor, remove the battery and dispose of it properly.

(a) Use the tip of a screwdriver to pry off the back cover.

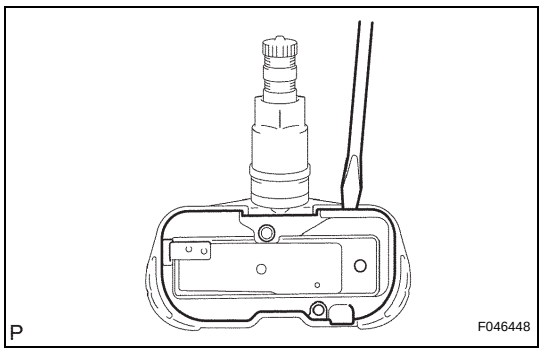

(b) The battery and base board covered with silicone resin are exposed. While taking out the battery, cut the 2 terminals that connect the battery and the base board.

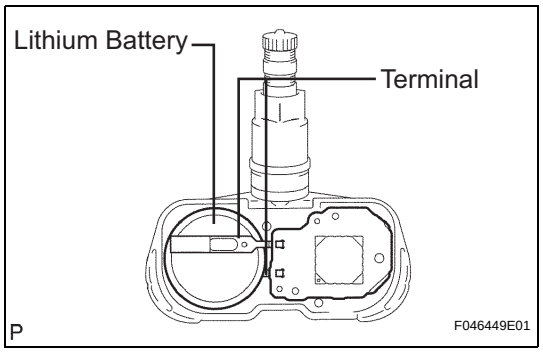

TW

TIRE PRESSURE WARNING VALVE AND TRANSMITTER

COMPONENTS

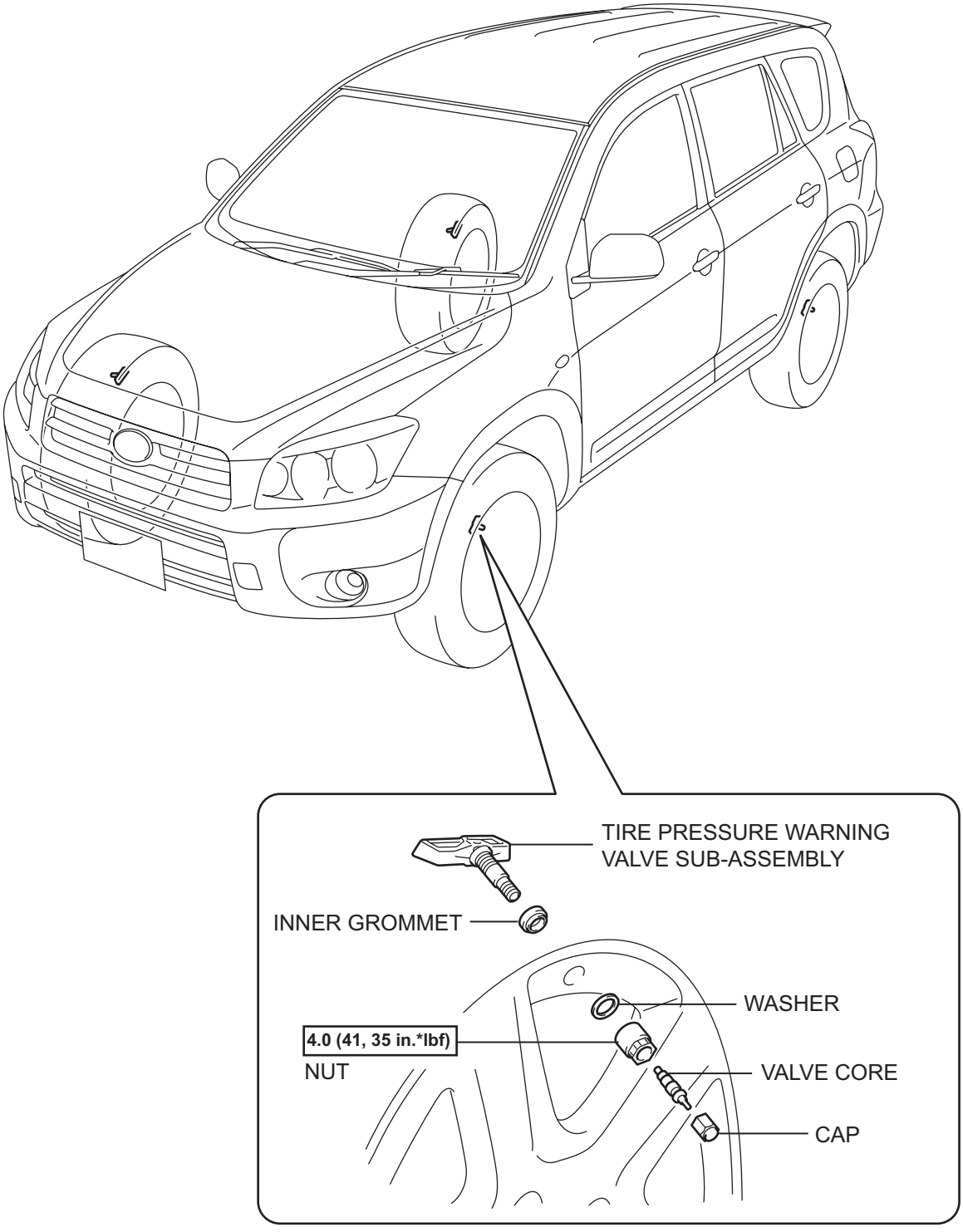

N*m (kgf*cm, ft.*lbf) : Specified torque

C128862E02

REMOVAL

1. **REMOVE FRONT TIRE**
2. **REMOVE REAR TIRE**
3. **REMOVE TIRE PRESSURE WARNING VALVE SUB-ASSEMBLY**
   (a) Remove the valve core and cap, and release air from the tire.
   (b) After ensuring that air is sufficiently released, remove the nut and washer that are used to fix the tire pressure warning valve and drop the valve sensor inside the tire.
   HINT:
   Keep the removed cap, valve core, nut and washer.

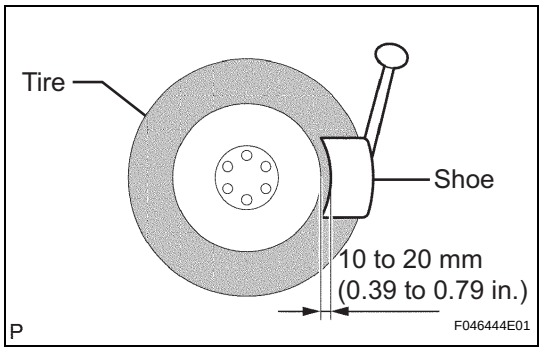

   (c) After dropping the tire pressure warning valve into the tire, disengage the tire bead using the shoe of the tire remover.
   NOTICE:
   Be careful not to damage the tire pressure warning valve because of interference between the sensor and tire bead.
   (d) Remove the bead on the upper side.
   (e) Take out the sensor from the tire and remove the bead on the lower side.
   (f) Remove the inner grommet from the tire pressure warning valve.
   HINT:
   Check that there are no cracks or damage on the grommet. If necessary, replace the grommet, the washer and the nut.

INSTALLATION

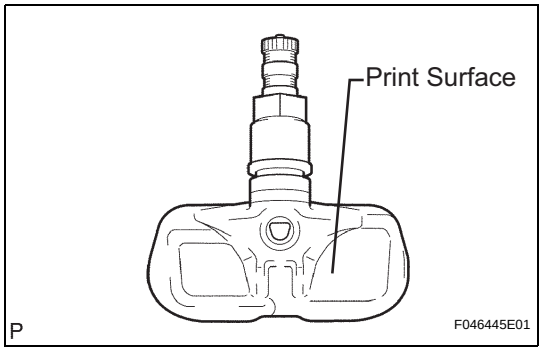

1. **INSTALL TIRE PRESSURE WARNING VALVE SUB-ASSEMBLY**
   (a) Insert the tire pressure warning valve into the valve installation hole. Insert it from the inside of the rim so that the print surface can be seen.
   NOTICE:
   - **Check that there is no visible deformation, damage or other abnormalities on the transmitter.**
   - **Check that there is no foreign matter on the inner grommet and around the rim hole.**
   - **If the tire pressure warning valve is installed in the reverse direction, it may be damaged or fail to transmit signals when the vehicle is driven at high speeds.**
   (b) Install the washer on the tire pressure warning valve from the rim side and tighten it with the nut.
   Torque: 4.0 N*m (41 kgf*cm, 35 in.*lbf)
   NOTICE:
   - **Make sure that there is no foreign matter on the washer and nut.**

TW

- **If the tire and tire pressure warning valve have been removed, check that there is no damage or cuts visible, and no foreign matter, such as mud, dirt or sand attached to the grommet. Replace the grommet with a new one if any of the defects mentioned above are found.**
- **Make sure that there is no oil, water or lubricant around the rim hole, tire pressure warning valve, washer and nut. Failing to do so may result in improper installation.**

(c) After the tire is inflated, the valve nut may be loose. Retighten the nut to the specified torque and then check for air leaks with soapy water.
Torque: 4.0 N*m (41 kgf*cm, 35 in.*lbf)

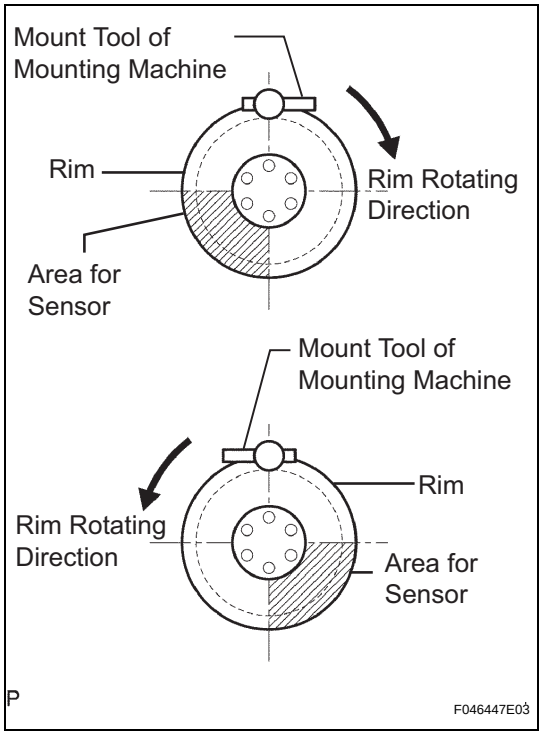

(d) Set the wheel disc to the mounting machine and install the lower tire bead. Position the main body of the valve sensor in the shaded area shown in the illustration.
NOTICE:
If the valve sensor is positioned outside this area, it will interfere with the tire bead and may be damaged.

(e) Install the upper bead.
NOTICE:
- **Make sure that the tire bead and tool do not interfere with the main body of the sensor and that the sensor is not clamped by the bead.**
- **Check that there is no water or other liquid around the tire pressure warning valve.**

2. INSTALL FRONT TIRE
Torque: 103 N*m (1,050 kgf*cm, 76 ft.*lbf)

3. INSTALL REAR TIRE
Torque: 103 N*m (1,050 kgf*cm, 76 ft.*lbf)

4. REGISTER TRANSMITTER ID
HINT:
If the tire pressure warning ECU is replaced with a new one or with an ECU from another vehicle, register the transmitter ID codes.

5. INSPECT TIRE PRESSURE WARNING SYSTEM

INSTALLATION

1. INSPECT TORQUE CONVERTER CLUTCH ASSEMBLY

(a) Inspect the torque converter (see page AX-153).

2. INSTALL TORQUE CONVERTER CLUTCH ASSEMBLY

(a) Install the torque converter clutch to the automatic transaxle.

(b) Using a vernier caliper, measure dimension A between the transaxle and the end surface of the drive plate.

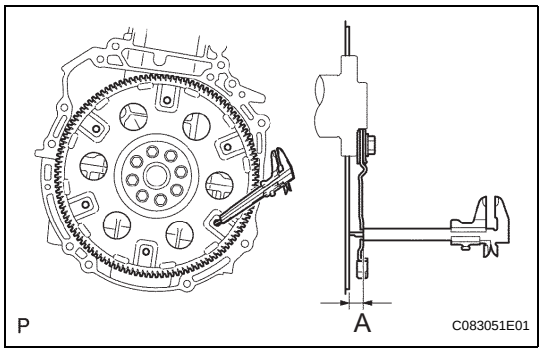

(c) Using a vernier caliper and straightedge, measure the dimension B shown in the illustration and check that B is greater than A.

Standard dimension:

A + 1.0 mm (0.039 in.) or more

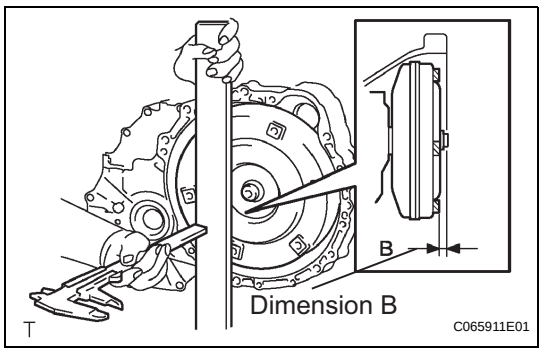

3. INSTALL NO. 1 TRANSMISSION CONTROL CABLE BRACKET

(a) Install the cable bracket with the 2 bolts.

Torque: 12 N*m (122 kgf*cm, 9 ft.*lbf)

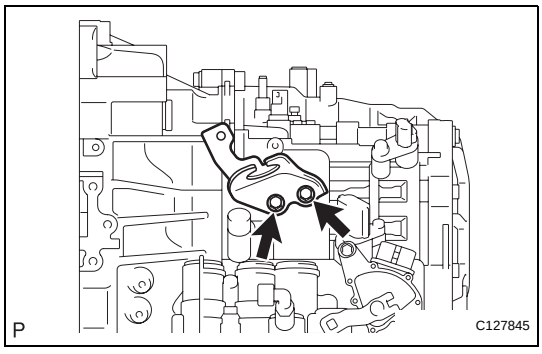

4. INSTALL TRANSMISSION OIL FILLER TUBE SUB-ASSEMBLY

(a) Install the filler tube with the bolt.

(b) Install the filler tube with the bolt.

Torque: 5.5 N*m (56 kgf*cm, 49 in.*lbf)

(c) Install the ATF dipstick.

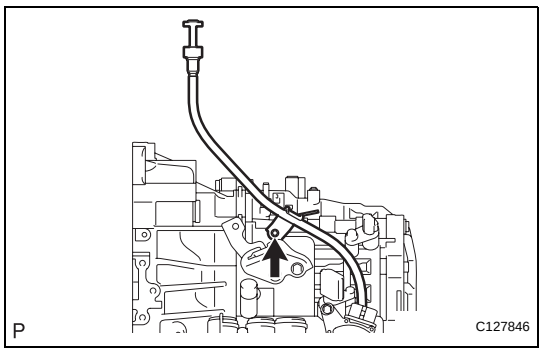

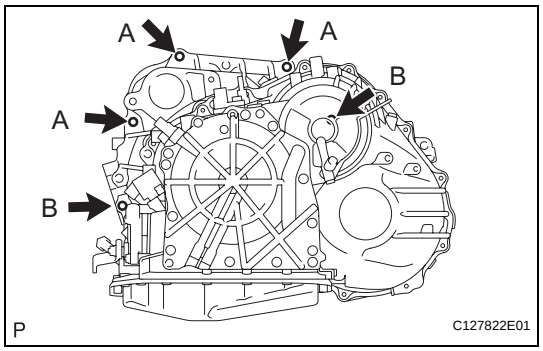

5. INSTALL AUTOMATIC TRANSAXLE ASSEMBLY

(a) Install the automatic transaxle with the 5 upper side mounting bolts to the engine.
Torque: 64 N*m (653 kgf*cm, 47 ft.*lbf) for bolt A
46 N*m (469 kgf*cm, 34 ft.*lbf) for bolt B

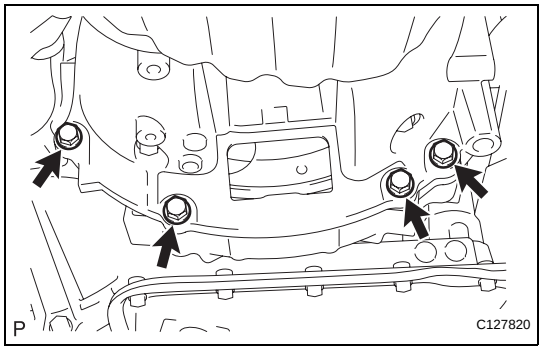

(b) Install the 4 lower side mounting bolts.
Torque: 37 N*m (377 kgf*cm, 27 ft.*lbf)

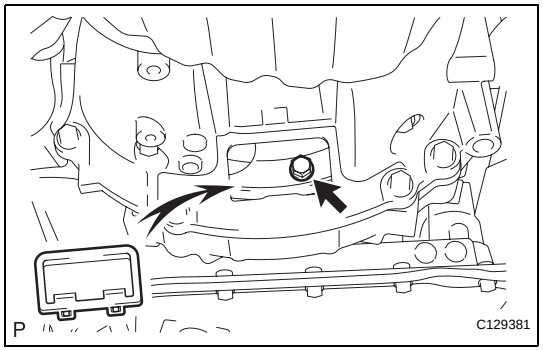

(c) Install the 6 torque converter clutch mounting bolts.
Torque: 41 N*m (418 kgf*cm, 30 ft.*lbf)
HINT:
First install the green colored bolt and then the 5 bolts.

(d) Install the flywheel housing under cover.

6. INSTALL TRANSFER ASSEMBLY

(a) Install the transfer (see page TF-75).

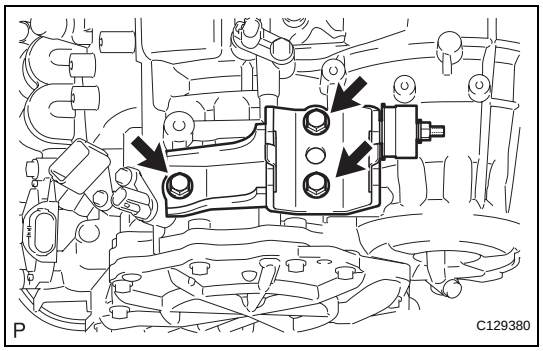

7. INSTALL ENGINE MOUNTING BRACKET LH

(a) Install the mounting bracket with the 3 bolts.
Torque: 64 N*m (653 kgf*cm, 47 ft.*lbf)

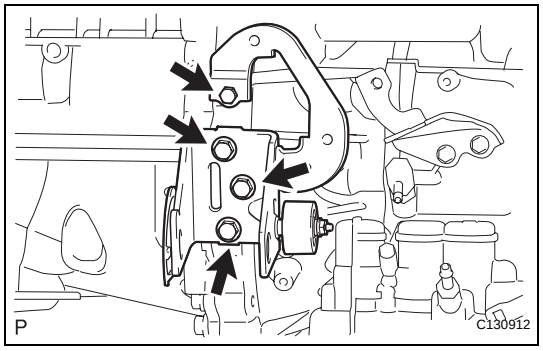

8. INSTALL ENGINE MOUNTING BRACKET FR

(a) Install the mounting bracket with the 4 bolts.
Torque: 64 N*m (653 kgf*cm, 47 ft.*lbf) for 14 mm head bolt
Torque: 12 N*m (122 kgf*cm, 9 ft.*lbf) for 12 mm head bolt

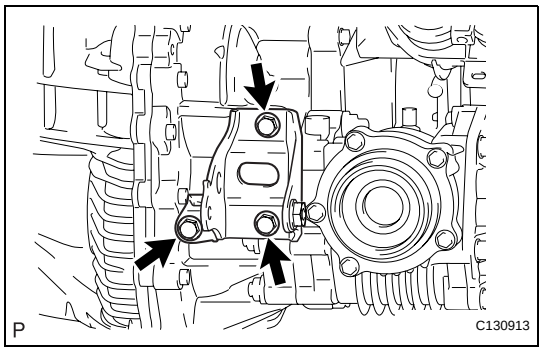

9. INSTALL ENGINE MOUNTING BRACKET RR

(a) Install the mounting bracket with the 3 bolts.
Torque: 45 N*m (459 kgf*cm, 33 ft.*lbf)

10. INSTALL TRANSMISSION OIL COOLER

(a) Install the oil cooler (see page AX-127).

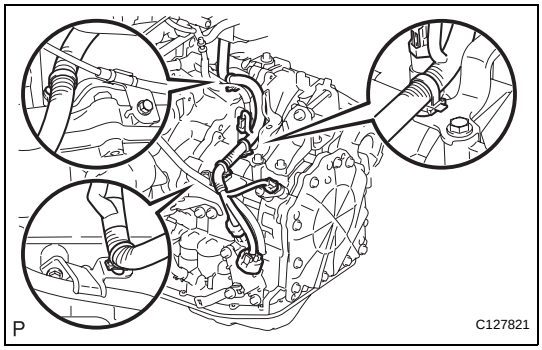

11. CONNECT WIRE HARNESS

(a) Connect the wire harness clamps.
(b) Connect the 2 speed sensor connectors.
(c) Connect the transaxle wire connector.
(d) Connect the park/neutral position switch connector.

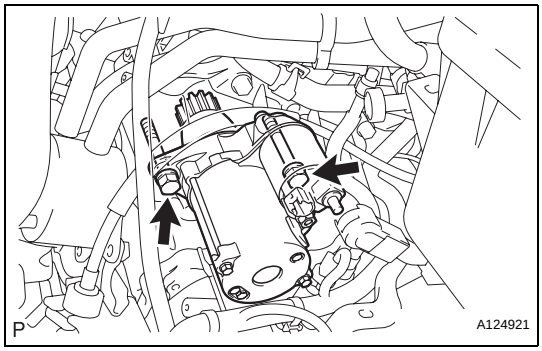

12. INSTALL STARTER ASSEMBLY

(a) Install the starter with the 2 bolts.
Torque: 37 N*m (377 kgf*cm, 27 ft.*lbf)

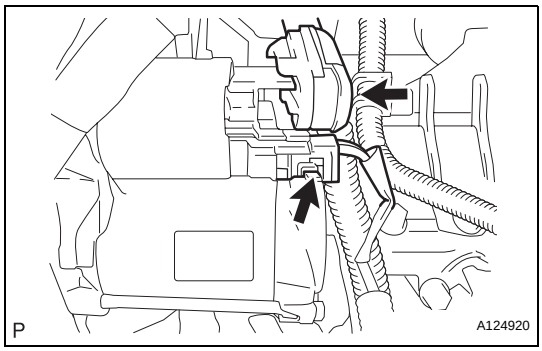

(b) Connect the starter wire with the nut.
Torque: 13 N*m (133 kgf*cm, 10 ft.*lbf)
(c) Connect the starter connector.
(d) Install the terminal nut and cover the nut with the cap.
Torque: 9.8 N*m (100 kgf*cm, 7 in.*lbf)

13. INSTALL ENGINE ASSEMBLY WITH TRANSAXLE

(a) Install the engine with transaxle. (see page EM-105).

14. ADD AUTOMATIC TRANSAXLE FLUID
Fluid type:
Toyota Genuine ATF WS

15. INSPECT AUTOMATIC TRANSAXLE FLUID

(a) Inspect the automatic transaxle fluid (see page AX-102).

16. PERFORM RESET MEMORY

(a) Perform the RESET MEMORY procedures (A/T initialization) (see page AX-18).

AUTOMATIC TRANSAXLE ASSEMBLY

COMPONENTS

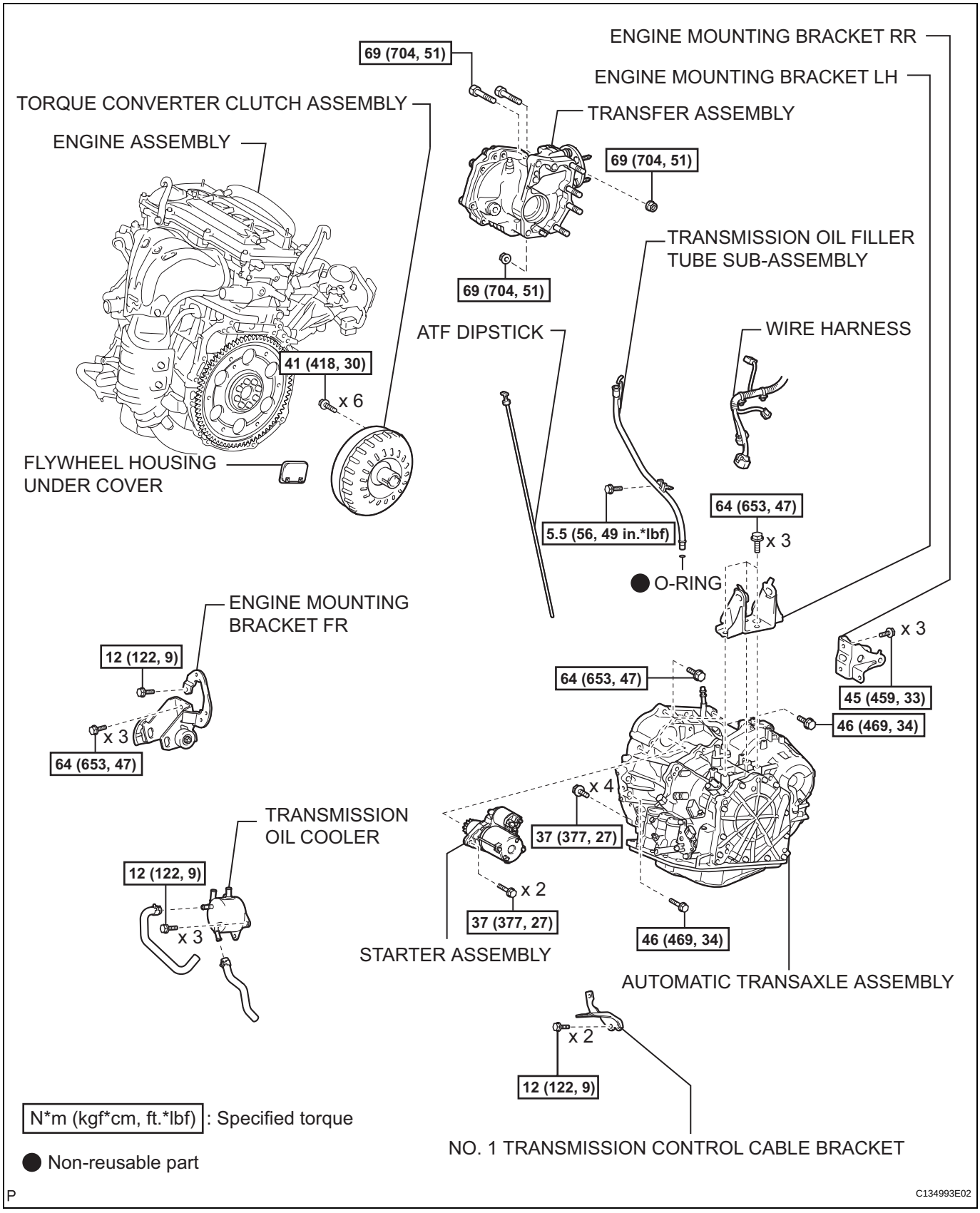

AX

REMOVAL

1. REMOVE ENGINE ASSEMBLY WITH TRANSAXLE

(a) Remove the engine with transaxle (see page EM-98).

2. DRAIN AUTOMATIC TRANSAXLE FLUID

(a) Remove the drain plug and gasket, and drain ATF.

(b) Install a new gasket and the drain plug.
Torque: 47 N*m (479 kgf*cm, 35 ft.*lbf)

3. REMOVE STARTER ASSEMBLY

(a) Disconnect the starter connector.

(b) Open the terminal cap, and remove the nut and disconnect the starter wire.

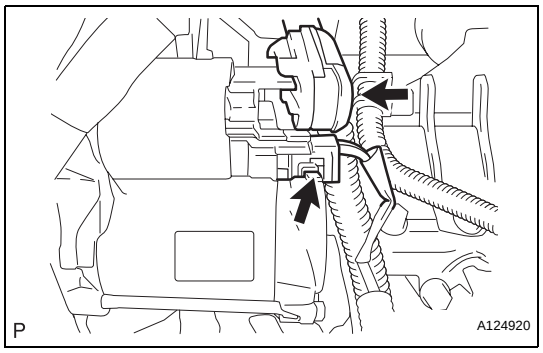

(c) Remove the 2 bolts and starter.

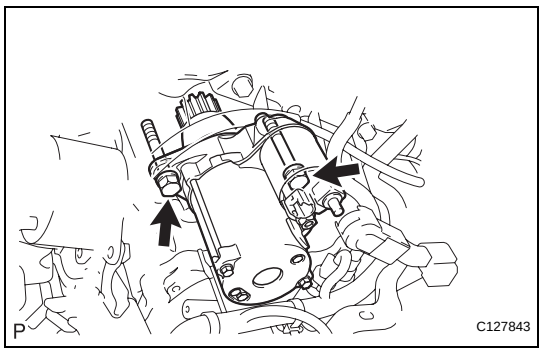

4. DISCONNECT WIRE HARNESS

(a) Disconnect the park/neutral position switch connector.

(b) Disconnect the transaxle wire connector.

(c) Disconnect the 2 speed sensor connectors.

(d) Disconnect the wire harness clamps.

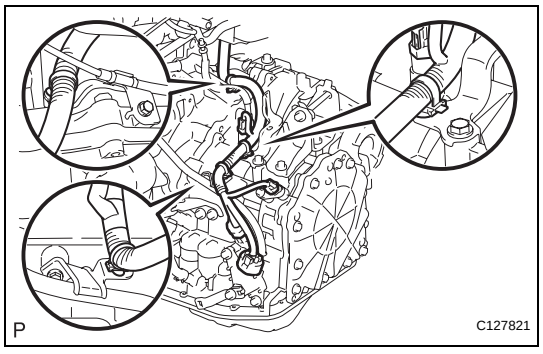

5. REMOVE TRANSMISSION OIL COOLER

(a) Remove the oil cooler (see page AX-127).

6. REMOVE ENGINE MOUNTING BRACKET RR

(a) Remove the 3 bolts and mounting bracket.

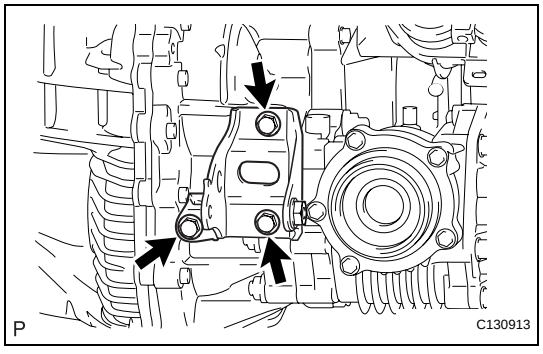

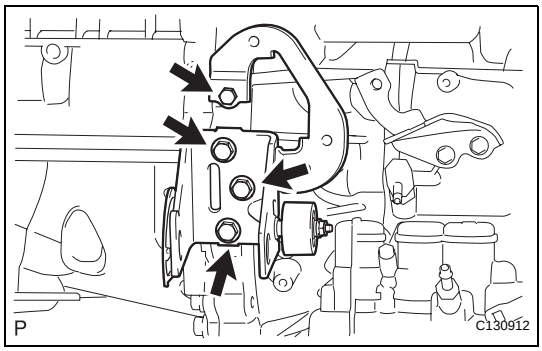

7. REMOVE ENGINE MOUNTING BRACKET FR

(a) Remove the 4 bolts and mounting bracket.

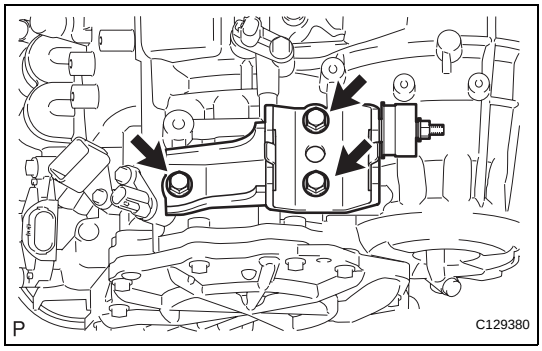

8. REMOVE ENGINE MOUNTING BRACKET LH

(a) Remove the 3 bolts and mounting bracket.

9. REMOVE TRANSFER ASSEMBLY

(a) Remove the transfer (see page TF-59).

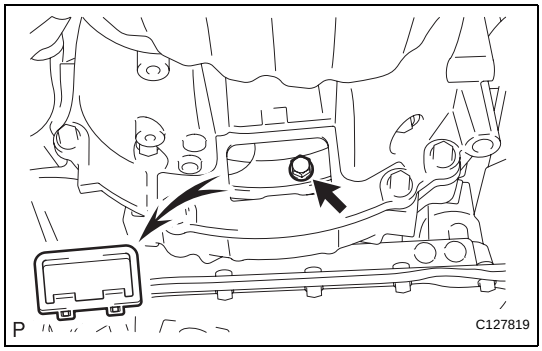

10. REMOVE AUTOMATIC TRANSAXLE ASSEMBLY

(a) Remove the flywheel housing under cover.

(b) Turn the crankshaft to gain access and remove the 6 bolts while holding the crankshaft pulley bolt with a wrench.

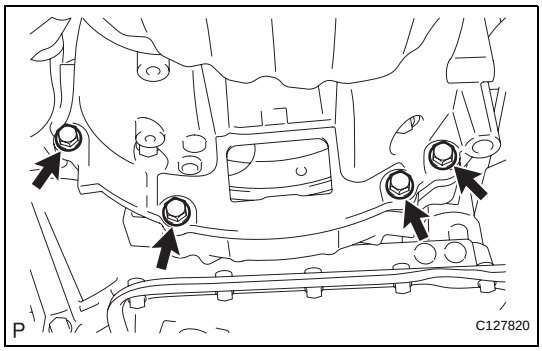

(c) Remove the 4 lower side mounting bolts.

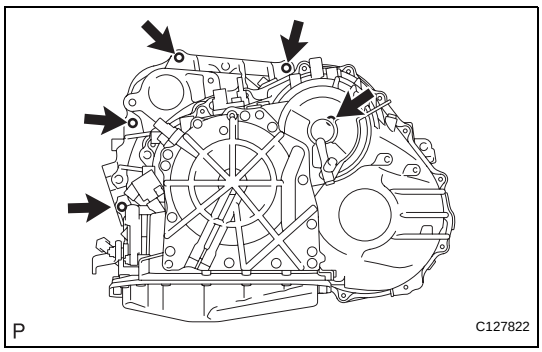

(d) Remove the 5 upper side mounting bolts.

(e) Separate and remove the automatic transaxle.

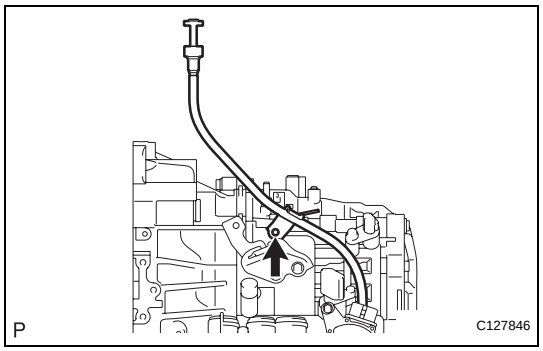

11. REMOVE TRANSMISSION OIL FILLER TUBE SUB-ASSEMBLY

(a) Remove the ATF dipstick.

(b) Remove the bolt and oil filler tube.

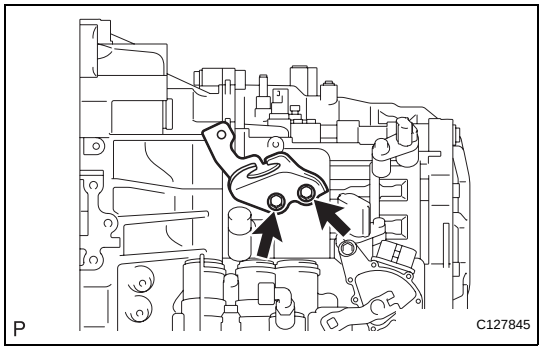

12. REMOVE NO. 1 TRANSMISSION CONTROL CABLE BRACKET

(a) Remove the 2 bolts and cable bracket.

13. REMOVE TORQUE CONVERTER CLUTCH ASSEMBLY

AUTOMATIC TRANSAXLE FLUID

ON-VEHICLE INSPECTION

1. CHECK TRANSAXLE FLUID LEVEL

HINT:

Drive the vehicle so that the engine and transaxle are at normal operating temperature.

Fluid temperature:

70 to 80°C (158 to 176°F)

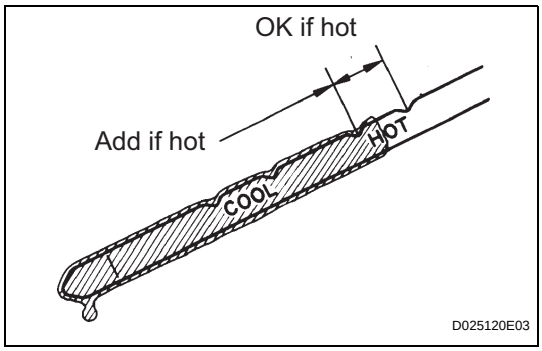

(a) Park the vehicle on a level surface and set the parking brake.

(b) With the engine idling and the brake pedal depressed, move the shift lever to each position from P to L position, and return it to the P position.

(c) Take out the ATF dipstick and wipe it clean.

(d) Fully push the dipstick back into the pipe.

(e) Take it out and check that the fluid level is at the HOT position.

If there are leaks, it is necessary to repair or replace O-rings, FIPGs, oil seals, plugs and/or other parts.

DEFINITION OF TERMS

Term	Definition
Monitor description	Description of what the ECM monitors and how it detects malfunctions (monitoring purpose and its details).
Related DTCs	Diagnostic code.
Typical enabling condition	Preconditions that allow the ECM to detect malfunctions. With all preconditions satisfied, the ECM sets the DTC when the monitored value(s) exceeds the malfunction threshold(s).
Sequence of operation	The priority order that is applied to monitoring, if multiple sensors and components are used to detect the malfunction. While another sensor is being monitored, the next sensor or component will not be monitored.
Required sensor/Components	The sensors and components that are used by the ECM to detect malfunctions.
Frequency of operation	The number of times that the ECM checks for malfunctions per driving cycle. "Once per driving cycle" means that the ECM detects malfunction only 1 time during a single driving cycle. "Continuous" means that the ECM detects a malfunction every time the enabling condition is met.
Duration	The minimum time that the ECM must sense a continuous deviation in the monitored value(s) before setting a DTC. This timing begins after the "typical enabling conditions" are met.
Malfunction thresholds	Beyond this value, the ECM will conclude that there is a malfunction and set a DTC.
MIL operation	MIL illumination timing after a defect is detected. "Immediate" means that the ECM illuminates the MIL the instant the ECM determines that there is a malfunction. "2 driving cycle" means that the ECM illuminates the MIL if the same malfunction is detected again in the 2nd driving cycle.
Component operating range	Normal operation range of sensors and solenoids under normal driving conditions. Use these ranges as a reference. They cannot be used to judge if a sensor or solenoid is defective or not.

PARTS LOCATION

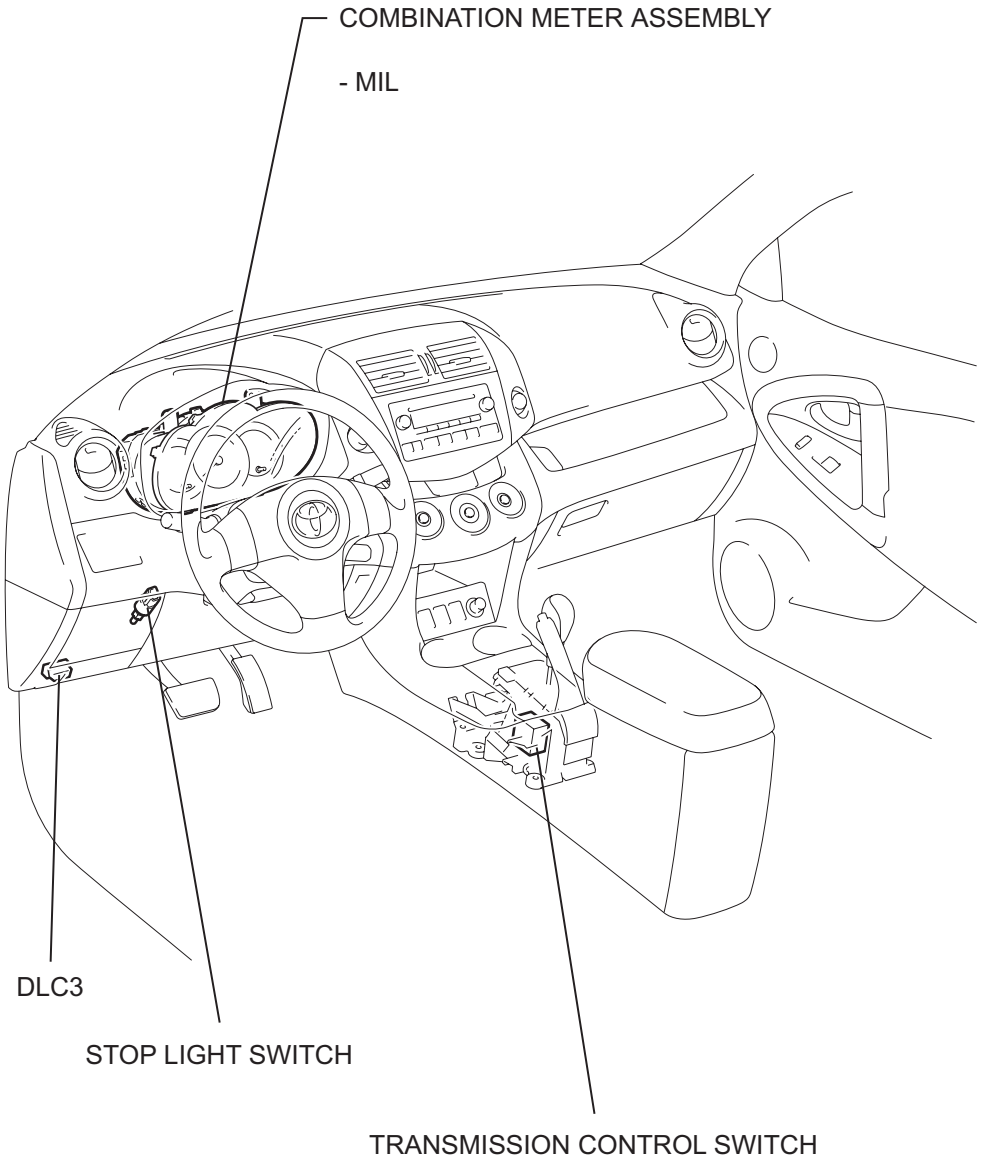

C127571E01

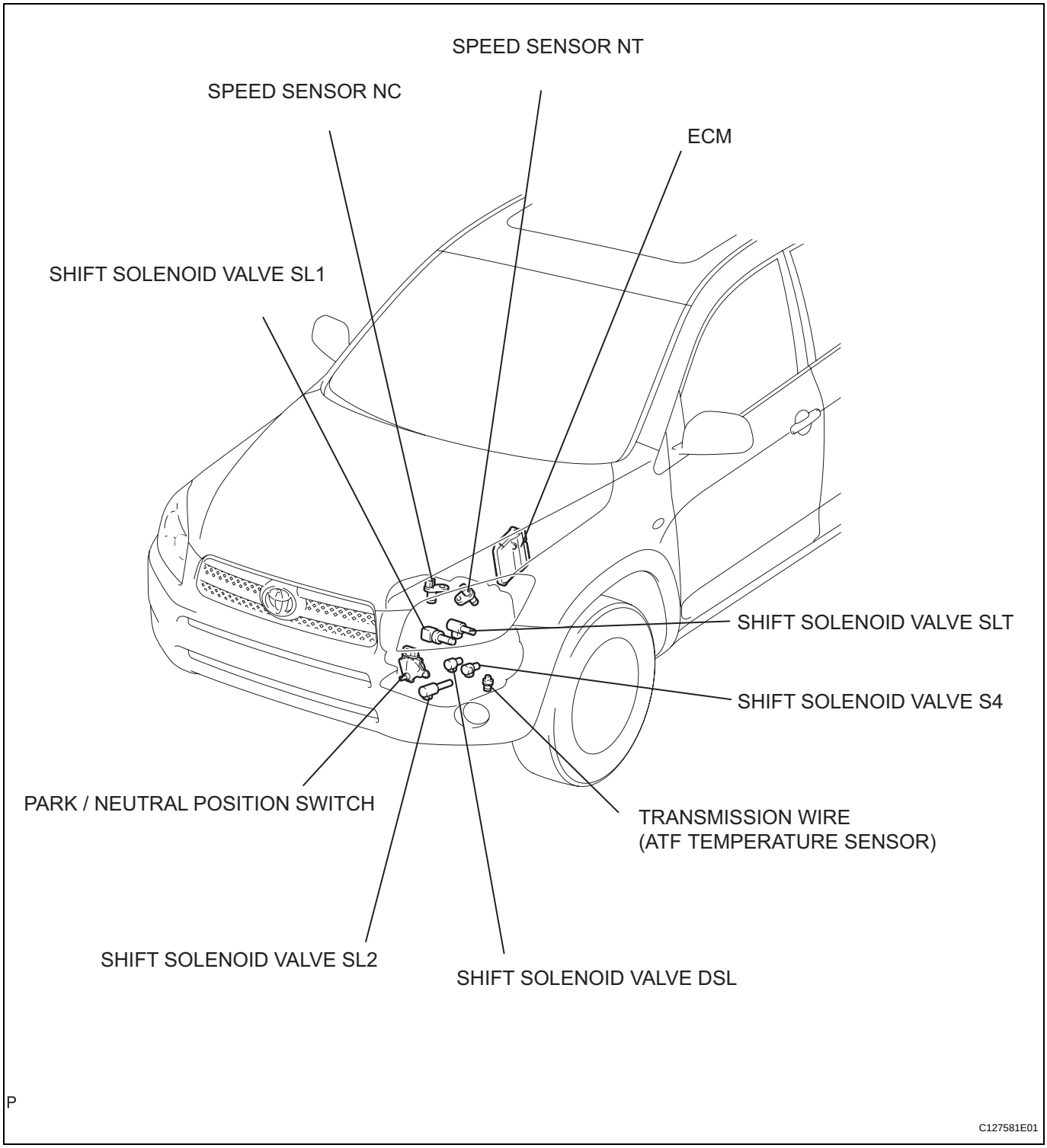
SPEED SENSOR NT
SPEED SENSOR NC
ECM
SHIFT SOLENOID VALVE SL1
SHIFT SOLENOID VALVE SLT
SHIFT SOLENOID VALVE S4
PARK / NEUTRAL POSITION SWITCH
TRANSMISSION WIRE
(ATF TEMPERATURE SENSOR)
SHIFT SOLENOID VALVE SL2
SHIFT SOLENOID VALVE DSL
P
C127581E01

SYSTEM DIAGRAM

The configuration of the electronic control system in the U140F automatic transaxle is as shown in the following chart.

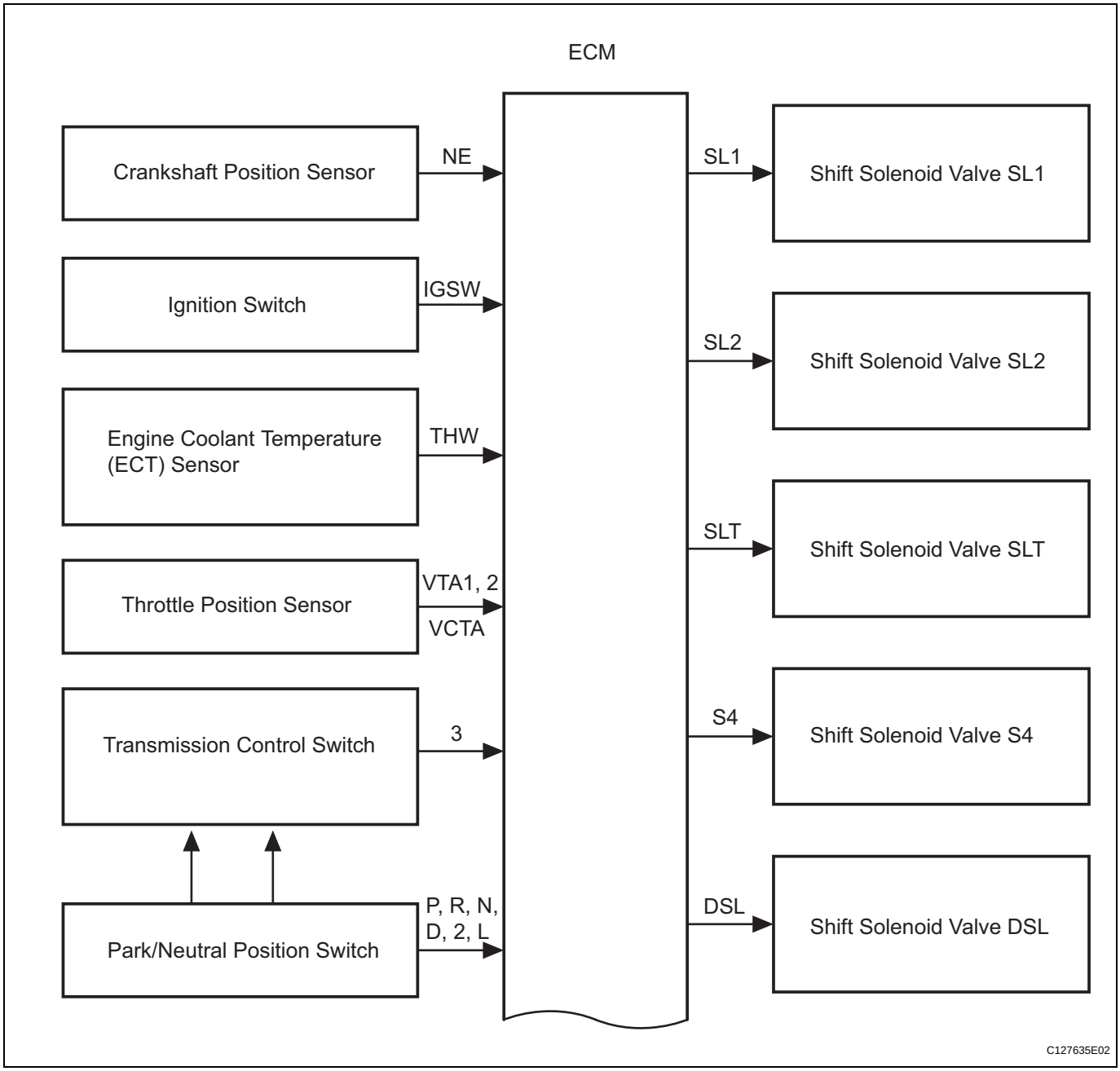

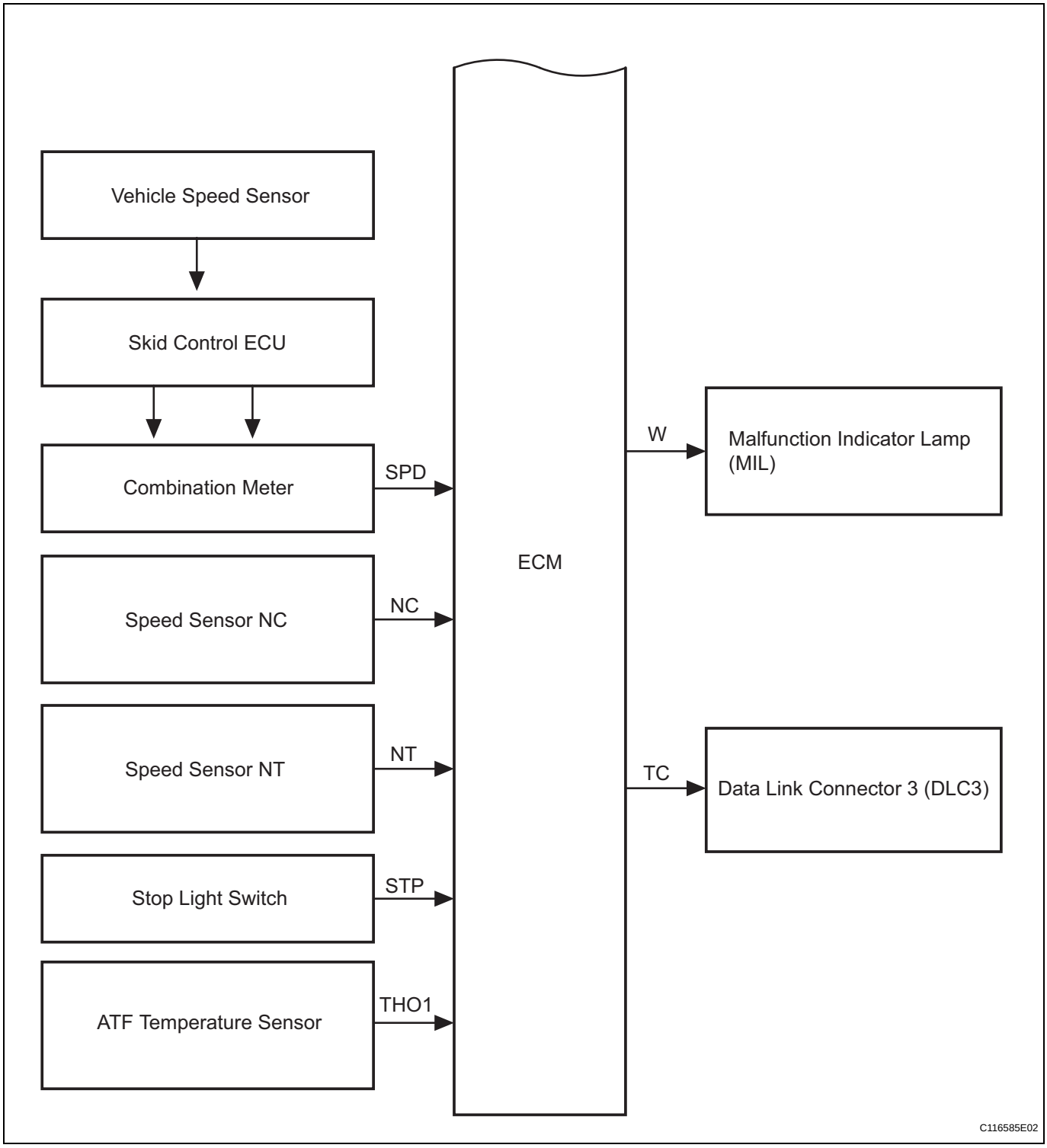
Vehicle Speed Sensor
Skid Control ECU
Combination Meter
Speed Sensor NC
Speed Sensor NT
Stop Light Switch
ATF Temperature Sensor
SPD
NC
NT
STP
THO1
ECM
W
Malfunction Indicator Lamp (MIL)
TC
Data Link Connector 3 (DLC3)
C116585E02

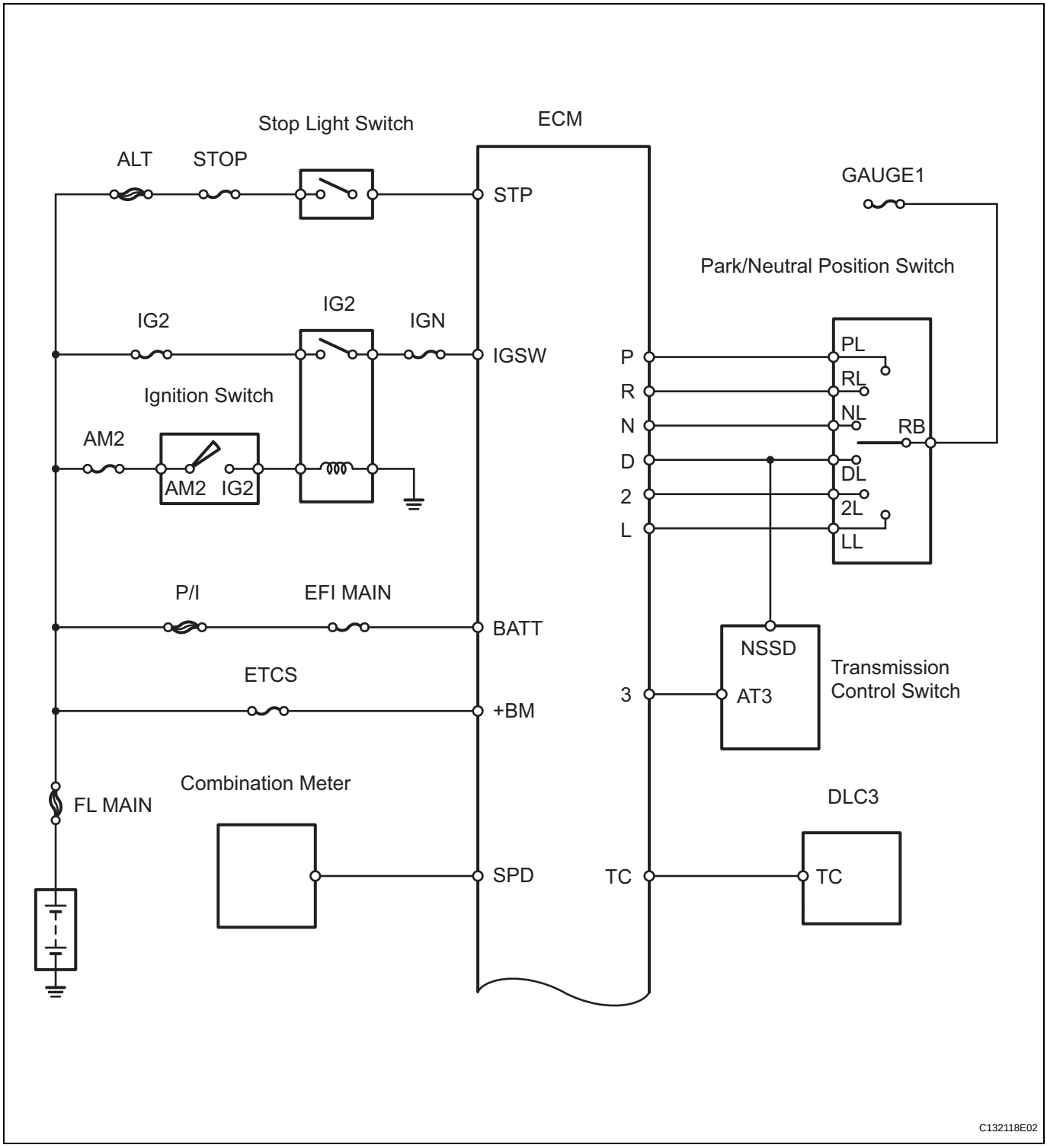
Stop Light Switch
ECM
ALT
STOP
STP
GAUGE1
Park/Neutral Position Switch
IG2
IG2
IGN
IGSW
P
R
N
D
2
L
PL
RL
NL
RB
DL
2L
LL
Ignition Switch
AM2
AM2
IG2
P/I
EFI MAIN
BATT
NSSD
Transmission
Control Switch
ETCS
+BM
3
AT3
Combination Meter
FL MAIN
DLC3
SPD
TC
TC
C132118E02

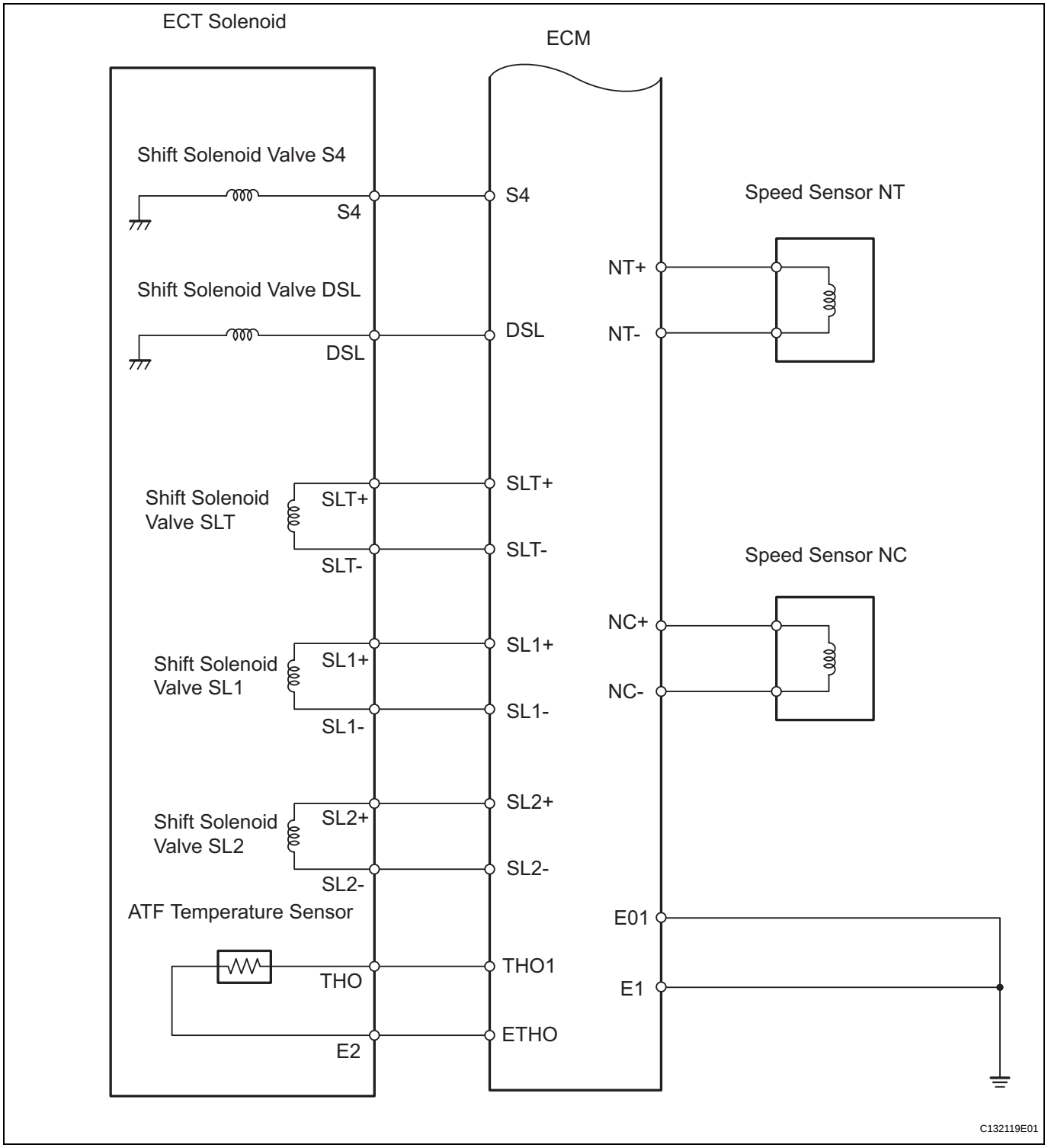
ECT Solenoid
ECM
Shift Solenoid Valve S4
S4
S4
Shift Solenoid Valve DSL
DSL
DSL
Shift Solenoid Valve SLT
SLT+
SLT-
SLT+
SLT-
Shift Solenoid Valve SL1
SL1+
SL1-
SL1+
SL1-
Shift Solenoid Valve SL2
SL2+
SL2-
SL2+
SL2-
ATF Temperature Sensor
THO
E2
THO1
ETHO
Speed Sensor NT
NT+
NT-
Speed Sensor NC
NC+
NC-
E01
E1
C132119E01

SYSTEM DESCRIPTION

1. SYSTEM DESCRIPTION

(a) The Electronic Controlled Automatic Transaxle (ECT) is an automatic transaxle that electronically controls shift timing using the Engine Control Module (ECM). The ECM detects electrical signals that indicate engine and driving conditions, and controls the shift point based on driver habits and road conditions. As a result, fuel efficiency and power transaxle performance are improved.
Shift shock is reduced by controlling the engine and transaxle simultaneously.
In addition, the ECT has the following features:

- Diagnostic function.
- Fail-safe function when a malfunction occurs.

HOW TO PROCEED WITH TROUBLESHOOTING

HINT:

- The ECM of this system is connected to the CAN and multiplex communication system. Therefore, before starting troubleshooting, make sure to check that there is no trouble in the CAN and multiplex communication systems.
- *: Use the intelligent tester.

1	VEHICLE BROUGHT TO WORKSHOP

NEXT

2	CUSTOMER PROBLEM ANALYSIS

NEXT

3	INSPECT BATTERY VOLTAGE

Standard voltage:
11 to 14 V

If the voltage is below 11 V, recharge or replace the battery before proceeding.

NEXT

4	CONNECT INTELLIGENT TESTER TO DLC3*

NEXT

5	CHECK AND CLEAR DTCS AND FREEZE FRAME DATA*

(a) Refer to the DTC CHECK / CLEAR (see page AX-29).

NEXT

6	VISUAL INSPECTION

NEXT

7	SETTING CHECK MODE DIAGNOSIS*

(a) Refer to the CHECK MODE PROCEDURE (see page AX-30).

NEXT

8	PROBLEM SYMPTOM CONFIRMATION

(a) Refer to the ROAD TEST (see page AX-12).
Result

Result	Proceed to
Symptom does not occur	A
Symptom occurs	B

B → GO TO STEP 10

A

9	SYMPTOM SIMULATION

(a) Refer to the ELECTRONIC CIRCUIT INSPECTION PROCEDURE (see page IN-37).

NEXT

10	DTC CHECK*

(a) Refer to the DTC CHECK / CLEAR (see page AX-29).
Result

Result	Proceed to
DTC is not output	A
DTC is output	B

B → GO TO STEP 18

A

11	BASIC INSPECTION

(a) Refer to the AUTOMATIC TRANSMISSION FLUID (see page AX-102).
(b) Refer to the PARK/NEUTRAL POSITION SWITCH (see page AX-108).
(c) Refer to the FLOOR SHIFT ASSEMBLY (see page AX-136).

NG → GO TO STEP 21

OK

AX

12	MECHANICAL SYSTEM TESTS

(a) Refer to the MECHANICAL SYSTEM TESTS (see page AX-15).

NG → GO TO STEP 17

OK

13 HYDRAULIC TEST

(a) Refer to the HYDRAULIC TEST (see page AX-16).

NG → GO TO STEP 17

OK

14 MANUAL SHIFTING TEST

(a) Refer to the MANUAL SHIFTING TEST (see page AX-17).

NG → GO TO STEP 16

OK

15 PROBLEM SYMPTOMS TABLE CHAPTER 1

(a) Refer to the PROBLEM SYMPTOMS TABLE (see page AX-21).

NG → GO TO STEP 19

OK

16 PROBLEM SYMPTOMS TABLE CHAPTER 2

(a) Refer to the PROBLEM SYMPTOMS TABLE (see page AX-21).

NEXT

17 PART INSPECTION

NG → GO TO STEP 21

OK

18 DTC CHART

(a) Refer to the DIAGNOSTIC TROUBLE CODE CHART (see page AX-35).

NEXT

19	CIRCUIT INSPECTION

NEXT

20	IDENTIFICATION OF PROBLEM

NEXT

21	REPAIR OR REPLACE

NEXT

22	CONFIRMATION TEST

NEXT

END

ROAD TEST

1. PROBLEM SYMPTOM CONFIRMATION

(a) Based on the result of the customer problem analysis, try to reproduce the symptoms. If the problem is that the transaxle does not shift up, shift down, or the shift point is too high or too low, conduct the following road test referring to the automatic shift schedule and simulate the problem symptoms.

2. ROAD TEST

NOTICE:

Perform the test at the normal operating ATF temperature of 50 to 80°C (122 to 176°F).

(a) D position test

Move the shift lever to D and fully depress the accelerator pedal. Check the following:

(1) Check up-shift operation.

Check that the 1 → 2, 2 → 3 and 3 → O/D up-shifts take place at the shift point shown in the automatic shift schedule (see page SS-55).

HINT:

O/D Gear Up-shift Prohibition Control

- Engine coolant temperature is 55°C (131°F) or less and vehicle speed is at 70 km/h (43 mph) or less.
- ATF temperature is 5°C (41°F) or less.

O/D Gear Lock-up Prohibition Control

- Brake pedal is depressed.
- Accelerator pedal is released.
- Engine coolant temperature is 60°C (140°F) or less.

(2) Check for shift shock and slip.

Check for shock and slip at the 1 → 2, 2 → 3 and 3 → O/D up-shifts.

(3) Check for abnormal noise and vibration.

Check for abnormal noise and vibration when up-shifting from 1 → 2, 2 → 3 and 3 → O/D while driving with the shift lever on D, and check while driving in the lock-up condition.

HINT:

The check for the cause of abnormal noise and vibration must be done thoroughly as it could also be due to loss of balance in the differential, torque converter clutch, etc.

(4) Check kick-down operation.

While driving the vehicle in the 2nd, 3rd and O/D gears with the shift lever on D, check that the possible kick-down vehicle speed limits for 2 → 1, 3 → 2 and O/D → 3 kick-downs conform to those indicated in the automatic shift schedule (see page SS-55).

(5) Check for abnormal shock and slip at kick-down.

(6) Check the lock-up mechanism.
- Drive the vehicle in the O/D gear with the shift lever on D. Maintain a steady speed (lock-up ON).
- Lightly depress the accelerator pedal and check that the engine speed does not change abruptly.

HINT:
- There is no lock-up function in the 1st and 2nd gear.
- If there is a sudden increase in engine speed, there is no lock-up.

(b) 3 position test

Move the shift lever to 3 and fully depress the accelerator pedal. Check the following:

(1) Check up-shift operation.
Check that the 1 → 2 and 2 → 3 up-shifts take place and that the shift point conforms to the automatic shift schedule (see page SS-55).

(2) Check engine braking.
While driving the vehicle in the 3rd gear with the shift lever on 3, release the accelerator pedal and check the engine braking effect.

(3) Check for abnormal noises during acceleration and deceleration, and for shock at up-shift and down-shift.

(c) 2 position test

Move the shift lever to 2 and fully depress the accelerator pedal. Check the following:

(1) Check up-shift operation.
Check that the 1 → 2 up-shift takes place and that the shift point conforms to the automatic shift schedule (see page SS-55).
HINT:
There is no O/D up-shift and lock-up when the shift lever is on 2.

(2) Check engine braking.
While driving the vehicle in the 2nd gear with the shift lever on 2, release the accelerator pedal and check the engine braking effect.

(3) Check for abnormal noises during acceleration and deceleration, and for shock at up-shift and down-shift.

(d) L position test

Move the shift lever to L and fully depress the accelerator pedal. Check the following:

(1) Check that there is no up-shift.
While driving the vehicle with the shift lever on L, check that there is no up-shift to 2nd gear.
HINT:
There is no lock-up in L.

(2) Check engine braking.
While driving the vehicle with the shift lever on L, release the accelerator pedal and check the engine braking effect.

(3) Check for abnormal noises during acceleration and deceleration.

(e) R position test
Move the shift lever to R and lightly depress the accelerator pedal. Check that the vehicle moves backward without any abnormal noise or vibration.
CAUTION:
Before conducting this test, ensure that no people or obstacles are in the test area.

(f) P position test
Stop the vehicle on an incline (more than 5°). Then move the shift lever to P and release the parking brake. Check that the parking lock pawl holds the vehicle in place.

MECHANICAL SYSTEM TESTS

1. STALL SPEED TEST

HINT:

This test is to check the overall performance of the engine and transaxle.

NOTICE:

- **Do not perform the stall speed test longer than 5 seconds.**
- **To ensure safety, perform this test in an open and level area that provides good traction.**
- **The stall speed test should always be performed with at least 2 people. One person should observe the condition of the wheels and wheel chocks while the other is performing the test.**

(a) Connect the intelligent tester to the CAN VIM. Then connect the CAN VIM to the DLC3.

(b) Run the vehicle until the transmission fluid temperature has reached 50 to 80°C (122 to 176°F).

(c) Allow the engine to idle with the air conditioning OFF.

(d) Chock all 4 wheels.

(e) Set the parking brake and keep the brake pedal depressed firmly with your left foot.

(f) Move the shift lever to the D position.

(g) Depress the accelerator pedal as much as possible with your right foot.

(h) Read the engine rpm (stall speed) and release the accelerator pedal immediately.

Standard value:

2,150 to 2,450 rpm

Evaluation:

Test Result	Possible Cause
Stall speed is lower than standard value	• Stator one-way clutch is not operating properly • Torque converter is faulty (stall speed is less than standard value by 600 rpm or more) • Engine power may be insufficient
Stall speed is higher than standard value	• Line pressure is low • C1 clutch slipping • F3 one-way clutch is not operating properly • F4 one-way clutch is not operating properly

NOTICE:

Perform the test at the normal operating ATF temperature of 50 to 80°C (122 to 176°F).

2. SHIFT TIME LAG TEST

HINT:

This test is to check the condition of the direct clutch, forward clutch, 1st brake and reverse brake.

(a) Connect the intelligent tester to the CAN VIM. Then connect the CAN VIM to the DLC3.

(b) Run the vehicle until the transmission fluid temperature has reached 50 to 80°C (122 to 176°F).

(c) Allow the engine to idle with the air conditioning OFF.

(d) Set the parking brake and keep the brake pedal depressed firmly.
(e) Check the D range time lag.
  (1) Move the shift lever to N and wait for 1 minute.
  (2) Move the shift lever to D and measure the time until the shock is felt.
  (3) Repeat the 2 procedures above 3 times, and calculate the average time of the 3 tests.
(f) Check the R range time lag.
  (1) Move the shift lever to N and wait for 1 minute.
  (2) Move the shift lever to R and measure the time until the shock is felt.
  (3) Repeat the 2 procedures above 3 times, and calculate the average time of the 3 tests.

Standard value:

D range time lag is less than 1.2 seconds
R range time lag is less than 1.5 seconds

Evaluation:

Test Result	Possible Cause
D range time lag exceeds standard value	• Line pressure is low • C1 clutch is worn • F3 one-way clutch is not operating properly • F4 one-way clutch is not operating properly
R range time lag exceeds standard value	• Line pressure is low • C3 clutch is worn • B4 brake is worn • F1 one-way clutch is not operating properly

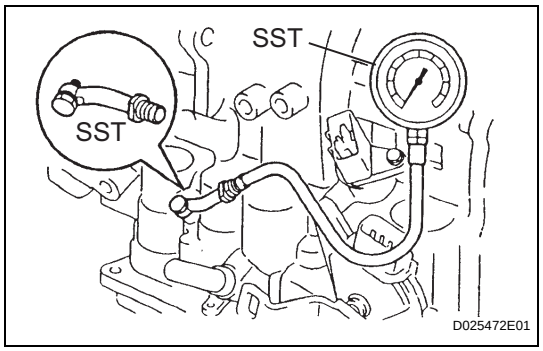

HYDRAULIC TEST

1. MEASURE LINE PRESSURE

NOTICE:

- **Perform the test at the normal operating ATF temperature: 50 to 80°C (122 to 176°F).**
- **The line pressure test should always be performed with at least 2 people. One person should observe the condition of the wheels or wheel chocks while the other is performing the test.**
- **Be careful to prevent SST's hose from interfering with the exhaust pipe.**
- **This test must be performed after checking and adjusting the engine.**
- **Perform the test with the A/C OFF.**
- **When conducting the stall test, do not continue for more than 10 seconds.**

(a) Warm up the ATF.
(b) Remove the test plug on the transaxle case center right side and connect SST.

SST 09992-00095 (09992-00231, 09992-00271)

(c) Fully apply the parking brake and chock the 4 wheels.
(d) Start the engine and check the idling speed.
(e) Keep your left foot firmly on the brake pedal and move the shift lever to D.
(f) Measure the line pressure when the engine is idling.

(g) Depress the accelerator pedal as much as possible with your right foot. Quickly read the highest line pressure reading when the engine speed reaches stall speed.
(h) Perform the measure line pressure test again with the shift lever on R.

Specified line pressure:

Condition	Shift Lever on D	Shift Lever on R
Idling	372 to 412 kPa (3.8 to 4.2 kgf/cm^2, 54 to 60 psi)	672 to 742 kPa (6.9 to 7.6 kgf/cm^2, 97 to 108 psi)
Stall	931 to 1,031 kPa (9.5 to 10.5 kgf/cm^2, 135 to 150 psi)	1,768 to 1,968 kPa (18.0 to 20.0 kgf/cm^2, 256 to 285 psi)

Evaluation:

Problem	Possible Cause
Measured values at all positions are higher than specified	• Shift solenoid valve SLT defective • Regulator valve defective
Measured values at all positions are lower than specified	• Shift solenoid valve SLT defective • Regulator valve defective • Oil pump defective • U/D (underdrive) direct clutch defective
Pressure is low when shift lever is on D only	• D position circuit fluid leak • Forward clutch defective
Pressure is low when shift lever is on R only	• R position circuit fluid leak • Direct clutch defective • 1st and reverse brake defective

MANUAL SHIFTING TEST

1. MANUAL SHIFTING TEST

HINT:

- Through this test, it can be determined whether the trouble occurs in the electrical circuit or if it is a mechanical problem in the transaxle.
- If any abnormalities are found in the following test, the problem is in the transaxle itself.

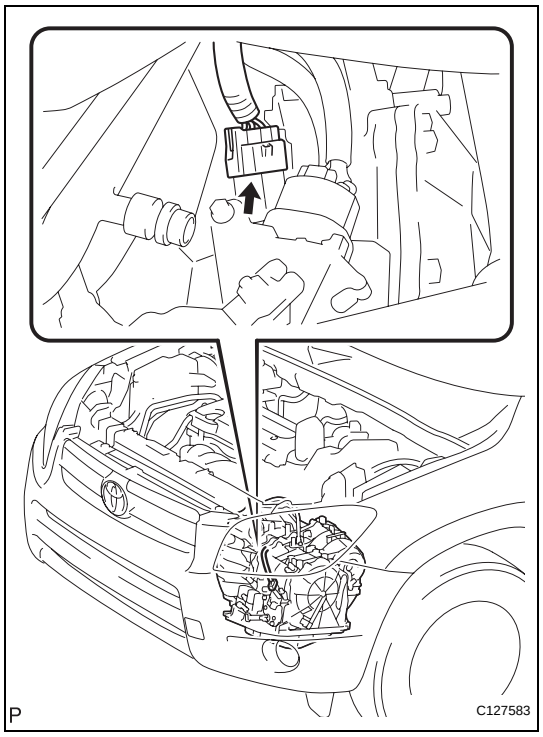

(a) Disconnect the connector of the transmission wire.
HINT:
It is possible to deactivate the electrical shift control by disconnecting the transmission wire. The gear positions can then be changed mechanically with the shift lever.

(b) Drive with the transmission wire disconnected. Move the shift lever to each position to check whether the gear position changes as shown in the table below.

Shift Lever Position	Gear Position
D	3rd
2	3rd
L	3rd
R	R
P	P

(c) Connect the connector of the transmission wire.

(d) Clear the DTC (see page AX-29).

INITIALIZATION

1. RESET MEMORY

NOTICE:

- **Perform the RESET MEMORY procedures (A/T initialization) when replacing the automatic transaxle assembly, engine assembly or ECM.**
- **RESET MEMORY can be performed only with the intelligent tester.**

HINT:

The ECM memorizes the vehicle conditions when the ECT controls the automatic transaxle assembly and engine assembly. Therefore, when the automatic transaxle assembly, engine assembly, or ECM has been replaced, it is necessary to reset the memory so that the ECM can memorize the new information.

The reset procedures are as follows.

(a) Turn the ignition switch OFF.

(b) Connect the intelligent tester to the CAN VIM. Then connect the CAN VIM to the DLC3.

(c) Turn the ignition switch ON and turn the tester ON.

(d) Enter the following menus: DIAGNOSIS / ENHANCED OBD II.

(e) Perform the reset memory procedures from the Engine menu.

CAUTION:

After performing the RESET MEMORY procedures, be sure to perform the ROAD TEST (see page AX-12) as described earlier.

HINT:

The ECM learns through the ROAD TEST.

Tester Menu Flow:

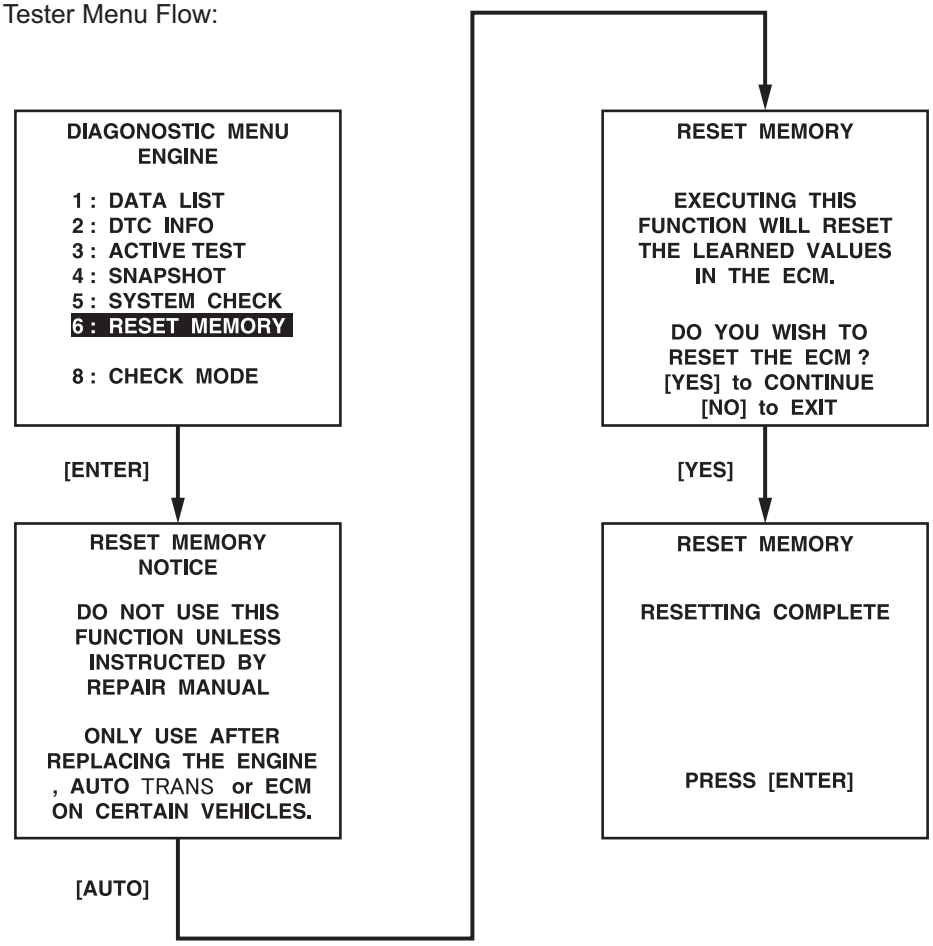

P C115865E02

MONITOR DRIVE PATTERN

1. TEST MONITOR DRIVE PATTERN FOR ECT

CAUTION:

Perform this drive pattern on a level surface and strictly observe the posted speed limits and traffic laws while driving.

HINT:

Performing this drive pattern is one method to simulate the ECT's malfunction detection conditions.

The DTCs may not be detected through ordinary, everyday driving. Also, DTCs may not be detected through this drive pattern.

(a) Preparation for driving

(1) Warm up the engine sufficiently (engine coolant temperature is 60°C (140°F) or higher).

(2) Drive the vehicle when the atmospheric temperature is -10°C (14°F) or higher. Malfunction is not detected when the atmospheric temperature is less than -10°C (14°F).

(b) Drive pattern

(1) Drive the vehicle through all the gears. Stop → 1st → 2nd → 3rd → O/D → O/D (lock-up ON).

(2) Repeat the above drive pattern 3 times or more.

NOTICE:

- **When using the intelligent tester, the monitor status can be found in "ENHANCED OBD II / DATA LIST" or under "CARB OBD II".**
- **In the event that the drive pattern must be interrupted (due to traffic conditions or other factors), the drive pattern can be resumed and, in most cases, the monitor can be completed.**

CAUTION:

Perform this drive pattern on a level road as much as possible and strictly observe the posted speed limits and traffic laws while driving.

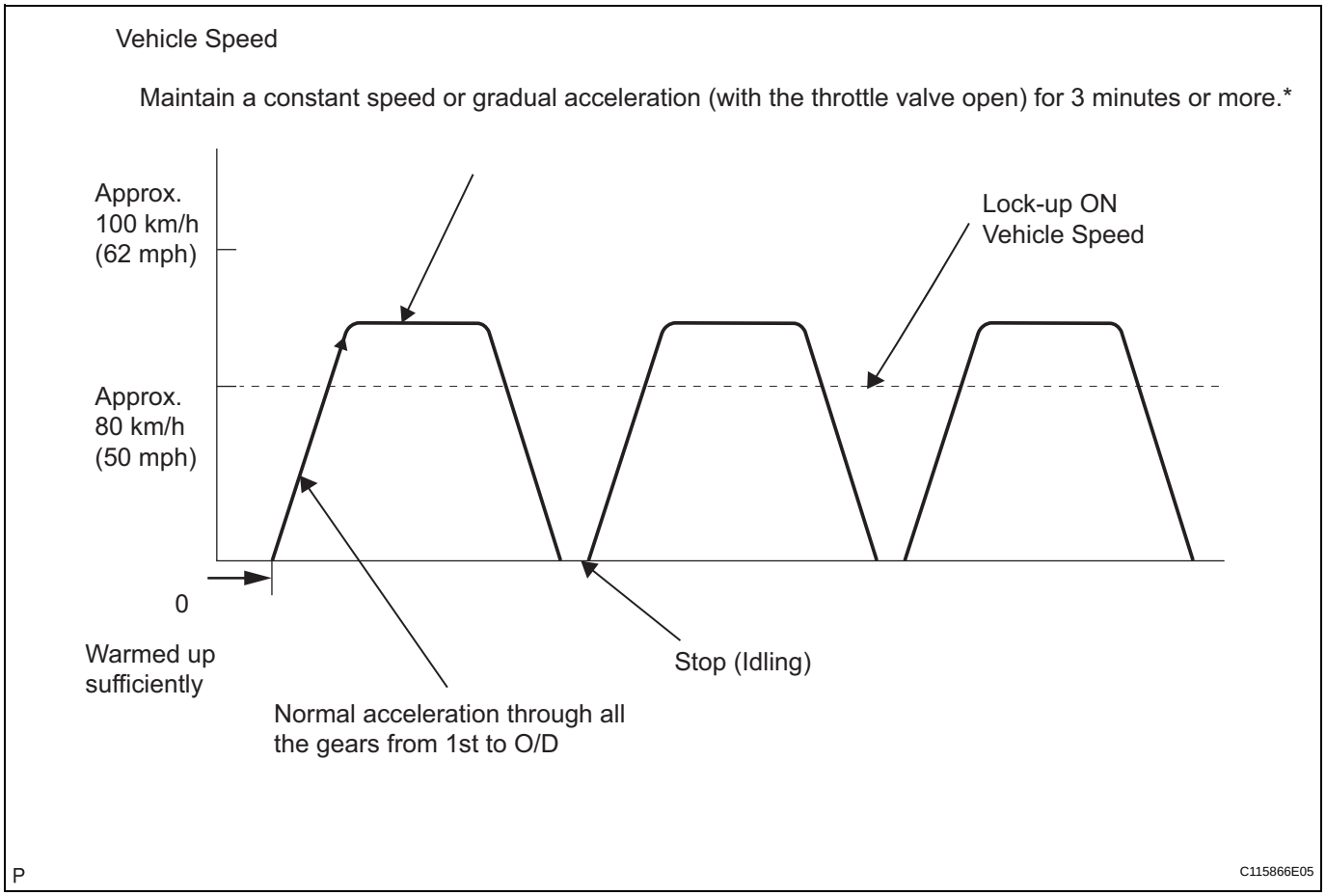

HINT:
*: Drive at such a speed in the uppermost gear to engage lock-up. The vehicle can be driven at a speed lower than the speed shown in the above diagram under the lock-up condition.

NOTICE:

It is necessary to drive the vehicle for approximately 30 minutes to detect DTC P0711 (Transmission fluid temperature sensor "A" performance).

PROBLEM SYMPTOMS TABLE

HINT:

- Use the table below to help determine the cause of the problem symptom. The potential causes of the symptoms are listed in order of probability in the "Suspected area" column of the table. Check each symptom by checking the suspected areas in the order they are listed. Replace parts as necessary.
- The Matrix Chart is divided into 2 chapters. When troubleshooting, check Chapter 1 first. If instructions are given in Chapter 1 to proceed to 2, proceed as instructed.
- If the instruction "Proceed to next circuit inspection shown in problem symptoms table" is given in the flowchart for each circuit, proceed to the next suspected area in the table.
- If the problem still occurs even though there are no malfunctions in any of the circuits, check the ECM and replace it if necessary.

CHAPTER 1: ELECTRICAL CIRCUIT MATRIX CHART

Symptom	Suspected area	See page
No up-shift (1st -> 2nd)	ECM	IN-37
No up-shift (2nd -> 3rd)	ECM	IN-37
No up-shift (3rd -> O/D)	1. Park/Neutral position switch circuit*	AX-39
	2. ECM	IN-37
No down-shift (O/D -> 3rd)	ECM	IN-37
No down-shift (3rd -> 2nd)	ECM	IN-37
No down-shift (2nd -> 1st)	ECM	IN-37
No lock-up or no lock-up off	ECM	IN-37
Shift point too high or too low	ECM	IN-37
Up-shift to O/D from 3rd while shift lever is on 3	1. Park/Neutral position switch circuit*	AX-39
	2. ECM	IN-37
Up-shift to O/D from 3rd while engine is cold	1. Engine coolant temp. sensor circuit*	ES-51
	2. ECM	IN-37
Harsh engagement (N -> D)	ECM	IN-37
Harsh engagement (lock-up)	ECM	IN-37
Harsh engagement (any driving position)	ECM	IN-37
Poor acceleration	ECM	IN-37
Engine stalls when starting off or stopping	ECM	IN-37
Malfunction in shifting	1. Park/Neutral position switch circuit*	AX-39
	2. ECM	IN-37

HINT:

*: When the circuit is defective, a DTC may be output.

CHAPTER 2: ON-VEHICLE REPAIR AND OFF-VEHICLE REPAIR

Symptom	Suspected area	See page
Vehicle does not move in all positions other than P and N	1. Manual valve	AX-155
	2. Primary regulator valve	AX-155
	3. Front and rear planetary gear	AX-155
	4. U/D planetary gear	AX-155
	5. F2 U/D one-way clutch	AX-155
	6. C1 forward clutch	AX-155
	7. B3 U/D brake	AX-155

Symptom	Suspected area	See page
Vehicle does not move with shift lever on R	1. Front and rear planetary gear	AX-155
	2. U/D planetary gear	AX-155
	3. C2 direct clutch	AX-155
	4. C3 U/D brake	AX-155
	5. B2 1st and reverse brake	AX-155
No up-shift (1st -> 2nd)	1. Valve body assembly	AX-118
	2. F1 No. 1 one-way clutch	AX-155
	3. B1 2nd brake	AX-155
No up-shift (2nd -> 3rd)	1. Valve body assembly	AX-118
	2. C2 direct clutch	AX-155
No up-shift (3rd -> O/D)	1. 3-4 shift valve	AX-155
	2. C3 U/D clutch	AX-155
No down-shift (O/D -> 3rd)	3-4 shift valve	AX-155
No down-shift (3rd -> 2nd)	Valve body assembly	AX-118
No down-shift (2nd -> 1st)	Valve body assembly	AX-118
No lock-up or no lock-up off	1. Lock-up relay valve	AX-155
	2. Torque converter clutch	AX-153
Harsh engagement (N -> D)	1. C1 accumulator	AX-155
	2. Valve body assembly	AX-118
	3. C1 forward clutch	AX-155
	4. F2 U/D one-way clutch	AX-155
	5. F1 No. 1 one-way clutch	AX-155
Harsh engagement (N -> R)	1. Valve body assembly	AX-118
	2. C2 direct clutch	AX-155
	3. B2 1st and reverse brake	AX-155
Harsh engagement (Lock-up)	1. Lock-up relay valve	AX-155
	2. Torque converter clutch	AX-153
Harsh engagement (2nd -> 3rd)	Valve body assembly	AX-118
Harsh engagement (3rd -> O/D)	Valve body assembly	AX-118
Harsh engagement (O/D -> 3rd)	Valve body assembly	AX-118
Slip or shudder (forward position, after warm-up)	1. Oil strainer	AX-118
	2. Torque converter clutch	AX-153
	3. C1 forward clutch	AX-155
	4. C2 direct clutch	AX-155
	5. C3 U/D brake	AX-155
	6. F1 No. 1 one-way clutch	AX-155
	7. F2 U/D one-way clutch	AX-155
Slip or shudder (shift lever on R)	1. Oil strainer	AX-118
	2. C2 direct clutch	AX-155
	3. B2 1st and reverse brake	AX-155
Slip or shudder (1st)	F1 No. 1 one-way clutch	AX-155
Slip or shudder (2nd)	1. F2 U/D one-way clutch	AX-155
	2. B1 2nd brake	AX-155
Slip or shudder (3rd)	C2 direct clutch	AX-155
Slip or shudder (O/D)	C3 U/D clutch	AX-155
No engine braking (1st to 3rd/shift lever on D)	B3 U/D brake	AX-155
No engine braking (1st/shift lever on L)	B2 1st and reverse brake	AX-155
No engine braking (2nd/shift lever on 2)	B1 2nd brake	AX-155

Symptom	Suspected area	See page
Poor acceleration (all positions)	1. Torque converter clutch	AX-153
	2. U/D planetary gear	AX-155
Poor acceleration (O/D)	1. C3 U/D clutch	AX-155
	2. U/D planetary gear	AX-155
Large shift shock or engine stalls when starting off or stopping	Torque converter clutch	AX-153
No kick-down	Valve body assembly	AX-118

TERMINALS OF ECM

1. CHECK ECM

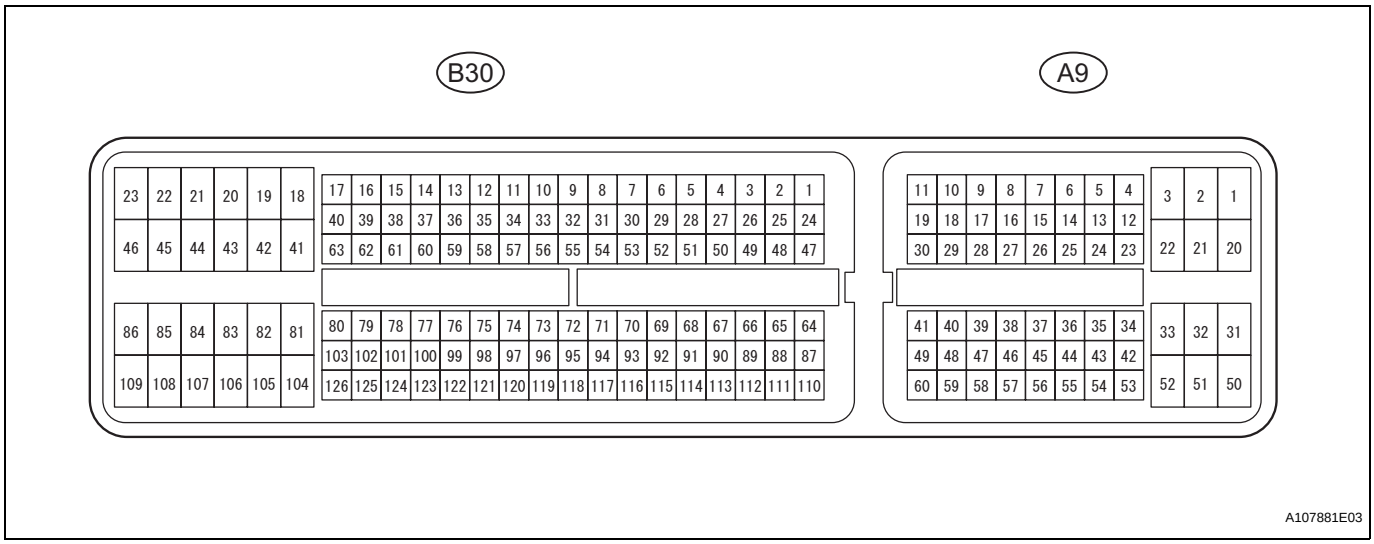

(a) Measure the voltage of the ECM connector.
HINT:
Each ECM terminal's standard voltage is shown in the table below.
In the table, first follow the information under "Condition". Look under "Symbols (Terminal No.)" for the terminals to be inspected. The standard voltage between the terminals is shown under "Specified Condition".
Use the illustration above as a reference for the ECM terminals.

Symbols (Terminal No.)	Wiring Color	Terminal Description	Condition	Specified Condition
STAR (B30-52) - E1 (B30-104)	W - BR	Park/Neutral position switch signal	Ignition switch ON and shift lever on P or N	Below 2 V
STAR (B30-52) - E1 (B30-104)	W - BR	Park/Neutral position switch signal	Ignition switch ON and shift lever not on P or N	10 to 14 V
P (B30-73) - E1 (B30-104)	L - BR	P shift position switch signal	Ignition switch ON and transfer shift lever on P	10 to 14 V
P (B30-73) - E1 (B30-104)	L - BR	P shift position switch signal	Ignition switch ON and transfer shift lever not on P	Below 1 V
R (B30-53) - E1 (B30-104)	R - BR	R shift position switch signal	Ignition switch ON and transfer shift lever on R	10 to 14 V
R (B30-53) - E1 (B30-104)	R - BR	R shift position switch signal	Ignition switch ON and transfer shift lever not on R	Below 1 V
N (B30-54) - E1 (B30-104)	Y - BR	N shift position switch signal	Ignition switch ON and transfer shift lever on N	10 to 14 V
N (B30-54) - E1 (B30-104)	Y - BR	N shift position switch signal	Ignition switch ON and transfer shift lever not on N	Below 1 V
D (B30-56) - E1 (B30-104)	B - BR	D shift position switch signal	Ignition switch ON and transfer shift lever on D or 3	10 to 14 V
D (B30-56) - E1 (B30-104)	B - BR	D shift position switch signal	Ignition switch ON and transfer shift lever not on D or 3	Below 1 V

Symbols (Terminal No.)	Wiring Color	Terminal Description	Condition	Specified Condition
3 (A9-26) - E1 (B30-104)	P - BR	3 shift position switch signal	Ignition switch ON and transfer shift lever on 3	10 to 14 V
3 (A9-26) - E1 (B30-104)	P - BR	3 shift position switch signal	Ignition switch ON and transfer shift lever not on 3	Below 1 V
2 (B30-55) - E1 (B30-104)	P - BR	2 shift position switch signal	Ignition switch ON and transfer shift lever on 2 and L	10 to 14 V
2 (B30-55) - E1 (B30-104)	P - BR	2 shift position switch signal	Ignition switch ON and transfer shift lever not on 2 and L	Below 1 V
L (B30-74) - E1 (B30-104)	LG - BR	L shift position switch signal	Ignition switch ON and transfer shift lever on L	10 to 14 V
L (B30-74) - E1 (B30-104)	LG - BR	L shift position switch signal	Ignition switch ON and transfer shift lever not on L	Below 1 V
STP (A9-36) - E1 (B30-104)	L - BR	Stop light switch signal	Brake pedal is depressed	Between 10 V and 14 V
STP (A9-36) - E1 (B30-104)	L - BR	Stop light switch signal	Brake pedal is released	Below 1 V
SL1+ (B30-57) - SL1- (B30-77)	V - P	SL1 solenoid signal	Engine idle speed	Pulse generation (see waveform 1)
SL1+ (B30-57) - SL1- (B30-77)	V - P	SL1 solenoid signal	Ignition switch ON	Pulse generation (see waveform 1)
SL1+ (B30-57) - SL1- (B30-77)	V - P	SL1 solenoid signal	1st gear	Pulse generation (see waveform 1)
SL1+ (B30-57) - SL1- (B30-77)	V - P	SL1 solenoid signal	Not on 1st gear	Below 1 V
SL2+ (B30-58) - SL2- (B30-59)	Y - L	SL2 solenoid signal	Engine idle speed	Pulse generation (see waveform 2)
SL2+ (B30-58) - SL2- (B30-59)	Y - L	SL2 solenoid signal	Ignition switch ON	Pulse generation (see waveform 2)
SL2+ (B30-58) - SL2- (B30-59)	Y - L	SL2 solenoid signal	1st or 2nd gear	Pulse generation (see waveform 2)
SL2+ (B30-58) - SL2- (B30-59)	Y - L	SL2 solenoid signal	3rd or O/D gear	Below 1 V
DSL (B30-79) - E01 (B30-45)	G - BR	DSL solenoid signal	Vehicle speed 65 km/h (40 mph), lock-up (ON to OFF)	Below 1 V
DSL (B30-79) - E01 (B30-45)	G - BR	DSL solenoid signal	Vehicle driving under lock-up position	Pulse generation (see waveform 3)
SLT+ (B30-76) - SLT- (B30-75)	R - GR	SLT solenoid signal	Engine idle speed	Pulse generation (see waveform 4)
S4 (B30-78) - E01 (B30-45)	W - BR	S4 solenoid signal	Ignition switch ON	Below 1 V
S4 (B30-78) - E01 (B30-45)	W - BR	S4 solenoid signal	O/D gear	10 to 14 V
S4 (B30-78) - E01 (B30-45)	W - BR	S4 solenoid signal	Not on O/D gear	Below 1 V
THO1 (B30-72) - ETHO (B30-95)	LG- BR	ATF temperature sensor signal	ATF temperature: 115°C (239°F) or more	Below 1.5 V
NT+ (B30-125) - NT- (B30-124)	W - R	Speed sensor (NT) signal	Vehicle speed 20 km/h (12 mph)	Pulse generation (see waveform 5)
NC+ (B30-101) - NC- (B30-102)	R - W	Speed sensor (NC) signal	Vehicle speed 30 km/h (19 mph): (3rd gear) Engine speed 1,400 rpm	Pulse generation (see waveform 6)

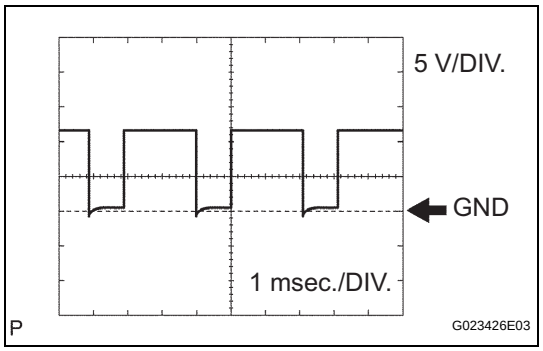

(b) Using an oscilloscope, check the waveform 1.
Waveform 1 (Reference)

Item	Content
Symbols (Terminal No.)	SL1+ (B30-57) - SL1- (B30-77)
Tool Setting	5 V/DIV., 1 msec./DIV.
Condition	Engine idle speed

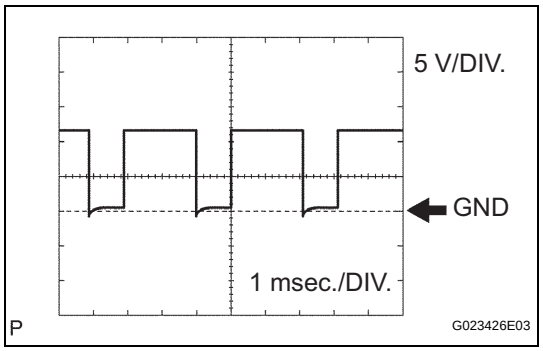

(c) Using an oscilloscope, check the waveform 2.
Waveform 2 (Reference)

Item	Content
Symbols (Terminal No.)	SL2+ (B30-58) - SL2- (B30-59)
Tool Setting	5 V/DIV., 1 msec./DIV.
Condition	Engine idle speed

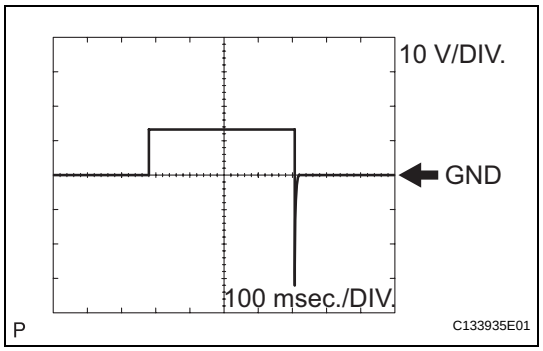

(d) Using an oscilloscope, check the waveform 3.
Waveform 3 (Reference)

Item	Content
Symbols (Terminal No.)	DSL (B30-79) - E01 (B30-45)
Tool Setting	10 V/DIV., 100 msec./DIV.
Condition	Vehicle speed 65 km/h (40 mph), lock-up (ON to OFF)

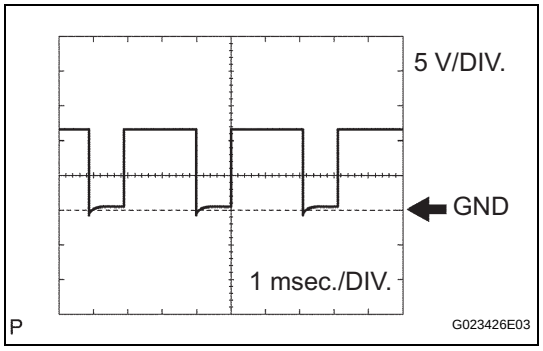

(e) Using an oscilloscope, check the waveform 4.
Waveform 4 (Reference)

Item	Content
Symbols (Terminal No.)	SLT+ (B30-76) - SLT- (B30-75)
Tool Setting	5 V/DIV., 1 msec./DIV.
Condition	Engine idle speed

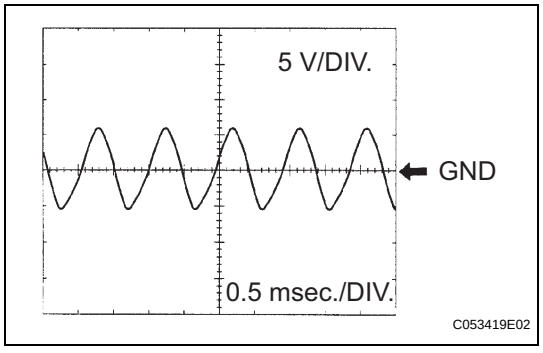

(f) Using an oscilloscope, check the waveform 5.
Waveform 5 (Reference)

Item	Content
Symbols (Terminal No.)	NT+ (B30-125) - NT- (B30-124)
Tool Setting	5 V/DIV., 0.5 msec./DIV.
Condition	Vehicle speed 20 km/h (12 mph)

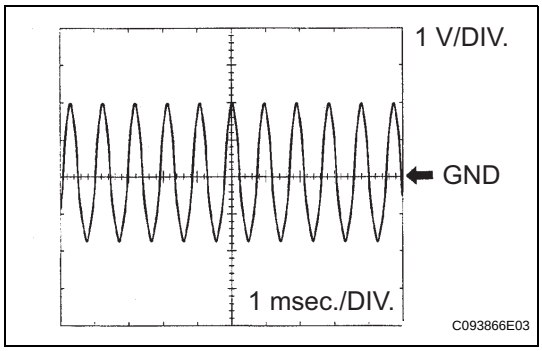

(g) Using an oscilloscope, check the waveform 6.
Waveform 6 (Reference)

Item	Content
Symbols (Terminal No.)	NC+ (B30-101) - NC- (B30-102)
Tool Setting	1 V/DIV., 1 msec./DIV.
Condition	Vehicle speed 30 km/h (19 mph): (3rd gear) Engine speed 1,400 rpm

DIAGNOSIS SYSTEM

1. DESCRIPTION

(a) When troubleshooting On-Board Diagnostic (OBD II) vehicles, the vehicle must be connected to the OBD II scan tool (complying with SAE J1987). Various data output from the vehicle's ECM can then be read.

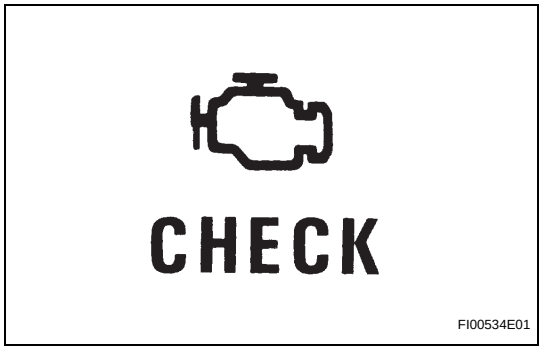

(b) OBD II regulations require that the vehicle's on-board computer illuminates the Malfunction Indicator Lamp (MIL) on the instrument panel when the computer detects a malfunction in:
(1) The emission control system/components
(2) The powertrain control components (which affect vehicle emissions)
(3) The computer
In addition, the applicable Diagnostic Trouble Codes (DTCs) prescribed by SAE J2012 are recorded in the ECM memory.
When the malfunction does not reoccur, the MIL stays illuminated until the ignition switch is turned OFF, and the MIL turns OFF when the engine is started. However, the DTCs remain recorded in the ECM memory.

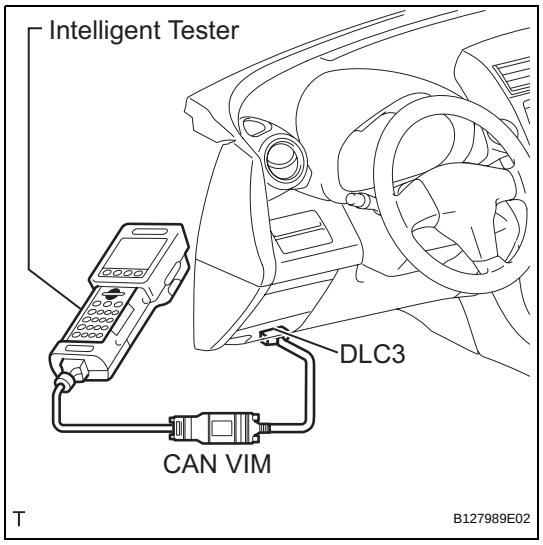

(c) To check DTCs, connect the intelligent tester to the Data Link Connector 3 (DLC3) of the vehicle. The tester displays DTCs, the freeze frame data and a variety of the engine data.
The DTCs and freeze frame data can be erased with the tester (see page AX-29).

2. NORMAL MODE AND CHECK MODE

(a) The diagnosis system operates in "normal mode" during normal vehicle use. In normal mode, "2 trip detection logic" is used to ensure accurate detection of malfunctions. "Check mode" is also available to technicians as an option. In check mode, "1 trip detection logic" is used for simulating malfunction symptoms and increasing the system's ability to detect malfunctions, including intermittent malfunctions.

3. 2 TRIP DETECTION LOGIC

(a) When a malfunction is first detected, the malfunction is temporarily stored in the ECM memory (1st trip). If the same malfunction is detected during the next drive cycle, the MIL is illuminated (2nd trip).

4. FREEZE FRAME DATA

(a) Freeze frame data records the engine conditions (fuel system, calculated load, engine coolant temperature, fuel trim, engine speed, vehicle speed, etc.) when a malfunction is detected. When troubleshooting, freeze frame data can help determine if the vehicle was running or stopped, if the engine was warmed up or not, if the air-fuel ratio was lean or rich, and other data from the time the malfunction occurred.

(b) The intelligent tester records freeze frame data in 5 different instances: 1) 3 times before the DTC is set, 2) once when the DTC is set, and 3) once after the DTC is set. These data can be used to simulate the vehicle's condition around the time when the malfunction occurred. The data may help find the cause of the malfunction, or judge if the DTC is being caused by a temporary malfunction or not.

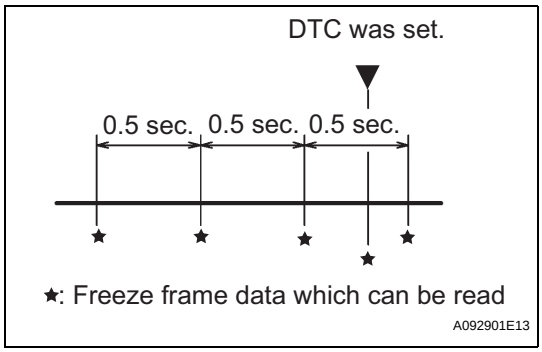

5. DATA LINK CONNECTOR 3 (DLC3)

(a) The vehicle's ECM uses the ISO 15765-4 for communication protocol. The terminal arrangement of the DLC3 complies with SAE J1962 and matches the ISO 15765-4 format.

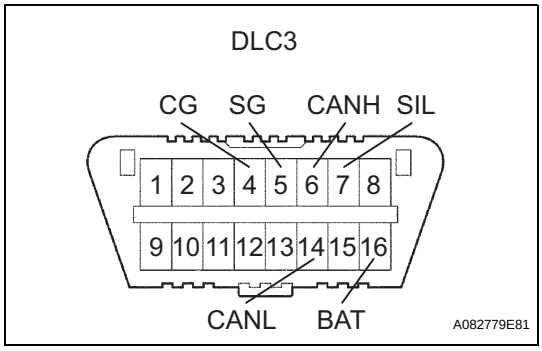

Symbols (Terminal No.)	Terminal Description	Condition	Specified Condition
SIL (7) - SG (5)	Bus "+" line	During transmission	Pulse generation
CG (4) - Body ground	Chassis ground	Always	Below 1 Ω
SG (5) - Body ground	Signal ground	Always	Below 1 Ω
BAT (16) - Body ground	Battery positive	Always	9 to 14 V
CANH (6) - CANL (14)	HIGH-level CAN bus line	Ignition switch OFF	54 to 69 Ω
CANH (6) - Battery positive	HIGH-level CAN bus line	Ignition switch OFF	1 MΩ or higher
CANH (6) - CG (4)	HIGH-level CAN bus line	Ignition switch OFF	200 Ω or higher
CANL (14) - Battery positive	LOW-level CAN bus line	Ignition switch OFF	1 MΩ or higher
CANL (14) - CG (4)	LOW-level CAN bus line	Ignition switch OFF	200 Ω or higher

HINT:
*: Before measuring the resistance, leave the vehicle as is for at least 1 minute and do not operate the ignition switch, other switches or doors.
If the result is not as specified, the DLC3 may have a malfunction. Repair or replace the harness and connector.
HINT:
Connect the cable of the intelligent tester to the DLC3, turn the ignition switch ON and attempt to use the tester. If the screen displays UNABLE TO CONNECT TO VEHICLE, a problem exists in the vehicle side or the tester side.

If communication is normal when the tester is connected to another vehicle, inspect the DLC3 on the original vehicle.
If communication is still not possible when the tester is connected to another vehicle, the problem is probably in the tester itself. Consult the Service Department listed in the tester's instruction manual.

6. CHECK MIL

(a) Check that the MIL illuminates when turning the ignition switch ON.
If the MIL does not illuminate, there is a problem in the MIL circuit (see page ES-386).

(b) When the engine is started, the MIL should turn off.

7. ALL READINESS

(a) For this vehicle, using the intelligent tester allows readiness codes corresponding to all DTCs to be read. When the diagnosis (normal or malfunctioning) has been completed, readiness codes are set. Enter the following menus: ENHANCED OBD II / MONITOR STATUS.

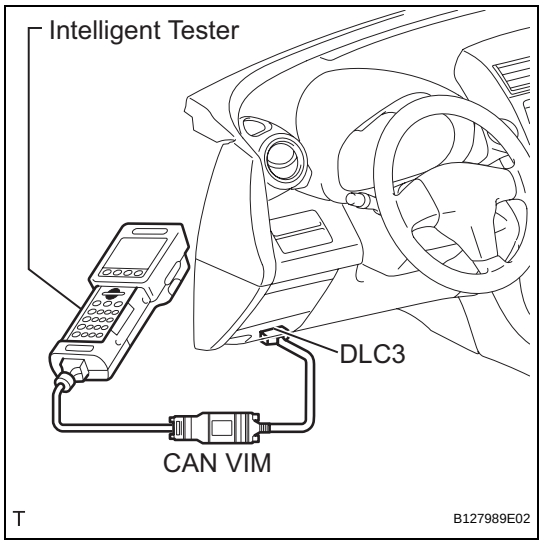

DTC CHECK / CLEAR

1. CHECK DTC

(a) DTCs which are stored in the ECM can be displayed with the intelligent tester.
The intelligent tester can display pending DTCs and current DTCs. Some DTCs are not stored unless a malfunction is detected in consecutive driving cycles. When a malfunction is detected in only one driving cycle, it is stored as a pending DTC.

(1) Connect the intelligent tester to the CAN VIM. Then connect the CAN VIM to the DLC3.

(2) Turn the ignition switch ON and turn the tester ON.

(3) Enter the following menus: DIAGNOSIS / ENHANCED OBD II / DTC INFO / CURRENT CODES (or PENDING CODE).

(4) Confirm the DTCs and freeze frame data and then write them down.

(5) Confirm the details of the DTCs (see page AX-35).

NOTICE:
When simulating a symptom with the scan tool to check for DTCs, use normal mode. For codes on the DIAGNOSTIC TROUBLE CODE CHART subject to "2 trip detection logic", perform the following actions.
Turn the ignition switch OFF after the symptom is simulated once. Then repeat the simulation process again. When the symptom has been simulated twice, the MIL illuminates and the DTCs are recorded in the ECM.

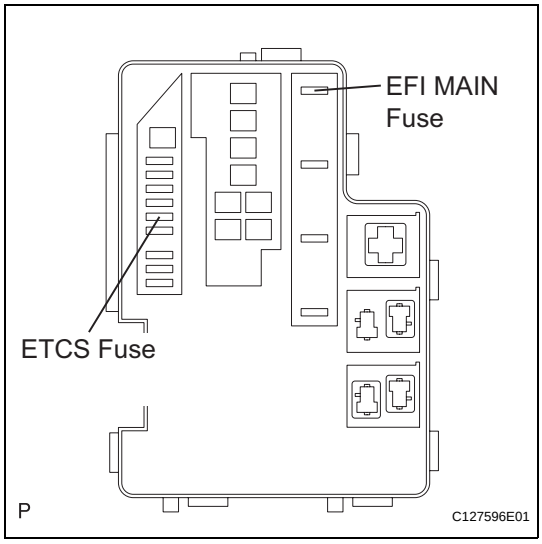

2. CLEAR DTC

(a) When using the intelligent tester:

(1) Connect the intelligent tester to the CAN VIM. Then connect the CAN VIM to the DLC3.

(2) Turn the ignition switch ON and turn the tester ON.

(3) Enter the following menus: DIAGNOSIS / ENHANCED OBD II / DTC INFO / CLEAR CODES. Then and press YES.
HINT:
When operating the tester to erase the codes, the DTCs and freeze frame data will be erased.

(b) When not using the intelligent tester:

(1) Disconnect the battery terminal or remove the EFI MAIN and ETCS fuses from the engine room No. 1 relay block and engine room No. 1 junction block for 60 seconds or more. However, if you disconnect the battery terminal, perform the "INITIALIZATION" procedure (see page AX-18).

CHECK MODE PROCEDURE

1. DESCRIPTION

(a) Check mode has a higher sensitivity to malfunctions and can detect malfunctions that normal mode cannot detect. Check mode can also detect all the malfunctions that normal mode can detect. In check mode, DTCs are detected with 1 trip detection logic.

2. CHECK MODE PROCEDURE

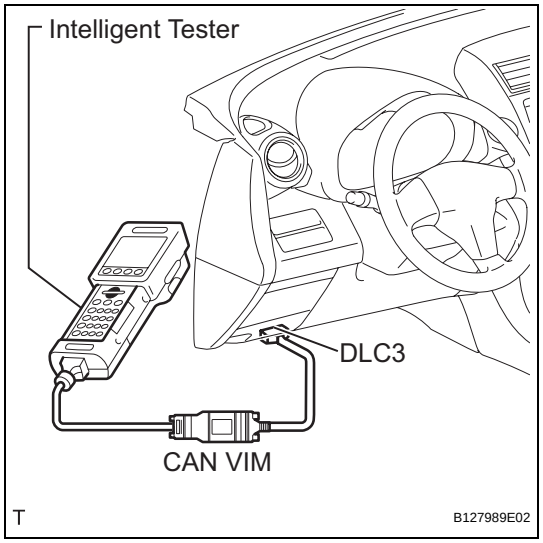

(a) Make sure that the following conditions below are met:
  (1) Battery positive voltage 11 V or more
  (2) Throttle valve fully closed
  (3) Transaxle in the P or N position
  (4) A/C OFF

(b) Turn the ignition switch OFF.

(c) Connect the intelligent tester to the CAN VIM. Then connect the CAN VIM to the DLC3.

(d) Turn the ignition switch ON and turn the tester ON.

(e) Enter the following menus: DIAGNOSIS / ENHANCED OBD II / CHECK MODE.

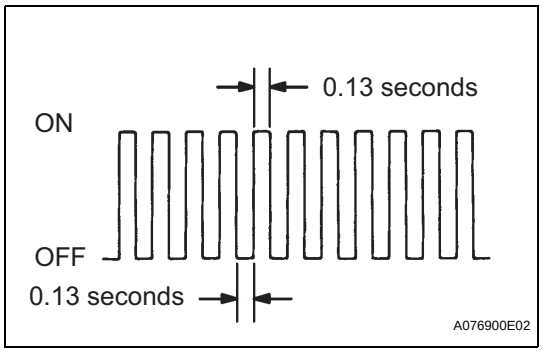

(f) Change the ECM to check mode. Make sure the MIL flashes as shown in the illustration.

NOTICE:

All DTCs and freeze frame data recorded will be erased if: 1) the intelligent tester is used to change the ECM from normal mode to check mode or vice versa; or 2) during check mode, the ignition switch is turned from ON to ACC or OFF.

Before check mode, make notes of the DTCs and freeze frame data.

(g) Start the engine. The MIL should turn off after the engine starts.

(h) Perform "MONITOR DRIVE PATTERN" for the ECT test (see page AX-19).
(Or, simulate the conditions of the malfunction described by the customer.)

(i) After simulating the malfunction conditions, use the tester to check the DTC and freeze frame data.

FAIL-SAFE CHART

1. FAIL-SAFE CHART

This function minimizes the loss of the ECT functions when a malfunction occurs in a sensor or solenoid.

(a) Automatic Transmission Fluid (ATF) temperature sensor:
When the ATF temperature sensor has a malfunction, O/D up-shift is prohibited.

(b) Counter gear speed sensor NC (Speed sensor NC):
When the counter gear speed sensor has a malfunction, O/D up-shift is prohibited.

(c) Shift solenoid valve DSL:
When the solenoid valve DSL has a malfunction, the current to the solenoid valve is stopped.
This stops lock-up control, then fuel economy decreases.

(d) Shift solenoid valve SL1, SL2 and S4:
If any of the shift solenoid valve circuits develops an open or short, the ECM turns the other shift solenoid "ON" and "OFF" in order to shift into the gear positions shown in the table below.
Manual shifting as shown in the following table must be done. In case of a short circuit, the ECM stops sending the current to the short circuited solenoid.
Even if starting the engine in the fail-safe mode, the gear position remains in the same position.

Normal				Shift Solenoid Valve SL1				Shift Solenoid Valve SL2				Shift Solenoid Valve S4			
Gear	Solenoid Valve			Gear	Solenoid Valve			Gear	Solenoid Valve			Gear	Solenoid Valve		
	SL1	SL2	S4		SL1	SL2	S4		SL1	SL2	S4		SL1	SL2	S4
1st	ON	ON	OFF	2nd	X	ON	OFF	3rd	ON ↓ OFF	X	OFF	1st	ON	ON	X
2nd	OFF	ON	OFF	2nd	X	ON	OFF	3rd	OFF	X	OFF	2nd	OFF	ON	X
3rd	OFF	OFF	OFF	3rd	X	OFF ↓ ON	OFF ↓ ON	3rd	OFF	X	OFF	3rd	OFF	OFF	X
O/D	OFF	OFF	ON	3rd	X	OFF ↓ ON	ON	O/D	OFF	X	ON	3rd	OFF	OFF	X

Shift Solenoid Valve SL1 and SL2				Shift Solenoid Valve SL1 and S4				Shift Solenoid Valve SL2 and S4				Shift Solenoid Valve SL1, SL2 and S4			
Gear	Solenoid Valve			Gear	Solenoid Valve			Gear	Solenoid Valve			Gear	Solenoid Valve		
	SL1	SL2	S4		SL1	SL2	S4		SL1	SL2	S4		SL1	SL2	S4
3rd	X	X	OFF	2nd	X	ON	X	3rd	ON ↓ OFF	X	X	3rd	X	X	X
3rd	X	X	OFF	2nd	X	ON	X	3rd	OFF	X	X	3rd	X	X	X
3rd	X	X	OFF	2nd	X	OFF ↓ ON	X	3rd	OFF	X	X	3rd	X	X	X
O/D	X	X	ON	2nd	X	OFF ↓ ON	X	3rd	OFF	X	X	3rd	X	X	X

HINT:

- ↓: Condition in the normal operation is shown above the "↓".
- ↓: Condition in the fail-safe mode is shown beneath the "↓".
- E/B: Engine brake.

DATA LIST / ACTIVE TEST

1. READ DATA LIST

HINT:

Using the intelligent tester's DATA LIST allows switch, sensor, actuator, and other item values to be read without removing any parts. Reading the DATA LIST early in troubleshooting is one way to save time.

NOTICE:

In the table below, the values listed under "Normal Condition" are reference values. Do not depend solely on these reference values when deciding whether a part is faulty or not.

(a) Warm up the engine.

(b) Turn the ignition switch OFF.

(c) Connect the intelligent tester to the CAN VIM. Then connect the CAN VIM to the DLC3.

(d) Turn the ignition switch ON and turn the tester ON.

(e) Enter the following menus: DIAGNOSIS / ENHANCED OBD II / DATA LIST.

(f) Follow the instructions on the tester and read the DATA LIST.

Item	Measurement Item/ Range (Display)	Normal Condition	Diagnostic Note
SPD (NC)	Counter gear speed/ Min.: 0 rpm Max.: 12,750 rpm	4th (O/D) when shift lever is on D (after warming up the engine); Intermediate shaft speed (NC) becomes close to the engine speed	Data is displayed in increments of 50 rpm
SPD (NT)	Input turbine speed/ Min.: 0 rpm Max.: 12,750 rpm	• Lock-up ON (after warming up engine): Input turbine speed (NT) equal to engine speed. • Lock-up OFF (idling with shift lever on N): Input turbine speed (NT) is nearly equal to engine speed.	Data is displayed in increments of 50 rpm
PNP SW (NSW)	PNP switch status/ ON or OFF	Shift lever is: On P or N: ON Not on P or N: OFF	When shift lever position displayed on intelligent tester differs from actual position, adjustment of PNP switch or shift cable may be incorrect HINT: When failure still occurs even after adjusting these parts, see page AX-39
STOP LIGHT SW	Stop light switch status/ ON or OFF	• Brake pedal is depressed: ON • Brake pedal is released: OFF	-
SHIFT	ECM gear shift command/ 1st, 2nd, 3rd or 4th	Shift lever position is: • On L: 1st • On 2: 1st or 2nd • On 3: 1st, 2nd or 3rd • On D: 1st, 2nd, 3rd or 4th	-

Item	Measurement Item/ Range (Display)	Normal Condition	Diagnostic Note
REVERSE	PNP switch status/ ON or OFF	Shift lever is: On R: ON Not on R: OFF	When shift lever position displayed on intelligent tester differs from actual position, adjustment of PNP switch or shift cable may be incorrect HINT: When failure still occurs even after adjusting these parts, see page AX-39
PARKING	PNP switch status/ ON or OFF	Shift lever is: On P: ON Not on P: OFF	When shift lever position displayed on intelligent tester differs from actual position, adjustment of PNP switch or shift cable may be incorrect HINT: When failure still occurs even after adjusting these parts, see page AX-39
NEUTRAL	PNP switch status/ ON or OFF	Shift lever is: On N: ON Not on N: OFF	When shift lever position displayed on intelligent tester differs from actual position, adjustment of PNP switch or shift cable may be incorrect HINT: When failure still occurs even after adjusting these parts, see page AX-39
DRIVE	PNP switch status/ ON or OFF	Shift lever is: On D: ON Not on D: OFF	When shift lever position displayed on intelligent tester differs from actual position, adjustment of PNP switch or shift cable may be incorrect HINT: When failure still occurs even after adjusting these parts, see page AX-39
3RD	PNP switch status/ ON or OFF	Shift lever is: On 3: ON Not on 3: OFF	When shift lever position displayed on intelligent tester differs from actual position, adjustment of PNP switch or shift cable may be incorrect HINT: When failure still occurs even after adjusting these parts, see page AX-39
2ND	PNP switch status/ ON or OFF	Shift lever is: On 2: ON Not on 2: OFF	When shift lever position displayed on intelligent tester differs from actual position, adjustment of PNP switch or shift cable may be incorrect HINT: When failure still occurs even after adjusting these parts, see page AX-39
LOW	PNP switch status/ ON or OFF	Shift lever is: On L: ON Not on L: OFF	When shift lever position displayed on intelligent tester differs from actual position, adjustment of PNP switch or shift cable may be incorrect HINT: When failure still occurs even after adjusting these parts, see page AX-39

Item	Measurement Item/ Range (Display)	Normal Condition	Diagnostic Note
A/T OIL TEMP1	ATF temperature sensor value/ Min.: -40°C (-40°F) Max.: 215°C (419°F)	• After stall test: Approximately 80°C (176°F) • Equal to ambient temperature while engine is cold	If value is -40°C (-40°F) or "150°C (302°F) or more", ATF temperature sensor circuit is open or short circuited
LOCK UP SOL	Lock-up solenoid status/ ON or OFF	• Lock-up: ON • Not on lock-up: OFF	-
SOLENOID (SLT)	Shift solenoid SLT status/ ON or OFF	• Accelerator pedal is depressed: OFF • Accelerator pedal is released: ON	-

2. PERFORM ACTIVE TEST

HINT:

Performing the intelligent tester's ACTIVE TEST allows relay, VSV, actuator and other items to be operated without removing any parts. Performing the ACTIVE TEST early in troubleshooting is one way to save time. The DATA LIST can be displayed during the ACTIVE TEST.

(a) Warm up the engine.
(b) Turn the ignition switch OFF.
(c) Connect the intelligent tester to the CAN VIM. Then connect the CAN VIM to the DLC3.
(d) Turn the ignition switch ON and turn the tester ON.
(e) Enter the following menus: DIAGNOSIS / ENHANCED OBD II / ACTIVE TEST.
(f) Perform the ACTIVE TEST.

Item	Test Details	Diagnostic Note
SHIFT	[Test Details] Operate shift solenoid valve and set each shift lever position by yourself [Vehicle Condition] • IDL: ON • 50 km/h (31 mph) or less [Other information] • Press "→" button: Shift up • Press "←" button: Shift down	Possible to check operation of shift solenoid valves
SOLENOID (S4)	[Test Details] Operate the shift solenoid S4 [Vehicle Condition] • Vehicle stopped • Shift lever P or N position	-
SOLENOID (SL1)	[Test Details] Operate the shift solenoid SL1 [Vehicle Condition] • Vehicle stopped • Shift lever P or N position	-
SOLENOID (SL2)	[Test Details] Operate the shift solenoid SL2 [Vehicle Condition] • Vehicle stopped • Shift lever P or N position	-
LOCK UP	[Test Details] Control shift solenoid DSL to set automatic transaxle to the lock-up condition [Vehicle Condition] • Throttle valve opening angle: Less than 35% • Vehicle speed: 60 km/h (36 mph) or more	Possible to check shift solenoid valve DSL operation

Item	Test Details	Diagnostic Note
SOLENOID (DSL)	[Test Details] Operate the shift solenoid DSL [Vehicle Condition] • Vehicle stopped • Shift lever P or N position	-
SOLENOID (SLT)*	[Test Details] Operate shift solenoid SLT and raise line pressure [Vehicle Condition] • Vehicle stopped • IDL: ON HINT: OFF: Line pressure up (when Active Test "SOLENOID (SLT)" is performed, ECM commands SLT solenoid to turn OFF) ON: No action (normal operation)	-

HINT:
*: "SOLENOID (SLT)" in the ACTIVE TEST is performed to check the line pressure changes by connecting SST to the automatic transaxle, which is used in the HYDRAULIC TEST (see page AX-16) as well. Please note that the pressure values in the ACTIVE TEST and HYDRAULIC TEST are different.

DIAGNOSTIC TROUBLE CODE CHART

If a DTC is displayed during the DTC check, check the circuit listed in the table below and proceed to the page given.
HINT:

- *1: "Comes on" means the Malfunction Indicator Lamp (MIL) illuminates.
- *2: "DTC stored" means the ECM memorizes the malfunction code if the ECM detects the DTC detection condition.
- These DTCs may be output when the clutch, brake, gear components, etc., inside the automatic transaxle are damaged.

DTC No.	Detection Item	Trouble Area	MIL*1	Memory*2	See page
P0705	Transmission Range Sensor Circuit Malfunction (PRNDL Input)	- Open or short in park/neutral position switch circuit - Park/Neutral position switch - ECM	Comes on	DTC stored	AX-39
P0710	Transmission Fluid Temperature Sensor "A" Circuit	- Open or short in ATF temperature sensor circuit - ATF temperature sensor - ECM	Comes on	DTC stored	AX-46
P0711	Transmission Fluid Temperature Sensor "A" Performance	- Open or short in No. 1 ATF temperature sensor circuit - No. 1 ATF temperature sensor - ECM	Comes on	DTC stored	AX-50
P0712	Transmission Fluid Temperature Sensor "A" Circuit Low Input	- Short in ATF temperature sensor circuit - ATF temperature sensor - ECM	Comes on	DTC stored	AX-46
P0713	Transmission Fluid Temperature Sensor "A" Circuit High Input	- Open in ATF temperature sensor circuit - ATF temperature sensor - ECM	Comes on	DTC stored	AX-46
P0717	Input Speed Sensor Circuit No Signal	- Open or short in speed sensor NT circuit - Speed sensor NT - ECM	Comes on	DTC stored	AX-53
P0724	Brake Switch "B" Circuit High	- Short in stop light switch circuit - Stop light switch - ECM	Comes on	DTC stored	AX-57

DTC No.	Detection Item	Trouble Area	MIL*1	Memory*2	See page
P0741	Torque Converter Clutch Solenoid Performance (Shift Solenoid Valve DSL)	- Shift solenoid valve DSL remains open or closed - Valve body is blocked - Shift solenoid valve DSL - Torque converter clutch - Automatic transaxle (clutch, brake, gear, etc.) - Line pressure is too low - ECM	Comes on	DTC stored	AX-60
P0746	Pressure Control Solenoid "A" Performance (Shift Solenoid Valve SL1)	- Shift solenoid valve SL1 remains open or closed - Valve body is blocked - Shift solenoid valve SL1 - Automatic transaxle (clutch, brake, gear, etc.) - ECM	Comes on	DTC stored	AX-66
P0748	Pressure Control Solenoid "A" Electrical (Shift Solenoid Valve SL1)	- Open or short in shift solenoid valve SL1 circuit - Shift solenoid valve SL1 - ECM	Comes on	DTC stored	AX-70
P0766	Shift Solenoid "D" Performance (Shift Solenoid Valve S4)	- Shift solenoid valve S4 remains open or closed - Valve body is blocked - Shift solenoid valve S4 - Automatic transaxle (clutch, brake, gear, etc.) - ECM	Comes on	DTC stored	AX-73
P0776	Pressure Control Solenoid "B" Performance (Shift Solenoid Valve SL2)	- Shift solenoid valve SL2 remains open or closed - Valve body is blocked - Shift solenoid valve SL2 - Automatic transaxle (clutch, brake, gear, etc.) - ECM	Comes on	DTC stored	AX-77
P0778	Pressure Control Solenoid "B" Electrical (Shift Solenoid Valve SL2)	- Open or short in shift solenoid valve SL2 circuit - Shift solenoid valve SL2 - ECM	Comes on	DTC stored	AX-81
P0793	Intermediate Shaft Speed Sensor "A"	- Open or short in speed sensor NC circuit - Speed sensor NC - ECM	Comes on	DTC stored	AX-84

DTC No.	Detection Item	Trouble Area	MIL*1	Memory*2	See page
P0982	Shift Solenoid "D" Control Circuit Low (Shift Solenoid Valve S4)	- Short in shift solenoid valve S4 circuit - Shift solenoid valve S4 - ECM	Comes on	DTC stored	AX-88
P0983	Shift Solenoid "D" Control Circuit High (Shift Solenoid Valve S4)	- Open in shift solenoid valve S4 circuit - Shift solenoid valve S4 - ECM	Comes on	DTC stored	AX-88
P2714	Pressure Control Solenoid "D" Performance (Shift Solenoid Valve SLT)	- Shift solenoid valve SLT remains open or closed - Valve body is blocked - Torque converter clutch - Automatic transaxle (clutch, brake, gear, etc.) - ECM	Comes on	DTC stored	AX-91
P2716	Pressure Control Solenoid "D" Electrical (Shift Solenoid Valve SLT)	- Open or short in shift solenoid valve SLT circuit - Shift solenoid valve SLT - ECM	Comes on	DTC stored	AX-96
P2769	Torque Converter Clutch Solenoid Circuit Low (Shift Solenoid Valve DSL)	- Short in shift solenoid valve DSL circuit - Shift solenoid valve DSL - ECM	Comes on	DTC stored	AX-99
P2770	Torque Converter Clutch Solenoid Circuit High (Shift Solenoid Valve DSL)	- Open in shift solenoid valve DSL circuit - Shift solenoid valve DSL - ECM	Comes on	DTC stored	AX-99

DTC	P0705	Transmission Range Sensor Circuit Malfunction (PRNDL Input)

DESCRIPTION

The Park/Neutral Position (PNP) switch detects the shift lever position and sends signals to the ECM.

DTC No.	DTC Detection Condition	Trouble Area
P0705	When one of following conditions is met: (A) Any 2 or more of the following signals are ON simultaneously (2 trip detection logic) • P input signal is ON • N input signal is ON • R input signal is ON • D input signal is ON • 2 input signal is ON • L input signal is ON (B) Any 2 or more of the following signals are ON simultaneously (2 trip detection logic) • NSW input signal is ON • R input signal is ON • D input signal is ON • 2 input signal is ON • L input signal is ON (C) All of the signals are OFF simultaneously (2 trip detection logic) • P input signal is OFF • N input signal is OFF • NSW input signal is OFF • R input signal is OFF • D input signal is OFF • 2 input signal is OFF • L input signal is OFF (D) Both 1 and 2 are met (2 trip detection logic) 1. Either of the following is met (a) NSW input signal is ON (b) P input signal is ON (c) N input signal is ON (d) R input signal is ON 2. Either of the following is met (a) 3 input signal is ON (b) L input signal is ON	• Open or short in park/neutral position switch circuit • Park/Neutral position switch • ECM

MONITOR DESCRIPTION

These DTCs indicate a problem with the park/neutral position switch and the wire harness in the park/neutral position switch circuit.
The park/neutral position switch detects the shift lever position and sends a signal to the ECM.
For security, the park/neutral position switch detects the shift lever position so that the engine can be started only when the shift lever is on P or N.
The park/neutral position switch sends a signal to the ECM according to the shift lever position (R, D, 3, 2 or L).
The ECM determines that there is a problem with the switch or related parts if it receives more than 1 position signal simultaneously. The ECM will illuminate the MIL and store the DTC.

MONITOR STRATEGY

Related DTCs	P0705: Park/Neutral position switch/Verify switch input
Required sensors/Components	Park/Neutral position switch
Frequency of operation	Continuous
Duration	2 seconds or 60 seconds
MIL operation	2 driving cycles

Sequence of operation	None

TYPICAL ENABLING CONDITIONS

The monitor will run whenever this DTC is not present.	None
Ignition switch	ON
Battery voltage	10.5 V or more

TYPICAL MALFUNCTION THRESHOLDS

Condition (A)

Number of the following signal input at the same time	2 or more
P switch	ON
N switch	ON
R switch	ON
D switch	ON
2 switch	ON
L switch	ON

Condition (B)

Number of the following signal input at the same time	2 or more
NSW switch	ON
R switch	ON
D switch	ON
2 switch	ON
L switch	ON

Condition (C)

When all of the following conditions are met	-
P switch	OFF
N switch	OFF
NSW switch	OFF
R switch	OFF
D switch	OFF
2 switch	OFF
L switch	OFF

Condition (D)

When both conditions (a) and (b) are met	-
(a) When one of following condition is met	-
NSW switch	ON
P switch	ON
N switch	ON
R switch	ON
(b) When one of following condition is met	-
3 switch	ON
L switch	ON

AX

COMPONENT OPERATING RANGE

Park/Neutral position switch	Park/Neutral position switch sends only one signal to ECM.

WIRING DIAGRAM

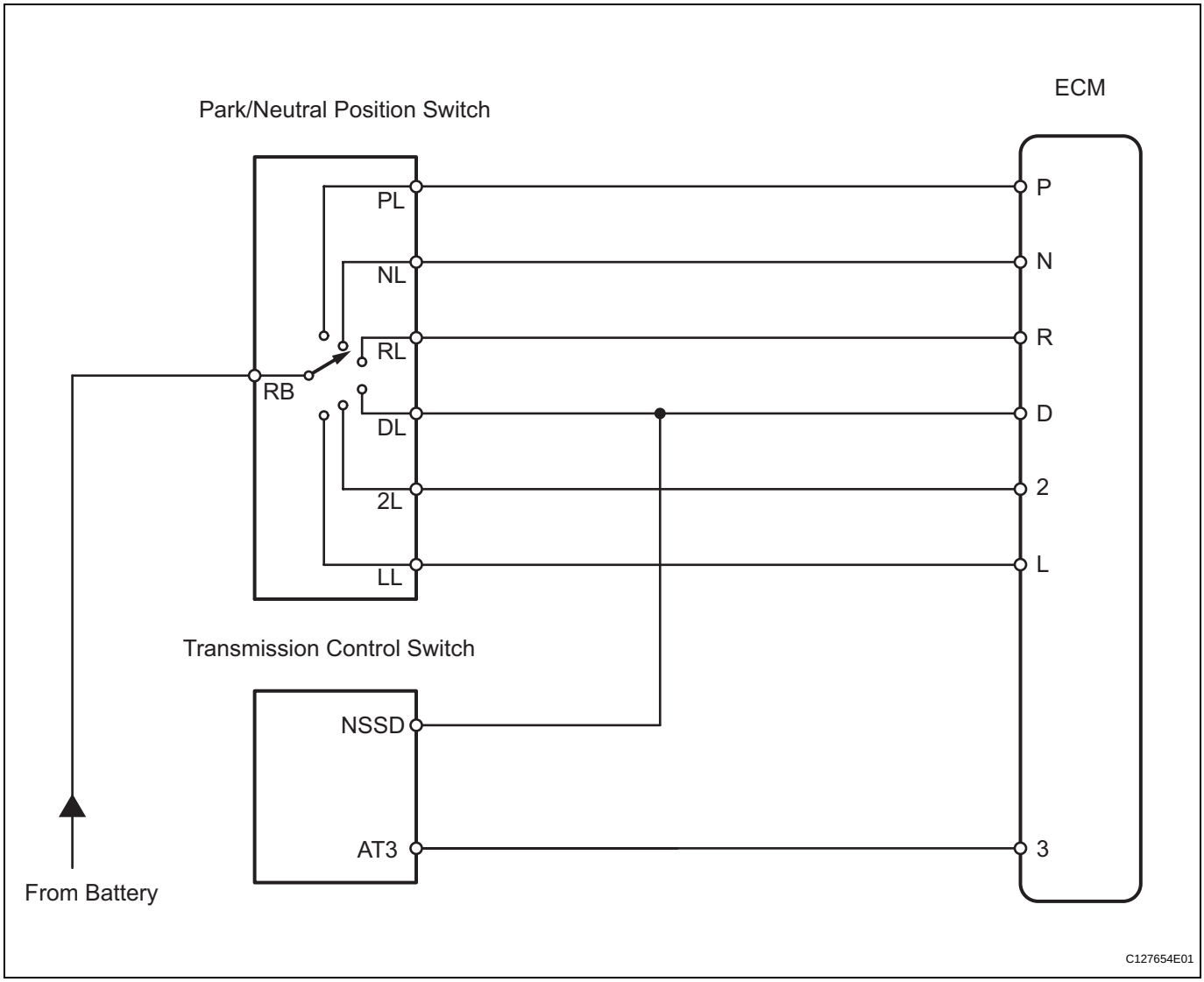

INSPECTION PROCEDURE

HINT:

Using the intelligent tester's DATA LIST allows switch, sensor, actuator and other item values to be read without removing any parts. Reading the DATA LIST early in troubleshooting is one way to save time.

NOTICE:

In the table below, the values listed under "Normal Condition" are reference values. Do not depend solely on these reference values when deciding whether a part is faulty or not.

1. Warm up the engine.
2. Turn the ignition switch OFF.
3. Connect the intelligent tester to the CAN VIM. Then connect the CAN VIM to the DLC3.
4. Turn the ignition switch ON and turn the tester ON.
5. Enter the following menus: DIAGNOSIS / ENHANCED OBD II / DATA LIST.
6. Follow the instructions on the tester and read the DATA LIST.

Item	Measurement Item/ Range (Display)	Normal Condition	Diagnostic Note
PNP SW (NSW)	PNP switch status/ ON or OFF	Shift lever is: On P or N: ON Not on P or N: OFF	When shift lever position displayed on intelligent tester differs from actual position, adjustment of PNP switch or shift cable may be incorrect

Item	Measurement Item/ Range (Display)	Normal Condition	Diagnostic Note
REVERSE	PNP switch status/ ON or OFF	Shift lever is: On R: ON Not on R: OFF	When shift lever position displayed on intelligent tester differs from actual position, adjustment of PNP switch or shift cable may be incorrect
PARKING	PNP switch status/ ON or OFF	Shift lever is: On P: ON Not on P: OFF	When shift lever position displayed on intelligent tester differs from actual position, adjustment of PNP switch or shift cable may be incorrect
NEUTRAL	PNP switch status/ ON or OFF	Shift lever is: On N: ON Not on N: OFF	When shift lever position displayed on intelligent tester differs from actual position, adjustment of PNP switch or shift cable may be incorrect
DRIVE	PNP switch status/ ON or OFF	Shift lever is: On D: ON Not on D: OFF	When shift lever position displayed on intelligent tester differs from actual position, adjustment of PNP switch or shift cable may be incorrect
3RD	PNP switch status/ ON or OFF	Shift lever is: On 3: ON Not on 3: OFF	When shift lever position displayed on intelligent tester differs from actual position, adjustment of PNP switch or shift cable may be incorrect
2ND	PNP switch status/ ON or OFF	Shift lever is: On 2: ON Not on 2: OFF	When shift lever position displayed on intelligent tester differs from actual position, adjustment of PNP switch or shift cable may be incorrect
LOW	PNP switch status/ ON or OFF	Shift lever is: On L: ON Not on L: OFF	When shift lever position displayed on intelligent tester differs from actual position, adjustment of PNP switch or shift cable may be incorrect

1 CHECK WIRE HARNESS (PARK/NEUTRAL POSITION SWITCH - BATTERY)

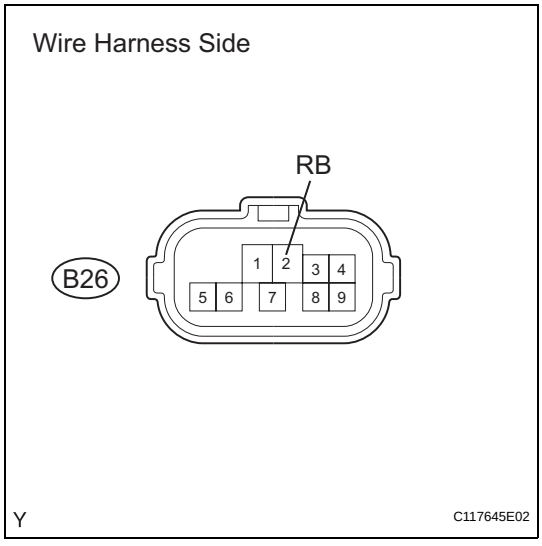

(a) Disconnect the B26 park/neutral position switch connector.
(b) Turn the ignition switch ON.
(c) Measure the voltage.

Standard voltage

Tester Connection	Specified Condition
2 (RB) - Body ground	10 to 14 V

NG → **CHECK POWER SOURCE OF ECM**

OK

AX

2 INSPECT PARK/NEUTRAL POSITION SWITCH

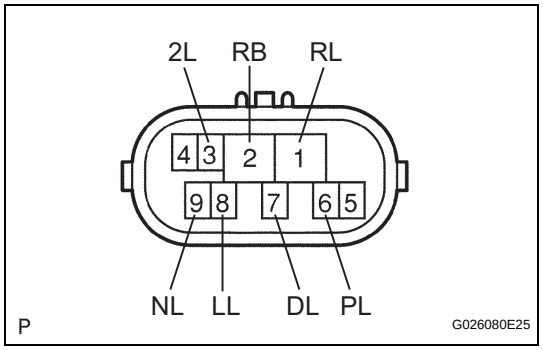

(a) Disconnect the B26 park/neutral position switch connector.
(b) Measure the resistance of the park/neutral position switch when the shift lever is moved to each position.

Standard resistance

Tester Connection	Shift Lever Position	Specified Condition
6 (PL) - 2 (RB)	P	Below 1 Ω
6 (PL) - 2 (RB)	Not on P	10 kΩ or higher
1 (RL) - 2 (RB)	R	Below 1 Ω
1 (RL) - 2 (RB)	Not on R	10 kΩ or higher
9 (NL) - 2 (RB)	N	Below 1 Ω
9 (NL) - 2 (RB)	Not on N	10 kΩ or higher
7 (DL) - 2 (RB)	D	Below 1 Ω
7 (DL) - 2 (RB)	Not on D	10 kΩ or higher
3 (2L) - 2 (RB)	2	Below 1 Ω
3 (2L) - 2 (RB)	Not on 2	10 kΩ or higher
8 (LL) - 2 (RB)	L	Below 1 Ω
8 (LL) - 2 (RB)	Not on L	10 kΩ or higher

NG → **REPLACE PARK/NEUTRAL POSITION SWITCH**

OK

3 CHECK WIRE HARNESS (ECM - BATTERY AND BODY GROUND)

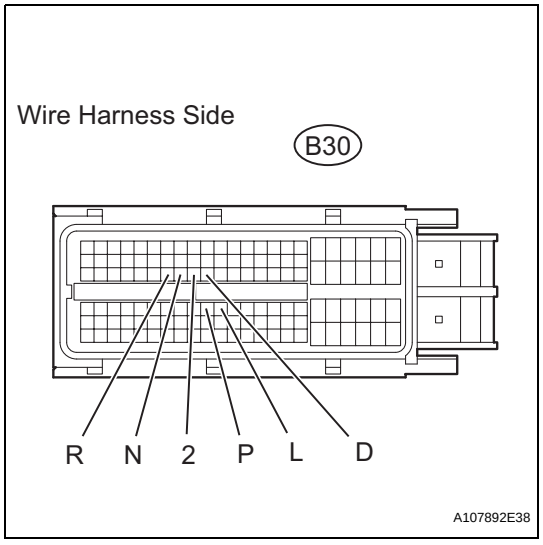

(a) Disconnect the B30 ECM connector.
(b) Turn the ignition switch ON.
(c) Measure the voltage of the wire harness side connector.

Standard voltage

Tester Connection	Shift Lever Position	Specified Condition
B30-73 (P) - Body ground	P	10 to 14 V
B30-73 (P) - Body ground	Not on P	Below 1 V
B30-53 (R) - Body ground	R	10 to 14 V*
B30-53 (R) - Body ground	Not on R	Below 1 V
B30-54 (N) - Body ground	N	10 to 14 V
B30-54 (N) - Body ground	Not on N	Below 1 V
B30-56 (D) - Body ground	D or 3	10 to 14 V
B30-56 (D) - Body ground	Not on D or 3	Below 1 V
B30-55 (2) - Body ground	2	10 to 14 V

AX

Tester Connection	Shift Lever Position	Specified Condition
B30-55 (2) - Body ground	Not on 2	Below 1 V
B30-74 (L) - Body ground	L	10 to 14 V
B30-74 (L) - Body ground	Not on L	Below 1 V

HINT:
*: The voltage will drop slightly due to the illumination of the back-up light.

NG → **REPAIR OR REPLACE HARNESS AND CONNECTOR**

OK

4 CHECK WIRE HARNESS (PARK/NEUTRAL POSITION SWITCH - TRANSMISSION CONTROL SWITCH)

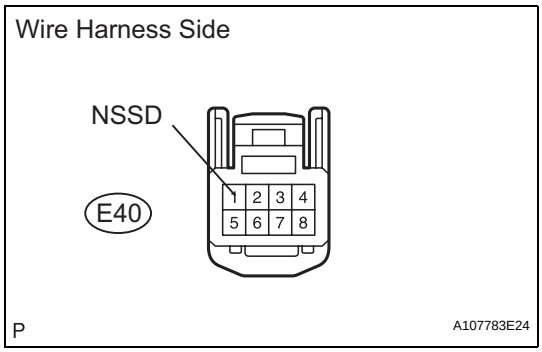

(a) Disconnect the E40 switch connector.
(b) Turn the ignition switch ON.
(c) Measure the voltage when the shift lever is moved to each position.

Standard voltage

Tester Connection	Shift Lever Position	Specified Condition
1 (NSSD) - Body ground	D and 3	10 to 14 V
1 (NSSD) - Body ground	Not on D and 3	Below 1 V

NG → **REPAIR OR REPLACE HARNESS AND CONNECTOR**

OK

5 INSPECT TRANSMISSION CONTROL SWITCH

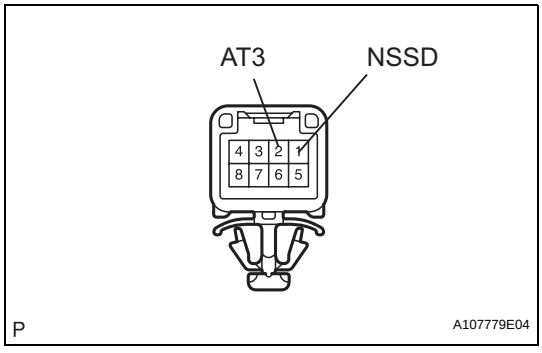

(a) Disconnect the E40 switch connector.
(b) Measure the resistance of the switch when the shift lever is moved to each position.

Standard resistance

Tester Connection	Shift Lever Position	Specified Condition
1 (NSSD) - 2 (AT3)	D	10 kΩ or higher
1 (NSSD) - 2 (AT3)	3	Below 1 Ω

NG → **REPLACE TRANSMISSION CONTROL SWITCH**

OK

6	CHECK WIRE HARNESS (TRANSMISSION CONTROL SWITCH - BATTERY AND BODY GROUND)

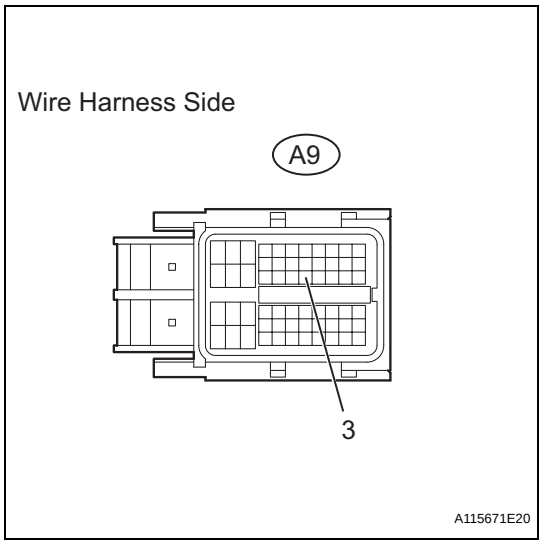

(a) Disconnect the A9 ECM connector.
(b) Turn the ignition switch ON.
(c) Measure the voltage of the wire harness side connector.

Standard voltage

Tester Connection	Shift Lever Position	Specified Condition
A9-26 (3) - Body ground	3	10 to 14 V
A9-26 (3) - Body ground	Not on 3	Below 1 V

HINT:
*: The voltage will drop slightly due to the illumination of the back-up light.

NG → **REPAIR OR REPLACE HARNESS AND CONNECTOR**

OK

REPLACE ECM

DTC	P0710	Transmission Fluid Temperature Sensor "A" Circuit

DTC	P0712	Transmission Fluid Temperature Sensor "A" Circuit Low Input

DTC	P0713	Transmission Fluid Temperature Sensor "A" Circuit High Input

DESCRIPTION

The Automatic Transmission Fluid (ATF) temperature sensor converts the ATF temperature into a resistance value which is input into the ECM.
The ECM applies a voltage to the temperature sensor through ECM terminal THO1.
The sensor resistance changes with the ATF temperature.
One terminal of the sensor is grounded so that the sensor resistance and voltage decrease as the temperature becomes higher.
The ECM calculates the ATF based on the voltage signal.

DTC No.	DTC Detection Condition	Trouble Area
P0710	ATF temperature sensor resistance changes from (a) to (b) or from (b) to (a) in less than 0.5 sec., and P0712 and P0713 are not detected (1 trip detection logic): (a) ATF temperature sensor resistance is less than 79 Ω (b) ATF temperature sensor resistance is more than 156 kΩ	• Open or short in ATF temperature sensor circuit • ATF temperature sensor • ECM
P0712	ATF temperature sensor resistance is less than 79 Ω for 0.5 sec. or more (1 trip detection logic)	• Short in ATF temperature sensor circuit • ATF temperature sensor • ECM
P0713	15 minutes or more after the engine start, ATF temperature sensor resistance is more than 156 kΩ for 0.5 sec. or more (1 trip detection logic)	• Open in ATF temperature sensor circuit • ATF temperature sensor • ECM

MONITOR DESCRIPTION

ATF temperature sensor converts ATF temperature to an electrical resistance value. Based on the resistance, the ECM determines the ATF temperature, and the ECM detects an open or short in the ATF temperature circuit. If the resistance value of the ATF temperature is less than 79 Ω*1 or more than 156 kΩ*2, the ECM interprets this as a fault in the ATF sensor or wiring. The ECM will illuminate the MIL and store the DTC.
HINT:

- *1: 150°C (302°F) or more is indicated regardless of the actual ATF temperature.
- *2: -40°C (-40°F) is indicated regardless of the actual ATF temperature.
- The ATF temperature can be checked on the intelligent tester display.

MONITOR STRATEGY

Related DTCs	P0710: ATF temperature sensor/Range check (Chattering) P0712: ATF temperature sensor/Range check (Low resistance) P0713: ATF temperature sensor/Range check (High resistance)
Required sensors/Components	ATF temperature sensor
Frequency of operation	Continuous
Duration	0.5 sec.

MIL operation	Immediate
Sequence of operation	None

TYPICAL ENABLING CONDITIONS

P0710, P0712: Range check (Chattering, Low resistance)

The monitor will run whenever the following DTCs are not present.	None
The typical enabling condition is not available.	-

P0713: Range check (High resistance)

The monitor will run whenever the following DTCs are not present.	None
Time after engine start	15 min. or more

TYPICAL MALFUNCTION THRESHOLDS

P0710: Range check (Chattering)

ATF temperature sensor resistance	Less than 79 Ω or more than 156 kΩ

P0712: Range check (Low resistance)

ATF temperature sensor resistance	Less than 79 Ω

P0713: Range check (High resistance)

ATF temperature sensor resistance	More than 156 kΩ

COMPONENT OPERATING RANGE

ATF temperature sensor	79 Ω to 156 kΩ

WIRING DIAGRAM

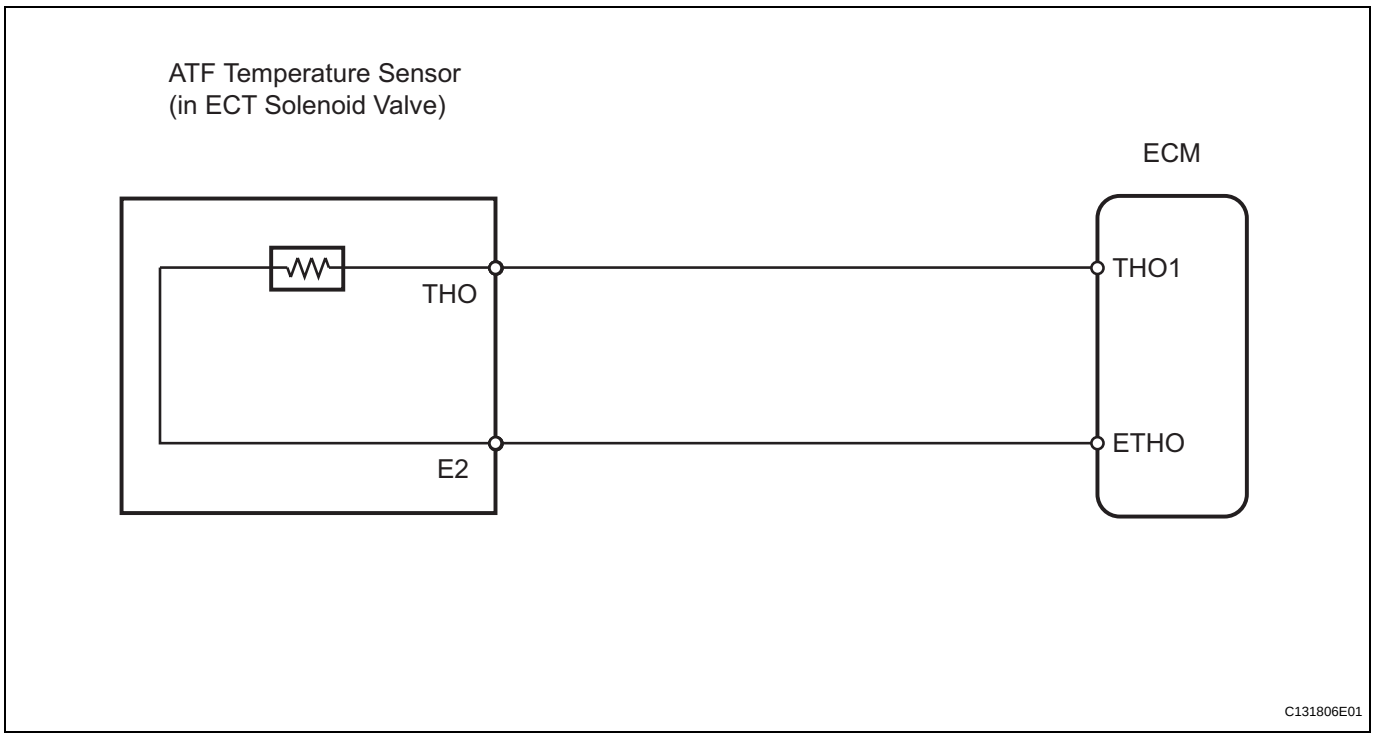

AX

INSPECTION PROCEDURE

HINT:
Using the intelligent tester's DATA LIST allows switch, sensor, actuator and other item values to be read without removing any parts. Reading the DATA LIST early in troubleshooting is one way to save time.
NOTICE:
In the table below, the values listed under "Normal Condition" are reference values. Do not depend solely on these reference values when deciding whether a part is faulty or not.

1. Warm up the engine.
2. Turn the ignition switch OFF.
3. Connect the intelligent tester to the CAN VIM. Then connect the CAN VIM to the DLC3.
4. Turn the ignition switch ON and turn the tester ON.
5. Enter the following menus: DIAGNOSIS / ENHANCED OBD II / DATA LIST.
6. Follow the instructions on the tester and read the DATA LIST.

Item	Measurement Item/ Range (Display)	Normal Condition	Diagnostic Note
A/T OIL TEMP1	ATF temperature sensor value/ Min.: -40°C (-40°F) Max.: 215°C (419°F)	• After stall test: Approximately 80°C (176°F) • Equal to ambient temperature while engine is cold	If value is -40°C (-40°F) or "150°C (302°F) or more", ATF temperature sensor circuit is open or short circuited

HINT:
- When DTC P0712 is output and the tester output is 150°C (302°F) or more, there is a short circuit.
- When DTC P0713 is output and the tester output is -40°C (-40°F), there is an open circuit.
  Measure the resistance between terminal THO1 (THO) and the body ground.

Temperature Displayed	Malfunction
-40°C (-40°F)	Open circuit
150°C (302°F) or more	Short circuit

HINT:
If a circuit related to the ATF temperature sensor becomes open, P0713 is set in approximately 0.5 seconds. It is not necessary to inspect the circuit when P0711 is set.

1	INSPECT TRANSMISSION WIRE (ATF TEMPERATURE SENSOR)

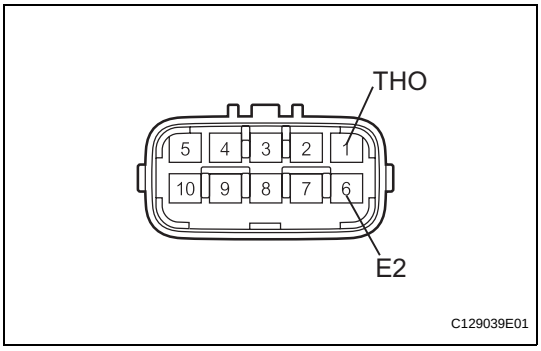

(a) Disconnect the B27 wire connector.
(b) Measure the resistance of the transmission wire.
Standard resistance

Tester Connection	Specified Condition
1 (THO) - 6 (E2)	**90 Ω to 156 kΩ**
1 (THO) - Body ground	**1 MΩ or higher**
6 (E2) - Body ground	**1 MΩ or higher**

HINT:
If the resistance is out of the specified range of either of the ATF temperatures shown in the table below, the driveability of the vehicle may decrease.
Standard resistance

ATF Temperature	Specified Condition
10°C (68°F)	**6.4 kΩ**
110°C (230°F)	**0.2 kΩ**

NG → **REPAIR OR REPLACE TRANSMISSION WIRE**

AX

OK

2	CHECK WIRE HARNESS (TRANSMISSION WIRE - ECM)

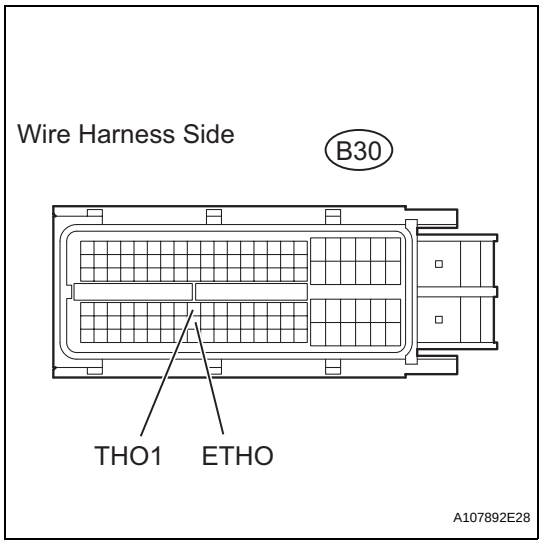

(a) Disconnect the B30 ECM connector.
(b) Measure the resistance of the wire harness side connector.

Standard resistance

Tester Connection	Specified Condition
B30-72 (THO1) - B30-95 (ETHO)	90 Ω to 156 kΩ
B30-72 (THO1) - Body ground	1 MΩ or higher
B30-95 (ETHO) - Body ground	1 MΩ or higher

NG → **REPAIR OR REPLACE HARNESS AND CONNECTOR**

OK

REPLACE ECM

DTC	P0711	Transmission Fluid Temperature Sensor "A" Performance

DESCRIPTION

Refer to DTC P0710 (see page AX-46).

DTC No.	DTC Detection Condition	Trouble Area
P0711	Case 1 (2 trip detection logic): First, ECM checks for following conditions: (a) 17 minutes or more after engine is started and after 9 km (5.6 miles) or more of driving, ECT is -15°C (5°F) or more (b) After starting engine and certain period of time has elapsed, ECT and IAT are -10°C (14°F) or more If conditions are met, ECM then checks if ATF temperature is less than 20°C (68°F). If so, ECM interprets this as fault and illuminates MIL. Case 2 (2 trip detection logic): First, ECM checks for following conditions: (a) ECT is 60°C (140°F) or more (b) After starting engine and certain period of time has elapsed, ECT is less than 35°C (95°F) If conditions are met, ECM then checks if ATF temperature is 100°C (212°F) or more. If so, ECM interprets this as fault and illuminates MIL.	• Open or short in No. 1 ATF temperature sensor circuit • No. 1 ATF temperature sensor • ECM

MONITOR DESCRIPTION

This DTC indicates that there is a problem with output from the ATF temperature sensor and that the sensor itself is defective. The ATF temperature sensor converts the ATF temperature to an electrical resistance value. Based on the resistance, the ECM determines the ATF temperature, detects open or short circuits of the ATF temperature circuit, and detects faults in the ATF temperature sensor.
Case 1 (2 trip detection logic):
First, the ECM checks for the following conditions:
(a) 17 minutes or more after the engine is started and after 9 km (5.6 miles) or more of driving, the ECT is -15°C (5°F) or more.
(b) After starting the engine and a certain period of time has elapsed, the ECT and IAT are -10°C (14°F) or more.
If the conditions are met, the ECM then checks if the ATF temperature is less than 20°C (68°F). If so, the ECM interprets this as a fault and illuminates the MIL.
Case 2 (2 trip detection logic):
First, the ECM checks for the following conditions:
(a) ECT is 60°C (140°F) or more.
(b) After starting the engine and a certain period of time has elapsed, the ECT is less than 35°C (95°F).
If the conditions are met, the ECM then checks if the ATF temperature is 100°C (212°F) or more. If so, the ECM interprets this as a fault and illuminates the MIL.

MONITOR STRATEGY

Related DTCs	P0711: ATF temperature sensor/Rationality check
Required sensors/Components	ATF temperature sensor
Frequency of operation	Continuous
Duration	Condition 1: 3 seconds Condition 2: 10 seconds
MIL operation	2 driving cycles

Sequence of operation	None

TYPICAL ENABLING CONDITIONS

All

The monitor will run whenever this DTC is not present	None P0110-P0113: IAT sensor P0115-P0118: ECT sensor P0710-P0713: Trans fluid temperature sensor

Condition 1

Time after engine start	17 minutes or more
ECT	-15°C (5°F) or more
Driving distance after engine start	9 km (5.6 miles) or more
IAT (12 sec. after engine start)	-10°C (14°F) or more
ECT (12 sec. after engine start)	-10°C (14°F) or more

Condition 2

ECT	60°C (140°F) or more
ECT (12 sec. after engine start)	Less than 35°C (95°F)

TYPICAL MALFUNCTION THRESHOLDS

Condition 1

ATF temperature	Less than 20°C (68°F)

Condition 2

ATF temperature	100°C (212°F) or more

COMPONENT OPERATING RANGE

ATF temperature	Atmospheric temperature - approximately 130°C (266°F)

WIRING DIAGRAM

Refer to DTC P0710 (see page AX-47).

INSPECTION PROCEDURE

HINT:

Using the intelligent tester's DATA LIST allows switch, sensor, actuator and other item values to be read without removing any parts. Reading the DATA LIST early in troubleshooting is one way to save time.

NOTICE:

In the table below, the values listed under "Normal Condition" are reference values. Do not depend solely on these reference values when deciding whether a part is faulty or not.

1. Warm up the engine.
2. Turn the ignition switch OFF.
3. Connect the intelligent tester to the CAN VIM. Then connect the CAN VIM to the DLC3.
4. Turn the ignition switch ON and turn the tester ON.
5. Enter the following menus: DIAGNOSIS / ENHANCED OBD II / DATA LIST.
6. Follow the instructions on the tester and read the DATA LIST.

Item	Measurement Item/ Range (Display)	Normal Condition	Diagnostic Note
A/T OIL TEMP1	ATF temperature sensor value/ Min.: -40°C (-40°F) Max.: 215°C (419°F)	• After stall test: Approximately 80°C (176°F) • Equal to ambient temperature while engine is cold	If value is -40°C (-40°F) or "150°C (302°F) or more", ATF temperature sensor circuit is open or short circuited

HINT:
- When DTC P0712 is output and the tester output is 150°C (302°F) or more, there is a short circuit.
- When DTC P0713 is output and the tester output is -40°C (-40°F), there is an open circuit.
  Measure the resistance between terminal THO1 (THO) and the body ground.

Temperature Displayed	Malfunction
-40°C (-40°F)	Open circuit
150°C (302°F) or more	Short circuit

HINT:
If a circuit related to the ATF temperature sensor becomes open, P0713 is set in approximately 0.5 seconds.
It is not necessary to inspect the circuit when P0711 is set.

1 CHECK OTHER DTC OUTPUT (IN ADDITION TO DTC P0711)

(a) Connect the intelligent tester to the CAN VIM. Then connect the CAN VIM to the DLC3.
(b) Turn the ignition switch ON and turn the tester ON.
(c) Enter the following menus: DIAGNOSIS / ENHANCED OBD II / DTC INFO / CURRENT CODES.
(d) Read the DTCs using the tester.

Result

Display (DTC output)	Proceed to
Only P0711 is output	A
P0711 and other DTCs are output	B

HINT:
If any other codes besides P0711 are output, perform troubleshooting for those DTCs first.

B → **GO TO DTC OUTPUT**

A

2 CHECK TRANSAXLE FLUID LEVEL

OK:
Automatic transaxle fluid level is correct.

NG → **ADD FLUID**

OK

REPAIR OR REPLACE TRANSMISSION WIRE

DTC	P0717	Input Speed Sensor Circuit No Signal

DESCRIPTION

This sensor detects the rotation speed of the turbine, which shows the input revolution of the transaxle. By comparing the input speed signal (NT) with the counter gear speed sensor signal (NC), the ECM detects the shift timing of the gears and controls the engine torque and hydraulic pressure according to various conditions. As a result, smooth gear shifting is achieved.

DTC No.	DTC Detection Condition	Trouble Area
P0717	ECM detects conditions (a), (b) and (c) continuously for 5 sec. or more (1 trip detection logic): (a) Vehicle speed: 50 km/h (31 mph) or more (b) Park/Neutral position switch (NSW, R and L) is OFF (c) Speed sensor NT: Less than 300 rpm	• Open or short in speed sensor NT circuit • Speed sensor NT • ECM

MONITOR DESCRIPTION

This DTC indicates that a pulse is not output from the speed sensor NT (input speed sensor) or is output only a little. The NT terminal of the ECM detects the revolving signal from the speed sensor (NT) (input RPM). The ECM outputs a gear shift signal comparing the input speed sensor (NT) with the output speed sensor (NC).

While the vehicle is operating in the 2nd, 3rd or O/D gear position with the shift lever on D, if the input shaft revolution is less than 300 rpm*1 and the output shaft revolution is 1,000 rpm or more*2, the ECM detects the trouble, illuminates the MIL and stores the DTC.

HINT:

*1: Pulse is not output or is irregularly output.

*2: The vehicle speed is approximately 50 km/h (31 mph) or more.

MONITOR STRATEGY

Related DTCs	P0717: Speed sensor (NT)/Verify pulse input
Required sensors/Components	Speed sensor (NT), Speed sensor (NC)
Frequency of operation	Continuous
Duration	5 sec.
MIL operation	Immediate
Sequence of operation	None

TYPICAL ENABLING CONDITIONS

The monitor will run whenever the following DTCs are not present.	P0500: VSS P0748: Shift solenoid SL1 P0778: Shift solenoid SL2 P0982, P0983: Shift solenoid S4
Shift change	Shift change is completed before starting next shift change operation
ECM selected gear	2nd, 3rd or 4th
Output shaft rpm	1,000 rpm or more
NSW switch	OFF
R switch	OFF
L switch	OFF
Engine	Running
Ignition switch	ON
Starter	OFF

TYPICAL MALFUNCTION THRESHOLDS

Sensor signal rpm	Less than 300 rpm

COMPONENT OPERATING RANGE

Speed sensor (NT)	Input speed is equal to engine speed when lock-up ON.

WIRING DIAGRAM

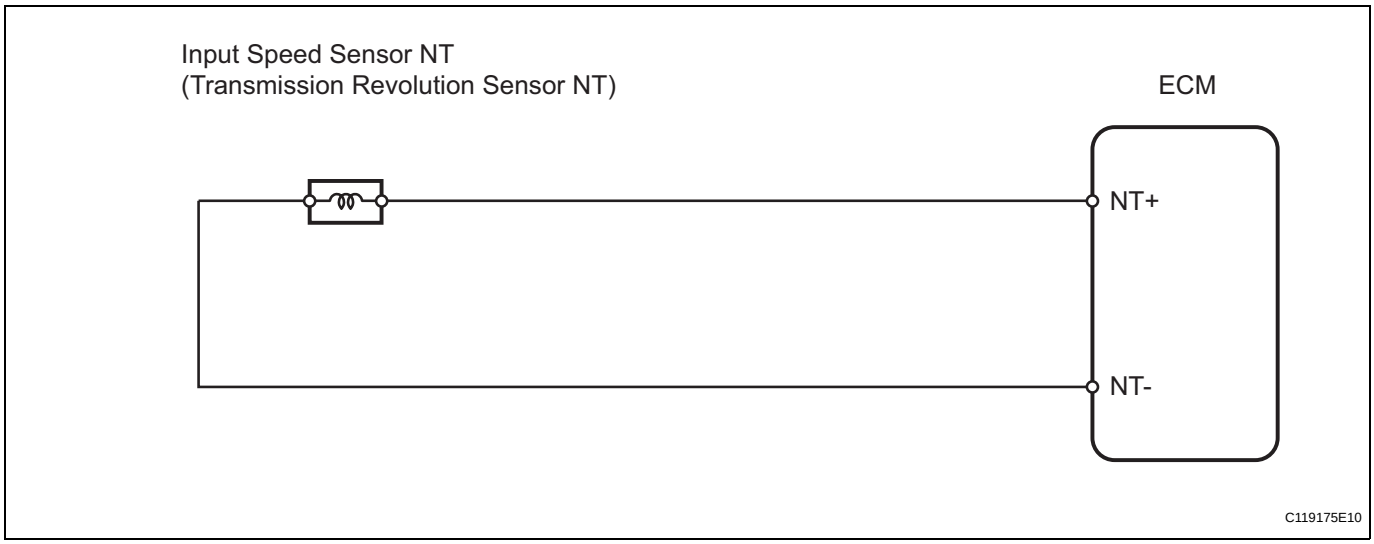

INSPECTION PROCEDURE

HINT:
Using the intelligent tester's DATA LIST allows switch, sensor, actuator and other item values to be read without removing any parts. Reading the DATA LIST early in troubleshooting is one way to save time.
NOTICE:
In the table below, the values listed under "Normal Condition" are reference values. Do not depend solely on these reference values when deciding whether a part is faulty or not.

1. Warm up the engine.
2. Turn the ignition switch OFF.
3. Connect the intelligent tester to the CAN VIM. Then connect the CAN VIM to the DLC3.
4. Turn the ignition switch ON and turn the tester ON.
5. Enter the following menus: DIAGNOSIS / ENHANCED OBD II / DATA LIST.
6. Follow the instructions on the tester and read the DATA LIST.

Item	Measurement Item/ Range (Display)	Normal Condition	Diagnostic Note
SPD (NT)	Input turbine speed/ Min.: 0 rpm Max.: 12,750 rpm	• Lock-up ON (after warming up engine): Input turbine speed (NT) equal to engine speed. • Lock-up OFF (idling with shift lever on N): Input turbine speed (NT) is nearly equal to engine speed.	Data is displayed in increments of 50 rpm

AX

HINT:
- SPD (NT) is always 0 rpm while driving:
  Open or short in the sensor or circuit.

- SPD (NT) is always more than 0 rpm and less than 300 rpm while driving the vehicle at 50 km/h (31 mph) or more:
  Sensor trouble, improper installation, or intermittent connection trouble of the circuit.

1 INSPECT SPEED SENSOR (INSTALLATION)

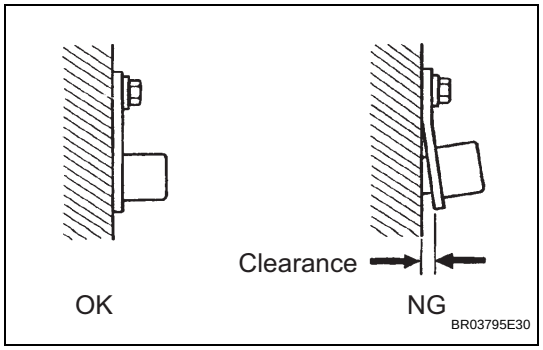

(a) Check the speed sensor NT installation.
OK:
Installation bolt is tightened properly and there is no clearance between the sensor and transaxle case.

NG → **SECURELY INSTALL SENSOR OR REPLACE SPEED SENSOR**

OK

2 INSPECT SPEED SENSOR NT

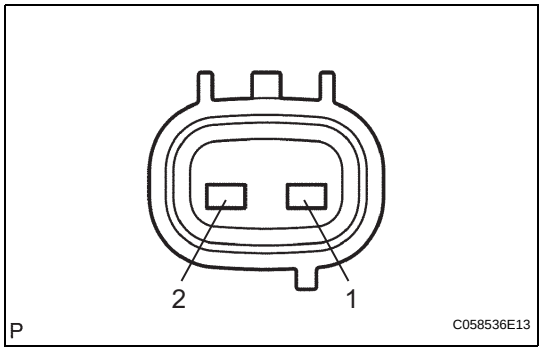

(a) Disconnect the B28 sensor connector from the transaxle.
(b) Measure the resistance of the sensor.
Standard resistance

Tester Connection	Condition	Specified Condition
1 - 2	20°C (68°F)	560 to 680 Ω

NG → **REPLACE SPEED SENSOR NT**

OK

3 CHECK WIRE HARNESS (SPEED SENSOR - ECM)

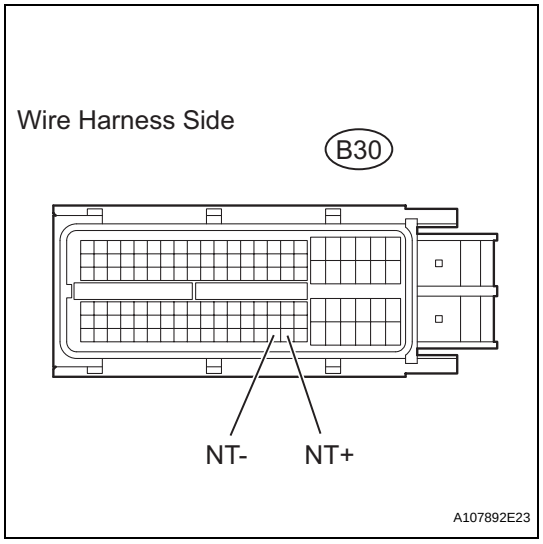

(a) Disconnect the B30 ECM connector.
(b) Measure the resistance of the wire harness side connector.
Standard resistance

Tester Connection	Condition	Specified Condition
B30-125 (NT+) - B30-124 (NT-)	20°C (68°F)	560 to 680 Ω
B30-125 (NT+) - Body ground	20°C (68°F)	10 kΩ or higher
B30-124 (NT-) - Body ground	20°C (68°F)	10 kΩ or higher

NG → **REPAIR OR REPLACE HARNESS AND CONNECTOR**

AX

OK

REPLACE ECM

DTC	P0724	Brake Switch "B" Circuit High

DESCRIPTION

The purpose of this circuit is to prevent the engine from stalling while driving in the lock-up condition when the brakes are suddenly applied.
When the brake pedal is depressed, this switch sends a signal to the ECM. Then the ECM cancels the operation of the lock-up clutch while braking is in progress.

DTC No.	DTC Detection Condition	Trouble Area
P0724	Stop light switch remains ON even when vehicle is driven in GO (30 km/h (18.63 mph) or more) and STOP (less than 3 km/h (1.86 mph)) pattern 5 times (2 trip detection logic)	• Short in stop light switch signal circuit • Stop light switch • ECM

MONITOR DESCRIPTION

This DTC indicates that the stop light switch remains ON. When the stop light switch remains ON during GO and STOP driving, the ECM interprets this as a fault in the stop light switch. Then the MIL illuminates and the ECM stores the DTC. The vehicle must GO (30 km/h (18.63 mph) or more) and STOP (less than 3 km/h (1.86 mph)) 5 times for 2 driving cycles in order for the DTC to be output.

MONITOR STRATEGY

Related DTCs	P0724: Stop light switch/Range check/Rationality
Required sensors/Components	Stop light switch, Vehicle speed sensor
Frequency of operation	Continuous
Duration	GO and STOP 5 times
MIL operation	2 driving cycles
Sequence of operation	None

TYPICAL ENABLING CONDITIONS

The monitor will run whenever this DTC is not present.	None
Battery voltage	8 V or more
Starter	OFF
Ignition switch	ON
GO (Vehicle speed is 30 km/h (18.63 mph) or more)	Once
STOP (Vehicle speed is less than 3 km/h (1.86 mph))	Once

TYPICAL MALFUNCTION THRESHOLDS

Brake switch	Stuck ON

WIRING DIAGRAM

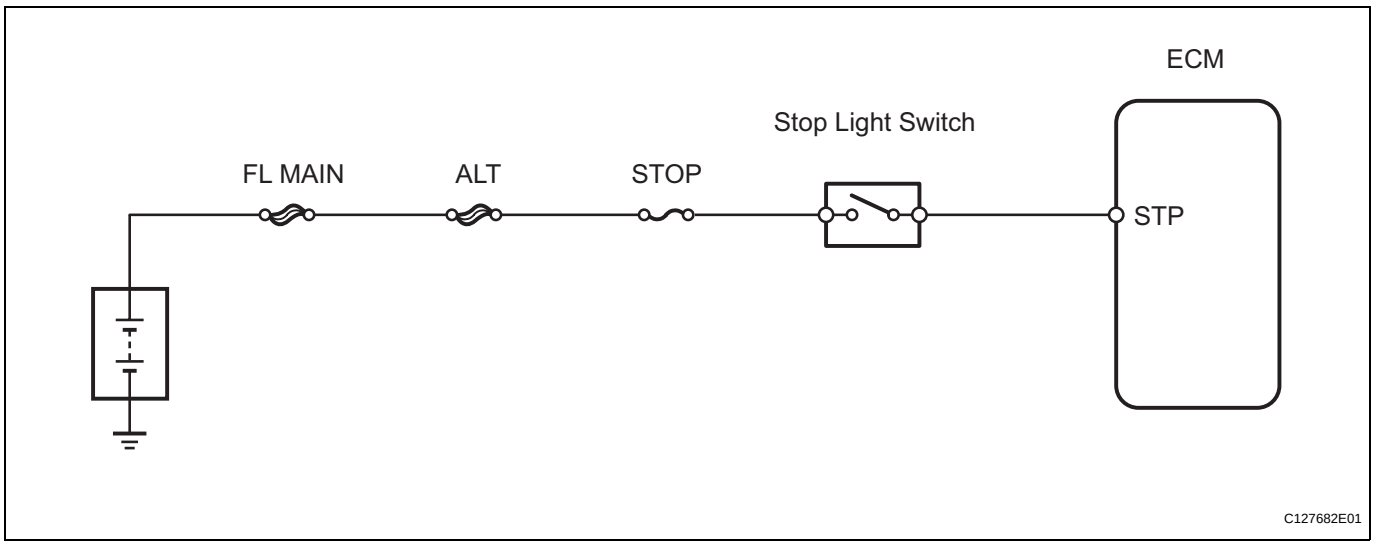

INSPECTION PROCEDURE

HINT:
Using the intelligent tester's DATA LIST allows switch, sensor, actuator and other item values to be read without removing any parts. Reading the DATA LIST early in troubleshooting is one way to save time.
NOTICE:
In the table below, the values listed under "Normal Condition" are reference values. Do not depend solely on these reference values when deciding whether a part is faulty or not.

1. Warm up the engine.
2. Turn the ignition switch OFF.
3. Connect the intelligent tester to the CAN VIM. Then connect the CAN VIM to the DLC3.
4. Turn the ignition switch ON and turn the tester ON.
5. Enter the following menus: DIAGNOSIS / ENHANCED OBD II / DATA LIST.
6. Follow the instructions on the tester and read the DATA LIST.

Item	Measurement Item/ Range (Display)	Normal Condition	Diagnostic Note
STOP LIGHT SW	Stop light switch status/ ON or OFF	• Brake pedal is depressed: ON • Brake pedal is released: OFF	-

1	INSPECT STOP LIGHT SWITCH

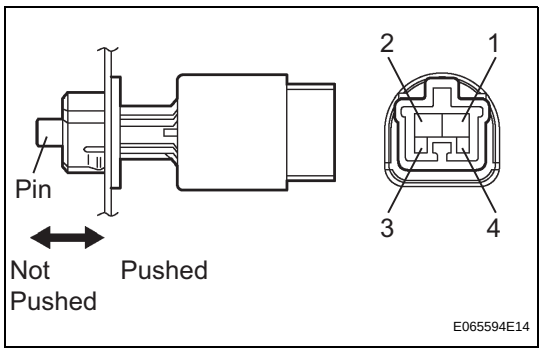

(a) Remove the A3 stop light switch.
(b) Measure the resistance of the switch.
Standard resistance

Tester Connection	Switch Condition	Specified Condition
1 - 2	Pin pushed (pedal released)	Below 1 Ω
1 - 2	Pin not pushed (pedal depressed)	10 kΩ or higher
3 - 4	Pin pushed (pedal released)	10 kΩ or higher
3 - 4	Pin not pushed (pedal depressed)	Below 1 Ω

NG → REPLACE STOP LIGHT SWITCH

AX

OK

2	CHECK WIRE HARNESS (ECM - BATTERY)

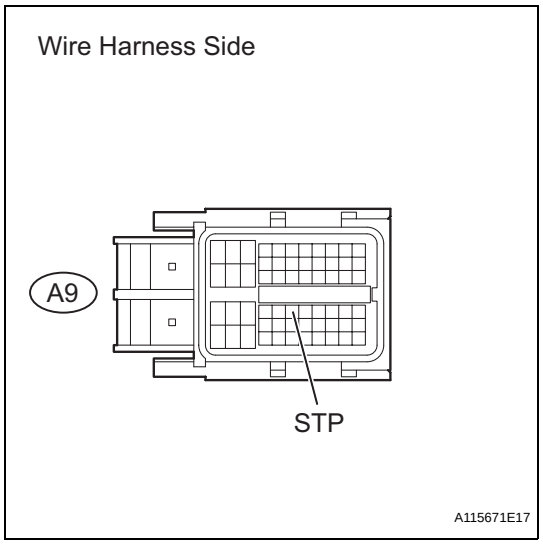

(a) Measure the voltage of the wire harness side connector.
Standard voltage

Tester Connection	Condition	Specified Condition
A9-36 (STP) - Body ground	Brake pedal is depressed	10 to 14 V
A9-36 (STP) - Body ground	Brake pedal is released	Below 1 V

NG → **REPAIR OR REPLACE HARNESS AND CONNECTOR**

OK

REPLACE ECM

DTC	P0741	Torque Converter Clutch Solenoid Performance (Shift Solenoid Valve DSL)

DESCRIPTION

The ECM uses the signals from the throttle position sensor, air-flow meter, turbine (input) speed sensor, intermediate (counter) shaft speed sensor and crankshaft position sensor to monitor the engagement condition of the lock-up clutch.
Then the ECM compares the engagement conditions of the lock-up clutch with the lock-up schedule in the ECM memory to detect mechanical problems of the shift solenoid valve DSL, valve body and torque converter clutch.

DTC No.	DTC Detection Condition	Trouble Area
P0741	Lock-up does not occur when driving in lock-up range Lock-up remains ON in lock-up OFF range (2 trip detection logic)	• Shift solenoid valve DSL remains open or closed • Valve body is blocked • Shift solenoid valve DSL • Torque converter clutch • Automatic transaxle (clutch, brake, gear, etc.) • Line pressure is too low • ECM

MONITOR DESCRIPTION

Torque converter lock-up is controlled by the ECM based on the speed sensor (NT), speed sensor (NC), engine rpm, engine load, engine temperature, vehicle speed, transmission temperature and gear selection.
The ECM determines the lock-up status of the torque converter by comparing the engine rpm (NE) to the input turbine rpm (NT). The ECM calculates the actual transmission gear by comparing input turbine rpm control voltage to counter gear rpm (NC). When conditions are appropriate, the ECM requests "lock-up" by applying control voltage to the shift solenoid valve DSL. When the DSL is turned on, it applies pressure to the lock-up relay valve and locks the torque converter clutch.
If the ECM detects no lock-up after lock-up has been requested or if it detects lock-up when it is not requested, the ECM interprets this as a fault in the shift solenoid valve DSL or lock-up system performance.
The ECM will illuminate the MIL and store the DTC.
Example:
When any of the following is met, the system judges it as a malfunction.

1. There is a difference in rotation between the input side (engine speed) and output side (input turbine speed) of the torque converter when the ECM commands lock-up.
   (Engine speed is at least 100 rpm greater than input turbine speed.)
2. There is no difference in rotation between the input side (engine speed) and output side (input turbine speed) of the torque converter when the ECM commands lock-up OFF.
   (The difference between engine speed and input turbine speed is less than 35 rpm.)

MONITOR STRATEGY

Related DTCs	P0741: Shift solenoid valve DSL/OFF malfunction Shift solenoid valve DSL/ON malfunction
Required sensors/Components	Shift solenoid valve DSL, Speed sensor (NT), Speed sensor (NC), Crankshaft position sensor (NE), Throttle position sensor (VPA1), Mass air flow sensor (MAF), Transmission temperature sensor (THO1), Engine coolant temperature sensor (ECT)
Frequency of operation	Continuous

Duration	OFF malfunction 3.5 sec. ON malfunction 1.8 sec.
MIL operation	2 driving cycles
Sequence of operation	None

TYPICAL ENABLING CONDITIONS

All

The monitor will run when ever this DTC is no present	P0115-P0118: ECT sensor P0125: Insufficient ECT for Closed Loop P0500: VSS P0748-P0799: Trans solenoid (range)
Transmission range	"D"
ECT (Engine coolant temperature)	60°C (140°F) or higher
ATF temperature	-20°C (-4°F) or higher
ATF temperature sensor circuit	Not circuit malfunction
ECT sensor circuit	Not circuit malfunction
Turbine speed sensor circuit	Not circuit malfunction
Intermediate shaft speed sensor circuit	Not circuit malfunction
Output speed sensor circuit	Not circuit malfunction
Shift solenoid valve SL1 circuit	Not circuit malfunction
Shift solenoid valve SL2 circuit	Not circuit malfunction
Shift solenoid valve S4 circuit	Not circuit malfunction
Shift solenoid valve DSL circuit	Not circuit malfunction
Electronic throttle system	Not circuit malfunction

OFF malfunction

ECM lock-up command	ON
ECM selected gear	3rd or 4th
Vehicle speed	25 km/h (15.5 mph) or more

ON malfunction

ECM lock-up command	OFF
ECM selected gear	3rd or 4th
Vehicle speed	25 to 60 km/h (15.5 to 37.2 mph)
Throttle valve opening angle	8% or more

TYPICAL MALFUNCTION THRESHOLDS

Either of the following conditions is met: OFF malfunction or ON malfunction

OFF malfunction

Engine speed - input (turbine) speed	100 rpm or more

ON malfunction

2 detections are necessary per driving cycle:
1st detection: temporary flag ON
2nd detection: pending fault code ON
Vehicle speed must be under 10 km/h (6.2 mph) once before 2nd detection

Difference between engine speed and input (turbine) speed	Less than 35 rpm

WIRING DIAGRAM

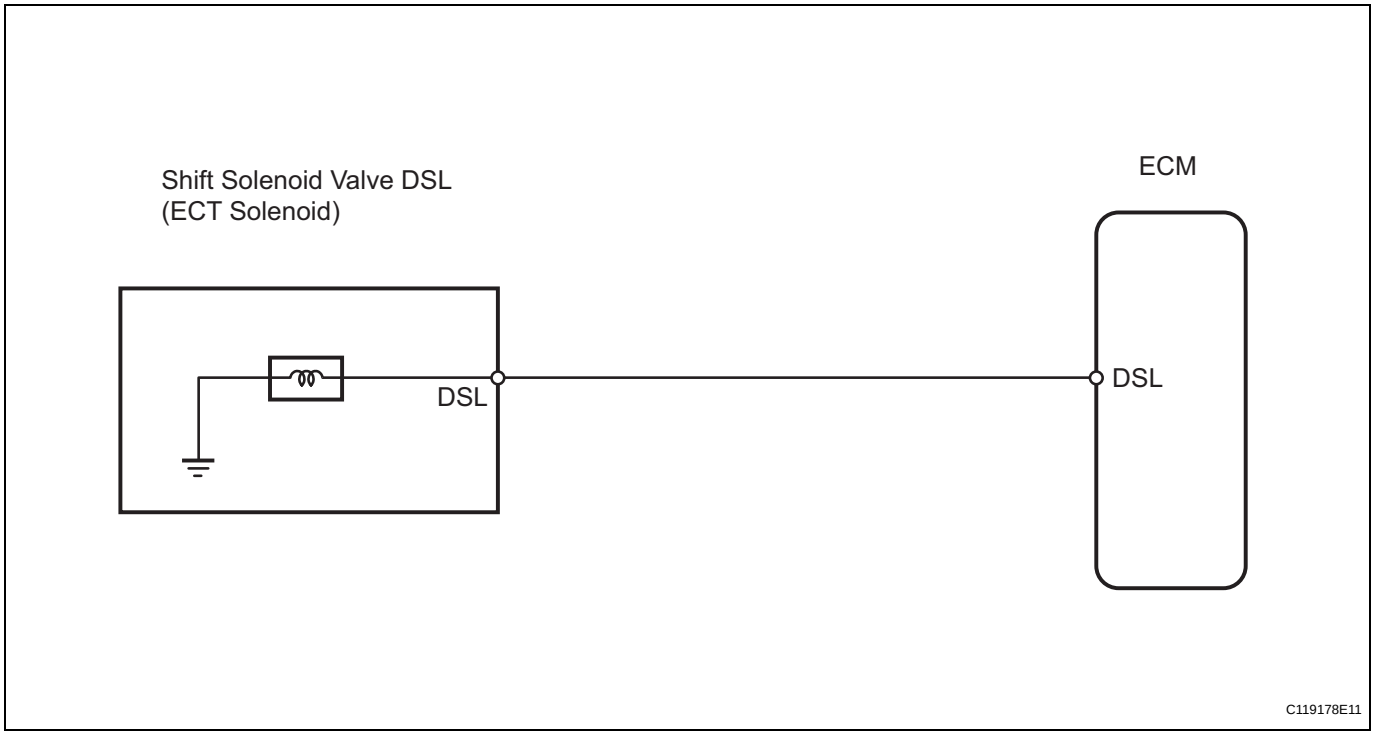

INSPECTION PROCEDURE

HINT:
Performing the intelligent tester's ACTIVE TEST allows relay, VSV, actuator and other items to be operated without removing any parts. Performing the ACTIVE TEST early in troubleshooting is one way to save time.
The DATA LIST can be displayed during the ACTIVE TEST.

1. Warm up the engine.
2. Turn the ignition switch OFF.
3. Connect the intelligent tester to the CAN VIM. Then connect the CAN VIM to the DLC3.
4. Turn the ignition switch ON and turn the tester ON.
5. Enter the following menus: DIAGNOSIS / ENHANCED OBD II / ACTIVE TEST.
6. Follow the instructions on the tester and read the ACTIVE TEST.

Item	Test Detail	Diagnostic Note
LOCK UP	[Test Details] Control shift solenoid DSL to set automatic transaxle to the lock-up condition [Vehicle Condition] • Throttle valve opening angle: Less than 35% • Vehicle speed: 60 km/h (36 mph) or more	Possible to check shift solenoid valve DSL operation

HINT:
- This test can be conducted when the vehicle speed is 60 km/h (36 mph) or more.
- This test can be conducted in the 3rd or O/D gear.

7. Lightly depress the accelerator pedal and check that the engine speed does not change abruptly.
HINT:
- When changing the accelerator pedal opening angle while driving, if the engine speed does not change, lock-up is ON.
- Slowly release the accelerator pedal in order to decelerate. (Do not fully release the pedal as that will close the throttle valve and lock-up may be turned OFF.)

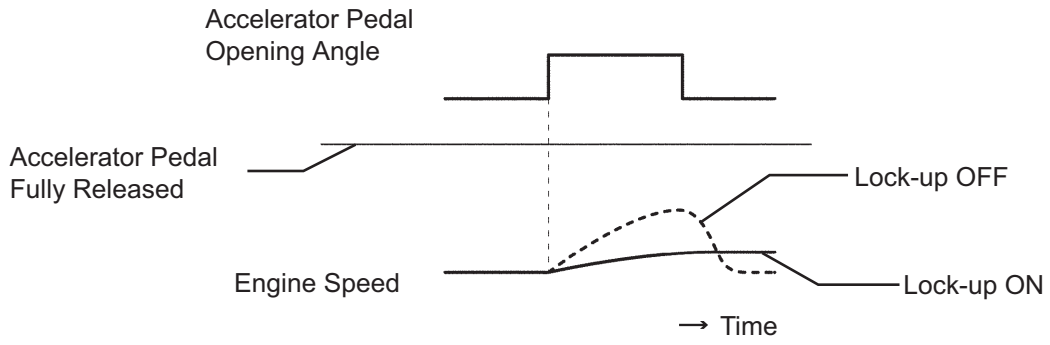

1	CHECK OTHER DTC OUTPUT (IN ADDITION TO DTC P0741)

(a) Connect the intelligent tester to the CAN VIM. Then connect the CAN VIM to the DLC3.
(b) Turn the ignition switch ON and turn the tester ON.
(c) Enter the following menus: DIAGNOSIS / ENHANCED OBD II / DTC INFO / CURRENT CODES.
(d) Read the DTCs using the tester.

Result

Display (DTC output)	Proceed to
Only P0741 is output	A
P0741 and other DTCs are output	B

HINT:
If any other codes besides P0741 are output, perform troubleshooting for those DTCs first.

B → **GO TO DTC CHART**

A

2	INSPECT TRANSMISSION WIRE (SHIFT SOLENOID VALVE DSL)

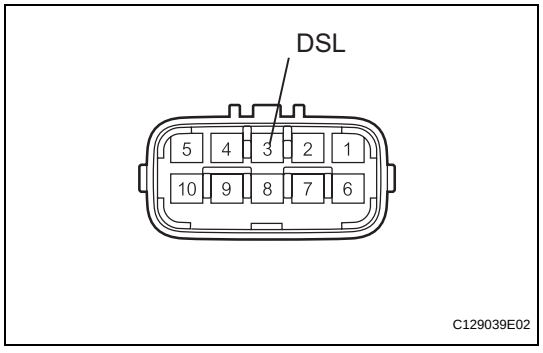

(a) Disconnect the B27 wire connector.
(b) Measure the resistance of the transmission wire.

Standard resistance

Tester Connection	Condition	Specified Condition
3 (DSL) - Body ground	20°C (68°F)	11 to 13 Ω

NG → **Go to step 4**

OK

3	CHECK WIRE HARNESS (TRANSMISSION WIRE - ECM)

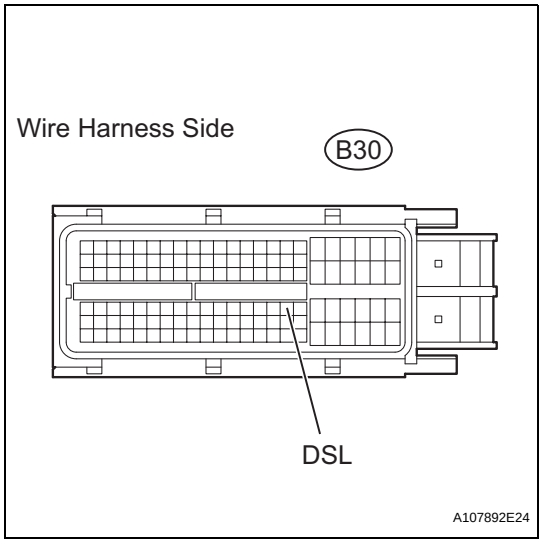

(a) Disconnect the B30 ECM connector.
(b) Measure the resistance of the wire harness side connector.
Standard resistance

Tester Connection	Condition	Specified Condition
B30-79 (DSL) - Body ground	20°C (68°F)	11 to 13 Ω

NG → **REPAIR OR REPLACE HARNESS AND CONNECTOR**

OK

REPLACE ECM

4	INSPECT SHIFT SOLENOID VALVE DSL

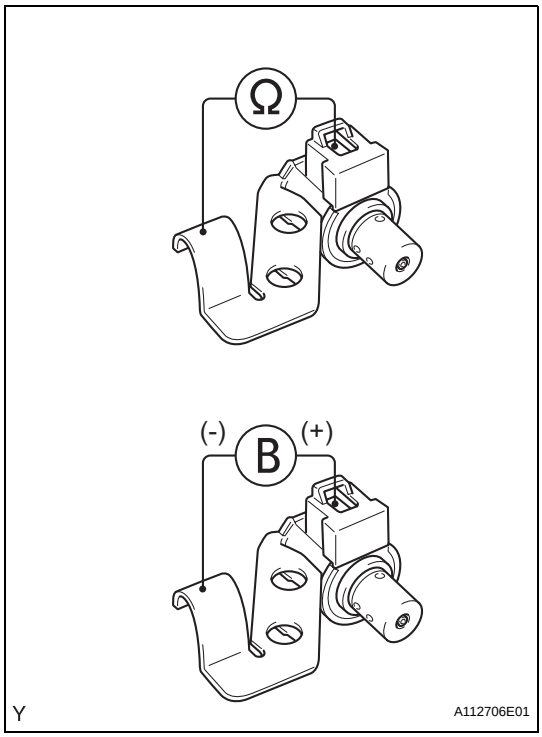

(a) Remove the shift solenoid valve DSL.
(b) Measure the resistance of the solenoid valve.
Standard resistance:
11 to 13 Ωat 20°C (68°F)
(c) Connect the battery's positive (+) lead to the terminal of the solenoid valve connector, and the negative (-) lead to the solenoid body. Then check that the valve moves and makes an operating noise.
OK:
Valve moves and makes operating noise.

NG → **REPLACE SHIFT SOLENOID VALVE DSL**

OK

AX

5	CHECK TRANSMISSION WIRE

OK:
The connectors and pins are securely installed.
There is no open or short on the wire harness.

NG → **REPAIR OR REPLACE TRANSMISSION WIRE**

OK

6	INSPECT TRANSMISSION VALVE BODY ASSEMBLY

(a) Check the transmission valve body assembly.
OK:
There are no foreign objects on each valve.

NG → **REPAIR OR REPLACE TRANSMISSION VALVE BODY ASSEMBLY**

OK

7	INSPECT TORQUE CONVERTER CLUTCH ASSEMBLY

(a) Check the torque converter clutch assembly (see page AX-153).
OK:
The torque converter clutch operates normally.

NG → **REPLACE TORQUE CONVERTER CLUTCH ASSEMBLY**

OK

REPAIR AUTOMATIC TRANSAXLE ASSEMBLY

DTC	P0746	Pressure Control Solenoid "A" Performance (Shift Solenoid Valve SL1)

DESCRIPTION

The ECM uses signals from the vehicle speed sensor to detect the actual gear position (1st, 2nd, 3rd or O/D gear).
Then the ECM compares the actual gear with the shift schedule in the ECM memory to detect mechanical problems of the shift solenoid valves, valve body or automatic transaxle (clutch, brake, gear, etc.).

DTC No.	DTC Detection Condition	Trouble Area
P0746	Gear required by the ECM does not match the actual gear when driving (2 trip detection logic)	• Shift solenoid valve SL1 remains open or closed • Valve body is blocked • Shift solenoid valve SL1 • Automatic transaxle (clutch, brake, gear, etc.) • ECM

MONITOR DESCRIPTION

The ECM commands gear shifts by turning the shift solenoid valves ON/OFF. According to the input shaft revolution, intermediate (counter) shaft revolution and output shaft revolution, the ECM detects the actual gear position (1st, 2nd, 3rd or O/D gear position). When the gear position commanded by the ECM and the actual gear position are not the same, the ECM illuminates the MIL.
Example:
When either condition (a) or (b) is met, the ECM detects a malfunction.
(a) The ECM commands the 1st gear, but the actual gear is 2nd.
(b) The ECM commands the 2nd gear, but the actual gear is 1st.

MONITOR STRATEGY

Related DTCs	P0746: Shift solenoid valve SL1/OFF malfunction Shift solenoid valve SL1/ON malfunction
Required sensors/Components	Shift solenoid valve SL1, Speed sensor (NT), Speed sensor (NC), Crankshaft position sensor (NE)
Frequency of operation	Continuous
Duration	OFF malfunction, ON malfunction (A) 0.8 sec. ON malfunction (B) 1 sec.
MIL operation	2 driving cycles
Sequence of operation	None

TYPICAL ENABLING CONDITIONS

All

Transmission range	"D"
ECT (Engine coolant temperature)	60°C (140°F) or more
ATF temperature	-20°C (-4°F) or more
ATF temperature sensor circuit	Not circuit malfunction
ECT sensor circuit	Not circuit malfunction
Turbine speed sensor circuit	Not circuit malfunction
Intermediate shaft speed sensor circuit	Not circuit malfunction
Output speed sensor circuit	Not circuit malfunction
Shift solenoid valve SL1 circuit	Not circuit malfunction

Shift solenoid valve SL2 circuit	Not circuit malfunction
Shift solenoid valve S4 circuit	Not circuit malfunction
Electronic throttle system	Not circuit malfunction

OFF malfunction

ECM selected gear	1st
Vehicle speed	10 to 40 km/h (6.2 to 24.9 mph)
Throttle valve opening angle	4.5% or more (varies with engine speed)

ON malfunction (A)

ECM selected gear	2nd
Vehicle speed	10 km/h (6.2 mph) or more
Throttle valve opening angle	4.5% or more (varies with engine speed)

ON malfunction (B)

ECM lock-up command	OFF
ECM selected gear	3rd or 4th

TYPICAL MALFUNCTION THRESHOLDS

Either of the following conditions is met:
OFF malfunction, or ON malfunction (A) and (B)
2 detections are necessary per driving cycle:
1st detection: temporary flag ON
2nd detection: pending fault code ON

OFF malfunction

Input (turbine) speed/Intermediated shaft speed	1.49 to 1.63

ON malfunction (A)

Input (turbine) speed/Intermediated shaft speed	2.72 to 2.86

ON malfunction (B)

Engine speed - Input (turbine) speed	250 rpm or more

INSPECTION PROCEDURE

HINT:
Performing the intelligent tester's ACTIVE TEST allows relay, VSV, actuator and other items to be operated without removing any parts. Performing the ACTIVE TEST early in troubleshooting is one way to save time.
The DATA LIST can be displayed during the ACTIVE TEST.

1. Warm up the engine.
2. Turn the ignition switch OFF.
3. Connect the intelligent tester to the CAN VIM. Then connect the CAN VIM to the DLC3.
4. Turn the ignition switch ON and turn the tester ON.
5. Enter the following menus: DIAGNOSIS / ENHANCED OBD II / ACTIVE TEST.
6. Follow the instructions on the tester and read the ACTIVE TEST.
   HINT:
   While driving, the shift position can be forcibly changed with the tester. Comparing the shift position commanded by the ACTIVE TEST with the actual shift position enables you to confirm the problem (see page AX-31).

Item	Test Detail	Diagnostic Note
SHIFT	[Test Details] Operate shift solenoid valve and set each shift lever position by yourself [Vehicle Condition] • IDL: ON • 50 km/h (31 mph) or less [Other information] • Press "→" button: Shift up • Press "←" button: Shift down	Possible to check operation of shift solenoid valves

HINT:
- This test can be conducted when the vehicle speed is 50 km/h (31 mph) or more.
- This shift position commanded by the ECM is shown in the DATA LIST/SHIFT display on the tester.

1 CHECK OTHER DTC OUTPUT (IN ADDITION TO DTC P0746)

(a) Connect the intelligent tester to the CAN VIM. Then connect the CAN VIM to the DLC3.
(b) Turn the ignition switch ON and turn the tester ON.
(c) Enter the following menus: DIAGNOSIS / ENHANCED OBD II / DTC INFO / CURRENT CODES.
(d) Read the DTCs using the tester.

Result

Display (DTC output)	Proceed to
Only P0746 is output	A
P0746 and other DTCs are output	B

HINT:
If any other codes besides P0746 are output, perform the troubleshooting for those DTCs first.

B → **GO TO DTC CHART**

A

2	INSPECT SHIFT SOLENOID VALVE SL1

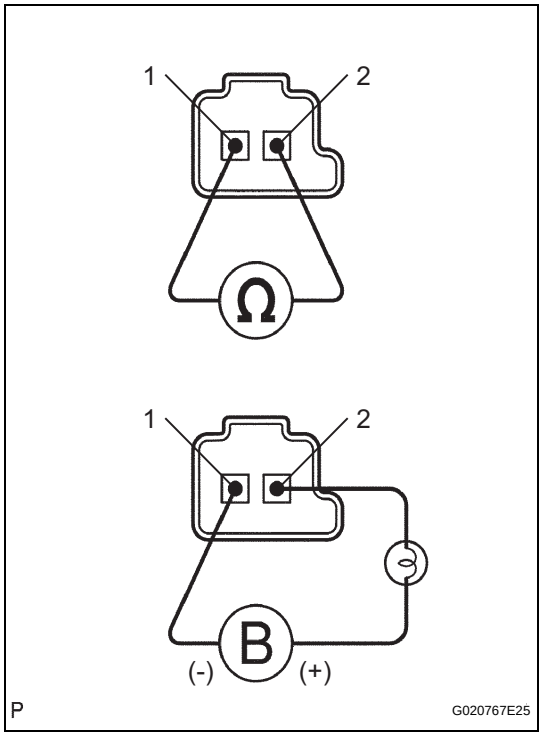

(a) Remove the shift solenoid valve SL1.
(b) Measure the resistance of the solenoid valve.
Standard resistance:
5.0 to 5.6 Ωat 20°C (68°F)
(c) Connect the battery's positive (+) lead with a 21 W bulb to terminal 2 and the negative (-) lead to terminal 1 of the solenoid valve connector. Then check that the valve moves and makes an operating noise.
OK:
Valve moves and makes operating noise.

NG → **REPLACE SHIFT SOLENOID VALVE SL1**

OK

3	INSPECT TRANSMISSION VALVE BODY ASSEMBLY

(a) Check the transmission valve body assembly.
OK:
There are no foreign objects on each valve.

NG → **REPAIR OR REPLACE TRANSMISSION VALVE BODY ASSEMBLY**

OK

4	INSPECT TORQUE CONVERTER CLUTCH ASSEMBLY

(a) Check the torque converter clutch assembly (see page AX-153).
OK:
The torque converter clutch operates normally.

NG → **REPLACE TORQUE CONVERTER CLUTCH ASSEMBLY**

OK

REPAIR OR REPLACE AUTOMATIC TRANSAXLE ASSEMBLY

DTC	P0748	Pressure Control Solenoid "A" Electrical (Shift Solenoid Valve SL1)

DESCRIPTION

Shifting from 1st to O/D is performed in combination with the ON and OFF operation of the shift solenoid valves SL1 and SL2, which are controlled by the ECM. If an open or short circuit occurs in any of the shift solenoid valves, the ECM controls the remaining normal shift solenoid valves to allow the vehicle to be operated safely (see page AX-31).

DTC No.	DTC Detection Condition	Trouble Area
P0748	Duty cycle to shift solenoid valve SL1 is 100% (1 trip detection logic)	• Open or short in shift solenoid valve SL1 circuit • Shift solenoid valve SL1 • ECM

MONITOR DESCRIPTION

This DTC indicates an open or short in the shift solenoid valve SL1 circuit. The ECM commands gear shifts by turning the shift solenoid valves ON/OFF. When there is an open or short circuit in any shift solenoid valve circuit, the ECM detects the problem, illuminates the MIL and stores the DTC. Also, the ECM performs the fail-safe function and turns the other normal shift solenoid valves ON/OFF. In case of an open or short circuit, the ECM stops sending current to the circuit (see page AX-31).

MONITOR STRATEGY

Related DTCs	P0748: Shift solenoid valve SL1/Range check
Required sensors/Components	Shift solenoid valve SL1
Frequency of operation	Continuous
Duration	1 sec.
MIL operation	Immediate
Sequence of operation	None

TYPICAL ENABLING CONDITIONS

The monitor will run whenever this DTC is not present.	None
Battery voltage	11 V or more
Starter	OFF
Ignition switch	ON

TYPICAL MALFUNCTION THRESHOLDS

Solenoid status	Fail

COMPONENT OPERATING RANGE

Output signal duty	Less than 100%

WIRING DIAGRAM

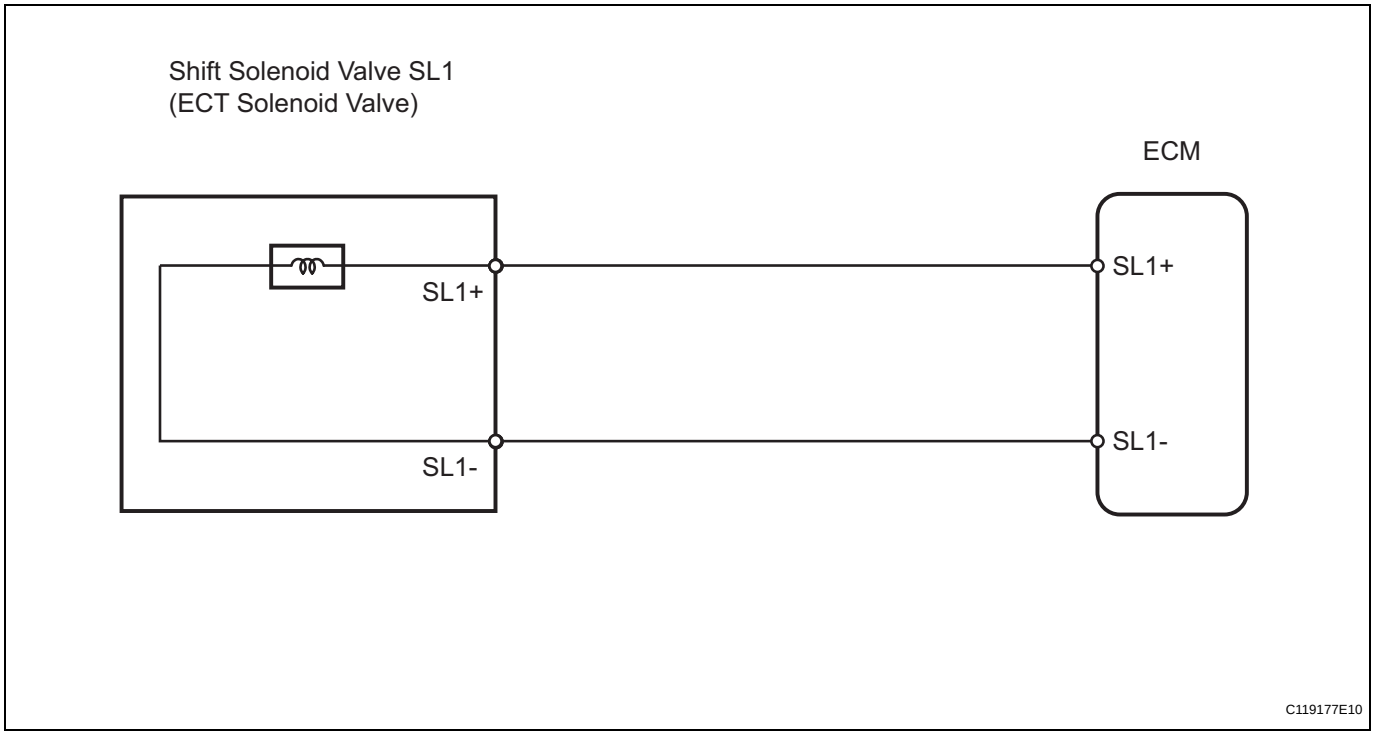

INSPECTION PROCEDURE

1	INSPECT TRANSMISSION WIRE (SHIFT SOLENOID VALVE SL1)

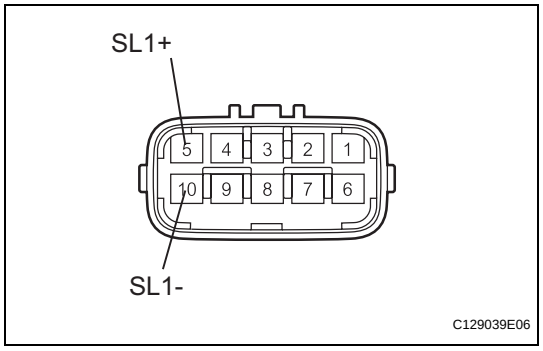

(a) Disconnect the B27 wire connector.
(b) Measure the resistance of the transmission wire.

Standard resistance

Tester Connection	Condition	Specified Condition
5 (SL1+) - 10 (SL1-)	20°C (68°F)	5.0 to 5.6 Ω
5 (SL1+) - Body ground	20°C (68°F)	1 MΩ or higher
10 (SL1-) - Body ground	20°C (68°F)	1 MΩ or higher

NG → **Go to step 3**

OK

2	CHECK WIRE HARNESS (TRANSMISSION WIRE - ECM)

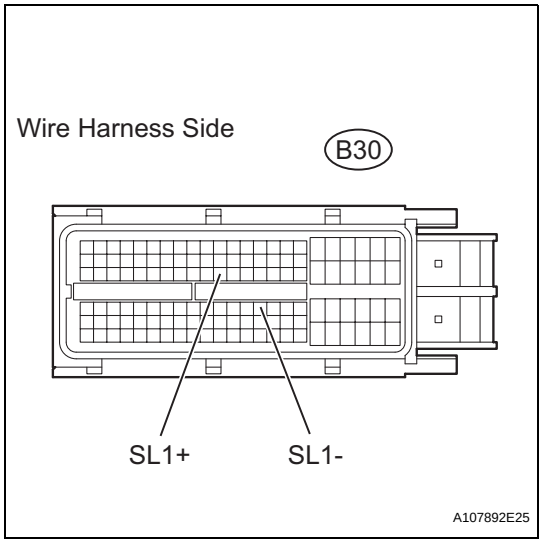

(a) Disconnect the B30 ECM connector.
(b) Measure the resistance of the wire harness side connector.
Standard resistance

Tester Connection	Condition	Specified Condition
B30-57 (SL1+) - B30-77 (SL1-)	20°C (68°F)	5.0 to 5.6 Ω
B30-57 (SL1+) - Body ground	20°C (68°F)	1 MΩ or higher
B30-77 (SL1-) - Body ground	20°C (68°F)	1 MΩ or higher

NG → **REPAIR OR REPLACE HARNESS AND CONNECTOR**

OK

REPLACE ECM

3	INSPECT SHIFT SOLENOID VALVE SL1

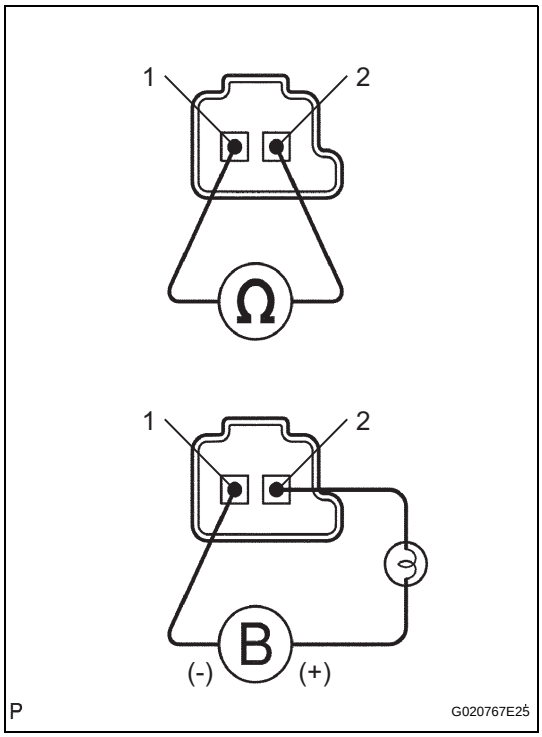

(a) Remove the shift solenoid valve SL1.
(b) Measure the resistance of the solenoid valve.
Standard resistance:
5.0 to 5.6 Ωat 20°C (68°F)
(c) Connect the battery's positive (+) lead with a 21 W bulb to terminal 2 and the negative (-) lead to terminal 1 of the solenoid valve connector. Then check that the valve moves and makes an operating noise.
OK:
Valve moves and makes operating noise.

NG → **REPLACE SHIFT SOLENOID VALVE SL1**

OK

REPAIR OR REPLACE TRANSMISSION WIRE

AX

DTC	P0766	Shift Solenoid "D" Performance (Shift Solenoid Valve S4)

SYSTEM DESCRIPTION

The ECM uses signals from the output shaft speed sensor and input speed sensor to detect the actual gear position (1st, 2nd, 3rd or O/D gear).
Then the ECM compares the actual gear with the shift schedule in the ECM memory to detect mechanical problems of the shift solenoid valves, valve body or automatic transaxle (clutch, brake, gear, etc.).

DTC No.	DTC Detection Condition	Trouble Area
P0766	Gear required by the ECM does not match the actual gear when driving (2 trip detection logic)	• Shift solenoid valve S4 remains open or closed • Valve body is blocked • Shift solenoid valve S4 • Automatic transaxle (clutch, brake, gear, etc.) • ECM

MONITOR DESCRIPTION

This DTC indicates a stuck OFF malfunction of the shift solenoid valve S4, stuck ON malfunction of the shift solenoid valve SL2, or brake control valve malfunction. The ECM commands gear shifts by turning the shift solenoid valves ON/OFF. When the gear position commanded by the ECM and the actual gear position are not the same, the ECM illuminates the MIL and stores the DTC.

MONITOR STRATEGY

Related DTCs	P0766: Shift solenoid valve S4/ON malfunction Shift solenoid valve S4/OFF malfunction
Required sensors/Components	Shift solenoid valve S4, Speed sensor (NT), Speed sensor (NC), Crankshaft position sensor (NE)
Frequency of operation	Continuous
Duration	1 sec.
MIL operation	2 driving cycles
Sequence of operation	None

TYPICAL ENABLING CONDITIONS

All

Transmission range	"D"
ECT (Engine coolant temperature)	60°C (140°F) or more
ATF temperature	-20°C (-4°F) or more
ATF temperature circuit	Not circuit malfunction
ECT sensor circuit	Not circuit malfunction
Turbine speed sensor circuit	Not circuit malfunction
Intermediate shaft speed sensor circuit	Not circuit malfunction
Output speed sensor circuit	Not circuit malfunction
Shift solenoid valve SL1 circuit	Not circuit malfunction
Shift solenoid valve SL2 circuit	Not circuit malfunction
Shift solenoid valve S4 circuit	Not circuit malfunction
Electric throttle control system	Not circuit malfunction

OFF malfunction

ECM selected gear	4th

Vehicle speed	10 km/h (6.2 mph) or more
Throttle valve opening angle	5% or more

ON malfunction

ECM selected gear	3rd
Vehicle speed	10 km/h (6.2 mph) or more
Throttle valve opening angle	5% or more

TYPICAL MALFUNCTION THRESHOLDS

Either of the following conditions is met:
OFF malfunction or ON malfunction
2 detections are necessary per driving cycle:
1st detection: temporary flag ON
2nd detection: pending fault code ON

OFF malfunction

Intermediate shaft speed/Output speed	1.34 to 1.48

ON malfunction

Intermediate shaft speed/Output speed	0.95 to 1.09

INSPECTION PROCEDURE

HINT:
Performing the intelligent tester's ACTIVE TEST allows relay, VSV, actuator and other items to be operated without removing any parts. Performing the ACTIVE TEST early in troubleshooting is one way to save time.
The DATA LIST can be displayed during the ACTIVE TEST.

1. Warm up the engine.
2. Turn the ignition switch OFF.
3. Connect the intelligent tester to the CAN VIM. Then connect the CAN VIM to the DLC3.
4. Turn the ignition switch ON and turn the tester ON.
5. Enter the following menus: DIAGNOSIS / ENHANCED OBD II / ACTIVE TEST.
6. Follow the instructions on the tester and perform the ACTIVE TEST.

HINT:
While driving, the shift position can be forcibly changed with the tester.
Comparing the shift position commanded by the ACTIVE TEST with the actual shift position enables you to confirm the problem (see page AX-31).

Item	Test Details	Diagnostic Note
SHIFT	[Test Details] Operate the shift solenoid valve and set each shift lever position by yourself [Vehicle Condition] • IDL: ON • 50 km/h (31 mph) or less [Other information] • Press "→" button: Shift up • Press "←" button: Shift down	Possible to check the operation of the shift solenoid valves

HINT:
- This test can be conducted when the vehicle speed is 50 km/h (31 mph) or less.
- The shift position commanded by the ECM is shown in the DATA LIST/SHIFT display on the tester.

1 CHECK OTHER DTC OUTPUT (IN ADDITION TO DTC P0766)

(a) Connect the intelligent tester to the CAN VIM. Then connect the CAN VIM to the DLC3.
(b) Turn the ignition switch ON and turn the tester ON.
(c) Enter the following menus: DIAGNOSIS / ENHANCED OBD II / DTC INFO / CURRENT CODES.
(d) Read the DTCs using the tester.
Result

Display (DTC output)	Proceed to
Only P0766 is output	A
P0766 and other DTCs are output	B

HINT:
If any other codes besides P0766 are output, perform troubleshooting for those DTCs first.

B → **GO TO DTC CHART**

A

2 INSPECT SHIFT SOLENOID VALVE S4

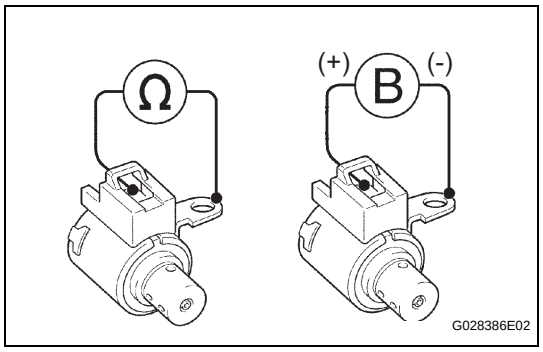

(a) Remove the shift solenoid valve S4.
(b) Measure the resistance between the solenoid valve terminal and solenoid valve body.
Standard resistance:
11 to 15 Ω at 20°C (68°F)
(c) Connect the battery's positive (+) lead to the terminal of the solenoid valve connector, and the negative (-) lead to the solenoid body. Then check that the valve moves and makes an operating noise.
OK:
Valve moves and makes operating noise.

NG → **REPLACE SHIFT SOLENOID VALVE S4**

OK

3 INSPECT TRANSMISSION VALVE BODY ASSEMBLY

(a) Check the transmission valve body assembly.
OK:
There are no foreign objects on each valve.

NG → **REPAIR OR REPLACE TRANSMISSION VALVE BODY ASSEMBLY**

OK

4	INSPECT TORQUE CONVERTER CLUTCH ASSEMBLY

(a) Check the torque converter clutch assembly (see page AX-153).

OK:

The torque converter clutch operates normally.

NG → **REPLACE TORQUE CONVERTER CLUTCH ASSEMBLY**

OK

REPAIR OR REPLACE AUTOMATIC TRANSAXLE ASSEMBLY

DTC	P0776	Pressure Control Solenoid "B" Performance (Shift Solenoid Valve SL2)

DESCRIPTION

The ECM uses signals from the output shaft speed sensor and input speed sensor to detect the actual gear position (1st, 2nd, 3rd or O/D gear).
Then the ECM compares the actual gear with the shift schedule in the ECM memory to detect mechanical problems of the shift solenoid valves, valve body or automatic transaxle (clutch, brake, gear, etc.).

DTC No.	DTC Detection Condition	Trouble Area
P0776	Gear required by the ECM does not match the actual gear when driving (2 trip detection logic)	• Shift solenoid valve SL2 remains open • Valve body is blocked • Automatic transaxle (clutch, brake, gear, etc.) • ECM

MONITOR DESCRIPTION

This DTC indicates a stuck ON malfunction or stuck OFF malfunction of the shift solenoid valve SL2.
The ECM commands gear shifts by turning the shift solenoid valves ON/OFF. When the gear position commanded by the ECM and the actual gear position are not the same, the ECM illuminates the MIL and stores the DTC.

MONITOR STRATEGY

Related DTCs	P0776: Shift solenoid valve SL2/ON malfunction Shift solenoid valve SL2/OFF malfunction
Required sensors/Components	Shift solenoid valve SL2, Speed sensor (NT), Speed sensor (NO), Crankshaft position sensor (NE)
Frequency of operation	Continuous
Duration	0.8 sec.
MIL operation	2 driving cycles
Sequence of operation	None

TYPICAL ENABLING CONDITIONS

All

Transmission range	"D"
ECT (Engine coolant temperature)	60°C (140°F) or more
ATF temperature	-20°C (-4°F) or more
ATF temperature circuit	Not circuit malfunction
ECT sensor circuit	Not circuit malfunction
Turbine speed sensor circuit	Not circuit malfunction
Intermediate shaft speed sensor circuit	Not circuit malfunction
Output speed sensor circuit	Not circuit malfunction
Shift solenoid valve SL1 circuit	Not circuit malfunction
Shift solenoid valve SL2 circuit	Not circuit malfunction
Shift solenoid valve S4 circuit	Not circuit malfunction
Electric throttle control system	Not circuit malfunction

OFF malfunction

ECM selected gear	1st
Vehicle speed	10 to 40 km/h (6.2 to 24.9 mph)
Throttle valve opening angle	4.5% or more (varies with engine speed)

ON malfunction

ECM selected gear	3rd or 4th
Vehicle speed	10 km/h (6.2 mph) or more
Throttle valve opening angle	4.5% or more (varies with engine speed)

TYPICAL MALFUNCTION THRESHOLDS

Either of the following conditions is met:
OFF malfunction or ON malfunction
2 detections are necessary per driving cycle:
1st detection: temporary flag ON
2nd detection: pending fault code ON

OFF malfunction

Input (turbine) speed/Intermediate shaft speed	0.93 to 1.07

ON malfunction

Input (turbine) speed/Intermediate shaft speed	1.49 to 1.63

INSPECTION PROCEDURE

HINT:
Performing the intelligent tester's ACTIVE TEST allows relay, VSV, actuator and other items to be operated without removing any parts. Performing the ACTIVE TEST early in troubleshooting is one way to save time.
The DATA LIST can be displayed during the ACTIVE TEST.

1. Warm up the engine.
2. Turn the ignition switch OFF.
3. Connect the intelligent tester to the CAN VIM. Then connect the CAN VIM to the DLC3.
4. Turn the ignition switch ON and turn the tester ON.
5. Enter the following menus: DIAGNOSIS / ENHANCED OBD II / ACTIVE TEST.
6. Follow the instructions on the tester and perform the ACTIVE TEST.

HINT:
While driving, the shift position can be forcibly changed with the tester.
Comparing the shift position commanded by the ACTIVE TEST with the actual shift position enables you to confirm the problem (see page AX-31).

Item	Test Details	Diagnostic Note
SHIFT	[Test Details] Operate the shift solenoid valve and set each shift lever position by yourself [Vehicle Condition] • IDL: ON • 50 km/h (31 mph) or less [Other information] • Press "→" button: Shift up • Press "←" button: Shift down	Possible to check the operation of the shift solenoid valves

HINT:
- This test can be conducted when the vehicle speed is 50 km/h (31 mph) or less.
- The shift position commanded by the ECM is shown in the DATA LIST/SHIFT display on the tester.

1	**CHECK OTHER DTC OUTPUT (IN ADDITION TO DTC P0776)**

(a) Connect the intelligent tester to the CAN VIM. Then connect the CAN VIM to the DLC3.
(b) Turn the ignition switch ON and turn the tester ON.

(c) Enter the following menus: DIAGNOSIS / ENHANCED OBD II / DTC INFO / CURRENT CODES.
(d) Read the DTCs using the tester.
Result

Display (DTC output)	Proceed to
Only P0776 is output	A
P0776 and other DTCs are output	B

HINT:
If any other codes besides P0776 are output, perform troubleshooting for those DTCs first.

B → **GO TO DTC CHART**

A

2 INSPECT SHIFT SOLENOID VALVE SL2

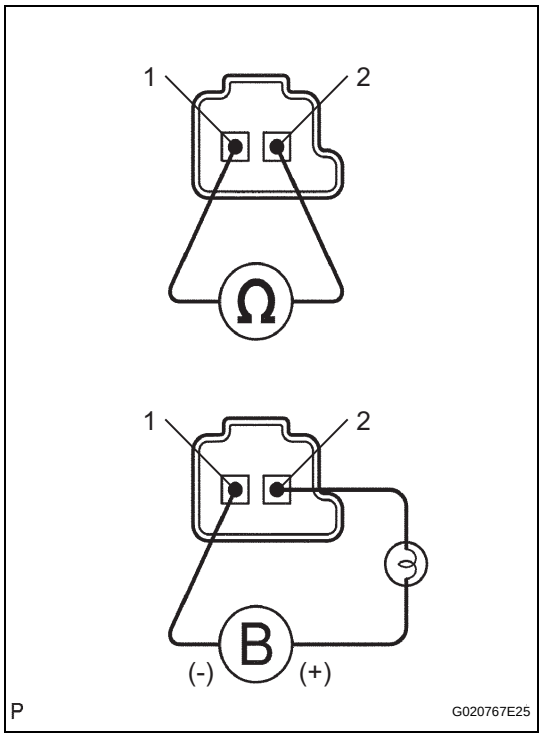

(a) Remove the shift solenoid valve SL2.
(b) Measure the resistance of the solenoid valve.
Standard resistance:
5.0 to 5.6 Ωat 20°C (68°F)
(c) Connect the battery's positive (+) lead with a 21 W bulb to terminal 2 and the negative (-) lead to terminal 1 of the solenoid valve connector. Then check that the valve moves and makes an operating noise.
OK:
Valve moves and makes operating noise.

NG → **REPLACE SHIFT SOLENOID VALVE SL2**

OK

3 INSPECT TRANSMISSION VALVE BODY ASSEMBLY

(a) Check the transmission valve body assembly.
OK:
There are no foreign objects on each valve.

NG → **REPAIR TRANSMISSION VALVE BODY ASSEMBLY**

OK

4	INSPECT TORQUE CONVERTER CLUTCH ASSEMBLY

(a) Check the torque converter clutch assembly (see page AX-153).

OK:

The torque converter clutch operates normally.

NG → **REPLACE TORQUE CONVERTER CLUTCH ASSEMBLY**

OK

REPAIR OR REPLACE AUTOMATIC TRANSAXLE ASSEMBLY

DTC	P0778	Pressure Control Solenoid "B" Electrical (Shift Solenoid Valve SL2)

DESCRIPTION

Shifting from 1st to O/D is performed in combination with the ON and OFF operation of the shift solenoid valves SL1 and SL2, which are controlled by the ECM. If an open or short circuit occurs in any of the shift solenoid valves, the ECM controls the remaining normal shift solenoid valves to allow the vehicle to be operated safely (see page AX-31).

DTC No.	DTC Detection Condition	Trouble Area
P0778	Duty cycle to shift solenoid valve SL2 is 100% (1 trip detection logic)	• Open or short in shift solenoid valve SL2 circuit • Shift solenoid valve SL2 • ECM

MONITOR DESCRIPTION

This DTC indicates an open or short in the shift solenoid valve SL2 circuit. The ECM commands gear shifts by turning the shift solenoid valves ON/OFF. When there is an open or short circuit in any shift solenoid valve circuit, the ECM detects the problem, illuminates the MIL and stores the DTC. Also, the ECM performs the fail-safe function and turns the other normal shift solenoid valves ON/OFF. In case of an open or short circuit, the ECM stops sending current to the circuit (see page AX-31).

MONITOR STRATEGY

Related DTCs	P0778: Shift solenoid valve SL2/Range check
Required sensors/Components	Shift solenoid valve SL2
Frequency of operation	Continuous
Duration	1 sec.
MIL operation	Immediate
Sequence of operation	None

TYPICAL ENABLING CONDITIONS

The monitor will run whenever this DTC is not present.	None
Battery voltage	11 V or more
Starter	OFF
Ignition switch	ON

TYPICAL MALFUNCTION THRESHOLDS

Solenoid status	Fail

COMPONENT OPERATING RANGE

Output signal duty	Less than 100%

WIRING DIAGRAM

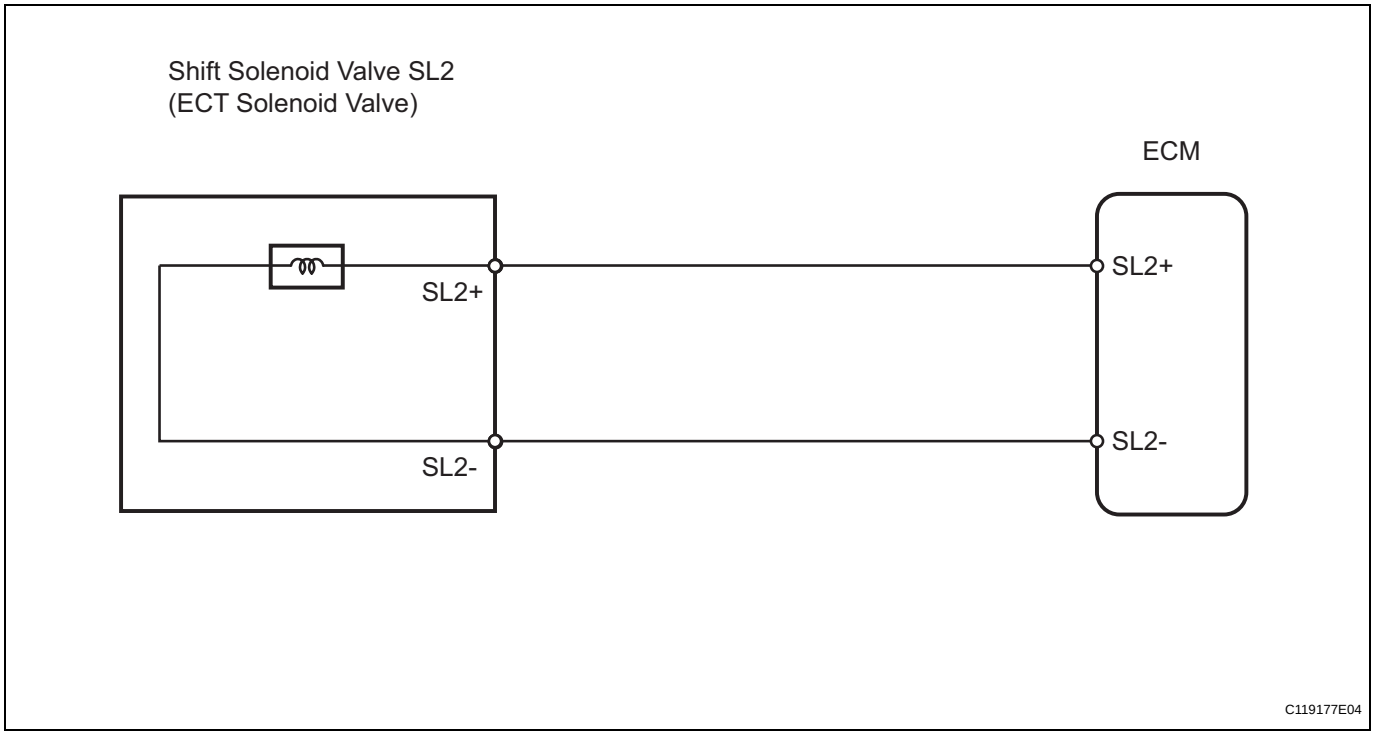

INSPECTION PROCEDURE

1	INSPECT TRANSMISSION WIRE (SHIFT SOLENOID VALVE SL2)

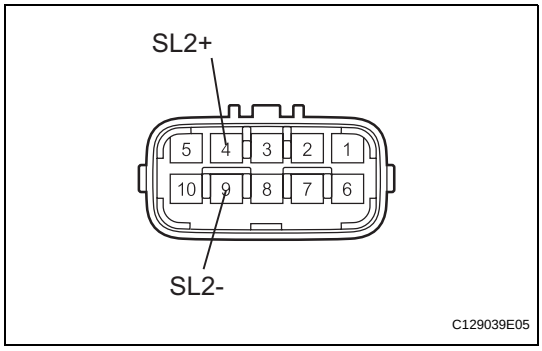

(a) Disconnect the B27 wire connector.
(b) Measure the resistance of the transmission wire.

Standard resistance

Tester Connection	Condition	Specified Condition
4 (SL2+) - 9 (SL2-)	20°C (68°F)	5.0 to 5.6 Ω
4 (SL2+) - Body ground	20°C (68°F)	1 MΩ or higher
9 (SL2-) - Body ground	20°C (68°F)	1 MΩ or higher

NG → **Go to step 3**

OK

2 CHECK WIRE HARNESS (TRANSMISSION WIRE - ECM)

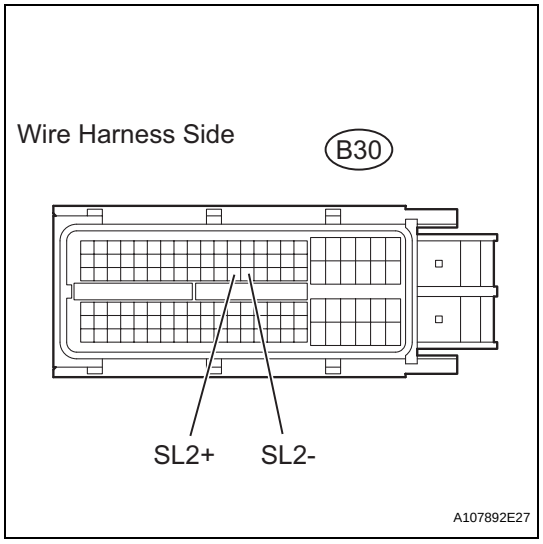

(a) Disconnect the B30 ECM connector.
(b) Measure the resistance of the wire harness side connector.
Standard resistance

Tester Connection	Condition	Specified Condition
B30-58 (SL2+) - B30-59 (SL2-)	20°C (68°F)	5.0 to 5.6 Ω
B30-58 (SL2+) - Body ground	20°C (68°F)	1 MΩ or higher
B30-59 (SL2-) - Body ground	20°C (68°F)	1 MΩ or higher

NG → **REPAIR OR REPLACE HARNESS AND CONNECTOR**

OK

REPLACE ECM

3 INSPECT SHIFT SOLENOID VALVE SL2

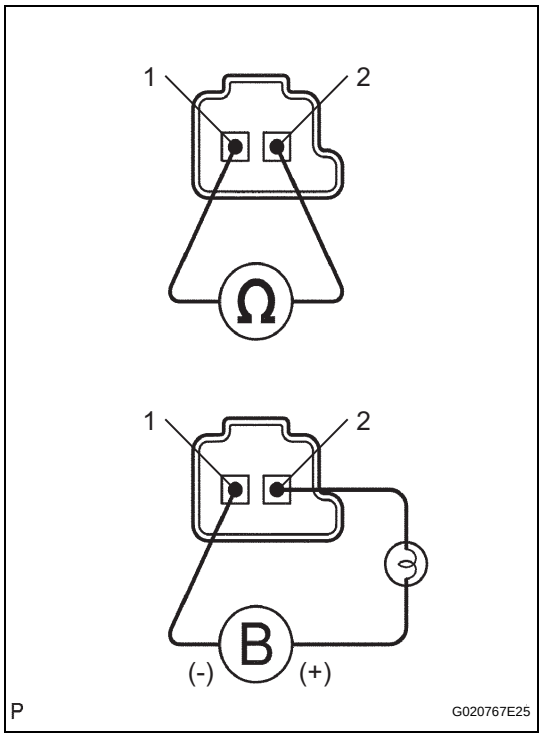

(a) Remove the shift solenoid valve SL2.
(b) Measure the resistance of the solenoid valve.
Standard resistance:
5.0 to 5.6 Ωat 20°C (68°F)
(c) Connect the battery's positive (+) lead with a 21 W bulb to terminal 2 and the negative (-) lead to terminal 1 of the solenoid valve connector. Then check that the valve moves and makes an operating noise.
OK:
Valve moves and makes operating noise.

NG → **REPLACE SHIFT SOLENOID VALVE SL2**

OK

REPAIR OR REPLACE TRANSMISSION WIRE

AX

DTC	P0793	Intermediate Shaft Speed Sensor "A"

DESCRIPTION

This sensor detects the rotation speed of the counter gear. By comparing the counter gear speed signal (NC) with the direct clutch speed sensor signal (NT), the ECM detects the shift timing of the gears and approximately controls the engine torque and hydraulic pressure according to various conditions. Thus smooth gear shifting is performed.

DTC No.	DTC Detection Condition	Trouble Area
P0793	ECM detects conditions (a) and (b) continuously for 5 sec. or more (1 trip detection logic): (a) Park/Neutral position switch (NSW) is OFF (b) Speed sensor NC: Less than 300 rpm	• Open or short in speed sensor NC circuit • Speed sensor NC • ECM

MONITOR DESCRIPTION

The NC terminal of the ECM detects revolution signals from speed sensor NC (counter gear rpm). The ECM calculates gear shifts by comparing speed sensor NT with speed sensor NC.
While the vehicle is operating in the 2nd, 3rd or O/D gear position with the shift lever on D, if the counter gear revolution is less than 300 rpm*1 and the output shaft revolution is more than 1,000 rpm*2, the ECM detects the trouble, illuminates the MIL and stores the DTC.
*1: Pulse is not output or is irregularly output.
*2: The vehicle speed is 50 km/h (31 mph) or more.

MONITOR STRATEGY

Related DTCs	P0793: Speed sensor (NC)/Verify pulse input
Required sensors/Components	Speed sensor (NC), Speed sensor (NT), NSW switch
Frequency of operation	Continuous
Duration	5 sec.
MIL operation	Immediate
Sequence of operation	None

TYPICAL ENABLING CONDITIONS

The monitor will run whenever the following DTCs are not present.	P0500: VSS P0748: Shift solenoid SL1 P0778: Shift solenoid SL2 P0982, P0983: Shift solenoid S4
Engine	Running
NSW switch	OFF
Output shaft rpm	1,000 rpm or more

TYPICAL MALFUNCTION THRESHOLDS

Sensor signal rpm	Less than 300 rpm

COMPONENT OPERATING RANGE

Counter gear speed sensor (NC)	4th (O/D) when shift lever is on D (after warming up the engine); Intermediate shaft speed (NC) becomes close to the engine speed

WIRING DIAGRAM

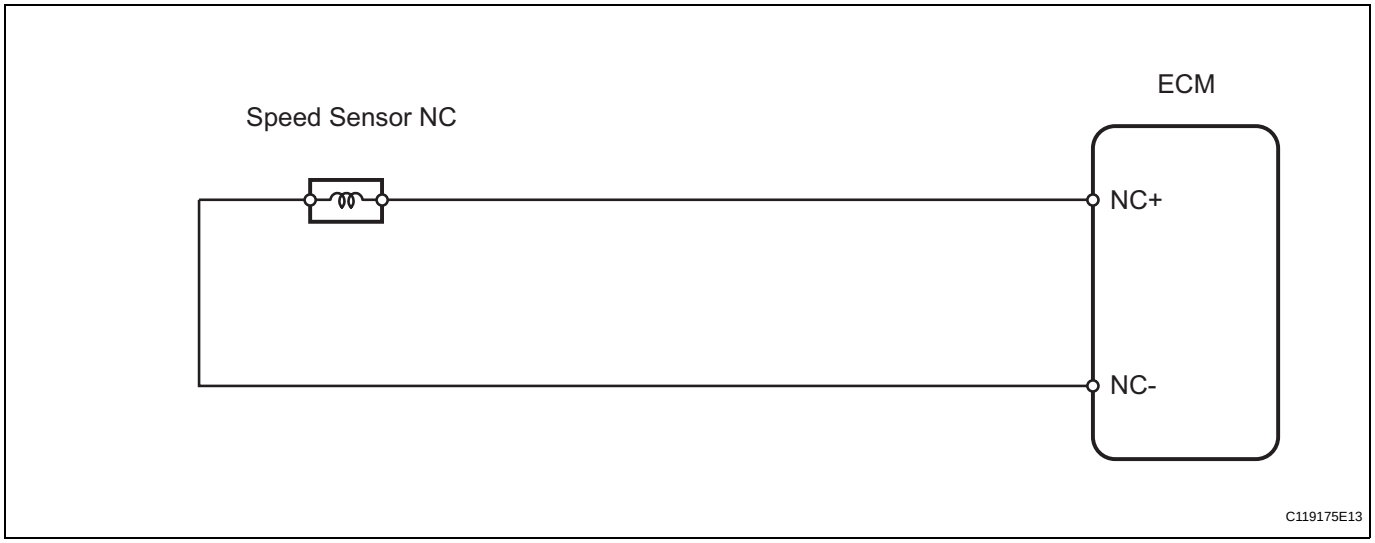

INSPECTION PROCEDURE

HINT:
Using the intelligent tester's DATA LIST allows switch, sensor, actuator and other item values to be read without removing any parts. Reading the DATA LIST early in troubleshooting is one way to save time.
NOTICE:
In the table below, the values listed under "Normal Condition" are reference values. Do not depend solely on these reference values when deciding whether a part is faulty or not.

1. Warm up the engine.
2. Turn the ignition switch OFF.
3. Connect the intelligent tester to the CAN VIM. Then connect the CAN VIM to the DLC3.
4. Turn the ignition switch ON and turn the tester ON.
5. Enter the following menus: DIAGNOSIS / ENHANCED OBD II / DATA LIST.
6. Follow the instructions on the tester and read the DATA LIST.

Item	Measurement Item/ Range (Display)	Normal Condition	Diagnostic Note
SPD (NC)	Counter gear speed/ Min.: 0 rpm Max.: 12,750 rpm	4th (O/D) when shift lever is on D (after warming up the engine); Intermediate shaft speed (NC) becomes close to the engine speed	Data is displayed in increments of 50 rpm

HINT:

- SPD (NC) is always 0 rpm while driving:
  Open or short in the sensor or circuit.
- SPD (NC) is always more than 0 and less than 300 rpm while driving the vehicle at 50 km/h (31 mph) or more:
  Sensor trouble, improper installation, or intermittent connection trouble of the circuit.

1	INSPECT SPEED SENSOR (INSTALLATION)

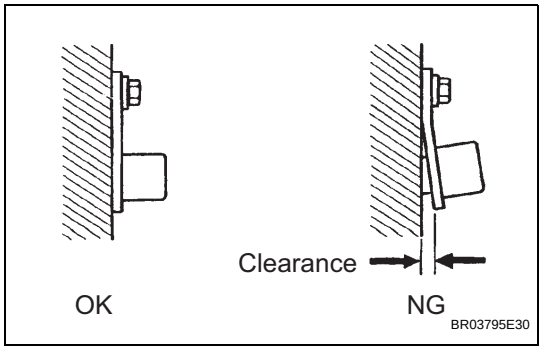

(a) Check the speed sensor NC installation.
OK:
Installation bolt is tightened properly and there is no clearance between the sensor and transaxle case.

NG → **REPLACE SPEED SENSOR NC**

OK

2	INSPECT SPEED SENSOR NC

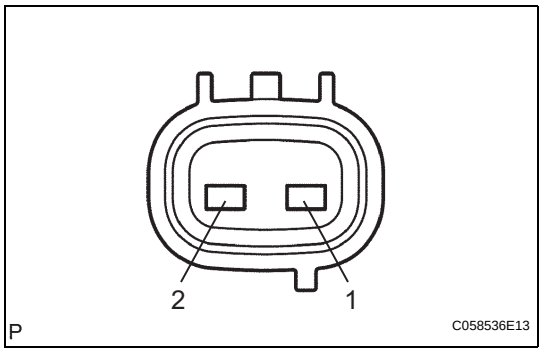

(a) Disconnect the B24 sensor connector from the transaxle.
(b) Measure the resistance of the sensor.
Standard resistance

Tester Connection	Condition	Specified Condition
1 - 2	20°C (68°F)	560 to 680 Ω

NG → **REPLACE SPEED SENSOR NC**

OK

3	CHECK WIRE HARNESS (SPEED SENSOR - ECM)

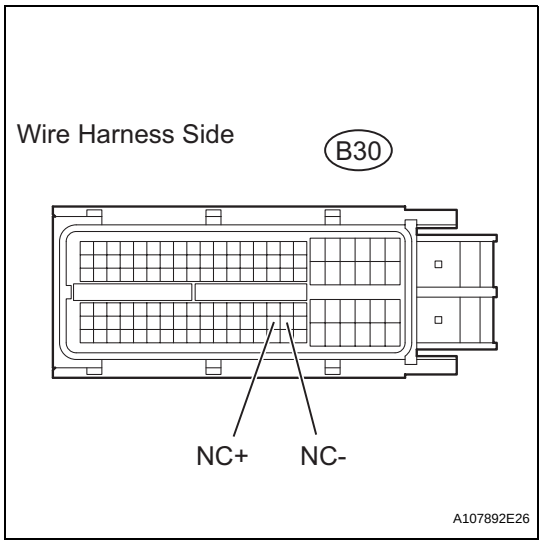

(a) Disconnect the B30 ECM connector.
(b) Measure the resistance of the wire harness side connector.
Standard resistance

Tester Connection	Specified Condition
B30-101 (NC+) - B30-102 (NC-)	560 to 680 Ω
B30-101 (NC+) - Body ground	10 kΩ or higher
B30-102 (NC-) - Body ground	10 kΩ or higher

NG → **REPAIR OR REPLACE HARNESS AND CONNECTOR**

OK

REPLACE ECM

DTC	P0982	Shift Solenoid "D" Control Circuit Low (Shift Solenoid Valve S4)

DTC	P0983	Shift Solenoid "D" Control Circuit High (Shift Solenoid Valve S4)

DESCRIPTION

Shifting from 1st to O/D is performed in combination with the ON and OFF operation of the shift solenoid valves SL1 and SL2, which are controlled by the ECM. If an open or short circuit occurs in any of the shift solenoid valves, the ECM controls the remaining normal shift solenoid valves to allow the vehicle to be operated safely (see page AX-31).

DTC No.	DTC Detection Condition	Trouble Area
P0982	ECM detects short in solenoid valve S4 circuit 2 times when solenoid valve S4 is operated (1 trip detection logic)	• Short in shift solenoid valve S4 circuit • Shift solenoid valve S4 • ECM
P0983	ECM detects open in solenoid valve S4 circuit 2 times when solenoid valve S4 is not operated (1 trip detection logic)	• Open in shift solenoid valve S4 circuit • Shift solenoid valve S4 • ECM

MONITOR DESCRIPTION

This DTC indicates an open or short in the shift solenoid valve S4 circuit. The ECM commands gear shifts by turning the shift solenoid valves ON/OFF. When there is an open or short circuit in any shift solenoid valve circuit, the ECM detects the problem, illuminates the MIL and stores the DTC. Also, the ECM performs the fail-safe function and turns the other normal shift solenoid valves ON/OFF. In case of an open or short circuit, the ECM stops sending current to the circuit (see page AX-31).

MONITOR STRATEGY

Related DTCs	P0982: Shift solenoid valve S4/Range check (Low resistance) P0983: Shift solenoid valve S4/Range check (High resistance)
Required sensors/Components	Shift solenoid valve S4
Frequency of operation	Continuous
Duration	0.128 sec.
MIL operation	Immediate
Sequence of operation	None

TYPICAL ENABLING CONDITIONS

P0982: Range check (Low resistance)

The monitor will run whenever this DTC is not present.	None
Shift solenoid valve S4	ON
Battery voltage	8 V or more
Ignition switch	ON
Starter	OFF

P0983: Range check (High resistance)

The monitor will run whenever this DTC is not present	None
Shift solenoid valve S4	OFF
Battery voltage	8 V or more
Ignition switch	ON
Starter	OFF

TYPICAL MALFUNCTION THRESHOLDS

P0982: Range check (Low resistance)

Shift solenoid valve S4 resistance	8 Ω or less

P0983: Range check (High resistance)

Shift solenoid valve S4 resistance	100 kΩ or more

COMPONENT OPERATING RANGE

Shift solenoid valve S4	Resistance: 11 to 15 Ω at 20°C (68°F)

WIRING DIAGRAM

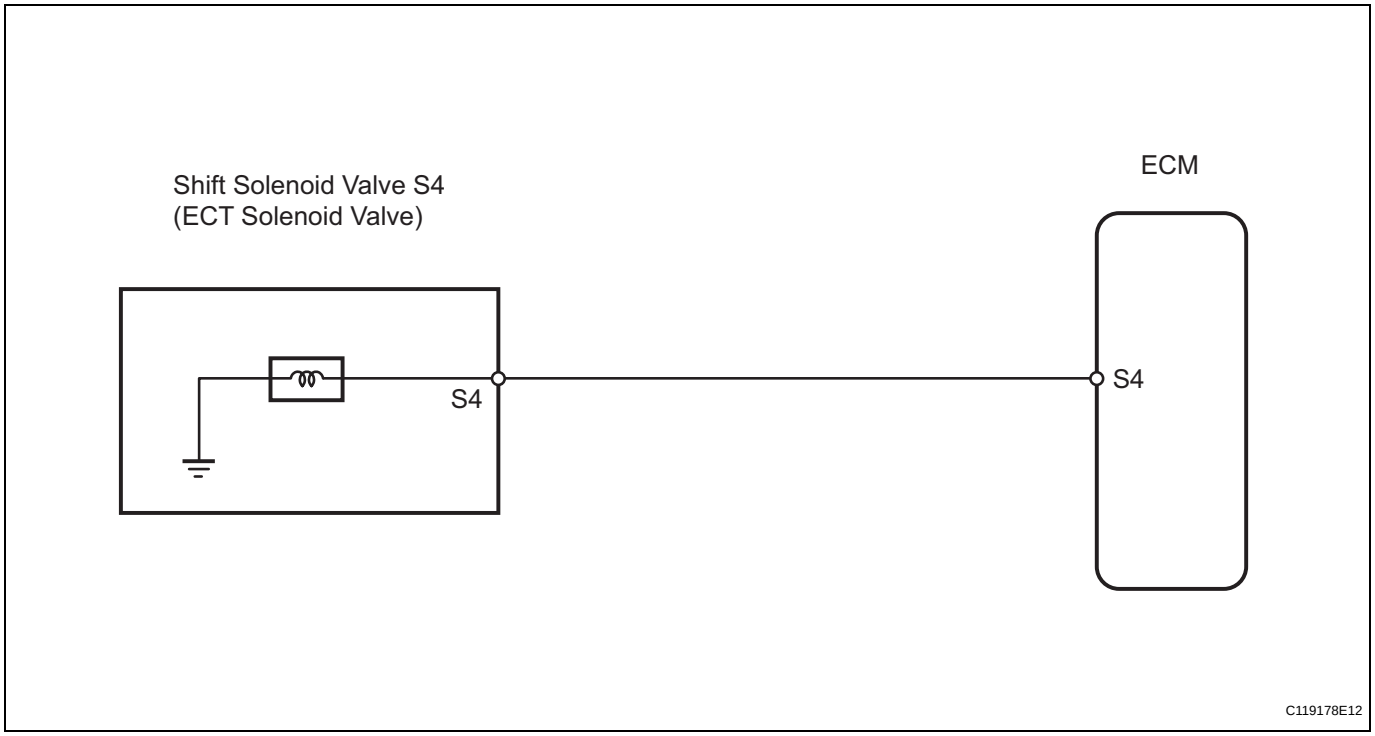

INSPECTION PROCEDURE

1	INSPECT TRANSMISSION WIRE (SHIFT SOLENOID VALVE S4)

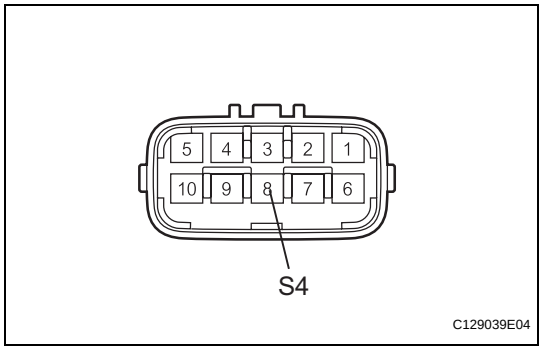

(a) Disconnect the B27 wire connector.
(b) Measure the resistance of the transmission wire.
Standard resistance

Tester Connection	Condition	Specified Condition
8 (S4) - Body ground	20°C (68°F)	11 to 15 Ω

NG → **Go to step 3**

OK

AX

2	CHECK WIRE HARNESS (TRANSMISSION WIRE - ECM)

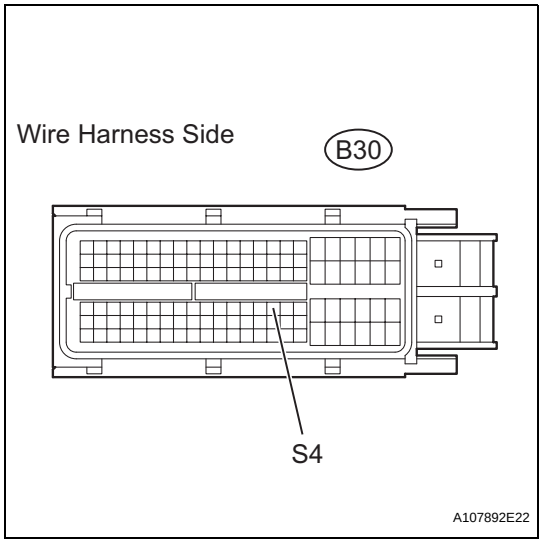

(a) Disconnect the B30 ECM connector.
(b) Measure the resistance of the wire harness side connector.
Standard resistance

Tester Connection	Condition	Specified Condition
B30-78 (S4) - Body ground	20°C (68°F)	11 to 15 Ω

NG → **REPAIR OR REPLACE HARNESS AND CONNECTOR**

OK

REPLACE ECM

3	INSPECT SHIFT SOLENOID VALVE S4

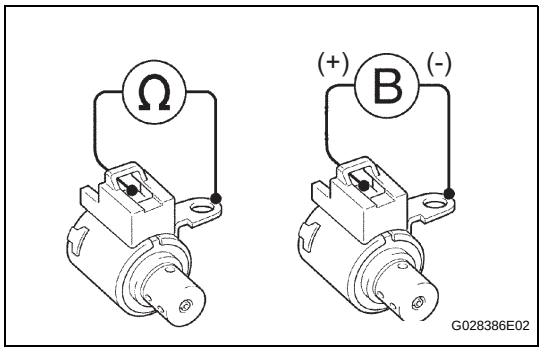

(a) Remove the shift solenoid valve S4.
(b) Measure the resistance of the solenoid valve.
Standard resistance:
11 to 15 Ω at 20°C (68°F)
(c) Connect the battery's positive (+) lead to the terminal of the solenoid valve connector, and the negative (-) lead to the solenoid body. Then check that the valve moves and makes an operating noise.
OK:
Valve moves and makes operating noise.

NG → **REPLACE SHIFT SOLENOID VALVE S4**

OK

REPAIR OR REPLACE TRANSMISSION WIRE

DTC	P2714	Pressure Control Solenoid "D" Performance (Shift Solenoid Valve SLT)

DESCRIPTION

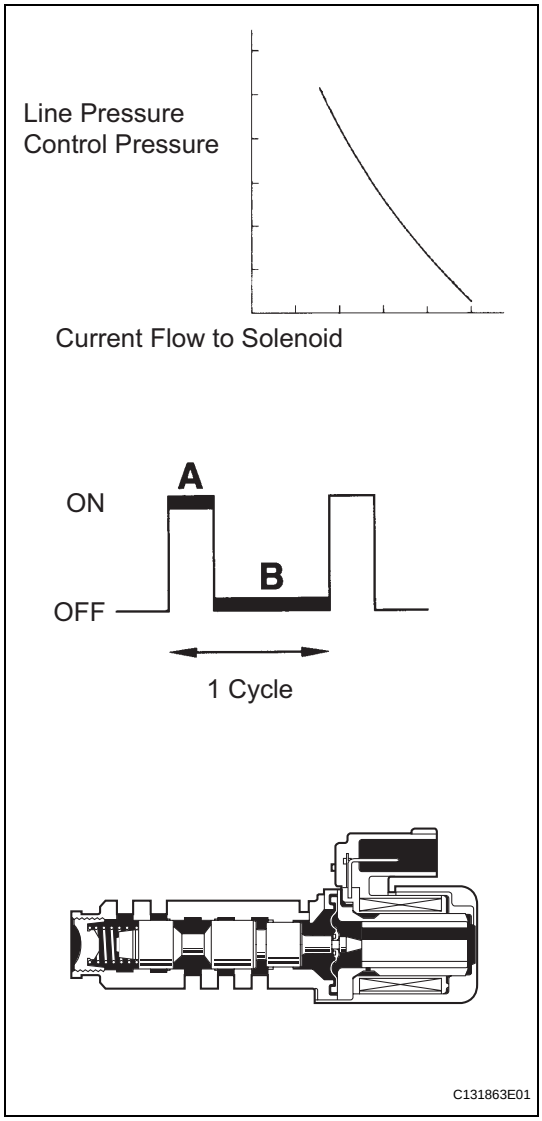

The throttle pressure that is applied to the primary regulator valve (which modulates the line pressure) causes the solenoid valve SLT, under electronic control, to precisely modulate and generate the line pressure according to the extent that the accelerator pedal is depressed or the output of engine power. This controls the line pressure and provides smooth shifting characteristics.
Upon receiving a signal of the throttle valve opening angle, the ECM controls the line pressure by sending a predetermined duty ratio* to the solenoid valve, modulating the line pressure and generating throttle pressure.
HINT:
*: The duty ratio is the ratio of the current ON time (A) to the total of the current ON and OFF time (A + B).
Duty Ratio (%) = A / (A + B) x 100

DTC No.	DTC Detection Condition	Trouble Area
P2714	ECM detects malfunction on SLT (ON side) according to difference in revolutions of turbine (input) and output shaft (2 trip detection logic)	• Shift solenoid valve SLT remains open or closed • Valve body is blocked • Torque converter clutch • Automatic transaxle (clutch, brake or gear etc.) • ECM

MONITOR DESCRIPTION

In any forward position, when the difference between the revolutions of the turbine and output shaft exceeds the specified value (varies with output speed) determined by the ECM, the ECM illuminates the MIL and outputs the DTC. When shift solenoid valve SLT remains on, the oil pressure goes down and the clutch engagement force decreases.

MONITOR STRATEGY

Related DTCs	P2714: Shift solenoid valve SLT/ON malfunction
Required sensors/Components	Shift solenoid valve SLT, Speed sensor (NT), Speed sensor (SPD)
Frequency of operation	Continuous
Duration	1 second
MIL operation	2 driving cycles
Sequence of operation	None

TYPICAL ENABLING CONDITIONS

The following conditions are common to ON malfunctions (a), (b), (c) and (d).

The monitor runs whenever the following DTCs are not present	None
Transmission shift position	D
Time after shifting N to D	4.5 seconds or more
ATF (Automatic Transmission Fluid) temperature	-10°C (14°F) or more
ATF temperature sensor (TFT sensor) circuit	No circuit malfunction
Electronic Throttle Control System (if applicable)	No circuit malfunction
Shift solenoid valve S1 circuit	No circuit malfunction
Shift solenoid valve S2 circuit	No circuit malfunction
Shift solenoid valve SLU circuit	No circuit malfunction
Shift solenoid valve SLT circuit	No circuit malfunction
Speed sensor (NT) circuit	No circuit malfunction
Speed sensor (SPD) circuit	No circuit malfunction

ON malfunction (a):

ECM gearshift command	1st
Input (turbine) speed	300 rpm or more
Output speed	300 rpm or more

ON malfunction (b):

ECM gearshift command	2nd
Input (turbine) speed	300 rpm or more
Output speed	300 rpm or more

ON malfunction (c):

ECM gearshift command	3rd
Input (turbine) speed	300 rpm or more
Output speed	300 rpm or more

ON malfunction (d):

ECM gearshift command	4th
Input (turbine) speed	300 rpm or more
Output speed	300 rpm or more

TYPICAL MALFUNCTION THRESHOLDS

[ON malfunction]

Detection condition: Total accumulated time of ON malfunctions (a), (b), (c) and (d) is 1 second or more

ON malfunction (a):

NT - NC x 1st gear ratio (without counter gear and under drive gear) NT: Input (turbine) speed NC: Counter gear speed	More than 300 rpm at counter gear speed of 1,000 rpm (Conditions vary with counter gear speed)
Duration	0.85 seconds or more

ON malfunction (b):

NT - NC x 2nd gear ratio (without counter gear and under drive gear)	More than 300 rpm at counter gear speed of 1,000 rpm (Conditions vary with counter gear speed)
Duration	0.85 seconds or more

ON malfunction (c):

NT - NC x 3rd gear ratio (without counter gear and under drive gear)	More than 300 rpm at counter gear speed of 1,000 rpm (Conditions vary with counter gear speed)
Duration	0.85 seconds or more

ON malfunction (d):

NC - NO x Counter gear ratio x under drive gear ratio (Low or High)	More than 300 rpm at output speed of 1,000 rpm (Conditions vary with output speed)
Duration	0.85 seconds or more

WIRING DIAGRAM

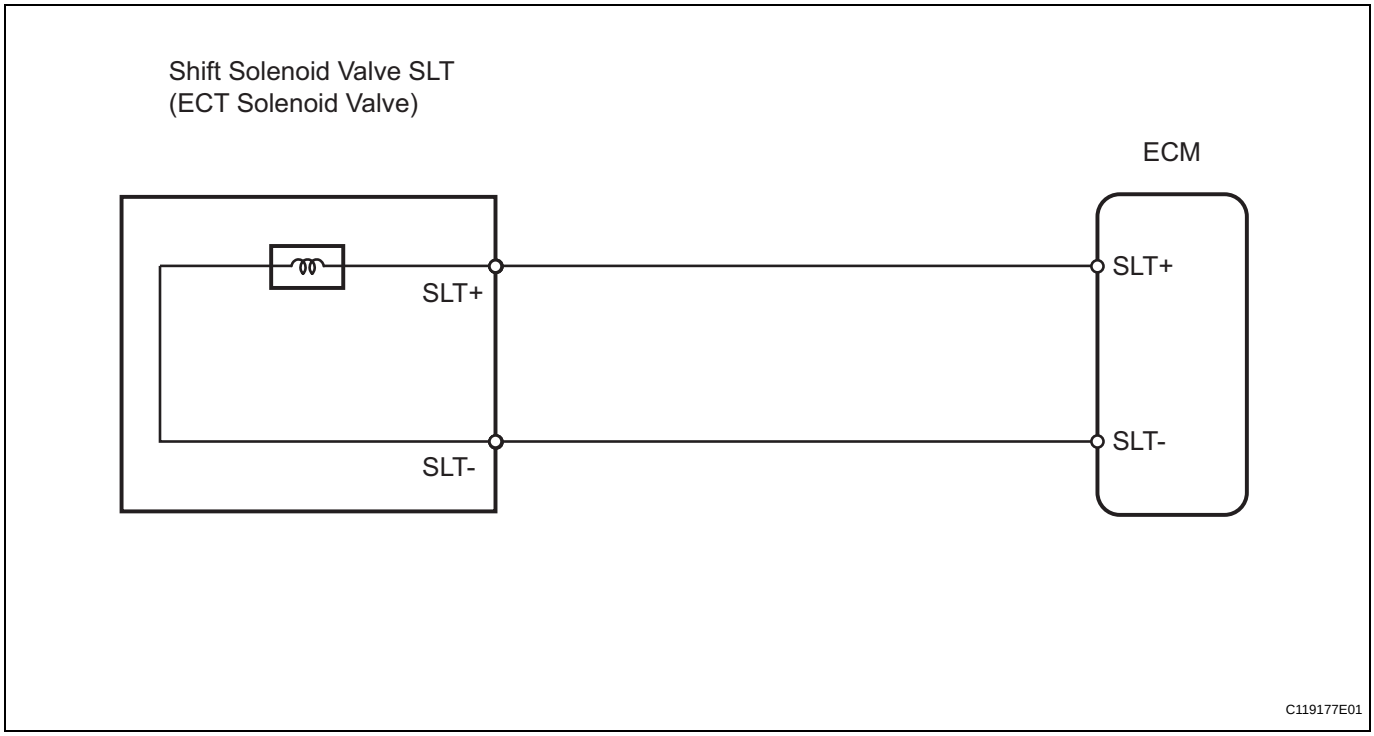

INSPECTION PROCEDURE

HINT:
Performing the intelligent tester's ACTIVE TEST allows relay, VSV, actuator and other items to be operated without removing any parts. Performing the ACTIVE TEST early in troubleshooting is one way to save time.
The DATA LIST can be displayed during the ACTIVE TEST.

1. Warm up the engine.
2. Turn the ignition switch OFF.
3. Connect the intelligent tester to the CAN VIM. Then connect the CAN VIM to the DLC3.
4. Turn the ignition switch ON and turn the tester ON.
5. Enter the following menus: DIAGNOSIS / ENHANCED OBD II / ACTIVE TEST.
6. Perform the ACTIVE TEST.

Item	Test Details	Diagnostic Note
SOLENOID (SLT)*	[Test Details] Operate shift solenoid SLT and raise line pressure [Vehicle Condition] • Vehicle stopped • IDL: ON HINT: OFF: Line pressure up (when Active Test "SOLENOID (SLT)" is performed, ECM commands SLT solenoid to turn OFF) ON: No action (normal operation)	-

HINT:
*: "SOLENOID (SLT)" in the ACTIVE TEST is performed to check the line pressure changes by connecting SST to the automatic transaxle, which is used in the HYDRAULIC TEST (see page AX-16) as well. Please note that the pressure values in the ACTIVE TEST and HYDRAULIC TEST are different.

1 CHECK OTHER DTCS OUTPUT (IN ADDITION TO DTC P2714)

(a) Connect the intelligent tester to the CAN VIM. Then connect the CAN VIM to the DLC3.
(b) Turn the ignition switch ON and turn the tester ON.
(c) Enter the following menus: DIAGNOSIS / ENHANCED OBD II / DTC INFO / CURRENT CODES.
(d) Read the DTCs using the tester.

Result

Display (DTC output)	Proceed to
Only P2714 is output	A
P2714 and other DTCs are output	B

HINT:
If any other codes besides P2714 are output, perform troubleshooting for those DTCs first.

B → GO TO DTC CHART

A

2	INSPECT SHIFT SOLENOID VALVE SLT

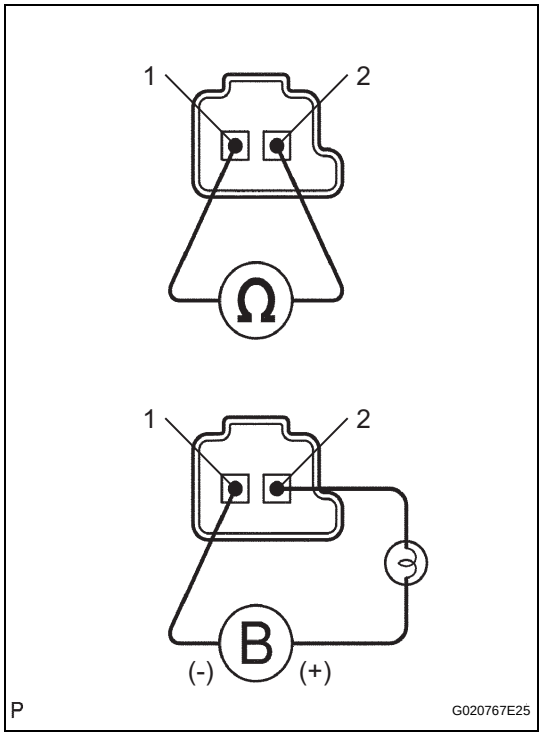

(a) Remove the shift solenoid valve SLT.
(b) Measure the resistance of the solenoid valve.
Standard resistance:
5.0 to 5.6 Ωat 20°C (68°F)
(c) Connect the battery's positive (+) lead with a 21 W bulb to terminal 2 and the negative (-) lead to terminal 1 of the solenoid valve connector. Then check that the valve moves and makes an operating noise.
OK:
Valve moves and makes operating noise.

NG → **REPLACE SHIFT SOLENOID VALVE SLT**

OK

3	INSPECT TRANSMISSION VALVE BODY ASSEMBLY

(a) Check the transmission valve body assembly.
OK:
There are no foreign objects on each valve.

NG → **REPAIR OR REPLACE TRANSMISSION VALVE BODY ASSEMBLY**

OK

4	INSPECT TORQUE CONVERTER CLUTCH ASSEMBLY

(a) Check the torque converter clutch assembly (see page AX-153).
OK:
The torque converter clutch operates normally.

NG → **REPLACE TORQUE CONVERTER CLUTCH ASSEMBLY**

OK

REPAIR OR REPLACE AUTOMATIC TRANSAXLE ASSEMBLY

DTC	P2716	Pressure Control Solenoid "D" Electrical (Shift Solenoid Valve SLT)

DESCRIPTION

Refer to DTC P2714 (see page AX-91).

DTC No.	DTC Detection Condition	Trouble Area
P2716	Condition (a) and (b) below is detected for 1 sec. or more (1 trip detection logic): (a) SLT - terminal: 0 V (b) SLT - terminal: 12 V	• Open or short in shift solenoid valve SLT circuit • Shift solenoid valve SLT • ECM

MONITOR DESCRIPTION

When an open or short in the shift solenoid valve SLT circuit is detected, the ECM interprets this as a fault. The ECM will illuminate the MIL and store the DTC.

MONITOR STRATEGY

Related DTCs	P2716: Shift solenoid valve SLT/Range check
Required sensors/Components	Shift solenoid valve SLT
Frequency of operation	Continuous
Duration	1 sec.
MIL operation	Immediate
Sequence of operation	None

TYPICAL ENABLING CONDITIONS

The monitor will run whenever this DTC is not present.	None
Battery voltage	11 V or more
Solenoid current cut status	Not cut
CPU command duty ratio to SLT	19% or more
Starter	OFF
Ignition switch	ON

TYPICAL MALFUNCTION THRESHOLDS

Solenoid status from IC	Fail (open or short)

COMPONENT OPERATING RANGE

Shift solenoid valve SLT	Resistance: 5.0 to 5.6 Ω at 20°C (68°F)

WIRING DIAGRAM

Refer to DTC P2714 (see page AX-91).

INSPECTION PROCEDURE

1 INSPECT TRANSMISSION WIRE (SHIFT SOLENOID VALVE SLT)

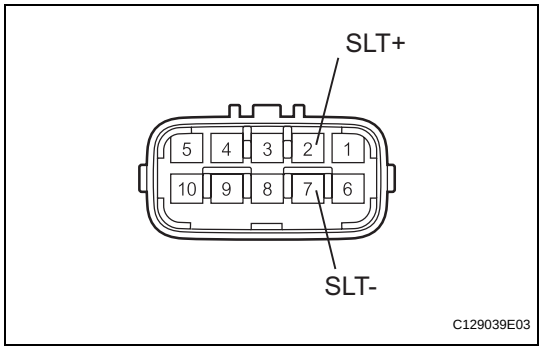

(a) Disconnect the B27 wire connector.
(b) Measure the resistance of the transmission wire.
Standard resistance

Tester Connection	Condition	Specified Condition
2 (SLT+) - 7 (SLT-)	20°C (68°F)	5.0 to 5.6 Ω
2 (SLT+) - Body ground	20°C (68°F)	1 MΩ or higher
7 (SLT-) - Body ground	20°C (68°F)	1 MΩ or higher

NG → **Go to step 3**

OK

2 CHECK WIRE HARNESS (TRANSMISSION WIRE - ECM)

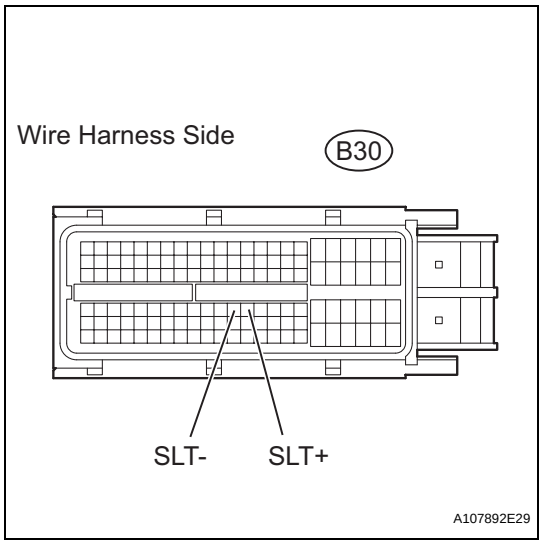

(a) Disconnect the B30 ECM connector.
(b) Measure the resistance of the wire harness side connector.
Standard resistance

Tester Connection	Condition	Specified Condition
B30-76 (SLT+) - B30-75 (SLT-)	20°C (68°F)	5.0 to 5.6 Ω
B30-76 (SLT+) - Body ground	20°C (68°F)	1 MΩ or higher
B30-75 (SLT-) - Body ground	20°C (68°F)	1 MΩ or higher

NG → **REPAIR OR REPLACE HARNESS AND CONNECTOR**

OK

REPLACE ECM

3	INSPECT SHIFT SOLENOID VALVE SLT

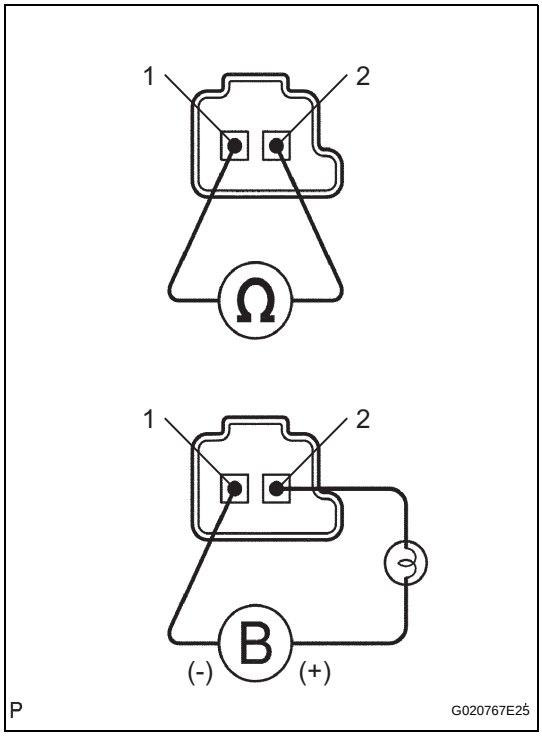

(a) Remove the shift solenoid valve SLT.
(b) Measure the resistance of the solenoid valve.
Standard resistance:
5.0 to 5.6 Ωat 20°C (68°F)
(c) Connect the battery's positive (+) lead with a 21 W bulb to terminal 2 and the negative (-) lead to terminal 1 of the solenoid valve connector. Then check that the valve moves and makes an operating noise.
OK:
Valve moves and makes operating noise.

NG → **REPLACE SHIFT SOLENOID VALVE SLT**

OK

REPAIR OR REPLACE TRANSMISSION WIRE

DTC	P2769	Torque Converter Clutch Solenoid Circuit Low (Shift Solenoid Valve DSL)

DTC	P2770	Torque Converter Clutch Solenoid Circuit High (Shift Solenoid Valve DSL)

DESCRIPTION

The shift solenoid valve DSL is turned ON and OFF by signals from the ECM to control the hydraulic pressure acting on the lock-up relay valve, which then controls operation of the lock-up clutch.

DTC No.	DTC Detection Condition	Trouble Area
P2769	ECM detects short in shift solenoid valve DSL circuit when shift solenoid valve DSL is operated (2 trip detection logic)	• Short in shift solenoid valve DSL circuit • Shift solenoid valve DSL • ECM
P2770	ECM detects open in shift solenoid valve DSL circuit when shift solenoid valve DSL is not operated (2 trip detection logic)	• Open in shift solenoid valve DSL circuit • Shift solenoid valve DSL • ECM

Fail-safe function:
If the ECM detects a malfunction, it turns the shift solenoid valve DSL OFF.

MONITOR DESCRIPTION

Torque converter lock-up is controlled by the ECM based on engine rpm, engine load, engine temperature, vehicle speed, transmission temperature, and shift position selection. The ECM determines the lock-up status of the torque converter by comparing the engine rpm (NE) to the input rpm (NT). The ECM calculates the actual transmission gear by comparing the input rpm (NT) to the output rpm (SP2). When conditions are appropriate, the ECM requests "lock-up" by applying control voltage to the shift solenoid valve DSL. When the shift solenoid valve DSL is opened, the shift solenoid valve DSL applies pressure to the lock-up relay valve and locks the torque converter clutch. If the ECM detects an open or short in the shift solenoid valve DSL circuit, the ECM interprets this as a fault in the shift solenoid valve DSL or its circuit. The ECM will illuminate the MIL and store a DTC.

MONITOR STRATEGY

Related DTCs	P2769: Shift solenoid valve DSL/Range check (Low resistance) P2770: Shift solenoid valve DSL/Range check (High resistance)
Requires sensors/Components	Shift solenoid valve DSL
Frequency of operation	Continuous
Duration	0.064 sec.
MIL operation	2 driving cycles
Sequence of operation	None

TYPICAL ENABLING CONDITIONS

P2769: Range check (Low resistance)

The monitor will run whenever this DTC is not present	None
Shift solenoid valve DSL	ON
Solenoid current cut status	Not cut
Battery voltage	8 V or more
Starter	OFF
Ignition switch	ON

P2770: Range check (High resistance)

The monitor will run whenever this DTC is not present	None

Shift solenoid valve DSL	ON
Battery voltage	8 V or more
Starter	OFF
Ignition switch	ON

TYPICAL MALFUNCTION THRESHOLDS

P2769: Range check (Low resistance)

Shift solenoid valve DSL resistance	8 Ω or less

P2770: Range check (High resistance)

Shift solenoid valve DSL resistance	100 kΩ or more

COMPONENT OPERATING RANGE

Shift solenoid valve DSL	Resistance: 11 to 13 Ω at 20°C (68°F)

WIRING DIAGRAM

Refer to DTC P0741 (see page AX-62).

INSPECTION PROCEDURE

1 INSPECT TRANSMISSION WIRE (SHIFT SOLENOID VALVE DSL)

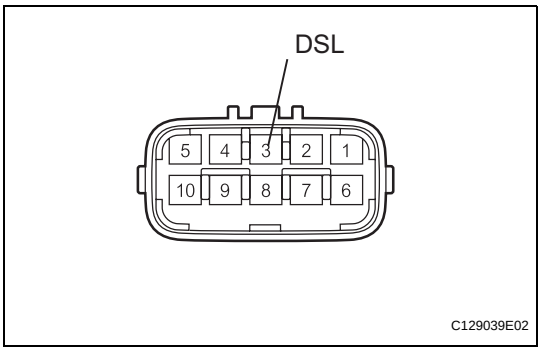

(a) Disconnect the B27 wire connector.
(b) Measure the resistance of the transmission wire.

Standard resistance

Tester Connection	Condition	Specified Condition
3 (DSL) - Body ground	20°C (68°F)	11 to 13 Ω

NG → **Go to step 3**

OK

2 CHECK WIRE HARNESS (TRANSMISSION WIRE - ECM)

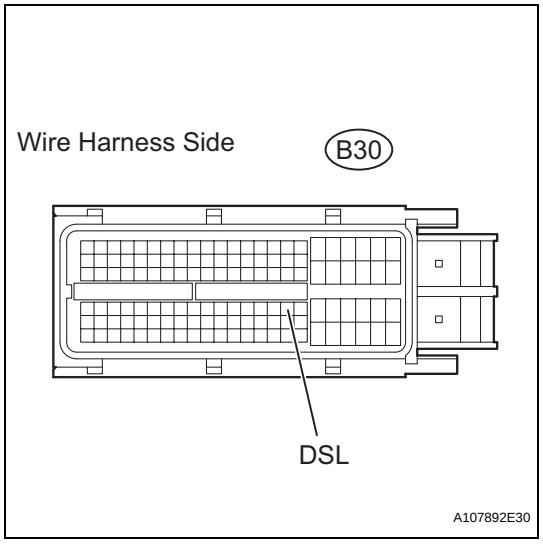

(a) Disconnect the B30 ECM connector.
(b) Measure the resistance of the wire harness side connector.
Standard resistance

Tester Connection	Condition	Specified Condition
B30-79 (DSL) - Body ground	20°C (68°F)	11 to 13 Ω

NG → **REPAIR OR REPLACE HARNESS AND CONNECTOR**

OK

REPLACE ECM

3 INSPECT SHIFT SOLENOID VALVE DSL

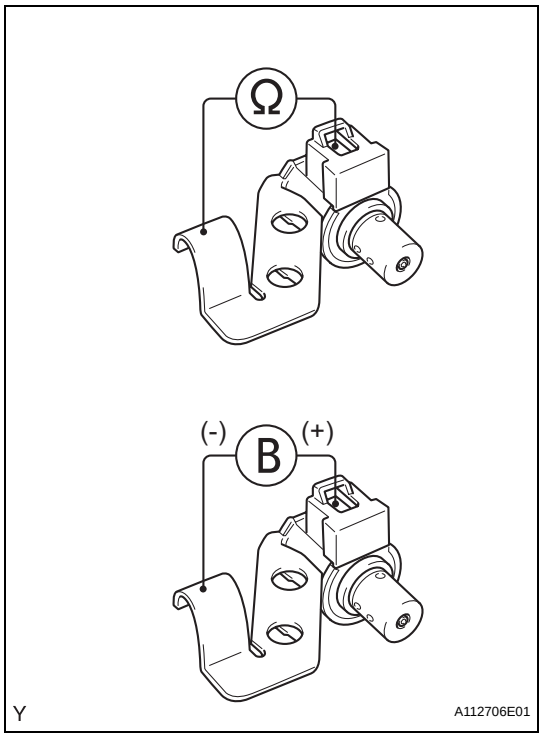

(a) Remove the shift solenoid valve DSL.
(b) Measure the resistance between the solenoid valve terminal and solenoid valve body.
Standard resistance:
11 to 13 Ω at 20°C (68°F)
(c) Connect the battery's positive (+) lead to the terminal of the solenoid valve connector, and the negative (-) lead to the solenoid body. Then check that the valve moves and makes an operating noise.
OK:
Valve moves and makes operating noise.

NG → **REPLACE SHIFT SOLENOID VALVE DSL**

OK

REPAIR OR REPLACE TRANSMISSION WIRE

AX

AUTOMATIC TRANSAXLE SYSTEM

PRECAUTION

NOTICE:
Perform the RESET MEMORY procedures (A/T initialization) when replacing the automatic transaxle assembly, engine assembly or ECM (see page AX-18).
HINT:
RESET MEMORY cannot be completed by only reconnecting the cable to the negative (-) battery terminal.
CAUTION:
When using compressed air, always aim away from yourself to prevent Automatic Transmission Fluid (ATF) or kerosene from spraying on your face.
NOTICE:

- **The automatic transaxle is composed of precision-made parts, necessitating careful inspection before reassembly because even a small nick could cause fluid leakage or affect performance.**
- **The procedures are organized so that you work on only one component group at a time. This will help avoid confusion with similar-looking parts of different sub-assemblies being on your workbench at the same time.**
- **The component groups are inspected and repaired from the converter housing side.**
- **Whenever possible, complete the inspection, repair and reassembly before proceeding to the next component group. If a defect is found in a certain component group during reassembly, inspect and repair this group immediately. If a component group cannot be assembled because parts are being ordered, be sure to keep all parts of the group in a separate container while proceeding with disassembly, inspection, repair and reassembly of other component groups.**
- **Use of Toyota Genuine ATF WS is recommended.**
- **All disassembled parts should be washed clean, and compressed air should be blown through any fluid passages and holes.**
- **Dry all parts with compressed air. Never use cloth.**
- **The recommended ATF or kerosene should be used for cleaning.**
- **After cleaning, the parts should be arranged in the order they were removed for efficient inspection, repairs, and reassembly.**
- **When disassembling a valve body, be sure to match each valve with its corresponding spring.**
- **New discs for the brakes and clutches that will be used for replacement must be soaked in ATF for at least 15 minutes before reassembly.**

- **All oil seal rings, clutch discs, clutch plates, rotating parts, and sliding surfaces should be coated with ATF prior to reassembly.**
- **All old gaskets and rubber O-rings must be replaced.**
- **Do not apply adhesive cement to gaskets and similar parts.**
- **Make sure that the ends of the snap rings are not aligned with any cutouts. Also make sure that snap rings are correctly installed into the grooves.**
- **If a worn bushing is to be replaced, the sub-assembly containing the bushing must also be replaced.**
- **Check the thrust bearings and races for wear or damage. Replace them if necessary.**
- **Use petroleum jelly to keep parts in place.**
- **When working with FIPG material, perform the following:**
  Using a razor blade and gasket scraper, remove all old FIPG material from the gasket surface.
  Clean all components thoroughly to remove all foreign matter.
  Clean both sealing surfaces with a non-residue solvent.
  Apply FIPG material in a continuous line approximately 1 mm (0.04 in.) in diameter on the sealing surface.
  Reassemble parts within 10 minutes of applying FIPG material. Failing to do so will require the FIPG material to be removed and reapplied.

REASSEMBLY

1. BEARING POSITION

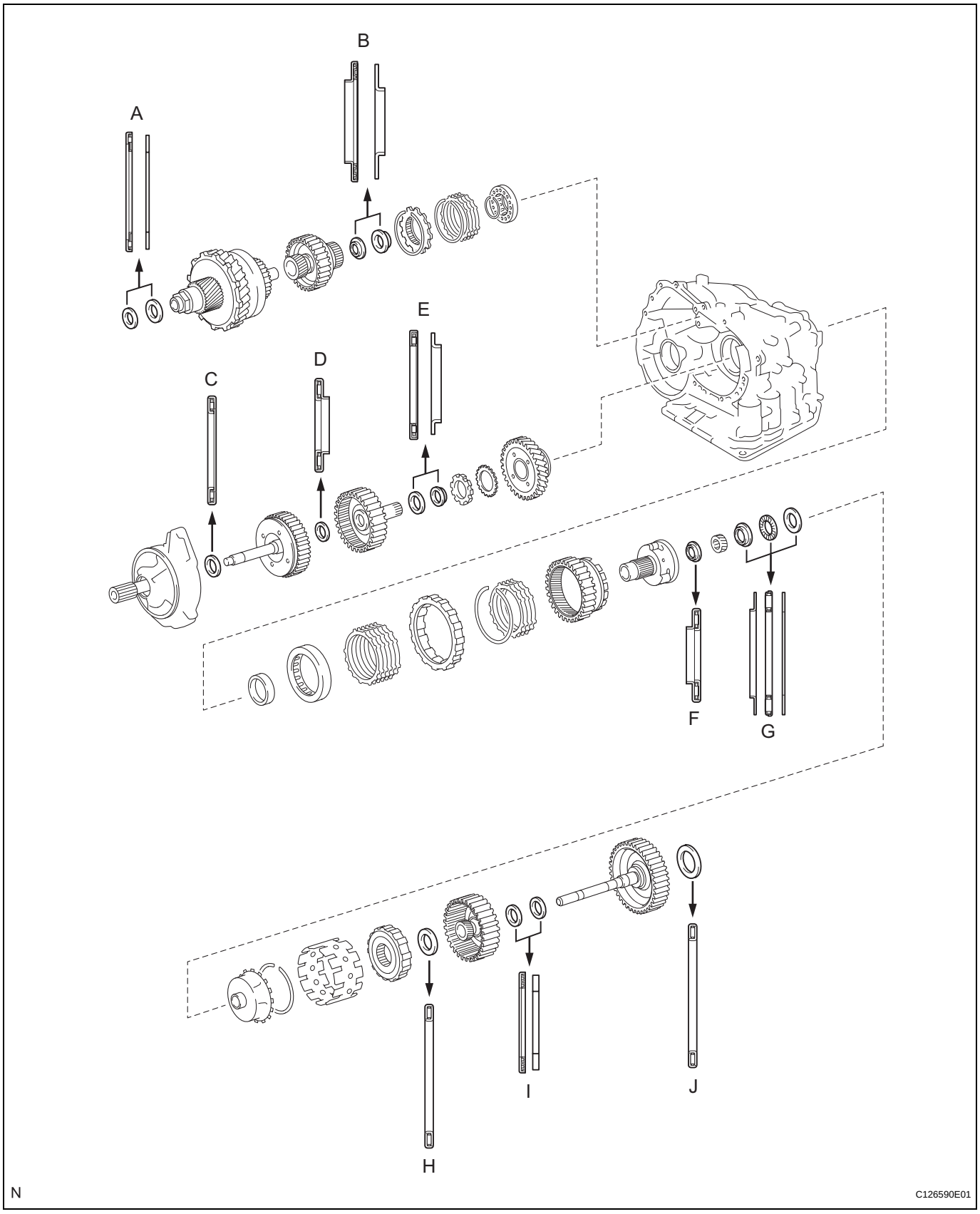

AX

Standard bearing position

Mark	Front Race Diameter Inside / Outside	Thrust Bearing Diameter Inside / Outside	Rear Race Diameter Inside / Outside
A	-	57.2 mm (2.252 in.) / 84.96 mm (3.3449 in.)	56.4 mm (2.220 in.) / 83.0 mm (3.268 in.)
B	-	37.73 mm (1.4854 in.) / 58.0 mm (2.283 in.)	29.9 mm (1.177 in.) / 55.5 mm (2.185 in.)
C	-	33.85 mm (1.3327 in.) / 52.2 mm (2.055 in.)	-
D	-	23.5 mm (0.925 in.) / 44.0 mm (1.732 in.)	-
E	-	36.3 mm (1.429 in.) / 52.2 mm (2.055 in.)	34.5 mm (1.358 in.) / 48.5 mm (1.909 in.)
F	-	34.6 mm (1.362 in.) / 52.2 mm (2.055 in.)	-
G	40.3 mm (1.587 in.) / 58.0 mm (2.283 in.)	38.6 mm (1.520 in.) / 60.0 mm (2.362 in.)	38.6 mm (1.520 in.) / 58.0 mm (2.283 in.)
H	-	53.6 mm (2.110 in.) / 69.6 mm (2.740 in.)	-
I	-	33.8 mm (1.331 in.) / 48.2 mm (1.898 in.)	30.3 mm (1.193 in.) / 46.0 mm (1.811 in.)
J	-	53.6 mm (2.110 in.) / 70.18 mm (2.763 in.) or 69.6 mm (2.740 in.)	-

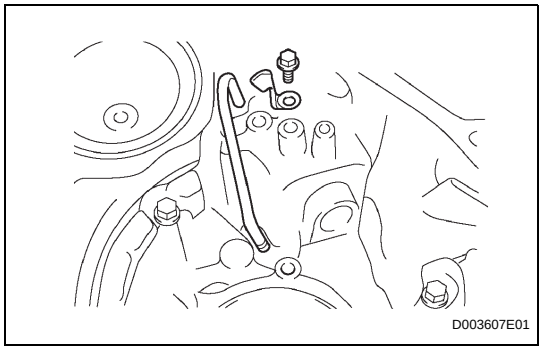

2. INSTALL DIFFERENTIAL GEAR LUBE APPLY TUBE

(a) Install the apply tube and clamp to the transaxle housing with the bolt.

Torque: 9.8 N*m (100 kgf*cm, 87 in.*lbf)

NOTICE:

Make sure to insert the pipe to the stopper.

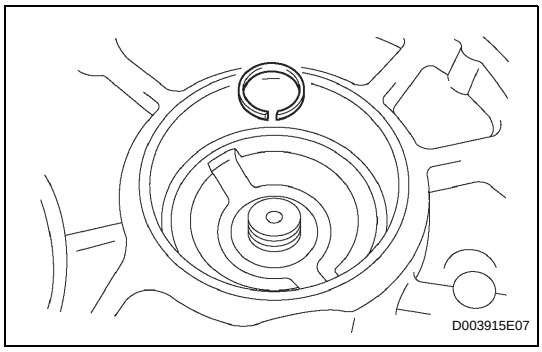

3. INSTALL UNDERDRIVE OUTPUT SHAFT OIL SEAL RING

(a) Install a new oil seal ring to the transaxle housing.

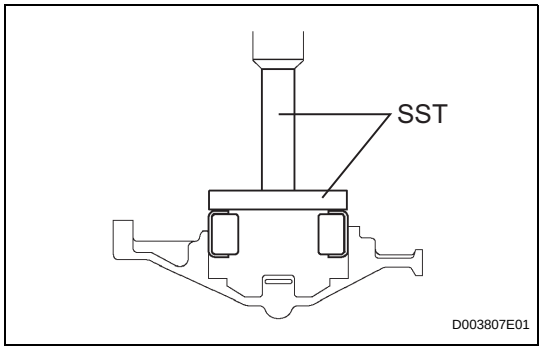

4. INSTALL UNDERDRIVE CYLINDRICAL ROLLER BEARING

(a) Using SST and a press, press in the underdrive cylindrical roller bearing.

SST 09950-60020 (09951-00810), 09950-70010 (09951-07100)

NOTICE:

Do not apply excessive pressure.

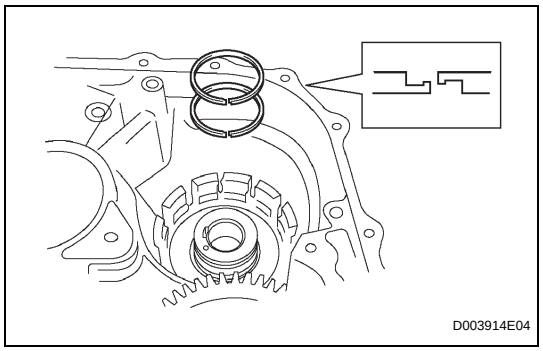

5. INSTALL UNDERDRIVE CLUTCH DRUM OIL SEAL RING

(a) Install 2 new oil seal rings to the transaxle.

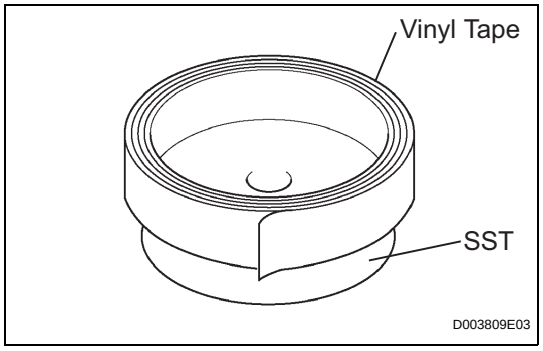

6. INSTALL UNDERDRIVE BRAKE PISTON

(a) Wind a vinyl tape around SST at the place 4.0 mm (0.157 in.) above from the bottom end until the thickness of the wound tape is about 5.0 mm (0.197 in.)

SST 09950-60010 (09951-00320)

NOTICE:

Clean SST to remove deposited oil before winding a vinyl tape.

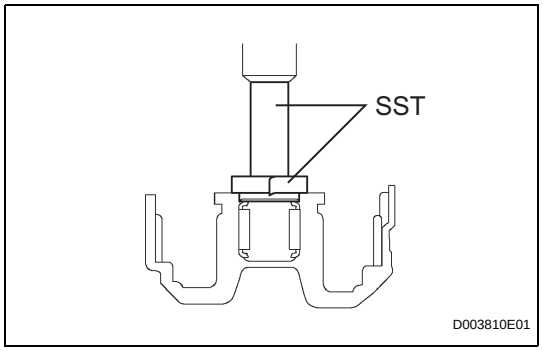

(b) Using SST and a press, press in the needle-roller bearing to the transaxle until the wound vinyl tape contacts the transaxle case.

SST 09950-60010 (09951-00320), 09950-70010 (09951-07100)

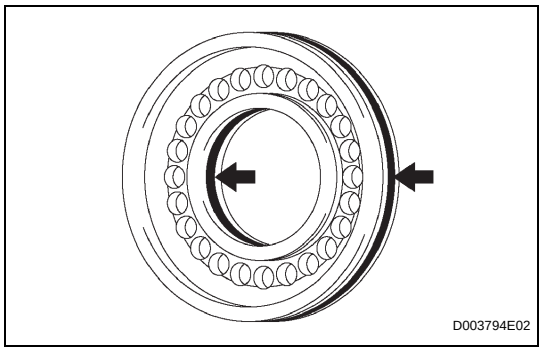

(c) Coat 2 new O-rings with ATF, and install them to the underdrive brake piston.

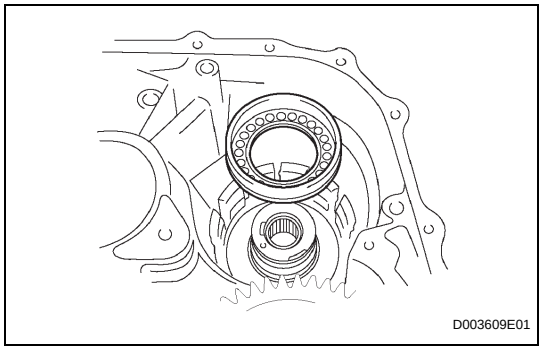

(d) Install the underdrive brake piston to the transaxle.

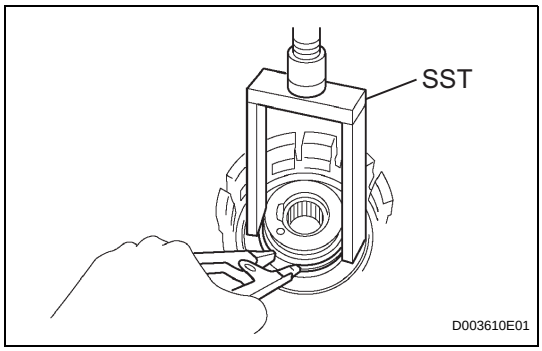

(e) Using SST, a snap ring expander and press, press in the piston return spring and snap ring to the transaxle.
SST 09387-00020
NOTICE:
Do not apply excessive pressure.

7. INSTALL NO. 2 BREATHER PLUG

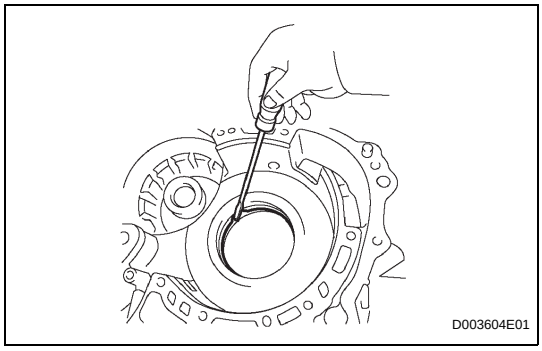

8. INSTALL COUNTER DRIVE GEAR HOLE SNAP RING

(a) Using a screwdriver, press in the snap ring to the transaxle.

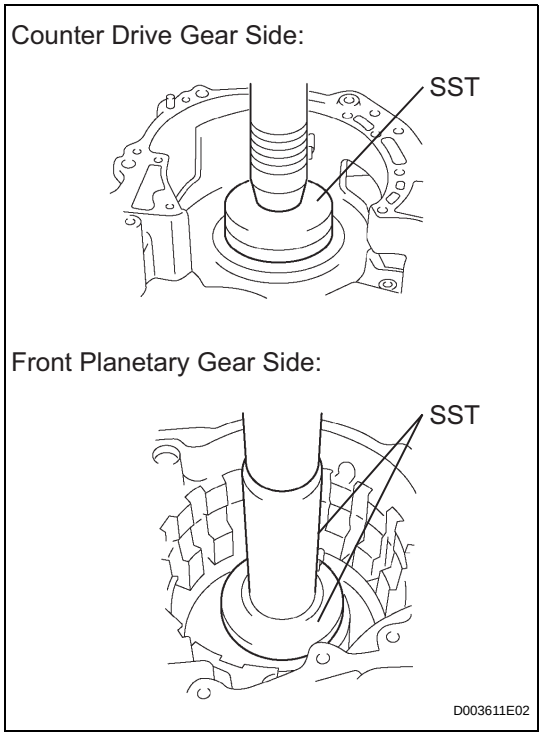

9. INSTALL COUNTER DRIVE GEAR

(a) Using SST and a press, press in the 2 bearings outer races to the transaxle.
SST 09950-60020 (09951-00890), 09950-70010 (09951-07150)

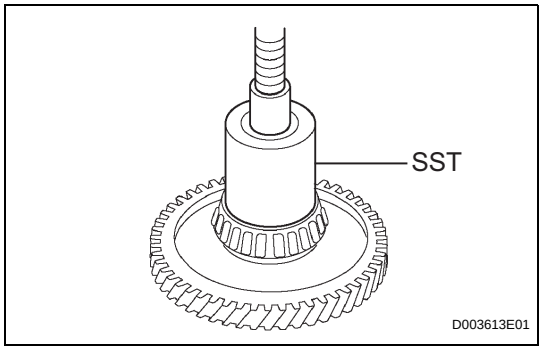

(b) Using SST and a press, press in the tapered roller bearing to the counter drive gear until the bearing race contacts with the snap ring.
NOTICE:
Do not apply excessive pressure.
SST 09649-17010

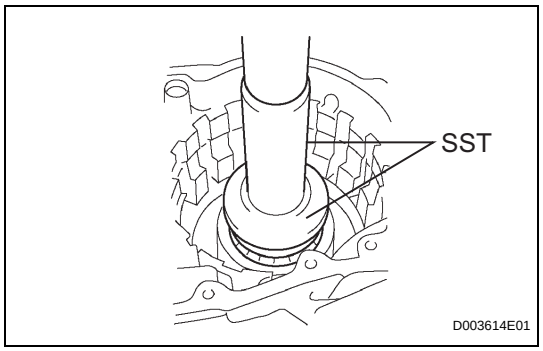

(c) Using SST and a press, install the counter drive gear and bearing to the transaxle.
SST 09950-70010 (09951-07150), 09950-60020 (09951-00750)
NOTICE:
Do not apply excessive pressure.

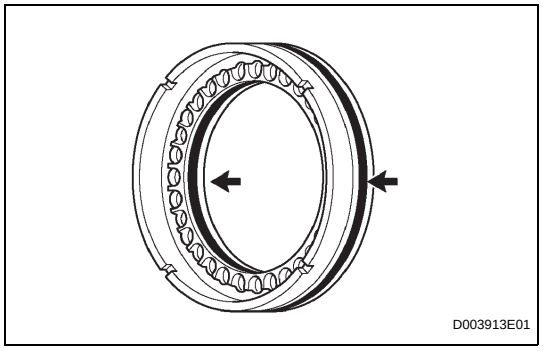

10. INSTALL 1ST AND REVERSE BRAKE PISTON
(a) Coat 2 new O-rings with ATF.
(b) Install the 2 O-ring to the 1st and reverse brake piston.

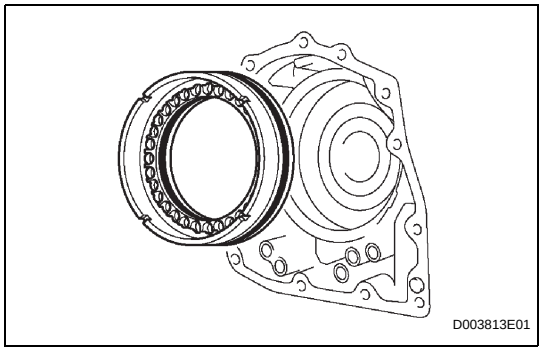

(c) Coat the 1st and reverse brake piston with ATF, and install it to the transaxle.

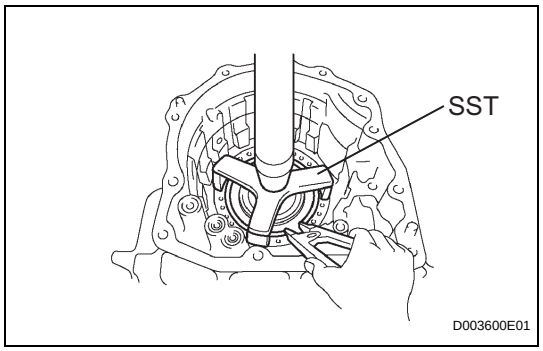

11. INSTALL 1ST AND REVERSE BRAKE RETURN SPRING SUB-ASSEMBLY
(a) Using SST, a press and snap ring expander, press the piston return spring and snap ring to the transaxle.
SST 09387-00070
NOTICE:
- **Stop the press when the spring sheet is lowered to the place 1 to 2 mm (0.039 to 0.078 in.) from the snap ring groove, preventing the spring sheet from being deform.**
- **Do not expand the snap ring excessively.**

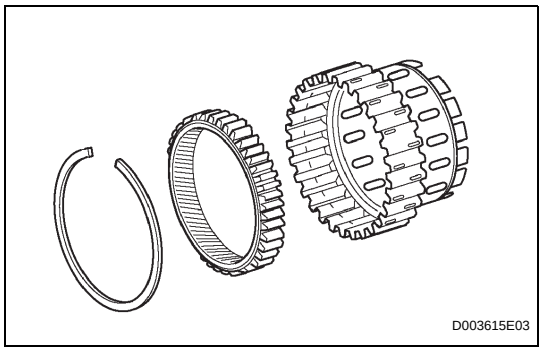

12. INSTALL FRONT PLANETARY RING GEAR

(a) Using a screwdriver, install the front planetary ring gear and snap ring to the brake hub.

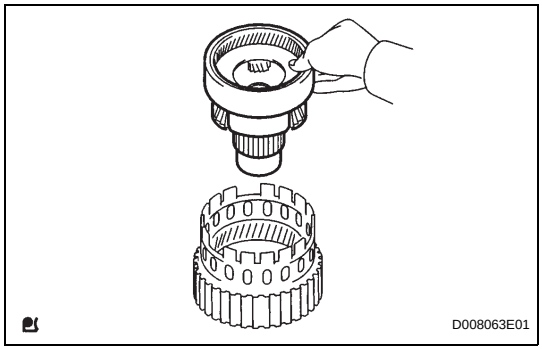

13. INSTALL FRONT PLANETARY GEAR ASSEMBLY

(a) Install the front planetary gear assembly to the brake hub.

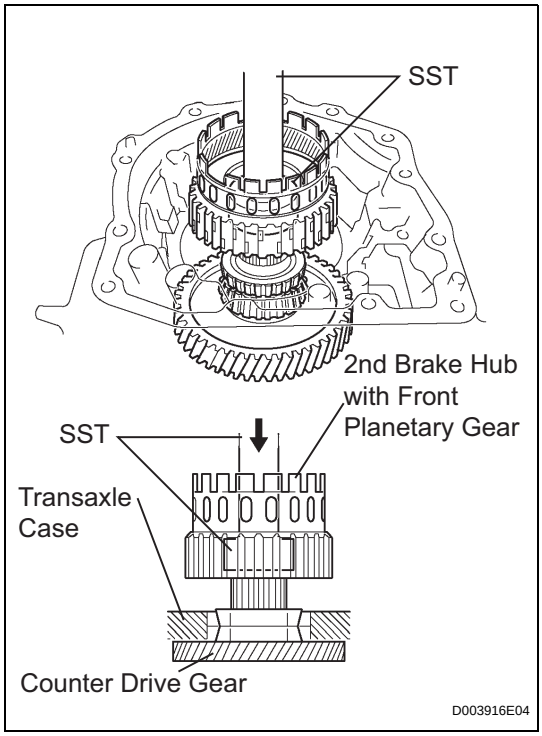

(b) Using SST and a press, press-fit the front planetary gear.

SST 09950-60010 (09951-00500), 09950-70010 (09951-07100)

NOTICE:

Do not apply excessive pressure.

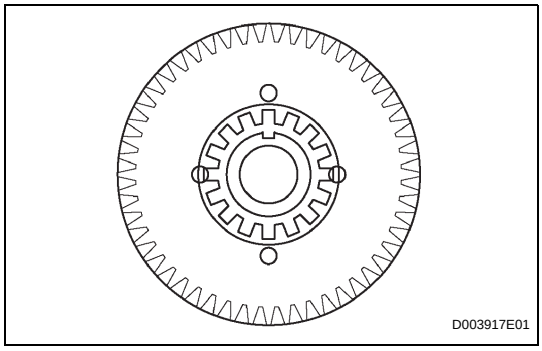

(c) Install the washer, as shown in the illustration.

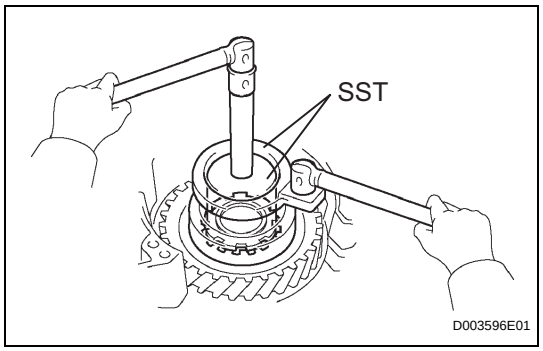

(d) Using SST, install the nut.
SST 09387-00030, 09387-00080
Torque: 280 N*m (2,855 kgf*cm, 206 ft.*lbf)

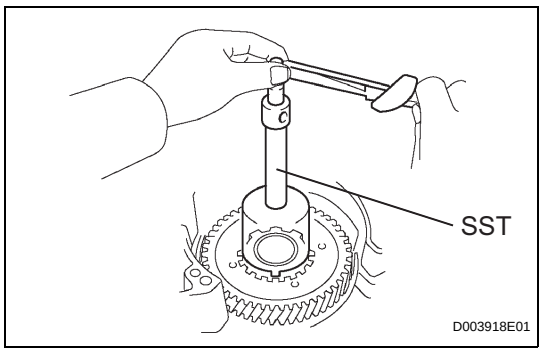

(e) Using SST and a torque wrench, measure the turning torque of the bearing while rotating SST at 60 rpm. When the measured value is not within the specified value, gradually tighten the nut until it reaches the specified value.
SST 09387-00080
Torque: Turning torque at 60 rpm
0.51 to 1.02 N*m (5.1 to 10.0 kgf*cm, 4.4 to 8.7 in.*lbf) for new
0.3 to 0.5 N*m (3.1 to 5.1 kgf*cm, 27 to 4.4 in.*lbf) for used
HINT:
Use a torque wrench with a fulcrum length of 160 mm (6.3 in.).

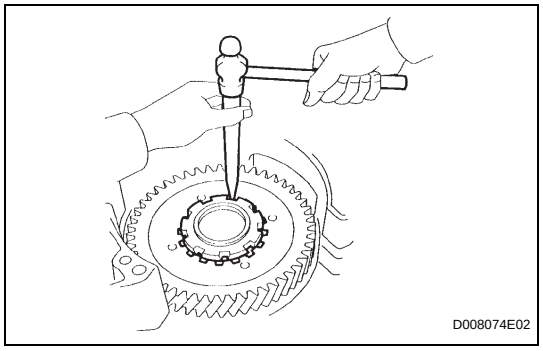

(f) Using a chisel and hammer, stake the front planetary gear washer.

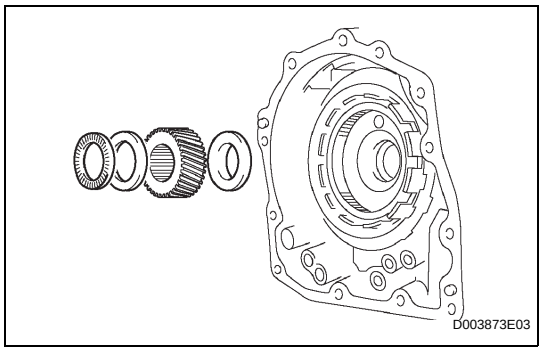

14. INSTALL INPUT SUN GEAR

(a) Install the 2 thrust bearings, bearing race and front planetary sun gear to the front planetary gear.
Standard bearing and race diameter

Item	Inside	Outside
Bearing	34.6 mm (1.362 in.)	52.2 mm (2.055 in.)
Race	40.3 mm (1.587 in.)	58.0 mm (2.283 in.)
Bearing	38.6 mm (1.52 in.)	60.0 mm (2.362 in.)

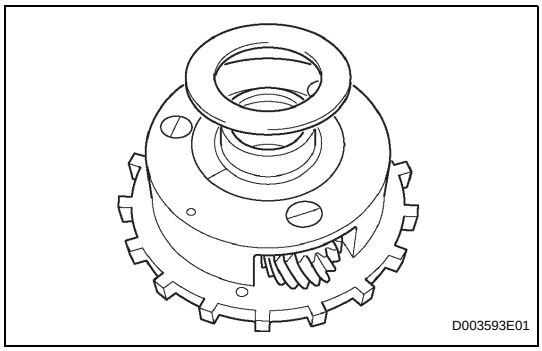

15. INSTALL REAR PLANETARY GEAR ASSEMBLY

(a) Coat the bearing race with ATF, and install it to the rear planetary gear assembly.

Standard bearing race diameter

Item	Inside	Outside
Race	38.6 mm (1.520 in.)	58.0 mm (2.83 in.)

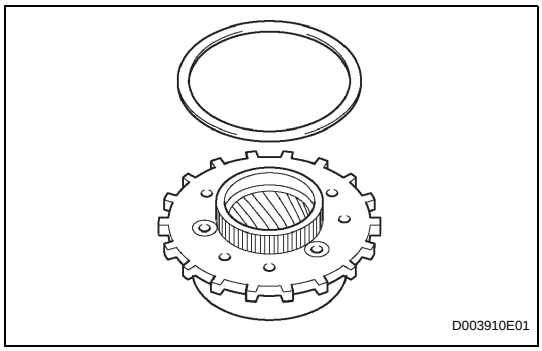

(b) Install the No. 2 thrust washer.

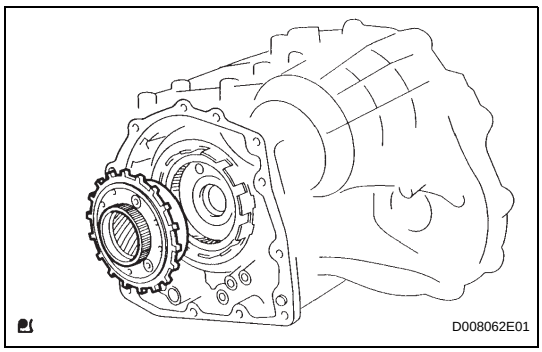

(c) Install the rear planetary gear to the rear planetary ring gear.

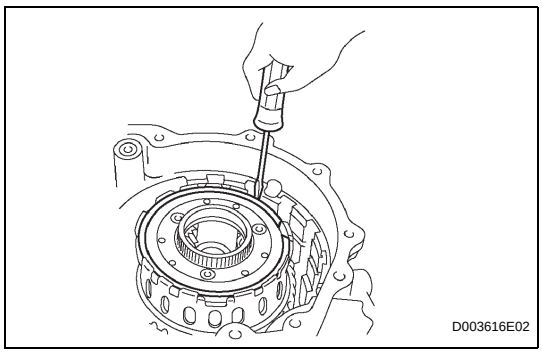

(d) Using a screwdriver, install the snap ring.

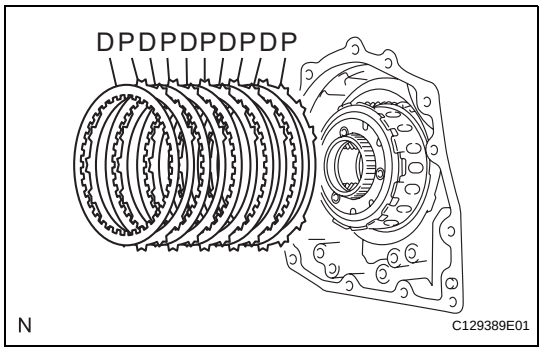

16. INSTALL 1ST AND REVERSE BRAKE CLUTCH DISC

(a) Install the 5 plates and 5 discs.

Install in order:

P - D - P - D - P - D - P - D - P - D

HINT:

P = Plate

D = Disc

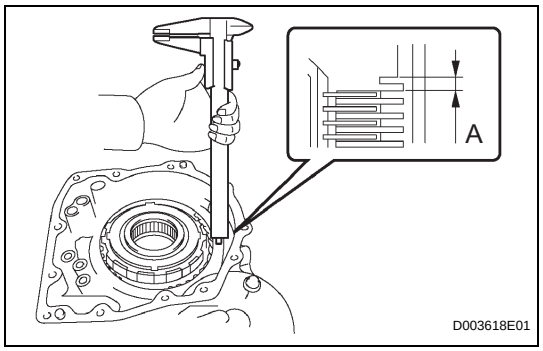

(b) Using a vernier caliper, measure the distance between the disc surface and the contact surface of the 2nd brake cylinder and transaxle (Dimension A).

(c) Select an appropriate flange so that the pack clearance will meet the specified value.
0.745 to 1.21 mm (0.0293 to 0.0476 in.)
HINT:
Piston stroke = Dimension A - Flange thickness
Standard flange thickness

Mark	Thickness	Mark	Thickness
1	1.8 mm (0.071in.)	5	2.2 mm (0.087 in.)
2	1.9 mm (0.075 in.)	6	2.3 mm (0.091 in.)
3	2.0 mm (0.079 in.)	7	2.4 mm (0.094 in.)
4	2.1 mm (0.083 in.)	8	2.5 mm (0.098 in.)

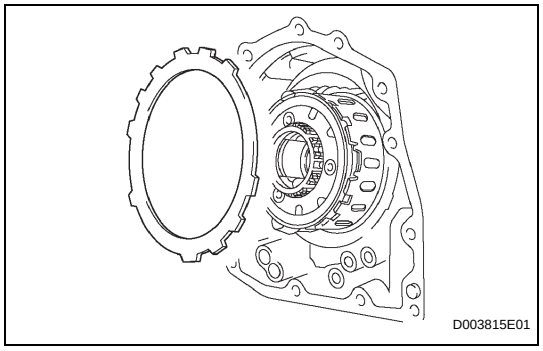

(d) Install the flange.

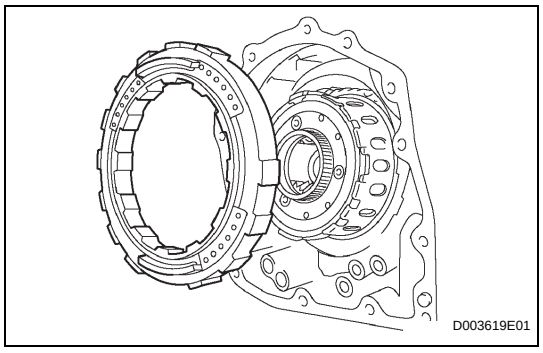

17. INSTALL 2ND BRAKE PISTON ASSEMBLY

(a) Install the 2nd brake piston to the transaxle.

(b) Install the snap ring and measure the inside diameter.
Standard inside diameter:
More than 167 mm (6.57 in.)
NOTICE:
- **Because the taper snap ring has the positioning direction, check it when installing.**
- **When the diameter does not satisfy the specified value, replace the snap ring with a new one.**

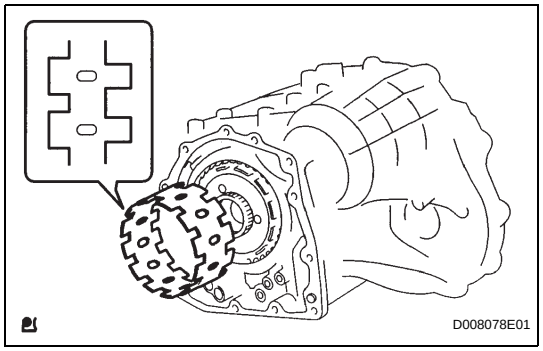

18. INSTALL 1-WAY CLUTCH SLEEVE OUTER

(a) Install the 1-way clutch outer sleeve to the 2nd brake cylinder.
NOTICE:
Check the positioning direction of the outer sleeve.

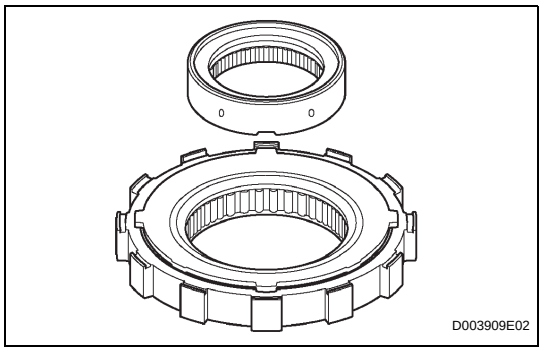

19. INSTALL 1-WAY CLUTCH ASSEMBLY

(a) Install the inner race to the 1-way clutch.

NOTICE:
Check the direction of the inner race.

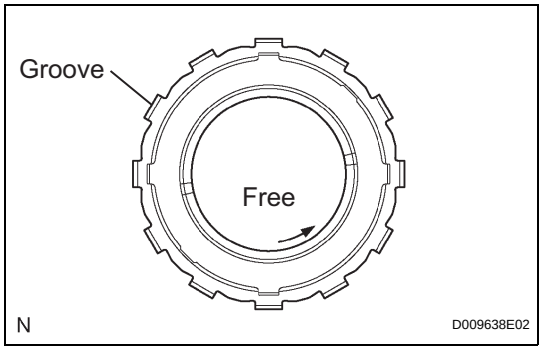

(b) Check the rotating direction of the 1-way clutch for the lock or free operation, as shown in illustration.

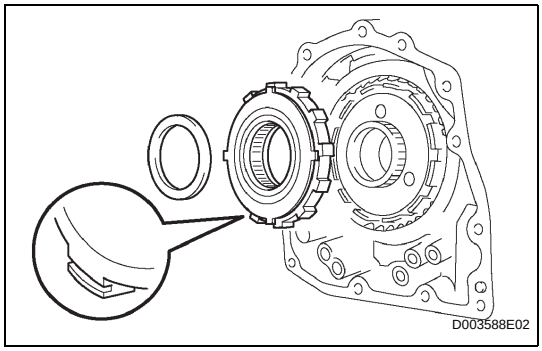

(c) Install the 1-way clutch and bearing to the 1-way clutch sleeve outer.

Standard bearing diameter

Item	Inside	Outside
Bearing	53.6 mm (2.110 in.)	69.6 mm (2.740 in.)

NOTICE:
Install the thrust bearing properly so that no-colored race will be visible.

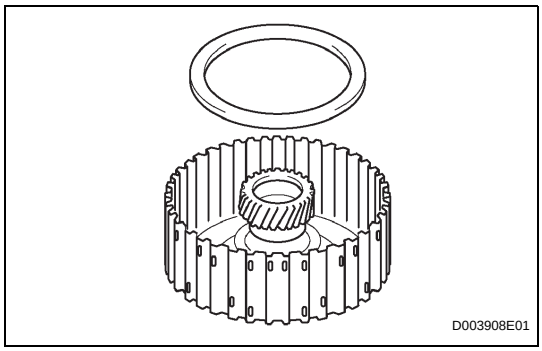

20. INSTALL REAR PLANETARY SUN GEAR ASSEMBLY

(a) Coat the No. 1 thrust washer with petroleum jelly, and install it onto the rear planetary sun gear.

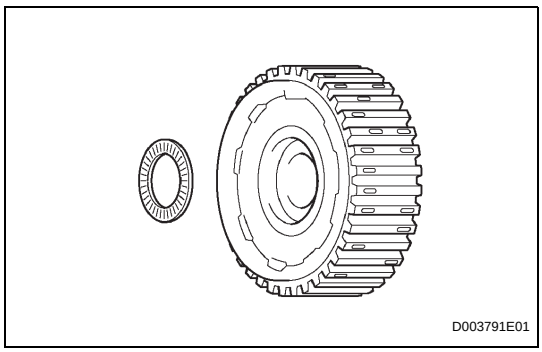

(b) Coat the bearing with petroleum jelly, and install it onto the rear planetary sun gear.

Standard bearing diameter

Item	Inside	Outside
Bearing	33.8 mm (1.331 in)	48.2 mm (1.898 in.)

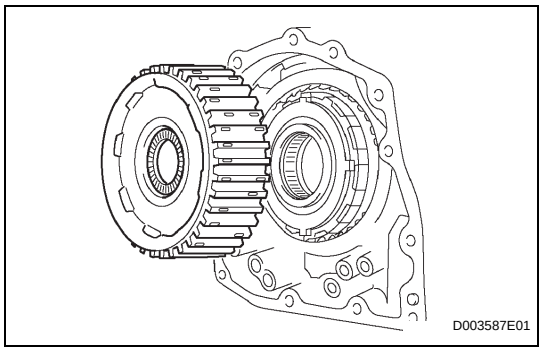

(c) Install the rear planetary sun gear to the rear planetary gear.

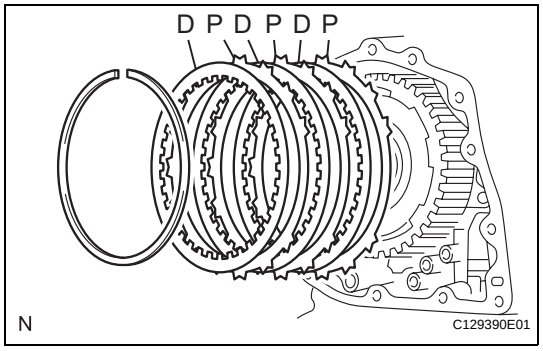

21. INSTALL 2ND BRAKE CLUTCH DISC

(a) Install the 3 discs and 3 plates to the transaxle.
Standard install in order:
P - D - P - D - P - D
HINT:
P = Plate
D = Disc

(b) Temporarily install the snap ring.

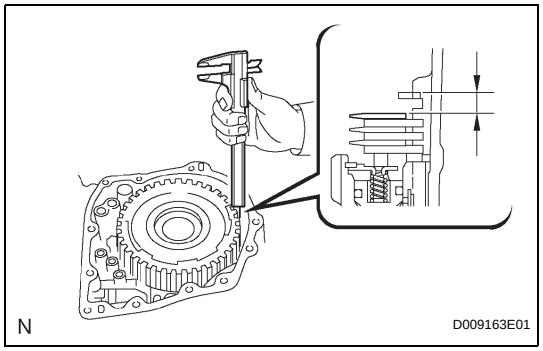

(c) Using a vernier caliper, measure the distance between the disc surface and snap ring surface.

(d) Select an appropriate flange so that the pack clearance will meet the specified value.
Standard pack clearance:
0.50 to 0.91 mm (0.0197 to 0.0358 in.)
HINT:
Piston stroke = Clearance - Flange thickness - Snap ring thickness 1.6 mm (0.063 in.)
Standard flange thickness

Mark	Thickness	Mark	Thickness
1	3.0 mm (0.118 in.)	5	3.4 mm (0.134 in.)
2	3.1 mm (0.122 in.)	6	3.5 mm (0.138 in.)
3	3.2 mm (0.126 in.)	7	3.6 mm (0.142 in.)
4	3.3 mm (0.130 in)	8	-

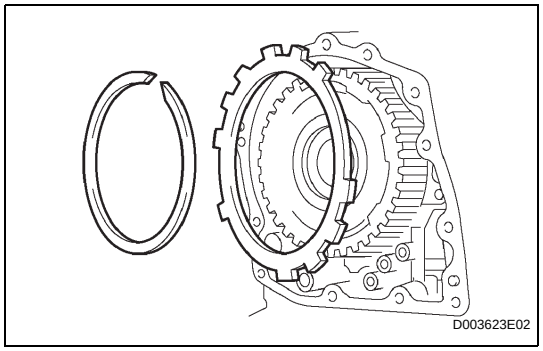

(e) Temporarily remove the snap ring, attach the selected flange and restore the snap ring.
NOTICE:
Secure the snap ring so that its gap is visible through the groove of the transaxle case.

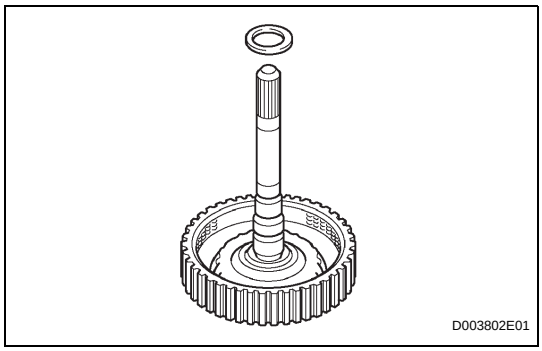
D003802E01

22. INSTALL DIRECT CLUTCH

(a) Install the bearing race to the direct clutch.

Standard bearing race diameter

Item	Inside	Outside
Bearing race	30.3 mm (1.193 in.)	46.0 mm (1.811 in.)

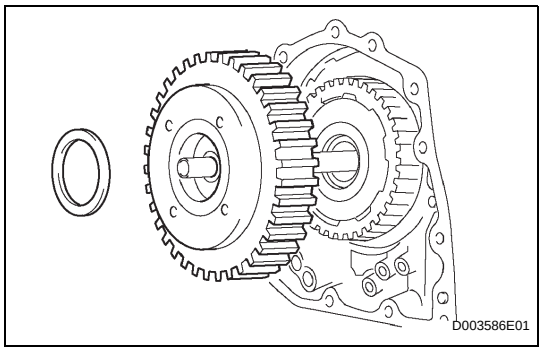
D003586E01

(b) Install the direct clutch and thrust bearing to the rear planetary sun gear.

NOTICE:

The disc in the direct clutch should completely mate with the hub attached outside the rear planetary sun gear. Otherwise, the rear cover cannot be installed.

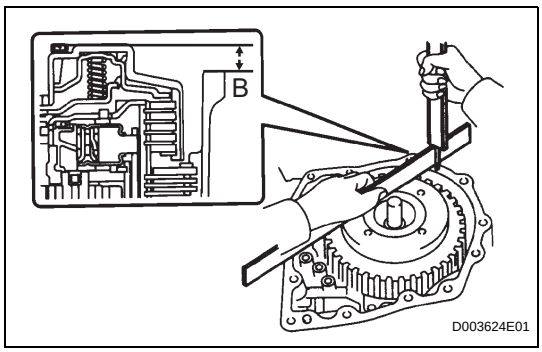

D003624E01

(c) Clean the connector part of the transaxle case and rear cover.

(d) As shown in the illustration, place a straightedge on the direct clutch drum and measure the distance between the transaxle case and the straightedge using a vernier caliper (Dimension B).

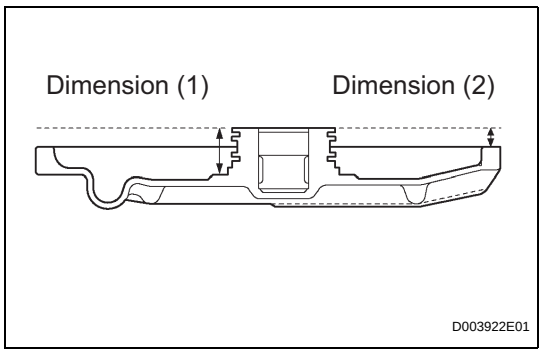

D003922E01

(e) Measure the 2 places of the rear cover as shown in the illustration. Calculate a dimension C using the following formula.

HINT:

Dimension C = Dimension (1) - Dimension (2)

(f) Calculate the end play value using the following formula. Select a thrust bearing which satisfies the end play value and install it.

End play:

0.198 to 0.936 mm (0.00780 to 0.03685 in.)

NOTICE:

Make sure that the colored race side is facing the direct clutch assembly.

HINT:

End play = Dimension C - Dimension B

Standard bearing thickness and diameter

Thickness	Inside	Outside
3.58 mm (0.1409 in.)	53.6 mm (2.110 in.)	69.6 mm (2.740 in.)
3.88 mm (0.1528 in.)	53.6 mm (2.110 in.)	70.18 mm (2.768 in.)

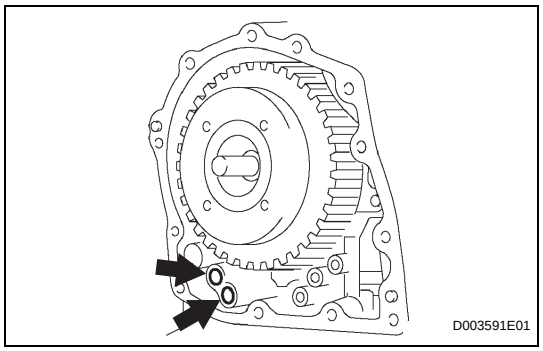

23. INSTALL NO. 1 GOVERNOR APPLY GASKET

(a) Install 2 new governor apply gaskets.

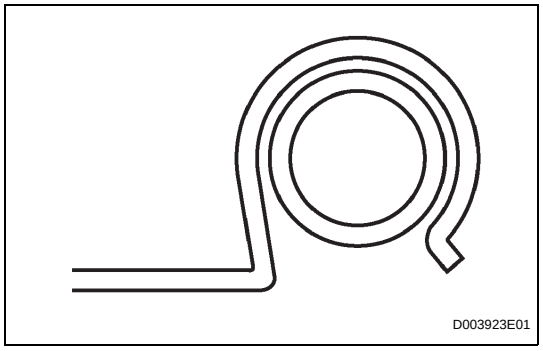

24. INSTALL FRONT CLUTCH APPLY TUBE

(a) Install the clamp to the front clutch apply tube.
NOTICE:
Make sure to install the clamp to the apply pipe before installing the apply pipe to the transaxle case. This prevents the apply pipe from being deformed or damaged.

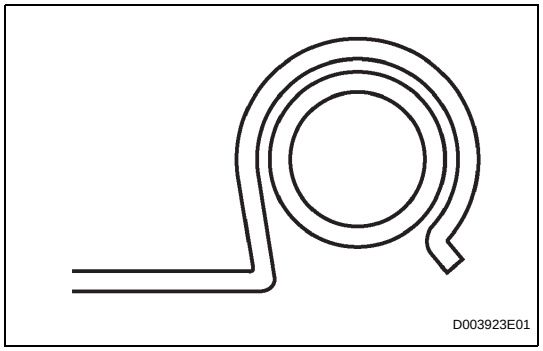

25. INSTALL BRAKE APPLY TUBE

(a) Install the clamp to the brake apply tube.
NOTICE:
Make sure to install the clamp to the apply pipe before installing the apply pipe to the transaxle case. This prevents the apply pipe from being deformed or damaged.

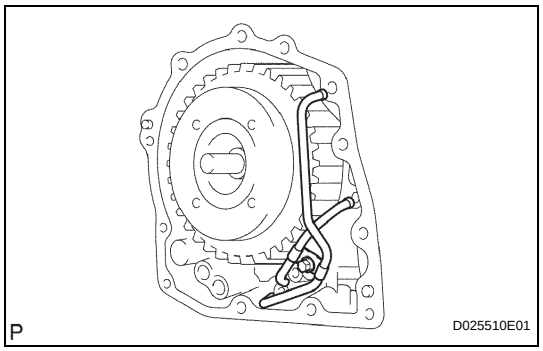

(b) Install the 2 apply tubes and to the transaxle with the bolt.
Torque: 5.4 N*m (55 kgf*cm, 48 in.*lbf)
NOTICE:
Each pipe should be securely inserted until it reaches the stopper.

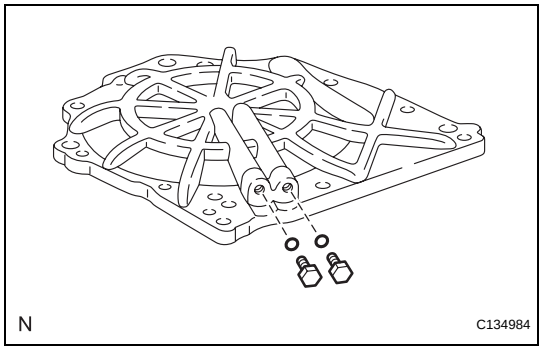

26. INSTALL NO. 1 TRANSAXLE CASE PLUG

(a) Install 2 new O-rings to the 2 plugs.
(b) Install the 2 plugs to the transaxle rear cover.
Torque: 7.4 N*m (75 kgf*cm, 65 in.*lbf)

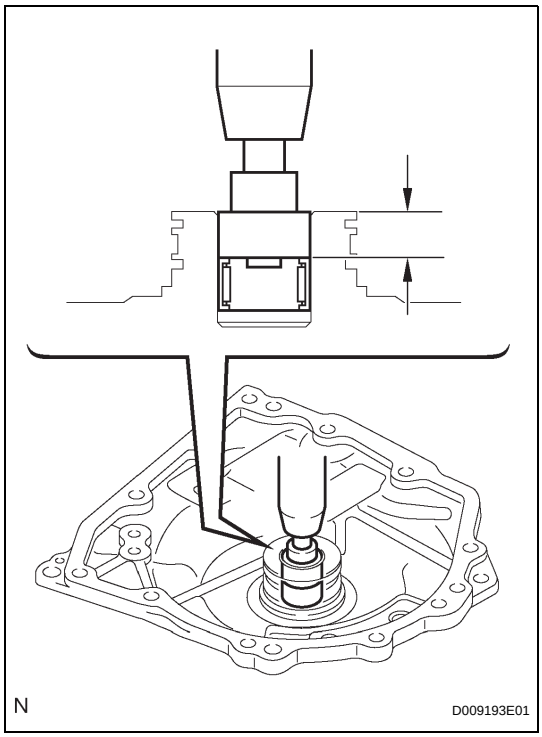

27. INSTALL TRANSAXLE REAR COVER SUB-ASSEMBLY

(a) Using SST and a press, press in the bearing.
SST 09950-60010 (09951-00230, 09952-06010)
Standard depth:
12.05 to 12.75 mm (0.4744 to 0.5020 in.)
NOTICE:
- **Face the inscribed mark side of the bearing race up.**
- **Repeat the press-fit until the specified value is obtained.**

(b) Apply adhesive to the 2 screws.
Adhesive:
Toyota Genuine Adhesive 1344,
Three Bond 1344 or Equivalent

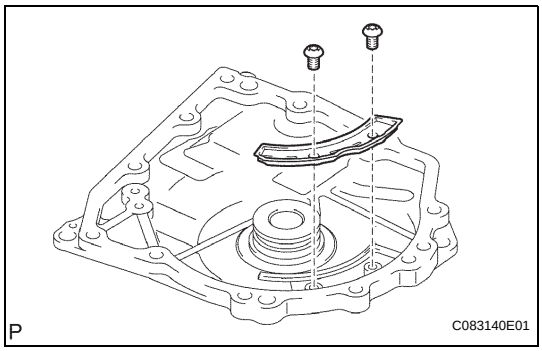

(c) Using a T30 "torx" socket wrench, install the transaxle rear cover plate with the 2 screws.
Torque: 7.5 N*m (76 kgf*cm, 66 in.*lbf)

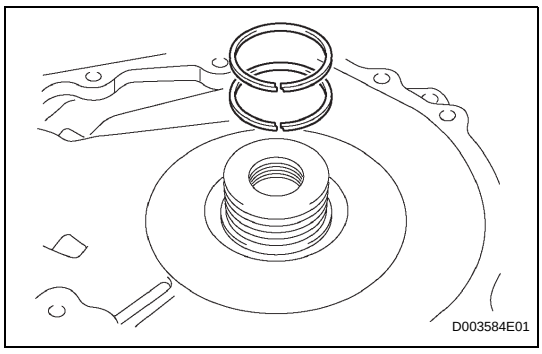

(d) Coat 2 new oil seal rings with ATF, and install them to the transaxle rear cover.

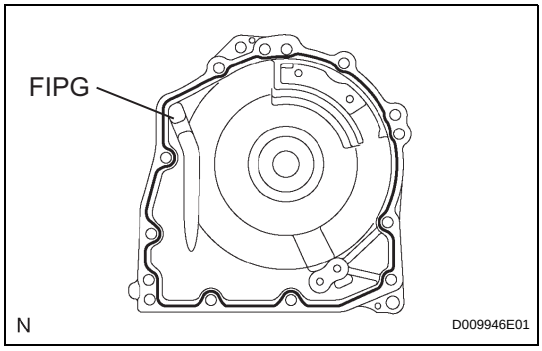

(e) Remove any packing material and be careful not to get oil on the contacting surfaces of the transaxle rear cover or the transaxle.

(f) Apply FIPG to the cover.
Seal packing:
Toyota Genuine Seal Packing 1281,
Three Bond 1281 or Equivalent

(g) Coat the needle roller bearing with ATF.

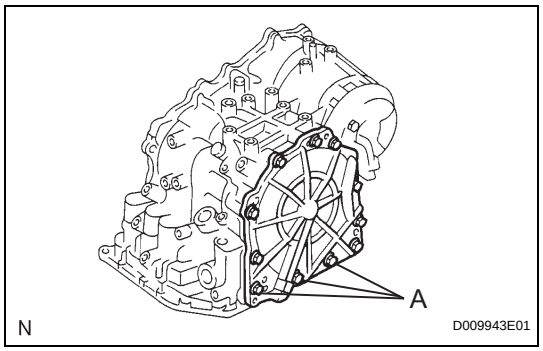

(h) Apply adhesive to the threads of the bolts labeled A.
Adhesive:
Toyota Genuine Adhesive 1344,
Three Bond 1344 or Equivalent

(i) Install the 11 bolts.
Torque: 19 N*m (194 kgf*cm, 14 ft.*lbf) for bolt A.
25 N*m (255 kgf*cm, 18 ft.*lbf) for other bolt
SST 09950-60010 (09951-00230, 09952-06010)

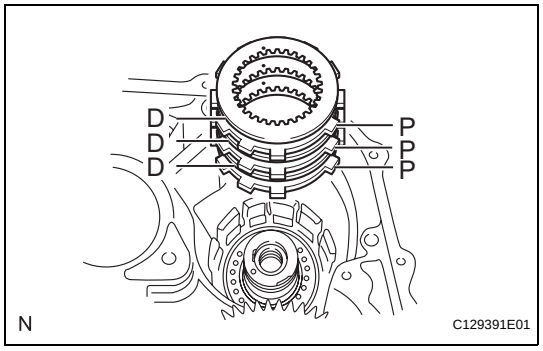

28. INSTALL NO. 2 UNDERDRIVE CLUTCH DISC

(a) Install the 3 discs and 3 plates to the transaxle.
Install in order:
P - D - P - D - P - D
HINT:
D = Disc
P = Plate

(b) Using a screwdriver, install the snap ring.

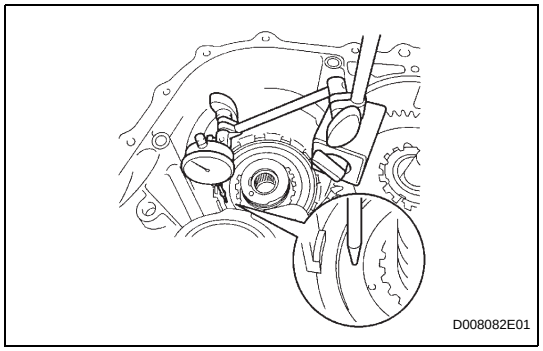

(c) Using a dial indicator, measure the underdrive brake pack clearance while applying and releasing compressed air (392kPa, 4.0 kgf/cm^2, 57 psi).
Standard pack clearance:
1.59 to 2.20 mm (0.0626 to 0.0866 in.)
HINT:
Select an appropriate flange from the table below so that it will meet the specified value.
Standard flange thickness

Mark	Thickness	Mark	Thickness
1	3.0 mm (0.118 in.)	3	3.4 mm (0.134 in.)
2	3.2 (0.126 in.)	-	-

(d) Temporarily remove the snap ring and attach the flange. Restore the snap ring.

29. INSPECT UNDERDRIVE 1-WAY CLUTCH ASSEMBLY (See page AX-186)

30. INSTALL UNDERDRIVE 1 WAY CLUTCH ASSEMBLY

(a) Install the outer race retainer to the 1-way clutch.

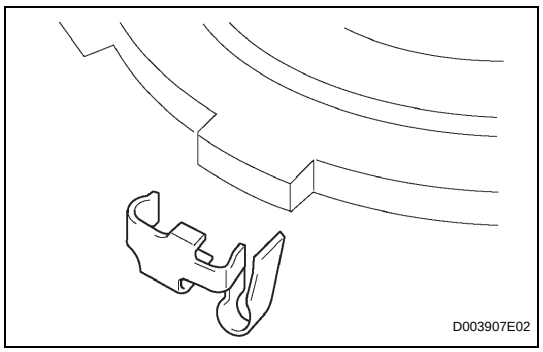

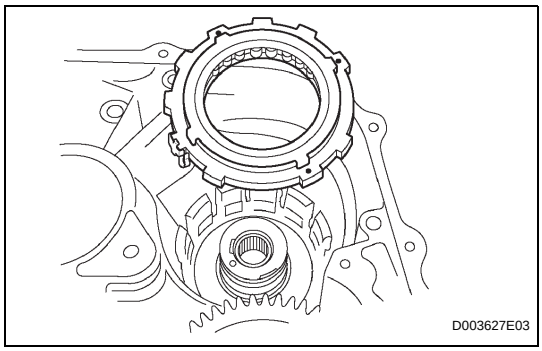

(b) Install the 1-way clutch to the transaxle.
NOTICE:
Make sure that the mark on the 1-way clutch outer race is visible.

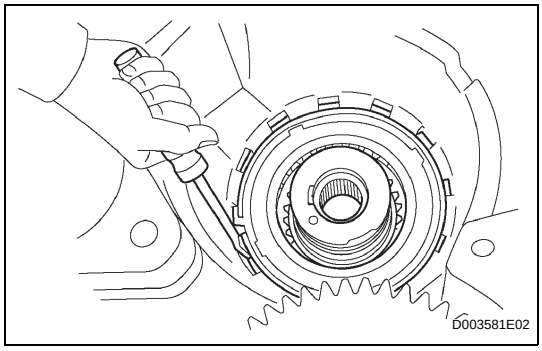

(c) Using a screwdriver, install the snap ring to the transaxle.

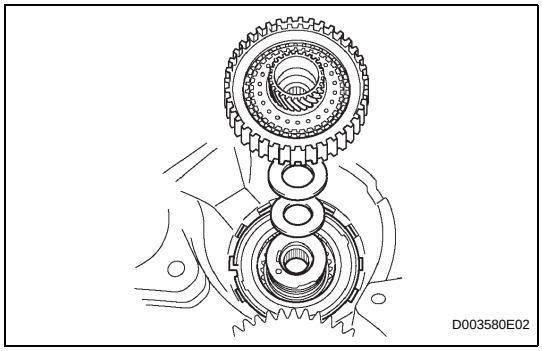

31. INSTALL UNDERDRIVE CLUTCH ASSEMBLY

(a) Coat the bearing and bearing race with petroleum jelly, and install them onto the underdrive clutch.
Standard race diameter

Item	Inside	Outside
Bearing	37.73 mm (1.4854 in.)	58.0 mm (2.283 in.)
Race	29.9 mm (1.177 in.)	55.5 mm (2.185 in.)

(b) Install the underdrive clutch to the transaxle.

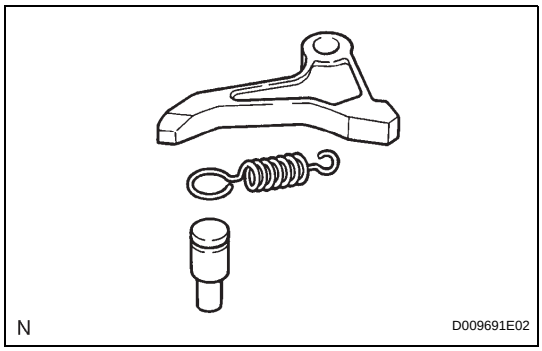

32. INSTALL UNDERDRIVE PLANETARY GEAR

(a) Install the pawl pin and spring to the parking lock pawl.

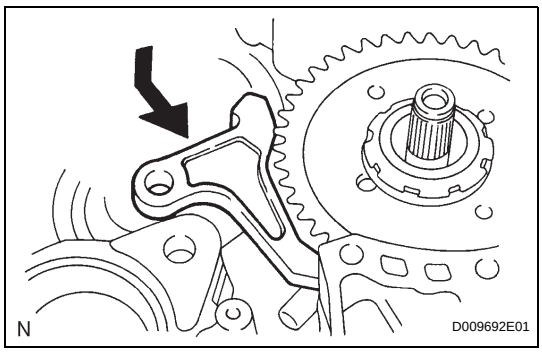

(b) Temporarily install the parking lock pawl, shaft and spring to the transaxle case as shown in the illustration.

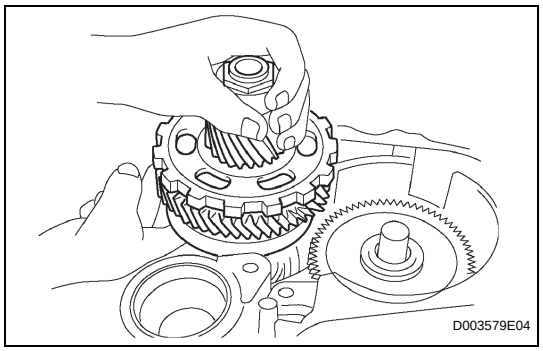

(c) Install the underdrive planetary gear to the transaxle.
NOTICE:
Engage all the discs of underdrive clutch and the hub splines of the underdrive planetary gear firmly and assemble them securely.

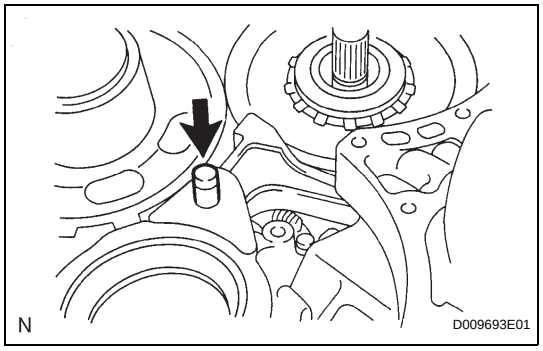

(d) Install the parking lock pawl shaft.

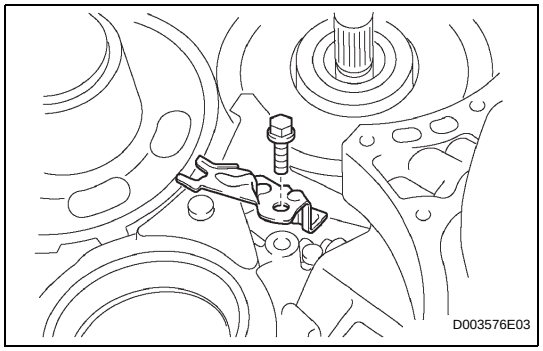

(e) Install the pawl shaft clamp with the bolt.
Torque: 9.8 N*m (100 kgf*cm, 87 in.*lbf)

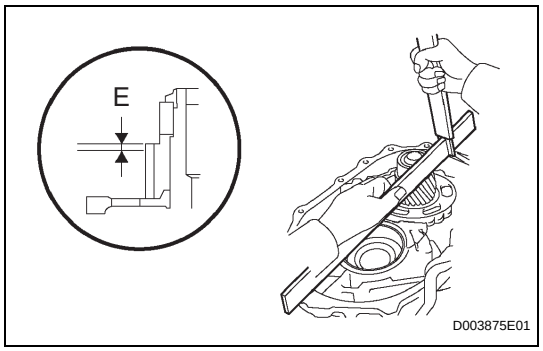

(f) Using a straightedge and vernier calipers as shown in the illustration, measure the gap between the top of the differential drive pinion in the underdrive planetary gear and contact surface of the transaxle and housing (Dimension D).
NOTICE:
Make a note of dimension D as it is necessary for the following process.

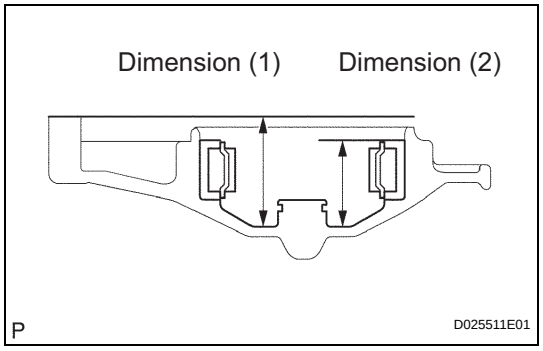

(g) As shown in the illustration, measure the 2 places of the transaxle housing. Calculate the dimension E using the formula.
NOTICE:
Make a note of dimension E as it is necessary for the following process.
HINT:
Dimension E = Dimension (1) - Dimension (2)

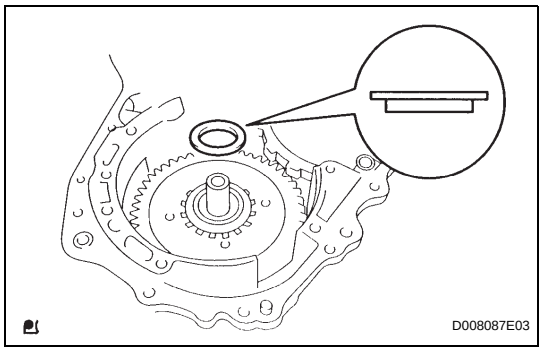

33. INSTALL MULTIPLE DISC CLUTCH HUB

(a) Install the bearing race to the transaxle while checking its direction.

Standard bearing race diameter

Item	Inside	Outside
Bearing race	34.5 mm (1.358 in.)	48.5 mm (1.909 in.)

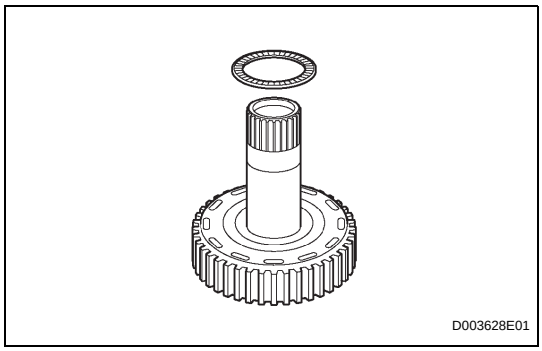

(b) Coat the thrust bearing and race with petroleum jelly, and install them onto the multiple disc clutch hub.

Standard thrust bearing and race diameter

Item	Inside	Outside
Bearing	36.3 mm (1.429 in.)	52.2 mm (2.055 in.)

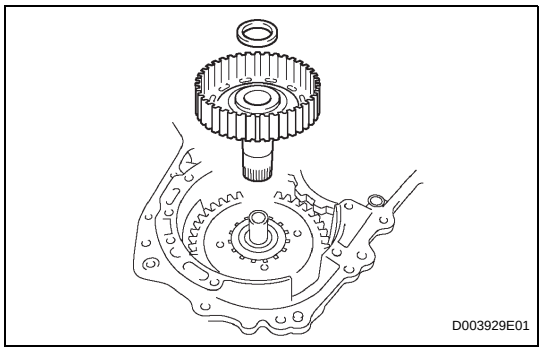

(c) Install the bearing to the multiple clutch hub.

Standard bearing diameter

Item	Inside	Outside
Bearing	23.5 mm (0.925 in.)	44.0 mm (1.732 in.)

(d) Install the forward clutch hub to the transaxle.

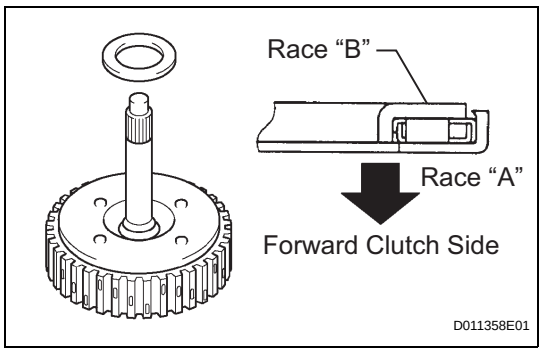

34. INSTALL FORWARD CLUTCH ASSEMBLY

(a) Install the thrust bearing to the forward clutch.

Standard bearing diameter

Item	Inside	Outside
Bearing	33.85 mm (1.3327 in.)	52.2 mm (2.055 in.)

NOTICE:
Install the thrust bearing properly so that the race "B" will be visible.

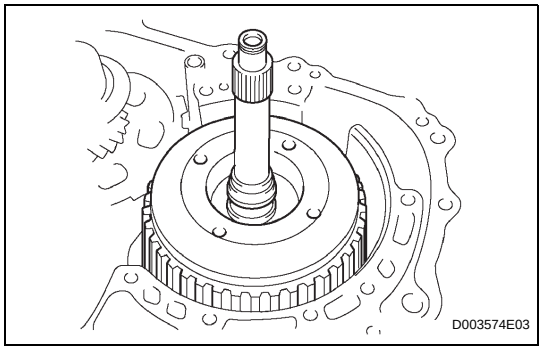

(b) Install the forward clutch to the multiple clutch hub.

NOTICE:
Align the splines of all discs in the forward clutch with those of multiple clutch hub to assemble them securely.

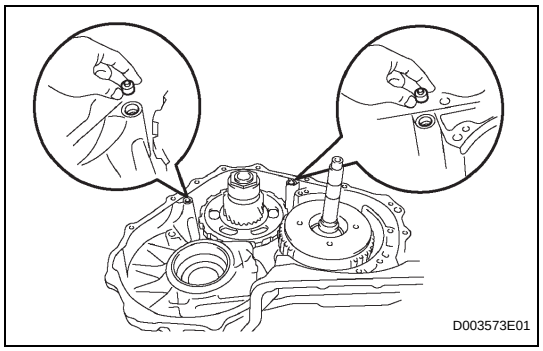

35. INSTALL OVERDRIVE BRAKE GASKET

(a) Install 2 new overdrive brake gaskets.

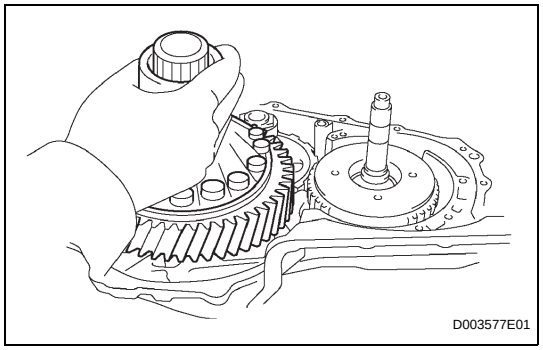

36. INSTALL DIFFERENTIAL GEAR ASSEMBLY

(a) Install the differential gear to the transaxle.

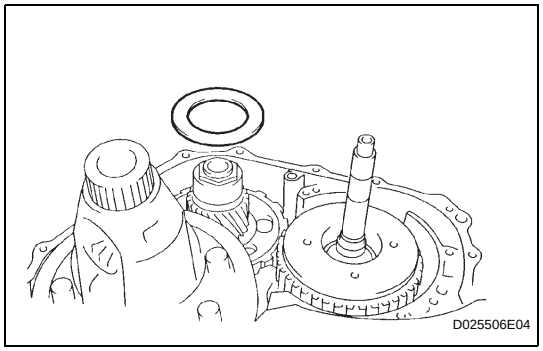

37. INSTALL NO. 2 THRUST BEARING UNDERDRIVE RACE

(a) Install the thrust bearing race to the underdrive planetary gear.

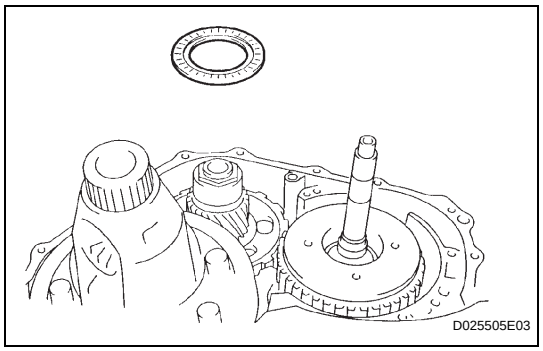

38. INSTALL THRUST NEEDLE ROLLER BEARING

(a) Calculate the end play value using the following formula and values of Dimensions D and E that were measured when installing cylindrical roller bearing and underdrive planetary gear. Select an appropriate underdrive planetary gear thrust bearing race No. 2 which satisfies the specified end play value, and instal it.

End play:

0.498 to 0.993 mm (0.0196 to 0.0390 in.)

HINT:

End play = Dimension E - Dimension D - thrust bearing thickness 3.28mm (0.1291 in.) - underdrive thrust bearing race thickness.

Standard race thickness

E - D	Thickness
Less than 7.64 mm (0.3008 in.)	3.5 mm (0.138 in.)
7.64 mm (0.3008 in.)	3.8 m (0.150 in.)

Standard bearing and bearing race diameter

Item	Inside	Outside
Bearing	57.2 mm (2.252 in.)	84.96 mm (3.3449 in.)
Bearing race	56.4 mm (2.220 in.)	83.0mm (3.268 in.)

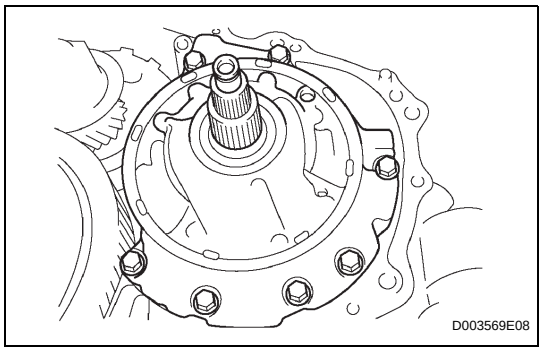

39. INSTALL OIL PUMP ASSEMBLY

(a) Install the oil pump to the transaxle with the 7 bolts.
Torque: 22 N*m (224 kgf*cm, 16 ft.*lbf)

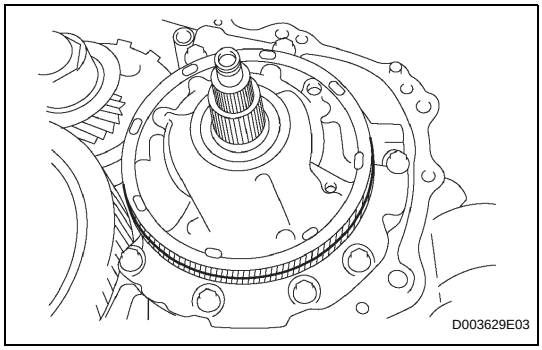

(b) Coat the O-ring of the oil pump with ATF.

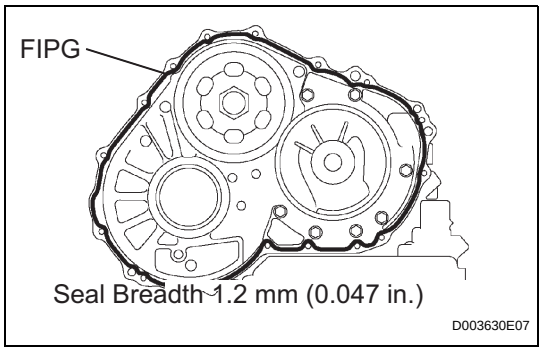

40. INSTALL TRANSAXLE HOUSING

(a) Remove any packing material and be careful not to get oil on the contacting surface of the transaxle housing.

(b) Apply FIPG to the transaxle.
Seal packing:
Toyota Genuine Seal Packing 1281,
Three Bond 1281 or Equivalent

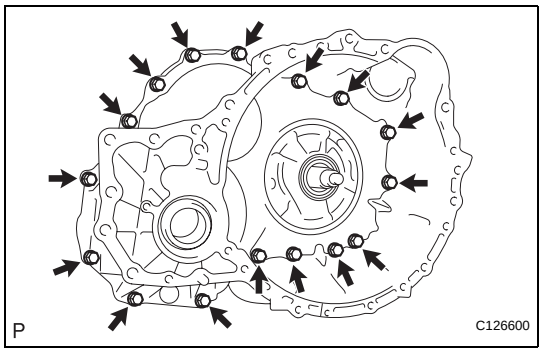

(c) Install the transaxle housing to the transaxle with the 16 bolts.
Torque: 22 N*m (224 kgf*cm, 16 ft.*lbf) for bolt A
29 N*m (296 kgf*cm, 21 ft.*lbf) for bolt B and C

HINT:
Each bolt length is indicated below.
Bolt length:
50 mm (1.969 in.) for bolt A
50 mm (1.969 in.) for bolt B
42 mm (1.654 in.) for bolt C
NOTICE:
Because the bolt labeled A are seal bolts, apply seal packing to new bolts and tighten them within 10 minutes after application.
Seal packing:
Toyota Genuine Seal Packing 1281,

AX

Three Bond 1281 or Equivalent

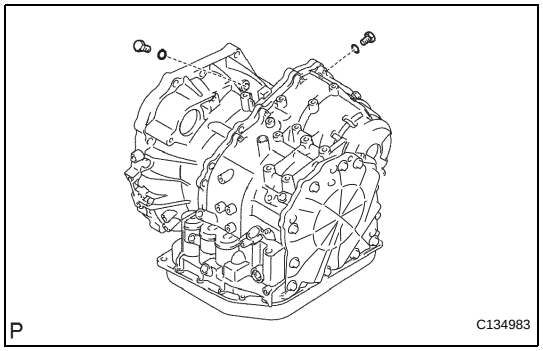

41. INSTALL NO. 1 TRANSAXLE CASE PLUG

(a) Install 2 new O-rings to the 2 plugs.

(b) Install the 2 plugs to the transaxle housing.

Torque: 7.4 N*m (75 kgf*cm, 65 in.*lbf)

42. INSPECT INPUT SHAFT END PLAY (See page AX-184)

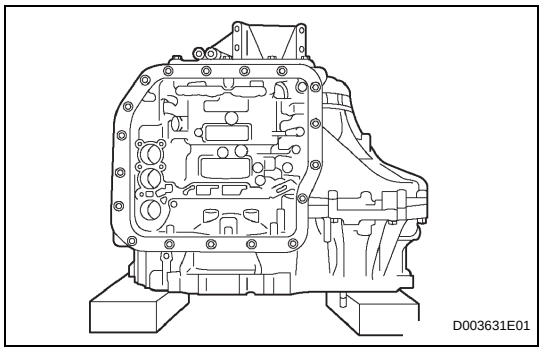

43. FIX AUTOMATIC TRANSAXLE ASSEMBLY

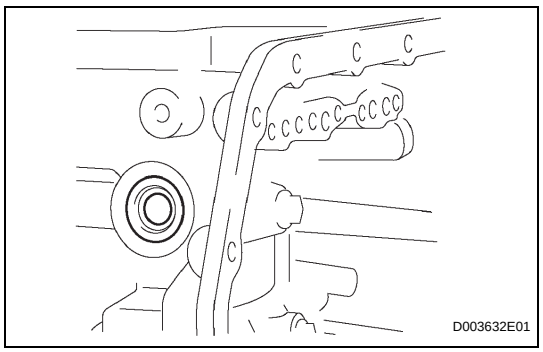

44. INSTALL MANUAL VALVE LEVER SHAFT OIL SEAL

(a) Coat a new oil seal with ATF.

(b) Install the oil seal to the transaxle.

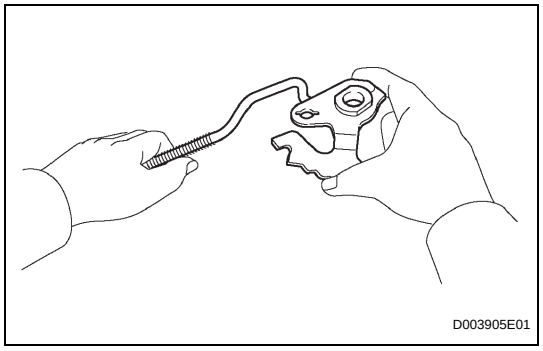

45. INSTALL PARKING LOCK ROD SUB-ASSEMBLY

(a) Install the parking lock rod to the manual valve lever.

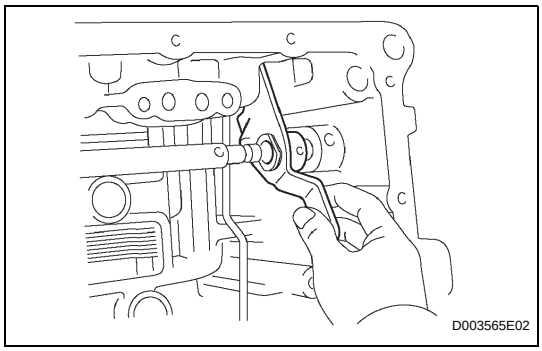

46. INSTALL MANUAL VALVE LEVER SUB-ASSEMBLY

(a) Install a new spacer and manual valve lever shaft to the transaxle.

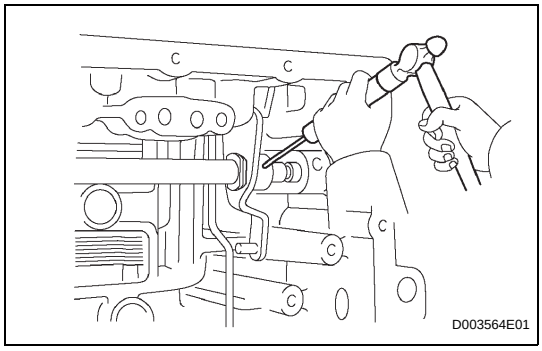

(b) Using a pin punch and hammer, tap in a new pin.

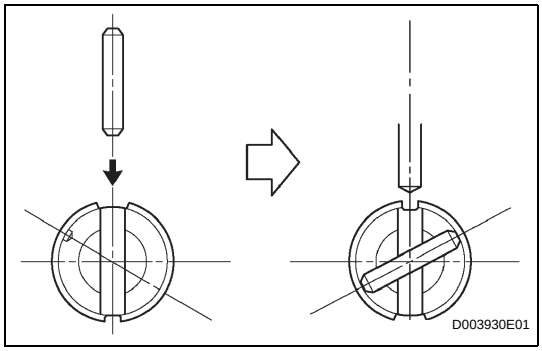

(c) Turn the spacer and lever shaft to align the small hole for locating the staking position mark on the lever shaft.
(d) Using a pin punch, stake the spacer through the small hole.
(e) Check that the spacer does not turn.

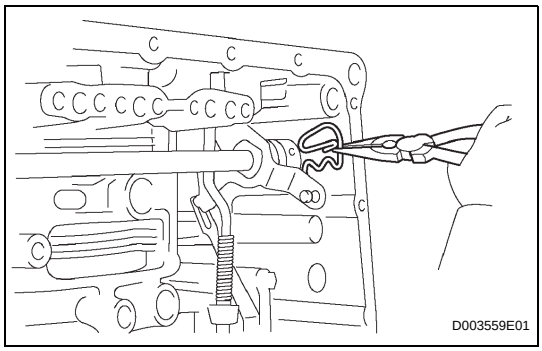

47. INSTALL MANUAL VALVE LEVER SHAFT RETAINER SPRING

(a) Using needle-nose pliers, install the retainer spring.

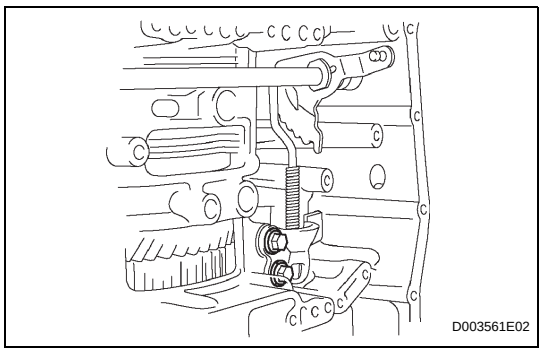

48. INSTALL PARKING LOCK PAWL BRACKET

(a) Install the parking lock pawl bracket with the 2 bolts.
Torque: 20 N*m (205 kgf*cm, 15 ft.*lbf)
Bolt length:
25 mm (0.984 in.)

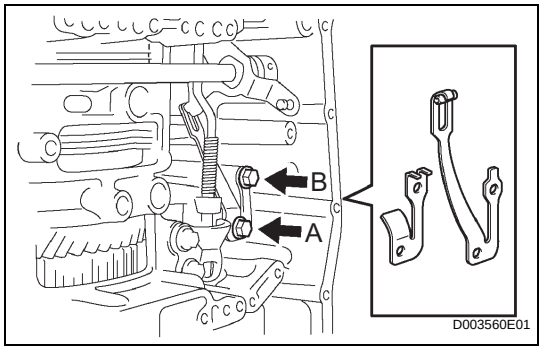

49. INSTALL MANUAL DETENT SPRING SUB-ASSEMBLY

(a) Install the manual detent spring with the 2 bolts.

NOTICE:
Make sure to install the manual detent spring and cover in this order.
Torque: 20 N*m (204 kgf*cm, 16 ft.*lbf) for bolt A
12 N*m (122 kgf*cm, 9 ft.*lbf) for bolt B

HINT:
Each bolt length is indicated below.
27 mm (1.063 in.) for bolt A
16 mm (0.630 in.) for bolt B

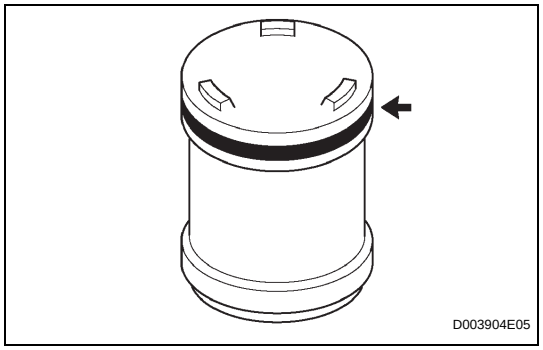

50. INSTALL B-3 ACCUMULATOR PISTON

(a) Coat a new O-ring with ATF, and install it to the B-3 accumulator piston.

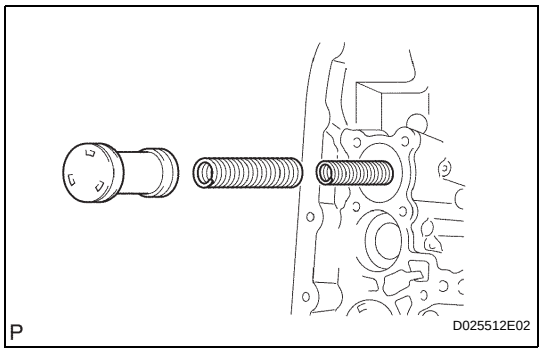

(b) Coat the piston with ATF, install it to the transaxle.

Standard accumulator spring

Spring	Free length Outer diameter	Color
B-3 Inner	60.24 mm (2.3716 in.) 15.9 (0.626 in.)	Yellowish green
B-3 Outer	74.61 mm (2.9374 in.) 21.7 mm (0.854 in.)	Blue

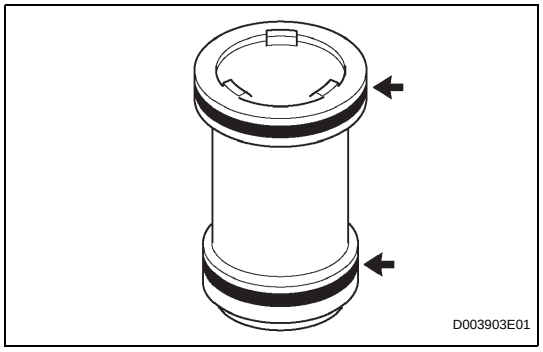

51. INSTALL C-1 ACCUMULATOR PISTON

(a) Coat 2 new O-rings with ATF, and install them to the C-1 accumulator piston.

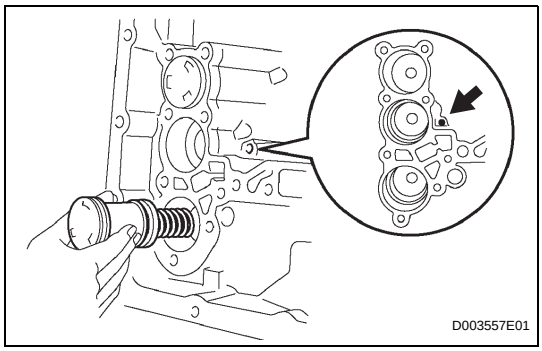

(b) Coat the piston with ATF, and install it to the transaxle.

Standard accumulator spring

Spring	Free length Outer diameter	Color
C-1	81.53 mm (3.2098 in.) 18.5 mm (0.728 in.)	Pink

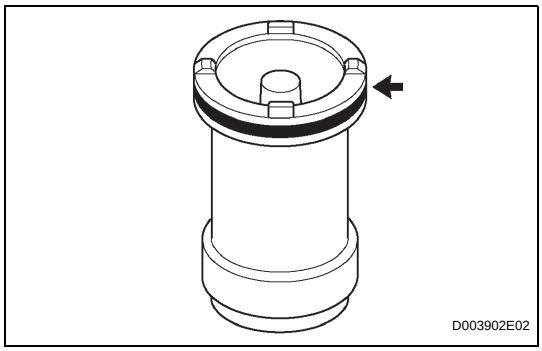

52. INSTALL C-3 ACCUMULATOR PISTON

(a) Coat a new O-ring with ATF, and install it to the C-3 accumulator piston.

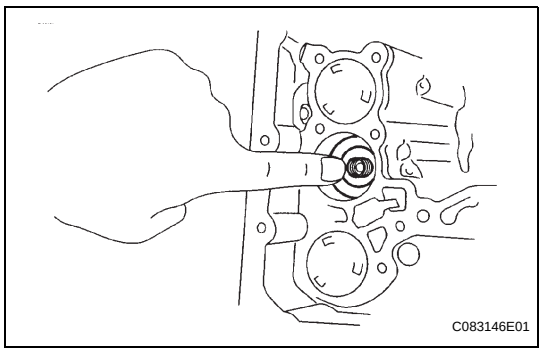

(b) Coat the piston with ATF, install it to the transaxle case.

Standard accumulator spring

Spring	Free length Outer diameter	Color
C - 3	90.49 mm (3.5626 in.) 19.2 mm (0.756 in.)	White

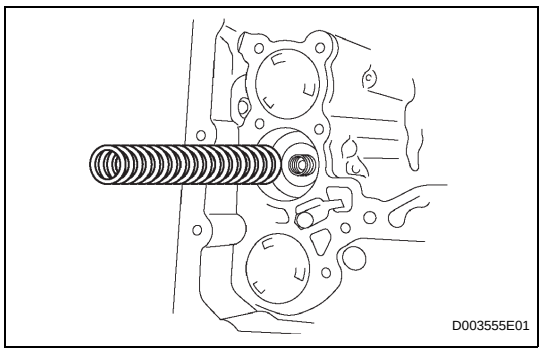

(c) Install the spring from the C-3 accumulator piston.

53. INSTALL CHECK BALL BODY

(a) Install the check ball body and spring.

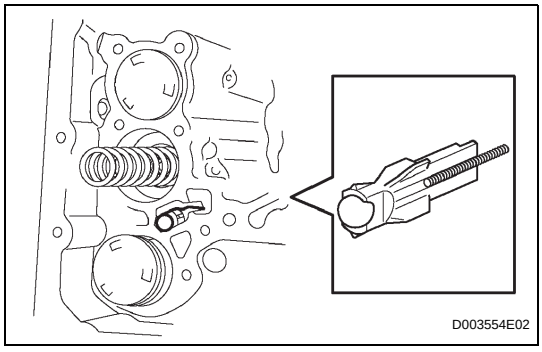

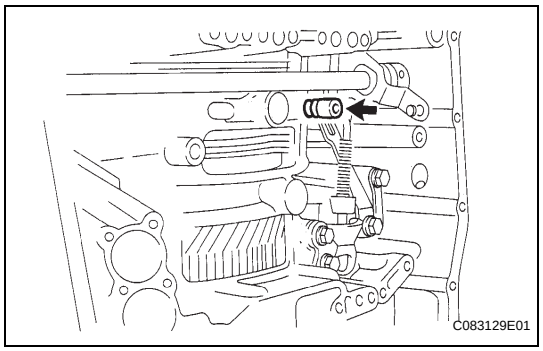

54. INSTALL BRAKE DRUM GASKET

(a) Coat a new brake drum gasket with ATF, and install it to the transaxle.

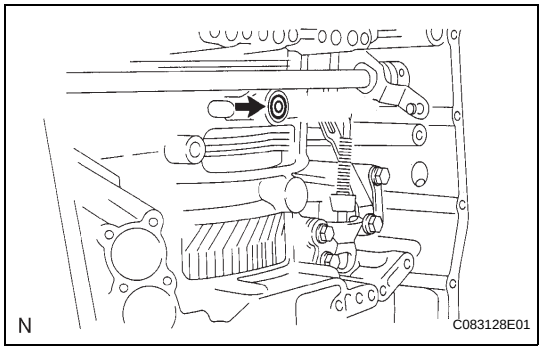

55. INSTALL TRANSAXLE CASE 2ND BRAKE GASKET

(a) Coat a new transaxle case 2nd brake gasket with ATF, and install it to the transaxle.

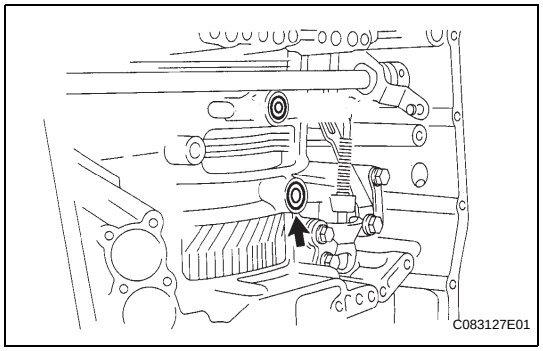

56. INSTALL NO. 1 GOVERNOR APPLY GASKET

(a) Coat a new governor apply gasket No. 1 with ATF, and install it to the transaxle.

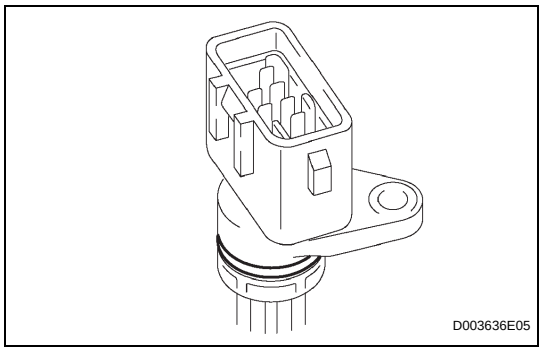

57. INSTALL TRANSMISSION WIRE

(a) Coat a new O-ring with ATF, and install it to the transaxle solenoid wire.

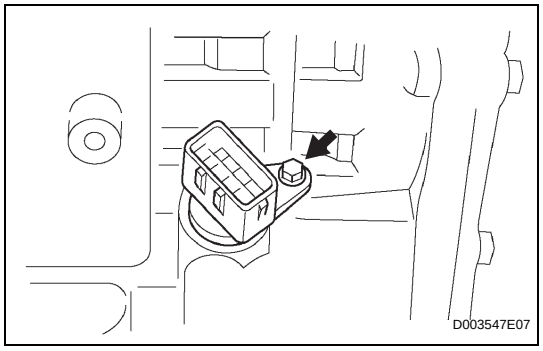

(b) Install the solenoid wire retaining bolt
Torque: 5.4 N*m (55 kgf*cm, 48 in.*lbf)

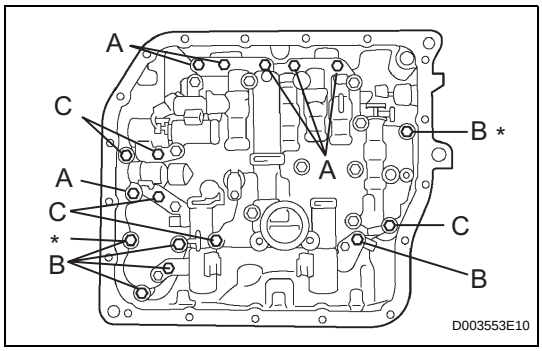

58. INSTALL TRANSMISSION VALVE BODY ASSEMBLY

(a) Align the groove of the manual valve with the pin of lever.

(b) Install the 17 bolts.
Torque: 11 N*m (112 kgf*cm, 8 ft.*lbf)
NOTICE:
- **Push the valve body against the accumulator piston spring and the check ball body to install it.**
- **Tighten the bolts marked by * in the illustration first temporarily because they are positioning bolts.**

HINT:
Each bolt length is indicated below.
Bolt length:
25 mm (0.984 in.) for bolt A
41 mm (1.614 in.) for bolt B
45 mm (1.771 in.) for bolt C

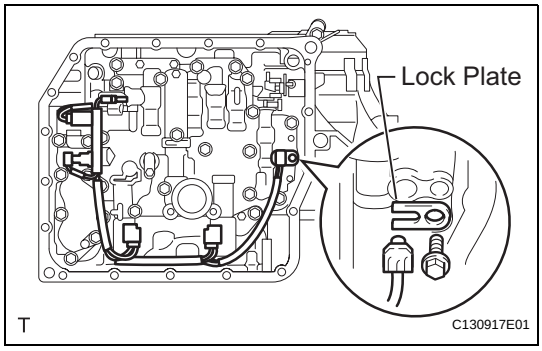

(c) Connect the 5 solenoid connectors.

(d) Coat the O-ring of the temperature sensor with ATF.

(e) Install the ATF temperature sensor with the lock plate and bolt.
Torque: 6.6 N*m (67 kgf*cm, 58 in.*lbf)

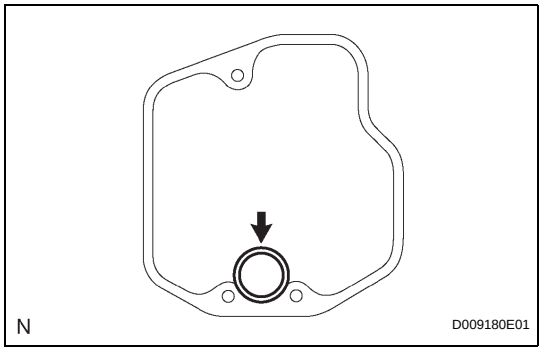

59. INSTALL VALVE BODY OIL STRAINER ASSEMBLY

(a) Coat a new O-ring with ATF.

(b) Install the O-ring to the oil strainer.

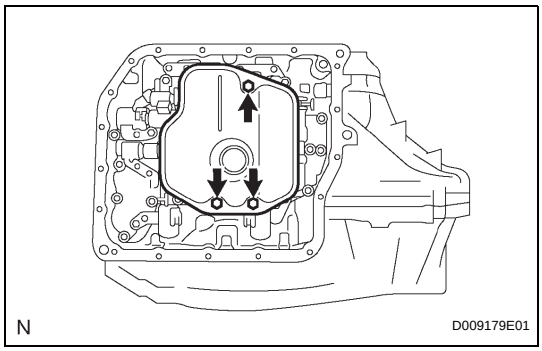

(c) Install the oil strainer with the 3 bolts.
Torque: 11 N*m (112 kgf*cm, 8 ft.*lbf)

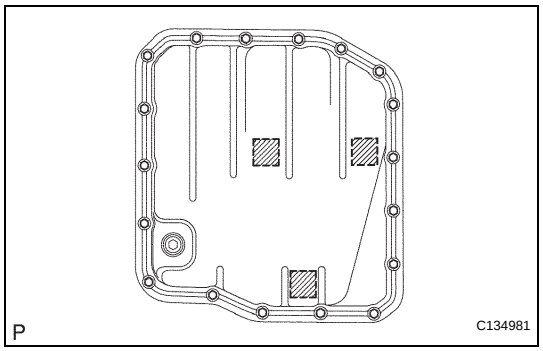

60. INSTALL AUTOMATIC TRANSAXLE OIL PAN SUB-ASSEMBLY

(a) Install the 3 magnets in the oil pan.

(b) Install a new oil pan gasket to the oil pan.

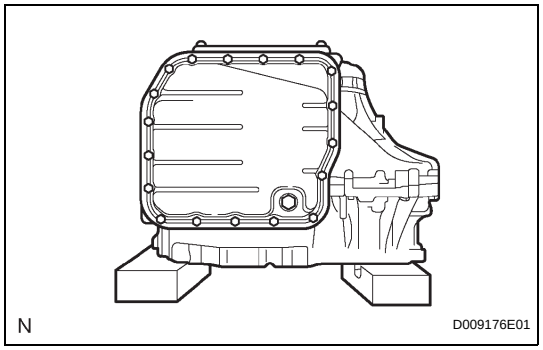

(c) Install the oil pan to the transaxle with the 18 bolts.
Torque: 7.6 N*m (77 kgf*cm, 67 in.*lbf)
NOTICE:
Because the bolts are seal bolts, apply seal packing to new bolts and tighten them within 10 minutes after application.

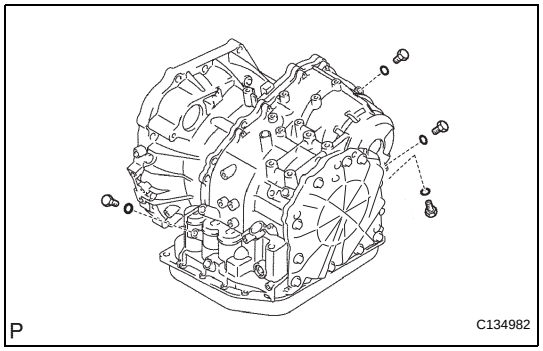

61. INSTALL NO. 1 TRANSAXLE CASE PLUG

(a) Coat 4 new O-rings with ATF, and install them to the 4 plugs.

(b) Install the 4 plugs to the transaxle case.
Torque: 7.4 N*m (75 kgf*cm, 65 in.*lbf)

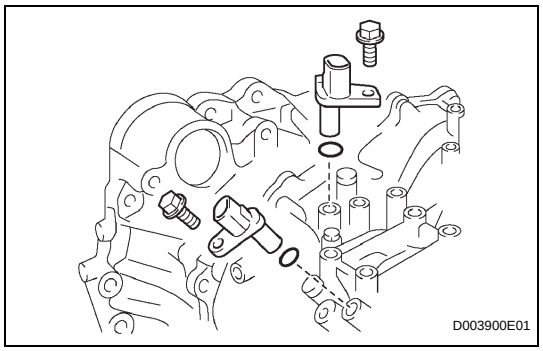

62. INSTALL SPEED SENSOR

(a) Coat 2 new O-rings with ATF, and install them to the 2 sensors.

(b) Install the 2 sensors with the 2 bolts.
Torque: 11 N*m (112 kgf*cm, 8 ft.*lbf)

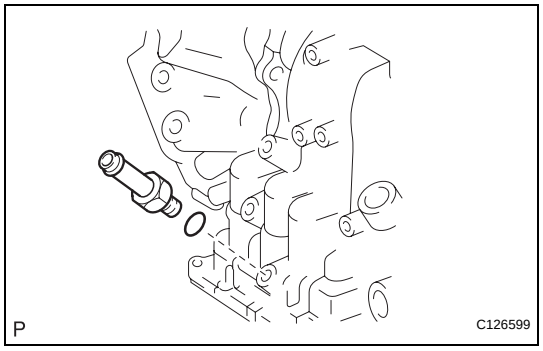

63. INSTALL OIL COOLER INLET TUBE UNION

(a) Coat a new O-ring with ATF, and install it to the union.

(b) Install the union to the transaxle.
Torque: 27 N*m (276 kgf*cm, 20 ft.*lbf)

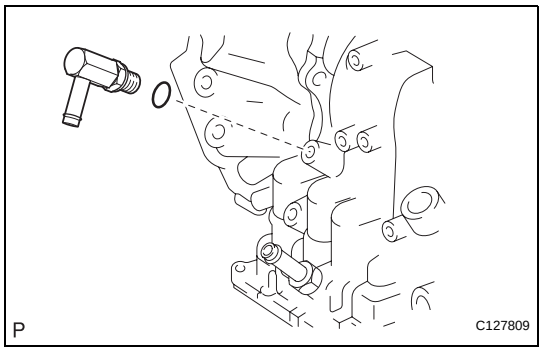

64. INSTALL OIL COOLER OUTLET TUBE UNION

(a) Coat a new O-ring with ATF, and install it to the union.

(b) Install the union to the transaxle.
Torque: 25 N*m (255 kgf*cm, 18 ft.*lbf)

65. INSTALL BREATHER PLUG HOSE

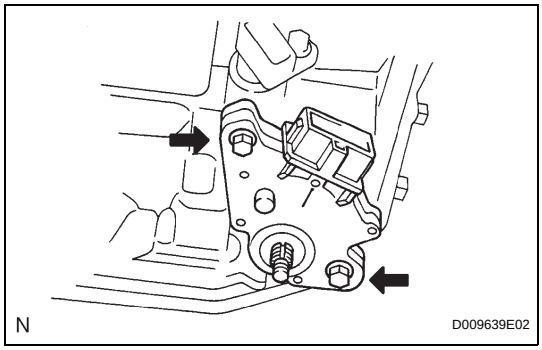

66. INSTALL PARK/NEUTRAL POSITION SWITCH ASSEMBLY

(a) Install the park/neutral position switch to the manual valve shaft.

(b) Temporarily install the 2 bolts.

(c) Install a new lock plate and tighten the manual valve shaft nut.
Torque: 5.4 N*m (55 kgf*cm, 48 in.*lbf)

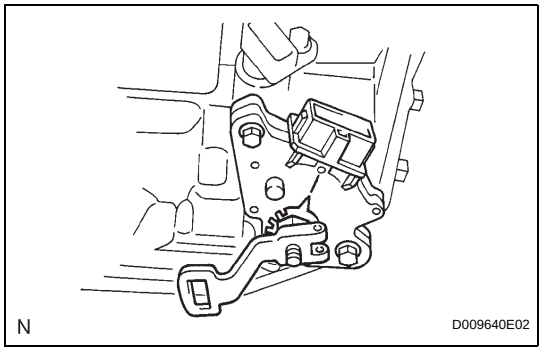

(d) Temporarily install the control shaft lever.

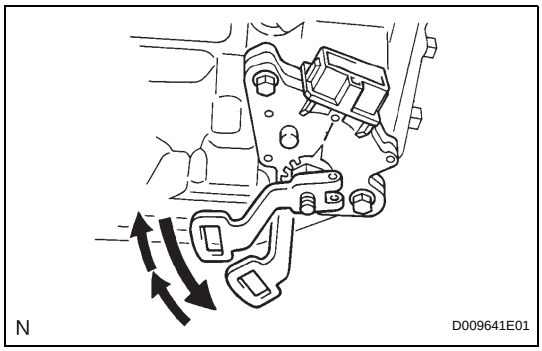

(e) Turn the lever counterclockwise until it stops, and then turn it clockwise 2 notches.

(f) Remove the control shaft lever.

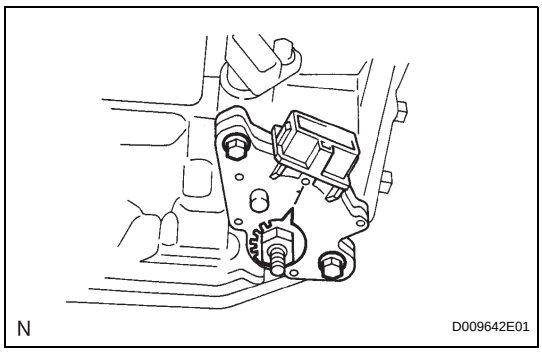

(g) Align the groove with neutral basic line.

(h) Hold the switch in this position and tighten the 2 bolts.
Torque: 6.9 N*m (70 kgf*cm, 61 in.*lbf)

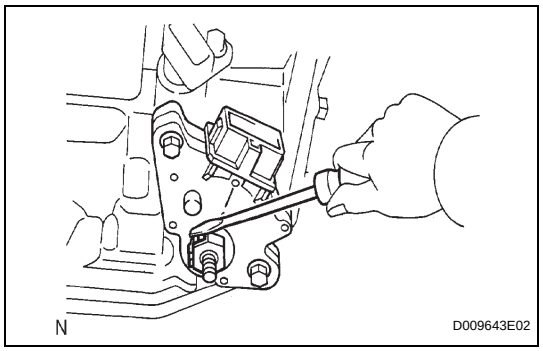

(i) Using a screwdriver, stake the nut with the lock plate.

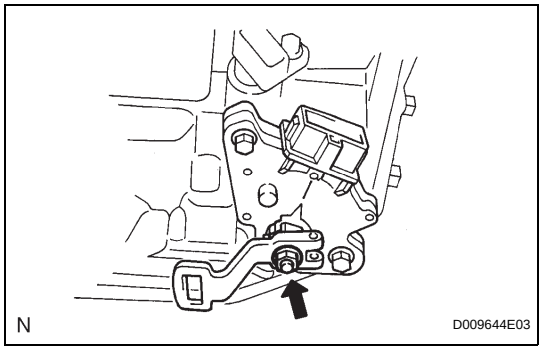

(j) Install the control shaft lever with the washer and nut.
Torque: 13 N*m (133 kgf*cm, 10 ft.*lbf)

AUTOMATIC TRANSAXLE UNIT

COMPONENTS

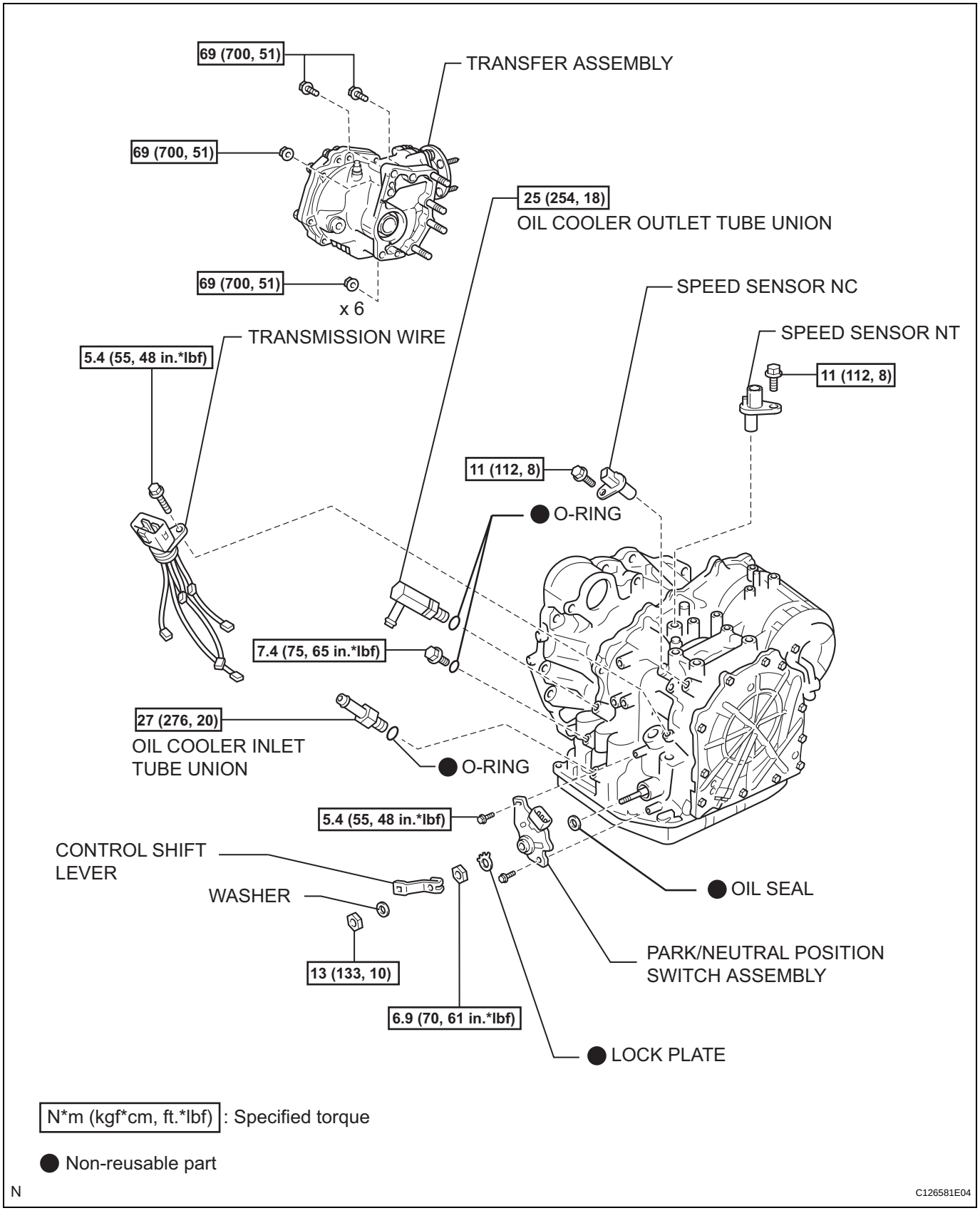

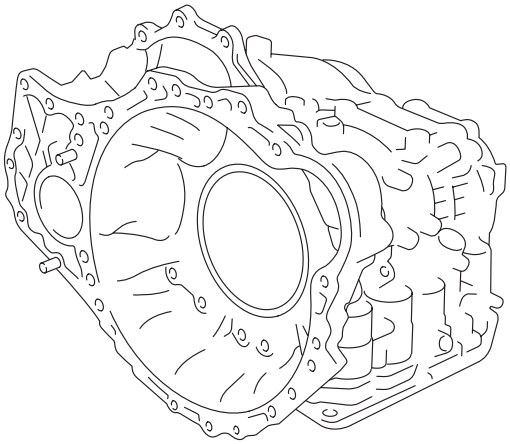

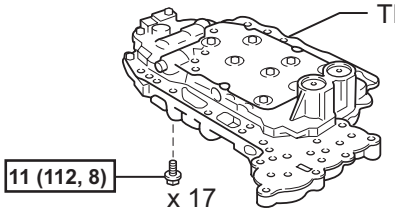

● O-RING

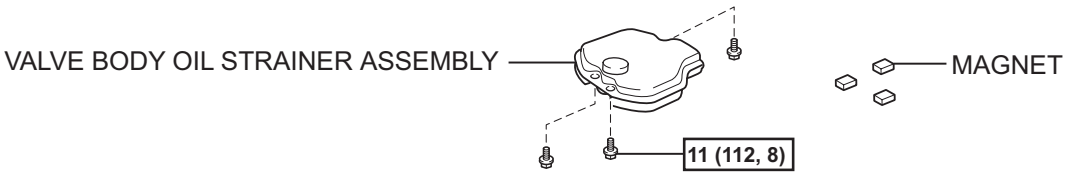

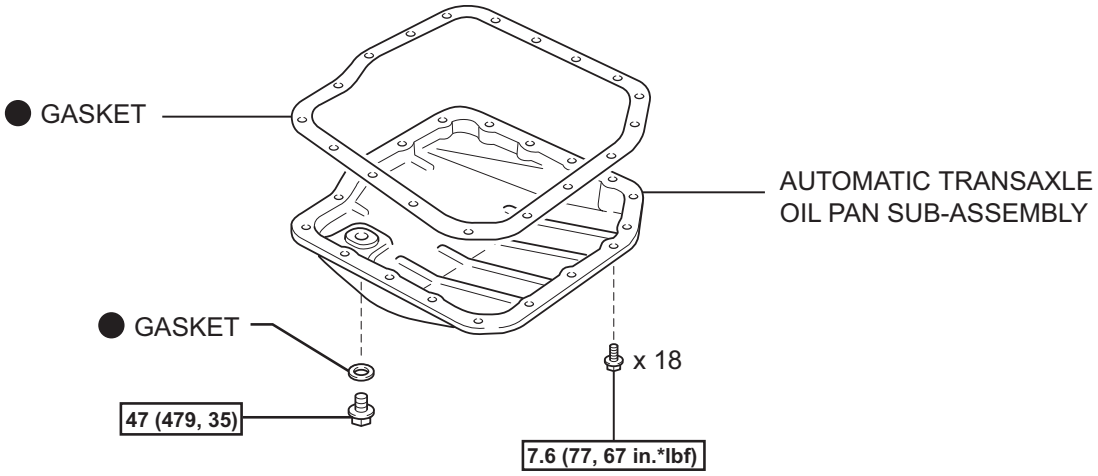

N*m (kgf*cm, ft.*lbf) : Specified torque

● Non-reusable part

N

C126582E04

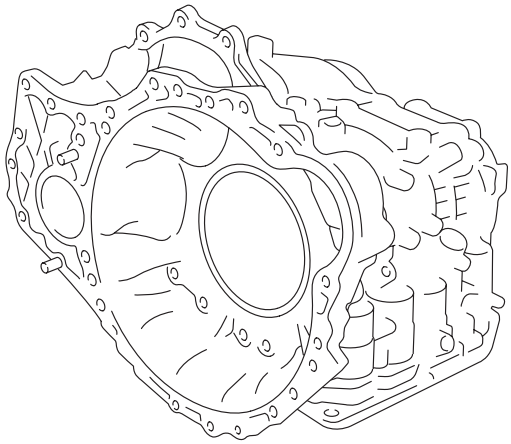

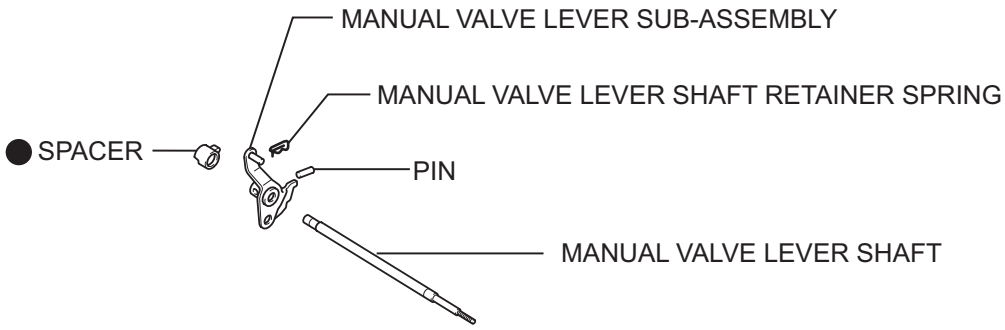

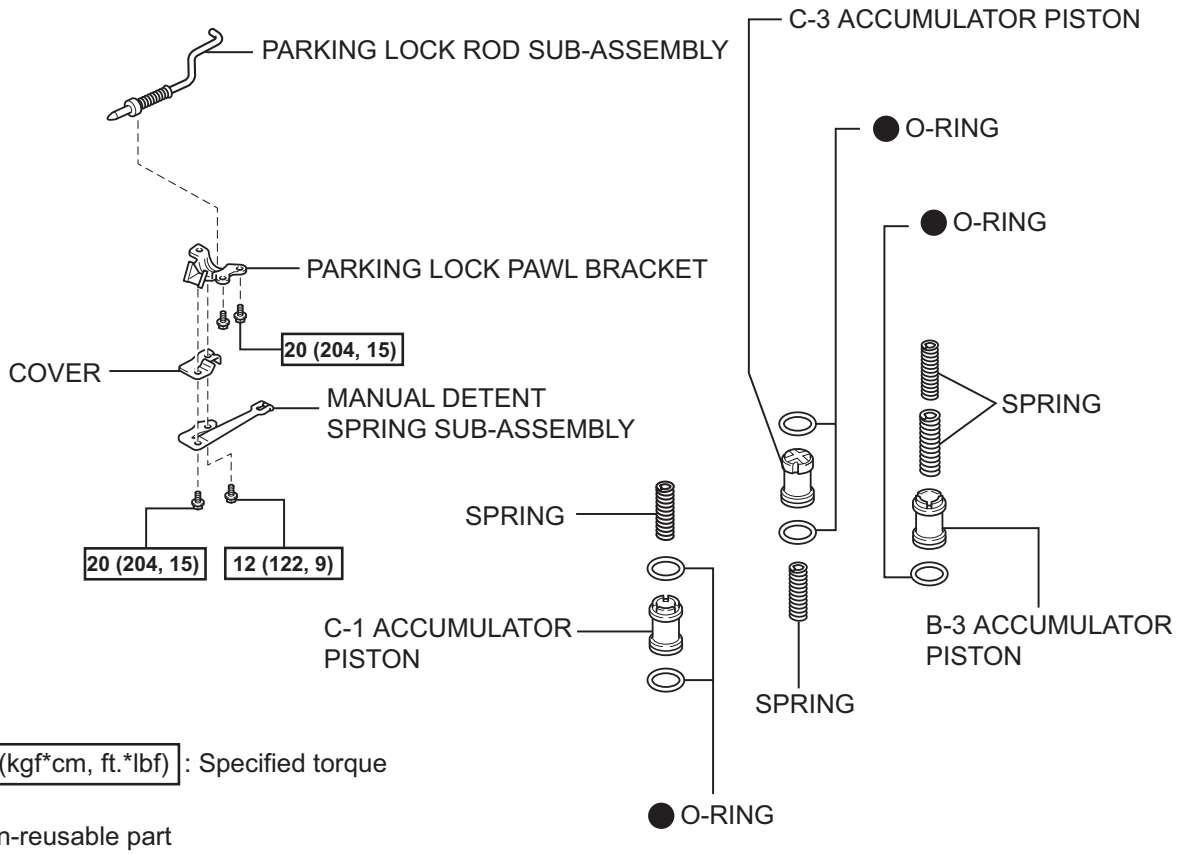

N

C126583E03

AX

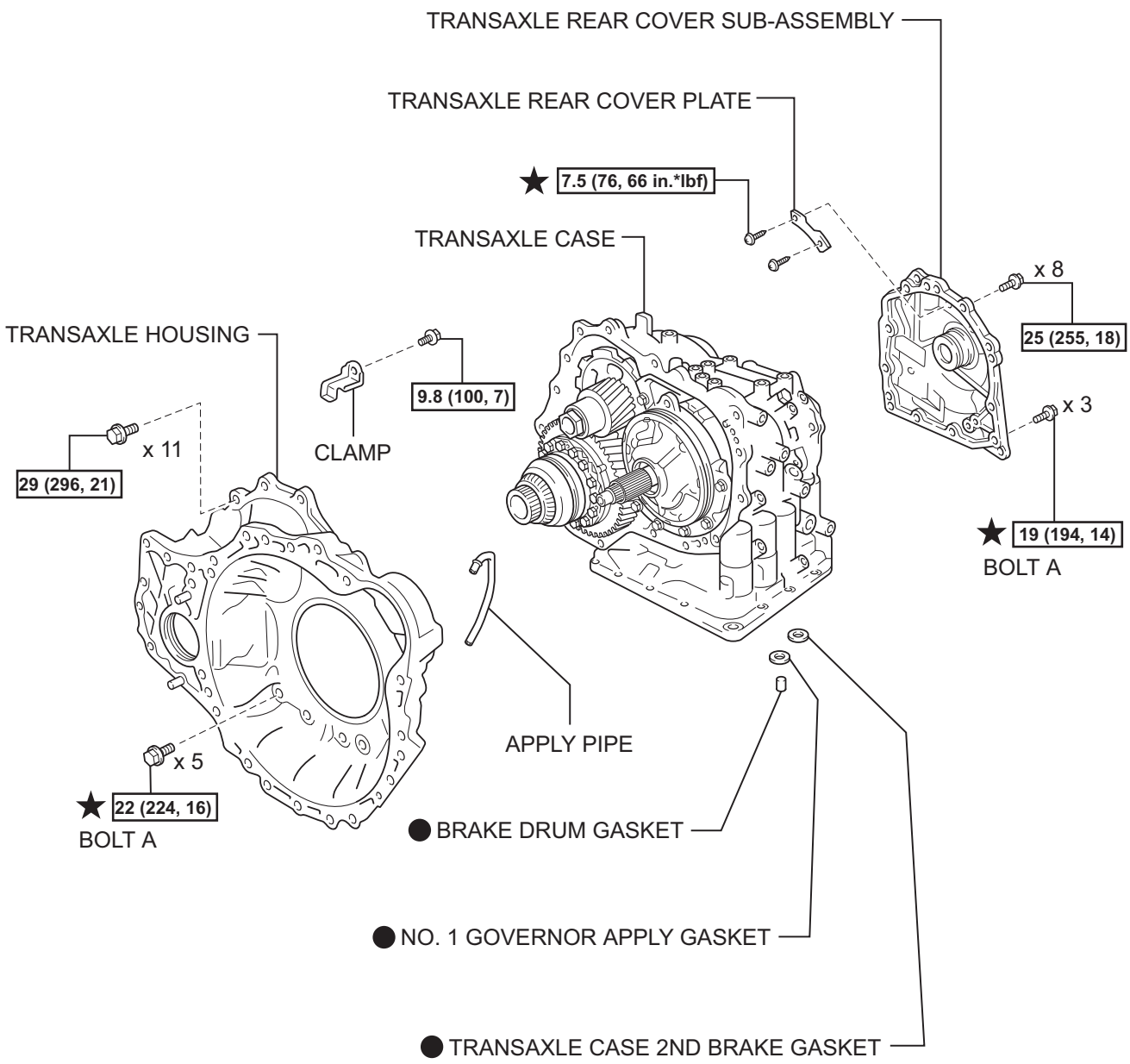

N*m (kgf*cm, ft.*lbf) : Specified torque

● Non-reusable part

★ Precoated part

N

C126584E03

AX

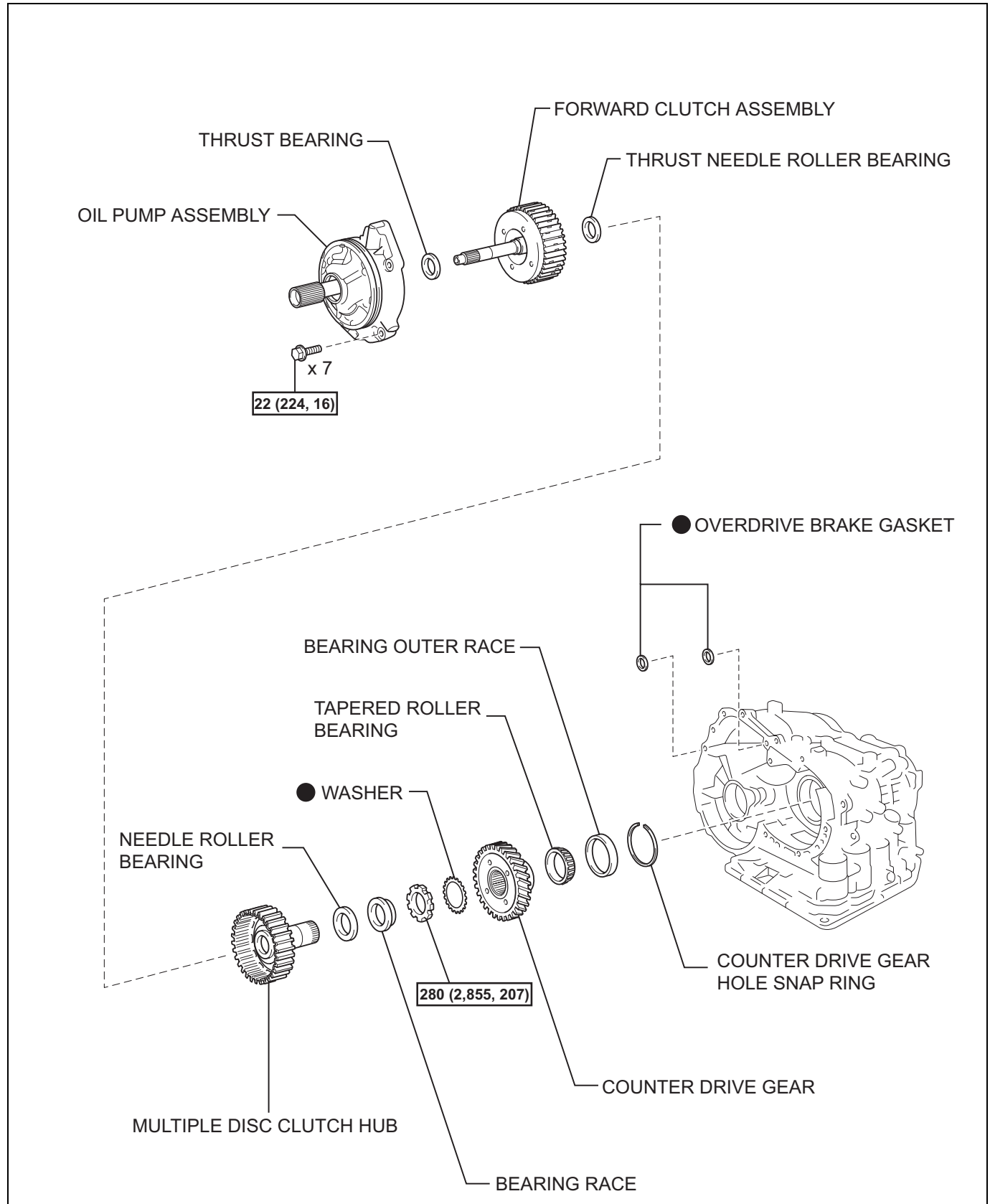

N*m (kgf*cm, ft.*lbf) : Specified torque

● Non-reusable part

N

C126585E03

AX

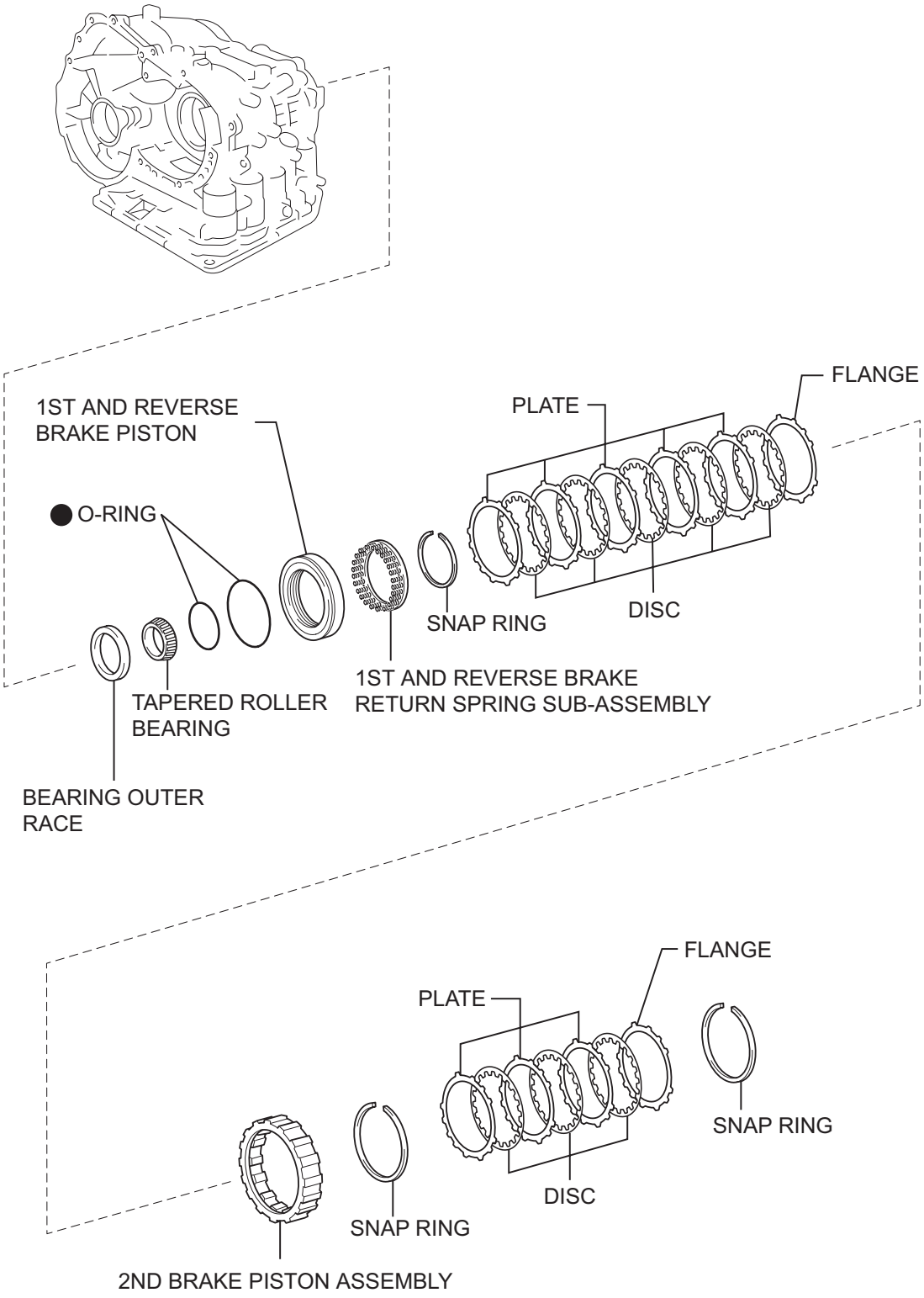

● Non-reusable part

N

C126586E03

AX

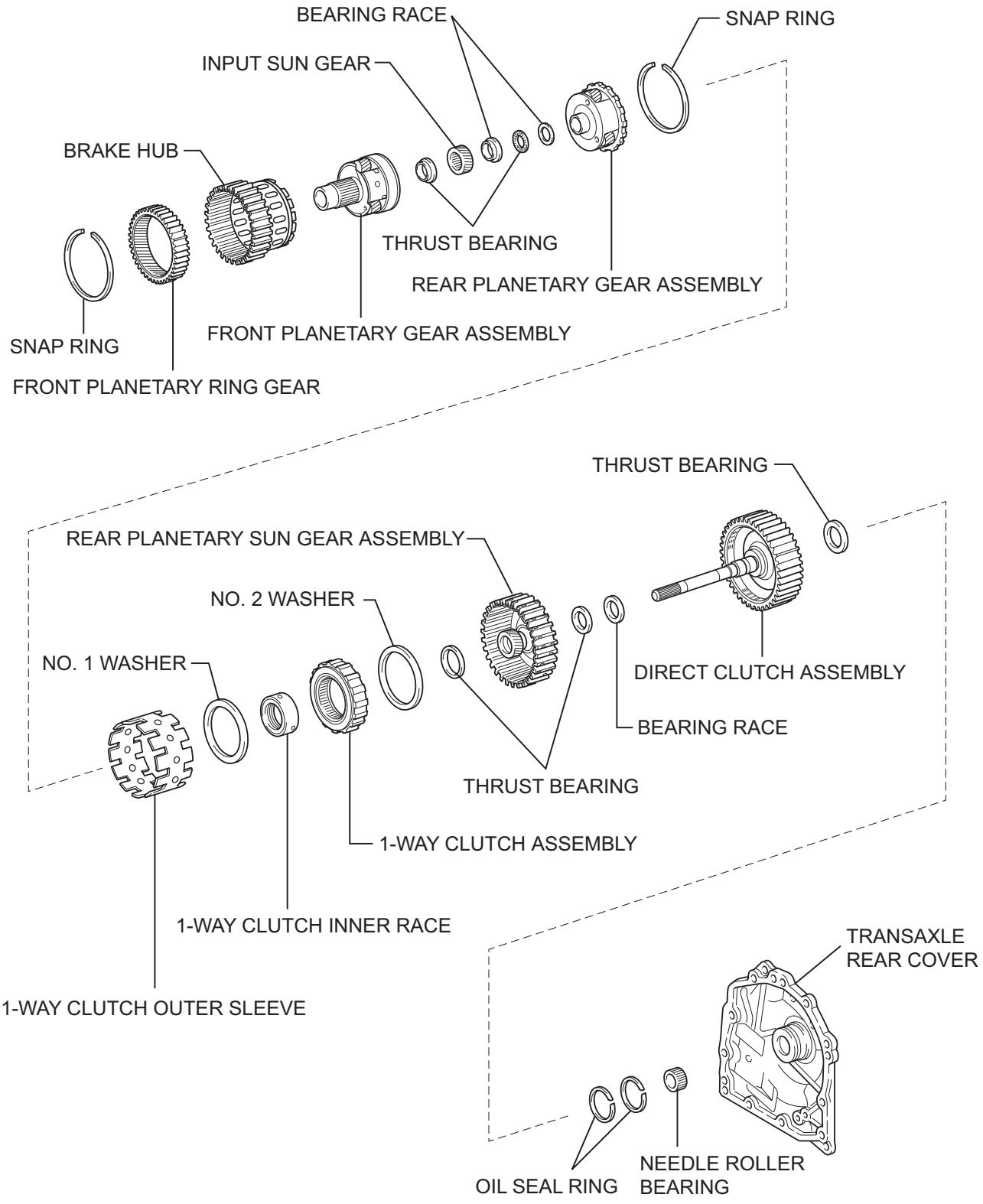

N

C126587E03

AX

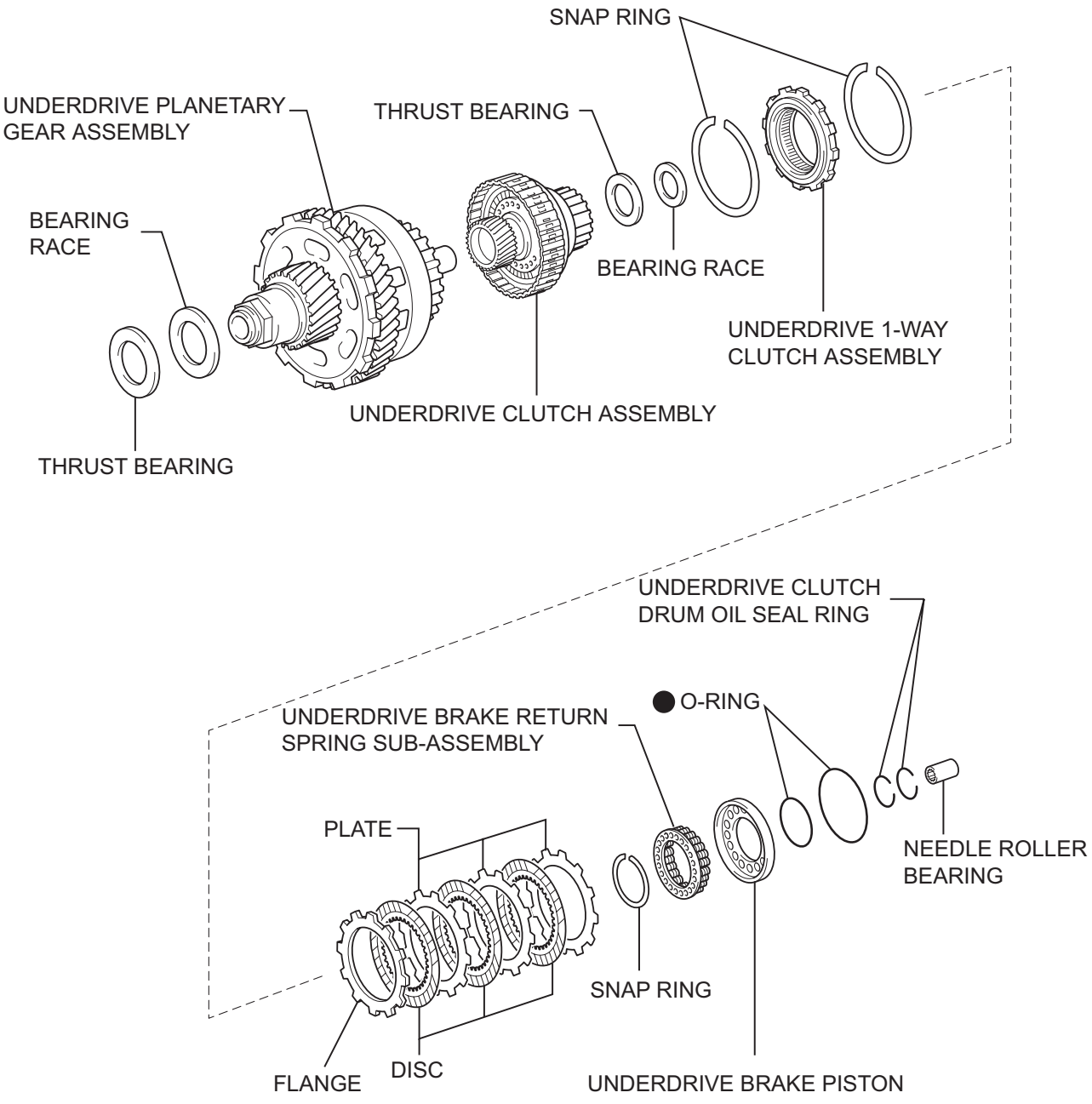

AX

● Non-reusable part

N

C126588E03

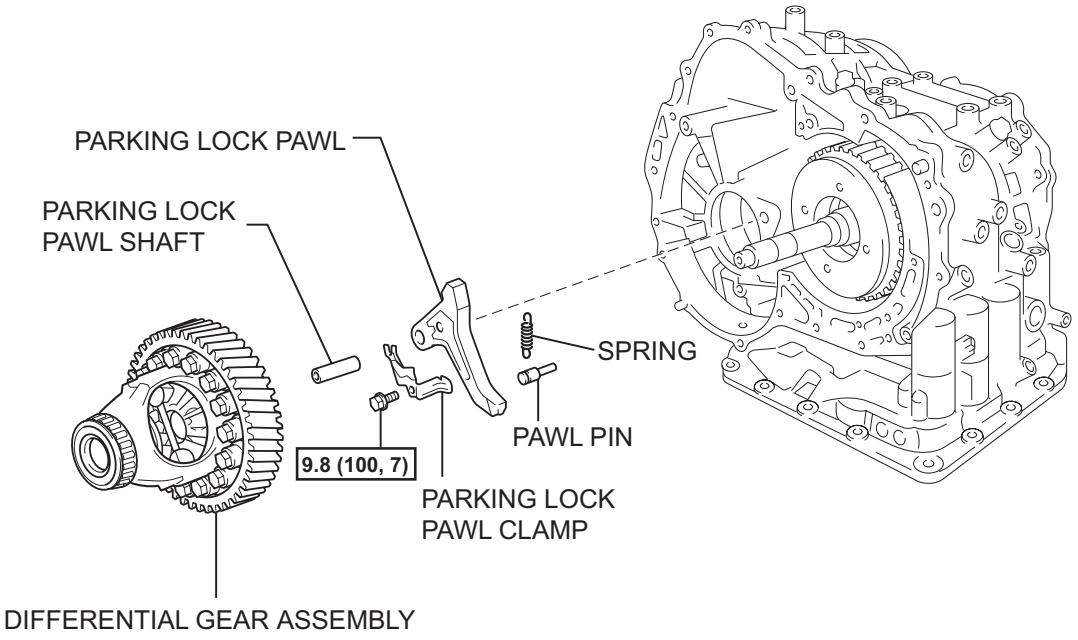

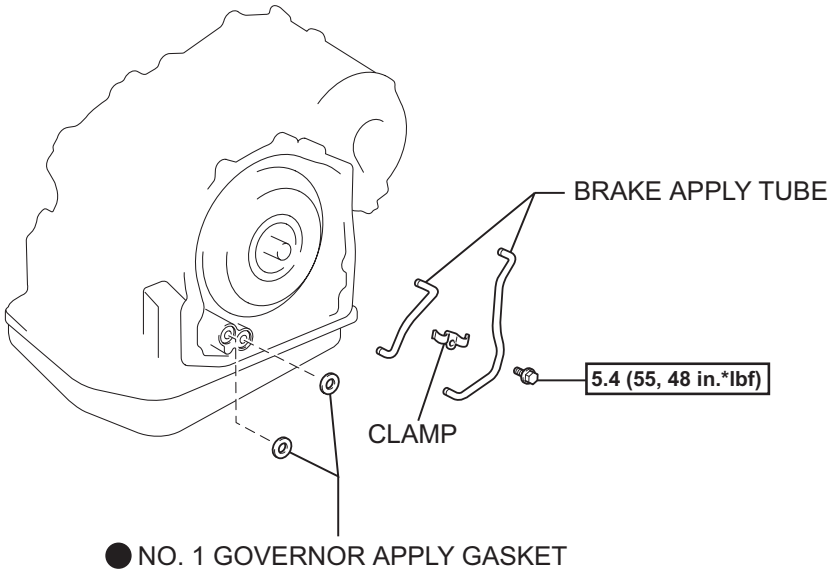

N*m (kgf*cm, ft.*lbf) : Specified torque

● Non-reusable part

N

C126589E03

AX

DISASSEMBLY

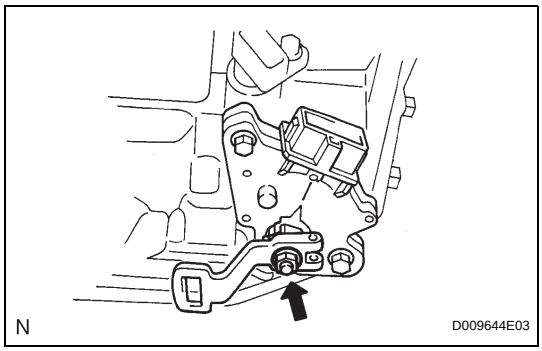

1. REMOVE PARK/NEUTRAL POSITION SWITCH ASSEMBLY

(a) Remove the nut, washer and control shaft lever.

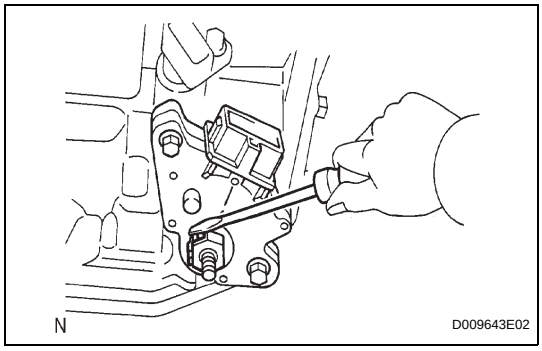

(b) Using a screwdriver, pry off the lock plate.
(c) Remove the nut and lock plate.

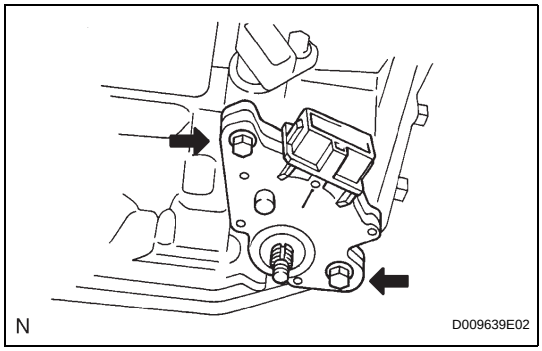

(d) Remove the 2 bolts and pull out the switch.

2. REMOVE BREATHER PLUG HOSE

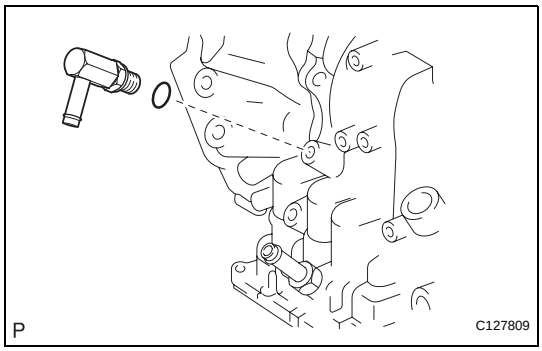

3. REMOVE OIL COOLER OUTLET TUBE UNION

(a) Remove the union.
(b) Remove the O-ring from the union.

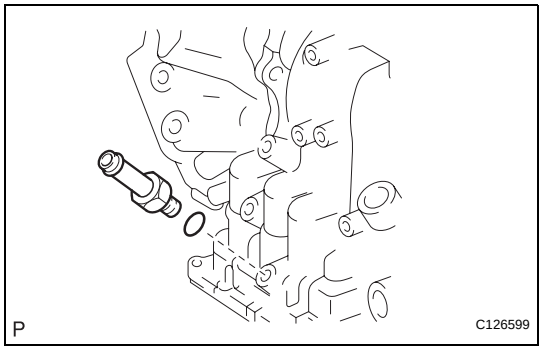

4. REMOVE OIL COOLER INLET TUBE UNION

(a) Remove the union.
(b) Remove the O-ring from the union.

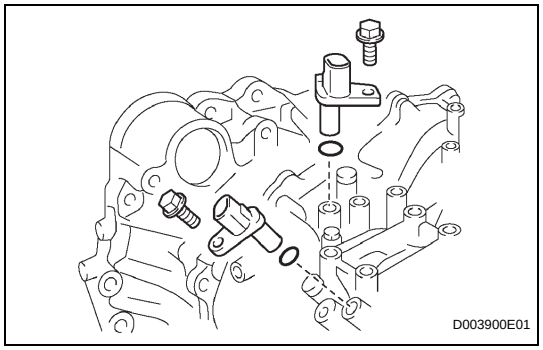

5. REMOVE SPEED SENSOR

(a) Remove the 2 bolts and 2 transmission revolution sensors from the transaxle.

(b) Remove the 2 O-rings from the sensors.

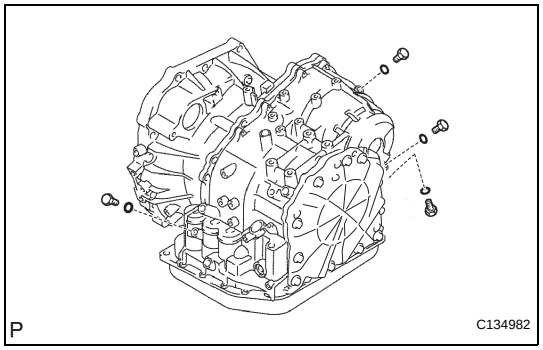

6. REMOVE NO. 1 TRANSAXLE CASE PLUG

(a) Remove the 4 plugs from the transaxle.

(b) Remove the 4 O-rings from the 4 plugs.

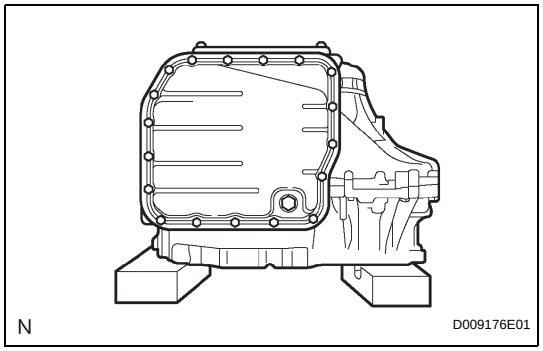

7. PLACE TRANSAXLE ON WOODEN BLOCKS

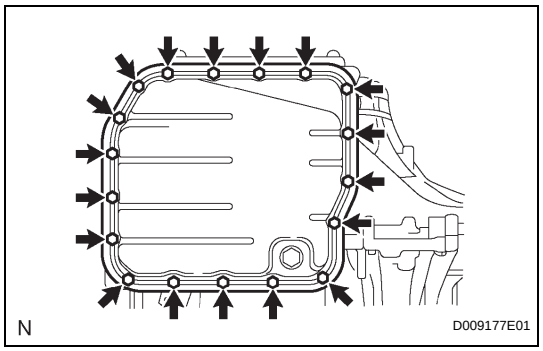

8. REMOVE AUTOMATIC TRANSAXLE OIL PAN SUB-ASSEMBLY

(a) Remove the 18 bolts.

(b) Remove the oil pan and 3 magnets.

(c) Remove the gasket from the oil pan.

9. INSPECT AUTOMATIC TRANSAXLE OIL PAN SUB-ASSEMBLY (See page AX-184)

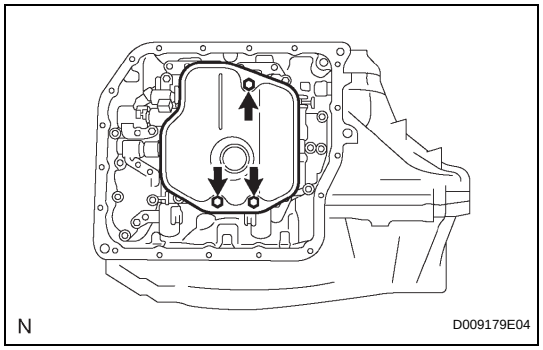

10. REMOVE VALVE BODY OIL STRAINER ASSEMBLY

(a) Remove the 3 bolts and oil strainer.

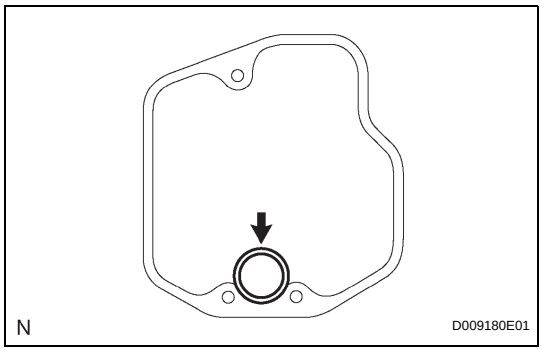

(b) Remove the O-ring from the oil strainer.

11. REMOVE TRANSMISSION WIRE

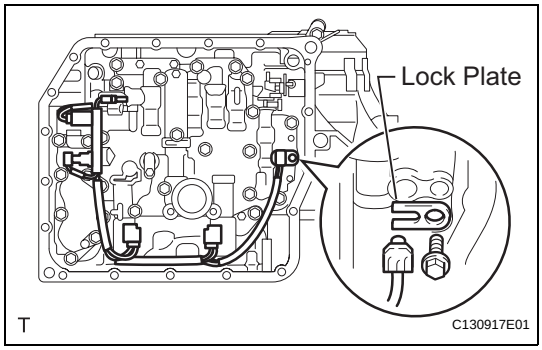

(a) Disconnect the 5 shift solenoid valve connectors.
(b) Remove the bolt, lock plate and ATF temperature sensor.

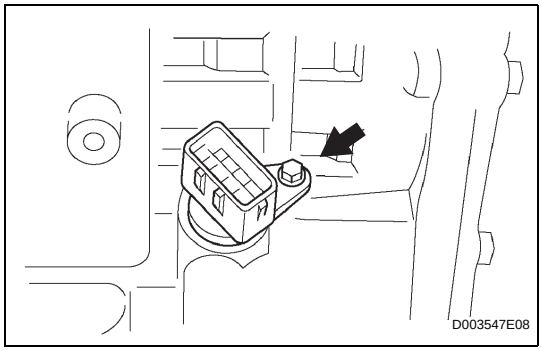

(c) Remove the bolt and transaxle wire.

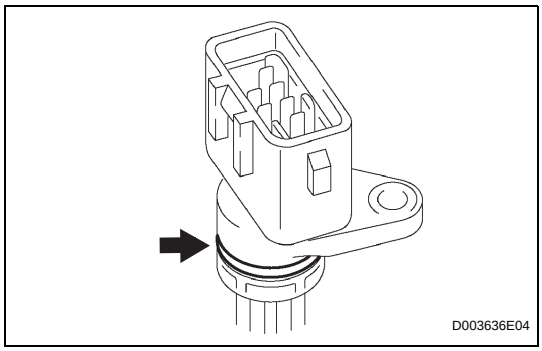

(d) Remove the O-ring from the transaxle wire.

12. REMOVE TRANSMISSION VALVE BODY ASSEMBLY

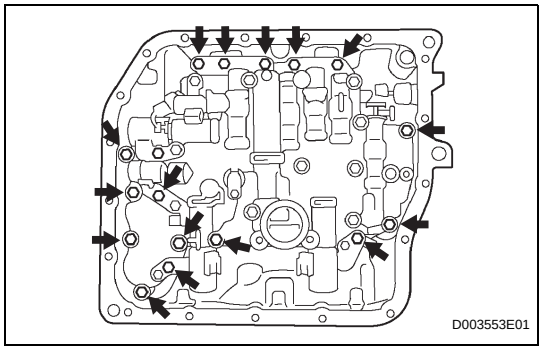

(a) Support the valve body and remove the 17 bolts and valve body.

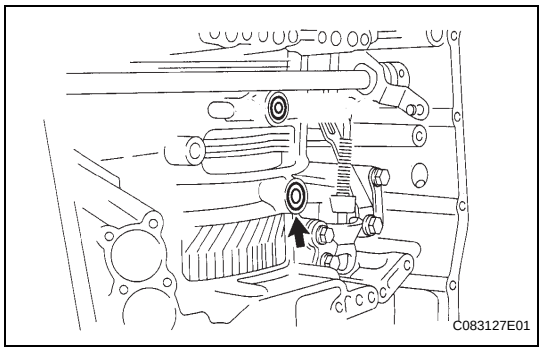

13. REMOVE NO. 1 GOVERNOR APPLY GASKET

(a) Remove the governor apply gasket from the transaxle case.

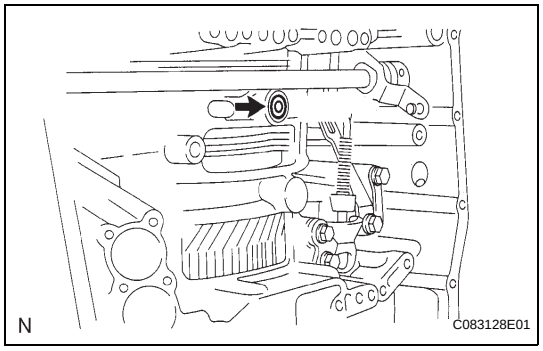

14. REMOVE TRANSAXLE CASE 2ND BRAKE GASKET

(a) Remove the 2nd brake gasket from the transaxle.

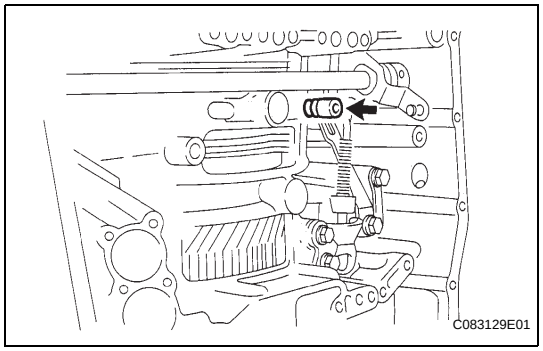

15. REMOVE BRAKE DRUM GASKET

(a) Remove the brake drum gasket from the transaxle.

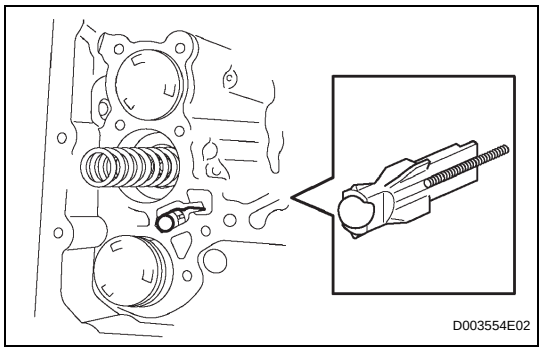

16. REMOVE CHECK BALL BODY

(a) Remove the check ball and spring from the transaxle.

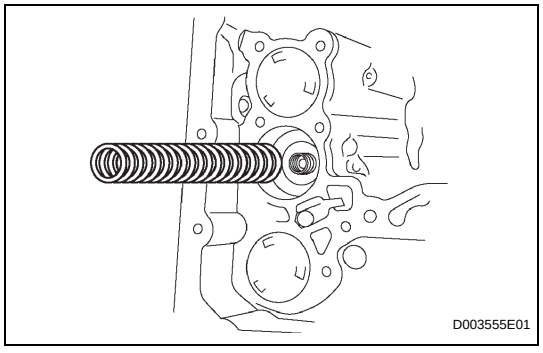

17. REMOVE C-3 ACCUMULATOR PISTON

(a) Remove the spring from the C-3 accumulator piston.

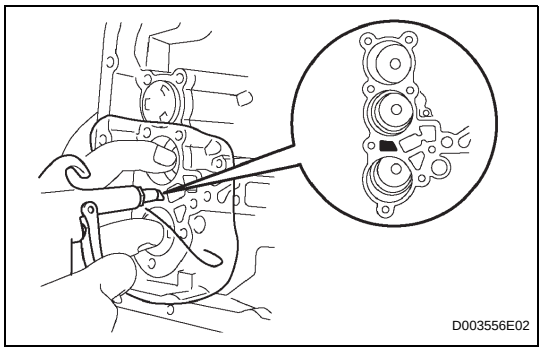

(b) Apply compressed air (392 kPa, 4.0 kgf/cm^2, 57 psi) to the oil hole and remove the C-3 accumulator piston.

NOTICE:

- **Applying compressed air may cause the piston to jump out. When removing the piston, hold it with your hand using a waste cloth.**
- **Make sure not to spatter ATF when applying compressed air.**

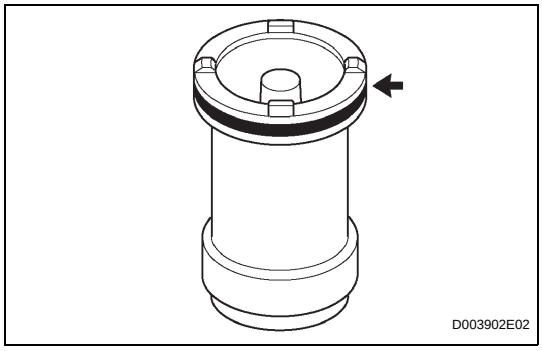

(c) Remove the O-ring from the C-3 accumulator piston.

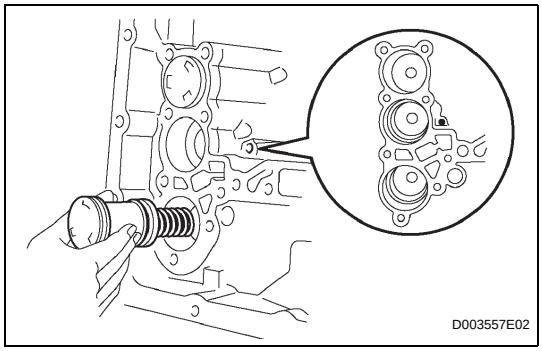

18. REMOVE C-1 ACCUMULATOR PISTON

(a) Apply compressed air (392 kPa, 4.0 kgf/cm^2, 57 psi) to the oil hole and remove the C-1 accumulator piston and spring.

NOTICE:

- **Applying compressed air may cause the piston to jump out. When removing the piston, hold it with your hand using a waste cloth.**
- **Make sure not to spatter ATF when applying compressed air.**

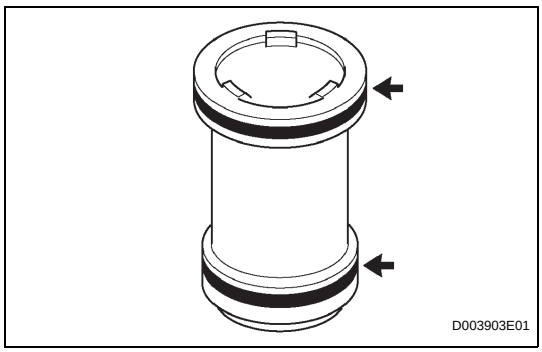

(b) Remove the 2 O-rings from the C-1 accumulator piston.

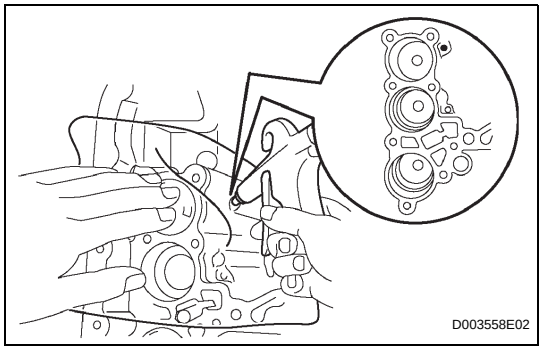

19. REMOVE B-3 ACCUMULATOR PISTON

(a) Apply compressed air (392 kPa, 4.0 kgf/cm^2, 57 psi) to the oil hole and remove the B-3 accumulator piston and 2 springs.

NOTICE:

- **Applying compressed air may cause the piston to jump out. When removing the piston, hold it with your hand using a waste cloth.**

- **Make sure not to spatter ATF when applying compressed air.**

(b) Remove the O-ring from the B-3 accumulator piston.

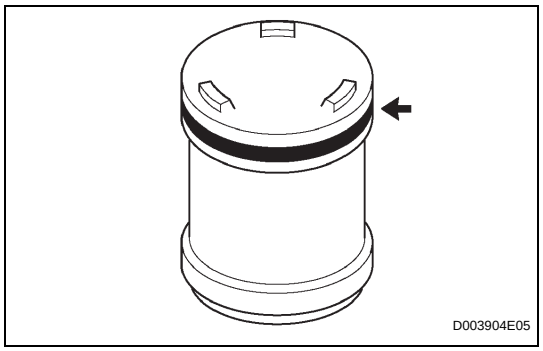

20. REMOVE MANUAL DETENT SPRING SUB-ASSEMBLY

(a) Remove the 2 bolts, manual detent spring and cover.

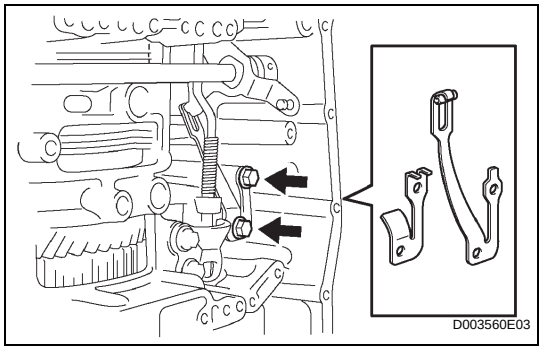

21. REMOVE PARKING LOCK PAWL BRACKET

(a) Remove the 2 bolts and parking lock pawl bracket.

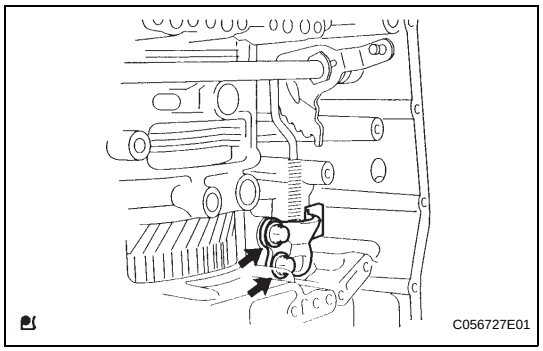

22. REMOVE MANUAL VALVE LEVER SHAFT RETAINER SPRING

(a) Using needle-nose pliers, remove the retainer spring.

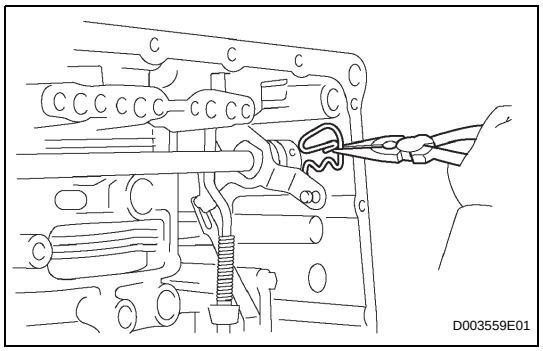

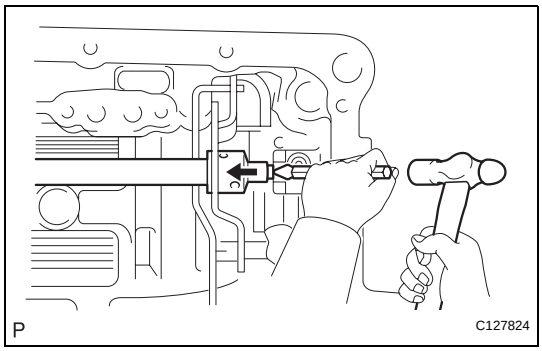

23. REMOVE MANUAL VALVE LEVER SUB-ASSEMBLY

(a) Using a chisel and hammer, unstake and remove the spacer.

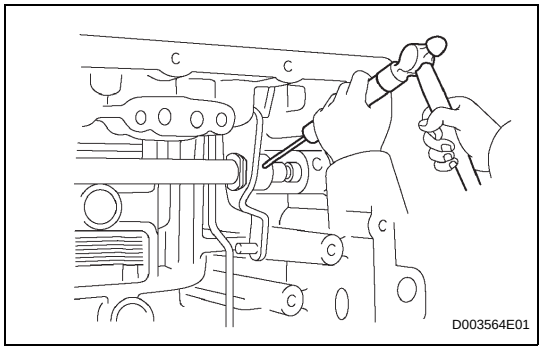

(b) Using a pin punch and hammer, tap out the pin.
HINT:
Slowly tap out the pin so that it will not fall into the transaxle.

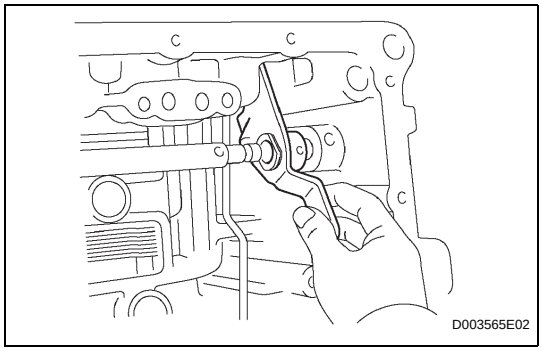

(c) Remove the manual valve lever shaft and manual valve lever.

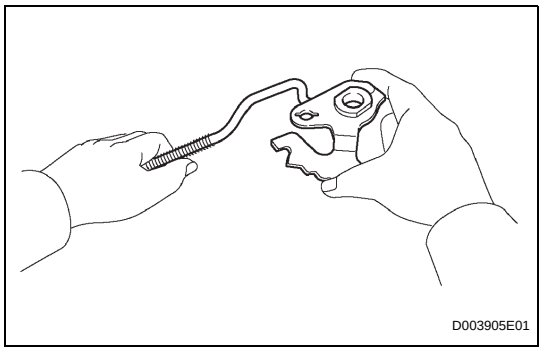

24. REMOVE PARKING LOCK ROD SUB-ASSEMBLY

(a) Remove the parking lock rod from the manual valve lever.

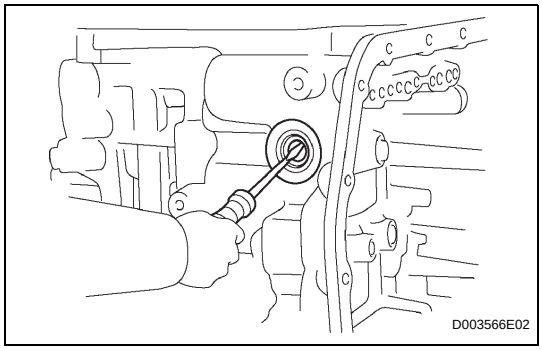

25. REMOVE MANUAL VALVE LEVER SHAFT OIL SEAL

(a) Using a screwdriver, pry out the oil seal from the transaxle.

26. FIX AUTOMATIC TRANSAXLE ASSEMBLY

(a) Fix the transaxle case with the oil pump side facing up.

27. INSPECT INPUT SHAFT END PLAY (See page AX-184)

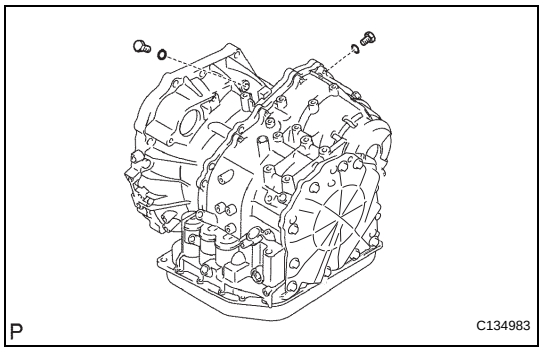

28. REMOVE NO. 1 TRANSAXLE CASE PLUG

(a) Remove the 2 plugs.

(b) Remove the 2 O-rings from the 2 plugs.

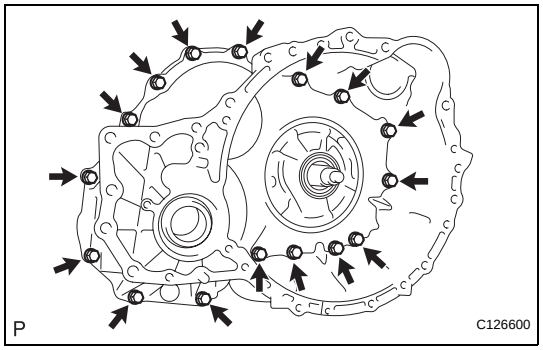

29. REMOVE TRANSAXLE HOUSING

(a) Remove the 16 bolts.

(b) Tap on the circumference of the transaxle housing with a plastic-faced hammer to remove the transaxle housing from the transaxle case.

NOTICE:

The differential may be accidentally removed when the transaxle housing is removed.

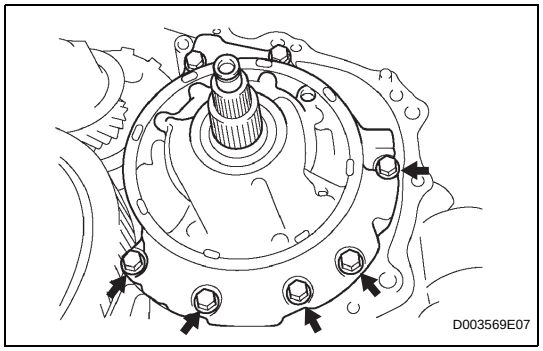

30. REMOVE OIL PUMP ASSEMBLY

(a) Remove the 7 bolts and oil pump from the transaxle.

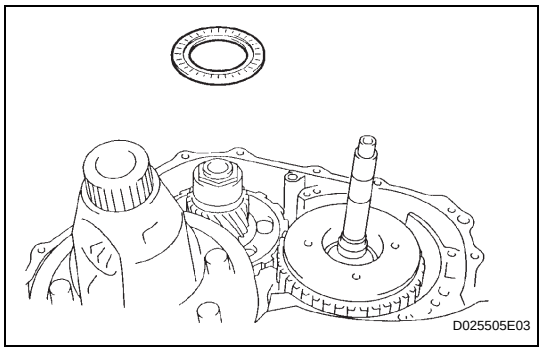

31. REMOVE THRUST NEEDLE ROLLER BEARING

(a) Remove thrust needle roller bearing from the underdrive planetary gear.

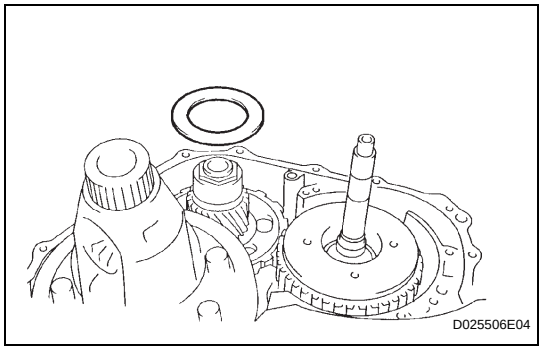

32. REMOVE NO. 2 THRUST BEARING UNDERDRIVE RACE

(a) Remove the thrust bearing underdrive race from the underdrive planetary gear.

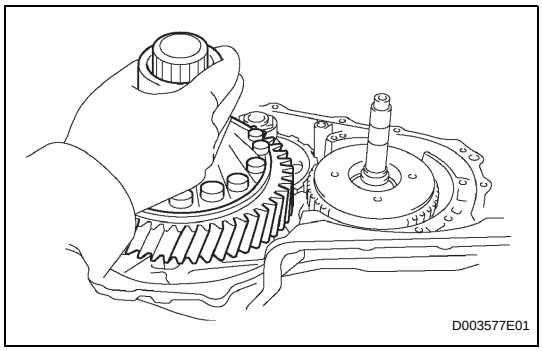

33. REMOVE DIFFERENTIAL GEAR ASSEMBLY

(a) Remove the differential gear form the transaxle.

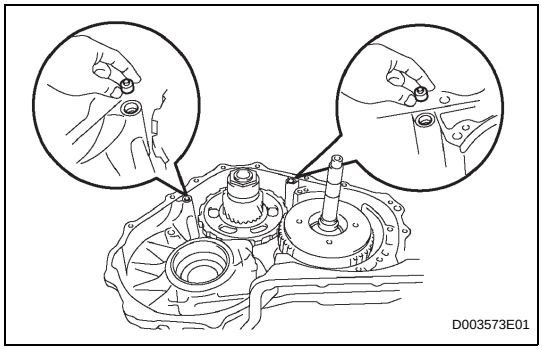

34. REMOVE OVERDRIVE BRAKE GASKET

(a) Remove the 2 overdrive brake gaskets from the transaxle.

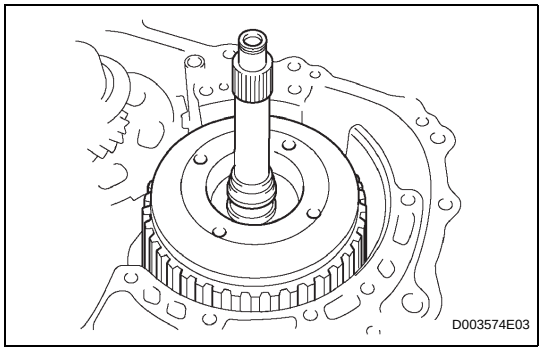

35. REMOVE FORWARD CLUTCH ASSEMBLY

(a) Remove the forward clutch from the transaxle.

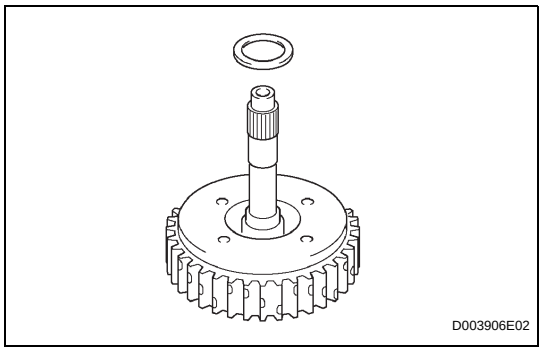

(b) Remove the thrust bearing from the forward clutch.

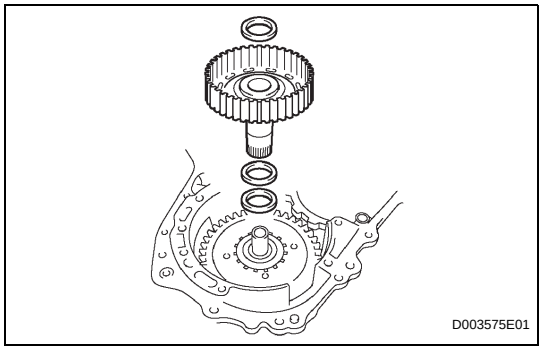

36. REMOVE MULTIPLE DISC CLUTCH HUB

(a) Remove the thrust bearing, multiple clutch hub, needle roller bearing and bearing race from the transaxle.

37. INSPECT MULTIPLE DISC CLUTCH HUB (See page AX-184)

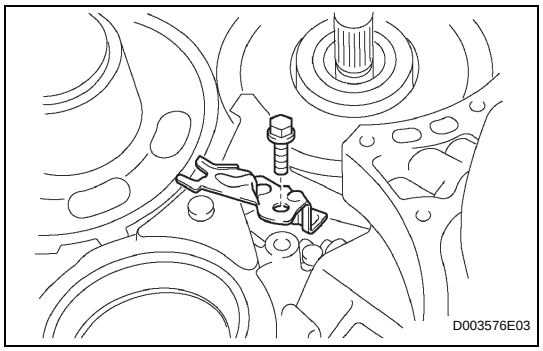

38. REMOVE UNDERDRIVE PLANETARY GEAR ASSEMBLY

(a) Remove the bolt and parking pawl shaft clamp.

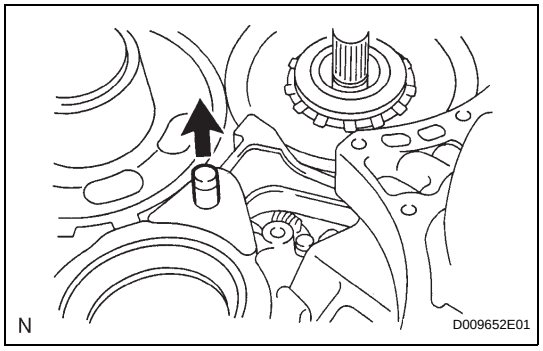

(b) Remove the parking lock pawl shaft.

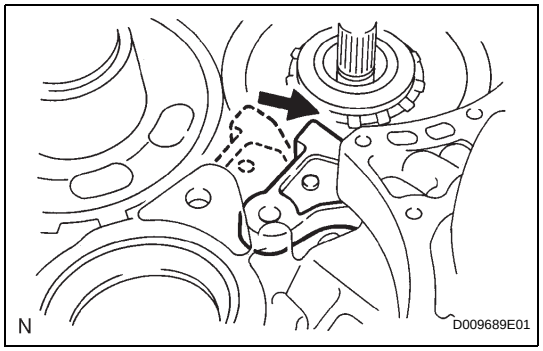

(c) Push the parking lock pawl.
HINT:
Failure to do so will cause interference when the underdrive planetary gear is removed.

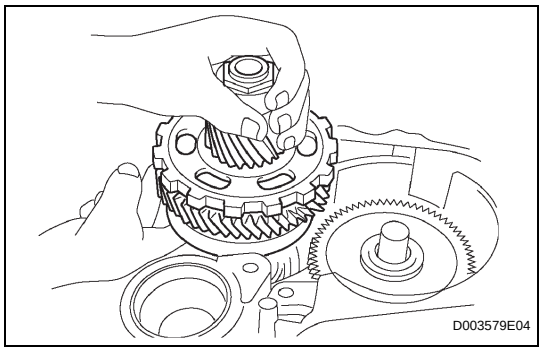

(d) Remove the underdrive planetary gear from the transaxle.
NOTICE:
Be careful so that the underdrive planetary gear assembly will not fall out.

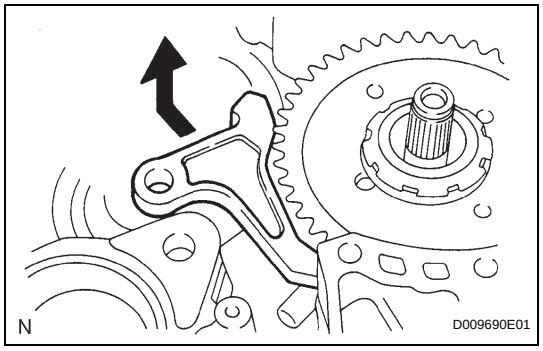

(e) Remove the spring, pawl pin and parking lock pawl.

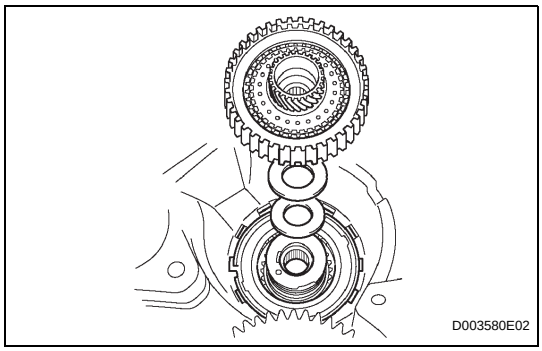

39. REMOVE UNDERDRIVE CLUTCH ASSEMBLY

(a) Remove the underdrive clutch, thrust bearing and bearing race from the transaxle.

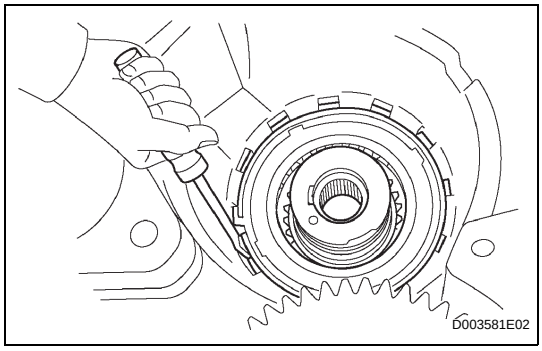

40. REMOVE UNDERDRIVE 1-WAY CLUTCH ASSEMBLY

(a) Using a screwdriver, pry out the snap ring from the transaxle.

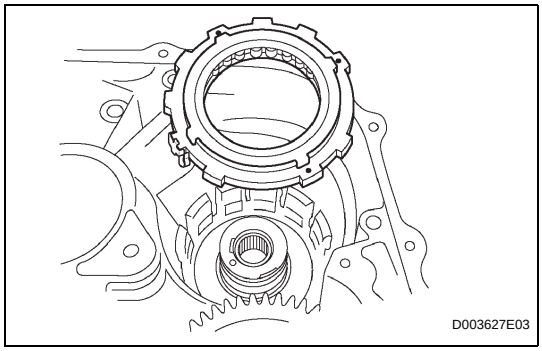

(b) Remove the 1-way clutch from the transaxle.

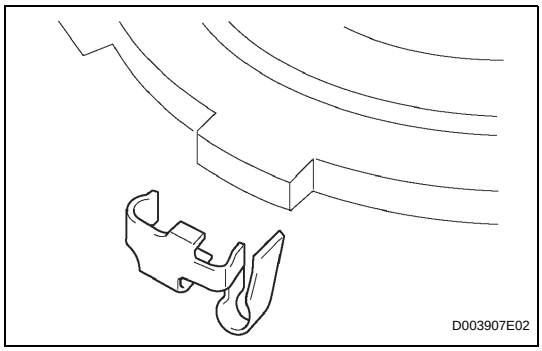

(c) Remove the outer race retainer from the 1-way clutch.

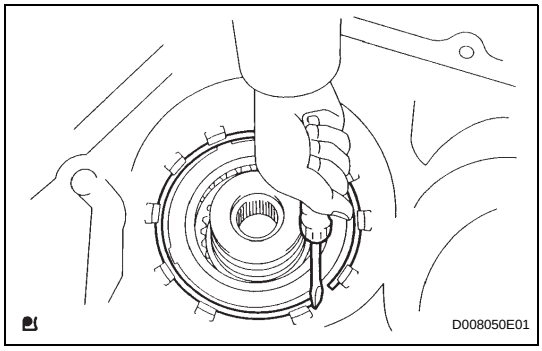

41. REMOVE NO. 2 UNDERDRIVE CLUTCH DISC

(a) Using a screwdriver, pry out the snap ring.

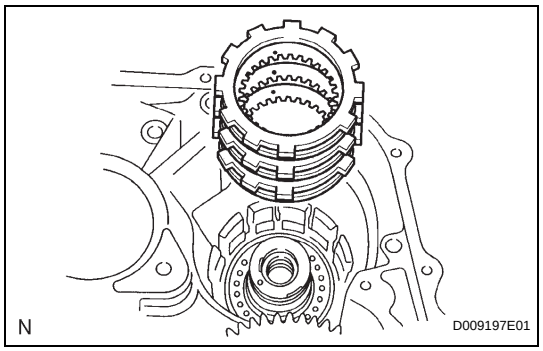

(b) Remove the flange, 3 discs and 3 plates from the transaxle.

42. INSPECT NO. 2 UNDERDRIVE CLUTCH DISC (See page AX-185)

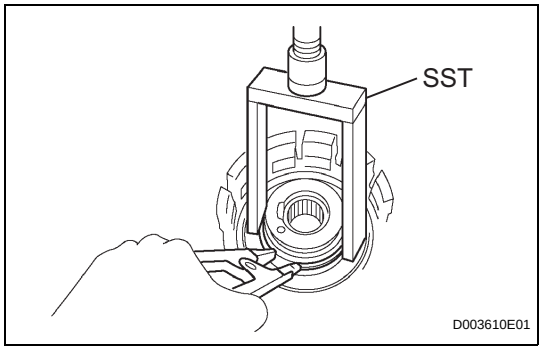

43. REMOVE UNDERDRIVE BRAKE RETURN SPRING SUB-ASSEMBLY

(a) Using SST, a snap ring expander and press, remove the snap ring and piston return spring.
SST 09387-00020

44. INSPECT UNDERDRIVE BRAKE RETURN SPRING SUB-ASSEMBLY (See page AX-185)

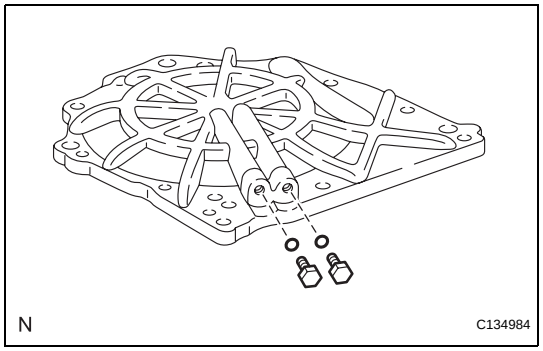

45. REMOVE NO. 1 TRANSAXLE CASE PLUG

(a) Remove the 2 plugs from the transaxle rear cover.
(b) Remove the 2 O-rings from the 2 plugs.

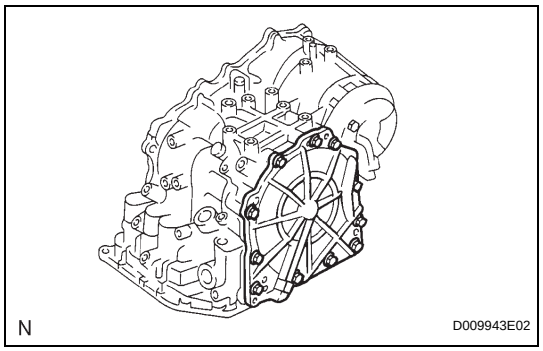

46. REMOVE TRANSAXLE REAR COVER SUB-ASSEMBLY

(a) Remove the 11 bolts.

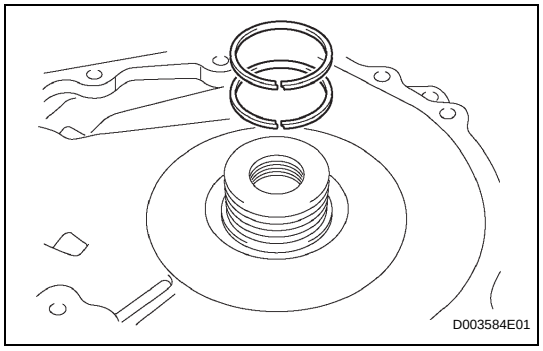

(b) Tap in the circumference of the rear cover with a plastic-fased hammer to remove the transaxle rear cover from the transaxle.
(c) Remove the 2 oil seal rings from the transaxle rear cover.

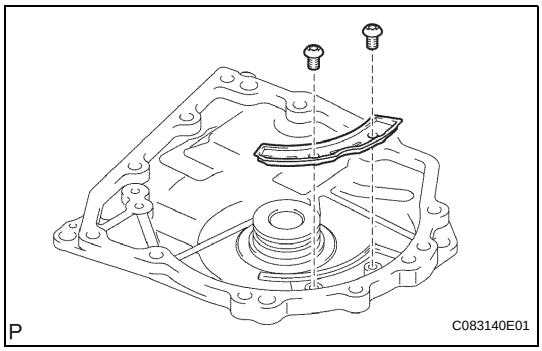

(d) Using a T30 "torx" socket wrench, remove the 2 screws and transaxle rear cover plate.

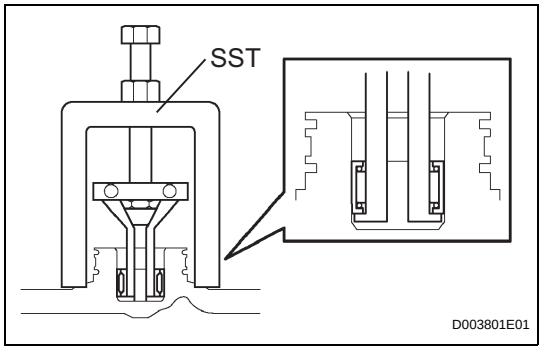

(e) Using SST, remove the needle-roller bearing from the transaxle rear cover.
SST 09387-00041 (09387-01040, 09387-01010, 09387-01030)

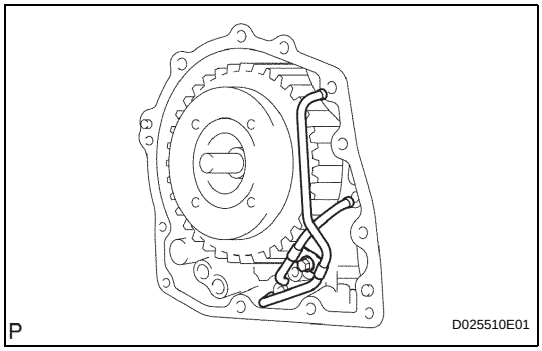

47. REMOVE BRAKE APPLY TUBE
(a) Remove the bolt, clamp and 2 brake apply tubes.
(b) Remove the brake apply tube from the clamp.

48. REMOVE FRONT CLUTCH APPLY TUBE
(a) Remove the front clutch apply tube from the clamp.

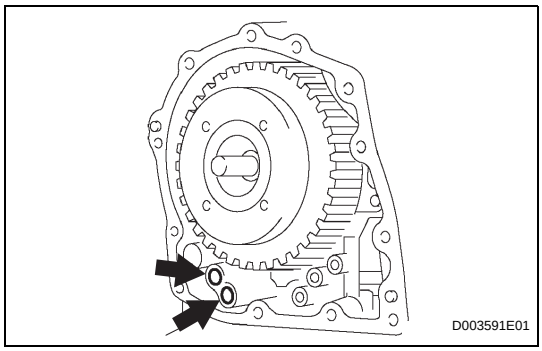

49. REMOVE NO. 1 GOVERNOR APPLY GASKET
(a) Using a screwdriver, remove the 2 apply gaskets.

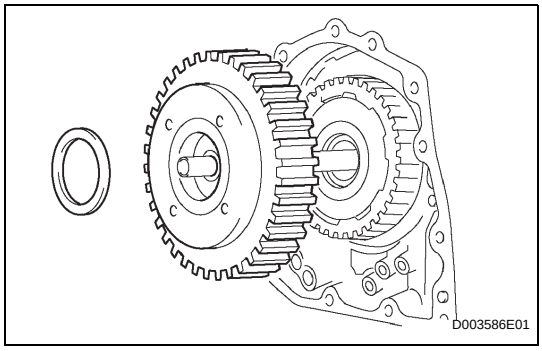

50. REMOVE DIRECT CLUTCH ASSEMBLY
(a) Remove the thrust bearing and direct clutch from the transaxle.

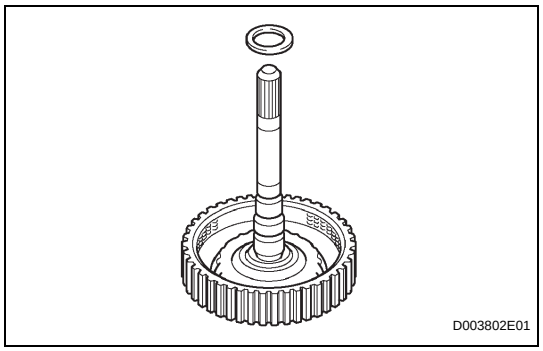

(b) Remove the bearing race from the direct clutch.

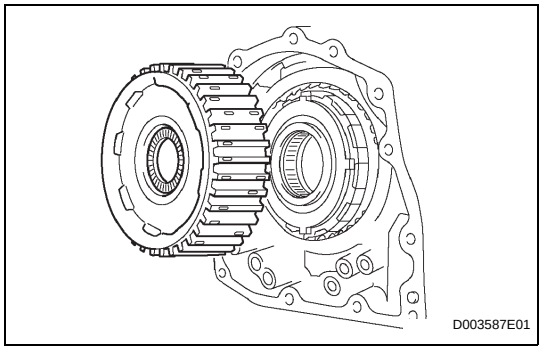

51. REMOVE REAR PLANETARY SUN GEAR ASSEMBLY

(a) Remove the rear planetary sun gear from the transaxle.

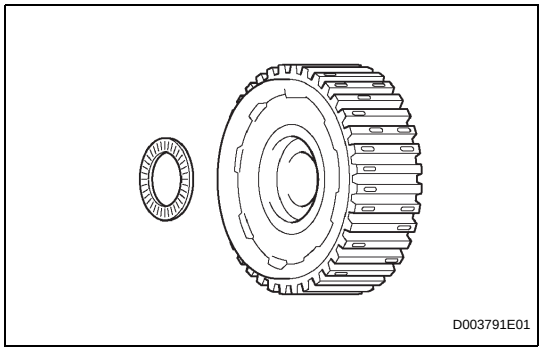

(b) Remove the thrust bearing from the rear planetary sun gear.

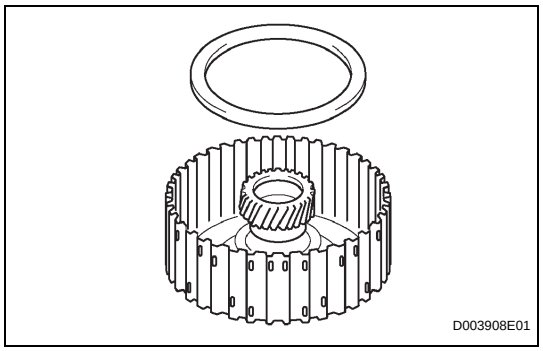

(c) Remove the No. 1 thrust washer from the rear planetary sun gear.

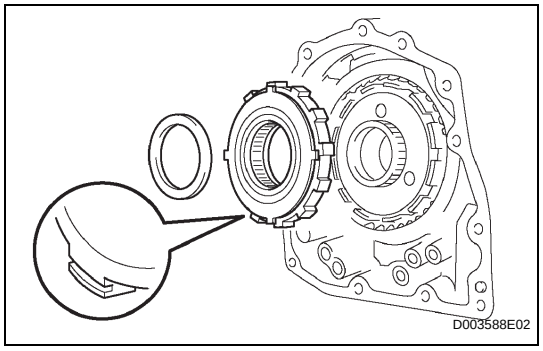

52. REMOVE 1-WAY CLUTCH ASSEMBLY

(a) Remove the 1-way clutch and thrust bearing from the transaxle.

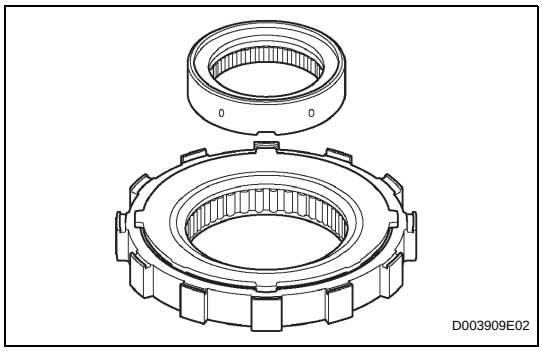

(b) Remove the inner race from the 1-way clutch.

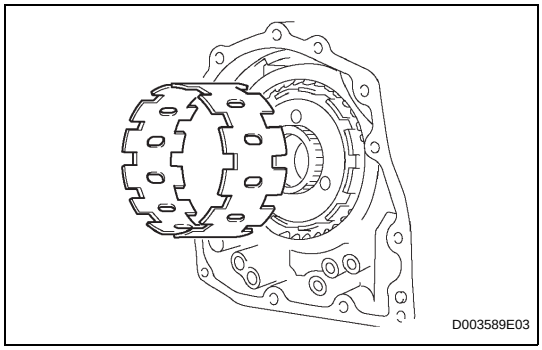

53. REMOVE 1-WAY CLUTCH OUTER SLEEVE

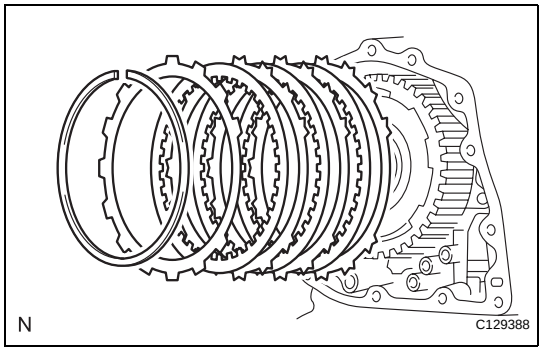

54. REMOVE 2ND BRAKE CLUTCH DISC

(a) Using a screwdriver, remove the snap ring.

(b) Remove the flange, 3 discs and 3 plates from the transaxle.

55. INSPECT 2ND BRAKE CLUTCH DISC (See page AX-185)

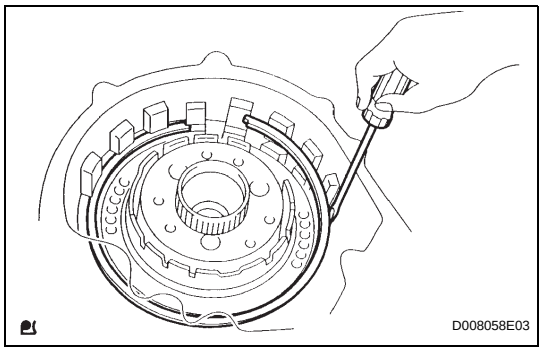

56. REMOVE 2ND BRAKE PISTON ASSEMBLY

(a) Using a screwdriver, remove the snap ring.

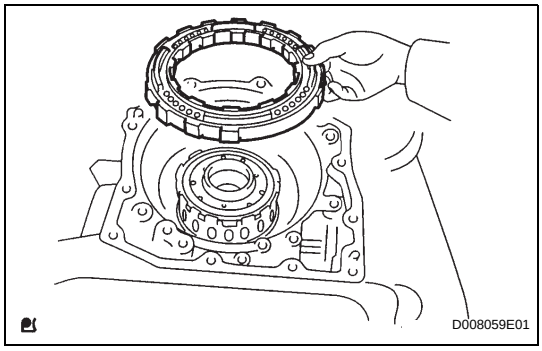

(b) Remove the 2nd brake piston from the transaxle.

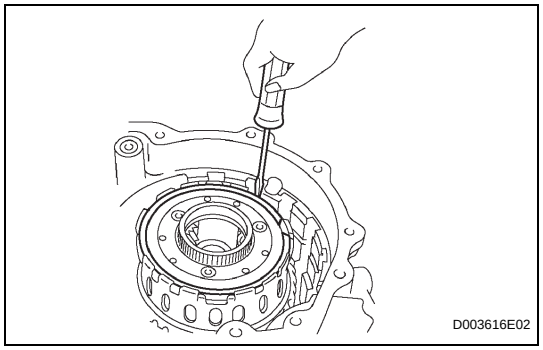

57. REMOVE REAR PLANETARY GEAR ASSEMBLY

(a) Using a screwdriver, pry out the snap ring.

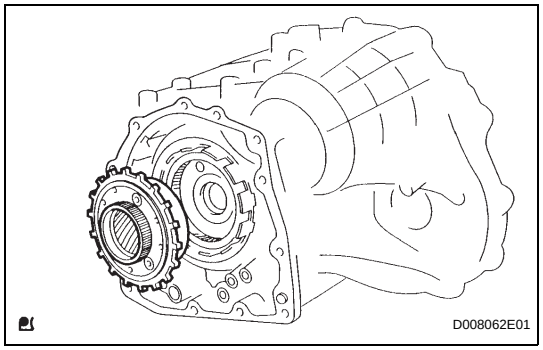

(b) Remove the rear planetary gear from the transaxle.

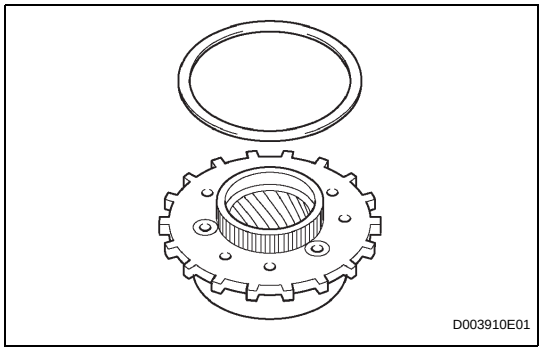

(c) Remove the No. 1 planetary carrier thrust washer from the rear planetary gear.

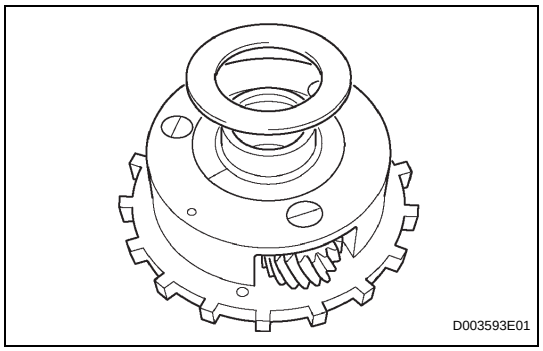

(d) Remove the bearing race from the rear planetary gear.

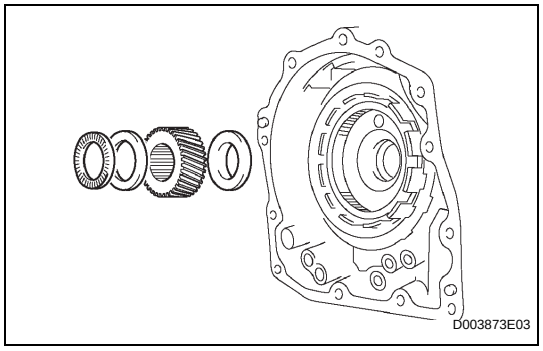

58. REMOVE INPUT SUN GEAR

(a) Remove the 2 thrust bearings, bearing race and input sun gear from the transaxle.

AX

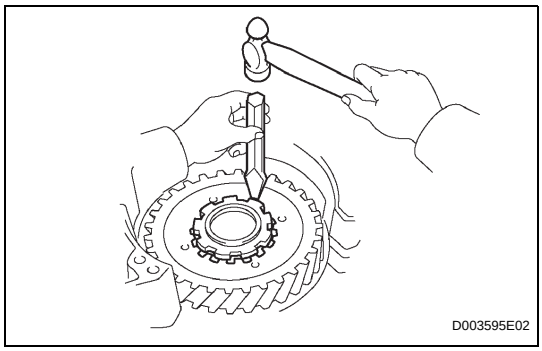
D003595E02

59. REMOVE FRONT PLANETARY GEAR ASSEMBLY

(a) Using a chisel and hammer, unstake the lock washer.

NOTICE:
Push down all claws of the washer. Otherwise SST cannot be fully pressed against the nut and cannot loosen the nut.

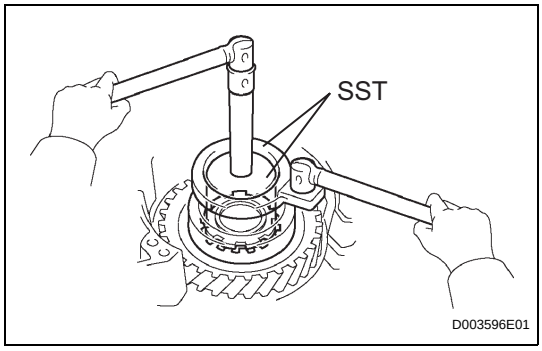

D003596E01

(b) Using SST, remove the nut.
SST 09387-00030, 09387-00080

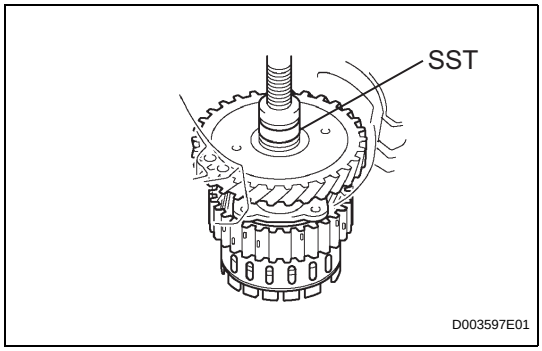

D003597E01

(c) Using SST and a press, remove the front planetary gear from the counter drive gear.
SST 09950-60010 (09951-00450)

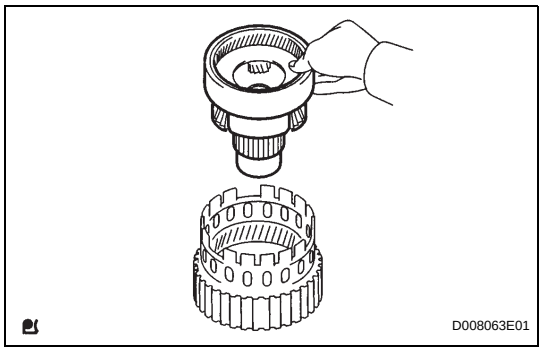
D008063E01

(d) Remove the front planetary gear from the brake hub.

60. REMOVE FRONT PLANETARY RING GEAR

(a) Using a screwdriver, remove the snap ring and front planetary ring gear from the brake hub.

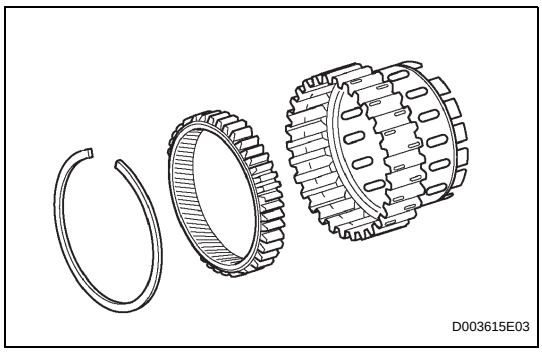
D003615E03

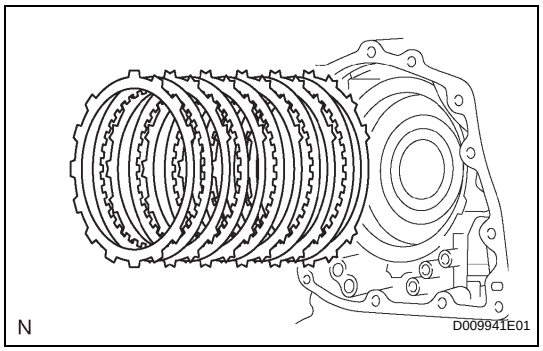

61. REMOVE 1ST AND REVERSE BRAKE CLUTCH DISC

(a) Remove the flange, 5 discs and 5 plates from the transaxle case.

62. INSPECT 1ST AND REVERSE BRAKE CLUTCH DISC (See page AX-185)

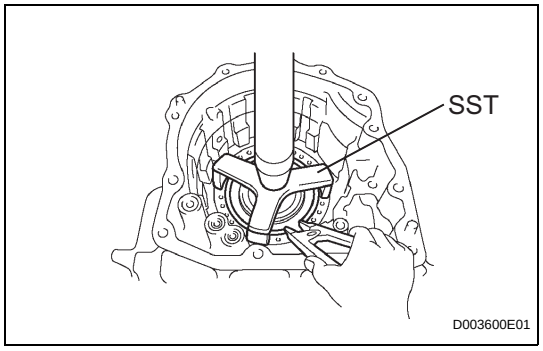

63. REMOVE 1ST AND REVERSE BRAKE RETURN SPRING SUB-ASSEMBLY

(a) Using SST, a press and snap ring expander, remove the snap ring and piston return spring.

SST 09387-00070

NOTICE:

- **Stop the press when the spring sheet is lowered 1 to 2 mm (0.039 to 0.078 in.) from the snap ring groove, preventing the spring sheet from deforming.**
- **Do not expand the snap ring excessively.**

64. INSPECT 1ST AND REVERSE BRAKE RETURN SPRING SUB-ASSEMBLY (See page AX-186)

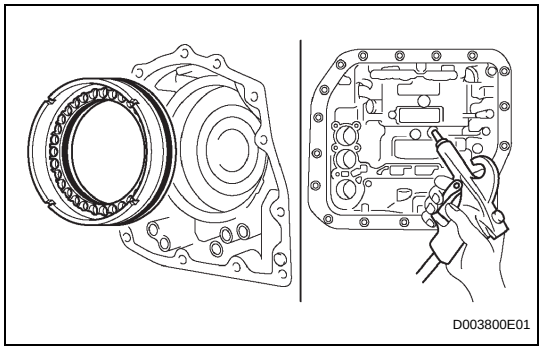

65. REMOVE 1ST AND REVERSE BRAKE PISTON

(a) Apply compressed air (392 kPa, 4.0 kgf/cm^2, 57 psi) to the transaxle case to remove the 1st and reverse brake piston.

NOTICE:

- **Applying compressed air may cause the piston to jump out. When removing the piston, hold it with your hand using a waste cloth.**
- **Make sure not to spatter ATF when applying compressed air.**

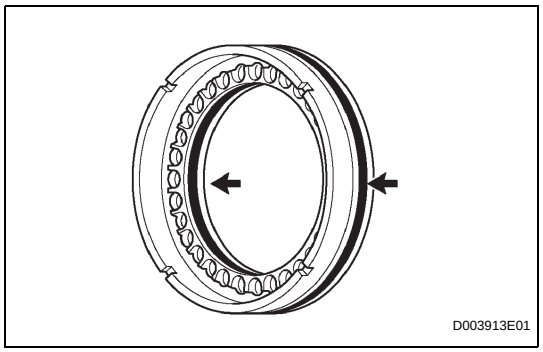

(b) Remove the 2 O-rings from the 1st and reverse brake piston.

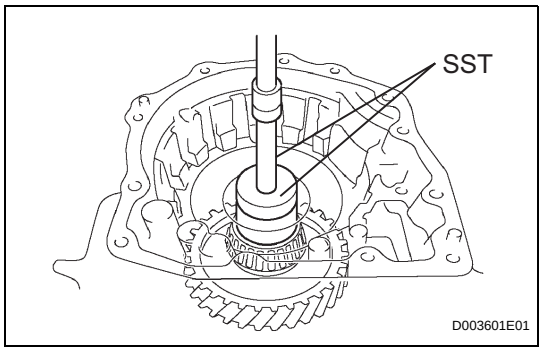

66. REMOVE COUNTER DRIVE GEAR

(a) Using SST and a press, remove the counter drive gear from the transaxle case.

SST 09950-60010 (09951-00580), 09950-70010 (09951-07100)

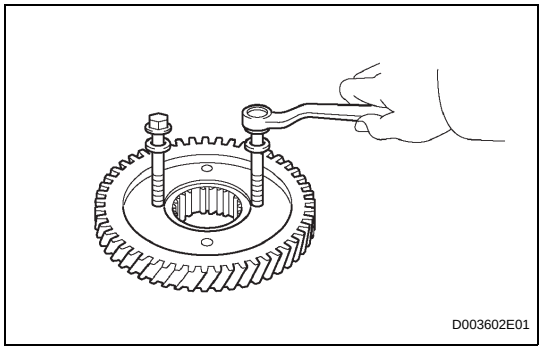

(b) As shown in the illustration, tighten the 2 bolts evenly and make a clearance of approximately 20.0 mm (0.797 in.) between the counter drive gear and the inner race.

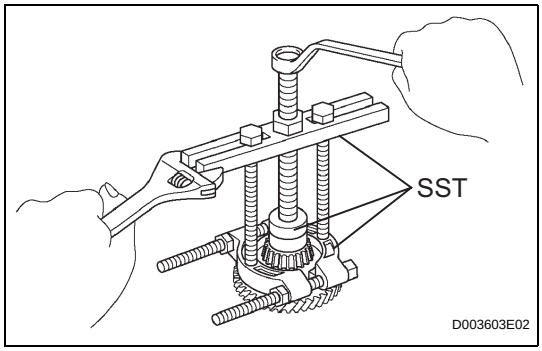

(c) Using SST, remove the tapered roller bearing.

SST 09950-60010 (09951-00580), 09950-00020, 09950-00030

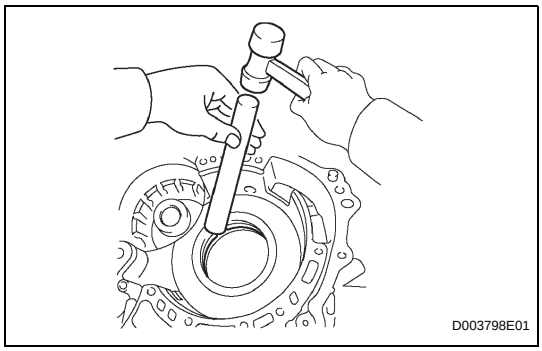

(d) Using a brass bar and hammer, tap out the 2 bearing outer races.

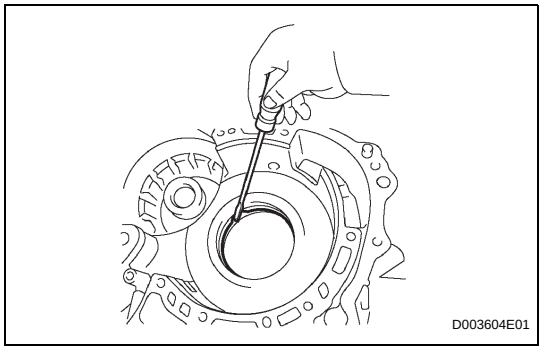

67. REMOVE COUNTER DRIVE GEAR HOLE SNAP RING

(a) Using a screwdriver, pry out the snap ring from the transaxle.

68. REMOVE NO. 2 BREATHER PLUG

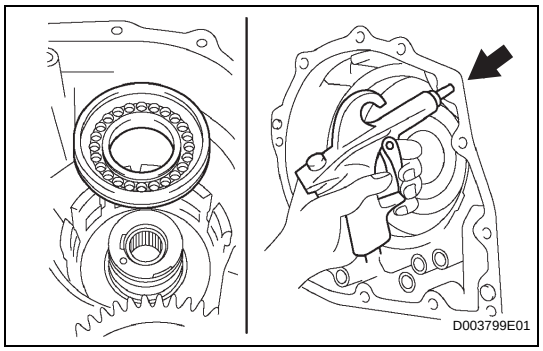

69. REMOVE UNDERDRIVE BRAKE PISTON

(a) Apply compressed air (392 kPa, 4.0 kgf/cm^2, 57 psi) to the transaxle case to remove the underdrive brake piston.

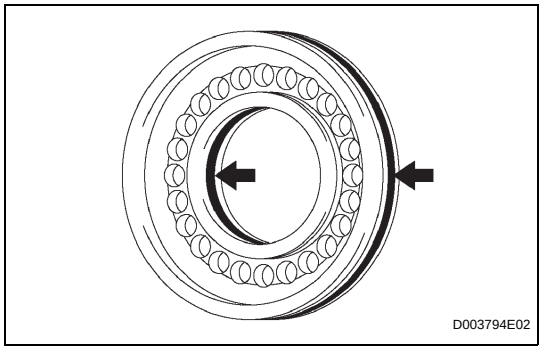

(b) Remove the 2 O-rings from the underdrive brake piston.

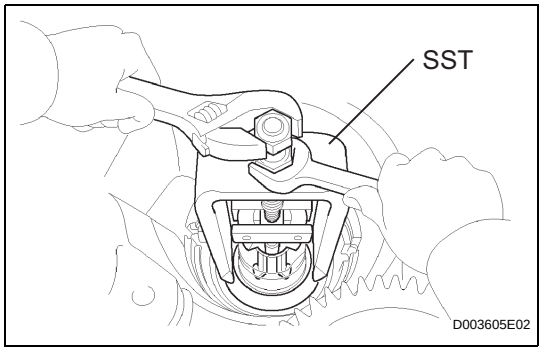

(c) Using SST, remove the needle-roller bearing from the transaxle.
SST 09387-00041 (09387-01010, 09387-01030, 09387-01040)

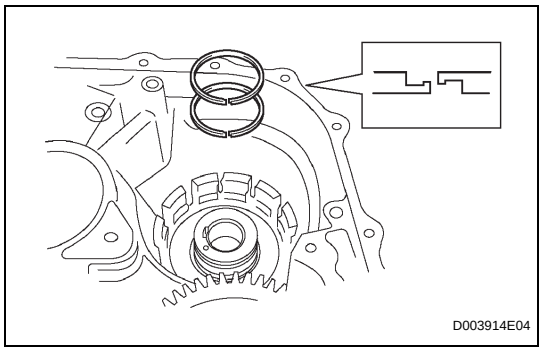

70. REMOVE UNDERDRIVE CLUTCH DRUM OIL SEAL RING

(a) Remove the 2 oil seal rings from the transaxle.

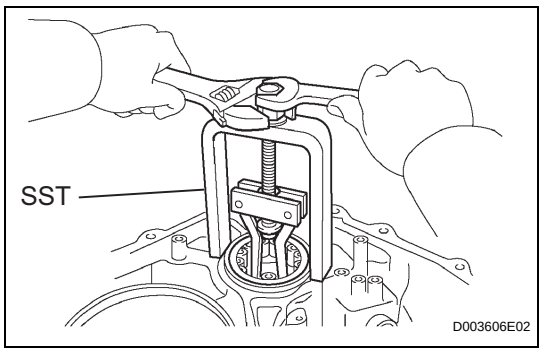

71. REMOVE UNDERDRIVE CYLINDRICAL ROLLER BEARING

(a) Using SST, remove the cylindrical roller bearing from the transaxle.
SST 09514-35011

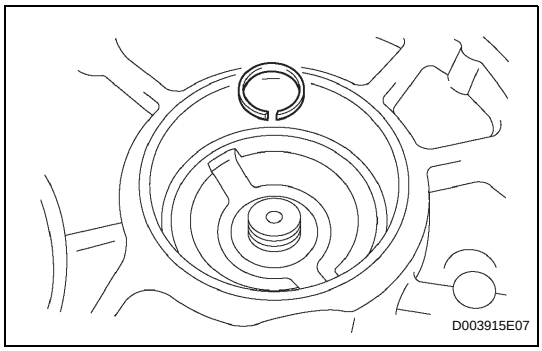

72. REMOVE UNDERDRIVE OUTPUT SHAFT OIL SEAL RING

(a) Remove the oil seal ring from the transaxle housing.

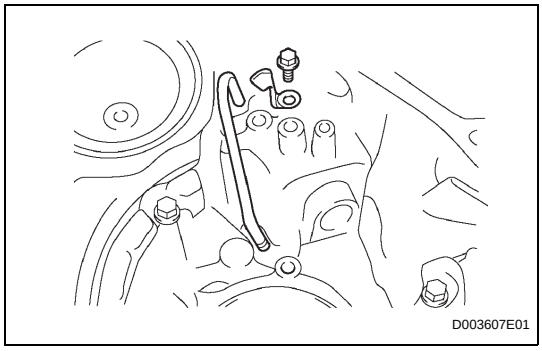

73. REMOVE DIFFERENTIAL GEAR LUBE APPLY TUBE

(a) Remove the bolt, clamp and apply tube from the transaxle.

INSPECTION

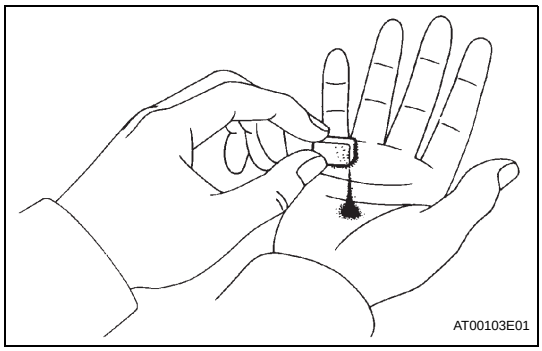

1. INSPECT AUTOMATIC TRANSAXLE OIL PANEL SUB-ASSEMBLY

(a) Remove the magnets and use them to collect any steel chips. Examine the chips and particles in the pan and on the magnet to determine what type of wear has occurred in the transaxle.
Steel (magnetic): bearing gear and plate wear
Brass (non-magnetic): bush wear

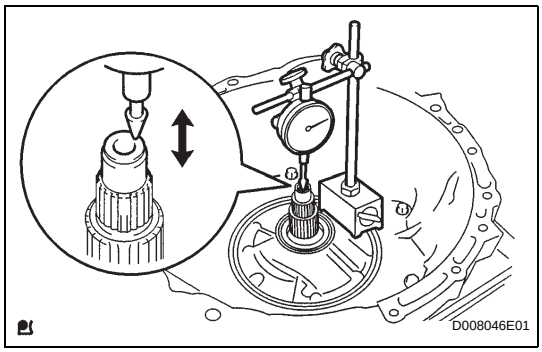

2. INSPECT INPUT SHAFT END PLAY

(a) Using a dial indicator, measure the input shaft end play.
Standard end play:
0.262 to 1.249 mm (0.0103 to 0.0492 in.)

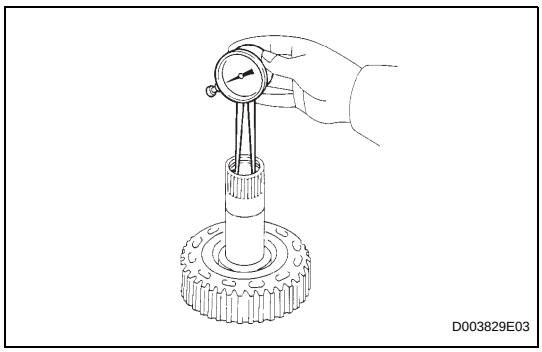

3. INSPECT MULTIPLE DISC CLUTCH HUB

(a) Using a caliper gauge, measure the inside diameter of the forward clutch hub bushing.
Standard inside diameter:
23.025 to 23.045 mm (0.9065 to 0.9073 in.)
Maximum inside diameter:
23.09 mm (0.9091 in.)
NOTICE:
- **When the diameter is over the maximum, replace the multiple disc clutch hub with a new one.**

- **Check the contact surface of the bush in the direct clutch shaft. If any scratch or discolor is identified, replace the direct clutch sub-assembly with a new one.**

If the inside diameter is greater then the maximum, replace the forward clutch hub.

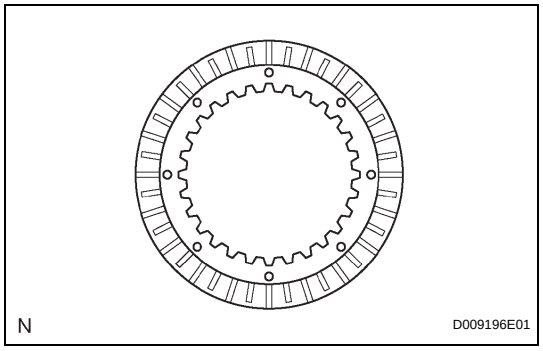

4. INSPECT NO. 2 UNDERDRIVE CLUTCH DISC

(a) Check to see if the sliding surface of the disc, plate and flange are worn or burnt.
If necessary, replace them.
NOTICE:
- **If the lining of the disc is peeling off or discolored, or even if a part of the groove is defaced, replace all discs.**
- **Before assembling new discs, soak them in ATF for at least 15 minutes.**

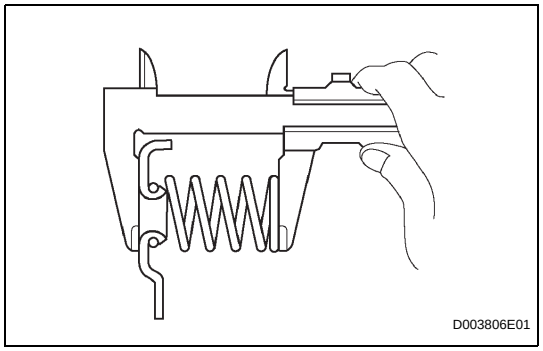

5. INSPECT UNDERDRIVE BRAKE RETURN SPRING SUB-ASSEMBLY

(a) Using a vernier caliper, measure the free length of the spring together with the spring seat.
Standard free length:
14.04 mm (0.5528 in.)

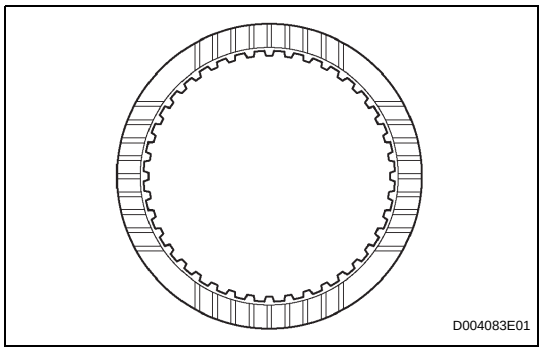

6. INSPECT 2ND BRAKE CLUTCH DISC

(a) Check to see if the sliding surface of the disc, plate and flange are worn or burnt.
If necessary, replace them.
NOTICE:
- **If the lining of the disc is peeling off or discolored, or even if a part of the printed number is defaced, replace all discs.**
- **Before assembling new discs, soak them in ATF for at least 15 minutes.**

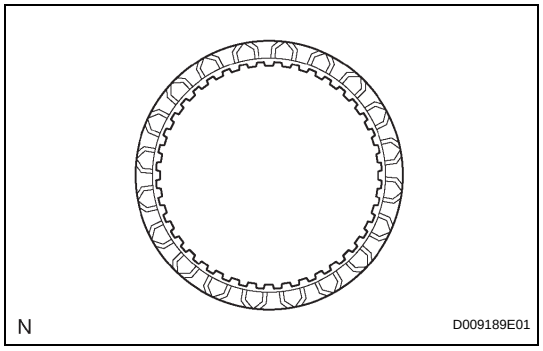

7. INSPECT 1ST AND REVERSE BRAKE CLUTCH DISC

(a) Check to see if the sliding surface of the disc, plate and flange are worn or burnt.
If necessary, replace them.
NOTICE:
- **If the lining of the disc is peeling off or discolored, or even if a part of the groove is defaced, replace all discs.**
- **Before assembling new discs, soak them in ATF for at least 15 minutes.**

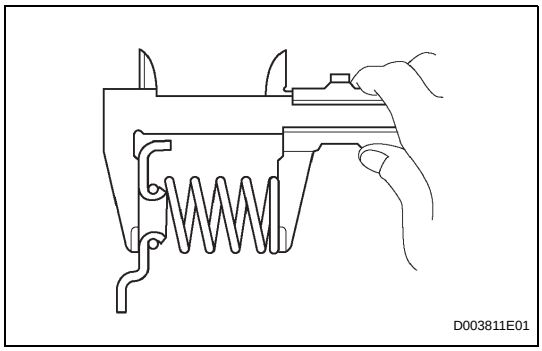

8. INSPECT 1ST AND REVERSE BRAKE RETURN SPRING SUB-ASSEMBLY

(a) Using a vernier caliper, measure the free length of the spring together with the spring seat.
Standard free length:
15.51 mm (0.6106 in.)

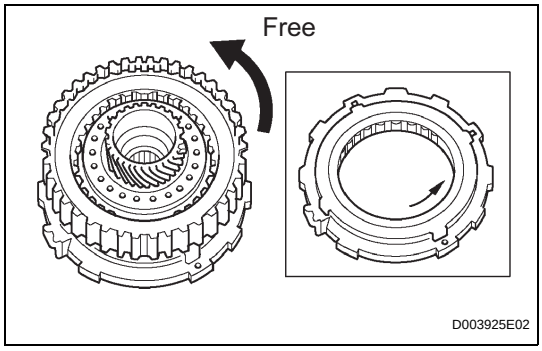

9. INSPECT UNDERDRIVE 1-WAY CLUTCH ASSEMBLY

(a) Install the underdrive clutch assembly to the 1-way clutch. Rotate the underdrive clutch assembly to check the rotating direction for the lock or free operation.

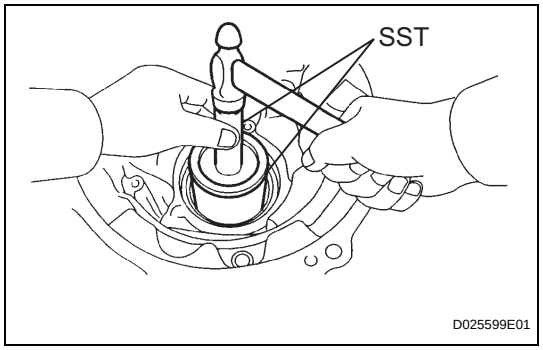

7. REMOVE TRANSAXLE HOUSING OIL SEAL

(a) Using SST and hammer, tap out the oil seal.
SST 09950-70010 (09951-07100), 09215-00013 (09215-00471)

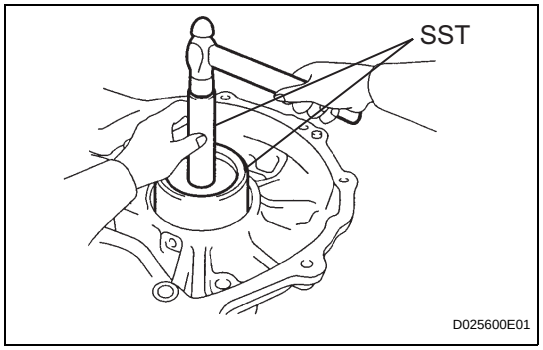

8. REMOVE DIFFERENTIAL SIDE BEARING RETAINER OIL SEAL

(a) Using SST and hammer, tap out the oil seal.
SST 09950-70010 (09951-07100), 09608-10010

INSPECTION

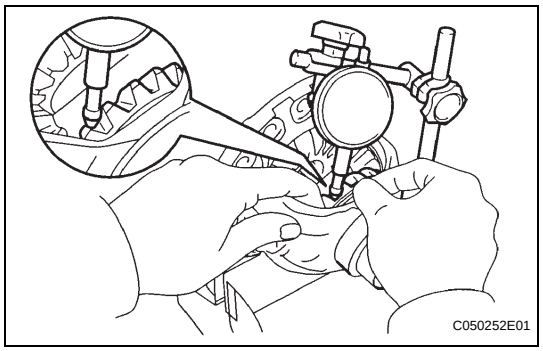

1. INSPECT DIFFERENTIAL SIDE GEAR BACKLASH

(a) Using a dial indicator, measure the backlash of the side gear.
Standard backlash:
0.05 to 0.20 mm (0.0020 to 0.0070 in.)
Standard thrust washer thickness

Thickness	Thickness
1.625 mm (0.0640 in.)	1.825 mm (0.0719 in.)
1.725 mm (0.0679 in.)	-

REASSEMBLY

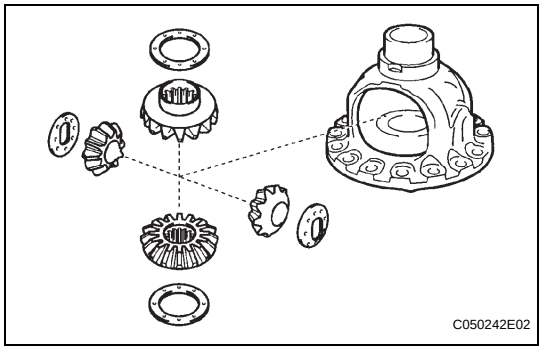

1. INSTALL FRONT DIFFERENTIAL SIDE GEAR

(a) Coat the 2 front differential side gears, 2 side gear thrust washers, 2 font differential pinions and 2 pinion thrust washers with ATF and install them to the differential case.

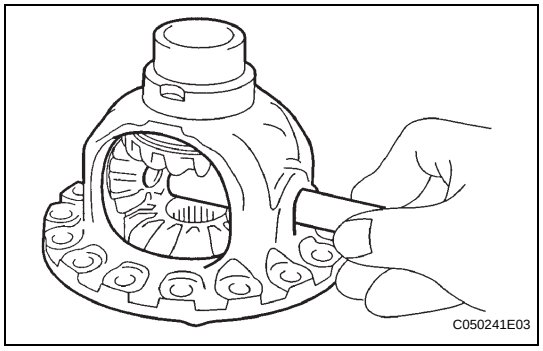

2. INSTALL NO. 1 FRONT DIFFERENTIAL PINION SHAFT

(a) Coat the No. 1 front differential pinion shaft with ATF, and install it to the differential case.

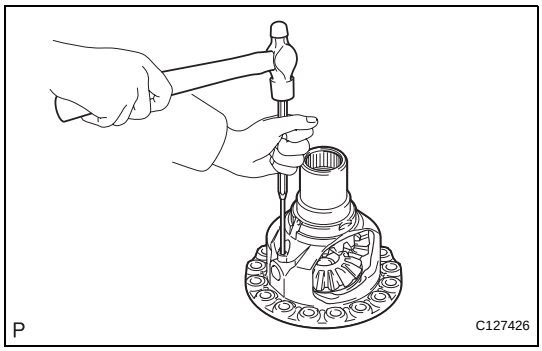

3. INSTALL TRANSAXLE CASE STRAIGHT PIN

(a) Using a pin punch and a hammer, tap in the pinion shaft straight pin.

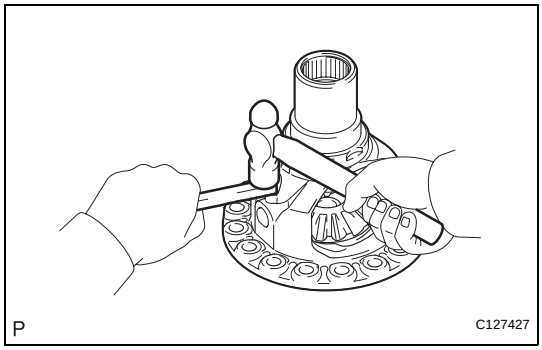

(b) Using a chisel and a hammer, stake the differential case.

NOTICE:
Stake it after adjusting the backlash.

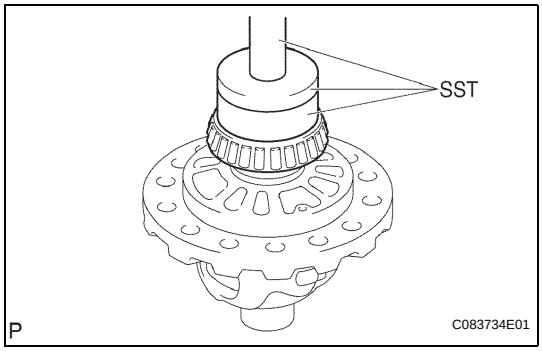

4. INSTALL FRONT DIFFERENTIAL CASE REAR TAPERED ROLLER BEARING

(a) Using SST and a press, press in the front differential case rear tapered roller bearing to the differential case.

SST 09550-60010, 09950-60020 (09951-00680), 09950-70010 (09951-07100)

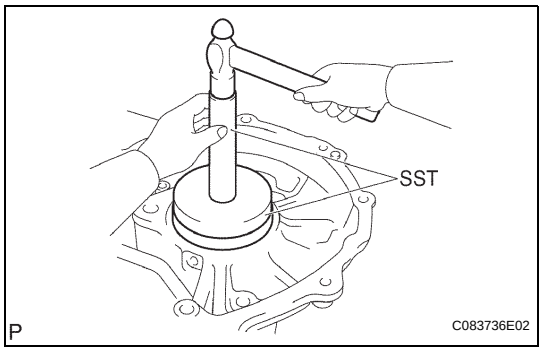

(b) Using SST and a hammer, tap in the front differential case tapered roller bearing front outer race to the transaxle housing.

SST 09550-60010, 09950-60020 (09951-00680), 09950-70010 (09951-07100, 09951-00890)

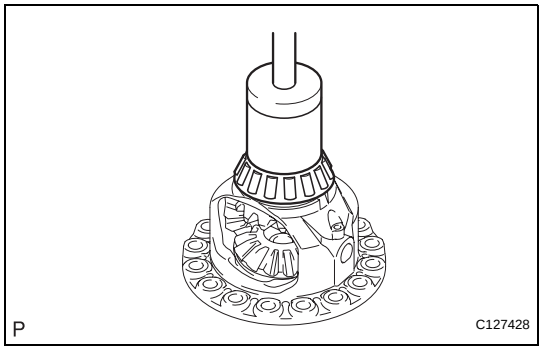

5. INSTALL FRONT DIFFERENTIAL CASE FRONT TAPERED ROLLER BEARING

(a) Using SST and a press, press in the front differential case rear tapered roller bearing to the differential case.

SST 09550-60010, 09950-60020 (09951-00680), 09950-70010 (09951-07100, 09951-00890)

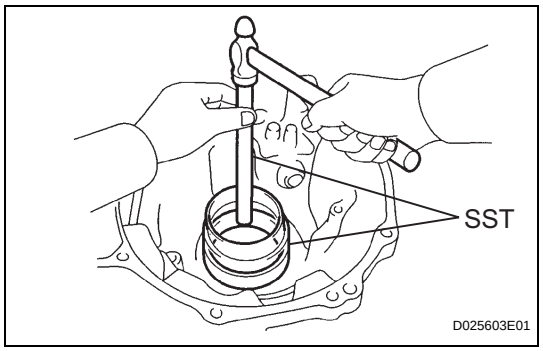

(b) Using SST and a hammer, tap in the front differential case tapered roller bearing front outer race to the transaxle housing.
SST 09550-60010, 09950-60020 (09951-00680), 09950-70010 (09951-07100, 09951-00890)
NOTICE:
Clearance is not allowed between the bearing and transaxle housing.

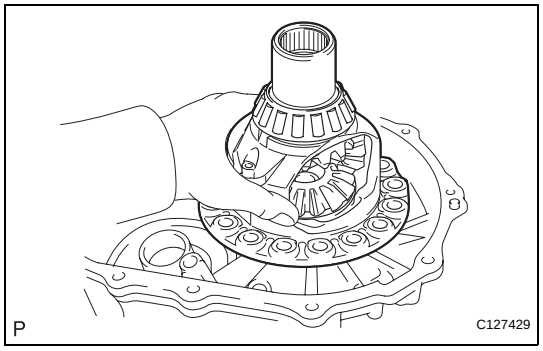

6. ADJUST DIFFERENTIAL SIDE BEARING PRELOAD

(a) Install the differential assembly to the transaxle case.

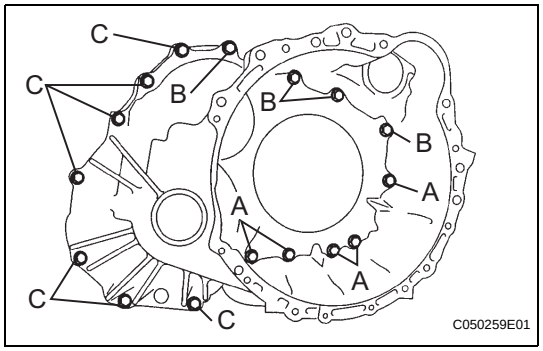

(b) Clean the matching surfaces of the transaxle case and transaxle housing.

(c) Install the transaxle housing to the transaxle case and tighten them with the 16 bolts
Torque: 22 N*m (224 kgf*cm, 16 ft.*lbf) for bolt A
29 N*m (296 kgf*cm, 21 ft.*lbf) for bolts B and C
HINT:
Each bolt length is indicated below.
Bolt length:
50 mm (1.969 in.) for bolt A
50 m (1.969 in.) for bolt B
42 mm (1.654 in.) for bolt C
NOTICE:
Usually, bolt A is non-reusable bolt. In this case, however, it can be used after cleaning it.

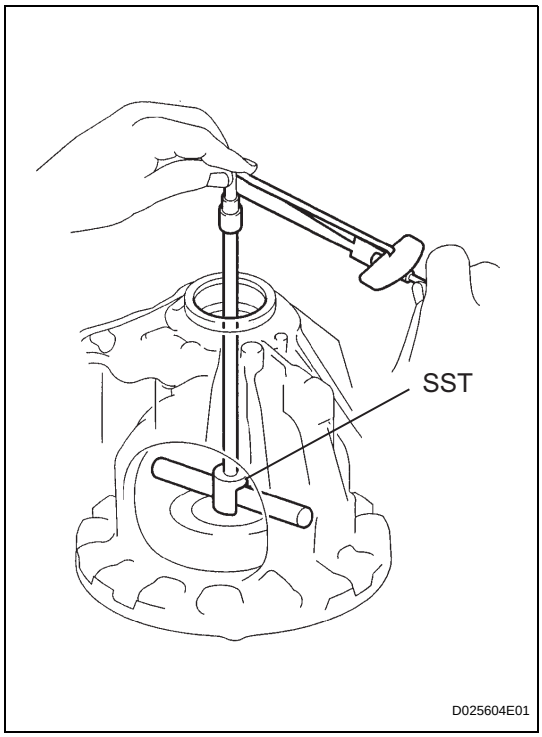

(d) Using SST, return the differential assembly right and left 2 or 3 times to allow the bearing settle.
SST 09564-32011

(e) Using SST and torque wrench, measure the turning torque of the differential.
SST 09564-32011
Torque: Standard turning torque at 60 rpm
0.20 to 0.69 N*m (2.0 to 7.0 kgf*cm, 1.8 to 6.1 in.*lbf)
HINT:
If the turning torque is not within the specified value, refer to the table below and select a thrust washer which turning torque is within the specified value.
Standard flange thickness

Mark	Thickness	Mark	Thickness
0	2.00 mm (0.0787 in.)	9	2.45 mm (0.0965 in.)
1	2.05 mm (0.0807 in.)	A	2.50 mm (0.0984 in.)
2	2.10 mm (0.0827 in.)	B	2.55 mm (0.1004 in.)
3	2.15 mm (0.0846 in.)	C	2.60 mm (0.1024 in.)
4	2.20 mm (0.0866 in.)	D	2.65 mm (1.1043 in.)
5	2.25 mm (0.0886 in.)	E	2.70 mm (0.1063 in.)
6	2.30 mm (0.0906 in.)	F	2.75 mm (0.1083 in.)
7	2.35 mm (0.0925 in.)	G	2.80 mm (0.1102)
8	2.40 mm (0.0945 in.)	H	2.85 mm (0.1122 in.)

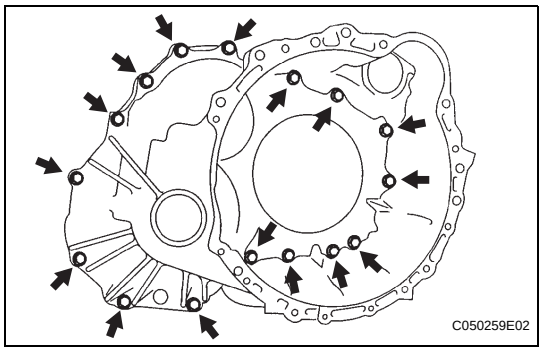

(f) Remove the 16 bolts and the transaxle housing.

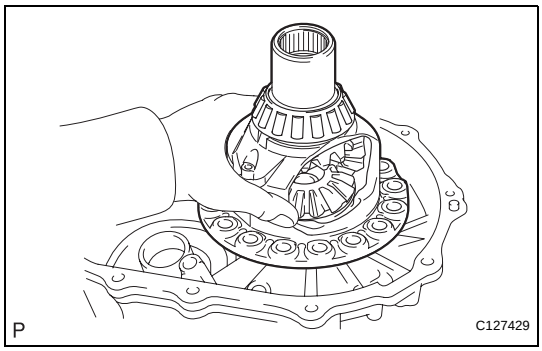

(g) Remove the differential assembly.

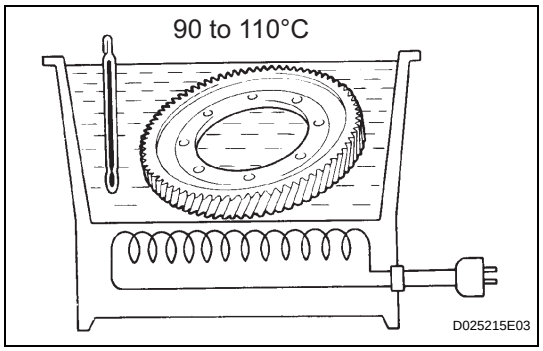

7. INSTALL FRONT DIFFERENTIAL RING GEAR

(a) Using ATF and a heater, heat the front differential ring gear to 90 to 110 °C (194.0 to 230.0 °F)
NOTICE:
Do not overheat the ring gear to 110°C (230.0°F) or more.

(b) Clean the contract surface of the front differential case.

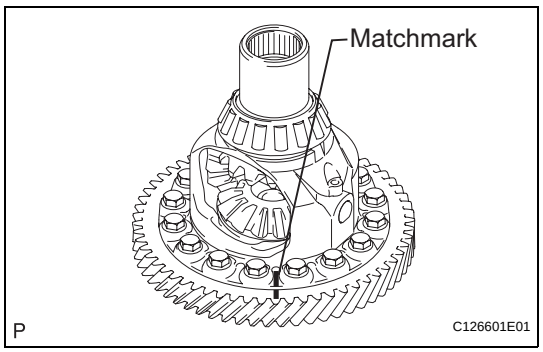

(c) Align the matchmarks, and install the front differential ring gear case quickly.
NOTICE:
Do not install the bolts while the ring gear is hot.

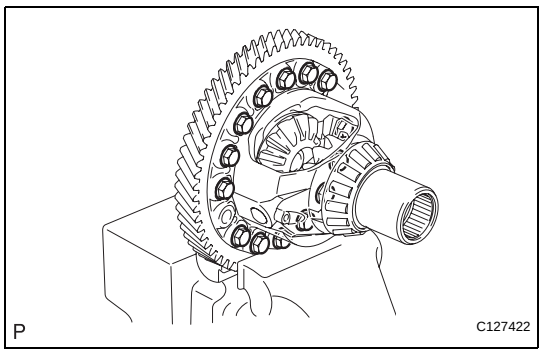

(d) Tighten the 14 bolts.
Torque: 95 N*m (969 kgf*cm, 70 ft.*lbf)
NOTICE:
Tighten the bolts a little at a time in diagonal order.

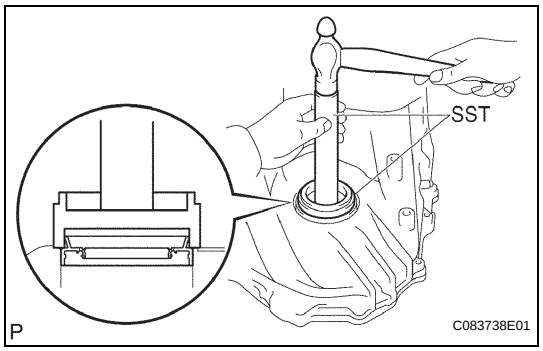

8. INSTALL DIFFERENTIAL SIDE BEARING RETAINER OIL SEAL

(a) Coat the lip of a new oil seal with a little amount of MP grease.

(b) Using SST and a hammer, tap in the oil seal.
SST 09223-15020, 09950-70010 (09951-07100)

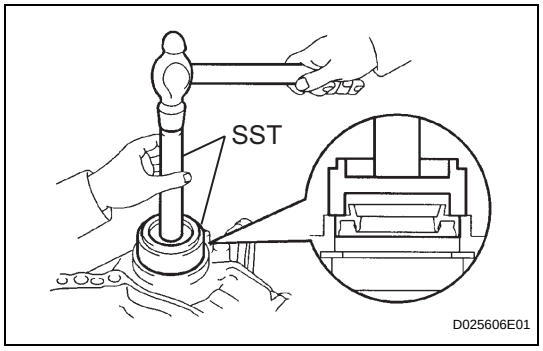

9. REMOVE TRANSAXLE HOUSING OIL SEAL

(a) Coat the lip of a new oil seal with a little amount of MP grease.

(b) Using SST and a hammer, tap in the oil seal.
SST 09710-30050, 09950-70010 (09951-07100)

DIFFERENTIAL CASE

COMPONENTS

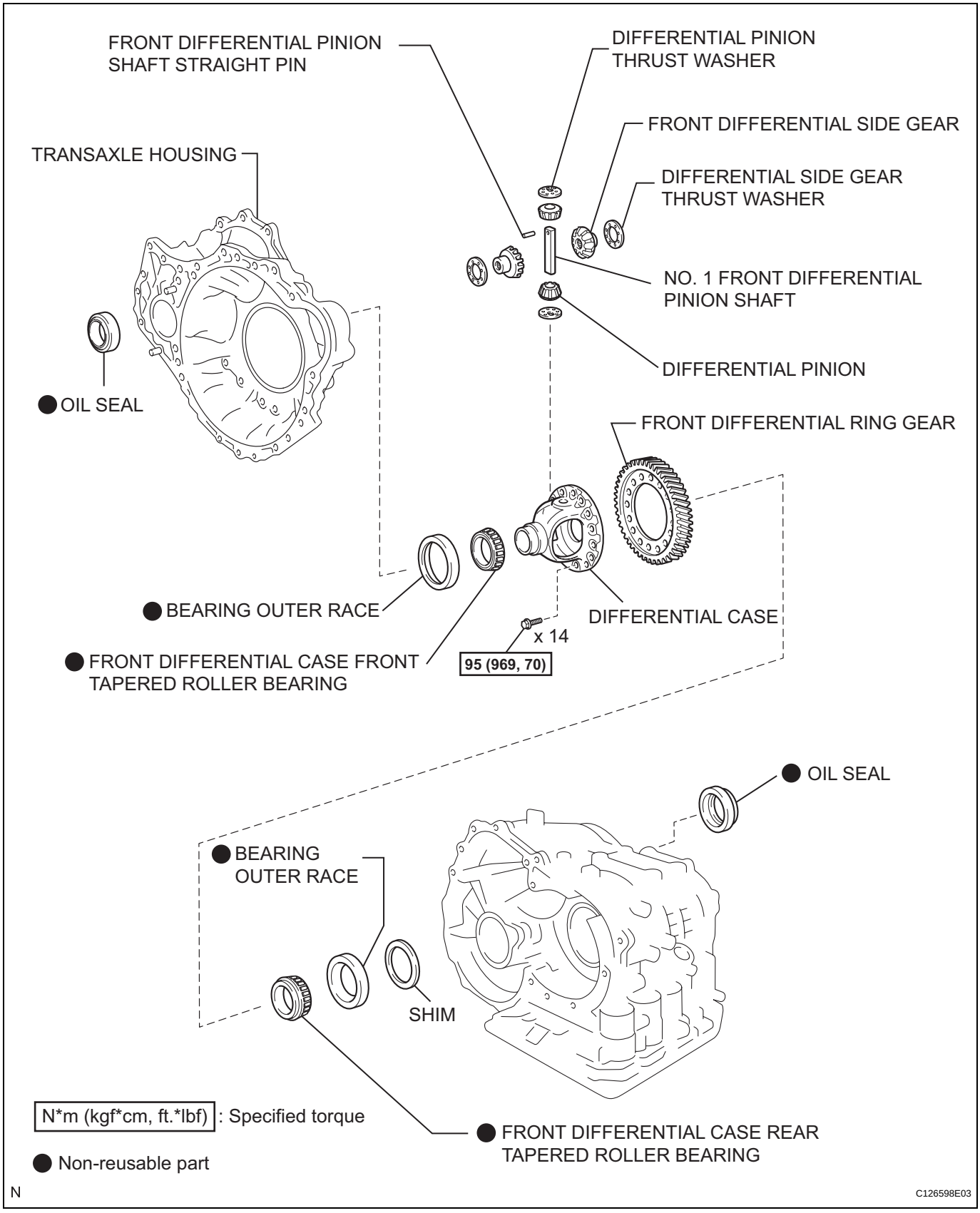

AX

DISASSEMBLY

1. REMOVE FRONT DIFFERENTIAL RING GEAR

(a) Place the matchmarks on the ring gear and differential case.

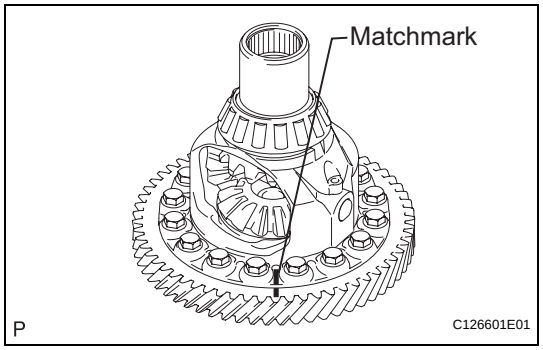

(b) Remove the 14 bolts.

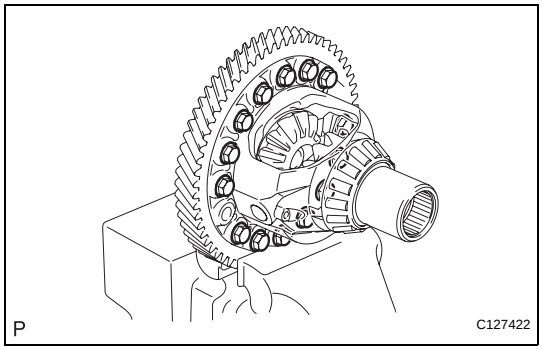

(c) Using a plastic-faced hammer, tap on the ring gear to remove it from the case.

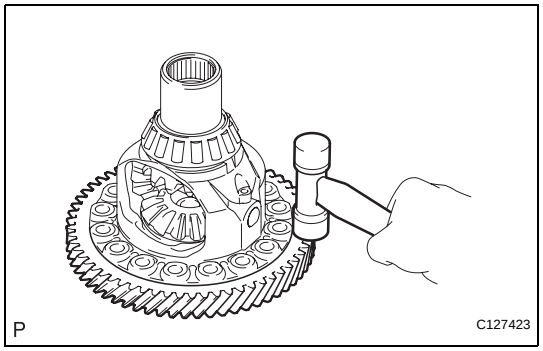

2. REMOVE FRONT DIFFERENTIAL CASE FRONT TAPERED ROLLER BEARING

(a) Using SST, tap out the front differential case front tapered roller bearing from the differential case.
SST 09950-00020, 09950-00030, 09950-60010 (09951-00500)

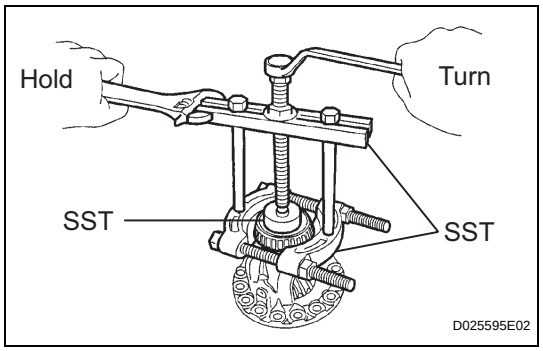

(b) Using SST, remove the front differential case front tapered roller bearing outer race.
SST 09308-00010

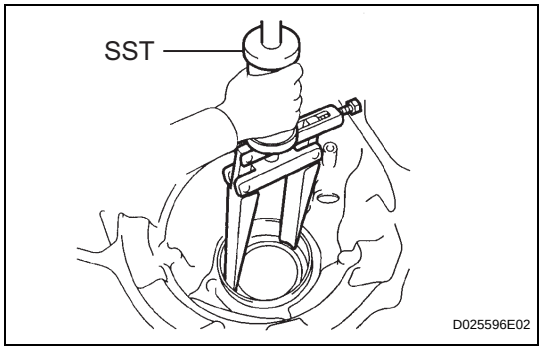

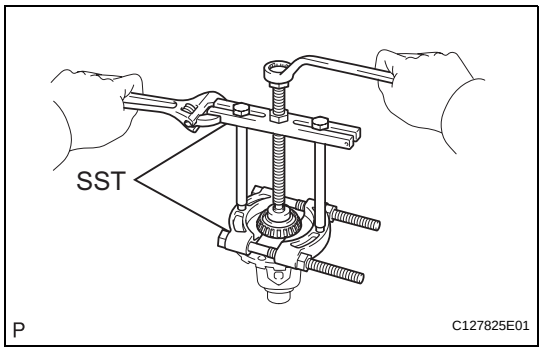

3. REMOVE FRONT DIFFERENTIAL CASE REAR TAPERED ROLLER BEARING

(a) Using SST, remove the front differential case rear tapered roller bearing from the differential case.
SST 09950-00020, 09950-00030, 09950-60010 (09951-00500)

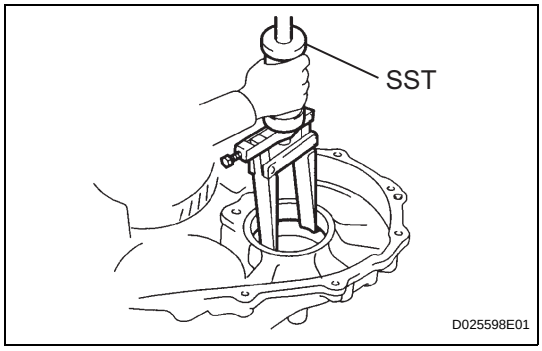

(b) Using SST, tap out the front differential case front tapered roller bearing outer race.
SST 09308-00010

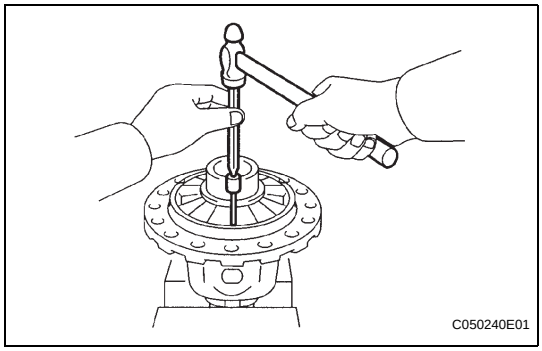

4. REMOVE FRONT DIFFERENTIAL PINION SHAFT STRAIGHT PIN

(a) Using a pin punch and hammer, tap in the straight pin.
NOTICE:
Before removing the straight pin, unstake it with a pin punch.

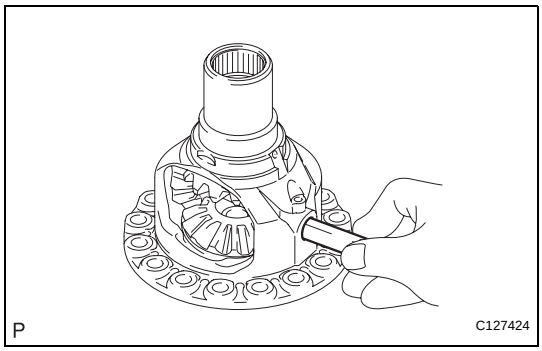

5. REMOVE NO. 1 FRONT DIFFERENTIAL PINION SHAFT

(a) Remove the front differential pinion shaft from the differential case.

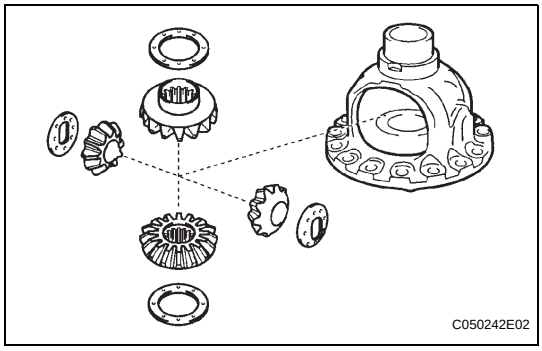

6. REMOVE FRONT DIFFERENTIAL SIDE GEAR

(a) Remove the 2 front differential pinions, 2 pinion thrust washers, 2 front differential side gears and 2 side gear thrust washers from the differential case.

REPLACEMENT

1. REPLACE TRANSAXLE HOUSING OIL SEAL LH

(a) Drain the automatic transaxle fluid.
  (1) Remove the drain plug and gasket, and drain ATF.
  (2) Install a new gasket and drain plug.
  Torque: 47 N*m (479 kgf*cm, 35 ft.*lbf)

(b) Remove the front drive shaft LH (see page DS-41).

(c) Remove the transaxle housing oil seal LH.
  (1) Using SST, tap out the oil seal.
  SST 09308-00010

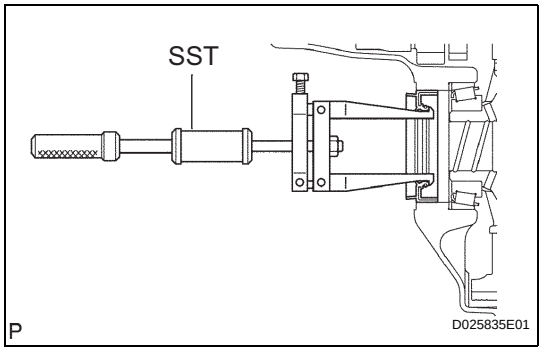

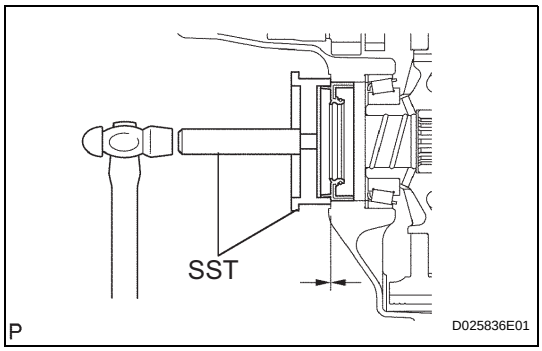

(d) Install a new transaxle housing oil seal LH.
  (1) Coat the lip of a new oil seal with MP grease.
  (2) Using SST and a hammer, tap in the oil seal.
  SST 09726-27012 (09726-02041), 09950-70010 (09951-07200, 09951-07200)
  Standard depth:
  0 +-0.5 mm (0 +-0.020 in.)

(e) Install the front drive shaft LH (see page DS-65).

(f) Add automatic transaxle fluid.
  Fluid type:
  Toyota Genuine ATF WS

(g) Inspect the transaxle fluid level (see page AX-102).

2. REPLACE TRANSAXLE HOUSING OIL SEAL RH

(a) Remove the engine with transaxle (see page EM-98).

(b) Drain the automatic transaxle fluid.
  (1) Remove the drain plug and gasket, and drain ATF.
  (2) Install a new gasket and the drain plug.
  Torque: 47 N*m (479 kgf*cm, 35 ft.*lbf)

(c) Remove the 3 bolts and drive shaft bearing bracket.

(d) Remove the 3 bolts and engine mount bracket RR.

(e) Remove the transfer assembly (see page TF-59).

(f) Remove the transaxle housing oil seal RH.
  (1) Using a screwdriver with vinyl tape wound around its tip, remove the oil seal.
  NOTICE:
  Be careful not to damage the housing.

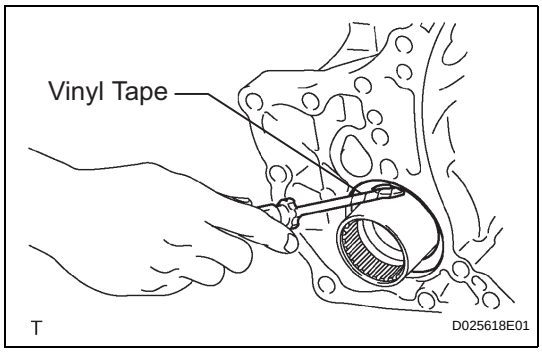

AX

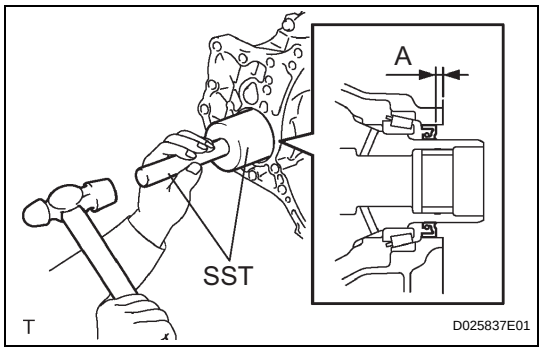

(g) Install a new transaxle housing oil seal RH.
  (1) Coat the lip of a new oil seal with MP grease.
  (2) Using SST and a hammer, tap in the oil seal.
    SST 09309-37010
    Standard depth:
      6.0 +-0.5 mm (0.236 +-0.020 in.)
(h) Install the transfer assembly (see page TF-75).
(i) Install the engine mount bracket RR with the 3 bolts.
  Torque: 64 N*m (652 kgf*cm, 47 ft.*lbf)
(j) Install the drive shaft bearing bracket with the 3 bolts.
  Torque: 64 N*m (653 kgf*cm, 47 ft.*lbf)
(k) Install the engine with transaxle (see page EM-105).
(l) Add automatic transaxle fluid.
  Fluid type:
    Toyota Genuine ATF WS
(m) Inspect the fluid level (see page AX-102).

DIFFERENTIAL OIL SEAL

COMPONENTS

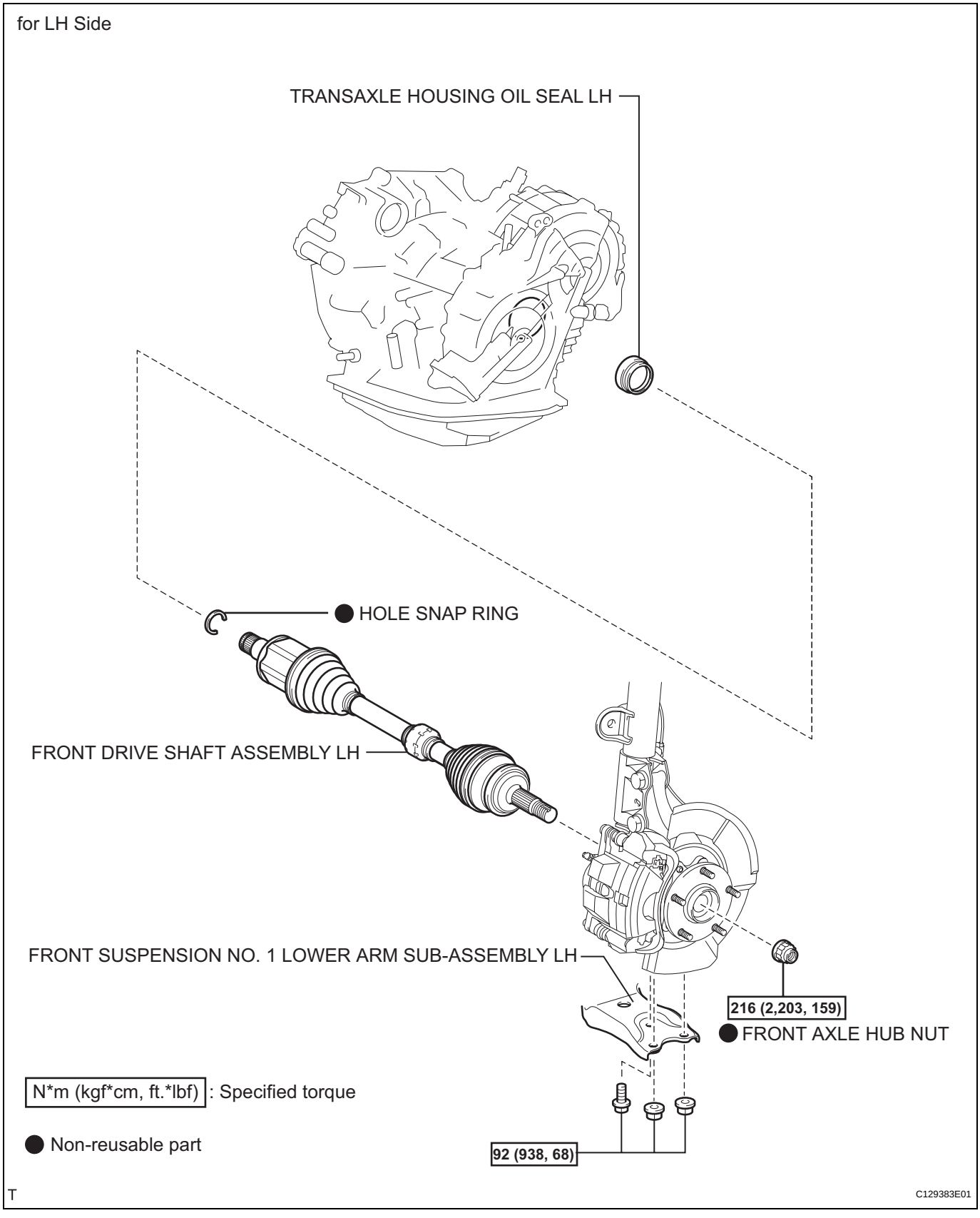

AX

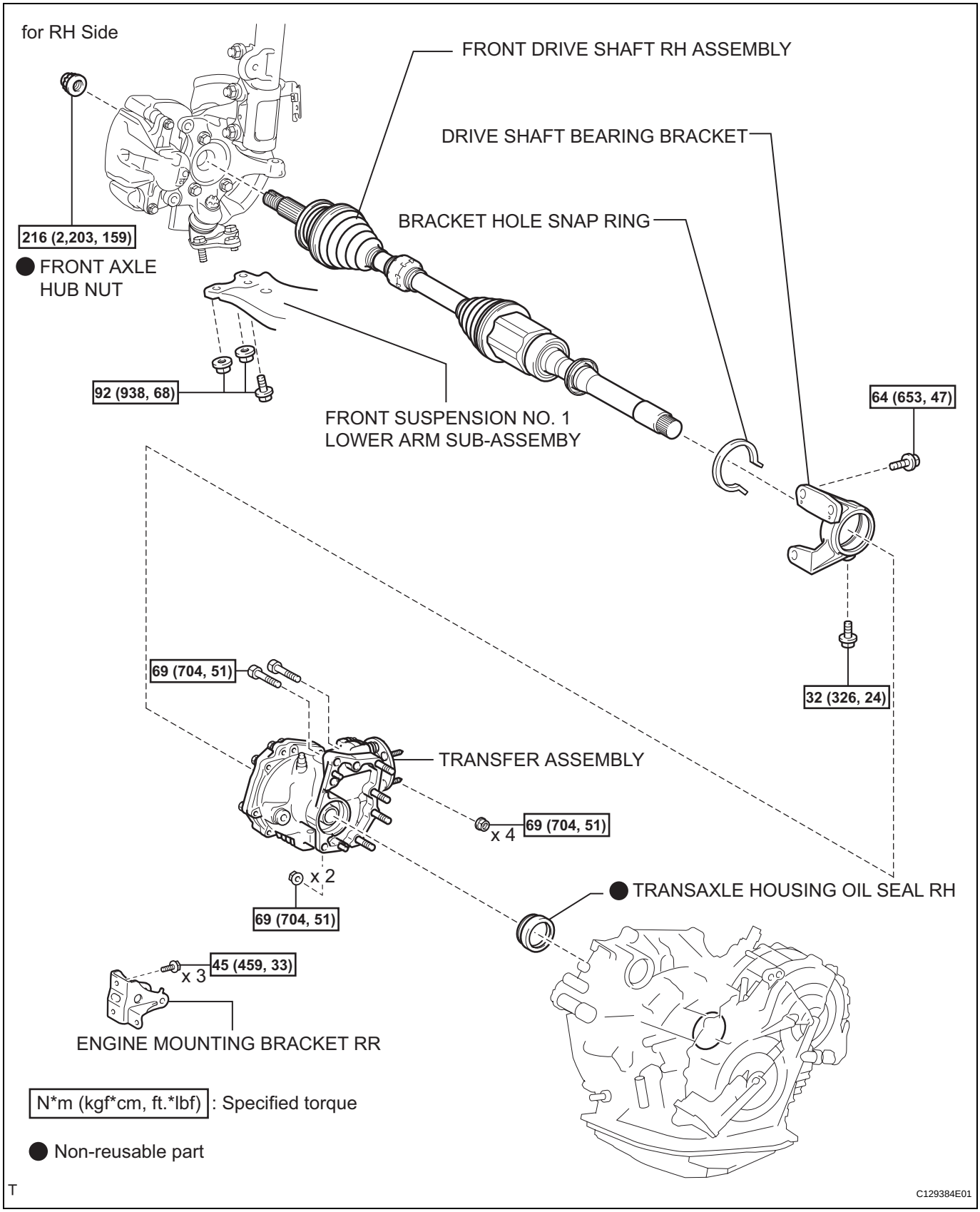
for RH Side
FRONT DRIVE SHAFT RH ASSEMBLY
DRIVE SHAFT BEARING BRACKET
BRACKET HOLE SNAP RING
216 (2,203, 159)
● FRONT AXLE HUB NUT
92 (938, 68)
FRONT SUSPENSION NO. 1 LOWER ARM SUB-ASSEMBY
64 (653, 47)
32 (326, 24)
69 (704, 51)
TRANSFER ASSEMBLY
x 4
69 (704, 51)
x 2
69 (704, 51)
● TRANSAXLE HOUSING OIL SEAL RH
45 (459, 33)
x 3
ENGINE MOUNTING BRACKET RR
N*m (kgf*cm, ft.*lbf) : Specified torque
● Non-reusable part
T
C129384E01

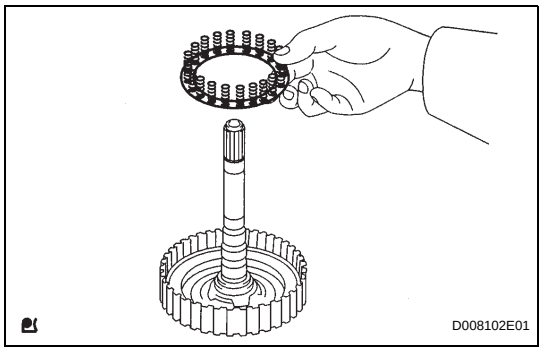

(d) Remove the piston return spring from the direct clutch drum.

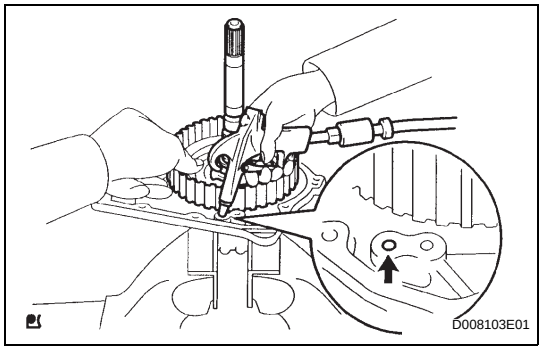

(e) Install the direct clutch drum on the transaxle rear cover.
(f) Holding the direct clutch piston with your hand, apply compressed air (392 kPa, 4.0 kgf*cm^2, 57 psi) to the transaxle rear cover to remove the direct clutch piston.

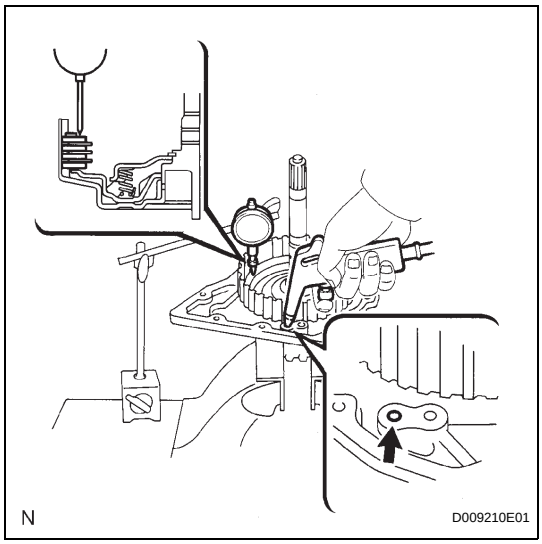

INSPECTION

1. INSPECT PACK CLEARANCE OF DIRECT CLUTCH

(a) Install the direct clutch and needle roller bearing on the transaxle rear cover.
(b) Using a dial indicator, measure the forward clutch pack clearance while applying and releasing compressed air (392 kPa, 4.0 kgf/cm^2, 57 psi)
Standard pack clearance:
0.515 to 0.825 mm (0.0203 to 0.0324 in.)
If the pack clearance is not as specified, inspect the discs, plates and flange.

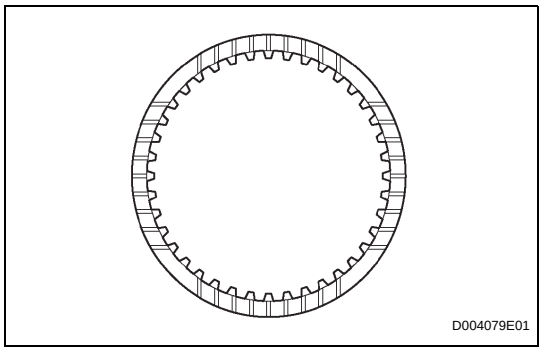

2. INSPECT DIRECT MULTIPLE DISC CLUTCH DISC

(a) Check to see if the sliding surface of the disc, plate and flange are worn or burnt.
If necessary, replace them.
HINT:
- If the lining of the disc is peeling off or discolored, or even if a part of the printed mark is defaced, replace all discs.
- Before assembling new discs, soak them in ATF for at least 15 minutes.

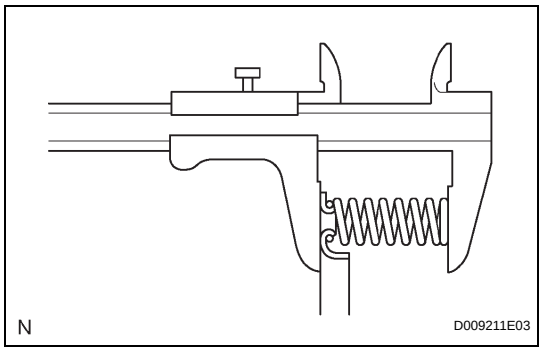

3. INSPECT DIRECT CLUTCH RETURN SPRING SUB-ASSEMBLY

(a) Using a vernier caliper, measure the free length of the spring together with the spring seat.
Standard free length:
22.58 mm (0.8898 in.)

REASSEMBLY

1. INSTALL DIRECT CLUTCH RETURN SPRING SUB-ASSEMBLY

(a) Coat the direct clutch piston with ATF, and install it to the direct clutch drum.
NOTICE:
Be careful not to damage the lip seal of the direct clutch piston.

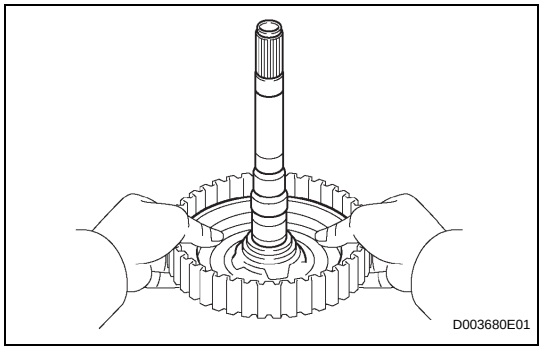

(b) Install the piston return spring to the direct clutch drum.

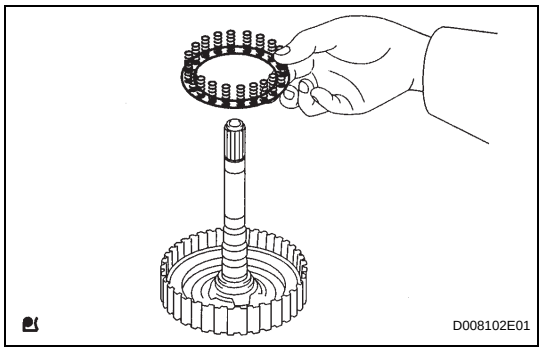

(c) Install the clutch balancer to the direct clutch drum.
NOTICE:
Be careful not to damage the lip seal of the direct clutch balancer.

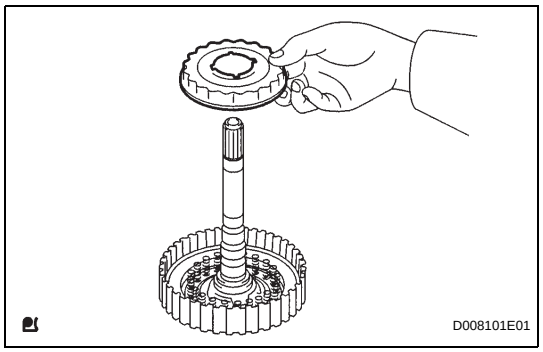

(d) Place SST on the clutch balancer and compress the piston return spring with a press.
SST 09387-00020

(e) Using a snap ring expander, install the snap ring to the direct clutch drum.
NOTICE:
- **Be sure the end gap of the snap ring is not aligned with the clutch balancer claw.**
- **Stop the press when the spring sheet is lowered to the place 1 to 2 mm (0.039 to 0.078 in.) from the snap ring groove.**

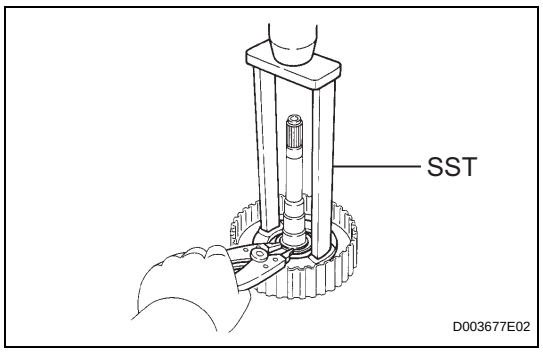

- **This prevents the spring sheet from being deformed.**
- **Do not expand the snap ring excessively.**

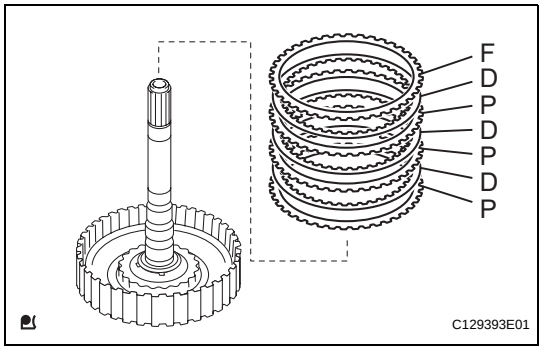

2. INSTALL DIRECT MULTIPLE DISC CLUTCH DISC

(a) Install the 3 plates, 3 discs and flange to the direct clutch drum.

Install in order:

P - D - P - D - P - D - F

HINT:
P = Plate
D = Disc
F = Flange

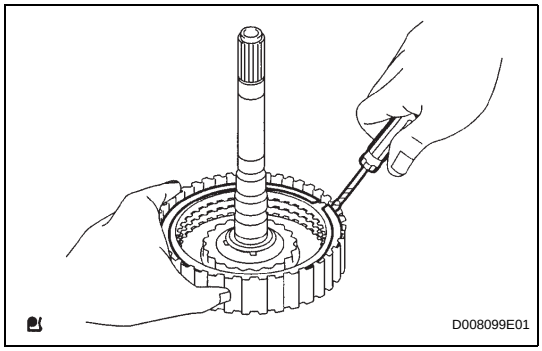

(b) Using a screwdriver, install the snap ring.

(c) Check that the end gap of the snap ring is not aligned with one of the cutouts.

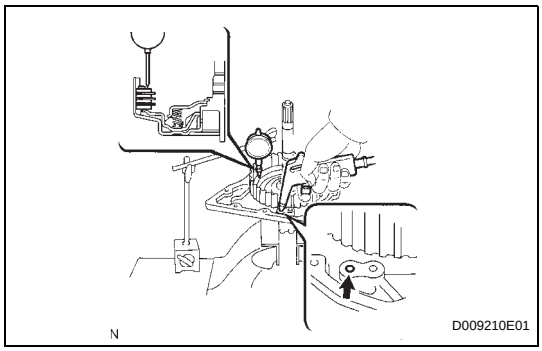

3. INSPECT PACK CLEARANCE OF DIRECT CLUTCH

(a) Install the direct clutch on the transaxle rear cover.

(b) Using a dial indicator, measure the direct clutch pack clearance while applying and releasing compressed air (392 kPa, 4.0 kgf/cm^2, 57 psi).

Standard pack clearance:

0.515 to 0.825 mm (0.0203 to 0.0324 in.)

If the pack clearance is less than the minimum, parts may have been assembled incorrectly, so check and reassemble again.

If the stroke is not as specified, select another flange.

HINT:
There are 6 flanges in different thickness.

Standard flanges in different thickness

No.	Thickness	No.	Thickness
1	3.0 mm (.118 in.)	4	3.3 mm (0.130 in.)
2	3.1 mm (0.122 in.)	5	3.4 mm (0.134 in.)
3	3.2 mm (0.126 in.)	6	3.5 mm (0.138 in.)

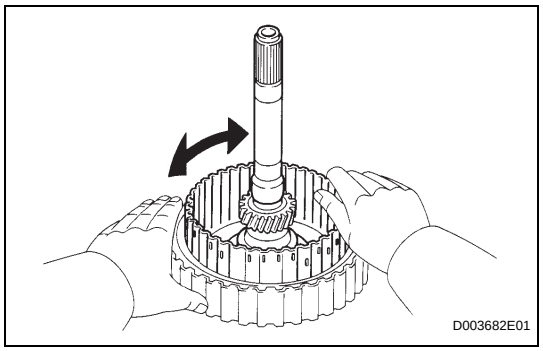

4. INSPECT DIRECT MULTIPLE DISC CLUTCH DISC

(a) Check that the disc rotates when rotating the disc after inserting the rear planetary sun gear.

NOTICE:

Do not place the rear planetary sun gear in a vise.

DIRECT CLUTCH

COMPONENTS

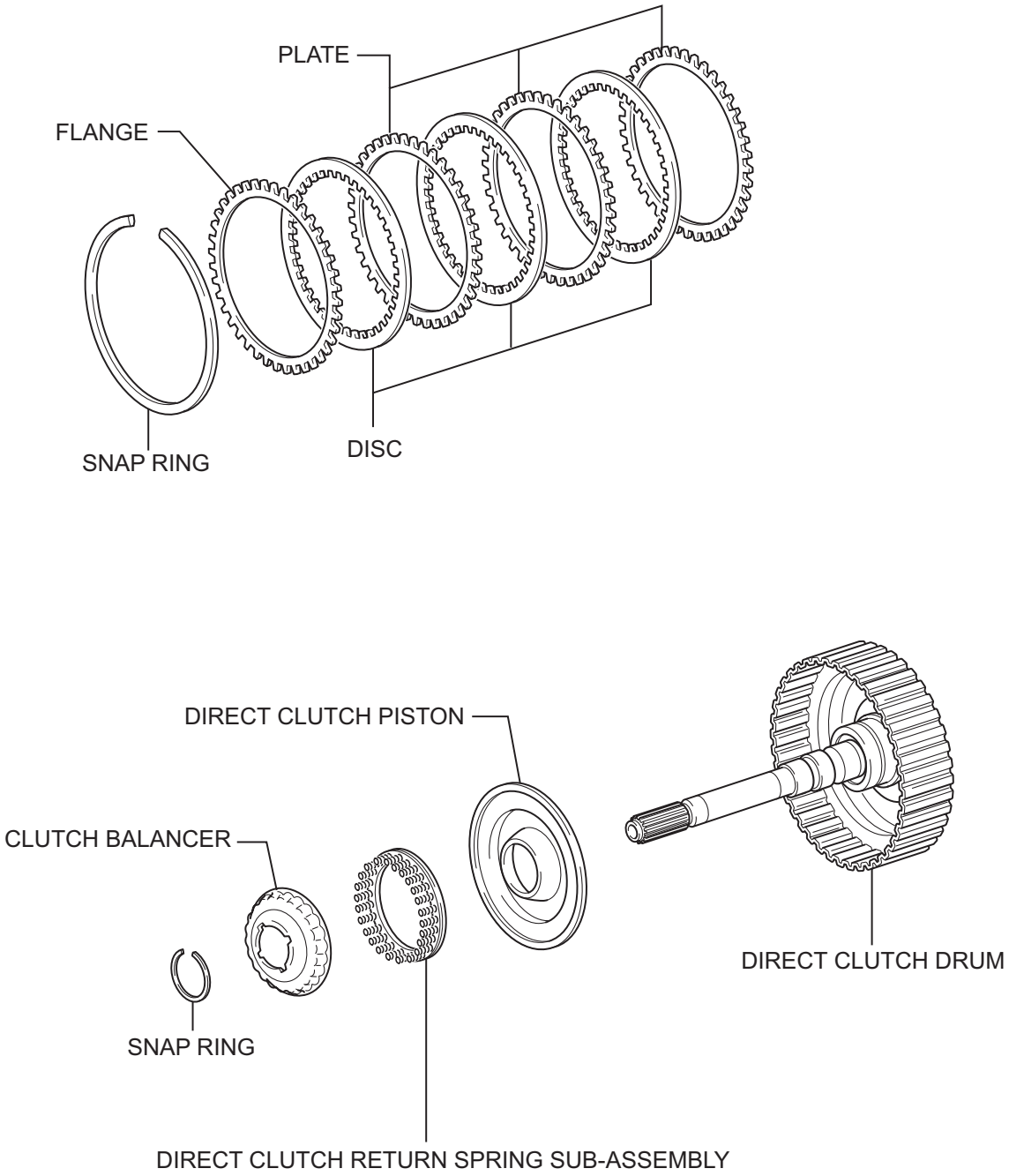

N

C126592E03

DISASSEMBLY

1. INSPECT PACK CLEARANCE OF DIRECT CLUTCH (See page AX-234)

2. REMOVE DIRECT MULTIPLE DISC CLUTCH DISC

(a) Using a screwdriver, pry out the snap ring from the direct clutch drum.

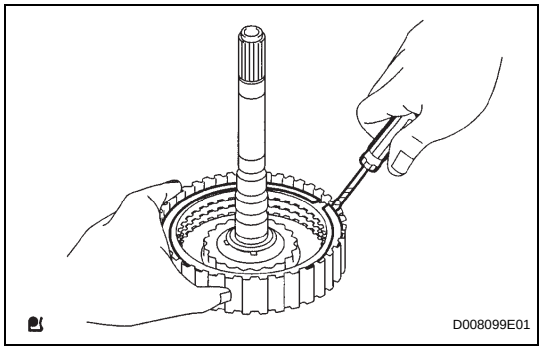

(b) Remove the flange, 3 discs and 3 plates from the direct clutch drum.

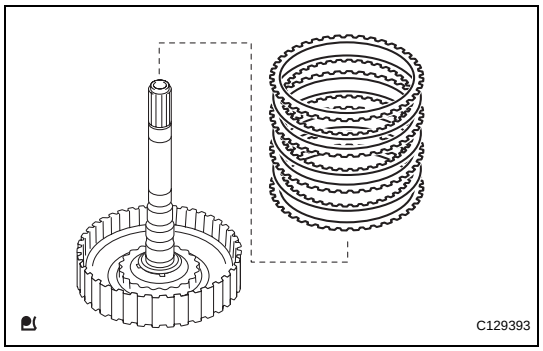

3. INSPECT DIRECT MULTIPLE DISC CLUTCH DISC (See page AX-234)

4. REMOVE DIRECT CLUTCH RETURN SPRING SUB-ASSEMBLY

(a) Place SST on the clutch balancer and compress the spring with a press.
SST 09387-00020

(b) Using a snap ring expander, remove the snap ring from the direct clutch drum.
NOTICE:
- **Stop the press when the spring sheet is lowered to the place 1 to 2 mm (0.039 to 0.078 in.) from the snap ring groove.**
- **This prevents the spring sheet from being deformed.**
- **Do not expand the snap ring excessively.**

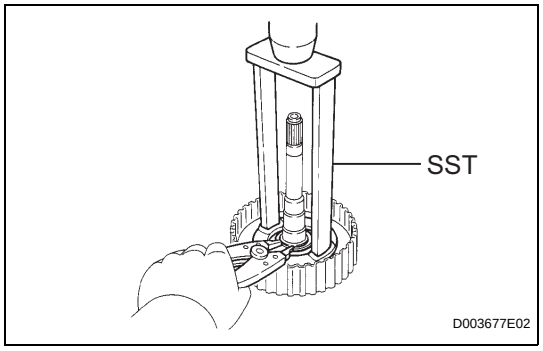

(c) Remove the clutch balancer from the direct clutch drum.

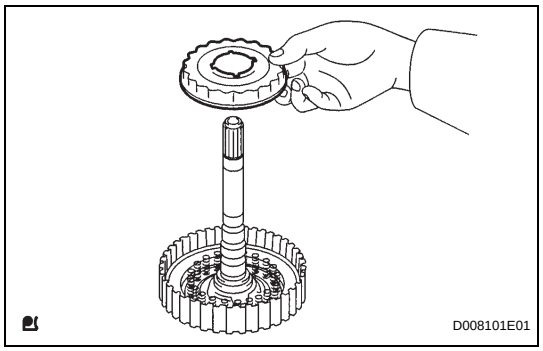

REMOVAL

1. **DISCONNECT CABLE FROM NEGATIVE BATTERY TERMINAL**
   CAUTION:
   Wait at least 90 seconds after disconnecting the cable from the negative (-) battery terminal to prevent airbag and seat belt pretensioner activation.
2. **REMOVE SHIFT LEVER KNOB SUB-ASSEMBLY**
3. **REMOVE REAR CONSOLE BOX SUB-ASSEMBLY**
   (a) Remove the console box (see page IP-20).
4. **DISCONNECT TRANSAXLE CONTROL CABLE ASSEMBLY**
   (a) Disconnect the control cable from the shift lever.

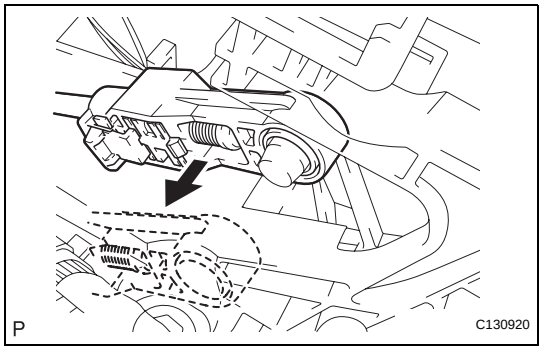

   (b) Turn the nut and disconnect the control cable from the shift lever retainer.

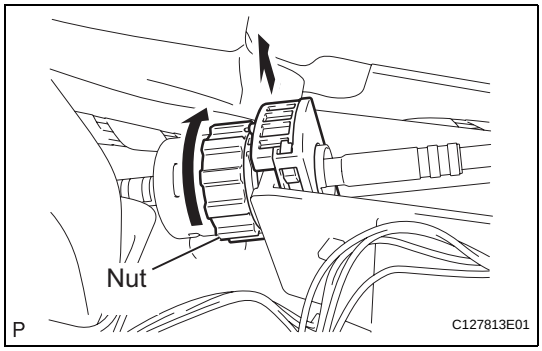

5. **REMOVE FLOOR SHIFT ASSEMBLY**
   (a) Remove the 4 bolts and floor shift.

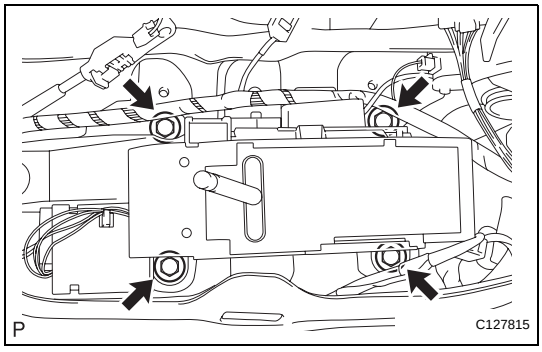

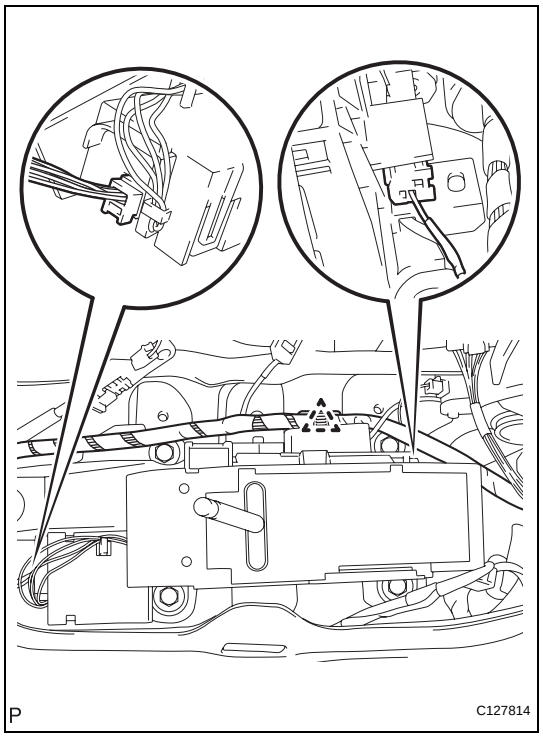

(b) Disconnect the 2 connectors and detach the clamp.

DISASSEMBLY

1. REMOVE LOWER POSITION INDICATOR HOUSING

(a) Detach the 4 claws and remove the housing.

(b) Remove the position indicator slide cover with slide No. 2 cover.

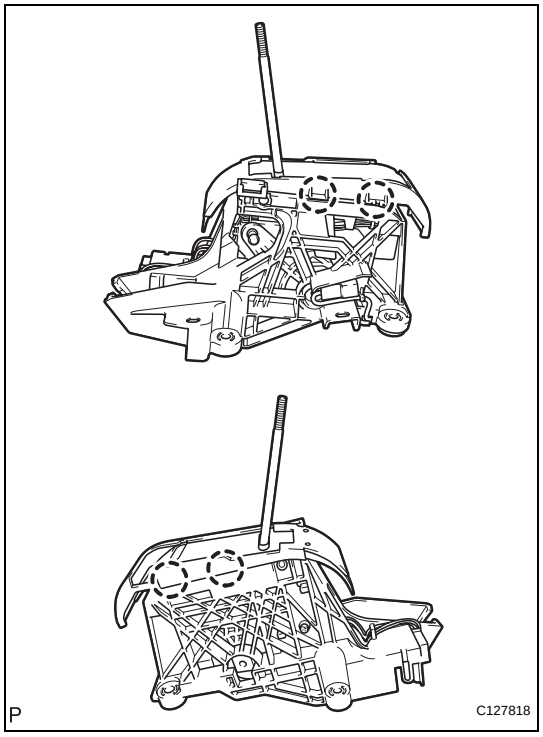

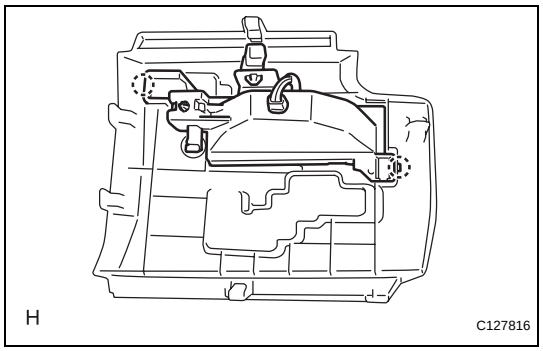

2. REMOVE POSITION INDICATOR LIGHT HOUSING

(a) Detach the 2 claws and remove the indicator light housing from the floor shift position indicator housing.

3. REMOVE INDICATOR LIGHT WIRE SUB-ASSEMBLY

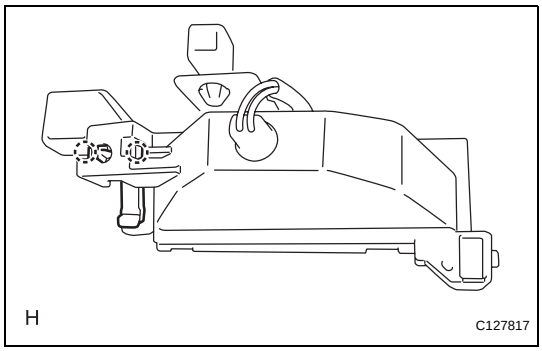

4. REMOVE SHIFT LOCK RELEASE BUTTON

(a) Detach the 2 claws and remove the button and spring from the position indicator light housing.

ADJUSTMENT

1. INSPECT SHIFT LEVER POSITION

(a) When shifting the lever from P to the R position with the ignition switch ON and the brake pedal depressed, make sure that the shift lever moves smoothly and moves correctly into position.

(b) Start the engine and make sure that the vehicle moves forward when shifting the lever from N to the D position and moves rearward when shifting the lever to the R position.
If the operation cannot be performed as specified, inspect the park/neutral position switch assembly and check the shift lever assembly installation condition.

2. ADJUST SHIFT LEVER POSITION

(a) Shift the shift lever to the N position.

(b) Slide the adjuster case cover in the direction shown in the illustration and pull out the lock piece.

(c) Gently pull the cable rod toward the rear of the vehicle by hand to pull the cable taut.

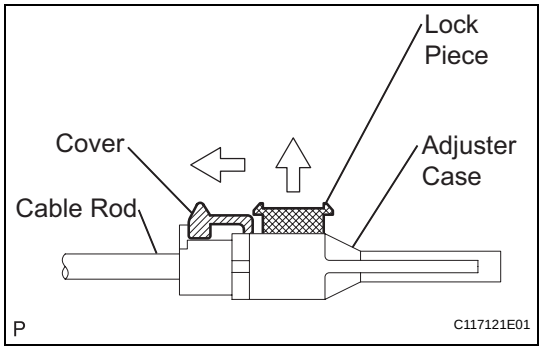

(d) Press the lock piece into the adjuster case and lock it.

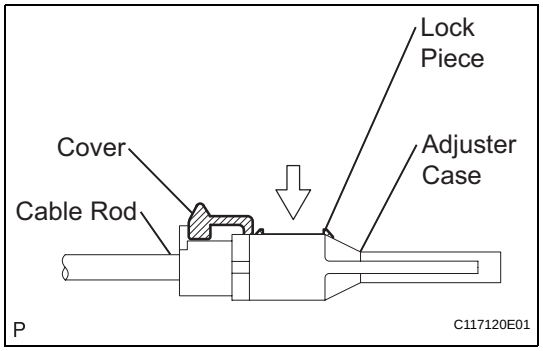

(e) Slide the cover in the direction shown in the illustration.
NOTICE:
Slide the cover past the protrusion of the lock piece.

(f) Inspect the operation after the adjustment.

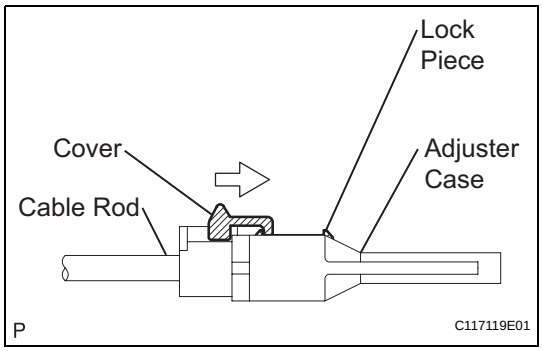

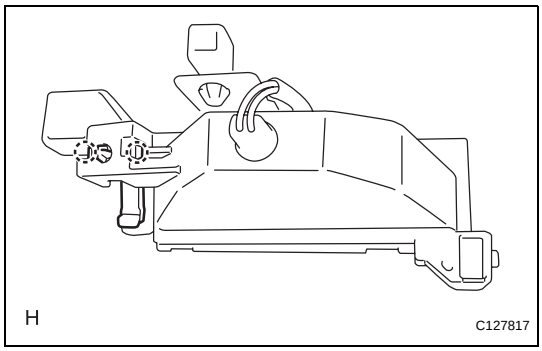

REASSEMBLY

1. INSTALL SHIFT LOCK RELEASE BUTTON

(a) Install the spring and button and attach the claws to the position indicator light housing.

2. INSTALL INDICATOR LIGHT WIRE SUB-ASSEMBLY

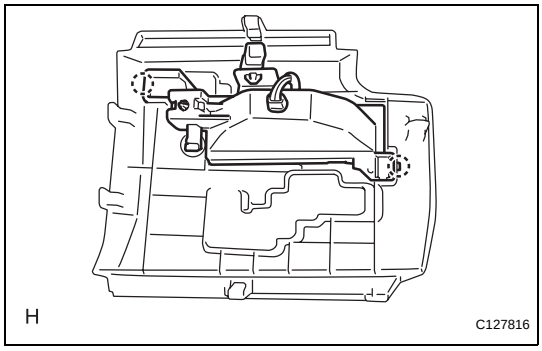

3. INSTALL POSITION INDICATOR LIGHT HOUSING

(a) Attach the indicator light housing to the shift position indicator housing with the 2 claws.

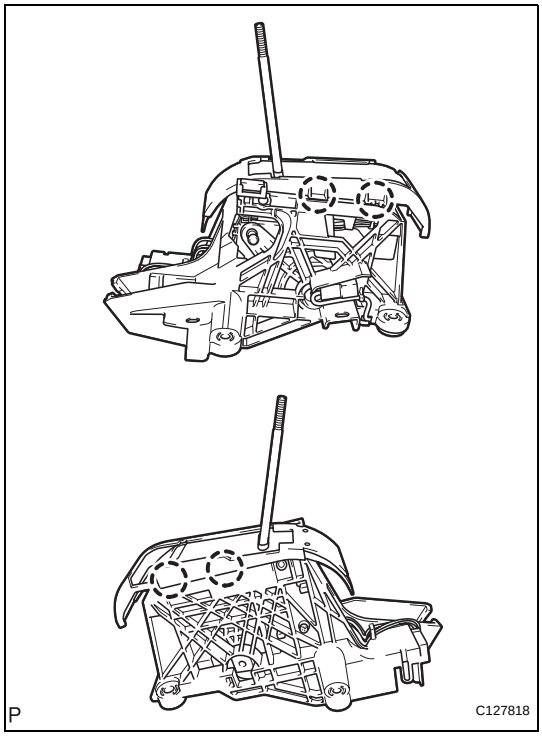

4. INSTALL LOWER POSITION INDICATOR HOUSING

(a) Install the position indicator slide cover with slide cover No. 2 to the indicator housing.

(b) Attach the housing to the floor shift assembly with the 4 claws.

INSTALLATION

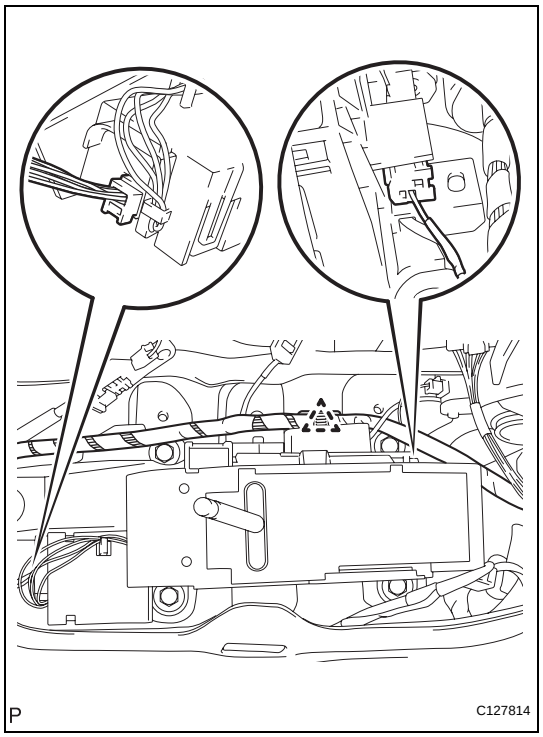

1. INSTALL FLOOR SHIFT ASSEMBLY

(a) Connect the 2 connectors and attach the clamp.

(b) Install the floor shift with the 4 bolts.

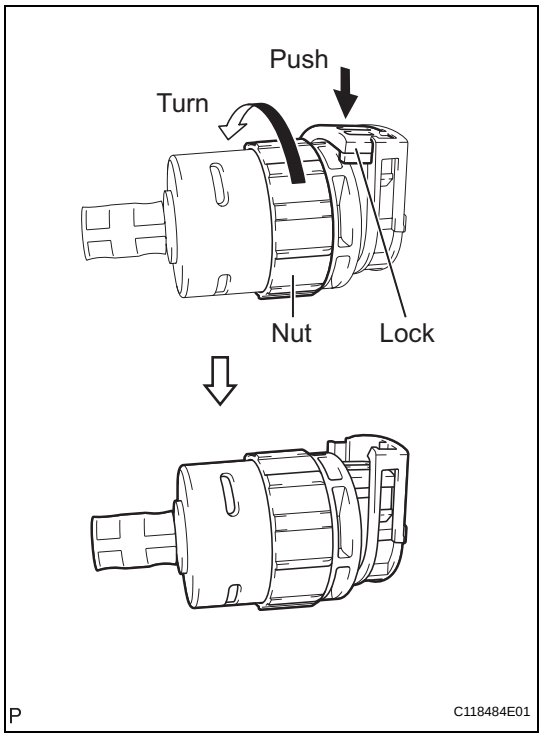

2. CONNECT TRANSAXLE CONTROL CABLE ASSEMBLY

(a) Turn the nut of the control cable and push in the lock.

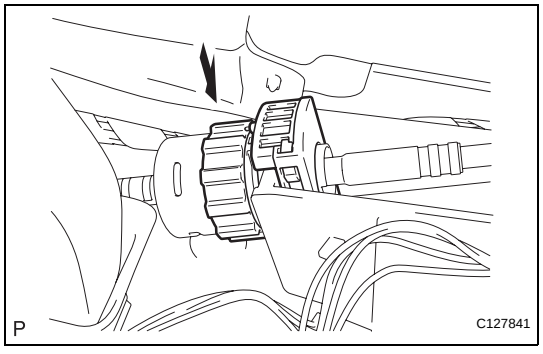

(b) Install the control cable onto the shift lever retainer.
NOTICE:
- **Install the cable with the protruding portion of the cable outer facing upward.**

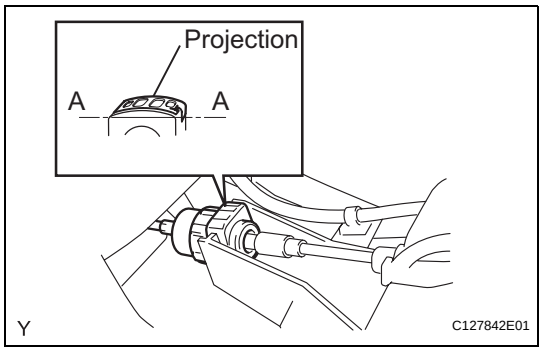

- **After installing, check that the lock of the cable outer is protruding beyond portion A-A, as shown in the illustration.**

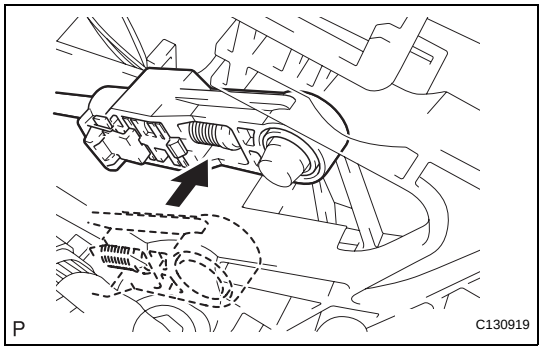

(c) Connect the control cable to the shift lever.
NOTICE:
Connect the control cable so that the adjusting mechanism lock of the control cable is installed on the driver side of the vehicle.

3. **CONNECT CABLE TO NEGATIVE BATTERY TERMINAL**
4. **INSPECT SHIFT LEVER POSITION (See page AX-138)**
5. **ADJUST SHIFT LEVER POSITION (See page AX-138)**
6. **INSTALL REAR CONSOLE BOX SUB-ASSEMBLY**
   (a) Install the rear console box (see page IP-26).
7. **INSTALL SHIFT LEVER KNOB SUB-ASSEMBLY**

FLOOR SHIFT ASSEMBLY

COMPONENTS

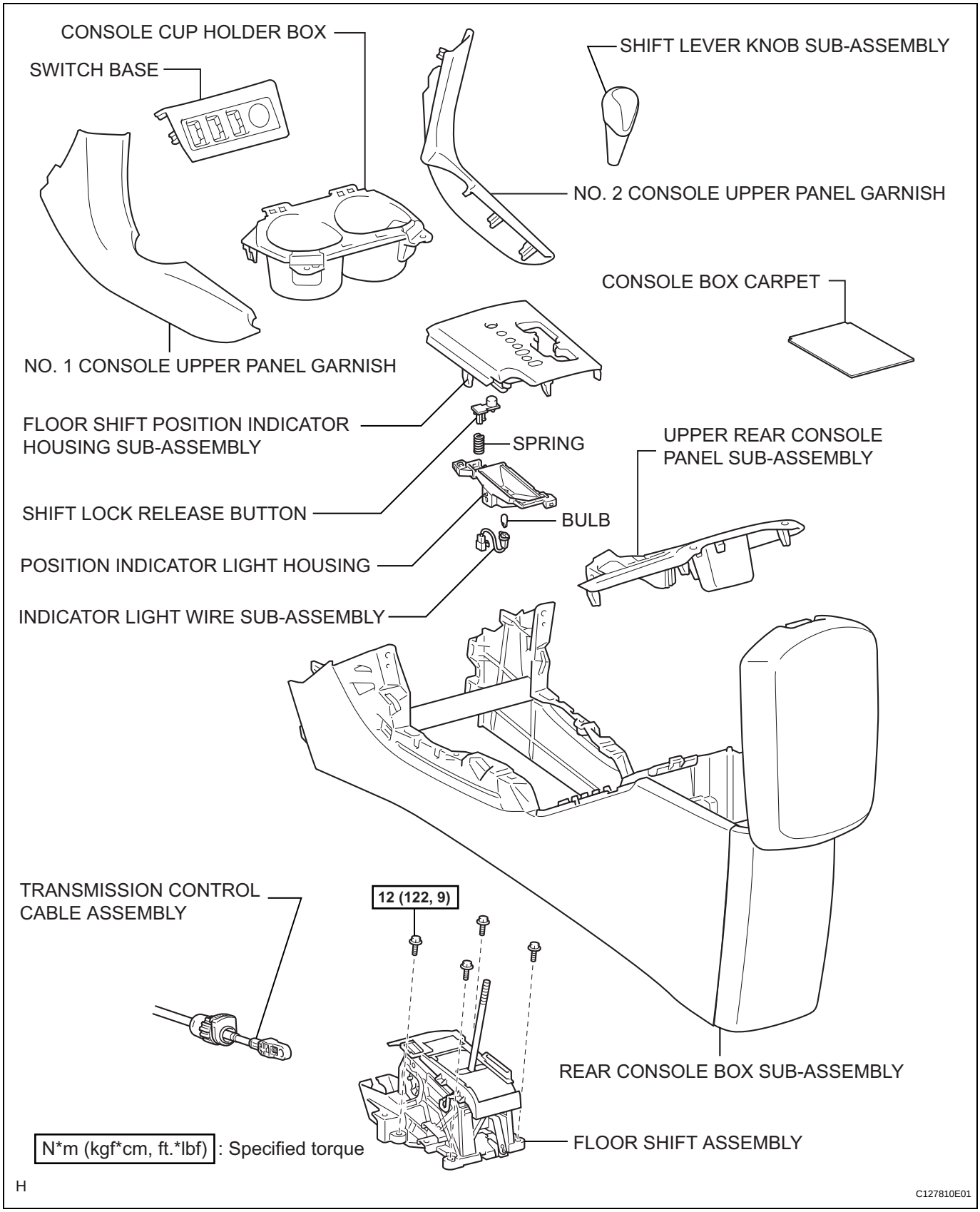

AX

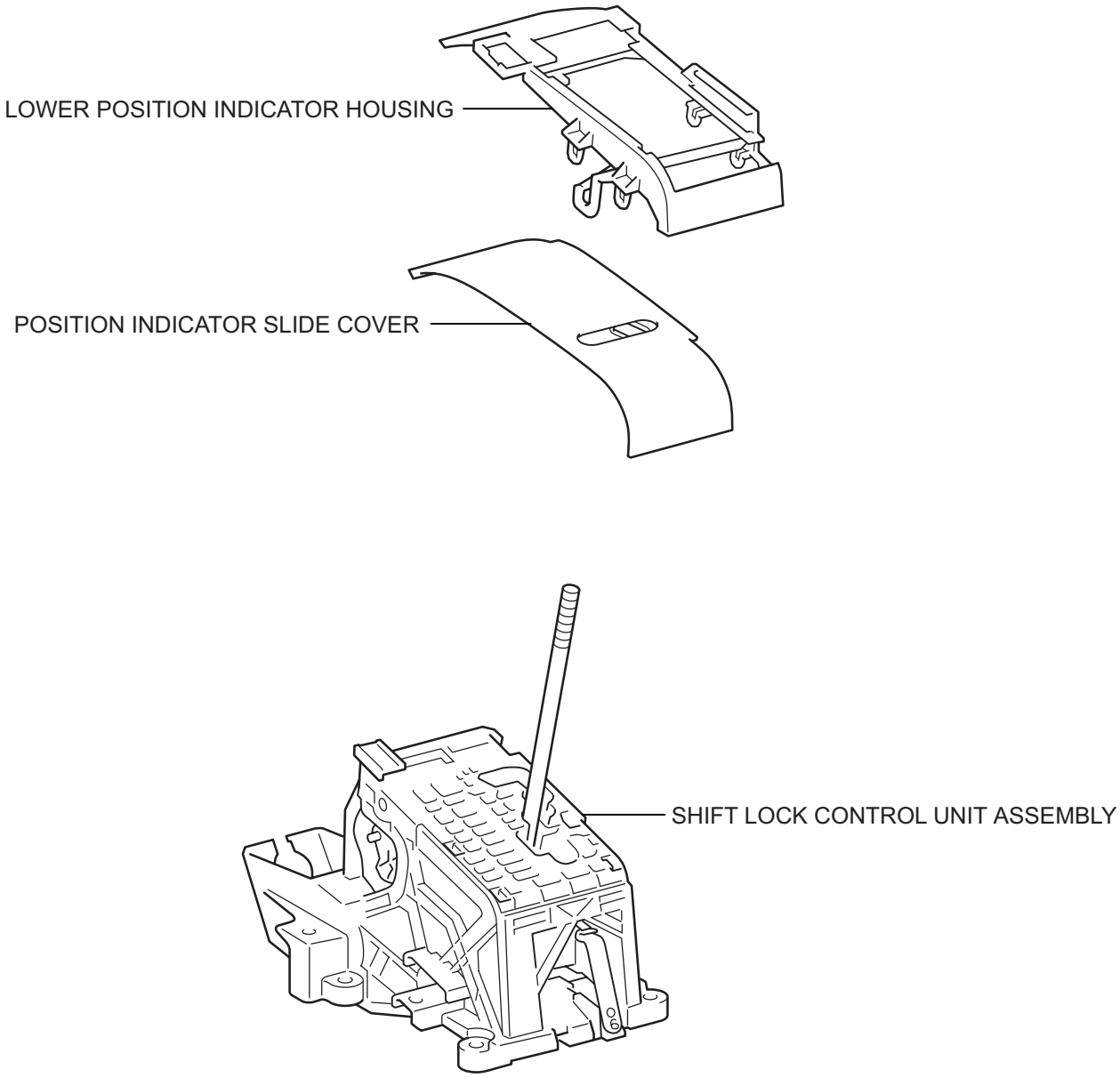

H

C127811E01

FORWARD CLUTCH

COMPONENTS

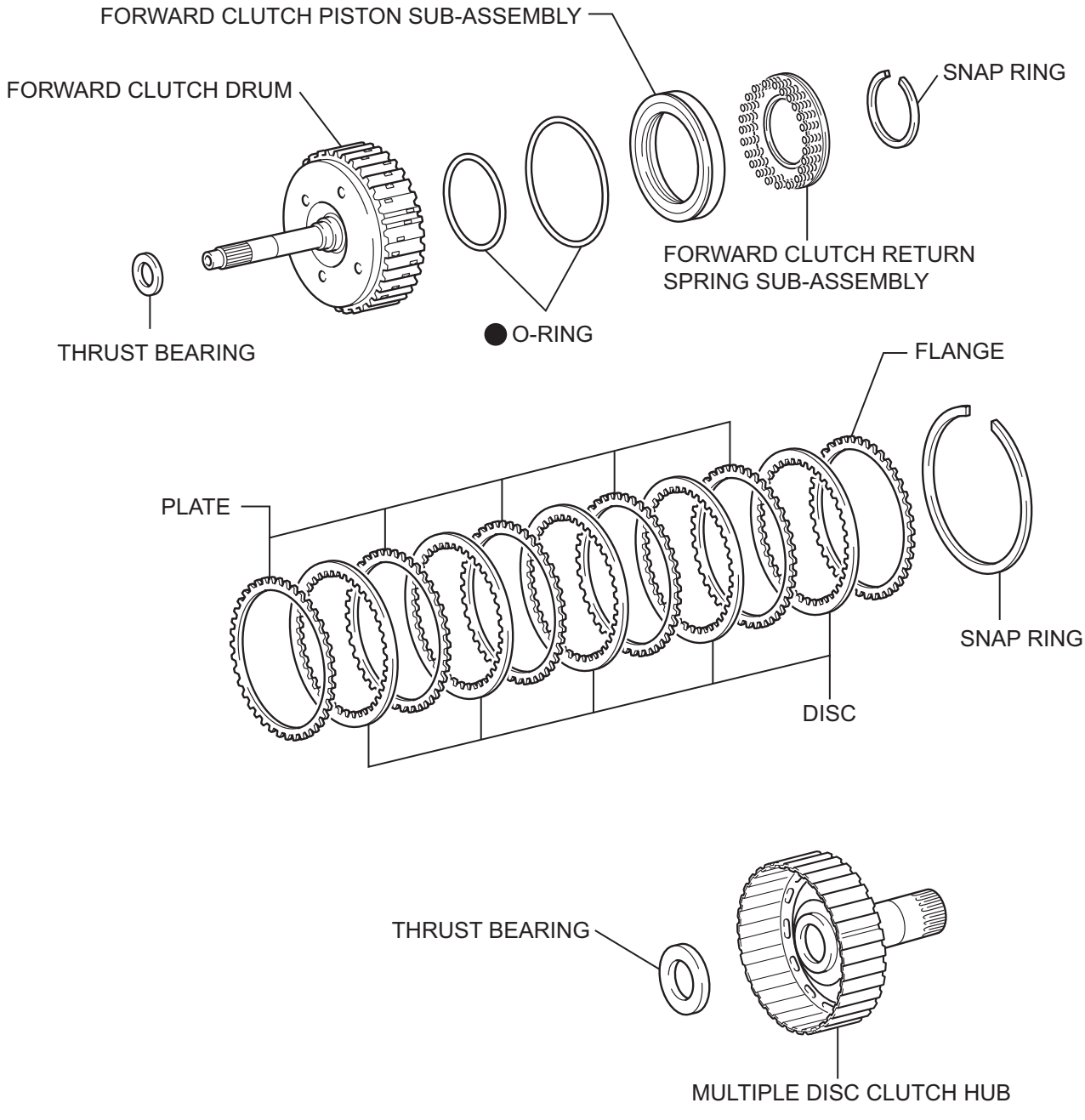

DISASSEMBLY

1. **INSPECT FORWARD CLUTCH (See page AX-227)**
2. **REMOVE FORWARD MULTIPLE DISC CLUTCH DISC**
   (a) Using a screwdriver, remove the snap ring.

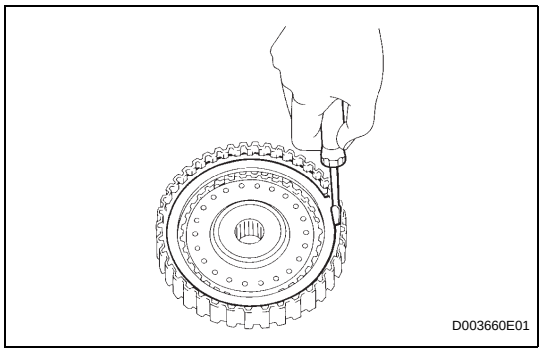

   (b) Remove the flange , 5 discs and 5 plates from the input shaft.

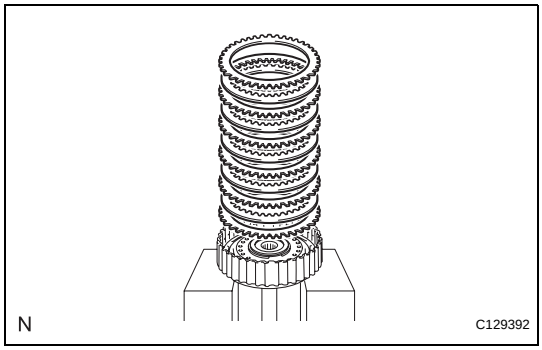

3. **INSPECT FORWARD MULTIPLE DISC CLUTCH DISC (See page AX-228)**
4. **REMOVE FORWARD CLUTCH RETURN SPRING SUB-ASSEMBLY**
   (a) Place SST on the spring retainer and compress the return spring with a press.
   SST 09350-32014 (09351-32070)
   (b) Using a snap ring expander, remove the snap ring.

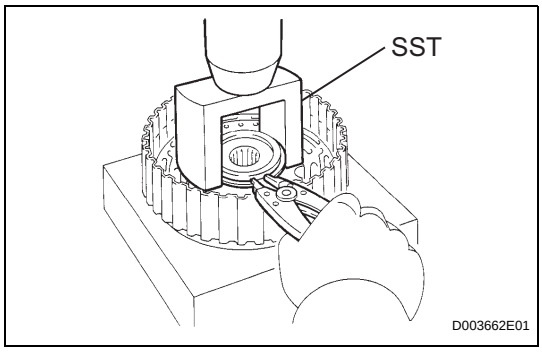

   (c) Remove the piston return spring.
5. **INSPECT FORWARD CLUTCH RETURN SPRING SUB-ASSEMBLY (See page AX-228)**

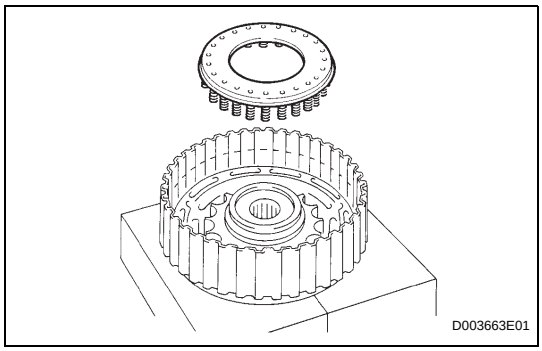

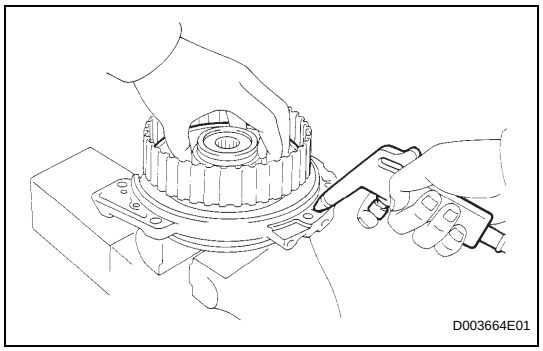

6. **REMOVE FORWARD CLUTCH PISTON SUB-ASSEMBLY**
   (a) Place the forward clutch drum onto the oil pump.
   (b) Holding the forward clutch piston with your hand, apply compressed air (392 kPa, 4.0kgf/cm^2, 57 psi) to the oil pump to remove the forward clutch piston.
   HINT:
   When the piston is slanted and cannot be removed, remove it by pushing down the protruding side and applying compressed air again, or using needle-nose pliers (with its tips wrapped in tape).

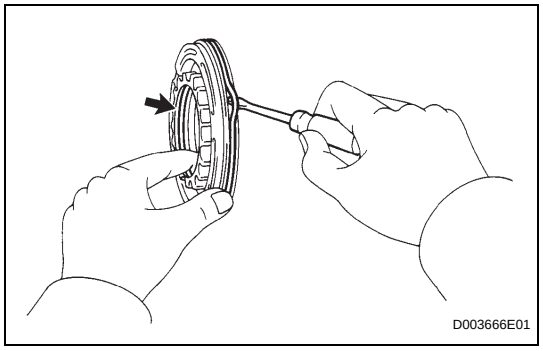

   (c) Using a screwdriver, pry out the 2 O-rings.

7. **REMOVE FORWARD CLUTCH PISTON SUB-ASSEMBLY (See page AX-228)**

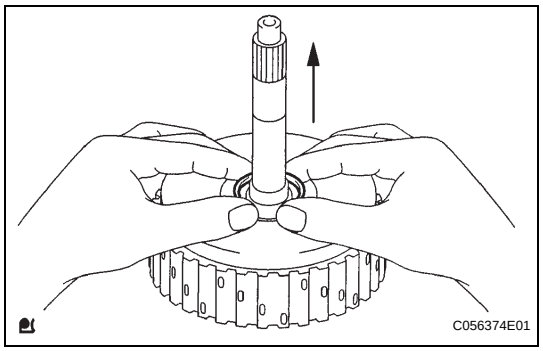

8. **REMOVE INPUT SHAFT OIL SEAL RING**

INSPECTION

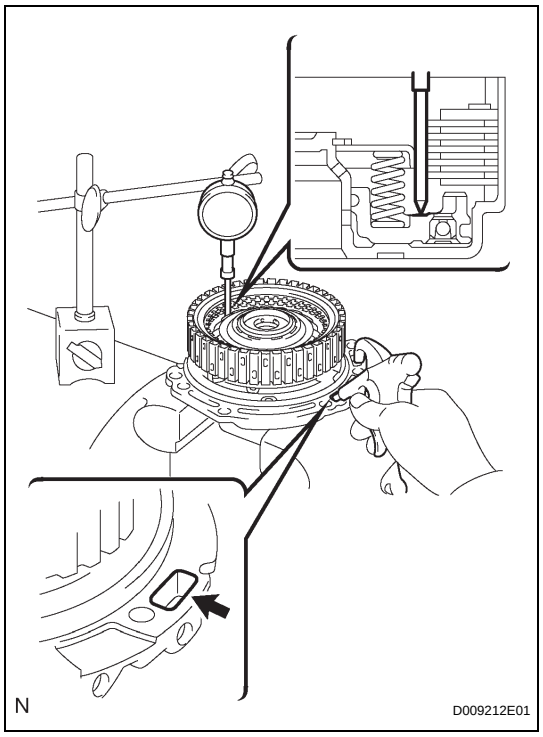

1. **INSPECT PACK CLEARANCE OF FORWARD CLUTCH**
   (a) Install the forward clutch on the oil pump.
   NOTICE:
   Be careful not to damage the oil seal ring of oil pump.
   (b) Using a dial indicator, measure the forward clutch piston stroke while applying and releasing compressed air (392 kPa, 4.0 kgf/cm^2, 57 psi)
   Standard position stroke:
   1.74 to 2.08 mm (0.0685 to 0.0819 in.)
   If the piston stroke is less than the minimum, the parts may have been assembled incorrectly. Check and reassemble again.
   If the clearance is not as specified, select another flange.
   HINT:
   As the opening is big, cover it with a shop rag to prevent the compressed air from being discharged.

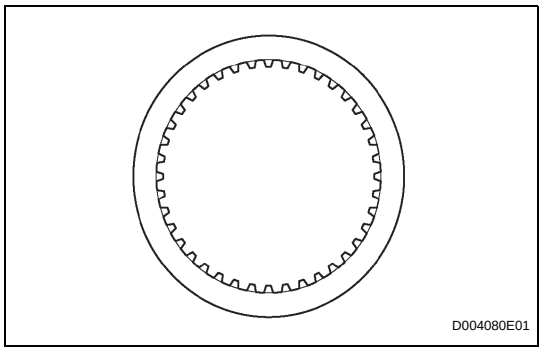

2. INSPECT FORWARD MULTIPLE DISC CLUTCH DISC

(a) Check to see if the sliding surface of the disc, plate and flange are worn or burnt.
If necessary, replace them.
HINT:
- If the lining of the disc is peeling off or discolored, replace all discs.
- Before assembling new discs, soak them in ATF for at least 15 minutes.

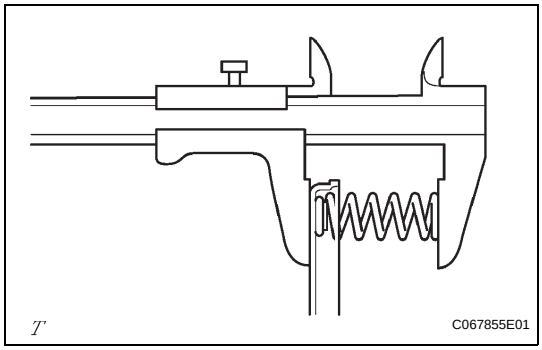

3. INSPECT FORWARD CLUTCH RETURN SPRING SUB-ASSEMBLY

(a) Using a vernier caliper, measure the free length of the spring together with the spring seat.
Standard free length:
28.23 mm (1.1102 in.)

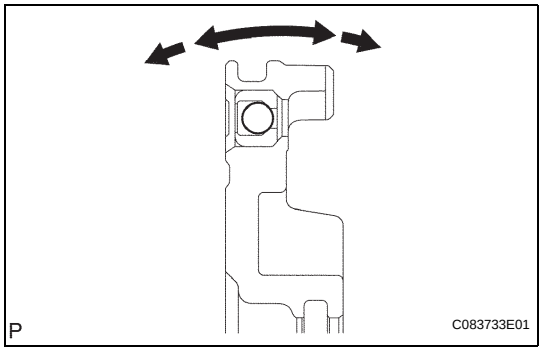

4. INSPECT FORWARD CLUTCH PISTON SUB-ASSEMBLY

(a) Shake the piston to check that the check ball is not stuck.

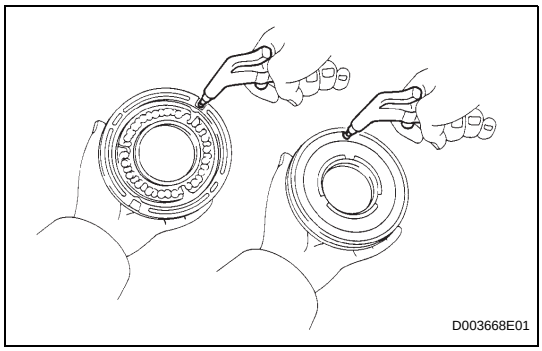

(b) Check that air does not leak from the valve when applying low compressed air (392 kPa, 4.0 kgf*cm^2, 57 psi)

REASSEMBLY

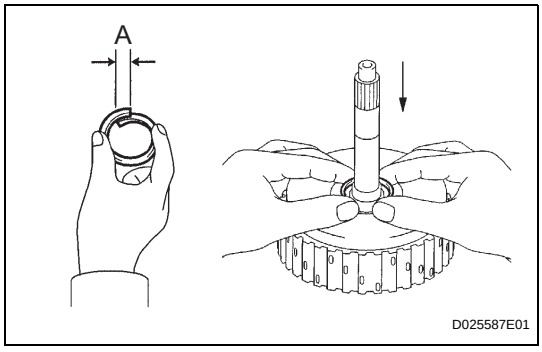

1. INSTALL INPUT SHAFT OIL SEAL RING

(a) Compress the oil seal ring from both sides to reduce dimension A.
Standard dimension A:
5 mm (0.197 in.)

(b) Coat the oil seal ring with ATF and install it to the input shaft.

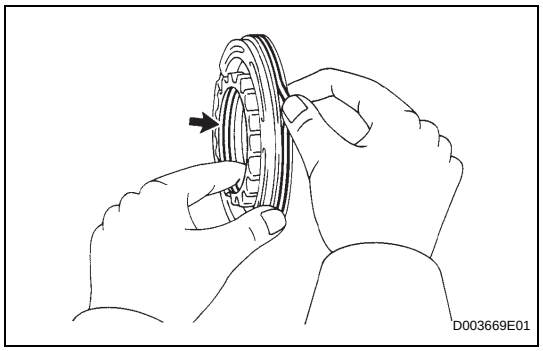

2. INSTALL FORWARD CLUTCH PISTON SUB-ASSEMBLY

(a) Coat 2 new O-rings with ATF, and install them to the forward clutch piston.

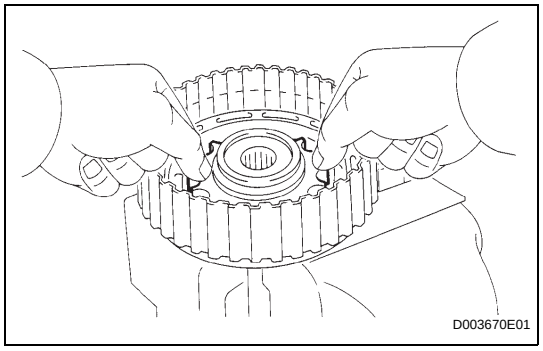

(b) Install the forward clutch piston to the forward clutch drum.

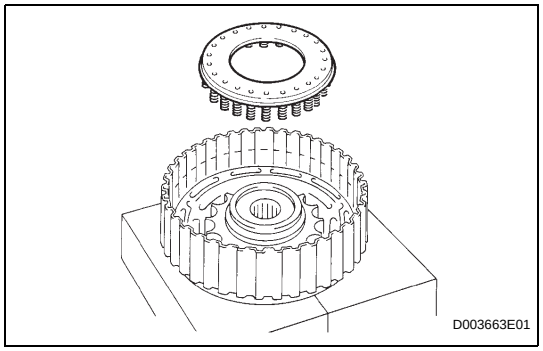

3. INSTALL FORWARD CLUTCH RETURN SPRING SUB-ASSEMBLY

(a) Place the return spring onto the piston.
SST 09350-32014 (09351-32070)

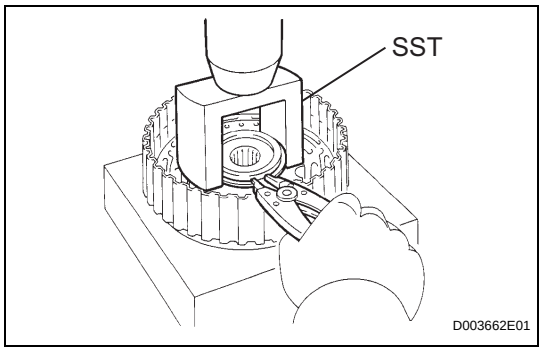

(b) Place SST on the return spring, and compress the return spring with a press.

(c) Install the snap ring with a snap ring expander. Be sure the end gap of the snap ring is not aligned with the spring retainer claw.
NOTICE:
- **Stop the press when the spring sheet is lowered to the place 1 to 2 mm (0.039 to 0.078 in.) from the snap ring groove.**
- **This prevents the spring sheet from being deformed.**
- **Do not expand the snap ring excessively.**

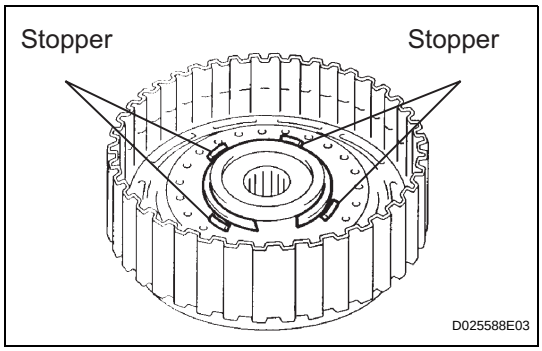

(d) Set the end gap of the snap ring in the piston shown in the illustration.
NOTICE:
The end gap of the snap ring should not coincide with any of the stoppers.

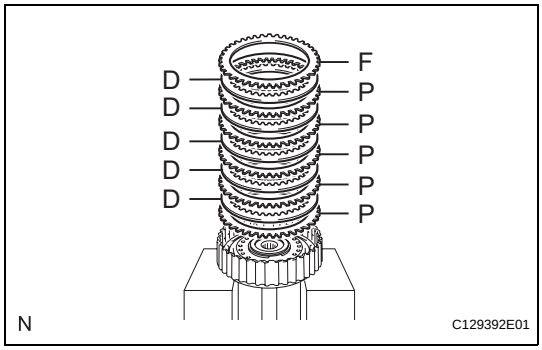

4. INSTALL FORWARD MULTIPLE DISC CLUTCH DISC

(a) Install the 5 plates, 5 discs and flange.
Install in order:
P - D - P - D - P - D - P - D - P - D - F
HINT:
P = Plate
D = Disc
F = Flange

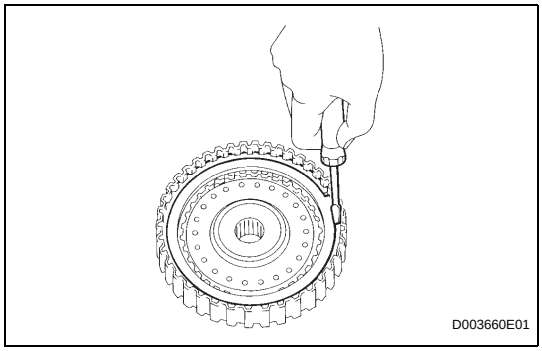

(b) Using a screwdriver, install the snap ring.
(c) Check that the end gap of the snap ring is not aligned with one of the cutouts.

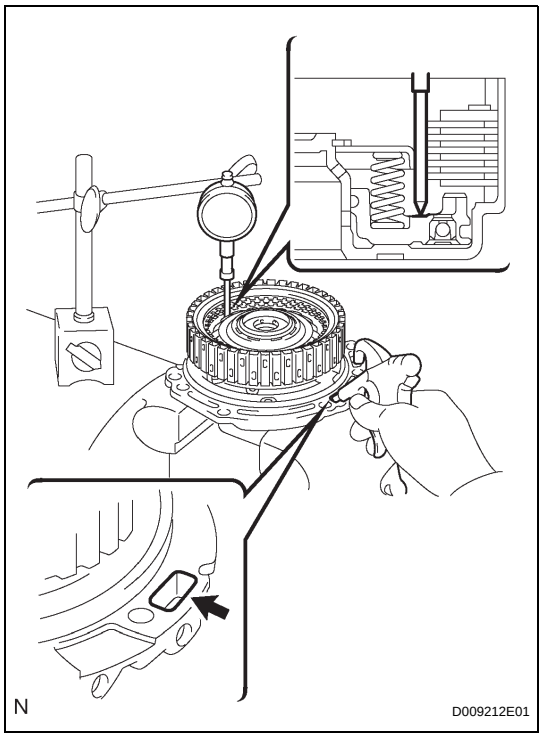

5. INSPECT PACK CLEARANCE OF FORWARD CLUTCH

(a) Install the forward clutch on the oil pump.
NOTICE:
Be careful not to damage the oil seal ring of the oil pump.
(b) Using a dial indicator, measure the forward clutch piston stroke while applying and releasing compressed air (392 kgf/cm^2, 4.0 kPa, 57 psi)
Standard piston stroke:
1.74 to 2.08 mm (0.0685 to 0.0819 in.)
If the piston stroke is less than the minimum, parts may have been assembled incorrectly. Check and reassemble again. If the clearance is not as specified, select another flange.
NOTICE:
There are 5 different flanges in thickness.
Standard flange thickness

No.	Thickness	No.	Thickness
1	3.00 mm (0.1181 in.)	4	3.45 mm (0.1358 in.)

No.	Thickness	No.	Thickness
2	3.15 mm (0.1240 in.)	5	3.60 mm (0.1417 in.)
3	3.30 mm (0.1299 in.)	-	-

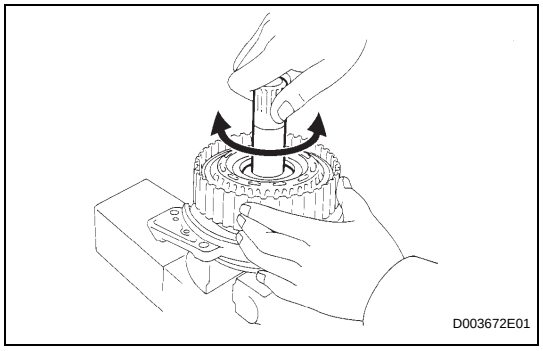

6. INSPECT FORWARD MULTIPLE DISC CLUTCH CLUTCH DISC

(a) Inspect the clutch disc rotation.

(1) After inserting the multiple disc clutch into the multiple disc clutch hub, rotate the forward clutch and check that the disc lightly rotates.

NOTICE:

Do not place the forward clutch in a vise.

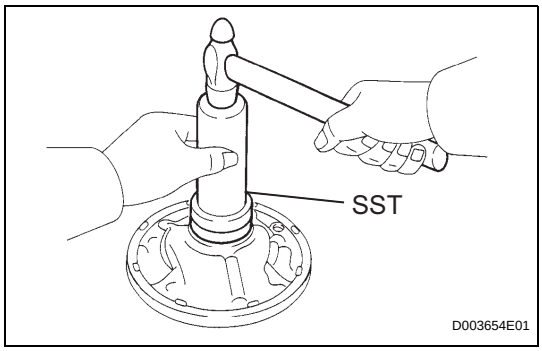

REASSEMBLY

1. INSTALL FRONT OIL PUMP OIL SEAL

(a) Using SST and a hammer, install a new oil seal to the pump.
SST 09350-32014 (09351-32140)
HINT:
The seal end should be flat with the outer edge of the oil pump.

(b) Coat the lip of the oil seal with petroleum jelly.

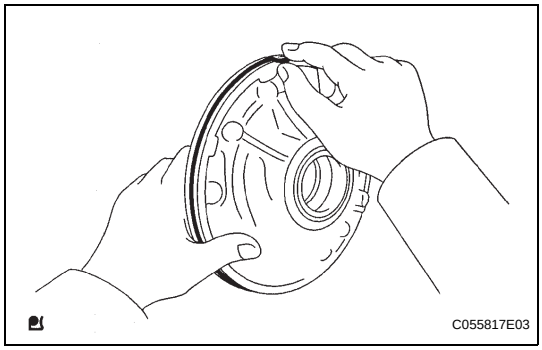

2. INSTALL FRONT OIL PUMP BODY O-RING

(a) Coat the new O-ring with ATF, and install it to the oil pump body.

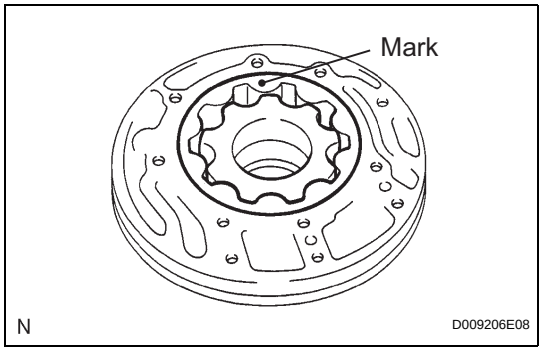

3. INSTALL FRONT OIL PUMP DRIVEN GEAR

(a) Coat the front oil pump driven gear with ATF, and install it to the oil pump body with the marked side facing up.

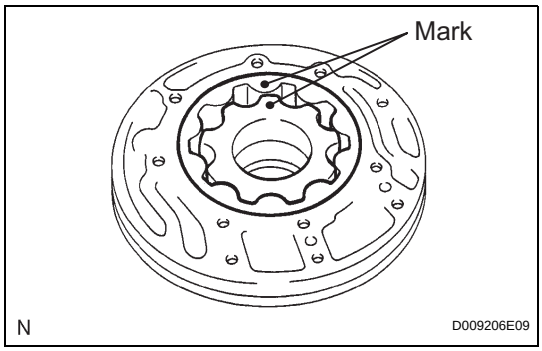

4. INSTALL FRONT OIL PUMP DRIVE GEAR

(a) Coat the front oil pump drive gear with ATF, and install it to the oil pump body with the marked side facing up.

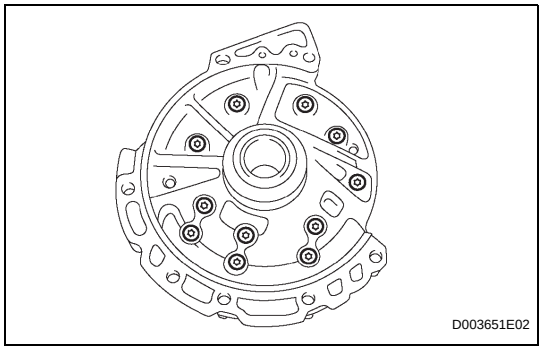

5. INSTALL STATOR SHAFT ASSEMBLY

(a) Set the stator shaft by aligning each bolt hole.

(b) Using a T30 "trox" socket, install the 11 bolts.
Torque: 9.8 N*m (100 kgf*cm, 87 in.*lbf)

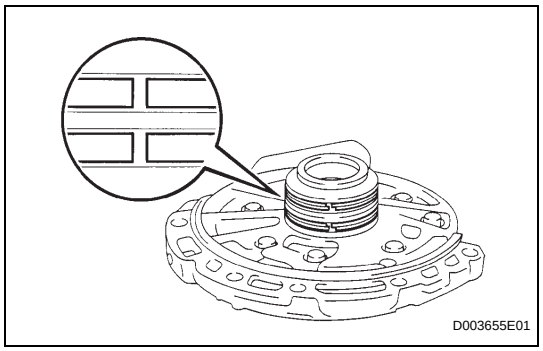

6. INSTALL CLUTCH DRUM OIL SEAL RING

(a) Install the 2 clutch drum oil seal rings.

NOTICE:

Do not expand the ring ends excessively.

7. INSPECT OIL PUMP ASSEMBLY (See page AX-218)

OIL PUMP

COMPONENTS

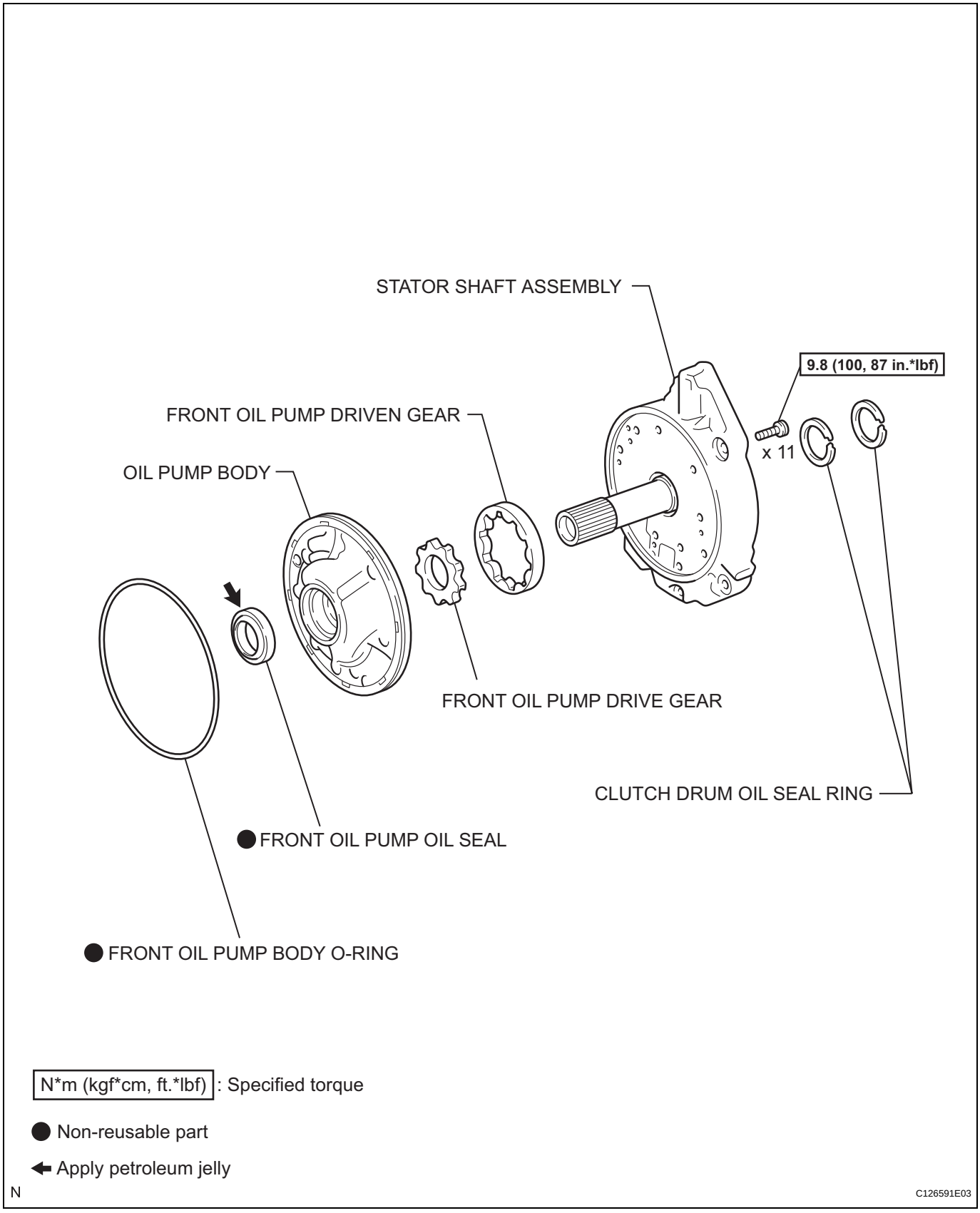

DISASSEMBLY

1. **INSPECT OIL PUMP ASSEMBLY (See page AX-218)**

2. **REMOVE CLUTCH DRUM OIL SEAL RING**
   (a) Remove the 2 clutch drum oil seal rings.

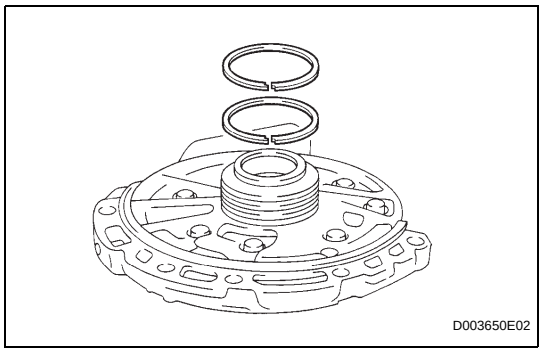

3. **REMOVE STATOR SHAFT ASSEMBLY**
   (a) Using a T30 "torx" socket, remove the 11 bolts and stator shaft. Keep the gears in assembling order.

4. **INSPECT CLEARANCE OF OIL PUMP ASSEMBLY (See page AX-218)**

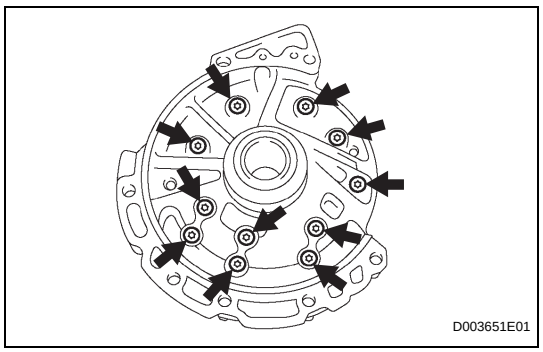

5. **REMOVE FRONT OIL PUMP DRIVE GEAR**
   (a) Remove the front oil pump drive gear.

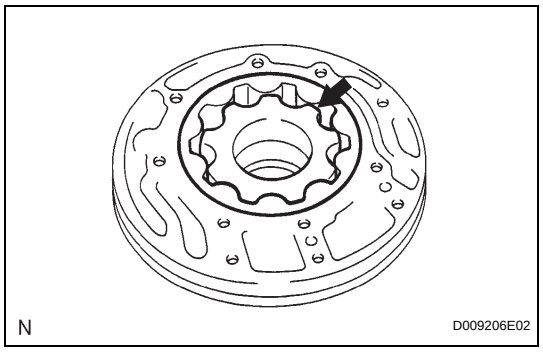

6. **REMOVE FRONT OIL PUMP DRIVEN GEAR**
   (a) Remove the front oil pump driven gear.

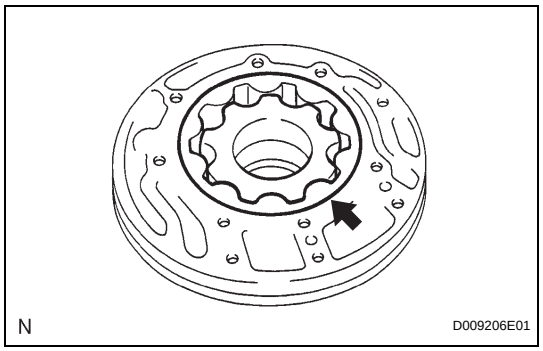

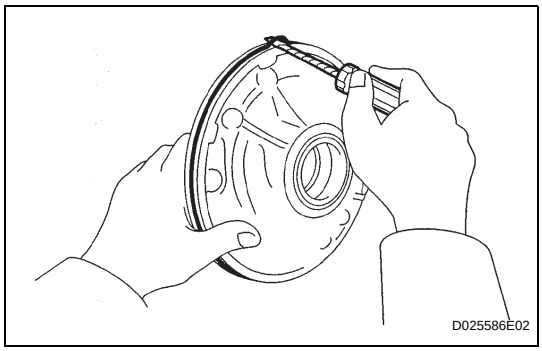

7. REMOVE FRONT OIL PUMP BODY O-RING

(a) Using a screwdriver, pry out the O-ring.
HINT:
Tape the screwdriver before use.

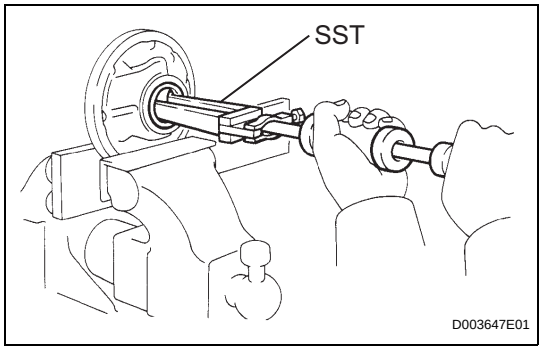

8. REMOVE FRONT OIL PUMP OIL SEAL

(a) Mount the oil pump in a soft jaw vise.
(b) Using SST, tap out the oil seal from the oil pump body.
SST 09308-00010

9. INSPECT FRONT OIL PUMP AND GEAR BODY SUB-ASSEMBLY (See page AX-219)

10. INSPECT STATOR SHAFT ASSEMBLY (See page AX-219)

INSPECTION

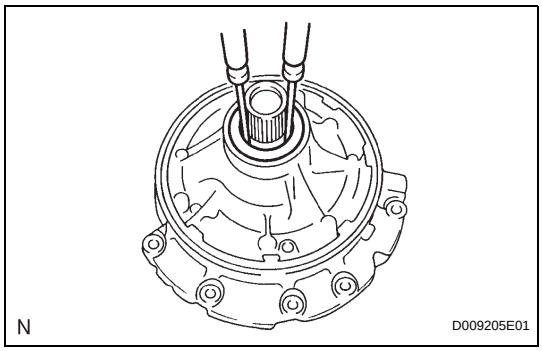

1. INSPECT OIL PUMP ASSEMBLY

(a) Turn the drive gear with 2 screwdrivers and make sure it rotates smoothly.
NOTICE:
Be careful not to damage the oil seal lip.

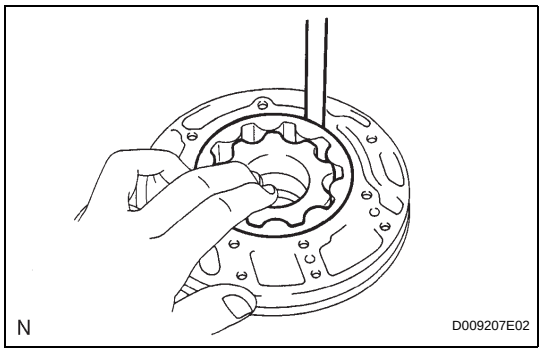

2. INSPECT CLEARANCE OF OIL PUMP ASSEMBLY

(a) Push the driven gear to one side of the body. Using a feeler gauge, measure the clearance.
Standard body clearance:
0.10 to 0.17 mm (0.0039 to 0.0067 in.)
Maximum body clearance:
0.17 mm (0.0067 in.)
If the body clearance is greater than the maximum, replace the oil pump body sub-assembly.

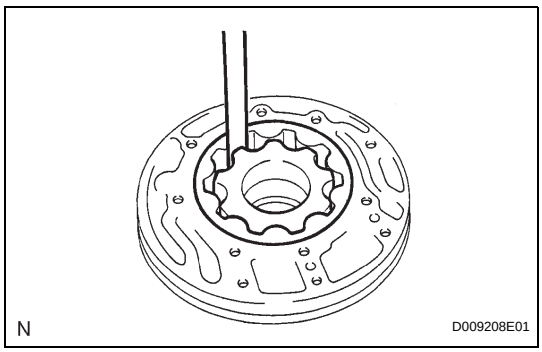

(b) Measure the tip clearance between the driven gear teeth and drive gear teeth.
Standard tip clearance:
0.07 to 0.15 mm (0.0028 to 0.0059 in.)
Maximum tip clearance:
0.15 mm (0.0059 in.)
If the tip clearance is grater than the maximum, replace the oil pump body sub-assembly.

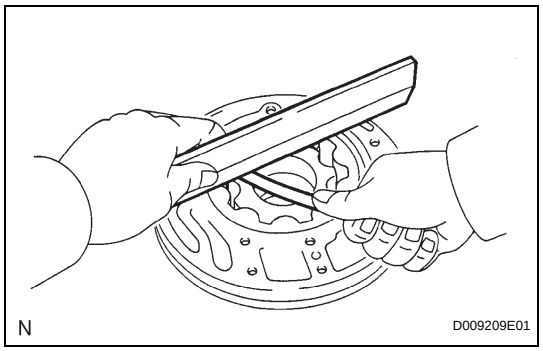

(c) Using a straightedge and feeler gauge, measure the side clearance of both gears.

Standard side clearance:
0.02 to 0.05 mm (0.0008 to 0.0020 in.)
Maximum side clearance:
0.05 mm (0.0020 in.)

Standard drive gear thickness

Mark	Thickness
1	10.690 to 10.699 mm (0.4209 to 0.4212 in.)
2	10.700 to 10.709 mm (0.4213 to 0.4216 in.)
3	10.710 to 10.720 mm (0.4217 to 0.4220 in.)
4	10.721 to 10.730 mm (0.4221 to 0.4224 in.)
5	10.731 to 10.740 mm (0.4225 to 0.4228 in.)

Standard driven gear thickness

Mark	Thickness
1	10.690 to 10.699 mm (0.4209 to 0.4212 in.)
2	10.700 to 10.709 mm (0.4213 to 0.4216 in.)
3	10.710 to 10.720 mm (0.4217 to 0.4220 in.)
4	10.721 to 10.730 mm (0.4221 to 0.4224 in.)
5	10.731 to 10.740 mm (0.4225 to 0.4228 in.)

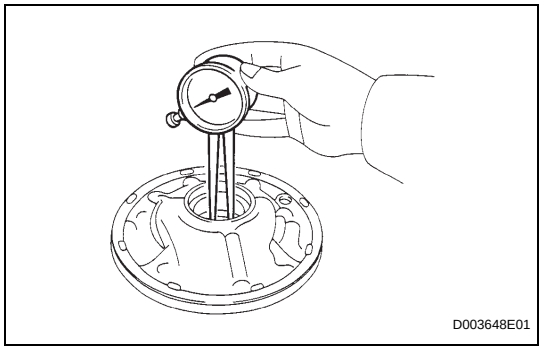

3. INSPECT FRONT OIL PUMP AND GEAR BODY SUB-ASSEMBLY

(a) Using a caliper gauge, measure the inside diameter of the oil pump body bush.

Standard inside diameter:
38.113 to 38.138 mm (1.50051 to 1.50149 in.)
Maximum inside diameter:
38.188 mm (1.50346 in.)

If the inside diameter is grater than maximum, replace the oil pump body sub-assembly.

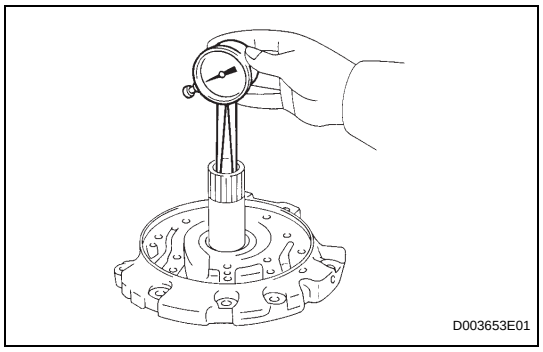

4. INSPECT STATOR SHAFT ASSEMBLY

(a) Using a caliper gauge, measure the inside diameter of the stator shaft bush.

Standard inside diameter:
21.500 to 21.526 mm (0.84646 to 0.84748 in.)
Maximum inside diameter:
21.57 mm (0.8492 in.)

If the indicator diameter is greater than the maximum, replace the stator shaft.

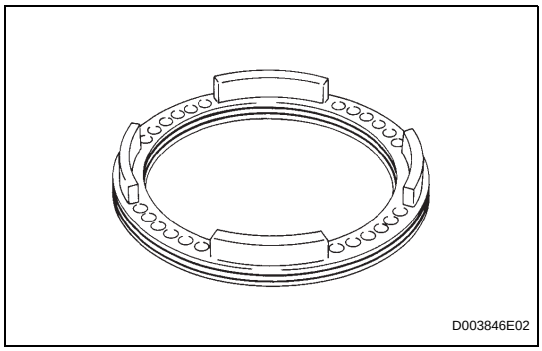

REASSEMBLY

1. INSTALL 2ND BRAKE PISTON O-RING

(a) Coat the 2 new O-rings with ATF, and install them into the 2nd brake piston.

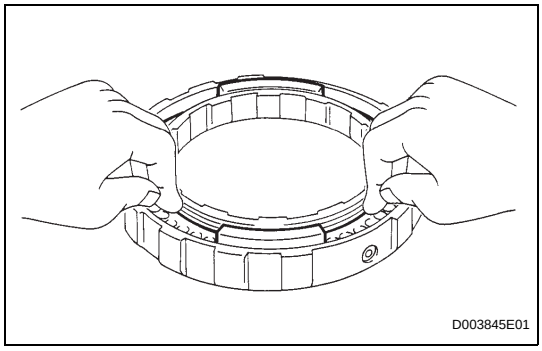

2. INSTALL 2ND BRAKE PISTON

(a) Press in the 2nd brake piston into the 2nd brake cylinder with your hands.

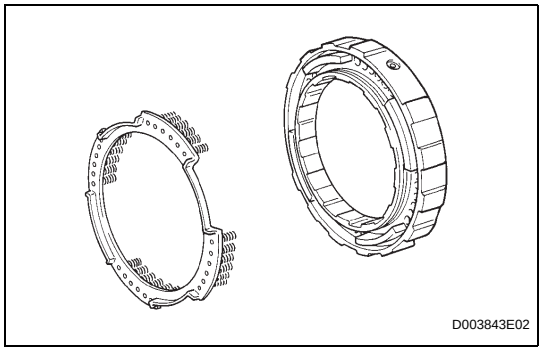

3. INSTALL 2ND BRAKE PISTON RETURN SPRING SUB-ASSEMBLY

(a) Install the piston return spring.

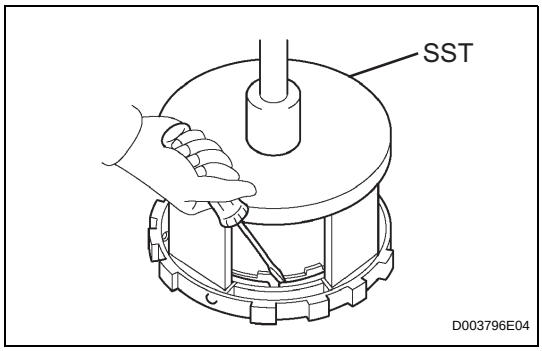

(b) Place SST on the piston return spring, and compress the piston return spring with a press.
SST 09387-00060

(c) Using a screwdriver, install the snap ring.
NOTICE:
Be sure the end gap of the snap ring is not aligned with the piston return spring claw.

SECOND BRAKE PISTON

COMPONENTS

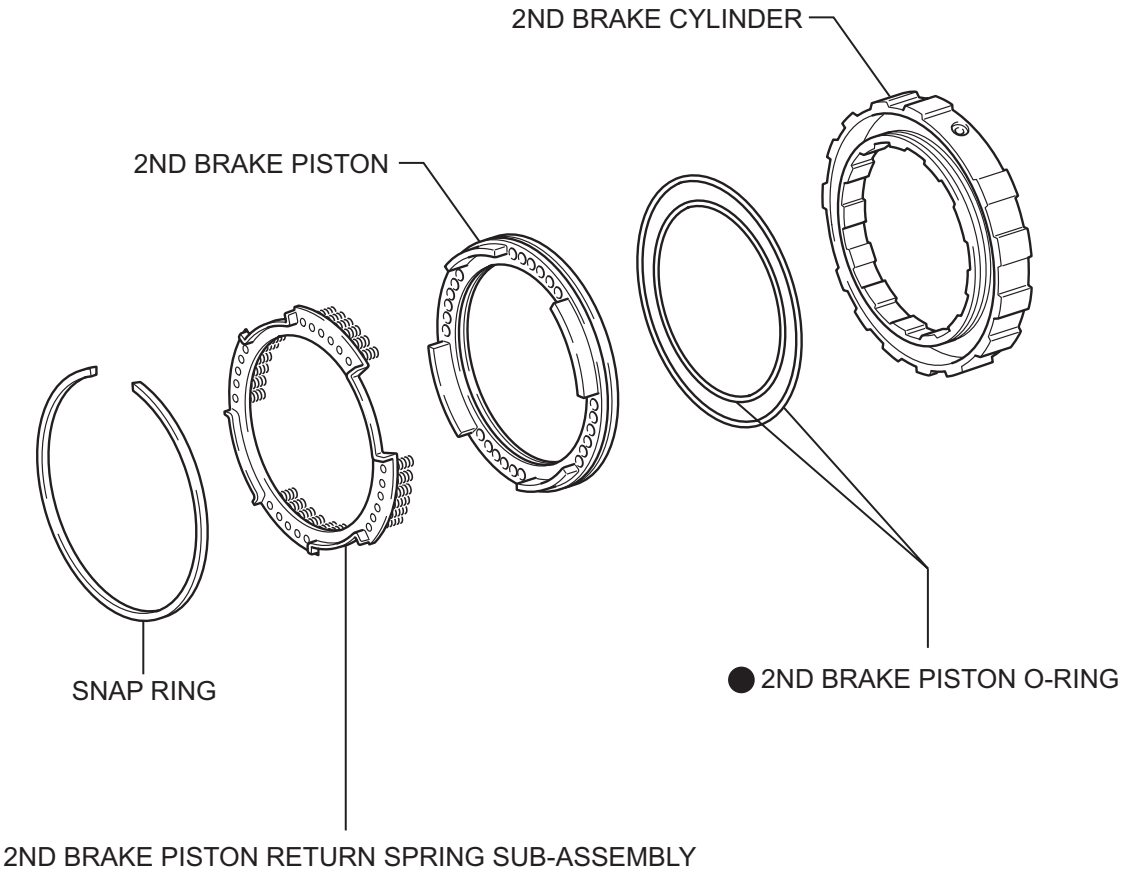

AX

● Non-reusable part

N

C126594E03

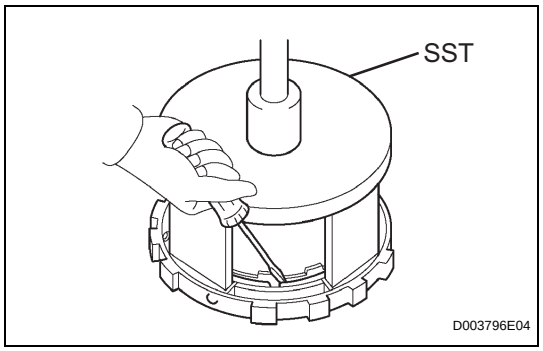

DISASSEMBLY

1. REMOVE 2ND BRAKE PISTON RETURN SPRING SUB-ASSEMBLY

(a) Place SST on the return spring and compress.

(b) Using a screwdriver, pry out the snap ring.

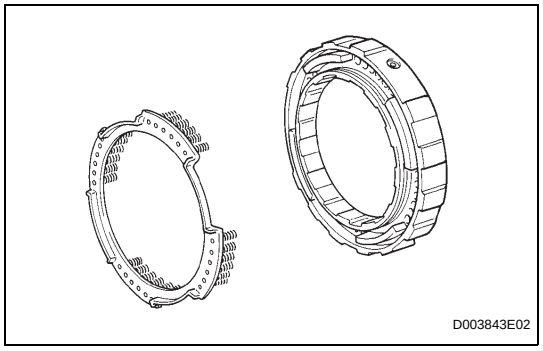

(c) Remove the piston return spring.

2. INSPECT 2ND BRAKE PISTON RETURN SPRING SUB-ASSEMBLY (See page AX-223)

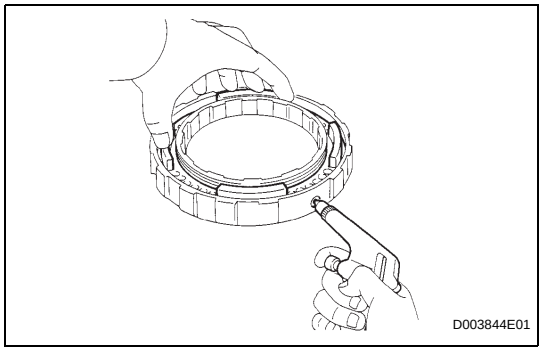

3. REMOVE 2ND BRAKE PISTON

(a) Hold the 2nd brake piston and apply compressed air (392 kPa, 4.0kgf/cm^2, 57 psi) to the 2nd brake cylinder to remove the 2nd brake piston.

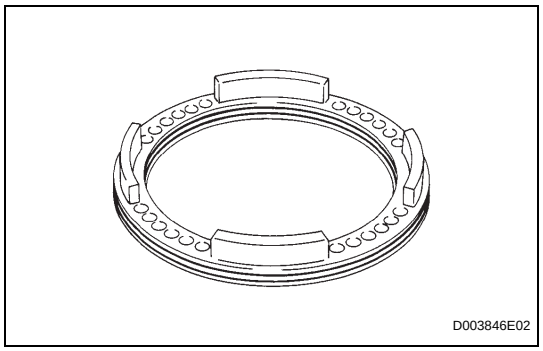

4. REMOVE 2ND BRAKE PISTON O-RING

(a) Remove the 2 O-rings from the 2nd brake piston.

INSPECTION

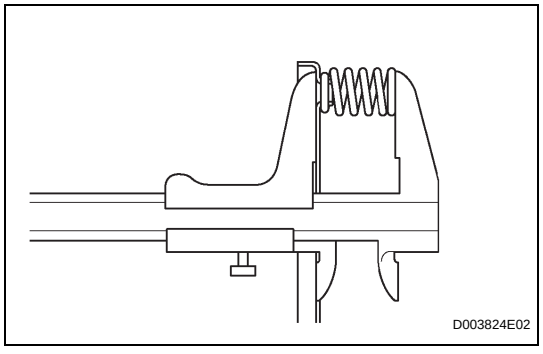

1. INSPECT 2ND BRAKE PISTON RETURN SPRING SUB-ASSEMBLY

(a) Using a vernier caliper, measure the free length of the spring together with the spring seat.

Standard free length:

16.61 mm (0.6539 in.)

ON-VEHICLE INSPECTION

1. CHECK SHIFT LOCK OPERATION

(a) Move the shift lever to P.
(b) Turn the ignition switch OFF.
(c) Check that the shift lever cannot be moved to any position other than P.
(d) Turn the ignition switch ON, depress the brake pedal and check that the shift lever can be moved to other positions.

2. CHECK SHIFT LOCK RELEASE BUTTON OPERATION

(a) When operating the shift lever with the shift lock release button pressed, check that the lever can be moved to any position other than P. If the operation cannot be performed as specified, check the shift lever assembly.

3. REMOVE KEY INTERLOCK OPERATION

(a) Turn the ignition switch ON.
(b) Depress the brake pedal and move the shift lever to any position other than P.
(c) Check that the ignition switch cannot be turned OFF.
(d) Move the shift lever to P, turn the ignition switch OFF and check that the key can be removed. If the results are not as specified, inspect the shift lock control unit.

4. CHECK SHIFT LOCK CONTROL UNIT ASSEMBLY

(a) Measure the voltage of the connector.
HINT:
Do not disconnect the shift lock control ECU connector.
Standard voltage

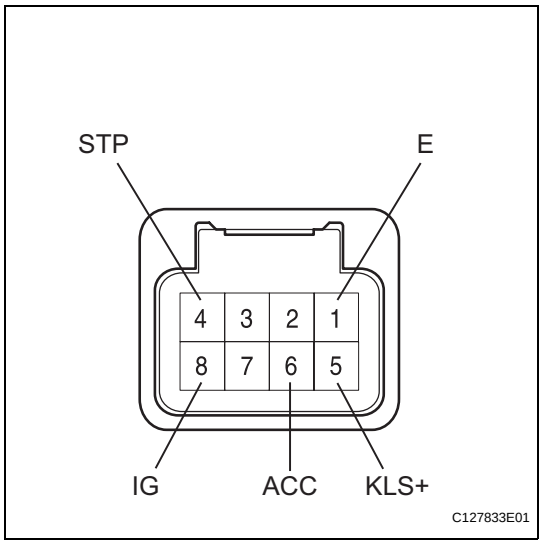

Tester Connection	Condition	Specified Condition
6 (ACC) - 1 (E)	Ignition switch ON	10 to 14 V
6 (ACC) - 1 (E)	Ignition switch ACC	10 to 14 V
6 (ACC) - 1 (E)	Ignition switch OFF	Below 1 V
4 (STP) - 1 (E)	Depress brake pedal	10 to 14 V
4 (STP) - 1 (E)	Release brake pedal	Below 1 V
5 (KLS+) - 1 (E)	Ignition switch ON and shift lever on P	Below 1 V
5 (KLS+) - 1 (E)	Ignition switch ACC and shift lever not on P	7.5 to 11 V
5 (KLS+) - 1 (E)	Ignition switch ACC and shift lever not on P (after approx. 1 second)	6 to 9 V
8 (IG) - 1 (E)	Ignition switch IG	10 to 14 V
8 (IG) - 1 (E)	Ignition switch OFF	Below 1 V

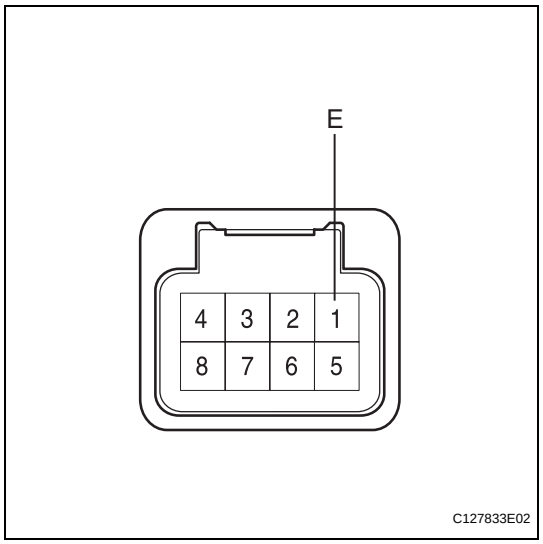

(b) the resistance of the connector.
HINT:
Do not disconnect the shift lock control ECU connector.
Standard resistance

Tester Connection	Measuring Condition	Specified Condition
1 (E) - Body ground	Always	Below 1 Ω

If the result is not as specified, replace the shift lock control ECU.

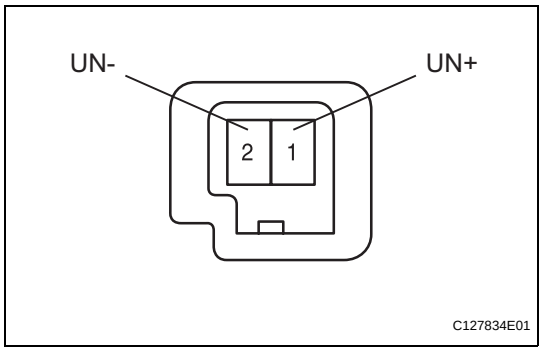

INSPECTION

1. INSPECT KEY INTERLOCK SOLENOID

(a) Disconnect the solenoid connector.

(b) Connect the battery's positive (+) lead to terminal 1 (UN+) and the battery's negative (-) lead to terminal 2 (UN-).
Check that the operating noise of the solenoid can be heard.
If the result is not as specified, replace the solenoid.

SHIFT LOCK SYSTEM

PARTS LOCATION

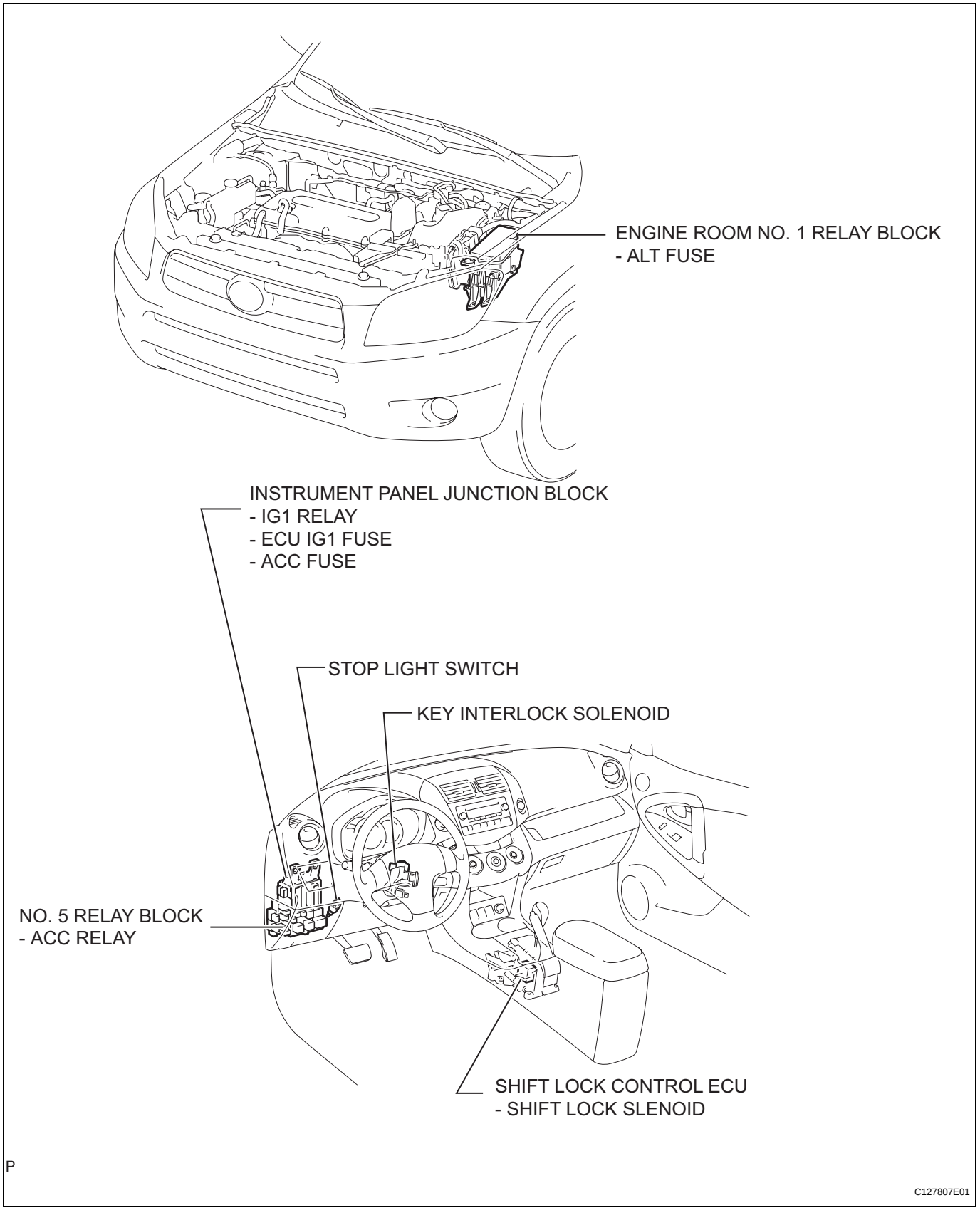

AX

P

SYSTEM DIAGRAM

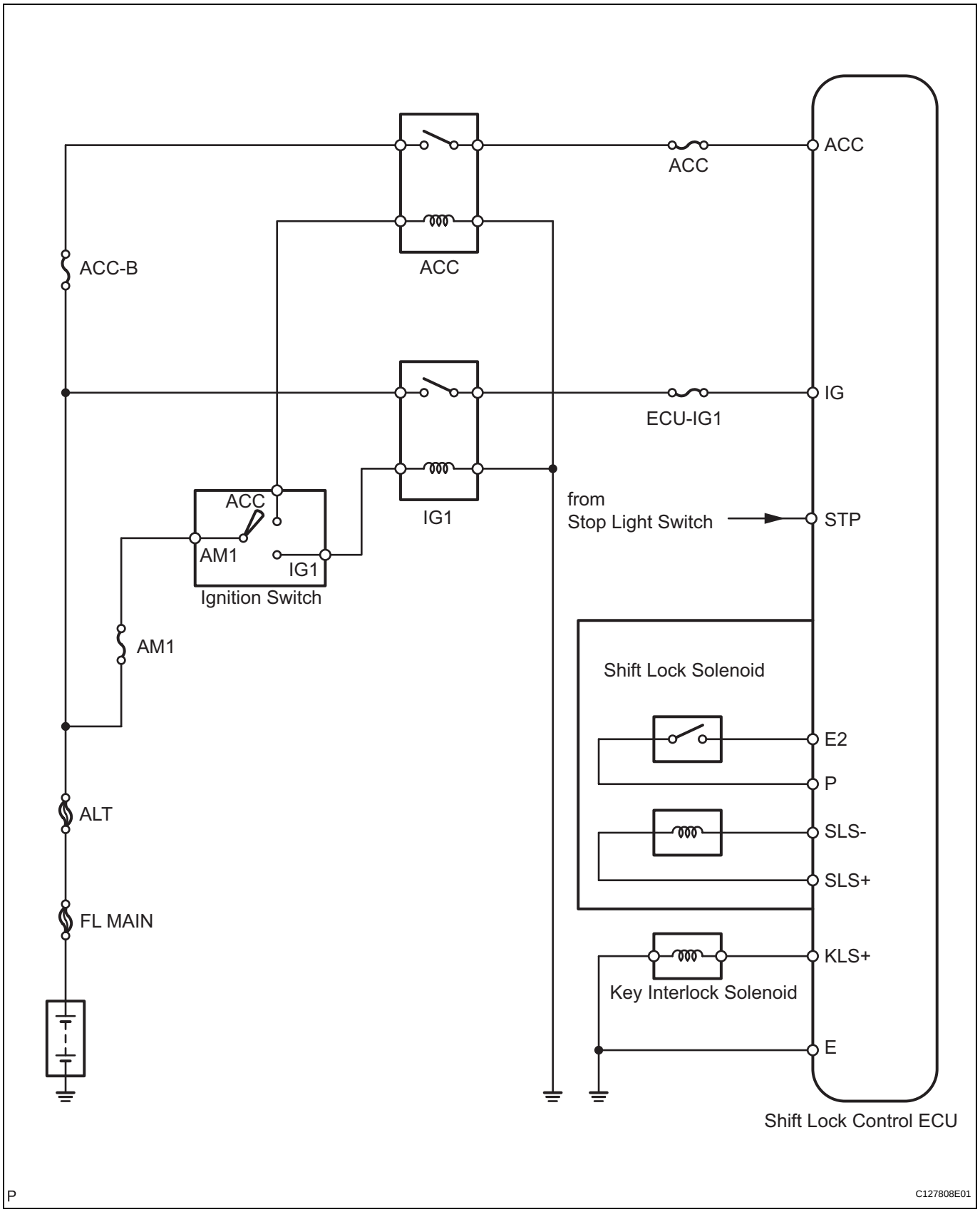

SPEED SENSOR

COMPONENTS

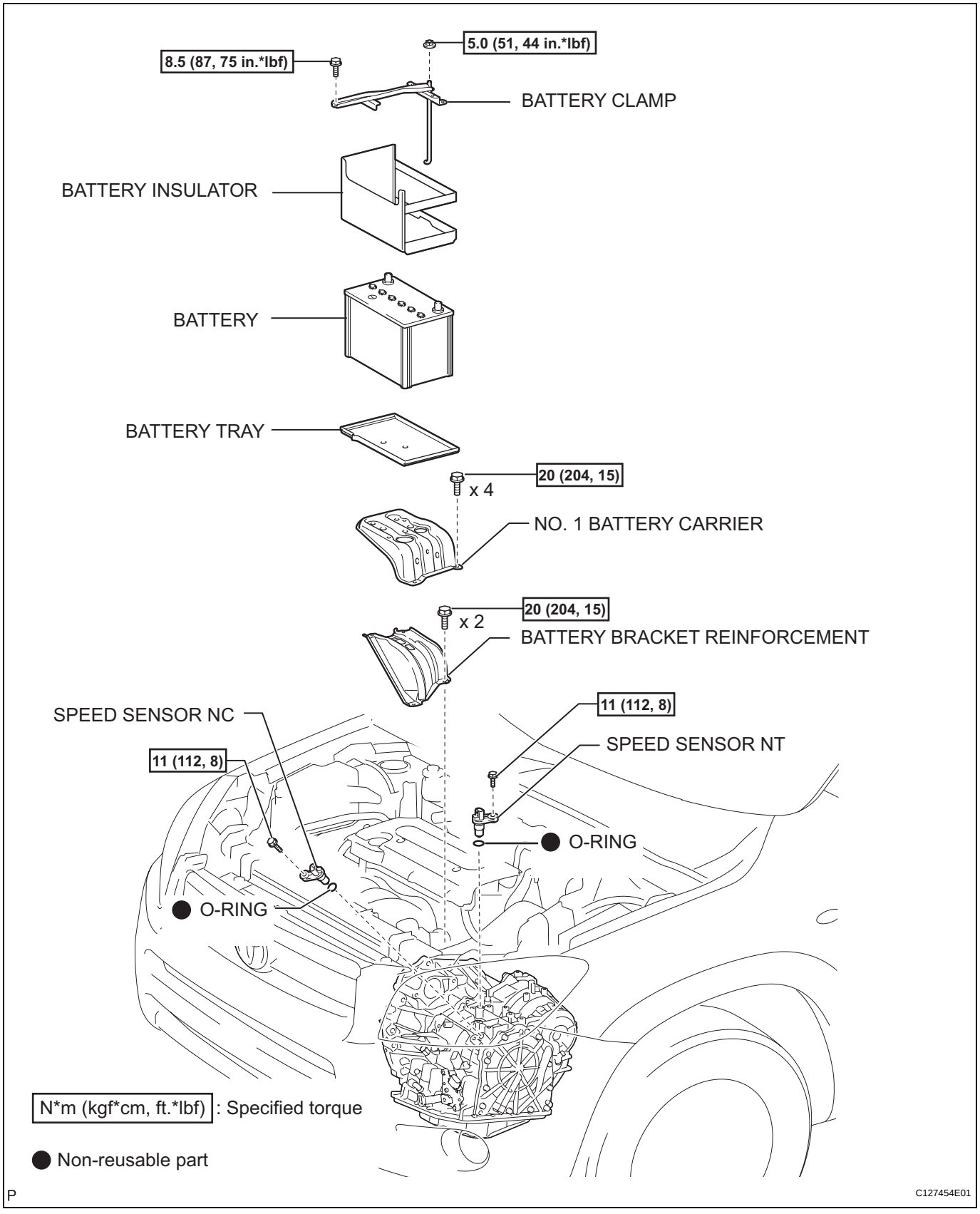

AX

REMOVAL

1. DISCONNECT CABLE FROM NEGATIVE BATTERY TERMINAL

CAUTION:

Wait at least 90 seconds after disconnecting the cable from the negative (-) battery terminal to prevent airbag and seat belt pretensioner activation.

2. REMOVE BATTERY

(a) Loosen the nut and remove the bolt and battery clamp.
(b) Remove the battery.
(c) Remove the battery tray.
(d) Remove the 4 bolts and battery carrier.
(e) Remove the 2 bolts and battery bracket reinforcement.

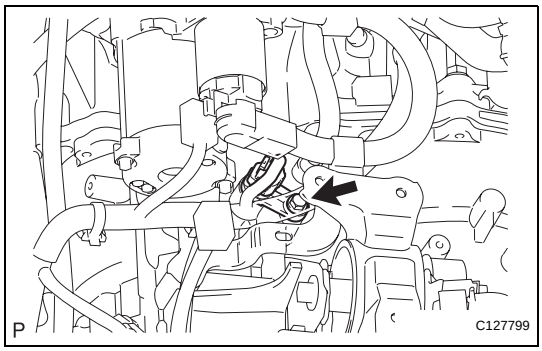

3. REMOVE SPEED SENSOR NT

(a) Disconnect the sensor connector.
(b) Remove the bolt and sensor.
(c) Remove the O-ring from the sensor.

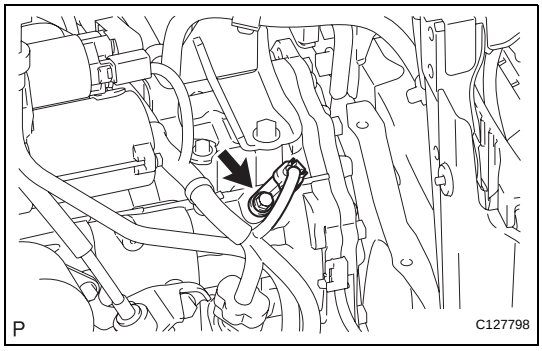

4. REMOVE SPEED SENSOR NC

(a) Disconnect the sensor connector.
(b) Remove the bolt and sensor.
(c) Remove the O-ring from the sensor.

INSPECTION

1. INSPECT SPEED SENSOR NT

Measure the resistance of the sensor.

Standard resistance

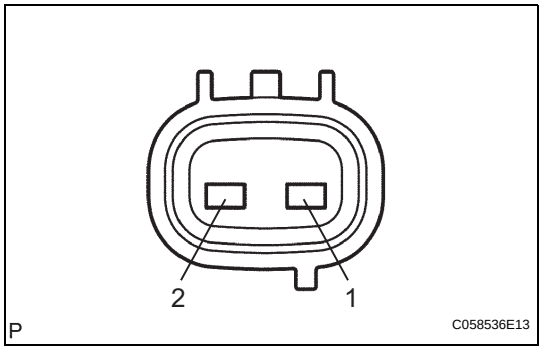

Tester Connection	Condition	Specified Condition
1 - 2	20°C (68°F)	560 to 680 Ω

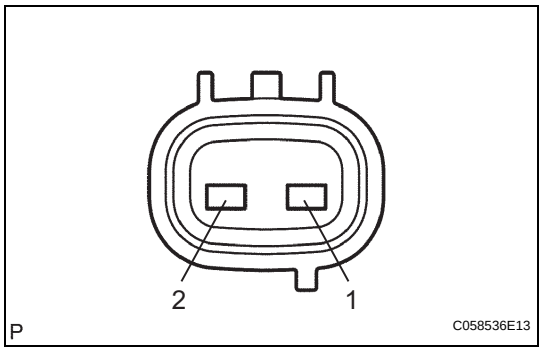

2. INSPECT SPEED SENSOR NC

Measure the resistance of the sensor.

Standard resistance

Tester Connection	Condition	Specified Condition
1 - 2	20°C (68°F)	560 to 680 Ω

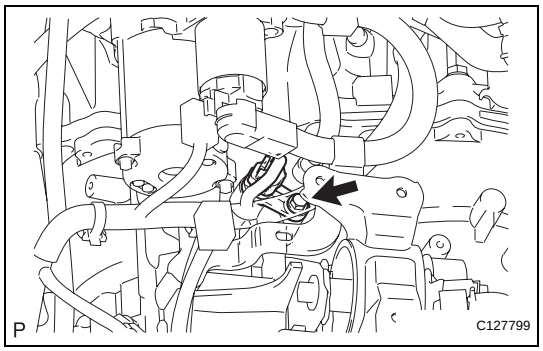

INSTALLATION

1. INSTALL SPEED SENSOR NC

(a) Coat a new O-ring with ATF.
(b) Install the O-ring to the sensor.
(c) Install the sensor with the bolt.
Torque: 11 N*m (112 kgf*cm, 8 ft.*lbf)
(d) Connect the sensor connector.

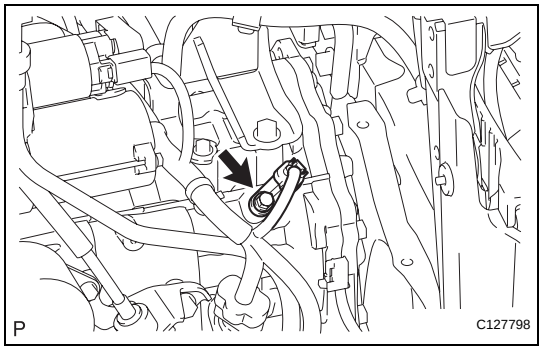

2. INSTALL SPEED SENSOR NT

(a) Coat a new O-ring with ATF.
(b) Install the O-ring to the sensor.
(c) Install the sensor with the bolt.
Torque: 11 N*m (112 kgf*cm, 8 ft.*lbf)
(d) Connect the sensor connector.

3. INSTALL BATTERY

(a) Install the battery bracket reinforcement with the 2 bolts.
Torque: 20 N*m (204 kgf*cm, 15 ft.*lbf)
(b) Install the battery carrier with the 4 bolts.
Torque: 20 N*m (204 kgf*cm, 15 ft.*lbf)
(c) Install the battery tray.
(d) Install the battery with the battery clamp.
Torque: 8.5 N*m (87 kgf*cm, 75 in.*lbf) for bolt
5.0 N*m (51 kgf*cm, 44 in.*lbf) for nut

4. CONNECT CABLE TO NEGATIVE BATTERY TERMINAL

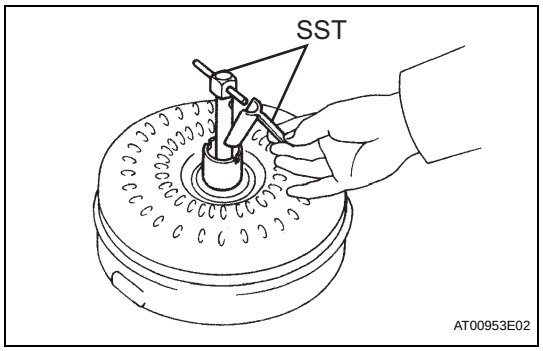

TORQUE CONVERTER AND DRIVE PLATE

INSPECTION

1. INSPECT TORQUE CONVERTER CLUTCH ASSEMBLY

(a) Inspect the one-way clutch.

(1) Install SST to the inner race of the one-way clutch.
SST 09350-32014 (09351-32010)

(2) Set SST so that it fits in the notch of the converter hub and in the outer race of the one-way clutch.
SST 09350-32014 (09351-32020)

(3) With the torque converter standing on its side, check that the clutch locks when SST is turned counterclockwise and rotates freely and smoothly when turned clockwise. If the results are not as specified, clean the converter and recheck the one-way clutch. If the results still are not as specified, replace the converter.

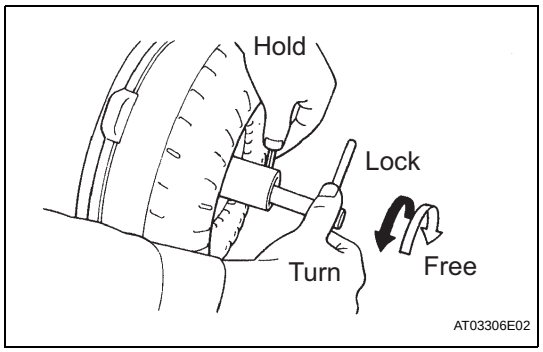

(b) Determine the condition of the torque converter clutch.

(1) Check that the following conditions are met:
- During the stall test or when the shift lever is on N, metallic sounds are not emitted from the torque converter clutch.
- The one-way clutch turns in one direction and locks in the other direction.
- The amount of powder in the ATF is not greater than the sample shown in the illustration.
  If the results are not as specified, replace the torque converter clutch assembly.

HINT:
The sample illustration shows approximately 0.25 liters (0.26 US qts, 0.22 Imp. qts) of the ATF taken from a removed torque converter clutch.

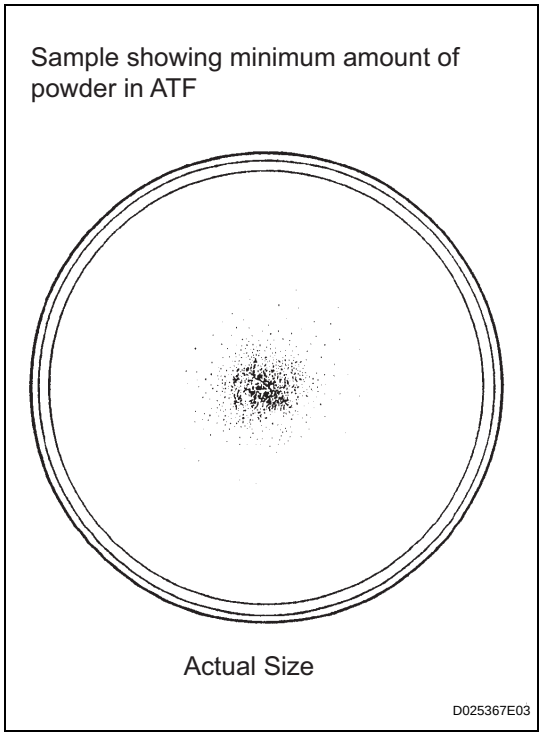

(c) Replace the ATF in the torque converter clutch.

(1) If the ATF is discolored and/or has a foul odor, stir the ATF in the torque converter clutch thoroughly and drain the ATF with the torque converter facing upward.

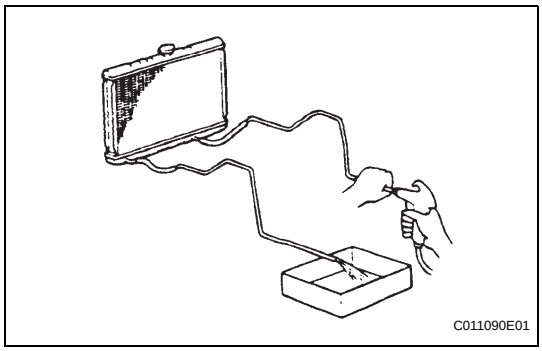

(d) Clean and check the oil cooler and oil pipe line.
  (1) If the torque converter clutch is inspected or the ATF is replaced, clean the oil cooler and oil pipe line.
    - Apply compressed air of 196 kPa (2 kgf/cm^2, 28 psi) into the inlet hose.
    - If a large amount of powder is found in the ATF, add new ATF using a bucket pump and clean the oil cooler and oil pipe line again.
  (2) If the ATF is cloudy, inspect the oil cooler (radiator).

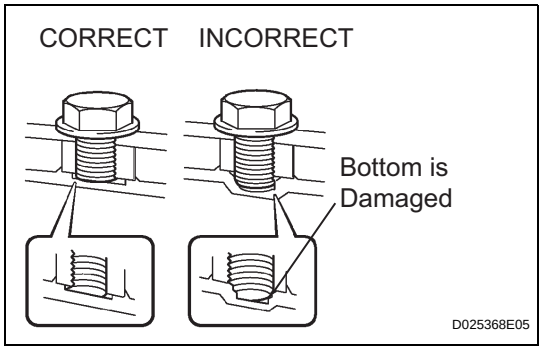

(e) Prevent deformation of the torque converter clutch and damage to the oil pump gear.
  (1) When any marks due to interference are found on the end of the bolt for the torque converter clutch and on the bottom of the bolt hole, replace the bolt and torque converter clutch.
  (2) All of the bolts should be the same length.
  (3) Make sure no spring washers are missing.

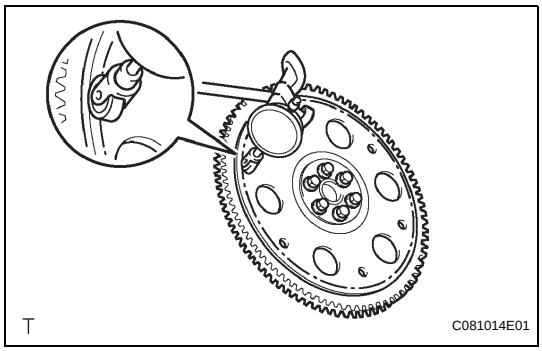

2. INSPECT DRIVE PLATE AND RING GEAR SUB-ASSEMBLY

(a) Set up a dial indicator and measure the drive plate runout.

Maximum runout:

0.30 mm (0.0118 in.)

If the runout is greater than the maximum or if the ring gear is damaged, replace the drive plate. If installing a new drive plate, note the orientation of the spacers and tighten the bolts.

Torque: 98 N*m (999 kgf*cm, 72 ft.*lbf)

(b) Check the ring gear for any damage.

If the ring gear is damaged, replace the drive plate.

TRANSMISSION CONTROL CABLE ASSEMBLY

REPLACEMENT

1. **REMOVE REAR CONSOLE BOX SUB-ASSEMBLY**
   (a) Remove the console box (see page IP-20).

2. **DISCONNECT CABLE FROM NEGATIVE BATTERY TERMINAL**
   CAUTION:
   Wait at least 90 seconds after disconnecting the cable from the negative (-) battery terminal to prevent airbag and seat belt pretensioner activation.

3. **REMOVE BATTERY**
   (a) Loosen the nut and remove the bolt and battery clamp.
   (b) Remove the battery.
   (c) Remove the battery tray.
   (d) Remove the 4 bolts and battery carrier.
   (e) Remove the 2 bolts and battery bracket reinforcement.

4. **REMOVE AIR CLEANER ASSEMBLY**
   (a) Disconnect the mass air flow meter connector.
   (b) Remove the 2 clamps of the engine wire.

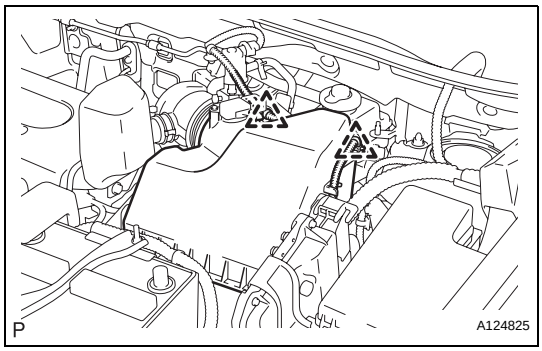

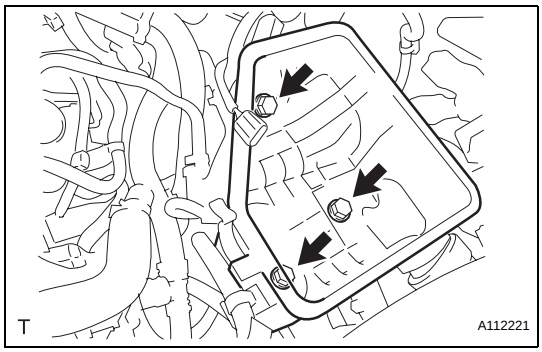

   (c) Remove the 4 bolts from the air cleaner case.
   (d) Disconnect the air cleaner case from the No. 1 air cleaner inlet.

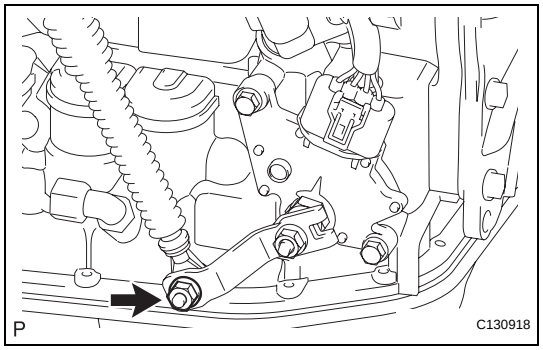

5. REMOVE TRANSAXLE CONTROL CABLE ASSEMBLY

(a) Remove the nut and disconnect the control cable from the control shaft lever.

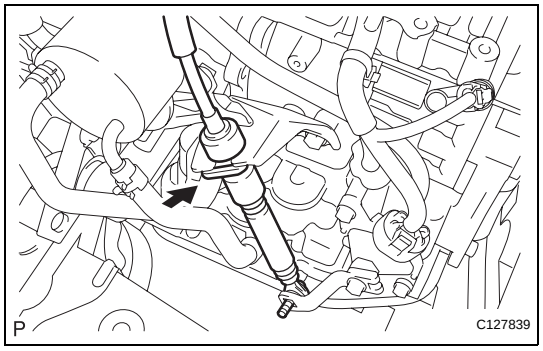

(b) Remove the clip and disconnect the control cable from the control cable bracket.

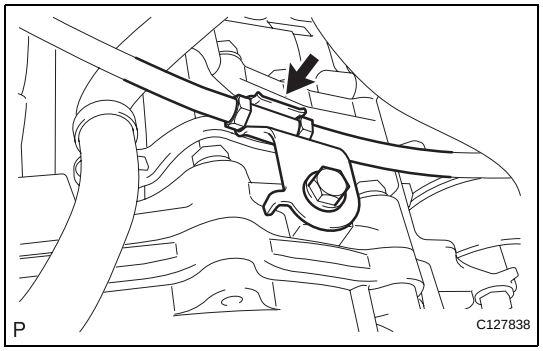

(c) Disconnect the control cable from the control cable support.

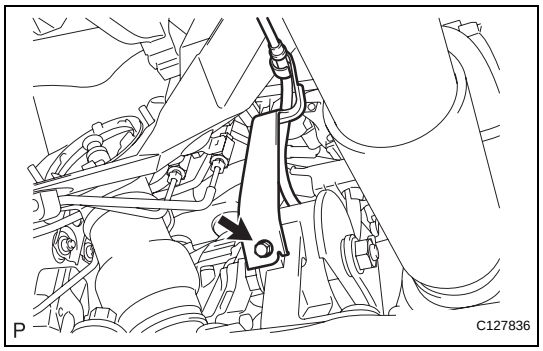

(d) Remove the bolt and disconnect the clamp of the control cable.

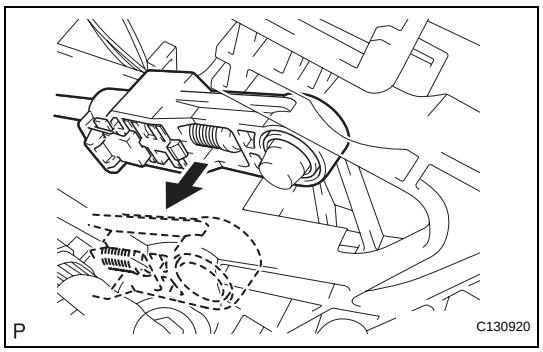

(e) Disconnect the control cable from the shift lever.

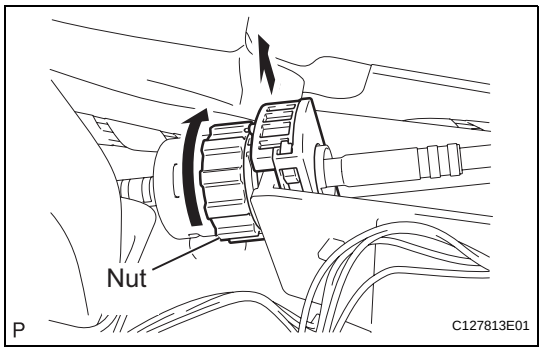

(f) Turn the nut and disconnect the control cable from the shift lever retainer.

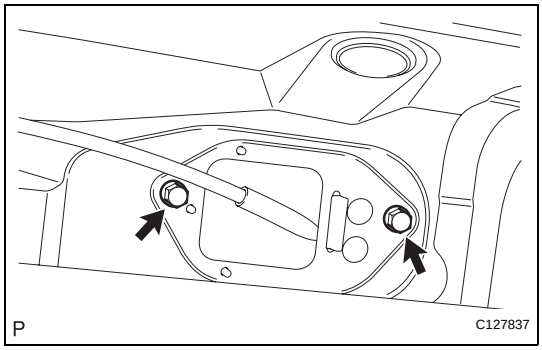

(g) Remove the 2 bolts and control cable.

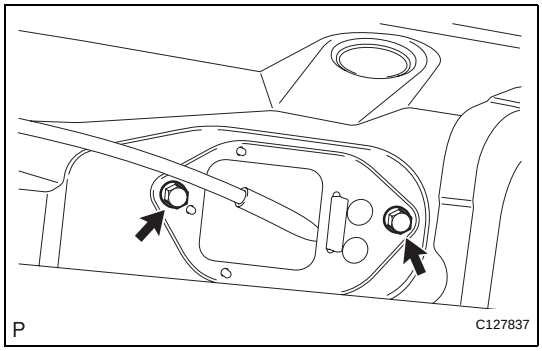

6. INSTALL TRANSAXLE CONTROL CABLE ASSEMBLY

(a) Install the control cable with the 2 bolts.
Torque: 5.0 N*m (51 kgf*cm, 44 in.*lbf)

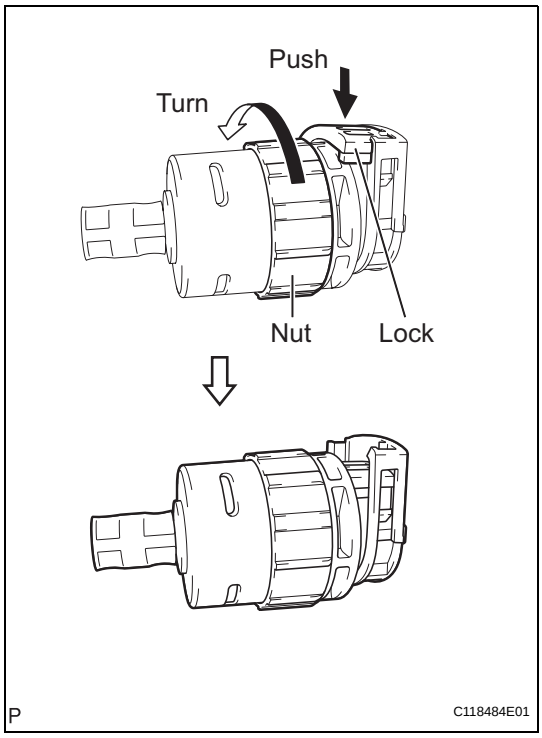

(b) Turn the nut of the control cable and push in the lock.

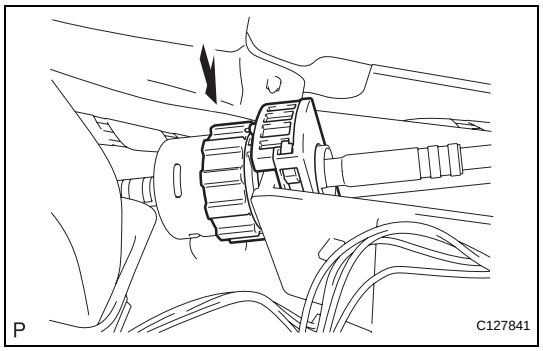

(c) Install the control cable onto the shift lever retainer.

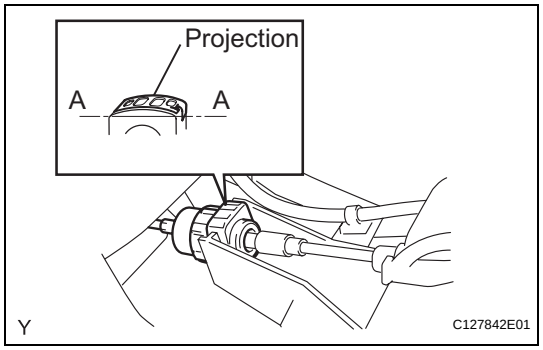

NOTICE:
- **Install the cable with the protruding portion of the cable outer facing upward.**
- **After installing, check that the lock of the cable outer is protruding beyond portion A-A, as shown in the illustration.**

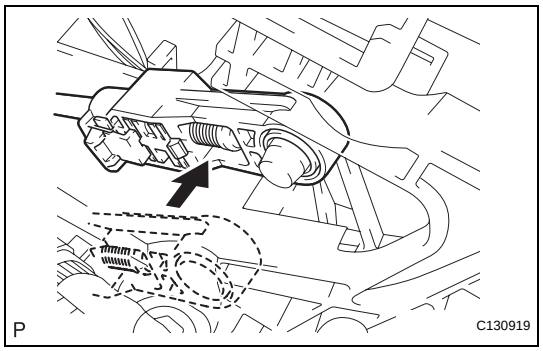

(d) Connect the control cable to the shift lever.
NOTICE:
Connect the control cable so that the adjusting mechanism lock of the control cable is installed on the driver side of the vehicle.

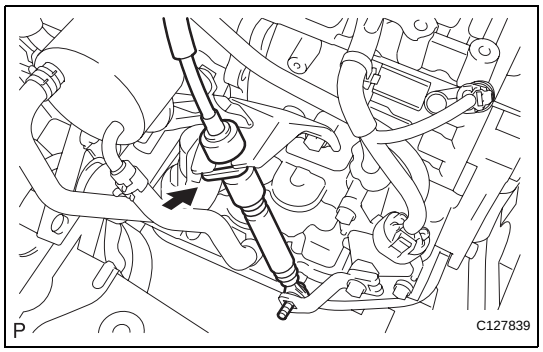

(e) Fix the control cable onto the control cable bracket with the clip.

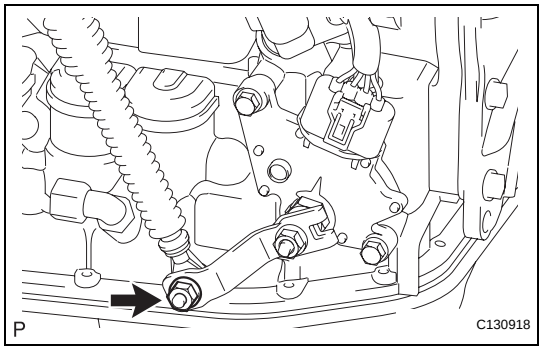

(f) Connect the control cable onto the control shaft lever with the nut.
Torque: 12 N*m (122 kgf*cm, 9 ft.*lbf)

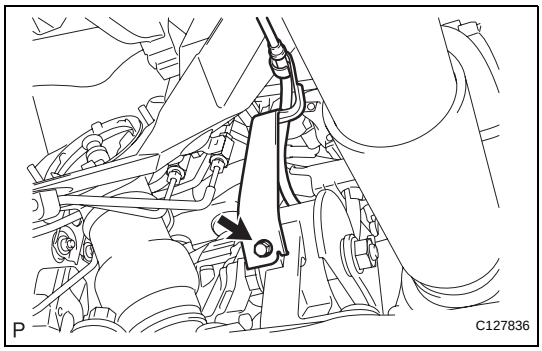

(g) Connect the clamp of the control cable with the bolt.
Torque: 12 N*m (122 kgf*cm, 9 ft.*lbf)

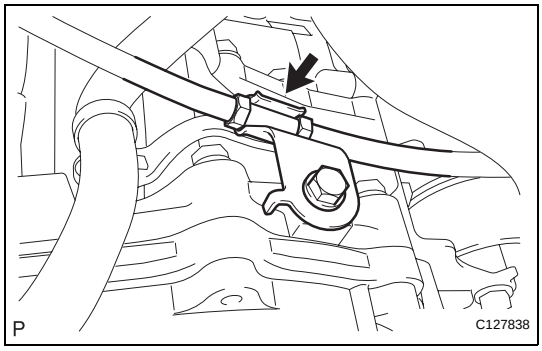

(h) Connect the control cable to the cable support.

7. INSTALL AIR CLEANER ASSEMBLY

(a) Connect the air cleaner case to the No. 1 air cleaner inlet.

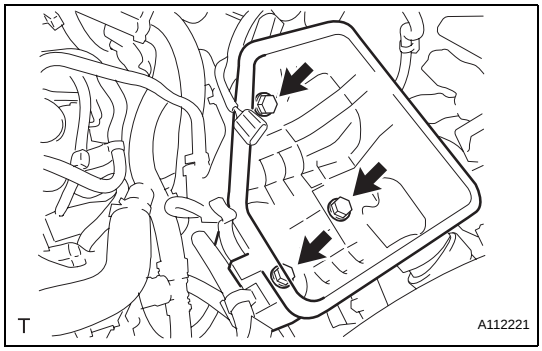

(b) Install the air cleaner case with the 4 bolts.
Torque: 5.0 N*m (51 kgf*cm, 44 in.*lbf)

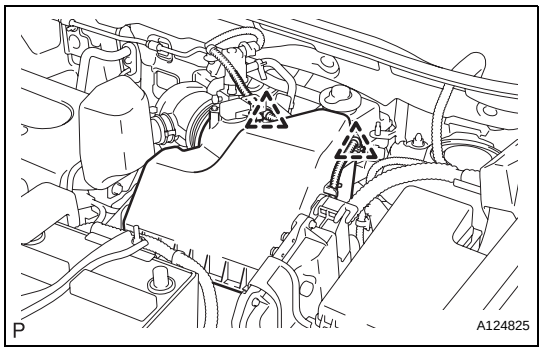

(c) Connect the 2 clamps of the engine wire.
(d) Connect the mass air flow meter connector.

8. INSTALL BATTERY

(a) Install the battery bracket reinforcement with the 2 bolts.
Torque: 20 N*m (204 kgf*cm, 15 ft.*lbf)
(b) Install the battery carrier with the 4 bolts.
Torque: 20 N*m (204 kgf*cm, 15 ft.*lbf)
(c) Install the battery tray.
(d) Connect the 2 clamps of the engine wire.
(e) Install the battery with the battery clamp.
Torque: 8.5 N*m (87 kgf*cm, 75 in.*lbf) for bolt
5.0 N*m (51 kgf*cm, 44 in.*lbf) for nut

9. CONNECT CABLE TO NEGATIVE BATTERY TERMINAL

10. INSPECT SHIFT LEVER POSITION

(a) When shifting the lever from P to the R position with the ignition switch on (IG) and the brake pedal depressed, make sure that the shift lever moves smoothly and moves correctly into position.

(b) Start the engine and make sure that the vehicle moves forward when shifting the lever from N to the D position and moves rearward when shifting the lever to the R position.
If the operation cannot be performed as specified, inspect the park/neutral position switch and check the shift lever installation condition.

11. ADJUST SHIFT LEVER POSITION (See page AX-138)

12. INSTALL REAR CONSOLE BOX SUB-ASSEMBLY

(a) Install the rear console box (see page IP-26).

TRANSMISSION OIL COOLER

COMPONENTS

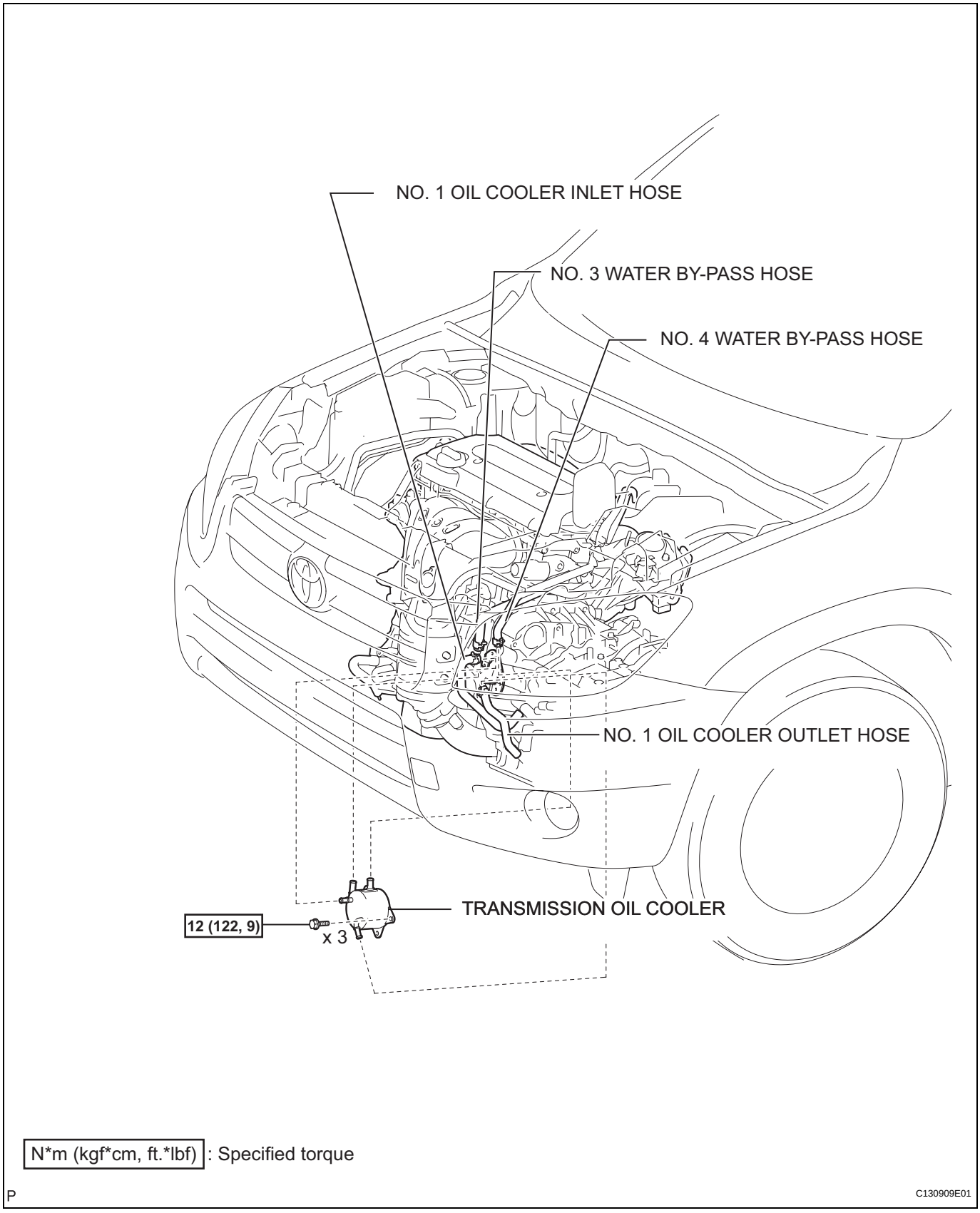

AX

N*m (kgf*cm, ft.*lbf) : Specified torque

P

C130909E01

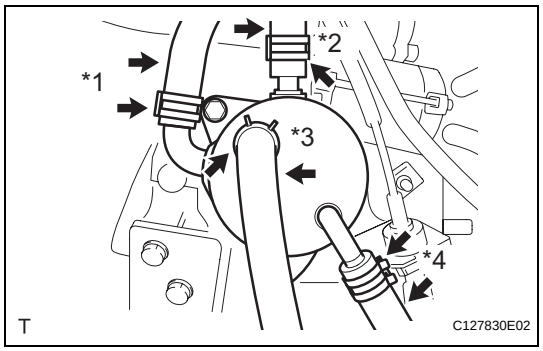

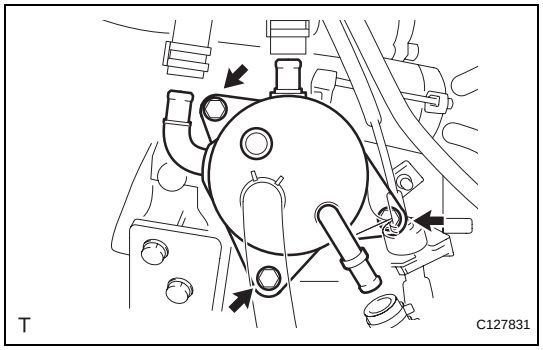

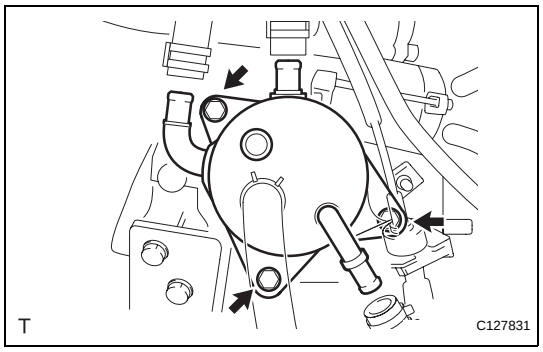

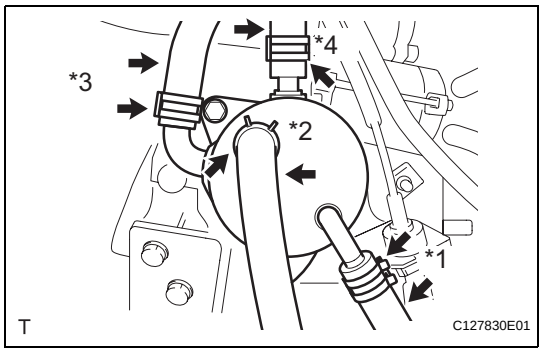

REMOVAL

1. REMOVE TRANSMISSION OIL COOLER

(a) *1: Disconnect the No. 3 water by-pass hose from the transmission oil cooler.

(b) *2: Disconnect the No. 4 water by-pass hose from the transmission oil cooler.

(c) *3: Disconnect the No. 1 oil cooler inlet hose from the transmission oil cooler.

(d) *4: Disconnect the No. 1 oil cooler outlet hose from the transmission oil cooler.

(e) Remove the 3 bolts and oil cooler from the bracket.

INSTALLATION

1. INSTALL TRANSMISSION OIL COOLER

(a) Install the oil cooler to the bracket with the 3 bolts.
Torque: 12 N*m (122 kgf*cm, 9 ft.*lbf)

(b) *1: Connect the No. 1 oil cooler outlet hose to the transmission.

(c) *2: Connect the No. 1 oil cooler inlet hose to the transmission.

(d) *3: Connect the No. 3 water by-pass hose to the transmission.

(e) *4: Connect the No. 4 water by-pass hose to the transmission.

2. ADD AUTOMATIC TRANSAXLE FLUID

3. INSPECT AUTOMATIC TRANSAXLE FLUID

(a) Inspect the automatic transaxle fluid (see page AX-102).

4. ADD COOLANT

(a) Add the coolant (see page CO-6).

REMOVAL

1. DISCONNECT CABLE FROM NEGATIVE BATTERY TERMINAL

CAUTION:

Wait at least 90 seconds after disconnecting the cable from the negative (-) battery terminal to prevent airbag and seat belt pretensioner activation.

2. REMOVE NO. 1 ENGINE UNDER COVER

3. DRAIN AUTOMATIC TRANSAXLE FLUID

(a) Remove the drain plug and gasket, and drain ATF.

(b) Install a new gasket and the drain plug.

Torque: 47 N*m (479 kgf*cm, 35 ft.*lbf)

4. REMOVE AUTOMATIC TRANSAXLE OIL PAN SUB-ASSEMBLY

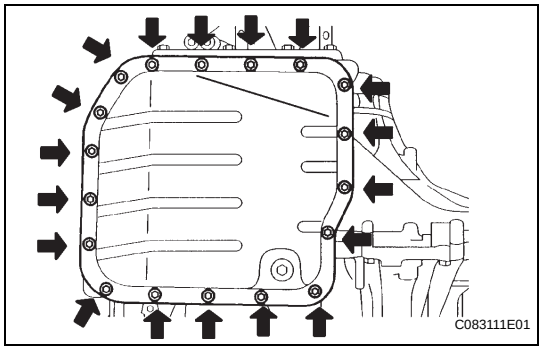

(a) Remove the 18 bolts, oil pan and gasket.

NOTICE:

Some fluid will remain in the oil pan. Carefully remove the oil pan.

(b) Remove the 3 magnets from the oil pan.

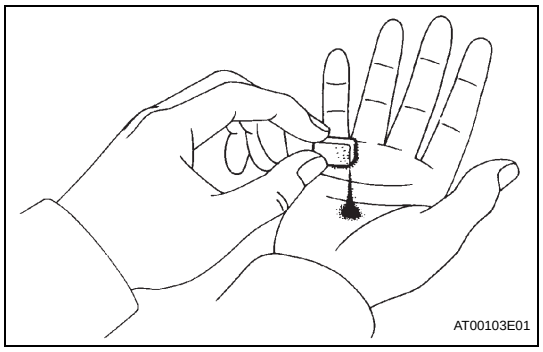

(c) Examine particles in the pan.

(1) Use the removed magnets to collect any steel chips. Look carefully at the chips and particles in the pan and on the magnet to anticipate what type of wear you will find in the transaxle.
Steel (magnetic): bearing, gear and plate wear
Brass (non-magnetic): bush wear

5. REMOVE TRANSMISSION WIRE

(a) Disconnect the 5 shift solenoid valve connectors.

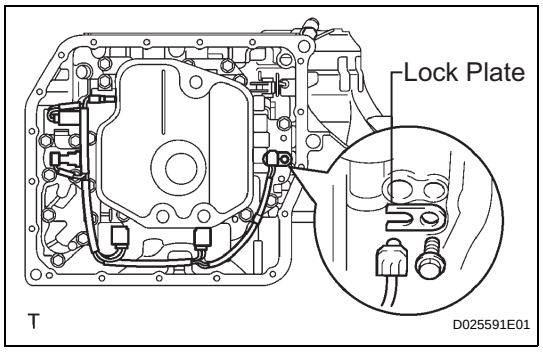

(b) Remove the bolt, lock plate and ATF temperature sensor.

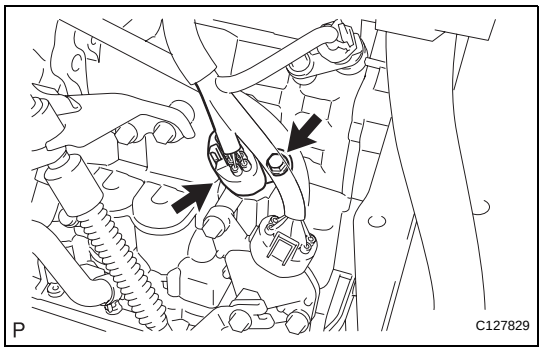

(c) Disconnect the transmission wire connector.
(d) Remove the bolt and transmission wire.

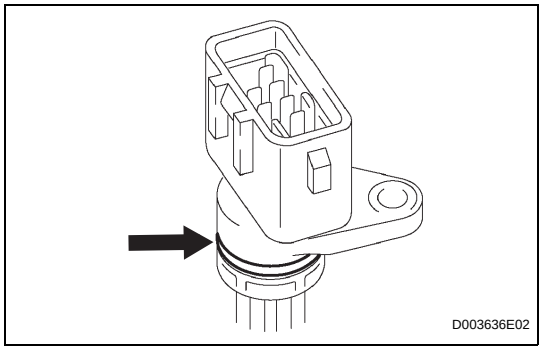

(e) Remove the O-ring from the transmission wire.

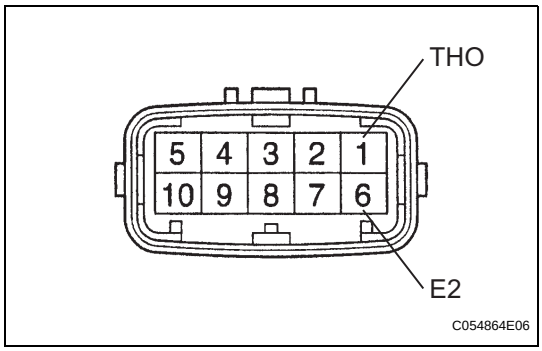

INSPECTION

1. INSPECT TRANSMISSION WIRE

(a) Disconnect the B27 wire connector.
(b) Measure the resistance of the transmission wire.
Standard resistance

Tester Connection	Specified Condition
1 (THO) - 6 (E2)	90 Ω to 156 kΩ
1 (THO) - Body ground	1 MΩ or higher
6 (E2) - Body ground	1 MΩ or higher

HINT:
If the resistance is not as specified for either of the ATF temperatures shown in the table below, the driveability of the vehicle may decrease.
Standard resistance

ATF Temperature	Specified Condition
10°C (68°F)	6.4 kΩ
110°C (230°F)	0.2 kΩ

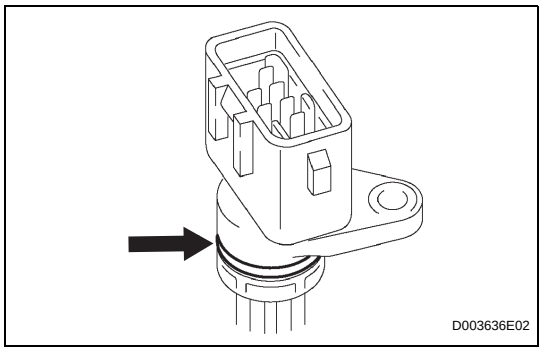

INSTALLATION

1. INSTALL TRANSMISSION WIRE

(a) Coat a new O-ring of the transmission wire connector with ATF.

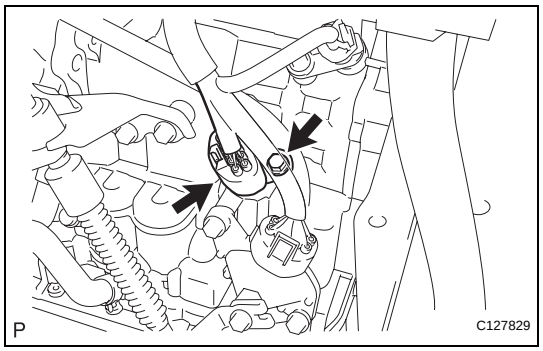

(b) Install the transmission wire.
(c) Install the bolt.
(d) Connect the connector.

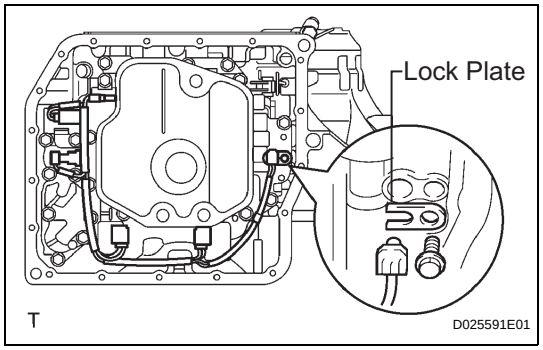

(e) Coat the O-ring of the ATF temperature sensor with ATF.
(f) Install the ATF temperature sensor with the lock plate and bolt.
Torque: 6.6 N*m (67 kgf*cm, 58 in.*lbf)
(g) Connect the 5 shift solenoid valve connectors.

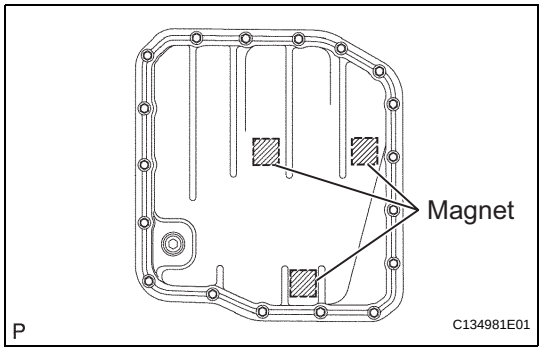

2. INSTALL AUTOMATIC TRANSAXLE OIL PAN SUB-ASSEMBLY
(a) Install the 3 magnets in the oil pan.

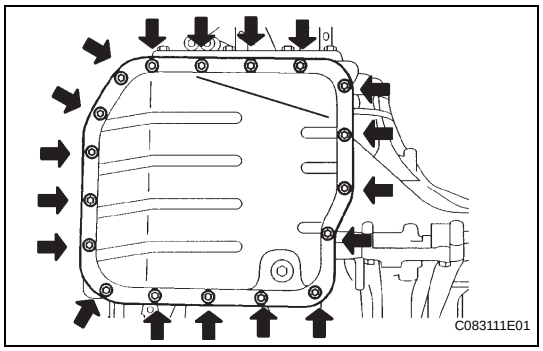

(b) Install a new gasket and the oil pan with the 18 bolts.
Torque: 7.6 N*m (77 kgf*cm, 67 in.*lbf)

3. INSTALL NO. 1 ENGINE UNDER COVER

4. CONNECT CABLE TO NEGATIVE BATTERY TERMINAL

5. ADD AUTOMATIC TRANSAXLE FLUID
Fluid type:
Toyota Genuine ATF WS

6. INSPECT TRANSAXLE FLUID LEVEL
(a) Inspect the fluid level (see page AX-102).

7. PERFORM RESET MEMORY
(a) Perform the RESET MEMORY procedures (A/T initialization) (see page AX-18).

TRANSMISSION WIRE

COMPONENTS

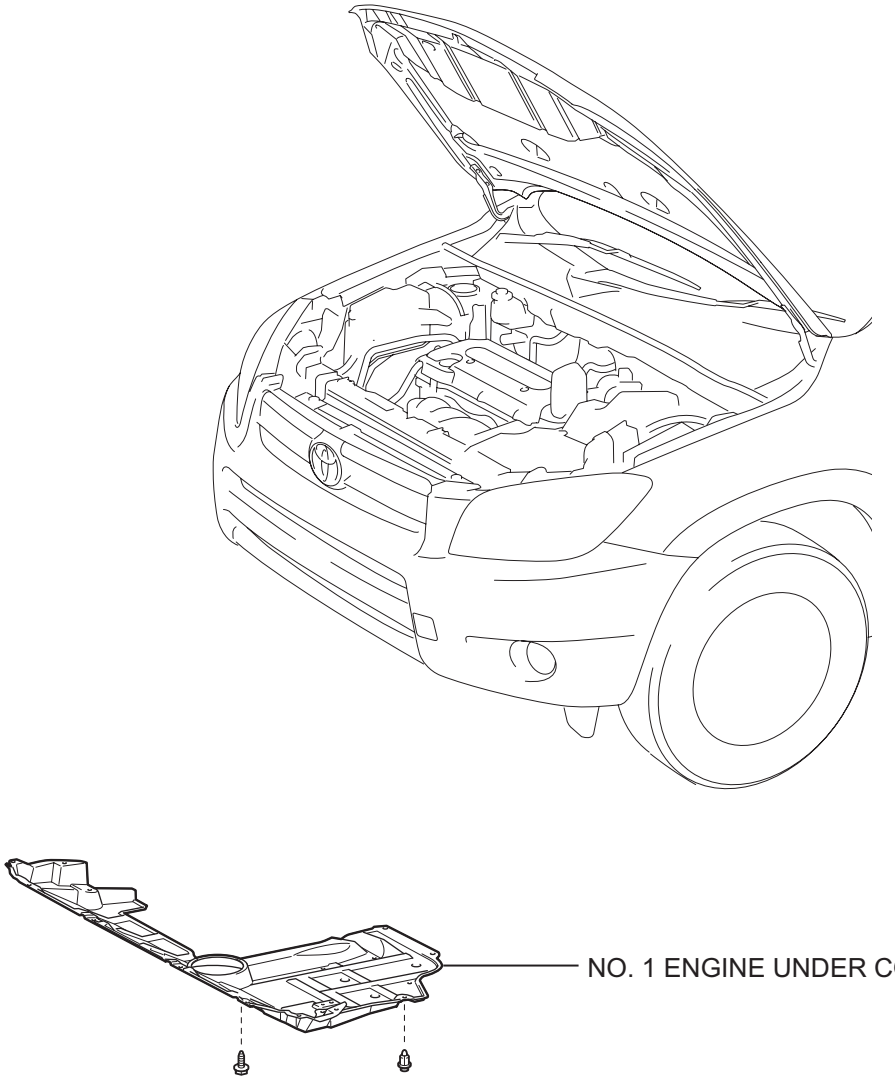

P

C127832E01

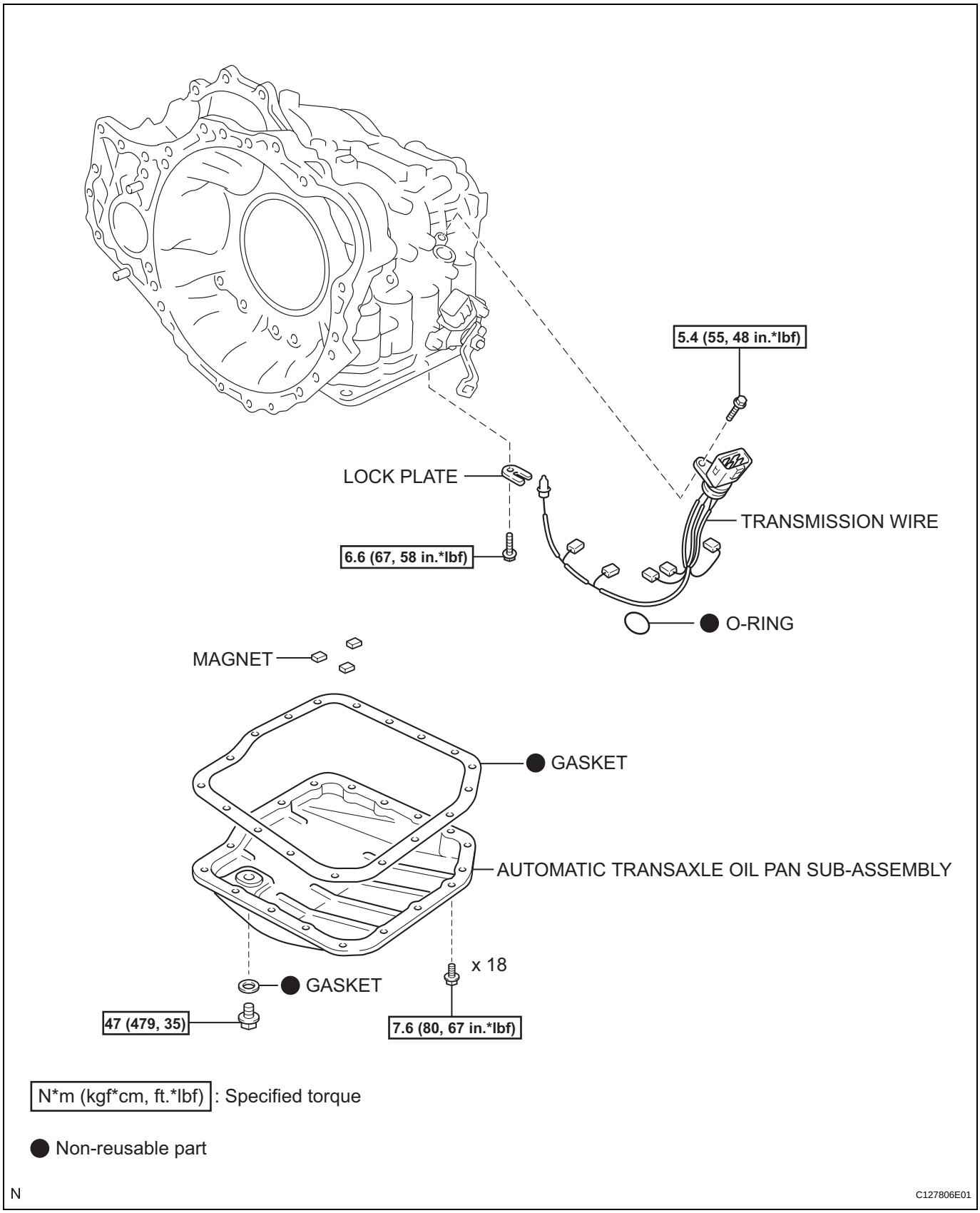

N*m (kgf*cm, ft.*lbf) : Specified torque

● Non-reusable part

N

C127806E01

UNDERDRIVE CLUTCH

COMPONENTS

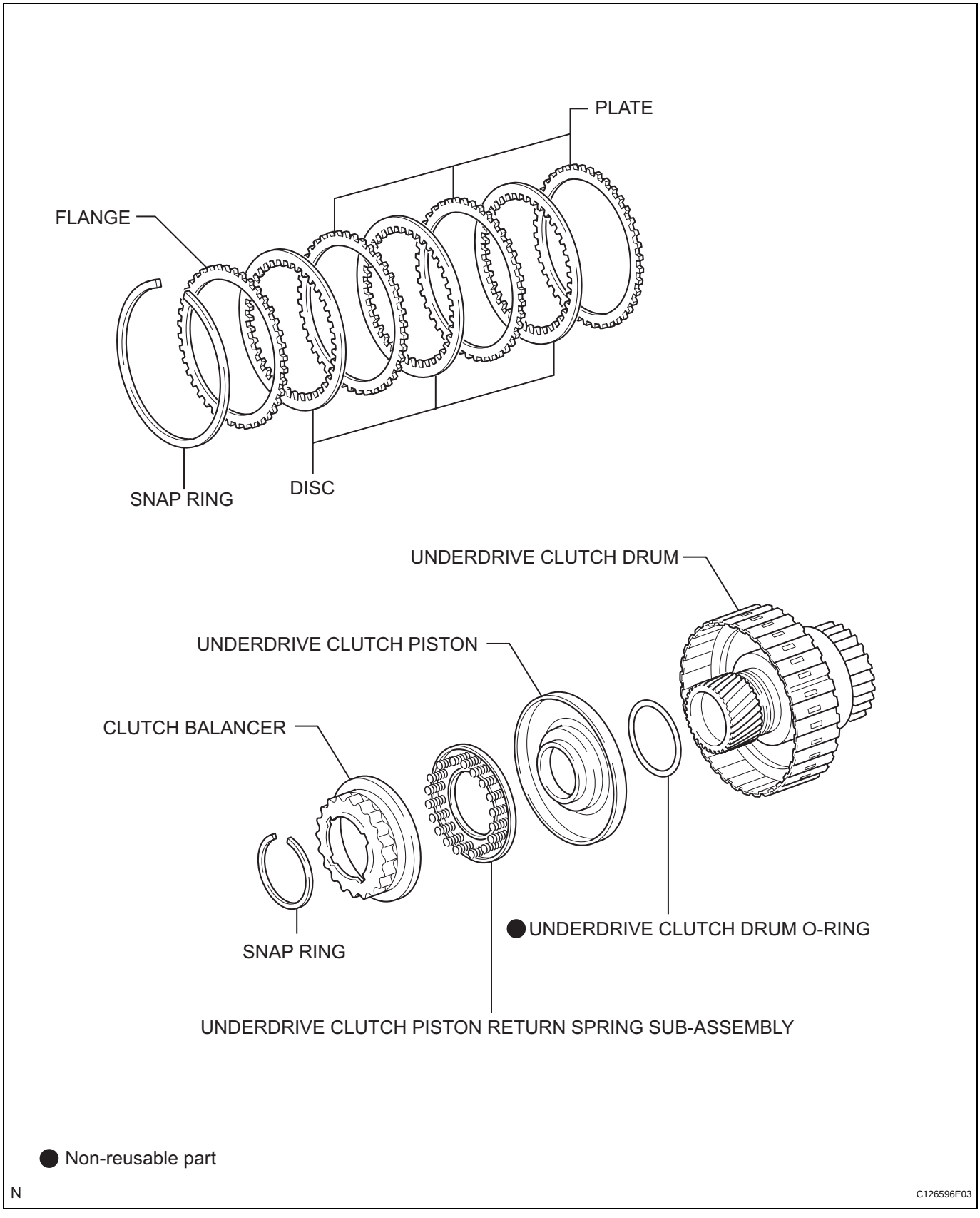

AX

DISASSEMBLY

1. INSPECT PACK CLEARANCE OF UNDERDRIVE CLUTCH (See page AX-247)

2. REMOVE NO. 1 UNDERDRIVE CLUTCH DISC

(a) Using a screwdriver, pry out the underdrive clutch flange snap ring.

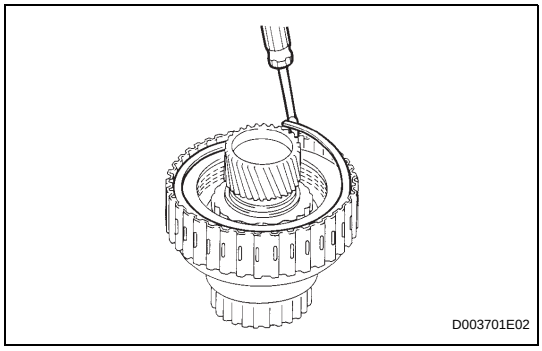

(b) Remove the flange, 3 discs and 3 plates from the underdrive clutch drum.

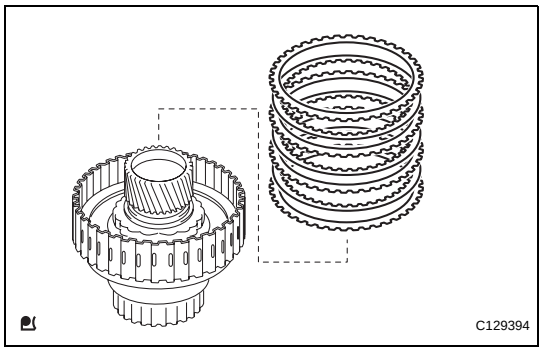

3. INSPECT NO. 1 UNDERDRIVE CLUTCH DISC (See page AX-248)

4. INSPECT UNDERDRIVE CLUTCH DRUM SUB-ASSEMBLY (See page AX-248)

5. REMOVE UNDERDRIVE CLUTCH DRUM O-RING

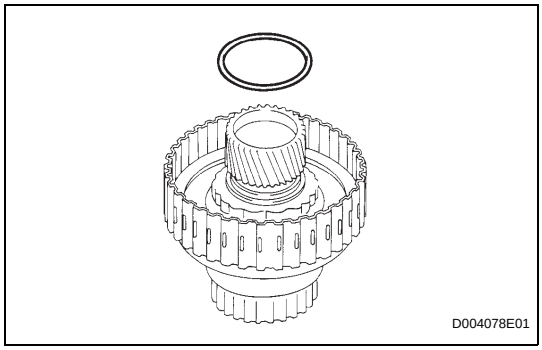

6. REMOVE UNDERDRIVE CLUTCH PISTON SET

(a) Place SST on the clutch balancer and compress the spring with a press.

SST 09350-32014 (09351-32070)

(b) Using a snap ring expander, remove the snap ring.

NOTICE:

- **Stop the press when the spring sheet is lowered to a position 1 to 2 mm (0.04 to 0.08 in.) from the snap ring groove.**
- **This prevents the spring sheet from being deformed.**
- **Do not expand the snap ring excessively.**

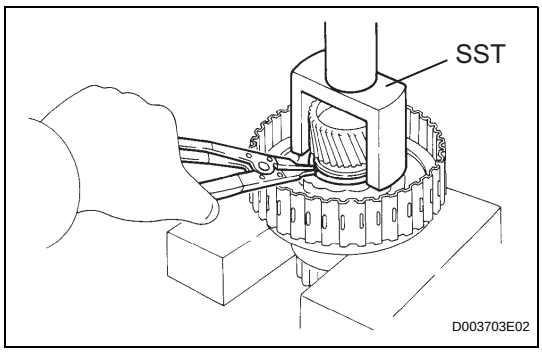

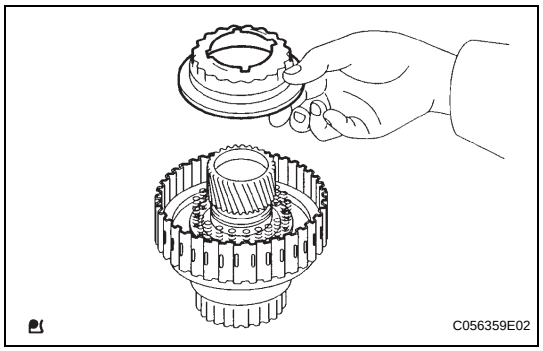

(c) Remove the clutch balancer from the underdrive clutch drum.

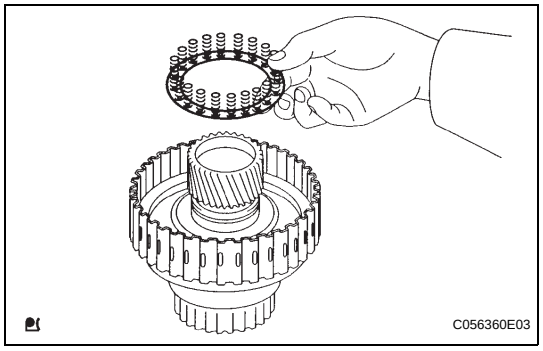

(d) Remove the piston return spring from the underdrive clutch drum.

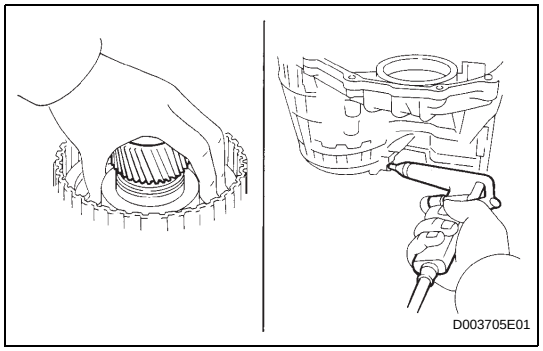

(e) Install the underdrive clutch to the transaxle.
NOTICE:
Be careful not to damage the oil seal rings.

(f) Holding the underdrive clutch piston with your hand, apply compressed air (392 kPa, 4.0 kgf/cm^2, 57 psi) to the transaxle case to remove the underdrive clutch piston.

7. INSPECT UNDERDRIVE CLUTCH RETURN SPRING SUB-ASSEMBLY (See page AX-248)

INSPECTION

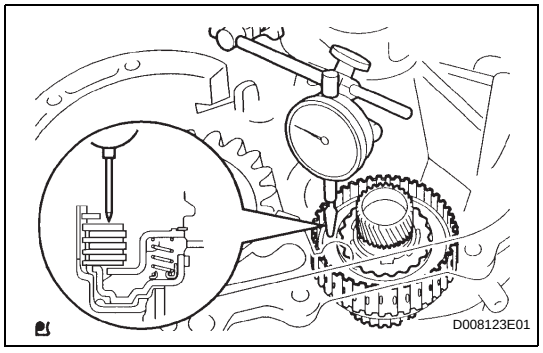

1. INSPECT UNDERDRIVE CLUTCH PACK CLEARANCE

(a) Install the underdrive clutch to the transaxle.
NOTICE:
Be careful not to damage the oil seal rings.

(b) Install a dial indicator as shown in the illustration.

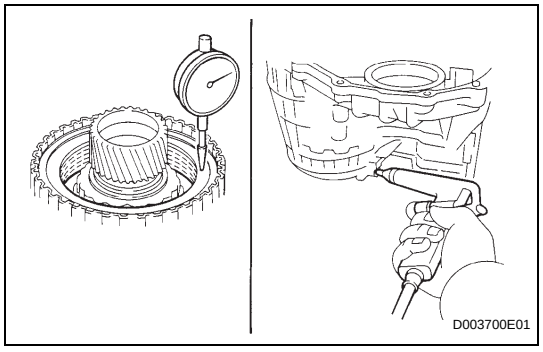

(c) Measure the underdrive clutch pack clearance while applying and releasing compressed air (392 kPa, 4.0kgf/cm^2, 57 psi)
Standard pack clearance:
1.51 to 1.90 mm (0.0594 to 0.0748 in.)
If the pack clearance is not as specified, inspect the discs, plates and flange.

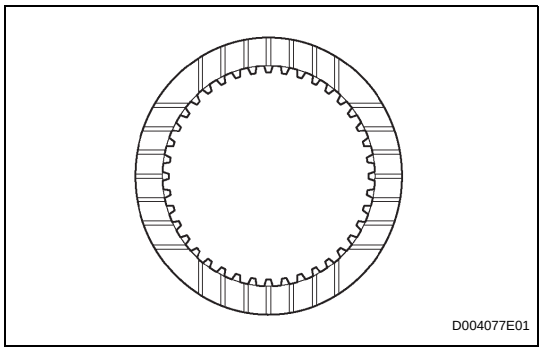

2. INSPECT NO. 1 UNDERDRIVE CLUTCH DISC

(a) Check to see if the sliding surface of the disc, plate and flange are worn or burnt. If necessary, replace them.

HINT:

- If the lining of the discs is peeling off or discolored, or even if a part of the printed mark is defaced, replace all discs.
- Before assembling new discs, soak them in ATF for at least 15 minutes.

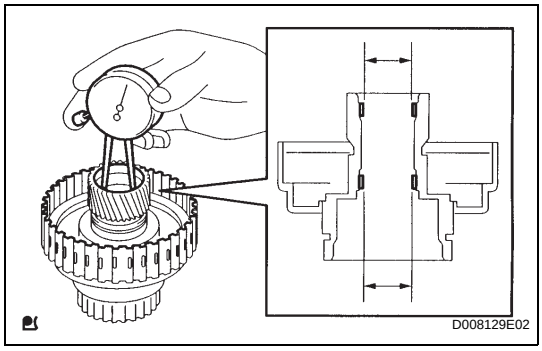

3. INSPECT UNDERDRIVE CLUTCH DRUM SUB-ASSEMBLY

(a) Using a caliper gauge measure the inside diameter of the underdrive clutch drum bush.

Standard drum bush:

37.06 to 37.08 mm (1.4591 to 1.4598 in.)

Maximum drum bush:

37.13 mm (1.4618 in.)

If the inside diameter is greater then the maximum, replace the underdrive clutch drum sub-assembly.

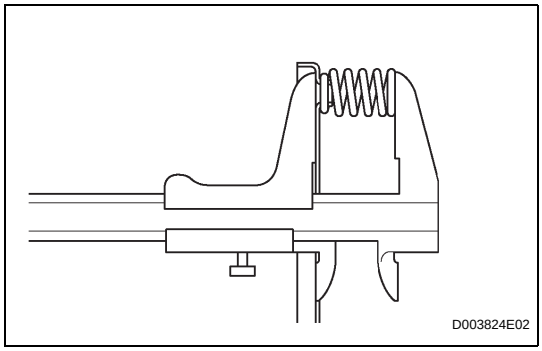

4. INSPECT UNDERDRIVE CLUTCH RETURN SPRING SUB-ASSEMBLY

(a) Using a vernier caliper, measure the free length of the spring together with the spring seat.

Standard free length:

17.14 mm (0.6752 in.)

INSTALLATION

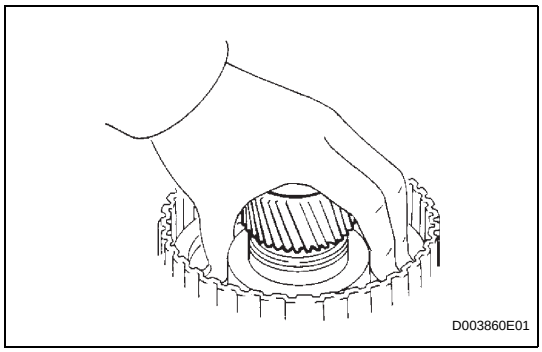

1. INSTALL UNDERDRIVE CLUTCH PISTON SET

(a) Coat the underdrive clutch piston with ATF, and install it to the underdrive clutch piston drum.

NOTICE:

Be careful not to damage the O-ring.

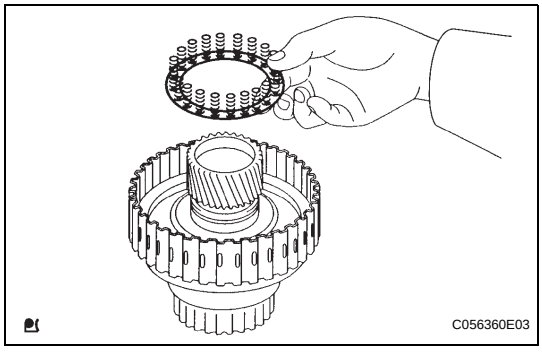

(b) Install the piston return spring to the underdrive clutch drum.

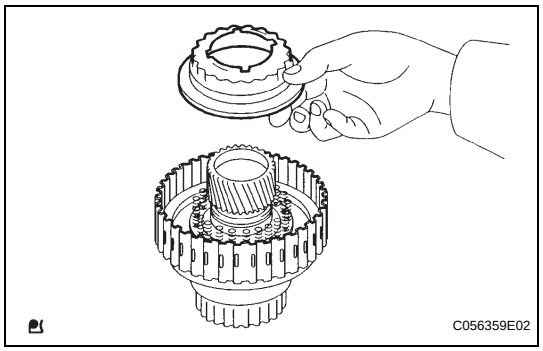

(c) Install the clutch balancer to the underdrive clutch drum.
NOTICE:
Be careful not to damage the lip seal of the clutch balancer.

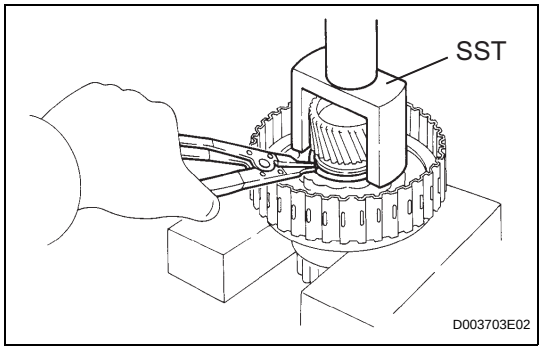

(d) Place SST on the clutch balancer and compress the piston return spring with a press.
SST 09350-32014 (09351-32070)

(e) Using a snap ring expander, install the snap ring to the underdrive clutch drum.
NOTICE:
- **Be sure the end gap of the snap ring is not aligned with the clutch balancer's claw.**
- **Stop the press when the spring sheet is lowered to a position 1 to 2 mm (0.039 0.078 in.) from the snap ring groove.**
- **This prevents the spring sheet from being deformed.**
- **Do not expand the snap ring excessively.**

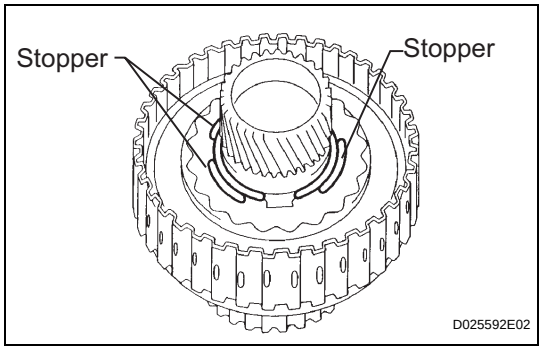

(f) Set the end gap of the snap ring in the underdrive clutch drum shown in the illustration.
NOTICE:
The end gap of the snap ring should not coincide with any of the stopper.

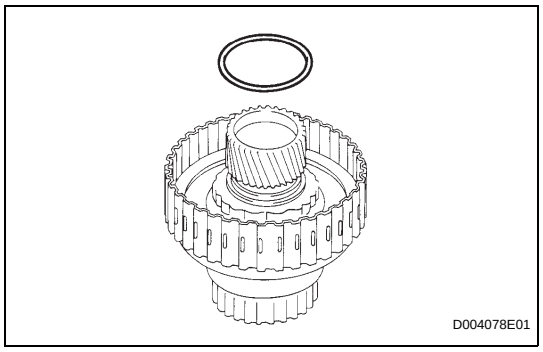

2. INSTALL UNDERDRIVE CLUTCH DRUM O-RING

(a) Coat the new O-ring with ATF, and install it to the underdrive clutch drum.

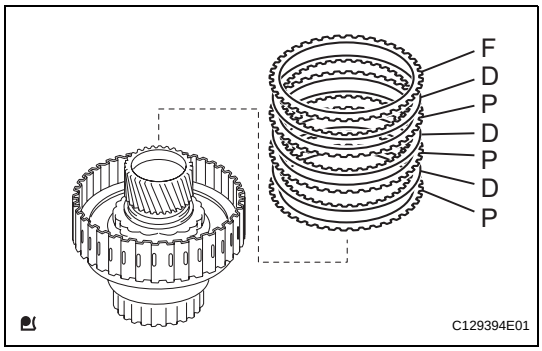

3. INSTALL NO. 1 UNDERDRIVE CLUTCH DISC

(a) Install the 3 plates, 3 discs and flange to the underdrive clutch drum.

Install in order:

P - D - P - D - P - D - F

HINT:

P = Plate

D = Disc

F = Flange

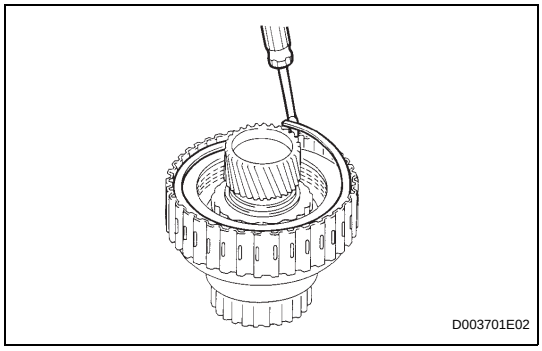

(b) Using a screwdriver, install the underdrive clutch flange hole snap ring.

(c) Check that the end gap of the snap ring is not aligned with one of the cutouts.

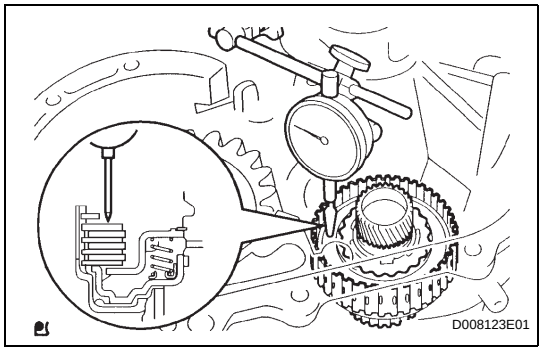

4. INSPECT UNDERDRIVE CLUTCH PACK CLEARANCE

(a) Install the underdrive clutch to the transaxle.

NOTICE:

Be careful not to damage the oil seal rings.

(b) Set a dial indicator as shown in the illustration.

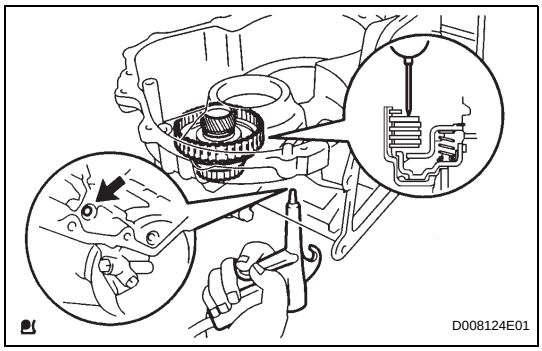

(c) Measure the underdrive clutch piston stroke while applying and releasing compressed air (392 kPa, 4.0 kgf/cm^2, 57 psi).

Standard pack clearance:

1.51 to 1.90 mm (0.0594 to 0.0748 in.)

If the pack clearance is less than the minimum, parts may have been assembled incorrectly, so check and reassemble again.

If the park clearance is not as specified, select another flange.

HINT:

There are 3 flanges in different thickness.

Standard flange thickness

No.	Thickness	No.	Thickness
1	3.0 mm (0.118 in.)	3	3.4 mm (0.134 in.)
2	3.2 mm (0.126 in.)	-	-

UNDERDRIVE PLANETARY GEAR

COMPONENTS

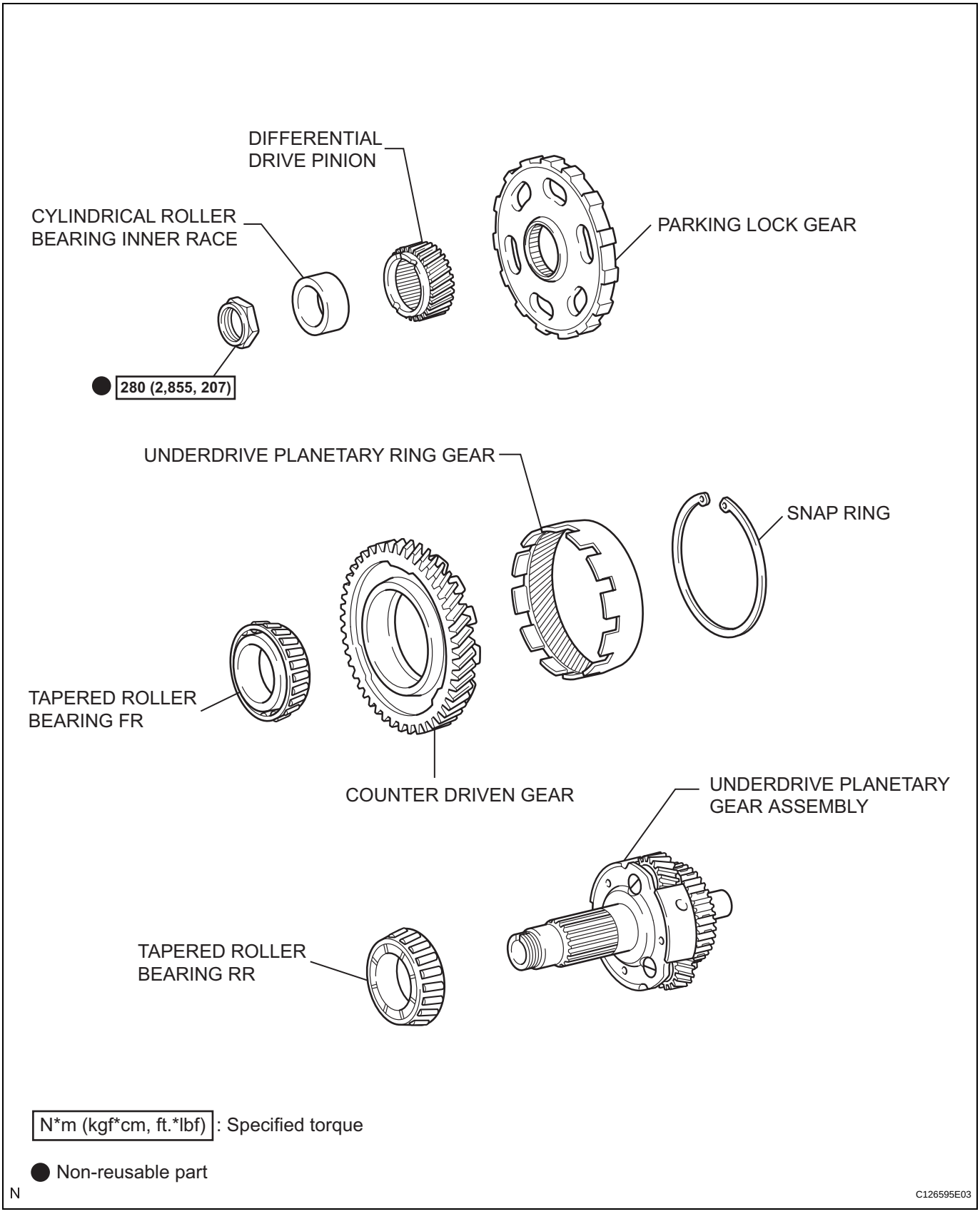

N*m (kgf*cm, ft.*lbf) : Specified torque

● Non-reusable part

N

C126595E03

AX

DISASSEMBLY

1. REMOVE UNDERDRIVE PLANETARY GEAR PRELOAD (See page AX-240)

2. REMOVE UNDERDRIVE INPUT SHAFT NUT

SST 09930-00010 (09931-00010, 09931-00020), 09387-00050, 09564-16020

(a) Using SST, loosen the staked part of the nut.

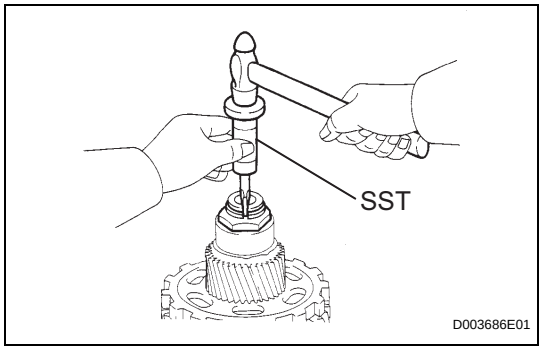

(b) Clamp the underdrive planetary gear in soft jaw vise.

NOTICE:
Be careful not to damage the differential drive pinion.

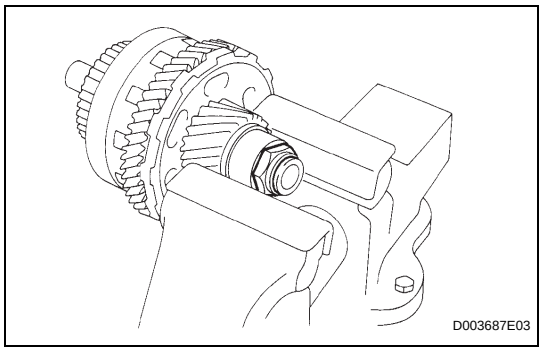

(c) Using SST, remove the lock nut.

SST 09387-00050

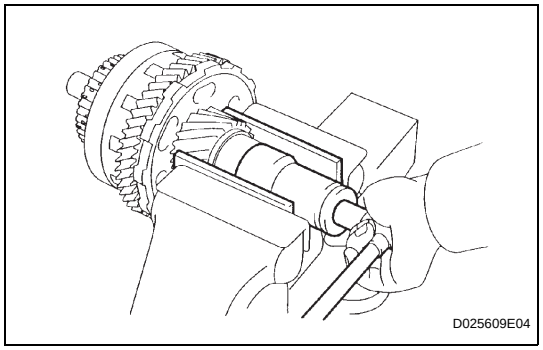

3. REMOVE CYLINDRICAL ROLLER BEARING INNER RACE

(a) Using SST, remove the cylindrical roller bearing race inner.

SST 09950-00020, 09950-00030, 09950-60010 (09951-00340)

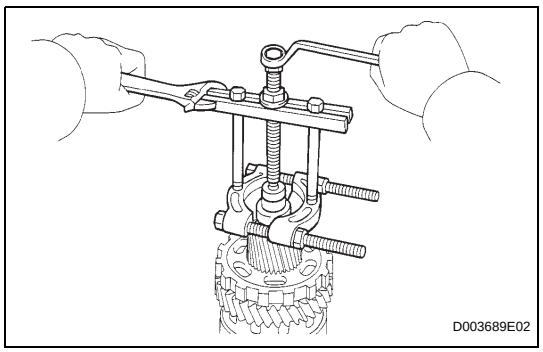

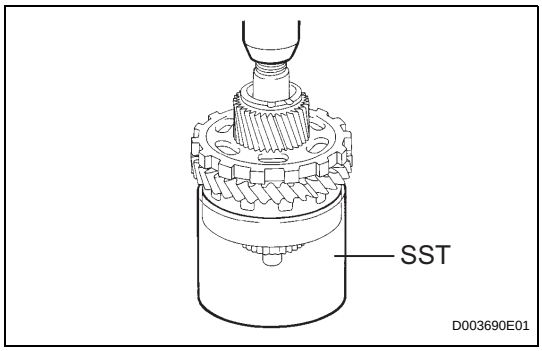

4. REMOVE UNDERDRIVE PLANETARY GEAR ASSEMBLY

(a) Using SST and a press, remove the differential drive pinion, parking lock gear, counter driven gear with underdrive planetary ring gear and front tapered roller bearing.
SST 09387-00050

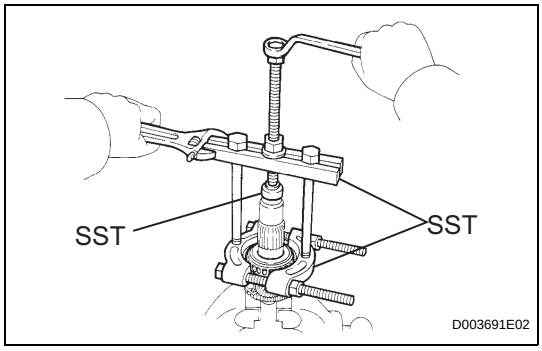

(b) Clamp the underdrive planetary gear in soft jaw vise.

(c) Using SST, remove the rear tapped roller bearing from the underdrive planetary gear.
SST 09950-00020, 09950-00030, 09950-60010 (09951-00340)

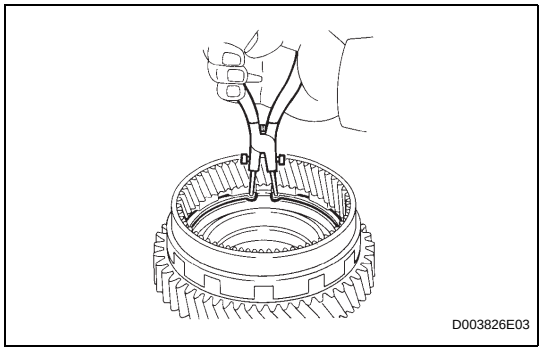

5. REMOVE UNDERDRIVE PLANETARY RING GEAR

(a) Using snap ring pliers, remove the snap ring.

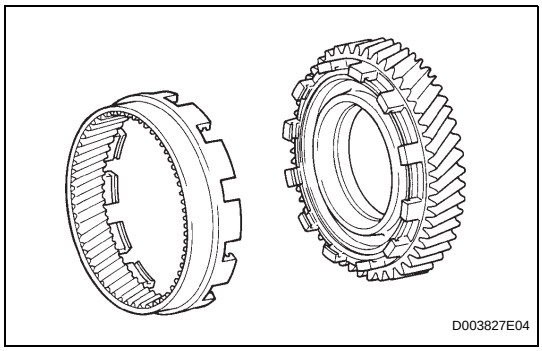

(b) Remove the underdrive planetary ring gear from the counter driven gear.

INSPECTION

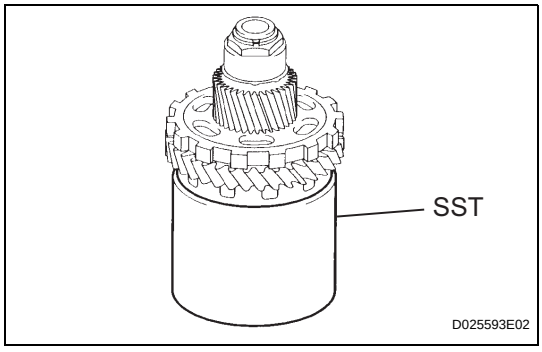

1. INSPECT UNDERDRIVE PLANETARY GEAR PRELOAD

(a) Using SST, fix the underdrive planetary gear.
SST 09387-00050

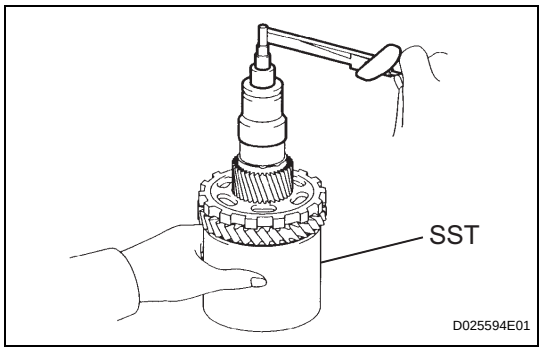

(b) Using SST and a torque wrench, measure the turning torque of the underdrive planetary gear in place while rotating the torque wrench at 60 rpm.
SST 09387-00050
Torque: Turning torque at 60 rpm
0.10 to 4.41 N*m (1.0 to 45 kgf*cm, 0.9 to 39 in.*lbf)
HINT:
Use a torque wrench with a fulcrum length of 160 mm (6.3 in.)

REASSEMBLY

1. INSTALL UNDERDRIVE PLANETARY RING GEAR

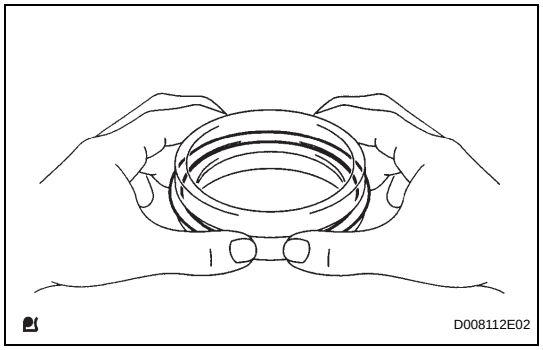

(a) Install a new snap ring to the outer race of the tapered roller bearing.

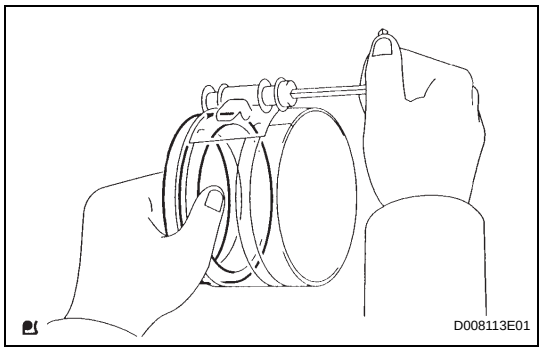

(b) Using a piston ring compressor, squeeze the snap ring.

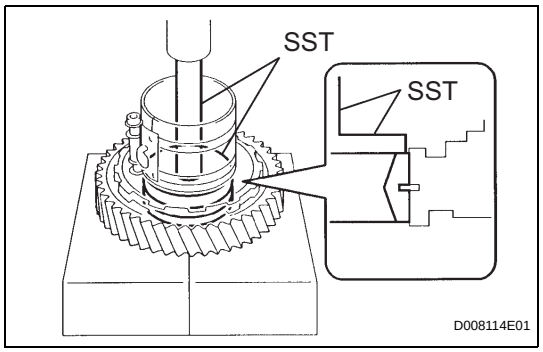

(c) Using SST a press, press in the outer race of the tapered roller bearing.
SST 09950-60020 (09951-00890), 09950-70010 (09951-07100)

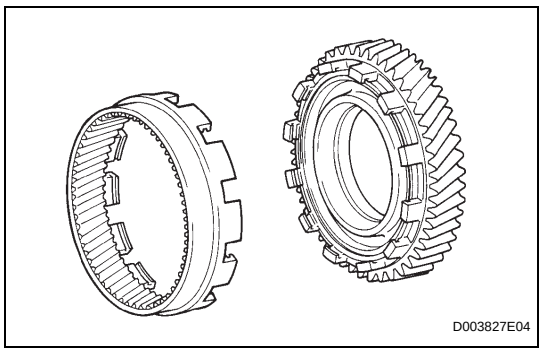

(d) Install the underdrive planetary ring gear to the counter driven gear.

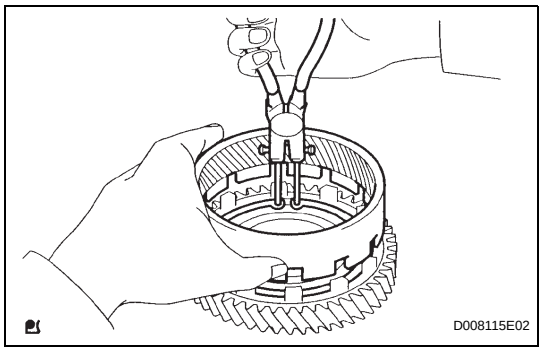

(e) Using snap ring pliers, install the snap ring.

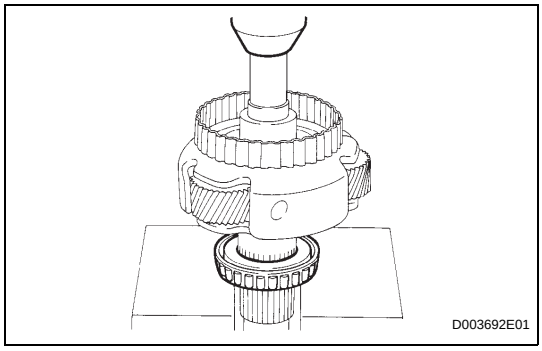

2. INSTALL UNDERDRIVE PLANETARY GEAR ASSEMBLY

(a) Using a press, press in the rear tapered roller bearing to the underdrive planetary gear.
NOTICE:
Press in the bearing until it becomes flat at the bottom

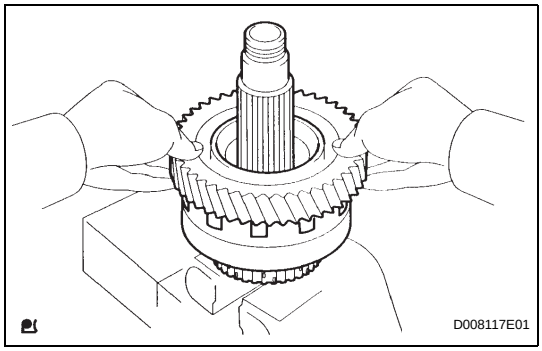

(b) Install the counter driven gear with planetary ring gear to the underdrive planetary gear.

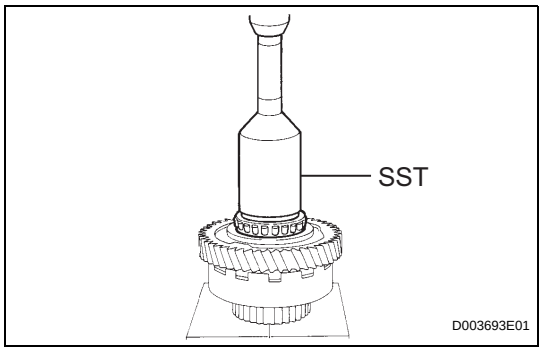

(c) Using SST and a press, press in the front tapered roller bearing.
SST 09214-76011
NOTICE:
Press in the counter driven gear while rotating it.

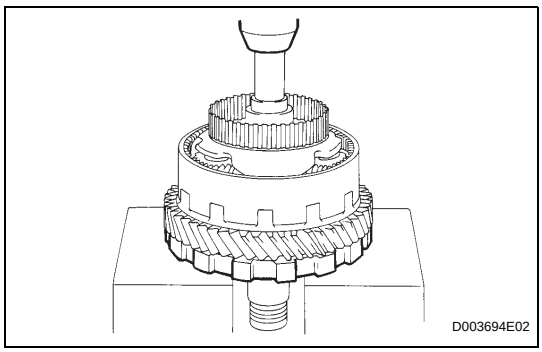

(d) Using a press, press in the parking lock gear.
NOTICE:
Press in the counter driven gear while rotating it.

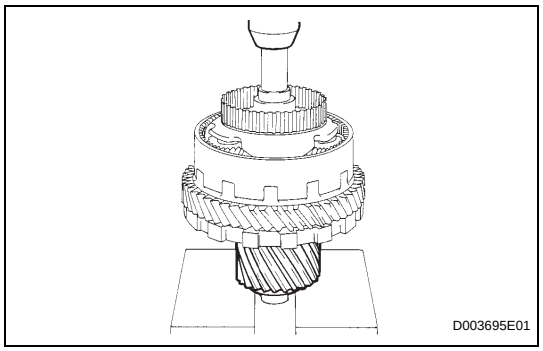

(e) Using a press, press in the differential drive pinion.
NOTICE:
Press in the counter driven gear while rotating it.

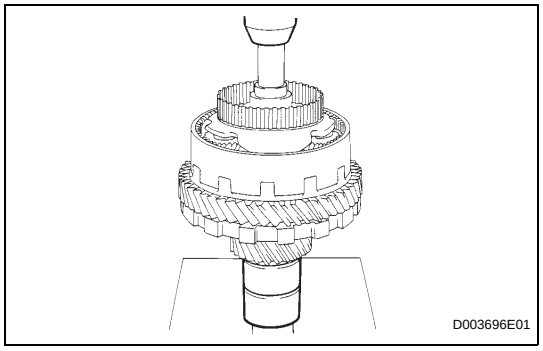

3. INSTALL CYLINDRICAL ROLLER BEARING INNER RACE

(a) Using a press, press in the cylindrical roller bearing race inner.
NOTICE:
Press in the counter driven gear while rotating it.

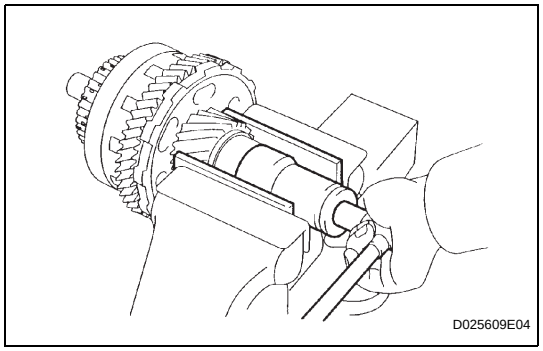

4. INSTALL UNDERDRIVE INPUT SHAFT NUT

(a) Clamp the underdrive planetary gear in a soft jaw vise.
NOTICE:
Be careful not to damage the differential drive pinion.

(b) Using a socket wrench, install a new lock nut.
Torque: 280 N*m (2,855 kgf*cm, 207 in.*lbf)
HINT:
Use a torque wrench with a fulcrum length of 750 mm (29.53 in.)

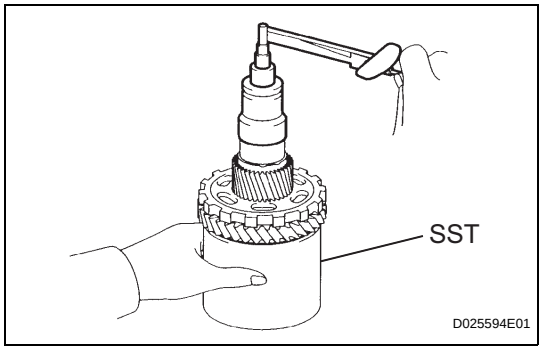

5. INSPECT UNDERDRIVE PLANETARY GEAR PRELOAD

(a) Using SST and a torque wrench, measure the turning torque of underdrive planetary gear assembly while rotating the torque wrench at 60 rpm.
SST 09387-00050
Torque: Turning torque at 60 rpm
0.10 to 4.41 N*m (1.0 to 45 kgf*cm, 0.9 to 39 in.*lbf)
HINT:
Use a torque wrench with a fulcrum length of 160 mm (6.30 in.)

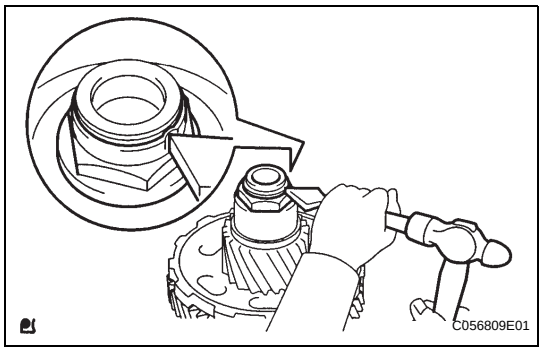

(b) Using a pin punch and a hammer, stake the lock nut.

NOTICE:

Make sure that there are no cracks on the nut.

REASSEMBLY

1. INSTALL MANUAL VALVE

(a) Install the manual valve to the valve body.

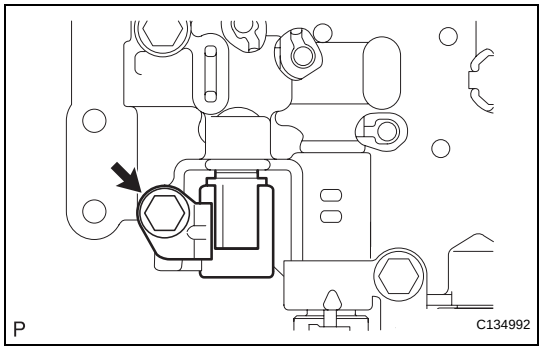

2. INSTALL SHIFT SOLENOID VALVE S4

(a) Install the shift solenoid valve S4 to the valve body with the bolt.
Torque: 11 N*m (112 kgf*cm, 9 ft.*lbf)

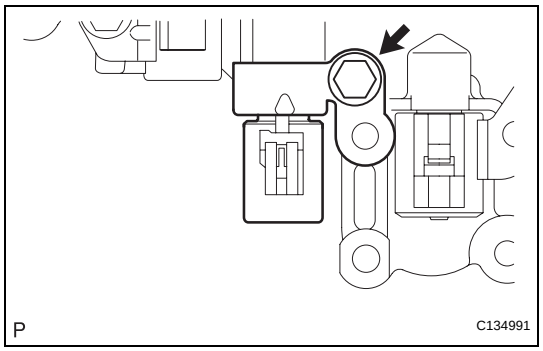

3. INSTALL SHIFT SOLENOID VALVE SL2

(a) Install the shift solenoid valve SL2 to the valve body with the bolt and plate.
Torque: 11 N*m (112 kgf*cm, 8 ft.*lbf)

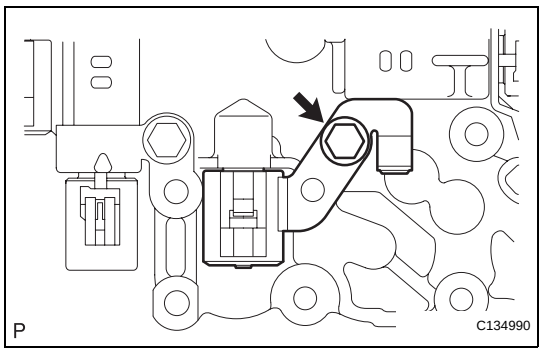

4. INSTALL SHIFT SOLENOID VALVE DSL

(a) Install the shift solenoid valve DSL to the valve body with the bolt.
Torque: 11 N*m (112 kgf*cm, 8 ft.*lbf)

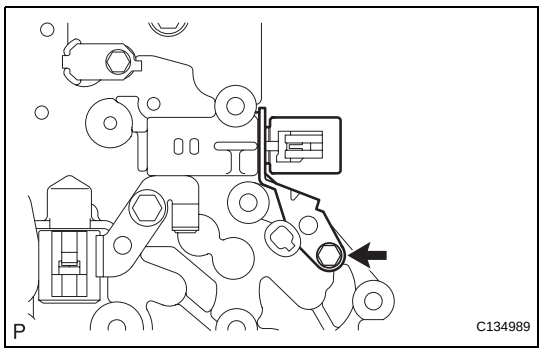

5. INSTALL SHIFT SOLENOID VALVE SL1

(a) Install the shift solenoid valve SL1 to the valve body with the bolt and plate.
Torque: 6.6 N*m (67 kgf*cm, 58 in.*lbf)

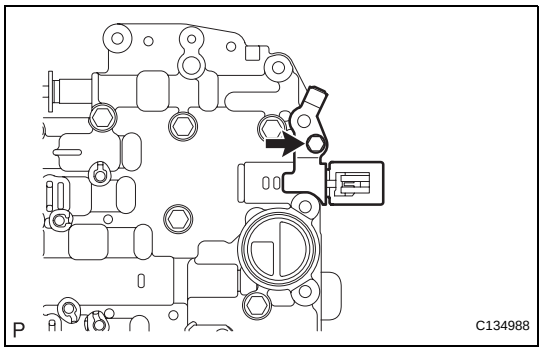

6. INSTALL SHIFT SOLENOID VALVE SLT

(a) Install the shift solenoid valve SLT to the valve body with the bolt and plate.
Torque: 6.6 N*m (67 kgf*cm, 58 in.*lbf)

REMOVAL

1. **DISCONNECT CABLE FROM NEGATIVE BATTERY TERMINAL**
   CAUTION:
   Wait at least 90 seconds after disconnecting the cable from the negative (-) battery terminal to prevent airbag and seat belt pretensioner activation.

2. **REMOVE NO. 1 ENGINE UNDER COVER**

3. **DRAIN AUTOMATIC TRANSAXLE FLUID**
   (a) Remove the drain plug and gasket, and drain ATF.
   (b) Install a new gasket and the drain plug.
   Torque: 47 N*m (479 kgf*cm, 35 ft.*lbf)

4. **REMOVE AUTOMATIC TRANSAXLE OIL PAN SUB-ASSEMBLY**
   (a) Remove the 18 bolts, oil pan and gasket.
   NOTICE:
   Some fluid will remain in the oil pan. Carefully remove the oil pan sub-assembly.
   (b) Remove the 3 magnets from the oil pan.

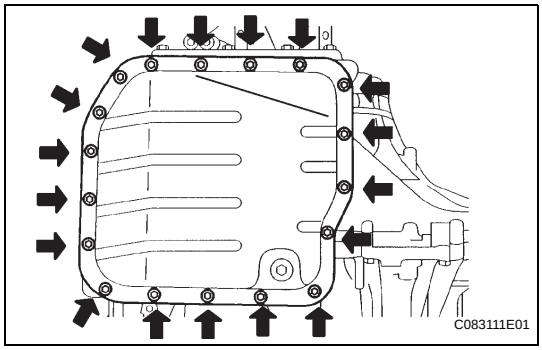

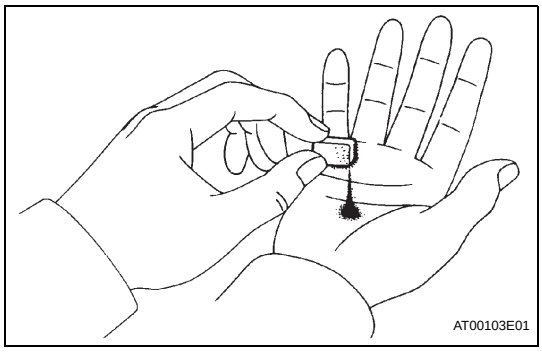

   (c) Examine particles in the pan.
      (1) Use the removed magnets to collect any steel chips. Look carefully at the chips and particles in the pan and on the magnet to anticipate what type of wear you will find in the transaxle.
      Steel (magnetic): bearing, gear and plate wear
      Brass (non-magnetic): bush wear

5. **REMOVE VALVE BODY OIL STRAINER ASSEMBLY**
   (a) Remove the 3 bolts and oil strainer.
   NOTICE:
   Be careful as some fluid will come out with the oil strainer.

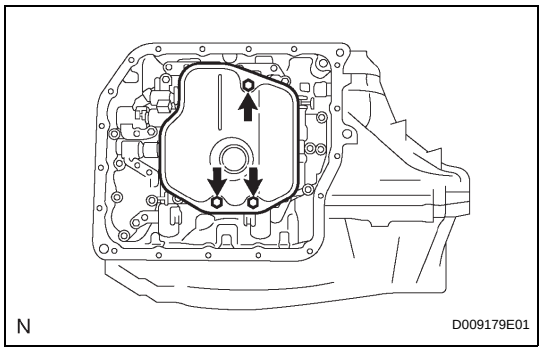

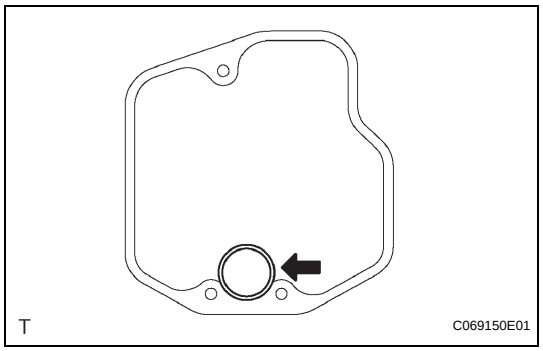

(b) Remove the O-ring from the oil strainer.

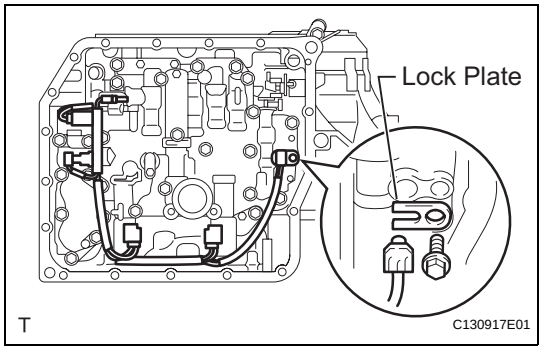

6. DISCONNECT TRANSMISSION WIRE

(a) Disconnect the 5 connectors.

(b) Remove the bolt and lock plate, and remove the ATF temperature sensor.

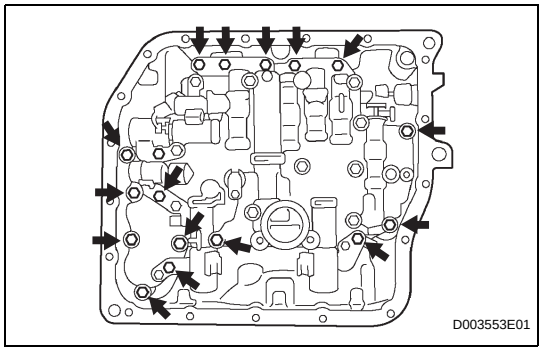

7. REMOVE TRANSMISSION VALVE BODY ASSEMBLY

(a) Support the valve body and remove the 17 bolts and valve body.

NOTICE:

Be careful not to drop the check valve body, spring and accumulator piston.

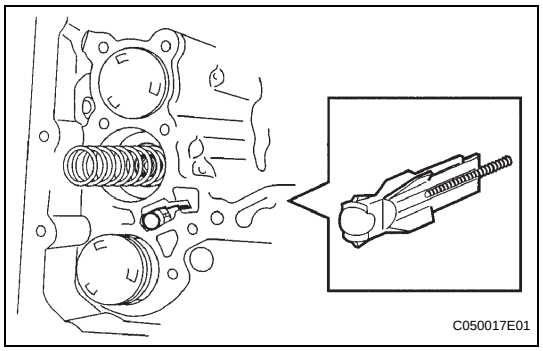

(b) Remove the check ball body and spring.

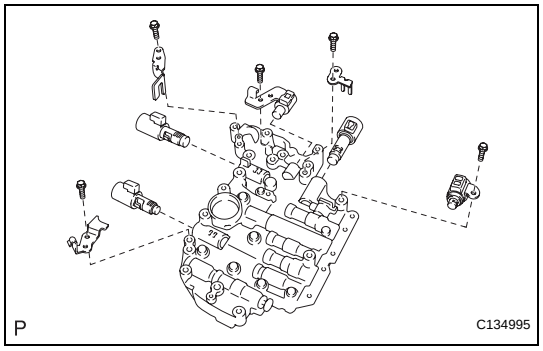

(c) Remove the 5 bolts, 4 plates and 5 shift solenoid valves.

INSTALLATION

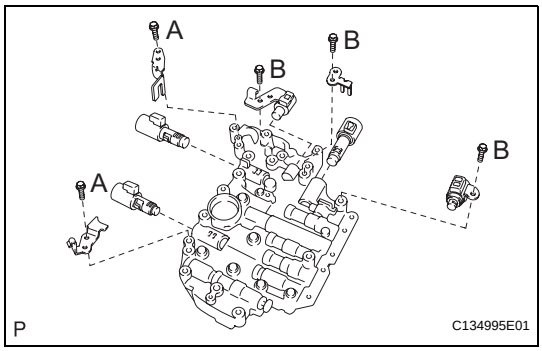

1. INSTALL TRANSMISSION VALVE BODY ASSEMBLY

(a) Install the 5 shift solenoid valves with the 5 bolts and 4 plates.

Torque: 6.6 N*m (67 kgf*cm, 58 in.*lbf) for bolt A
11 N*m (112 kgf*cm, 8 ft.*lbf) for bolt B

HINT:

Each bolt length is indicated below.

Bolt length:
12 mm (0.47 in.) for Bolt A
45 mm (1.77 in.) for Bolt B

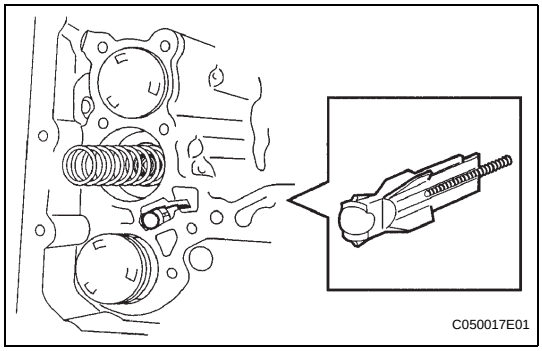

(b) Install the spring and check ball body.

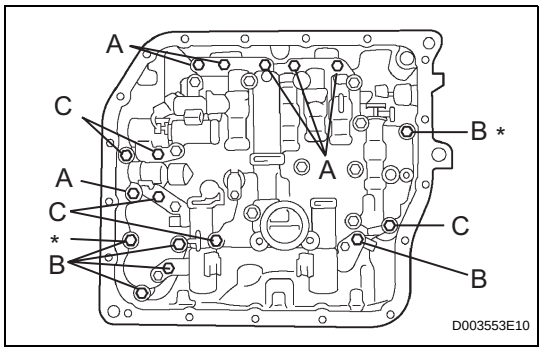

(c) Align the groove of the manual valve with the pin of lever.

(d) Install the 17 bolts.

Torque: 11 N*m (112 kgf*cm, 8 ft.*lbf)

NOTICE:

- **Push the valve body against the accumulator piston spring and the check ball body to install it.**
- **Tighten the bolts marked by * in the illustration first temporarily because they are positioning bolts.**

HINT:

Each bolt length is indicated below.

Bolt length:
25 mm (0.984 in.) for Bolt A
41 mm (1.614 in.) for Bolt B
45 mm (1.771 in.) for Bolt C

2. INSTALL TRANSMISSION WIRE

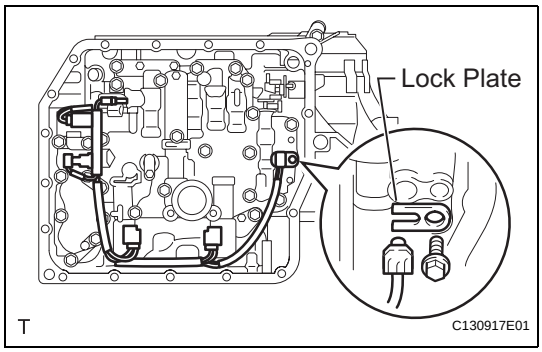

(a) Coat the O-ring of the temperature sensor with ATF.

(b) Install the ATF temperature sensor with the lock plate and bolt.

Torque: 6.6 N*m (67 kgf*cm, 58 in.*lbf)

(c) Connect the 5 shift solenoid valve connectors.

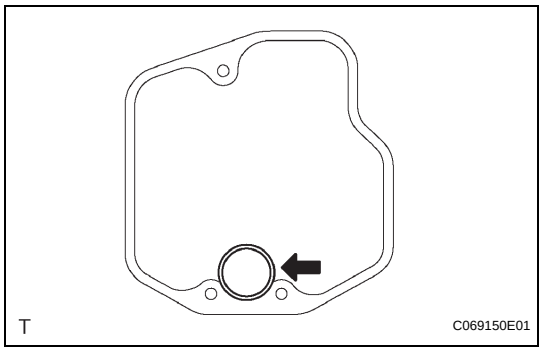

3. INSTALL VALVE BODY OIL STRAINER ASSEMBLY

(a) Coat a new O-ring with ATF.

(b) Install the O-ring to the oil strainer.

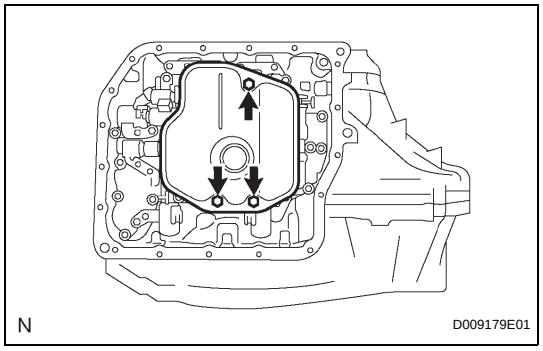

(c) Install the oil strainer with the 3 bolts.
Torque: 11 N*m (112 kgf*cm, 8 ft.*lbf)

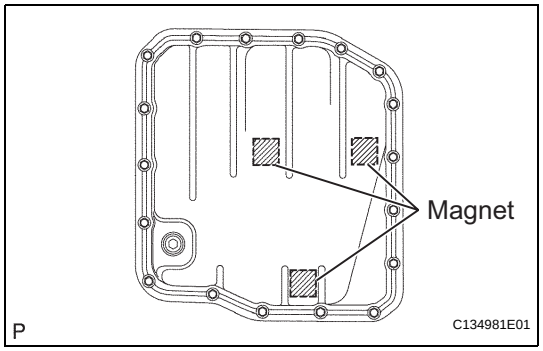

4. INSTALL AUTOMATIC TRANSAXLE OIL PAN SUB-ASSEMBLY

(a) Install the 3 magnets in the oil pan.

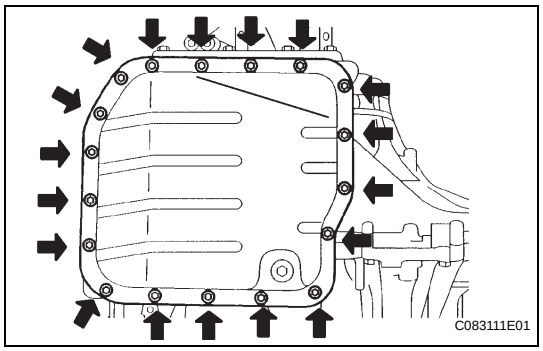

(b) Install a new gasket and oil pan with the 18 bolts.
Torque: 7.6 N*m (77 kgf*cm, 67 in.*lbf)

5. INSTALL NO. 1 ENGINE UNDER COVER

6. CONNECT CABLE TO NEGATIVE BATTERY TERMINAL

7. ADD AUTOMATIC TRANSAXLE FLUID
Fluid type:
Toyota Genuine ATF WS

8. INSPECT TRANSAXLE FLUID LEVEL

(a) Inspect the fluid level (see page AX-102).

9. PERFORM RESET MEMORY

(a) Perform the RESET MEMORY procedures (A/T initialization) (see page AX-18).

VALVE BODY ASSEMBLY

COMPONENTS

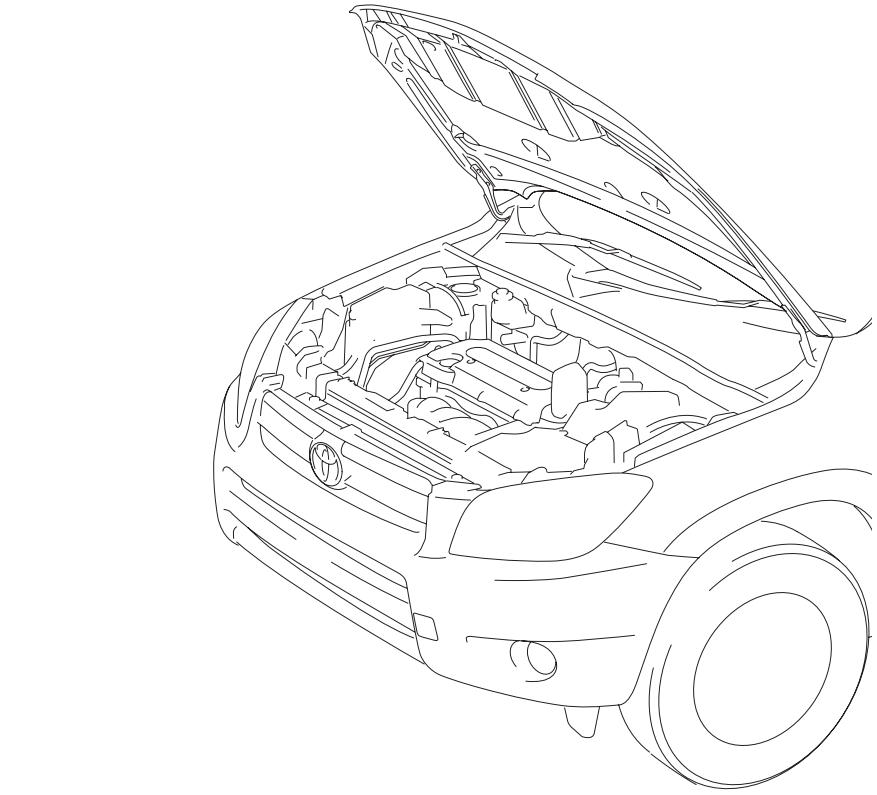

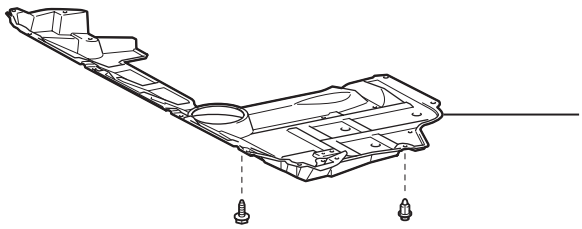

NO. 1 ENGINE UNDER COVER

P

C127832E01

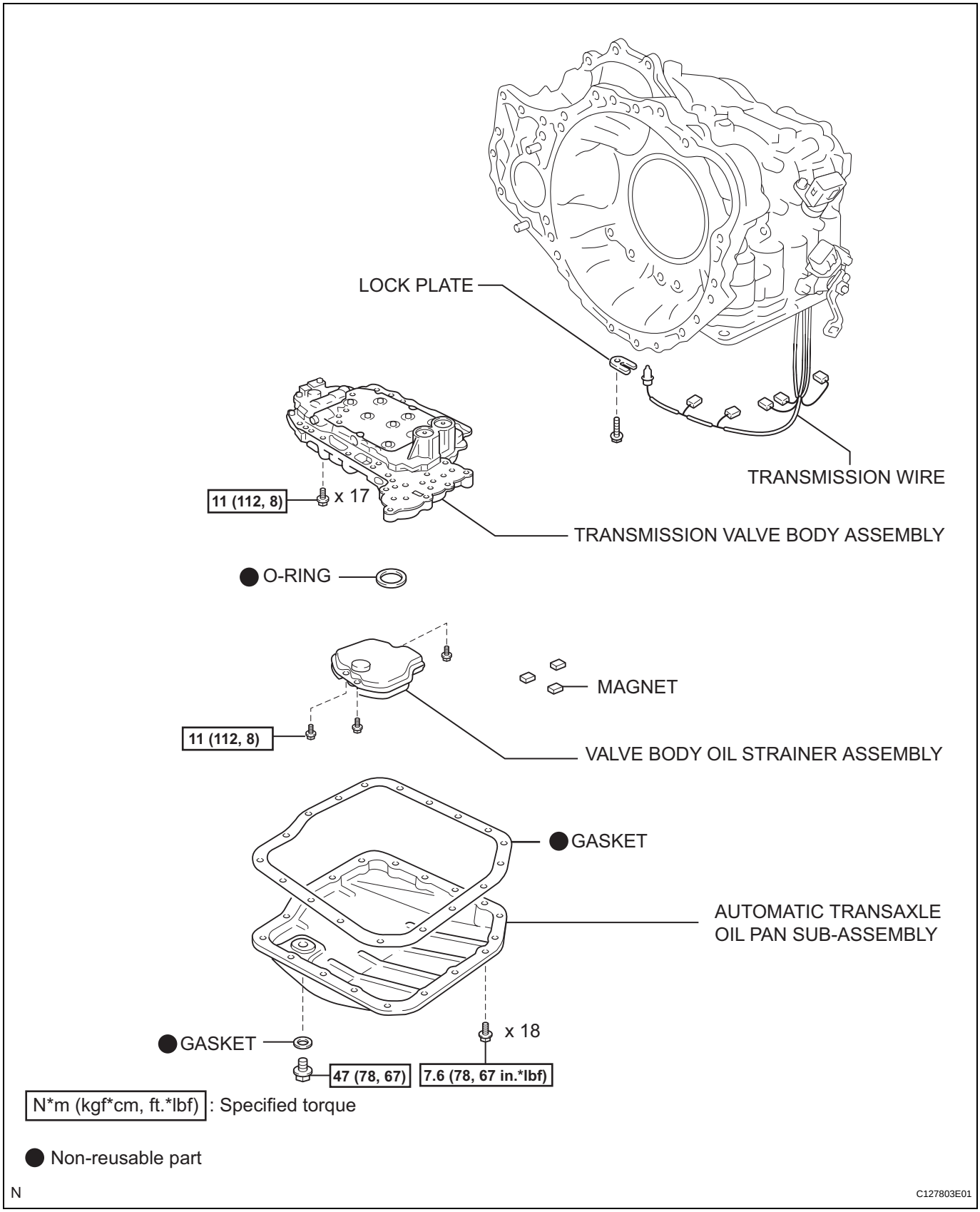
LOCK PLATE
TRANSMISSION WIRE
11 (112, 8)
x 17
TRANSMISSION VALVE BODY ASSEMBLY
● O-RING
MAGNET
11 (112, 8)
VALVE BODY OIL STRAINER ASSEMBLY
● GASKET
AUTOMATIC TRANSAXLE
OIL PAN SUB-ASSEMBLY
● GASKET
x 18
47 (78, 67)
7.6 (78, 67 in.*lbf)
N*m (kgf*cm, ft.*lbf) : Specified torque
● Non-reusable part
N
C127803E01

VALVE BODY

COMPONENTS

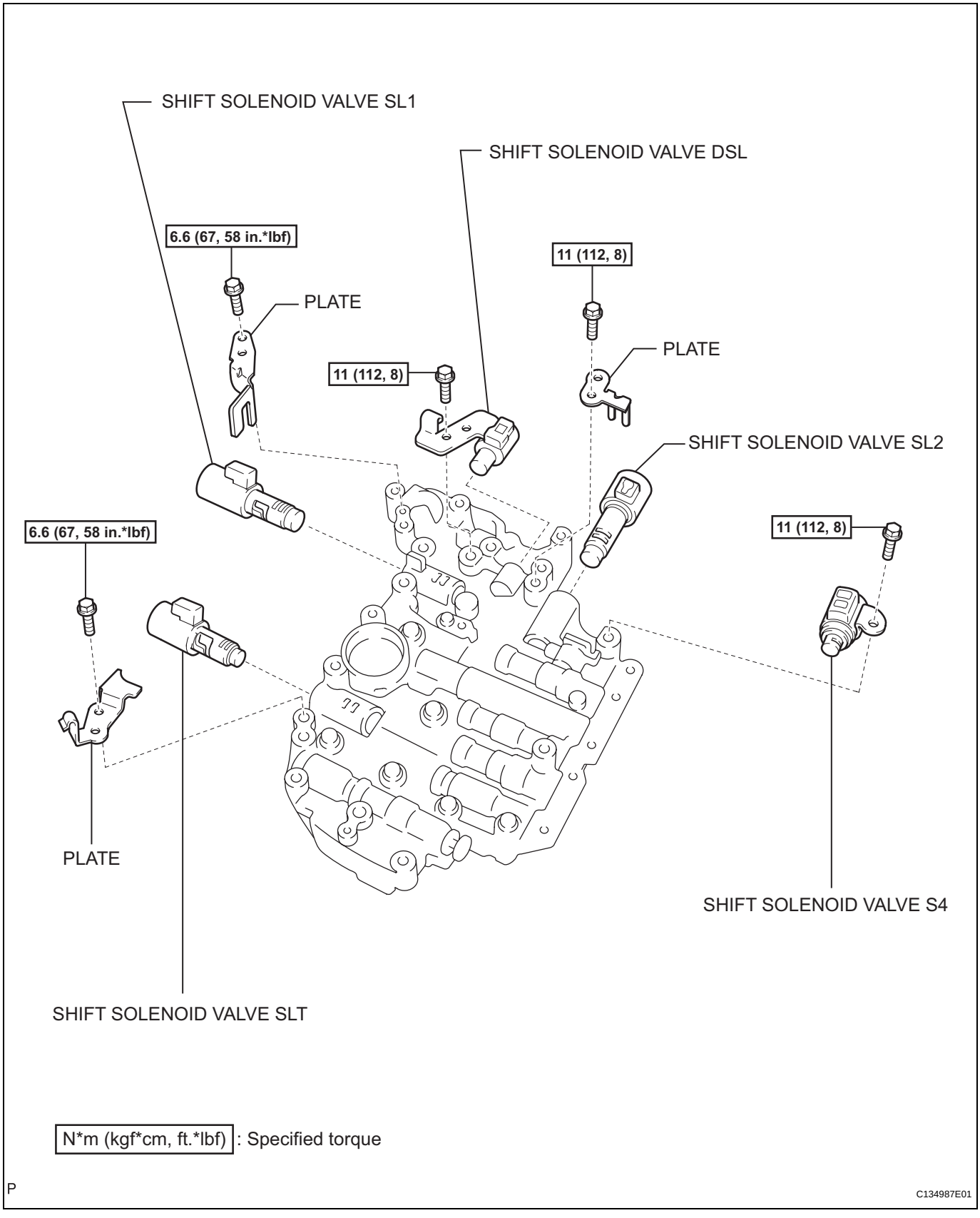

AX

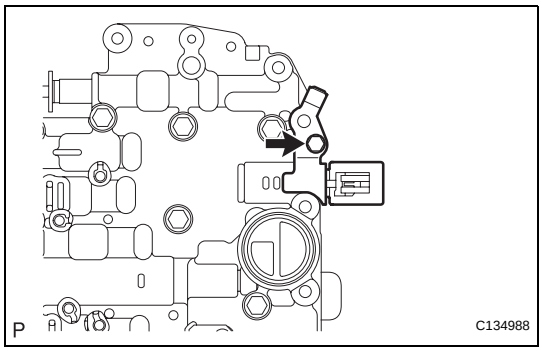

DISASSEMBLY

1. REMOVE SHIFT SOLENOID VALVE SLT

(a) Remove the bolt, plate and shift solenoid valve SLT from the valve body.

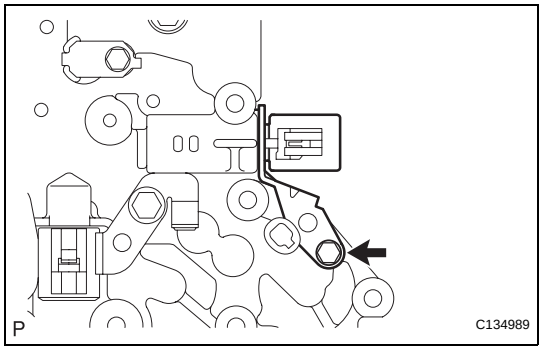

2. REMOVE SHIFT SOLENOID VALVE SL1

(a) Remove the bolt, plate and shift solenoid valve SL1 from the valve body.

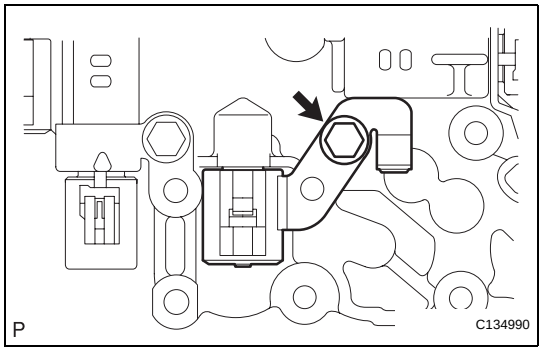

3. REMOVE SHIFT SOLENOID VALVE DSL

(a) Remove the bolt and shift solenoid valve DSL from the valve body.

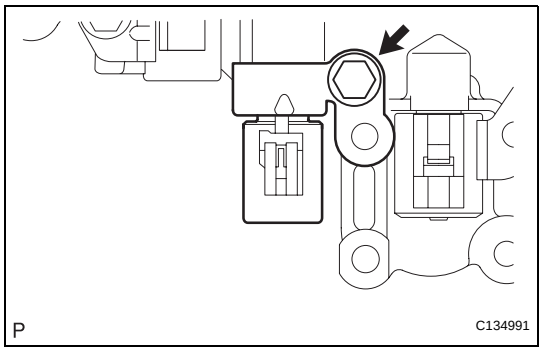

4. REMOVE SHIFT SOLENOID VALVE SL2

(a) Remove the bolt, plate and shift solenoid valve SL2 from the valve body.

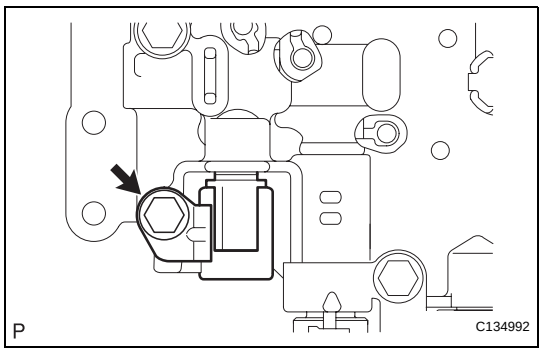

5. REMOVE SHIFT SOLENOID VALVE S4

(a) Remove the bolt and shift solenoid valve S4 from the valve body.

6. REMOVE MANUAL VALVE

(a) Remove the manual valve from the valve body.

REMOVAL

1. **DISCONNECT CABLE FROM NEGATIVE BATTERY TERMINAL**
   CAUTION:
   Wait at least 90 seconds after disconnecting the cable from the negative (-) battery terminal to prevent airbag and seat belt pretensioner activation.

2. **REMOVE NO. 1 ENGINE UNDER COVER**

3. **DRAIN AUTOMATIC TRANSAXLE FLUID**
   (a) Remove the drain plug and gasket, and drain ATF.
   (b) Install a new gasket and the drain plug.
   Torque: 47 N*m (479 kgf*cm, 35 ft.*lbf)

4. **REMOVE AUTOMATIC TRANSAXLE OIL PAN SUB-ASSEMBLY**
   (a) Remove the 18 bolts, oil pan and gasket.
   NOTICE:
   Some fluid will remain in the oil pan. Carefully remove the oil pan sub-assembly.
   (b) Remove the 3 magnets from the oil pan.

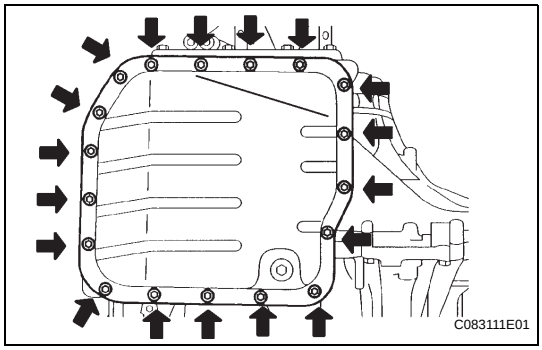

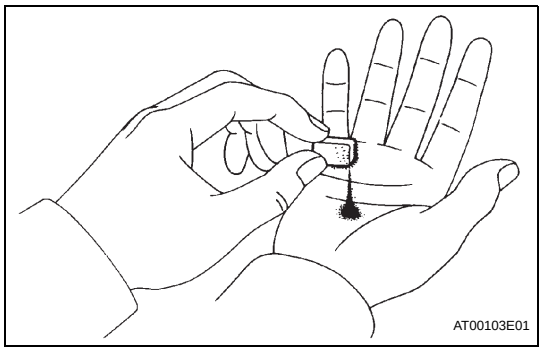

   (c) Examine particles in the pan.
      (1) Use the removed magnets to collect any steel chips. Look carefully at the chips and particles in the pan and on the magnet to anticipate what type of wear you will find in the transaxle.
      Steel (magnetic): bearing, gear and plate wear
      Brass (non-magnetic): bush wear

5. **REMOVE VALVE BODY OIL STRAINER ASSEMBLY**
   (a) Remove the 3 bolts and oil strainer.
   NOTICE:
   Be careful as some fluid will come out with the oil strainer.

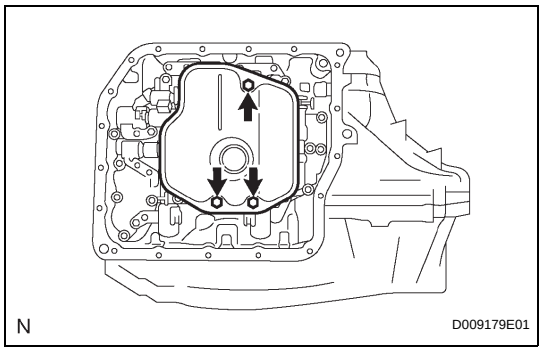

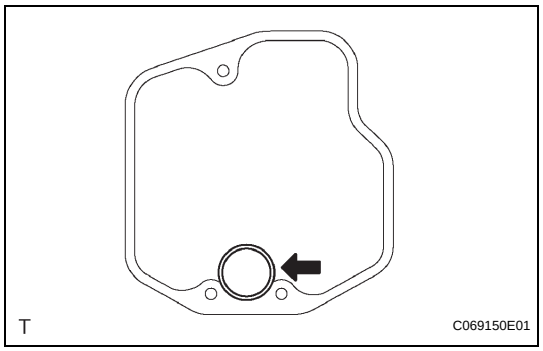

(b) Remove the O-ring from the oil strainer.

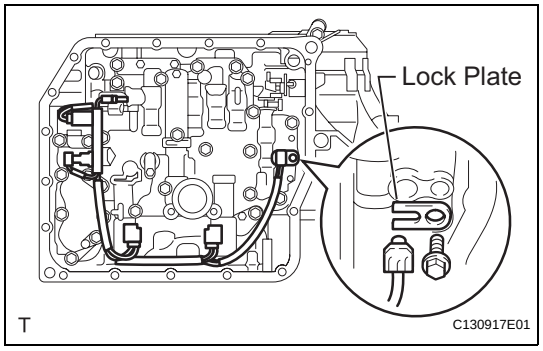

6. DISCONNECT TRANSMISSION WIRE

(a) Disconnect the 5 connectors.

(b) Remove the bolt and lock plate, and remove the ATF temperature sensor.

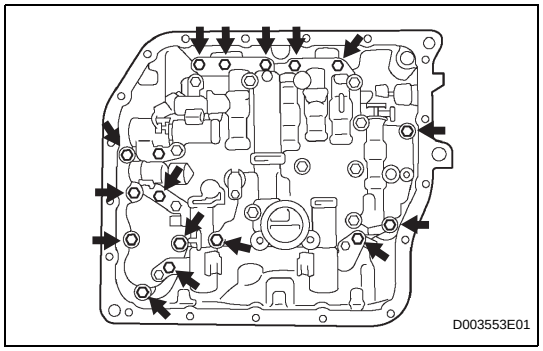

7. REMOVE TRANSMISSION VALVE BODY ASSEMBLY

(a) Support the valve body and remove the 17 bolts and valve body.

NOTICE:

Be careful not to drop the check valve body, spring and accumulator piston.

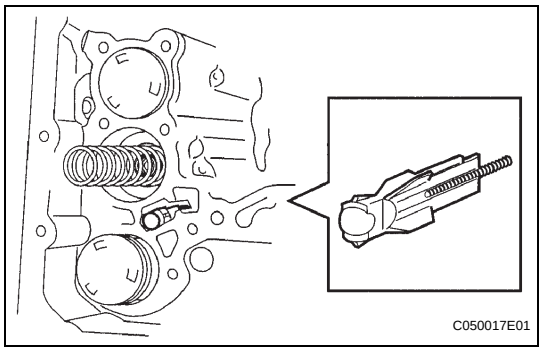

(b) Remove the check ball body and spring.

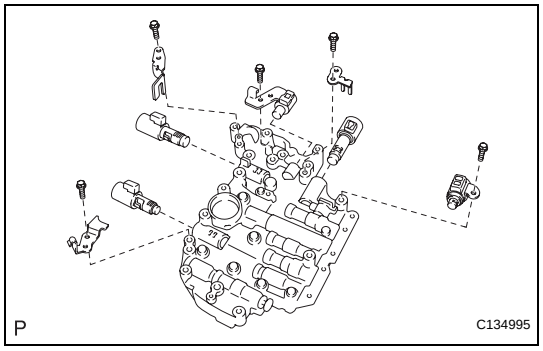

(c) Remove the 5 bolts, 4 plates and 5 shift solenoid valves.

INSTALLATION

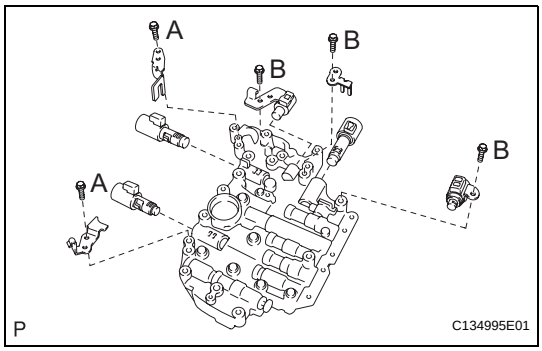

1. INSTALL TRANSMISSION VALVE BODY ASSEMBLY

(a) Install the 5 shift solenoid valves with the 5 bolts and 4 plates.

Torque: 6.6 N*m (67 kgf*cm, 58 in.*lbf) for bolt A
11 N*m (112 kgf*cm, 8 ft.*lbf) for bolt B

HINT:

Each bolt length is indicated below.

Bolt length:
12 mm (0.47 in.) for Bolt A
45 mm (1.77 in.) for Bolt B

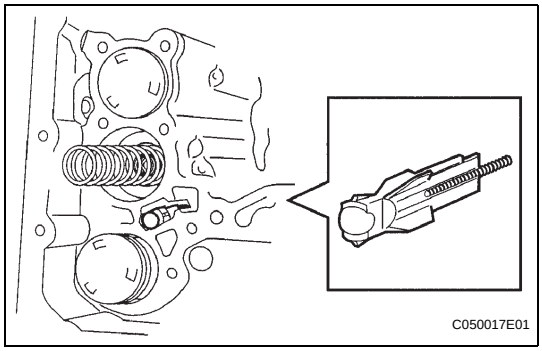

(b) Install the spring and check ball body.

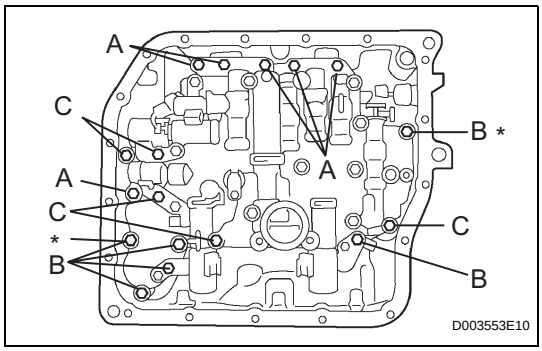

(c) Align the groove of the manual valve with the pin of lever.

(d) Install the 17 bolts.

Torque: 11 N*m (112 kgf*cm, 8 ft.*lbf)

NOTICE:

- **Push the valve body against the accumulator piston spring and the check ball body to install it.**
- **Tighten the bolts marked by * in the illustration first temporarily because they are positioning bolts.**

HINT:

Each bolt length is indicated below.

Bolt length:
25 mm (0.984 in.) for Bolt A
41 mm (1.614 in.) for Bolt B
45 mm (1.771 in.) for Bolt C

2. INSTALL TRANSMISSION WIRE

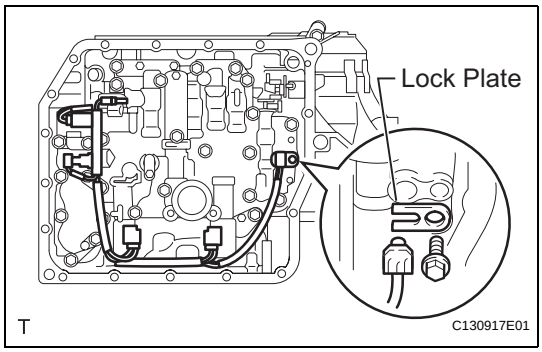

(a) Coat the O-ring of the temperature sensor with ATF.

(b) Install the ATF temperature sensor with the lock plate and bolt.

Torque: 6.6 N*m (67 kgf*cm, 58 in.*lbf)

(c) Connect the 5 shift solenoid valve connectors.

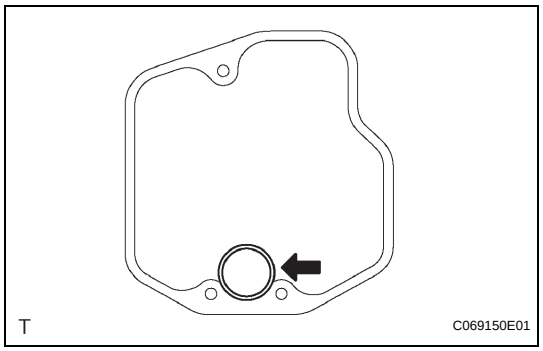

3. INSTALL VALVE BODY OIL STRAINER ASSEMBLY

(a) Coat a new O-ring with ATF.

(b) Install the O-ring to the oil strainer.

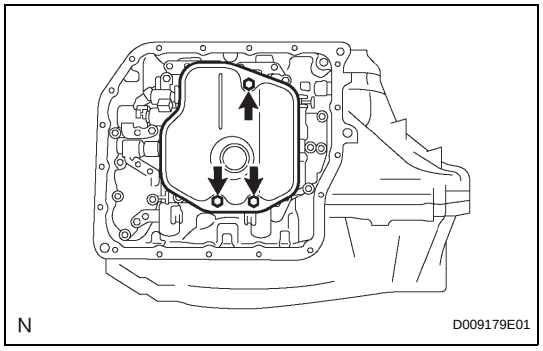

(c) Install the oil strainer with the 3 bolts.
Torque: 11 N*m (112 kgf*cm, 8 ft.*lbf)

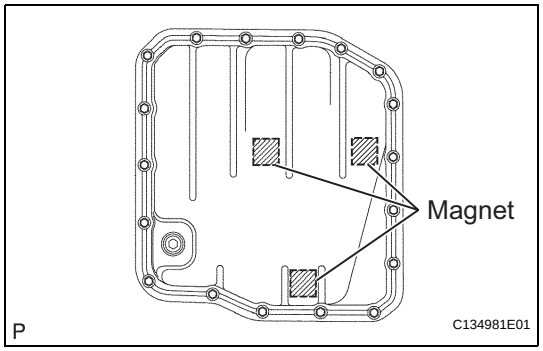

4. INSTALL AUTOMATIC TRANSAXLE OIL PAN SUB-ASSEMBLY

(a) Install the 3 magnets in the oil pan.

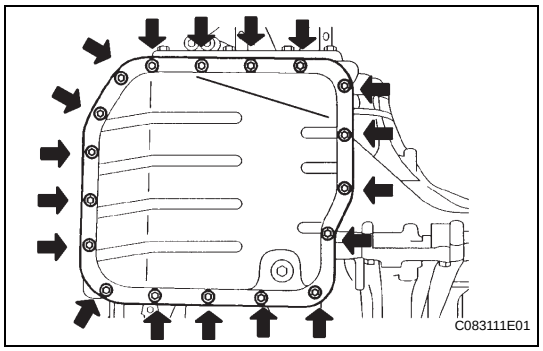

(b) Install a new gasket and oil pan with the 18 bolts.
Torque: 7.6 N*m (77 kgf*cm, 67 in.*lbf)

5. INSTALL NO. 1 ENGINE UNDER COVER

6. CONNECT CABLE TO NEGATIVE BATTERY TERMINAL

7. ADD AUTOMATIC TRANSAXLE FLUID
Fluid type:
Toyota Genuine ATF WS

8. INSPECT TRANSAXLE FLUID LEVEL

(a) Inspect the fluid level (see page AX-102).

9. PERFORM RESET MEMORY

(a) Perform the RESET MEMORY procedures (A/T initialization) (see page AX-18).

VALVE BODY ASSEMBLY

COMPONENTS

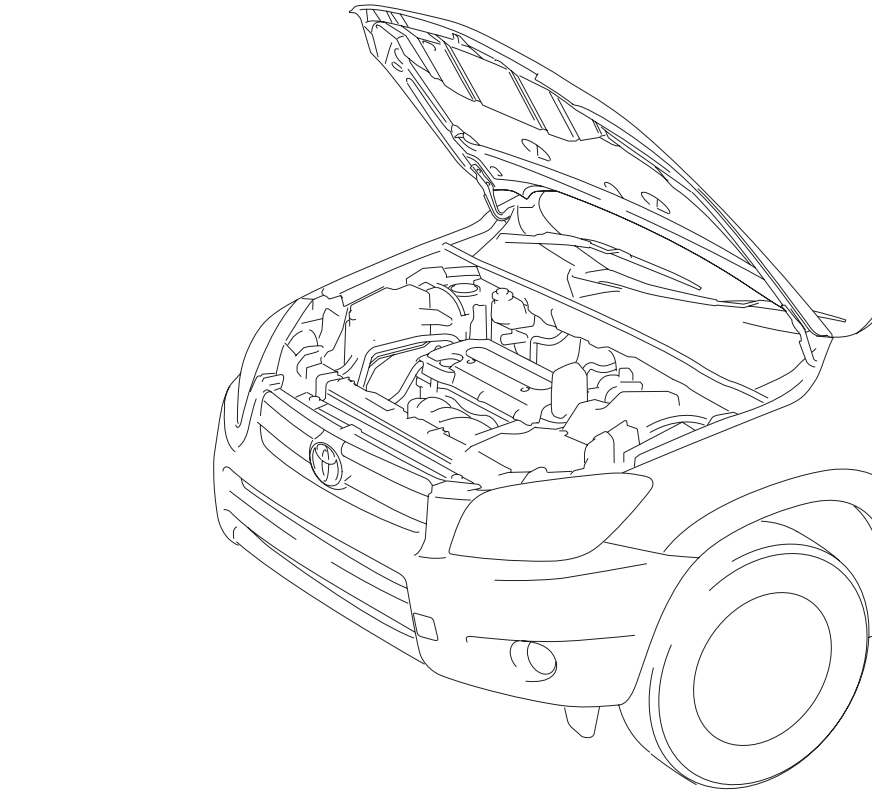

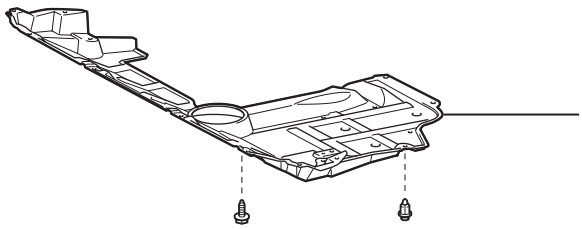

NO. 1 ENGINE UNDER COVER

P

C127832E01

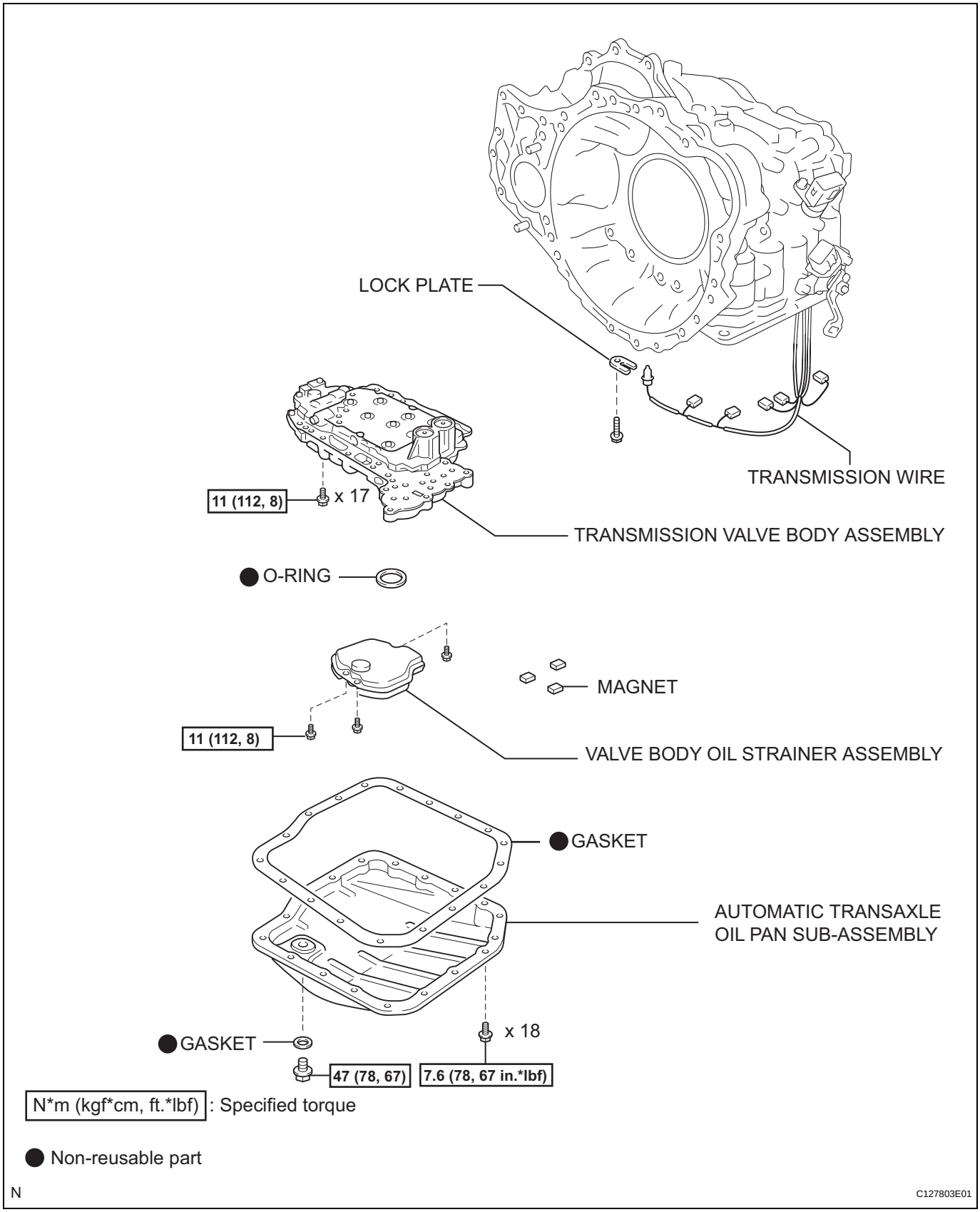
LOCK PLATE
TRANSMISSION WIRE
11 (112, 8)
x 17
TRANSMISSION VALVE BODY ASSEMBLY
● O-RING
MAGNET
11 (112, 8)
VALVE BODY OIL STRAINER ASSEMBLY
● GASKET
AUTOMATIC TRANSAXLE
OIL PAN SUB-ASSEMBLY
● GASKET
x 18
47 (78, 67)
7.6 (78, 67 in.*lbf)
N*m (kgf*cm, ft.*lbf) : Specified torque
● Non-reusable part
N
C127803E01

INSTALLATION

1. INSPECT TORQUE CONVERTER CLUTCH ASSEMBLY

(a) Inspect the torque converter clutch (see page AX-178).

2. INSTALL TORQUE CONVERTER CLUTCH ASSEMBLY

(a) Install the torque converter clutch to the automatic transaxle.

(b) Using a vernier caliper, measure dimension A between the transaxle and end surface of the drive plate.

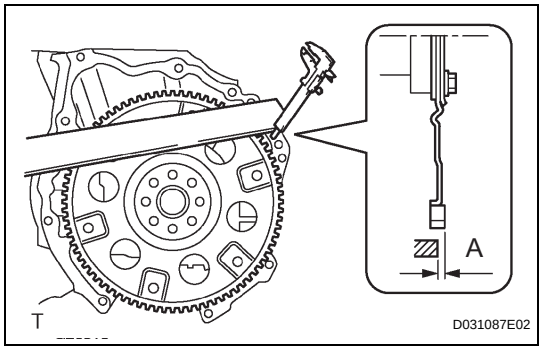

(c) Using a vernier caliper and straightedge, measure dimension B shown in the illustration and check that B is greater than A.

Standard dimension:

A + 1.0 mm (0.039 in.) or more

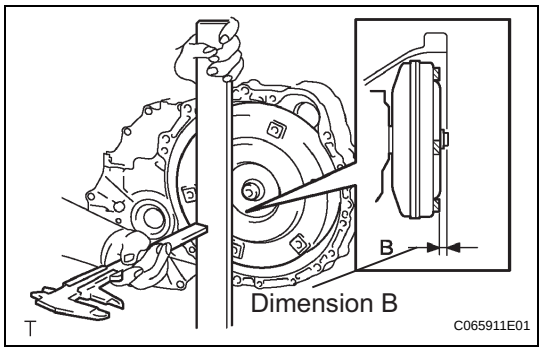

3. INSTALL AUTOMATIC TRANSMISSION CASE PROTECTOR

(a) Install the protector with the 2 bolts.

Torque: 23 N*m (235 kgf*cm, 17 ft.*lbf)

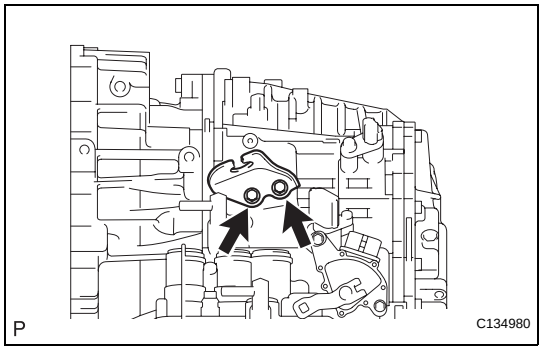

4. INSTALL NO. 1 TRANSMISSION CONTROL CABLE BRACKET

(a) Install the cable bracket with the 2 bolts.

Torque: 12 N*m (122 kgf*cm, 9 ft.*lbf)

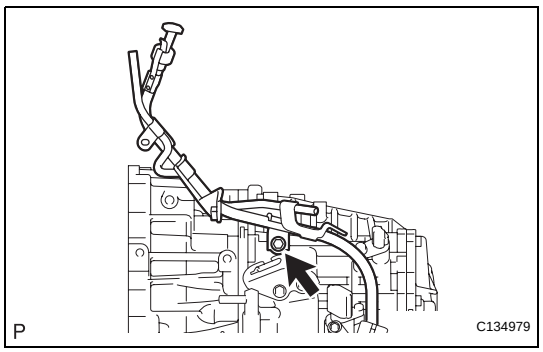

5. INSTALL TRANSMISSION OIL FILLER TUBE SUB-ASSEMBLY

(a) Install the filler tube with the bolt.

Torque: 5.5 N*m (56 kgf*cm, 49 in.*lbf)

(b) Install the ATF dipstick.

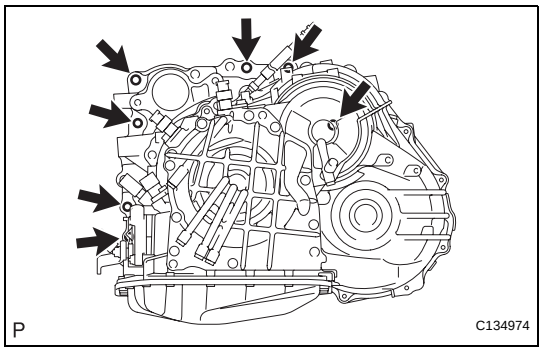

6. INSTALL AUTOMATIC TRANSAXLE ASSEMBLY

(a) Install the automatic transaxle to the engine with the 7 upper side mounting bolts.
Torque: 64 N*m (653 kgf*cm, 47 ft.*lbf)

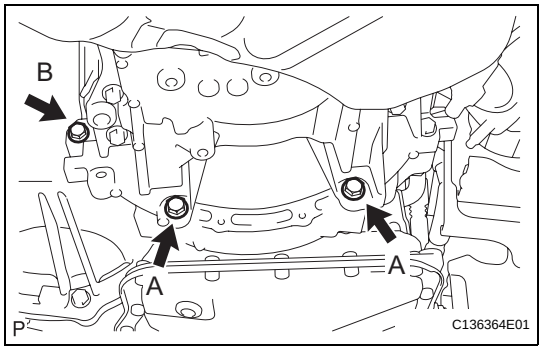

(b) Install the 3 lower side mounting bolts.
Torque: 37 N*m (377 kgf*cm, 27 ft.*lbf) for bolt A
46 N*m (469 kgf*cm, 34 ft.*lbf) for bolt B

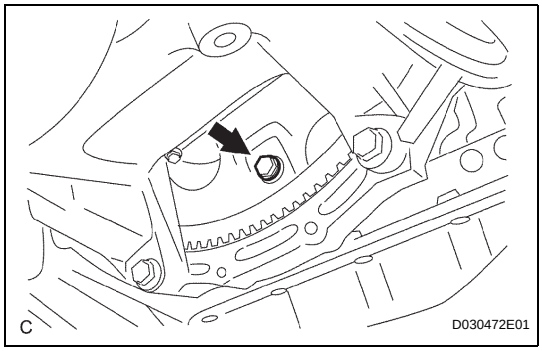

(c) Install the 6 torque converter clutch mounting bolts.
Torque: 41 N*m (418 kgf*cm, 30 ft.*lbf)
HINT:
First install the green colored bolt and then the other 5 bolts.

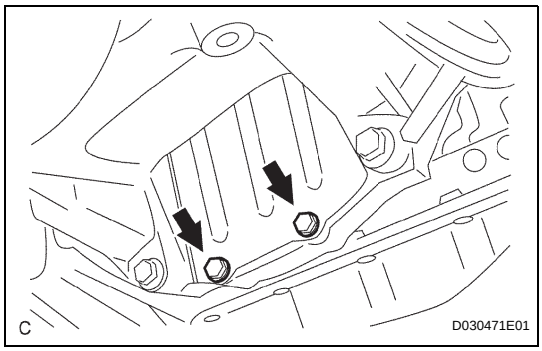

(d) Install the flywheel housing under cover with the 2 bolts.
Torque: 7.8 N*m (80 kgf*cm, 69 in.*lbf)

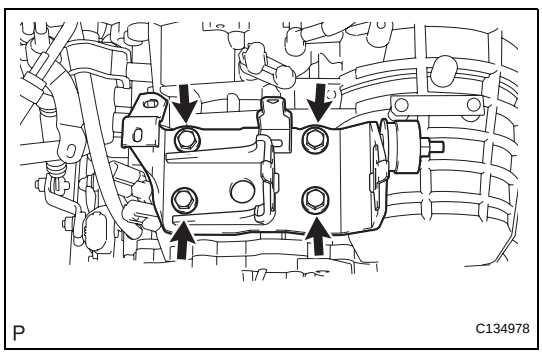

7. INSTALL ENGINE MOUNTING BRACKET LH

(a) Install the mounting bracket with the 4 bolts.
Torque: 64 N*m (653 kgf*cm, 47 ft.*lbf)

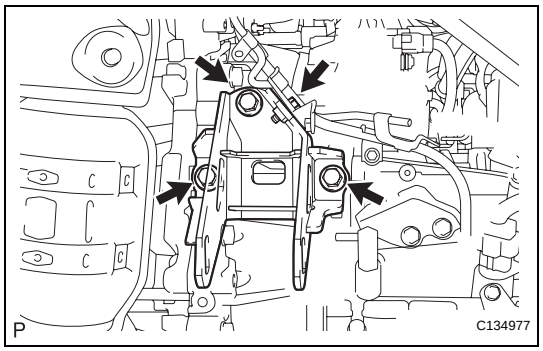

8. INSTALL FRONT ENGINE MOUNTING BRACKET

(a) Install the mounting bracket with the 4 bolts.
Torque: 64 N*m (657 kgf*cm, 47 ft.*lbf)
Torque: 5.5 N*m (56 kgf*cm, 49 in.*lbf) for filler tube bolt

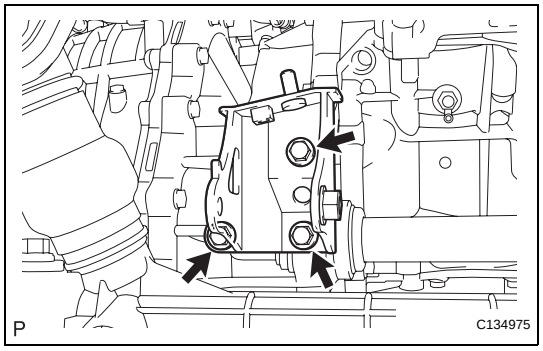

9. INSTALL REAR ENGINE MOUNTING BRACKET

(a) Install the mounting bracket with the 3 bolts.
Torque: 45 N*m (459 kgf*cm, 33 ft.*lbf)

10. INSTALL TRANSMISSION OIL COOLER HOSES AND TUBE

(a) Install the transmission oil cooler hoses and tube (see page AX-152).

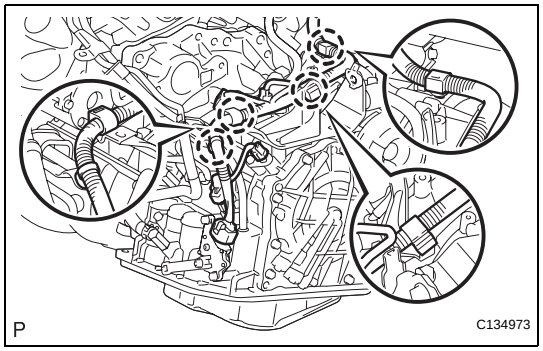

11. CONNECT WIRE HARNESS

(a) Connect the wire harness clamps.
(b) Connect the 2 speed sensor connectors.
(c) Connect the transaxle wire connector.
(d) Connect the park/neutral position switch connector.

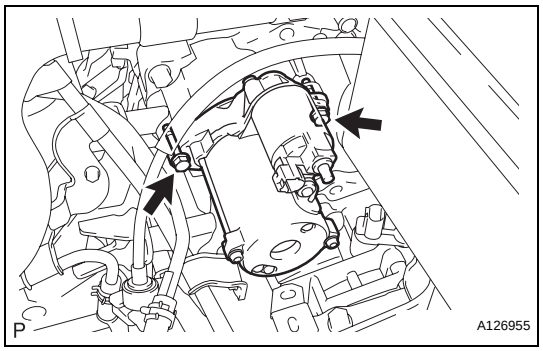

12. INSTALL STARTER ASSEMBLY

(a) Install the starter with the 2 bolts.
Torque: 37 N*m (377 kgf*cm, 27 ft.*lbf)
(b) Connect the starter connector.

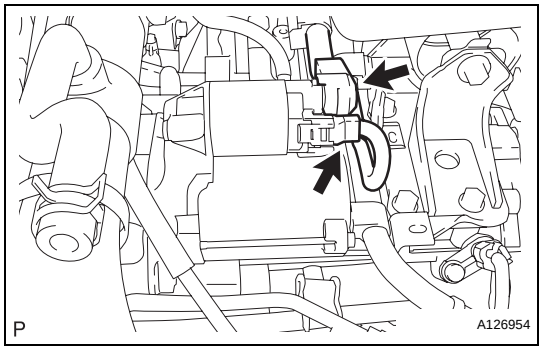

(c) Install the terminal nut and cover the nut with the cap.
Torque: 9.8 N*m (100 kgf*cm, 88 in.*lbf)

13. INSTALL ENGINE ASSEMBLY WITH TRANSAXLE

(a) Install the engine with transaxle (see page EM-31).

14. ADD AUTOMATIC TRANSAXLE FLUID
Fluid type:
Toyota Genuine ATF WS

15. INSPECT AUTOMATIC TRANSAXLE FLUID

(a) Inspect the automatic transaxle fluid (see page AX-126).

16. PERFORM RESET MEMORY

(a) Perform the RESET MEMORY procedures (A/T initialization) (see page AX-20).

AUTOMATIC TRANSAXLE ASSEMBLY

COMPONENTS

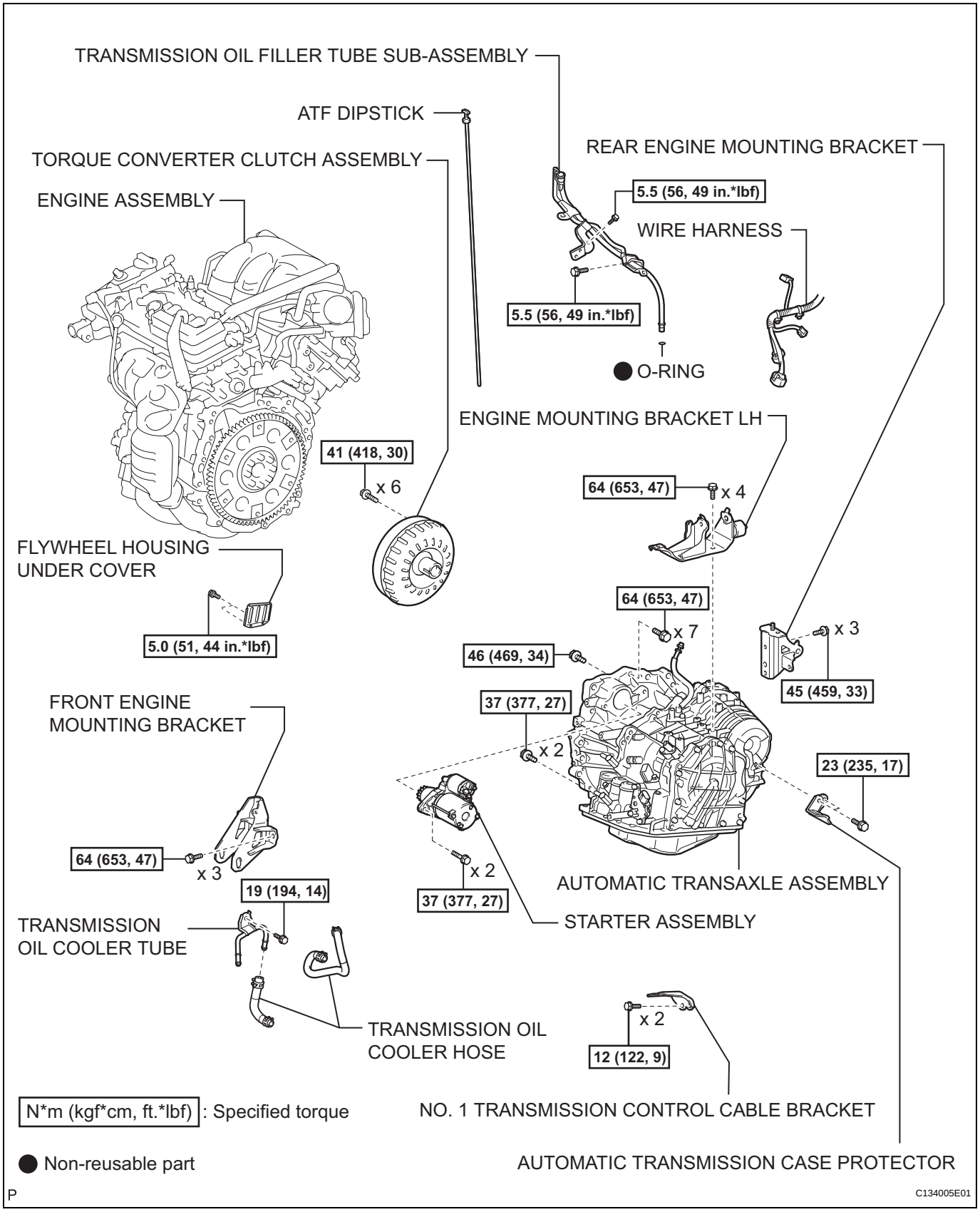

REMOVAL

1. REMOVE ENGINE ASSEMBLY WITH TRANSAXLE

(a) Remove the engine with transaxle (see page EM-21).

2. DRAIN AUTOMATIC TRANSAXLE FLUID

(a) Remove the drain plug and gasket, and drain the ATF.

(b) Install a new gasket and the drain plug.
Torque: 47 N*m (479 kgf*cm, 35 ft.*lbf)

3. REMOVE STARTER ASSEMBLY

(a) Disconnect the starter connector.

(b) Open the terminal cap, and remove the nut and disconnect the starter wire.

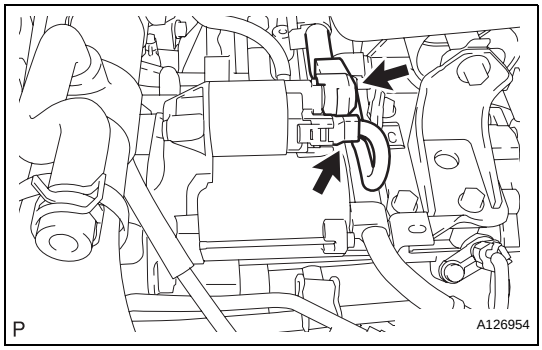

(c) Remove the 2 bolts and starter.

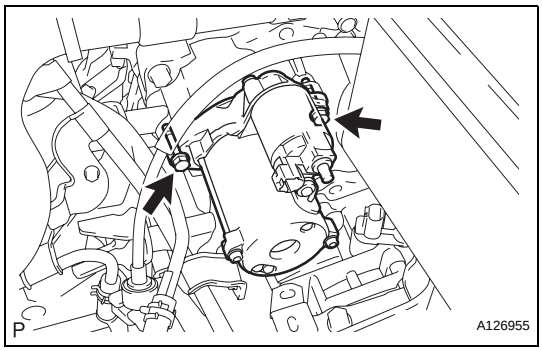

4. DISCONNECT WIRE HARNESS

(a) Disconnect the park/neutral position switch connector.

(b) Disconnect the transaxle wire connector.

(c) Disconnect the 2 speed sensor connectors.

(d) Disconnect the wire harness clamps.

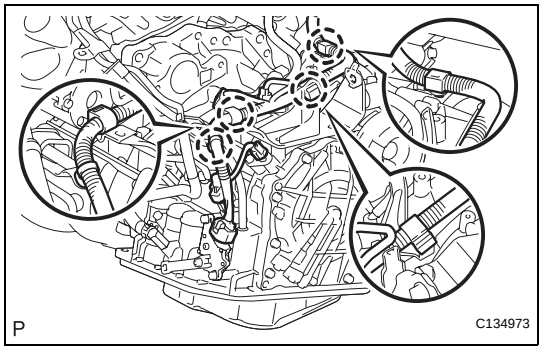

5. REMOVE TRANSMISSION OIL COOLER HOSE AND TUBE

(a) Remove the oil cooler hoses and tube (see page AX-151).

6. REMOVE REAR ENGINE MOUNTING BRACKET

(a) Remove the 3 bolts and mounting bracket.

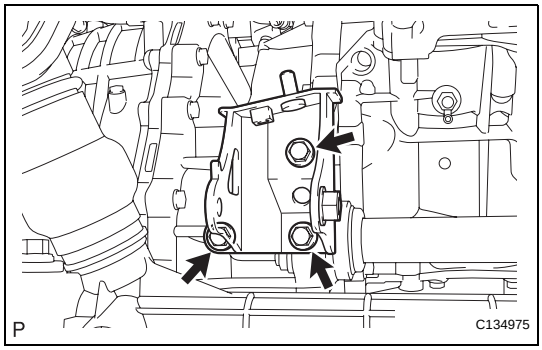

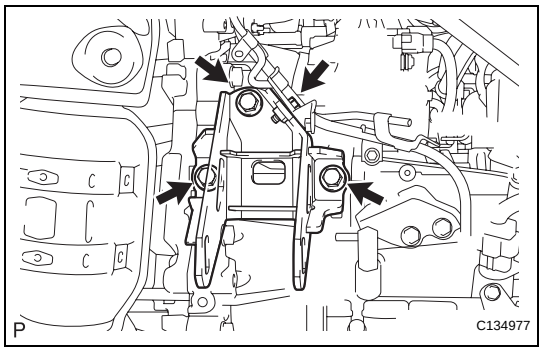

7. REMOVE FRONT ENGINE MOUNTING BRACKET

(a) Remove the 4 bolts and mounting bracket.

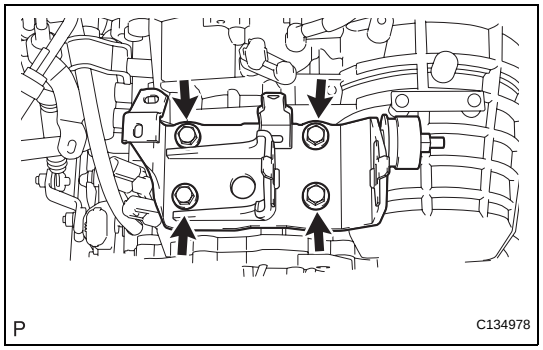

8. REMOVE ENGINE MOUNTING BRACKET LH

(a) Remove the 4 bolts and mounting bracket.

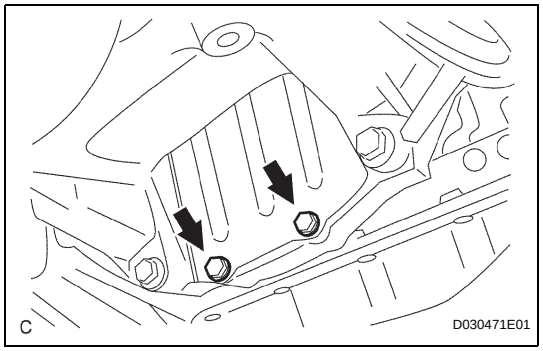

9. REMOVE AUTOMATIC TRANSAXLE ASSEMBLY

(a) Remove the 2 bolts and flywheel housing under cover.

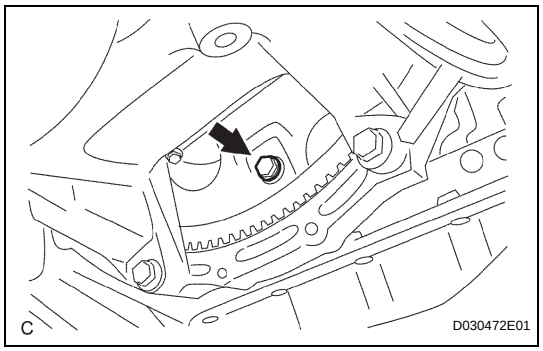

(b) Turn the crankshaft to gain access and remove the 6 bolts while holding the crankshaft pulley bolt with a wrench.

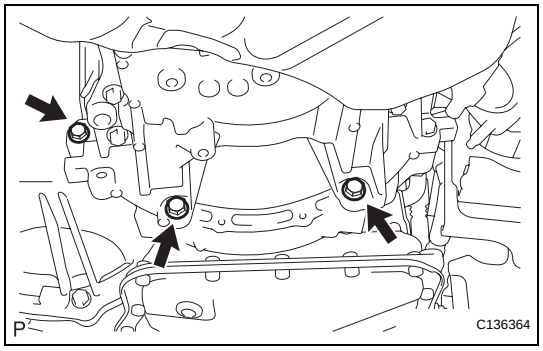

(c) Remove the 3 lower side mounting bolts.

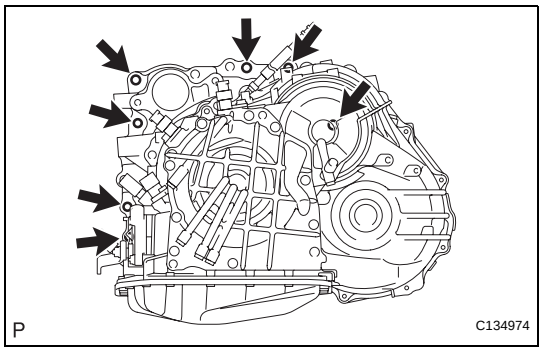

(d) Remove the 7 upper side mounting bolts.
(e) Separate and remove the automatic transaxle.

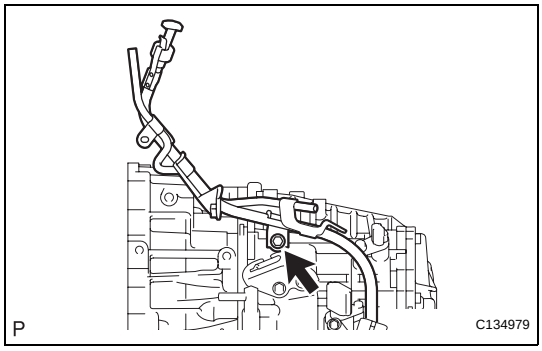

10. REMOVE TRANSMISSION OIL FILLER TUBE SUB-ASSEMBLY

(a) Remove the ATF dipstick.
(b) Remove the bolt and oil filler tube.

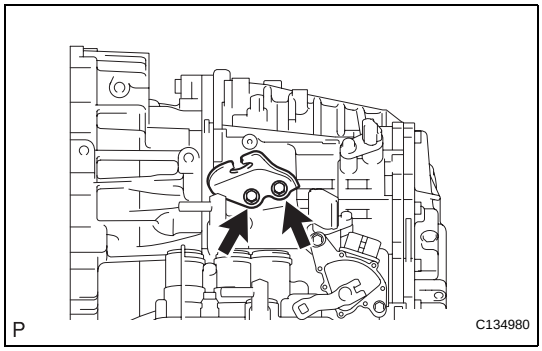

11. REMOVE NO. 1 TRANSMISSION CONTROL CABLE BRACKET

(a) Remove the 2 bolts and cable bracket.

12. REMOVE AUTOMATIC TRANSMISSION CASE PROTECTOR

(a) Remove the 2 bolts and protector.

13. REMOVE TORQUE CONVERTER CLUTCH ASSEMBLY

AUTOMATIC TRANSAXLE FLUID

ON-VEHICLE INSPECTION

1. CHECK FLUID LEVEL

HINT:

Drive the vehicle so that the engine and transaxle are at normal operating temperature.

Fluid temperature:

70 to 80°C (158 to 176°F)

(a) Park the vehicle on a level surface and set the parking brake.

(b) With the engine idling and the brake pedal depressed, move the shift lever to each position from the P to L position, and return it to the P position.

(c) Take out the dipstick and wipe it clean.

(d) Fully push the dipstick back into the pipe.

(e) Take the dipstick out and check that the fluid level is in the HOT range.

If the level is not in the HOT range, add transaxle fluid.

CAUTION:

Wear gloves when working.

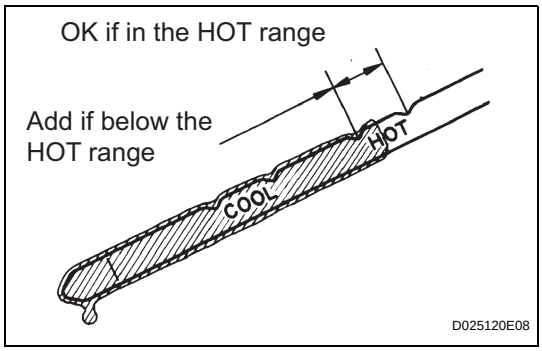

DEFINITION OF TERMS

Term	Definition
Monitor description	Description of what the ECM monitors and how it detects malfunctions (monitoring purpose and its details).
Related DTCs	Diagnostic code.
Typical enabling condition	Preconditions that allow the ECM to detect malfunctions. With all preconditions satisfied, the ECM sets the DTC when the monitored value(s) exceeds the malfunction threshold(s).
Sequence of operation	The priority order that is applied to monitoring, if multiple sensors and components are used to detect the malfunction. While another sensor is being monitored, the next sensor or component will not be monitored.
Required sensor/Components	The sensors and components that are used by the ECM to detect malfunctions.
Frequency of operation	The number of times that the ECM checks for malfunctions per driving cycle. "Once per driving cycle" means that the ECM detects malfunction only 1 time during a single driving cycle. "Continuous" means that the ECM detects a malfunction every time the enabling condition is met.
Duration	The minimum time that the ECM must sense a continuous deviation in the monitored value(s) before setting a DTC. This timing begins after the "typical enabling conditions" are met.
Malfunction thresholds	Beyond this value, the ECM will conclude that there is a malfunction and set a DTC.
MIL operation	MIL illumination timing after a defect is detected. "Immediate" means that the ECM illuminates the MIL the instant the ECM determines that there is a malfunction. "2 driving cycle" means that the ECM illuminates the MIL if the same malfunction is detected again in the 2nd driving cycle.
Component operating range	Normal operation range of sensors and solenoids under normal driving conditions. Use these ranges as a reference. They cannot be used to judge if a sensor or solenoid is defective or not.

PARTS LOCATION

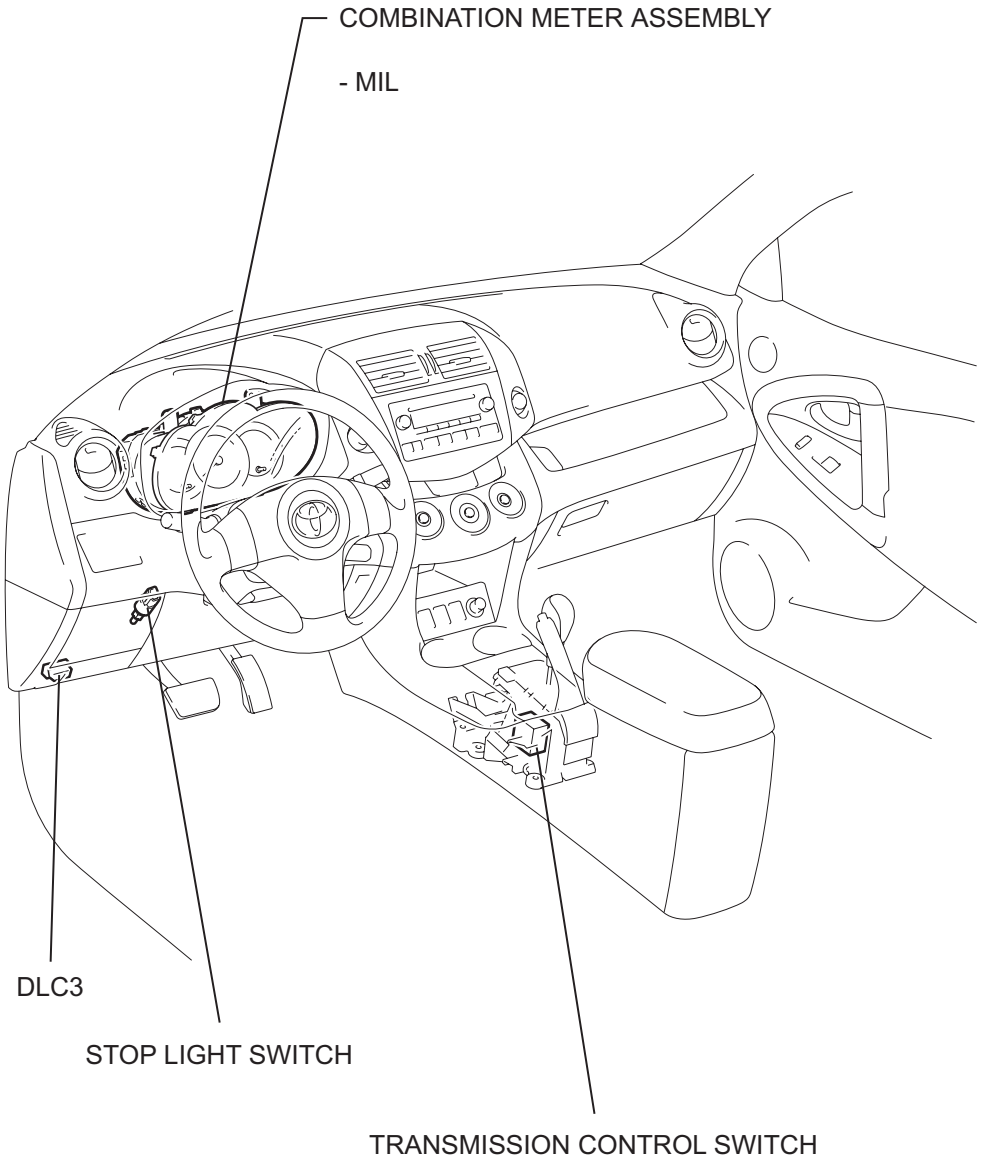

P

C127571E01

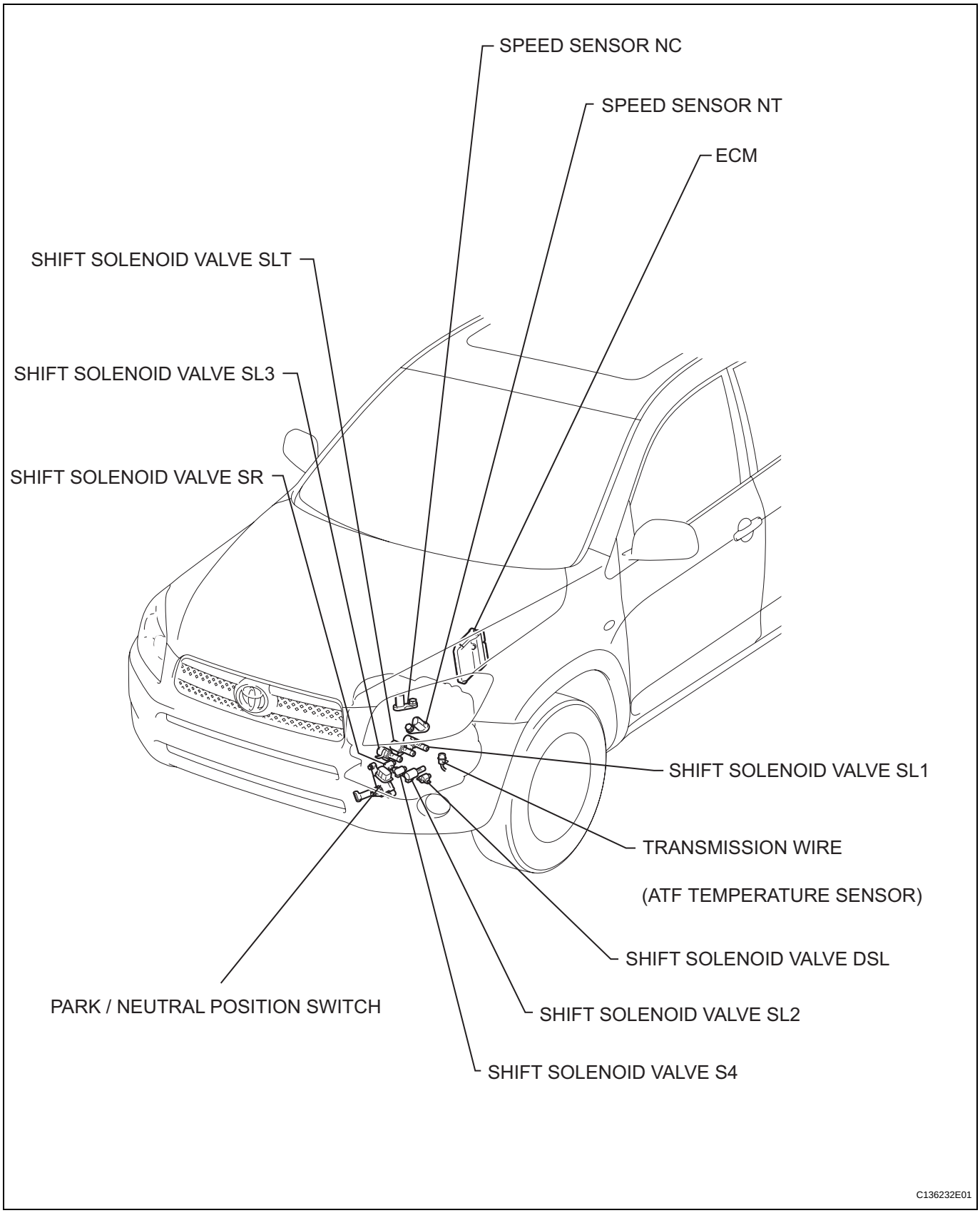
SPEED SENSOR NC
SPEED SENSOR NT
ECM
SHIFT SOLENOID VALVE SLT
SHIFT SOLENOID VALVE SL3
SHIFT SOLENOID VALVE SR
SHIFT SOLENOID VALVE SL1
TRANSMISSION WIRE
(ATF TEMPERATURE SENSOR)
SHIFT SOLENOID VALVE DSL
PARK / NEUTRAL POSITION SWITCH
SHIFT SOLENOID VALVE SL2
SHIFT SOLENOID VALVE S4
C136232E01

SYSTEM DIAGRAM

The configuration of the electronic control system in the U151E automatic transaxle is as shown in the following chart.

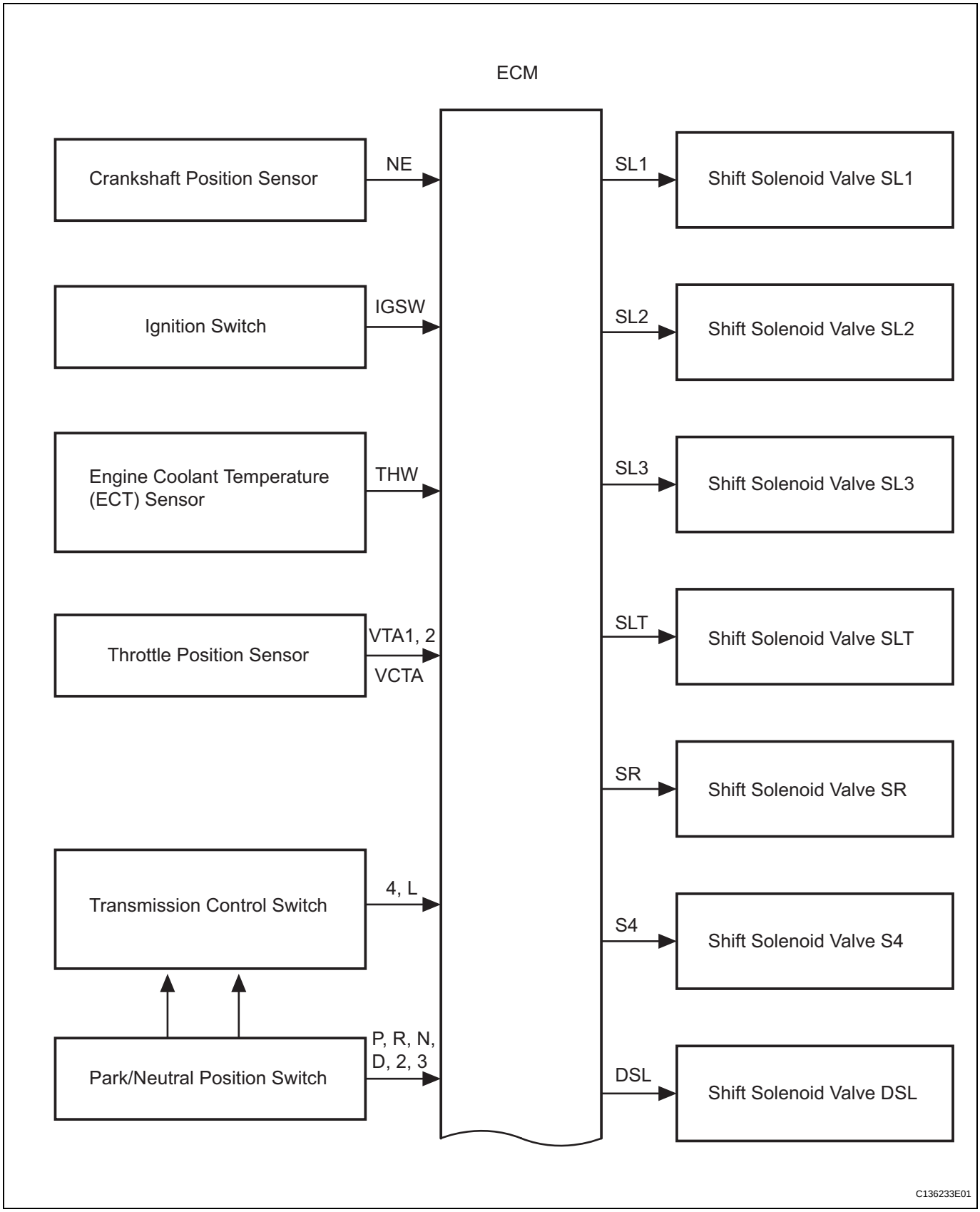

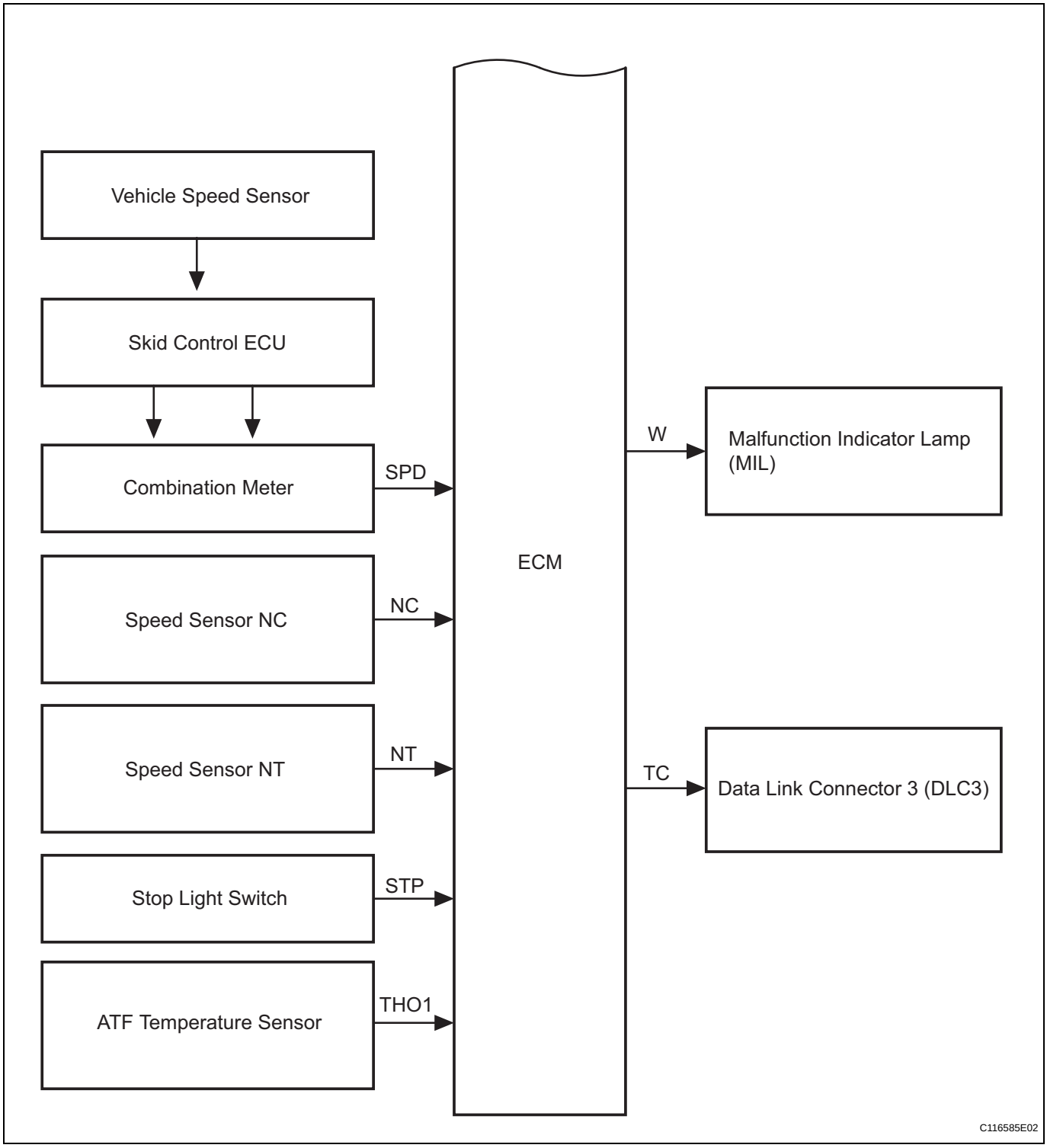
Vehicle Speed Sensor
Skid Control ECU
Combination Meter
Speed Sensor NC
Speed Sensor NT
Stop Light Switch
ATF Temperature Sensor
SPD
NC
NT
STP
THO1
ECM
W
Malfunction Indicator Lamp (MIL)
TC
Data Link Connector 3 (DLC3)
C116585E02

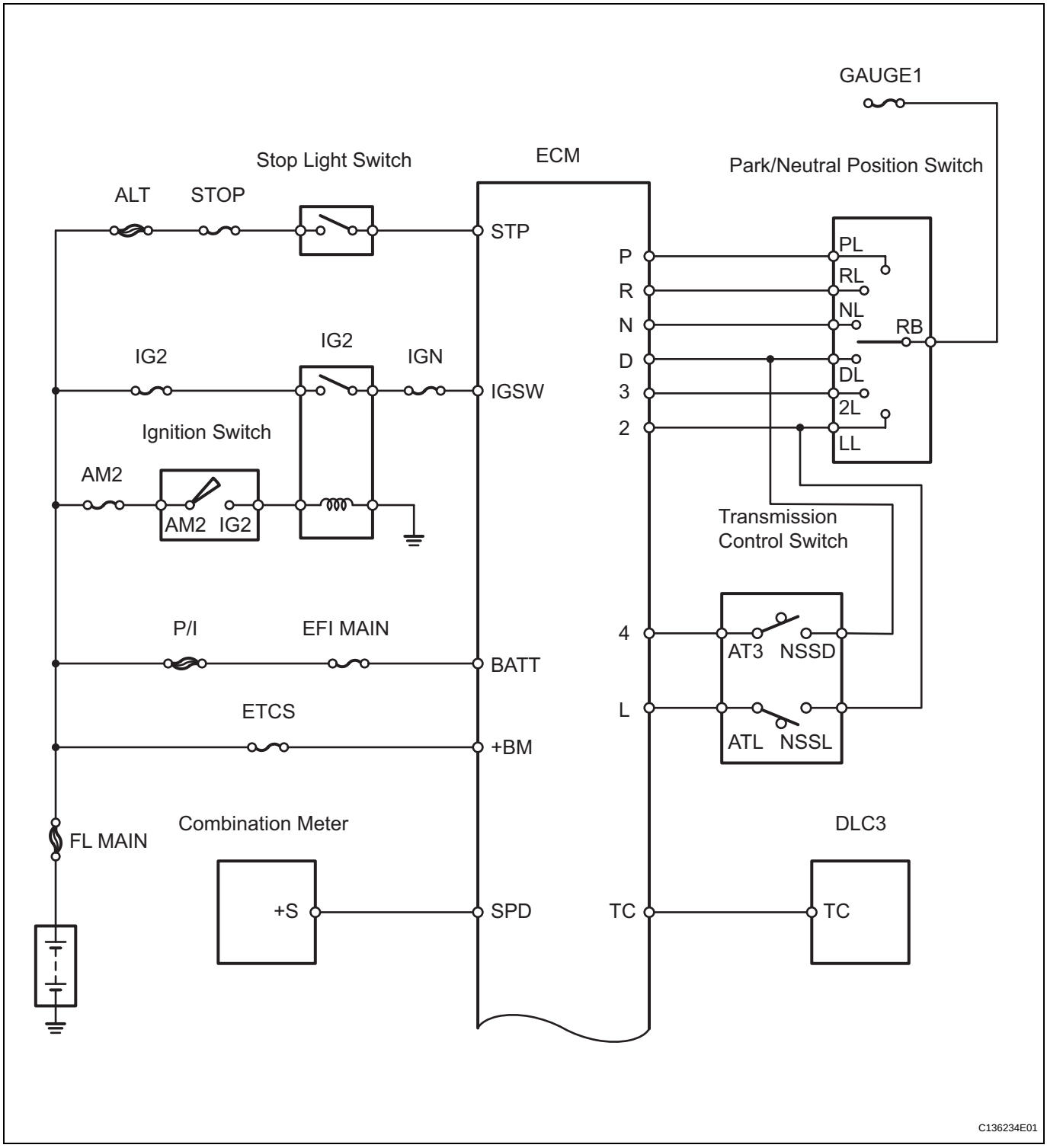
GAUGE1
Stop Light Switch
ECM
Park/Neutral Position Switch
ALT
STOP
STP
P
R
N
D
3
2
PL
RL
NL
RB
DL
2L
LL
IG2
IG2
IGN
IGSW
Ignition Switch
AM2
AM2
IG2
Transmission
Control Switch
4
L
AT3
NSSD
ATL
NSSL
P/I
EFI MAIN
BATT
ETCS
+BM
FL MAIN
Combination Meter
DLC3
+S
SPD
TC
TC
C136234E01

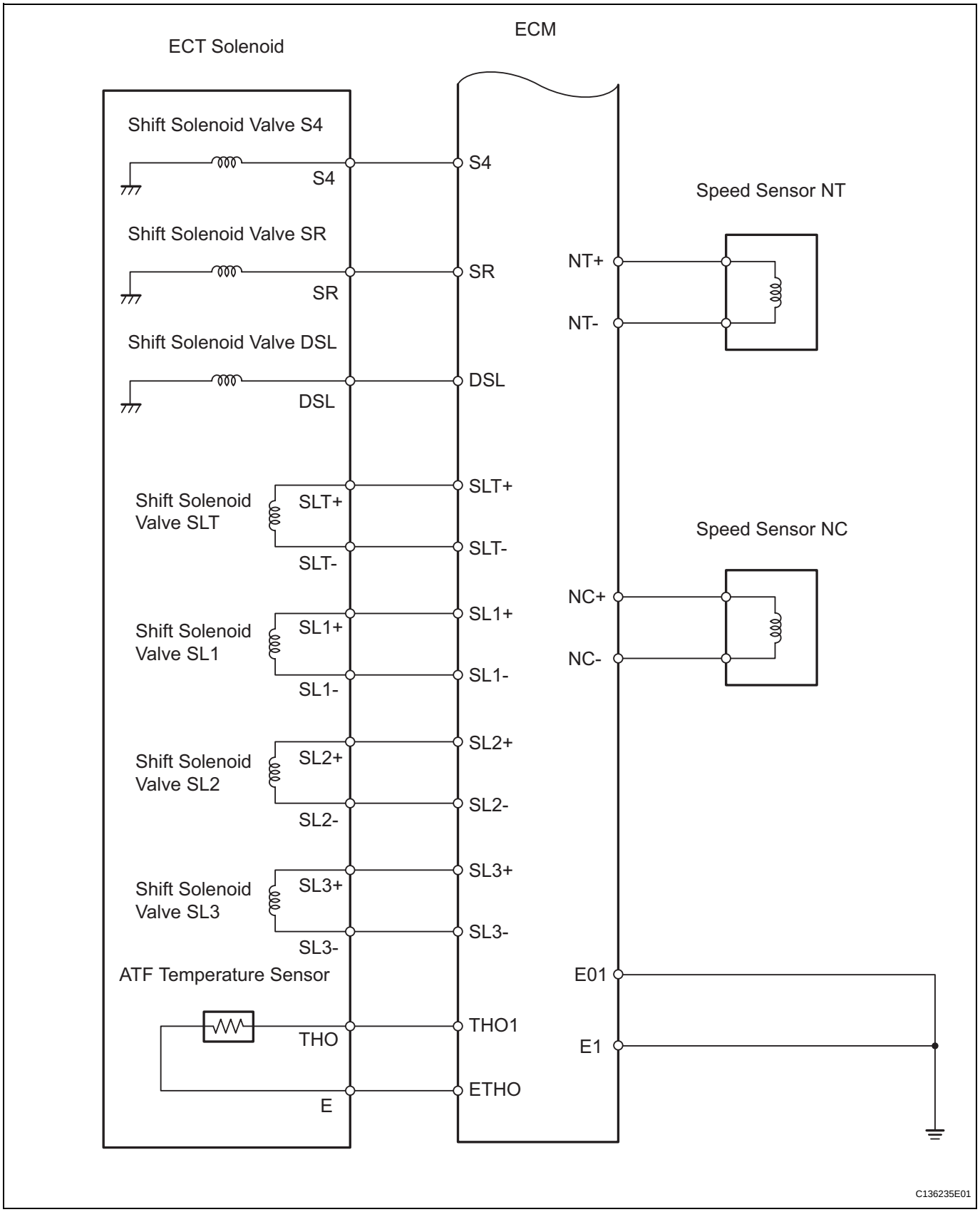
ECT Solenoid
ECM
Shift Solenoid Valve S4
S4
S4
Shift Solenoid Valve SR
SR
SR
Shift Solenoid Valve DSL
DSL
DSL
Shift Solenoid Valve SLT
SLT+
SLT-
SLT+
SLT-
Shift Solenoid Valve SL1
SL1+
SL1-
SL1+
SL1-
Shift Solenoid Valve SL2
SL2+
SL2-
SL2+
SL2-
Shift Solenoid Valve SL3
SL3+
SL3-
SL3+
SL3-
ATF Temperature Sensor
THO
E
THO1
ETHO
Speed Sensor NT
NT+
NT-
Speed Sensor NC
NC+
NC-
E01
E1
C136235E01

SYSTEM DESCRIPTION

1. SYSTEM DESCRIPTION

(a) The Electronic Controlled Automatic Transaxle (ECT) is an automatic transaxle that electronically controls shift timing using the Engine Control Module (ECM). The ECM detects electrical signals that indicate engine and driving conditions, and controls the shift point based on driver habits and road conditions. As a result, fuel efficiency and power transaxle performance are improved.
Shift shock is reduced by controlling the engine and transaxle simultaneously.
In addition, the ECT has the following features:

- Diagnostic function.
- Fail-safe function when a malfunction occurs.

HOW TO PROCEED WITH TROUBLESHOOTING

HINT:

- The ECM of this system is connected to the CAN and multiplex communication system. Therefore, before starting troubleshooting, make sure to check that there is no trouble in the CAN and multiplex communication systems.
- *: Use the intelligent tester.

1	VEHICLE BROUGHT TO WORKSHOP

NEXT

2	CUSTOMER PROBLEM ANALYSIS

NEXT

3	INSPECT BATTERY VOLTAGE

Standard voltage:
11 to 14 V

If the voltage is below 11 V, recharge or replace the battery before proceeding.

NEXT

4	CONNECT INTELLIGENT TESTER TO DLC3*

NEXT

5	CHECK AND CLEAR DTCS AND FREEZE FRAME DATA*

(a) Refer to the DTC CHECK / CLEAR (see page AX-33).

NEXT

6	VISUAL INSPECTION

NEXT

7	SETTING CHECK MODE DIAGNOSIS*

(a) Refer to the CHECK MODE PROCEDURE (see page AX-34).

NEXT

8	PROBLEM SYMPTOM CONFIRMATION

(a) Refer to the ROAD TEST (see page AX-13).

Result

Result	Proceed to
Symptom does not occur	A
Symptom occurs	B

B → GO TO STEP 10

A

9	SYMPTOM SIMULATION

(a) Refer to the ELECTRONIC CIRCUIT INSPECTION PROCEDURE (see page IN-37).

NEXT

10	DTC CHECK*

(a) Refer to the DTC CHECK / CLEAR (see page AX-33).

Result

Result	Proceed to
DTC is not output	A
DTC is output	B

B → GO TO STEP 18

A

11	BASIC INSPECTION

(a) Refer to the AUTOMATIC TRANSMISSION FLUID (see page AX-126).

(b) Refer to the PARK/NEUTRAL POSITION SWITCH (see page AX-132).

(c) Refer to the FLOOR SHIFT ASSEMBLY (see page AX-162).

NG → GO TO STEP 21

OK

12	MECHANICAL SYSTEM TESTS

(a) Refer to the MECHANICAL SYSTEM TESTS (see page AX-16).

NG → GO TO STEP 17

OK

13 HYDRAULIC TEST

(a) Refer to the HYDRAULIC TEST (see page AX-18).

NG → GO TO STEP 17

OK

14 MANUAL SHIFTING TEST

(a) Refer to the MANUAL SHIFTING TEST (see page AX-19).

NG → GO TO STEP 16

OK

15 PROBLEM SYMPTOMS TABLE CHAPTER 1

(a) Refer to the PROBLEM SYMPTOMS TABLE (see page AX-23).

NG → GO TO STEP 19

OK

16 PROBLEM SYMPTOMS TABLE CHAPTER 2

(a) Refer to the PROBLEM SYMPTOMS TABLE (see page AX-23).

NEXT

17 PART INSPECTION

NG → GO TO STEP 21

OK

18 DTC CHART

(a) Refer to the DIAGNOSTIC TROUBLE CODE CHART (see page AX-40).

NEXT

19	CIRCUIT INSPECTION

NEXT

20	IDENTIFICATION OF PROBLEM

NEXT

21	REPAIR OR REPLACE

NEXT

22	CONFIRMATION TEST

NEXT

END

ROAD TEST

1. PROBLEM SYMPTOM CONFIRMATION

(a) Based on the result of the customer problem analysis, try to reproduce the symptoms. If the problem is that the transaxle does not shift up, shift down, or the shift point is too high or too low, conduct the following road test referring to the automatic shift schedule and simulate the problem symptoms.

2. ROAD TEST

NOTICE:

Perform the test at the normal operating ATF temperature of 50 to 80°C (122 to 176°F).

(a) D position test:

Move the shift lever to D and fully depress the accelerator pedal. Check the following:

(1) Check up-shift operation.

Check that the 1 → 2, 2 → 3, 3 → 4 and 4 → 5th up-shifts take place at the shift point shown in the automatic shift schedule (see page SS-43).

HINT:

5th Gear Up-shift Prohibition Control

- Engine coolant temperature is 55°C (131°F) or less and vehicle speed is at 80 km/h (50 mph) or less.
- ATF temperature is -2°C (28°F) or less.

4th Gear Up-shift Prohibition Control

- Engine coolant temperature is 47°C (117°F) or less and vehicle speed is at 55 km/h (34 mph) or less.

5th and 4th Gear Lock-up Prohibition Control

- Brake pedal is depressed.
- Accelerator pedal is released.
- Engine coolant temperature is 60°C (140°F) or less.

(2) Check for shift shock and slip.

Check for shock and slip at the 1 → 2, 2 → 3, 3 → 4 and 4 → 5th up-shifts.

(3) Check for abnormal noise and vibration.

Check for abnormal noise and vibration when up-shifting from 1 → 2, 2 → 3, 3 → 4 and 4 → 5th while driving with the shift lever on D, and check while driving in the lock-up condition.

HINT:

The check for the cause of abnormal noise and vibration must be done thoroughly as it could also be due to loss of balance in the differential, torque converter clutch, etc.

(4) Check kick-down operation.
While driving the vehicle in the 2nd, 3rd, 4th and 5th gears with the shift lever on D, check that the possible kick-down vehicle speed limits for 2 → 1, 3 → 2, 4 → 3 and 5 → 4 kick-downs conform to those indicated in the automatic shift schedule (see page SS-43).
(5) Check for abnormal shock and slip at kick-down.
(6) Check the lock-up mechanism.
- Drive the vehicle in the 5th gear with the shift lever on D. Maintain a steady speed (lock-up ON).
- Lightly depress the accelerator pedal and check that the engine speed does not change abruptly.

HINT:
- There is no lock-up in the 1st, 2nd and 3rd gear.
- 4th lock-up operates while uphill-downhill control is active with the shift lever on D.
- If there is a sudden increase in engine speed, there is no lock-up.

(b) 4 (O/D OFF) position test:
Move the shift lever to 4 and fully depress the accelerator pedal. Check the following:
(1) Check up-shift operation.
Check that the 1 → 2, 2 → 3 and 3 → 4 up-shifts take place and that the shifts point conforms to the automatic shift schedule (see page SS-43).
HINT:
There is no 5th up-shift in the 4 position.
(2) Check engine braking.
While driving the vehicle in the 4th gear with the shift lever on 4, release the accelerator pedal and check the engine braking effect.
(3) Check for abnormal noise during acceleration and deceleration, and for shock at up-shift and down-shift.

(c) 3 position test:
Move the shift lever to 3 and fully depress the accelerator pedal. Check the following:
(1) Check up-shift operation.
Check that the 1 → 2 and 2 → 3 up-shifts take place and that the shifts point conforms to the automatic shift schedule (see page SS-43).
HINT:
There is no 3rd up-shift and lock-up in the 3 position.
(2) Check engine braking.
While driving the vehicle in the 3rd gear with the shift lever on 3, release the accelerator pedal and check the engine braking effect.

(3) Check for abnormal noise during acceleration and deceleration, and for shock at up-shift and down-shift.

(d) 2 position test:
Move the shift lever to 2 and fully depress the accelerator pedal. Check the following:
(1) Check up-shift operation.
Check that the 1 →2 up-shifts take place and that the shift point conforms to the automatic shift schedule (see page SS-43).
HINT:
There is no 3rd up-shift and lock-up when the shift lever is on 2.
(2) Check engine braking.
While driving the vehicle in the 2nd gear with the shift lever on 2, release the accelerator pedal and check the engine braking effect.
(3) Check for abnormal noise during acceleration and deceleration, and for shock at up-shift and down-shift.

(e) L position test:
Move the shift lever to L and fully depress the accelerator pedal. Check the following:
(1) Check no up-shift.
While driving the vehicle with the shift lever on L, check that there is no up-shift to 2nd gear.
HINT:
There is no lock-up in L.
(2) Check engine braking.
While driving the vehicle with the shift lever on L, release the accelerator pedal and check the engine braking effect.
(3) Check for abnormal noises during acceleration and deceleration.

(f) R position test:
Move the shift lever to R and lightly depress the accelerator pedal. Check that the vehicle moves backward without any abnormal noise or vibration.
CAUTION:
Before conducting this test, ensure that no people or obstacles are in the test area.

(g) P position test:
Stop the vehicle on an incline (more than 5°). Then move the shift lever to P and release the parking brake. Check that the parking lock pawl holds the vehicle in place.

(h) Uphill/downhill control function test:
(1) Check that the gear does not up-shift to the 4th or 5th gear while the vehicle is driving uphill.
(2) Check that the gear automatically down-shifts from 5 → 4 or from 4 → 3 when the brake is applied while the vehicle is driving downhill.

MECHANICAL SYSTEM TESTS

1. STALL SPEED TEST

HINT:

This test is to check the overall performance of the engine and transaxle.

NOTICE:

- **Do not perform the stall speed test longer than 10 seconds.**
- **To ensure safety, perform this test in an open and level area that provides good traction.**
- **The stall speed test should always be performed with at least 2 people. One person should observe the condition of the wheels and wheel chocks while the other is performing the test.**

(a) Connect the intelligent tester to the CAN VIM. Then connect the CAN VIM to the DLC3.

(b) Run the vehicle until the transmission fluid temperature has reached 50 to 80°C (122 to 176°F).

(c) Allow the engine to idle with the air conditioning OFF.

(d) Chock all 4 wheels.

(e) Set the parking brake and keep the brake pedal depressed firmly with your left foot.

(f) Move the shift lever to the D position.

(g) Depress the accelerator pedal as much as possible with your right foot.

(h) Read the engine rpm (stall speed) and release the accelerator pedal immediately.

Standard value:

2,030 to 2,330 rpm

Evaluation:

Test Result	Possible Cause
Stall speed is lower than standard value	• Engine power output may be insufficient • Stator one-way clutch not operating properly HINT: If the value is less than the specified value by 600 rpm or more, the torque converter could be faulty.
Stall speed is higher than standard value	• Line pressure is too low • Forward clutch slipping • U/D (underdrive) brake slipping • U/D (underdrive) one-way clutch is not operating properly • No. 1 one-way clutch not operating properly • Improper fluid level

NOTICE:

Perform the test at the normal operating ATF temperature of 50 to 80°C (122 to 176°F).

2. SHIFT TIME LAG TEST

HINT:

This test is to check the condition of the direct clutch, forward clutch, 1st brake and reverse brake.

(a) Connect the intelligent tester to the CAN VIM. Then connect the CAN VIM to the DLC3.

(b) Run the vehicle until the transmission fluid temperature has reached 50 to 80°C (122 to 176°F).

(c) Allow the engine to idle with the air conditioning OFF.
(d) Set the parking brake and keep the brake pedal depressed firmly.
(e) Check the D range time lag.
  (1) Move the shift lever to N and wait for 1 minute.
  (2) Move the shift lever to D and measure the time until the shock is felt.
  (3) Repeat the 2 procedures above 3 times, and calculate the average time of the 3 tests.
(f) Check the R range time lag.
  (1) Move the shift lever to N and wait for 1 minute.
  (2) Move the shift lever to R and measure the time until the shock is felt.
  (3) Repeat the 2 procedures above 3 times, and calculate the average time of the 3 tests.

Standard value:

D range time lag is less than 1.2 seconds
R range time lag is less than 1.5 seconds

Evaluation:

Test Result	Possible Cause
D range time lag exceeds standard value	• Line pressure is too low • Forward clutch worn • No. 1 one-way clutch is not operating properly • U/D (underdrive) one-way clutch is not operating • U/D (underdrive) brake worn
R range time lag exceeds standard value	• Line pressure is too low • Reverse clutch worn • 1st and reverse brake worn • U/D (underdrive) brake worn

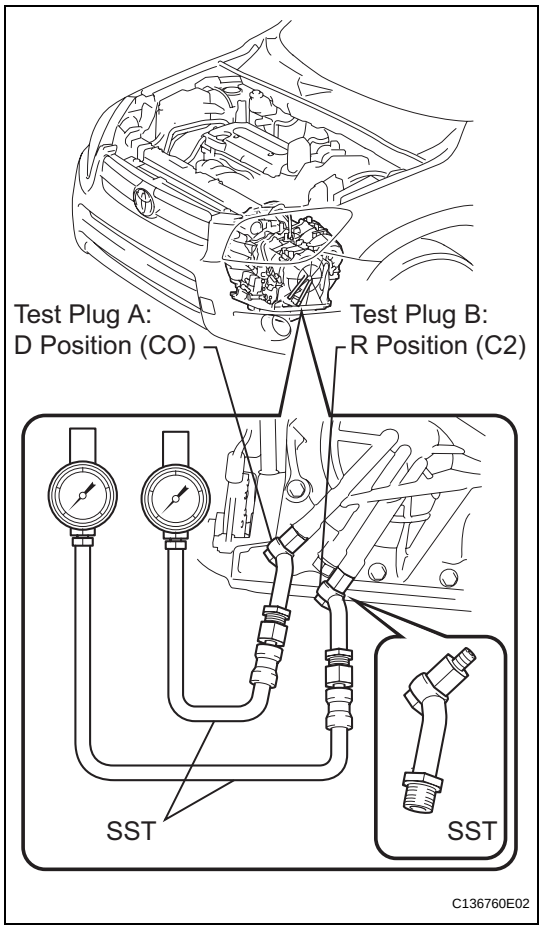

HYDRAULIC TEST

1. PERFORM HYDRAULIC TEST

(a) Measure the line pressure.

NOTICE:

- **Perform the test at the normal operating ATF temperature: 50 to 80°C (122 to 176°F).**
- **The line pressure test should always be performed with at least 2 people. One person should observe the condition of the wheels or wheel chocks while the other is performing the test.**
- **Be careful to prevent SST's hose from interfering with the exhaust pipe.**
- **This test must be performed after checking and adjusting the engine.**
- **Perform the test with the A/C OFF.**
- **When conducting the stall test, do not continue for more than 10 seconds.**

(1) Warm up the ATF (Automatic Transmission Fluid).

(2) Lift the vehicle up.

(3) Remove the engine under cover.

(4) Connect the intelligent tester to the DLC3.

(5) Remove the test plug A on the transaxle case front left side and install SST.

SST 09992-00095 (09992-00231, 09992-00271)

NOTICE:

There is a difference between the installation point of the D position and R position.

(6) Start the engine.

(7) Using intelligent tester, shift to D position and hold 3rd gear by active test, and measure the line pressure in idling.

Specified line pressure:

Condition	D position kPa (kgf/cm^2, psi)
Idling	372 to 412 kPa (3.8 to 4.2 kgf/cm^2, 54 to 60 psi)

(8) Turn the ignition switch off.

(9) Disconnect the connector of the transmission wire.

HINT:

Disconnect the connector only when performing the position stall test.

(10) Start the engine.

(11) Firmly depress the brake pedal, shift to the D position, depress the accelerator pedal all the way down and check the line pressure while the stall test is performed.

Specified line pressure:

Condition	D position kPa (kgf/cm^2, psi)
Stall test	931 to 1,031 kPa (9.5 to 10.5 kgf/cm^2, 135 to 150 psi)

(12)Turn the ignition switch off.
(13)Remove SST, and install the test plug A.
(14)Remove the test plug B, install SST and start the engine.
SST 09992-00095 (09992-00231, 09992-00271)
(15)Connect the transmission wire connector, depress the brake pedal firmly, shift to the R position and check the line pressure while the engine is idling and during the stall test.
Specified line pressure:

Condition	R position kPa (kgf/cm^2, psi)
Idling	672 to 742 kPa (6.9 to 7.6 kgf/cm^2, 97 to 108 psi)
Stall test	1,768 to 1,968 kPa (18.0 to 20.0 kgf/cm^2, 256 to 285 psi)

(16)Remove SST, and install the test plug B.
(17)Clear the DTC.

Evaluation:

Problem	Possible cause
Measured values at all positions are higher than specified	• Shift solenoid valve SLT defective • Regulator valve defective
Measured values at all positions are lower than specified	• Shift solenoid valve SLT defective • Regulator valve defective • Oil pump defective • U/D (underdrive) direct clutch defective
Pressure is low when shift lever is on D only	• D position circuit fluid leak • Forward clutch defective
Pressure is low when shift lever is on R only	• R position circuit fluid leak • Reverse clutch defective • 1st and reverse brake defective

MANUAL SHIFTING TEST

1. MANUAL SHIFTING TEST

HINT:

- Through this test, it can be determined whether the trouble occurs in the electrical circuit or if it is a mechanical problem in the transaxle.
- If any abnormalities are found in the following test, the problem is in the transaxle itself.

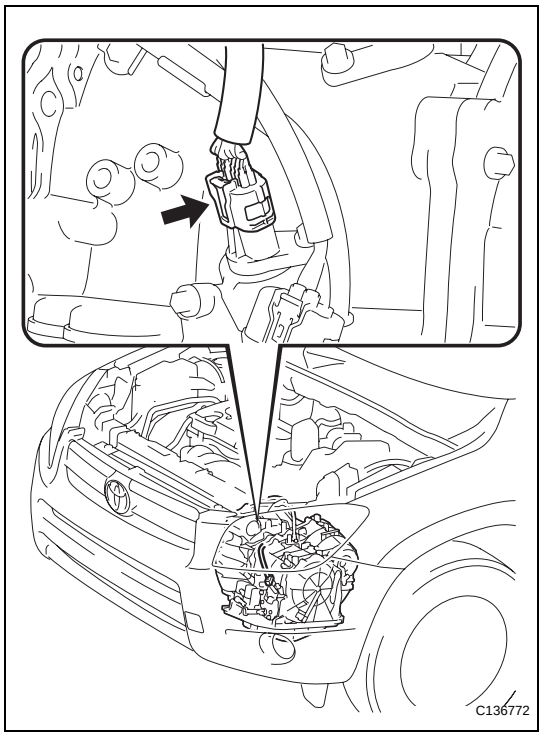

(a) Disconnect the connector of the transmission wire.

HINT:

It is possible to deactivate the electrical shift control by disconnecting the transmission wire. The gear positions can then be changed mechanically with the shift lever.

(b) Drive with the transmission wire disconnected. Move the shift lever to each position to check whether the gear position changes as shown in the table below.

Shift Lever Position	Shifting Condition
L ⟷ 2	Not Shift (Not Change)
2 ⟷ 3	Down Shift ⟷ Up Shift
3 ⟷ 4 ⟷ D	Not Shift (Not Change)

HINT:

While driving with the transmission wire disconnected:

- When the shift lever position is in L or 2, the gear position is held in 3rd.
- When the shift lever position is in 3, 4 or D, the gear position is held in 4th.
- When the shift lever position is in R or P, the operation is the same as usual.

(c) Connect the connector of the transmission wire.

(d) Clear the DTC (see page AX-33).

INITIALIZATION

1. RESET MEMORY

NOTICE:

- **Perform the RESET MEMORY procedures (A/T initialization) when replacing the automatic transaxle assembly, engine assembly or ECM.**
- **RESET MEMORY can be performed only with the intelligent tester.**

HINT:

The ECM memorizes the vehicle conditions when the ECT controls the automatic transaxle assembly and engine assembly. Therefore, when the automatic transaxle assembly, engine assembly, or ECM has been replaced, it is necessary to reset the memory so that the ECM can memorize the new information.

The reset procedures are as follows.

(a) Turn the ignition switch OFF.

(b) Connect the intelligent tester to the CAN VIM. Then connect the CAN VIM to the DLC3.

(c) Turn the ignition switch ON and turn the tester ON.

(d) Enter the following menus: DIAGNOSIS / ENHANCED OBD II.

(e) Perform the reset memory procedures from the Engine menu.

CAUTION:

After performing the RESET MEMORY procedures, be sure to perform the ROAD TEST (see page AX-13) as described earlier.

HINT:

The ECM learns through the ROAD TEST.

Tester Menu Flow:

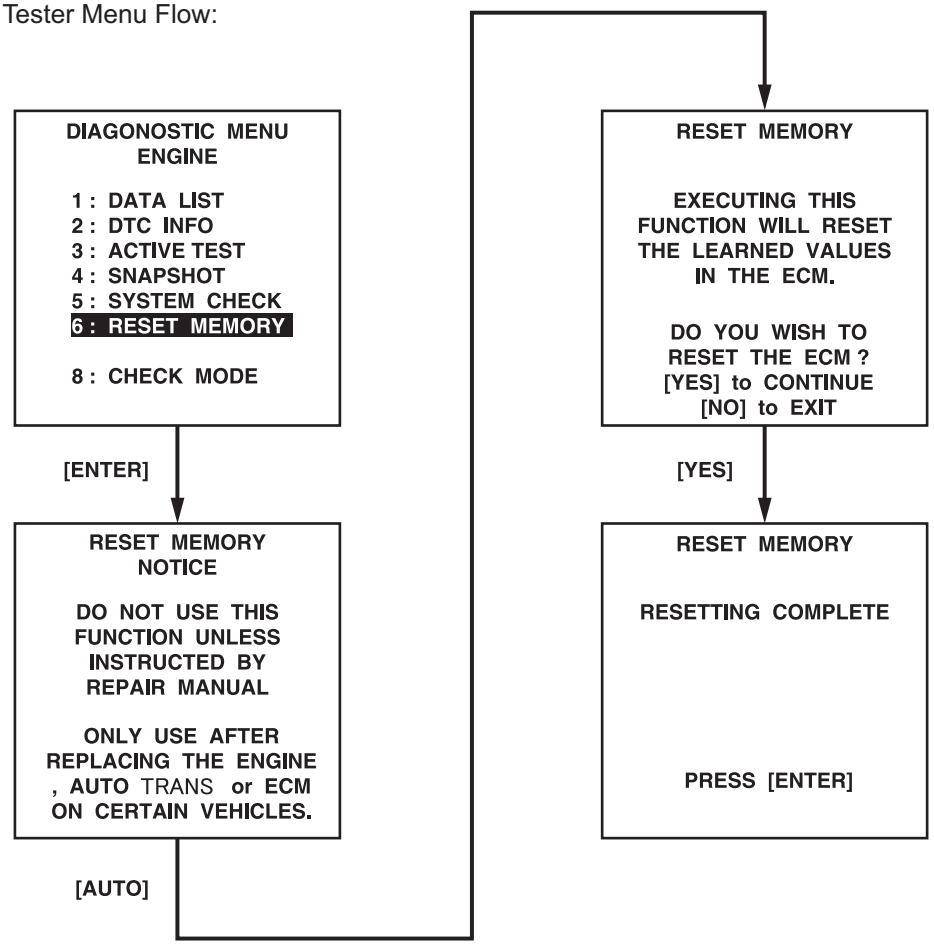

P C115865E02

MONITOR DRIVE PATTERN

1. TEST MONITOR DRIVE PATTERN FOR ECT

CAUTION:

Perform this drive pattern on a level surface and strictly observe the posted speed limits and traffic laws while driving.

HINT:

Performing this drive pattern is one method to simulate the ECT's malfunction detection conditions.

The DTCs may not be detected through ordinary, everyday driving. Also, DTCs may not be detected through this drive pattern.

(a) Preparation for driving

(1) Warm up the engine sufficiently (engine coolant temperature is 60°C (140°F) or higher).

(2) Drive the vehicle when the atmospheric temperature is -10°C (14°F) or higher. Malfunction is not detected when the atmospheric temperature is less than -10°C (14°F).

(b) Drive pattern

(1) Drive the vehicle through all the gears. Stop → 1st → 2nd → 3rd → 4th → 5th → 5th (lock-up ON).

(2) Repeat the above drive pattern 3 times or more.

NOTICE:

- **When using the intelligent tester, the monitor status can be found in "ENHANCED OBD II / DATA LIST" or under "CARB OBD II".**
- **In the event that the drive pattern must be interrupted (due to traffic conditions or other factors), the drive pattern can be resumed and, in most cases, the monitor can be completed.**

CAUTION:

Perform this drive pattern on a level road as much as possible and strictly observe the posted speed limits and traffic laws while driving.

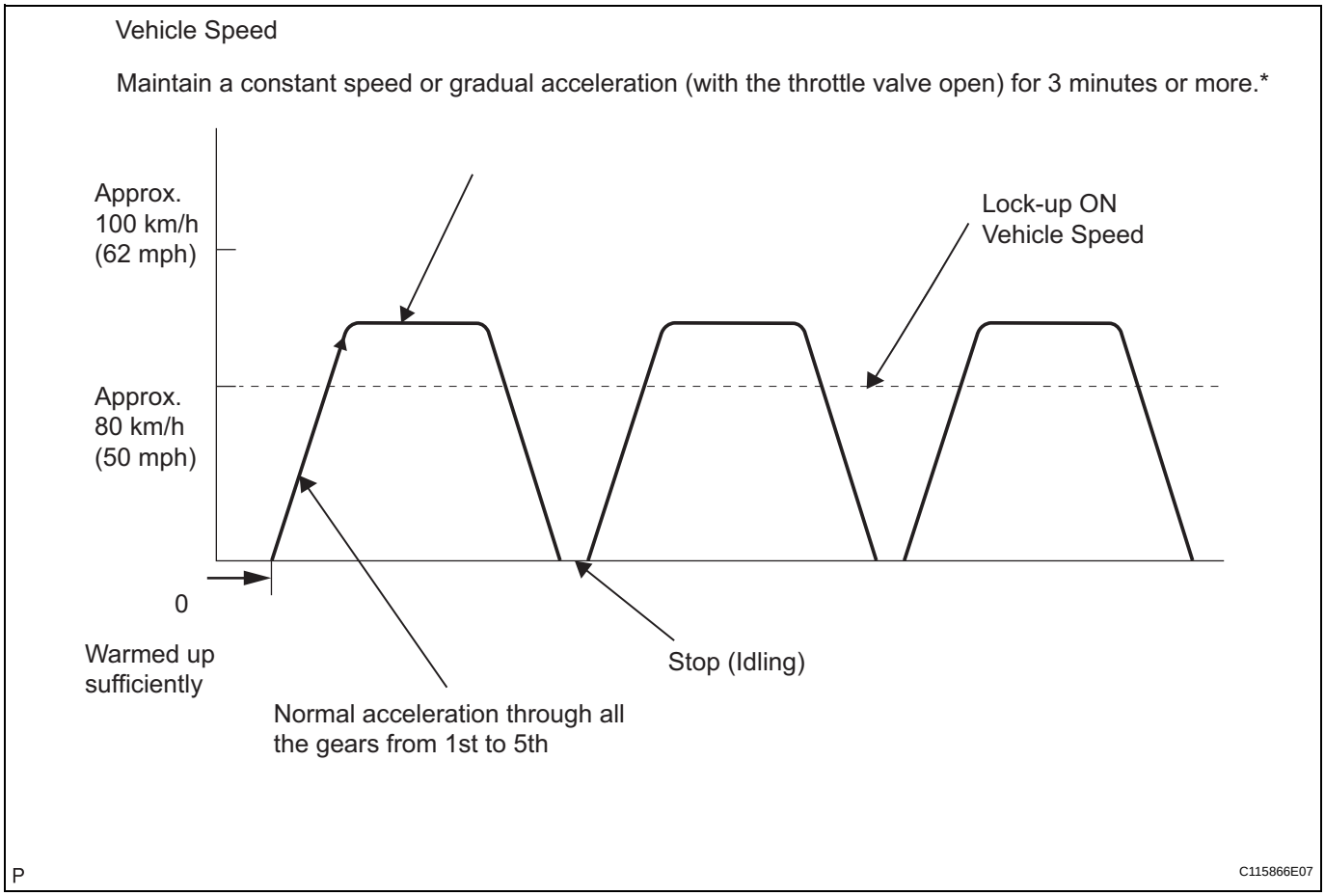

HINT:
*: Drive at such a speed in the uppermost gear to engage lock-up. The vehicle can be driven at a speed lower than the speed shown in the above diagram under the lock-up condition.

NOTICE:

It is necessary to drive the vehicle for approximately 30 minutes to detect DTC P0711 (Transmission fluid temperature sensor "A" performance).

PROBLEM SYMPTOMS TABLE

HINT:

- Use the table below to help determine the cause of the problem symptom. The potential causes of the symptoms are listed in order of probability in the "Suspected area" column of the table. Check each symptom by checking the suspected areas in the order they are listed. Replace parts as necessary.
- The Matrix Chart is divided into 2 chapters. When troubleshooting, check Chapter 1 first. If instructions are given in Chapter 1 to proceed to 2, proceed as instructed.
- If the instruction "Proceed to next circuit inspection shown in problem symptoms table" is given in the flowchart for each circuit, proceed to the next suspected area in the table.
- If the problem still occurs even though there are no malfunctions in any of the circuits, check the ECM and replace it if necessary.

1. Chapter 1: Electronic Circuit Matrix Chart

Symptom	Suspected area	See page
No down-shift (a particular gear, from 1st to 4th gear, is not down-shifted)	ECM	IN-37
No down-shift (5th -> 4th)	1. Transmission control switch (4 <--> D position) circuit	AX-44
	2. Shift solenoid valve S4 circuit*	AX-106
	3. ECM	IN-37
No up-shift (a particular gear, from 1st to 4th gear, is not up-shifted)	ECM	IN-37
No up-shift (4th -> 5th)	1. Transmission control switch (4 <--> D position) circuit	AX-44
	2. Shift solenoid valve S4 circuit*	AX-106
	3. ECM	IN-37
No lock-up	1. Stop light switch circuit*	AX-62
	2. Engine coolant temperature sensor circuit*	ES-56
	3. ECM	IN-37
No lock-up off	ECM	IN-37
Shift point too high or too low	1. Throttle position sensor circuit*	ES-56
	2. ECM	IN-37
Up-shift to 5th from 4th while shift lever on 4	1. Transmission control switch (4 <--> D position) circuit	AX-44
	2. ECM	IN-37
Up-shift to 5th from 4th while engine is cold	1. Engine coolant temperature sensor circuit*	ES-56
	2. ECM	IN-37
Up-shift to 2nd from 1st while shift lever is on L	1. Transmission control switch (2 <--> L position) circuit*	AX-44
	2. ECM	IN-37
Harsh engagement (N -> D)	1. Shift solenoid valve SL1 circuit*	AX-76
	2. ECM	IN-37
Harsh engagement (lock-up)	ECM	IN-37
Harsh engagement (any driving position)	ECM	IN-37
Poor acceleration	ECM	IN-37
No kick-down	ECM	IN-37
Engine stalls when starting off or stopping	ECM	IN-37
Malfunction in shifting	1. Park/Neutral position switch circuit*	AX-44
	2. Transmission control switch (4 <--> D position) circuit	AX-44
	3. ECM	IN-37

HINT:
*: When the circuit is defective, a DTC may be output.

2. Chapter 2: On-Vehicle Repair and Off-Vehicle Repair

Symptom	Suspected area	See page
Vehicle does not move in any forward position and with the shift lever on R	1. Valve body assembly	AX-142
	2. B3 U/D brake	AX-180
	3. Torque converter clutch	AX-178
Vehicle does not move with shift lever on R	1. Valve body assembly	AX-142
	2. C2 reverse clutch	AX-180
	3. B2 1st and reverse brake	AX-180
No up-shift (1st -> 2nd)	1. Valve body assembly	AX-142
	2. B1 2nd and O/D brake	AX-180
No up-shift (2nd -> 3rd)	1. Valve body assembly	AX-142
	2. C0 direct and O/D clutch	AX-180
No up-shift (3rd -> 4th)	1. Valve body assembly	AX-142
	2. B1 2nd and O/D brake	AX-180
No up-shift (4th -> 5th)	1. Shift solenoid valve S4	AX-79
	2. Valve body assembly	AX-142
	3. C3 U/D clutch	AX-180
No down-shift (5th -> 4th)	1. Shift solenoid valve S4	AX-79
	2. Valve body assembly	AX-142
No down-shift (4th -> 3rd)	Valve body assembly	AX-142
No down-shift (3rd -> 2nd)	Valve body assembly	AX-142
No down-shift (2nd -> 1st)	Valve body assembly	AX-142
No lock-up or no lock-up off	1. Shift solenoid valve DSL	AX-65
	2. Valve body assembly	AX-142
	3. Torque converter clutch	AX-178
Harsh engagement (N -> D)	1. Shift solenoid valve SL1	AX-72
	2. Valve body assembly	AX-142
	3. C1 accumulator	AX-180
	4. C1 forward clutch	AX-180
	5. F1 No. 1 one-way clutch	AX-180
	6. F2 U/D one-way clutch	AX-180
Harsh engagement (lock-up)	1. Shift solenoid valve SL2	AX-87
	2. Valve body assembly	AX-142
	3. Torque converter clutch	AX-178
Harsh engagement (N -> R)	1. Valve body assembly	AX-142
	2. C2 accumulator	AX-180
	3. C2 reverse clutch	AX-180
	4. B2 1st and reverse brake	AX-180
Harsh engagement (1st -> 2nd -> 3rd -> 4th -> 5th)	1. Shift solenoid valve SLT	AX-120
	2. Valve body assembly	AX-142
Harsh engagement (1st -> 2nd)	1. Valve body assembly	AX-142
	2. B1 2nd and O/D brake	AX-180
Harsh engagement (2nd -> 3rd)	1. Valve body assembly	AX-142
	2. C0 accumulator	AX-180
	3. C0 direct and O/D clutch	AX-180
Harsh engagement (3rd -> 4th)	1. Valve body assembly	AX-142
	2. B1 2nd and O/D brake	AX-180

Symptom	Suspected area	See page
Harsh engagement (4th -> 5th)	1. Valve body assembly	AX-142
	2. C3 accumulator	AX-180
	3. B3 U/D clutch	AX-180
Harsh engagement (5th -> 4th)	1. Valve body assembly	AX-142
	2. B3 accumulator	AX-180
Slip or shudder (forward and reverse: after warm-up)	1. Valve body assembly	AX-142
	2. Oil strainer	AX-142
	3. C0 direct and O/D clutch	AX-180
	4. C1 forward clutch	AX-180
	5. C3 U/D clutch	AX-180
	6. B1 2nd and brake	AX-180
	7. B3 U/D brake	AX-180
	8. F1 No. 1 one-way clutch	AX-180
	9. F2 U/D one-way clutch	AX-180
	10. Torque converter clutch	AX-178
Slip or shudder (particular position: just after engine starts)	Torque converter clutch	AX-178
Slip or shudder (shift lever on R)	1. C2 reverse clutch	AX-180
	2. B2 1st and reverse brake	AX-180
Slip or shudder (1st)	1. C1 forward clutch	AX-180
	2. F1 No. 1 one-way clutch	AX-180
	3. F2 U/D one-way clutch	AX-180
Slip or shudder (2nd)	B1 2nd and O/D brake	AX-180
Slip or shudder (3rd)	C0 direct and O/D clutch	AX-180
Slip or shudder (4th)	B1 2nd and O/D brake	AX-180
Slip or shudder (5th)	C3 U/D clutch	AX-180
Shift position too high or too low	Shift solenoid valve SLT	AX-120
No engine braking (1st to 4th/shift lever on D)	B3 U/D brake	AX-180
No engine braking (1st/shift lever on L)	1. Valve body assembly	AX-142
	2. B2 1st and reverse brake	AX-180
No engine braking (2nd/shift lever on 2)	1. Valve body assembly	AX-142
	2. B1 2nd and O/D brake	AX-180
No engine braking (3rd/shift lever on 3)	B3 U/D brake	AX-180
No kick-down	Valve body assembly	AX-142
Poor acceleration (all positions)	1. Shift solenoid valve SLT	AX-120
	2. Torque converter clutch	AX-178
Poor acceleration (5th)	1. C3 U/D clutch	AX-180
	2. U/D planetary gear unit	AX-180
Engine stalls when starting off or stopping	1. Shift solenoid valve DSL	AX-65
	2. Torque converter clutch	AX-178

TERMINALS OF ECM

1. CHECK ECM

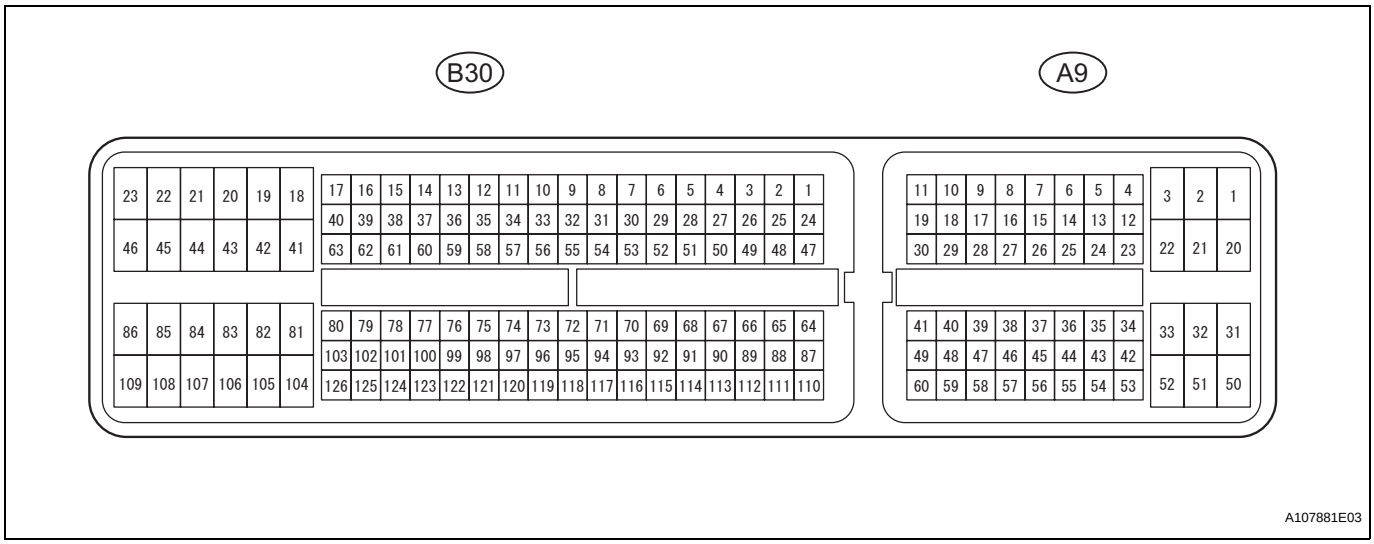

(a) Measure the voltage of the ECM connector.
HINT:
Each ECM terminal's standard voltage is shown in the table below.
In the table, first follow the information under "Condition". Look under "Symbols (Terminal No.)" for the terminals to be inspected. The standard voltage between the terminals is shown under "Specified Condition".
Use the illustration above as a reference for the ECM terminals.

Symbols (Terminal No.)	Wiring Color	Terminal Description	Condition	Specified Condition
P (B30-24) - E1 (B30-81)	R - BR	P shift position switch signal	Ignition switch ON and transfer shift lever on P	10 to 14 V
P (B30-24) - E1 (B30-81)	R - BR	P shift position switch signal	Ignition switch ON and transfer shift lever not on P	Below 1 V
R (B30-25) - E1 (B30-81)	B - BR	R shift position switch signal	Ignition switch ON and transfer shift lever on R	10 to 14 V
R (B30-25) - E1 (B30-81)	B - BR	R shift position switch signal	Ignition switch ON and transfer shift lever not on R	Below 1 V
N (B30-27) - E1 (B30-81)	L-B - BR	N shift position switch signal	Ignition switch ON and transfer shift lever on N	10 to 14 V
N (B30-27) - E1 (B30-81)	L-B - BR	N shift position switch signal	Ignition switch ON and transfer shift lever not on N	Below 1 V
D (B30-26) - E1 (B30-81)	L - BR	D shift position switch signal	Ignition switch ON and transfer shift lever on D or 3	10 to 14 V
D (B30-26) - E1 (B30-81)	L - BR	D shift position switch signal	Ignition switch ON and transfer shift lever not on D or 3	Below 1 V
4 (A9-25) - E1 (B30-81)	P - BR	4 shift position switch signal	Ignition switch ON and transfer shift lever on 4	10 to 14 V
4 (A9-25) - E1 (B30-81)	P - BR	4 shift position switch signal	Ignition switch ON and transfer shift lever not on 4	Below 1 V

Symbols (Terminal No.)	Wiring Color	Terminal Description	Condition	Specified Condition
3 (B30-29) - E1 (B30-81)	LG - BR	3 shift position switch signal	Ignition switch ON and transfer shift lever on 3	10 to 14 V
3 (B30-29) - E1 (B30-81)	LG - BR	3 shift position switch signal	Ignition switch ON and transfer shift lever not on 3	Below 1 V
2 (B30-28) - E1 (B30-81)	V - BR	2 shift position switch signal	Ignition switch ON and transfer shift lever on 2 and L	10 to 14 V
2 (B30-28) - E1 (B30-81)	V - BR	2 shift position switch signal	Ignition switch ON and transfer shift lever not on 2 and L	Below 1 V
L (A9-26) - E1 (B30-81)	V - BR	L shift position switch signal	Ignition switch ON and transfer shift lever on L	10 to 14 V
L (A9-26) - E1 (B30-81)	V - BR	L shift position switch signal	Ignition switch ON and transfer shift lever not on L	Below 1 V
STP (A9-36) - E1 (B30-81)	L - BR	Stop light switch signal	Brake pedal is depressed	Between 10 V and 14 V
STP (A9-36) - E1 (B30-81)	L - BR	Stop light switch signal	Brake pedal is released	Below 1 V
SL1+ (B30-16) - SL1- (B30-17)	P - LG	SL1 solenoid signal	Engine idle speed	Pulse generation (see waveform 1)
SL1+ (B30-16) - SL1- (B30-17)	P - LG	SL1 solenoid signal	Ignition switch ON	Pulse generation (see waveform 1)
SL1+ (B30-16) - SL1- (B30-17)	P - LG	SL1 solenoid signal	1st gear	Pulse generation (see waveform 1)
SL1+ (B30-16) - SL1- (B30-17)	P - LG	SL1 solenoid signal	Not on 1st gear	Below 1 V
SL2+ (B30-12) - SL2- (B30-13)	BR - R	SL2 solenoid signal	Engine idle speed	Pulse generation (see waveform 2)
SL2+ (B30-12) - SL2- (B30-13)	BR - R	SL2 solenoid signal	Ignition switch ON	Pulse generation (see waveform 2)
SL2+ (B30-12) - SL2- (B30-13)	BR - R	SL2 solenoid signal	1st or 2nd gear	Pulse generation (see waveform 2)
SL2+ (B30-12) - SL2- (B30-13)	BR - R	SL2 solenoid signal	3rd, 4th or 5th gear	Below 1 V
SL3+ (B30-14) - SL3- (B30-15)	GR - G-R	SL3 solenoid signal	Engine idle speed	Pulse generation (see waveform 3)
SL3+ (B30-14) - SL3- (B30-15)	GR - G-R	SL3 solenoid signal	Ignition switch ON	Pulse generation (see waveform 3)
SL3+ (B30-14) - SL3- (B30-15)	GR - G-R	SL3 solenoid signal	1st or 2nd gear	Pulse generation (see waveform 3)
SL3+ (B30-14) - SL3- (B30-15)	GR - G-R	SL3 solenoid signal	3rd, 4th or 5th gear	Below 1 V
DSL (B30-9) - E01 (B30-22)	V - BR	DSL solenoid signal	Vehicle speed 65 km/h (40 mph), lock-up (ON to OFF)	Below 1 V
DSL (B30-9) - E01 (B30-22)	V - BR	DSL solenoid signal	Vehicle driving under lock-up position	Pulse generation (see waveform 4)
SLT+ (B30-11) - SLT- (B30-10)	L - W	SLT solenoid signal	Engine idle speed	Pulse generation (see waveform 5)
SR (B30-8) - E01 (B30-22)	G - BR	SR solenoid signal	Ignition switch ON	Below 1 V
SR (B30-8) - E01 (B30-22)	G - BR	SR solenoid signal	3th, 4th or 5th gear	10 to 14 V
SR (B30-8) - E01 (B30-22)	G - BR	SR solenoid signal	1st or 2nd gear	Below 1 V
S4 (B30-7) - E01 (B30-22)	L-B - BR	S4 solenoid signal	Ignition switch ON	Below 1 V
S4 (B30-7) - E01 (B30-22)	L-B - BR	S4 solenoid signal	5th gear	10 to 14 V
S4 (B30-7) - E01 (B30-22)	L-B - BR	S4 solenoid signal	Not on 5th gear	Below 1 V
THO1 (B30-126) - ETHO (B30-124)	Y - B	ATF temperature sensor signal	ATF temperature 115°C (239°F) or more	Below 1.5 V
NT+ (B30-6) - NT- (B30-5)	B - G	Speed sensor (NT) signal	Vehicle speed 20 km/h (12 mph)	Pulse generation (see waveform 6)

Symbols (Terminal No.)	Wiring Color	Terminal Description	Condition	Specified Condition
NC+ (B30-4) - NC- (B30-3)	W - Y	Speed sensor (NC) signal	Vehicle speed 30 km/h (19 mph) (3rd gear) Engine speed 1,400 rpm	Pulse generation (see waveform 7)

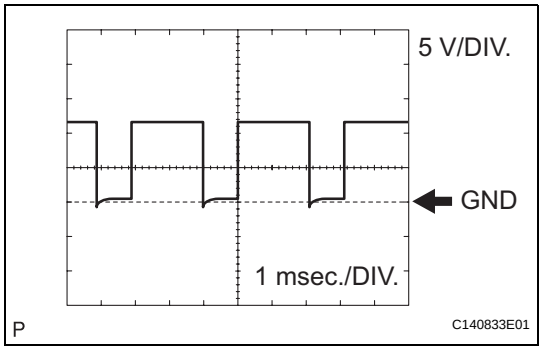

(b) Using an oscilloscope, check the waveform 1.
Waveform 1 (Reference)

Item	Content
Symbols (Terminal No.)	SL1+ (B30-16) - SL1- (B30-17)
Tool Setting	5 V/DIV., 1 msec./DIV.
Condition	Engine idle speed

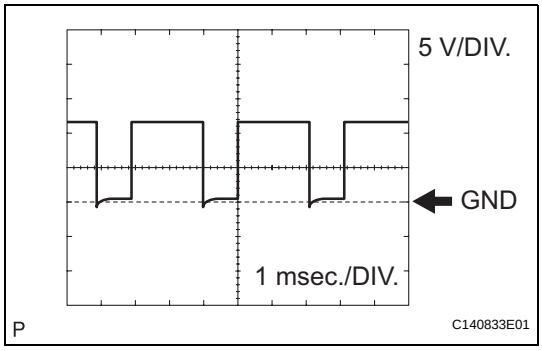

(c) Using an oscilloscope, check the waveform 2.
Waveform 2 (Reference)

Item	Content
Symbols (Terminal No.)	SL2+ (B30-12) - SL2- (B30-13)
Tool Setting	5 V/DIV., 1 msec./DIV.
Condition	Engine idle speed

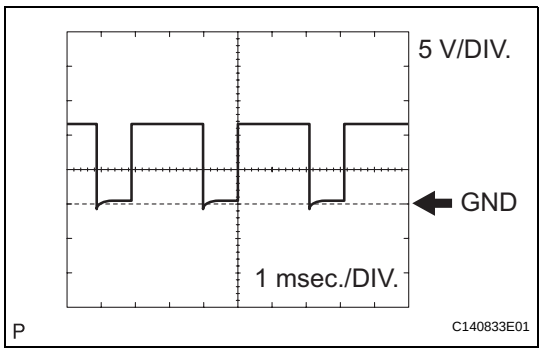

(d) Using an oscilloscope, check the waveform 3.
Waveform 3 (Reference)

Item	Content
Symbols (Terminal No.)	SL3+ (B30-14) - SL3- (B30-15)
Tool Setting	5 V/DIV., 1 msec./DIV.
Condition	Engine idle speed

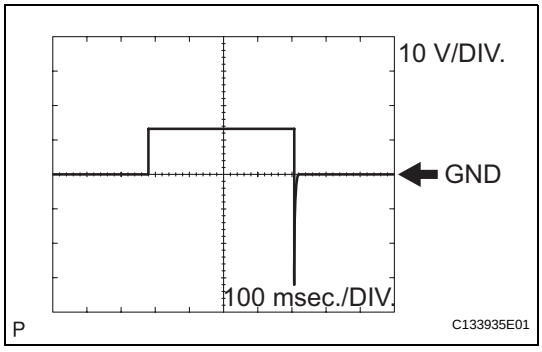

(e) Using an oscilloscope, check the waveform 4.
Waveform 4 (Reference)

Item	Content
Symbols (Terminal No.)	DSL (B30-9) - E01 (B30-22)
Tool Setting	10 V/DIV., 100 msec./DIV.
Condition	Vehicle speed 65 km/h (40 mph), lock-up (ON to OFF)

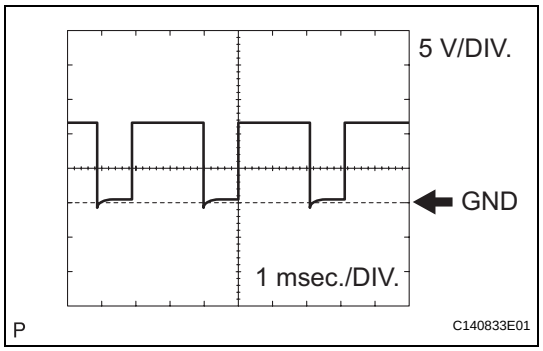

(f) Using an oscilloscope, check the waveform 5.
Waveform 5 (Reference)

Item	Content
Symbols (Terminal No.)	SLT+ (B30-11) - SLT- (B30-10)
Tool Setting	5 V/DIV., 1 msec./DIV.
Condition	Engine idle speed

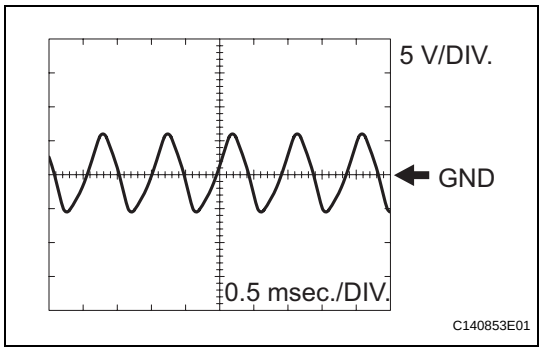

(g) Using an oscilloscope, check the waveform 6.
Waveform 6 (Reference)

Item	Content
Symbols (Terminal No.)	NT+ (B30-6) - NT- (B30-5)
Tool Setting	5 V/DIV., 0.5 msec./DIV.
Condition	Vehicle speed 20 km/h (12 mph)

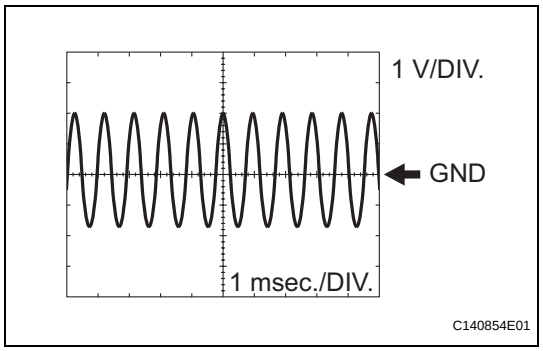

(h) Using an oscilloscope, check the waveform 7.
Waveform 7 (Reference)

Item	Content
Symbols (Terminal No.)	NC+ (B30-4) - NC- (B30-3)
Tool Setting	1 V/DIV., 1 msec./DIV.
Condition	Vehicle speed 30 km/h (19 mph) (3rd gear) Engine speed 1,400 rpm

DIAGNOSIS SYSTEM

1. DESCRIPTION

(a) When troubleshooting On-Board Diagnostic (OBD II) vehicles, the vehicle must be connected to the OBD II scan tool (complying with SAE J1987). Various data output from the vehicle's ECM can then be read.

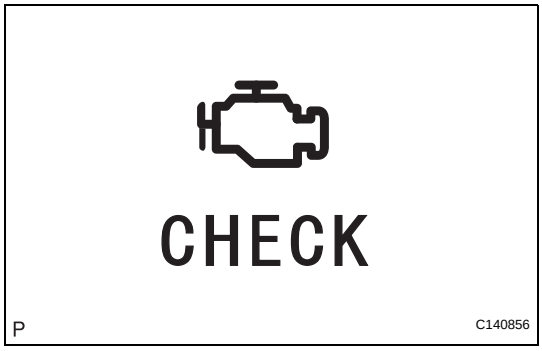

(b) OBD II regulations require that the vehicle's on-board computer illuminates the Malfunction Indicator Lamp (MIL) on the instrument panel when the computer detects a malfunction in:
(1) The emission control system/components
(2) The powertrain control components (which affect vehicle emissions)
(3) The computer
In addition, the applicable Diagnostic Trouble Codes (DTCs) prescribed by SAE J2012 are recorded in the ECM memory.
When the malfunction does not reoccur, the MIL stays illuminated until the ignition switch is turned OFF, and the MIL turns OFF when the engine is started. However, the DTCs remain recorded in the ECM memory.

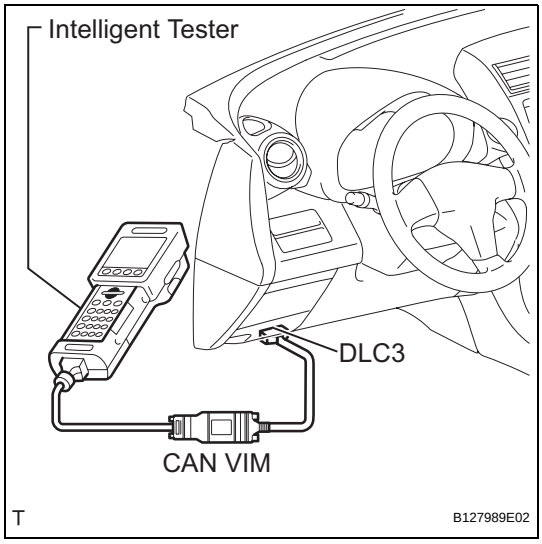

(c) To check DTCs, connect the intelligent tester to the Data Link Connector 3 (DLC3) of the vehicle. The tester displays DTCs, the freeze frame data and a variety of the engine data.
The DTCs and freeze frame data can be erased with the tester (see page AX-40).

2. NORMAL MODE AND CHECK MODE

(a) The diagnosis system operates in "normal mode" during normal vehicle use. In normal mode, "2 trip detection logic" is used to ensure accurate detection of malfunctions. "Check mode" is also available to technicians as an option. In check mode, "1 trip detection logic" is used for simulating malfunction symptoms and increasing the system's ability to detect malfunctions, including intermittent malfunctions.

3. 2 TRIP DETECTION LOGIC

(a) When a malfunction is first detected, the malfunction is temporarily stored in the ECM memory (1st trip). If the same malfunction is detected during the next drive cycle, the MIL is illuminated (2nd trip).

4. FREEZE FRAME DATA

(a) Freeze frame data records the engine conditions (fuel system, calculated load, engine coolant temperature, fuel trim, engine speed, vehicle speed, etc.) when a malfunction is detected. When troubleshooting, freeze frame data can help determine if the vehicle was running or stopped, if the engine was warmed up or not, if the air-fuel ratio was lean or rich, and other data from the time the malfunction occurred.

(b) The intelligent tester records freeze frame data in 5 different instances: 1) 3 times before the DTC is set, 2) once when the DTC is set, and 3) once after the DTC is set. These data can be used to simulate the vehicle's condition around the time when the malfunction occurred. The data may help find the cause of the malfunction, or judge if the DTC is being caused by a temporary malfunction or not.

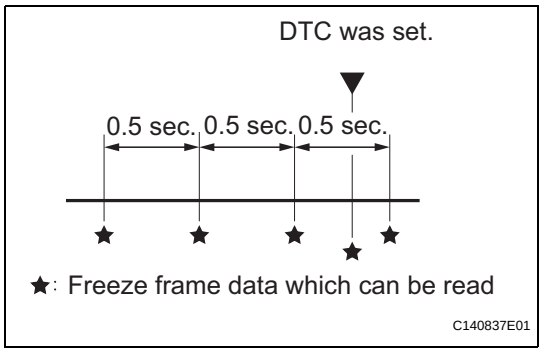

5. DATA LINK CONNECTOR 3 (DLC3)

(a) The vehicle's ECM uses the ISO 15765-4 for communication protocol. The terminal arrangement of the DLC3 complies with SAE J1962 and matches the ISO 15765-4 format.

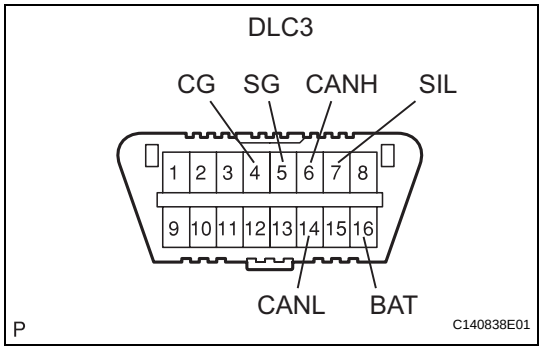

Terminal of DLC3

Symbols (Terminal No.)	Terminal Description	Condition	Specified Condition
SIL (7) - SG (5)	Bus "+" line	During transmission	Pulse generation
CG (4) - Body ground	Chassis ground	Always	Below 1 Ω
SG (5) - Body ground	Signal ground	Always	Below 1 Ω
BAT (16) - Body ground	Battery positive	Always	9 to 14 V
CANH (6) - CANL (14)	CAN bus line	Ignition switch OFF*	54 to 69 Ω
CANH (6) - Battery positive	HIGH-level CAN bus line	Ignition switch OFF*	6 kΩ or higher
CANH (6) - CG (4)	HIGH-level CAN bus line	Ignition switch OFF*	200 Ω or higher
CANL (14) - Battery positive	LOW-level CAN bus line	Ignition switch OFF*	6 kΩ or higher
CANL (14) - CG (4)	LOW-level CAN bus line	Ignition switch OFF*	200 Ω or higher

NOTICE:

***: Before measuring the resistance, leave the vehicle as is for at least 1 minute and do not operate the ignition switch, any other switches or the doors.**

If the result is not as specified, the DLC3 may have a malfunction. Repair or replace the harness and connector.

HINT:
Connect the cable of the intelligent tester to the DLC3, turn the ignition switch ON and attempt to use the tester. If the screen displays UNABLE TO CONNECT TO VEHICLE, a problem exists in the vehicle side or the tester side.
If communication is normal when the tester is connected to another vehicle, inspect the DLC3 on the original vehicle.
If communication is still not possible when the tester is connected to another vehicle, the problem is probably in the tester itself. Consult the Service Department listed in the tester's instruction manual.

6. CHECK MIL

(a) Check that the MIL illuminates when turning the ignition switch ON.
If the MIL does not illuminate, there is a problem in the MIL circuit (see page ES-430).

(b) When the engine is started, the MIL should turn off.

7. ALL READINESS

(a) For this vehicle, using the intelligent tester allows readiness codes corresponding to all DTCs to be read. When the diagnosis (normal or malfunctioning) has been completed, readiness codes are set. Enter the following menus: ENHANCED OBD II / MONITOR STATUS.

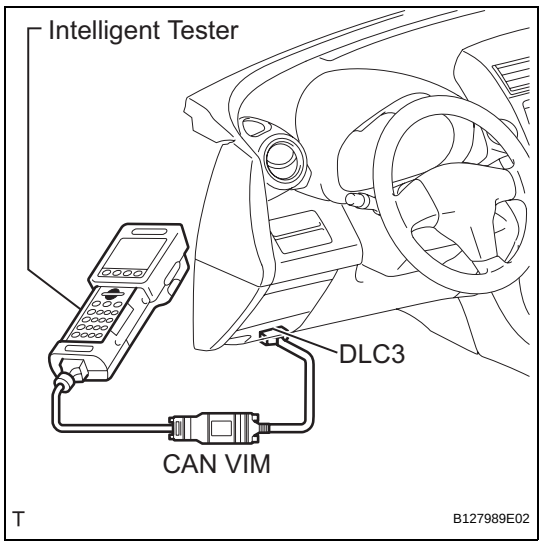

DTC CHECK / CLEAR

1. CHECK DTC

(a) DTCs which are stored in the ECM can be displayed with the intelligent tester.
The intelligent tester can display pending DTCs and current DTCs. Some DTCs are not stored unless a malfunction is detected in consecutive driving cycles. When a malfunction is detected in only one driving cycle, it is stored as a pending DTC.

(1) Connect the intelligent tester to the CAN VIM. Then connect the CAN VIM to the DLC3.

(2) Turn the ignition switch ON and turn the tester ON.

(3) Enter the following menus: DIAGNOSIS / ENHANCED OBD II / DTC INFO / CURRENT CODES (or PENDING CODE).

(4) Confirm the DTCs and freeze frame data, and then write them down.

(5) Confirm the details of the DTCs (see page AX-40).

NOTICE:
When simulating a symptom with the scan tool to check for DTCs, use normal mode. For codes on the DIAGNOSTIC TROUBLE CODE CHART subject to "2 trip detection logic", perform the following actions.

Turn the ignition switch OFF after the symptom is simulated once. Then repeat the simulation process. When the symptom has been simulated twice, the MIL illuminates and the DTCs are recorded in the ECM.

2. CLEAR DTC

(a) When using the intelligent tester:

(1) Connect the intelligent tester to the CAN VIM. Then connect the CAN VIM to the DLC3.

(2) Turn the ignition switch ON and turn the tester ON.

(3) Enter the following menus: DIAGNOSIS / ENHANCED OBD II / DTC INFO / CLEAR CODES. Then press YES.
HINT:
When operating the tester to erase the codes, the DTCs and freeze frame data will be erased.

(b) When not using the intelligent tester:

(1) Disconnect the cable from the negative (-) battery terminal or remove the EFI MAIN and ETCS fuses from the engine room No. 1 relay block and engine room No. 1 junction block for 60 seconds or more. However, if you disconnect the cable from the negative (-) battery terminal, perform the "INITIALIZATION" procedure (see page AX-20).

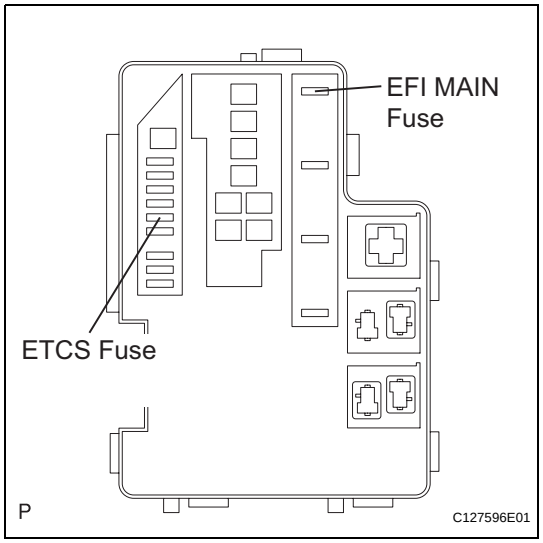

CHECK MODE PROCEDURE

1. DESCRIPTION

(a) Check mode has a higher sensitivity to malfunctions and can detect malfunctions that normal mode cannot detect. Check mode can also detect all the malfunctions that normal mode can detect. In check mode, DTCs are detected with 1 trip detection logic.

2. CHECK MODE PROCEDURE

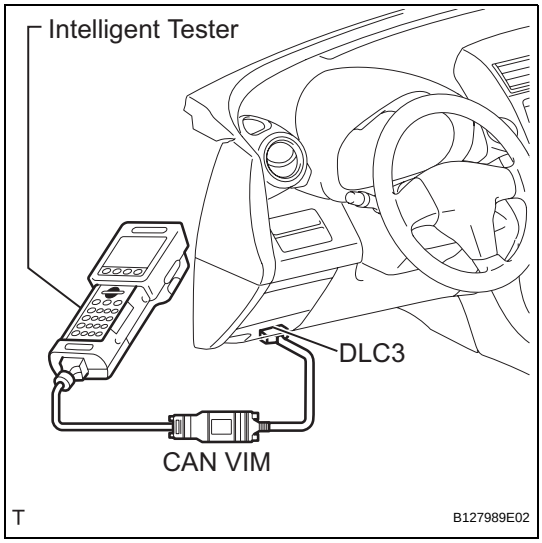

(a) Make sure that the following conditions below are met:
  (1) Battery positive voltage 11 V or more
  (2) Throttle valve fully closed
  (3) Transaxle in the P or N position
  (4) A/C OFF

(b) Turn the ignition switch OFF.

(c) Connect the intelligent tester to the CAN VIM. Then connect the CAN VIM to the DLC3.

(d) Turn the ignition switch ON and turn the tester ON.

(e) Enter the following menus: DIAGNOSIS / ENHANCED OBD II / CHECK MODE.

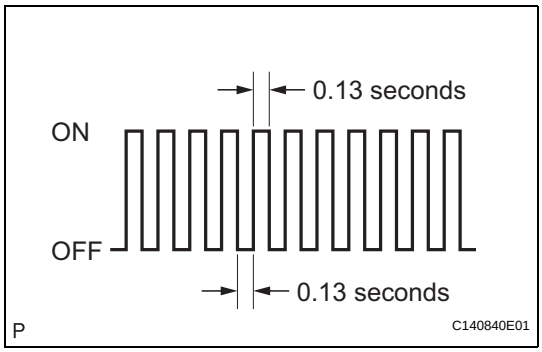

(f) Change the ECM to check mode. Make sure the MIL flashes as shown in the illustration.
NOTICE:
All DTCs and freeze frame data will be erased if: 1) the intelligent tester is used to change the ECM from normal mode to check mode or vice versa; or 2) during check mode, the ignition switch is turned from ON to ACC or OFF. Before check mode, make notes of the DTCs and freeze frame data.

(g) Start the engine. The MIL should turn off after the engine starts.

(h) Perform "MONITOR DRIVE PATTERN" for the ECT test (see page AX-21).
(Or, simulate the conditions of the malfunction described by the customer.)

(i) After simulating the malfunction conditions, use the tester to check the DTC and freeze frame data.

FAIL-SAFE CHART

1. FAIL-SAFE CHART

This function minimizes the loss of the ECT functions when a malfunction occurs in a sensor or solenoid.

(a) Automatic Transmission Fluid (ATF) temperature sensor:
When the ATF temperature sensor has a malfunction, 5th up-shift is prohibited.

(b) Counter gear speed sensor NC (Speed sensor NC):
When the counter gear speed sensor has a malfunction, 5th up-shift is prohibited.

(c) Shift solenoid valve DSL:
When the solenoid valve DSL has a malfunction, the current to the solenoid valve is stopped.
This stops lock-up control, then fuel economy decreases.

(d) Shift solenoid valve SL1, SL2, SL3 and S4:
If any of the shift solenoid valve circuits develops an open or short, the ECM turns the other shift solenoid "ON" and "OFF" in order to shift into the gear positions shown in the table below.
Manual shifting as shown in the following table must be done. In case of a short circuit, the ECM stops sending the current to the short circuited solenoid.
Even if starting the engine in the fail-safe mode, the gear position remains in the same position.

HINT:
FL: Flex Lock-up

Normal	Solenoid Valve	SL1	ON	OFF	ON	OFF	OFF
		SL2	ON	ON	OFF	FL	FL
		SL3	OFF	OFF	OFF	ON	ON
		S4	OFF	OFF	OFF	OFF	ON
	Gear Position		1st	2nd	3rd	4th	5th
SL1 Malfunction (During driving at 1st or 2nd)	Solenoid Valve	SL1	OFF				
		SL2	ON	ON	OFF to ON	FL to ON	FL to ON
		SL3	OFF	OFF	OFF	ON to OFF	ON to OFF
		S4	OFF	OFF	OFF	OFF	ON to OFF
	Gear Position		1st to 2nd	2nd	3rd to 2nd	4th to 2nd	5th to 2nd
SL1 Malfunction (During driving at 3rd)	Solenoid Valve	SL1	OFF				
		SL2	ON to FL	ON to FL	OFF to FL	FL	FL
		SL3	OFF	OFF	OFF	ON to FL	ON to FL
		S4	OFF to ON	OFF to ON	OFF to ON	OFF to ON	ON
	Gear Position		1st to 4th	2nd to 4th	3rd to 4th	4th	5th to 4th
SL1 Malfunction (During driving at 4th or 5th)	Solenoid Valve	SL1	OFF				
		SL2	ON to FL	ON to FL	OFF to FL	FL	FL
		SL3	OFF to ON	OFF to ON	OFF to ON	ON	ON
		S4	OFF	OFF	OFF	OFF	ON
	Gear Position		1st to 4th	2nd to 4th	3rd to 4th	4th	5th to 4th

SL2 Malfunction	Solenoid Valve	SL1	ON	OFF to ON	ON	OFF to ON	OFF to ON
		SL2	OFF				
		SL3	OFF	OFF	OFF	ON to OFF	ON to OFF
		S4	OFF to ON	OFF to ON	OFF to ON	OFF to ON	ON
	Gear Position		1st to 4th	2nd to 4th	3rd to 4th	4th	5th to 4th
SL3 Malfunction	Solenoid Valve	SL1	ON	OFF	ON	OFF to ON	OFF to ON
		SL2	ON	ON	OFF	FL	FL
		SL3	OFF				
		S4	OFF	OFF	OFF	OFF to ON	ON
	Gear Position		1st	2nd	3rd	4th	5th to 4th
S4 Malfunction	Solenoid Valve	SL1	ON	OFF	ON	OFF	OFF
		SL2	ON	ON	OFF	FL	FL
		SL3	OFF	OFF	OFF	ON	ON
		S4	OFF				
	Gear Position		1st	2nd	3rd	4th	5th to 4th
SL1, SL2, SL3, and S4 Malfunction	Solenoid Valve	SL1	OFF				
		SL2	OFF				
		SL3	OFF				
		S4	OFF				
	Gear Position		1st to 4th	2nd to 4th	3rd to 4th	4th	5th to 4th

DATA LIST / ACTIVE TEST

1. READ DATA LIST

HINT:

Using the intelligent tester's DATA LIST allows switch, sensor, actuator, and other item values to be read without removing any parts. Reading the DATA LIST early in troubleshooting is one way to save time.

NOTICE:

In the table below, the values listed under "Normal Condition" are reference values. Do not depend solely on these reference values when deciding whether a part is faulty or not.

(a) Warm up the engine.

(b) Turn the ignition switch OFF.

(c) Connect the intelligent tester to the CAN VIM. Then connect the CAN VIM to the DLC3.

(d) Turn the ignition switch ON and turn the tester ON.

(e) Enter the following menus: DIAGNOSIS / ENHANCED OBD II / DATA LIST.

(f) Follow the instructions on the tester and read the DATA LIST.

ECM:

Tester Display	Measurement Item/Range	Normal Condition	Diagnostic Note
SPD (NC)	Counter gear speed/ Min.: 0 rpm Max.: 12,750 rpm	3rd gear when shift lever is on D (after warming up the engine); Intermediate shaft speed (NC) becomes close to the engine speed	Data is displayed in increments of 50 rpm
SPD (NT)	Input turbine speed/ Min.: 0 rpm Max.: 12,750 rpm	• Lock-up ON (after warming up engine): Input turbine speed (NT) is equal to engine speed. • Lock-up OFF (idling with shift lever on N): Input turbine speed (NT) is nearly equal to engine speed.	Data is displayed in increments of 50 rpm
PNP SW [NSW]	PNP switch status/ ON or OFF	Shift lever is: On P or N: ON Not on P or N: OFF	When shift lever position displayed on intelligent tester differs from actual position, adjustment of PNP switch or shift cable may be incorrect HINT: When failure still occurs even after adjusting these parts, refer to DTC P0705 (see page AX-44)
STOP LIGHT SW	Stop light switch status/ ON or OFF	• Brake pedal is depressed: ON • Brake pedal is released: OFF	-
SHIFT	ECM gear shift command/ 1st, 2nd, 3rd, 4th and 5th	Shift lever position is: • On L: 1st • On 2: 1st or 2nd • On 3: 1st, 2nd or 3rd • On 4: 1st, 2nd, 3rd or 4th • On D: 1st, 2nd, 3rd, 4th or 5th	-

Tester Display	Measurement Item/Range	Normal Condition	Diagnostic Note
REVERSE	PNP switch status/ ON or OFF	Shift lever is: On R: ON Not on R: OFF	When shift lever position displayed on intelligent tester differs from actual position, adjustment of PNP switch or shift cable may be incorrect HINT: When failure still occurs even after adjusting these parts, refer to DTC P0705 (see page AX-44)
PARKING	PNP switch status/ ON or OFF	Shift lever is: On P: ON Not on P: OFF	When shift lever position displayed on intelligent tester differs from actual position, adjustment of PNP switch or shift cable may be incorrect HINT: When failure still occurs even after adjusting these parts, refer to DTC P0705 (see page AX-44)
NEUTRAL	PNP switch status/ ON or OFF	Shift lever is: On N: ON Not on N: OFF	When shift lever position displayed on intelligent tester differs from actual position, adjustment of PNP switch or shift cable may be incorrect HINT: When failure still occurs even after adjusting these parts, refer to DTC P0705 (see page AX-44)
DRIVE	PNP switch status/ ON or OFF	Shift lever is: On 4 or D: ON Not on 4 or D: OFF	When shift lever position displayed on intelligent tester differs from actual position, adjustment of PNP switch or shift cable may be incorrect HINT: When failure still occurs even after adjusting these parts, refer to DTC P0705 (see page AX-44
4TH/DRIVE	PNP switch status/ ON or OFF	Shift lever is: On 4: ON Not on 4: OFF	When shift lever position displayed on intelligent tester differs from actual position, adjustment of PNP switch or shift cable may be incorrect HINT: When failure still occurs even after adjusting these parts, refer to DTC P0705 (see page AX-44)
3RD	PNP switch status/ ON or OFF	Shift lever is: On 3: ON Not on 3: OFF	When shift lever position displayed on intelligent tester differs from actual position, adjustment of PNP switch or shift cable may be incorrect HINT: When failure still occurs even after adjusting these parts, refer to DTC P0705 (see page AX-44)
2ND	PNP switch status/ ON or OFF	Shift lever is: On 2 or L: ON Not on 2 or L: OFF	When shift lever position displayed on intelligent tester differs from actual position, adjustment of PNP switch or shift cable may be incorrect HINT: When failure still occurs even after adjusting these parts, refer to DTC P0705 (see page AX-44)

Tester Display	Measurement Item/Range	Normal Condition	Diagnostic Note
LOW	PNP switch status/ ON or OFF	Shift lever is: On L: ON Not on L: OFF	When shift lever position displayed on intelligent tester differs from actual position, adjustment of PNP switch or shift cable may be incorrect HINT: When failure still occurs even after adjusting these parts, refer to DTC P0705 (see page AX-44)
A/T OIL TEMP1	ATF temperature sensor value/ Min.: -40°C (-40°F) Max.: 215°C (419°F)	• After stall test: Approximately 80°C (176°F) • Equal to ambient temperature while engine is cold	If value is -40°C (-40°F) or "150°C (302°F) or more", ATF temperature sensor circuit is open or short circuited
LOCK UP SOL	Lock-up solenoid status/ ON or OFF	• Lock-up: ON • Not on lock-up: OFF	-
SOLENOID (SLT)	Shift solenoid SLT status/ ON or OFF	• Accelerator pedal is depressed: OFF • Accelerator pedal is released: ON	-

2. PERFORM ACTIVE TEST

HINT:

Performing the intelligent tester's ACTIVE TEST allows relay, VSV, actuator and other items to be operated without removing any parts. Performing the ACTIVE TEST early in troubleshooting is one way to save time. The DATA LIST can be displayed during the ACTIVE TEST.

(a) Warm up the engine.
(b) Turn the ignition switch OFF.
(c) Connect the intelligent tester to the CAN VIM. Then connect the CAN VIM to the DLC3.
(d) Turn the ignition switch ON and turn the tester ON.
(e) Enter the following menus: DIAGNOSIS / ENHANCED OBD II / ACTIVE TEST.
(f) Perform the ACTIVE TEST.

ECM:

Tester Display	Test Part	Control Range	Diagnostic Note
SHIFT	[Test Details] Operate shift solenoid valve and set each shift lever position by yourself [Vehicle Condition] • IDL: ON • 50 km/h (31 mph) or less [Other information] • Press "→" button: Shift up • Press "←" button: Shift down	-	Possible to check operation of shift solenoid valves
SOLENOID (S4)	[Test Details] Operate the shift solenoid S4 [Vehicle Condition] • Vehicle stopped • Shift lever P or N position	-	-
SOLENOID (SL1)	[Test Details] Operate the shift solenoid SL1 [Vehicle Condition] • Vehicle stopped • Shift lever P or N position	-	-

Tester Display	Test Part	Control Range	Diagnostic Note
SOLENOID (SL2)	[Test Details] Operate the shift solenoid SL2 [Vehicle Condition] • Vehicle stopped • Shift lever P or N position	-	-
SOLENOID (SL3)	[Test Details] Operate the shift solenoid SL3 [Vehicle Condition] • Vehicle stopped • Shift lever P or N position	-	-
LOCK UP	[Test Details] Control shift solenoid DSL to set automatic transaxle to the lock-up condition [Vehicle Condition] • Throttle valve opening angle: Less than 35% • Vehicle speed: 60 km/h (36 mph) or more	-	Possible to check shift solenoid valve DSL operation
SOLENOID (DSL)	[Test Details] Operate the shift solenoid DSL [Vehicle Condition] • Vehicle stopped • Shift lever P or N position	-	-
SOLENOID (SR)	[Test Details] Operate the shift solenoid SR [Vehicle Condition] • Vehicle stopped • Shift lever P or N position	-	-
SOLENOID (SLT)*	[Test Details] Operate shift solenoid SLT and raise line pressure [Vehicle Condition] • Vehicle stopped • IDL: ON HINT: OFF: Line pressure up (when Active Test "SOLENOID (SLT)" is performed, ECM commands SLT solenoid to turn OFF) ON: No action (normal operation)	-	-

HINT:
*: "SOLENOID (SLT)" in the ACTIVE TEST is performed to check the line pressure changes by connecting SST to the automatic transaxle, which is used in the HYDRAULIC TEST (see page AX-18) as well. Please note that the pressure values in the ACTIVE TEST and HYDRAULIC TEST are different.

DIAGNOSTIC TROUBLE CODE CHART

HINT:

- If a DTC is displayed during the DTC check, check the circuit listed in the table below and proceed to the page given.
- *1: "Comes on" means the Malfunction Indicator Lamp (MIL) illuminates.
- *2: "DTC stored" means the ECM memorizes the malfunction code if the ECM detects the DTC detection condition.
- These DTCs may be output when the clutch, brake, gear components, etc., inside the automatic transaxle are damaged.

Automatic transaxle system:

DTC No.	Detection Item	Trouble Area	MIL*1	Memory*2	See page
P0705	Transmission Range Sensor Circuit Malfunction (PRNDL Input)	- Open or short in park/neutral position switch circuit - Park/Neutral position switch - ECM	Comes on	DTC stored	AX-44
P0710	Transmission Fluid Temperature Sensor "A" Circuit	- Open or short in ATF temperature sensor circuit - ATF temperature sensor - ECM	Comes on	DTC stored	AX-51
P0711	Transmission Fluid Temperature Sensor "A" Performance	- Open or short in ATF temperature sensor circuit - ATF temperature sensor - ECM	Comes on	DTC stored	AX-55
P0712	Transmission Fluid Temperature Sensor "A" Circuit Low Input	- Short in ATF temperature sensor circuit - ATF temperature sensor - ECM	Comes on	DTC stored	AX-51
P0713	Transmission Fluid Temperature Sensor "A" Circuit High Input	- Open in ATF temperature sensor circuit - ATF temperature sensor - ECM	Comes on	DTC stored	AX-51
P0717	Input Speed Sensor Circuit No Signal	- Open or short in speed sensor NT circuit - Speed sensor NT - ECM	Comes on	DTC stored	AX-58
P0724	Brake Switch "B" Circuit High	- Short in stop light switch circuit - Stop light switch - ECM	Comes on	DTC stored	AX-62

DTC No.	Detection Item	Trouble Area	MIL*1	Memory*2	See page
P0741	Torque Converter Clutch Solenoid Performance (Shift Solenoid Valve DSL)	- Shift solenoid valve DSL remains open or closed - Valve body is blocked - Shift solenoid valve DSL - Torque converter clutch - Automatic transaxle (clutch, brake, gear, etc.) - Line pressure is too low - ECM	Comes on	DTC stored	AX-65
P0746	Pressure Control Solenoid "A" Performance (Shift Solenoid Valve SL1)	- Shift solenoid valve SL1 remains open or closed - Valve body is blocked - Shift solenoid valve SL1 - Automatic transaxle (clutch, brake, gear, etc.) - ECM	Comes on	DTC stored	AX-72
P0748	Pressure Control Solenoid "A" Electrical (Shift Solenoid Valve SL1)	- Open or short in shift solenoid valve SL1 circuit - Shift solenoid valve SL1 - ECM	Comes on	DTC stored	AX-76
P0766	Shift Solenoid "D" Performance (Shift Solenoid Valve S4)	- Shift solenoid valve S4 remains open or closed - Valve body is blocked - Shift solenoid valve S4 - Automatic transaxle (clutch, brake, gear, etc.) - ECM	Comes on	DTC stored	AX-79
P0771	Shift Solenoid "E" Performance (Shift Solenoid Valve SR)	- Shift solenoid valve SR remains open or closed - Valve body is blocked - Shift solenoid valve SR - Automatic transaxle (clutch, brake, gear, etc.)	Comes on	DTC stored	AX-83
P0776	Pressure Control Solenoid "B" Performance (Shift Solenoid Valve SL2)	- Shift solenoid valve SL2 remains open or closed - Valve body is blocked - Shift solenoid valve SL2 - Automatic transaxle (clutch, brake, gear, etc.) - ECM	Comes on	DTC stored	AX-87

DTC No.	Detection Item	Trouble Area	MIL*1	Memory*2	See page
P0778	Pressure Control Solenoid "B" Electrical (Shift Solenoid Valve SL2)	- Open or short in shift solenoid valve SL2 circuit - Shift solenoid valve SL2 - ECM	Comes on	DTC stored	AX-92
P0793	Intermediate Shaft Speed Sensor "A"	- Open or short in speed sensor NC circuit - Speed sensor NC - ECM	Comes on	DTC stored	AX-95
P0796	Pressure Control Solenoid "C" Performance (Shift Solenoid Valve SL3)	- Shift solenoid valve SL3 remains open or closed - Valve body is blocked Automatic transaxle (clutch, brake, gear, etc.)	Comes on	DTC stored	AX-99
P0798	Pressure Control Solenoid "C" Electrical (Shift Solenoid Valve SL3)	- Open or short in shift solenoid valve SL3 circuit - Shift solenoid valve SL3 - ECM	Comes on	DTC stored	AX-103
P0982	Shift Solenoid "D" Control Circuit Low (Shift Solenoid Valve S4)	- Short in shift solenoid valve S4 circuit - Shift solenoid valve S4 - ECM	Comes on	DTC stored	AX-106
P0983	Shift Solenoid "D" Control Circuit High (Shift Solenoid Valve S4)	- Open in shift solenoid valve S4 circuit - Shift solenoid valve S4 - ECM	Comes on	DTC stored	AX-106
P0985	Shift Solenoid "E" Control Circuit Low (Shift Solenoid Valve SR)	- Short in shift solenoid valve SR circuit - Shift solenoid valve SR - ECM	Comes on	DTC stored	AX-110
P0986	Shift Solenoid "E" Control Circuit High (Shift Solenoid Valve SR)	- Open in shift solenoid valve SR circuit - Shift solenoid valve SR - ECM	Comes on	DTC stored	AX-110
P2714	Pressure Control Solenoid "D" Performance (Shift Solenoid Valve SLT)	- Shift solenoid valve SLT remains closed - Valve body is blocked - Torque converter clutch - Automatic transaxle (clutch, brake, gear, etc.) - ECM	Comes on	DTC stored	AX-114
P2716	Pressure Control Solenoid "D" Electrical (Shift Solenoid Valve SLT)	- Open or short in shift solenoid valve SLT circuit - Shift solenoid valve SLT - ECM	Comes on	DTC stored	AX-120

DTC No.	Detection Item	Trouble Area	MIL*1	Memory*2	See page
P2769	Torque Converter Clutch Solenoid Circuit Low (Shift Solenoid Valve DSL)	- Short in shift solenoid valve DSL circuit - Shift solenoid valve DSL - ECM	Comes on	DTC stored	AX-123
P2770	Torque Converter Clutch Solenoid Circuit High (Shift Solenoid Valve DSL)	- Open in shift solenoid valve DSL circuit - Shift solenoid valve DSL - ECM	Comes on	DTC stored	AX-123

DTC	P0705	Transmission Range Sensor Circuit Malfunction (PRNDL Input)

DESCRIPTION

The Park/Neutral Position (PNP) switch detects the shift lever position and sends signals to the ECM.

DTC No.	DTC Detection Condition	Trouble Area
P0705	When one of following conditions is met: (A) Any 2 or more of the P, N, R, D, 3 and 2 input signals are ON simultaneously (2 trip detection logic) (B) Any 2 or more of the NSW, R, D, 3 and 2 input signals are ON simultaneously (2 trip detection logic) (C) When both conditions below are met (2 trip detection logic) • One of the NSW, P, N or R input signal is ON • One of the 4 or L input signal is ON (D) All of the NSW, P, N, R, D, 3 and 2 input signals are OFF (2 trip detection logic)	• Open or short in park/neutral position switch circuit • Park/Neutral position switch • ECM

MONITOR DESCRIPTION

These DTCs indicate a problem with the park/neutral position switch and the wire harness in the park/neutral position switch circuit.
The park/neutral position switch detects the shift lever position and sends a signal to the ECM.
For security, the park/neutral position switch detects the shift lever position so that the engine can be started only when the shift lever is on P or N.
The park/neutral position switch sends a signal to the ECM according to the shift lever position (R, D, 4, 3, 2 or L).
The ECM determines that there is a problem with the switch or related parts if it receives more than 1 position signal simultaneously. The ECM will illuminate the MIL and store the DTC.

MONITOR STRATEGY

Related DTCs	P0705: Park/Neutral position switch/Verify switch input
Required sensors/Components	Park/Neutral position switch
Frequency of operation	Continuous
Duration	2 seconds: Condition (A), (B) and (C) 60 seconds: Condition (D)
MIL operation	2 driving cycles
Sequence of operation	None

TYPICAL ENABLING CONDITIONS

The monitor will run whenever this DTC is not present.	None
Ignition switch	ON
Battery voltage	10.5 V or more

TYPICAL MALFUNCTION THRESHOLDS

1. One of the following conditions is met: Condition (A), (B), (C) or (D)

Condition (A)

Number of the following signal input at the same time	2 or more
P switch	ON
R switch	ON

N switch	ON
D switch	ON
3 switch	ON
2 switch	ON

Condition (B)

Number of the following signal input at the same time	2 or more
NSW switch	ON
R switch	ON
D switch	ON
3 switch	ON
2 switch	ON

Condition (C)

Both of the following conditions are met:	Condition 1 and 2
1. One of the following conditions is met:	Condition (a), (b), (c) or (d)
(a) NSW switch	ON
(b) P switch	ON
(c) R switch	ON
(d) N switch	ON
2. One of the following conditions is met:	Condition (a) or (b)
(a) 4 switch	ON
(b) L switch	ON

Condition (D)

When all conditions below are met:	Condition (a), (b), (c), (d), (e), (f) and (g)
(a) NSW switch	OFF
(b) P switch	OFF
(c) R switch	OFF
(d) N switch	OFF
(e) D switch	OFF
(f) 3 switch	OFF
(g) 2 switch	OFF

COMPONENT OPERATING RANGE

Park/Neutral position switch	Park/Neutral position switch sends only one signal to ECM.

WIRING DIAGRAM

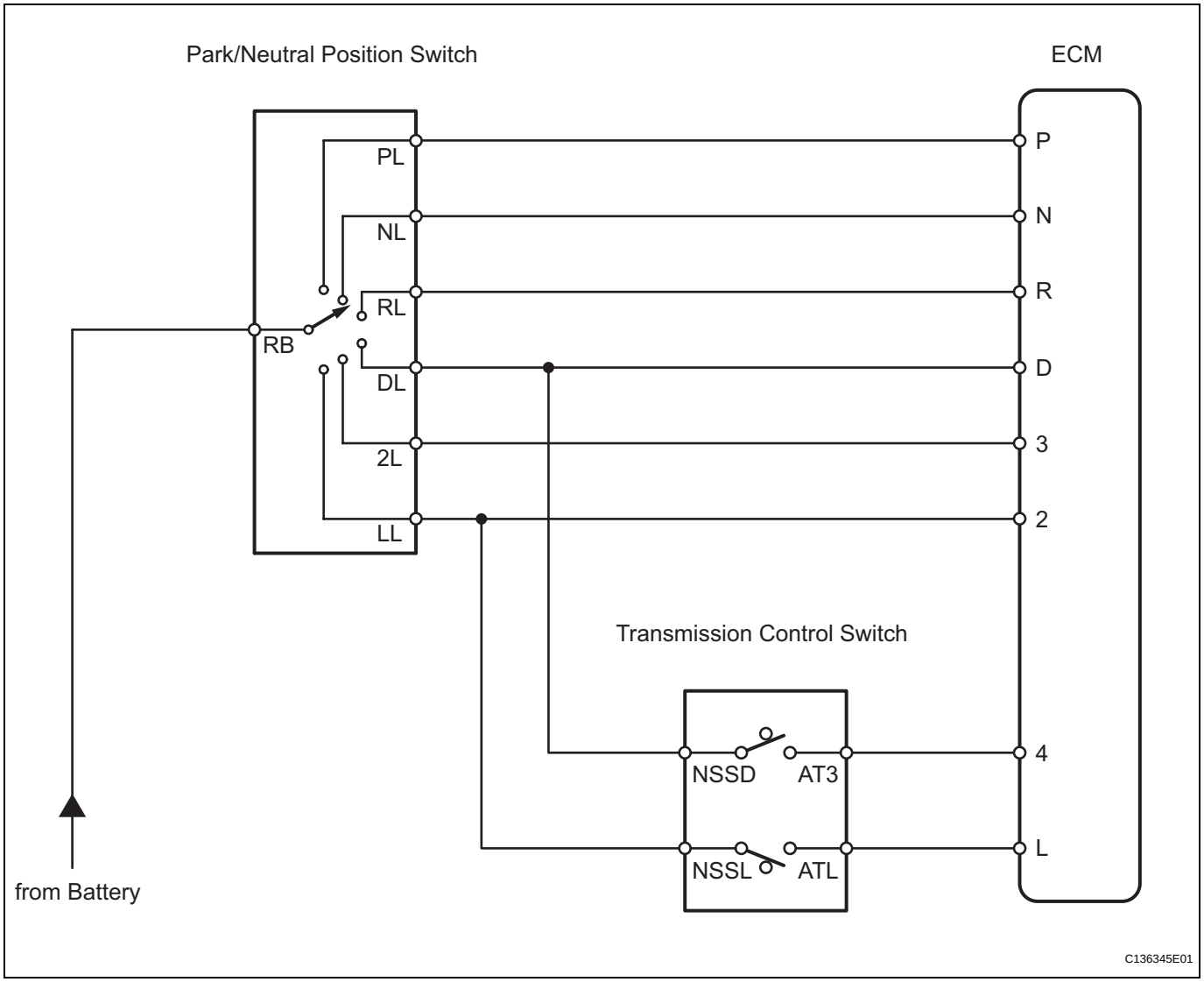

INSPECTION PROCEDURE

HINT:

Using the intelligent tester's DATA LIST allows switch, sensor, actuator and other item values to be read without removing any parts. Reading the DATA LIST early in troubleshooting is one way to save time.

NOTICE:

In the table below, the values listed under "Normal Condition" are reference values. Do not depend solely on these reference values when deciding whether a part is faulty or not.

1. Warm up the engine.
2. Turn the ignition switch OFF.
3. Connect the intelligent tester to the CAN VIM. Then connect the CAN VIM to the DLC3.
4. Turn the ignition switch ON and turn the tester ON.
5. Enter the following menus: DIAGNOSIS / ENHANCED OBD II / DATA LIST.
6. Follow the instructions on the tester and read the DATA LIST.

ECM:

Item	Measurement Item/ Range (Display)	Normal Condition	Diagnostic Note
PNP SW (NSW)	PNP switch status/ ON or OFF	Shift lever is: On P or N: ON Not on P or N: OFF	When shift lever position displayed on intelligent tester differs from actual position, adjustment of PNP switch or shift cable may be incorrect
REVERSE	PNP switch status/ ON or OFF	Shift lever is: On R: ON Not on R: OFF	When shift lever position displayed on intelligent tester differs from actual position, adjustment of PNP switch or shift cable may be incorrect
PARKING	PNP switch status/ ON or OFF	Shift lever is: On P: ON Not on P: OFF	When shift lever position displayed on intelligent tester differs from actual position, adjustment of PNP switch or shift cable may be incorrect
NEUTRAL	PNP switch status/ ON or OFF	Shift lever is: On N: ON Not on N: OFF	When shift lever position displayed on intelligent tester differs from actual position, adjustment of PNP switch or shift cable may be incorrect
4TH/DRIVE	PNP switch status/ ON or OFF	Shift lever is: On 4 or D: ON Not on 4 or D: OFF	When shift lever position displayed on intelligent tester differs from actual position, adjustment of PNP switch or shift cable may be incorrect
3RD	PNP switch status/ ON or OFF	Shift lever is: On 3: ON Not on 3: OFF	When shift lever position displayed on intelligent tester differs from actual position, adjustment of PNP switch or shift cable may be incorrect
2ND	PNP switch status/ ON or OFF	Shift lever is: On 2 or L: ON Not on 2 or L: OFF	When shift lever position displayed on intelligent tester differs from actual position, adjustment of PNP switch or shift cable may be incorrect
LOW	PNP switch status/ ON or OFF	Shift lever is: On L: ON Not on L: OFF	When shift lever position displayed on intelligent tester differs from actual position, adjustment of PNP switch or shift cable may be incorrect

1 CHECK WIRE HARNESS (PARK/NEUTRAL POSITION SWITCH - BATTERY)

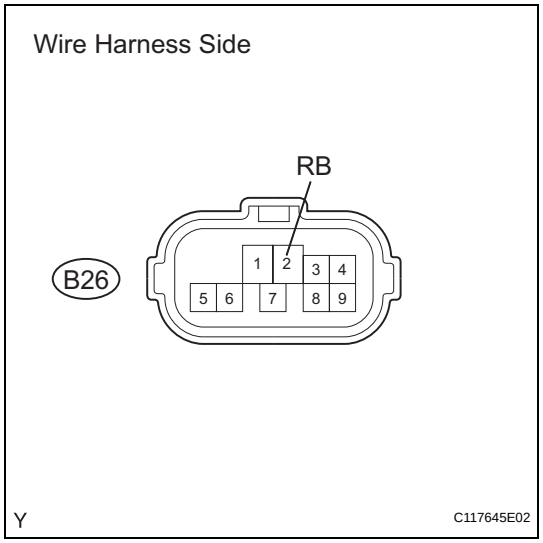

(a) Disconnect the B26 park/neutral position switch connector.
(b) Turn the ignition switch ON.
(c) Measure the voltage of the wire harness side connector.

Standard voltage

Tester Connection	Specified Condition
B26-2 (RB) - Body ground	10 to 14 V

NG → **CHECK POWER SOURCE OF ECM**

OK

2 INSPECT PARK/NEUTRAL POSITION SWITCH

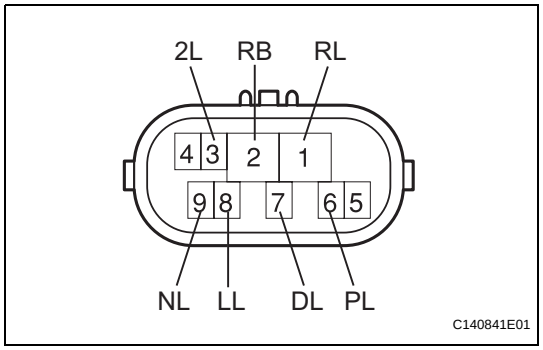

(a) Disconnect the B26 park/neutral position switch connector.
(b) Measure the resistance of the park/neutral position switch when the shift lever is moved to each position.

Standard resistance

Tester Connection	Shift Lever Position	Specified Condition
6 (PL) - 2 (RB)	P	Below 1 Ω
6 (PL) - 2 (RB)	Not on P	10 kΩ or higher
1 (RL) - 2 (RB)	R	Below 1 Ω
1 (RL) - 2 (RB)	Not on R	10 kΩ or higher
9 (NL) - 2 (RB)	N	Below 1 Ω
9 (NL) - 2 (RB)	Not on N	10 kΩ or higher
7 (DL) - 2 (RB)	D	Below 1 Ω
7 (DL) - 2 (RB)	Not on D	10 kΩ or higher
3 (2L) - 2 (RB)	2	Below 1 Ω
3 (2L) - 2 (RB)	Not on 2	10 kΩ or higher
8 (LL) - 2 (RB)	L	Below 1 Ω
8 (LL) - 2 (RB)	Not on L	10 kΩ or higher

NG → **REPLACE PARK/NEUTRAL POSITION SWITCH**

OK

3 CHECK WIRE HARNESS (ECM - BATTERY)

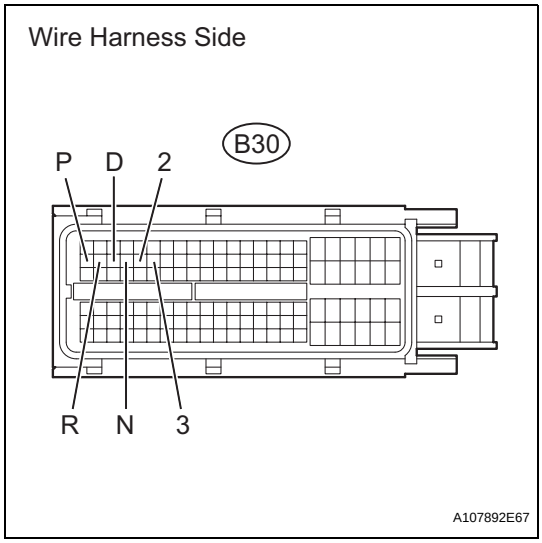

(a) Disconnect the B30 ECM connector.
(b) Turn the ignition switch ON.
(c) Measure the voltage of the wire harness side connector.

Standard voltage

Tester Connection	Shift Lever Position	Specified Condition
B30-24 (P) - Body ground	P	10 to 14 V
B30-24 (P) - Body ground	Not on P	Below 1 V
B30-25 (R) - Body ground	R	10 to 14 V*
B30-25 (R) - Body ground	Not on R	Below 1 V
B30-27 (N) - Body ground	N	10 to 14 V
B30-27 (N) - Body ground	Not on N	Below 1 V
B30-26 (D) - Body ground	D or 4	10 to 14 V
B30-26 (D) - Body ground	Not on D or 4	Below 1 V
B30-28 (2) - Body ground	2	10 to 14 V
B30-28 (2) - Body ground	Not on 2	Below 1 V
B30-29 (3) - Body ground	3 or L	10 to 14 V
B30-29 (3) - Body ground	Not on 3 or L	Below 1 V

HINT:
*: The voltage will drop slightly due to the illumination of the back-up light.

NG → **REPAIR OR REPLACE HARNESS AND CONNECTOR**

OK

4 CHECK WIRE HARNESS (PARK/NEUTRAL POSITION SWITCH - TRANSMISSION CONTROL SWITCH)

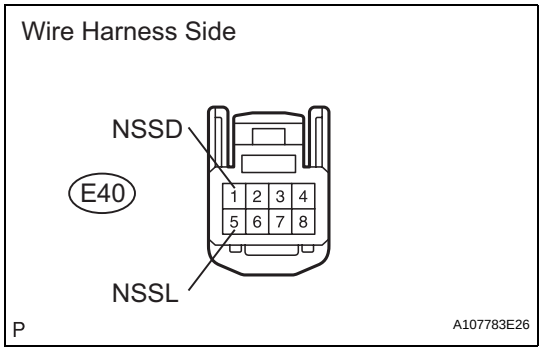

(a) Disconnect the E40 switch connector.
(b) Turn the ignition switch ON.
(c) Measure the voltage when the shift lever is moved to each position.

Standard voltage

Tester Connection	Shift Lever Position	Specified Condition
1 (NSSD) - Body ground	D and 4	10 to 14 V
1 (NSSD) - Body ground	Not on D and 4	Below 1 V
5 (NSSL) - Body ground	3 and L	10 to 14 V
5 (NSSL) - Body ground	Not on 3 and L	Below 1 V

AX

NG → REPAIR OR REPLACE HARNESS AND CONNECTOR

OK

5 INSPECT TRANSMISSION CONTROL SWITCH

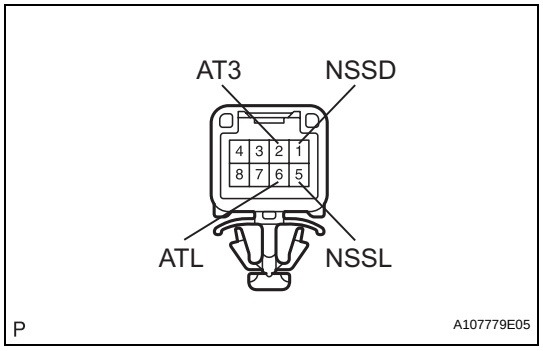

(a) Disconnect the E40 switch connector.
(b) Measure the resistance of the switch when the shift lever is moved to each position.

Standard resistance

Tester Connection	Shift Lever Position	Specified Condition
1 (NSSD) - 2 (AT3)	D	10 kΩ or higher
1 (NSSD) - 2 (AT3)	3	Below 1 Ω
5 (NSSL) - 6 (ATL)	D	10 kΩ or higher
5 (NSSL) - 6 (ATL)	3	Below 1 Ω

NG → REPLACE TRANSMISSION CONTROL SWITCH

OK

6 CHECK WIRE HARNESS (TRANSMISSION CONTROL SWITCH - BATTERY)

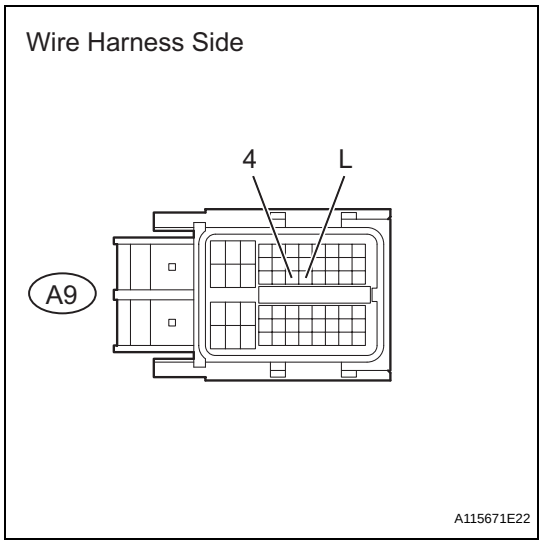

(a) Disconnect the A9 ECM connector.
(b) Turn the ignition switch ON.
(c) Measure the voltage of the wire harness side connector.

Standard voltage

Tester Connection	Shift Lever Position	Specified Condition
A9-25 (4) - Body ground	4	10 to 14 V
A9-25 (4) - Body ground	Not on 4	Below 1 V
A9-26 (L) - Body ground	L	10 to 14 V
A9-26 (L) - Body ground	Not on L	Below 1 V

HINT:
*: The voltage will drop slightly due to the illumination of the back-up light.

NG → REPAIR OR REPLACE HARNESS AND CONNECTOR

OK

REPLACE ECM

DTC	P0710	Transmission Fluid Temperature Sensor "A" Circuit

DTC	P0712	Transmission Fluid Temperature Sensor "A" Circuit Low Input

DTC	P0713	Transmission Fluid Temperature Sensor "A" Circuit High Input

DESCRIPTION

The Automatic Transmission Fluid (ATF) temperature sensor converts the ATF temperature into a resistance value which is input into the ECM.
The ECM applies a voltage to the temperature sensor through ECM terminal THO1.
The sensor resistance changes with the ATF temperature.
One terminal of the sensor is grounded so that the sensor resistance and voltage decrease as the temperature becomes higher.
The ECM calculates the ATF temperature based on the voltage signal.

DTC No.	DTC Detection Condition	Trouble Area
P0710	ATF temperature sensor resistance changes from (a) to (b) or from (b) to (a) in less than 0.5 sec., and P0712 and P0713 are not detected (1 trip detection logic): (a) ATF temperature sensor resistance is less than 79 Ω (b) ATF temperature sensor resistance is more than 156 kΩ	• Open or short in ATF temperature sensor circuit • ATF temperature sensor • ECM
P0712	ATF temperature sensor resistance is less than 79 Ω for 0.5 sec. or more (1 trip detection logic)	• Short in ATF temperature sensor circuit • ATF temperature sensor • ECM
P0713	15 minutes or more after the engine start, ATF temperature sensor resistance is more than 156 kΩ for 0.5 sec. or more (1 trip detection logic)	• Open in ATF temperature sensor circuit • ATF temperature sensor • ECM

MONITOR DESCRIPTION

ATF temperature sensor converts ATF temperature to an electrical resistance value. Based on the resistance, the ECM determines the ATF temperature, and the ECM detects an open or short in the ATF temperature circuit. If the resistance value of the ATF temperature is less than 79 Ω*1 or more than 156 kΩ*2, the ECM interprets this as a fault in the ATF sensor or wiring. The ECM will illuminate the MIL and store the DTC.
HINT:

- *1: 150°C (302°F) or more is indicated regardless of the actual ATF temperature.
- *2: -40°C (-40°F) is indicated regardless of the actual ATF temperature.
- The ATF temperature can be checked on the intelligent tester display.

MONITOR STRATEGY

Related DTCs	P0710: ATF temperature sensor/Range check (Chattering) P0712: ATF temperature sensor/Range check (Low resistance) P0713: ATF temperature sensor/Range check (High resistance)
Required sensors/Components	ATF temperature sensor
Frequency of operation	Continuous
Duration	0.5 sec.

MIL operation	Immediate
Sequence of operation	None

TYPICAL ENABLING CONDITIONS

P0710, P0712: Range check (Chattering, Low resistance)

The monitor will run whenever this DTC is not present.	None
The typical enabling condition is not available.	-

P0713: Range check (High resistance)

The monitor will run whenever this DTC is not present.	None
Time after engine start	15 min. or more

TYPICAL MALFUNCTION THRESHOLDS

P0710: Range check (Chattering)

ATF temperature sensor resistance	Less than 79 Ω or more than 156 kΩ

P0712: Range check (Low resistance)

ATF temperature sensor resistance	Less than 79 Ω

P0713: Range check (High resistance)

ATF temperature sensor resistance	More than 156 kΩ

COMPONENT OPERATING RANGE

ATF temperature sensor	Atmospheric temperature to approx. 130°C (266°F)

WIRING DIAGRAM

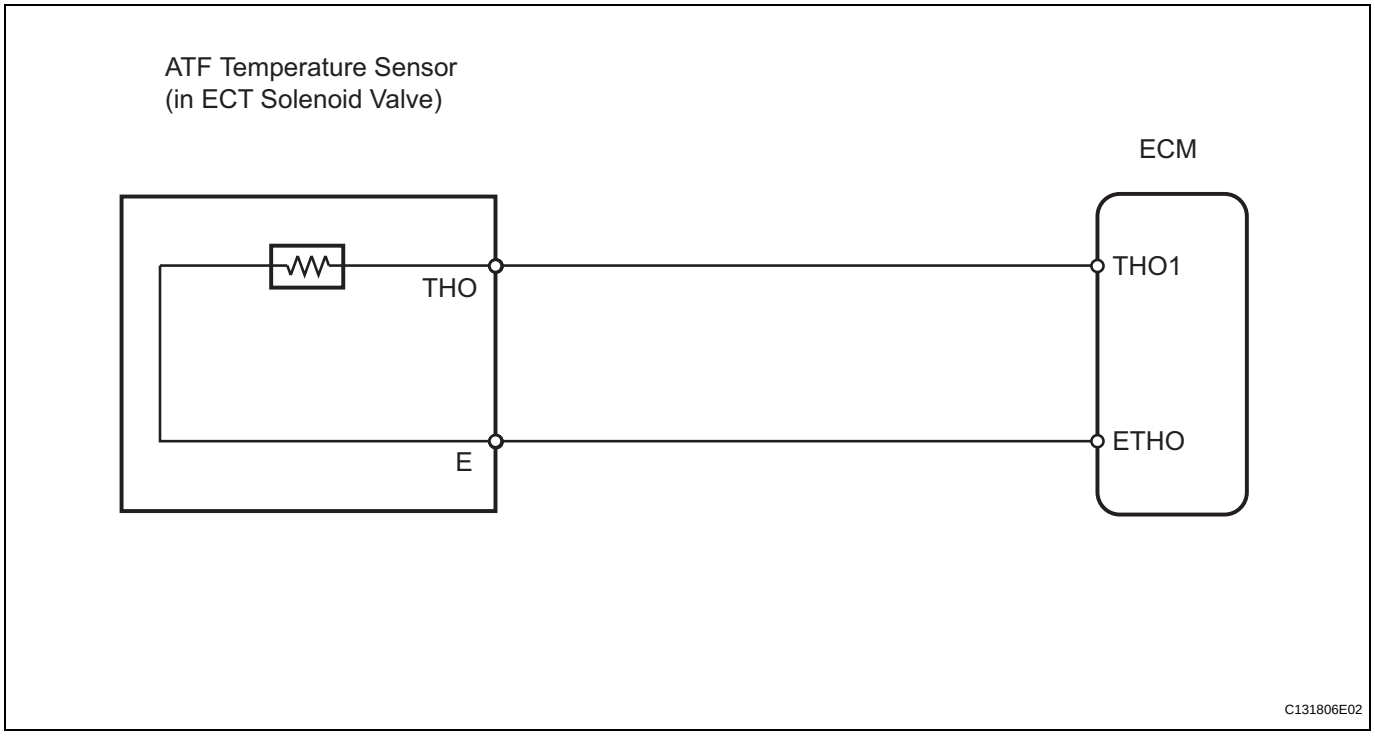

INSPECTION PROCEDURE

HINT:
Using the intelligent tester's DATA LIST allows switch, sensor, actuator and other item values to be read without removing any parts. Reading the DATA LIST early in troubleshooting is one way to save time.
NOTICE:
In the table below, the values listed under "Normal Condition" are reference values. Do not depend solely on these reference values when deciding whether a part is faulty or not.
1. Warm up the engine.
2. Turn the ignition switch OFF.
3. Connect the intelligent tester to the CAN VIM. Then connect the CAN VIM to the DLC3.
4. Turn the ignition switch ON and turn the tester ON.
5. Enter the following menus: DIAGNOSIS / ENHANCED OBD II / DATA LIST.
6. Follow the instructions on the tester and read the DATA LIST.

ECM:

Item	Measurement Item/ Range (Display)	Normal Condition	Diagnostic Note
A/T OIL TEMP1	ATF temperature sensor value/ Min.: -40°C (-40°F) Max.: 215°C (419°F)	• After stall test: Approximately 80°C (176°F) • Equal to ambient temperature while engine is cold	If value is -40°C (-40°F) or "150°C (302°F) or more", ATF temperature sensor circuit is open or short circuited

HINT:
- When DTC P0712 is output and the tester output is 150°C (302°F) or more, there is a short circuit.
- When DTC P0713 is output and the tester output is -40°C (-40°F), there is an open circuit. Measure the resistance between terminal THO1 (THO) and the body ground.

Temperature Displayed	Malfunction
-40°C (-40°F)	Open circuit
150°C (302°F) or more	Short circuit

HINT:
- If a circuit related to the ATF temperature sensor becomes open, P0713 is set in approximately 0.5 seconds.
- It is not necessary to inspect the circuit when P0711 is set.

1	INSPECT TRANSMISSION WIRE (ATF TEMPERATURE SENSOR)

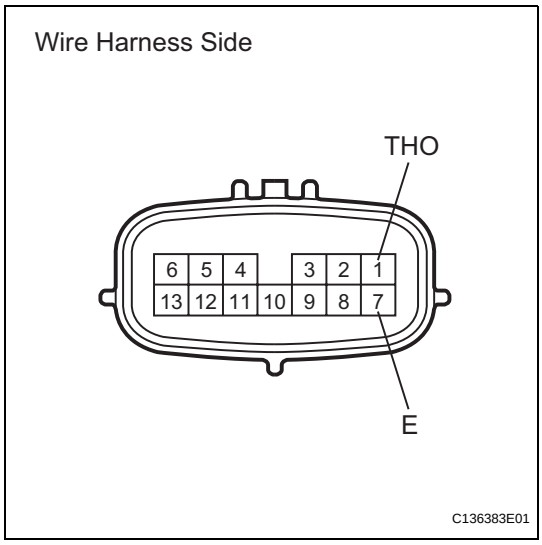

(a) Disconnect the B32 wire connector.
(b) Measure the resistance of the transmission wire.
Standard resistance

Tester Connection	Specified Condition
1 (THO) - 7 (E)	**79 Ω to 156 kΩ**
1 (THO) - Body ground	**1 MΩ or higher**
7 (E) - Body ground	**1 MΩ or higher**

HINT:
If the resistance is out of the specified range of either of the ATF temperatures shown in the table below, the driveability of the vehicle may decrease.
Standard resistance

ATF Temperature	Specified Condition
20°C (68°F)	**3 to 5 kΩ**
110°C (230°F)	**0.22 to 0.28 kΩ**

NG → **REPAIR OR REPLACE TRANSMISSION WIRE**

OK

2 CHECK WIRE HARNESS (TRANSMISSION WIRE - ECM)

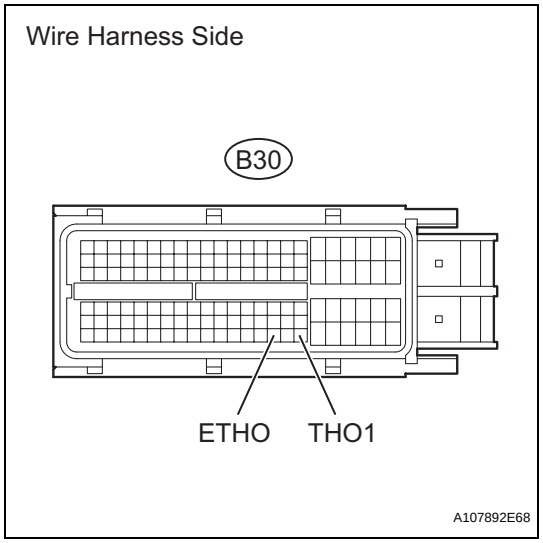

(a) Disconnect the B30 ECM connector.
(b) Measure the resistance of the wire harness side connector.

Standard resistance

Tester Connection	Specified Condition
B30-126 (THO1) - B30-124 (ETHO)	79 Ω to 156 kΩ
B30-126 (THO1) - Body ground	1 MΩ or higher
B30-124 (ETHO) - Body ground	1 MΩ or higher

NG → **REPAIR OR REPLACE HARNESS AND CONNECTOR**

OK

REPLACE ECM

DTC	P0711	Transmission Fluid Temperature Sensor "A" Performance

DESCRIPTION

The ATF (Automatic Transmission Fluid) temperature sensor converts the fluid temperature into a resistance value which is input into the ECM.

DTC No.	DTC Detection Condition	Trouble Area
P0711	When either condition below is met: (A) Both (a) and (b) are detected: (2 trip detection logic) (a) Intake air and engine coolant temperatures are more than -10°C (14°F) at engine start (b) After normal driving for over 18 min. and 20 sec. and 9 km (5.6 mile) or more, ATF temp. is less than 20°C (68°F) (B) When engine coolant temp. is less that 35°C (95°F) at engine start, the ATF temp. is 110°C (230°F) or more after 17 min. of engine start (2 trip detection logic)	• Open or short in ATF temperature sensor circuit • ATF temperature sensor • ECM

MONITOR DESCRIPTION

The ATF temperature sensor converts the ATF temperature to an electrical resistance value. Based on the resistance, the ECM determines the ATF temperature and detects an open or short in the ATF temperature circuit or a fault in the ATF temperature sensor.
After running the vehicle for a certain period, the ATF temperature should increase. If the ATF temperature is below 20°C (68°F) after running the vehicle for a certain period, the ECM interprets this as a fault, and turns on the MIL.
When the ATF temperature is 110°C (230°F) or more after 17 minutes of engine cold start, the ECM also determines this as a fault, turns on the MIL, and stores the DTC.

MONITOR STRATEGY

Related DTCs	P0711: ATF temperature sensor/Rationality check
Required sensors/Components	ATF temperature sensor
Frequency of operation	Continuous
Duration	3 sec.: Condition (A) 10 sec.: Condition (B)
MIL operation	2 driving cycles
Sequence of operation	None

TYPICAL ENABLING CONDITIONS

All:

The monitor will run whenever this DTC is not present.	None
Time after engine start	16 min. and 40 sec. or more
ECT (Engine coolant temperature)	-15°C (5°F) or more
ATF sensor circuit	Not circuit malfunction
ECT sensor circuit	Not circuit malfunction
IAT sensor circuit	Not circuit malfunction
ETCS	Not circuit malfunction

AX

Condition (A):

Time after engine start	18 min. and 20 sec.
Driving distance after engine start	9 km (5.6 mile) or more

IAT (Intake air temperature) (12 sec. after starting engine)	-10°C (14°F) or more
ECT (12 sec. after starting engine)	-10°C (14°F) or more

Condition (B):

ECT (Current temperature)	60°C (140°F) or more
ECT (12 sec. after engine start)	Less than 35°C (95°F)

TYPICAL MALFUNCTION THRESHOLDS

Condition (A):

ATF temperature sensor	Less than 20°C (68°F)

Condition (B):

ATF temperature sensor	110°C (230°F) or more

COMPONENT OPERATING RANGE

ATF temperature sensor	Atmospheric temperature - approximately 130°C (266°F)

WIRING DIAGRAM

Refer to DTC P0710 (see page AX-52).

INSPECTION PROCEDURE

HINT:
Using the intelligent tester's DATA LIST allows switch, sensor, actuator and other item values to be read without removing any parts. Reading the DATA LIST early in troubleshooting is one way to save time.
NOTICE:
In the table below, the values listed under "Normal Condition" are reference values. Do not depend solely on these reference values when deciding whether a part is faulty or not.

1. Warm up the engine.
2. Turn the ignition switch OFF.
3. Connect the intelligent tester to the CAN VIM. Then connect the CAN VIM to the DLC3.
4. Turn the ignition switch ON and turn the tester ON.
5. Enter the following menus: DIAGNOSIS / ENHANCED OBD II / DATA LIST.
6. Follow the instructions on the tester and read the DATA LIST.

ECM:

Item	Measurement Item/ Range (Display)	Normal Condition	Diagnostic Note
A/T OIL TEMP1	ATF temperature sensor value/ Min.: -40°C (-40°F) Max.: 215°C (419°F)	• After stall test: Approximately 80°C (176°F) • Equal to ambient temperature while engine is cold	If value is -40°C (-40°F) or "150°C (302°F) or more", ATF temperature sensor circuit is open or short circuited

HINT:
- When DTC P0712 is output and the tester output is 150°C (302°F) or more, there is a short circuit.
- When DTC P0713 is output and the tester output is -40°C (-40°F), there is an open circuit. Measure the resistance between terminal THO1 (THO) and the body ground.

Temperature Displayed	Malfunction
-40°C (-40°F)	Open circuit
150°C (302°F) or more	Short circuit

HINT:
- If a circuit related to the ATF temperature sensor becomes open, P0713 is set in approximately 0.5 seconds.
- It is not necessary to inspect the circuit when P0711 is set.

1	CHECK OTHER DTC OUTPUT (IN ADDITION TO DTC P0711)

(a) Connect the intelligent tester to the CAN VIM. Then connect the CAN VIM to the DLC3.
(b) Turn the ignition switch ON and turn the tester ON.
(c) Enter the following menus: DIAGNOSIS / ENHANCED OBD II / DTC INFO / CURRENT CODES.
(d) Read the DTCs using the tester.

Result

Display (DTC output)	Proceed to
Only P0711 is output	A
P0711 and other DTCs are output	B

HINT:
If any other codes besides P0711 are output, perform troubleshooting for those DTCs first.

B → **GO TO DTC OUTPUT**

A

2	CHECK TRANSAXLE FLUID LEVEL

OK:
Automatic transaxle fluid level is correct.

NG → **ADD FLUID**

OK

REPAIR OR REPLACE TRANSMISSION WIRE

DTC	P0717	Input Speed Sensor Circuit No Signal

DESCRIPTION

This sensor detects the rotation speed of the turbine, which shows the input revolution of the transaxle. By comparing the input speed signal (NT) with the counter gear speed sensor signal (NC), the ECM detects the shift timing of the gears and controls the engine torque and hydraulic pressure according to various conditions. As a result, smooth gear shifting is achieved.

DTC No.	DTC Detection Condition	Trouble Area
P0717	ECM detects conditions (a), (b) and (c) continuously for 5 sec. or more (1 trip detection logic): (a) Vehicle speed: 50 km/h (31 mph) or more (b) Park/Neutral position switch (NSW, R and L) is OFF (c) Speed sensor NT: Less than 300 rpm	• Open or short in speed sensor NT circuit • Speed sensor NT • ECM

MONITOR DESCRIPTION

This DTC indicates that a pulse is not output from the speed sensor NT (input speed sensor) or is output only a little. The NT terminal of the ECM detects the revolving signal from the speed sensor (NT) (input RPM). The ECM outputs a gear shift signal comparing the input speed sensor (NT) with the output speed sensor (NC).

While the vehicle is operating in the 2nd, 3rd, 4th or 5th gear position with the shift lever on D, if the input shaft revolution is less than 300 rpm*1 and the output shaft revolution is 1,000 rpm or more*2, the ECM detects the trouble, illuminates the MIL and stores the DTC.

HINT:

*1: Pulse is not output or is irregularly output.

*2: The vehicle speed is approximately 50 km/h (31 mph) or more.

MONITOR STRATEGY

Related DTCs	P0717: Speed sensor (NT)/Verify pulse input
Required sensors/Components	Speed sensor (NT), Speed sensor (NC)
Frequency of operation	Continuous
Duration	5 sec.
MIL operation	Immediate
Sequence of operation	None

TYPICAL ENABLING CONDITIONS

The monitor will run whenever these DTCs are not present.	P0500 (VSS) P0748 - P0798 (Trans solenoid (Range))
Shift change	Shift change is completed before starting next shift change operation
ECM selected gear	2nd, 3rd, 4th or 5th
Output shaft rpm	1,000 rpm or more
NSW switch	OFF
R switch	OFF
L switch	OFF
Engine	Running
Ignition switch	ON
Starter	OFF

TYPICAL MALFUNCTION THRESHOLDS

Sensor signal rpm	Less than 300 rpm

COMPONENT OPERATING RANGE

Speed sensor (NT)	Input speed is equal to engine speed when lock-up ON.

WIRING DIAGRAM

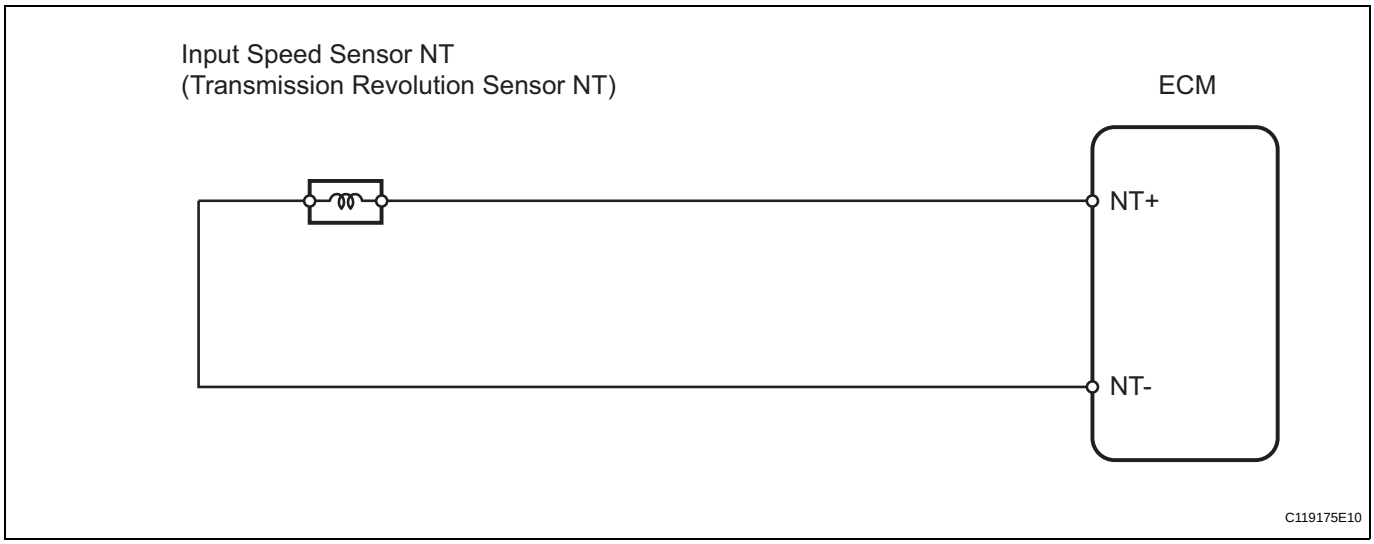

INSPECTION PROCEDURE

HINT:
Using the intelligent tester's DATA LIST allows switch, sensor, actuator and other item values to be read without removing any parts. Reading the DATA LIST early in troubleshooting is one way to save time.

NOTICE:
In the table below, the values listed under "Normal Condition" are reference values. Do not depend solely on these reference values when deciding whether a part is faulty or not.

1. Warm up the engine.
2. Turn the ignition switch OFF.
3. Connect the intelligent tester to the CAN VIM. Then connect the CAN VIM to the DLC3.
4. Turn the ignition switch ON and turn the tester ON.
5. Enter the following menus: DIAGNOSIS / ENHANCED OBD II / DATA LIST.
6. Follow the instructions on the tester and read the DATA LIST.

ECM:

Item	Measurement Item/ Range (Display)	Normal Condition	Diagnostic Note
SPD (NT)	Input turbine speed/ Min.: 0 rpm Max.: 12,750 rpm	• Lock-up ON (after warming up engine): Input turbine speed (NT) is equal to engine speed. • Lock-up OFF (idling with shift lever on N): Input turbine speed (NT) is nearly equal to engine speed.	Data is displayed in increments of 50 rpm

HINT:

- SPD (NT) is always 0 rpm while driving:
  Open or short in the sensor or circuit.

- SPD (NT) is always more than 0 rpm and less than 300 rpm while driving the vehicle at 50 km/h (31 mph) or more:
  Sensor trouble, improper installation, or intermittent connection trouble of the circuit.

1 INSPECT SPEED SENSOR (INSTALLATION)

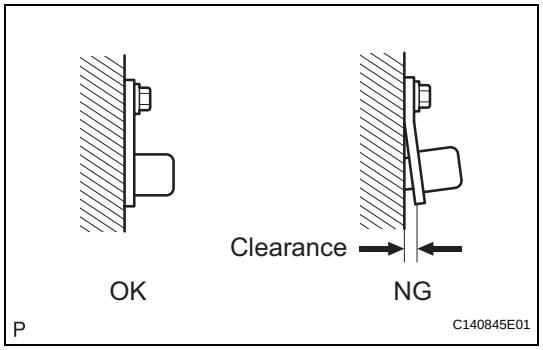

(a) Check the speed sensor NT installation.
OK:
Installation bolt is tightened properly and there is no clearance between the sensor and transaxle case.

NG → **SECURELY INSTALL SENSOR OR REPLACE SPEED SENSOR**

OK

2 INSPECT SPEED SENSOR NT

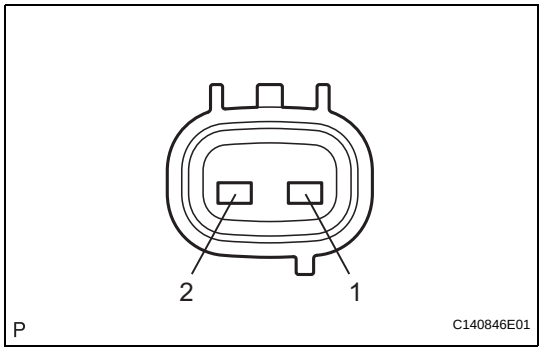

(a) Disconnect the B28 sensor connector from the transaxle.
(b) Measure the resistance of the sensor.
Standard resistance

Tester Connection	Condition	Specified Condition
1 - 2	20°C (68°F)	560 to 680 Ω

NG → **REPLACE SPEED SENSOR NT**

OK

3 CHECK WIRE HARNESS (SPEED SENSOR - ECM)

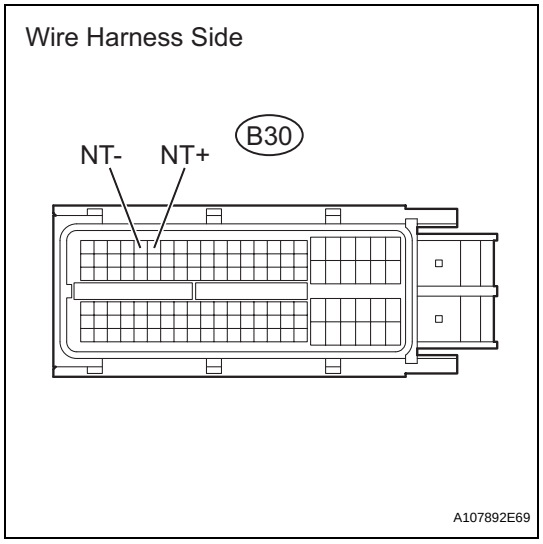

(a) Disconnect the B30 ECM connector.
(b) Measure the resistance of the wire harness side connector.
Standard resistance

Tester Connection	Condition	Specified Condition
B30-6 (NT+) - B30-5 (NT-)	20°C (68°F)	560 to 680 Ω
B30-6 (NT+) - Body ground	20°C (68°F)	10 kΩ or higher
B30-5 (NT-) - Body ground	20°C (68°F)	10 kΩ or higher

NG → **REPAIR OR REPLACE HARNESS AND CONNECTOR**

OK

REPLACE ECM

DTC	P0724	Brake Switch "B" Circuit High

DESCRIPTION

The purpose of this circuit is to prevent the engine from stalling while driving in the lock-up condition when the brakes are suddenly applied.
When the brake pedal is depressed, this switch sends a signal to the ECM. Then the ECM cancels the operation of the lock-up clutch while braking is in progress.

DTC No.	DTC Detection Condition	Trouble Area
P0724	Stop light switch remains ON even when vehicle is driven in GO (30 km/h (18.63 mph) or more) and STOP (less than 3 km/h (1.86 mph)) pattern 5 times (2 trip detection logic)	• Short in stop light switch signal circuit • Stop light switch • ECM

MONITOR DESCRIPTION

This DTC indicates that the stop light switch remains ON. When the stop light switch remains ON during GO and STOP driving, the ECM interprets this as a fault in the stop light switch. Then the MIL illuminates and the ECM stores the DTC. The vehicle must GO (30 km/h (18.63 mph) or more) and STOP (less than 3 km/h (1.86 mph)) 5 times for 2 driving cycles in order for the DTC to be output.

MONITOR STRATEGY

Related DTCs	P0724: Stop light switch/Range check/Rationality
Required sensors/Components	Stop light switch, Vehicle speed sensor
Frequency of operation	Continuous
Duration	GO and STOP 5 times
MIL operation	2 driving cycles
Sequence of operation	None

TYPICAL ENABLING CONDITIONS

The monitor will run whenever this DTC is not present.	None
Battery voltage	8 V or more
Starter	OFF
Ignition switch	ON
GO (Vehicle speed is 30 km/h (18.63 mph) or more)	Once
STOP (Vehicle speed is less than 3 km/h (1.86 mph))	Once

TYPICAL MALFUNCTION THRESHOLDS

Brake switch	Stuck ON

WIRING DIAGRAM

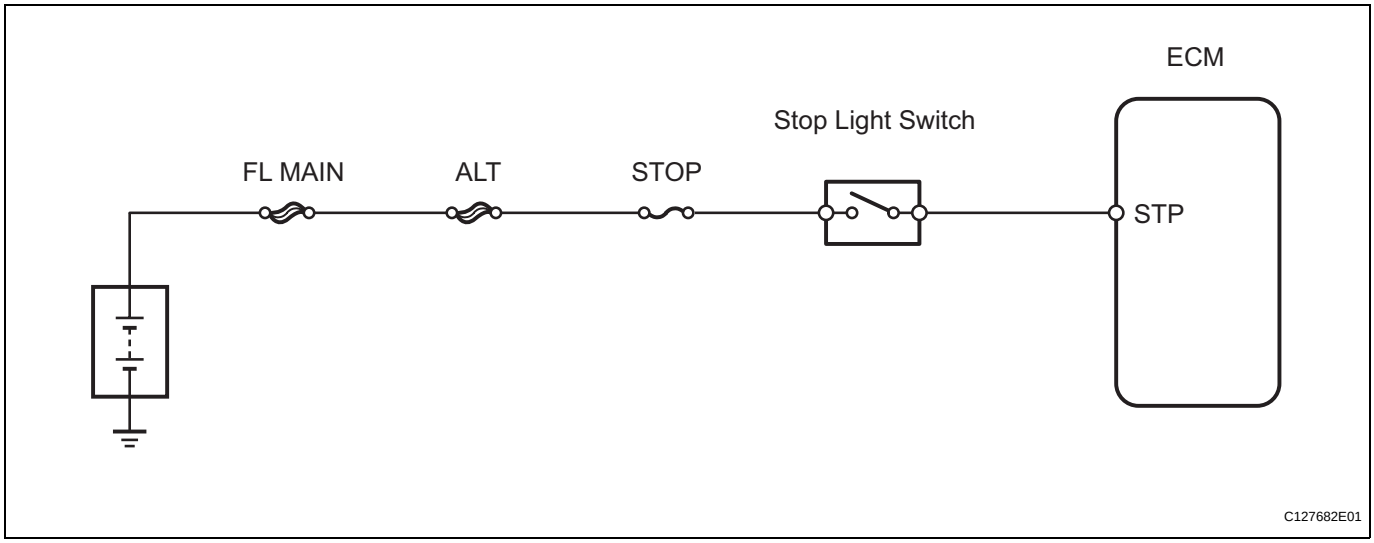

INSPECTION PROCEDURE

HINT:
Using the intelligent tester's DATA LIST allows switch, sensor, actuator and other item values to be read without removing any parts. Reading the DATA LIST early in troubleshooting is one way to save time.
NOTICE:
In the table below, the values listed under "Normal Condition" are reference values. Do not depend solely on these reference values when deciding whether a part is faulty or not.
1. Warm up the engine.
2. Turn the ignition switch OFF.
3. Connect the intelligent tester to the CAN VIM. Then connect the CAN VIM to the DLC3.
4. Turn the ignition switch ON and turn the tester ON.
5. Enter the following menus: DIAGNOSIS / ENHANCED OBD II / DATA LIST.
6. Follow the instructions on the tester and read the DATA LIST.

ECM:

Item	Measurement Item/ Range (Display)	Normal Condition	Diagnostic Note
STOP LIGHT SW	Stop light switch status/ ON or OFF	• Brake pedal is depressed: ON • Brake pedal is released: OFF	-

1	INSPECT STOP LIGHT SWITCH

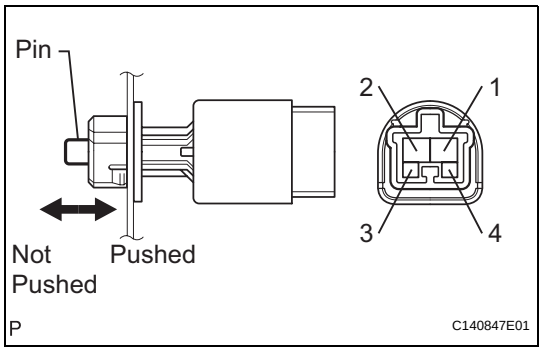

(a) Remove the A3 stop light switch.
(b) Measure the resistance of the switch.
Standard resistance

Tester Connection	Switch Condition	Specified Condition
1 - 2	Pin pushed (pedal released)	Below 1 Ω
1 - 2	Pin not pushed (pedal depressed)	10 kΩ or higher
3 - 4	Pin pushed (pedal released)	10 kΩ or higher
3 - 4	Pin not pushed (pedal depressed)	Below 1 Ω

AX

NG → REPLACE STOP LIGHT SWITCH

OK

2 CHECK WIRE HARNESS (ECM - BATTERY)

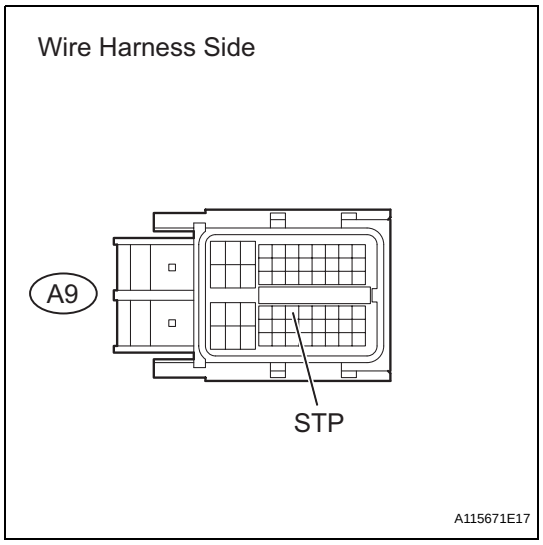

(a) Measure the voltage of the wire harness side connector.
Standard voltage

Tester Connection	Condition	Specified Condition
A9-36 (STP) - Body ground	Brake pedal is depressed	10 to 14 V
A9-36 (STP) - Body ground	Brake pedal is released	Below 1 V

NG → REPAIR OR REPLACE HARNESS AND CONNECTOR

OK

REPLACE ECM

DTC	P0741	Torque Converter Clutch Solenoid Performance (Shift Solenoid Valve DSL)

DESCRIPTION

The ECM uses the signals from the throttle position sensor, air-flow meter, turbine (input) speed sensor, intermediate (counter) shaft speed sensor and crankshaft position sensor to monitor the engagement condition of the lock-up clutch.
Then the ECM compares the engagement condition of the lock-up clutch with the lock-up schedule in the ECM memory to detect mechanical problems of the shift solenoid valve DSL, valve body and torque converter clutch.

DTC No.	DTC Detection Condition	Trouble Area
P0741	Lock-up does not occur when driving in the lock-up range (normal driving at 80 km/h [50 mph]), or lock up remains ON in the lock-up OFF range (2 trip detection logic)	• Shift solenoid valve DSL remains open or closed • Valve body is blocked • Shift solenoid valve DSL • Torque converter clutch • Automatic transaxle (clutch, brake, gear, etc.) • Line pressure is too low • ECM

MONITOR DESCRIPTION

Torque converter lock-up is controlled by the ECM based on the speed sensor (NT), speed sensor (NC), engine rpm, engine load, engine temperature, vehicle speed, transmission temperature, and gear selection. The ECM determines the lock-up status of the torque converter by comparing the engine rpm (NE) to the input turbine rpm (NT). The ECM calculates the actual transmission gear by comparing input turbine rpm (NT) to counter gear rpm (NC). When conditions are appropriate, the ECM requests "lock-up" by applying control voltage to the shift solenoid DSL. When the DSL is turned on, it applies pressure to the lock-up relay valve and locks the torque converter clutch.
If the ECM detects no lock-up after lock-up has been requested or if it detects lock-up when it is not requested, the ECM interprets this as a fault in the shift solenoid valve DSL or lock-up system performance. The ECM will turn on the MIL and store the DTC.
HINT:
Example:
When either of the following is met, the system judges it as a malfunction.

- There is a difference in rotation between the input side (engine speed) and output side (input turbine speed) of the torque converter when the ECM commands lock-up.
  (Engine speed is at least 75 rpm greater than input turbine speed.)
- There is no difference in rotation between the input side (engine speed) and output side (input turbine speed) of the torque converter when the ECM commands lock-up off.
  (The difference between engine speed and input turbine speed is less than 35 rpm.)

MONITOR STRATEGY

Related DTCs	P0741: Shift solenoid valve DSL/OFF malfunction Shift solenoid valve DSL/ON malfunction
Required sensors/Components	Shift solenoid valve DSL, Speed sensor (NT), Speed sensor (NC), Crankshaft position sensor (NE), Throttle position sensor (VPA1), Mass air flow sensor (MAF), Transmission temperature sensor (THO1), Engine coolant temperature sensor (ECT)
Frequency of operation	Continuous
Duration	OFF malfunction 3.5 sec. ON malfunction 1.8 sec.

MIL operation	2 driving cycles
Sequence of operation	None

TYPICAL ENABLING CONDITIONS

ALL:

The monitor will run whenever these DTCs are not present.	P0115 - P0118 (ECT sensor) P0125 (Insufficient ECT for closed loop) P0500 (VSS) P0748, P0778, P0798 (Shift solenoid valve (range))
ECT (Engine coolant temperature)	10°C (50°F) or more
Transmission range	"D"
ATF temperature	-20°C (-4°F) or more
ATF temperature sensor circuit	Not circuit malfunction
ECT sensor circuit	Not circuit malfunction
Turbine speed sensor circuit	Not circuit malfunction
Intermediate shaft speed sensor circuit	Not circuit malfunction
Output speed sensor circuit	Not circuit malfunction
Shift solenoid valve SL1 circuit	Not circuit malfunction
Shift solenoid valve SL2 circuit	Not circuit malfunction
Shift solenoid valve SL3 circuit	Not circuit malfunction
Shift solenoid valve S4 circuit	Not circuit malfunction
Shift solenoid valve SR circuit	Not circuit malfunction
Shift solenoid valve DSL circuit	Not circuit malfunction
Electronic throttle system	Not circuit malfunction

OFF malfunction

ECM lock-up command	ON
ECM selected gear	3rd, 4th or 5th
Vehicle speed	25 km/h (15.5 mph) or more

ON malfunction

ECM lock-up command	OFF
ECM selected gear	3rd, 4th or 5th
Throttle valve opening angle	7% or more
Vehicle speed	25 to 60 km/h (15.5 to 37.3 mph)

TYPICAL MALFUNCTION THRESHOLDS

Either of the following conditions is met: OFF malfunction or ON malfunction

OFF malfunction:

Engine Speed - Input (turbine) speed	100 rpm or more

ON malfunction:

Difference between engine speed and input (turbine) speed	Less than 35 rpm

WIRING DIAGRAM

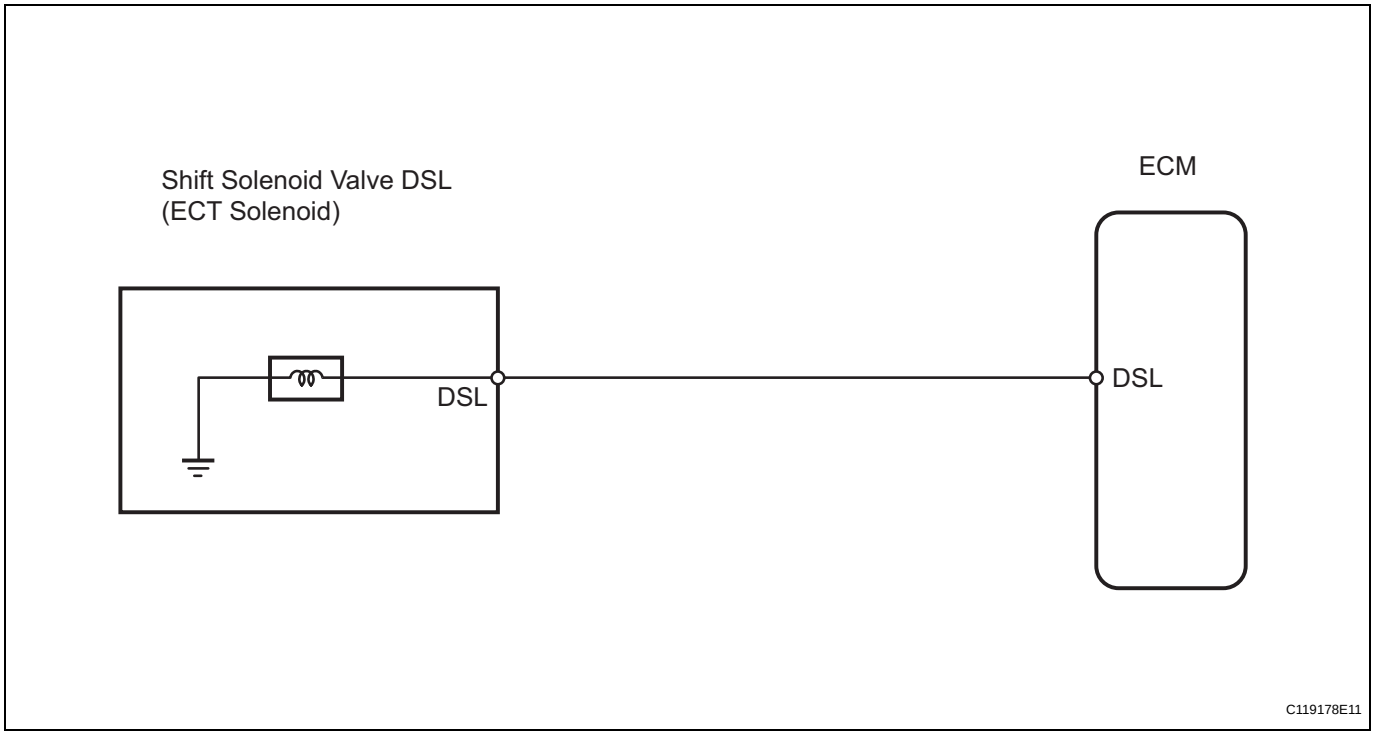

INSPECTION PROCEDURE

HINT:
Performing the intelligent tester's ACTIVE TEST allows relay, VSV, actuator and other items to be operated without removing any parts. Performing the ACTIVE TEST early in troubleshooting is one way to save time.
The DATA LIST can be displayed during the ACTIVE TEST.

1. Warm up the engine.
2. Turn the ignition switch OFF.
3. Connect the intelligent tester to the CAN VIM. Then connect the CAN VIM to the DLC3.
4. Turn the ignition switch ON and turn the tester ON.
5. Enter the following menus: DIAGNOSIS / ENHANCED OBD II / ACTIVE TEST.
6. Follow the instructions on the tester and perform the ACTIVE TEST.

ECM:

Item	Test Details	Diagnostic Note
LOCK UP	[Test Details] Control shift solenoid DSL to set automatic transaxle to the lock-up condition [Vehicle Condition] • Throttle valve opening angle: Less than 35% • Vehicle speed: 60 km/h (36 mph) or more	Possible to check shift solenoid valve DSL operation

HINT:
- This test can be conducted when the vehicle speed is 60 km/h (36 mph) or more.
- This test can be conducted in the 5th gear.

7. Lightly depress the accelerator pedal and check that the engine speed does not change abruptly.
   HINT:
   - When changing the accelerator pedal opening angle while driving, if the engine speed does not change, lock-up is ON.
   - Slowly release the accelerator pedal in order to decelerate. (Do not fully release the pedal as that will close the throttle valve and lock-up may be turned OFF.)

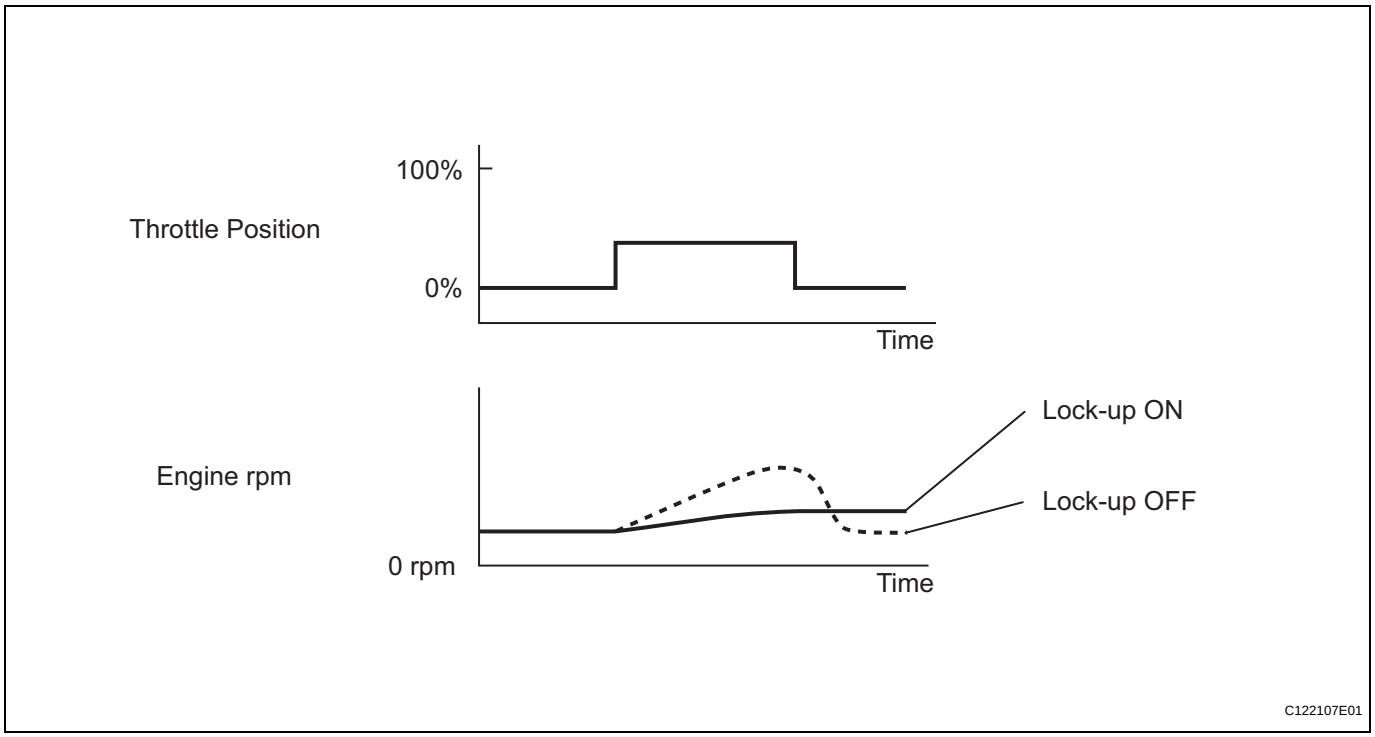

1	CHECK OTHER DTC OUTPUT (IN ADDITION TO DTC P0741)

(a) Connect the intelligent tester to the CAN VIM. Then connect the CAN VIM to the DLC3.
(b) Turn the ignition switch ON and turn the tester ON.
(c) Enter the following menus: DIAGNOSIS / ENHANCED OBD II / DTC INFO / CURRENT CODES.
(d) Read the DTCs using the tester.

Result

Display (DTC output)	Proceed to
Only P0741 is output	A
P0741 and other DTCs are output	B

HINT:
If any other codes besides P0741 are output, perform troubleshooting for those DTCs first.

B → GO TO DTC CHART

A

2	INSPECT TRANSMISSION WIRE (SHIFT SOLENOID VALVE DSL)

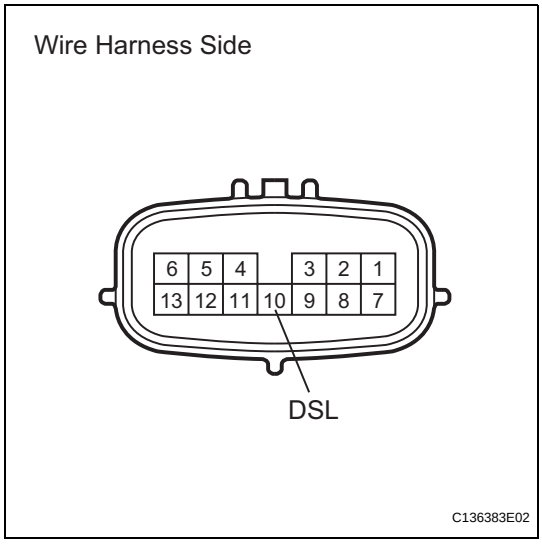

(a) Disconnect the B32 wire connector.
(b) Measure the resistance of the transmission wire.
Standard resistance

Tester Connection	Condition	Specified Condition
10 (DSL) - Body ground	20°C (68°F)	11 to 13 Ω

NG → **Go to step 4**

OK

3	CHECK WIRE HARNESS (TRANSMISSION WIRE - ECM)

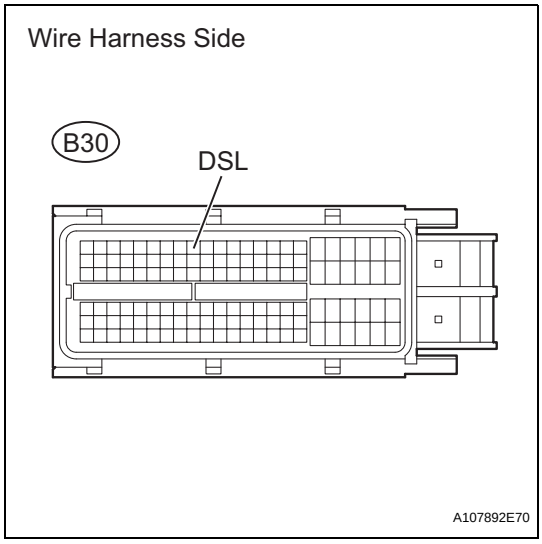

(a) Disconnect the B30 ECM connector.
(b) Measure the resistance of the wire harness side connector.
Standard resistance

Tester Connection	Condition	Specified Condition
B30-9 (DSL) - Body ground	20°C (68°F)	11 to 13 Ω

NG → **REPAIR OR REPLACE HARNESS AND CONNECTOR**

OK

REPLACE ECM

4	INSPECT SHIFT SOLENOID VALVE DSL

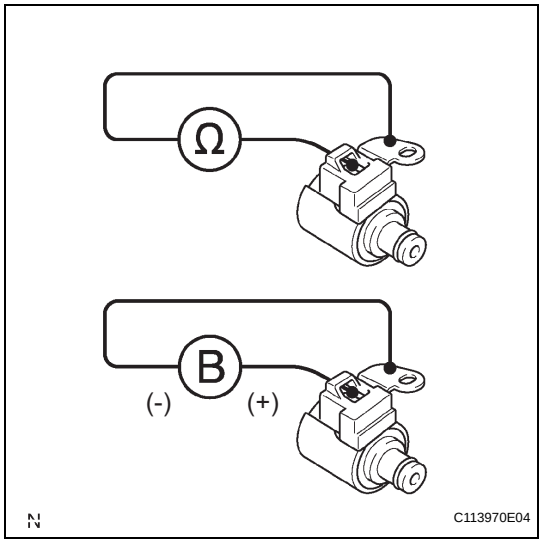

(a) Remove the shift solenoid valve DSL.
(b) Measure the resistance of the solenoid valve.
Standard resistance:
11 to 13 Ω at 20°C (68°F)
(c) Connect the battery's positive (+) lead to the terminal of the solenoid valve connector, and the negative (-) lead to the solenoid body. Then check that the valve moves and makes an operating noise.
OK:
Valve moves and makes operating noise.

NG → **REPLACE SHIFT SOLENOID VALVE DSL**

OK

5	CHECK TRANSMISSION WIRE

OK:
The connectors and pins are securely installed.
There is no open or short on the wire harness.

NG → **REPAIR OR REPLACE TRANSMISSION WIRE**

OK

6	INSPECT TRANSMISSION VALVE BODY ASSEMBLY

(a) Check the transmission valve body assembly.
OK:
There are no foreign objects on each valve.

NG → **REPAIR OR REPLACE TRANSMISSION VALVE BODY ASSEMBLY**

OK

7	INSPECT TORQUE CONVERTER CLUTCH ASSEMBLY

(a) Check the torque converter clutch assembly (see page AX-178).
OK:
The torque converter clutch operates normally.

NG → **REPLACE TORQUE CONVERTER CLUTCH ASSEMBLY**

AX

OK

REPAIR AUTOMATIC TRANSAXLE ASSEMBLY

DTC	P0746	Pressure Control Solenoid "A" Performance (Shift Solenoid Valve SL1)

DESCRIPTION

The ECM uses signals from the vehicle speed sensor to detect the actual gear position (1st, 2nd, 3rd, 4th or 5th gear).
Then the ECM compares the actual gear with the shift schedule in the ECM memory to detect mechanical problems of the shift solenoid valves, valve body or automatic transaxle (clutch, brake, gear, etc.).

DTC No.	DTC Detection Condition	Trouble Area
P0746	Gear required by the ECM does not match the actual gear when driving (2 trip detection logic)	• Shift solenoid valve SL1 remains open or closed • Valve body is blocked • Shift solenoid valve SL1 • Automatic transaxle (clutch, brake, gear, etc.) • ECM

MONITOR DESCRIPTION

The ECM commands gear shifts by turning the shift solenoid valves ON/OFF. According to the input shaft revolution, intermediate (counter) shaft revolution and output shaft revolution, the ECM detects the actual gear position (1st, 2nd, 3rd, 4th or 5th gear position). When the gear position commanded by the ECM and the actual gear position are not the same, the ECM illuminates the MIL.
HINT:
Example:
When either condition (a) or (b) is met, the ECM detects a malfunction.
(a) The ECM commands the 1st gear, but the actual gear is 2nd.
(b) The ECM commands the 2nd gear, but the actual gear is 1st.

MONITOR STRATEGY

Related DTCs	P0746: Shift solenoid valve SL1/OFF malfunction Shift solenoid valve SL1/ON malfunction
Required sensors/Components	Shift solenoid valve SL1, Speed sensor (NT), Speed sensor (NC), Crankshaft position sensor (NE)
Frequency of operation	Continuous
Duration	0.8 sec.
MIL operation	2 driving cycles
Sequence of operation	None

TYPICAL ENABLING CONDITIONS

ALL:

The monitor will run whenever these DTCs are not present.	P0115 - P0118 (ECT sensor) P0125 (Insufficient ECT for closed loop) P0500 (VSS) P0748, P0778, P0798 (Shift solenoid valve (range))
ECT (Engine coolant temperature)	10°C (50°F) or more
Transmission range	"D"
ATF temperature	-20°C (-4°F) or more
ATF temperature sensor circuit	Not circuit malfunction
ECT sensor circuit	Not circuit malfunction
Turbine speed sensor circuit	Not circuit malfunction
Intermediate shaft speed sensor circuit	Not circuit malfunction

Output speed sensor circuit	Not circuit malfunction
Shift solenoid valve SL1 circuit	Not circuit malfunction
Shift solenoid valve SL2 circuit	Not circuit malfunction
Shift solenoid valve SL3 circuit	Not circuit malfunction
Shift solenoid valve S4 circuit	Not circuit malfunction
Shift solenoid valve SR circuit	Not circuit malfunction
Shift solenoid valve DSL circuit	Not circuit malfunction
Electronic throttle system	Not circuit malfunction

OFF malfunction:

ECM selected gear	1st
Vehicle speed	Less than 40 km/h (24.9 mph)
Throttle valve opening angle	4.5% or more at engine speed 1,900 rpm (Varies with engine speed)

ON malfunction:

ECM selected gear	2nd
Throttle valve opening angle	4.5% or more at engine speed 1,900 rpm (Varies with engine speed)

TYPICAL MALFUNCTION THRESHOLDS

Either of the following conditions is met: OFF malfunction or ON malfunction

OFF malfunction:

2 detections are necessary per driving cycle:

1st detection: temporary flag ON

2nd detection: pending fault code ON

Input (turbine) speed/Intermediate shaft speed	1.49 to 1.63

ON malfunction:

Input (turbine) speed/Intermediate shaft speed	2.72 to 2.86

INSPECTION PROCEDURE

HINT:

Performing the intelligent tester's ACTIVE TEST allows relay, VSV, actuator and other items to be operated without removing any parts. Performing the ACTIVE TEST early in troubleshooting is one way to save time.

The DATA LIST can be displayed during the ACTIVE TEST.

1. Warm up the engine.
2. Turn the ignition switch OFF.
3. Connect the intelligent tester to the CAN VIM. Then connect the CAN VIM to the DLC3.
4. Turn the ignition switch ON and turn the tester ON.
5. Enter the following menus: DIAGNOSIS / ENHANCED OBD II / ACTIVE TEST.
6. Follow the instructions on the tester and perform the ACTIVE TEST.

   HINT:

   While driving, the shift position can be forcibly changed with the tester. Comparing the shift position commanded by the ACTIVE TEST with the actual shift position enables you to confirm the problem (see page AX-35).

ECM:

Item	Test Details	Diagnostic Note
SHIFT	[Test Details] Operate shift solenoid valve and set each shift lever position by yourself [Vehicle Condition] • IDL: ON • 50 km/h (31 mph) or less [Other information] • Press "→" button: Shift up • Press "←" button: Shift down	Possible to check operation of shift solenoid valves

HINT:
- This test can be conducted when the vehicle speed is 50 km/h (31 mph) or more.
- This shift position commanded by the ECM is shown in the DATA LIST/SHIFT display on the tester.

1 CHECK OTHER DTC OUTPUT (IN ADDITION TO DTC P0746)

(a) Connect the intelligent tester to the CAN VIM. Then connect the CAN VIM to the DLC3.
(b) Turn the ignition switch ON and turn the tester ON.
(c) Enter the following menus: DIAGNOSIS / ENHANCED OBD II / DTC INFO / CURRENT CODES.
(d) Read the DTCs using the tester.

Result

Display (DTC output)	Proceed to
Only P0746 is output	A
P0746 and other DTCs are output	B

HINT:
If any other codes besides P0746 are output, perform the troubleshooting for those DTCs first.

B → **GO TO DTC CHART**

A

2	INSPECT SHIFT SOLENOID VALVE SL1

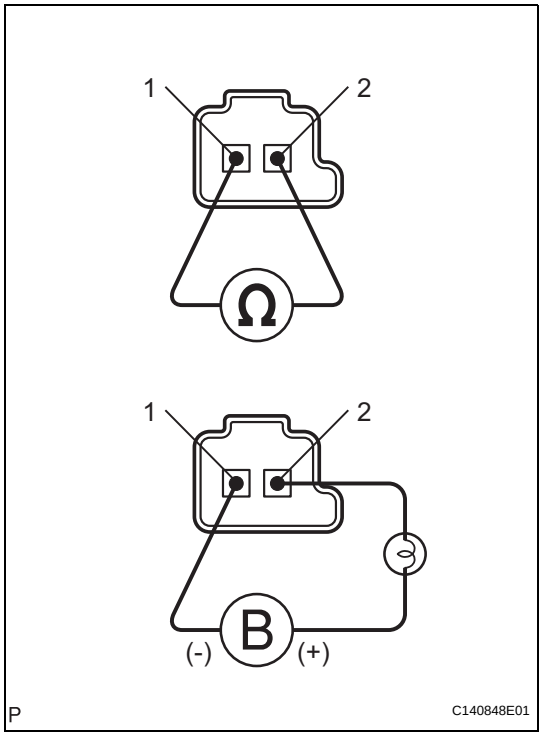

(a) Remove the shift solenoid valve SL1.
(b) Measure the resistance of the solenoid valve.
Standard resistance:
5.0 to 5.6 Ω at 20°C (68°F)
(c) Connect the battery's positive (+) lead with a 21 W bulb to terminal 2 and the negative (-) lead to terminal 1 of the solenoid valve connector. Then check that the valve moves and makes an operating noise.
OK:
Valve moves and makes operating noise.

NG → **REPLACE SHIFT SOLENOID VALVE SL1**

OK

3	INSPECT TRANSMISSION VALVE BODY ASSEMBLY

(a) Check the transmission valve body assembly.
OK:
There are no foreign objects on each valve.

NG → **REPAIR OR REPLACE TRANSMISSION VALVE BODY ASSEMBLY**

OK

4	INSPECT TORQUE CONVERTER CLUTCH ASSEMBLY

(a) Check the torque converter clutch assembly (see page AX-178).
OK:
The torque converter clutch operates normally.

NG → **REPLACE TORQUE CONVERTER CLUTCH ASSEMBLY**

OK

REPAIR OR REPLACE AUTOMATIC TRANSAXLE ASSEMBLY

DTC	P0748	Pressure Control Solenoid "A" Electrical (Shift Solenoid Valve SL1)

DESCRIPTION

Shifting from 1st to 5th is performed in combination with the ON and OFF operation of the shift solenoid valves SL1, SL2, SL3, S4 and SR, which are controlled by the ECM. If an open or short circuit occurs in any of the shift solenoid valves, the ECM controls the remaining normal shift solenoid valves to allow the vehicle to be operated safely (see page AX-35).

DTC No.	DTC Detection Condition	Trouble Area
P0748	Duty cycle to shift solenoid valve SL1 is 100% (1 trip detection logic)	• Open or short in shift solenoid valve SL1 circuit • Shift solenoid valve SL1 • ECM

MONITOR DESCRIPTION

The ECM commands gear shifts by turning the shift solenoid valves ON/OFF. When there is an open or short circuit in any shift solenoid valve circuit, the ECM detects the problem and illuminates the MIL and stores the DTC. And the ECM performs the fail-safe function and turns the other normal shift solenoid valves ON/OFF. In case of an open or short circuit, the ECM stops sending current to the circuit (see page AX-35).

MONITOR STRATEGY

Related DTCs	P0748: Shift solenoid valve SL1/Range check
Required sensors/Components	Shift solenoid valve SL1
Frequency of operation	Continuous
Duration	1 sec.
MIL operation	Immediate
Sequence of operation	None

TYPICAL ENABLING CONDITIONS

The monitor will run whenever this DTC is not present.	None
Battery voltage	10 V or more
Starter	OFF
Ignition switch	ON

TYPICAL MALFUNCTION THRESHOLDS

Output signal duty	100%

COMPONENT OPERATING RANGE

Output signal duty	Less than 100%

WIRING DIAGRAM

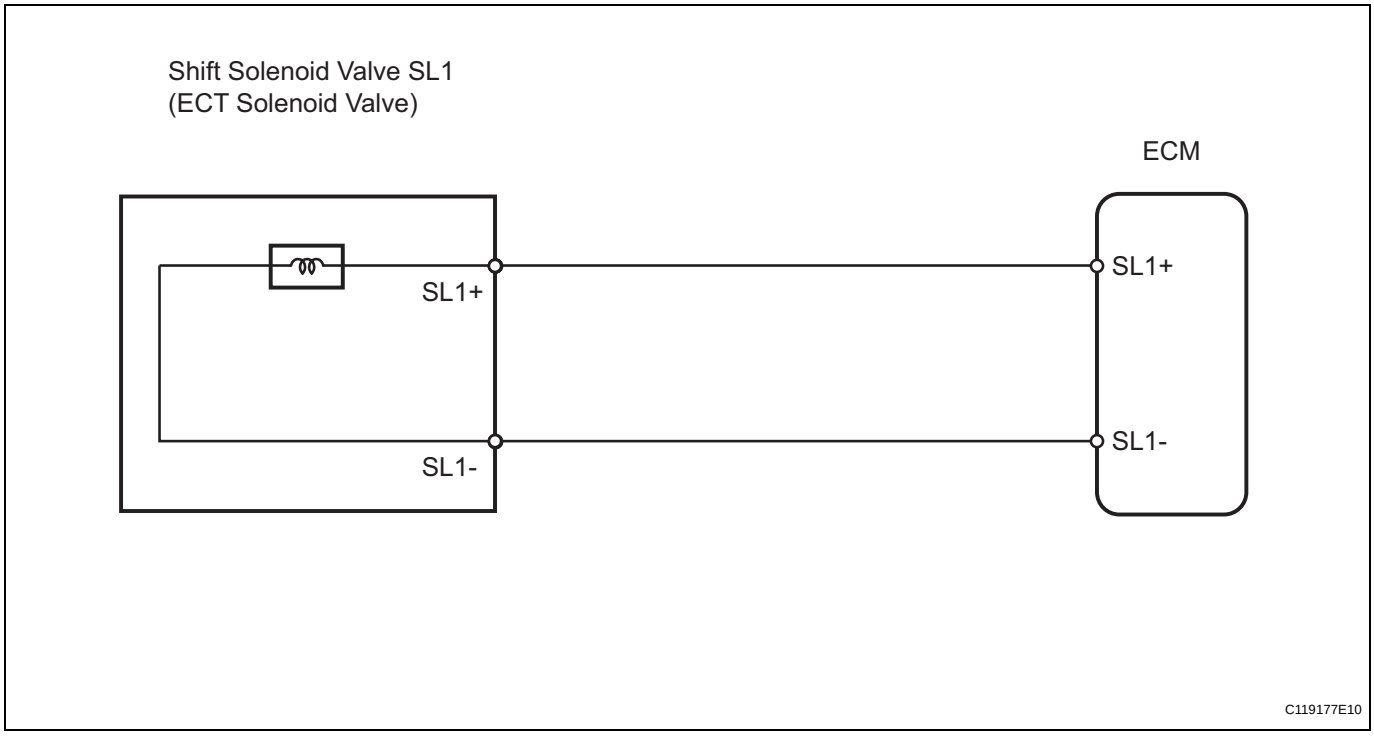

INSPECTION PROCEDURE

1	INSPECT TRANSMISSION WIRE (SHIFT SOLENOID VALVE SL1)

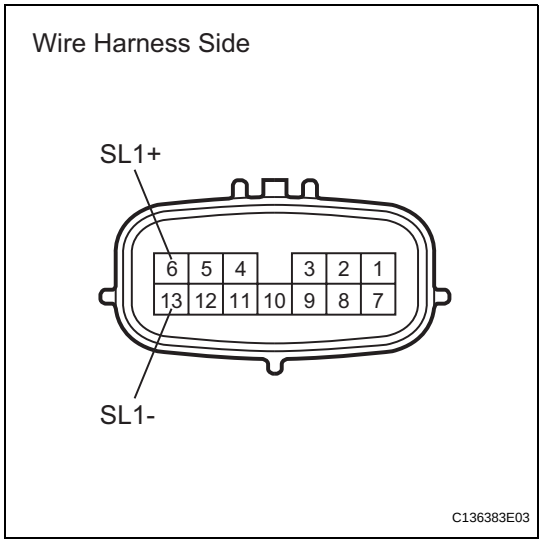

(a) Disconnect the B32 wire connector.
(b) Measure the resistance of the transmission wire.

Standard resistance

Tester Connection	Condition	Specified Condition
6 (SL1+) - 13 (SL1-)	20°C (68°F)	5.0 to 5.6 Ω
6 (SL1+) - Body ground	20°C (68°F)	1 MΩ or higher
13 (SL1-) - Body ground	20°C (68°F)	1 MΩ or higher

NG → **Go to step 3**

OK

2 CHECK WIRE HARNESS (TRANSMISSION WIRE - ECM)

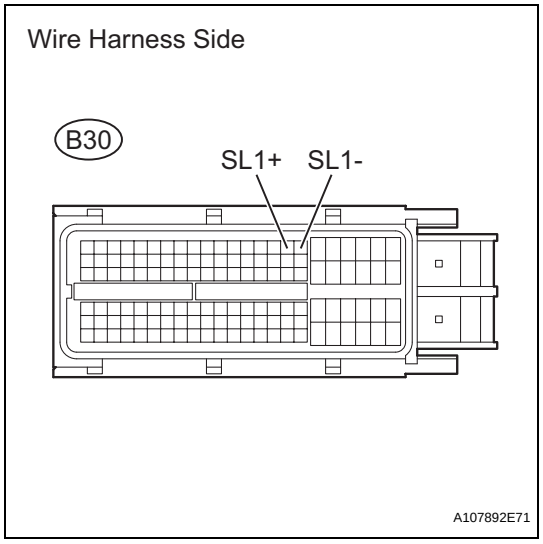

(a) Disconnect the B30 ECM connector.
(b) Measure the resistance of the wire harness side connector.
Standard resistance

Tester Connection	Condition	Specified Condition
B30-16 (SL1+) - B30-17 (SL1-)	20°C (68°F)	5.0 to 5.6 Ω
B30-16 (SL1+) - Body ground	20°C (68°F)	1 MΩ or higher
B30-17 (SL1-) - Body ground	20°C (68°F)	1 MΩ or higher

NG → **REPAIR OR REPLACE HARNESS AND CONNECTOR**

OK

REPLACE ECM

3 INSPECT SHIFT SOLENOID VALVE SL1

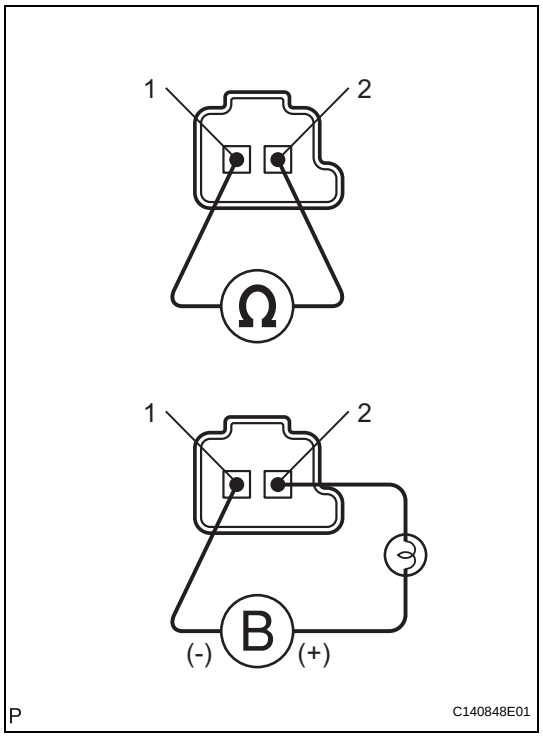

(a) Remove the shift solenoid valve SL1.
(b) Measure the resistance of the solenoid valve.
Standard resistance:
5.0 to 5.6 Ω at 20°C (68°F)
(c) Connect the battery's positive (+) lead with a 21 W bulb to terminal 2 and the negative (-) lead to terminal 1 of the solenoid valve connector. Then check that the valve moves and makes an operating noise.
OK:
Valve moves and makes operating noise.

NG → **REPLACE SHIFT SOLENOID VALVE SL1**

OK

REPAIR OR REPLACE TRANSMISSION WIRE

DTC	P0766	Shift Solenoid "D" Performance (Shift Solenoid Valve S4)

SYSTEM DESCRIPTION

The ECM uses signals from the vehicle speed sensor to detect the actual gear position (1st, 2nd, 3rd, 4th or 5th gear).
Then the ECM compares the actual gear with the shift schedule in the ECM memory to detect mechanical problems of the shift solenoid valves, valve body or automatic transaxle (clutch, brake, gear, etc.).

DTC No.	DTC Detection Condition	Trouble Area
P0766	Gear required by the ECM does not match the actual gear when driving (2 trip detection logic)	• Shift solenoid valve S4 remains open or closed • Valve body is blocked • Shift solenoid valve S4 • Automatic transaxle (clutch, brake, gear, etc.) • ECM

MONITOR DESCRIPTION

The ECM commands gear shifts by turning the shift solenoid valves ON/OFF. According to the input shaft revolution, intermediate (counter) shaft revolution and output shaft revolution, the ECM detects the actual gear position (1st, 2nd, 3rd, 4th or 5th gear position). When the gear position commanded by the ECM and the actual gear position are not the same, the ECM illuminates the MIL and stores the DTC.

MONITOR STRATEGY

Related DTCs	P0766: Shift solenoid valve S4/OFF malfunction Shift solenoid valve S4/ON malfunction
Required sensors/Components	Shift solenoid valve S4, Speed sensor (NT), Speed sensor (NC), Crankshaft position sensor (NE)
Frequency of operation	Continuous
Duration	OFF malfunction (A) and ON malfunction (B) 1 sec. OFF malfunction (B) 1.2 sec. ON malfunction (A) 0.8 sec.
MIL operation	2 driving cycles
Sequence of operation	None

TYPICAL ENABLING CONDITIONS

All:

The monitor will run whenever these DTCs are not present.	P0115 - P0118 (ECT sensor) P0125 (Insufficient ECT for closed loop) P0500 (VSS) P0748, P0778, P0798 (Shift solenoid valve (range))
ECT (Engine coolant temperature)	10°C (50°F) or more
Transmission range	"D"
ATF temperature	-20°C (-4°F) or more
ATF temperature sensor circuit	Not circuit malfunction
ECT sensor circuit	Not circuit malfunction
Turbine speed sensor circuit	Not circuit malfunction
Intermediate shaft speed sensor circuit	Not circuit malfunction
Output speed sensor circuit	Not circuit malfunction

Shift solenoid valve SL1 circuit	Not circuit malfunction
Shift solenoid valve SL2 circuit	Not circuit malfunction
Shift solenoid valve SL3 circuit	Not circuit malfunction
Shift solenoid valve S4 circuit	Not circuit malfunction
Shift solenoid valve SR circuit	Not circuit malfunction
Shift solenoid valve DSL circuit	Not circuit malfunction
Electronic throttle system	Not circuit malfunction

OFF malfunction (A):

ECM selected gear	5th
Throttle valve opening angle	5% or more
Vehicle speed	10 km/h (6.2 mph) or more

OFF malfunction (B):

ECM lock-up command	ON
ECM selected gear	3rd, 4th or 5th
Throttle valve opening angle	10% or more
Vehicle speed	25 to 100 km/h (15.5 to 62.1 mph)

ON malfunction (A):

ECM selected gear	4th or 5th
Throttle valve opening angle	4.5% or more at engine speed 1,900 rpm (Varies with engine speed)

ON malfunction (B):

ECM selected gear	4th
Throttle valve opening angle	5% or more
Vehicle speed	10 km/h (6.2 mph) or more

TYPICAL MALFUNCTION THRESHOLDS

Either of the following conditions is met: OFF malfunction (A) and (B), or ON malfunction (A) and (B)

2 detections are necessary per driving cycle:

1st detection: temporary flag ON

2nd detection: pending fault code ON

OFF malfunction (A):

Intermediate shaft speed/Output speed	1.44 to 1.58

OFF malfunction (B):

Difference between engine speed and input (turbine) speed	Less than 35 rpm

ON malfunction (A):

Input (turbine) speed/Intermediate shaft speed	0.64 to 0.74

ON malfunction (B):

Intermediate shaft speed/Output speed	1.02 to 1.16

INSPECTION PROCEDURE

HINT:

Performing the intelligent tester's ACTIVE TEST allows relay, VSV, actuator and other items to be operated without removing any parts. Performing the ACTIVE TEST early in troubleshooting is one way to save time.

The DATA LIST can be displayed during the ACTIVE TEST.

1. Warm up the engine.

2. Turn the ignition switch OFF.
3. Connect the intelligent tester to the CAN VIM. Then connect the CAN VIM to the DLC3.
4. Turn the ignition switch ON and turn the tester ON.
5. Enter the following menus: DIAGNOSIS / ENHANCED OBD II / ACTIVE TEST.
6. Follow the instructions on the tester and perform the ACTIVE TEST.

HINT:
While driving, the shift position can be forcibly changed with the tester.
Comparing the shift position commanded by the ACTIVE TEST with the actual shift position enables you to confirm the problem (see page AX-35).

ECM:

Item	Test Details	Diagnostic Note
SHIFT	[Test Details] Operate the shift solenoid valve and set each shift lever position by yourself [Vehicle Condition] • IDL: ON • 50 km/h (31 mph) or less [Other information] • Press "→" button: Shift up • Press "←" button: Shift down	Possible to check the operation of the shift solenoid valves

HINT:
- This test can be conducted when the vehicle speed is 50 km/h (31 mph) or less.
- The shift position commanded by the ECM is shown in the DATA LIST/SHIFT display on the tester.

1 CHECK OTHER DTC OUTPUT (IN ADDITION TO DTC P0766)

(a) Connect the intelligent tester to the CAN VIM. Then connect the CAN VIM to the DLC3.
(b) Turn the ignition switch ON and turn the tester ON.
(c) Enter the following menus: DIAGNOSIS / ENHANCED OBD II / DTC INFO / CURRENT CODES.
(d) Read the DTCs using the tester.

Result

Display (DTC output)	Proceed to
Only P0766 is output	A
P0766 and other DTCs are output	B

HINT:
If any other codes besides P0766 are output, perform troubleshooting for those DTCs first.

B → **GO TO DTC CHART**

A

2	INSPECT SHIFT SOLENOID VALVE S4

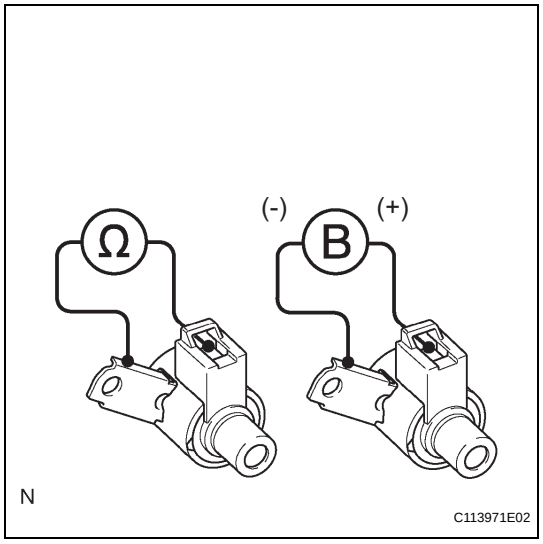

(a) Remove the shift solenoid valve S4.
(b) Measure the resistance between the solenoid valve terminal and solenoid valve body.
Standard resistance:
11 to 15 Ω at 20°C (68°F)
(c) Connect the battery's positive (+) lead to the terminal of the solenoid valve connector, and the negative (-) lead to the solenoid body. Then check that the valve moves and makes an operating noise.
OK:
Valve moves and makes operating noise.

NG → **REPLACE SHIFT SOLENOID VALVE S4**

OK

3	INSPECT TRANSMISSION VALVE BODY ASSEMBLY

(a) Check the transmission valve body assembly.
OK:
There are no foreign objects on each valve.

NG → **REPAIR OR REPLACE TRANSMISSION VALVE BODY ASSEMBLY**

OK

4	INSPECT TORQUE CONVERTER CLUTCH ASSEMBLY

(a) Check the torque converter clutch assembly (see page AX-178).
OK:
The torque converter clutch operates normally.

NG → **REPLACE TORQUE CONVERTER CLUTCH ASSEMBLY**

OK

REPAIR OR REPLACE AUTOMATIC TRANSAXLE ASSEMBLY

DTC	P0771	Shift Solenoid "E" Performance (Shift Solenoid Valve SR)

DESCRIPTION

The ECM uses signals from the vehicle speed sensor to detect the actual gear position (1st, 2nd, 3rd, 4th or 5th gear).
Then the ECM compares the actual gear with the shift schedule in the ECM memory to detect mechanical problems of the shift solenoid valves, valve body or automatic transaxle (clutch, brake, gear, etc.).

DTC No.	DTC Detection Condition	Trouble Area
P0771	Gear required by the ECM does not match the actual gear when driving (2 trip detection logic)	• Shift solenoid valve SR remains open or closed • Valve body is blocked • Shift solenoid valve SR • Automatic transaxle (clutch, brake, gear, etc.)

MONITOR DESCRIPTION

The ECM commands gear shifts by turning the shift solenoid valves ON/OFF. According to the input shaft revolution, intermediate (counter) shaft revolution and output shaft revolution, the ECM detects the actual gear position (1st, 2nd, 3rd, 4th or 5th gear position). When the gear position commanded by the ECM and the actual gear position are not the same, the ECM illuminates the MIL and stores the DTC.

MONITOR STRATEGY

Related DTCs	P0771: Shift solenoid valve SR/Rationality check
Required sensors/Components	Shift solenoid valve SR, Speed sensor (NT), Speed sensor (NC), Crankshaft position sensor (NE)
Frequency of operation	Continuous
Duration	OFF malfunction (A) 1 sec. OFF malfunction (B) 3.5 sec. ON malfunction (A) Continuous ON malfunction (B) and (C) 0.8 sec.
MIL operation	2 driving cycles
Sequence of operation	None

TYPICAL ENABLING CONDITIONS

All:

The monitor will run whenever these DTCs are not present.	P0115 - P0118 (ECT sensor) P0125 (Insufficient ECT for closed loop) P0500 (VSS) P0748, P0778, P0798 (Shift solenoid valve (range))
ECT (Engine coolant temperature)	10°C (50°F) or more
Transmission range	"D"
ATF temperature	-20°C (-4°F) or more
ATF temperature sensor circuit	Not circuit malfunction
ECT sensor circuit	Not circuit malfunction
Turbine speed sensor circuit	Not circuit malfunction
Intermediate shaft speed sensor circuit	Not circuit malfunction
Output speed sensor circuit	Not circuit malfunction

Shift solenoid valve SL1 circuit	Not circuit malfunction
Shift solenoid valve SL2 circuit	Not circuit malfunction
Shift solenoid valve SL3 circuit	Not circuit malfunction
Shift solenoid valve S4 circuit	Not circuit malfunction
Shift solenoid valve SR circuit	Not circuit malfunction
Shift solenoid valve DSL circuit	Not circuit malfunction
Electronic throttle system	Not circuit malfunction

OFF malfunction (A):

ECM selected gear	5th
Throttle valve opening angle	5% or more
Vehicle speed	10 km/h (6.2 mph) or more

OFF malfunction (B):

ECM lock-up command	ON
ECM selected gear	3rd, 4th or 5th
Vehicle speed	25 km/h (15.5 mph) or more

ON malfunction (A):

ECM lock-up command	OFF

ON malfunction (B):

ECM selected gear	1st
Vehicle speed	Less than 40 km/h (24.9 mph)
Throttle valve opening angle	4.5% or more at engine speed 1,900 rpm (Varies with engine speed)

ON malfunction (C):

ECM selected gear	3rd
Throttle valve opening angle	4.5% or more at engine speed 1,900 rpm (Varies with engine speed)

ON malfunction (D):

Duration time from shift command of ECM	15 sec. or more
ECM selected gear	4th or 5th

TYPICAL MALFUNCTION THRESHOLDS

Either of the following conditions is met: OFF malfunction (A) and (B), or ON malfunction (A), (B), (C) and (D)

OFF malfunction (A):

Intermediate shaft speed/Output speed	1.44 to 1.58

OFF malfunction (B):

Engine speed - Input (turbine) speed	75 rpm or more

ON malfunction (A):

Difference between engine speed and input (turbine) speed	150 rpm or more

ON malfunction (B):

Input (turbine) speed/Intermediate shaft speed	0.93 to 1.07

ON malfunction (C):

Input (turbine) speed/Intermediate shaft speed	0.93 to 1.07

ON malfunction (D):

Input (turbine) speed/Intermediate shaft speed	0.64 to 0.74

INSPECTION PROCEDURE

HINT:
Performing the intelligent tester's ACTIVE TEST allows relay, VSV, actuator and other items to be operated without removing any parts. Performing the ACTIVE TEST early in troubleshooting is one way to save time.
The DATA LIST can be displayed during the ACTIVE TEST.

1. Warm up the engine.
2. Turn the ignition switch OFF.
3. Connect the intelligent tester to the CAN VIM. Then connect the CAN VIM to the DLC3.
4. Turn the ignition switch ON and turn the tester ON.
5. Enter the following menus: DIAGNOSIS / ENHANCED OBD II / ACTIVE TEST.
6. Follow the instructions on the tester and perform the ACTIVE TEST.

HINT:
While driving, the shift position can be forcibly changed with the tester.
Comparing the shift position commanded by the ACTIVE TEST with the actual shift position enables you to confirm the problem (see page AX-35).

ECM:

Item	Test Details	Diagnostic Note
SHIFT	[Test Details] Operate the shift solenoid valve and set each shift lever position by yourself [Vehicle Condition] • IDL: ON • 50 km/h (31 mph) or less [Other information] • Press "→" button: Shift up • Press "←" button: Shift down	Possible to check the operation of the shift solenoid valves

HINT:
- This test can be conducted when the vehicle speed is 50 km/h (31 mph) or less.
- The shift position commanded by the ECM is shown in the DATA LIST/SHIFT display on the tester.

1 CHECK OTHER DTC OUTPUT (IN ADDITION TO DTC P0771)

(a) Connect the intelligent tester to the CAN VIM. Then connect the CAN VIM to the DLC3.
(b) Turn the ignition switch ON and turn the tester ON.
(c) Enter the following menus: DIAGNOSIS / ENHANCED OBD II / DTC INFO / CURRENT CODES.
(d) Read the DTCs using the tester.

Result

Display (DTC output)	Proceed to
Only P0771 is output	**A**
P0771 and other DTCs are output	**B**

HINT:
If any other codes besides P0771 are output, perform troubleshooting for those DTCs first.

B → **GO TO DTC CHART**

A

2	INSPECT SHIFT SOLENOID VALVE SR

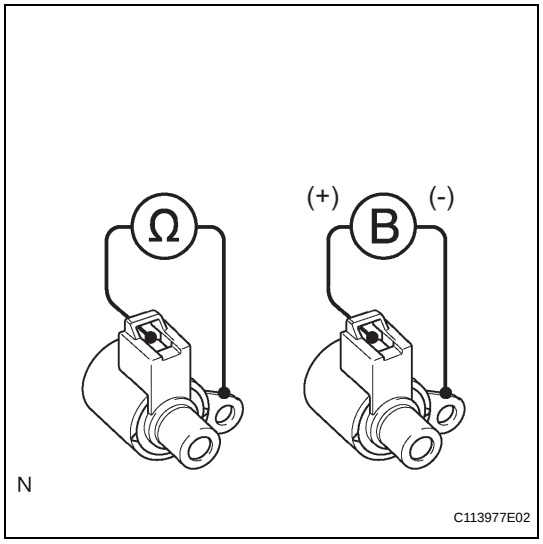

(a) Remove the shift solenoid valve SR.
(b) Measure the resistance between the solenoid valve terminal and solenoid valve body.
Standard resistance:
11 to 15 Ω at 20°C (68°F)
(c) Connect the battery's positive (+) lead to the terminal of the solenoid valve connector, and the negative (-) lead to the solenoid body. Then check that the valve moves and makes an operating noise.
OK:
Valve moves and makes operating noise.

NG → **REPLACE SHIFT SOLENOID VALVE SR**

OK

3	INSPECT TRANSMISSION VALVE BODY ASSEMBLY

(a) Check the transmission valve body assembly.
OK:
There are no foreign objects on each valve.

NG → **REPAIR OR REPLACE TRANSMISSION VALVE BODY ASSEMBLY**

OK

4	INSPECT TORQUE CONVERTER CLUTCH ASSEMBLY

(a) Check the torque converter clutch assembly (see page AX-35).
OK:
The torque converter clutch operates normally.

NG → **REPLACE TORQUE CONVERTER CLUTCH ASSEMBLY**

OK

REPAIR OR REPLACE AUTOMATIC TRANSAXLE ASSEMBLY

DTC	P0776	Pressure Control Solenoid "B" Performance (Shift Solenoid Valve SL2)

DESCRIPTION

The ECM uses signals from the vehicle speed sensor to detect the actual gear position (1st, 2nd, 3rd, 4th or 5th gear).
Then the ECM compares the actual gear with the shift schedule in the ECM memory to detect mechanical problems of the shift solenoid valves, valve body or automatic transaxle (clutch, brake, gear, etc.).

DTC No.	DTC Detection Condition	Trouble Area
P0776	Gear required by the ECM does not match the actual gear when driving (2 trip detection logic)	• Shift solenoid valve SL2 remains open or closed • Valve body is blocked • Shift solenoid valve SL2 • Automatic transaxle (clutch, brake, gear, etc.) • ECM

MONITOR DESCRIPTION

The ECM commands gear shifts by turning the shift solenoid valves ON/OFF. According to the input shaft revolution, intermediate (counter) shaft revolution and output shaft revolution, the ECM detects the actual gear position (1st, 2nd, 3rd, 4th or 5th gear position). When the gear position commanded by the ECM and the actual gear position are not the same, the ECM illuminates the MIL and stores the DTC.

MONITOR STRATEGY

Related DTCs	P0776: Shift solenoid valve SL2/ON malfunction Shift solenoid valve SL2/OFF malfunction
Required sensors/Components	Shift solenoid valve SL2, Speed sensor (NT), Speed sensor (NC), Crankshaft position sensor (NE)
Frequency of operation	Continuous
Duration	OFF malfunction (A) 1.8 sec. OFF malfunction (B) and (C) 0.8 sec. ON malfunction (A) and (B) 0.8 sec. ON malfunction (C) 0.4 sec.
MIL operation	2 driving cycles
Sequence of operation	None

TYPICAL ENABLING CONDITIONS

All:

The monitor will run whenever these DTCs are not present.	P0115 - P0118 (ECT sensor) P0125 (Insufficient ECT for closed loop) P0500 (VSS) P0748, P0778, P0798 (Shift solenoid valve (range))
ECT (Engine coolant temperature)	10°C (50°F) or more
Transmission range	"D"
ATF temperature	-20°C (-4°F) or more
ATF temperature sensor circuit	Not circuit malfunction
ECT sensor circuit	Not circuit malfunction
Turbine speed sensor circuit	Not circuit malfunction
Intermediate shaft speed sensor circuit	Not circuit malfunction

Output speed sensor circuit	Not circuit malfunction
Shift solenoid valve SL1 circuit	Not circuit malfunction
Shift solenoid valve SL2 circuit	Not circuit malfunction
Shift solenoid valve SL3 circuit	Not circuit malfunction
Shift solenoid valve S4 circuit	Not circuit malfunction
Shift solenoid valve SR circuit	Not circuit malfunction
Shift solenoid valve DSL circuit	Not circuit malfunction
Electronic throttle system	Not circuit malfunction

OFF malfunction (A):

ECM lock-up command	OFF
Vehicle speed	Less than 60 km/h (37.3 mph)
Throttle valve opening angle	7% or more

OFF malfunction (B):

ECM selected gear	1st
Vehicle speed	Less than 40 km/h (24.9 mph)
Throttle valve opening angle	4.5% or more at engine speed 1,900 rpm (Varies with engine speed)

OFF malfunction (C):

ECM selected gear	3rd
Throttle valve opening angle	4.5% or more at engine speed 1,900 rpm (Varies with engine speed)

OFF malfunction (D):

Duration time from shift command of ECM	15 sec. or more
ECM selected gear	4th or 5th

ON malfunction (A):

ECM selected gear	1st
Vehicle speed	Less than 40 km/h (24.9 mph)
Throttle valve opening angle	4.5% or more at engine speed 1,900 rpm (Varies with engine speed)

ON malfunction (B):

ECM selected gear	3rd
Throttle valve opening angle	5.0% or more at output speed 1,400 rpm (Varies with engine speed)
Malfunction of pressure control solenoid "B" (SL2) and "C" (SL3)	Not detected

ON malfunction (C):

Throttle valve opening angle	7.0% or more at output speed 1,050 rpm (Varies with engine speed)
Malfunction of pressure control solenoid "B" (SL2)	Not detected

TYPICAL MALFUNCTION THRESHOLDS

Either of the following conditions is met: OFF malfunction (A), (B), (C) and (D), or ON malfunction (A), (B) and (C)

OFF malfunction (A):

Difference between engine speed and input (turbine) speed	Less than 35 rpm

OFF malfunction (B) and (C):

Input (turbine) speed/Intermediate shaft speed	0.93 to 1.07

OFF malfunction (D):

Input (turbine) speed/Intermediate shaft speed	0.64 to 0.74

ON malfunction (A):

Input (turbine) speed/Intermediate shaft speed	2.72 to 2.86

ON malfunction (B):

Input (turbine) speed - Intermediate shaft speed	700 rpm or more

ON malfunction (C):

Input (turbine) speed - Intermediate shaft speed	Less than -500 rpm or 700 rpm or more

INSPECTION PROCEDURE

HINT:
Performing the intelligent tester's ACTIVE TEST allows relay, VSV, actuator and other items to be operated without removing any parts. Performing the ACTIVE TEST early in troubleshooting is one way to save time.
The DATA LIST can be displayed during the ACTIVE TEST.

1. Warm up the engine.
2. Turn the ignition switch OFF.
3. Connect the intelligent tester to the CAN VIM. Then connect the CAN VIM to the DLC3.
4. Turn the ignition switch ON and turn the tester ON.
5. Enter the following menus: DIAGNOSIS / ENHANCED OBD II / ACTIVE TEST.
6. Follow the instructions on the tester and perform the ACTIVE TEST.

HINT:
While driving, the shift position can be forcibly changed with the tester.
Comparing the shift position commanded by the ACTIVE TEST with the actual shift position enables you to confirm the problem (see page AX-35).

ECM:

Item	Test Details	Diagnostic Note
SHIFT	[Test Details] Operate the shift solenoid valve and set each shift lever position by yourself [Vehicle Condition] • IDL: ON • 50 km/h (31 mph) or less [Other information] • Press "→" button: Shift up • Press "←" button: Shift down	Possible to check the operation of the shift solenoid valves

HINT:

- This test can be conducted when the vehicle speed is 50 km/h (31 mph) or less.
- The shift position commanded by the ECM is shown in the DATA LIST/SHIFT display on the tester.

1	**CHECK OTHER DTC OUTPUT (IN ADDITION TO DTC P0776)**

(a) Connect the intelligent tester to the CAN VIM. Then connect the CAN VIM to the DLC3.
(b) Turn the ignition switch ON and turn the tester ON.
(c) Enter the following menus: DIAGNOSIS / ENHANCED OBD II / DTC INFO / CURRENT CODES.
(d) Read the DTCs using the tester.

Result

Display (DTC output)	Proceed to
Only P0776 is output	A
P0776 and other DTCs are output	B

HINT:
If any other codes besides P0776 are output, perform troubleshooting for those DTCs first.

B → **GO TO DTC CHART**

A

2 INSPECT SHIFT SOLENOID VALVE SL2

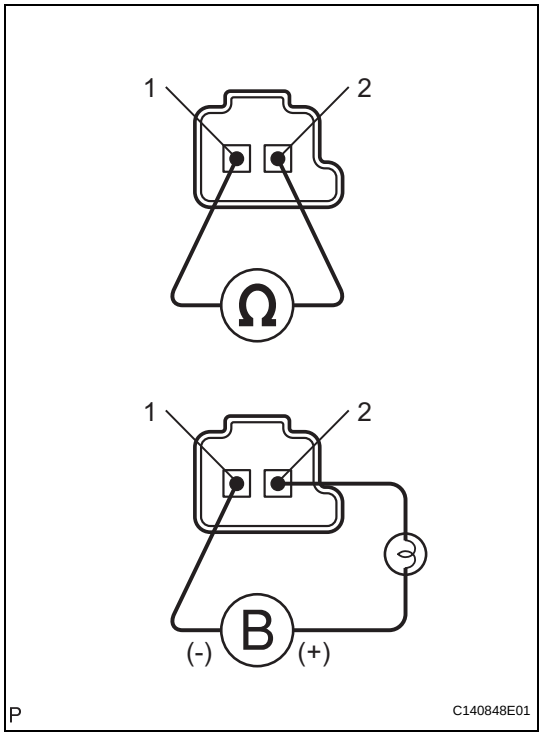

(a) Remove the shift solenoid valve SL2.
(b) Measure the resistance of the solenoid valve.
Standard resistance:
5.0 to 5.6 Ω at 20°C (68°F)
(c) Connect the battery's positive (+) lead with a 21 W bulb to terminal 2 and the negative (-) lead to terminal 1 of the solenoid valve connector. Then check that the valve moves and makes an operating noise.
OK:
Valve moves and makes operating noise.

NG → **REPLACE SHIFT SOLENOID VALVE SL2**

OK

3 INSPECT TRANSMISSION VALVE BODY ASSEMBLY

(a) Check the transmission valve body assembly.
OK:
There are no foreign objects on each valve.

NG → **REPAIR TRANSMISSION VALVE BODY ASSEMBLY**

OK

4	INSPECT TORQUE CONVERTER CLUTCH ASSEMBLY

(a) Check the torque converter clutch assembly (see page AX-178).

OK:

The torque converter clutch operates normally.

NG → **REPLACE TORQUE CONVERTER CLUTCH ASSEMBLY**

OK

REPAIR OR REPLACE AUTOMATIC TRANSAXLE ASSEMBLY

DTC	P0778	Pressure Control Solenoid "B" Electrical (Shift Solenoid Valve SL2)

DESCRIPTION

Shifting from 1st to 5th is performed in combination with the ON and OFF operation of the shift solenoid valves SL1, SL2, SL3, S4 and SR, which are controlled by the ECM. If an open or short circuit occurs in any of the shift solenoid valves, the ECM controls the remaining normal shift solenoid valves to allow the vehicle to be operated safely (see page AX-35).

DTC No.	DTC Detection Condition	Trouble Area
P0778	ECM checks for an open or short circuit in shift solenoid valves SL2 (1 trip detection logic) Hybrid IC for solenoid indicates fail	• Open or short in shift solenoid valve SL2 circuit • Shift solenoid valve SL2 • ECM

MONITOR DESCRIPTION

The ECM commands gear shifts by turning the shift solenoid valves ON/OFF. When there is an open or short circuit in any shift solenoid valve circuit, the ECM detects the problem and illuminates the MIL and stores the DTC. And the ECM performs the fail-safe function and turns the other normal shift solenoid valves ON/OFF. In case of an open or short circuit, the ECM stops sending current to the circuit (see page AX-35).

MONITOR STRATEGY

Related DTCs	P0778: Shift solenoid valve SL2/Range check
Required sensors/Components	Shift solenoid valve SL2
Frequency of operation	Continuous
Duration	1 sec.
MIL operation	Immediate
Sequence of operation	None

TYPICAL ENABLING CONDITIONS

The monitor will run whenever this DTC is not present.	None
Battery voltage	11 V or more
Starter	OFF
Ignition switch	ON
Solenoid current cut status	Not cut
CPU commanded duty	19% or more

TYPICAL MALFUNCTION THRESHOLDS

Solenoid status from MIC	Fail

COMPONENT OPERATING RANGE

Output signal duty	Less than 100%

WIRING DIAGRAM

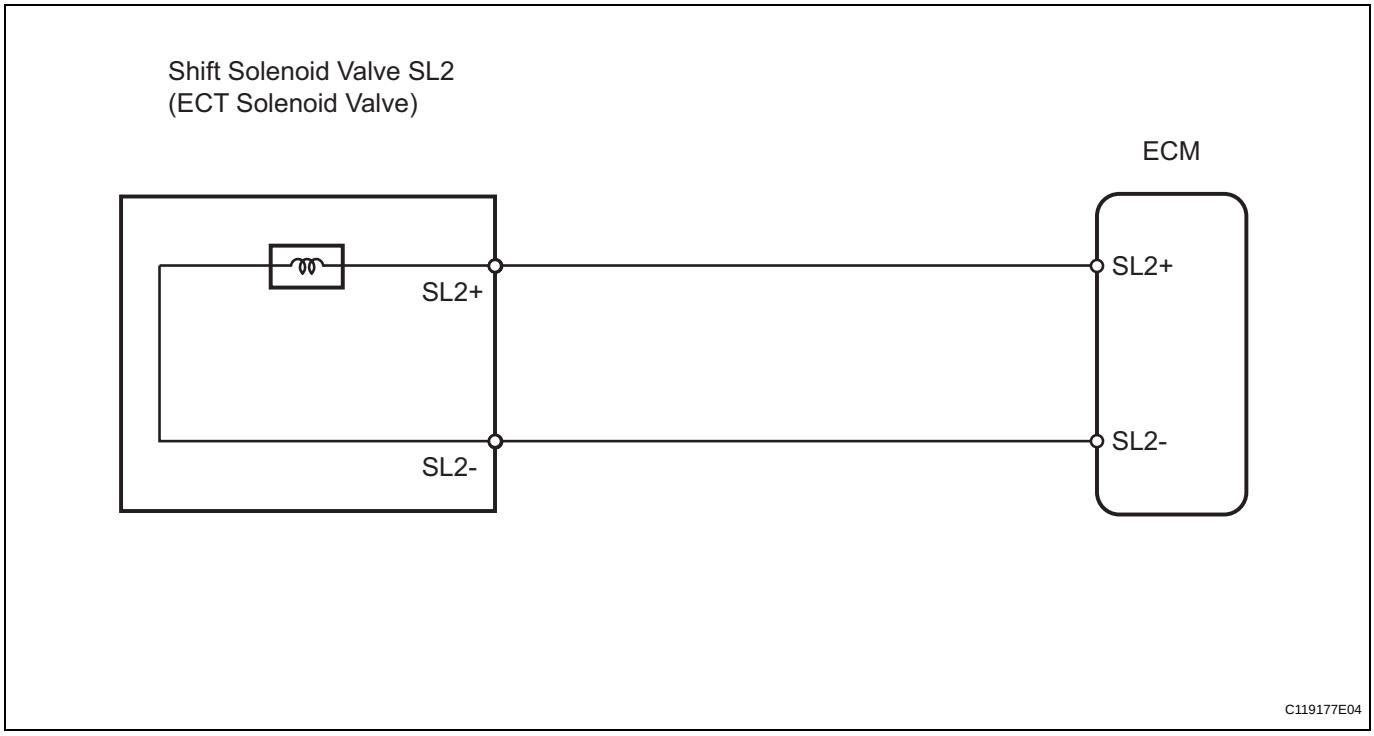

INSPECTION PROCEDURE

1	INSPECT TRANSMISSION WIRE (SHIFT SOLENOID VALVE SL2)

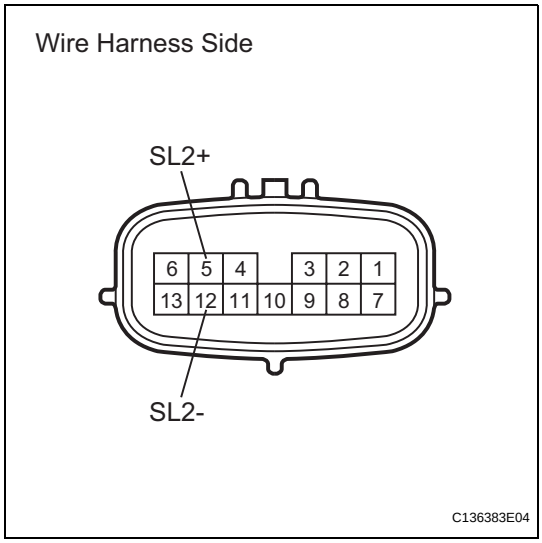

(a) Disconnect the B32 wire connector.
(b) Measure the resistance of the transmission wire.

Standard resistance

Tester Connection	Condition	Specified Condition
5 (SL2+) - 12 (SL2-)	20°C (68°F)	5.0 to 5.6 Ω
5 (SL2+) - Body ground	20°C (68°F)	1 MΩ or higher
12 (SL2-) - Body ground	20°C (68°F)	1 MΩ or higher

NG → **Go to step 3**

OK

2 CHECK WIRE HARNESS (TRANSMISSION WIRE - ECM)

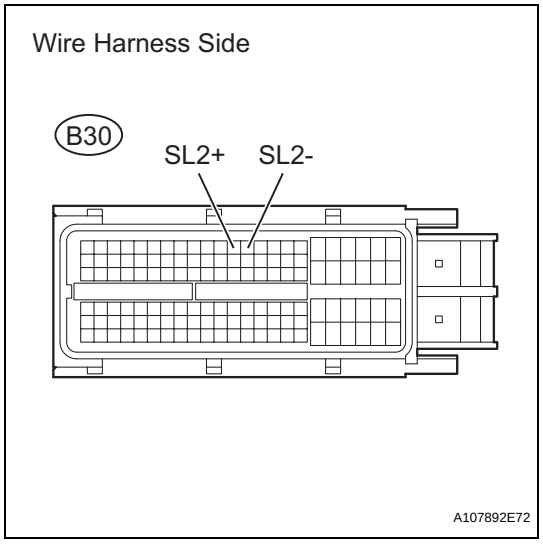

(a) Disconnect the B30 ECM connector.
(b) Measure the resistance of the wire harness side connector.
Standard resistance

Tester Connection	Condition	Specified Condition
B30-12 (SL2+) - B30-13 (SL2-)	20°C (68°F)	5.0 to 5.6 Ω
B30-12 (SL2+) - Body ground	20°C (68°F)	1 MΩ or higher
B30-13 (SL2-) - Body ground	20°C (68°F)	1 MΩ or higher

NG → **REPAIR OR REPLACE HARNESS AND CONNECTOR**

OK

REPLACE ECM

3 INSPECT SHIFT SOLENOID VALVE SL2

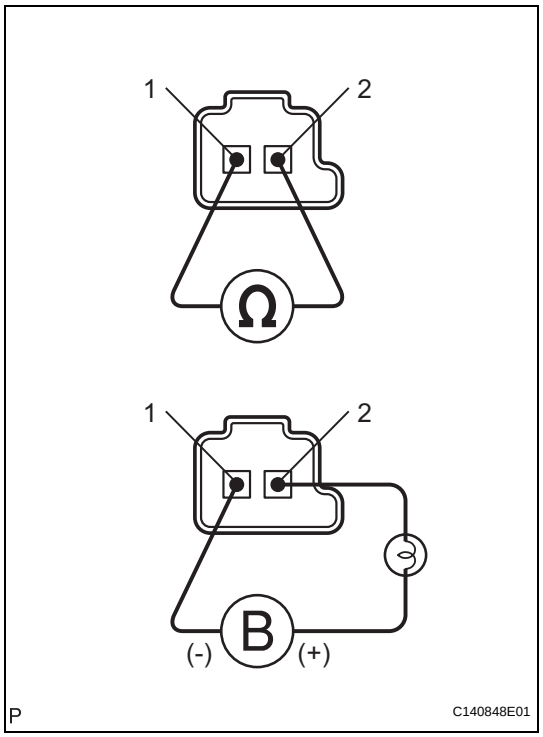

(a) Remove the shift solenoid valve SL2.
(b) Measure the resistance of the solenoid valve.
Standard resistance:
5.0 to 5.6 Ω at 20°C (68°F)
(c) Connect the battery's positive (+) lead with a 21 W bulb to terminal 2 and the negative (-) lead to terminal 1 of the solenoid valve connector. Then check that the valve moves and makes an operating noise.
OK:
Valve moves and makes operating noise.

NG → **REPLACE SHIFT SOLENOID VALVE SL2**

OK

REPAIR OR REPLACE TRANSMISSION WIRE

DTC	P0793	Intermediate Shaft Speed Sensor "A"

DESCRIPTION

This sensor detects the rotation speed of the counter gear. By comparing the counter gear speed signal (NC) with the direct clutch speed sensor signal (NT), the ECM detects the shift timing of the gears and approximately controls the engine torque and hydraulic pressure according to various conditions. Thus smooth gear shifting is performed.

DTC No.	DTC Detection Condition	Trouble Area
P0793	ECM detects conditions (a), (b) and (c) continuously for 5 sec. or more (1 trip detection logic): (a) Vehicle speed: 50 km/h (31 mph) or more (b) Park/Neutral position switch (NSW) is OFF (c) Speed sensor NC: Less than 300 rpm	• Open or short in speed sensor NC circuit • Speed sensor NC • ECM

MONITOR DESCRIPTION

The NC terminal of the ECM detects revolution signals from speed sensor NC (counter gear rpm). The ECM calculates gear shifts by comparing speed sensor NT with speed sensor NC.
While the vehicle is operating in the 2nd, 3rd, 4th or 5th gear position with the shift lever on D, if the counter gear revolution is less than 300 rpm*1 and the output shaft revolution is more than 1,000 rpm*2, the ECM detects the trouble, illuminates the MIL and stores the DTC.
*1: Pulse is not output or is irregularly output.
*2: The vehicle speed is 50 km/h (31 mph) or more.

MONITOR STRATEGY

Related DTCs	P0793: Speed sensor (NC)/Verify pulse input
Required sensors/Components	Speed sensor (NC), Speed sensor (NT), NSW switch
Frequency of operation	Continuous
Duration	5 sec.
MIL operation	Immediate
Sequence of operation	None

TYPICAL ENABLING CONDITIONS

The monitor will run whenever these DTCs are not present.	P0500 (VSS) P0748 - P0798 (Trans solenoid (Range))
Engine	Running
NSW switch	OFF
Output shaft rpm	1,000 rpm or more

TYPICAL MALFUNCTION THRESHOLDS

Sensor signal rpm	Less than 300 rpm

COMPONENT OPERATING RANGE

Counter gear speed sensor (NC)	3rd gear when shift lever is on D (after warming up the engine); Intermediate shaft speed (NC) becomes close to the engine speed

WIRING DIAGRAM

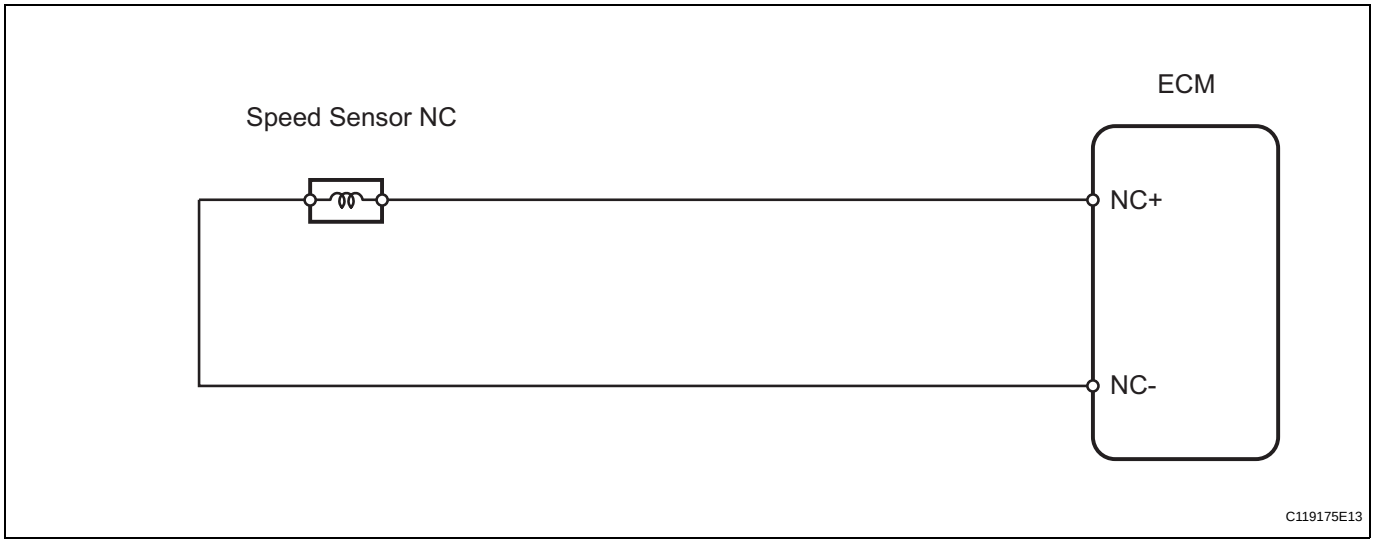

INSPECTION PROCEDURE

HINT:
Using the intelligent tester's DATA LIST allows switch, sensor, actuator and other item values to be read without removing any parts. Reading the DATA LIST early in troubleshooting is one way to save time.
NOTICE:
In the table below, the values listed under "Normal Condition" are reference values. Do not depend solely on these reference values when deciding whether a part is faulty or not.

1. Warm up the engine.
2. Turn the ignition switch OFF.
3. Connect the intelligent tester to the CAN VIM. Then connect the CAN VIM to the DLC3.
4. Turn the ignition switch ON and turn the tester ON.
5. Enter the following menus: DIAGNOSIS / ENHANCED OBD II / DATA LIST.
6. Follow the instructions on the tester and read the DATA LIST.

ECM:

Item	Measurement Item/ Range (Display)	Normal Condition	Diagnostic Note
SPD (NC)	Counter gear speed/ Min.: 0 rpm Max.: 12,750 rpm	3rd gear when shift lever is on D (after warming up the engine); Intermediate shaft speed (NC) becomes close to the engine speed	Data is displayed in increments of 50 rpm

HINT:

- SPD (NC) is always 0 rpm while driving:
  Open or short in the sensor or circuit.
- SPD (NC) is always more than 0 and less than 300 rpm while driving the vehicle at 50 km/h (31 mph) or more:
  Sensor trouble, improper installation, or intermittent connection trouble of the circuit.

1	INSPECT SPEED SENSOR (INSTALLATION)

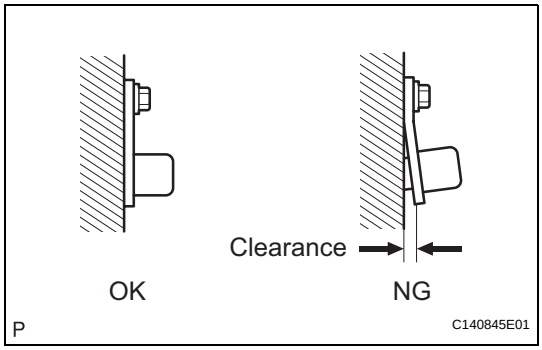

(a) Check the speed sensor NC installation.
OK:
Installation bolt is tightened properly and there is no clearance between the sensor and transaxle case.

NG → **REPLACE SPEED SENSOR NC**

OK

2	INSPECT SPEED SENSOR NC

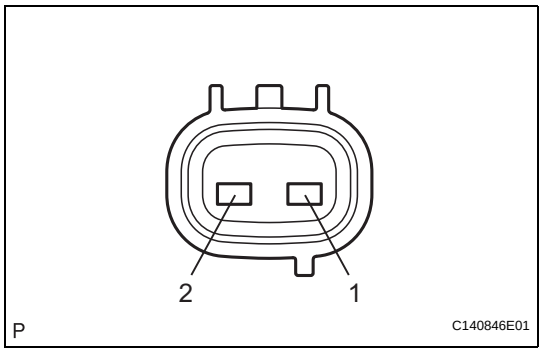

(a) Disconnect the B24 sensor connector from the transaxle.
(b) Measure the resistance of the sensor.
Standard resistance

Tester Connection	Condition	Specified Condition
1 - 2	20°C (68°F)	560 to 680 Ω

NG → **REPLACE SPEED SENSOR NC**

OK

3	CHECK WIRE HARNESS (SPEED SENSOR - ECM)

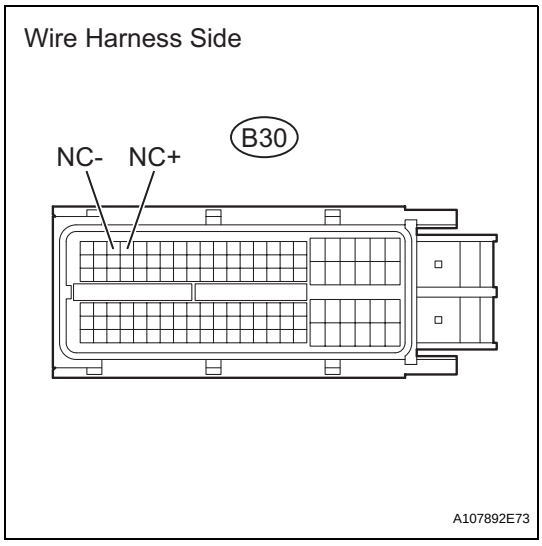

(a) Disconnect the B30 ECM connector.
(b) Measure the resistance of the wire harness side connector.
Standard resistance

Tester Connection	Specified Condition
B30-4 (NC+) - B30-3 (NC-)	560 to 680 Ω
B30-4 (NC+) - Body ground	10 kΩ or higher
B30-3 (NC-) - Body ground	10 kΩ or higher

NG → **REPAIR OR REPLACE HARNESS AND CONNECTOR**

OK

REPLACE ECM

DTC	P0796	Pressure Control Solenoid "C" Performance (Shift Solenoid Valve SL3)

DESCRIPTION

The ECM uses signals from the vehicle speed sensor to detect the actual gear position (1st, 2nd, 3rd, 4th or 5th gear).
Then the ECM compares the actual gear with the shift schedule in the ECM memory to detect mechanical problems of the shift solenoid valves, valve body or automatic transaxle (clutch, brake, gear, etc.).

DTC No.	DTC Detection Condition	Trouble Area
P0796	Gear required by the ECM does not match the actual gear when driving (2 trip detection logic)	• Shift solenoid valve SL3 remains open or closed • Valve body is blocked • Automatic transaxle (clutch, brake, gear, etc.)

MONITOR DESCRIPTION

The ECM commands gear shifts by turning the shift solenoid valves ON/OFF. According to the input shaft revolution, intermediate (counter) shaft revolution and output shaft revolution, the ECM detects the actual gear position (1st, 2nd, 3rd, 4th or 5th gear position). When the gear position commanded by the ECM and the actual gear position are not the same, the ECM illuminates the MIL and stores the DTC.

MONITOR STRATEGY

Related DTCs	P0796: Shift solenoid valve SL3/OFF malfunction Shift solenoid valve SL3/ON malfunction
Required sensors/Components	Shift solenoid valve SL3, Speed sensor (NT), Speed sensor (NC), Crankshaft position sensor (NE)
Frequency of operation	Continuous
Duration	OFF malfunction (A) 0.8 sec. OFF malfunction (B) 1 sec. ON malfunction (A) and (B) 0.8 sec. ON malfunction (C) 0.4 sec.
MIL operation	2 driving cycles
Sequence of operation	None

TYPICAL ENABLING CONDITIONS

All:

The monitor will run whenever these DTCs are not present.	P0115 - P0118 (ECT sensor) P0125 (Insufficient ECT for closed loop) P0500 (VSS) P0748, P0778, P0798 (Shift solenoid valve (range))
ECT (Engine coolant temperature)	10°C (50°F) or more
Transmission range	"D"
ATF temperature	-20°C (-4°F) or more
ATF temperature sensor circuit	Not circuit malfunction
ECT sensor circuit	Not circuit malfunction
Turbine speed sensor circuit	Not circuit malfunction
Intermediate shaft speed sensor circuit	Not circuit malfunction
Output speed sensor circuit	Not circuit malfunction

Shift solenoid valve SL1 circuit	Not circuit malfunction
Shift solenoid valve SL2 circuit	Not circuit malfunction
Shift solenoid valve SL3 circuit	Not circuit malfunction
Shift solenoid valve S4 circuit	Not circuit malfunction
Shift solenoid valve SR circuit	Not circuit malfunction
Shift solenoid valve DSL circuit	Not circuit malfunction
Electronic throttle system	Not circuit malfunction

OFF malfunction (A):

ECM selected gear	4th or 5th
Throttle valve opening angle	4.5% or more at engine speed 1,900 rpm (Varies with engine speed)

OFF malfunction (B):

ECM selected gear	4th
Throttle valve opening angle	5% or more
Vehicle speed	10 km/h (6.2 mph) or more

ON malfunction (A):

ECM selected gear	1st
Vehicle speed	Less than 40 km/h (24.9 mph)
Throttle valve opening angle	4.5% or more at engine speed 1,900 rpm (Varies with engine speed)

ON malfunction (B):

ECM selected gear	3rd
Throttle valve opening angle	5.0% or more at output speed 1,400 rpm (Varies with engine speed)
Malfunction of pressure control solenoid "B" (SL2) and "C" (SL3)	Not detected

ON malfunction (C):

Throttle valve opening angle	7.0% or more at output speed 1,050 rpm (Varies with engine speed)
Malfunction of pressure control solenoid "B" (SL2)	Not detected

TYPICAL MALFUNCTION THRESHOLDS

Either of the following conditions is met: OFF malfunction (A) and (B), or ON malfunctions (A), (B) and (C)

2 detections are necessary per driving cycle:

1st detection: temporary flag ON

2nd detection: pending fault code ON

OFF malfunction (A):

Input (turbine) speed/Intermediate shaft speed	0.93 to 1.07

OFF malfunction (B):

Intermediate shaft speed/Output speed	1.02 to 1.16

ON malfunction (A):

Input (turbine) speed/Intermediate shaft speed	0.93 to 1.07

ON malfunction (B):

Input (turbine) speed - Intermediate shaft speed	700 rpm or more

ON malfunction (C):

Input (turbine) speed - Intermediate shaft speed	Less than -500 rpm or 700 rpm or more

INSPECTION PROCEDURE

HINT:
Performing the intelligent tester's ACTIVE TEST allows relay, VSV, actuator and other items to be operated without removing any parts. Performing the ACTIVE TEST early in troubleshooting is one way to save time.
The DATA LIST can be displayed during the ACTIVE TEST.

1. Warm up the engine.
2. Turn the ignition switch OFF.
3. Connect the intelligent tester to the CAN VIM. Then connect the CAN VIM to the DLC3.
4. Turn the ignition switch ON and turn the tester ON.
5. Enter the following menus: DIAGNOSIS / ENHANCED OBD II / ACTIVE TEST.
6. Follow the instructions on the tester and perform the ACTIVE TEST.

HINT:
While driving, the shift position can be forcibly changed with the tester.
Comparing the shift position commanded by the ACTIVE TEST with the actual shift position enables you to confirm the problem (see page AX-35).

ECM:

Item	Test Details	Diagnostic Note
SHIFT	[Test Details] Operate the shift solenoid valve and set each shift lever position by yourself [Vehicle Condition] • IDL: ON • 50 km/h (31 mph) or less [Other information] • Press "→" button: Shift up • Press "←" button: Shift down	Possible to check the operation of the shift solenoid valves

HINT:
- This test can be conducted when the vehicle speed is 50 km/h (31 mph) or less.
- The shift position commanded by the ECM is shown in the DATA LIST/SHIFT display on the tester.

1 CHECK OTHER DTCS OUTPUT (IN ADDITION TO DTC P0796)

(a) Connect the intelligent tester to the CAN VIM. Then connect the CAN VIM to the DLC3.
(b) Turn the ignition switch ON and turn the tester ON.
(c) Enter the following menus: DIAGNOSIS / ENHANCED OBD II / DTC INFO / CURRENT CODES.
(d) Read the DTCs using the tester.

Result

Display (DTC output)	Proceed to
Only P0796 is output	A
P0796 and other DTCs are output	B

HINT:
If any other codes besides P0796 are output, perform troubleshooting for those DTCs first.

B → **GO TO DTC CHART**

A

2	INSPECT SHIFT SOLENOID VALVE SL3

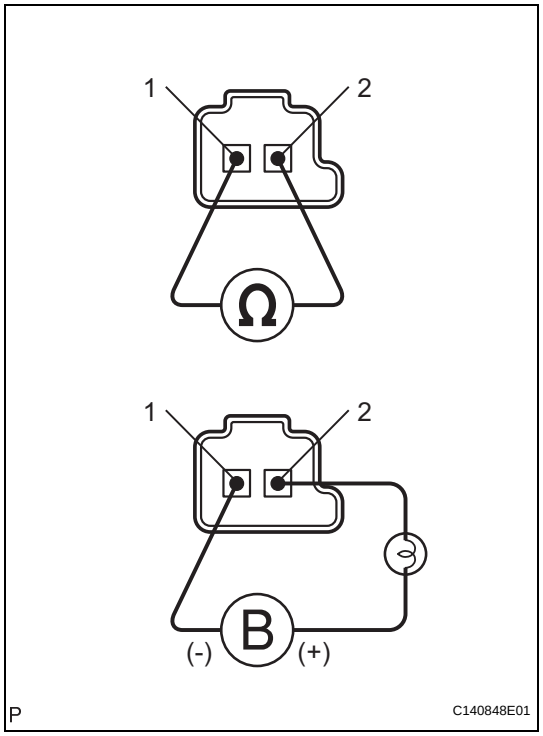

(a) Remove the shift solenoid valve SL3.
(b) Measure the resistance of the solenoid valve.
Standard resistance:
5.0 to 5.6 Ω at 20°C (68°F)
(c) Connect the battery's positive (+) lead with a 21 W bulb to terminal 2 and the negative (-) lead to terminal 1 of the solenoid valve connector. Then check that the valve moves and makes an operating noise.
OK:
Valve moves and makes operating noise.

NG → **REPLACE SHIFT SOLENOID VALVE SL3**

OK

3	INSPECT TRANSMISSION VALVE BODY ASSEMBLY

(a) Check the transmission valve body assembly.
OK:
There are no foreign objects on each valve.

NG → **REPAIR OR REPLACE TRANSMISSION VALVE BODY ASSEMBLY**

OK

4	INSPECT TORQUE CONVERTER CLUTCH ASSEMBLY

(a) Check the torque converter clutch assembly (see page AX-178).
OK:
The torque converter clutch operates normally.

NG → **REPLACE TORQUE CONVERTER CLUTCH ASSEMBLY**

OK

REPAIR OR REPLACE AUTOMATIC TRANSAXLE ASSEMBLY

DTC	P0798	Pressure Control Solenoid "C" Electrical (Shift Solenoid Valve SL3)

DESCRIPTION

Shifting from 1st to 5th is performed in combination with the ON and OFF operation of the shift solenoid valves SL1, SL2, SL3, S4 or SR which are controlled by the ECM. If an open or short circuit occurs in any of the shift solenoid valves, the ECM controls the remaining normal shift solenoid valves to allow the vehicle to be operated safely (see page AX-35).

DTC No.	DTC Detection Condition	Trouble Area
P0798	The ECM checks for an open or short in the shift solenoid valve SL3 circuit while driving and shifting gears (1 trip detection logic)	• Open or short in shift solenoid valve SL3 circuit • Shift solenoid valve SL3 • ECM

MONITOR DESCRIPTION

The ECM commands gear shifts by turning the shift solenoid valves ON/OFF. When there is an open or short circuit in any shift solenoid valve circuit, the ECM detects the problem and illuminates the MIL and stores the DTC. And the ECM performs the fail-safe function and turns the other normal shift solenoid valves ON/OFF. In case of an open or short circuit, the ECM stops sending current to the circuit (see page AX-35).

MONITOR STRATEGY

Related DTCs	P0798: Shift solenoid valve SL3/Range check
Required sensors/Components	Shift solenoid valve SL3
Frequency of operation	Continuous
Duration	1 sec.
MIL operation	Immediate
Sequence of operation	None

TYPICAL ENABLING CONDITIONS

The monitor will run whenever this DTC is not present.	None
Battery voltage	10 V or more
Ignition switch	ON
Starter	OFF

TYPICAL MALFUNCTION THRESHOLDS

Output signal duty	100%

COMPONENT OPERATING RANGE

Output signal duty	Less than 100%

WIRING DIAGRAM

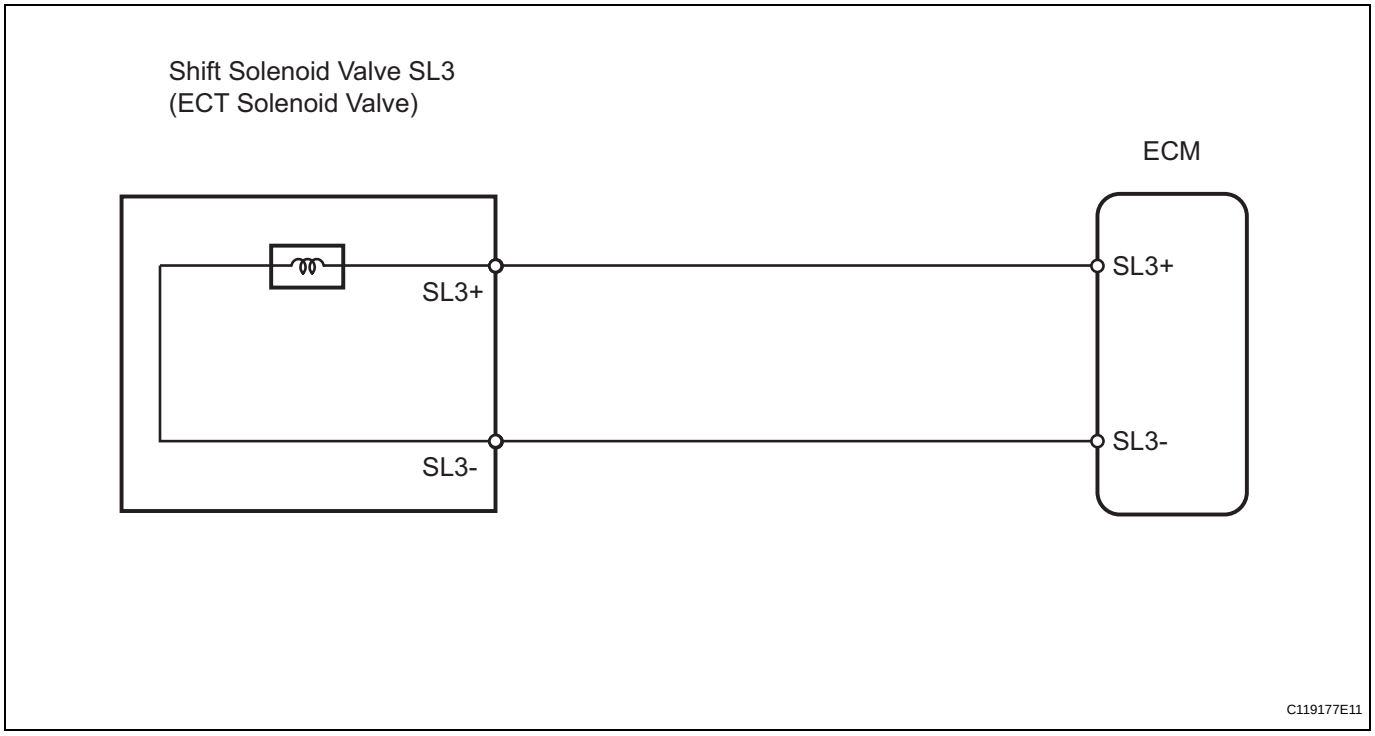

INSPECTION PROCEDURE

1	INSPECT TRANSMISSION WIRE (SHIFT SOLENOID VALVE SL3)

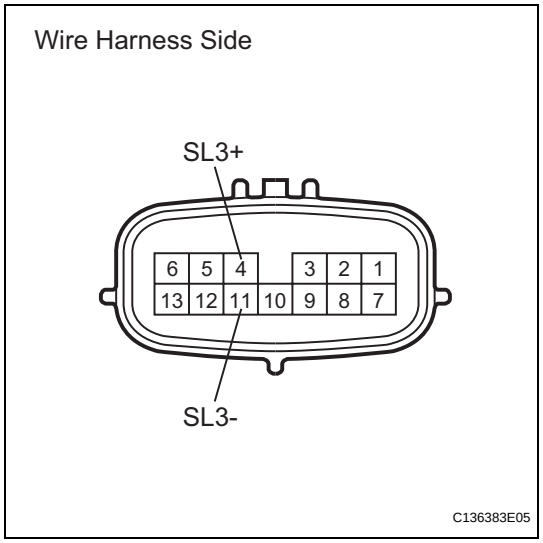

(a) Disconnect the B32 wire connector.
(b) Measure the resistance of the transmission wire.

Standard resistance

Tester Connection	Condition	Specified Condition
4 (SL3+) - 11 (SL3-)	20°C (68°F)	5.0 to 5.6 Ω
4 (SL3+) - Body ground	20°C (68°F)	1 MΩ or higher
11 (SL3-) - Body ground	20°C (68°F)	1 MΩ or higher

NG → **Go to step 3**

OK

2 CHECK WIRE HARNESS (TRANSMISSION WIRE - ECM)

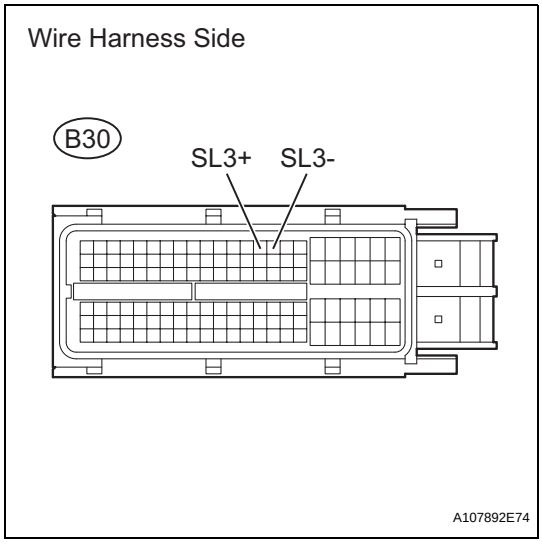

(a) Disconnect the B30 ECM connector.
(b) Measure the resistance of the wire harness side connector.
Standard resistance

Tester Connection	Condition	Specified Condition
B30-14 (SL3+) - B30-15 (SL3-)	20°C (68°F)	5.0 to 5.6 Ω
B30-14 (SL3+) - Body ground	20°C (68°F)	1 MΩ or higher
B30-15 (SL3-) - Body ground	20°C (68°F)	1 MΩ or higher

NG → **REPAIR OR REPLACE HARNESS AND CONNECTOR**

OK

REPLACE ECM

3 INSPECT SHIFT SOLENOID VALVE SL3

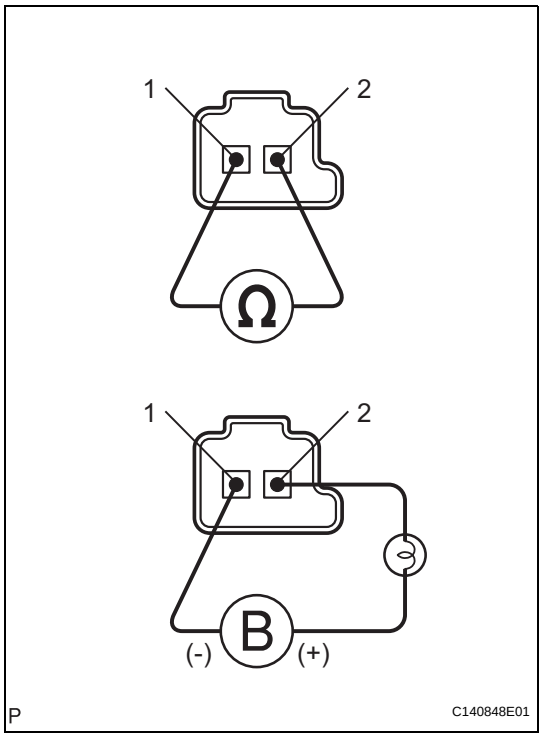

(a) Remove the shift solenoid valve SL3.
(b) Measure the resistance of the solenoid valve.
Standard resistance:
5.0 to 5.6 Ω at 20°C (68°F)
(c) Connect the battery's positive (+) lead with a 21 W bulb to terminal 2 and the negative (-) lead to terminal 1 of the solenoid valve connector. Then check that the valve moves and makes an operating noise.
OK:
Valve moves and makes operating noise.

NG → **REPLACE SHIFT SOLENOID VALVE SL3**

OK

REPAIR OR REPLACE TRANSMISSION WIRE

DTC	P0982	Shift Solenoid "D" Control Circuit Low (Shift Solenoid Valve S4)

DTC	P0983	Shift Solenoid "D" Control Circuit High (Shift Solenoid Valve S4)

DESCRIPTION

Shifting from 1st to 5th is performed in combination with the ON and OFF operation of the shift solenoid valves SL1, SL2, SL3, S4 or SR, which are controlled by the ECM. If an open or short circuit occurs in any of the shift solenoid valves, the ECM controls the remaining normal shift solenoid valves to allow the vehicle to be operated safely (see page AX-35).

DTC No.	DTC Detection Condition	Trouble Area
P0982	ECM detects short in solenoid valve S4 circuit 2 times when solenoid valve S4 is operated (1 trip detection logic)	• Short in shift solenoid valve S4 circuit • Shift solenoid valve S4 • ECM
P0983	ECM detects open in solenoid valve S4 circuit 2 times when solenoid valve S4 is not operated (1 trip detection logic)	• Open in shift solenoid valve S4 circuit • Shift solenoid valve S4 • ECM

MONITOR DESCRIPTION

This DTC indicates an open or short in the shift solenoid valve S4 circuit. The ECM commands gear shifts by turning the shift solenoid valves ON/OFF. When there is an open or short circuit in any shift solenoid valve circuit, the ECM detects the problem, illuminates the MIL and stores the DTC. Also, the ECM performs the fail-safe function and turns the other normal shift solenoid valves ON/OFF. In case of an open or short circuit, the ECM stops sending current to the circuit (see page AX-35).

MONITOR STRATEGY

Related DTCs	P0982: Shift solenoid valve S4/Range check (Low resistance) P0983: Shift solenoid valve S4/Range check (High resistance)
Required sensors/Components	Shift solenoid valve S4
Frequency of operation	Continuous
Duration	0.064 sec.
MIL operation	Immediate
Sequence of operation	None

TYPICAL ENABLING CONDITIONS

P0982: Range check (Low resistance)

The monitor will run whenever this DTC is not present.	None
Shift solenoid valve S4	ON
Battery voltage	8 V or more
Ignition switch	ON
Starter	OFF

P0983: Range check (High resistance)

The monitor will run whenever this DTC is not present.	None
Shift solenoid valve S4	OFF
Battery voltage	8 V or more
Ignition switch	ON
Starter	OFF

TYPICAL MALFUNCTION THRESHOLDS

P0982: Range check (Low resistance)

Shift solenoid valve S4 resistance	8 Ω or less

P0983: Range check (High resistance)

Shift solenoid valve S4 resistance	100 kΩ or more

COMPONENT OPERATING RANGE

Shift solenoid valve S4	Resistance: 11 to 15 Ω at 20°C (68°F)

WIRING DIAGRAM

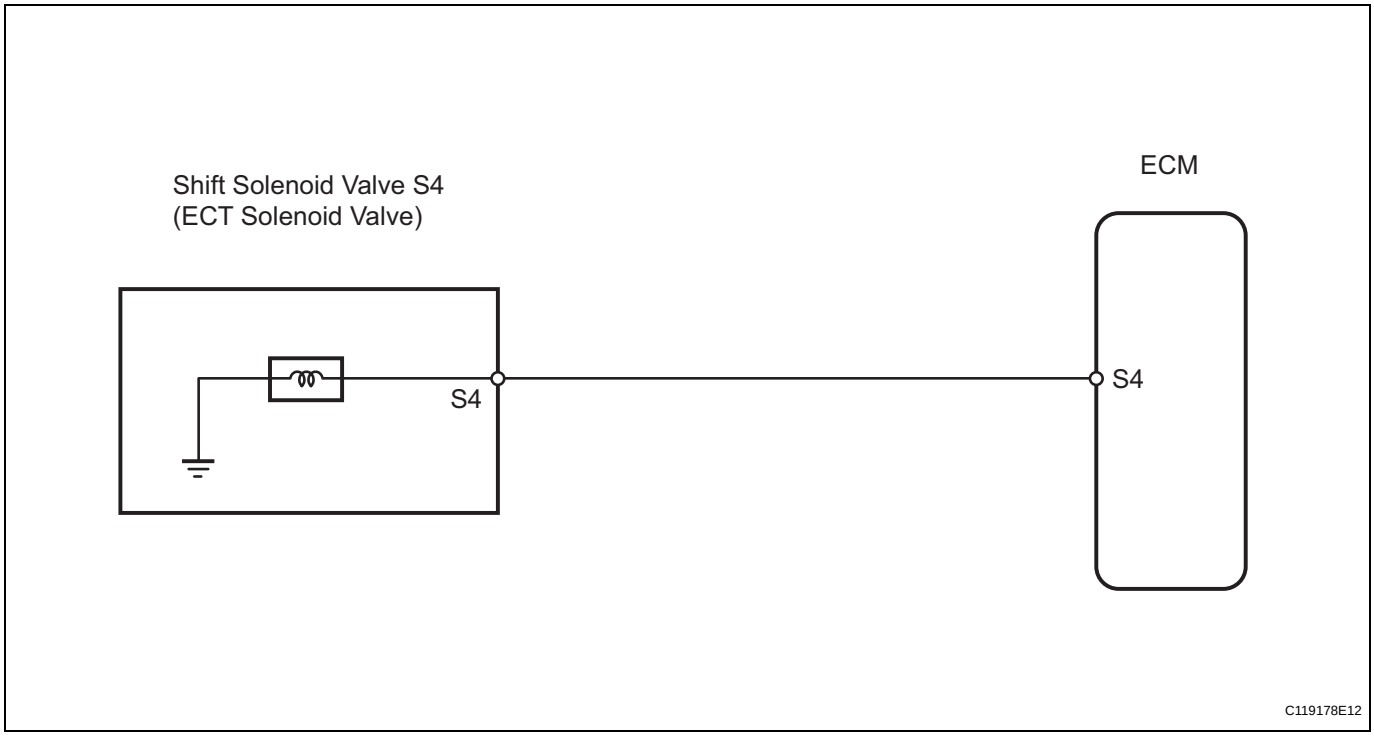

INSPECTION PROCEDURE

1 INSPECT TRANSMISSION WIRE (SHIFT SOLENOID VALVE S4)

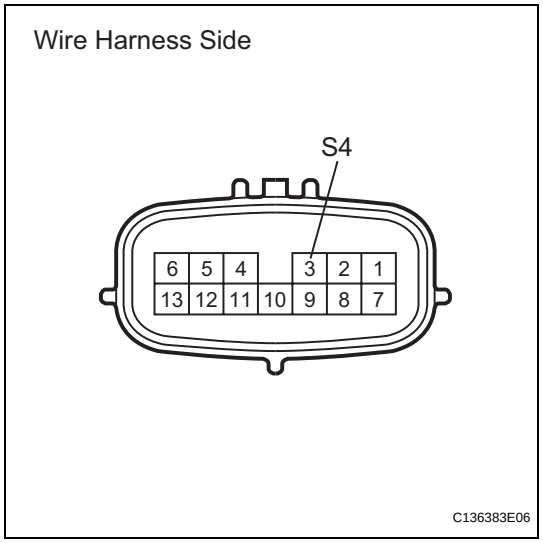

(a) Disconnect the B32 wire connector.
(b) Measure the resistance of the transmission wire.

Standard resistance

Tester Connection	Condition	Specified Condition
3 (S4) - Body ground	20°C (68°F)	11 to 15 Ω

NG → **Go to step 3**

OK

2 CHECK WIRE HARNESS (TRANSMISSION WIRE - ECM)

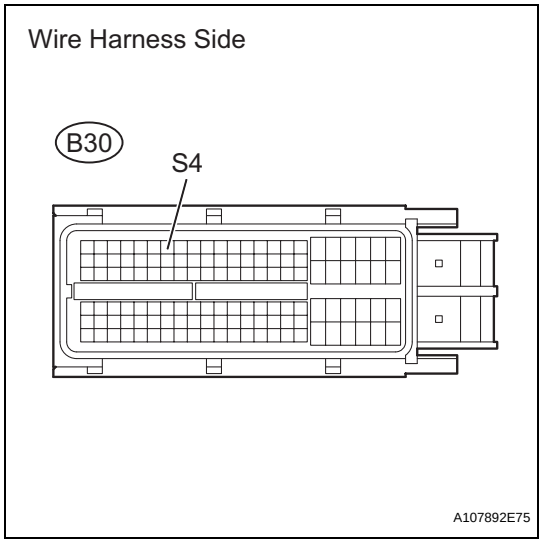

(a) Disconnect the B30 ECM connector.
(b) Measure the resistance of the wire harness side connector.

Standard resistance

Tester Connection	Condition	Specified Condition
B30-7 (S4) - Body ground	20°C (68°F)	11 to 15 Ω

NG → **REPAIR OR REPLACE HARNESS AND CONNECTOR**

OK

REPLACE ECM

3	INSPECT SHIFT SOLENOID VALVE S4

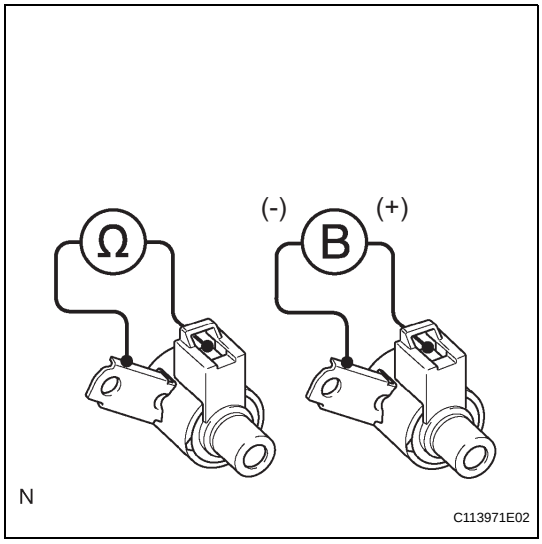

(a) Remove the shift solenoid valve S4.
(b) Measure the resistance of the solenoid valve.
Standard resistance:
11 to 15 Ω at 20°C (68°F)
(c) Connect the battery's positive (+) lead to the terminal of the solenoid valve connector, and the negative (-) lead to the solenoid body. Then check that the valve moves and makes an operating noise.
OK:
Valve moves and makes operating noise.

NG → **REPLACE SHIFT SOLENOID VALVE S4**

OK

REPAIR OR REPLACE TRANSMISSION WIRE

DTC	P0985	Shift Solenoid "E" Control Circuit Low (Shift Solenoid Valve SR)

DTC	P0986	Shift Solenoid "E" Control Circuit High (Shift Solenoid Valve SR)

DESCRIPTION

Shifting from 1st to 5th is performed in combination with the ON and OFF operation of the shift solenoid valves SL1, SL2, SL3, S4 or SR, which are controlled by the ECM. If an open or short circuit occurs in any of the shift solenoid valves, the ECM controls the remaining normal shift solenoid valves to allow the vehicle to be operated safely (see page AX-35).

DTC No.	DTC Detection Condition	Trouble Area
P0985	ECM detects short in solenoid valve SR circuit 2 times when solenoid valve SR is operated (1 trip detection logic)	• Short in shift solenoid valve SR circuit • Shift solenoid valve SR • ECM
P0986	ECM detects open in solenoid valve SR circuit 2 times when solenoid valve SR is not operated (1 trip detection logic)	• Open in shift solenoid valve SR circuit • Shift solenoid valve SR • ECM

MONITOR DESCRIPTION

The ECM commands gear shifts by turning the shift solenoid valves ON/OFF. When there is an open or short circuit in any shift solenoid valve circuit, the ECM detects the problem and illuminates the MIL and stores the DTC. And the ECM performs the fail-safe function and turns the other normal shift solenoid valves ON/OFF. In case of an open or short circuit, the ECM stops sending current to the circuit (see page AX-35).

MONITOR STRATEGY

Related DTCs	P0985: Shift solenoid valve SR/Range check (Low resistance) P0986: Shift solenoid valve SR/Range check (High resistance)
Required sensors/Components	Shift solenoid valve SR
Frequency of operation	Continuous
Duration	0.064 sec.
MIL operation	Immediate
Sequence of operation	None

TYPICAL ENABLING CONDITIONS

P0985: Range check (Low resistance):

The monitor will run whenever this DTC is not present.	None
Shift solenoid valve SR	ON
Battery voltage	8 V or more
Ignition switch	ON
Starter	OFF

P0986: Range check (High resistance):

The monitor will run whenever this DTC is not present.	None
Shift solenoid valve SR	OFF
Battery voltage	8 V or more
Ignition switch	ON
Starter	OFF

TYPICAL MALFUNCTION THRESHOLDS

P0985: Range check (Low resistance):

Shift solenoid valve SR resistance	8 Ω or less

P0986: Range check (High resistance):

Shift solenoid valve SR resistance	100 kΩ or more

COMPONENT OPERATING RANGE

Shift solenoid valve SR	Resistance: 11 to 15 Ω at 20°C (68°F)

WIRING DIAGRAM

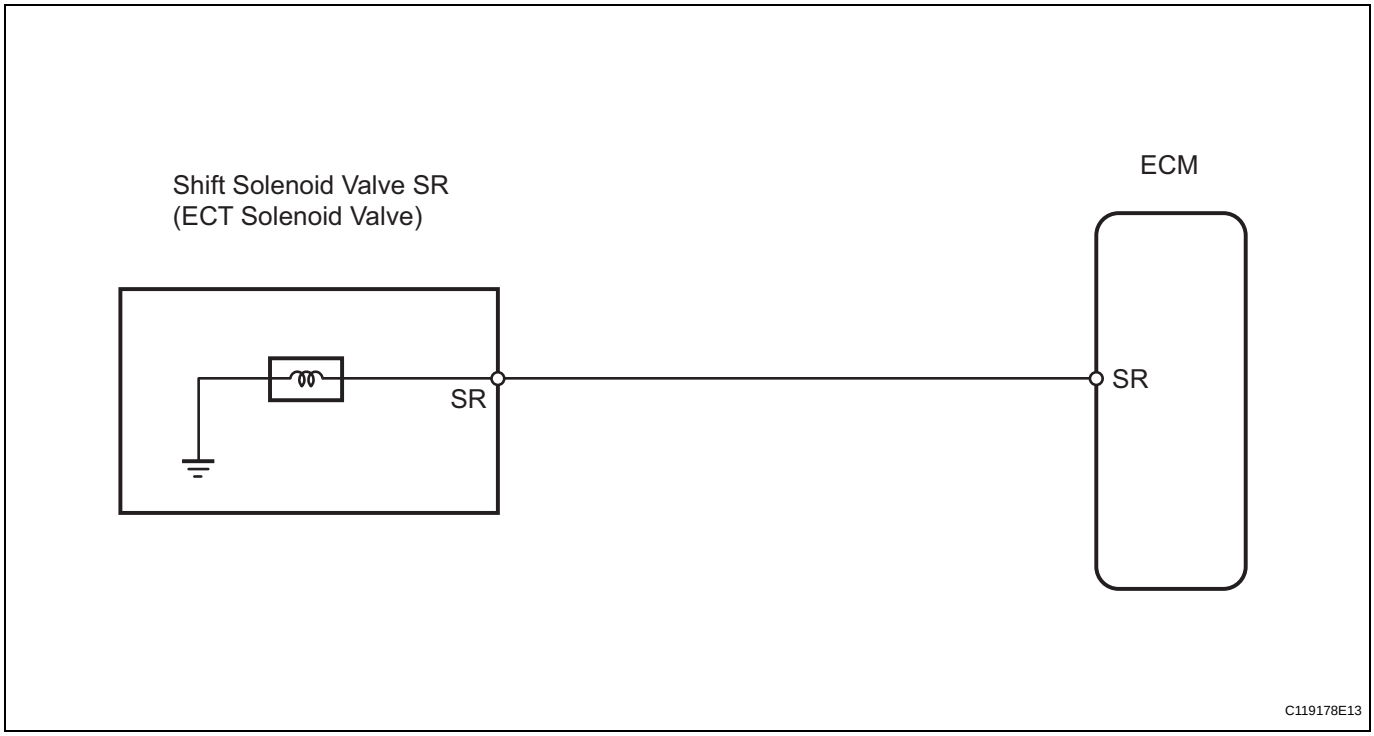

INSPECTION PROCEDURE

1 INSPECT TRANSMISSION WIRE (SHIFT SOLENOID VALVE SR)

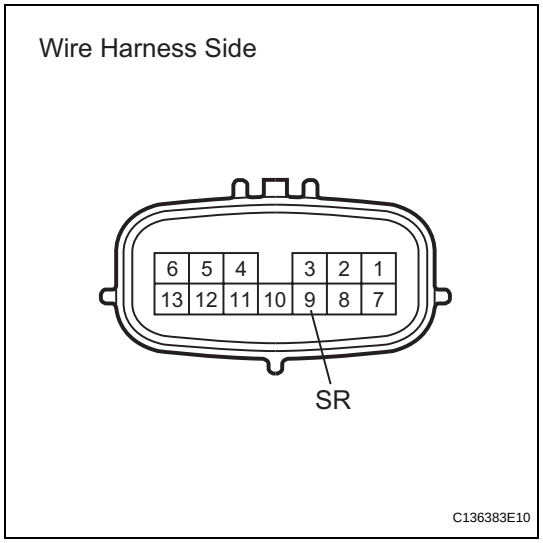

(a) Disconnect the B32 wire connector.
(b) Measure the resistance of the transmission wire.

Standard resistance

Tester Connection	Condition	Specified Condition
9 (SR) - Body ground	20°C (68°F)	11 to 15 Ω

NG → **Go to step 3**

OK

2 CHECK WIRE HARNESS (TRANSMISSION - ECM)

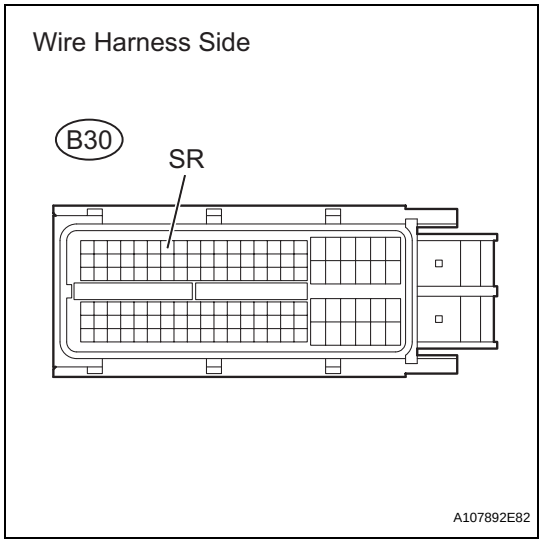

(a) Disconnect the B30 ECM connector.
(b) Measure the resistance of the wire harness side connector.

Standard resistance

Tester Connection	Condition	Specified Condition
B30-8 (SR) - Body ground	20°C (68°F)	11 to 15 Ω

NG → **REPAIR OR REPLACE HARNESS AND CONNECTOR**

OK

REPLACE ECM

3	INSPECT SHIFT SOLENOID VALVE SR

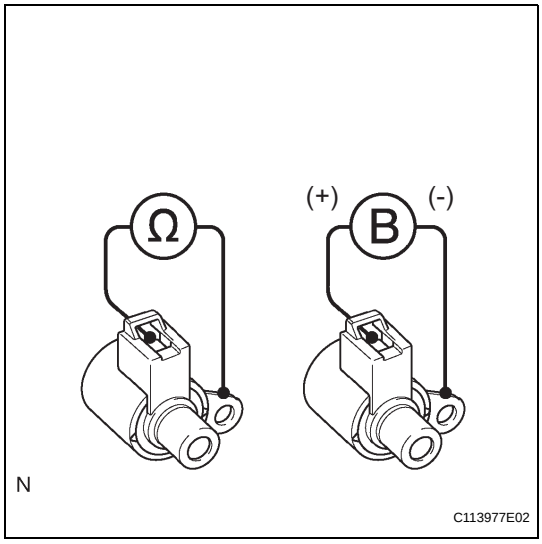

(a) Remove the shift solenoid valve SR.
(b) Measure the resistance of the solenoid valve.
Standard resistance:
11 to 15 Ω at 20°C (68°F)
(c) Connect the battery's positive (+) lead to the terminal of the solenoid valve connector, and the negative (-) lead to the solenoid body. Then check that the valve moves and makes an operating noise.
OK:
Valve moves and makes operating noise.

NG → **REPLACE SHIFT SOLENOID VALVE SR**

OK

REPAIR OR REPLACE TRANSMISSION WIRE

DTC	P2714	Pressure Control Solenoid "D" Performance (Shift Solenoid Valve SLT)

DESCRIPTION

The linear solenoid valve (SLT) controls the transmission line pressure for smooth transmission operation based on signals from the throttle position sensor and the vehicle speed sensor. The ECM adjusts the duty ratio* of the SLT solenoid valve to control hydraulic line pressure coming from the primary regulator valve. Appropriate line pressure assures smooth shifting with varying engine outputs.

HINT:

*: The duty ratio is the ratio of the current ON time (A) to the total of the current ON and OFF time (A + B).

Duty Ratio (%) = A / (A + B) x 100

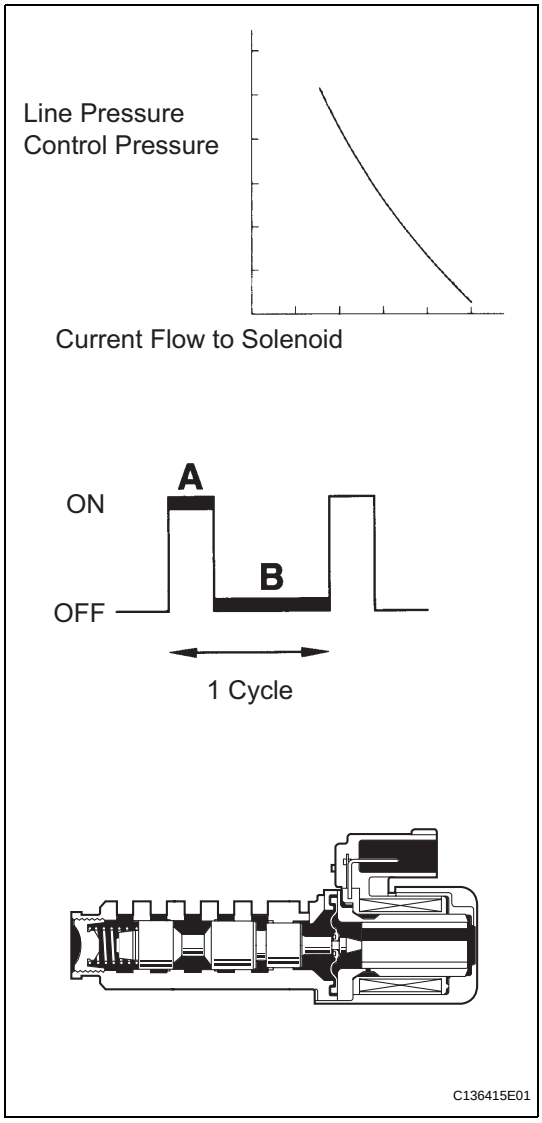

DTC No.	DTC Detection Condition	Trouble Area
P2714	ECM detects malfunction on SLT (ON side) according to difference in revolutions of turbine (input), intermediate and output shaft (2 trip detection logic)	• Shift solenoid valve SLT remains closed • Valve body is blocked • Torque converter clutch • Automatic transaxle (clutch, brake, gear, etc.) • ECM

MONITOR DESCRIPTION

In any forward position, when the difference between the revolutions of the turbine, intermediate and output shaft exceeds the specified value (varies with intermediate, output speed) determined by the ECM, the ECM illuminates the MIL and outputs the DTC. When shift solenoid valve SLT remains on, the oil pressure goes down and the clutch engagement force decreases.

NOTICE:

If you continue driving under these conditions, the clutch will burn out and the vehicle will no longer be drivable.

MONITOR STRATEGY

Related DTCs	P2714: Shift solenoid valve SLT/ON malfunction
Required sensors/Components	Shift solenoid valve SLT, Speed sensor (NT), Speed sensor (NC), Crankshaft position sensor (NE)
Frequency of operation	Continuous
Duration	0.5 sec.
MIL operation	2 driving cycles
Sequence of operation	None

TYPICAL ENABLING CONDITIONS

ON malfunction:

The monitor will run whenever this DTC is not present.	None
Transmission range	"D"
ATF temperature	-20°C (-4°F) or more
ATF temperature sensor circuit	Not circuit malfunction
Turbine speed sensor circuit	Not circuit malfunction
Intermediate shaft speed sensor circuit	Not circuit malfunction
Output speed sensor circuit	Not circuit malfunction
Shift solenoid valve SL1 circuit	Not circuit malfunction
Shift solenoid valve SL2 circuit	Not circuit malfunction
Shift solenoid valve SL3 circuit	Not circuit malfunction
Shift solenoid valve S4 circuit	Not circuit malfunction
Shift solenoid valve SR circuit	Not circuit malfunction
Shift solenoid valve DSL circuit	Not circuit malfunction
Shift solenoid valve SLT circuit	Not circuit malfunction
Electronic throttle system	Not circuit malfunction

ON malfunction (a):

ECM gearshift command	2nd
Temporary MAIN gear	1st, 2nd, 3rd or 4th
NT - NC x Temporary MAIN gear ratio NT: Input (turbine) speed NC: Intermediate shaft speed	100 rpm or more at intermediate shaft speed 1,000 rpm
Temporary U/D gear	Low or High
NC - NO x Temporary U/D gear ratio NO: Output speed	300 rpm or more at output speed 1,000 rpm
TT: Turbine Torque	192 N*m or more
NT	250 rpm or more
NC	250 rpm or more
NO	250 rpm or more

ON malfunction (b):

ECM gearshift command	1st, 3rd or 3.5th (MAIN: 3rd and U/D: High)

Temporary MAIN gear	1st, 2nd, 3rd or 4th
NT - NC x Temporary MAIN gear ratio NT: Input (turbine) speed NC: Intermediate shaft speed	100 rpm or more at intermediate shaft speed 1,000 rpm
Temporary U/D gear	Low or High
NC - NO x Temporary U/D gear ratio NO: Output speed	300 rpm or more at output speed 1,000 rpm
TT: Turbine Torque	900 N*m or more
NT	250 rpm or more
NC	250 rpm or more
NO	250 rpm or more

ON malfunction (c):

ECM gearshift command	4th or 5th
Temporary MAIN gear	1st, 2nd, 3rd or 4th
NT - NC x Temporary MAIN gear ratio NT: Input (turbine) speed NC: Intermediate shaft speed	100 rpm or more at intermediate shaft speed 1,000 rpm
Temporary U/D gear	Low or High
NC - NO x Temporary U/D gear ratio NO: Output speed	300 rpm or more at output speed 1,000 rpm
TT: Turbine Torque	189 N*m or more
NT	250 rpm or more
NC	250 rpm or more
NO	250 rpm or more

TYPICAL MALFUNCTION THRESHOLDS

[ON malfunction]

Detection condition: Total accumulated time of ON malfunctions (a), (b) and (c) is 1 second or more

ON malfunction (a):

NT - NC x 2nd gear ratio	100 rpm or more at intermediate shaft speed 1,000 rpm
NC - NO x Low gear ratio	300 rpm or more at output speed 1,000 rpm
Duration	1 sec. or more

ON malfunction (b):

NT - NC x 1st gear ratio, NT - NC x 3rd gear ratio or NT - NC x 3.5th gear ratio	100 rpm or more at intermediate shaft speed 1,000 rpm
NC - NO x Low gear ratio or NC - NO x High gear ratio	300 rpm or more at output speed 1,000 rpm
Duration	1 sec. or more

ON malfunction (c):

NT - NC x 4th gear ratio or NT - NC x 5th gear ratio	100 rpm or more at intermediate shaft speed 1,000 rpm
NC - NO x Low gear ratio or NC - NO x High gear ratio	300 rpm or more at output speed 1,000 rpm
Duration	1 sec. or more

WIRING DIAGRAM

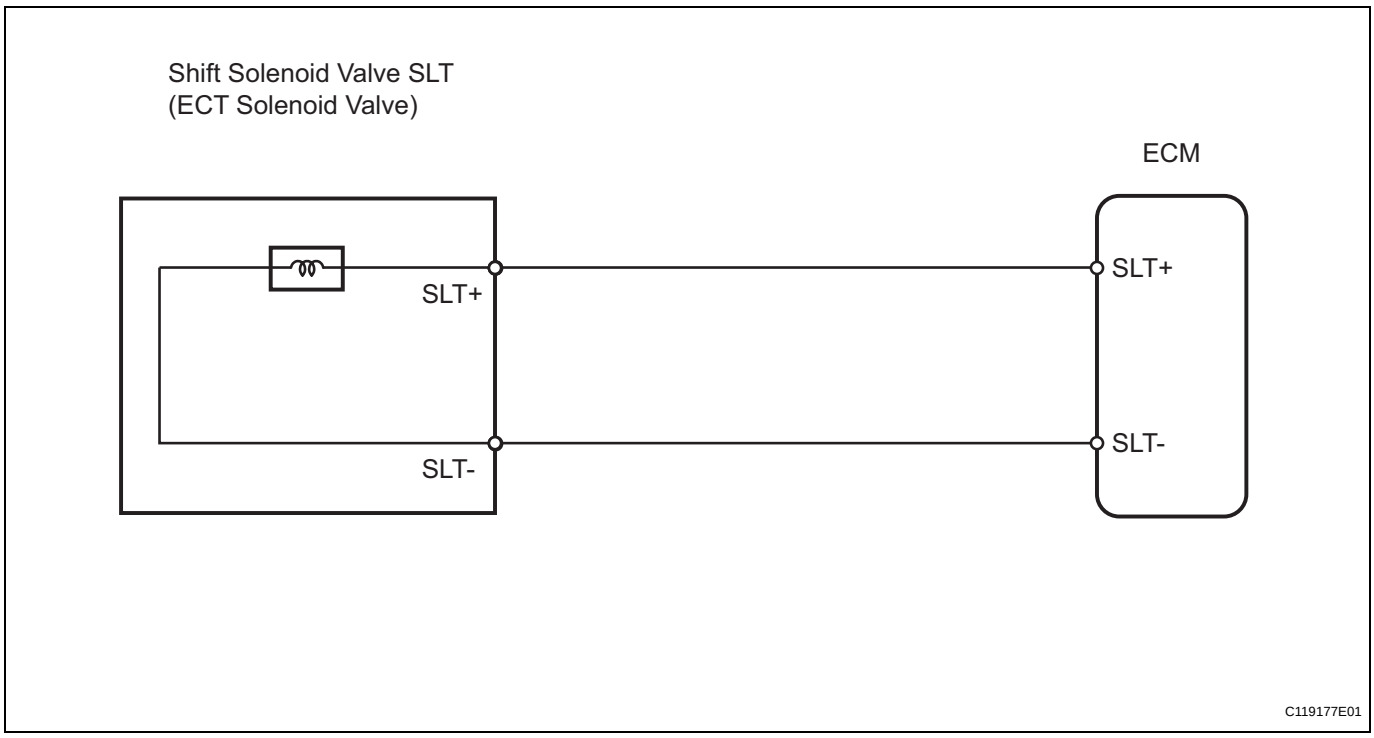

INSPECTION PROCEDURE

HINT:
Performing the intelligent tester's ACTIVE TEST allows relay, VSV, actuator and other items to be operated without removing any parts. Performing the ACTIVE TEST early in troubleshooting is one way to save time.
The DATA LIST can be displayed during the ACTIVE TEST.

1. Warm up the engine.
2. Turn the ignition switch OFF.
3. Connect the intelligent tester to the CAN VIM. Then connect the CAN VIM to the DLC3.
4. Turn the ignition switch ON and turn the tester ON.
5. Enter the following menus: DIAGNOSIS / ENHANCED OBD II / ACTIVE TEST.
6. Perform the ACTIVE TEST.

ECM:

Item	Test Details	Diagnostic Note
SOLENOID (SLT)*	[Test Details] Operate shift solenoid SLT and raise line pressure [Vehicle Condition] • Vehicle stopped • IDL: ON HINT: OFF: Line pressure up (when Active Test "SOLENOID (SLT)" is performed, ECM commands SLT solenoid to turn OFF) ON: No action (normal operation)	-

HINT:
*: "SOLENOID (SLT)" in the ACTIVE TEST is performed to check the line pressure changes by connecting SST to the automatic transaxle, which is used in the HYDRAULIC TEST (see page AX-18) as well. Please note that the pressure values in the ACTIVE TEST and HYDRAULIC TEST are different.

1 CHECK OTHER DTCS OUTPUT (IN ADDITION TO DTC P2714)

(a) Connect the intelligent tester to the CAN VIM. Then connect the CAN VIM to the DLC3.
(b) Turn the ignition switch ON and turn the tester ON.
(c) Enter the following menus: DIAGNOSIS / ENHANCED OBD II / DTC INFO / CURRENT CODES.
(d) Read the DTCs using the tester.

Result

Display (DTC output)	Proceed to
Only P2714 is output	A
P2714 and other DTCs are output	B

HINT:
If any other codes besides P2714 are output, perform troubleshooting for those DTCs first.

B → **GO TO DTC CHART**

A

2 INSPECT SHIFT SOLENOID VALVE SLT

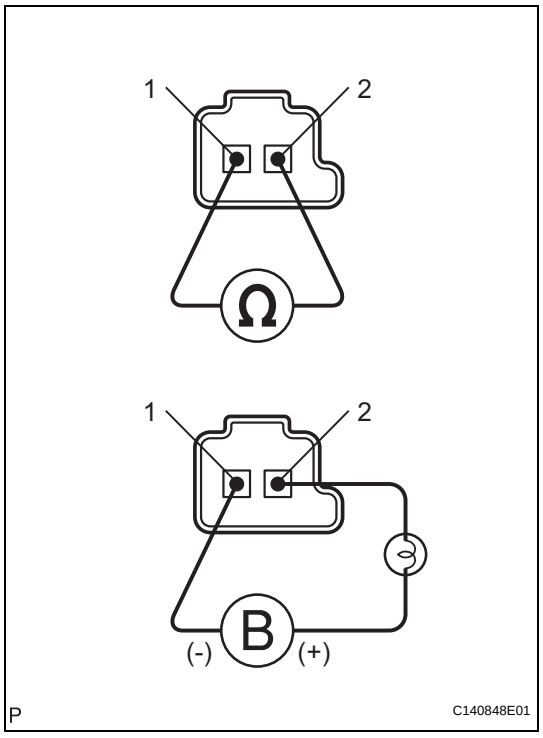

(a) Remove the shift solenoid valve SLT.
(b) Measure the resistance of the solenoid valve.
Standard resistance:
5.0 to 5.6 Ω at 20°C (68°F)
(c) Connect the battery's positive (+) lead with a 21 W bulb to terminal 2 and the negative (-) lead to terminal 1 of the solenoid valve connector. Then check that the valve moves and makes an operating noise.
OK:
Valve moves and makes operating noise.

NG → **REPLACE SHIFT SOLENOID VALVE SLT**

OK

3 INSPECT TRANSMISSION VALVE BODY ASSEMBLY

(a) Check the transmission valve body assembly.
OK:
There are no foreign objects on each valve.

NG → **REPAIR OR REPLACE TRANSMISSION VALVE BODY ASSEMBLY**

OK

4	INSPECT TORQUE CONVERTER CLUTCH ASSEMBLY

(a) Check the torque converter clutch assembly (see page AX-178).

OK:

The torque converter clutch operates normally.

NG → **REPLACE TORQUE CONVERTER CLUTCH ASSEMBLY**

OK

REPAIR OR REPLACE AUTOMATIC TRANSAXLE ASSEMBLY

DTC	P2716	Pressure Control Solenoid "D" Electrical (Shift Solenoid Valve SLT)

DESCRIPTION

Refer to DTC P2714 (see page AX-114).

DTC No.	DTC Detection Condition	Trouble Area
P2716	Conditions (a) and (b) below are detected for 1 sec. or more (1 trip detection logic): (a) SLT - terminal: 0 V (b) SLT - terminal: 12 V	• Open or short in shift solenoid valve SLT circuit • Shift solenoid valve SLT • ECM

MONITOR DESCRIPTION

When an open or short in the shift solenoid valve SLT circuit is detected, the ECM interprets this as a fault. The ECM will illuminate the MIL and store the DTC.

MONITOR STRATEGY

Related DTCs	P2716: Shift solenoid valve SLT/Range check
Required sensors/Components	Shift solenoid valve SLT
Frequency of operation	Continuous
Duration	1 sec.
MIL operation	Immediate
Sequence of operation	None

TYPICAL ENABLING CONDITIONS

The monitor will run whenever this DTC is not present.	None
Battery voltage	11 V or more
Solenoid current cut status	Not cut
CPU command duty ratio to SLT	19% or more
Starter	OFF
Ignition switch	ON

TYPICAL MALFUNCTION THRESHOLDS

Solenoid status from IC	Fail (open or short)

COMPONENT OPERATING RANGE

Shift solenoid valve SLT	Resistance: 5.0 to 5.6 Ω at 20°C (68°F)

WIRING DIAGRAM

Refer to DTC P2714 (see page AX-117).

INSPECTION PROCEDURE

1 INSPECT TRANSMISSION WIRE (SHIFT SOLENOID VALVE SLT)

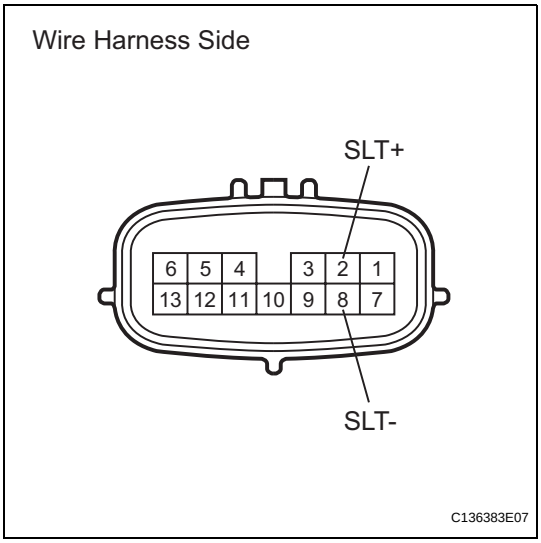

(a) Disconnect the B32 wire connector.
(b) Measure the resistance of the transmission wire.

Standard resistance

Tester Connection	Condition	Specified Condition
2 (SLT+) - 8 (SLT-)	20°C (68°F)	5.0 to 5.6 Ω
2 (SLT+) - Body ground	20°C (68°F)	1 MΩ or higher
8 (SLT-) - Body ground	20°C (68°F)	1 MΩ or higher

NG → **Go to step 3**

OK

2 CHECK WIRE HARNESS (TRANSMISSION WIRE - ECM)

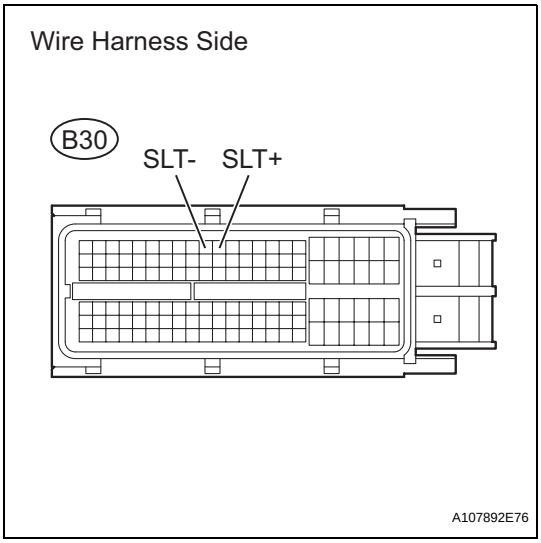

(a) Disconnect the B30 ECM connector.
(b) Measure the resistance of the wire harness side connector.

Standard resistance

Tester Connection	Condition	Specified Condition
B30-11 (SLT+) - B30-10 (SLT-)	20°C (68°F)	5.0 to 5.6 Ω
B30-11 (SLT+) - Body ground	20°C (68°F)	1 MΩ or higher
B30-10 (SLT-) - Body ground	20°C (68°F)	1 MΩ or higher

NG → **REPAIR OR REPLACE HARNESS AND CONNECTOR**

OK

REPLACE ECM

3	INSPECT SHIFT SOLENOID VALVE SLT

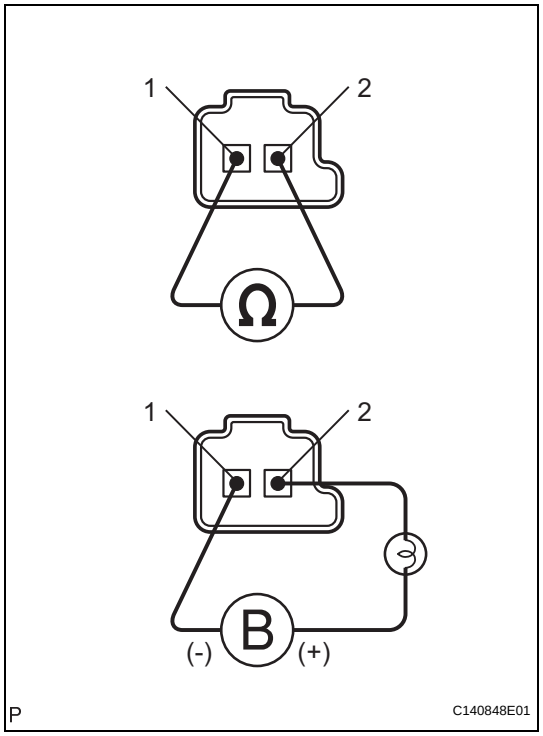

(a) Remove the shift solenoid valve SLT.
(b) Measure the resistance of the solenoid valve.
Standard resistance:
5.0 to 5.6 Ω at 20°C (68°F)
(c) Connect the battery's positive (+) lead with a 21 W bulb to terminal 2 and the negative (-) lead to terminal 1 of the solenoid valve connector. Then check that the valve moves and makes an operating noise.
OK:
Valve moves and makes operating noise.

NG → **REPLACE SHIFT SOLENOID VALVE SLT**

OK

REPAIR OR REPLACE TRANSMISSION WIRE

DTC	P2769	Torque Converter Clutch Solenoid Circuit Low (Shift Solenoid Valve DSL)

DTC	P2770	Torque Converter Clutch Solenoid Circuit High (Shift Solenoid Valve DSL)

DESCRIPTION

The shift solenoid valve DSL is turned ON and OFF by signals from the ECM to control the hydraulic pressure acting on the lock-up relay valve, which then controls operation of the lock-up clutch.

DTC No.	DTC Detection Condition	Trouble Area
P2769	ECM detects short in shift solenoid valve DSL circuit when shift solenoid valve DSL is operated (2 trip detection logic)	• Short in shift solenoid valve DSL circuit • Shift solenoid valve DSL • ECM
P2770	ECM detects open in shift solenoid valve DSL circuit when shift solenoid valve DSL is not operated (2 trip detection logic)	• Open in shift solenoid valve DSL circuit • Shift solenoid valve DSL • ECM

Fail-safe function:
If the ECM detects a malfunction, it turns the shift solenoid valve DSL OFF.

MONITOR DESCRIPTION

Torque converter lock-up is controlled by the ECM based on engine rpm, engine load, engine temperature, vehicle speed, transmission temperature, and shift position selection. The ECM determines the lock-up status of the torque converter by comparing the engine rpm (NE) to the input rpm (NT). The ECM calculates the actual transmission gear by comparing the input rpm (NT) to the output rpm (SP2). When conditions are appropriate, the ECM requests "lock-up" by applying control voltage to the shift solenoid valve DSL. When the shift solenoid valve DSL is opened, the shift solenoid valve DSL applies pressure to the lock-up relay valve and locks the torque converter clutch. If the ECM detects an open or short in the shift solenoid valve DSL circuit, the ECM interprets this as a fault in the shift solenoid valve DSL or its circuit. The ECM will illuminate the MIL and store a DTC.

MONITOR STRATEGY

Related DTCs	P2769: Shift solenoid valve DSL/Range check (Low resistance) P2770: Shift solenoid valve DSL/Range check (High resistance)
Requires sensors/Components	Shift solenoid valve DSL
Frequency of operation	Continuous
Duration	0.064 sec.
MIL operation	2 driving cycles
Sequence of operation	None

TYPICAL ENABLING CONDITIONS

P2769: Range check (Low resistance)

The monitor will run whenever this DTC is not present	None
Shift solenoid valve DSL	ON
Solenoid current cut status	Not cut
Battery voltage	8 V or more
Starter	OFF
Ignition switch	ON

P2770: Range check (High resistance)

The monitor will run whenever this DTC is not present	None

Shift solenoid valve DSL	ON
Battery voltage	8 V or more
Starter	OFF
Ignition switch	ON

TYPICAL MALFUNCTION THRESHOLDS

P2769: Range check (Low resistance)

Shift solenoid valve DSL resistance	8 Ω or less

P2770: Range check (High resistance)

Shift solenoid valve DSL resistance	100 kΩ or more

COMPONENT OPERATING RANGE

Shift solenoid valve DSL	Resistance: 11 to 13 Ω at 20°C (68°F)

WIRING DIAGRAM

Refer to DTC P0741 (see page AX-67).

INSPECTION PROCEDURE

1 INSPECT TRANSMISSION WIRE (SHIFT SOLENOID VALVE DSL)

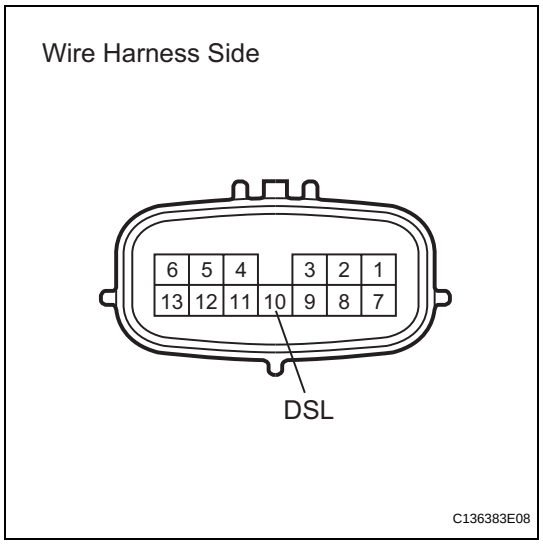

(a) Disconnect the B32 wire connector.
(b) Measure the resistance of the transmission wire.

Standard resistance

Tester Connection	Condition	Specified Condition
10 (DSL) - Body ground	20°C (68°F)	11 to 13 Ω

NG → **Go to step 3**

OK

2	CHECK WIRE HARNESS (TRANSMISSION WIRE - ECM)

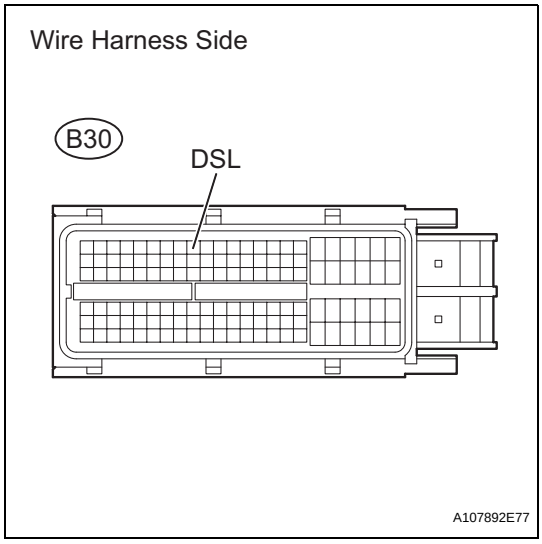

(a) Disconnect the B30 ECM connector.
(b) Measure the resistance of the wire harness side connector.

Standard resistance

Tester Connection	Condition	Specified Condition
B30-9 (DSL) - Body ground	20°C (68°F)	11 to 13 Ω

NG → **REPAIR OR REPLACE HARNESS AND CONNECTOR**

OK

REPLACE ECM

3	INSPECT SHIFT SOLENOID VALVE DSL

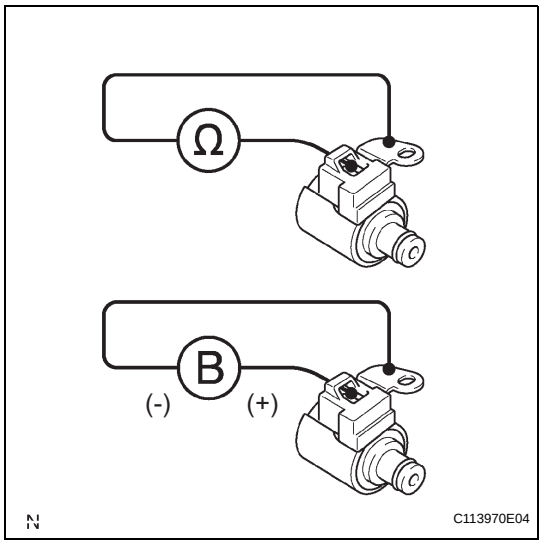

(a) Remove the shift solenoid valve DSL.
(b) Measure the resistance between the solenoid valve terminal and solenoid valve body.

Standard resistance:

11 to 13 Ω at 20°C (68°F)

(c) Connect the battery's positive (+) lead to the terminal of the solenoid valve connector, and the negative (-) lead to the solenoid body. Then check that the valve moves and makes an operating noise.

OK:

Valve moves and makes operating noise.

NG → **REPLACE SHIFT SOLENOID VALVE DSL**

OK

REPAIR OR REPLACE TRANSMISSION WIRE

AUTOMATIC TRANSAXLE SYSTEM

PRECAUTION

NOTICE:

- **Perform the RESET MEMORY procedures (A/T initialization) when replacing the automatic transaxle assembly, engine assembly or ECM (see page AX-20).**
- **Perform the REGISTRATION (VIN registration) when replacing the ECM (see page ES-14).**

HINT:

RESET MEMORY cannot be completed by only reconnecting the cable to the negative (-) battery terminal.

CAUTION:

When using compressed air, always aim away from yourself to prevent Automatic Transmission Fluid (ATF) or kerosene from spraying on your face.

NOTICE:

- **The automatic transaxle is composed of precision-made parts, necessitating careful inspection before reassembly because even a small nick could cause fluid leakage or affect performance.**
- **The procedures are organized so that you work on only one component group at a time. This will help avoid confusion with similar-looking parts of different sub-assemblies being on your workbench at the same time.**
- **The component groups are inspected and repaired from the converter housing side.**
- **Whenever possible, complete the inspection, repair and reassembly before proceeding to the next component group. If a defect is found in a certain component group during reassembly, inspect and repair this group immediately. If a component group cannot be assembled because parts are being ordered, be sure to keep all parts of the group in a separate container while proceeding with disassembly, inspection, repair and reassembly of other component groups.**
- **Use of Toyota Genuine ATF WS is recommended.**
- **All disassembled parts should be washed clean, and compressed air should be blown through any fluid passages and holes.**
- **Dry all parts with compressed air. Never use cloth.**
- **The recommended ATF or kerosene should be used for cleaning.**
- **After cleaning, the parts should be arranged in the order they were removed for efficient inspection, repairs, and reassembly.**
- **When disassembling a valve body, be sure to match each valve with its corresponding spring.**

- **New discs for the brakes and clutches that will be used for replacement must be soaked in ATF for at least 15 minutes before reassembly.**
- **All oil seal rings, clutch discs, clutch plates, rotating parts, and sliding surfaces should be coated with ATF prior to reassembly.**
- **All old gaskets and rubber O-rings must be replaced.**
- **Do not apply adhesive cement to gaskets and similar parts.**
- **Make sure that the ends of the snap rings are not aligned with any cutouts. Also make sure that snap rings are correctly installed into the grooves.**
- **If a worn bushing is to be replaced, the sub-assembly containing the bushing must also be replaced.**
- **Check the thrust bearings and races for wear or damage. Replace them if necessary.**
- **Use petroleum jelly to keep parts in place.**
- **When working with FIPG material, perform the following:**
  Using a razor blade and gasket scraper, remove all old FIPG material from the gasket surface.
  Clean all components thoroughly to remove all foreign matter.
  Clean both sealing surfaces with a non-residue solvent.
  Apply FIPG material in a continuous line approximately 1 mm (0.04 in.) in diameter on the sealing surface.
  Reassemble parts within 10 minutes of applying FIPG material. Failing to do so will require the FIPG material to be removed and reapplied.

DISASSEMBLY

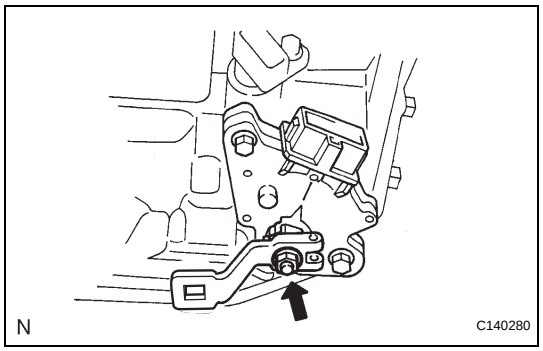

1. REMOVE PARK/NEUTRAL POSITION SWITCH ASSEMBLY

(a) Remove the nut, washer and control shaft lever.

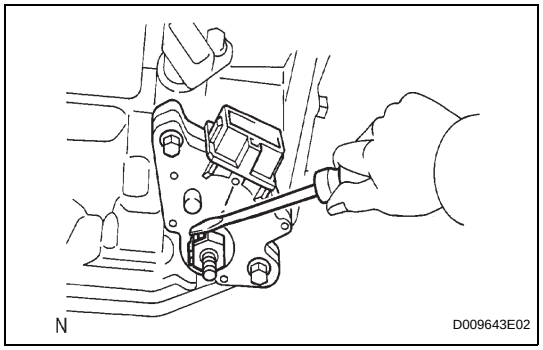

(b) Using a screwdriver, pry off the lock plate.
(c) Remove the nut and lock plate.

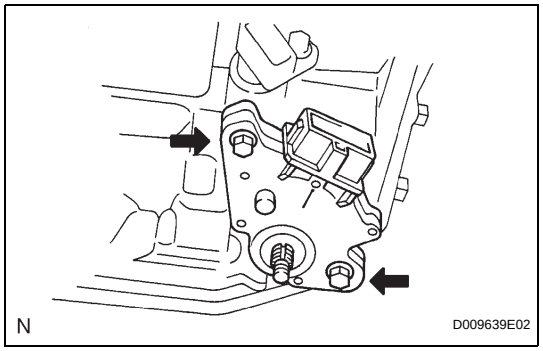

(d) Remove the 2 bolts and pull out the switch.

2. REMOVE BREATHER PLUG HOSE

(a) Remove the breather plug hose from the transaxle case.

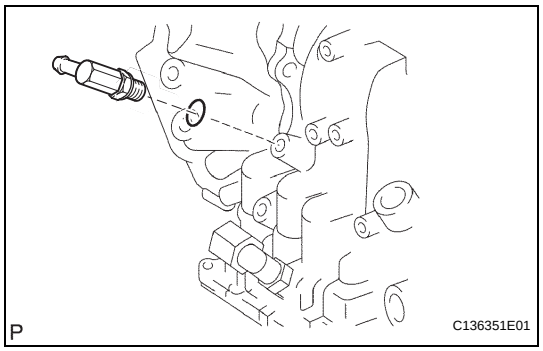

3. REMOVE OIL COOLER OUTLET TUBE ELBOW

(a) Remove the elbow.
(b) Remove the O-ring from the elbow.

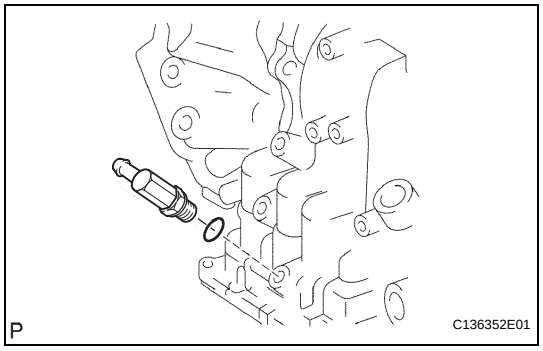

4. REMOVE OIL COOLER INLET TUBE ELBOW

(a) Remove the elbow.
(b) Remove the O-ring from the elbow.

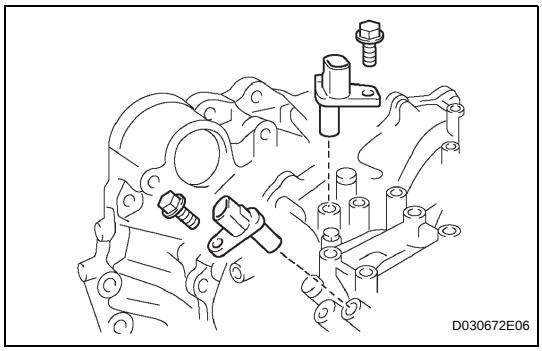

5. REMOVE SPEED SENSOR

(a) Remove the 2 bolts and the 2 speed sensors from the transaxle.

6. REMOVE SPEEDOMETER DRIVEN HOLE COVER SUB-ASSEMBLY

(a) Remove the bolt and cover.

(b) Remove the O-ring from the cover.

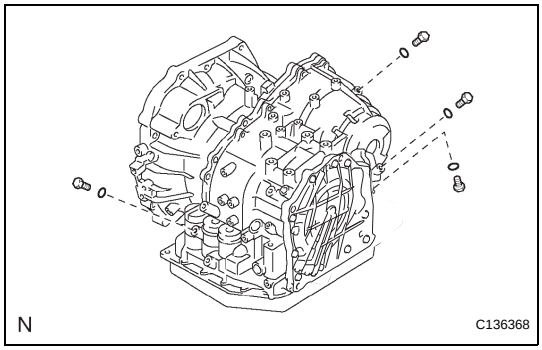

7. REMOVE NO. 1 TRANSAXLE CASE PLUG

(a) Remove the 4 plugs from the transaxle case.

(b) Remove the 4 O-rings from the 4 plugs.

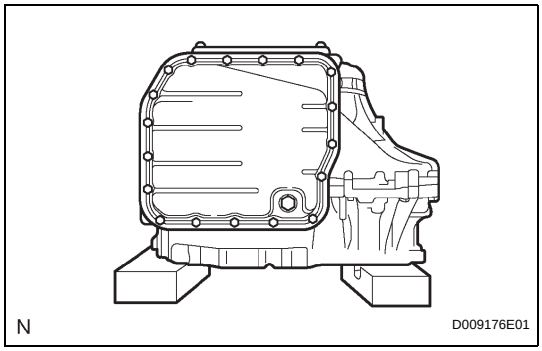

8. FIX AUTOMATIC TRANSAXLE ASSEMBLY

(a) Fix the transaxle.

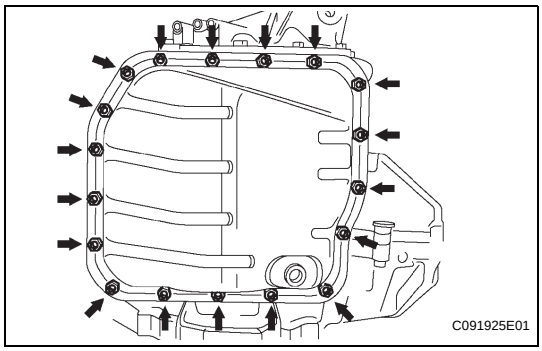

9. REMOVE AUTOMATIC TRANSAXLE OIL PAN SUB-ASSEMBLY

(a) Remove the 18 bolts, oil pan and gasket.

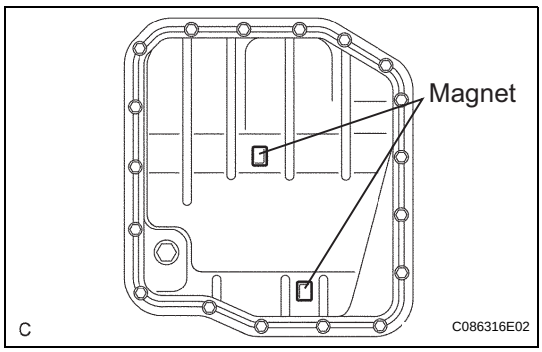

(b) Remove the 2 magnets from the oil pan.

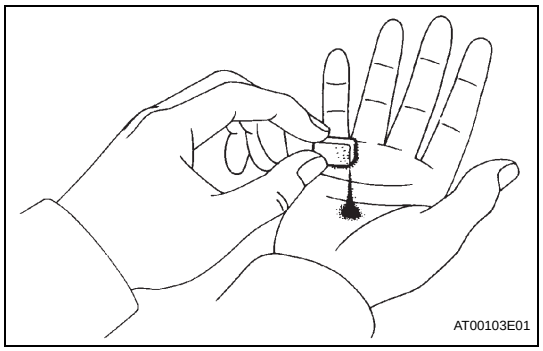

10. INSPECT TRANSMISSION OIL CLEANER MAGNET

(a) Remove the magnets and use them to collect any steel chips. Examine the chips and particles in the pan and on the magnet to determine what type of wear has occurred in the transaxle.

Result:

Steel (magnetic):

Wear of the bearing, gear and plate

Brass (non-magnetic):

Wear of the bush

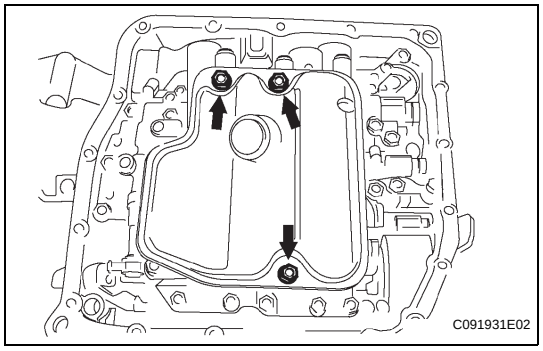

11. REMOVE VALVE BODY OIL STRAINER ASSEMBLY

(a) Remove the 3 bolts and oil strainer.

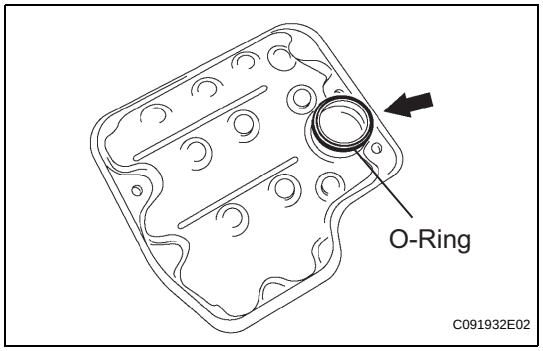

(b) Remove the O-ring from the oil strainer.

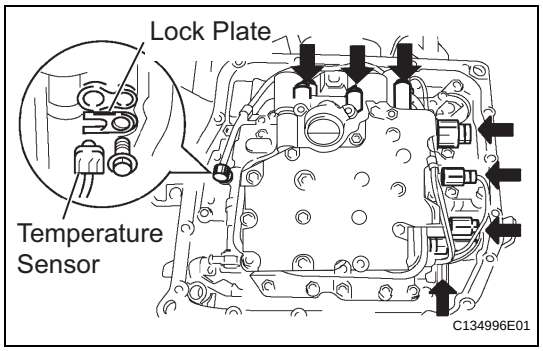

12. REMOVE TRANSMISSION WIRE

(a) Remove the 7 connectors from the shift solenoid valves.

(b) Remove the bolt, lock plate and temperature sensor.

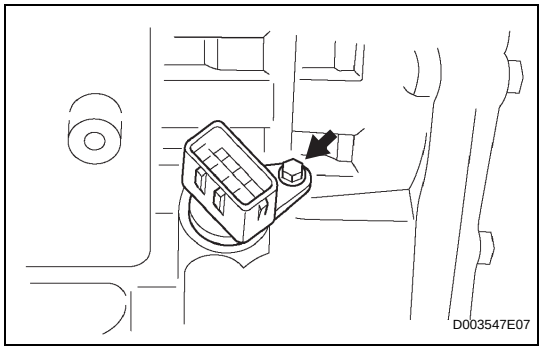

(c) Remove the bolt and transmission wire from the transaxle case.

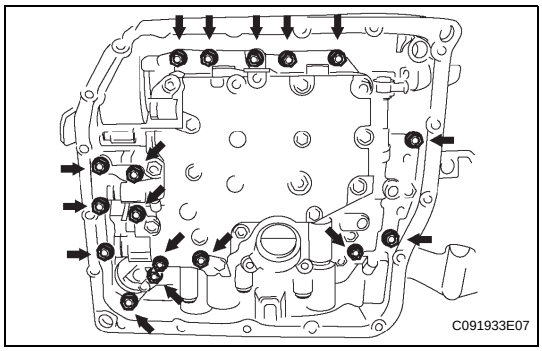

13. REMOVE TRANSMISSION VALVE BODY ASSEMBLY

(a) Support the valve body and remove the 17 bolts and valve body.

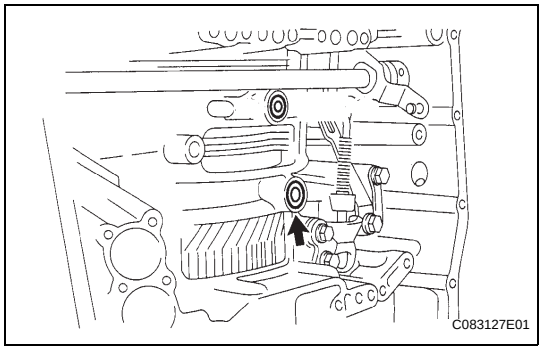

14. REMOVE NO. 1 GOVERNOR APPLY GASKET

(a) Remove the gasket from the transaxle case.

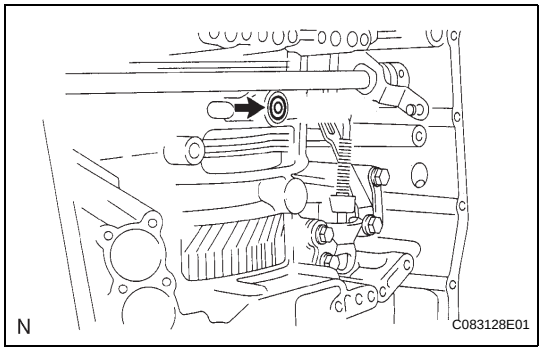

15. REMOVE TRANSAXLE CASE 2ND BRAKE GASKET

(a) Remove the gasket from the transaxle case.

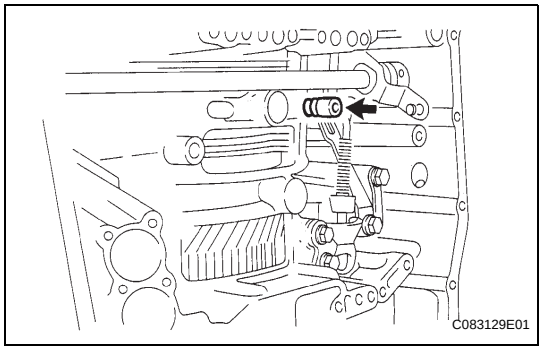

16. REMOVE BRAKE DRUM GASKET

(a) Remove the gasket from the transaxle case.

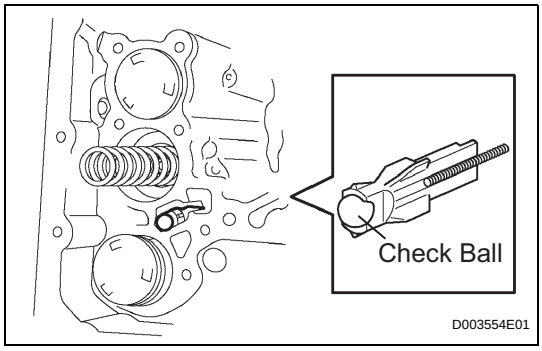

17. REMOVE CHECK BALL BODY

(a) Remove the check ball body and spring from the transaxle case.

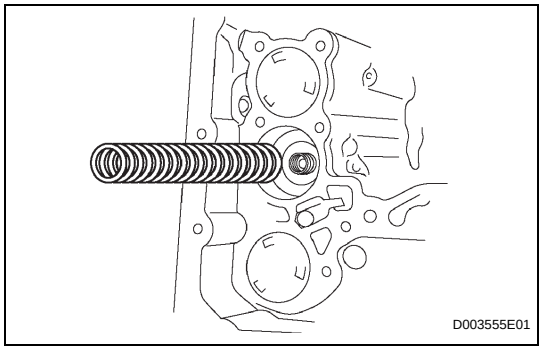

18. REMOVE C-3 ACCUMULATOR PISTON

(a) Remove the spring from the C-3 accumulator piston.

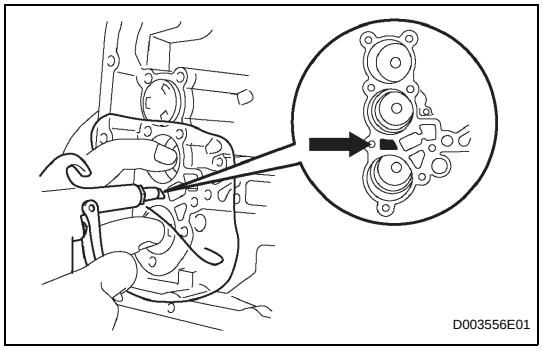

(b) Apply compressed air (392 kPa, 4.0 kgf/cm^2, 57 psi) to the oil hole and remove the C-3 accumulator piston.

NOTICE:

- **Applying compressed air may cause the piston to jump out. When removing the piston, hold it using a waste cloth.**
- **Take care not to splash ATF when applying compressed air.**

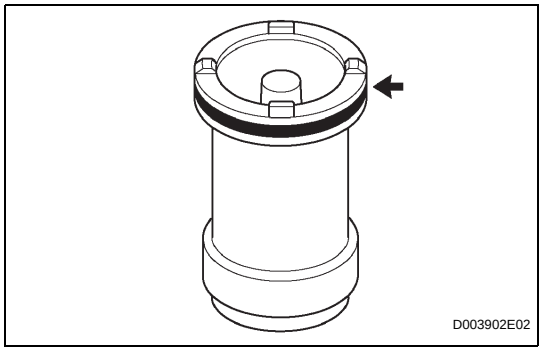

(c) Remove the O-ring from the C-3 accumulator piston.

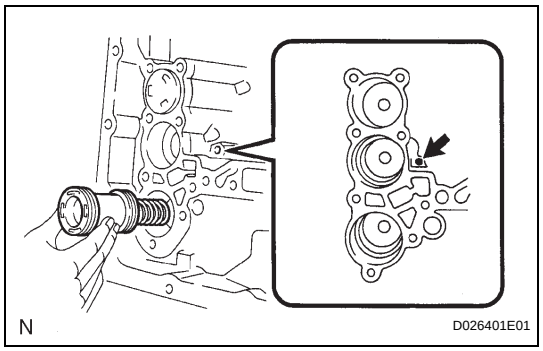

19. REMOVE REVERSE CLUTCH ACCUMULATOR PISTON

(a) Apply compressed air (392 kPa, 4.0 kgf/cm^2, 57 psi) to the oil hole and remove the reverse accumulator piston and spring.

NOTICE:

- **Applying compressed air may cause the piston to jump out. When removing the piston, hold it using a waste cloth.**
- **Take care not to splash ATF when applying compressed air.**

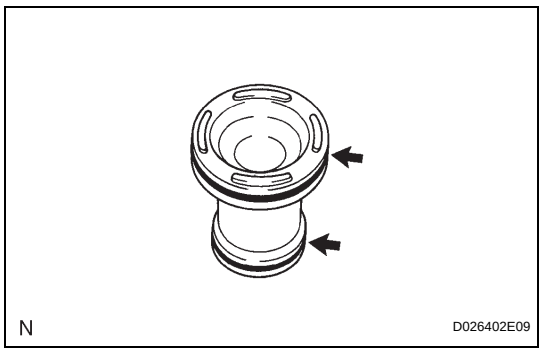

(b) Remove the 2 O-rings from the reverse clutch accumulator piston.

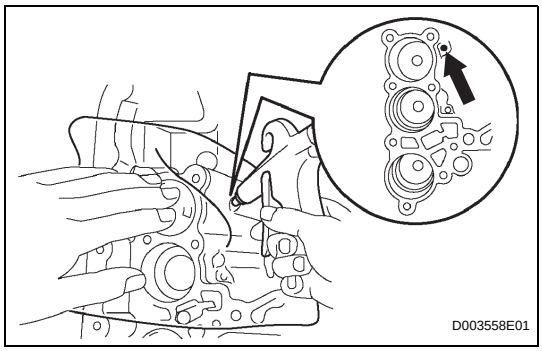

20. REMOVE B-3 ACCUMULATOR PISTON

(a) Apply compressed air (392 kPa, 4.0 kgf/cm^2, 57 psi) to the oil hole and remove the B-3 accumulator piston and 2 springs.

NOTICE:

- **Applying compressed air may cause the piston to jump out. When removing the piston, hold it using a waste cloth.**
- **Take care not to splash ATF when applying compressed air.**

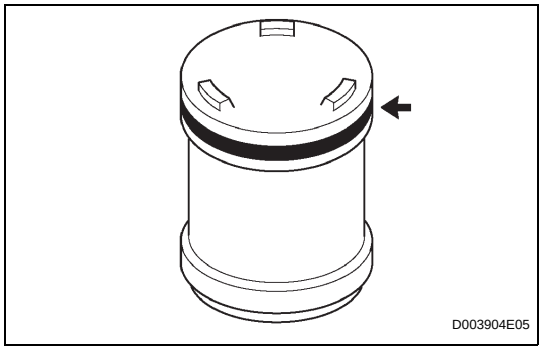

(b) Remove the O-ring from the B-3 accumulator piston.

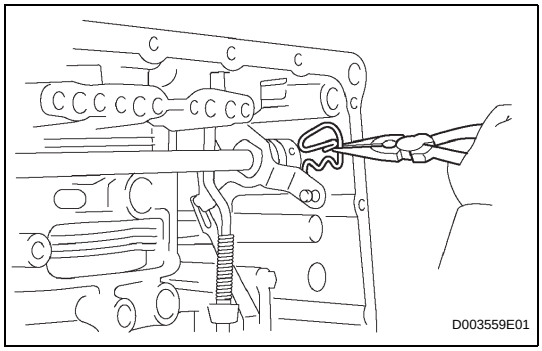

21. REMOVE MANUAL VALVE LEVER SHAFT RETAINER SPRING

(a) Using needle-nose pliers, remove the manual valve lever shaft retainer spring.

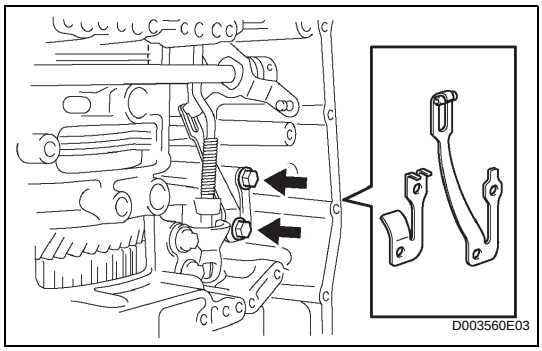

22. REMOVE MANUAL DETENT SPRING SUB-ASSEMBLY

(a) Remove the 2 bolts, manual detent spring and cover.

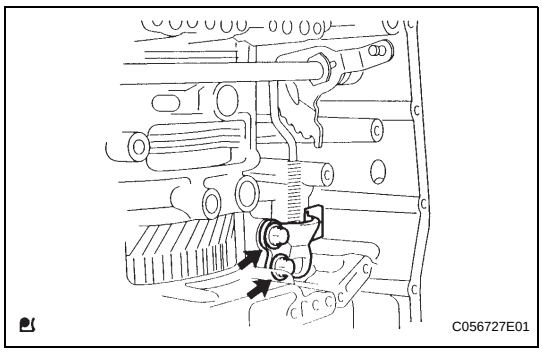

23. REMOVE PARKING LOCK PAWL BRACKET

(a) Remove the 2 bolts and parking lock pawl bracket.

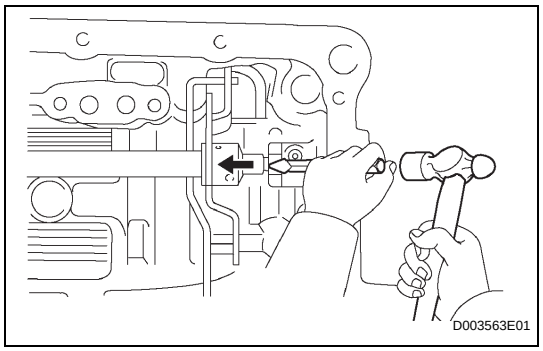

24. REMOVE MANUAL VALVE LEVER SUB-ASSEMBLY

(a) Using a chisel and hammer, cut off and remove the spacer.

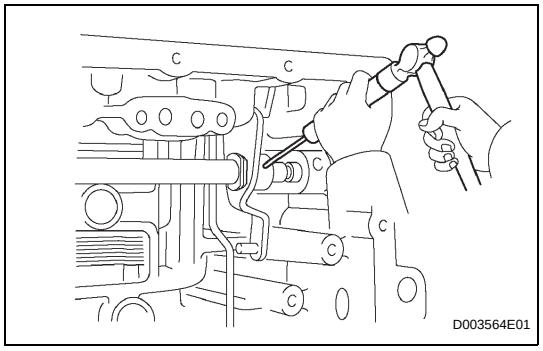

(b) Using a pin punch (ϕ35 mm) and hammer, drive out the pin.
HINT:
Slowly drive out the pin so that it does not fall into the transaxle case.

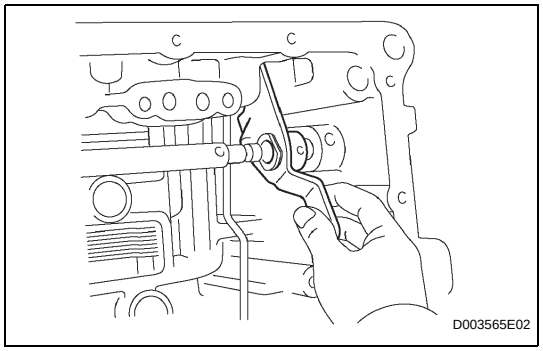

(c) Remove the manual valve lever shaft and manual valve lever.

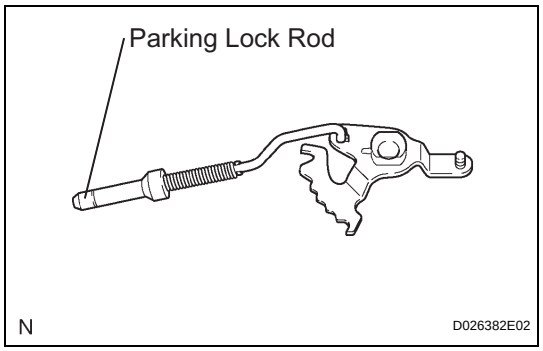

25. REMOVE PARKING LOCK ROD SUB-ASSEMBLY

(a) Remove the parking lock rod from the manual valve lever.

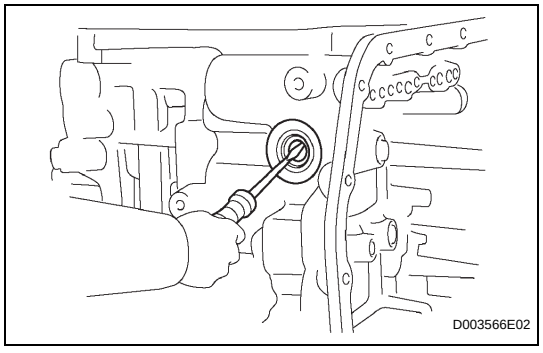

26. REMOVE MANUAL VALVE LEVER SHAFT OIL SEAL

(a) Using a screwdriver, pry out the oil seal from the transaxle case.
NOTICE:
Do not apply excessive force when removing the oil seal.

27. FIX AUTOMATIC TRANSAXLE ASSEMBLY

(a) Fix the transaxle case in place with the oil pump side facing up.

28. INSPECT INPUT SHAFT ENDPLAY (See page AX-212)

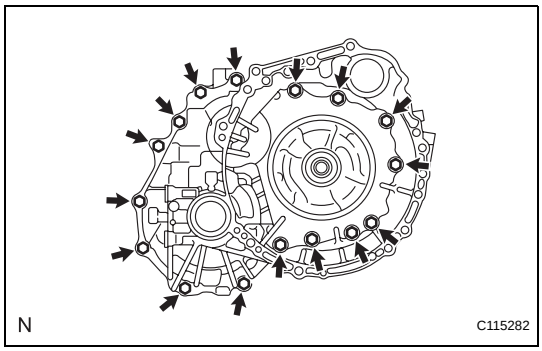

29. REMOVE TRANSAXLE HOUSING

(a) Remove the 16 bolts.

(b) Tap on the circumference of the transaxle housing with a plastic-faced hammer to remove the transaxle housing from the transaxle case.

NOTICE:

The differential may be accidentally removed when the transaxle housing is removed.

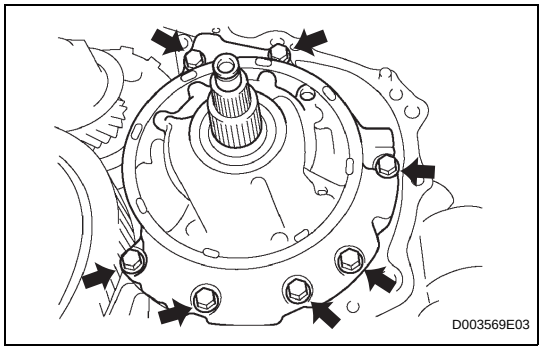

30. REMOVE OIL PUMP ASSEMBLY

(a) Remove the 7 bolts and oil pump from the transaxle case.

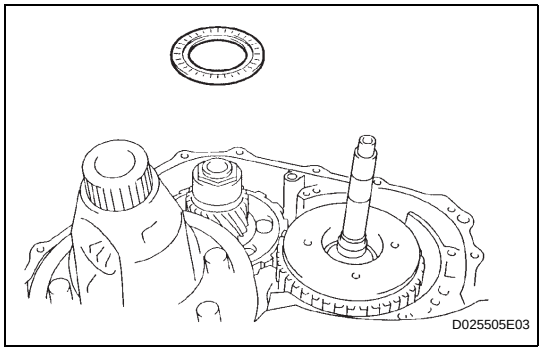

31. REMOVE THRUST NEEDLE ROLLER BEARING

(a) Remove the thrust needle roller bearing from the underdrive planetary gear.

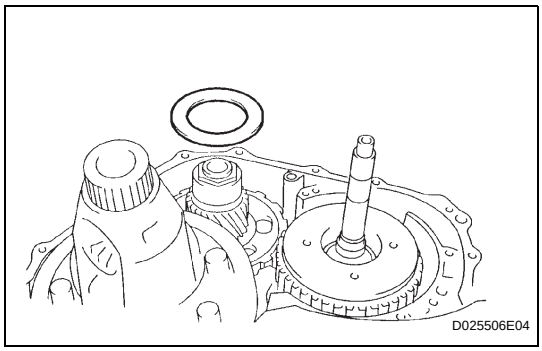

32. REMOVE NO. 2 THRUST BEARING UNDERDRIVE RACE

(a) Remove the thrust bearing race from the underdrive planetary gear.

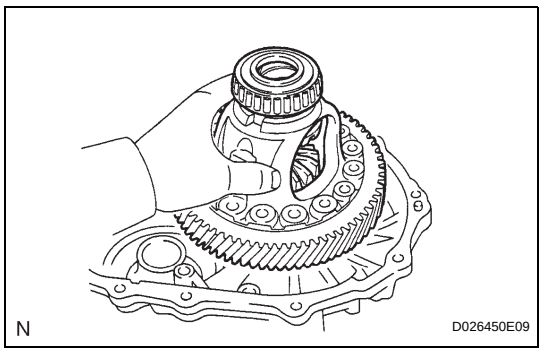

33. REMOVE DIFFERENTIAL GEAR ASSEMBLY

(a) Remove the differential gear from the transaxle case.

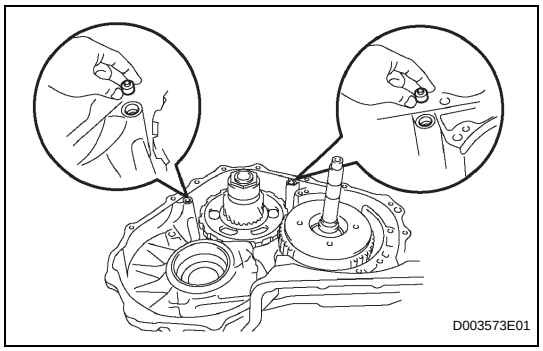

34. REMOVE OVERDRIVE BRAKE GASKET

(a) Remove the 2 overdrive brake gaskets from the transaxle case.

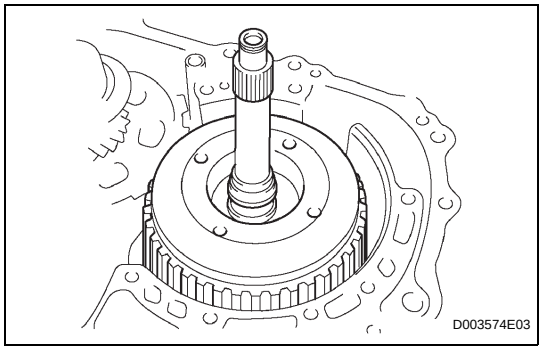

35. REMOVE FORWARD CLUTCH ASSEMBLY

(a) Remove the forward clutch from the transaxle case.

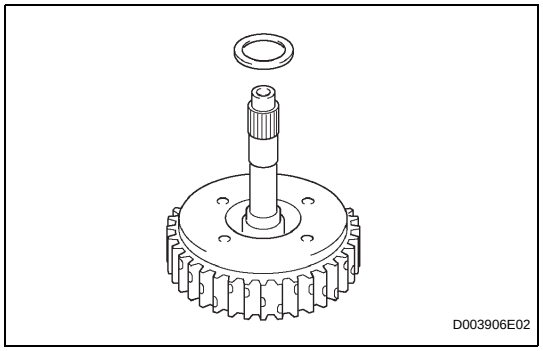

(b) Remove the thrust needle roller bearing from the forward clutch.

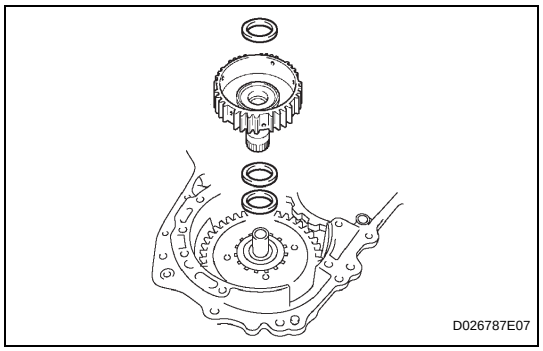

36. REMOVE MULTIPLE DISC CLUTCH HUB

(a) Remove the thrust needle roller bearing, multiple disc clutch hub, thrust needle roller bearing and No. 1 thrust bearing race from the transaxle case.

37. INSPECT MULTIPLE DISC CLUTCH HUB (See page AX-209)

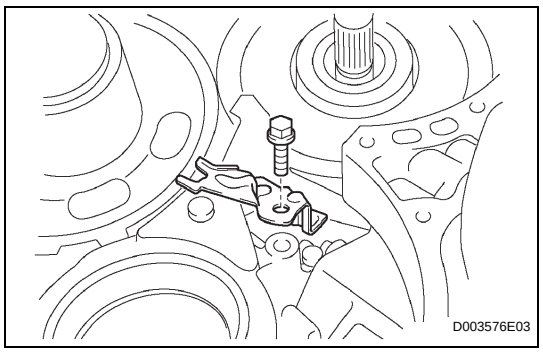

38. REMOVE UNDERDRIVE PLANETARY GEAR ASSEMBLY

(a) Remove the bolt and pawl shaft clamp.

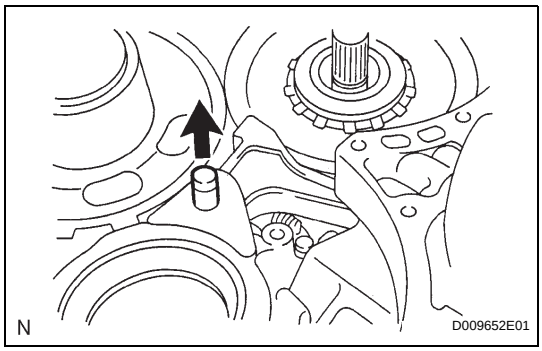

(b) Remove the parking lock pawl shaft.

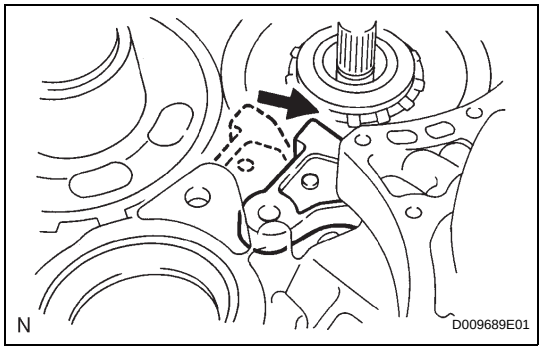

(c) Push the parking lock pawl.
HINT:
Failure to do so will cause interference when the underdrive planetary gear is removed.

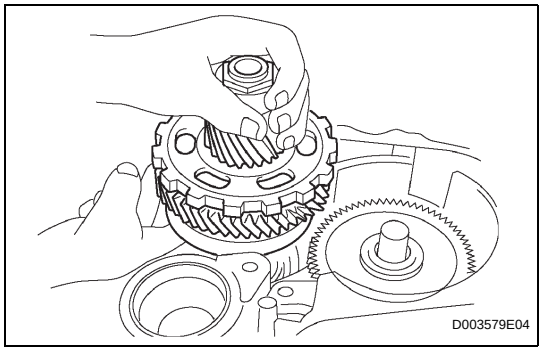

(d) Remove the underdrive planetary gear from the transaxle case.
NOTICE:
Make sure that the underdrive planetary gear dose not fall out.

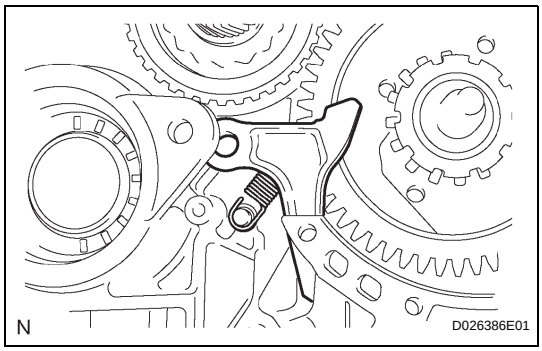

39. REMOVE PARKING LOCK PAWL

(a) Remove the spring, pawl pin and parking lock pawl.

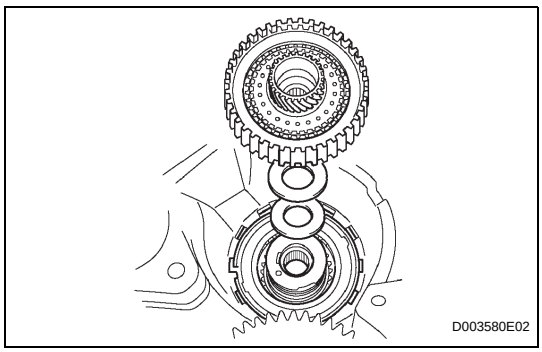

40. REMOVE UNDERDRIVE CLUTCH ASSEMBLY

(a) Remove the underdrive clutch, thrust bearing and bearing race from the transaxle case.

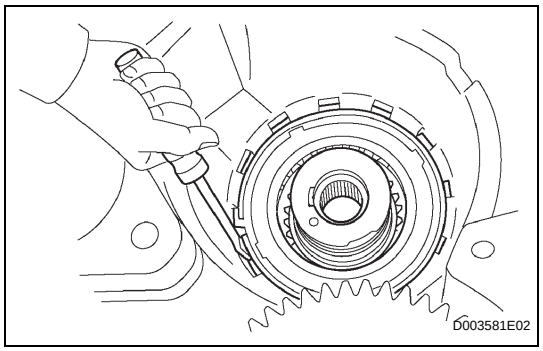

41. REMOVE UNDERDRIVE 1-WAY CLUTCH ASSEMBLY

(a) Using a screwdriver, remove the snap ring from the transaxle case.

NOTICE:
Do not apply excessive force when removing the snap ring.

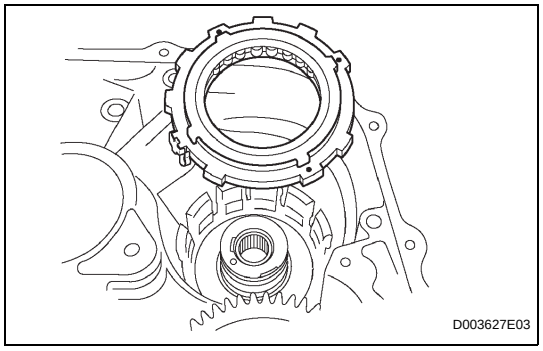

(b) Remove the underdrive 1-way clutch from the transaxle case.

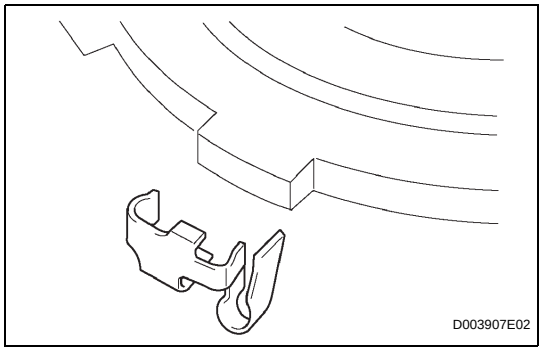

(c) Remove the outer race retainer from the 1-way clutch.

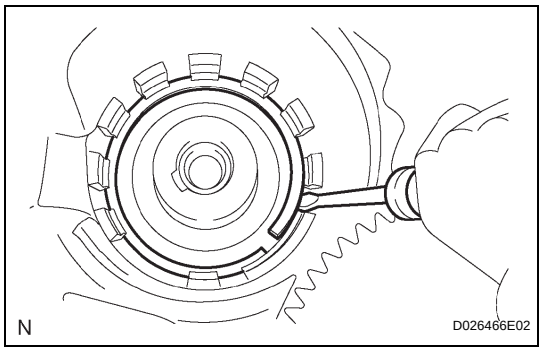

42. REMOVE NO. 2 UNDERDRIVE CLUTCH DISC

(a) Using a screwdriver, remove the snap ring.

NOTICE:
Do not apply excessive force when removing the snap ring.

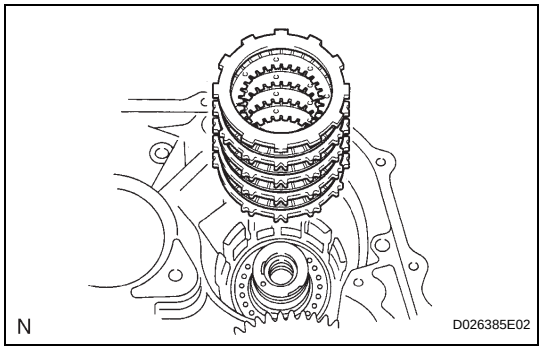

(b) Remove the flange, 4 discs and 4 plates from the transaxle case.

43. INSPECT NO. 2 UNDERDRIVE CLUTCH DISC (See page AX-209)

AX

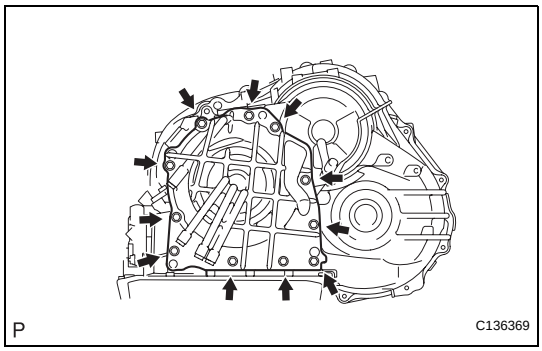

44. REMOVE TRANSAXLE REAR COVER SUB-ASSEMBLY

(a) Remove the 11 bolts.

(b) Tap on the circumference of the rear cover with a plastic hammer to remove the transaxle rear cover from the transaxle case.

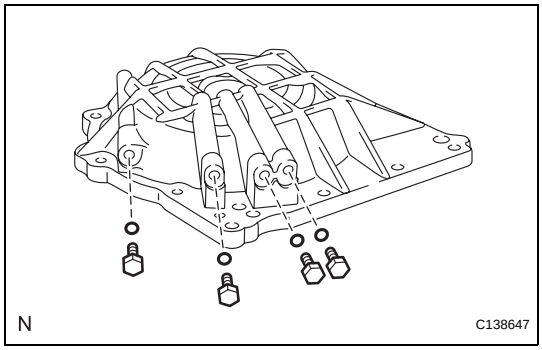

45. REMOVE NO. 1 TRANSAXLE CASE PLUG

(a) Remove the 4 plugs from the transaxle rear cover.

(b) Remove the 4 O-rings from the 4 plugs.

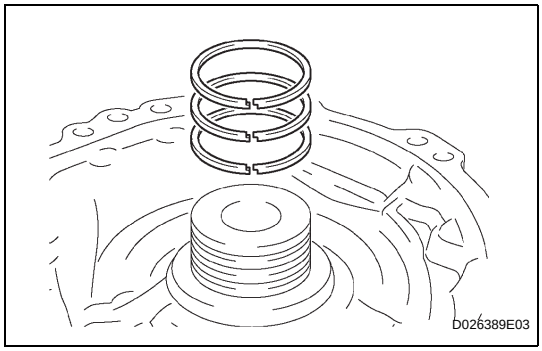

46. REMOVE REAR CLUTCH OIL SEAL RING OUTER

(a) Remove the 3 rear clutch oil seal rings from the transaxle rear cover.

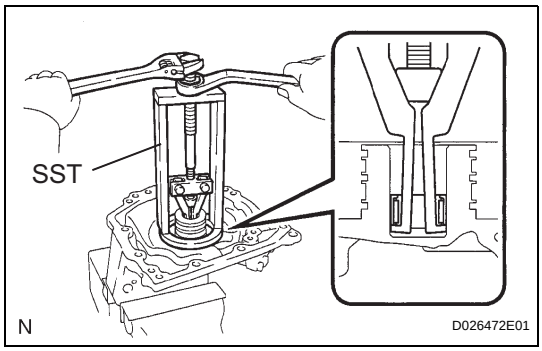

47. REMOVE NEEDLE ROLLER BEARING

(a) Using SST, remove the bearing from the transaxle rear cover.

SST 09387-00041 (09387-01021, 09387-01030, 09387-01040)

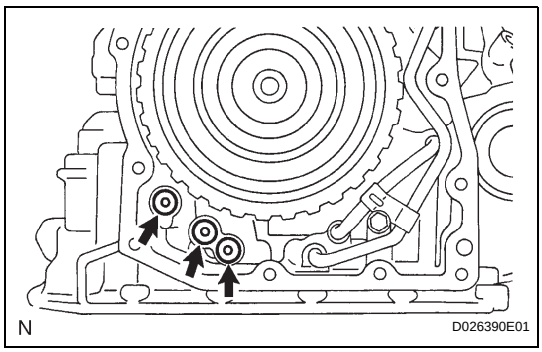

48. REMOVE NO. 1 GOVERNOR APPLY GASKET

(a) Using a screwdriver, remove the 3 apply gaskets.

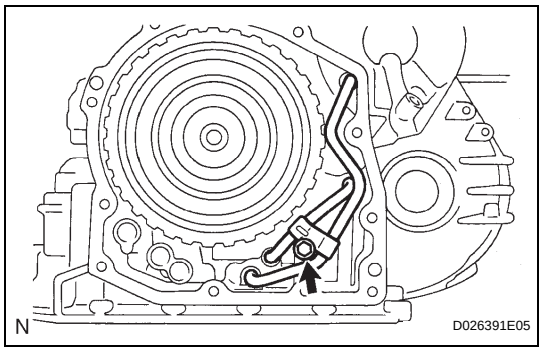

49. REMOVE BRAKE APPLY TUBE

(a) Remove the bolt, clamp and brake apply tube.
(b) Remove the clutch apply tube.
(c) Remove the brake apply tube from the clamp.
NOTICE:
Do not bend the tubes.

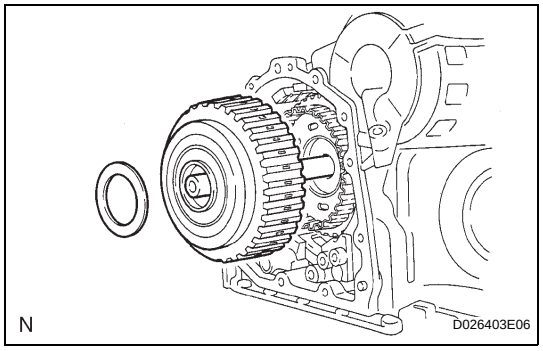

50. REMOVE DIRECT CLUTCH ASSEMBLY

(a) Remove the thrust bearing and the direct clutch from the transaxle case.

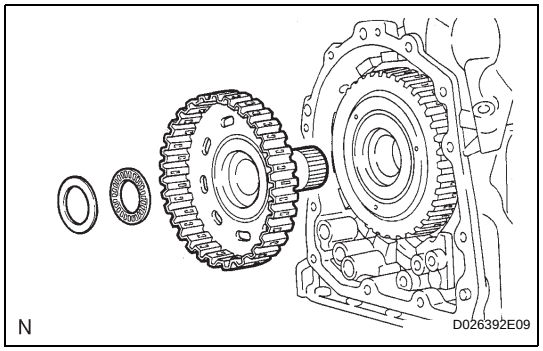

51. REMOVE OVERDRIVE DIRECT CLUTCH HUB SUB-ASSEMBLY

(a) Remove the thrust bearing race, thrust bearing and overdrive direct clutch hub from the planetary gear.

52. INSPECT OVERDRIVE DIRECT CLUTCH DRUM SUB-ASSEMBLY (See page AX-209)

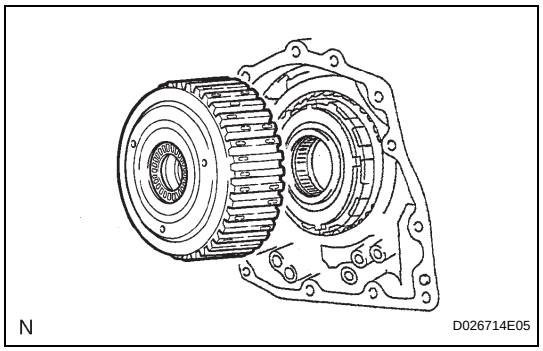

53. REMOVE REAR PLANETARY SUN GEAR ASSEMBLY

(a) Remove the rear planetary sun gear from the transaxle case.

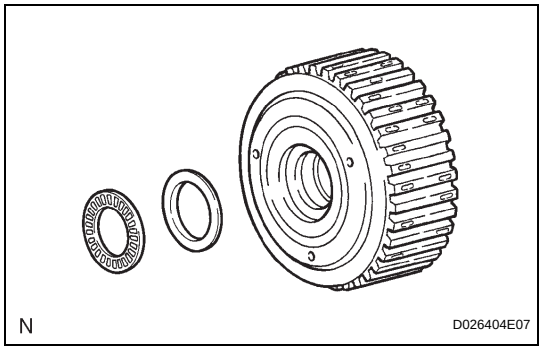

(b) Remove the thrust needle roller bearing and thrust bearing race from the rear planetary sun gear.

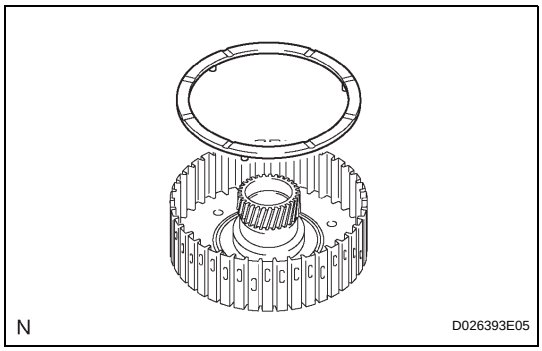

(c) Remove the planetary carrier thrust washer from the rear planetary sun gear.

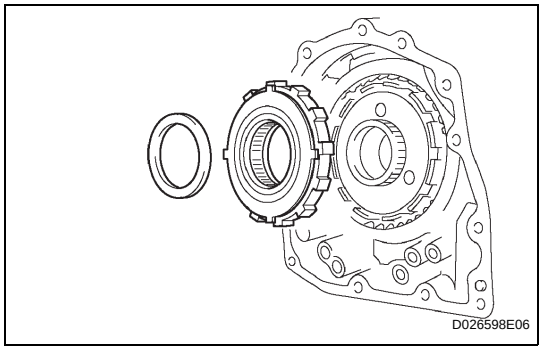

54. REMOVE 1-WAY CLUTCH ASSEMBLY

(a) Remove the 1-way clutch and thrust needle roller bearing from the transaxle case.

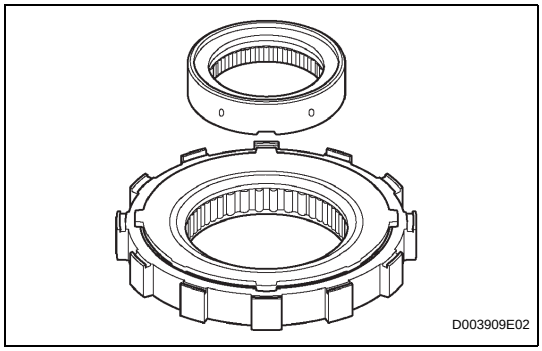

(b) Remove the 1-way clutch inner race from the 1-way clutch.

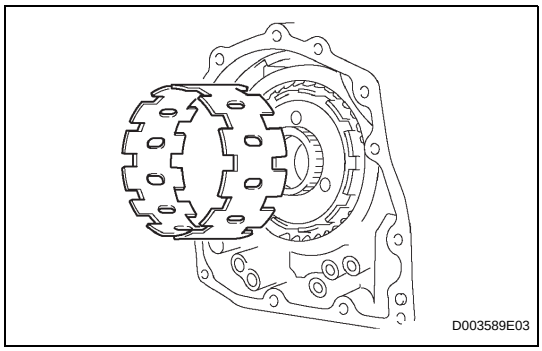

55. REMOVE 1-WAY CLUTCH SLEEVE OUTER

(a) Remove the 1-way clutch sleeve outer from the transaxle case.

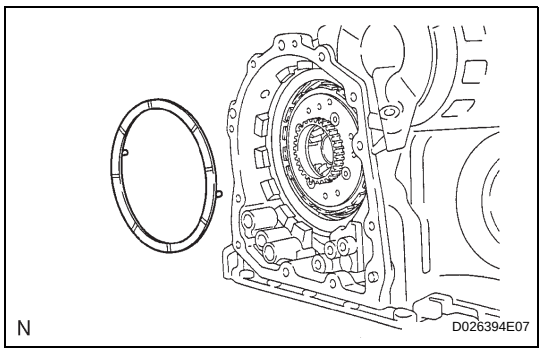

56. REMOVE NO. 1 PLANETARY CARRIER THRUST WASHER

(a) Remove the planetary carrier thrust washer from the planetary gear.

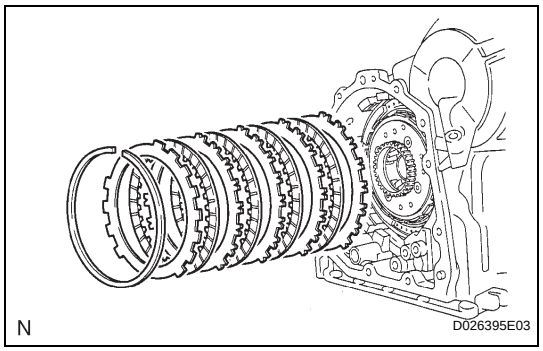

57. REMOVE 2ND BRAKE CLUTCH DISC

(a) Using a screwdriver, remove the snap ring.

(b) Remove the flange, 4 discs and 4 plates from the transaxle case.

58. INSPECT 2ND BRAKE CLUTCH DISC (See page AX-210)

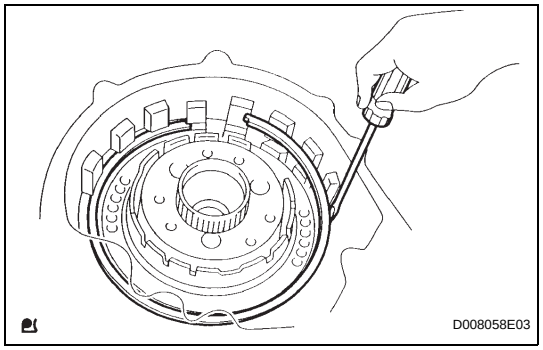

59. REMOVE 2ND BRAKE PISTON ASSEMBLY

(a) Using a screwdriver, remove the snap ring.

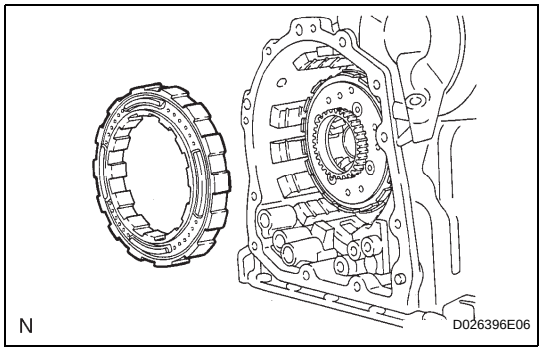

(b) Remove the 2nd brake piston from the transaxle case.

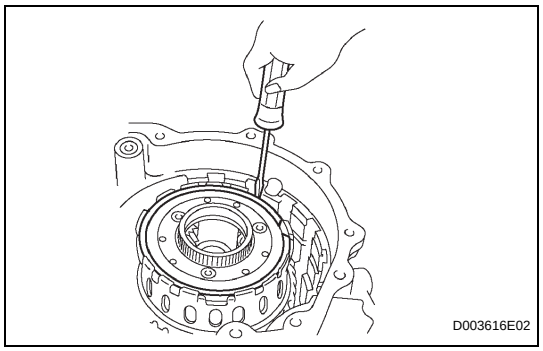

60. REMOVE REAR PLANETARY GEAR ASSEMBLY

(a) Using a screwdriver, remove the snap ring.

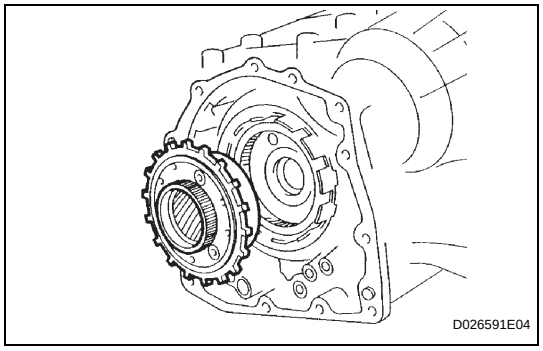

(b) Remove the rear planetary gear from the transaxle case.

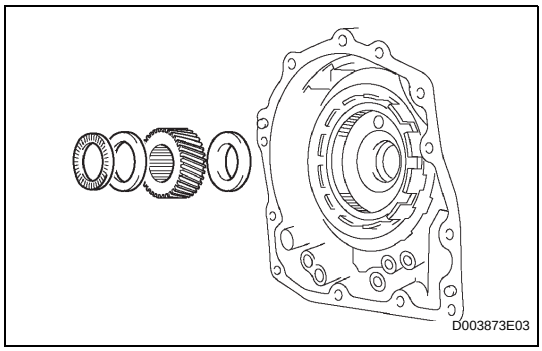

61. REMOVE INPUT SUN GEAR

(a) Remove the 2 thrust needle roller bearings, thrust bearing race and input sun gear from the transaxle case.

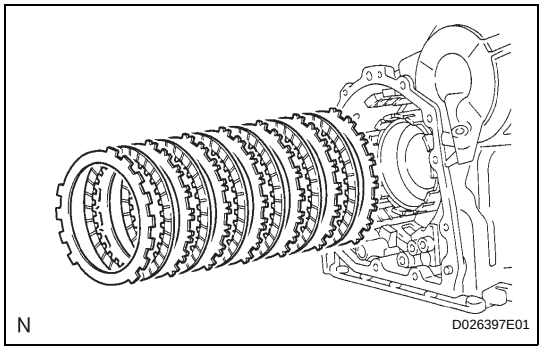

62. REMOVE 1ST AND REVERSE BRAKE CLUTCH DISC

(a) Remove the flange, 6 discs and 6 plates from the transaxle case.

63. INSPECT 1ST AND REVERSE BRAKE CLUTCH DISC (See page AX-210)

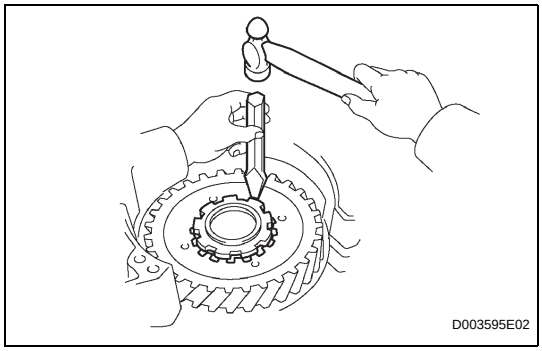

64. REMOVE FRONT PLANETARY GEAR ASSEMBLY

(a) Using a chisel and hammer, unstake the lock washer.

NOTICE:
Push down all the claws of the washer. Otherwise SST cannot be fully pressed against the nut, and cannot loosen the nut.

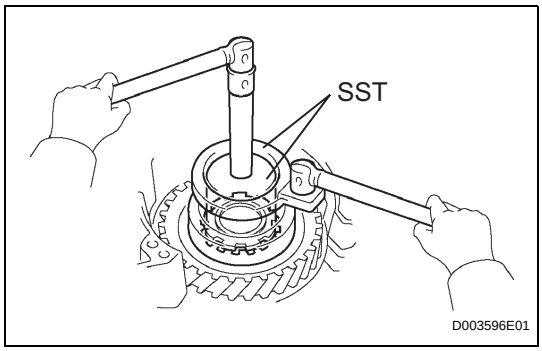

(b) Using SST, remove the nut.
SST 09387-00030, 09387-00080

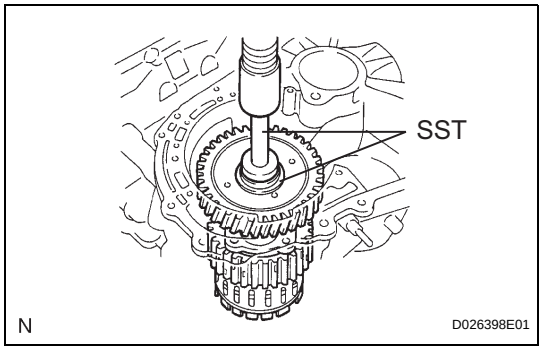

(c) Using SST and a press, press out the front planetary gear from the counter drive gear.
SST 09950-60010 (09951-00450), 09950-70010 (09951-07100)

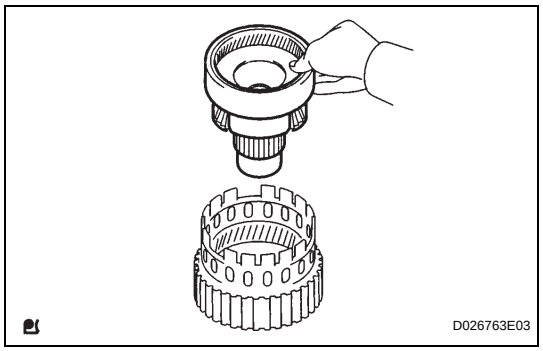

(d) Remove the front planetary gear from the brake hub.

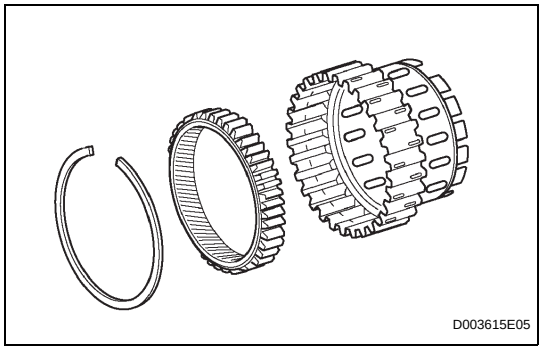

65. REMOVE FRONT PLANETARY RING GEAR

(a) Using a screwdriver, remove the snap ring and front planetary ring gear from the brake hub.

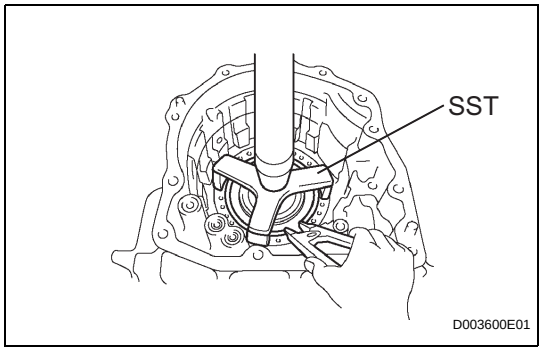

66. REMOVE 1ST AND REVERSE BRAKE RETURN SPRING SUB-ASSEMBLY

(a) Place SST on the return spring, and compress the return spring with a press.

NOTICE:

Stop the press when the spring seat is lowered 1 to 2 mm (0.039 to 0.078 in.) from the snap ring groove to prevent the spring seat from being deformed.

SST 09387-00070

(b) Using a snap ring expander, remove the snap ring.

NOTICE:

Do not expand the snap ring excessively.

67. INSPECT 1ST AND REVERSE BRAKE RETURN SPRING SUB-ASSEMBLY (See page AX-210)

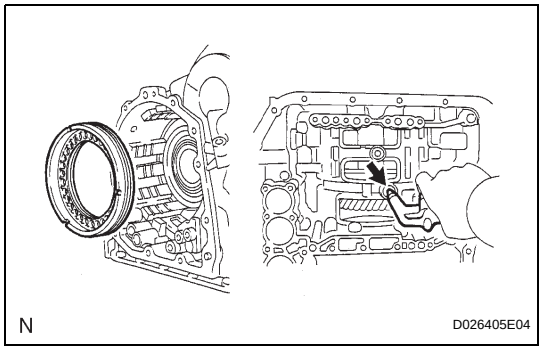

68. REMOVE 1ST AND REVERSE BRAKE PISTON

(a) Apply compressed air (392 kPa, 4.0 kgf/cm^2, 57 psi) to the transaxle case to remove the 1st and reverse brake piston.

NOTICE:

- **Applying compressed air may cause the piston to jump out. When removing the piston, hold it using a waste cloth.**
- **Take care not to splash ATF when applying compressed air.**

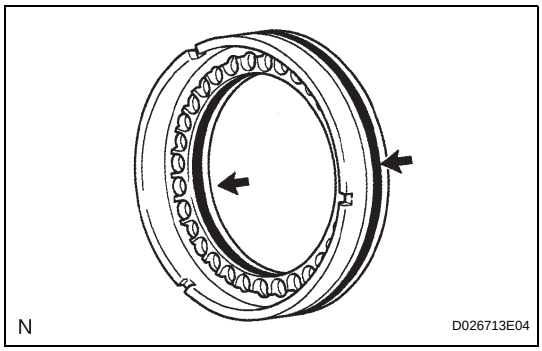

(b) Remove the 2 O-rings from the 1st and reverse brake piston.

69. REMOVE COUNTER DRIVE GEAR

(a) Using SST and a press, remove the counter drive gear from the transaxle case.

SST 09950-60010 (09951-00590), 09950-70010 (09951-07100)

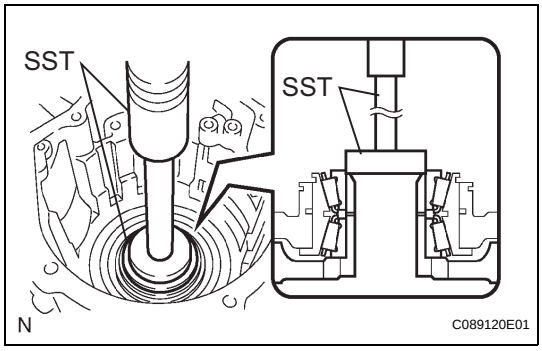

(b) As shown in the illustration, tighten the 2 bolts evenly and make a clearance of approximately. 20.0 mm (0.787 in.) between the counter drive gear and the inner race.

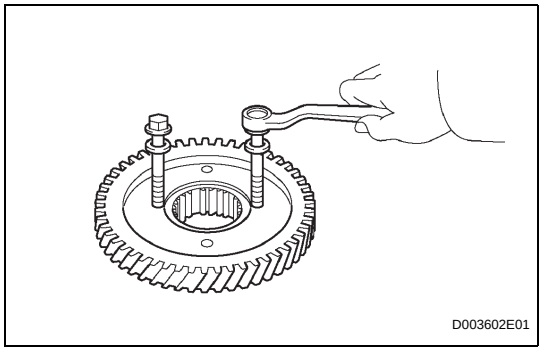

(c) Using SST, remove the tapered roller bearing.

SST 09950-60010 (09951-00590), 09950-00020, 09950-00030, 09950-40011 (09957-04010)

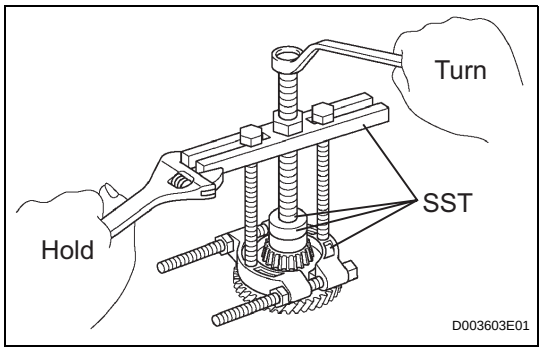

70. REMOVE TRANSFER DRIVEN PINION FRONT BEARING

(a) Using a snap ring expander, remove the snap ring.

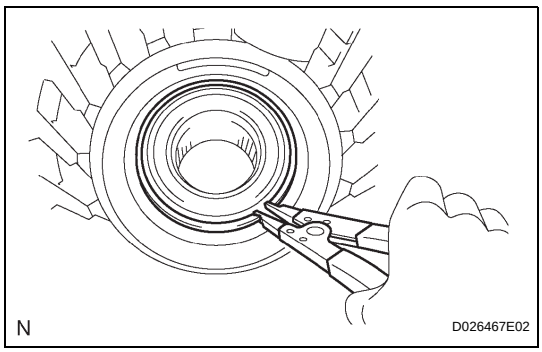

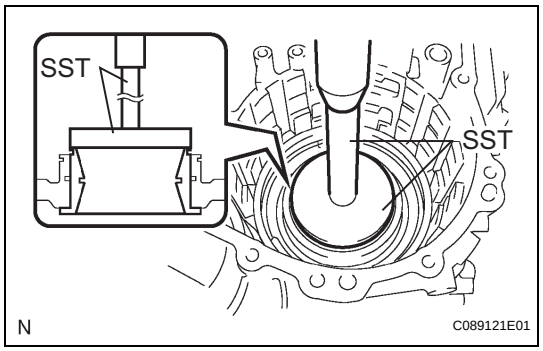

(b) Using SST and a press, remove the bearing outer race.
SST 09950-60020 (09951-00910)

71. REMOVE NO. 2 BREATHER PLUG

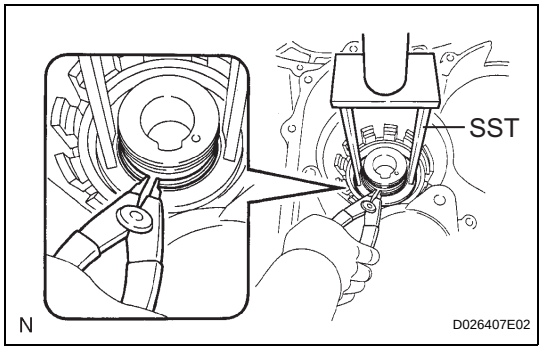

72. REMOVE UNDERDRIVE BRAKE RETURN SPRING SUB-ASSEMBLY

(a) Place SST on the return spring, and compress the return spring with a press.
NOTICE:
Stop the press when the spring seat is lowered 1 to 2 mm (0.039 to 0.078 in.) from the snap ring groove to prevent the spring seat from being deformed.
SST 09387-00020

(b) Using a snap ring expander, remove the snap ring.
NOTICE:
Do not expand the snap ring excessively.

73. INSPECT UNDERDRIVE BRAKE RETURN SPRING SUB-ASSEMBLY (See page AX-210)

74. REMOVE UNDERDRIVE BRAKE PISTON

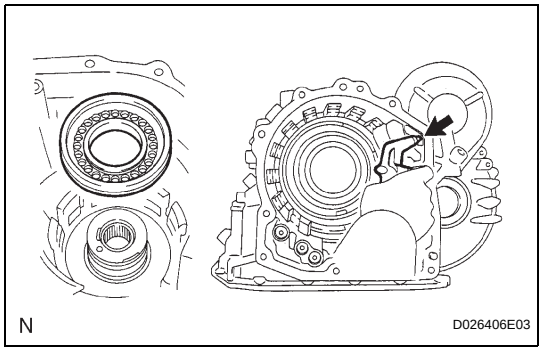

(a) Apply compressed air (392 kPa, 4.0 kgf/cm^2, 57 psi) to the transaxle case to remove the underdrive brake piston.

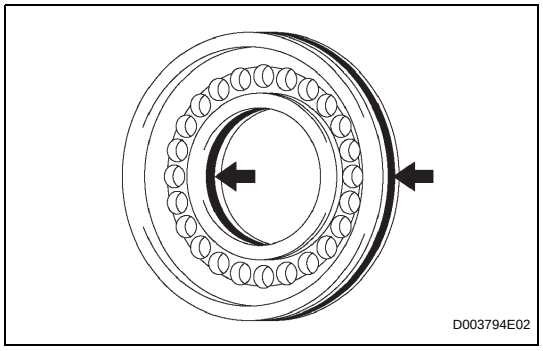

(b) Remove the 2 O-rings from the underdrive brake piston.

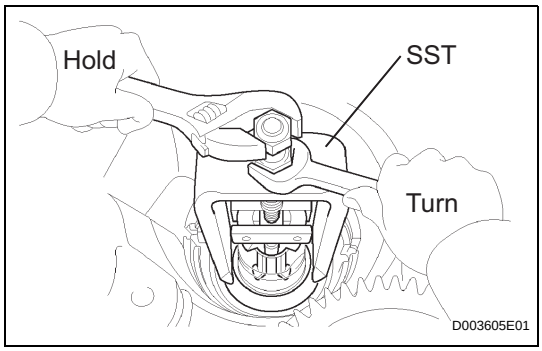

75. REMOVE NEEDLE ROLLER BEARING

(a) Using SST, remove the needle roller bearing from the transaxle case.

SST 09387-00041 (09387-01010, 09387-01030, 09387-01040)

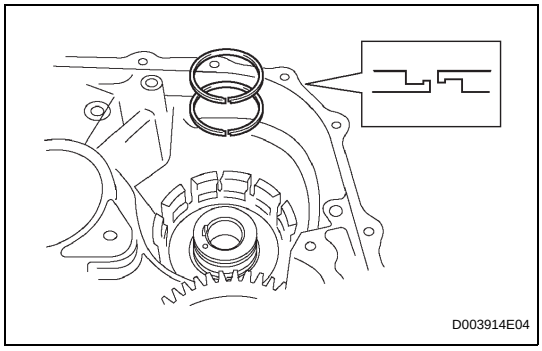

76. REMOVE UNDERDRIVE CLUTCH DRUM OIL SEAL RING

(a) Remove the 2 oil seal rings from the transaxle case.

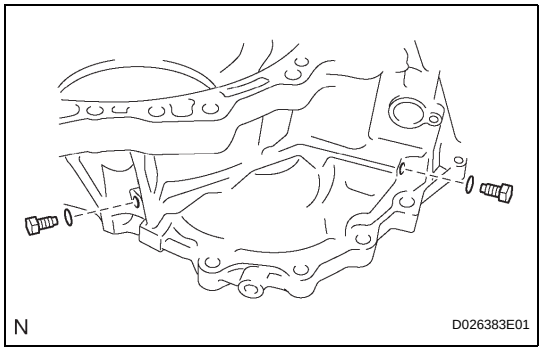

77. REMOVE NO. 1 TRANSAXLE CASE PLUG

(a) Remove the 2 transaxle case plugs.

(b) Remove the 2 O-rings from the 2 plugs.

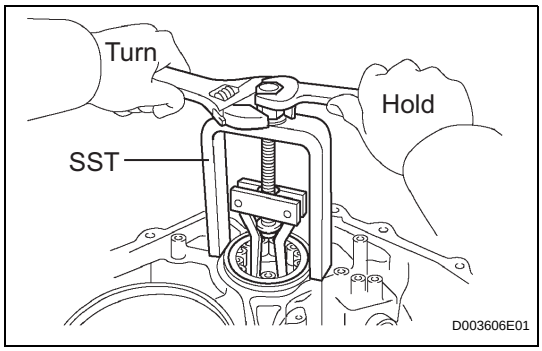

78. REMOVE UNDERDRIVE CYLINDRICAL ROLLER BEARING

(a) Using SST, remove the underdrive cylindrical roller bearing from the transaxle case.

SST 09514-35011

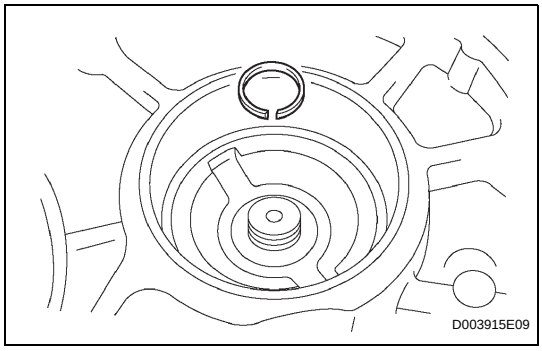

79. REMOVE UNDERDRIVE OUTPUT SHAFT OIL SEAL RING

(a) Remove the oil seal ring from the transaxle housing.

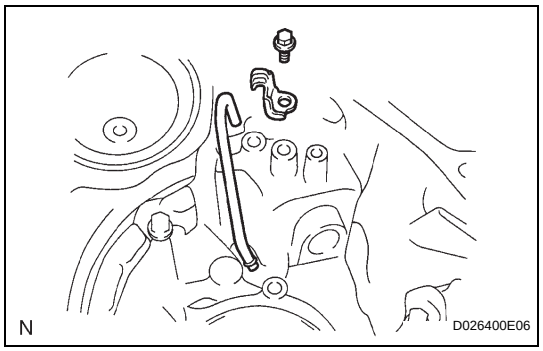

80. REMOVE DIFFERENTIAL GEAR LUBE APPLY TUBE

(a) Remove the bolt, transaxle apply tube clamp and differential gear lube apply tube from the transaxle housing.

NOTICE:

Do not bend the tubes.

INSPECTION

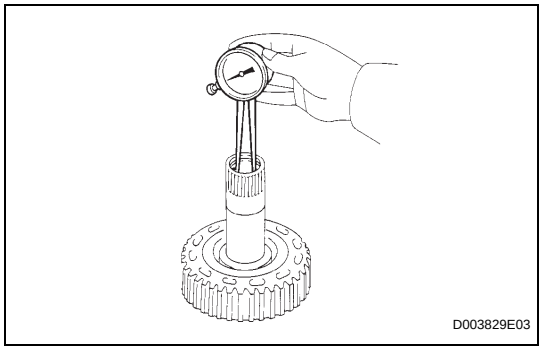

1. INSPECT MULTIPLE DISC CLUTCH HUB

(a) Using a caliper gauge, measure the inside diameter of the forward clutch hub bushing.

Standard inside diameter:

23.03 to 23.05 mm (0.9067 to 0.9075 in.)

Maximum inside diameter:

23.09 mm (0.9091 in.)

NOTICE:

Check the contact surface of the bushing in the direct clutch shaft. If any scratch or discoloration is found, replace the direct clutch sub-assembly with a new one.

If the inside diameter is greater than the maximum, replace the forward clutch hub with a new one.

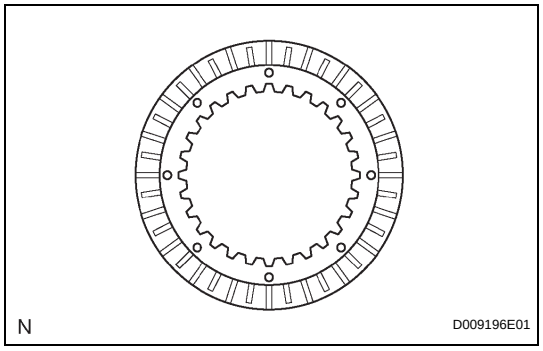

2. INSPECT NO. 2 UNDERDRIVE CLUTCH DISC

(a) Check if the sliding surfaces of the disc, plate and flange are worn or burnt.

If necessary, replace them.

NOTICE:

- **If the lining of the disc comes off or is discolored, or if a part of the groove is worn, replace all the discs.**
- **Before installing new discs, immerse them in ATF for at least 15 minutes.**

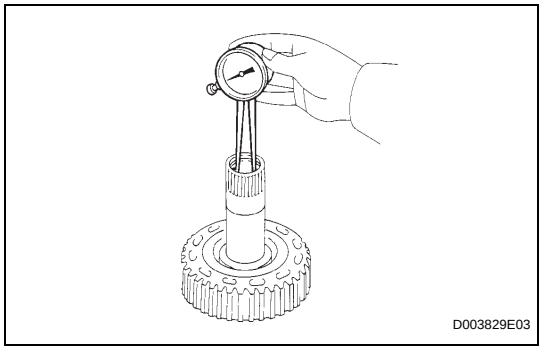

3. INSPECT OVERDRIVE DIRECT CLUTCH DRUM SUB-ASSEMBLY

(a) Using a caliper gauge, measure the inside diameter of the forward clutch hub bushing.

Standard inside diameter:

23.025 to 23.046 mm (0.9065 to 0.9073 in.)

Maximum inside diameter:

23.09 mm (0.9091 in.)

NOTICE:

Check the contact surface of the bushing in the direct clutch shaft. If any scratch or discoloration is found, replace the direct clutch sub-assembly with a new one.

If the inside diameter is greater than the maximum, replace the forward clutch hub with a new one.

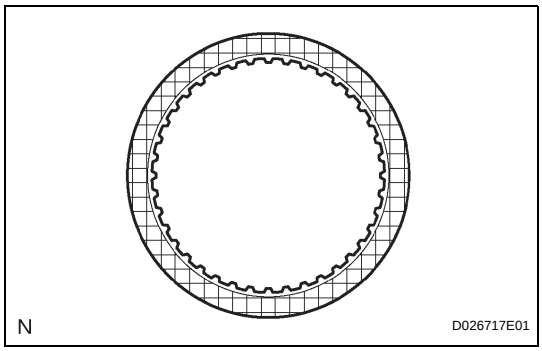

4. INSPECT 2ND BRAKE CLUTCH DISC

(a) Check if the sliding surface of the disc, plate and flange are worn or burnt.
If necessary, replace them.
NOTICE:
- **If the lining of the disc comes off or is discolored, or if a part of the groove is worn, replace all the discs.**
- **Before installing new discs, immerse them in ATF for at least 15 minutes.**

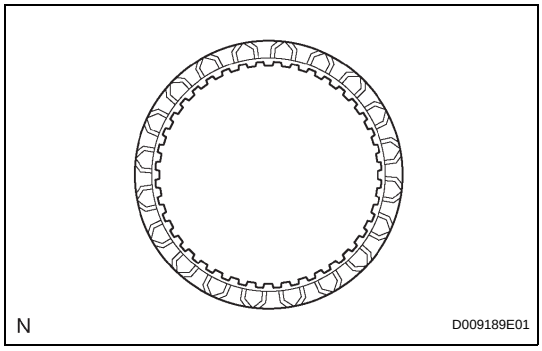

5. INSPECT 1ST AND REVERSE BRAKE CLUTCH DISC

(a) Check if the sliding surface of the disc, plate and flange are worn or burnt.
If necessary, replace them.
NOTICE:
- **If the lining of the disc comes off or is discolored, or if a part of the groove is worn, replace all the discs.**
- **Before installing new discs, immerse them in ATF for at least 15 minutes.**

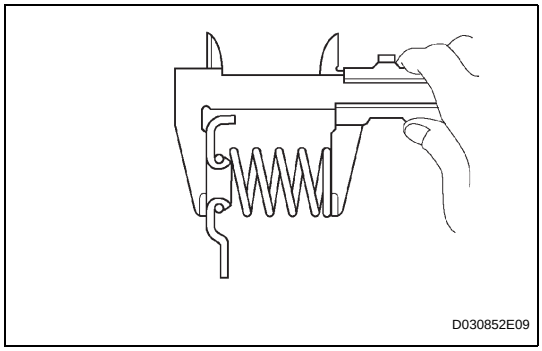

6. INSPECT 1ST AND REVERSE BRAKE RETURN SPRING SUB-ASSEMBLY

(a) Using a vernier caliper, measure the free length of the spring together with the spring seat.
Standard free length:
17.61 mm (0.6933 in.)
If the result is not as specified, replace the spring.

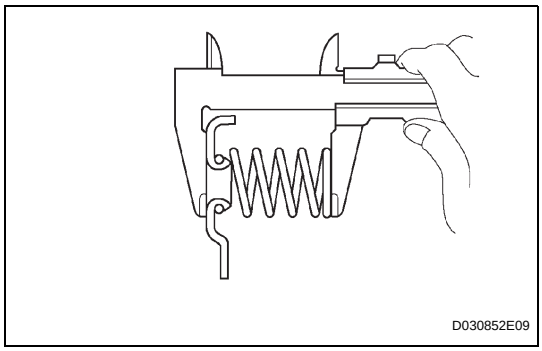

7. INSPECT UNDERDRIVE BRAKE RETURN SPRING SUB-ASSEMBLY

(a) Using a vernier caliper, measure the free length of the spring together with the spring seat.
Standard free length:
13.24 mm (0.5213 in.)
If the result is not as specified, replace the spring.

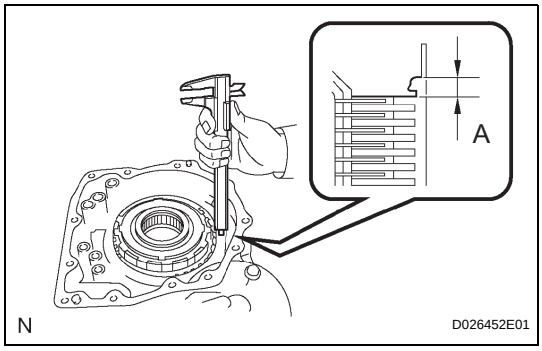

8. INSPECT PACK CLEARANCE OF 1ST AND REVERSE BRAKE

(a) Using a vernier caliper, measure the distance between the disc surface and the contact surface of the 2nd brake cylinder and transaxle case (Dimension A).

(b) Select an appropriate flange so that the pack clearance will meet the specified value.
Standard pack clearance:
1.16 to 1.35 mm (0.0457 to 0.0531 in.)

HINT:
Piston stroke = Dimension A - Flange thickness
Standard flange thickness

Mark	Thickness	Mark	Thickness
1	1.8 mm (0.071 in.)	5	2.2 mm (0.087 in.)
2	1.9 mm (0.075 in.)	6	2.3 mm (0.091 in.)
3	2.0 mm (0.079 in.)	7	2.4 mm (0.094 in.)
4	2.1 mm (0.083 in.)	8	2.5 mm (0.098 in.)

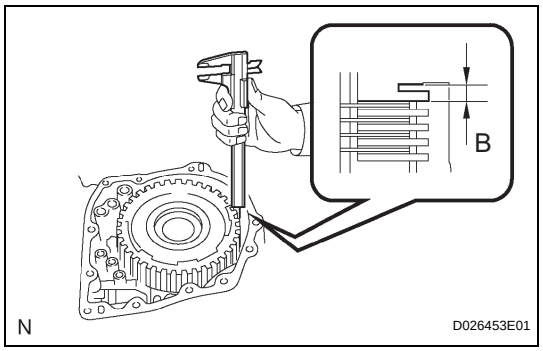

9. INSPECT PACK CLEARANCE OF 2ND BRAKE

(a) Using a vernier caliper, measure the distance between the disc surface and snap ring surface (Dimension B).

(b) Select an appropriate flange so that the pack clearance will meet the specified value.
Standard pack clearance:
0.62 to 0.91 mm (0.0244 to 0.0358 in.)
HINT:
Piston stroke = Dimension B - Flange thickness - Snap ring thickness 1.6 mm (0.063 in.)
Standard flange thickness

Mark	Thickness	Mark	Thickness
1	3.0 mm (0.118 in.)	5	3.4 mm (0.134 in.)
2	3.1 mm (0.122 in.)	6	3.5 mm (0.138 in.)
3	3.2 mm (0.126 in.)	7	3.6 mm (0.142 in.)
4	3.3 mm (0.130 in.)	-	-

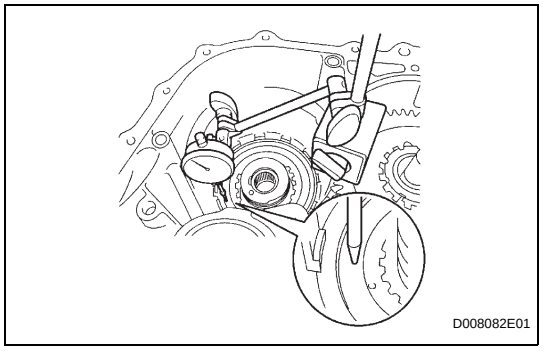

10. INSPECT PACK CLEARANCE OF UNDERDRIVE BRAKE

(a) Using a dial indicator, measure the underdrive brake pack clearance while applying and releasing compressed air (392 kPa, 4.0 kgf/cm^2, 57 psi).
Standard pack clearance:
1.81 to 2.20 mm (0.0713 to 0.0866 in.)
HINT:
Select an appropriate flange from the table below so that it will meet the specified value.
Standard flange thickness

Mark	Thickness	Mark	Thickness
1	3.0 mm (0.118 in.)	4	3.1 mm (0.122 in.)
2	3.2 mm (0.126 in.)	5	3.3 mm (0.130 in.)
3	3.4 mm (0.134 in.)	-	-

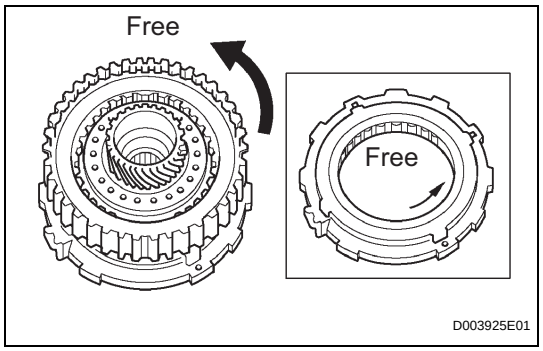

11. INSPECT UNDERDRIVE 1-WAY CLUTCH ASSEMBLY

(a) Install the underdrive clutch assembly to the 1-way clutch.

(b) Check that the underdrive 1-way clutch locks when turned clockwise and rotates freely when turned counterclockwise as shown in the illustration.
If the result is not as specified, replace the underdrive 1-way clutch.

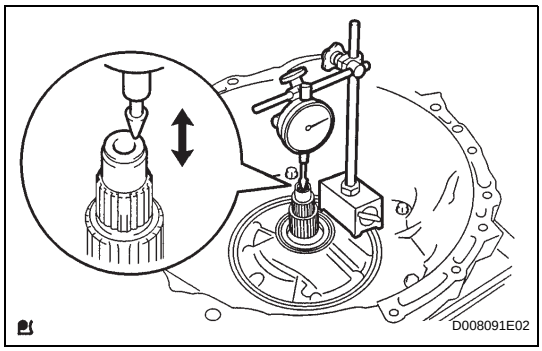

12. INSPECT INPUT SHAFT END PLAY

(a) Using a dial indicator, measure the input shaft end play.

Standard end play:

0.262 to 1.244 mm (0.0103 to 0.0490 in.)

If the result is not as specified, replace the input shaft or thrust needle roller bearing.

REASSEMBLY

1. BEARING POSITION

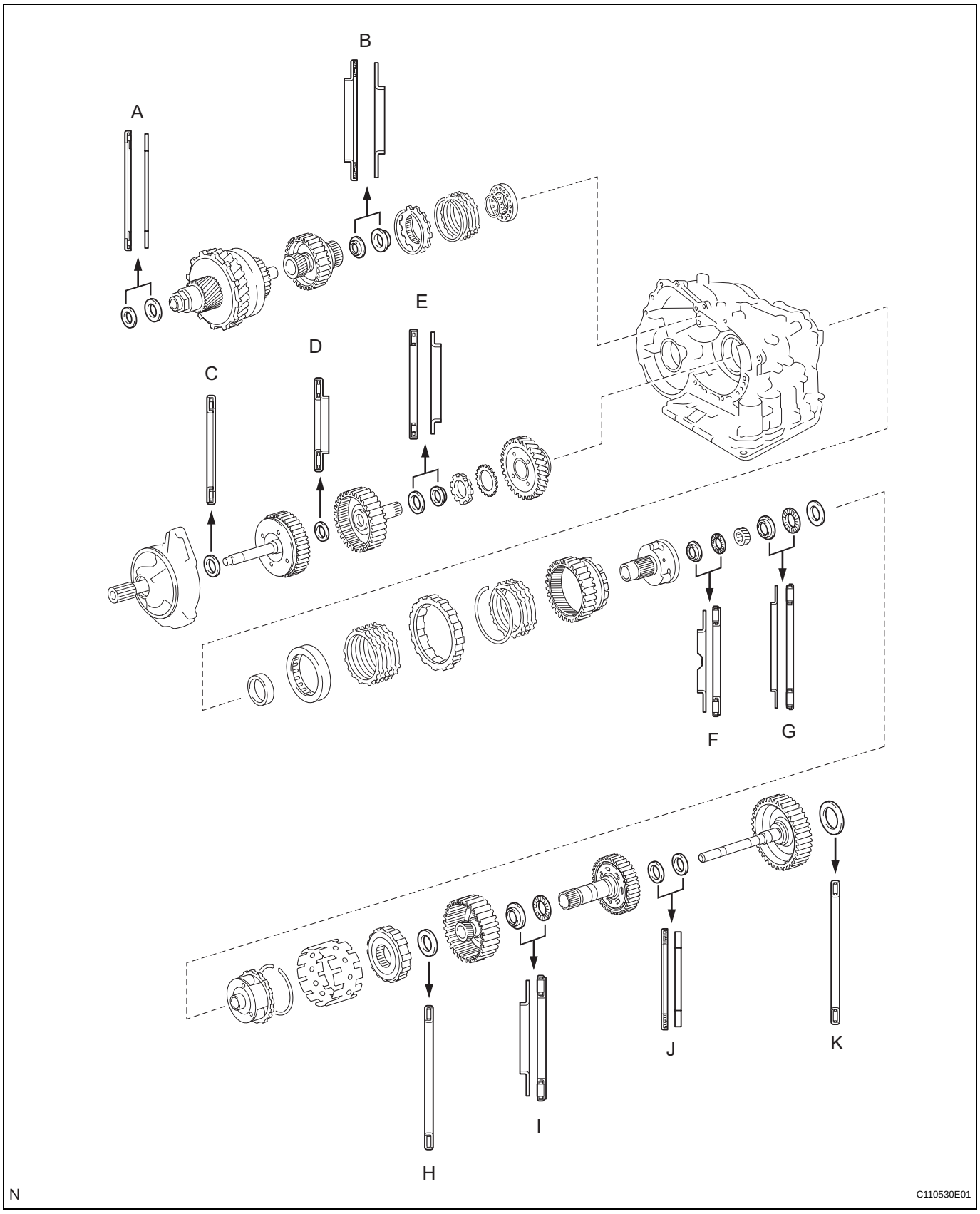

Standard bearing position

Mark	Front Race Diameter Inside / Outside	Thrust Bearing Diameter Inside / Outside	Rear Race Diameter Inside / Outside
A	-	57.2 mm (2.252 in.) / 84.96 mm (3.3449 in.)	56.4 mm (2.220 in.) / 83.0 mm (3.268 in.)
B	-	37.73 mm (1.4854 in.) / 58.0 mm (2.283 in.)	-
C	-	33.85 mm (1.3327 in.) / 52.2 mm (2.055 in.)	-
D	24.94 mm (0.982 in.)	23.5 mm (0.925 in.) / 44.0mm (1.732 in.)	-
E	-	36.3 mm (1.429 in.) / 51.93 mm (2.0445 in.)	34.5 mm (1.358 in.) / 48.35 mm (1.904 in.)
F	34.35 mm (1.3524 in.) / 56.57 mm (2.2272 in.)	32.45 mm (1.2776 in.) / 56.48 mm (2.2236 in.)	-
G	40.15 mm (1.5807 in.) / 59.25 mm (2.3327 in.)	38.65 mm (1.5217 in.) / 59.79 mm (2.3539 in.)	38.65 mm (1.5217 in.) / 59.25 mm (2.3327 in.)
H	-	53.6 mm (2.110 in.) / 69.6 mm (2.740 in.)	-
I	33.02 mm (1.3000 in.) / 45.8 mm (1.803 in.)	31.85 mm (1.2539 in.) / 57.3 mm (2.256 in.)	-
J	-	24.79 mm (0.9760 in.) / 39.5 mm (1.555 in.)	23.6 mm (0.929 in.) / 37.95 mm (1.4941 in.)
K	-	56.3 mm (2.216 in.) / 75.96 mm (2.9905 in.)	-

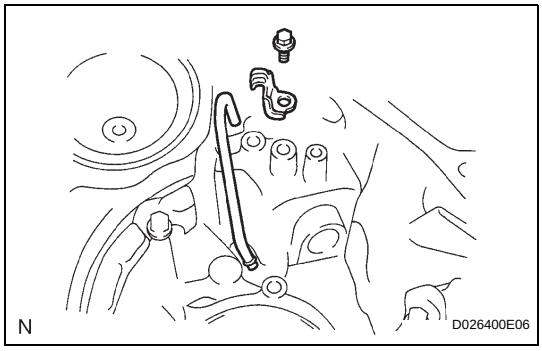

2. INSTALL DIFFERENTIAL GEAR LUBE APPLY TUBE

(a) Install the differential gear lube apply tube and transaxle apply tube clamp to the transaxle housing with the bolt.

Torque: 9.8 N*m (100 kgf*cm, 87 in.*lbf)

NOTICE:

Make sure to insert the pipe to the stopper.

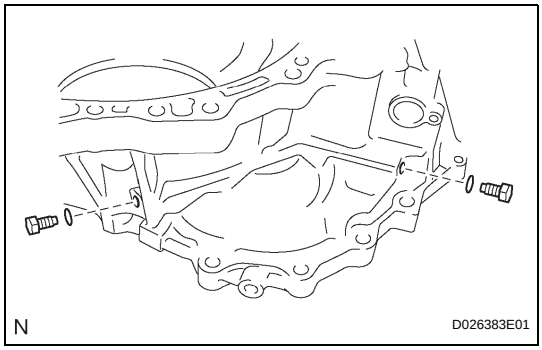

3. INSTALL NO. 1 TRANSAXLE CASE PLUG

(a) Install 2 new O-rings to the 2 plugs.

(b) Install the 2 plugs to the transaxle rear cover.

Torque: 7.4 N*m (75 kgf*cm, 65 in.*lbf)

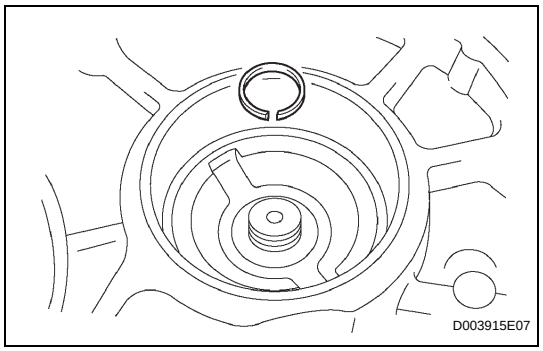

4. INSTALL UNDERDRIVE OUTPUT SHAFT OIL SEAL RING

(a) Coat a new oil seal ring with ATF and install it to the transaxle housing.

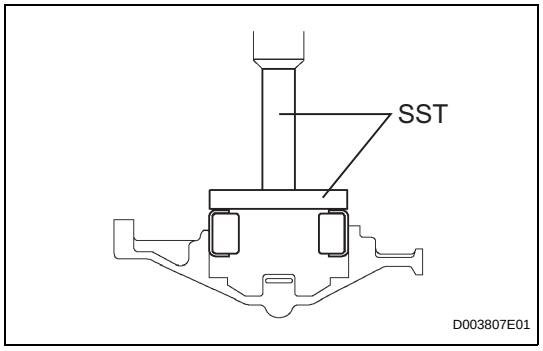

5. INSTALL UNDERDRIVE CYLINDRICAL ROLLER BEARING

(a) Coat the underdrive cylindrical roller bearing with ATF.

(b) Using SST and a press, press in the underdrive cylindrical roller bearing.

SST 09950-60020 (09951-00810), 09950-70010 (09951-07100)

NOTICE:

Do not apply excessive pressure to the bearing.

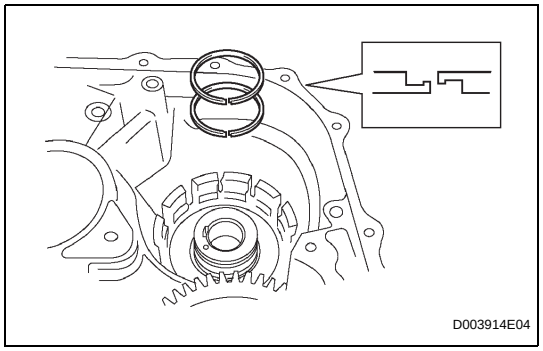

6. INSTALL UNDERDRIVE CLUTCH DRUM OIL SEAL RING

(a) Coat 2 new oil seal rings with ATF, and install them to the transaxle rear cover.

NOTICE:

- **Do not expand the end gap of the oil seal ring too much.**
- **Fix the hooks firmly. Confirm that the oil seal ring rotates freely in its groove.**

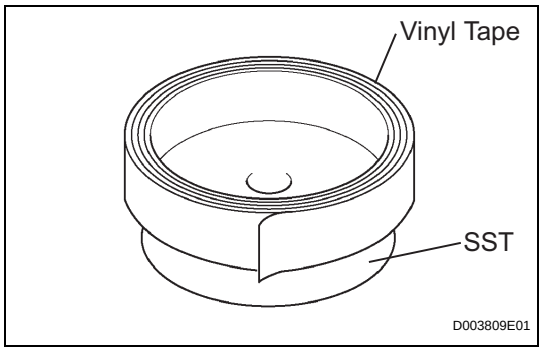

7. INSTALL NEEDLE ROLLER BEARING

(a) Wrap vinyl tape around SST 4.0 mm (0.157 in.) from the bottom of SST until the thickness of the tape is about 5.0 mm (0.197 in.).

SST 09950-60010 (09951-00320), 09950-70010 (09951-07100)

NOTICE:

Clean SST to remove deposited oil before wrapping vinyl tape.

(b) Coat the needle roller bearing with ATF.

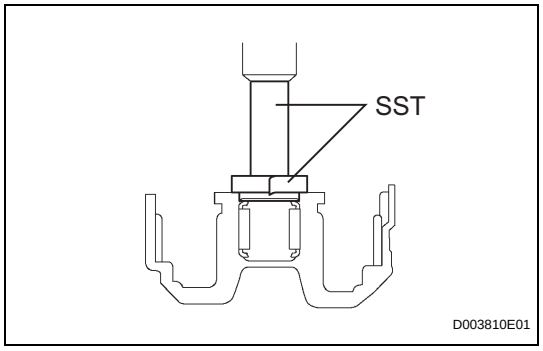

(c) Using SST and a press, press in the needle-roller bearing to the transaxle case.

SST 09950-60010 (09951-00320), 09950-70010 (09951-07100)

NOTICE:

When the wrapped vinyl tape contacts the transaxle case, stop press-fitting.

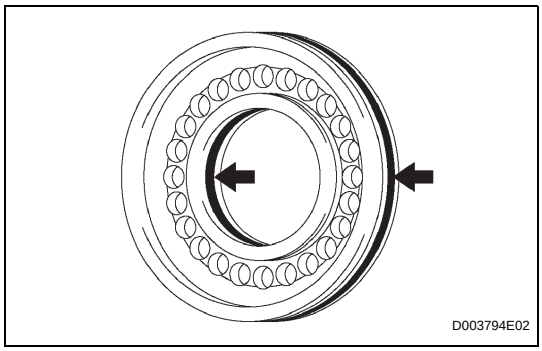

8. INSTALL UNDERDRIVE BRAKE PISTON

(a) Coat 2 new O-rings with ATF, and install them to the underdrive brake piston.

NOTICE:

- **Make sure that the O-rings are not twisted or pinched when they are installed.**
- **Apply sufficient ATF to the O-ring before installing.**

(b) Coat the underdrive brake piston with ATF.

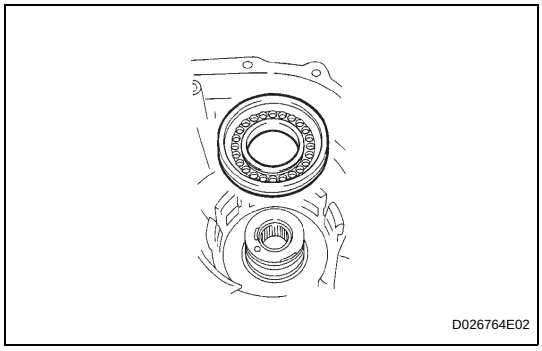

(c) Install the underdrive brake piston to the transaxle case.

NOTICE:

Be careful not to damage the O-ring.

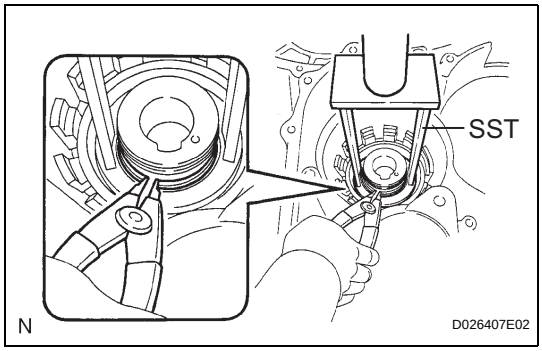

9. INSTALL UNDERDRIVE BRAKE RETURN SPRING SUB-ASSEMBLY

(a) Place SST on the return spring and compress the return spring with a press.

NOTICE:

- **Stop the press when the spring seat is lowered to a position 1 to 2 mm (0.039 to 0.078 in.) from the snap ring groove to prevent the spring seat from being deformed.**
- **After installing the return spring, check that all the return spring's springs fit in the piston correctly.**

SST 09387-00020

(b) Using a snap ring expander, press in the snap ring to the transaxle case.

NOTICE:

The snap ring must be fully engaged in the groove of the transaxle case.

10. INSTALL NO. 2 BREATHER PLUG

11. INSTALL COUNTER DRIVE GEAR BEARING

(a) Coat the counter drive gear bearing with ATF.

(b) Using SST and a press, press in the bearing outer race.

SST 09950-60020 (09951-01030), 09950-70010 (09951-07150), 09649-17010

NOTICE:

- **Do not apply excessive pressure to the bearing.**
- **Press-fit the bearing outer race until it contacts the transaxle case.**

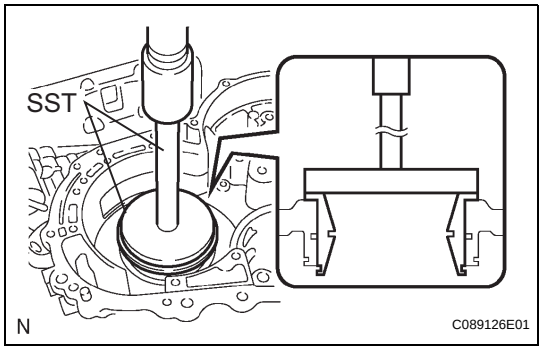

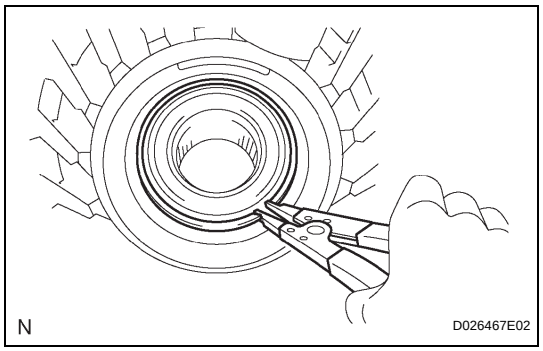

(c) Using a snap ring expander, install the snap ring.
NOTICE:
The white mark side of the snap ring should face upward.

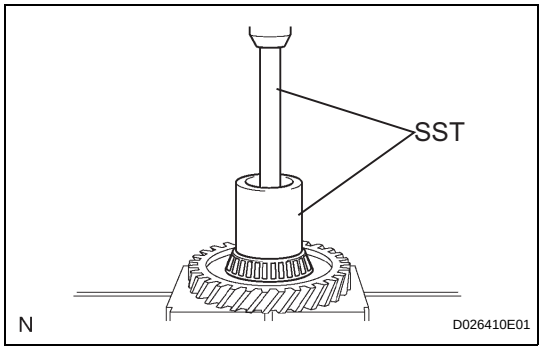

12. INSTALL COUNTER DRIVE GEAR

(a) Coat the counter drive gear with ATF.

(b) Using SST and a press, press in the tapered roller bearing to the counter drive gear.
SST 09950-70010 (09951-07150), 09649-17010
NOTICE:
Do not apply excessive pressure to the bearing.

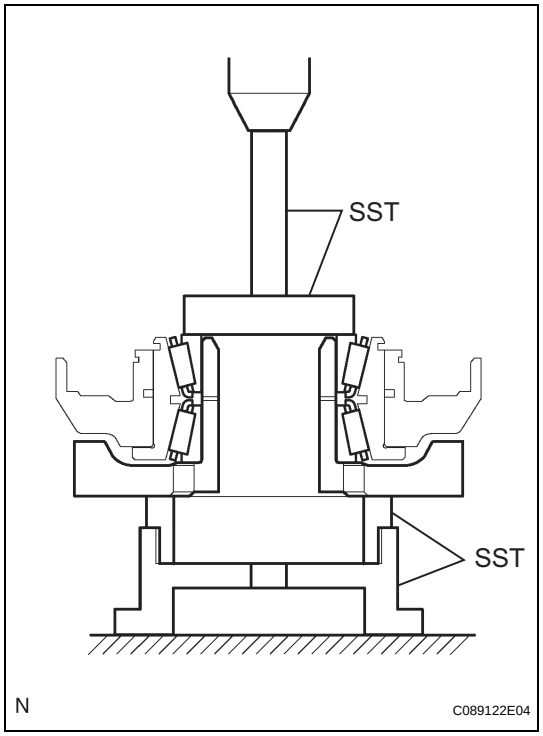

(c) Using SST and a press, press in the counter drive gear and bearing to the transaxle case.
SST 09950-70010 (09951-07150), 09223-15030, 09527-17011, 09950-60020 (09951-00750)
NOTICE:
Do not apply excessive pressure to the counter drive gear.

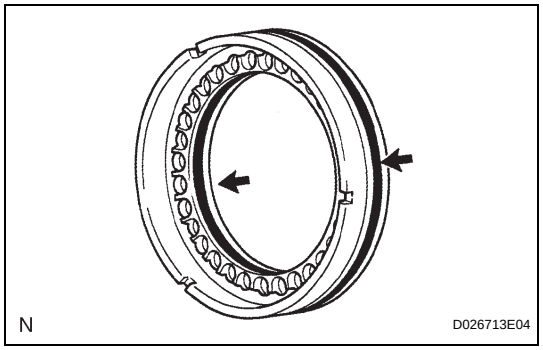

13. INSTALL 1ST AND REVERSE BRAKE PISTON

(a) Coat 2 new O-rings with ATF.

(b) Install the 2 O-rings to the 1st and reverse brake piston.
NOTICE:
- **Make sure that the O-rings are not twisted or pinched when they are installed.**
- **Apply sufficient ATF to the O-ring prior to assembling.**

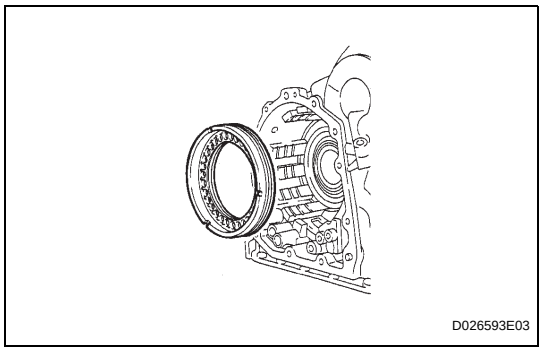

(c) Coat the 1st and reverse brake piston with ATF, and install it to the transaxle case.
NOTICE:
Be careful not to damage the O-ring.

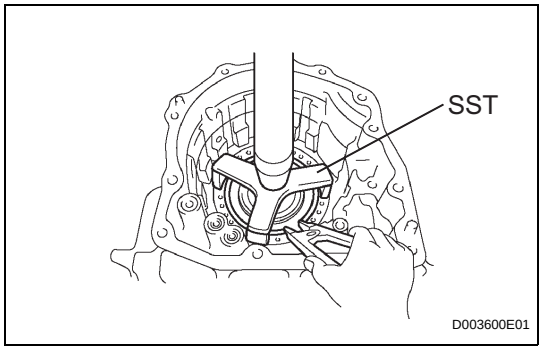

14. INSTALL 1ST AND REVERSE BRAKE RETURN SPRING SUB-ASSEMBLY

(a) Place SST on the return spring and compress the return spring with a press.
NOTICE:
- **Stop the press when the spring seat is lowered 1 to 2 mm (0.039 to 0.078 in.) from the snap ring groove to prevent the spring seat from being deformed.**
- **After installing the return spring, check that all the return spring's springs fit in the piston correctly.**

SST 09387-00070

(b) Using a snap ring expander, press in the snap ring to the transaxle case.
NOTICE:
- **The snap ring must be fully engaged in the groove of the transaxle case.**
- **Fix the snap ring to the inside of the claw of the spring seat firmly.**

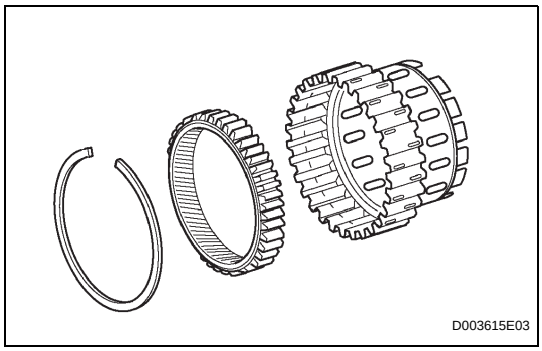

15. INSTALL FRONT PLANETARY RING GEAR

(a) Using a screwdriver, install the front planetary ring gear and snap ring to the brake hub.
NOTICE:
Confirm that the snap ring is engaged in the groove of the brake hub correctly.

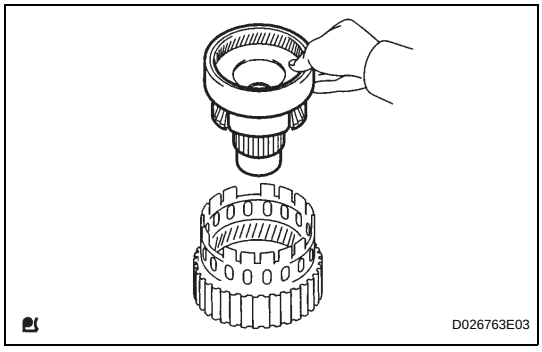

16. INSTALL FRONT PLANETARY GEAR ASSEMBLY

(a) Install the front planetary gear to the brake hub.

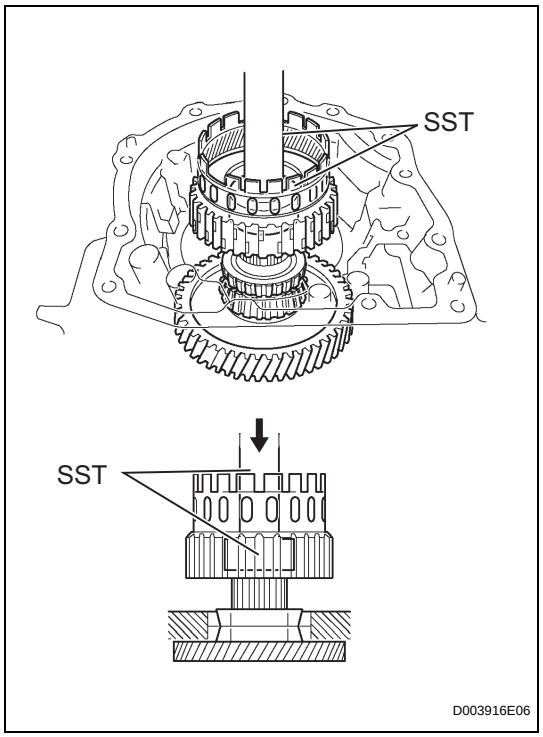

(b) Using SST and a press, press-fit the front planetary gear.
SST 09950-60010 (09951-00500), 09950-70010 (09951-07100)
NOTICE:
- **Do not apply excessive pressure to the planetary gear.**
- **Press the inner race of the LH tapered roller bearing, counter gear and front planetary gear to the position where no preload should be applied to one pair of tapered roller bearings (left and right).**

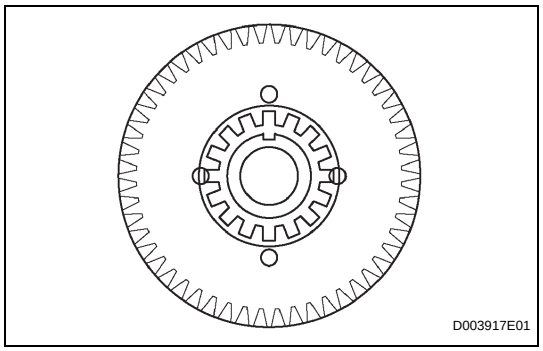

(c) Install a new washer as shown in the illustration.

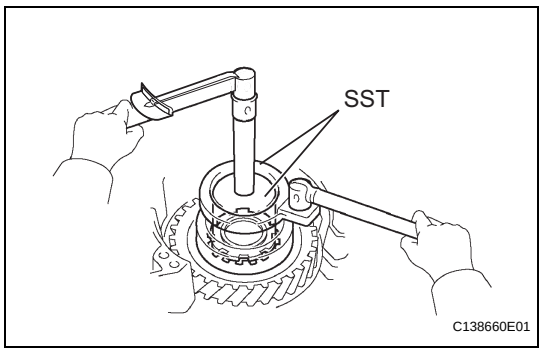

(d) Using SST, install the nut.
SST 09387-00030, 09387-00080
Torque: 280 N*m (3,355 kgf*cm, 207 ft.*lbf)
NOTICE:
Assemble the washer after pressing each part, then tighten the nut to the standard torque.

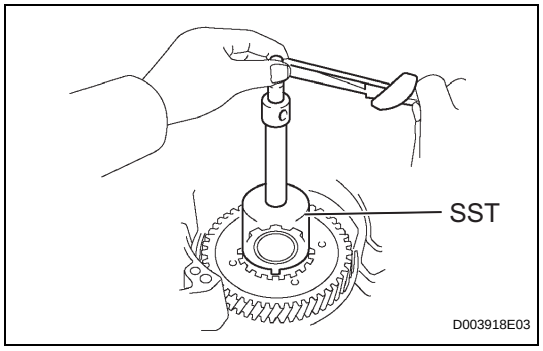

(e) Using SST and a torque wrench, measure the turning torque of the bearing while rotating SST at 60 rpm. When the measured value is not as specified, gradually tighten the nut until it reaches the specified value.
SST 09387-00080
Standard turning torque at 60 rpm:
0.51 to 1.02 N*m (5.1 to 10.0 kgf*cm, 4.4 to 8.7 in.*lbf) for new bearing
0.26 to 0.51 N*m (2.7 to 5.2 kgf*cm, 2.3 to 4.5 in.*lbf) for used bearing

(f) Tighten the nut gradually until the specified turning torque of the tapered roller bearing is measured.
Torque: 350 N*m (3,569 kgf*cm, 258 ft.*lbf)

(g) Using a chisel and hammer, stake the front lock washer.

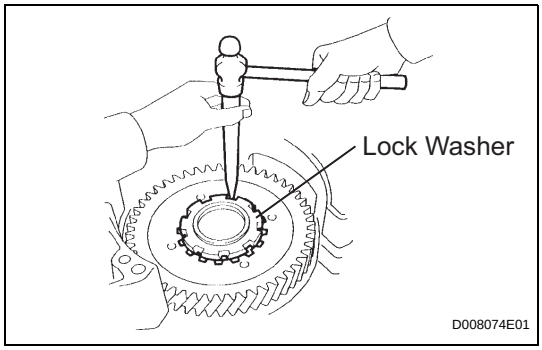

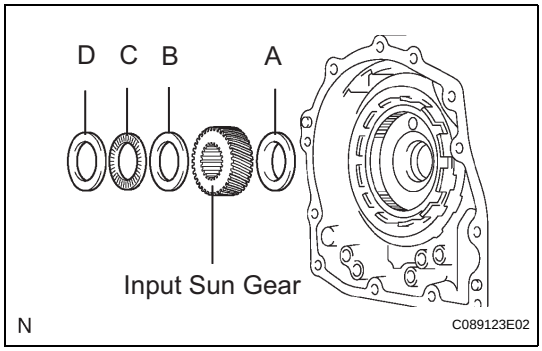

17. INSTALL INPUT SUN GEAR

(a) Coat the 2 thrust bearings with ATF.

(b) Install the 2 thrust bearings, bearing race and input sun gear to the front planetary gear.

NOTICE:

- **Install the bearing race on the side of the front planetary carrier. Be careful about the direction of the race.**
- **When installing the thrust bearing and front sun gears, be careful about the direction of the parts.**
- **When install the bearing race on the side of the front sun gear, be careful of the direction of the race.**
- **Install the thrust bearing and the race after holding the parts on the input sun gear by applying grease. Make sure that the assembling order is correct.**

Standard thrust bearing and bearing race diameter

Item	Inside	Outside
Thrust Bearing, A	32.5 mm (1.28 in.)	56.5 mm (2.224 in.)
Thrust Bearing, C	38.6 mm (1.520 in.)	59.7 mm (2.35 in.)
Bearing Race, B	40.2 mm (1.583 in.)	59.3 mm (2.335 in.)
Bearing Race, D	38.6 mm (1.520 in.)	59.3 mm (2.335 in.)

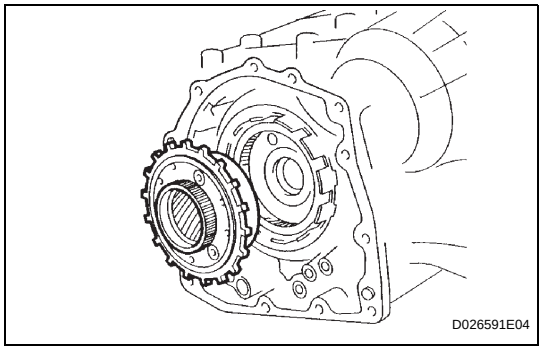

18. INSTALL REAR PLANETARY GEAR ASSEMBLY

(a) Install the rear planetary gear to the rear planetary ring gear.

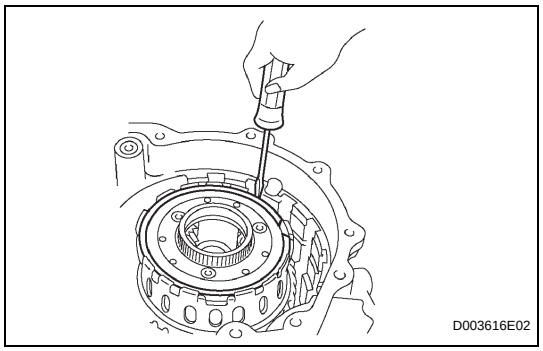

(b) Using a screwdriver, install the snap ring.
NOTICE:
Confirm that the snap ring is fixed in the groove of the 1st and reverse brake hub correctly.

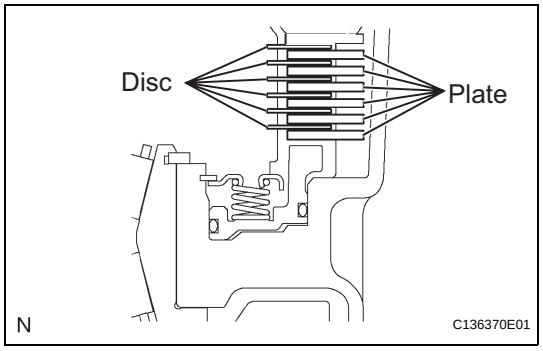

19. INSTALL 1ST AND REVERSE BRAKE CLUTCH DISC

(a) Coat the 6 discs with the ATF.
(b) Install the 6 plates and 6 discs.
NOTICE:
Make sure that the plates and discs are installed as shown in the illustration.

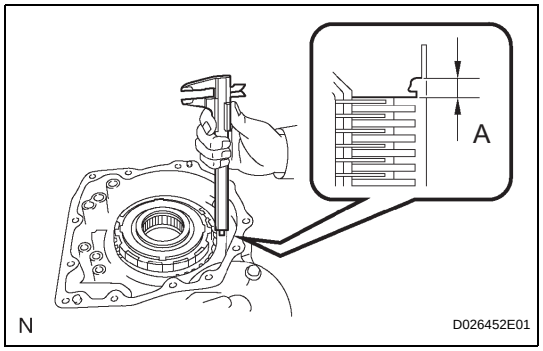

20. INSPECT PACK CLEARANCE OF FIRST AND REVERSE BRAKE

(a) Using a vernier caliper, measure the distance between the disc surface and the contact surface of the 2nd brake cylinder and transaxle case (Dimension A).
(b) Select an appropriate flange so that the pack clearance will meet the specified value.
Standard pack clearance:
1.16 to 1.35 mm (0.0457 to 0.0531 in.)
HINT:
Piston stroke = Dimension A - Flange thickness
Standard flange thickness

Mark	Thickness	Mark	Thickness
1	1.8 mm (0.071 in.)	5	2.2 mm (0.087 in.)
2	1.9 mm (0.075 in.)	6	2.3 mm (0.091 in.)
3	2.0 mm (0.079 in.)	7	2.4 mm (0.094 in.)
4	2.1 mm (0.083 in.)	8	2.5 mm (0.098 in.)

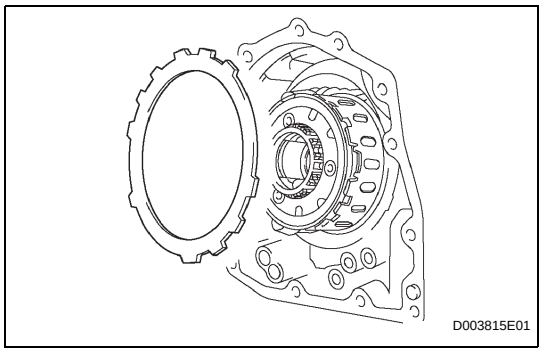

(c) Install the flange.

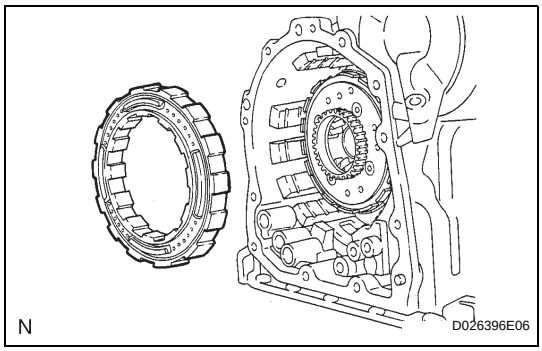

21. INSTALL SECOND BRAKE PISTON ASSEMBLY

(a) Install the second brake piston to the transaxle case.

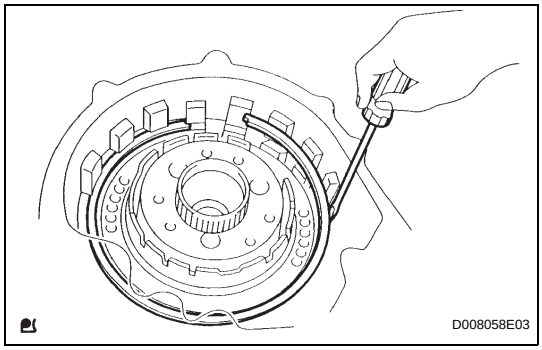

(b) Install the snap ring and measure the inside diameter.

Inside diameter:

Greater than 167 mm (6.57 in.)

NOTICE:

- **Make sure that the taper snap ring is installed in the correct direction.**
- **When the diameter does not meet the specified value, replace the snap ring with a new one.**
- **After installing the snap ring, confirm that there is no clearance between the 2nd brake cylinder and the fitting surface of the cylinder in the transaxle case.**

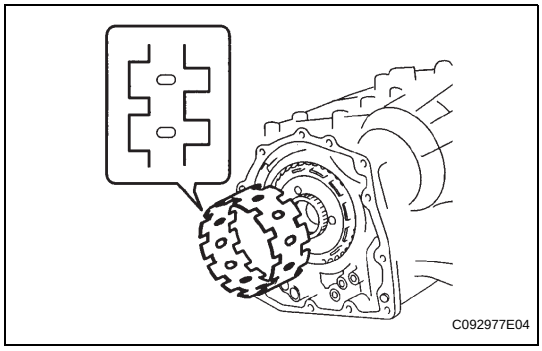

22. INSTALL 1-WAY CLUTCH SLEEVE OUTER

(a) Install the 1-way clutch sleeve outer to the 2nd brake cylinder.

NOTICE:

Make sure that the outer sleeve is installed in the correct direction.

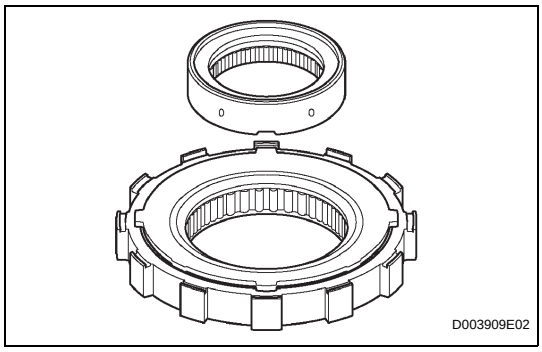

23. INSTALL 1-WAY CLUTCH ASSEMBLY

(a) Install the 1-way clutch inner race to the 1-way clutch.

NOTICE:

- **Make sure that the inner race is installed in the correct direction.**
- **Confirm that the discrimination mark is visible.**

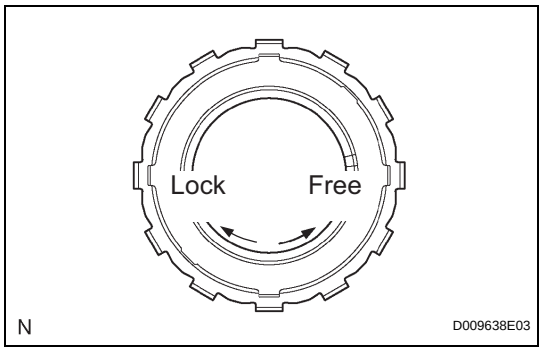

(b) Check that the 1-way clutch locks when turned clockwise and rotates freely when turned counterclockwise as shown in the illustration.
If the result is not as specified, replace the 1-way clutch.

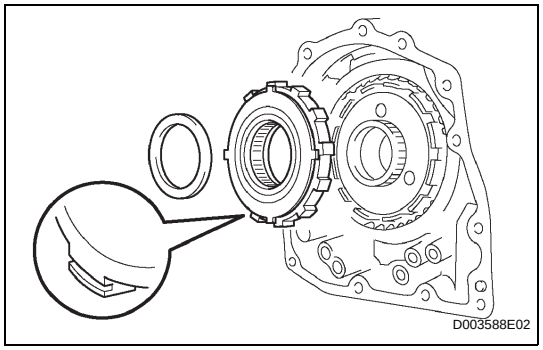

(c) Install the 1-way clutch and thrust needle roller bearing to the 1-way clutch sleeve outer.
Standard bearing diameter

Item	Inside	Outside
Bearing	53.6 mm (2.110 in.)	69.4 mm (2.732 in.)

NOTICE:
Install the thrust bearing properly so that the non-colored race will be visible.

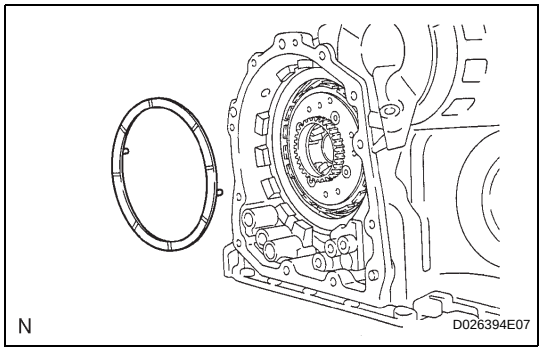

24. INSTALL NO. 1 PLANETARY CARRIER THRUST WASHER

(a) Coat the planetary carrier thrust washer with yellow petrolatum, and install the washer onto the planetary sun gear.
NOTICE:
After installing the washer, confirm that the projection of the washer is fixed firmly in the hole of the planetary sun gear.

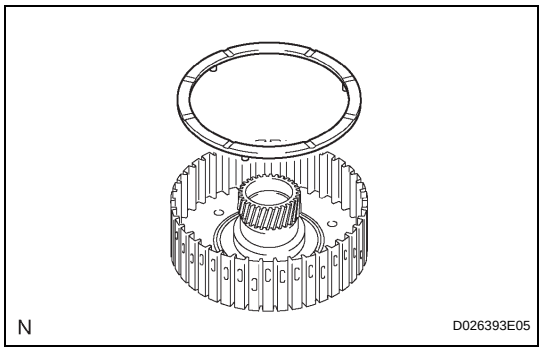

25. REMOVE REAR PLANETARY SUN GEAR ASSEMBLY

(a) Coat the planetary carrier thrust washer with yellow petrolatum, and install the washer onto the rear planetary sun gear.

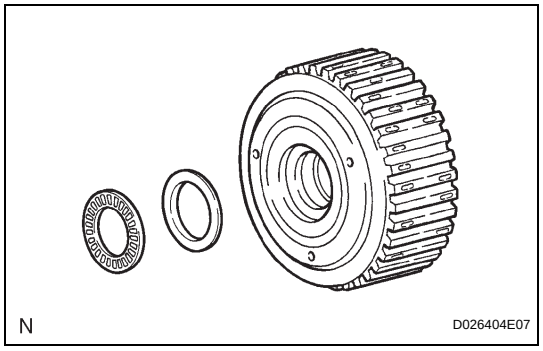

(b) Coat the bearing with yellow petrolatum, and install the bearing onto the rear planetary sun gear.
Standard bearing diameter

Item	Inside	Outside
Race	33.0 mm (1.299 in.)	45.4 mm (1.787 in.)
Bearing	31.85 mm (1.254 in.)	45.2 mm (1.78 in.)

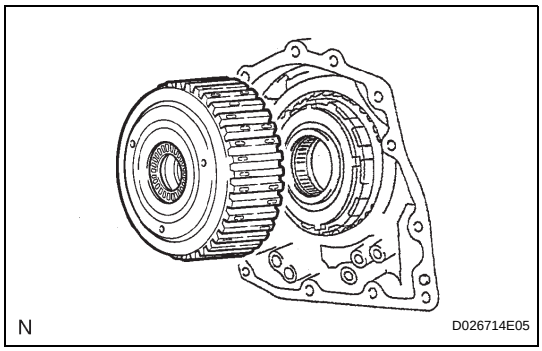

(c) Install the rear planetary sun gear to the rear planetary gear.
NOTICE:
After installing the rear planetary sun gear, make sure that the B1 discs are engaged.

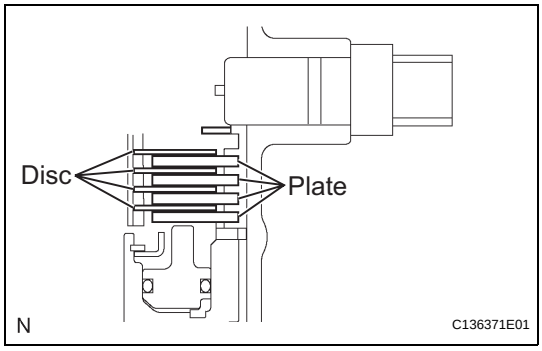

26. INSTALL 2ND BRAKE CLUTCH DISC
(a) Coat the 4 discs with ATF.
(b) Install the 4 plates and 4 discs to the transaxle case.
NOTICE:
Make sure that the plates and discs are installed as shown in the illustration.
(c) Temporarily install the snap ring.

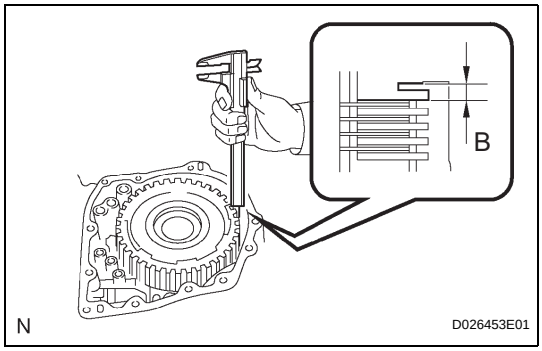

27. INSPECT PACK CLEARANCE OF 2ND BRAKE
(a) Using a vernier caliper, measure the distance between the disc surface and snap ring surface (Dimension B).
(b) Select an appropriate flange so that the pack clearance will meet the specified value.
Standard clearance:
0.62 to 0.91 mm (0.0244 to 0.0358 in.)
HINT:
Piston stroke = Dimension B - Flange thickness - Snap ring thickness 1.6 mm (0.063 in.)
Standard flange thickness

Mark	Thickness	Mark	Thickness
1	3.0 mm (0.118 in.)	5	3.4 mm (0.134 in.)
2	3.1 mm (0.122 in.)	6	3.5 mm (0.138 in.)
3	3.2 mm (0.126 in.)	7	3.6 mm (0.142 in.)
4	3.3 mm (0.130 in.)	8	-

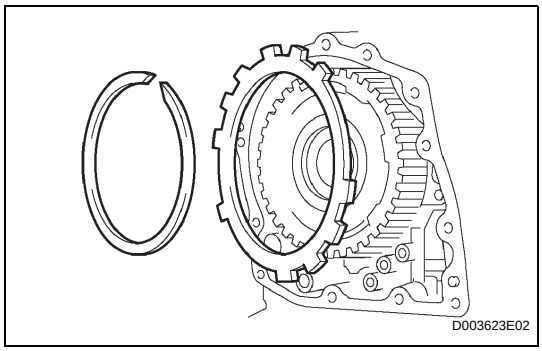

(c) Temporarily remove the snap ring, attach the selected flange and reinstall the snap ring.
NOTICE:
Secure the snap ring so that the ends are visible through the groove of the transaxle case.

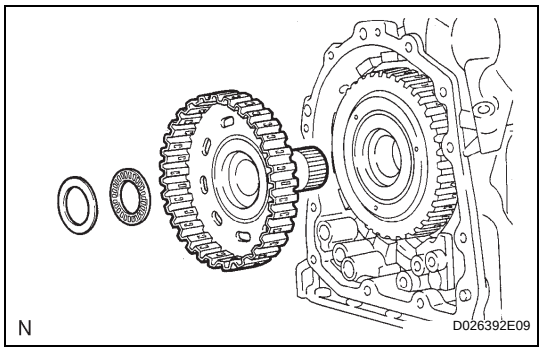

28. INSTALL OVERDRIVE DIRECT CLUTCH HUB SUB-ASSEMBLY

(a) Install the direct clutch hub to the planetary gear.
NOTICE:
Be careful not to damage the bushing inside the overdrive clutch hub during installation.

(b) Coat the thrust bearing with ATF.

(c) Install the bearing race and the thrust bearing to the direct clutch hub.
NOTICE:
Be careful not to drop the bearing when it is installed.
Standard bearing and race diameter

Item	Inside	Outside
Bearing	24.7 mm (0.972 in.)	39.5 mm (1.555 in.)
Race	23.6 mm (0.929 in.)	38.0 mm (1.496 in.)

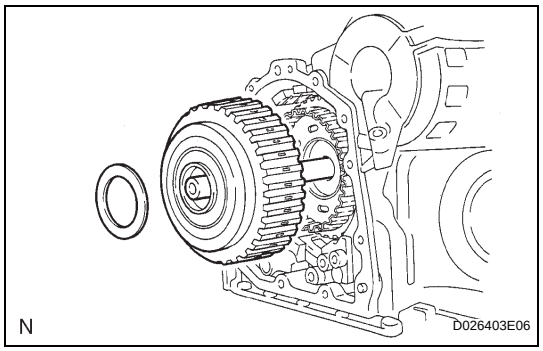

29. INSTALL DIRECT CLUTCH ASSEMBLY

(a) Coat the thrust bearing with ATF.

(b) Install the direct clutch and thrust bearing to the rear planetary sun gear.
NOTICE:
The disc in the direct clutch should completely match with the hub attached outside the rear planetary sun gear. Otherwise, the rear cover cannot be installed.

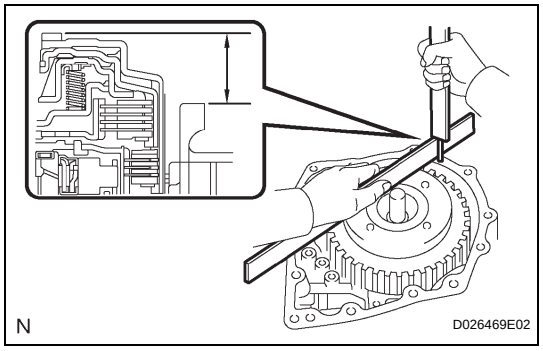

(c) Clean the connecting part of the transaxle case and the rear cover.

(d) As shown in the illustration, place a straightedge on the direct clutch drum and measure the distance between the transaxle case and the straightedge using a vernier caliper (Dimension C).

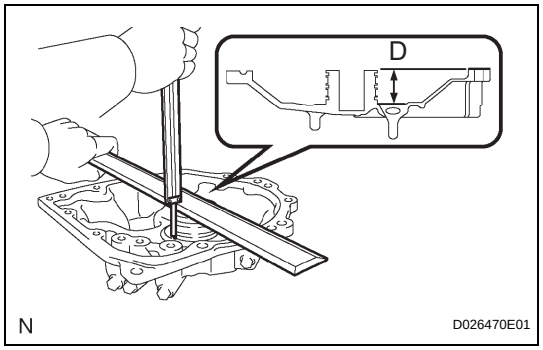

(e) Using a vernier caliper and straightedge, measure the dimension shown in the illustration (Dimension D).

(f) Calculate the end play value using the following formula. Select a thrust bearing which satisfies the end play value and install the selected bearing.
Standard end play:
0.244 to 0.901 mm (0.0096 to 0.0355 in.)
NOTICE:
Make sure that the non-collared race side is facing the direct clutch.
HINT:
End play = Dimension D - Dimension C

Standard bearing thickness and diameter

Thickness	Inside	Outside
3.6 mm (0.1417 in.)	56.3 mm (2.217 in.)	75.7 mm (2.980 in.)
3.8 mm (0.1496 in.)	56.3 mm (2.217 in.)	75.7 mm (2.980 in.)

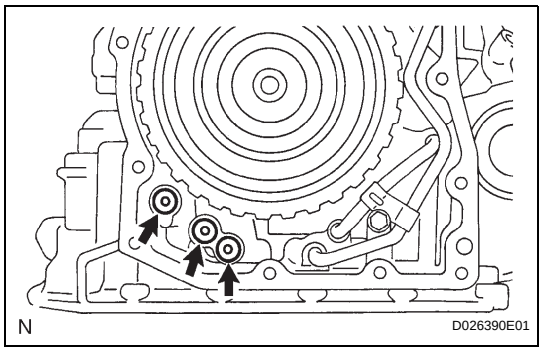

30. INSTALL NO. 1 GOVERNOR APPLY GASKET

(a) Install 3 new governor apply gaskets to the transaxle case.

31. INSTALL BRAKE APPLY TUBE

(a) Install the clamp to the brake apply tube.
NOTICE:
Make sure to install the clamp to the apply tube before installing the apply tube to the transaxle case. This prevents the apply tube from being deformed or damaged.

(b) Install the clutch apply tube.

(c) Install the brake apply tube to the transaxle case with the bolt.
Torque: 5.4 N*m (55 kgf*cm, 48 in.*lbf)
NOTICE:
The tube should be securely inserted until it reaches the stopper.

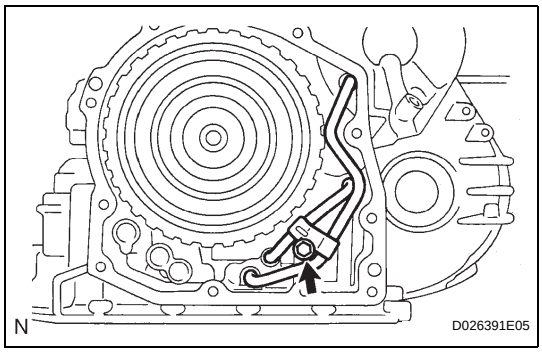

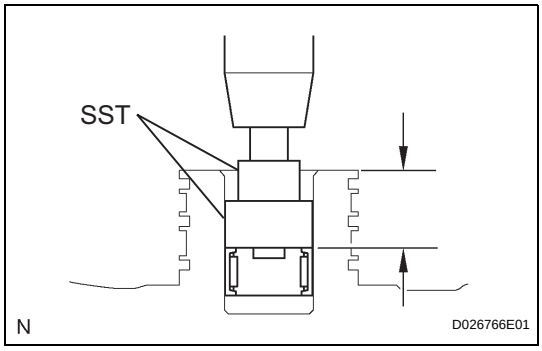

32. INSTALL NEEDLE ROLLER BEARING

(a) Using SST and a press, press the needle roller bearing into the transaxle rear cover.
SST 09950-60010 (09951-00230, 09952-06010)
Standard depth:
20.55 to 21.25 mm (0.8091 to 0.8366 in.)
NOTICE:
- **The engraved mark side of the bearing should face upward.**
- **Continue pressing until the specified value is obtained.**

(b) Coat a needle roller bearing with ATF.

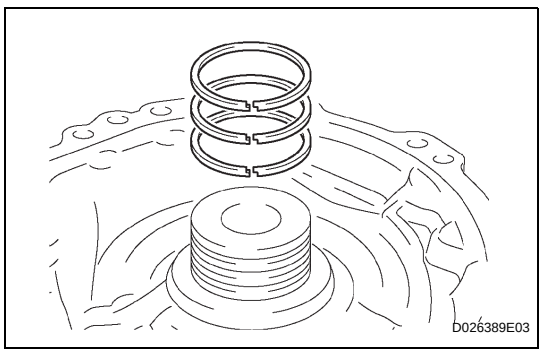

33. INSTALL REAR CLUTCH OIL SEAL RING OUTER

(a) Coat 3 new rear clutch oil seal rings with ATF, and install them to the transaxle rear cover.
NOTICE:
The snap ring should be fully engaged in the groove of the drum.

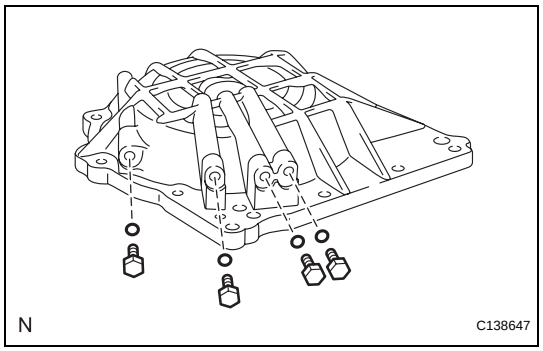

34. INSTALL NO. 1 TRANSAXLE CASE PLUG

(a) Coat 4 new O-rings with ATF.

(b) Install the 4 O-rings to the 4 plugs.

(c) Install the 4 plugs to the transaxle rear cover.
Torque: 7.4 N*m (75 kgf*cm, 65 in.*lbf)

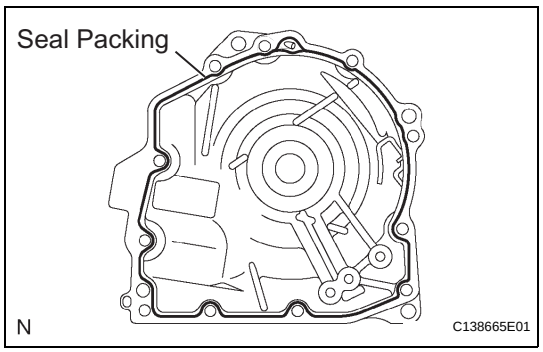

35. INSTALL TRANSAXLE REAR COVER SUB-ASSEMBLY

(a) Remove any packing material and be careful not to spill oil on the contact surfaces of the transaxle rear cover or the transaxle case.

(b) Apply FIPG to the cover.
Seal packing:
Toyota Genuine Seal Packing 1281,
Three Bond 1281 or Equivalent
NOTICE:
Make sure that the seal packing is applied in a bead (section diameter: ϕ1.2 mm (0.047 in.)) so that the entire sealing surface will be evenly sealed. The seal packing should also protrude slightly from the flange after the installation of the cover has been completed.

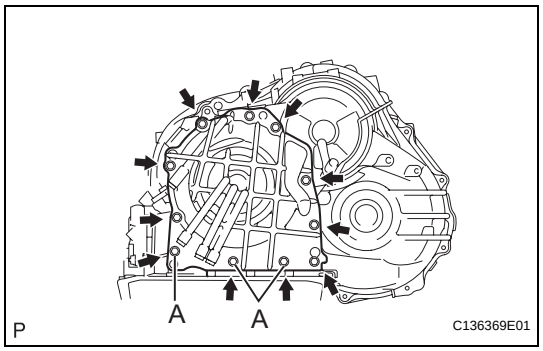

(c) Apply adhesive to the threads of bolt A.
Adhesive:
Toyota Genuine Adhesive 1344,
Three Bond 1344 or Equivalent

(d) Install the cover with the 11 bolts.
Torque: 19 N*m (194 kgf*cm, 14 ft.*lbf) for bolt A
25 N*m (255 kgf*cm, 18 ft.*lbf) for other bolts

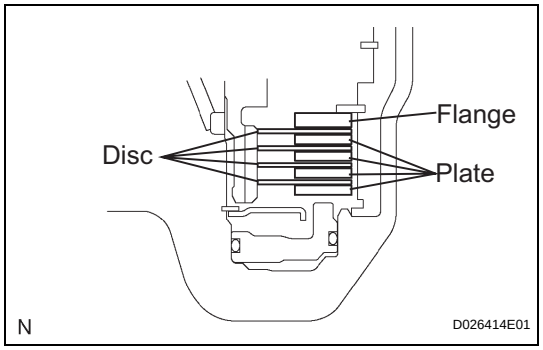

36. INSTALL NO. 2 UNDERDRIVE CLUTCH DISC

(a) Coat the 4 discs with ATF.

(b) Install the 4 discs, 4 plates and flange to the transaxle case.
NOTICE:
Be careful of the order of the discs, plate and flange.

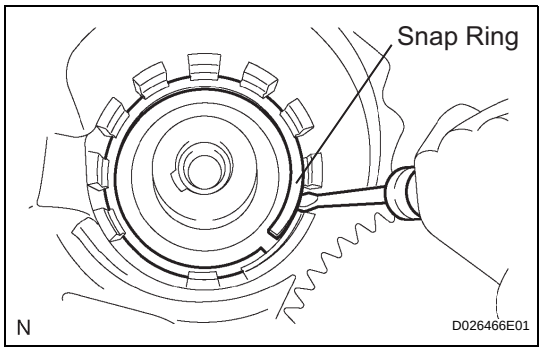

(c) Using a screwdriver, install the snap ring.
NOTICE:
The snap ring should be fully engaged in the groove of the drum.

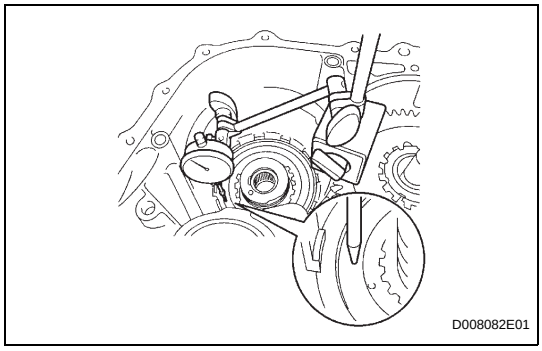

37. INSPECT PACK CLEARANCE OF UNDERDRIVE BRAKE

(a) Using a dial indicator, measure the underdrive brake pack clearance while applying and releasing compressed air (392 kPa, 4.0 kgf/cm^2, 57 psi).
Standard pack clearance:
1.81 to 2.20 mm (0.0713 to 0.0866 in.)
HINT:
Select an appropriate flange from the table below so that it will meet the specified value.
Standard flange thickness

Mark	Thickness	Mark	Thickness
1	3.0 mm (0.118 in.)	4	3.1 mm (0.122 in.)
2	3.2 mm (0.126 in.)	5	3.3 mm (0.130 in.)
3	3.4 mm (0.134 in.)	-	-

(b) Temporarily remove the snap ring, attach the selected flange and reinstall the snap ring.
(c) Reinstall the snap ring.

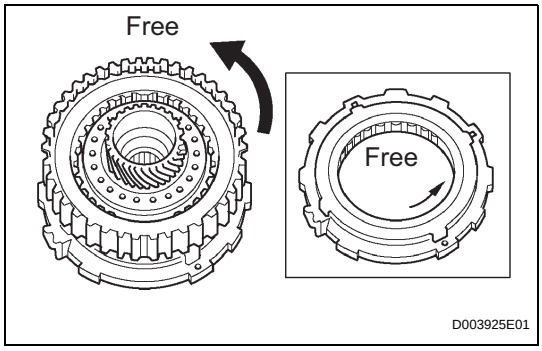

38. INSPECT UNDERDRIVE 1-WAY CLUTCH ASSEMBLY

(a) Install the underdrive clutch to the 1-way clutch.
(b) Check that the underdrive 1-way clutch locks when turned clockwise and rotates freely when turned counterclockwise as shown in the illustration.
If the result is not as specified, replace the underdrive 1-way clutch.

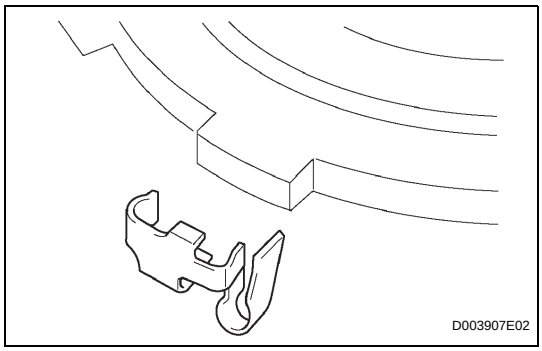

39. INSTALL UNDERDRIVE 1-WAY CLUTCH ASSEMBLY

(a) Install the outer race retainer to the 1-way clutch.
NOTICE:
Fix the outer race retainer to the external tooth of the 1-way clutch firmly.

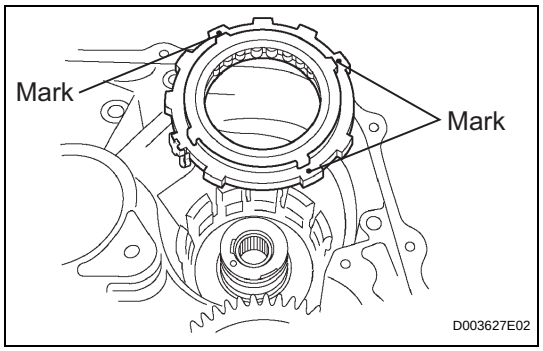

(b) Install the 1-way clutch to the transaxle case.
NOTICE:
Make sure that the mark on the 1-way clutch outer race is visible.

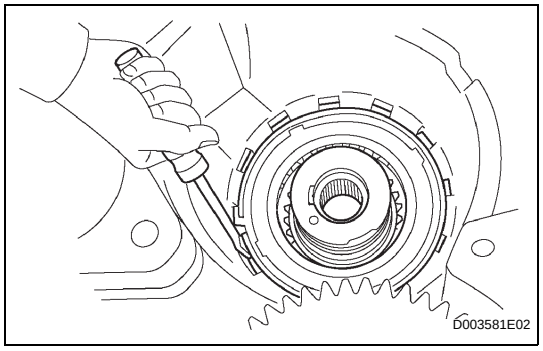

(c) Using a screwdriver, install the snap ring to the transaxle case.
NOTICE:
The snap ring should be fully engaged in the groove of the transaxle case.

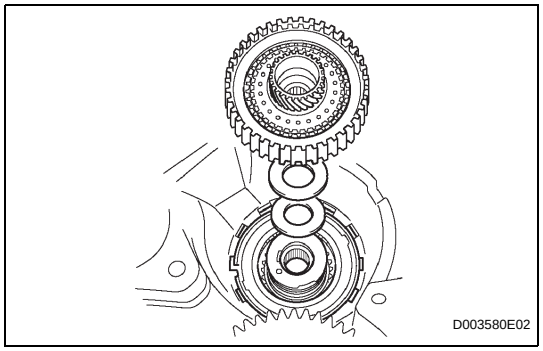

40. INSTALL UNDERDRIVE CLUTCH ASSEMBLY

(a) Coat the bearing and bearing race with petrolatum, and install them onto the underdrive clutch.
Standard bearing and bearing race diameter

Item	Inside	Outside
Bearing	37.73 mm (1.4854 in.)	58.0 mm (2.2835 in.)
Race	29.9 mm (1.1772 in.)	55.5 mm (2.185 in.)

(b) Install the underdrive clutch to the transaxle case.
NOTICE:
Do not damage the oil seal when installing the underdrive clutch drum.

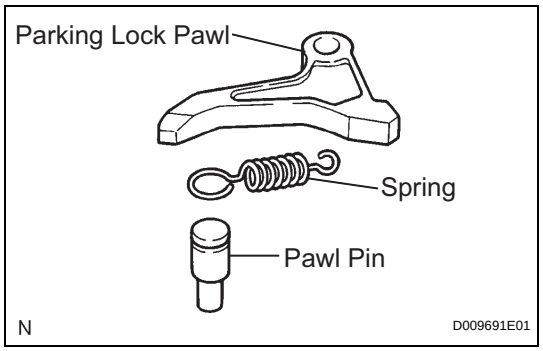

41. INSTALL PARKING LOCK PAWL

(a) Install the pawl pin and spring to the parking lock pawl.

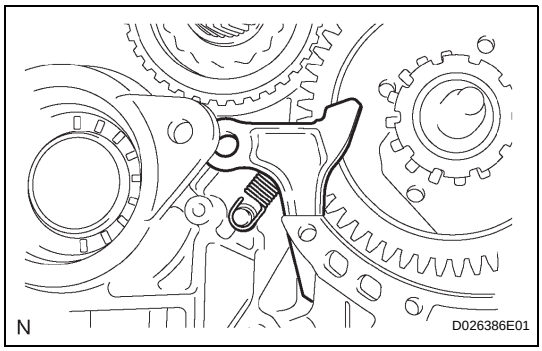

(b) Temporarily install the parking lock pawl, shaft and spring to the transaxle case, as shown in the illustration.

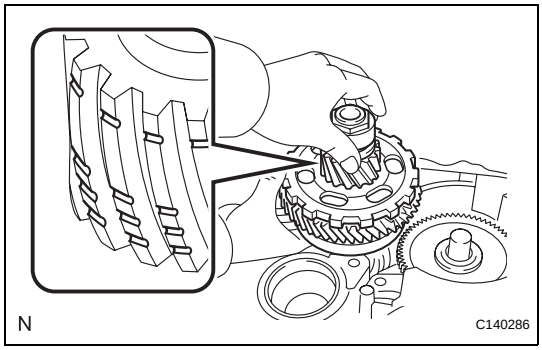

42. INSTALL UNDERDRIVE PLANETARY GEAR ASSEMBLY

(a) Install the underdrive planetary gear to the transaxle case.

NOTICE:

- **Fully engage all the discs of underdrive clutch and hub splines of the underdrive planetary gear and install them securely.**
- **Check the position and number of the grooves on each end face of the differential drive pinion gear.**

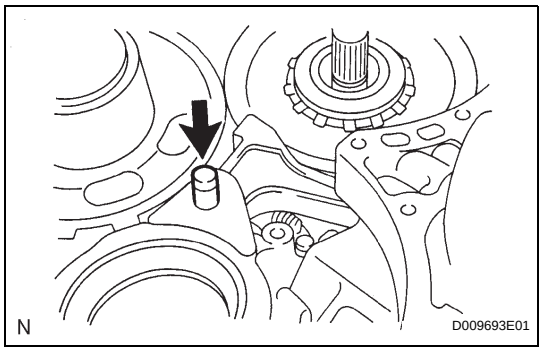

(b) Install the parking lock pawl shaft.

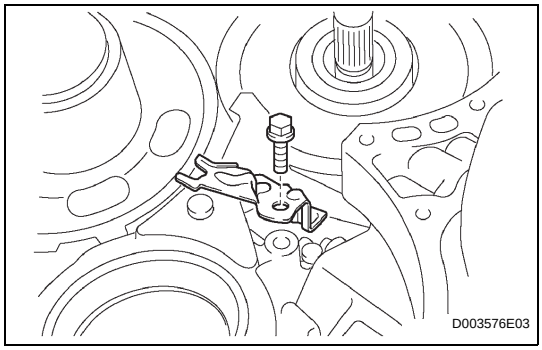

(c) Install the pawl shaft clamp with the bolt.
Torque: 9.8 N*m (100 kgf*cm, 87 in.*lbf)

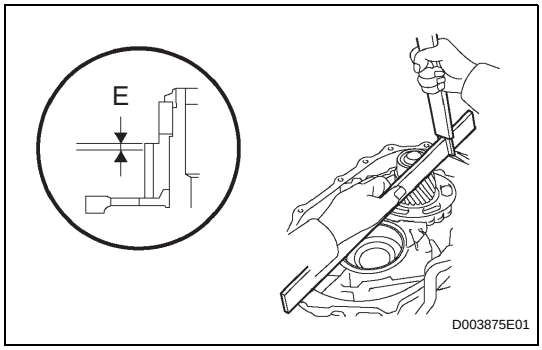

(d) Using a straightedge and vernier caliper as shown in the illustration, measure the gap between the top of the differential drive pinion in the underdrive planetary gear and the contact surface of the transaxle case and housing (Dimension E).

NOTICE:
Record dimension E for the following process.

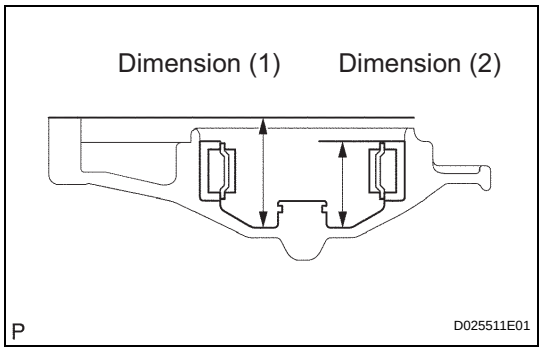

(e) As shown in the illustration, measure the 2 places of the transaxle housing, and calculate dimension F using the formula below.
NOTICE:
Record dimension F for the following process.
HINT:
Dimension F = Dimension (1) - Dimension (2)

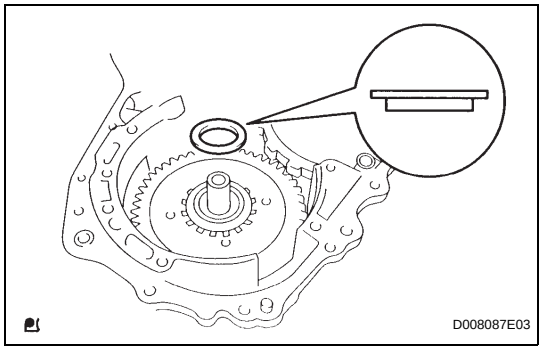

43. INSTALL MULTIPLE DISC CLUTCH HUB

(a) Install the thrust bearing race to the transaxle case while checking its direction.
Standard bearing race diameter

Item	Inside	Outside
Bearing race	39.5 mm (1.555 in.)	45.8 mm (1.803 in.)

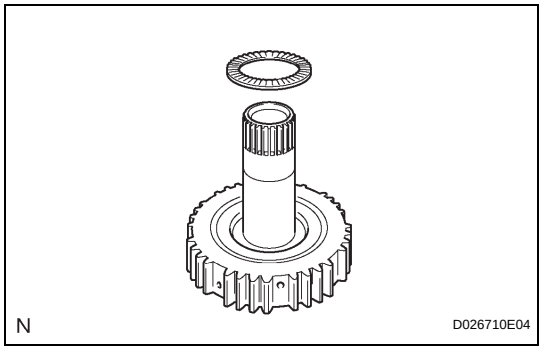

(b) Coat the thrust needle roller bearing and race with yellow petrolatum, and install them onto the multiple disc clutch hub.
Standard thrust bearing and race diameter

Item	Inside	Outside
Thrust Bearing	36.4 mm (1.433 in.)	52.2 mm (2.055 in.)

(c) Coat the needle roller bearing with ATF.

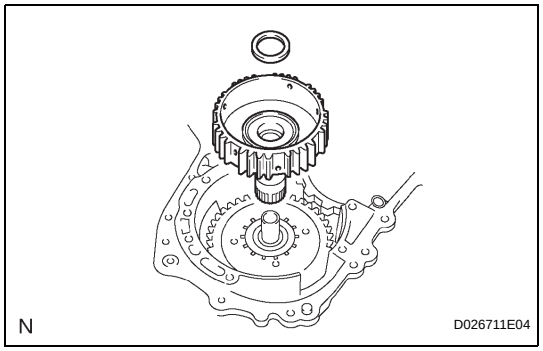

(d) Install the needle roller bearing to the multiple clutch hub.
Standard bearing diameter

Item	Inside	Outside
Bearing	23.6 mm (0.929 in.)	44 mm (1.732 in.)

(e) Install the multiple clutch hub to the transaxle case.

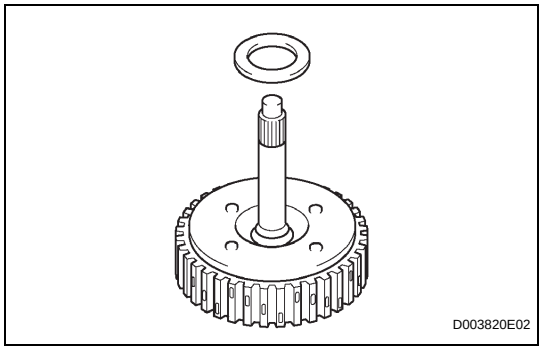

44. INSTALL FORWARD CLUTCH ASSEMBLY

(a) Coat the thrust needle roller bearing with ATF.
(b) Install the thrust needle roller bearing to the forward clutch.
Standard thrust bearing diameter

Item	Inside	Outside
Thrust Bearing	33.58 mm (1.3220 in.)	51.9 mm (2.043 in.)

NOTICE:
Install the thrust bearing properly so that the non-collared race or blue ink jet race will be visible.

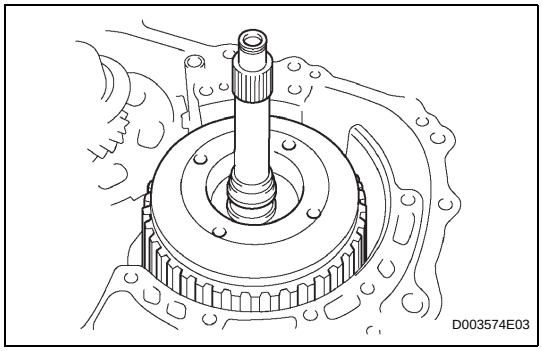

(c) Install the forward clutch to the transaxle case.
NOTICE:
- **Align the splines of all discs in the forward clutch with those of multiple clutch hub to install them securely.**
- **Be careful not to damage the bushing inside of the forward clutch hub during installation.**

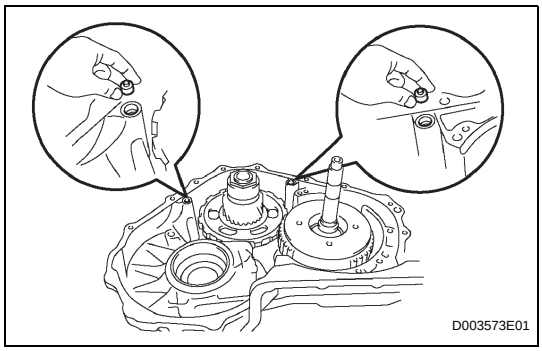

45. INSTALL OVERDRIVE BRAKE GASKET
(a) Install 2 new overdrive brake gaskets.

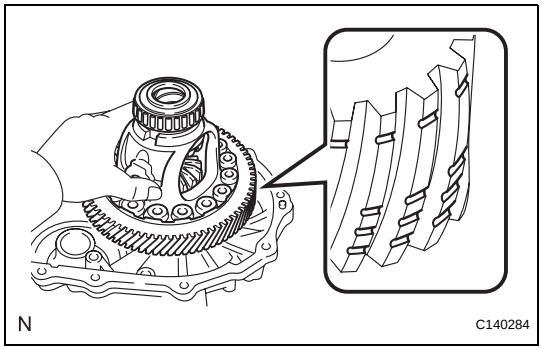

46. INSTALL DIFFERENTIAL GEAR ASSEMBLY
(a) Install the differential gear to the transaxle case.
NOTICE:
Check the position and number of the grooves on each end face of the differential ring gear.

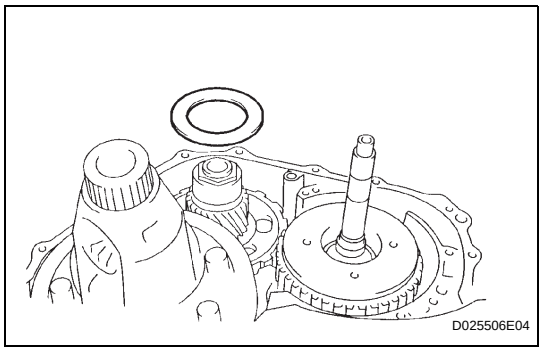

47. INSTALL NO. 2 THRUST BEARING UNDERDRIVE RACE
(a) Install the thrust bearing underdrive race to the underdrive planetary gear.

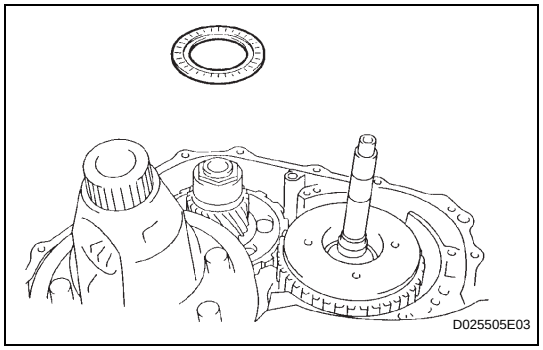

48. INSTALL THRUST NEEDLE ROLLER BEARING

(a) Coat the thrust needle roller bearing with ATF.

(b) Calculate the end play value using the following formula and values of Dimension E and F that were measured when installing the cylindrical roller bearing and underdrive planetary gear. Select an appropriate underdrive planetary gear thrust bearing race which satisfies the specified end play value, and install the selected bearing race.

Standard end play:

0.498 to 0.993 mm (0.0196 to 0.0391 in.)

HINT:

End play = Dimension F - Dimension E - thrust bearing thickness 2.5 mm (0.0984 in.) - underdrive thrust bearing race thickness.

Standard race thickness

F - E	Thickness
Less than 7.72 mm (0.3039 in.)	3.5 mm (0.138 in.)
7.72 mm (0.3039 in.)	3.8 mm (0.150 in.)

Standard bearing and bearing race diameter

Item	Inside	Outside
Bearing	57.2 mm (2.252 in.)	84.96 mm (3.345 in.)
Bearing race	56.4 mm (2.22 in.)	83 mm (3.268 in.)

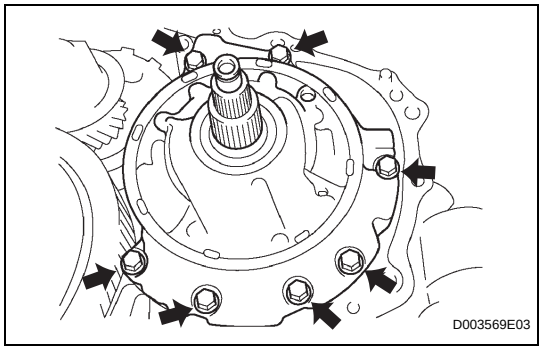

49. INSTALL OIL PUMP ASSEMBLY

(a) Install the oil pump to the transaxle case with the 7 bolts.

Torque: 22 N*m (226 kgf*cm, 16 ft.*lbf)

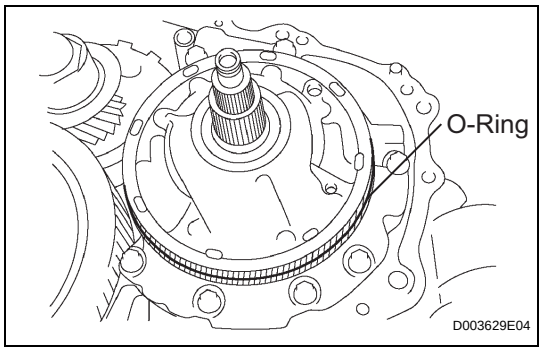

(b) Coat the O-ring of oil pump with ATF.

NOTICE:

Confirm that the input shaft rotates smoothly by manual operation after installing the oil pump.

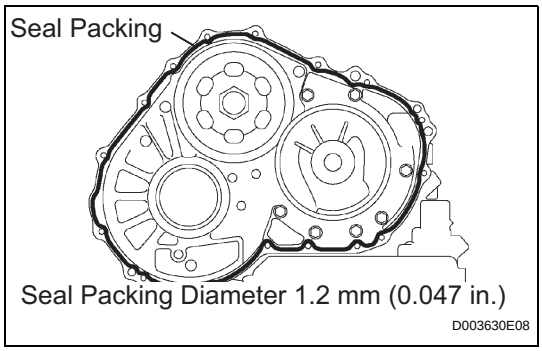

50. INSTALL TRANSAXLE HOUSING

(a) Remove any packing material and be careful not to spill oil on the contact surface of the transaxle case or transaxle housing.

(b) Apply seal packing to the transaxle case.
Seal packing:
Toyota Genuine Seal Packing 1281,
Three Bond 1281 or Equivalent

(c) Apply adhesive or equivalent to bolts A and D.
Adhesive:
Toyota Genuine Adhesive 1344,
Three Bond 1344 or Equivalent

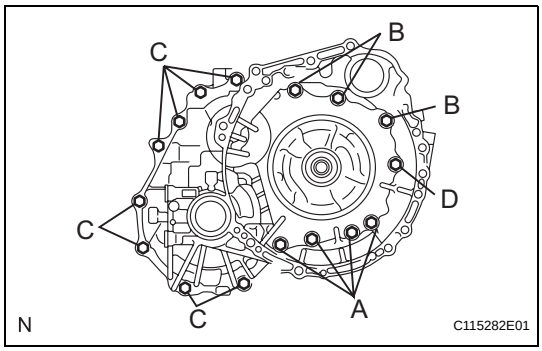

(d) Install the transaxle housing and 16 bolts to the transaxle case.
Torque: 22 N*m (224 kgf*cm, 16 ft.*lbf) for bolt A
29 N*m (295 kgf*cm, 21 ft.*lbf) for bolt B
29 N*m (295 kgf*cm, 21 ft.*lbf) for bolt C
22 N*m (226 kgf*cm, 16 ft.*lbf) for bolt D
HINT:
Each bolt length is indicated below.
Bolt length:
50 mm (1.97 in.) for bolt A
50 mm (1.97 in.) for bolt B
42 mm (1.65 in.) for bolt C
72 mm (2.84 in.) for bolt D
NOTICE:
Tighten the bolts within 10 minutes of adhesive application.

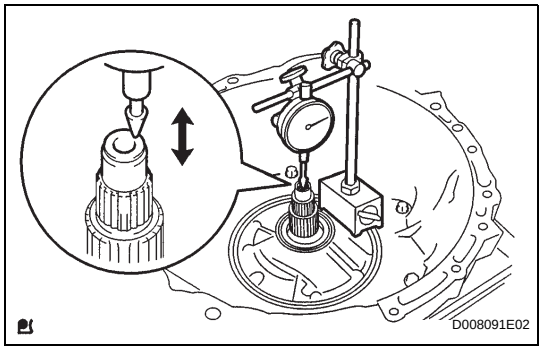

51. INSPECT INPUT SHAFT END PLAY

(a) Using a dial indicator, measure the input shaft end play.
Standard end play:
0.262 to 1.249 mm (0.0100 to 0.0494 in.)

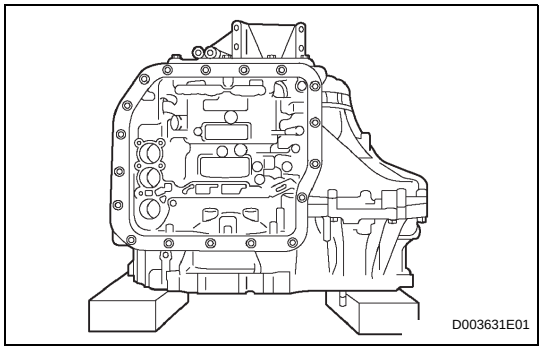

52. FIX AUTOMATIC TRANSAXLE ASSEMBLY

(a) Fix the transaxle.

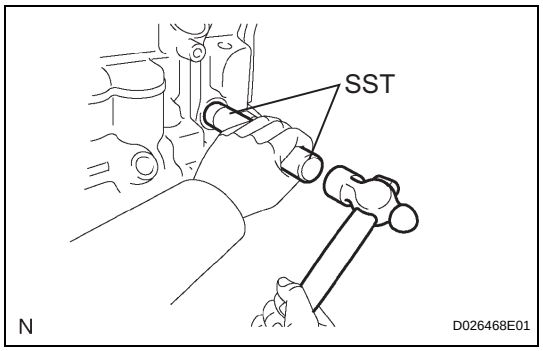

53. INSTALL MANUAL VALVE LEVER SHAFT OIL SEAL

(a) Coat a new oil seal with MP grease.

(b) Install the oil seal to the transaxle case.

SST 09950-60010 (09951-00230), 09950-70010 (09951-07100)

Standard depth:

0 +-0.5 mm (0 +-0.197 in.)

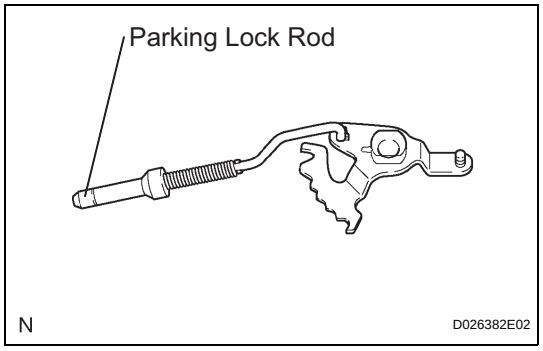

54. INSTALL PARKING LOCK ROD SUB-ASSEMBLY

(a) Install the parking lock rod to the manual valve lever.

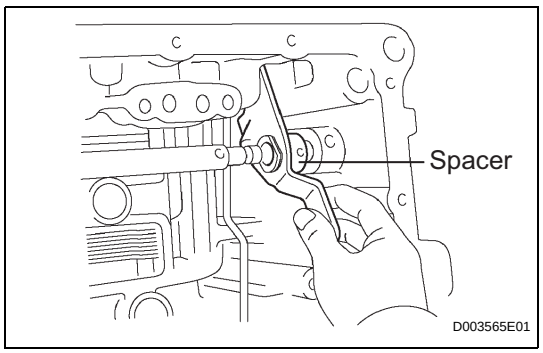

55. INSTALL MANUAL VALVE LEVER SUB-ASSEMBLY

(a) Install a new spacer and manual valve lever shaft to the transaxle case.

NOTICE:

Do not damage the oil seal when installing the shaft to the transaxle case.

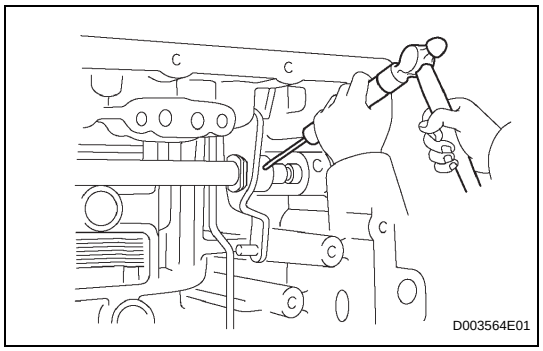

(b) Using a pin punch and hammer, drive in a new pin.

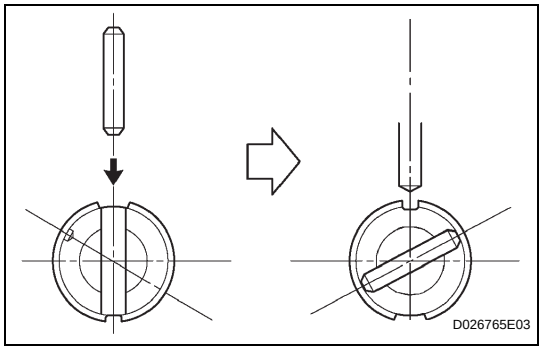

(c) Turn the spacer and the lever shaft to align the small hole for locating the staking position in the spacer with the staking position mark on the lever shaft.

(d) Using a pin punch, stake the spacer through the small hole.

(e) Check that the spacer does not turn.

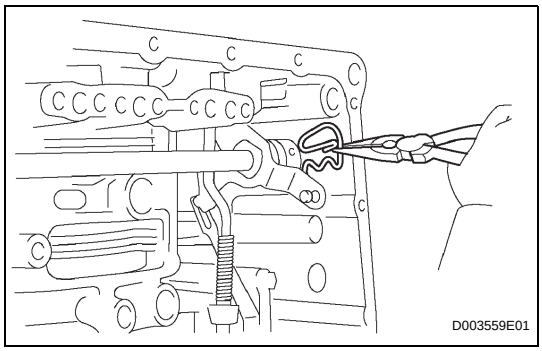

56. INSTALL MANUAL VALVE LEVER SHAFT RETAINER SPRING

(a) Using needle-nose pliers, install the retainer spring.

NOTICE:

Hang the spring on the shaft firmly.

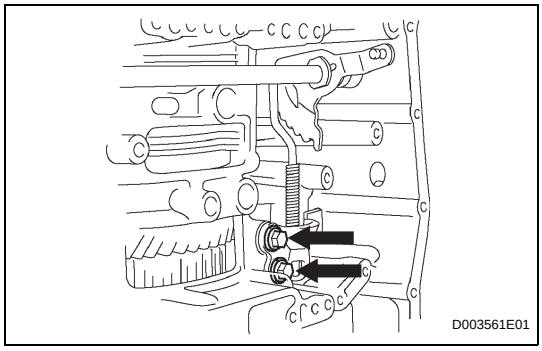

57. INSTALL PARKING LOCK PAWL BRACKET

(a) Install the parking lock pawl bracket with the 2 bolts.

Torque: 20 N*m (205 kgf*cm, 15 ft.*lbf)

HINT:

The bolt length is indicated below.

Bolt length:

25.0 mm (0.984 in.)

NOTICE:

Make sure that the parking rod is placed between the parking pawl and the guide of the parking bracket when the parking bracket is installed.

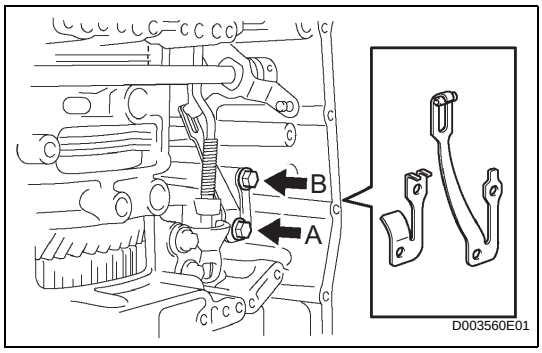

58. INSTALL MANUAL DETENT SPRING SUB-ASSEMBLY

(a) Install the manual detent spring and cover with the 2 bolts.

Torque: 20 N*m (205 kgf*cm, 15 ft.*lbf) for bolt A
12 N*m (122 kgf*cm, 9 ft.*lbf) for bolt B

HINT:

- Tighten bolt A first, and then bolt B.
- Each bolt length is indicated below.

Bolt length:

27 mm (1.06 in.) for bolt A
16 mm (0.63 in.) for bolt B

NOTICE:

Make sure to install the manual detent spring and cover in this order.

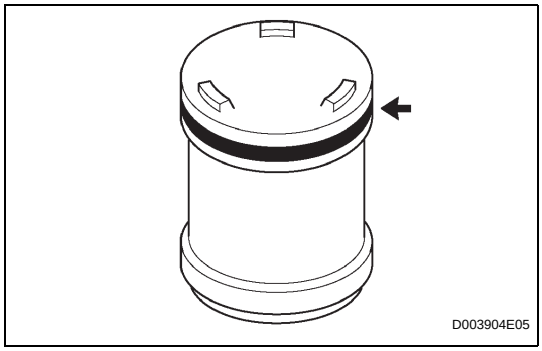

59. INSTALL B-3 ACCUMULATOR PISTON

(a) Coat a new O-ring with ATF, and install it to the B-3 accumulator piston.

NOTICE:

Make sure that the O-ring is not twisted and that it does not protrude abnormally from the accumulator piston. Apply sufficient ATF before installing the O-ring. The O-ring must be installed in the correct position.

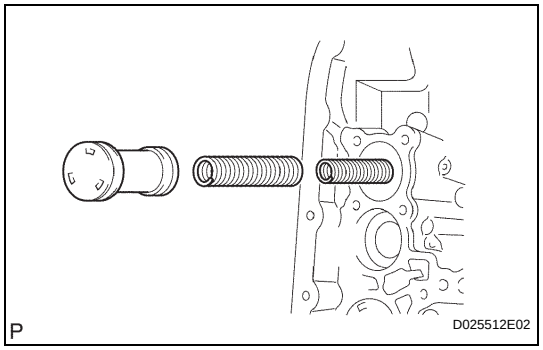

(b) Install the accumulator piston to the transaxle case.
(1) Coat the piston with ATF.
(2) Install the 2 springs to the piston, and install the piston (with springs) to the transaxle case.
NOTICE:
Before installing the springs, check the identification color of each spring. Standard accumulator spring
Standard accumulator spring

Spring	Free length / Outer diameter	Identification Color
Inner	Inner 62.00 mm (2.4409 in.) / 15.50 mm (0.610 in.)	Purple
Outer	Outer 74.23 mm (2.9224 in.) / 21.70 mm (0.8543 in.)	

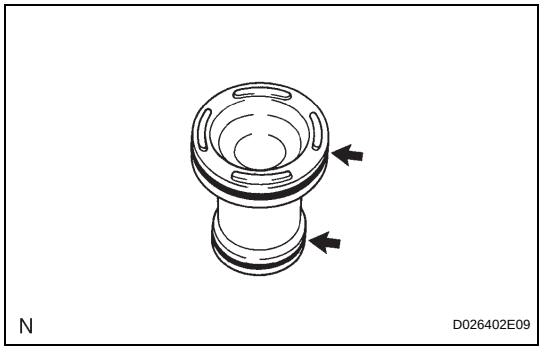

60. INSTALL REVERSE CLUTCH ACCUMULATOR PISTON

(a) Coat 2 new O-rings with ATF, and install them to the reverse accumulator piston.
NOTICE:
Make sure that the O-ring is not twisted and that it does not protrude abnormally from the accumulator piston. Apply sufficient ATF before installing the O-ring. The O-ring must be installed in the correct position.

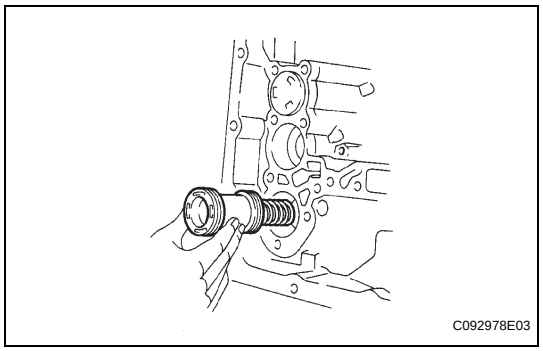

(b) Install the piston to the transaxle case.
(1) Coat the accumulator piston with ATF.
(2) Install the spring to the piston, and install the piston (with spring) to the transaxle case.
NOTICE:
Before installing the spring, check the identification color of the spring.
Standard accumulator spring

Free length Outer diameter	Identification Color
60.96 mm (2.3999 in.) / 14.10 mm (0.5551 in.)	Yellow

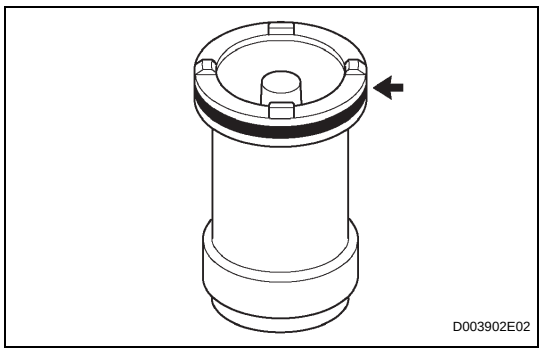

61. INSTALL C-3 ACCUMULATOR PISTON

(a) Coat a new O-ring with ATF, and install it to the C-3 accumulator piston.
NOTICE:
Make sure that the O-ring is not twisted and that it does not protrude abnormally from the accumulator piston. Apply sufficient ATF before installing the O-ring. The O-ring must be installed in the correct position.

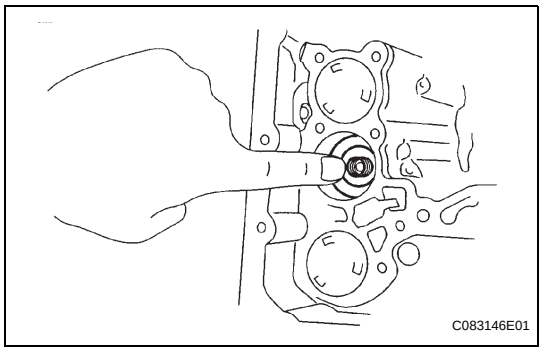

(b) Install the piston to the transaxle case and coat the piston with ATF.

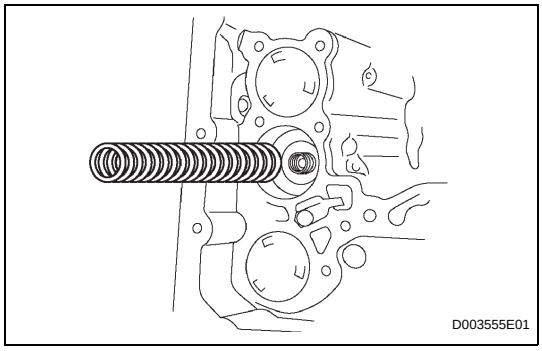

(c) Install the spring to the C-3 accumulator piston.
(d) Install the spring to the C-3 accumulator piston.
NOTICE:
Before installing the spring, check the identification color of the spring.
Standard accumulator spring

Free length Outer diameter	Color
72.20 mm (2.8425 in.) / 19.0 mm (0.748 in.)	Colorless

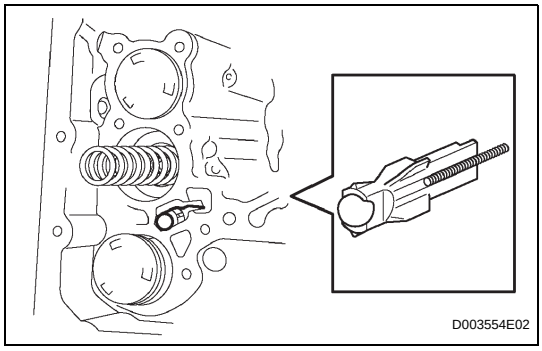

62. INSTALL CHECK BALL BODY
(a) Coat the check ball body with ATF.
(b) Install the check ball body and spring.
NOTICE:
Be sure to place the spring in the hole in the check ball body. Be careful of the direction of the parts.

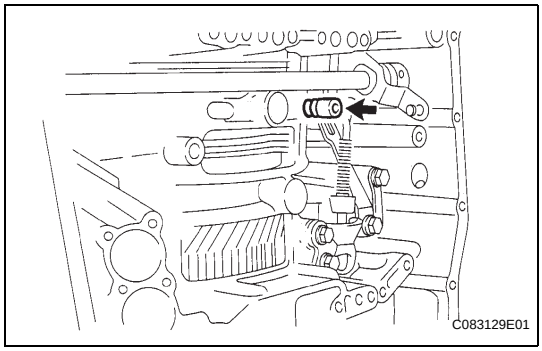

63. INSTALL BRAKE DRUM GASKET
(a) Coat a new brake drum gasket with ATF, and install it to the transaxle case.
NOTICE:
Be sure not to damage the lip of the transaxle case brake gasket when inserting the gasket to the case. Apply sufficient ATF to the gasket before installation. Be careful of the direction of parts.

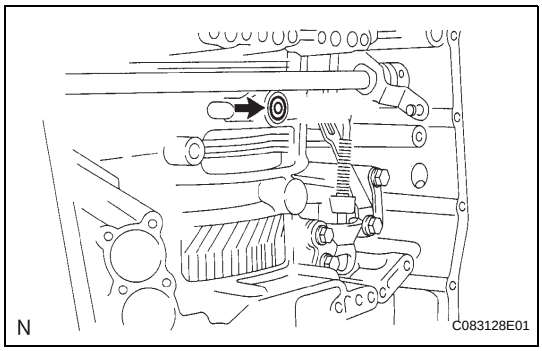

64. INSTALL TRANSAXLE CASE 2ND BRAKE GASKET
(a) Coat a new transaxle case 2nd brake gasket with ATF, and install it to the transaxle case.
NOTICE:
Be sure not to damage the lip of the transaxle case brake gasket when inserting the gasket to the case. Apply sufficient ATF to the gasket before installation. Be careful of the direction of parts.

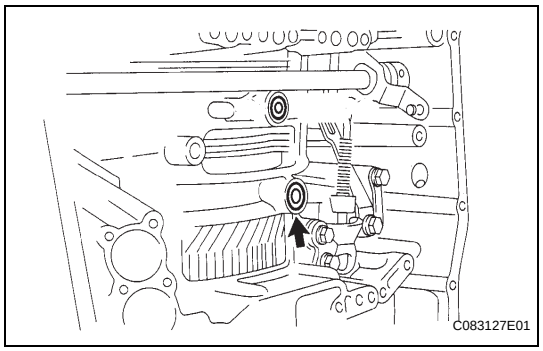

65. INSTALL NO. 1 GOVERNOR APPLY GASKET

(a) Coat a new governor apply gasket with ATF, and install it to the transaxle case.

NOTICE:

Be sure not to damage the lip of the transaxle case brake gasket when inserting the gasket to the case. Apply sufficient ATF to the gasket before installation. Be careful of the direction of parts.

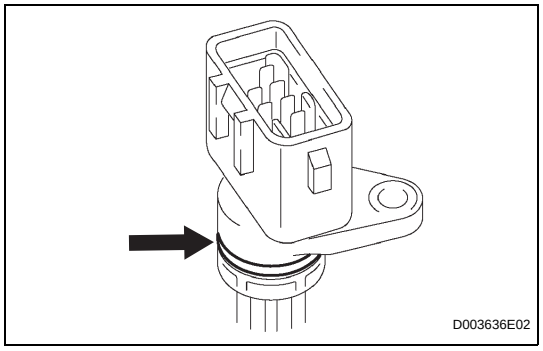

66. INSTALL TRANSMISSION WIRE

(a) Coat a new O-ring with ATF, and install it to the transmission wire.

NOTICE:

Make sure that the O-ring is not twisted, protruded, or pinched when installing the wire transmission to the transaxle case. Apply sufficient ATF to the O-ring before installation.

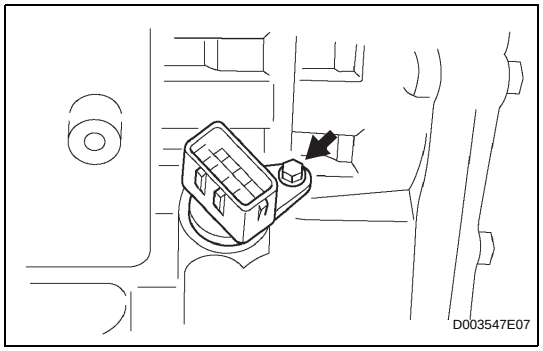

(b) Install the transmission wire retaining bolt.

Torque: 5.4 N*m (55 kgf*cm, 48 in.*lbf)

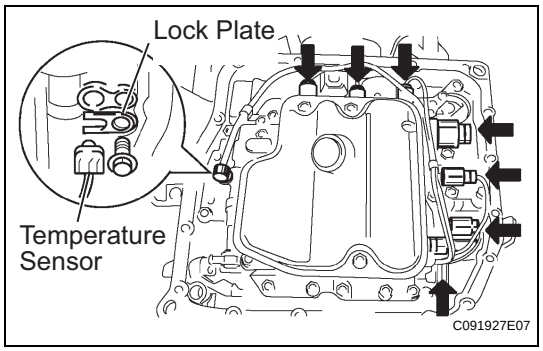

67. CONNECT TRANSMISSION WIRE

(a) Coat the O-ring of the ATF temperature sensor with ATF.

(b) Apply ATF to the bolt.

(c) Install the ATF temperature sensor with the lock plate and bolt.

Torque: 6.6 N*m (67 kgf*cm, 58 in.*lbf)

(d) Connect the 7 solenoid valve connectors.

68. INSTALL TRANSMISSION VALVE BODY ASSEMBLY

(a) Apply ATF to the 17 bolts.

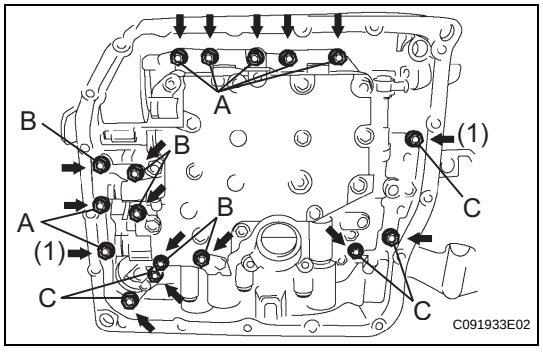

(b) While positioning the manual valve lever position, install the valve body to the transaxle case with the 17 bolts.

Torque: 11 N*m (112 kgf*cm, 8 ft.*lbf)

HINT:

Each bolt length is indicated below.

Bolt length:

25.0 mm (0.984 in.) for bolt A
57.0 mm (2.244 in.) for bolt B
41.0 mm (1.614 in.) for bolt C

NOTICE:
- **Push the valve body against the accumulator piston spring and the check ball body to install the valve body.**
- **When installing the valve body to the transaxle case, do not hold the solenoids.**
- **Temporarily tighten the bolts marked with (1) in the illustration first because they are positioning bolts.**

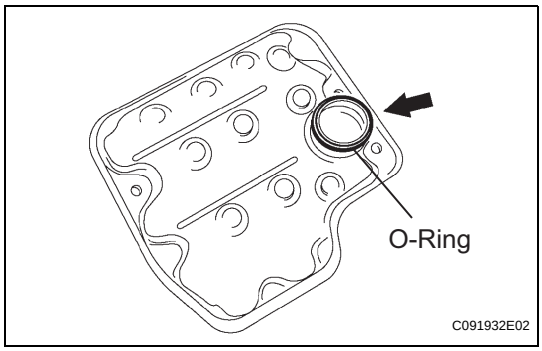

69. INSTALL VALVE BODY OIL STRAINER ASSEMBLY

(a) Coat a new O-ring with ATF and install it to the oil strainer.
NOTICE:
Make sure that the O-ring is not twisted or pinched. Apply sufficient ATF to the O-ring before installation.

(b) Apply ATF to the 3 bolts.

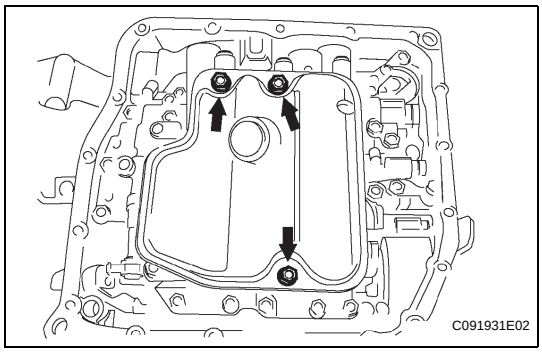

(c) Install the oil strainer to the valve body with the 3 bolts.
Torque: 11 N*m (112 kgf*cm, 8 ft.*lbf)

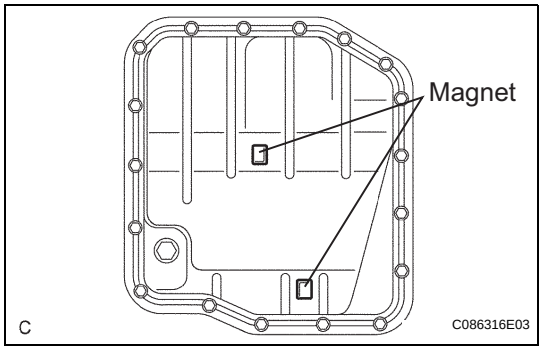

70. INSTALL AUTOMATIC TRANSAXLE OIL PAN SUB-ASSEMBLY

(a) Install the 2 magnets to the oil pan.

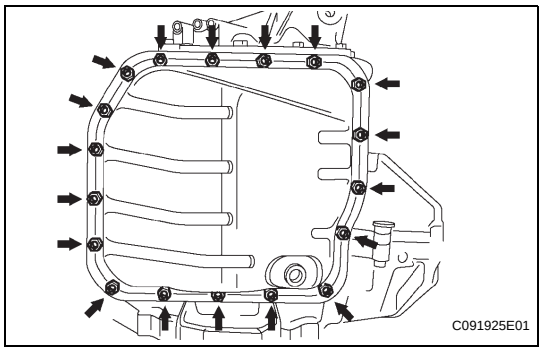

(b) Install the oil pan and a new oil pan gasket to the transaxle case with the 18 bolts.
Torque: 7.6 N*m (77 kgf*cm, 67 in.*lbf)
NOTICE:
Completely remove any oil or grease from the contact surface of the transaxle case and the oil pan with the gasket before installing the oil pan to the case.

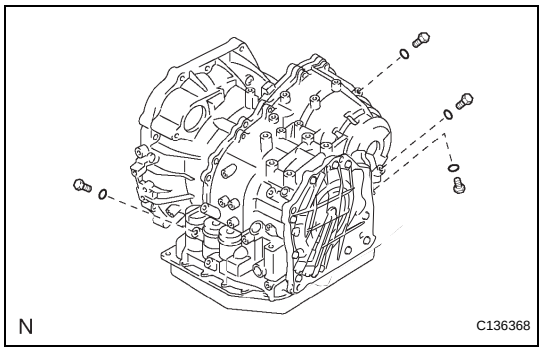

71. INSTALL NO. 1 TRANSAXLE CASE PLUG

(a) Coat 4 new O-rings with ATF, and install them to the 4 plugs.

(b) Install the 4 plugs to the transaxle case.
Torque: 7.4 N*m (75 kgf*cm, 65 in.*lbf)

72. INSTALL SPEEDOMETER DRIVEN HOLE COVER SUB-ASSEMBLY

(a) Coat a new O-ring with ATF, and install it to the cover.

(b) Install the cover with the bolt.
Torque: 5.5 N*m (56 kgf*cm, 49 in.*lbf)

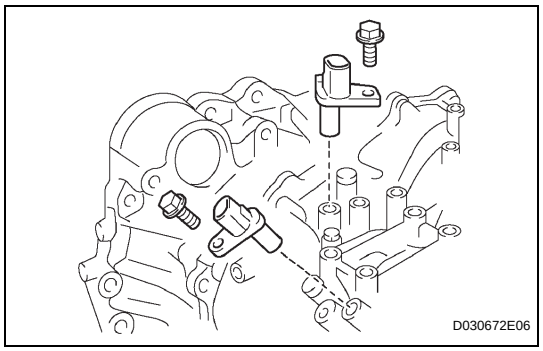

73. INSTALL SPEED SENSOR

(a) Coat 2 new O-rings with ATF and install them to the 2 sensors.

(b) Install the 2 sensors to the transaxle case with the 2 bolts.
Torque: 11 N*m (112 kgf*cm, 8 ft.*lbf)

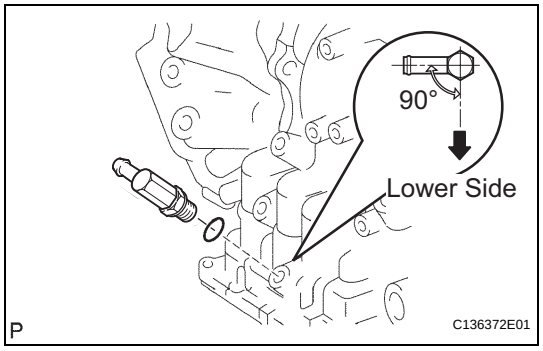

74. INSTALL OIL COOLER INLET TUBE ELBOW

(a) Coat a new O-ring with ATF, and install it to the elbow.

(b) Install the elbow to the transaxle case.
Torque: 27 N*m (276 kgf*cm, 20 ft.*lbf)

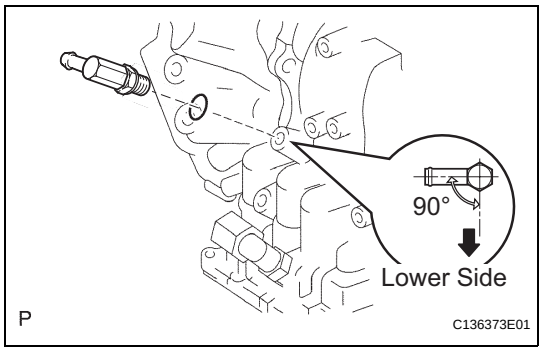

75. INSTALL OIL COOLER OUTLET TUBE ELBOW

(a) Coat a new O-ring with ATF, and install it to the elbow.

(b) Install the elbow to the transaxle case.
Torque: 27 N*m (276 kgf*cm, 20 ft.*lbf)

76. INSTALL BREATHER PLUG HOSE

(a) Install the breather plug hose to the transaxle case firmly.

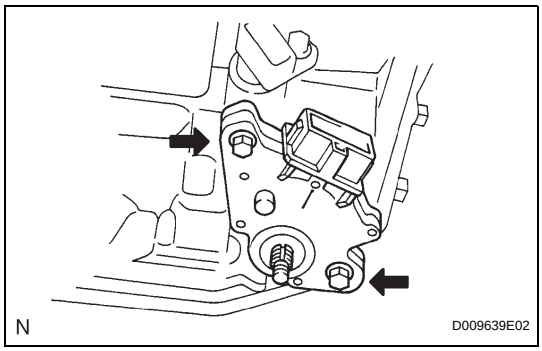

77. INSTALL PARK/NEUTRAL POSITION SWITCH ASSEMBLY

(a) Install the switch to the manual valve shaft.
(b) Temporarily install the 2 bolts.
(c) Install a new lock washer and tighten the manual valve shaft nut.
Torque: 5.4 N*m (55 kgf*cm, 48 in.*lbf)

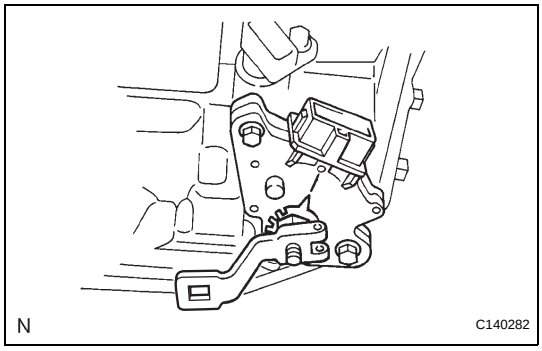

(d) Temporarily install the control shaft lever.

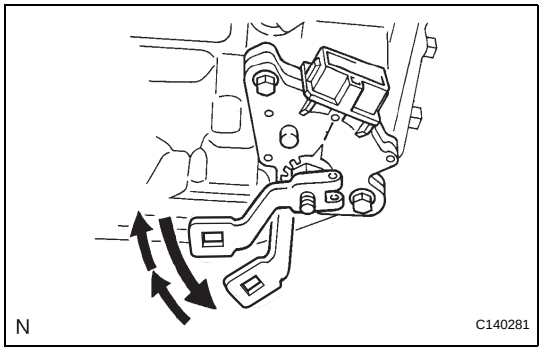

(e) Turn the lever counterclockwise until it stops, and then turn it clockwise 2 notches.
(f) Remove the control shaft lever.

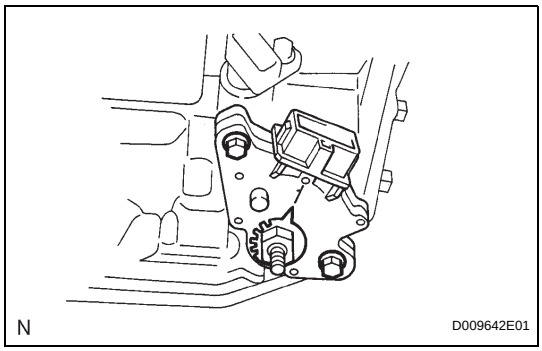

(g) Align the groove and neutral basic line.
(h) Hold the switch in this position and tighten the 2 bolts.
Torque: 6.9 N*m (70 kgf*cm, 61 in.*lbf)

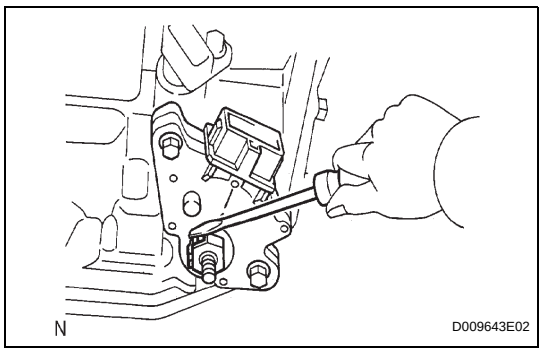

(i) Using a screwdriver, stake the nut with the lock washer.

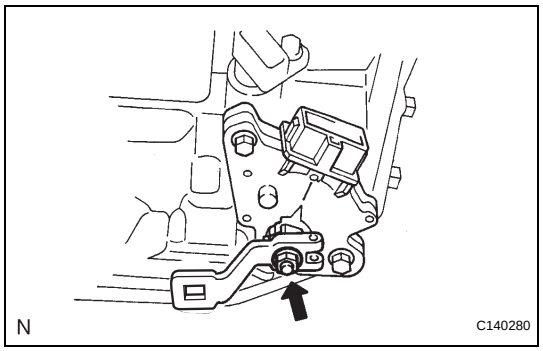

(j) Install the control shaft lever with the washer and nut.
Torque: 13 N*m (130 kgf*cm, 9 ft.*lbf)

78. INSTALL SPEEDOMETER DRIVEN HOLE COVER SUB-ASSEMBLY

(a) Coat a new O-ring with ATF and install it to the speedometer driven hole cover.
(b) Install the bolt and hole cover to the transaxle.
Torque: 6.9 N*m (70 kgf*cm, 61 in.*lbf)

AUTOMATIC TRANSAXLE UNIT

COMPONENTS

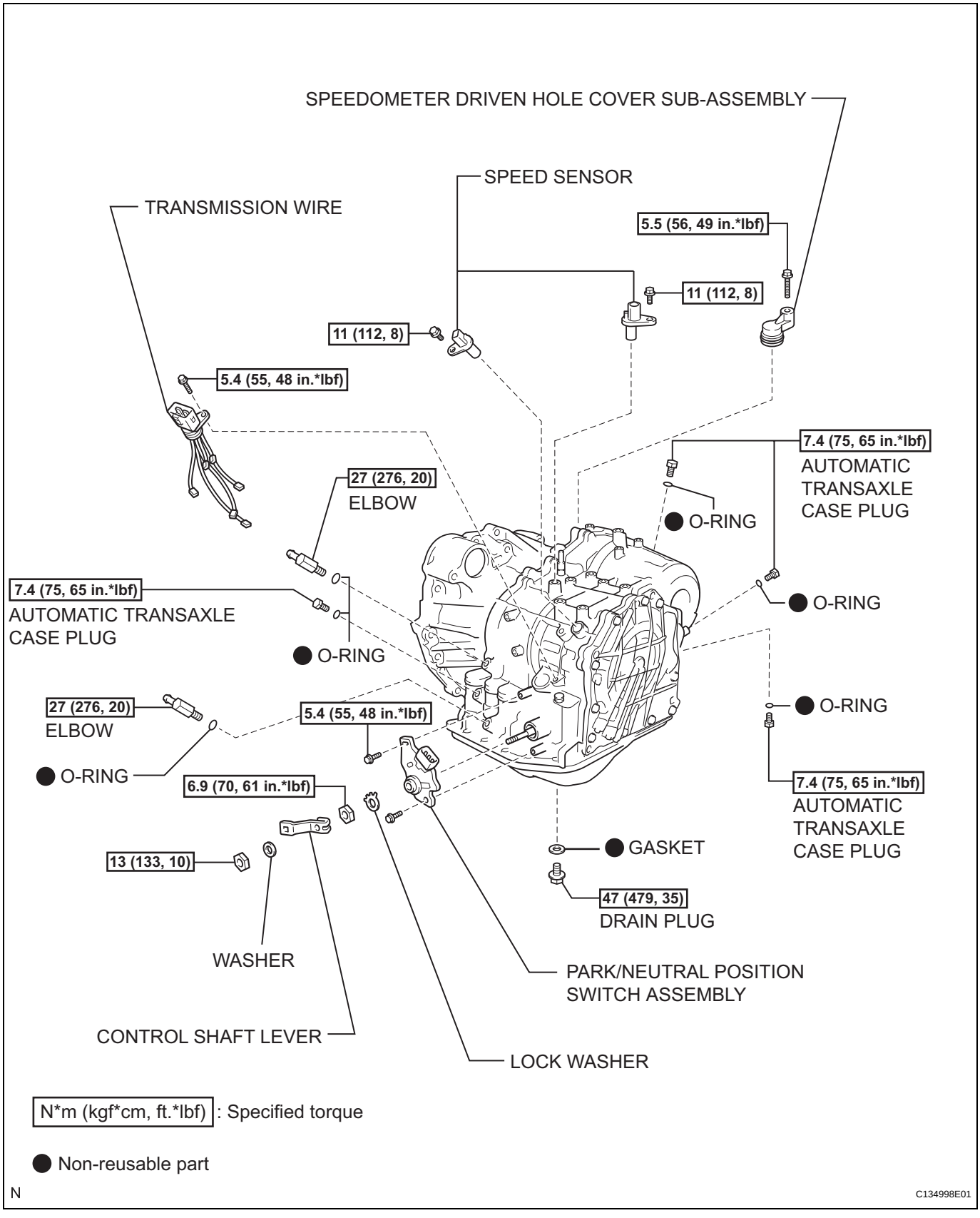

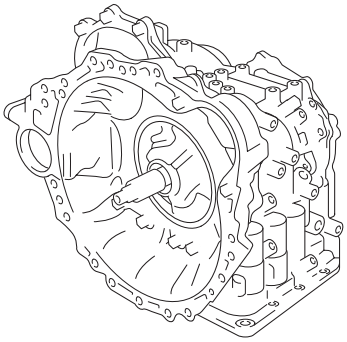

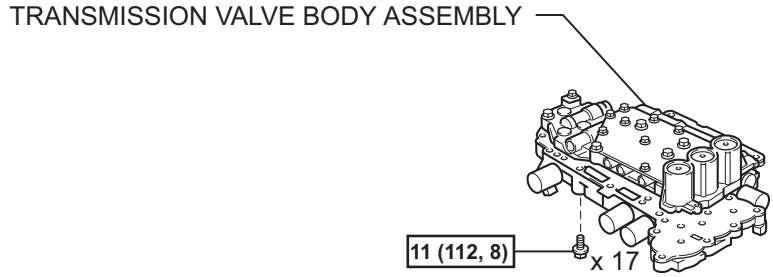

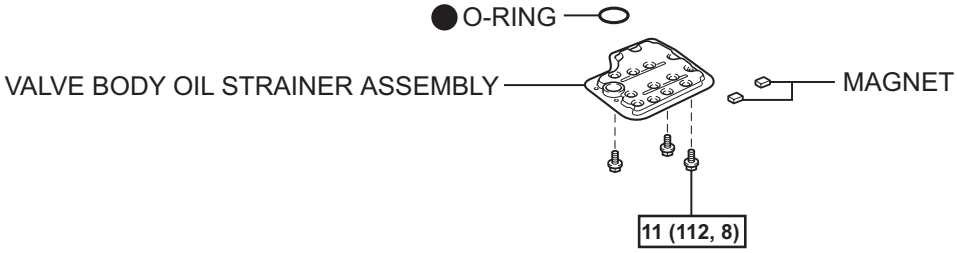

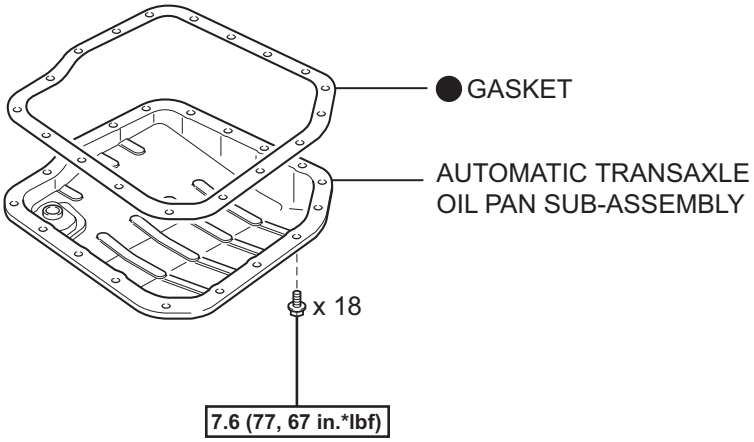

N*m (kgf*cm, ft.*lbf) : Specified torque

● Non-reusable part

N

C134999E01

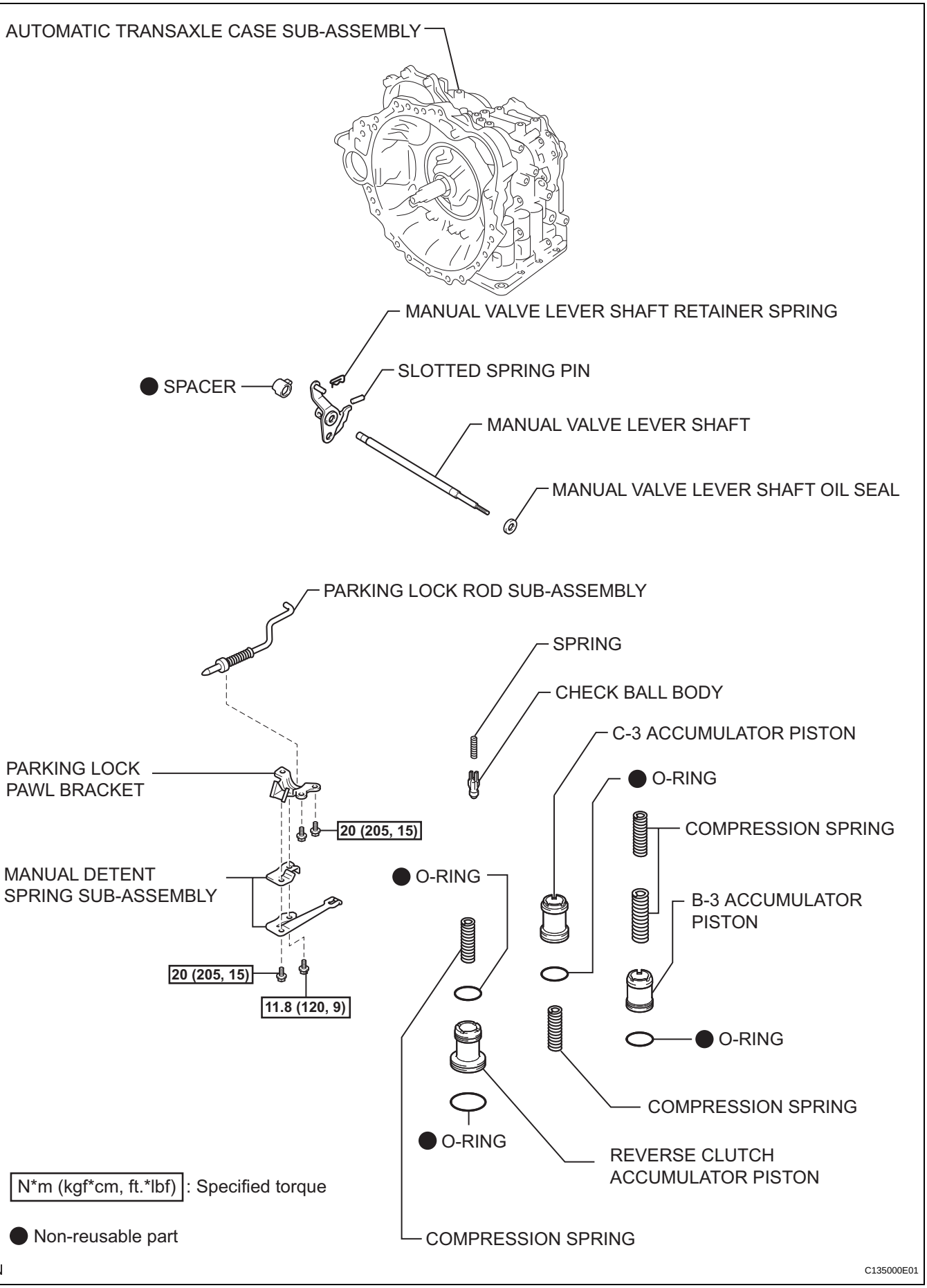
AUTOMATIC TRANSAXLE CASE SUB-ASSEMBLY
MANUAL VALVE LEVER SHAFT RETAINER SPRING
SLOTTED SPRING PIN
● SPACER
MANUAL VALVE LEVER SHAFT
MANUAL VALVE LEVER SHAFT OIL SEAL
PARKING LOCK ROD SUB-ASSEMBLY
SPRING
CHECK BALL BODY
C-3 ACCUMULATOR PISTON
PARKING LOCK PAWL BRACKET
● O-RING
20 (205, 15)
COMPRESSION SPRING
MANUAL DETENT SPRING SUB-ASSEMBLY
● O-RING
B-3 ACCUMULATOR PISTON
20 (205, 15)
11.8 (120, 9)
● O-RING
COMPRESSION SPRING
● O-RING
REVERSE CLUTCH ACCUMULATOR PISTON
N*m (kgf*cm, ft.*lbf) : Specified torque
● Non-reusable part
COMPRESSION SPRING
N
C135000E01

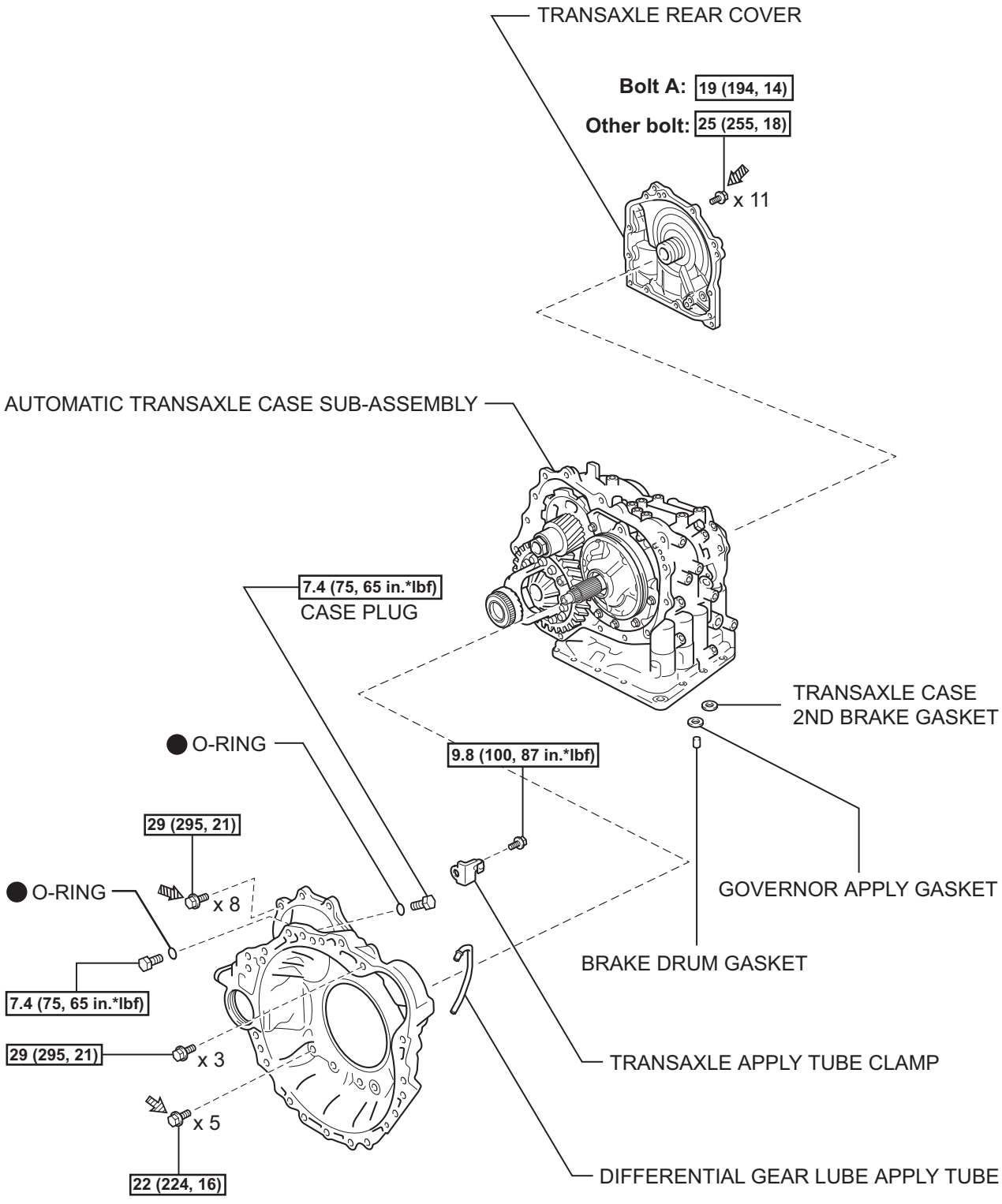

N*m (kgf*cm, ft.*lbf) : Specified torque

● Non-reusable part

Precoated part

N

C135001E01

AX

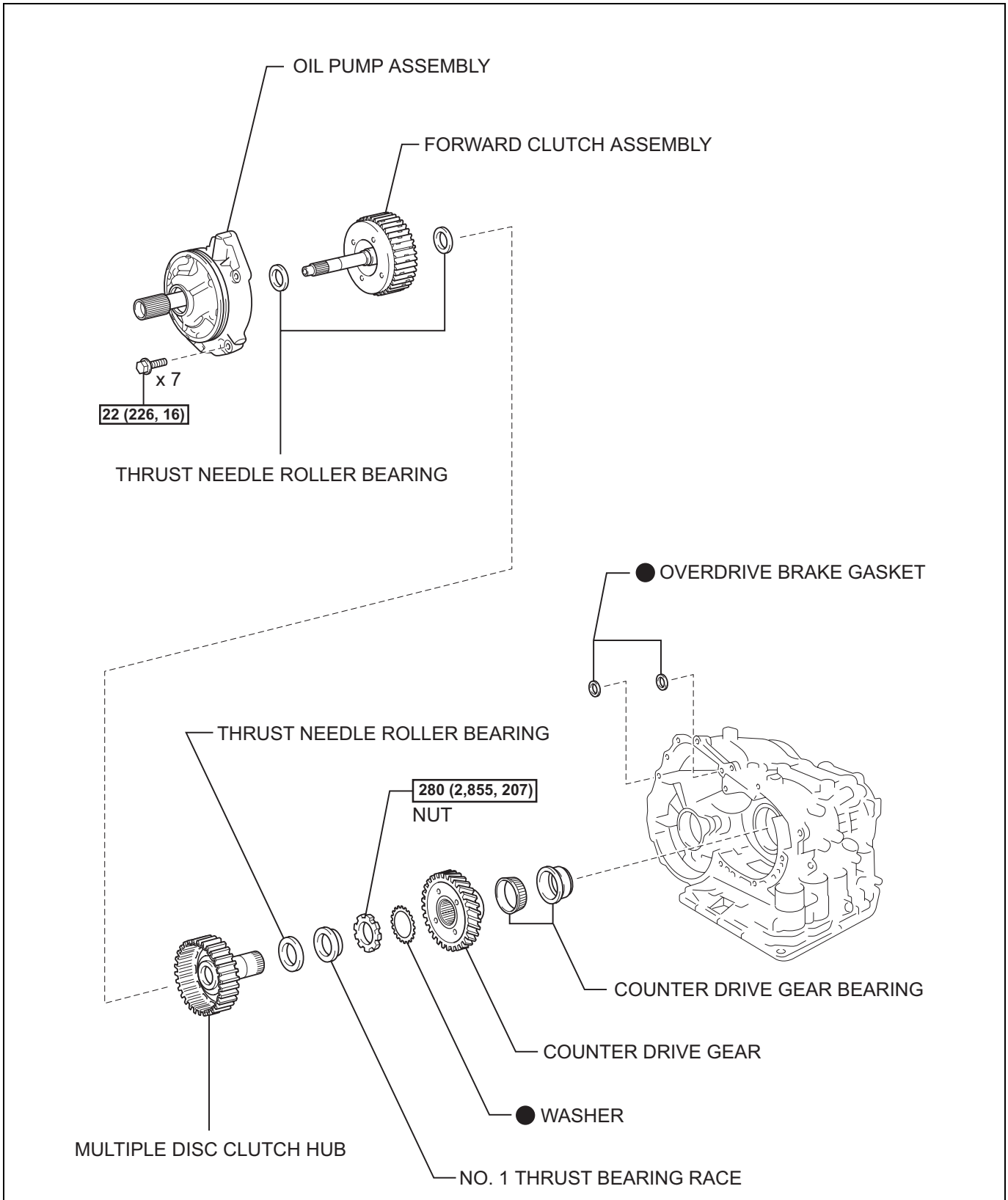

N*m (kgf*cm, ft.*lbf) : Specified torque

● Non-reusable part

AX

N

C136346E01

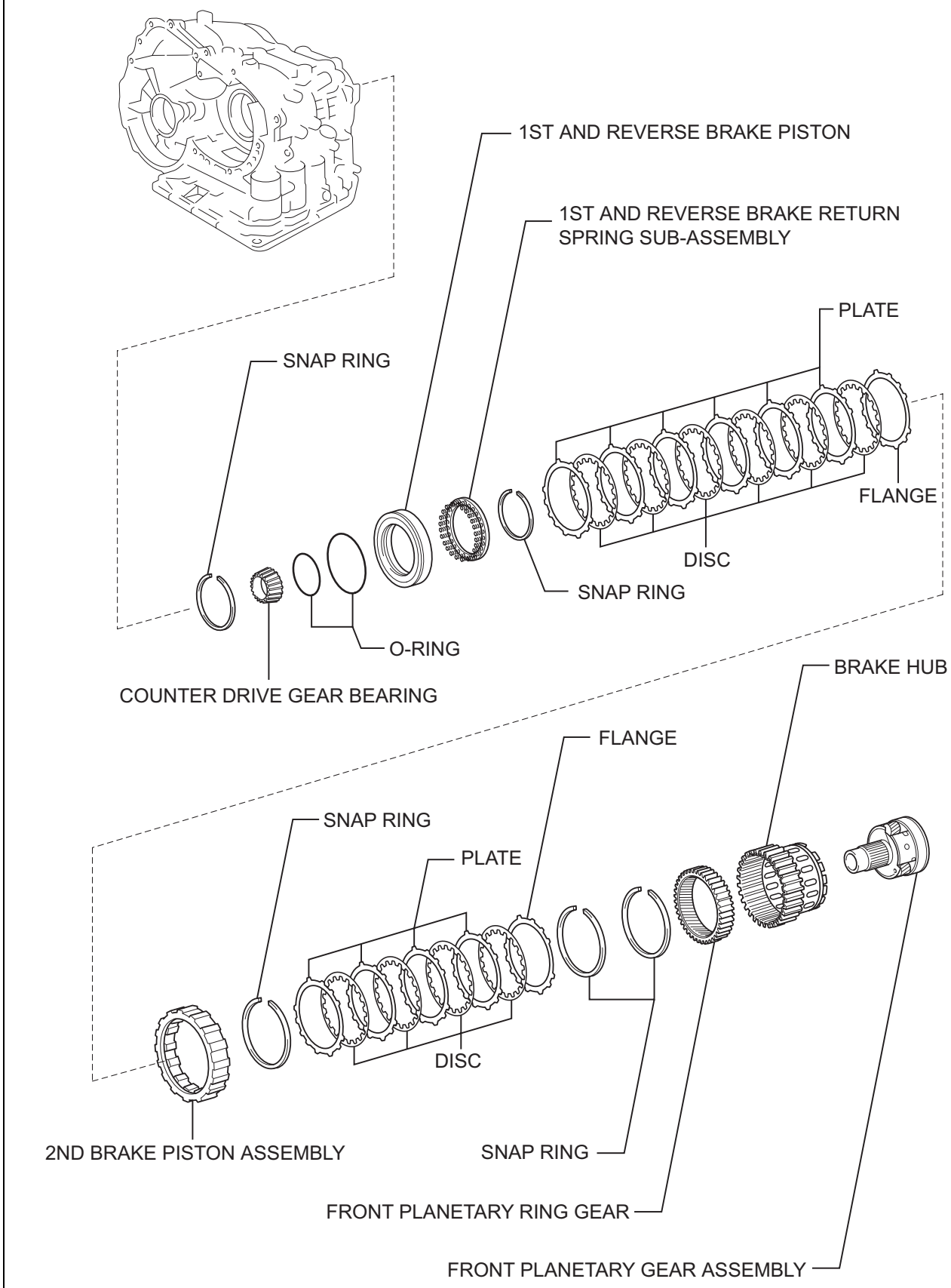

N

C136347E01

AX

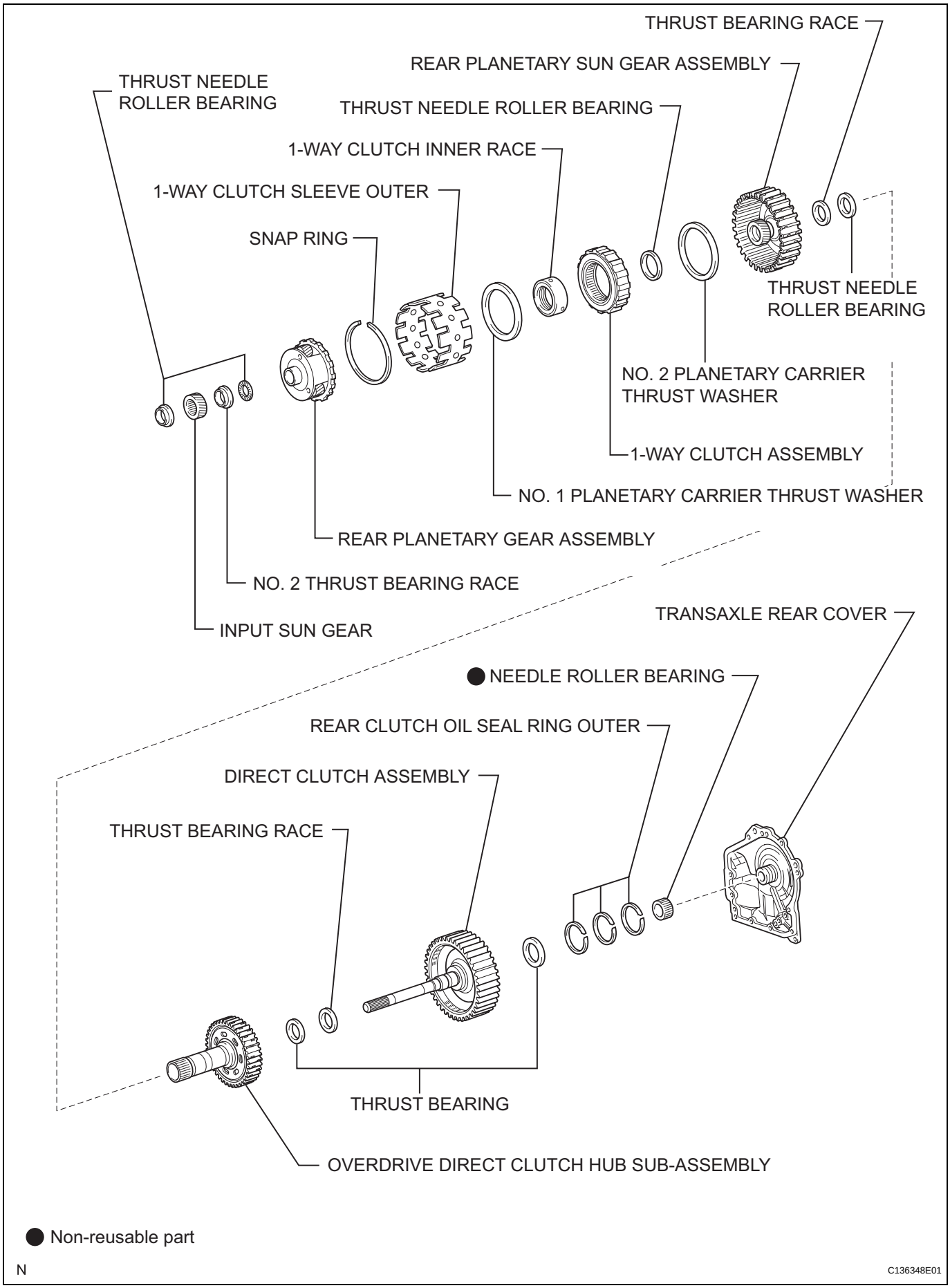

AX

● Non-reusable part

N

C136348E01

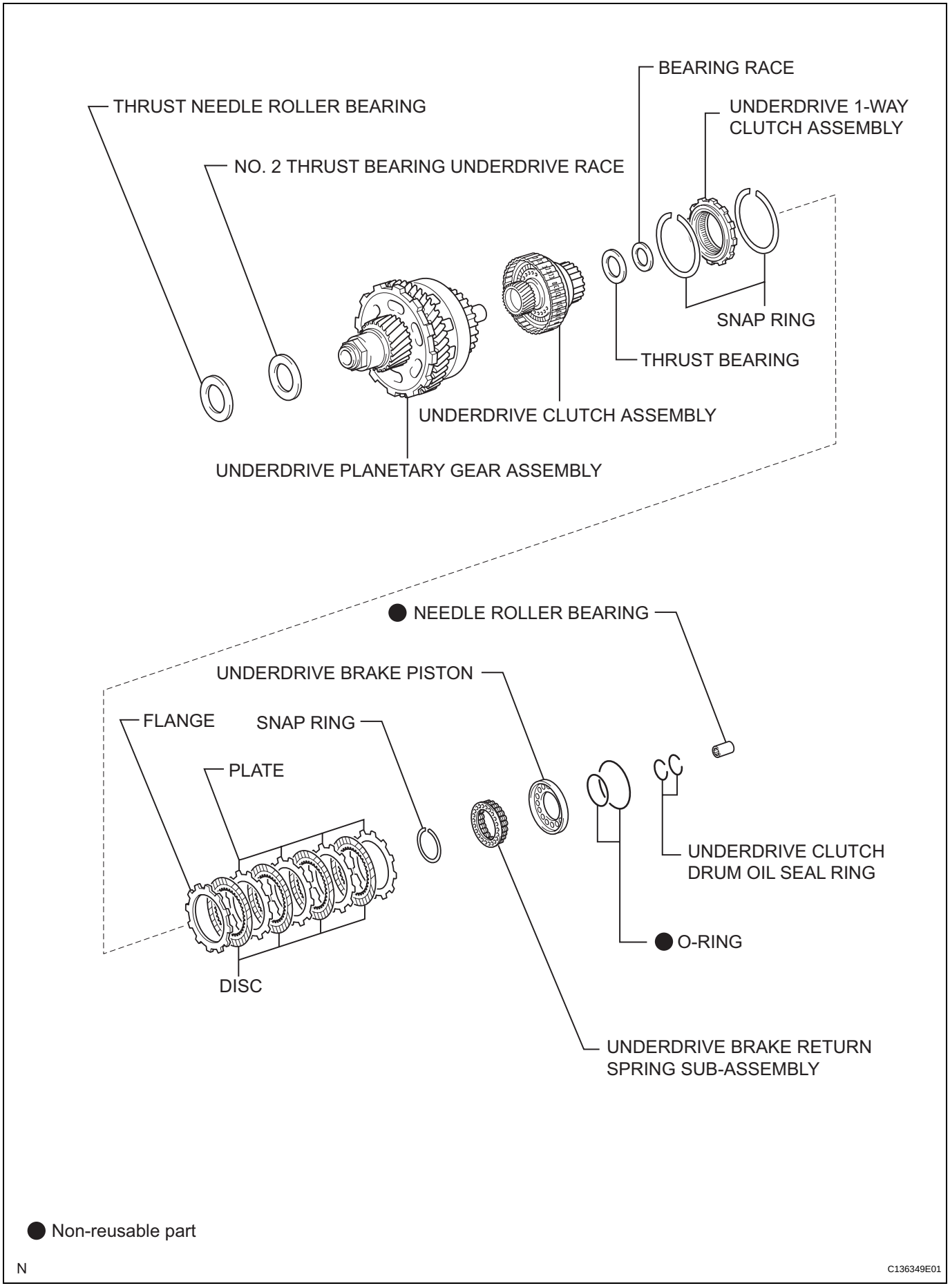
BEARING RACE
THRUST NEEDLE ROLLER BEARING
UNDERDRIVE 1-WAY CLUTCH ASSEMBLY
NO. 2 THRUST BEARING UNDERDRIVE RACE
SNAP RING
THRUST BEARING
UNDERDRIVE CLUTCH ASSEMBLY
UNDERDRIVE PLANETARY GEAR ASSEMBLY
● NEEDLE ROLLER BEARING
UNDERDRIVE BRAKE PISTON
FLANGE
SNAP RING
PLATE
UNDERDRIVE CLUTCH DRUM OIL SEAL RING
● O-RING
DISC
UNDERDRIVE BRAKE RETURN SPRING SUB-ASSEMBLY
● Non-reusable part
N
C136349E01

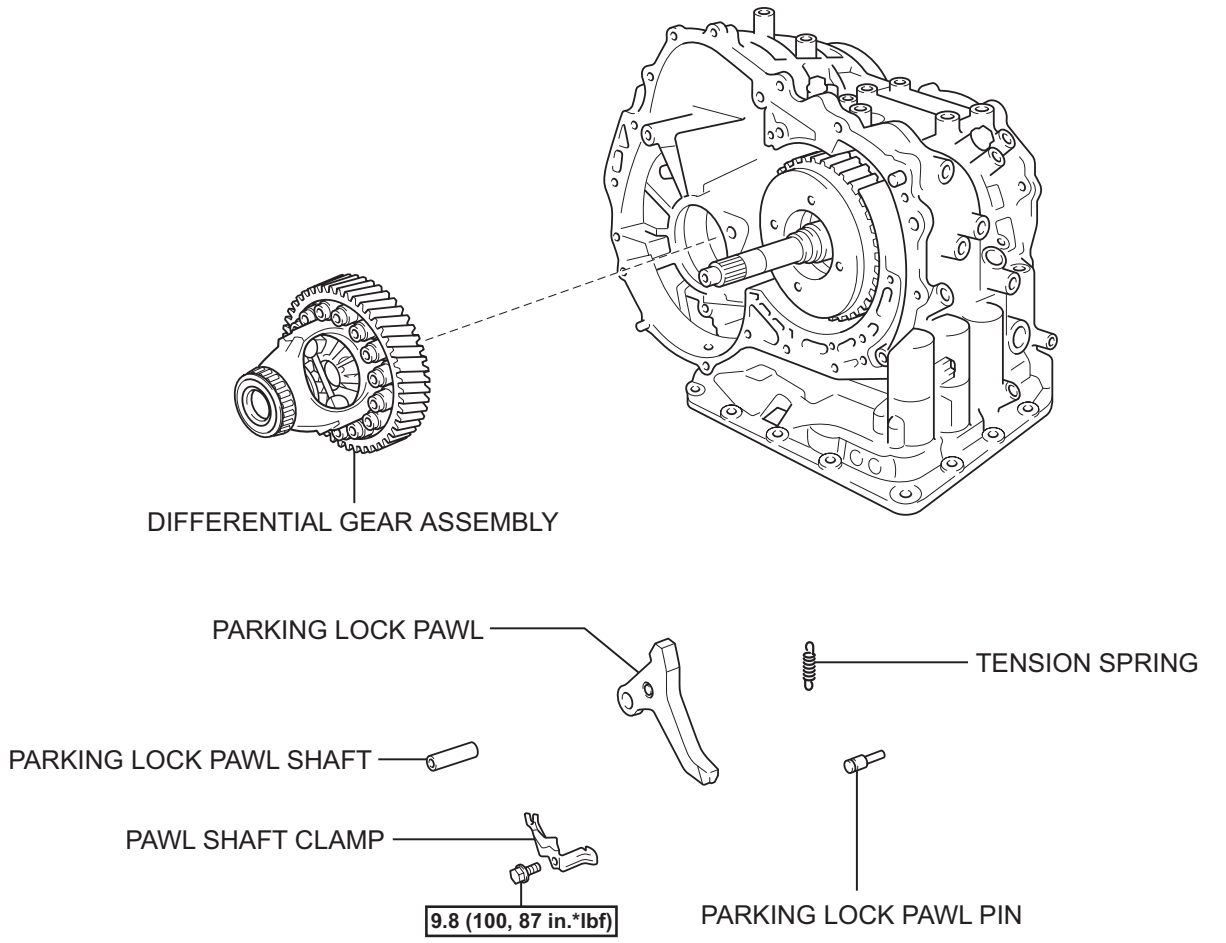

N*m (kgf*cm, ft.*lbf) : Specified torque

● Non-reusable part

AX

N

C136350E01

DIFFERENTIAL CASE

COMPONENTS

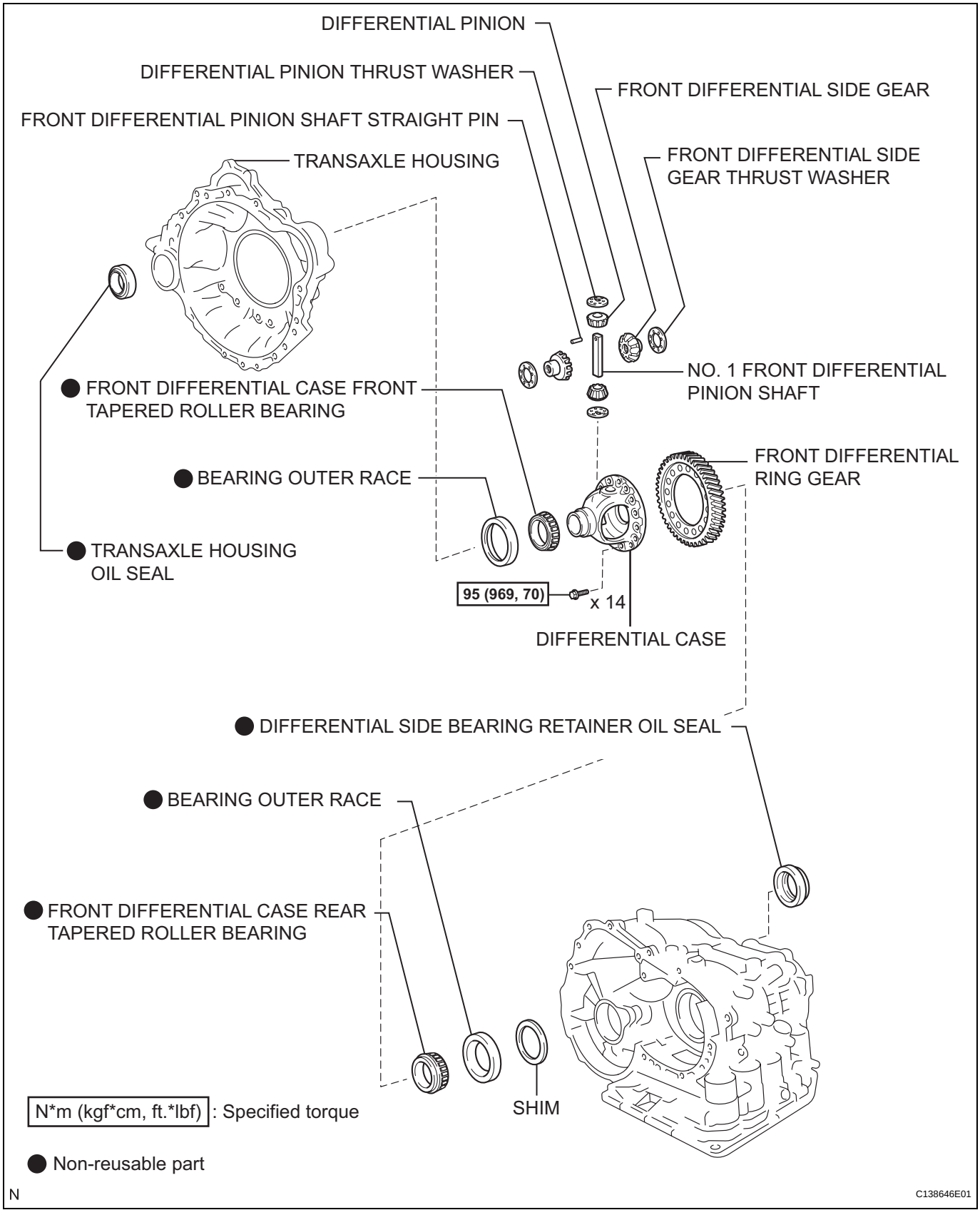

AX

N

DISASSEMBLY

1. REMOVE FRONT DIFFERENTIAL RING GEAR

(a) Place matchmarks on the ring gear and differential case.

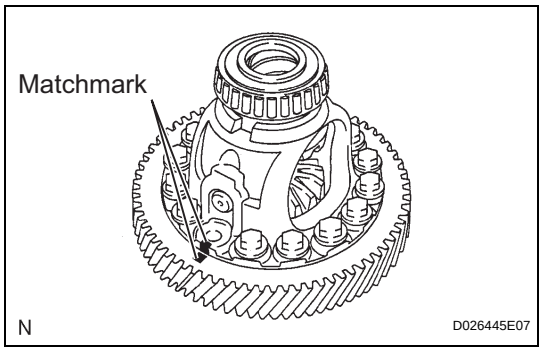

(b) Remove the 14 bolts.

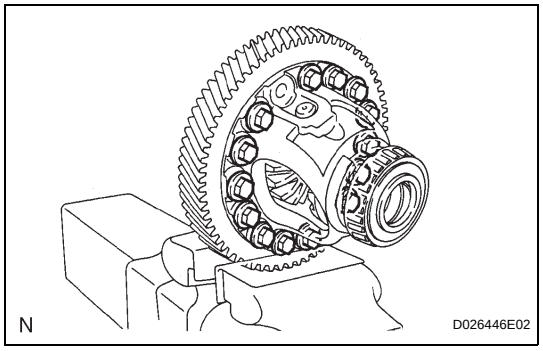

(c) Using a plastic-faced hammer, tap on the ring gear to remove it from the case.

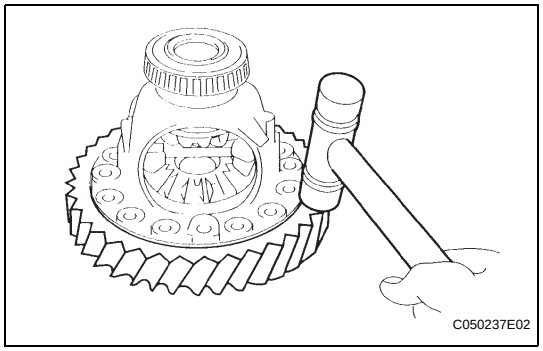

2. REMOVE FRONT DIFFERENTIAL CASE FRONT TAPERED ROLLER BEARING

(a) Using SST, remove the bearing from the differential case.

SST 09950-00020, 09950-00030, 09950-60010 (09951-00490), 09950-40011 (09957-04010)

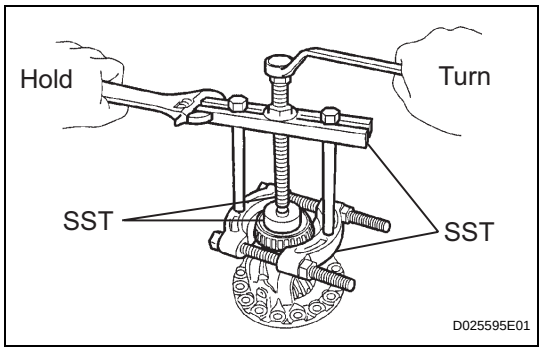

(b) Using SST, remove the front differential case front tapered roller bearing outer race.

SST 09308-00010

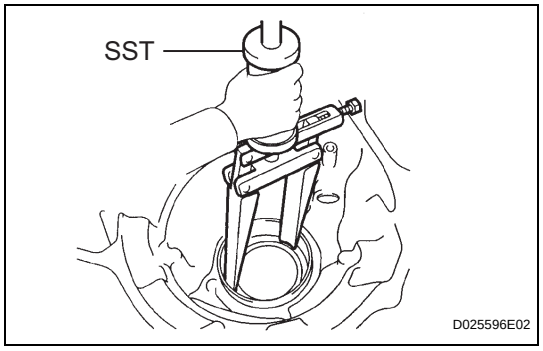

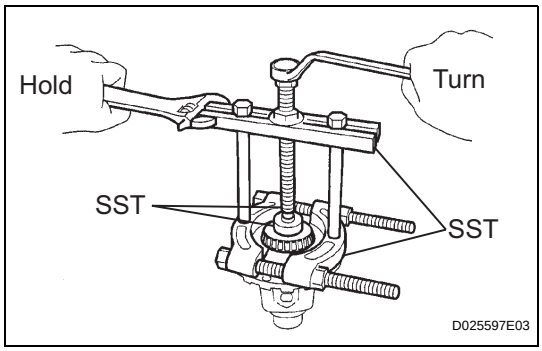

3. REMOVE FRONT DIFFERENTIAL CASE REAR TAPERED ROLLER BEARING

(a) Using SST, remove the bearing from the differential case.

SST 09950-00020, 09950-00030, 09950-60010 (09951-00490), 09950-40011 (09957-04010), 09308-00010

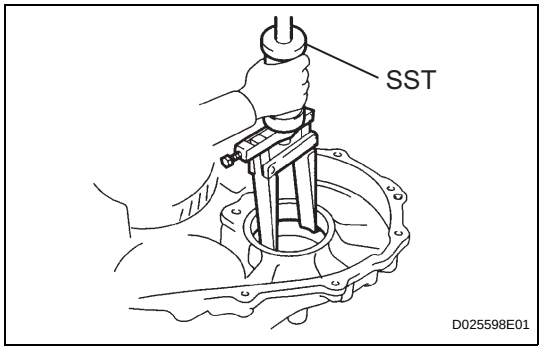

(b) Using SST, remove the front differential case rear tapered roller bearing outer race.

SST 09308-00010

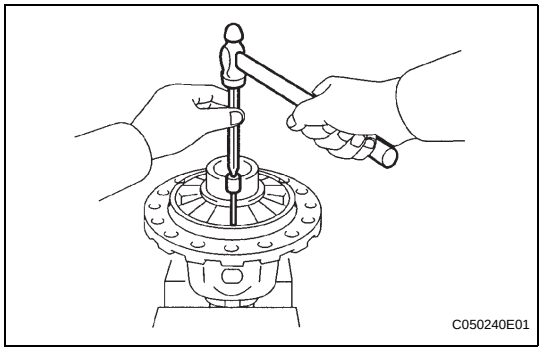

4. REMOVE FRONT DIFFERENTIAL PINION SHAFT STRAIGHT PIN

(a) Using a pin punch and hammer, remove the straight pin.

NOTICE:
Before removing the straight pin, unstake it with a pin punch.

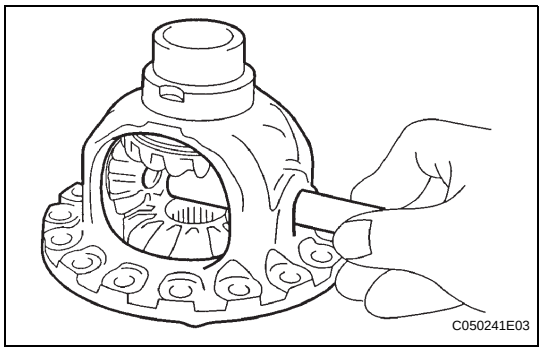

5. REMOVE NO. 1 FRONT DIFFERENTIAL PINION SHAFT

(a) Remove the front differential pinion shaft from the differential case.

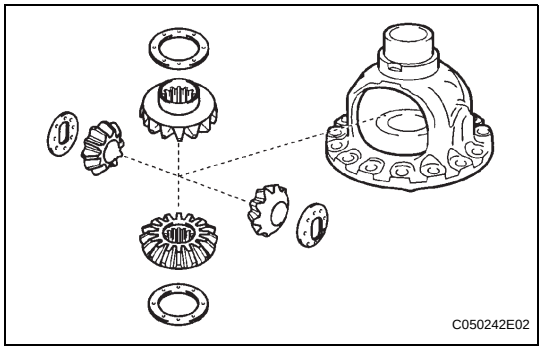

6. REMOVE FRONT DIFFERENTIAL SIDE GEAR

(a) Remove the 2 front differential pinions, 2 pinion thrust washers, 2 front differential side gears and 2 side gear thrust washers from the differential case.

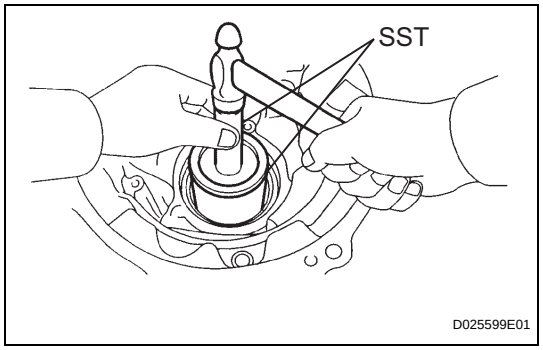

7. REMOVE TRANSAXLE HOUSING OIL SEAL

(a) Using SST and a hammer, tap out the oil seal.

SST 09950-70010 (09951-07100), 09215-00013 (09215-00471)

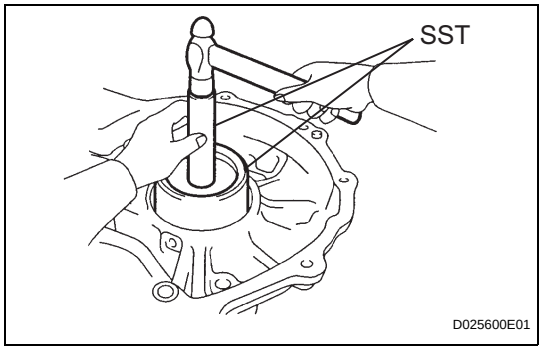

8. REMOVE DIFFERENTIAL SIDE BEARING RETAINER OIL SEAL

(a) Using SST, tap out the oil seal.

SST 09950-70010 (09951-07100), 09608-10010

INSPECTION

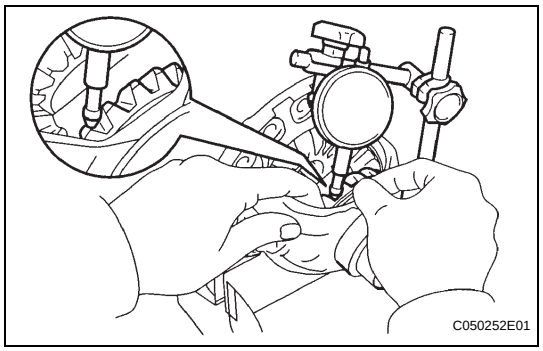

1. INSPECT BACKLASH

(a) Using a dial indicator, inspect the backlash of the side gear.

Standard backlash:
0.05 to 0.20 mm (0.0020 to 0.0079 in.)
Standard thrust washer thickness:
1.625 mm (0.0640 in.)
1.725 mm (0.0679 in.)
1.825 mm (0.0719 in.)

REASSEMBLY

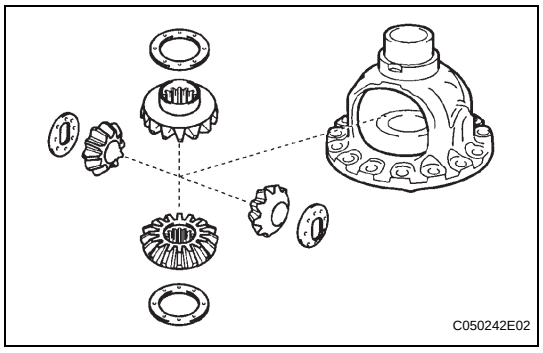

1. INSTALL FRONT DIFFERENTIAL SIDE GEAR

(a) Apply ATF to the 2 front differential side gears, 2 side gear thrust washers, 2 front differential pinions and 2 pinion thrust washers and install them to the differential case.

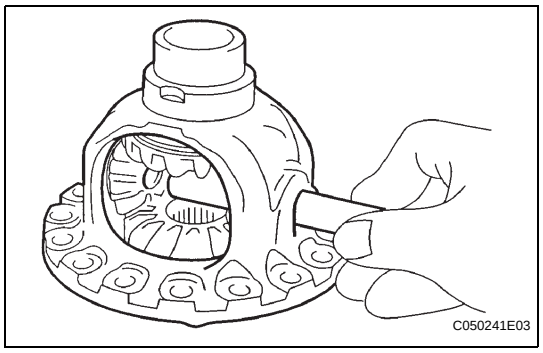

2. INSTALL NO. 1 FRONT DIFFERENTIAL PINION SHAFT

(a) Coat the No. 1 front differential pinion shaft with ATF, and install it to the differential case.

3. INSPECT BACKLASH (See page AX-287)

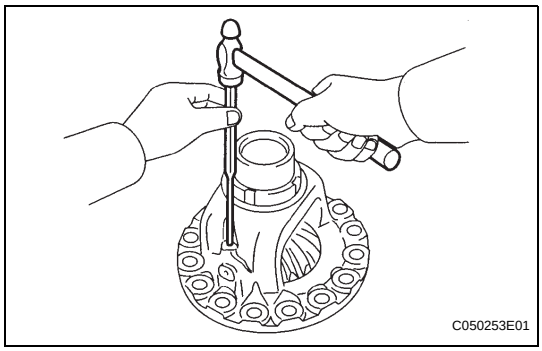

4. INSTALL FRONT DIFFERENTIAL PINION SHAFT STRAIGHT PIN

(a) Using a pin punch and hammer, install the pinion shaft straight pin.

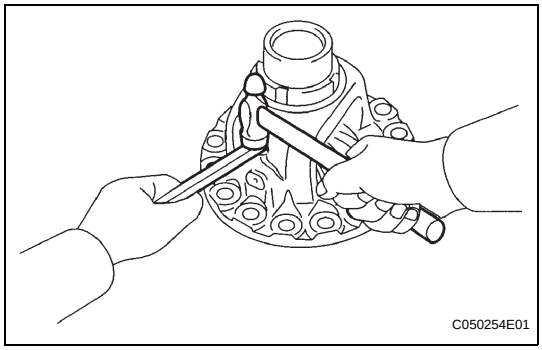

(b) Using a chisel and hammer, stake the differential case.

NOTICE:
Stake the differential case after adjusting the backlash.

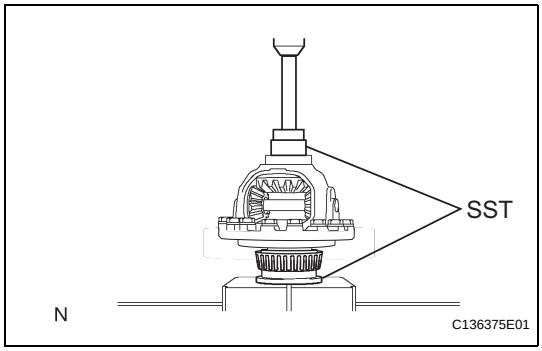

5. INSTALL FRONT DIFFERENTIAL CASE REAR TAPERED ROLLER BEARING

(a) Using SST and a press, press in the front differential case front tapered roller bearing to the differential case.

SST 09316-12010, 09550-60010 (09951-00490), 09950-70010 (09951-07100, 09951-07150)

NOTICE:
- **When replacing a bearing of the differential case, be sure to replace it together with the outer race.**
- **When replacing a bearing of the differential case, replace both the front and rear bearings together.**
- **Do not damage the bearing case when installing the bearing inner race.**

(b) Install the front differential case rear shim to the transaxle housing.

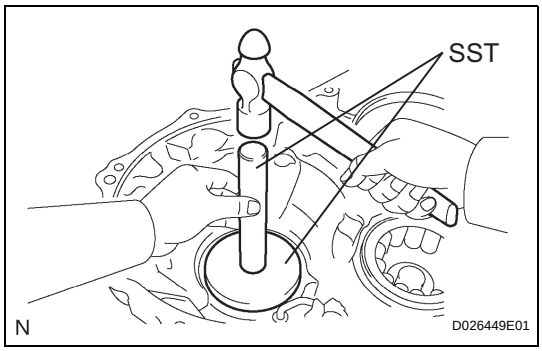

(c) Using SST and a hammer, tap in the front differential case rear tapered roller bearing outer race to the transaxle housing.

SST 09950-70010 (09951-07100, 09951-07150), 09950-60020 (09951-00890)

NOTICE:
- **When replacing the bearing, be sure to replace it together with the outer race.**
- **No clearance is allowed between the bearing and transaxle housing.**

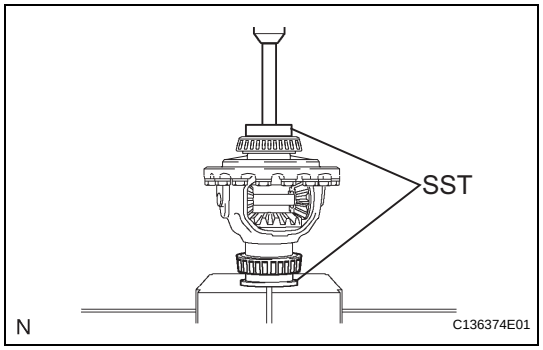

6. INSTALL FRONT DIFFERENTIAL CASE FRONT TAPERED ROLLER BEARING

(a) Using SST and a press, press in the front differential case front tapered roller bearing to the differential case.

SST 09316-12010, 09550-60010 (09951-00490), 09950-70010 (09951-07100)

NOTICE:

- **When replacing a bearing of the differential case, be sure to replace it together with the outer race.**
- **When replacing a bearing of the differential case, replace both the front and rear bearings together.**
- **Do not damage the bearing case when installing the bearing inner race.**

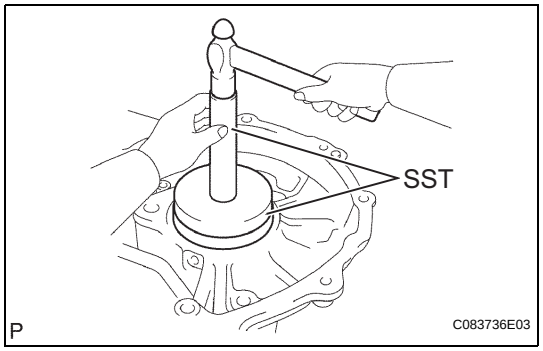

(b) Using SST and a hammer, tap in the front differential case front tapered roller bearing outer race to the transaxle housing.

SST 09550-60010 (09951-00490), 09950-60020 (09951-00910)

NOTICE:

When replacing the bearing, be sure to replace it together with the outer race.

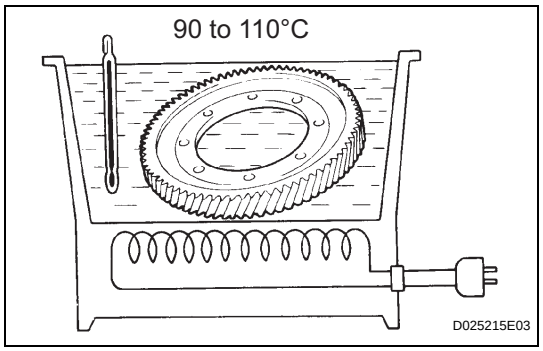

7. INSTALL FRONT DIFFERENTIAL RING GEAR

(a) Using ATF and a heater, heat the front differential ring gear to 90 to 110°C (194 to 230°F).

NOTICE:

Do not heat the ring gear to more than 110°C (230.0°F).

(b) Clean the contact surface of the front differential case.

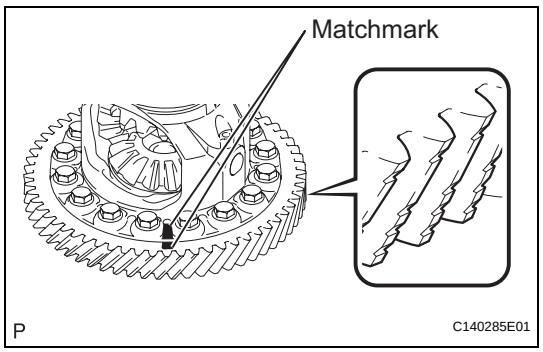

(c) Align the matchmarks, and install the front differential ring gear case quickly.

NOTICE:

- **Do not install the bolts while the ring gear is hot.**
- **Check the position and number of the grooves on each end face of the differential ring gear.**

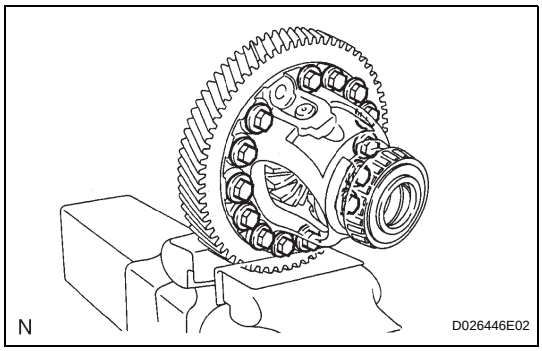

(d) Tighten the 14 bolts.
Torque: 95 N*m (969 kgf*cm, 70 ft.*lbf)
NOTICE:
Tighten the bolts a little at a time in a diagonal pattern.

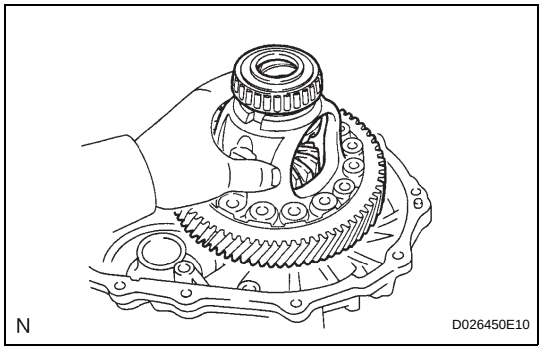

8. ADJUST DIFFERENTIAL SIDE BEARING PRELOAD

(a) Install the differential assembly to the transaxle case.

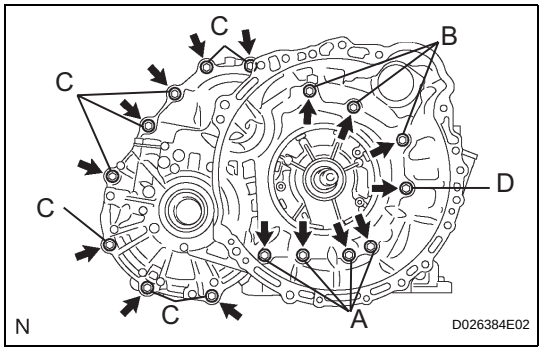

(b) Clean the mating surfaces of the transaxle case and transaxle housing.

(c) Install the transaxle housing to the transaxle case and tighten them with the 16 bolts.
Torque: 22 N*m (224 kgf*cm, 16 ft.*lbf) for bolt A
29 N*m (295 kgf*cm, 21 ft.*lbf) for bolt B
29 N*m (295 kgf*cm, 21 ft.*lbf) for bolt C
22 N*m (226 kgf*cm, 16 ft.*lbf) for bolt D

HINT:
- Each bolt length is indicated below.
  Bolt length:
  50 mm (1.969 in.) for bolt A
  50 mm (1.969 in.) for bolt B
  42 mm (1.654 in.) for bolt C
  72 mm (2.835 in.) for bolt D
- Usually, bolt A is non-reusable. In this case, however, the bolt can be used after cleaning it.

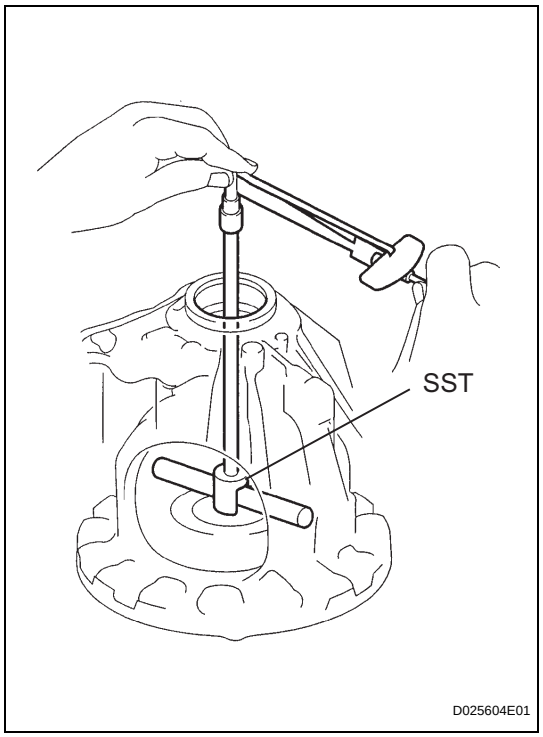

(d) Using SST, turn the differential assembly to the right and left 2 or 3 times to settle the bearing.
SST 09564-32011

(e) Using SST and a torque wrench, measure the turning torque of the differential.
SST 09564-32011
Torque: Standard turning torque at 60 rpm
0.20 to 0.69 N*m (2.0 to 7.0 kgf*cm, 1.8 to 6.1 in.*lbf) for new bearing
0.10 to 0.35 N*m (1.0 to 3.6 kgf*cm, 0.9 to 3.1 in.*lbf) for used bearing
HINT:
If the turning torque is not as specified, refer to the table below to select a front differential case rear shim so that the specified value is achieved.
Standard flange thickness

Mark	Thickness	Mark	Thickness
0	2.00 mm (0.0787 in.)	J	2.025 mm (0.07972 in.)
1	2.05 mm (0.0807 in.)	K	2.075 mm (0.08169 in.)
2	2.10 mm (0.0827 in.)	L	2.125 mm (0.08366 in.)
3	2.15 mm (0.0846 in.)	M	2.175 mm (0.08563 in.)
4	2.20 mm (0.0866 in.)	N	2.225 mm (0.08760 in.)
5	2.25 mm (0.0886 in.)	P	2.275 mm (0.08957 in.)
6	2.30 mm (0.0906 in.)	Q	2.325 mm (0.09154 in.)
7	2.35 mm (0.0925 in.)	R	2.375 mm (0.09350 in.)
8	2.40 mm (0.0945 in.)	S	2.425 mm (0.09547 in.)
9	2.45 mm (0.0965 in.)	T	2.475 mm (0.09744 in.)
A	2.50 mm (0.0984 in.)	U	2.525 mm (0.09941 in.)
B	2.55 mm (0.1004 in.)	V	2.575 mm (0.10138 in.)
C	2.60 mm (0.1024 in.)	W	2.625 mm (0.10335 in.)
D	2.65 mm (1.1043 in.)	X	2.675 mm (0.10531 in.)
E	2.70 mm (0.1063 in.)	Y	2.725 mm (0.10728 in.)
F	2.75 mm (0.1083 in.)	AA	2.775 mm (0.10925 in.)
G	2.80 mm (0.1102 in.)	AB	2.825 mm (0.11122 in.)
H	2.85 mm (0.1122 in.)	-	-

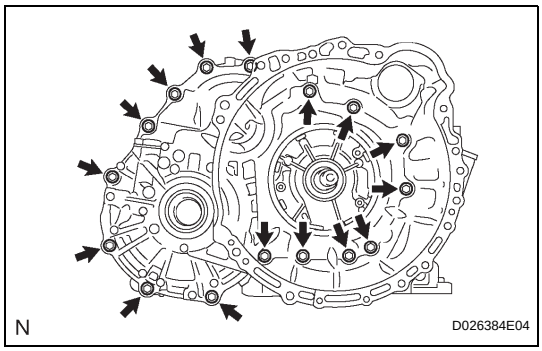

(f) Remove the 16 bolts and the transaxle housing.

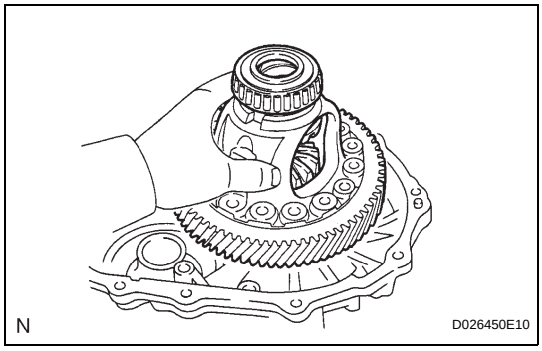

(g) Remove the differential assembly.

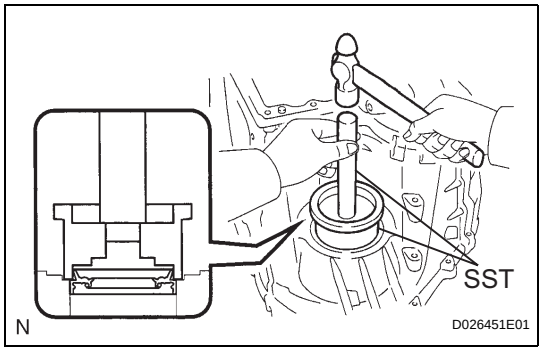

9. INSTALL TRANSAXLE HOUSING OIL SEAL

(a) Using SST and a hammer, tap in a new oil seal.
SST 09223-15020, 09950-70010 (09951-07150)

(b) Coat the lip of the oil seal with a little amount of MP grease.
Standard depth:
0 +-0.5 mm (0 +-0.0197 in.)

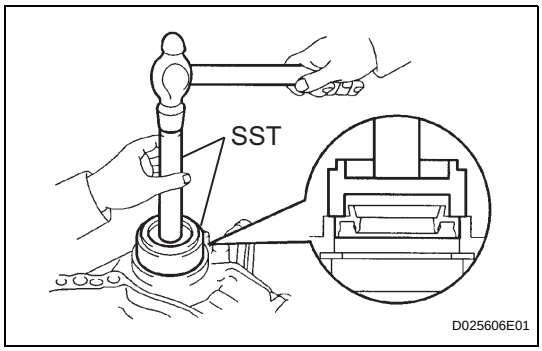

10. INSTALL DIFFERENTIAL SIDE BEARING RETAINER OIL SEAL

(a) Using SST and a hammer, tap in a new oil seal.
SST 09710-30050, 09950-70010 (09951-07150)

(b) Coat the lip of the oil seal with a little amount of MP grease.
Standard depth:
0 +-0.5 mm (0 +-0.0197 in.)

DIFFERENTIAL OIL SEAL

COMPONENTS

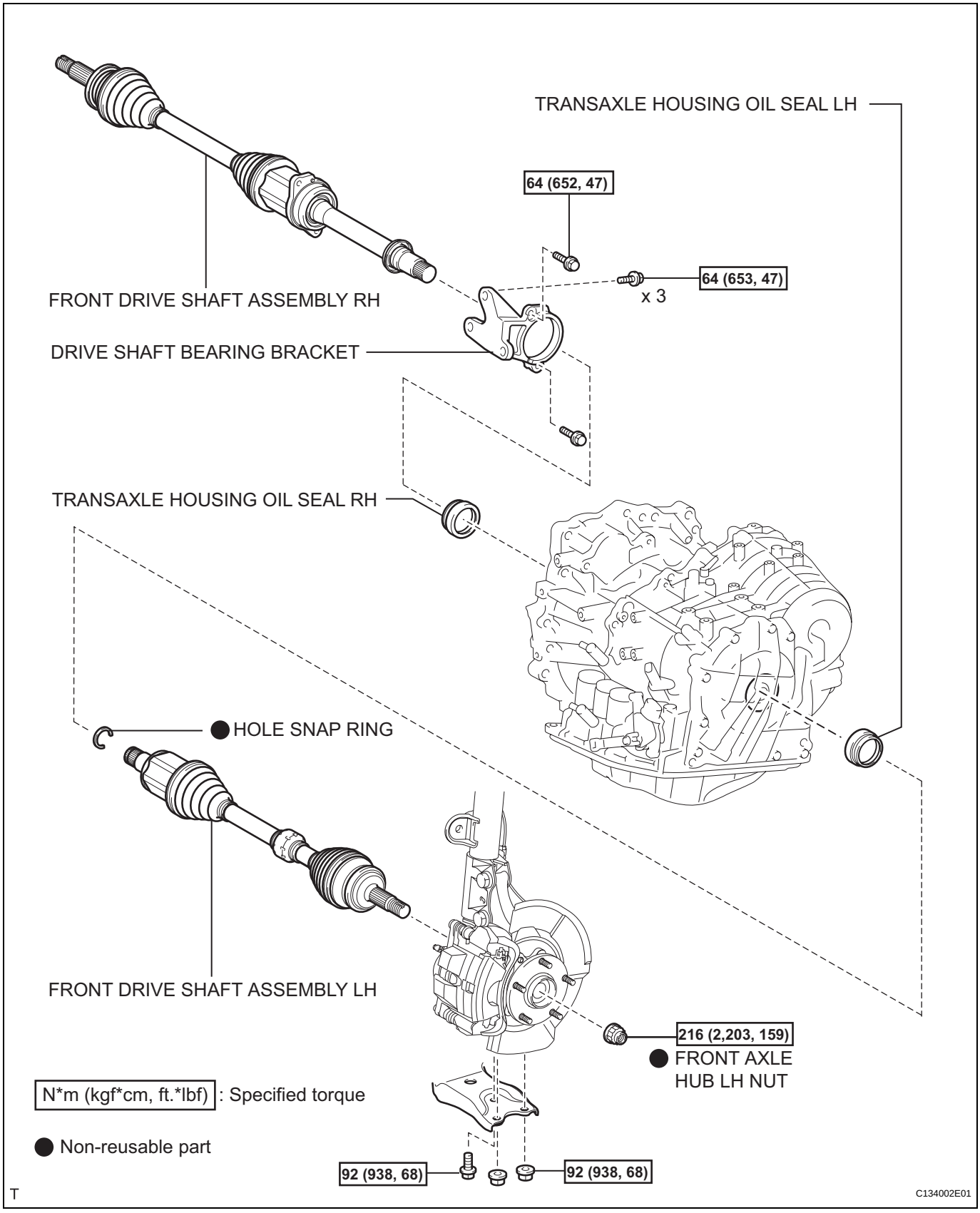

REPLACEMENT

1. DRAIN AUTOMATIC TRANSAXLE FLUID

(a) Remove the drain plug, gasket and drain the ATF.

(b) Install a new gasket and drain plug.

Torque: 47 N*m (479 kgf*cm, 35 ft.*lbf)

2. REMOVE FRONT DRIVE SHAFT ASSEMBLY

(a) Remove the drive shaft (see page DS-8).

3. REMOVE DRIVE SHAFT BEARING BRACKET

(a) Remove the 3 bolts and bracket.

4. REMOVE TRANSAXLE HOUSING OIL SEAL LH AND RH

(a) Using SST, tap out the oil seal LH.

SST 09308-00010

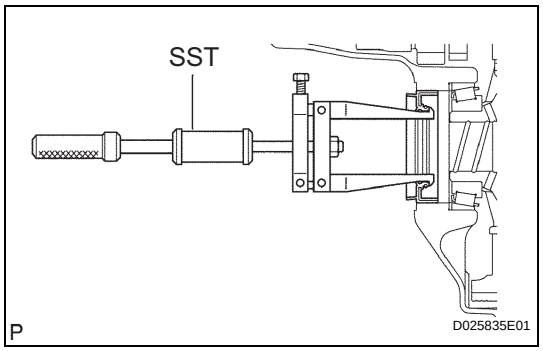

(b) Using SST, tap out the oil seal RH.

SST 09308-00010

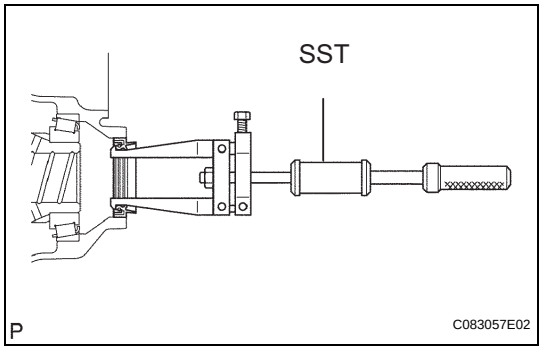

5. INSTALL TRANSAXLE HOUSING OIL SEAL LH AND RH

(a) Coat the lip of a new oil seal LH with MP grease.

(b) Using SST and a hammer, tap in the oil seal LH.

SST 09223-15020, 09950-70010 (09951-07150)

Standard depth:

0 +-0.5 mm (0 +-0.020 in.)

(c) Coat the lip of a new oil seal RH with MP grease.

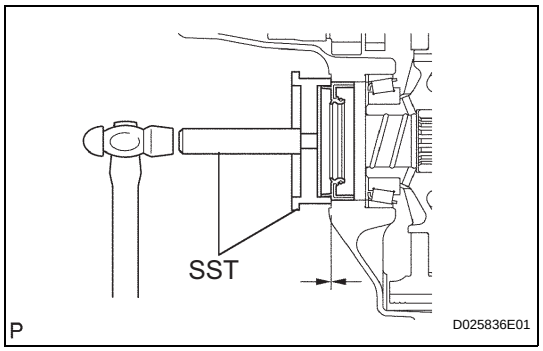

(d) Using SST and a hammer, tap in the oil seal RH.

SST 09316-60011 (09316-00011)

Standard depth:

0 +-0.5 mm (0 +-0.020 in.)

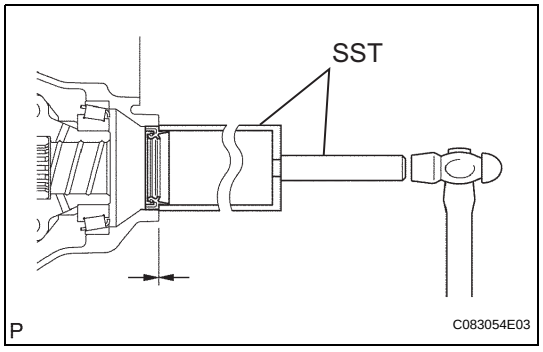

6. INSTALL DRIVE SHAFT BEARING BRACKET

(a) Install the bracket with the 3 bolts.

Torque: 64 N*m (653 kgf*cm, 47 ft.*lbf)

7. INSTALL FRONT DRIVE SHAFT ASSEMBLY

(a) Install the front drive shaft (see page DS-33).

8. ADD AUTOMATIC TRANSAXLE FLUID

Fluid type:

Toyota Genuine ATF WS

9. INSPECT TRANSAXLE FLUID LEVEL

(a) Inspect the transaxle fluid level (see page AX-126).

DIRECT CLUTCH

COMPONENTS

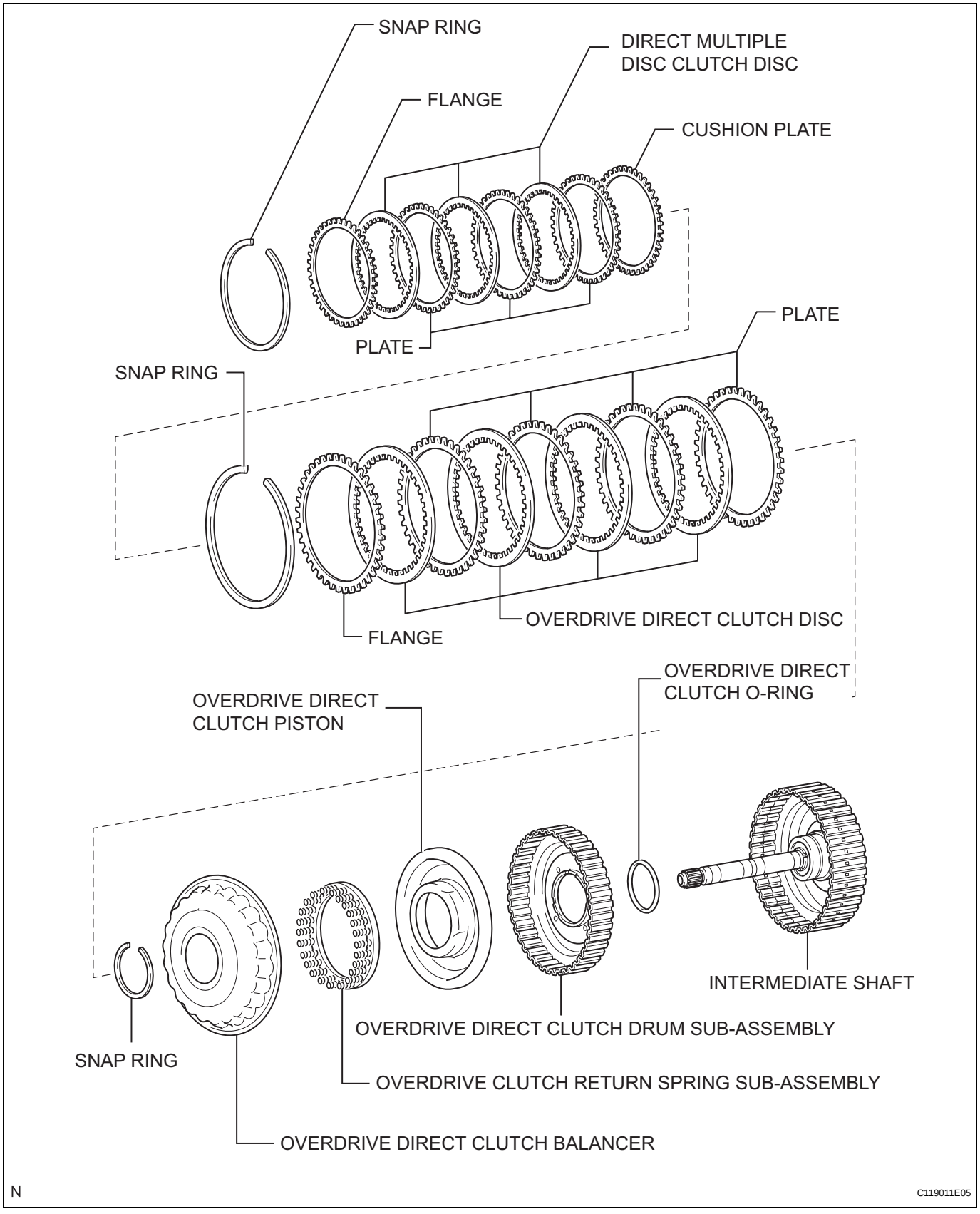

DISASSEMBLY

1. INSPECT PACK CLEARANCE OF REVERSE CLUTCH (See page AX-262)

2. INSPECT PACK CLEARANCE OF DIRECT CLUTCH AND OVERDRIVE CLUTCH (See page AX-262)

3. REMOVE DIRECT MULTIPLE DISC CLUTCH DISC

(a) Using a screwdriver, remove the snap ring from the intermediate shaft.

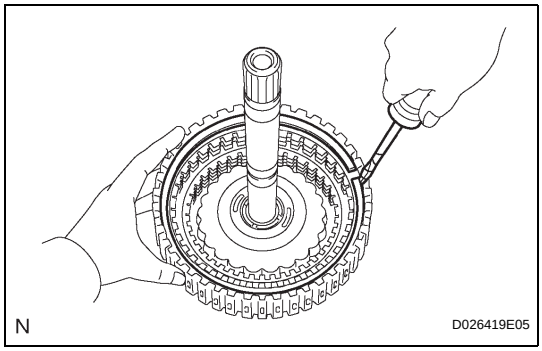

(b) Remove the flange, 3 discs, 3 plates and cushion plate from the intermediate shaft.

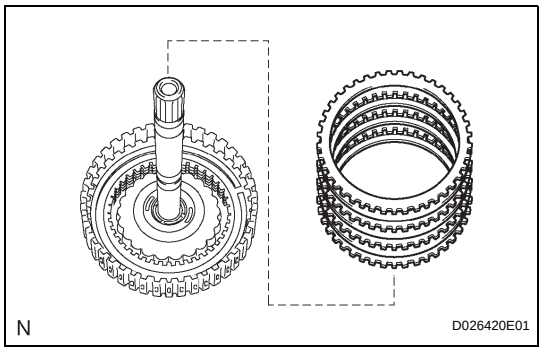

4. REMOVE OVERDRIVE DIRECT CLUTCH DISC

(a) Using a screwdriver, remove the snap ring from the intermediate shaft.

(b) Remove the flange, 4 discs and 4 plates from the intermediate shaft.

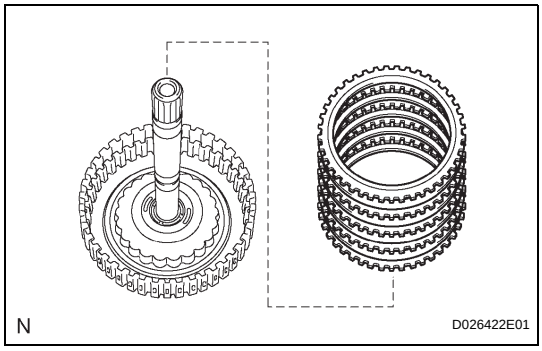

5. REMOVE OVERDRIVE CLUTCH RETURN SPRING SUB-ASSEMBLY

(a) Place SST on the clutch balancer and compress the spring with a press.
SST 09387-00020

(b) Using a snap ring expander, remove the snap ring from the direct clutch drum.
NOTICE:
- **Stop the press when the spring seat is lowered to a position 1 to 2 mm (0.039 to 0.078 in.) from the snap ring groove. This prevents the spring seat from being deformed.**
- **Do not expand the snap ring excessively.**

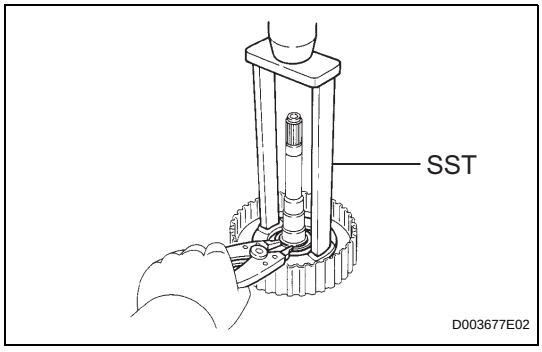

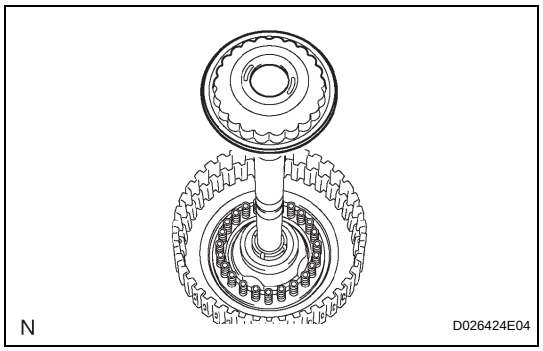

(c) Remove the clutch balancer from the direct clutch drum.

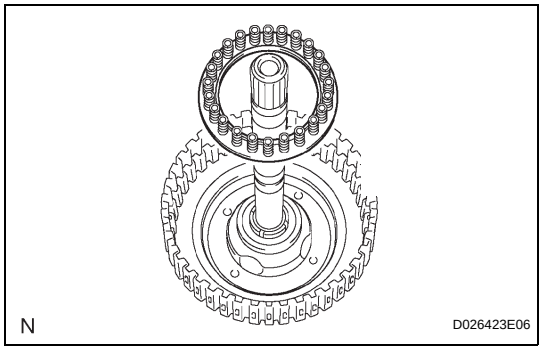

(d) Remove the overdrive clutch return spring from the direct clutch drum.

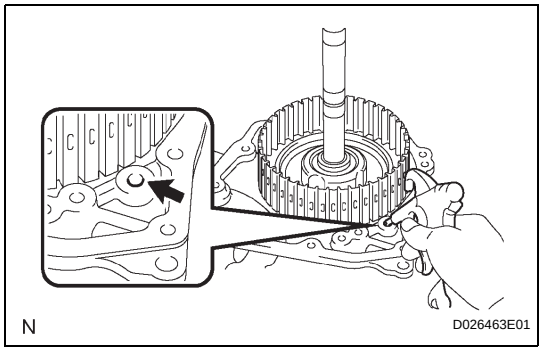

6. REMOVE OVERDRIVE DIRECT CLUTCH PISTON

(a) Install the intermediate shaft on the transaxle rear cover.

(b) Holding the direct clutch piston with your hand, apply compressed air (392 kPa, 4.0 kgf/cm^2, 57 psi) to the transaxle rear cover to remove the direct clutch piston.

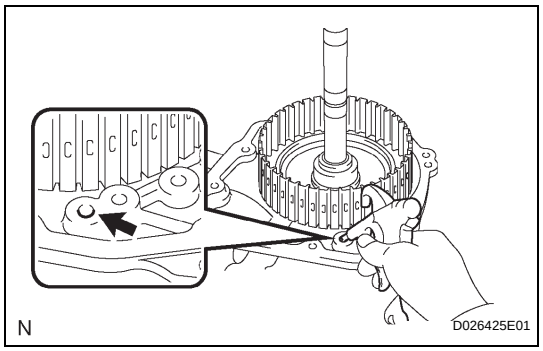

7. REMOVE OVERDRIVE DIRECT CLUTCH DRUM SUB-ASSEMBLY

(a) Holding the direct clutch drum by hand, apply compressed air (392 kPa, 4.0 kgf/cm^2, 57 psi) to the transaxle rear cover to remove the direct clutch drum.

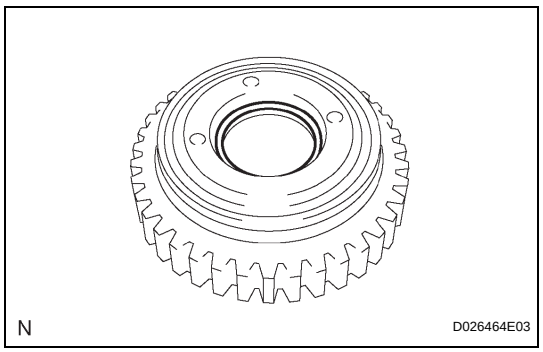

8. REMOVE OVERDRIVE DIRECT CLUTCH O-RING

(a) Using a screwdriver, remove the O-ring from the direct clutch drum.

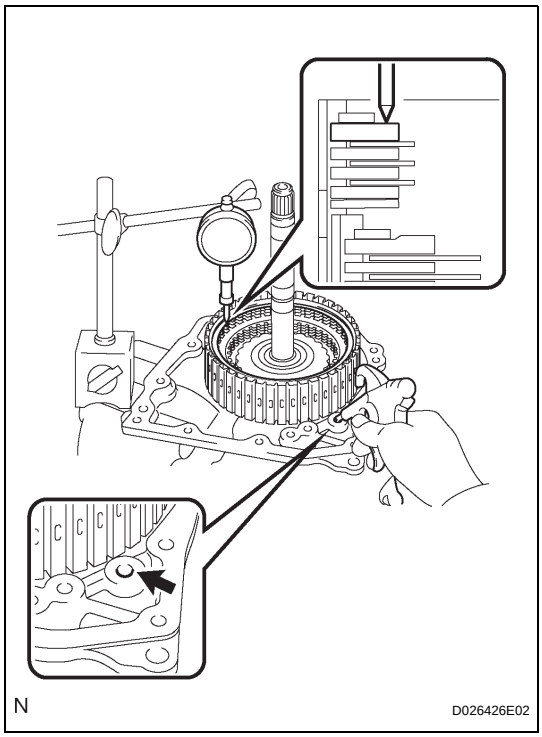

INSPECTION

1. INSPECT PACK CLEARANCE OF REVERSE CLUTCH

(a) Install the intermediate shaft and needle roller bearing onto the transaxle rear cover.

(b) Using a dial indicator, measure the reverse clutch pack clearance while applying and releasing compressed air (392 kPa, 4.0 kgf/cm^2, 57 psi).

Standard pack clearance:

0.60 to 0.82 mm (0.0236 to 0.0323 in.)

If the pack clearance is not as specified, inspect the discs, plates and flange.

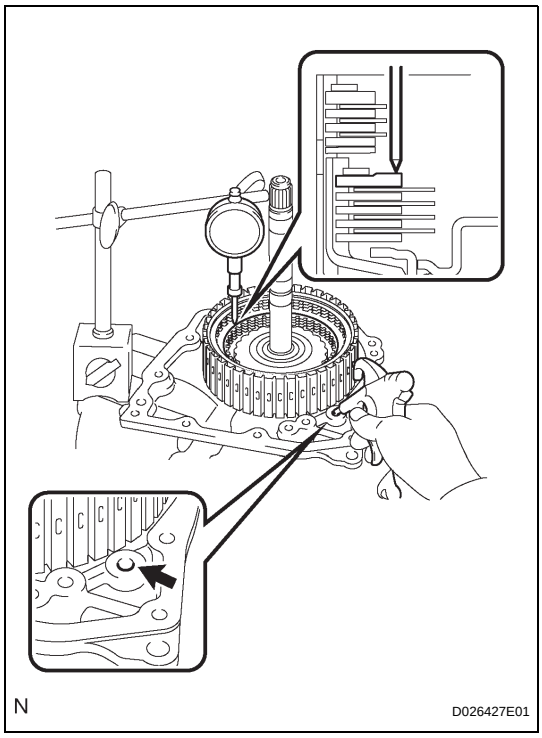

2. INSPECT PACK CLEARANCE OF DIRECT CLUTCH AND OVERDRIVE CLUTCH

(a) Using a dial indicator, measure the direct clutch and overdrive clutch pack clearance while applying and releasing compressed air (392 kPa, 4.0 kgf/cm^2, 57 psi).

Standard pack clearance:

0.61 to 0.83 mm (0.0240 to 0.0327 in.)

If the pack clearance is not as specified, inspect the discs, plates and flange.

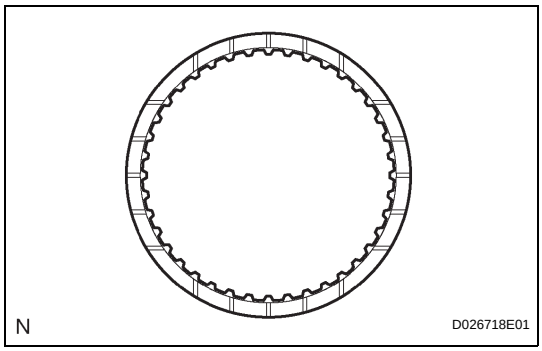

3. INSPECT DIRECT MULTIPLE DISC CLUTCH DISC

(a) Check if the sliding surfaces of the disc, plate and flange are worn or burnt.

If necessary, replace them.

NOTICE:

- **If the lining of the disc comes off or is discolored, or if a part of the groove is worn, replace all the discs.**
- **Before installing new discs, immerse them in ATF for at least 15 minutes.**

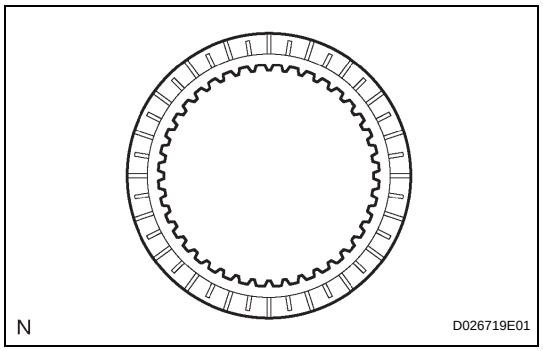

4. INSPECT OVERDRIVE DIRECT CLUTCH DISC

(a) Check if the sliding surface of the disc, plate and flange are worn or burnt.
If necessary, replace them.
NOTICE:
- **If the lining of the disc comes off or is discolored, or if a part of the groove is worn, replace all the discs.**
- **Before installing new discs, immerse them in ATF for at least 15 minutes.**

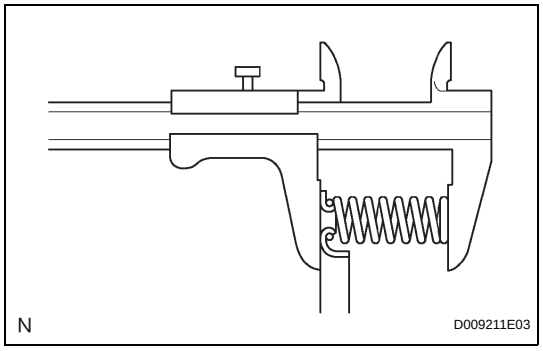

5. INSPECT OVERDRIVE CLUTCH RETURN SPRING SUB-ASSEMBLY

(a) Using a vernier caliper, measure the free length of the spring together with the spring seat.
Standard free length:
25.91 mm (1.0201 in.)

REASSEMBLY

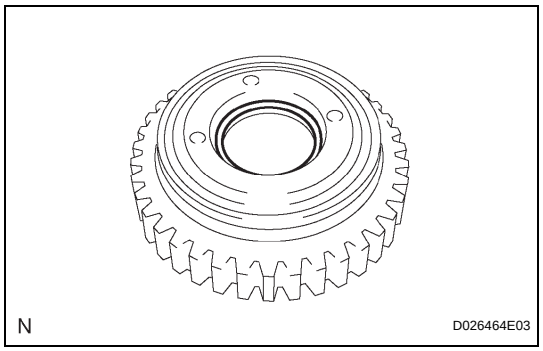

1. INSTALL OVERDRIVE DIRECT CLUTCH O-RING

(a) Coat the O-ring with ATF, and install it to the direct clutch drum.
NOTICE:
Make sure that the O-ring is not twisted or pinched when it is installed.

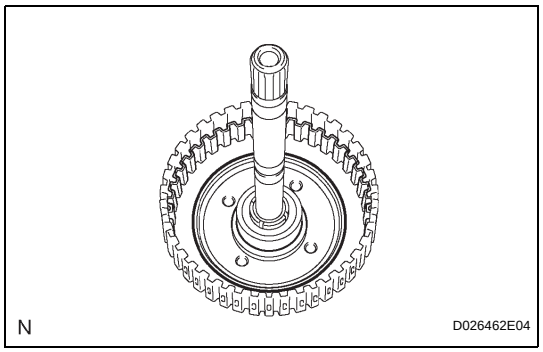

2. INSTALL OVERDRIVE DIRECT CLUTCH DRUM SUB-ASSEMBLY

(a) Coat the direct clutch drum with ATF, and install it to the intermediate shaft.
NOTICE:
- **Be careful not to damage the O-ring.**
- **Be careful not to damage the lip of the direct clutch drum.**

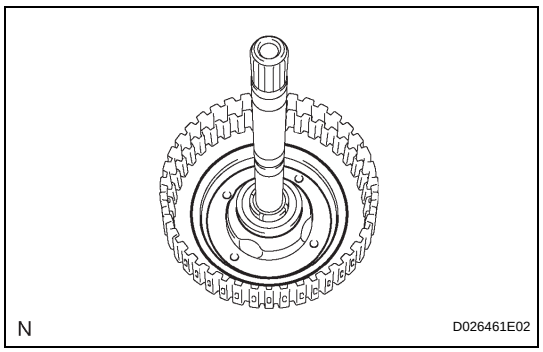

3. INSTALL OVERDRIVE DIRECT CLUTCH PISTON

(a) Coat the overdrive direct clutch piston with ATF, and install it to the direct clutch drum.

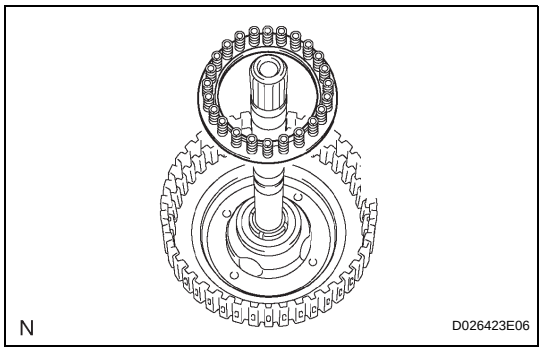

4. INSTALL OVERDRIVE CLUTCH RETURN SPRING SUB-ASSEMBLY

(a) Install the overdrive clutch return spring to the direct clutch drum.
NOTICE:
After installing the spring sub-assembly, check that all of the springs fit in the piston correctly.

(b) Coat the clutch balancer with ATF.

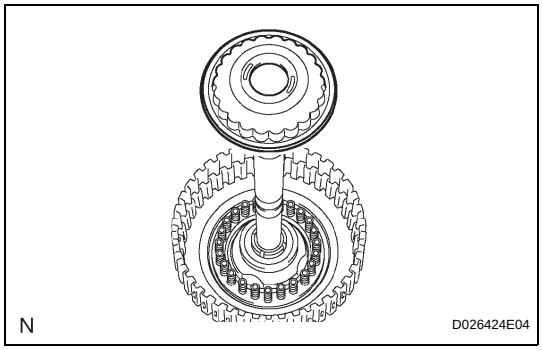

(c) Install the clutch balancer to the direct clutch drum.
NOTICE:
- **Be careful not to damage the lip of the direct clutch balancer.**
- **Make sure that the lip of the seal is not pinched and that it has no other defects.**
- **Apply sufficient ATF to the sealing lip before installing the clutch balancer.**

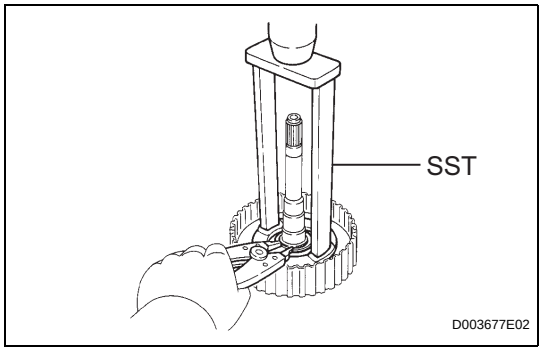

(d) Place SST on the clutch balancer and compress the overdrive clutch return spring with a press.
SST 09387-00020

(e) Using a snap ring expander, install the snap ring to the direct clutch drum.

(f) Be sure that the end gap of the snap ring is not aligned with the spring retainer claw.
NOTICE:
- **Stop the press when the spring seat is lowered to a position 1 to 2 mm (0.039 to 0.078 in.) from the snap ring groove. This prevents the spring seat from being deformed.**
- **Do not expand the snap ring excessively.**

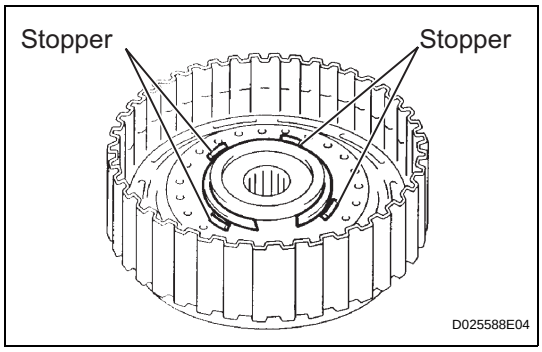

(g) Set the end gap of the snap ring in the piston shown in the illustration.
NOTICE:
The end gap of the snap ring should not align with any of the stoppers.

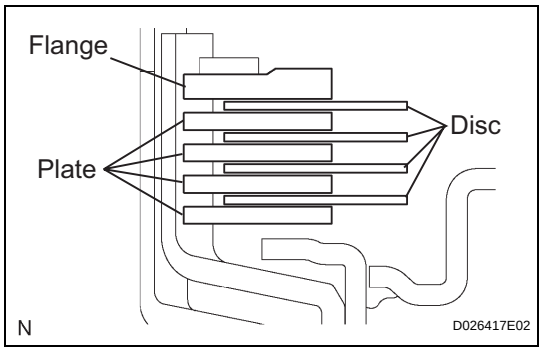

5. INSTALL OVERDRIVE DIRECT CLUTCH DISC

(a) Coat the 4 discs with ATF.

(b) Install the 4 plates, 4 discs and flange to the intermediate shaft.

NOTICE:

Make sure that the plates, discs and flange are installed as shown in the illustration.

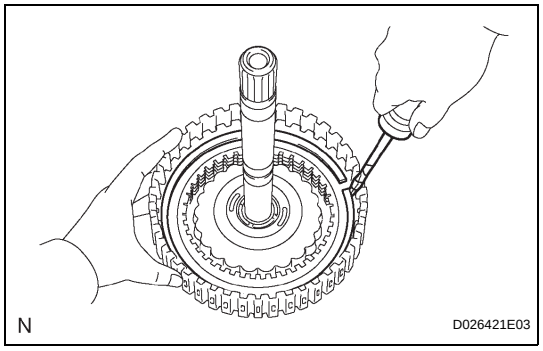

(c) Using a screwdriver, install the snap ring.

(d) Check that the end gap of the snap ring is not aligned with one of the cutouts.

NOTICE:

The snap ring should be fully engaged in the groove of the drum.

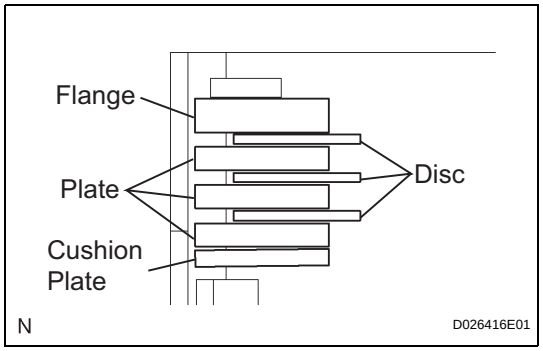

6. INSTALL DIRECT MULTIPLE DISC CLUTCH DISC

(a) Coat the 3 discs with ATF.

(b) Install the cushion plate, 3 plates, 3 discs and flange to the intermediate shaft.

NOTICE:

- **Install the cushion plate with the mark on the white surface facing towards the plate.**
- **Be careful of the order of cushion plate discs, plate and flange.**

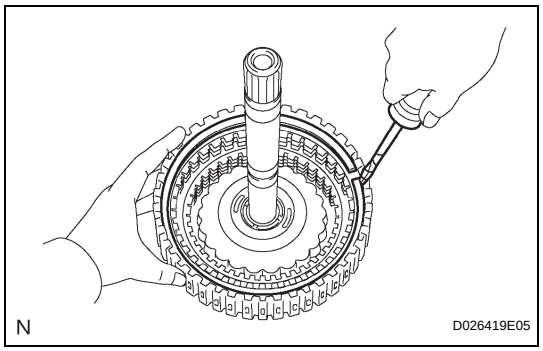

(c) Using a screwdriver, install the snap ring.

(d) Check that the end gap of the snap ring is not aligned with one of the cutouts.

NOTICE:

The snap ring should be fully engaged in the groove of the drum.

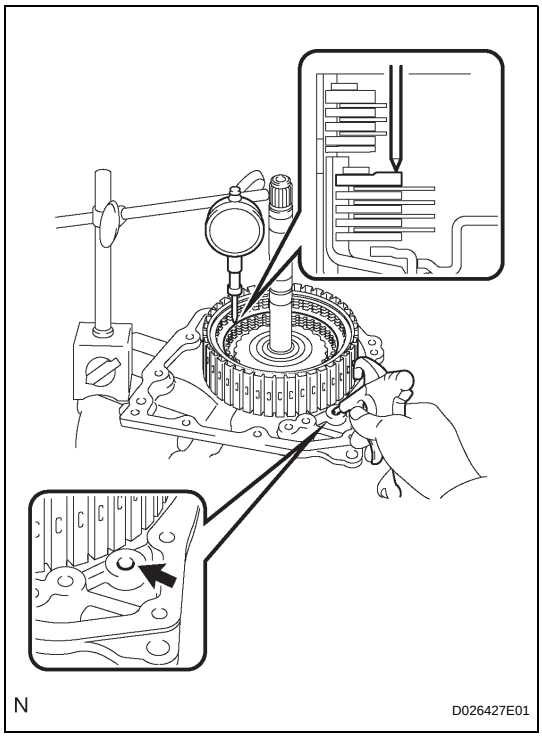

7. INSPECT PACK CLEARANCE OF DIRECT CLUTCH AND OVERDRIVE CLUTCH

(a) Using a dial indicator, measure the direct clutch and overdrive clutch pack clearance while applying and releasing compressed air (392 kPa, 4.0 kgf/cm^2, 57 psi).

Standard pack clearance:

0.61 to 0.83 mm (0.0240 to 0.0327 in.)

If the pack clearance is less than the minimum, parts may have been assembled incorrectly, so check and reassemble them again. If the clearance is not as specified, select another flange.

HINT:

There are 7 different thicknesses of flanges available.

Standard flange thickness

No.	Thickness	No.	Thickness
0	2.5 mm (0.098 in.)	4	2.9 mm (0.114 in.)
1	2.6 mm (0.102 in.)	5	3.0 mm (0.118 in.)
2	2.7 mm (0.106 in.)	6	3.1 mm (0.122 in.)
3	2.8 mm (0.110 in.)	-	-

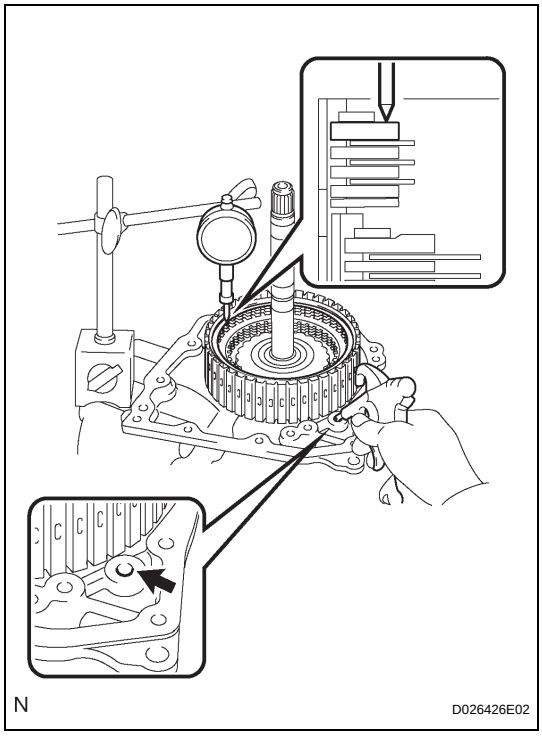

8. INSPECT PACK CLEARANCE OF REVERSE CLUTCH

(a) Install the intermediate shaft onto the transaxle rear cover.

(b) Using a dial indicator, measure the direct clutch pack clearance while applying and releasing compressed air (392 kPa, 4.0 kgf/cm^2, 57 psi).

Standard clearance:

0.60 to 0.82 mm (0.0236 to 0.0323 in.)

If the pack clearance is less than the minimum, parts may have been assembled incorrectly, so check and reassemble them again. If the clearance is not as specified, select another flange.

HINT:

There are 7 different thicknesses of flanges available.

Standard flange thickness

No.	Thickness	No.	Thickness
1	3.0 mm (0.118 in.)	5	3.4 mm (0.134 in.)
2	3.1 mm (0.122 in.)	6	3.5 mm (0.138 in.)
3	3.2 mm (0.126 in.)	7	3.6 mm (0.142 in.)
4	3.3 mm (0.130 in.)	-	-

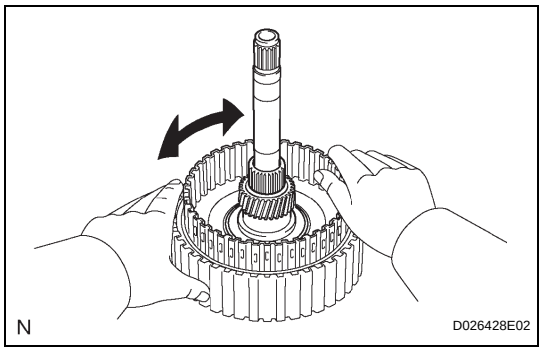

9. INSPECT DIRECT CLUTCH ASSEMBLY

(a) Check that the disc rotates when rotating the disc after inserting the rear planetary sun gear.

NOTICE:

Do not place the rear planetary sun gear in a vise.

REMOVAL

1. **DISCONNECT CABLE FROM NEGATIVE BATTERY TERMINAL**
   CAUTION:
   Wait at least 90 seconds after disconnecting the cable from the negative (-) battery terminal to prevent airbag and seat belt pretensioner activation.
2. **REMOVE SHIFT LEVER KNOB SUB-ASSEMBLY**
3. **REMOVE REAR CONSOLE BOX SUB-ASSEMBLY**
   (a) Remove the console box (see page IP-26).
4. **DISCONNECT TRANSMISSION CONTROL CABLE ASSEMBLY**
   (a) Disconnect the control cable from the shift lever.

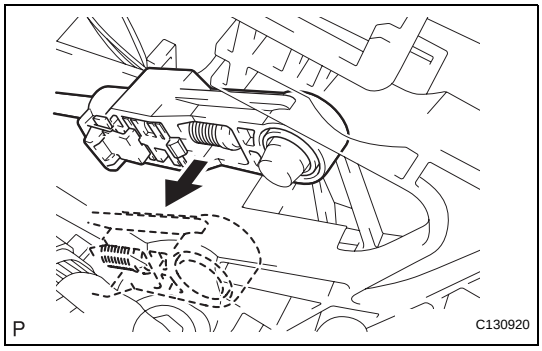

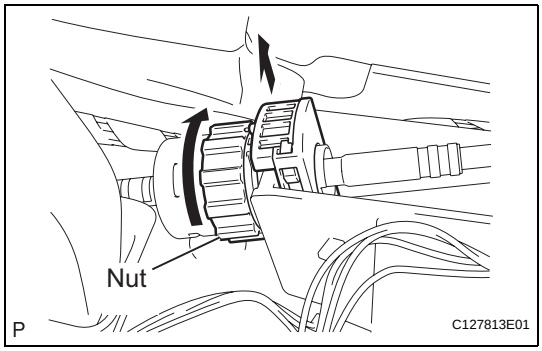

   (b) Turn the nut and disconnect the control cable from the shift lever retainer.

5. **REMOVE FLOOR SHIFT ASSEMBLY**
   (a) Remove the 4 bolts and floor shift.

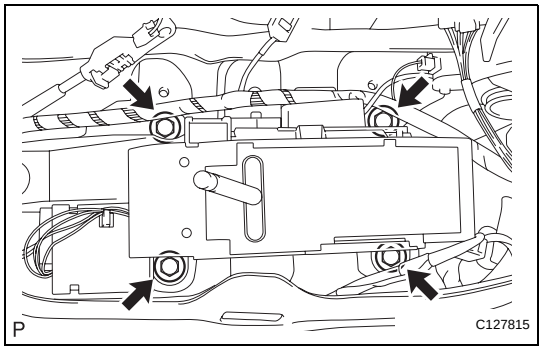

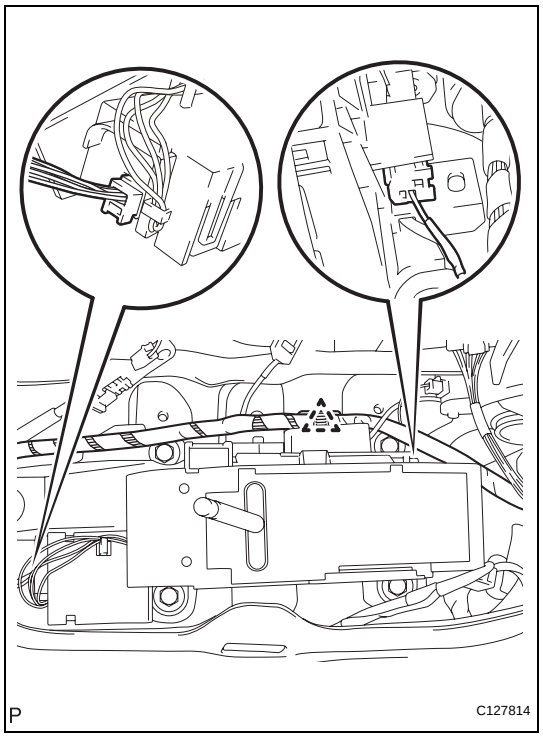

(b) Disconnect the 2 connectors and detach the clamp.

DISASSEMBLY

1. REMOVE LOWER POSITION INDICATOR HOUSING

(a) Detach the 4 claws and remove the housing.

(b) Remove the position indicator slide cover with slide No. 2 cover.

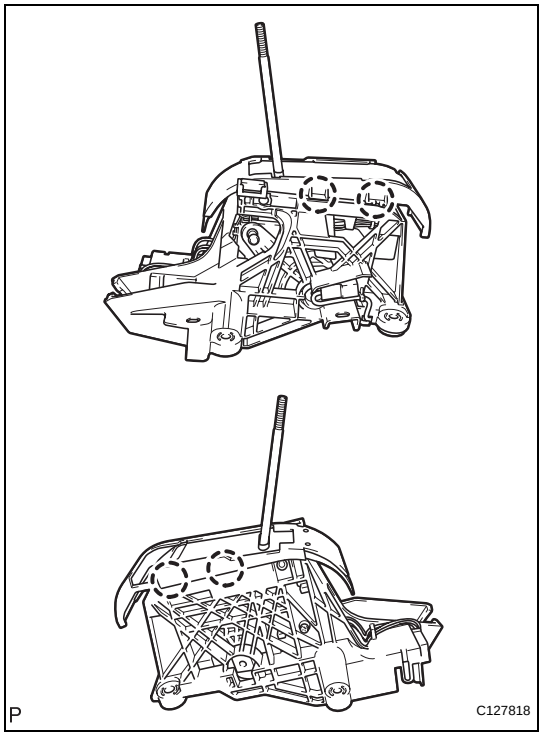

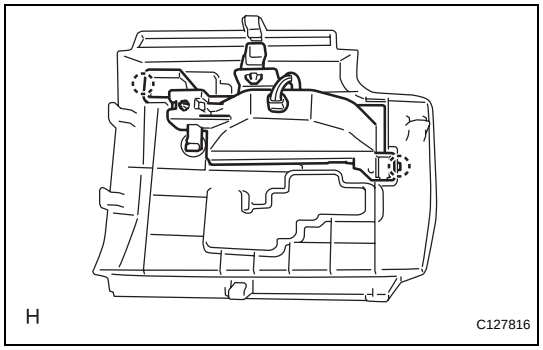

2. REMOVE POSITION INDICATOR LIGHT HOUSING

(a) Detach the 2 claws and remove the indicator light housing from the floor shift position indicator housing.

3. REMOVE INDICATOR LIGHT WIRE SUB-ASSEMBLY

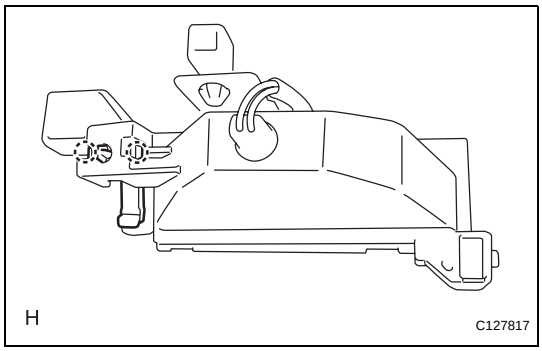

4. REMOVE SHIFT LOCK RELEASE BUTTON

(a) Detach the 2 claws and remove the button and spring from the position indicator light housing.

ADJUSTMENT

1. INSPECT SHIFT LEVER POSITION

(a) When shifting the lever from P to the R position with the ignition switch ON and the brake pedal depressed, make sure that the shift lever moves smoothly and moves correctly into position.

(b) Start the engine and make sure that the vehicle moves forward when shifting the lever from N to the D position and moves rearward when shifting the lever to the R position.
If the operation cannot be performed as specified, inspect the park/neutral position switch assembly and check the shift lever assembly installation condition.

2. ADJUST SHIFT LEVER POSITION

(a) Shift the shift lever to the N position.

(b) Slide the adjuster case cover in the direction shown in the illustration and pull out the lock piece.

(c) Gently pull the cable rod toward the rear of the vehicle by hand to pull the cable taut.

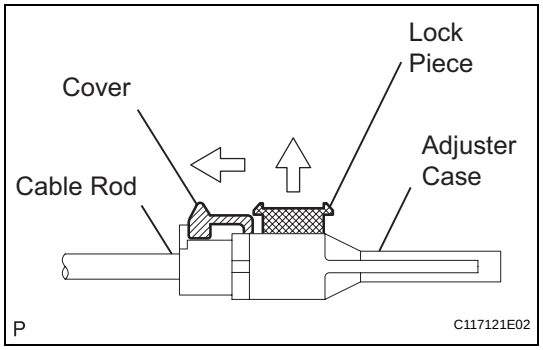

(d) Press the lock piece into the adjuster case and lock it.

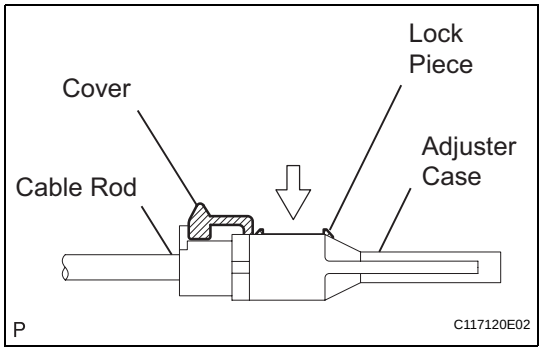

(e) Slide the cover in the direction shown in the illustration.
NOTICE:
Slide the cover past the protrusion of the lock piece.

(f) Inspect the operation.

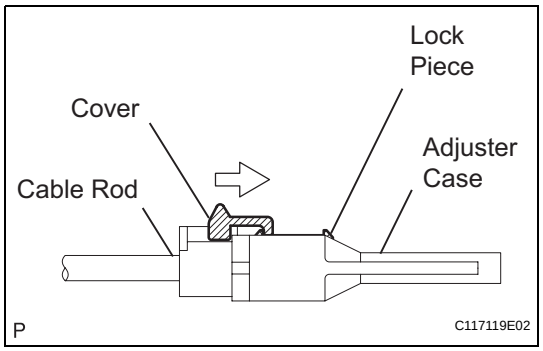

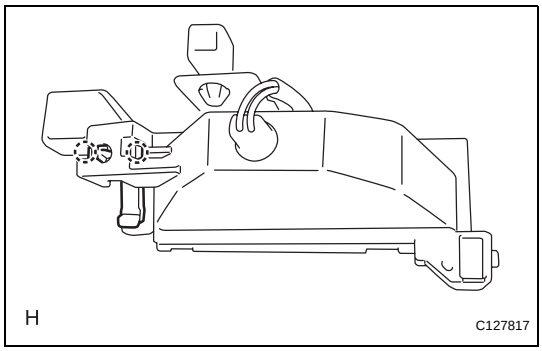

REASSEMBLY

1. INSTALL SHIFT LOCK RELEASE BUTTON

(a) Install the spring and button and attach the claws to the position indicator light housing.

2. INSTALL INDICATOR LIGHT WIRE SUB-ASSEMBLY

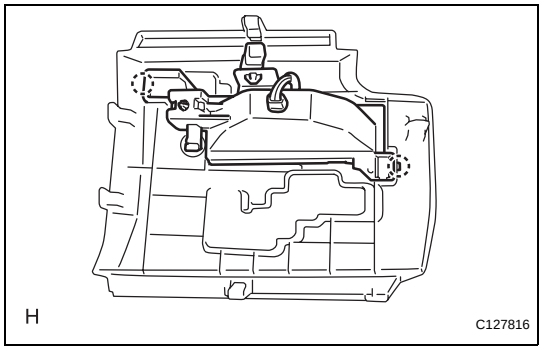

3. INSTALL POSITION INDICATOR LIGHT HOUSING

(a) Install the indicator light housing and attach the 2 claws to the shift position indicator housing.

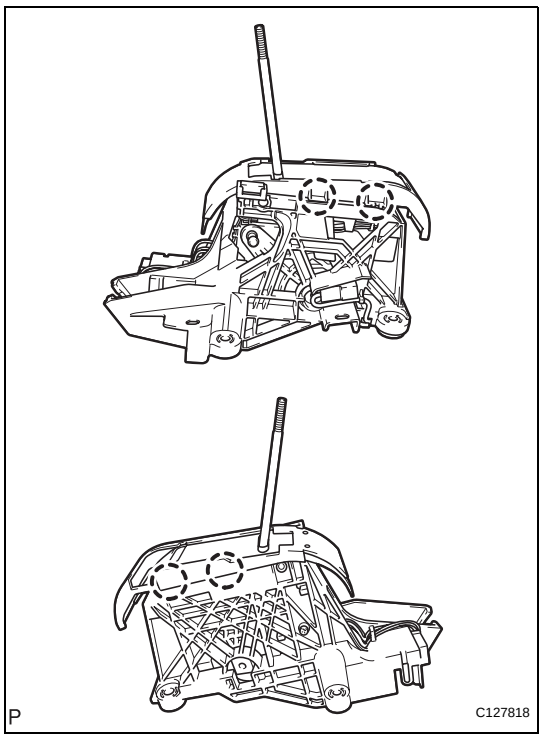

4. INSTALL LOWER POSITION INDICATOR HOUSING

(a) Install the position indicator slide cover with slide No. 2 cover to the indicator housing.

(b) Install the housing and attach the 4 claws to the floor shift assembly.

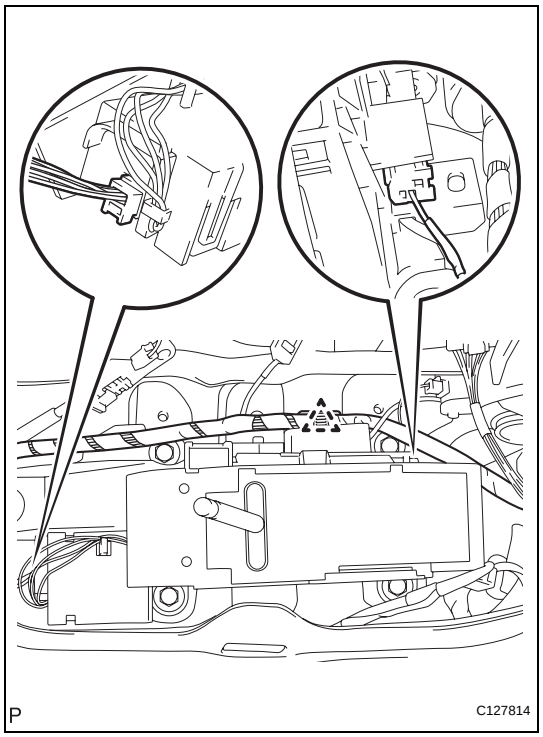

INSTALLATION

1. INSTALL FLOOR SHIFT ASSEMBLY

(a) Connect the 2 connectors and attach the clamp.

(b) Install the floor shift with the 4 bolts.
Torque: 12 N*m (122 kgf*cm, 9 ft.*lbf)

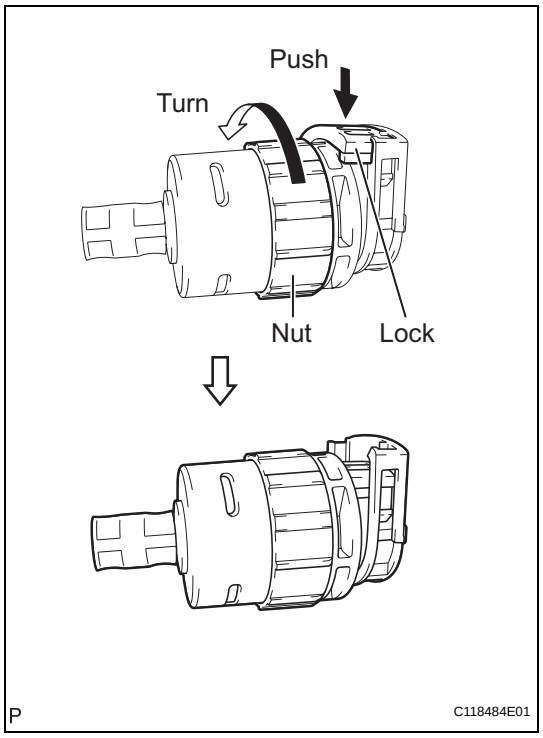

2. CONNECT TRANSMISSION CONTROL CABLE ASSEMBLY

(a) Turn the nut of the control cable and push in the lock.

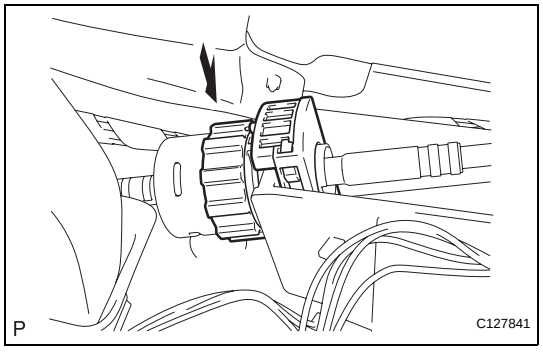

(b) Install the control cable onto the shift lever retainer.
NOTICE:
- **Install the cable with the protruding portion of the cable outer facing upward.**

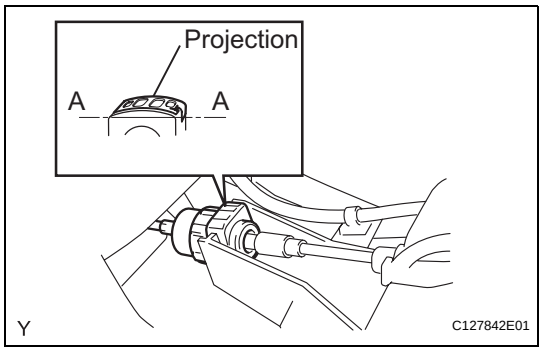

- **After installing, check that the lock of the cable outer is protruding beyond portion A-A, as shown in the illustration.**

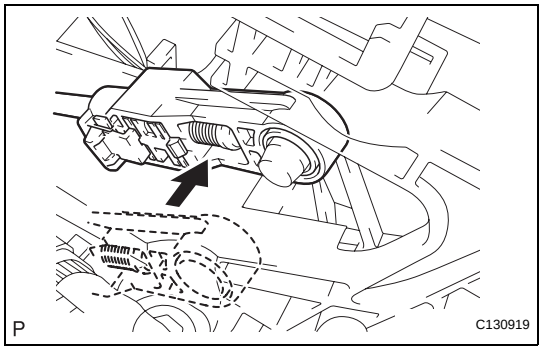

(c) Connect the control cable to the shift lever.
NOTICE:
Connect the control cable so that the adjusting mechanism lock of the control cable is installed on the driver side of the vehicle.

3. **CONNECT CABLE TO NEGATIVE BATTERY TERMINAL**
4. **INSPECT SHIFT LEVER POSITION (See page AX-164)**
5. **ADJUST SHIFT LEVER POSITION (See page AX-164)**
6. **INSTALL REAR CONSOLE BOX SUB-ASSEMBLY**
   (a) Install the rear console box (see page IP-28).
7. **INSTALL SHIFT LEVER KNOB SUB-ASSEMBLY**

FLOOR SHIFT ASSEMBLY

COMPONENTS

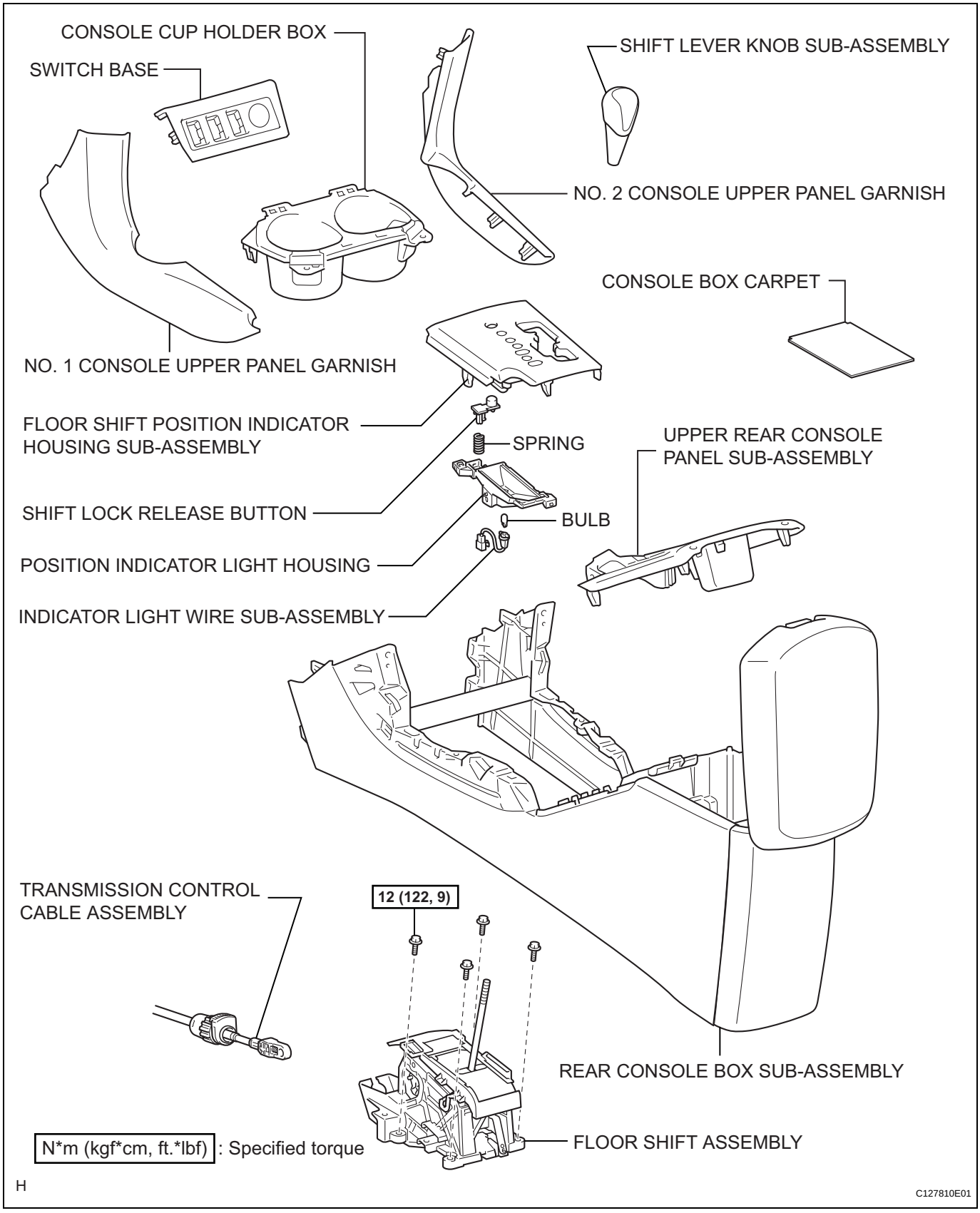

AX

H

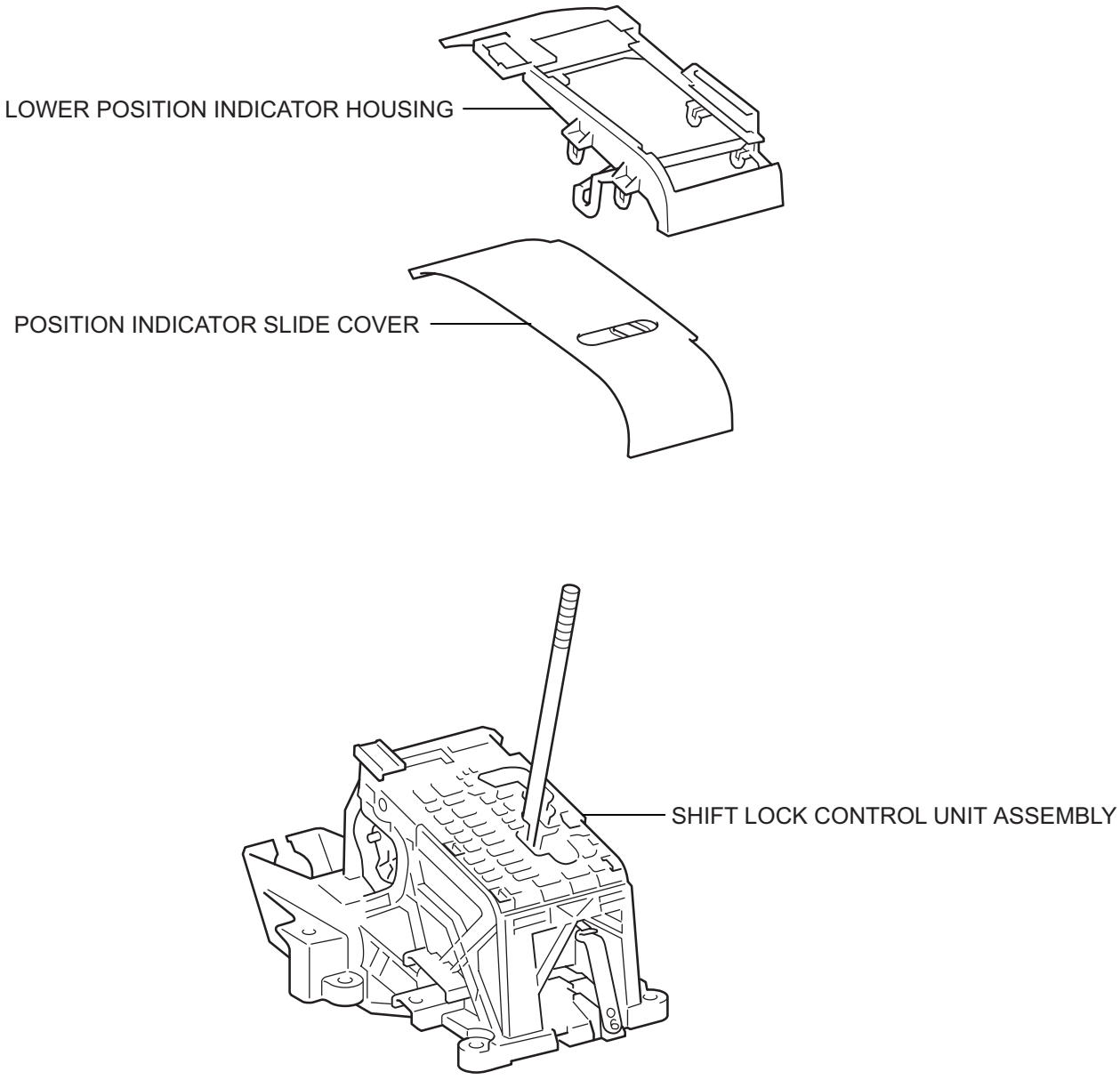

H

C127811E01

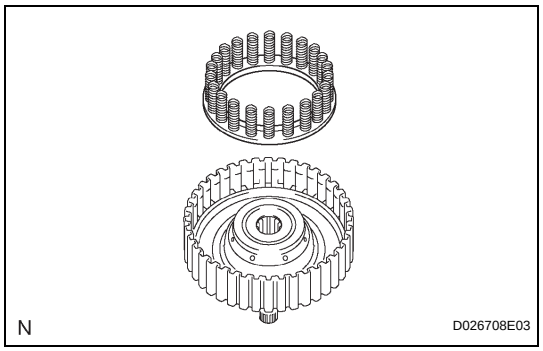

(d) Remove the forward clutch return spring from the input shaft.

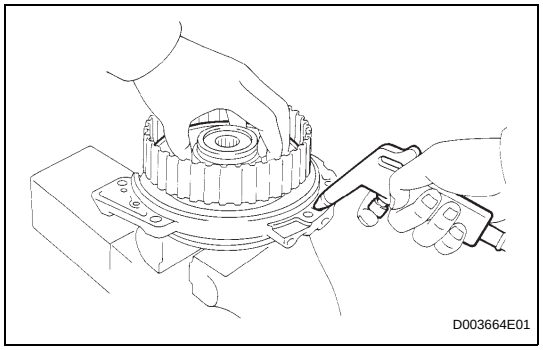

4. REMOVE FORWARD CLUTCH RETURN SPRING SUB-ASSEMBLY

(a) Place the forward clutch drum onto the oil pump.

(b) Holding the forward clutch piston by hand, apply compressed air (392 kPa, 4.0 kgf/cm^2, 57 psi) to the oil pump to remove the forward clutch piston.
HINT:
When the piston cannot be removed because it is slanted, blow air again with the protruding side pushed, or remove the piston using needle nose pliers with vinyl tape on the tip.

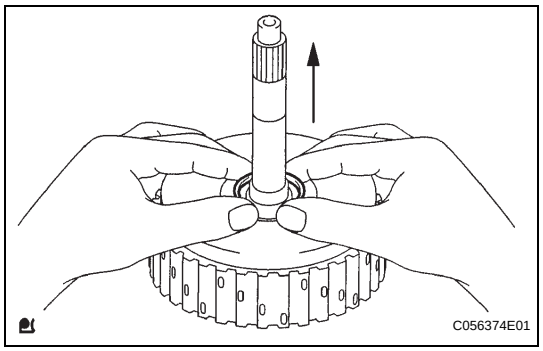

5. REMOVE INPUT SHAFT OIL SEAL RING

(a) Remove the input shaft oil seal ring from the input shaft.

INSPECTION

1. INSPECT PACK CLEARANCE OF FORWARD CLUTCH

(a) Install the forward clutch on the oil pump.
NOTICE:
Be careful not to damage the oil seal ring of the oil pump.

(b) Using a dial indicator, measure the forward clutch pack clearance while applying and releasing compressed air (392 kPa, 4.0 kgf/cm^2, 57 psi).
Standard pack clearance:
1.00 to 1.25 mm (0.0394 to 0.4921 in.)
If the clearance is not as specified, inspect the discs, plates and flange.
HINT:
If the opening is large, cover it with a piece of cloth to prevent the compressed air from being released.

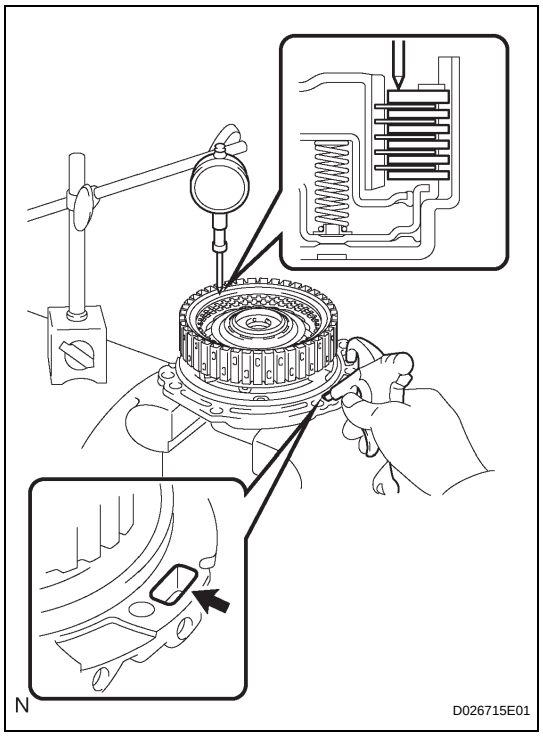

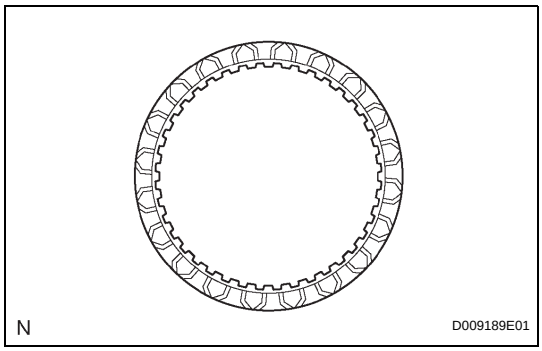

2. INSPECT FORWARD MULTIPLE DISC CLUTCH DISC

(a) Check if the sliding surface of the disc, plate and flange are worn or burnt.
If necessary, replace them.
NOTICE:
- **If the lining of the disc comes off or is discolored, or if a part of the groove is worn, replace all the discs.**
- **Before installing new discs, immerse them in ATF for at least 15 minutes.**

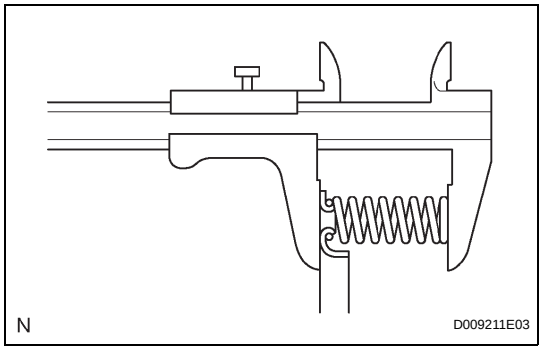

3. INSPECT FORWARD CLUTCH RETURN SPRING SUB-ASSEMBLY

(a) Using a vernier caliper, measure the free length of the spring together with the spring seat.
Standard free length:
26.74 mm (1.0528 in.)

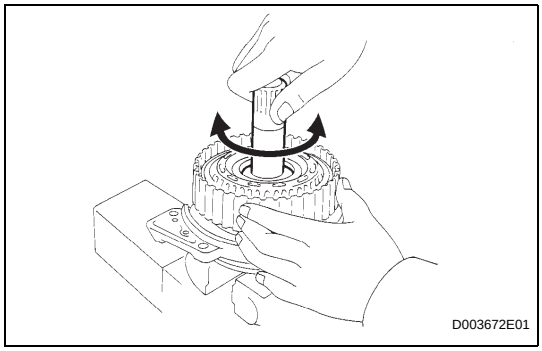

4. INSPECT FORWARD MULTIPLE DISC CLUTCH DISC

(a) Check if the disc lightly rotates when rotating the forward clutch after inserting the multiple disc clutch into it.
NOTICE:
Do not place the forward clutch in a vise.

REASSEMBLY

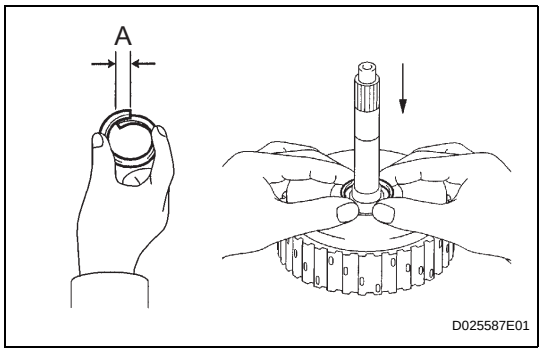

1. INSTALL INPUT SHAFT OIL SEAL RING

(a) Compress a new input shaft oil seal ring from both sides to reduce dimension A.
Dimension A:
5.0 mm (0.197 in.)

(b) Coat the oil seal ring with ATF and install it to the forward clutch drum.
NOTICE:
Do not expand the end gap of the oil seal ring too much. Fix the hooks firmly.

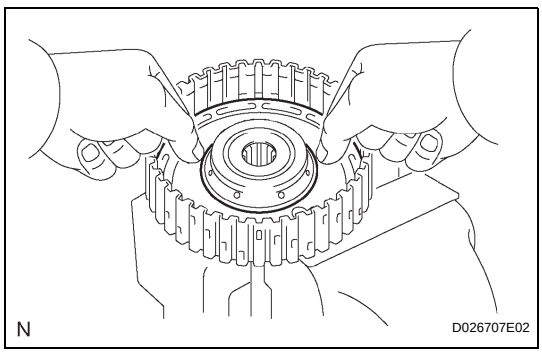

2. INSTALL FORWARD CLUTCH PISTON SUB-ASSEMBLY

(a) Coat the forward clutch piston with ATF, and install it to the forward clutch drum.
NOTICE:
Be careful not to damage the lip of the forward clutch piston.

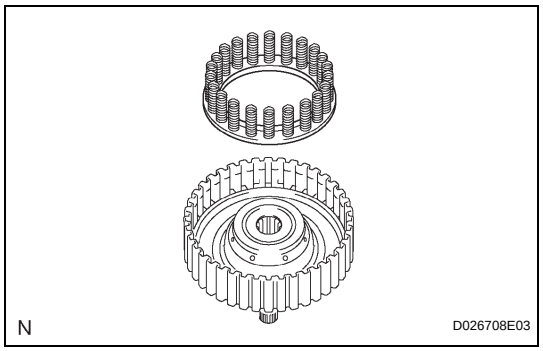

3. INSTALL FORWARD CLUTCH RETURN SPRING SUB-ASSEMBLY

(a) Install the return spring to the forward clutch drum.
NOTICE:
After installing the spring, check that all of the springs fit in the piston correctly.

(b) Coat the clutch balancer with ATF.

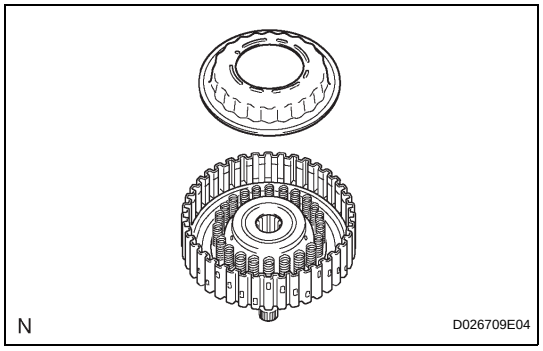

(c) Install the clutch balancer to the forward clutch drum.
NOTICE:
- **Be careful not to damage the lip of the forward clutch balancer.**
- **Make sure that the clutch balancer is not pinched and that there are no other defects on the lip.**
- **Apply sufficient ATF to the sealing lip before installation.**

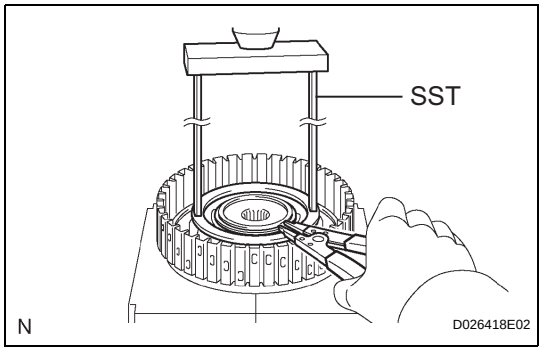

(d) Place SST on the clutch balancer, and compress the clutch balancer with a press.
SST 09387-00020

(e) Install the snap ring with a snap ring expander.

(f) Be sure that the end gap of the snap ring is not aligned with the spring retainer claw.
NOTICE:
- **Stop the press when the spring seat is lowered to a position 1 to 2 mm (0.039 to 0.078 in.) from the snap ring groove. This prevents the spring seat from being deformed.**
- **Do not expand the snap ring excessively.**

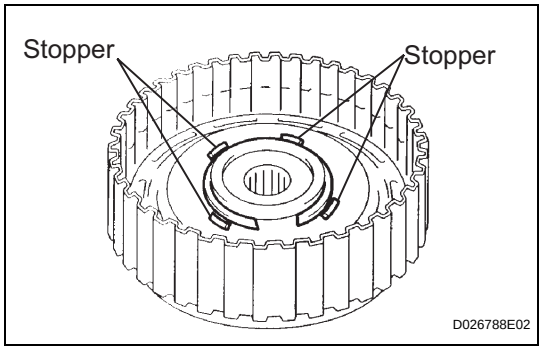

(g) Set the end gap of the snap ring in the piston as shown in the illustration.
NOTICE:
The end gap of the snap ring should not align with any of the stoppers.

4. INSTALL FORWARD MULTIPLE DISC CLUTCH DISC

(a) Coat the 5 discs with ATF.

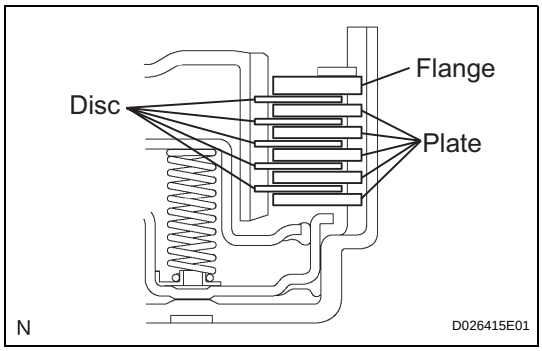

(b) Install the 5 plates, 5 discs and flange to the forward clutch drum.
NOTICE:
Make sure that the plates, discs, and flange are installed as shown in the illustration.

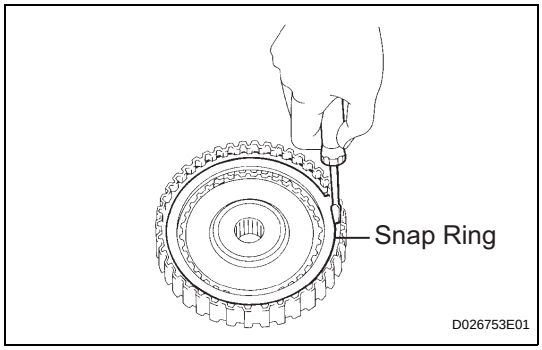

(c) Using a screwdriver, install the snap ring.
(d) Check that the end gap of the snap ring is not aligned with one of the cutouts.
NOTICE:
The snap ring should be fully engaged in the groove of the drum.

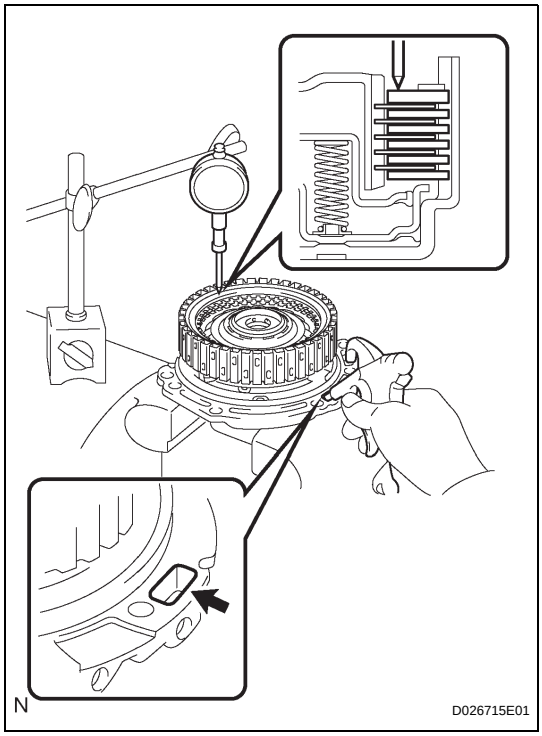

5. INSPECT PACK CLEARANCE OF FORWARD CLUTCH

(a) Using a dial indicator, measure the forward clutch pack clearance while applying and releasing compressed air (392 kgf/cm^2, 4.0 kPa, 57 psi).
Pack clearance:
1.00 to 1.25 mm (0.0394 to 0.4921 in.)
If the piston stroke is less than the minimum, parts may be assembled incorrectly. Check and reassemble the parts again.
If the clearance is not as specified, select another flange.
HINT:
There are 5 different thicknesses of flanges available.
Standard flange thickness

No.	Thickness	No.	Thickness
1	3.00 mm (0.1181 in.)	4	3.45 mm (0.1358 in.)
2	3.15 mm (0.1240 in.)	5	3.60 mm (0.1417 in.)
3	3.30 mm (0.1299 in.)	-	-

6. INSPECT FORWARD MULTIPLE DISC CLUTCH DISC (See page AX-256)

FORWARD CLUTCH

COMPONENTS

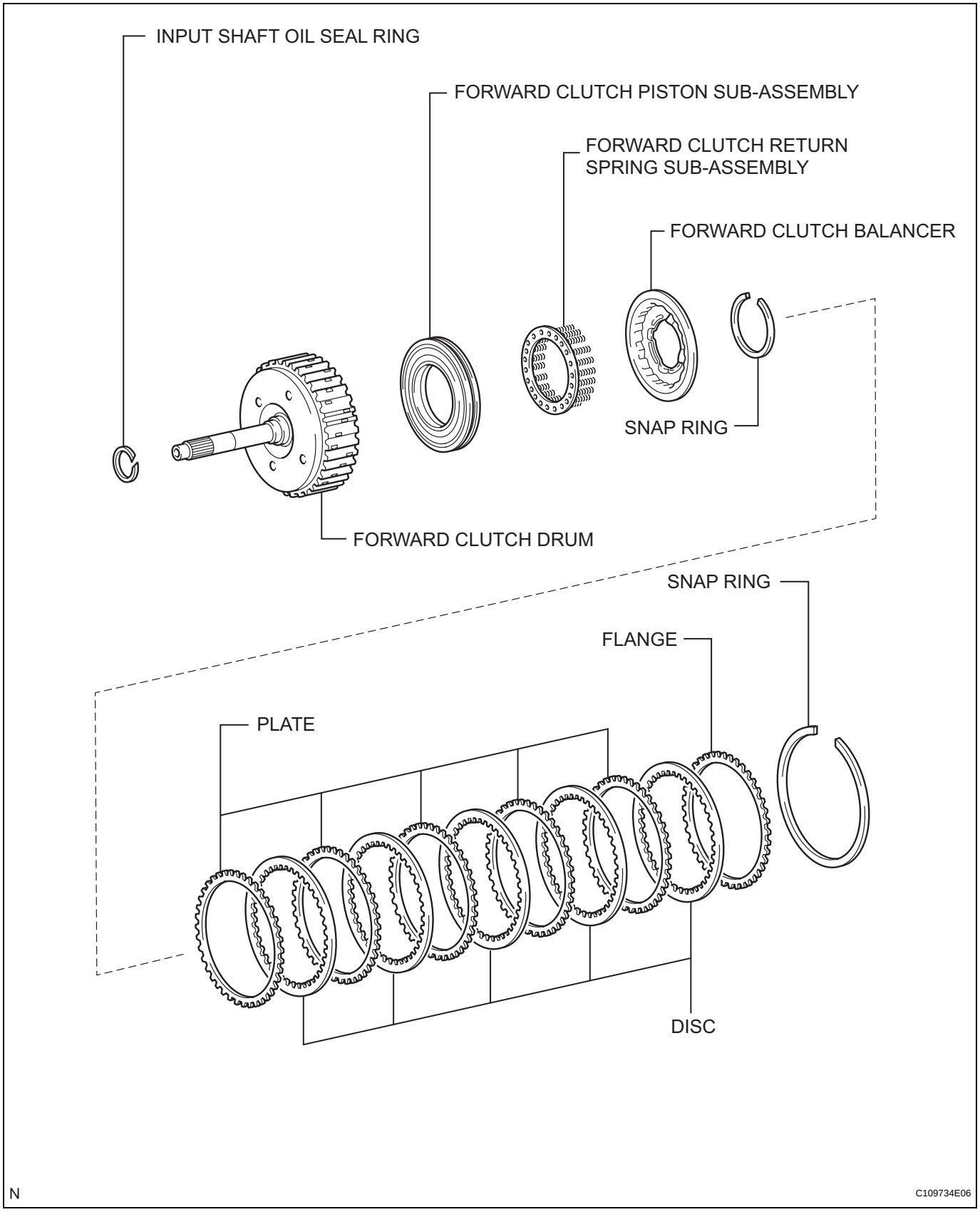

DISASSEMBLY

1. INSPECT PACK CLEARANCE OF FORWARD CLUTCH (See page AX-255)

2. REMOVE FORWARD MULTIPLE DISC CLUTCH DISC

(a) Using a screwdriver, remove the snap ring.

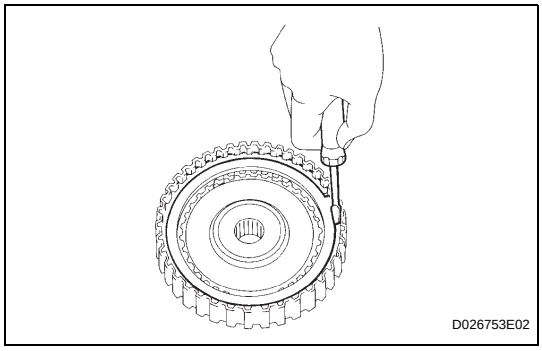

(b) Remove the flange, 5 discs and 5 plates from the forward clutch drum.

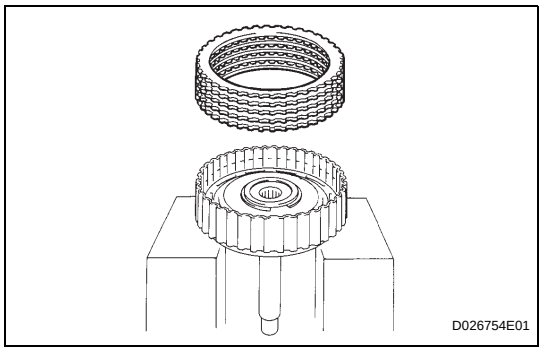

3. REMOVE FORWARD CLUTCH RETURN SPRING SUB-ASSEMBLY

(a) Place SST on the spring retainer and compress the return spring with a press.
SST 09387-00020

(b) Using a snap ring expander, remove the snap ring.
NOTICE:
- **Stop the press when the spring seat is lowered to a position 1 to 2 mm (0.039 to 0.078 in.) from the snap ring groove to prevent the spring seat from being deformed.**
- **Do not expand the snap ring excessively.**

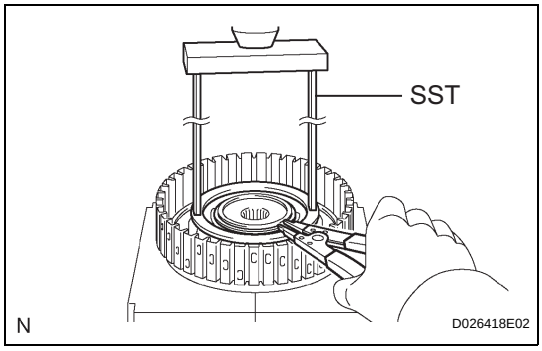

(c) Remove the clutch balancer from the forward clutch drum.

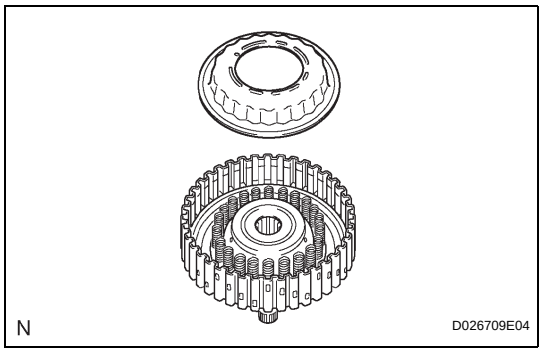

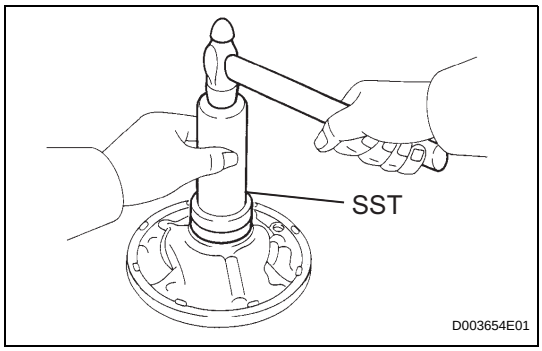

REASSEMBLY

1. INSTALL FRONT OIL PUMP OIL SEAL

(a) Using SST and a hammer, tap in a new oil seal to the oil pump body.
SST 09350-32014 (09351-32140)
HINT:
The seal end should be flat with the outer edge of the oil pump.

(b) Coat the lip of the oil seal with MP grease.

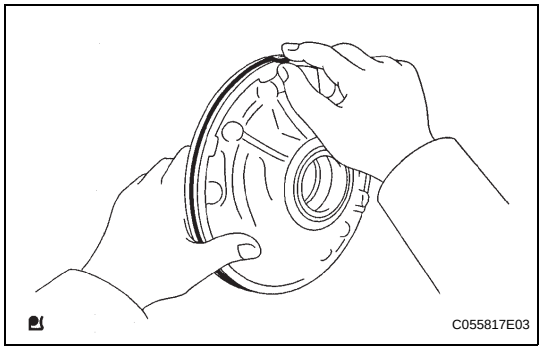

2. INSTALL FRONT OIL PUMP BODY O-RING

(a) Coat a new O-ring with ATF, and install it to the oil pump body.
NOTICE:
- **Make sure that the O-ring is not twisted or pinched.**
- **Apply enough ATF to the O-ring before installation.**

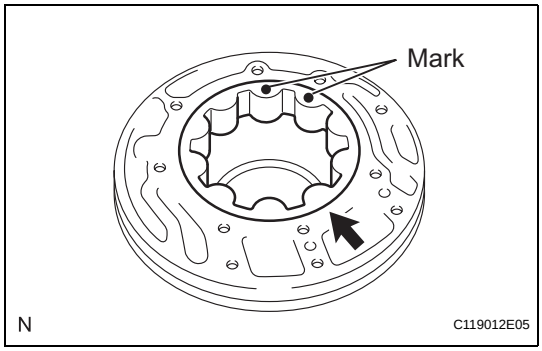

3. INSTALL FRONT OIL PUMP DRIVEN GEAR

(a) Coat the front oil pump driven gear with ATF, and install it to the oil pump body with the marked side facing upward.

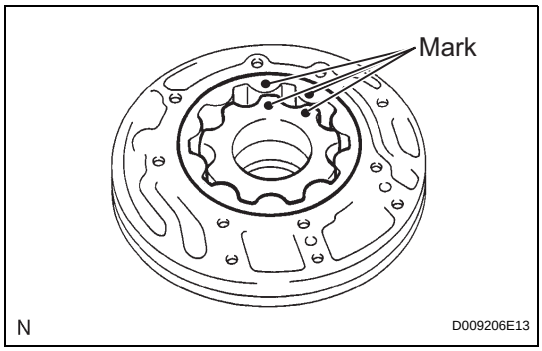

4. INSTALL FRONT OIL PUMP DRIVE GEAR

(a) Coat the front oil pump drive gear with ATF, and install it to the oil pump body with the marked side facing upward.

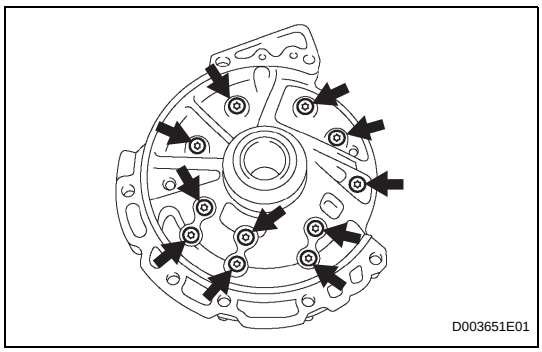

5. INSTALL STATOR SHAFT ASSEMBLY

(a) Set the stator shaft and align it with each bolt hole.

(b) Using a T30 "torx" socket, install the 11 bolts.
Torque: 9.8 N*m (100 kgf*cm, 87 in.*lbf)

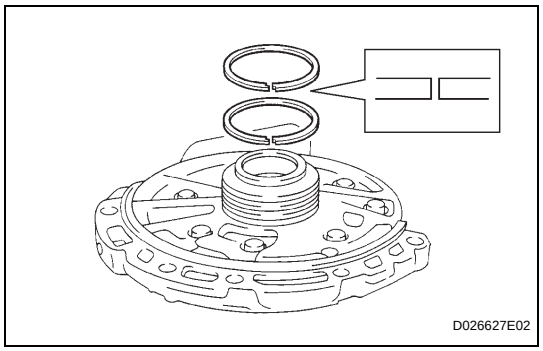

6. INSTALL CLUTCH DRUM OIL SEAL RING

(a) Coat 2 new oil seal rings with ATF.

(b) Install 2 new clutch drum oil seal rings.

NOTICE:

Do not expand the ring ends excessively.

7. INSPECT OIL PUMP ASSEMBLY (See page AX-246)

OIL PUMP

COMPONENTS

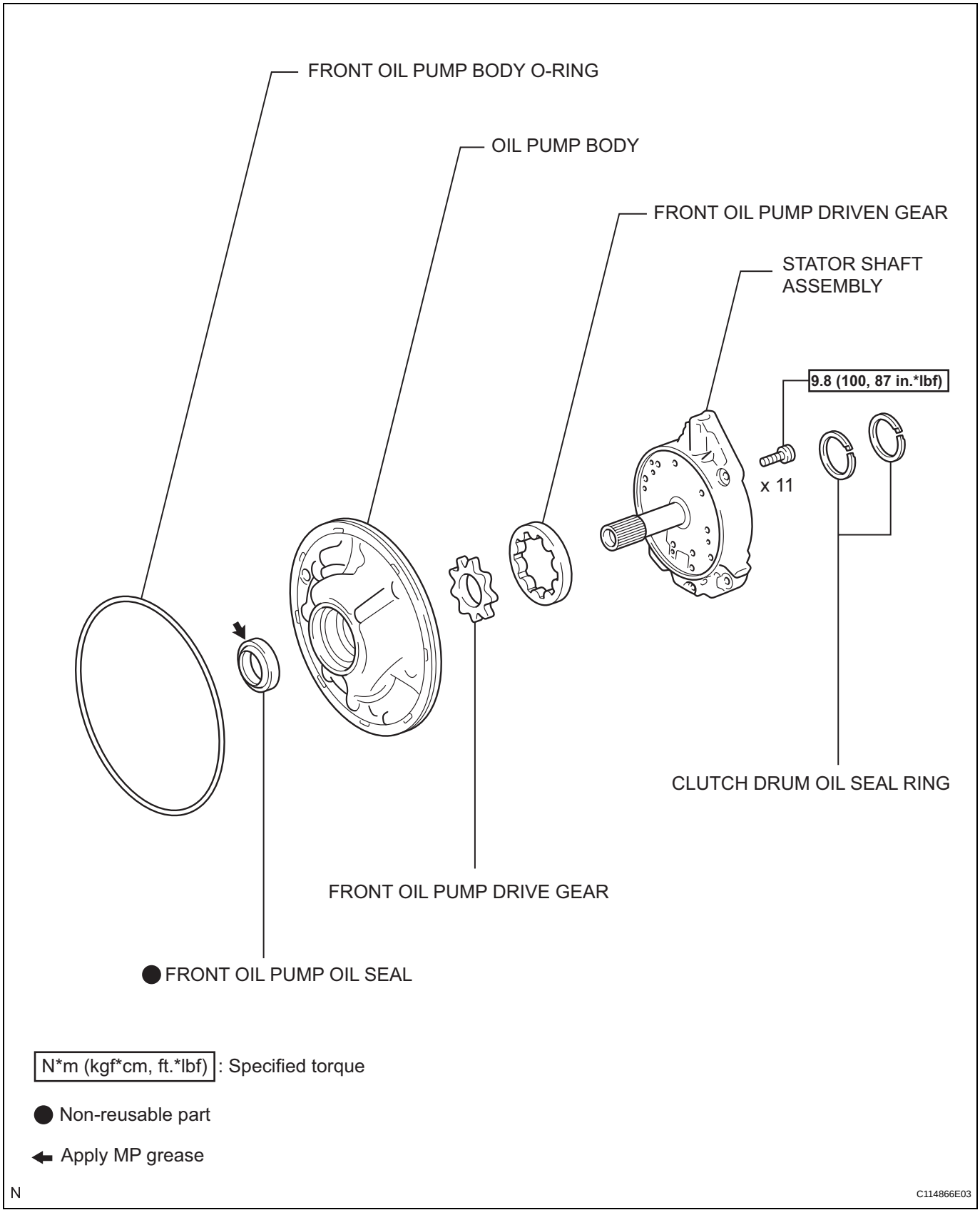

DISASSEMBLY

1. **INSPECT OIL PUMP ASSEMBLY (See page AX-246)**

2. **REMOVE CLUTCH DRUM OIL SEAL RING**
   (a) Remove the 2 clutch drum oil seal rings.

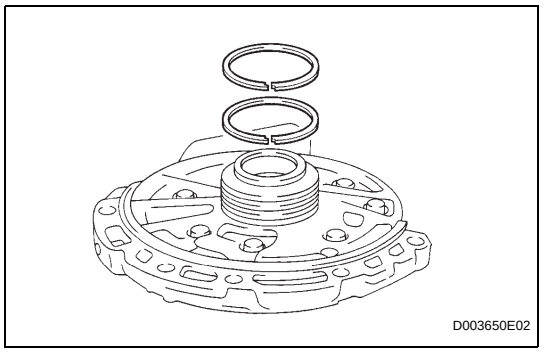

3. **REMOVE STATOR SHAFT ASSEMBLY**
   (a) Using a T30 "torx" socket, remove the 11 bolts and stator shaft.

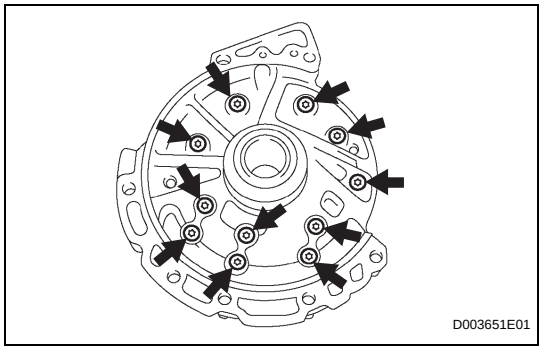

4. **INSPECT CLEARANCE OF OIL PUMP ASSEMBLY (See page AX-246)**

5. **REMOVE FRONT OIL PUMP DRIVE GEAR**

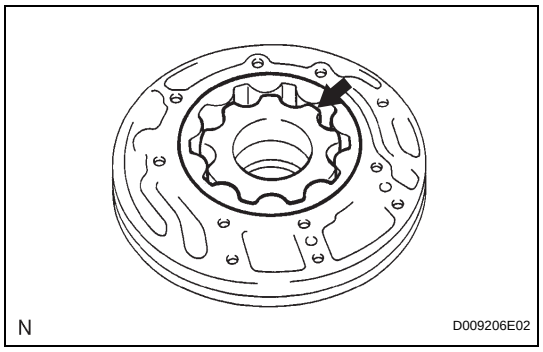

6. **REMOVE FRONT OIL PUMP DRIVEN GEAR**

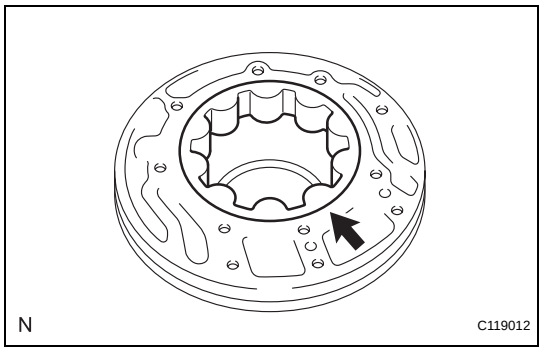

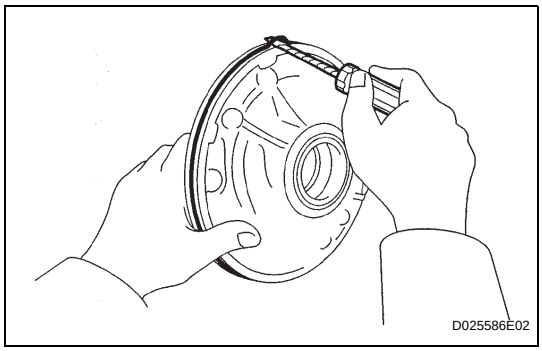

7. REMOVE FRONT OIL PUMP BODY O-RING

(a) Using a screwdriver, pry out the O-ring.
HINT:
Tape the screwdriver tip before use.

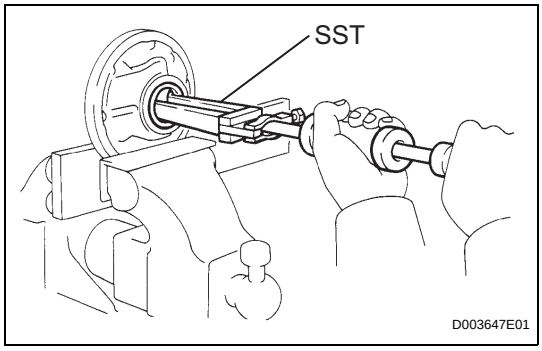

8. REMOVE FRONT OIL PUMP OIL SEAL

(a) Mount the oil pump in a soft jaw vise.
(b) Using SST, remove the oil seal from the oil pump body.
SST 09308-00010

INSPECTION

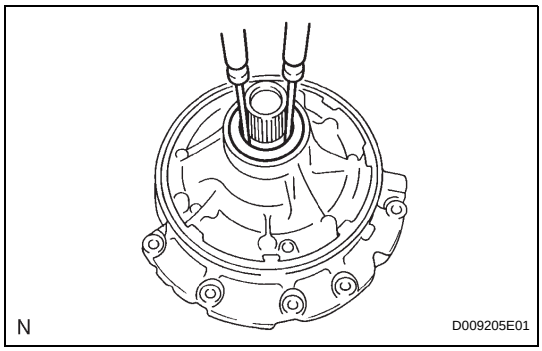

1. INSPECT OIL PUMP ASSEMBLY

(a) Turn the drive gear with 2 screwdrivers and make sure that it rotates smoothly.
NOTICE:
Be careful not to damage the lip of the oil seal.

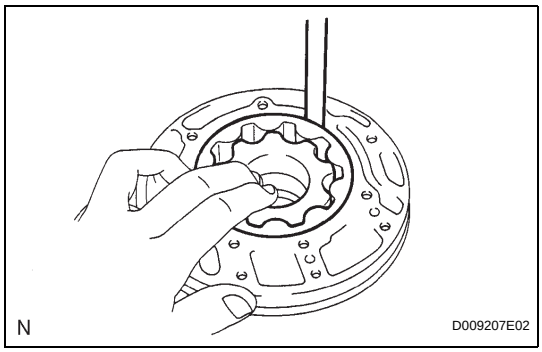

2. INSPECT CLEARANCE OF OIL PUMP ASSEMBLY

(a) Push the driven gear to one side of the body.
(b) Using a feeler gauge, measure the body clearance between the driven gear and oil pump body.
Standard body clearance:
0.10 to 0.17 mm (0.0039 to 0.0067 in.)
Maximum body clearance:
0.17 mm (0.0067 in.)
If the body clearance is greater than the maximum, replace the oil pump body sub-assembly.

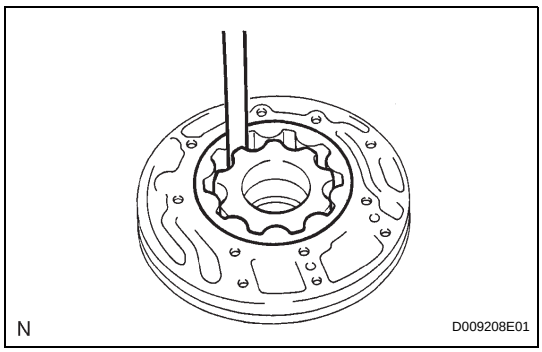

(c) Using a feeler gauge, measure the tip clearance between the driven gear teeth and drive gear teeth.
Standard tip clearance:
0.07 to 0.15 mm (0.0028 to 0.0059 in.)
Maximum tip clearance:
0.15 mm (0.0059 in.)
If the tip clearance is greater than the maximum, replace the oil pump body.

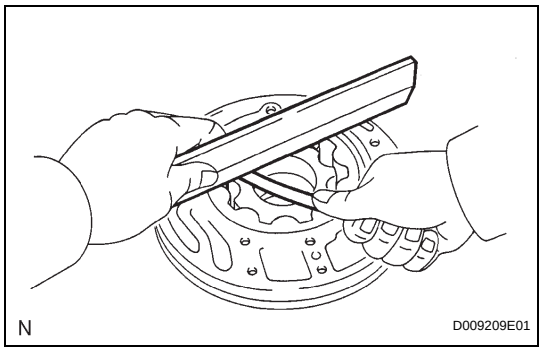

(d) Using a straightedge and feeler gauge, measure the side clearance of both gears.

Standard side clearance:
0.02 to 0.05 mm (0.0008 to 0.0020 in.)
Maximum side clearance:
0.05 mm (0.0020 in.)

Standard drive gear thickness

Mark	Thickness
A	11.690 to 11.699 mm (0.4602 to 0.4606 in.)
B	11.700 to 11.709 mm (0.4606 to 0.4610 in.)
C	11.710 to 11.720 mm (0.4610 to 0.4614 in.)
D	11.721 to 11.730 mm (0.4615 to 0.4618 in.)
E	11.731 to 11.740 mm (0.4619 to 0.4622 in.)

Standard driven gear thickness

Mark	Thickness
A	11.690 to 11.699 mm (0.4602 to 0.4606 in.)
B	11.700 to 11.709 mm (0.4606 to 0.4610 in.)
C	11.710 to 11.720 mm (0.4610 to 0.4614 in.)
D	11.721 to 11.730 mm (0.4615 to 0.4618 in.)
E	11.731 to 11.740 mm (0.4619 to 0.4622 in.)

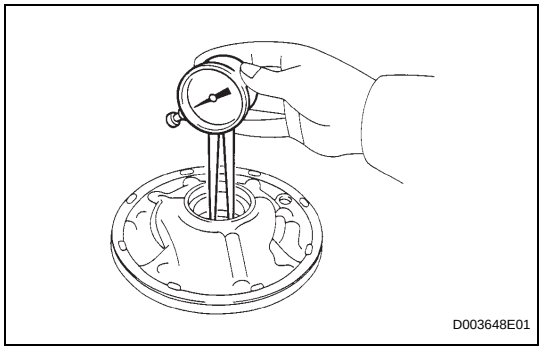

3. INSPECT FRONT OIL PUMP AND GEAR BODY SUB-ASSEMBLY

(a) Using a caliper gauge, measure the inside diameter of the oil pump body bushing.

Standard inside diameter:
38.113 to 38.138 mm (1.5005 to 1.5015 in.)
Maximum inside diameter:
38.188 mm (1.5035 in.)

If the inside diameter is greater than the maximum, replace the oil pump body sub-assembly.

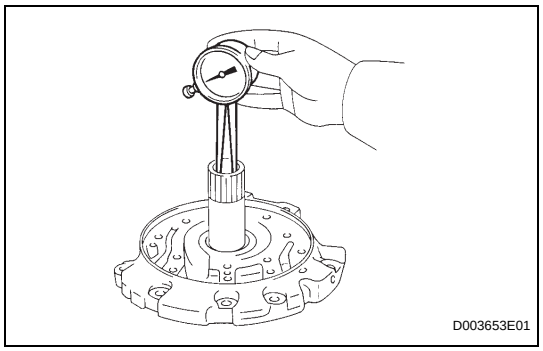

4. INSPECT STATOR SHAFT ASSEMBLY

(a) Using a caliper gauge, measure the inside diameter of the stator shaft.

Standard inside diameter:
21.500 to 21.526 mm (0.8465 to 0.8475 in.)
Maximum inside diameter:
21.57 mm (0.8492 in.)

If the inside diameter is greater than the maximum, replace the stator shaft.

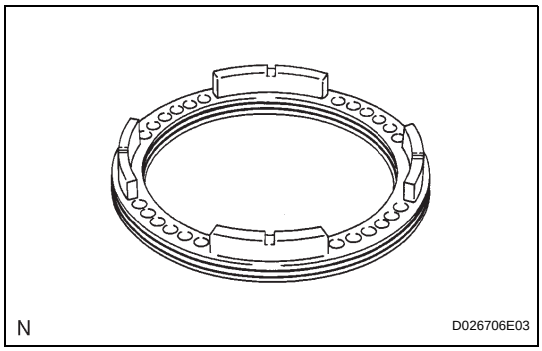

REASSEMBLY

1. INSTALL 2ND BRAKE PISTON O-RING

(a) Coat 2 new O-rings with ATF, and install them in the 2nd brake piston.

NOTICE:

Make sure that the O-ring is not twisted or pinched.

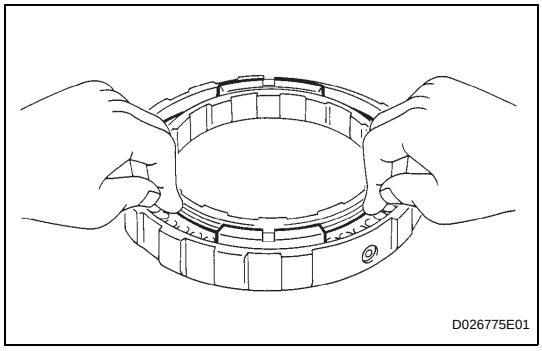

2. INSTALL 2ND BRAKE PISTON

(a) Coat the 2nd brake piston with ATF, and install it to the 2nd brake cylinder.

NOTICE:

Be careful not to damage the O-ring.

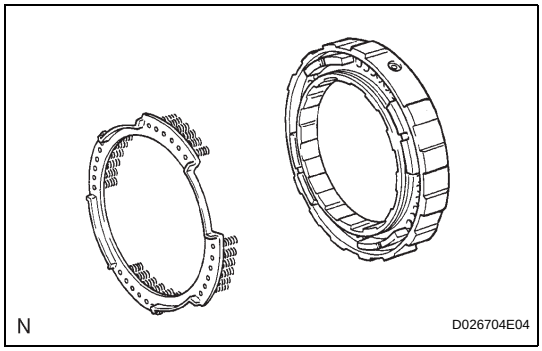

3. INSTALL 2ND BRAKE PISTON RETURN SPRING SUB-ASSEMBLY

(a) Install the 2nd brake piston return spring.

NOTICE:

After installing the spring, check that all of the springs fit in the piston correctly.

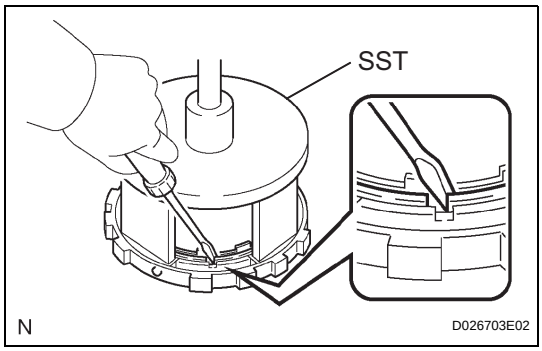

(b) Place SST on the piston return spring, and compress the piston return spring with a press.

SST 09387-00060

(c) Using a screwdriver, install the snap ring.

(d) Be sure that the end gap of the snap ring is not aligned with the spring retainer claw.

NOTICE:

Stop the press when the spring seat is lowered to a position 1 to 2 mm (0.039 to 0.078 in.) from the snap ring groove. This prevents the spring seat from being deformed.

SECOND BRAKE PISTON

COMPONENTS

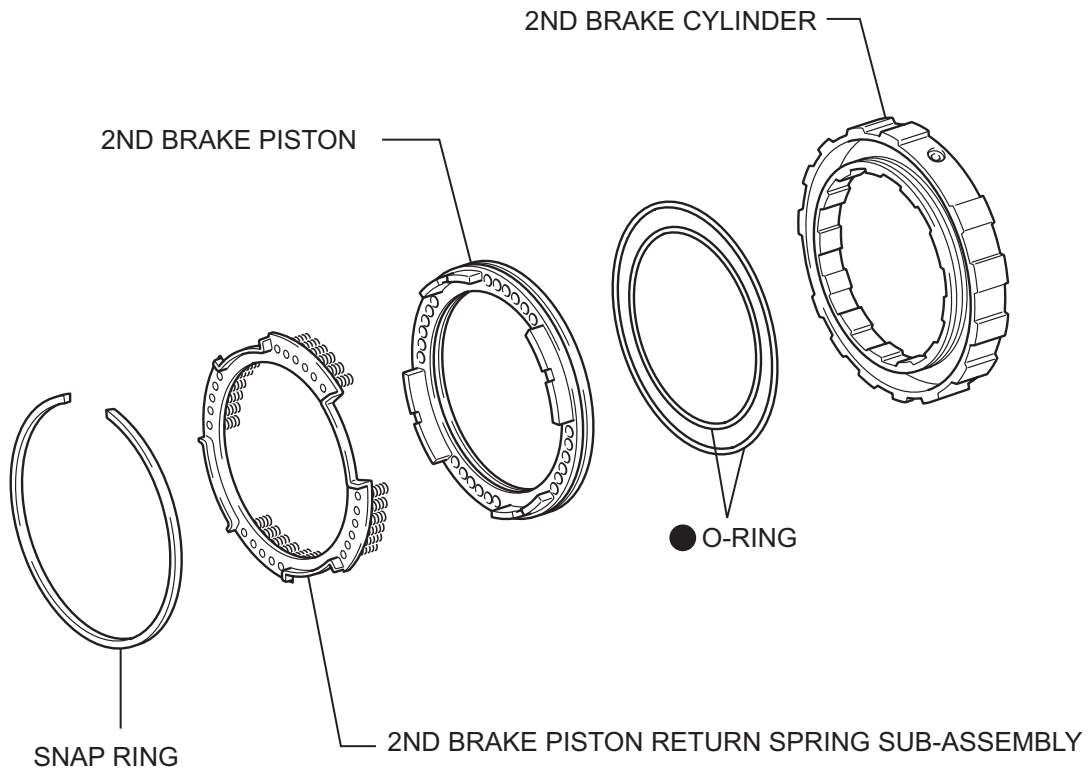

● Non-reusable part

N

C109736E07

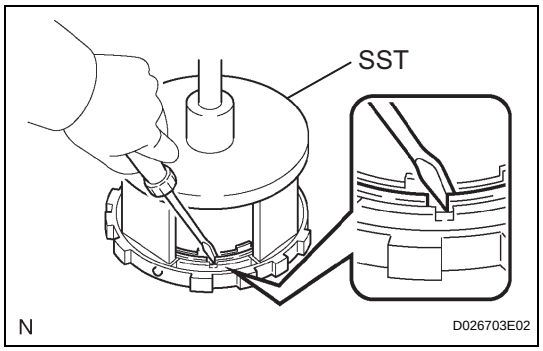

DISASSEMBLY

1. REMOVE 2ND BRAKE PISTON RETURN SPRING SUB-ASSEMBLY

(a) Place SST on the return spring and compress the return spring with a press.
SST 09387-00060

(b) Using a screwdriver, remove the snap ring.

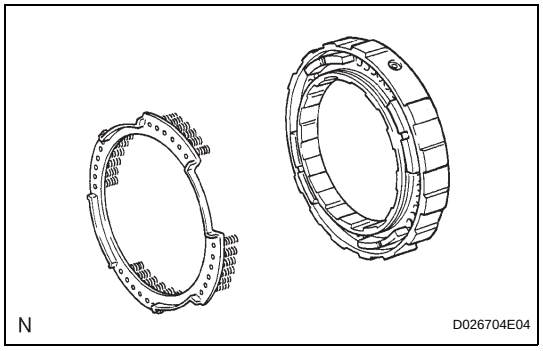

(c) Remove the 2nd brake piston return spring.

2. REMOVE 2ND BRAKE PISTON

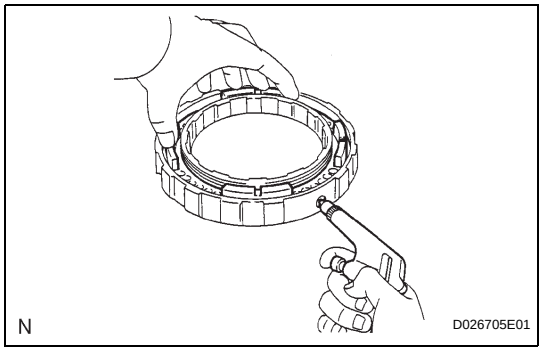

(a) Hold the 2nd brake piston and apply compressed air (392 kPa, 4.0 kgf/cm^2, 57 psi) to the 2nd brake cylinder to remove the 2nd brake piston.
NOTICE:
Hold the piston with a shop rag or a piece of cloth when removing the piston. Failure to do so may result in the piston jumping out from the cylinder.

3. REMOVE 2ND BRAKE PISTON O-RING

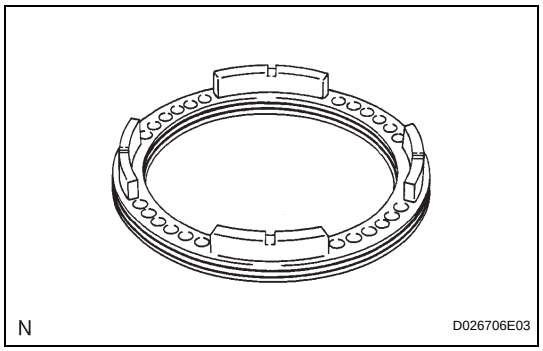

(a) Remove the 2 O-rings from the 2nd brake piston.

INSPECTION

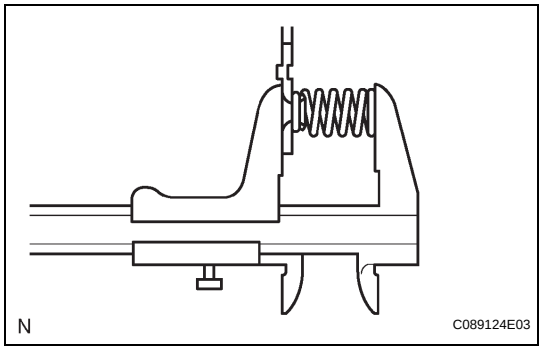

1. INSPECT 2ND BRAKE PISTON RETURN SPRING SUB-ASSEMBLY

(a) Using a vernier caliper, measure the free length of the spring together with the spring seat.
Standard free length:
16.61 mm (0.6539 in.)

ON-VEHICLE INSPECTION

1. CHECK SHIFT LOCK OPERATION

(a) Move the shift lever to P.
(b) Turn the ignition switch OFF.
(c) Check that the shift lever cannot be moved to any position other than P.
(d) Turn the ignition switch ON, depress the brake pedal and check that the shift lever can be moved to other positions.

2. CHECK SHIFT LOCK RELEASE BUTTON OPERATION

(a) When operating the shift lever with the shift lock release button pressed, check that the lever can be moved to any position other than P. If the operation cannot be performed as specified, check the shift lever assembly.

3. REMOVE KEY INTERLOCK OPERATION

(a) Turn the ignition switch ON.
(b) Depress the brake pedal and move the shift lever to any position other than P. Check that the ignition switch cannot be turned OFF.
(c) Move the shift lever to P, turn the ignition switch OFF and check that the key can be removed. If the results are not as specified, inspect the shift lock control unit.

4. CHECK SHIFT LOCK CONTROL UNIT ASSEMBLY

(a) Measure the voltage of the connector.
HINT:
Do not disconnect the shift lock control ECU connector.
Standard voltage

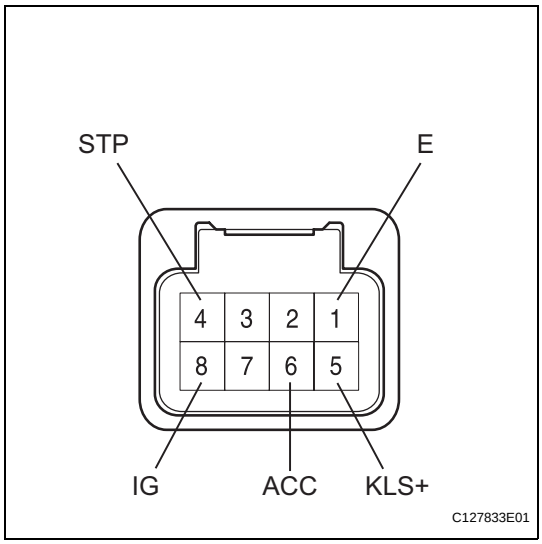

Tester Connection	Condition	Specified Condition
6 (ACC) - 1 (E)	Ignition switch ON	10 to 14 V
6 (ACC) - 1 (E)	Ignition switch ACC	10 to 14 V
6 (ACC) - 1 (E)	Ignition switch OFF	Below 1 V
4 (STP) - 1 (E)	Depress brake pedal	10 to 14 V
4 (STP) - 1 (E)	Release brake pedal	Below 1 V
5 (KLS+) - 1 (E)	Ignition switch ACC and shift lever on P	Below 1 V
5 (KLS+) - 1 (E)	Ignition switch ACC and shift lever not on P	7.5 to 11 V
5 (KLS+) - 1 (E)	Ignition switch ACC and shift lever not on P (after approx. 1 second)	6 to 9 V
8 (IG) - 1 (E)	Ignition switch ON	10 to 14 V
8 (IG) - 1 (E)	Ignition switch OFF	Below 1 V

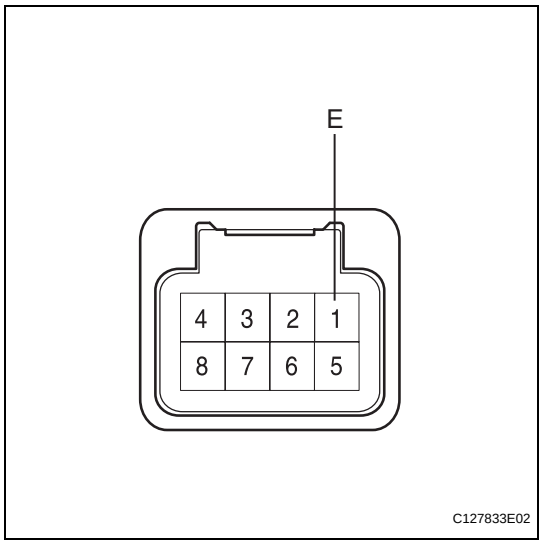

(b) Measure the resistance of the connector.
HINT:
Do not disconnect the shift lock control ECU connector.
Standard resistance

Tester Connection	Measuring Condition	Specified Condition
1 (E) - Body ground	Always	Below 1 Ω

If the result is not as specified, replace the shift lock control ECU.

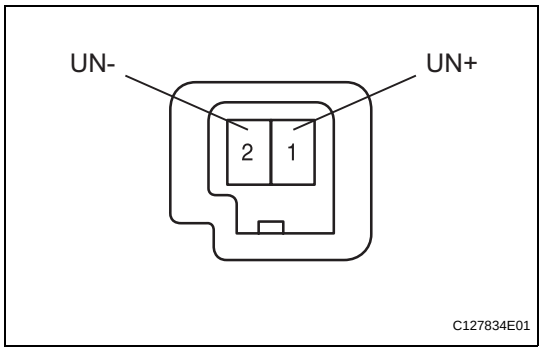

INSPECTION

1. INSPECT KEY INTERLOCK SOLENOID

(a) Disconnect the solenoid connector.

(b) Connect the battery's positive (+) lead to terminal 1 (UN+) and the battery's negative (-) lead to terminal 2 (UN-). Check that the operating noise of the solenoid can be heard.
If the result is not as specified, replace the solenoid.

SHIFT LOCK SYSTEM

PARTS LOCATION

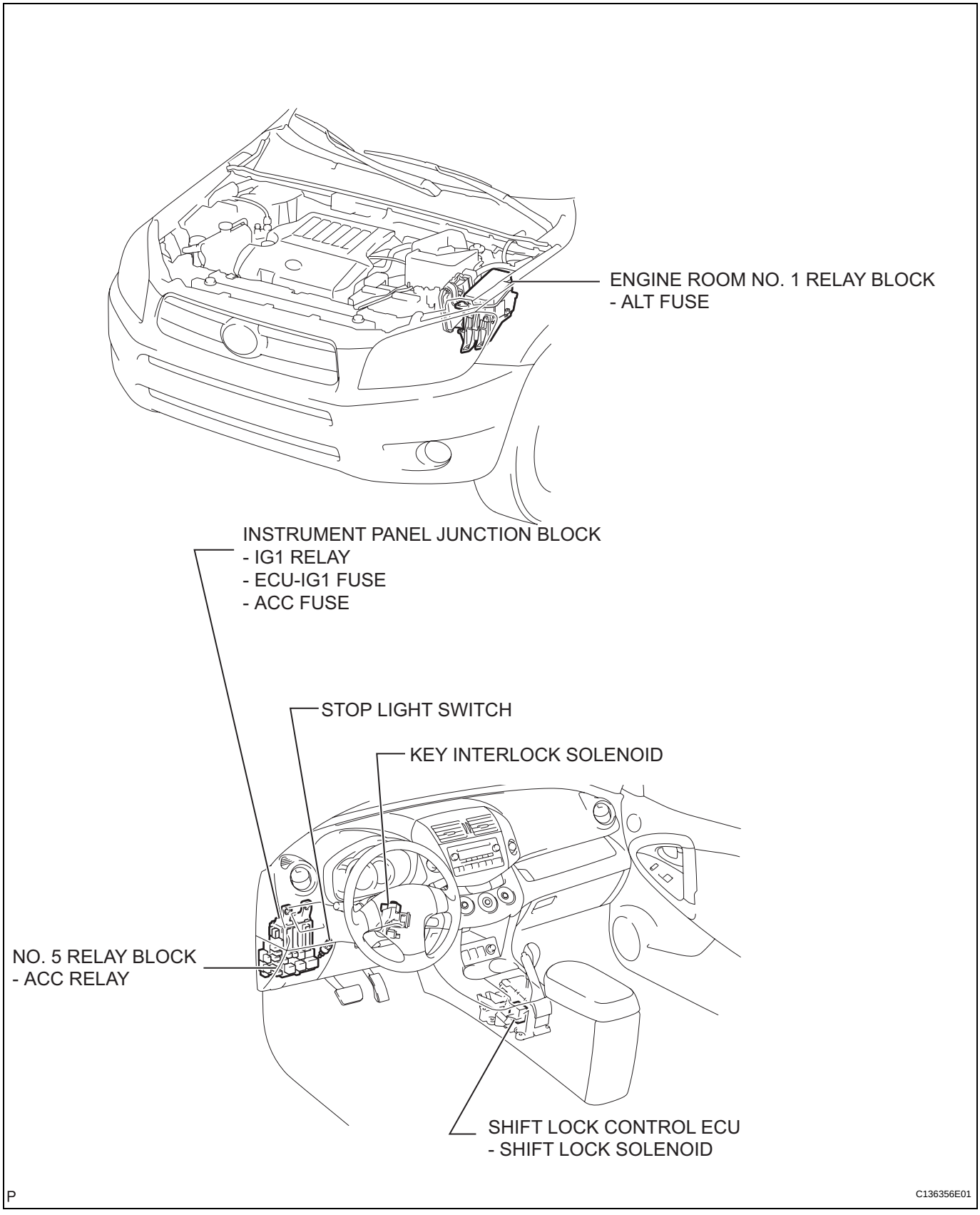

SYSTEM DIAGRAM

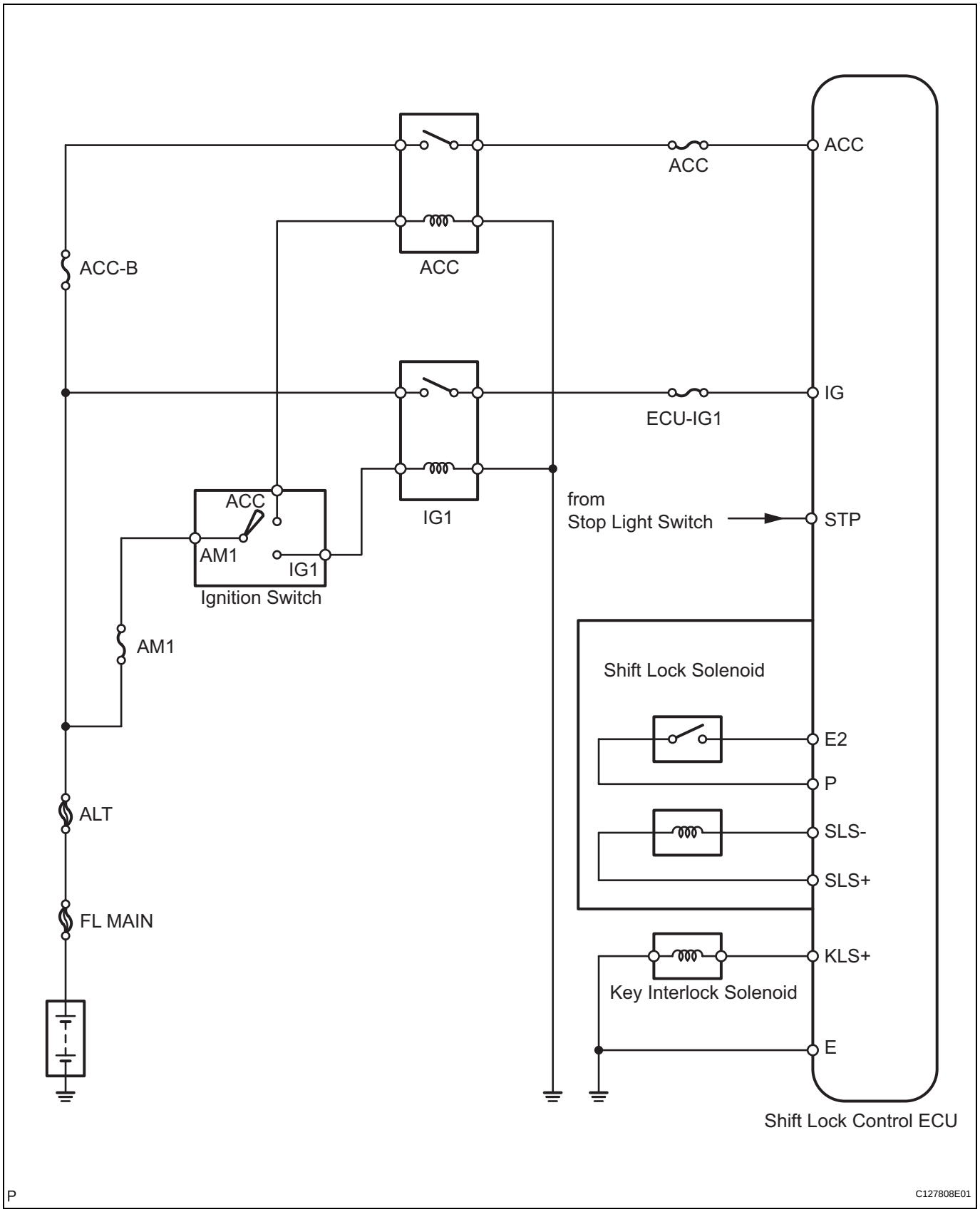

SPEED SENSOR

COMPONENTS

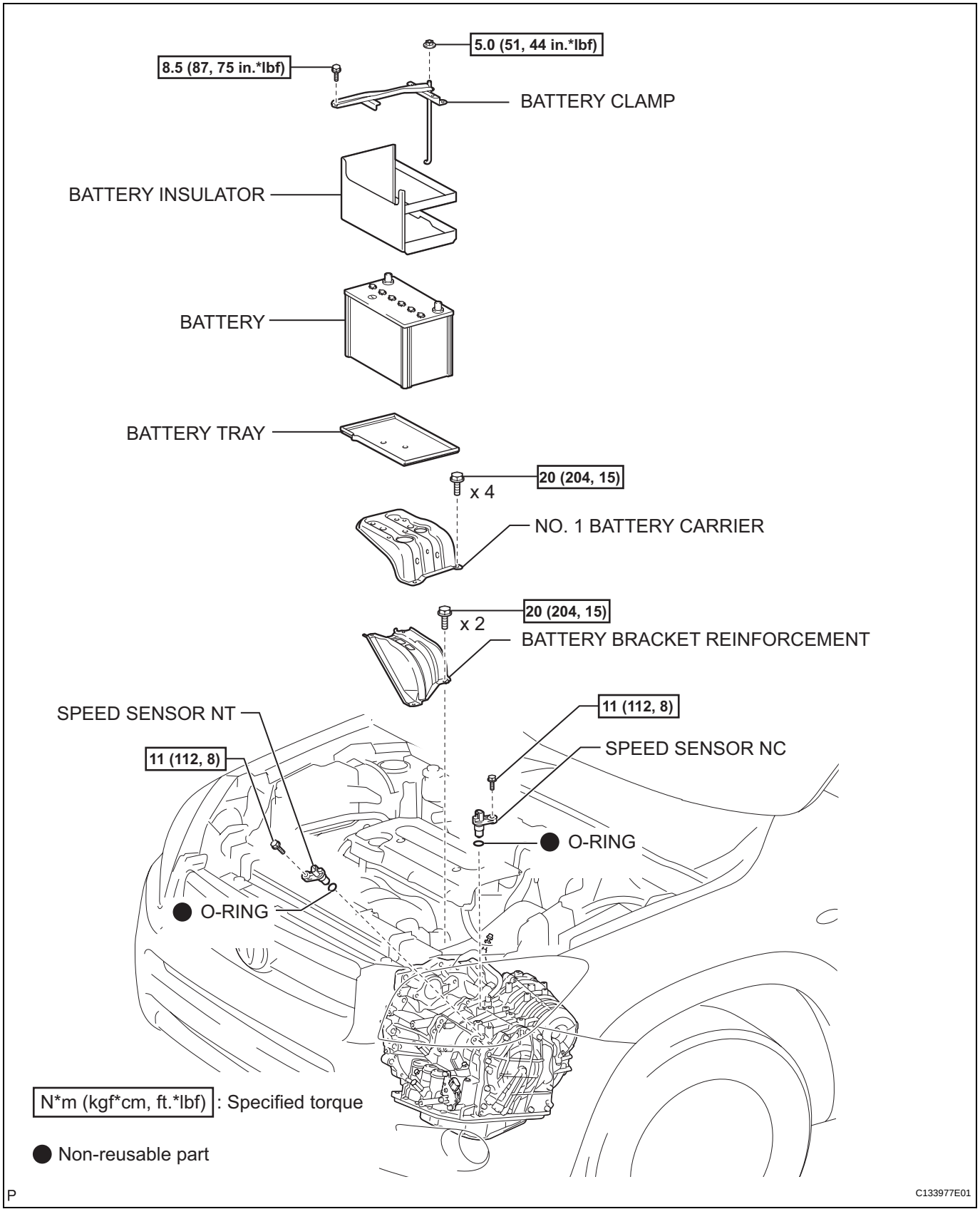

REMOVAL

1. DISCONNECT CABLE FROM NEGATIVE BATTERY TERMINAL

CAUTION:

Wait at least 90 seconds after disconnecting the cable from the negative (-) battery terminal to prevent airbag and seat belt pretensioner activation.

2. REMOVE BATTERY

(a) Loosen the nut and remove the bolt and battery clamp.
(b) Remove the battery and insulator.
(c) Remove the battery tray.
(d) Remove the 4 bolts and battery carrier.
(e) Remove the 2 bolts and battery bracket reinforcement.

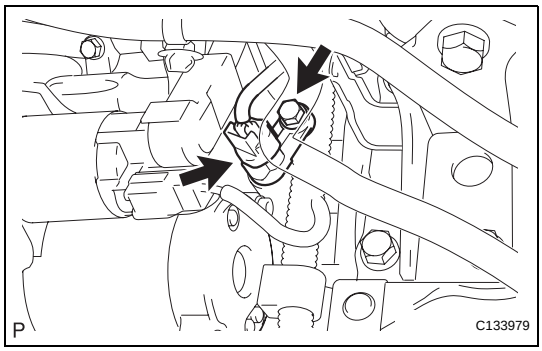

3. REMOVE SPEED SENSOR NC

(a) Disconnect the sensor connector.
(b) Remove the bolt and sensor.
(c) Remove the O-ring from the sensor.

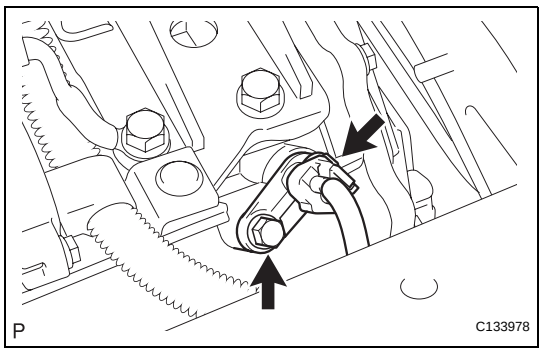

4. REMOVE SPEED SENSOR NT

(a) Disconnect the sensor connector.
(b) Remove the bolt and sensor.
(c) Remove the O-ring from the sensor.

INSPECTION

1. INSPECT SPEED SENSOR NT

Measure the resistance of the sensor.

Standard resistance

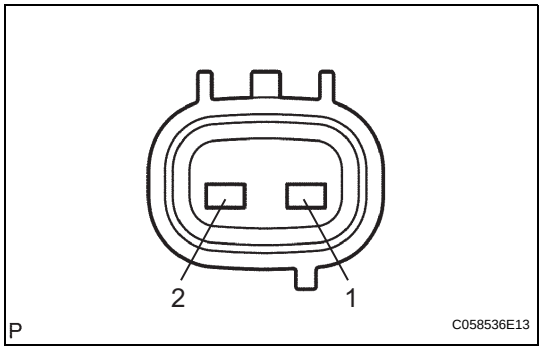

Tester Connection	Condition	Specified Condition
1 - 2	20°C (68°F)	560 to 680 Ω

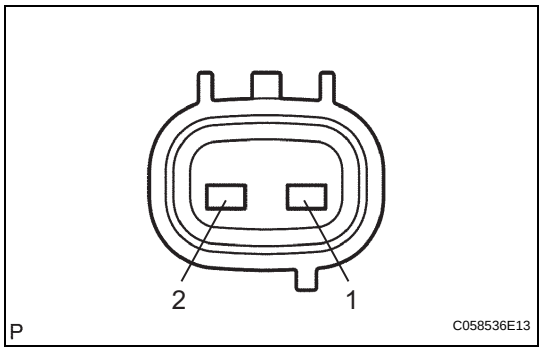

2. INSPECT SPEED SENSOR NC

Measure the resistance of the sensor.

Standard resistance

Tester Connection	Condition	Specified Condition
1 - 2	20°C (68°F)	560 to 680 Ω

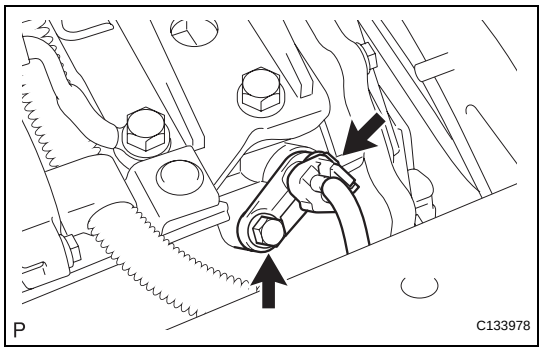

INSTALLATION

1. INSTALL SPEED SENSOR NT

(a) Coat a new O-ring with ATF.
(b) Install the O-ring to the sensor.
(c) Install the sensor with the bolt.
Torque: 11 N*m (112 kgf*cm, 8 ft.*lbf)
(d) Connect the sensor connector.

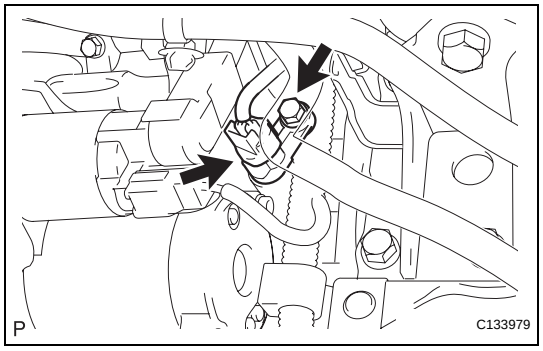

2. INSTALL SPEED SENSOR NC

(a) Coat a new O-ring with ATF.
(b) Install the O-ring to the sensor.
(c) Install the sensor with the bolt.
Torque: 11 N*m (112 kgf*cm, 8 ft.*lbf)
(d) Connect the sensor connector.

3. INSTALL BATTERY

(a) Install the battery bracket reinforcement with the 2 bolts.
Torque: 20 N*m (204 kgf*cm, 15 ft.*lbf)
(b) Install the battery carrier with the 4 bolts.
Torque: 20 N*m (204 kgf*cm, 15 ft.*lbf)
(c) Install the battery tray.
(d) Install the battery and insulator with the battery clamp.
Torque: 8.5 N*m (87 kgf*cm, 75 in.*lbf) for bolt
5.0 N*m (51 kgf*cm, 44 in.*lbf) for nut

4. CONNECT CABLE TO NEGATIVE BATTERY TERMINAL

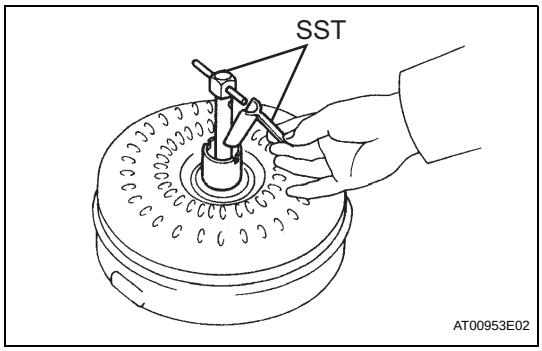

TORQUE CONVERTER AND DRIVE PLATE

INSPECTION

1. INSPECT TORQUE CONVERTER CLUTCH ASSEMBLY

(a) Inspect the one-way clutch.

(1) Install SST to the inner race of the one-way clutch.
SST 09350-32014 (09351-32010)

(2) Set SST so that it fits in the notch of the converter hub and in the outer race of the one-way clutch.
SST 09350-32014 (09351-32020)

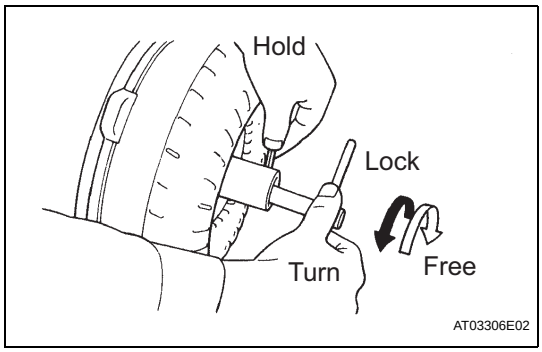

(3) With the torque converter standing on its side, check that the clutch locks when SST is turned counterclockwise and rotates freely and smoothly when turned clockwise. If the results are not as specified, clean the converter and recheck the one-way clutch. If the results still are not as specified, replace the converter.

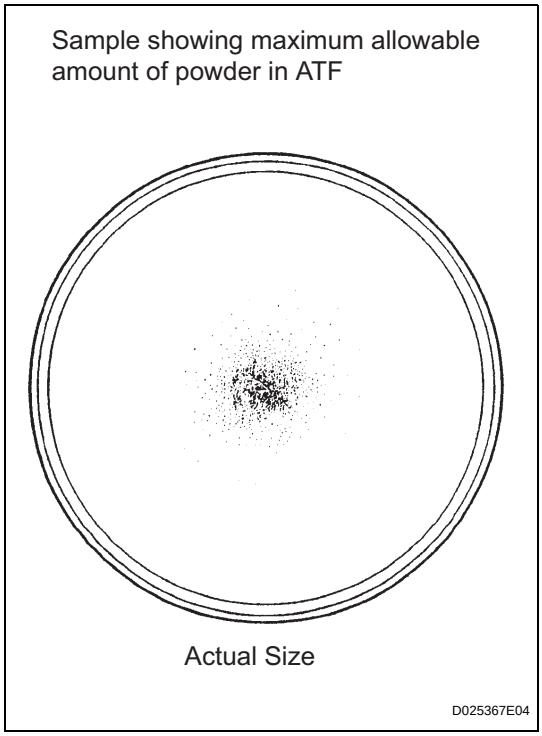

(b) Determine the condition of the torque converter clutch.

(1) Check that the following conditions are met:
- During the stall test or when the shift lever is on N, metallic sounds are not emitted from the torque converter clutch.
- The one-way clutch turns in one direction and locks in the other direction.
- The amount of powder in the ATF is not greater than the sample shown in the illustration.

If the results are not as specified, replace the torque converter clutch assembly.

HINT:
The sample illustration shows approximately 0.25 liters (0.26 US qts, 0.22 Imp. qts) of the ATF taken from a removed torque converter clutch.

(c) Replace the ATF in the torque converter clutch.

(1) If the ATF is discolored and/or has a foul odor, stir the ATF in the torque converter clutch thoroughly and drain the ATF with the torque converter facing upward.

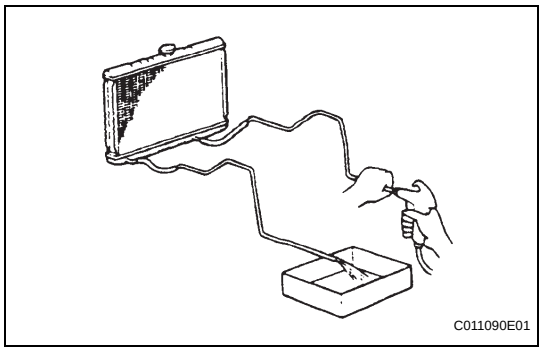

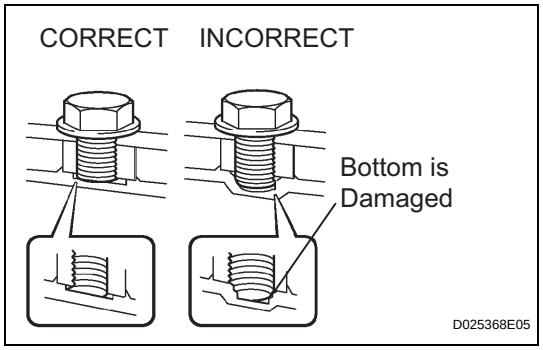

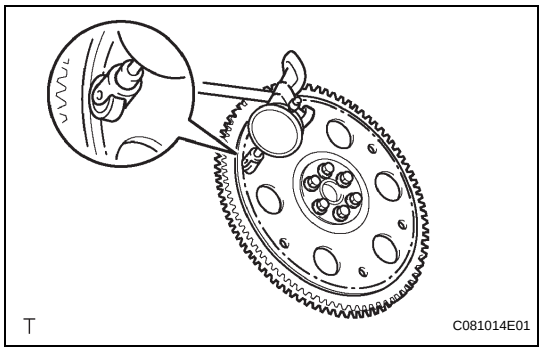

(d) Clean and check the oil cooler and oil pipe line.
  (1) If the torque converter clutch is inspected or the ATF is replaced, clean the oil cooler and oil pipe line.
    • Apply compressed air of 196 kPa (2 kgf/cm^2, 28 psi) into the inlet hose.
    • If a large amount of powder is found in the ATF, add new ATF using a bucket pump and clean the oil cooler and oil pipe line again.
  (2) If the ATF is cloudy, inspect the oil cooler (radiator).

(e) Prevent deformation of the torque converter clutch and damage to the oil pump gear.
  (1) When any marks due to interference are found on the end of the bolt for the torque converter clutch and on the bottom of the bolt hole, replace the bolt and torque converter clutch.
  (2) All of the bolts should be the same length.
  (3) Make sure no spring washers are missing.

2. INSPECT DRIVE PLATE AND RING GEAR SUB-ASSEMBLY

(a) Set up a dial indicator and measure the drive plate runout.
Maximum runout:
0.20 mm (0.0079 in.)
If the runout is greater than the maximum or if the ring gear is damaged, replace the drive plate. If installing a new drive plate, be careful of the orientation of the spacers and tighten the bolts.
Torque: 98 N*m (999 kgf*cm, 72 ft.*lbf)

(b) Check the ring gear for any damage.
If the ring gear is damaged, replace the drive plate.

TRANSMISSION CONTROL CABLE ASSEMBLY

REPLACEMENT

1. **REMOVE REAR CONSOLE BOX SUB-ASSEMBLY**
   (a) Remove the console box (see page IP-20).

2. **DISCONNECT CABLE FROM NEGATIVE BATTERY TERMINAL**
   CAUTION:
   Wait at least 90 seconds after disconnecting the cable from the negative (-) battery terminal to prevent airbag and seat belt pretensioner activation.

3. **REMOVE BATTERY**
   (a) Loosen the nut and remove the bolt and battery clamp.
   (b) Remove the battery and insulator.
   (c) Remove the battery tray.
   (d) Remove the 4 bolts and battery carrier.
   (e) Remove the 2 bolts and battery bracket reinforcement.

4. **REMOVE AIR CLEANER ASSEMBLY**
   (a) Disconnect the mass air flow meter connector.
   (b) Remove the 2 clamps of the engine wire.

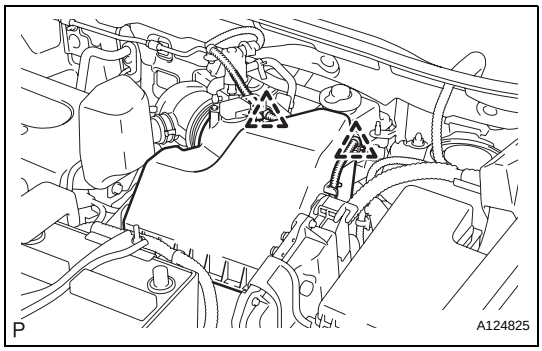

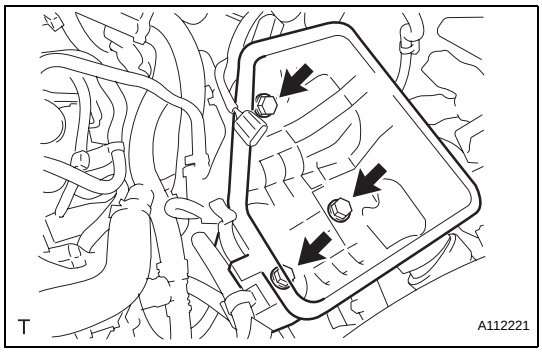

   (c) Remove the 3 bolts from the air cleaner case.
   (d) Disconnect the air cleaner case from the No. 1 air cleaner inlet.

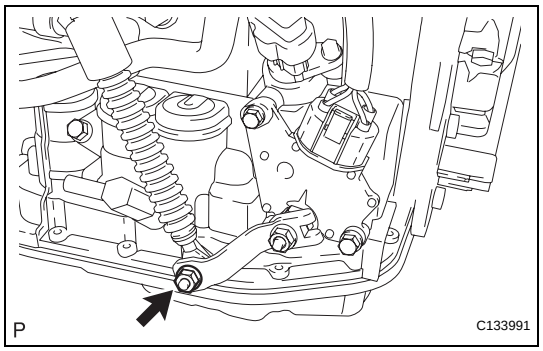

5. REMOVE TRANSAXLE CONTROL CABLE ASSEMBLY

(a) Remove the nut and disconnect the control cable from the control shaft lever.

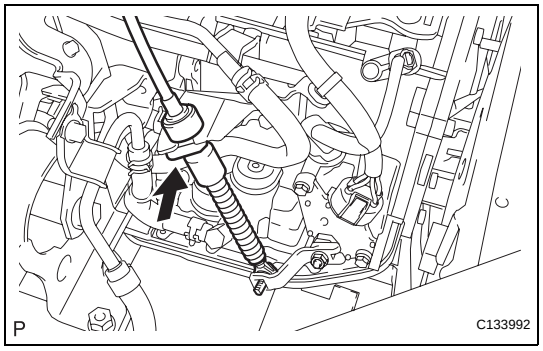

(b) Remove the clip and disconnect the control cable from the control cable bracket.

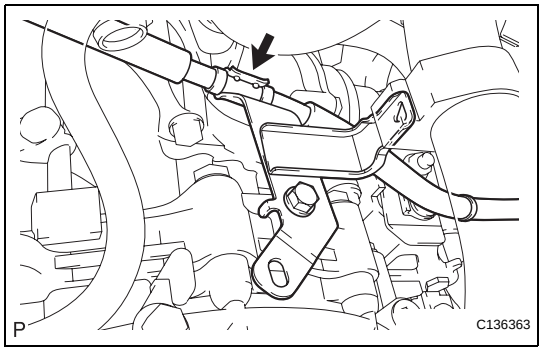

(c) Disconnect the control cable from the control cable support.

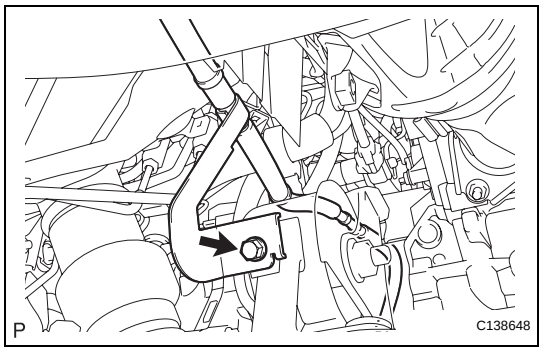

(d) Remove the bolt and disconnect the clamp of the control cable.

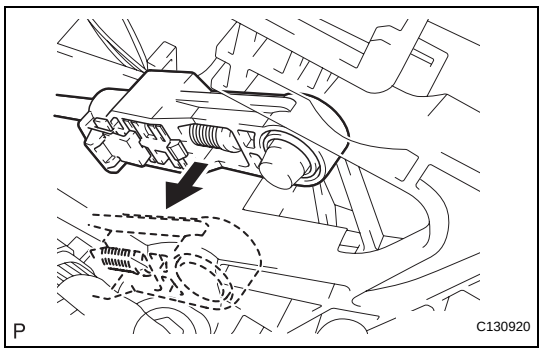

(e) Disconnect the control cable from the shift lever.

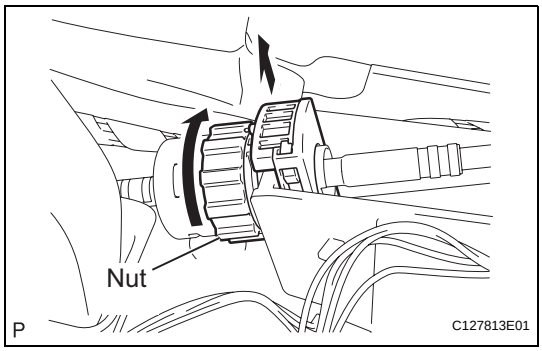

(f) Turn the nut and disconnect the control cable from the shift lever retainer.

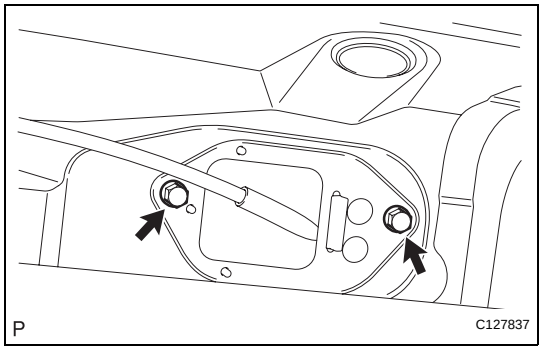

(g) Remove the 2 bolts and control cable.

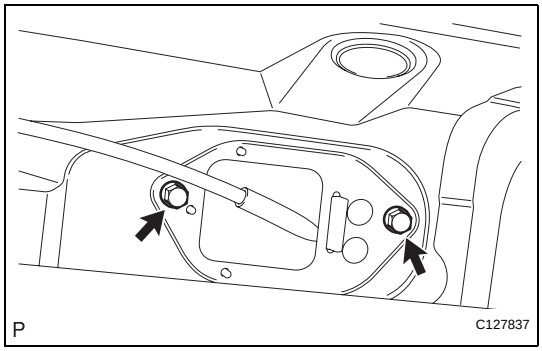

6. INSTALL TRANSAXLE CONTROL CABLE ASSEMBLY

(a) Install the control cable with the 2 bolts.
Torque: 5.0 N*m (51 kgf*cm, 44 in.*lbf)

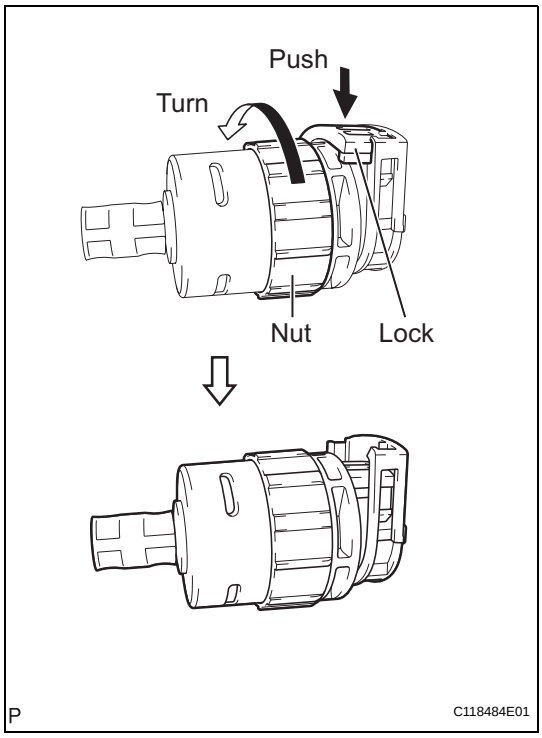

(b) Turn the nut of the control cable and push in the lock.

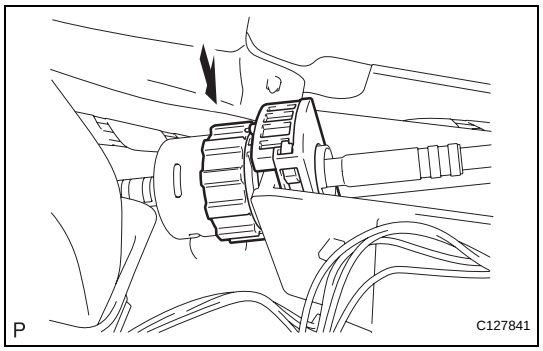

(c) Install the control cable onto the shift lever retainer.

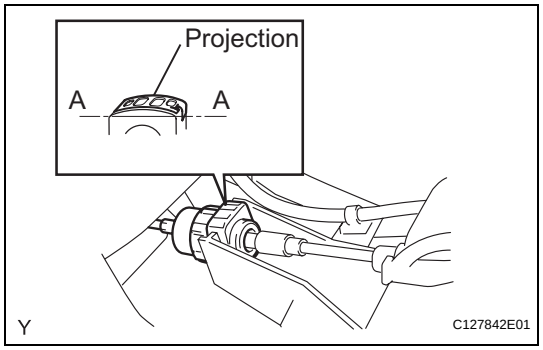

NOTICE:
- **Install the cable with the protruding portion of the cable outer facing upward.**
- **After installing, check that the lock of the cable outer is protruding beyond portion A-A, as shown in the illustration.**

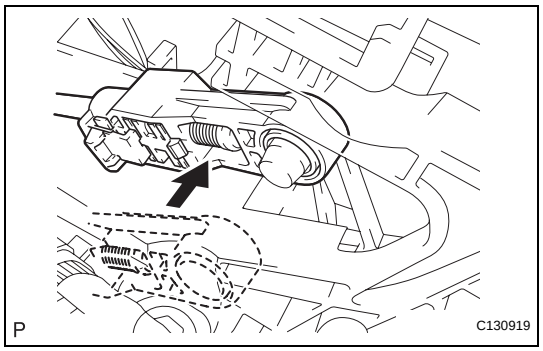

(d) Connect the control cable to the shift lever.
NOTICE:
Connect the control cable so that the adjusting mechanism lock of the control cable is installed on the driver side of the vehicle.

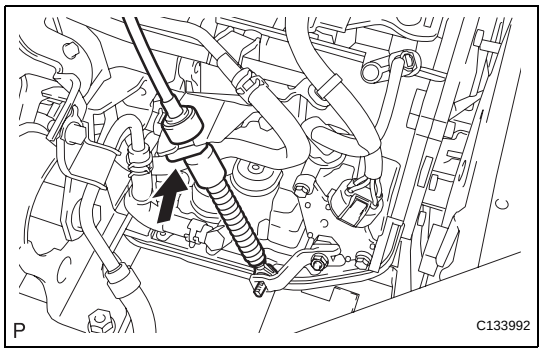

(e) Fix the control cable onto the control cable bracket with the clip.

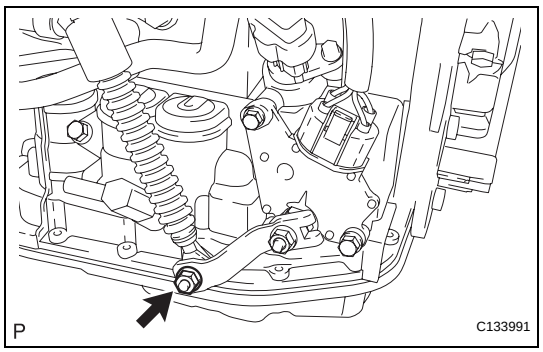

(f) Connect the control cable onto the control shaft lever with the nut.
Torque: 13 N*m (133 kgf*cm, 10 ft.*lbf)

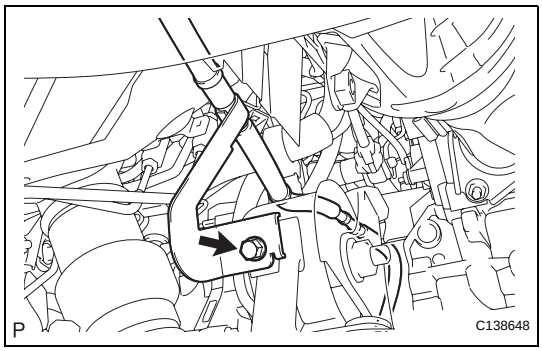

(g) Connect the clamp of the control cable with the bolt.
Torque: 12 N*m (122 kgf*cm, 9 ft.*lbf)

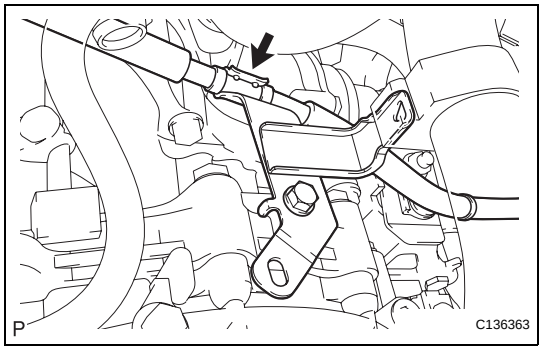

(h) Connect the control cable to the cable support.

7. INSTALL AIR CLEANER ASSEMBLY

(a) Connect the air cleaner case to the No. 1 air cleaner inlet.

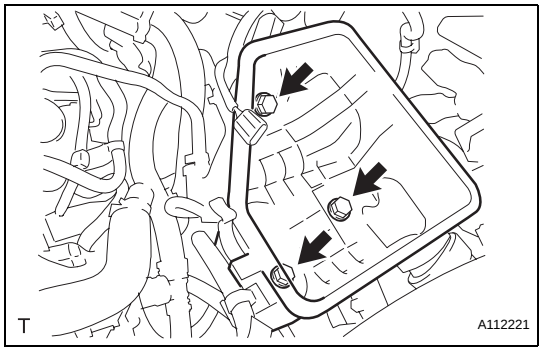

(b) Install the air cleaner case with the 3 bolts.
Torque: 5.0 N*m (51 kgf*cm, 44 in.*lbf)

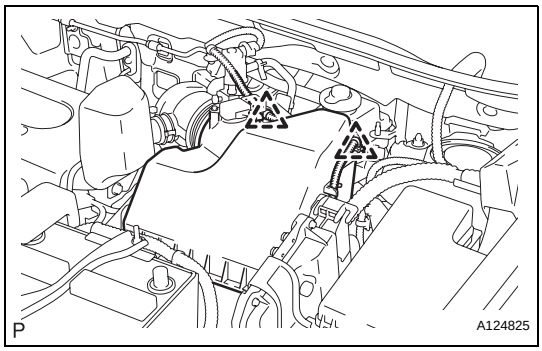

(c) Connect the 2 clamps of the engine wire.
(d) Connect the mass air flow meter connector.

8. INSTALL BATTERY

(a) Install the battery bracket reinforcement with the 2 bolts.
Torque: 20 N*m (204 kgf*cm, 15 ft.*lbf)
(b) Install the battery carrier with the 4 bolts.
Torque: 20 N*m (204 kgf*cm, 15 ft.*lbf)
(c) Install the battery tray.
(d) Connect the 2 clamps of the engine wire.
(e) Install the battery and insulator with the battery clamp.
Torque: 8.5 N*m (87 kgf*cm, 75 in.*lbf) for bolt
5.0 N*m (51 kgf*cm, 44 in.*lbf) for nut

9. CONNECT CABLE TO NEGATIVE BATTERY TERMINAL

10. INSPECT SHIFT LEVER POSITION

(a) When shifting the lever from P to the R position with the ignition switch ON and the brake pedal depressed, make sure that the shift lever moves smoothly and moves correctly into position.

(b) Start the engine and make sure that the vehicle moves forward when shifting the lever from N to the D position and moves rearward when shifting the lever to the R position.
If the operation cannot be performed as specified, inspect the park/neutral position switch and check the shift lever installation condition.

11. ADJUST SHIFT LEVER POSITION (See page AX-164)

12. INSTALL REAR CONSOLE BOX SUB-ASSEMBLY

(a) Install the rear console box (see page IP-26).

TRANSMISSION OIL COOLER

COMPONENTS

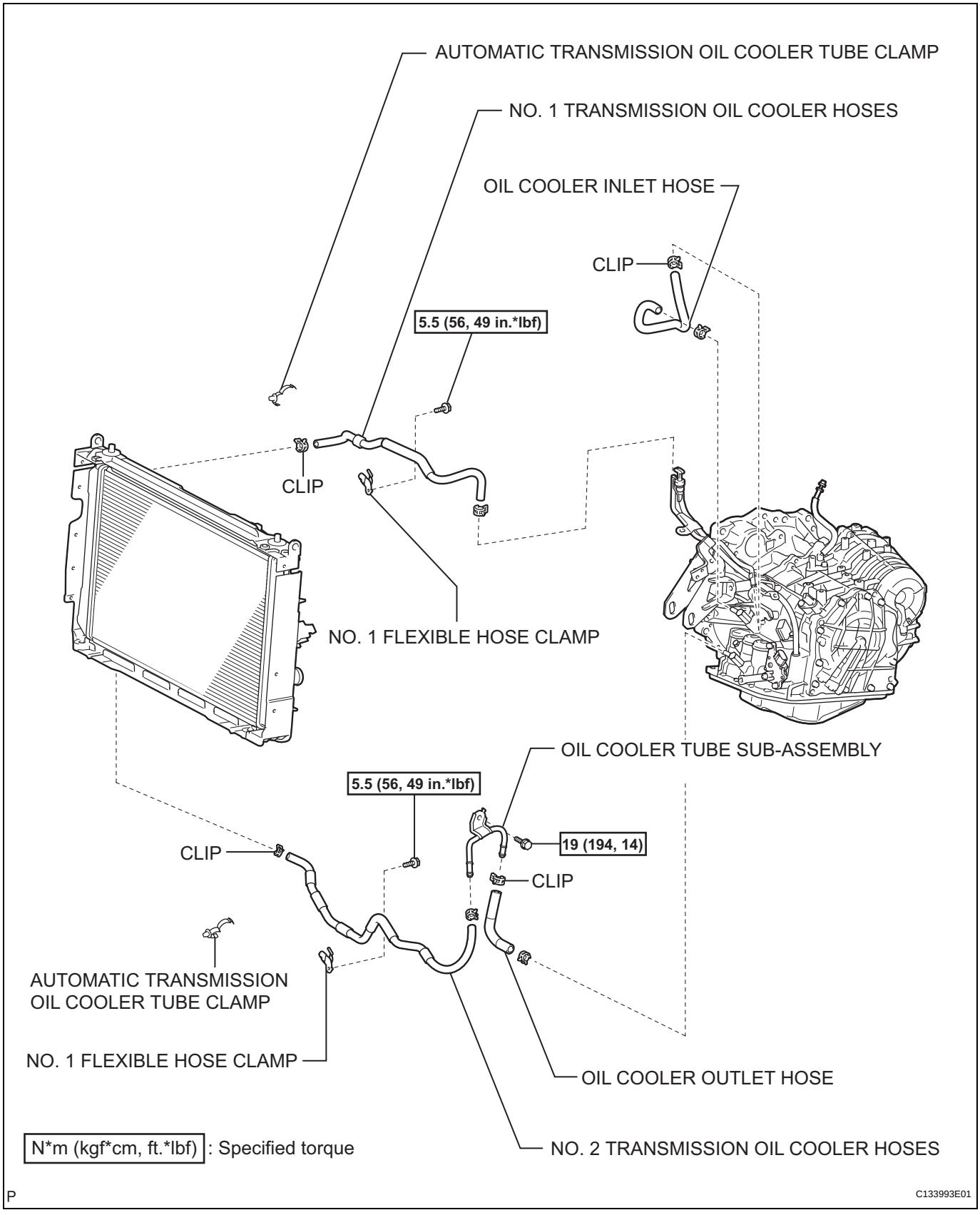

REMOVAL

1. DISCONNECT NO. 1 AND NO. 2 TRANSMISSION OIL COOLER HOSES

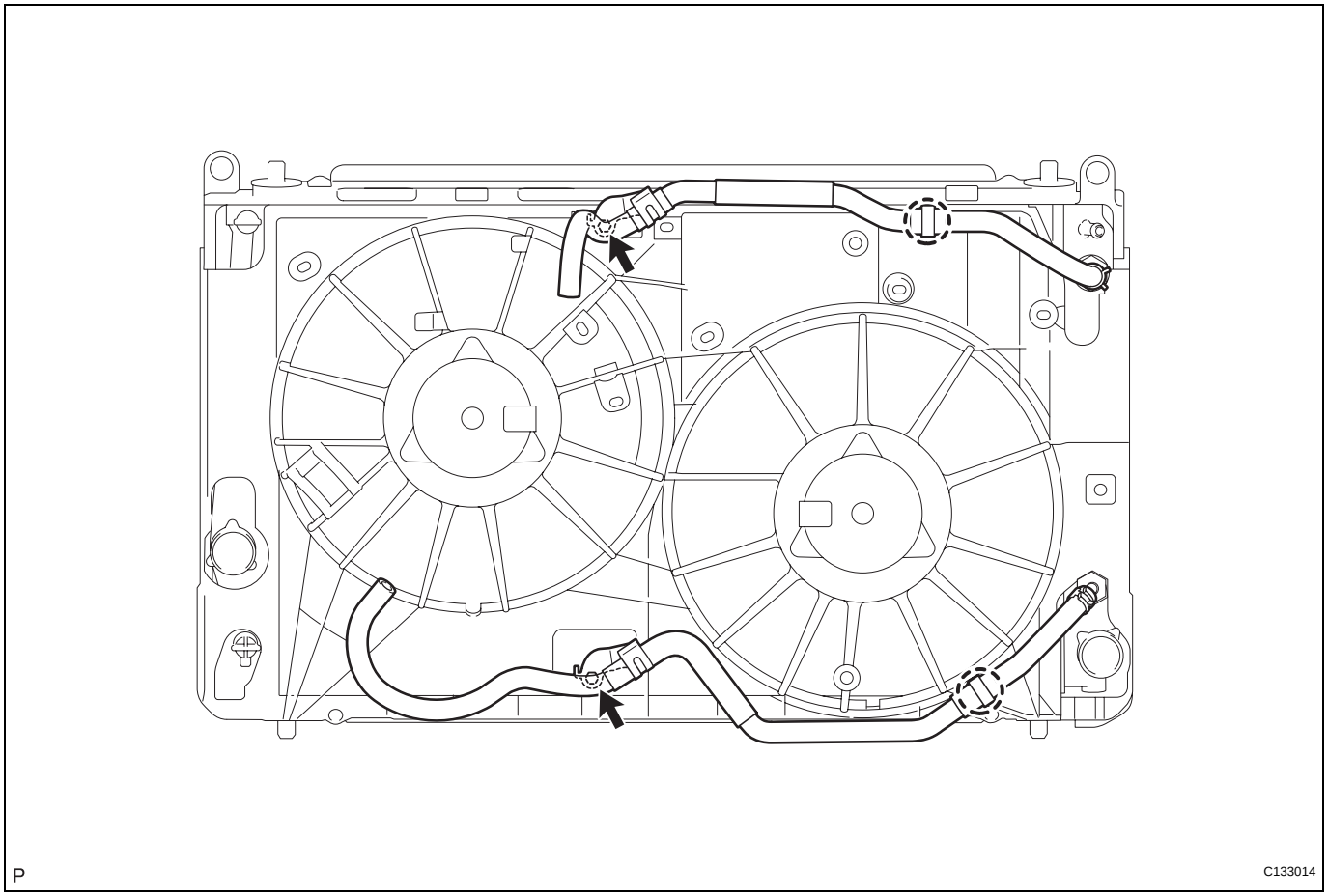

(a) Disconnect the 2 hoses from the 2 No. 1 flexible hose clamps.
(b) Detach the 2 claws to open the 2 automatic transmission oil cooler tube clamps.
(c) Disconnect the 2 hoses from the radiator.
(d) Remove the 2 bolts and 2 No. 1 flexible hose clamps.
(e) Remove the 2 automatic transmission oil cooler tube clamps.

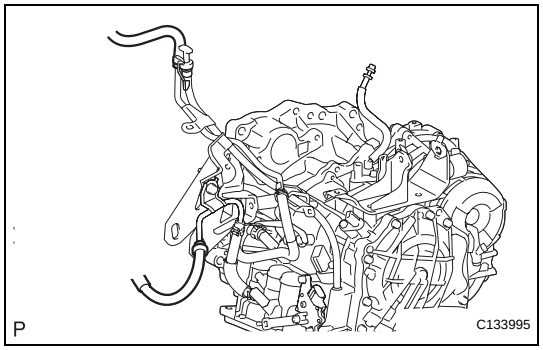

(f) Disconnect the 2 hoses from the transmission oil filler tube and oil cooler tube.

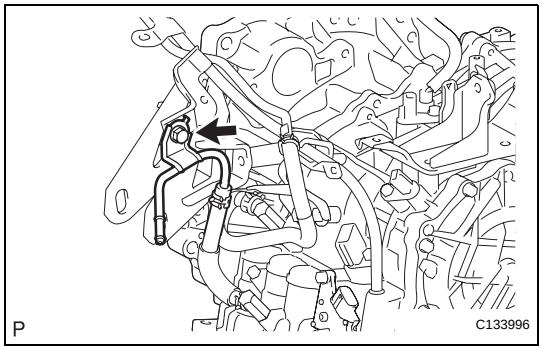

2. DISCONNECT OIL COOLER TUBE SUB-ASSEMBLY

(a) Disconnect the oil cooler outlet hose from the oil cooler tube and transaxle.

(b) Remove the bolt and oil cooler tube.

3. DISCONNECT OIL COOLER OUTLET HOSE

(a) Disconnect the oil cooler outlet hose from the transaxle.

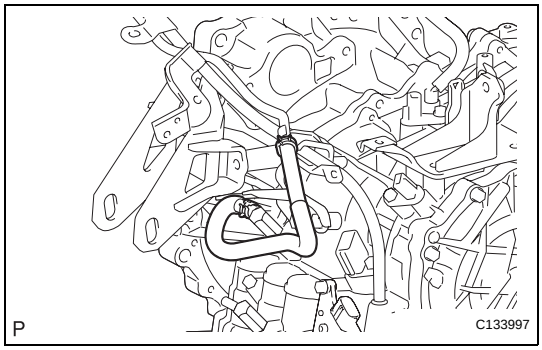

4. DISCONNECT OIL COOLER INLET HOSE

(a) Disconnect the hose from the transmission oil filler tube and transaxle, and remove it.

INSTALLATION

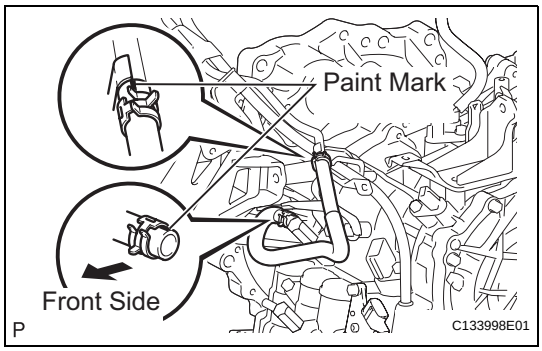

1. CONNECT OIL COOLER INLET HOSE

(a) Connect the hose to the transaxle and transmission oil filler tube.

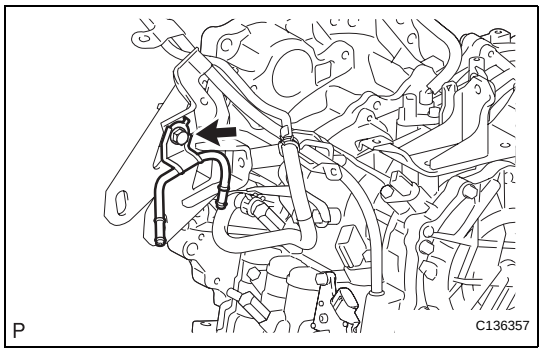

2. INSTALL OIL COOLER TUBE SUB-ASSEMBLY

(a) Install the tube with the bolt.

Torque: 19 N*m (194 kgf*cm, 14 ft.*lbf)

NOTICE:

Make sure the rotation stopper of the tube contacts the top part of the front engine mounting bracket.

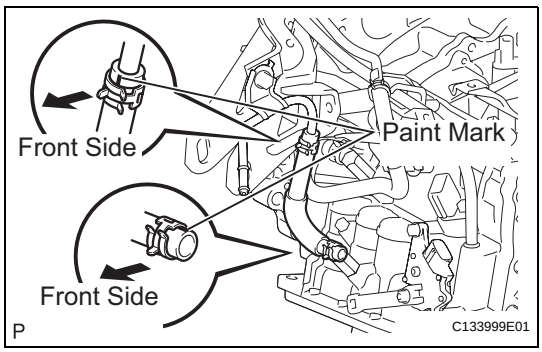

3. CONNECT OIL COOLER OUTLET HOSE

(a) Connect the hose to the transaxle and oil cooler tube.

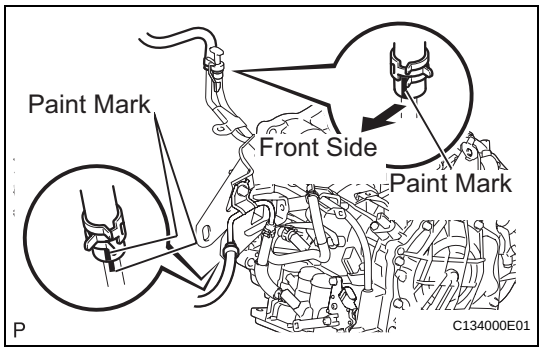

4. CONNECT NO. 1 AND NO. 2 TRANSMISSION OIL COOLER HOSES

(a) Connect the 2 hoses to the transmission oil filler tube and oil cooler tube.

(b) Install the 2 automatic transmission oil cooler tube clamps to the radiator.

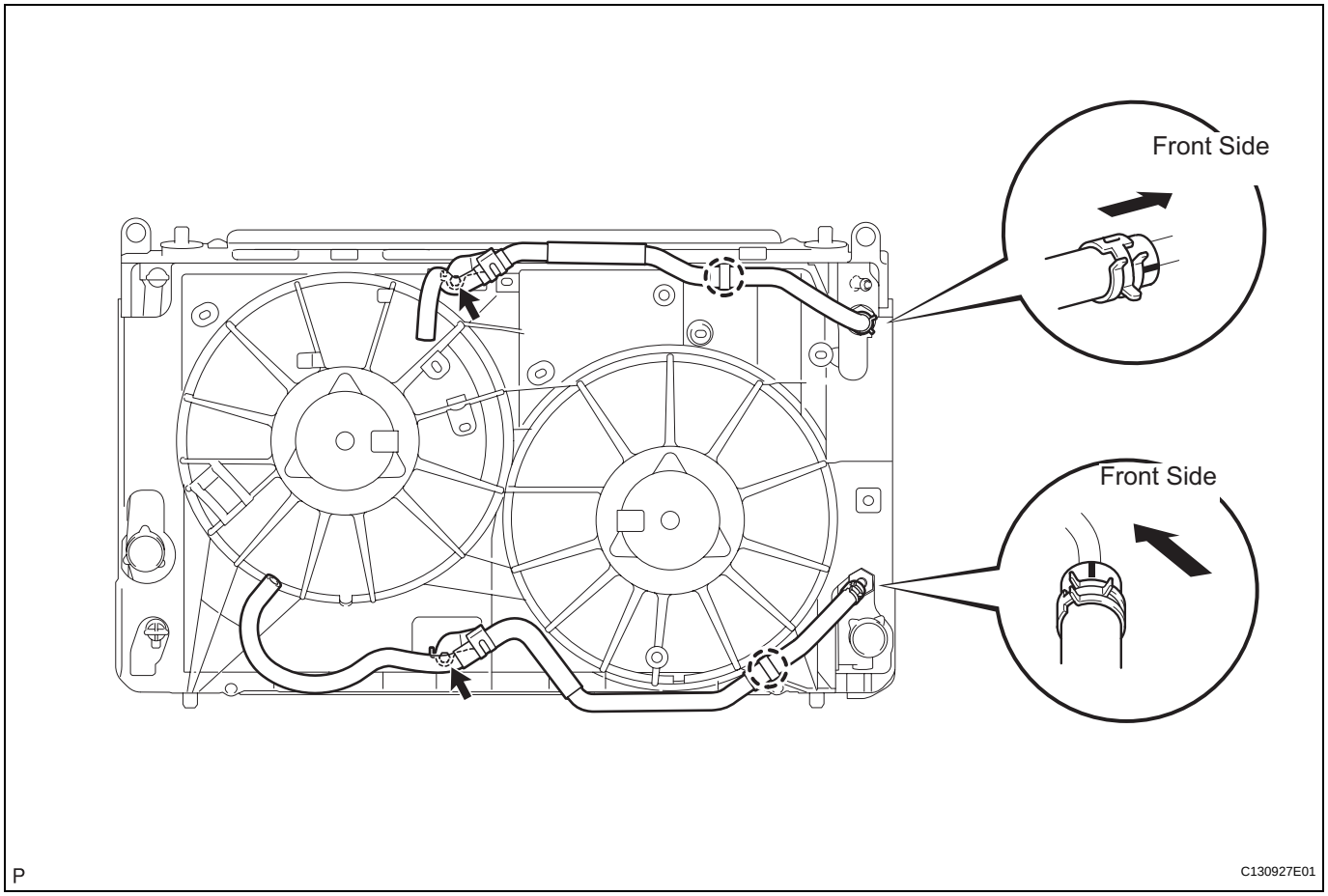

(c) Install the 2 No. 1 flexible hose clamps to the radiator with the 2 bolts.
Torque: 5.5 N*m (56 kgf*cm, 49 in.*lbf)

(d) Connect the 2 hoses to the radiator.

(e) Pass the 2 hoses through the 2 automatic transmission oil cooler tube clamps.

(f) Connect the 2 hoses to the 2 No. 1 flexible hose clamps, and close the 2 clamps.

5. ADD AUTOMATIC TRANSAXLE FLUID

6. INSPECT AUTOMATIC TRANSAXLE FLUID

(a) Inspect the automatic transaxle fluid (see page AX-126).

REMOVAL

1. DISCONNECT CABLE FROM NEGATIVE BATTERY TERMINAL

CAUTION:

Wait at least 90 seconds after disconnecting the cable from the negative (-) battery terminal to prevent airbag and seat belt pretensioner activation.

2. REMOVE NO. 1 ENGINE UNDER COVER

3. DRAIN AUTOMATIC TRANSAXLE FLUID

(a) Remove the drain plug and gasket, and drain the ATF.

(b) Install a new gasket and the drain plug.

Torque: 47 N*m (479 kgf*cm, 35 ft.*lbf)

4. REMOVE AUTOMATIC TRANSAXLE OIL PAN SUB-ASSEMBLY

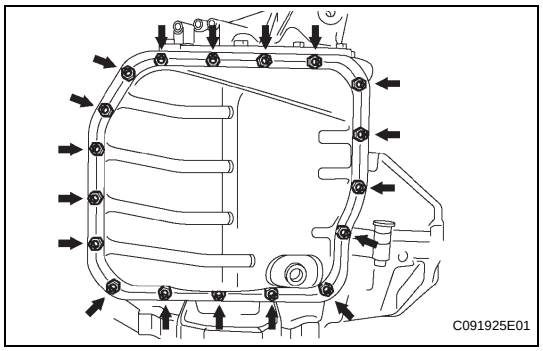

(a) Remove the 18 bolts, oil pan and gasket.

NOTICE:

Some fluid will remain in the oil pan. Carefully remove the oil pan.

(b) Remove the 2 magnets from the oil pan.

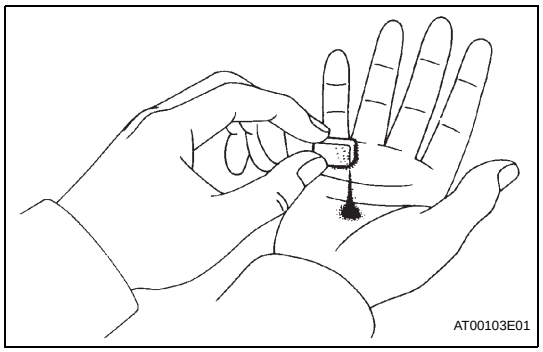

(c) Examine the particles in the pan.

(1) Use the removed magnets to collect any steel chips. Look carefully at the chips and particles in the pan and on the magnet to anticipate what type of wear you will find in the transaxle.
Steel (magnetic): bearing, gear and plate wear
Brass (non-magnetic): bush wear

5. REMOVE TRANSMISSION WIRE

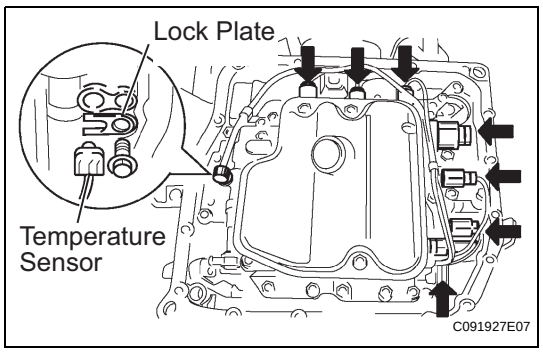

(a) Disconnect the 7 shift solenoid valve connectors.

(b) Remove the bolt, lock plate and ATF temperature sensor.

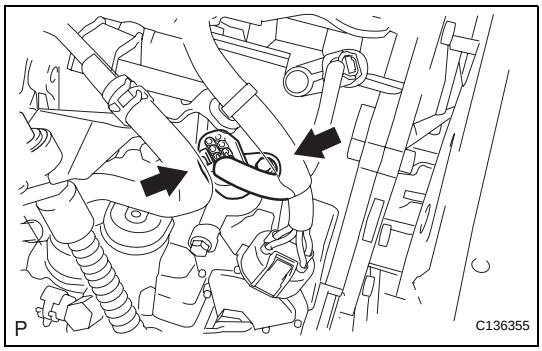

(c) Disconnect the transmission wire connector.
(d) Remove the bolt and transmission wire.

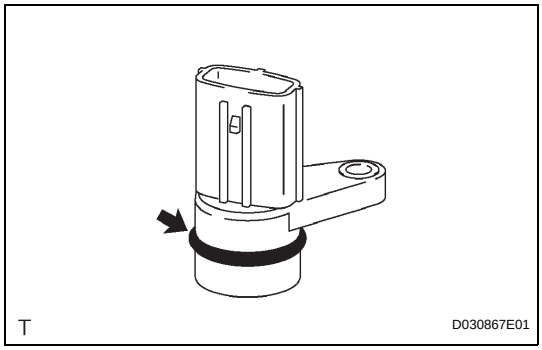

(e) Remove the O-ring from the transmission wire connector.

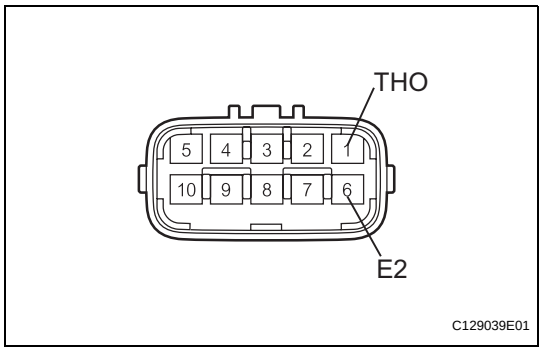

INSPECTION

1. INSPECT TRANSMISSION WIRE

(a) Measure the resistance of the transmission wire.
Standard resistance

Tester Connection	Specified Condition
1 (THO) - 6 (E2)	90 Ω to 156 kΩ
1 (THO) - Body ground	1 MΩ or higher
6 (E2) - Body ground	1 MΩ or higher

If the result is not as specified, replace the wire.
HINT:
If the resistance is not as specified for either of the ATF temperatures shown in the table below, the drivability of the vehicle may decrease.
Standard resistance

ATF Temperature	Specified Condition
10°C (68°F)	6.4 kΩ
110°C (230°F)	0.2 kΩ

INSTALLATION

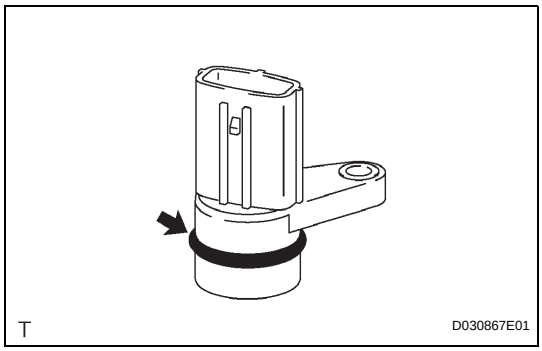

1. INSTALL TRANSMISSION WIRE

(a) Coat a new O-ring of the transmission wire connector with ATF.
(b) Install the O-ring to the transmission wire connector.

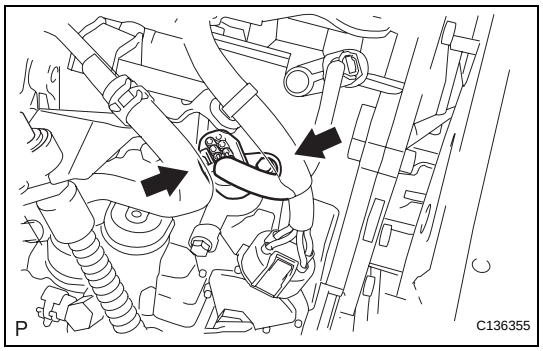

(c) Install the transmission wire.
(d) Install the bolt.
(e) Connect the connector.

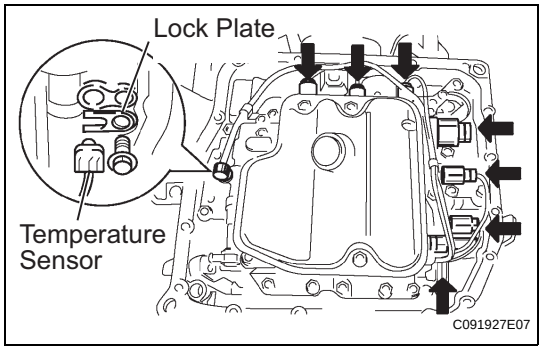

(f) Coat the O-ring of the ATF temperature sensor with ATF.
(g) Apply ATF to the bolt.
(h) Install the ATF temperature sensor with the lock plate and bolt.
Torque: 6.6 N*m (67 kgf*cm, 58 in.*lbf)
(i) Connect the 7 shift solenoid valve connectors.

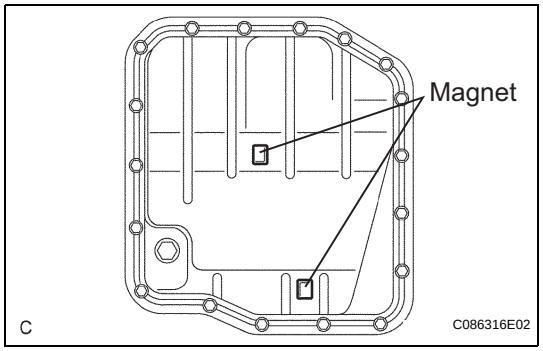

2. INSTALL AUTOMATIC TRANSAXLE OIL PAN SUB-ASSEMBLY
(a) Install the 2 magnets in the oil pan.

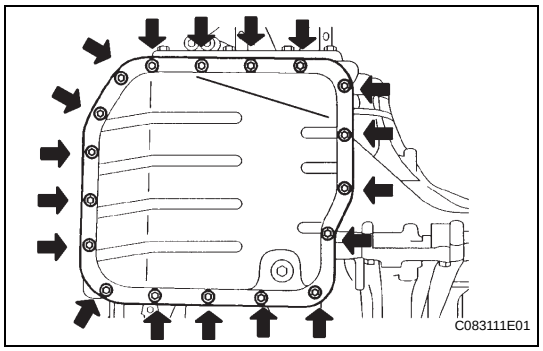

(b) Install a new gasket and the oil pan with the 18 bolts.
Torque: 7.6 N*m (80 kgf*cm, 69 in.*lbf)

3. INSTALL NO. 1 ENGINE UNDER COVER

4. CONNECT CABLE TO NEGATIVE BATTERY TERMINAL

5. ADD AUTOMATIC TRANSAXLE FLUID
Fluid type:
Toyota Genuine ATF WS

6. INSPECT TRANSAXLE FLUID LEVEL
(a) Inspect the fluid level (see page AX-126).

7. PERFORM RESET MEMORY
(a) Perform the RESET MEMORY procedures (A/T initialization) (see page AX-20).

TRANSMISSION WIRE

COMPONENTS

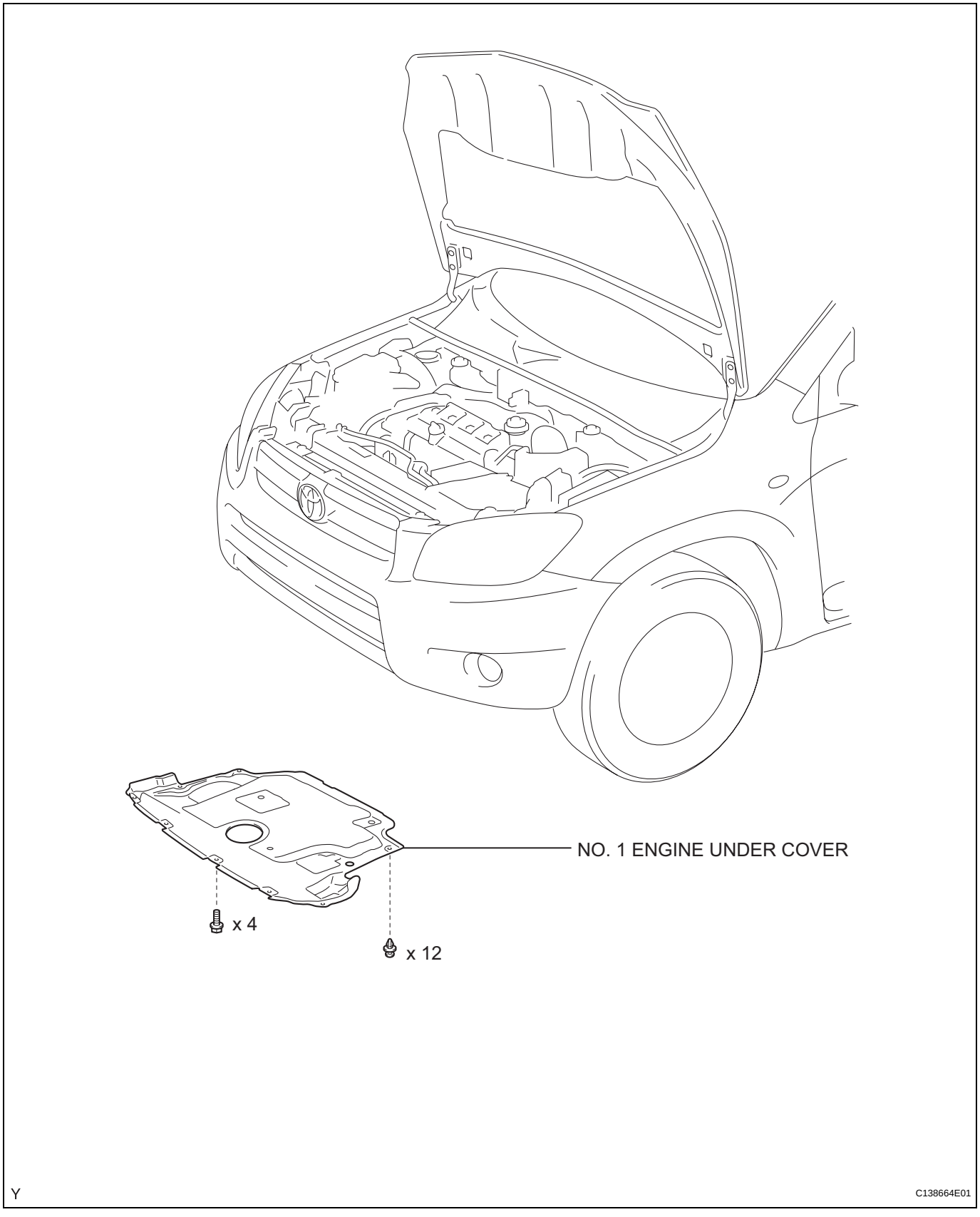

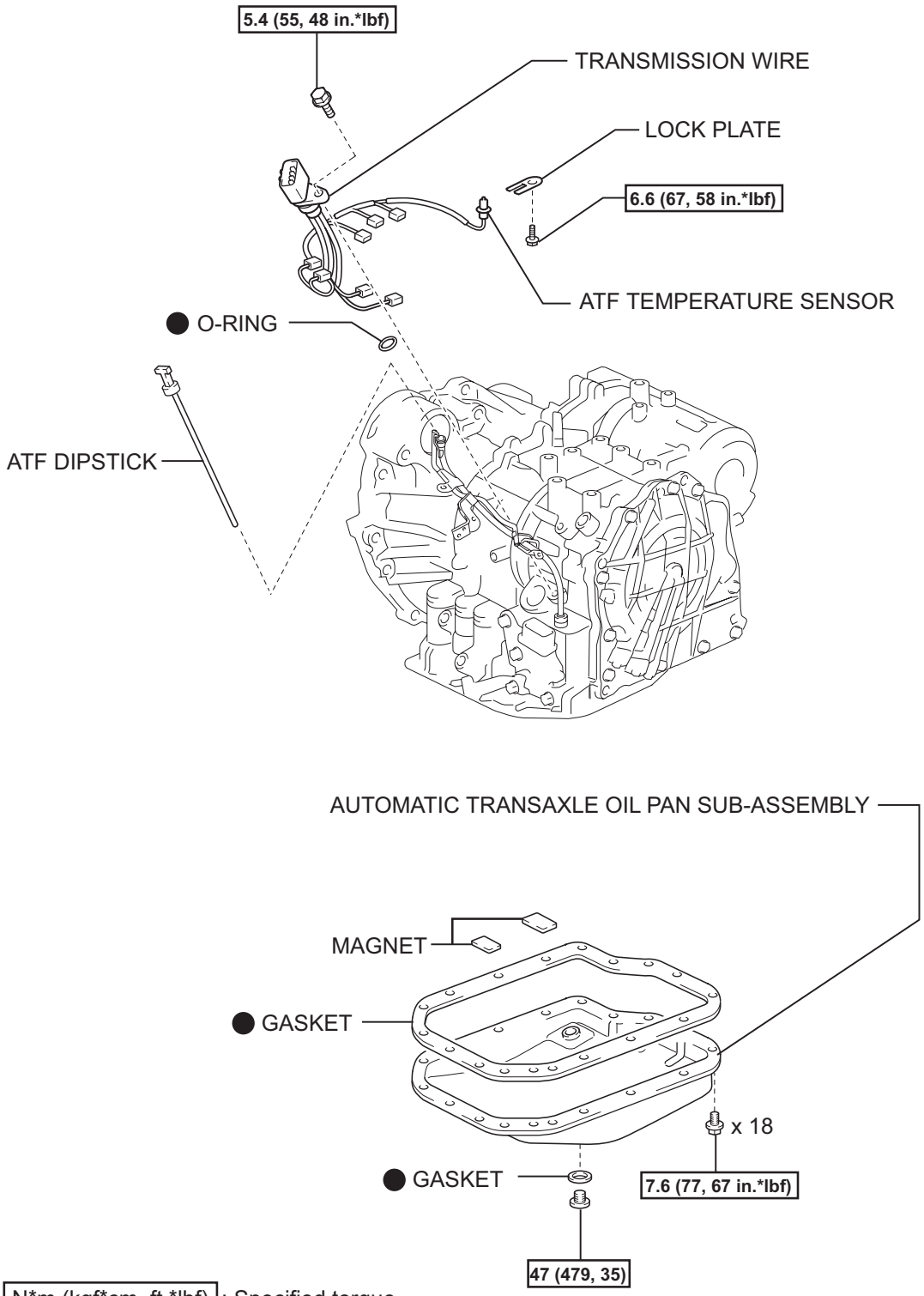

N*m (kgf*cm, ft.*lbf) : Specified torque

● Non-reusable part

AX

P

C136353E01

UNDERDRIVE CLUTCH

COMPONENTS

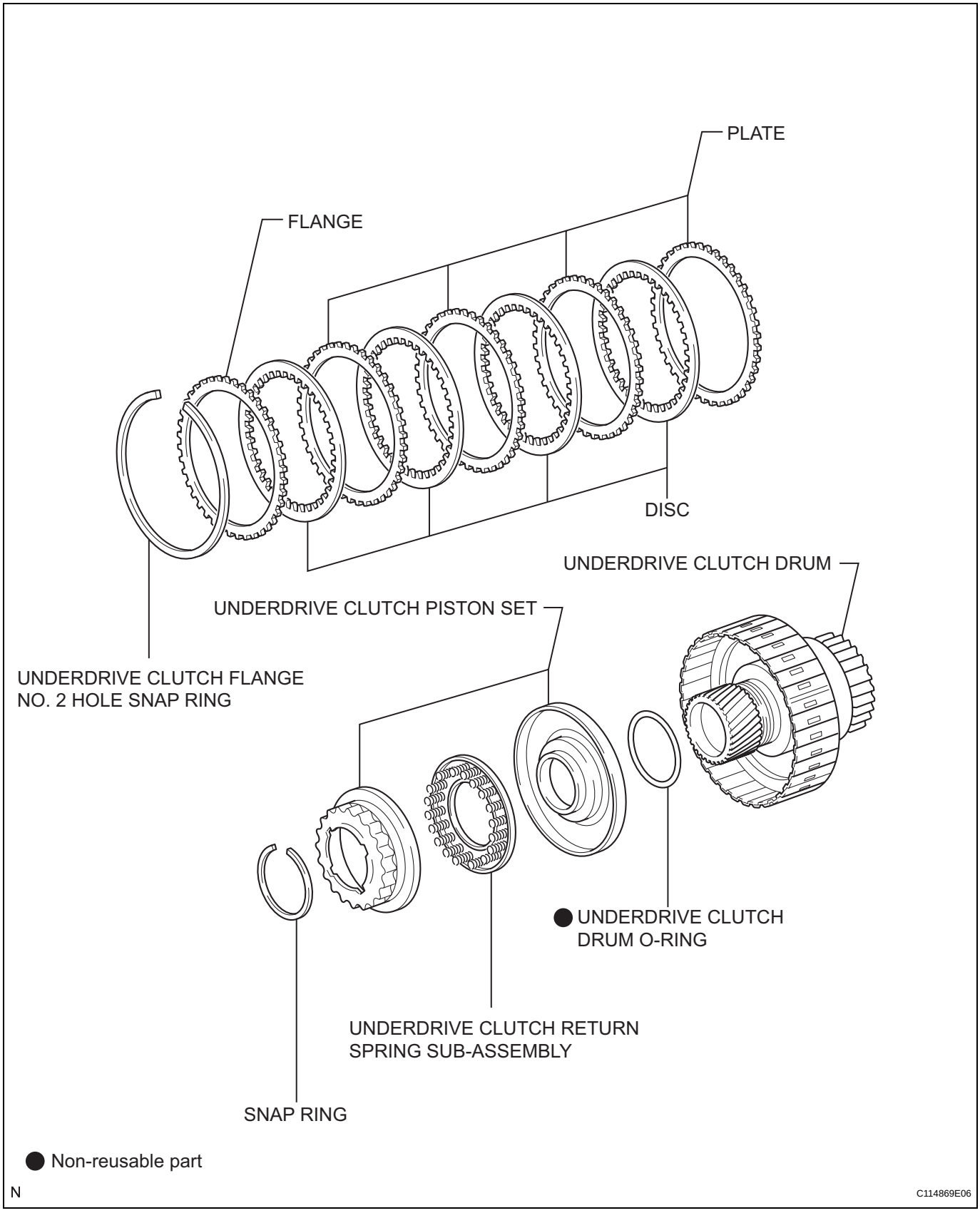

DISASSEMBLY

1. INSPECT UNDERDRIVE PACK CLEARANCE (See page AX-276)

2. REMOVE UNDERDRIVE CLUTCH FLANGE NO. 2 HOLE SNAP RING

(a) Using a screwdriver, remove the snap ring.

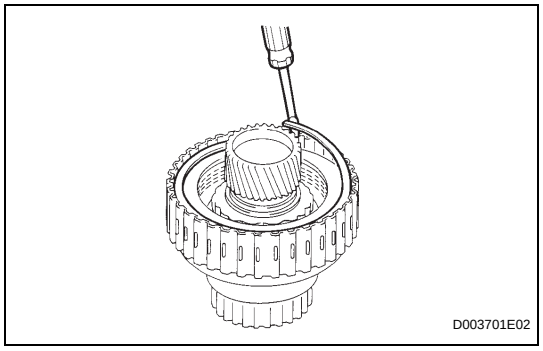

3. REMOVE NO. 1 UNDERDRIVE CLUTCH DISC

(a) Remove the flange, 4 discs and 4 plates from the underdrive clutch drum.

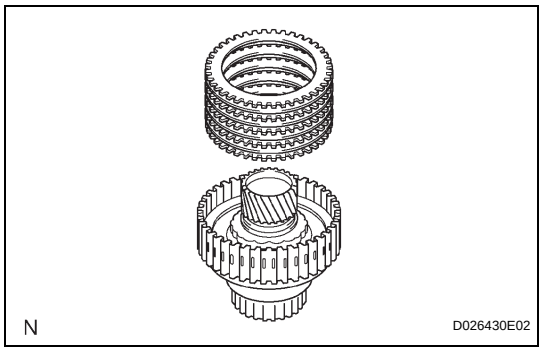

4. REMOVE UNDERDRIVE CLUTCH RETURN SPRING SUB-ASSEMBLY

(a) Place SST on the clutch balancer and compress the spring with a press.
SST 09350-32014

(b) Using a snap ring expander, remove the snap ring.
NOTICE:
- **Stop the press when the spring seat is lowered to a position 1 to 2 mm (0.039 to 0.078 in.) from the snap ring groove. This prevents the spring seat from being deformed.**
- **Do not expand the snap ring excessively.**

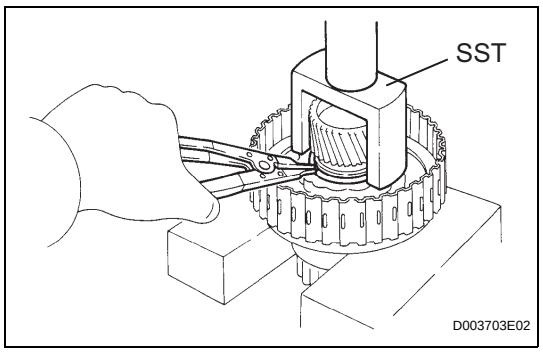

(c) Remove the clutch balancer from the underdrive clutch drum.

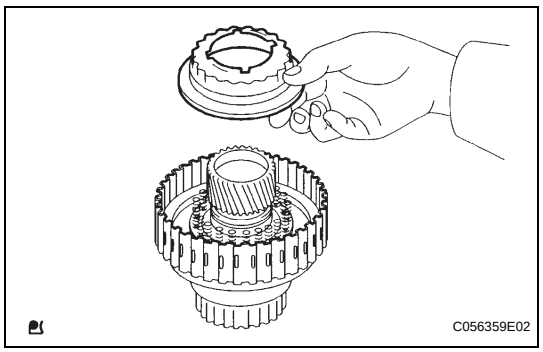

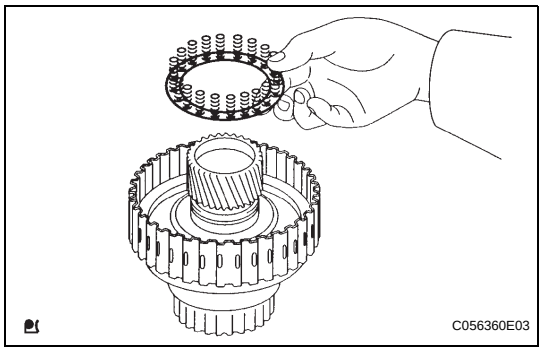

(d) Remove the return spring from the underdrive clutch drum.

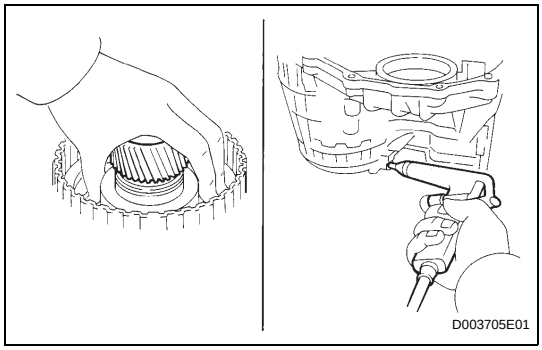

5. REMOVE UNDERDRIVE CLUTCH PISTON SET

(a) Install the underdrive clutch to the transaxle case.
NOTICE:
Be careful not to damage the oil seal ring.

(b) Holding the underdrive clutch piston by hand, apply compressed air (392 kPa, 4.0 kgf/cm^2, 57 psi) to the transaxle case to remove the underdrive clutch piston.

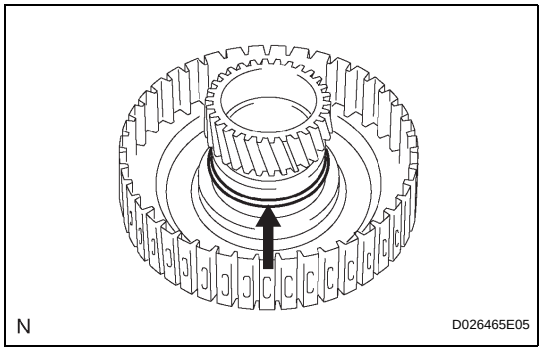

6. REMOVE UNDERDRIVE CLUTCH DRUM O-RING

(a) Using a screwdriver, remove the O-ring from the underdrive clutch drum.

INSPECTION

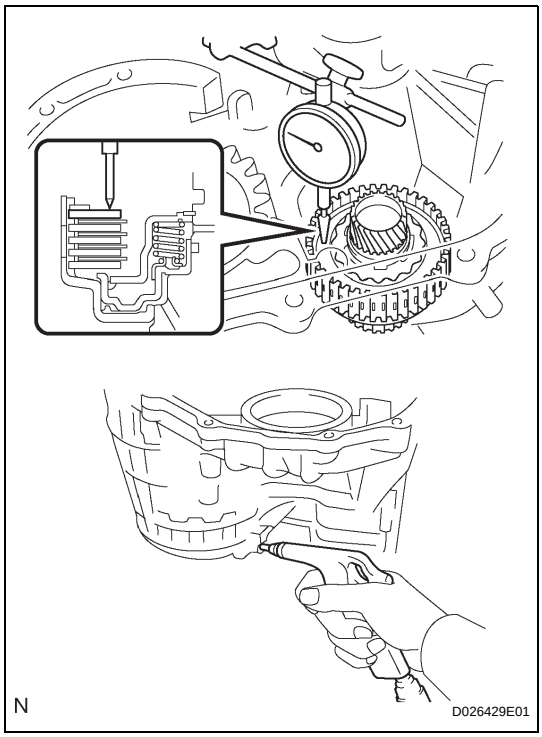

1. INSPECT UNDERDRIVE PACK CLEARANCE

(a) Install the underdrive clutch to the transaxle case.
NOTICE:
Be careful not to damage the oil seal rings.

(b) Install a dial indicator as shown in the illustration.

(c) Measure the underdrive clutch pack clearance while applying and releasing compressed air (392 kPa, 4.0 kgf/cm^2, 57 psi).
Standard pack clearance:
1.51 to 1.71 mm (0.0594 to 0.0673 in.)
If the pack clearance is not as specified, inspect the discs, plates and flange.
HINT:
There are 5 different thicknesses flanges available.
Standard flange thickness

Mark	Thickness	Mark	Thickness
1	3.0 mm (0.118 in.)	4	3.6 mm (0.122 in.)
2	3.2 mm (0.126 in.)	5	3.8 mm (0.130 in.)
3	3.4 mm (0.134 in.)	-	-

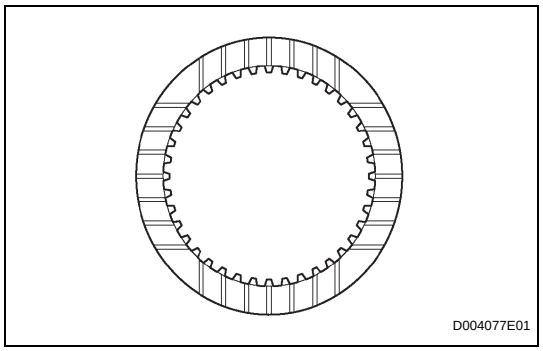

2. INSPECT NO. 1 UNDERDRIVE CLUTCH DISC

(a) Check if the sliding surface of the disc, plate and flange are worn or burnt. If necessary, replace them.

NOTICE:

- **If the lining of the disc comes off or is discolored, or if a part of the groove is worn, replace all the discs.**
- **Before installing new discs, immerse them in ATF for at least 15 minutes.**

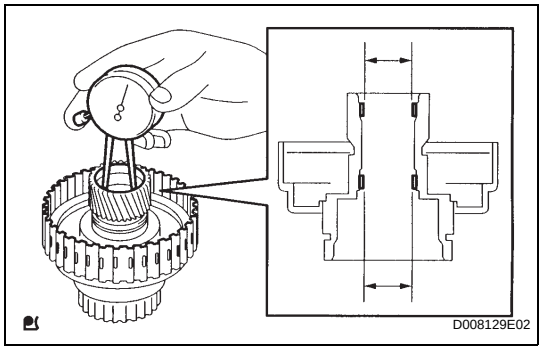

3. INSPECT UNDERDRIVE CLUTCH DRUM SUB-ASSEMBLY

(a) Using a caliper gauge, measure the inside diameter of the underdrive clutch drum bushing.

Standard drum bushing:

37.06 to 37.08 mm (1.4591 to 1.4598 in.)

Maximum drum bushing:

37.13 mm (1.4618 in.)

If the inside diameter is greater than the maximum, replace the underdrive clutch drum sub-assembly.

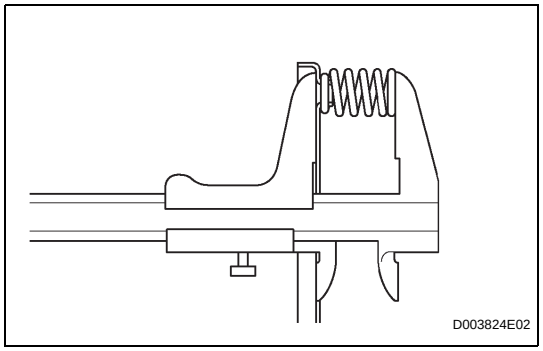

4. INSPECT UNDERDRIVE CLUTCH RETURN SPRING SUB-ASSEMBLY

(a) Using a vernier caliper, measure the free length of the spring together with the spring seat.

Standard free length:

17.14 mm (0.6752 in.)

REASSEMBLY

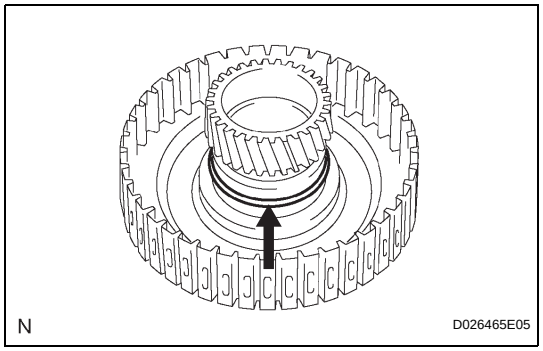

1. INSTALL UNDERDRIVE CLUTCH DRUM O-RING

(a) Coat a new O-ring with ATF, and install it to the underdrive clutch drum.

NOTICE:

Make sure that the O-ring is not twisted or pinched.

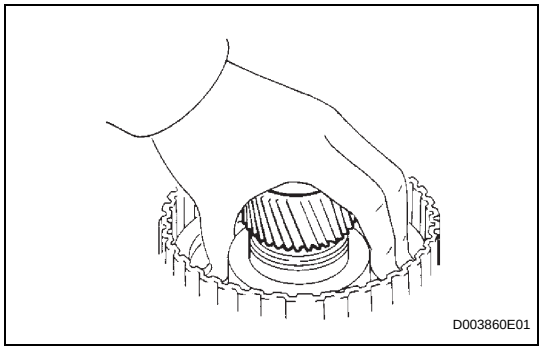

2. INSTALL UNDERDRIVE CLUTCH PISTON SET

(a) Coat the underdrive clutch piston with ATF, and install it to the underdrive clutch piston drum.

NOTICE:

- **Be careful not to damage the O-ring.**
- **Be careful not to damage the lip of the piston.**

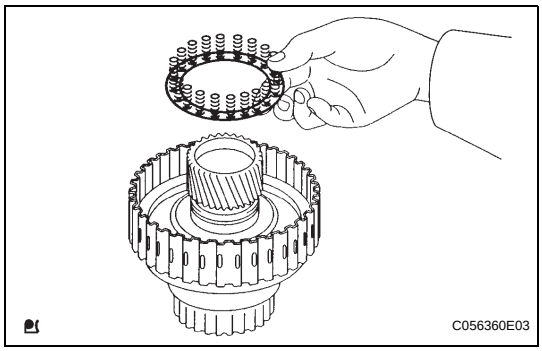

3. INSTALL UNDERDRIVE CLUTCH RETURN SPRING SUB-ASSEMBLY

(a) Install the return spring to the underdrive clutch drum.

NOTICE:

After installing the spring sub-assembly, check that all of the springs fit in the piston correctly.

(b) Coat the clutch balancer with ATF.

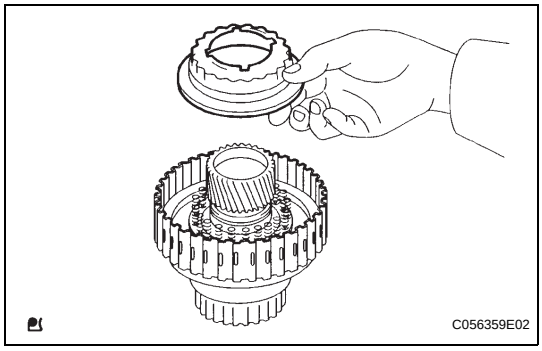

(c) Install the clutch balancer to the underdrive clutch drum.

NOTICE:

Be careful not to damage the lip of the clutch balancer.

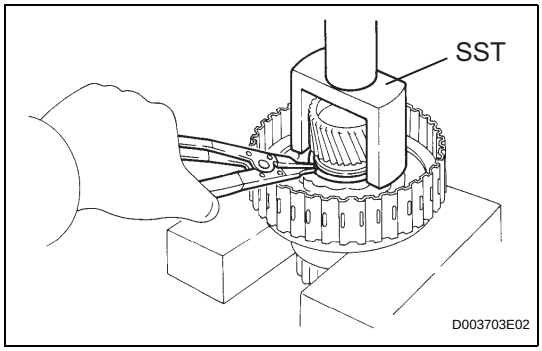

(d) Place SST on the clutch balancer and compress the piston return spring with a press.

SST 09350-32014 (09351-32070)

(e) Using a snap ring expander, install the snap ring to the underdrive clutch drum.

(f) Be sure that the end gap of the snap ring is not aligned with the spring retainer claw.

NOTICE:

- **Stop the press when the spring seat is lowered to a position 1 to 2 mm (0.039 to 0.078 in.) from the snap ring groove. This prevents the spring seat from being deformed.**
- **Do not expand the snap ring excessively.**

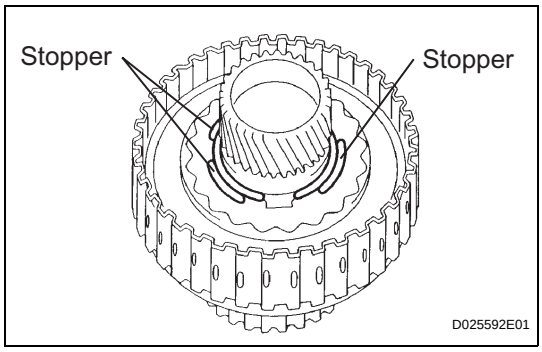

(g) Set the end gap of the snap ring in the underdrive clutch drum as shown in the illustration.

NOTICE:

The end gap of the snap ring should not align with any of the stoppers.

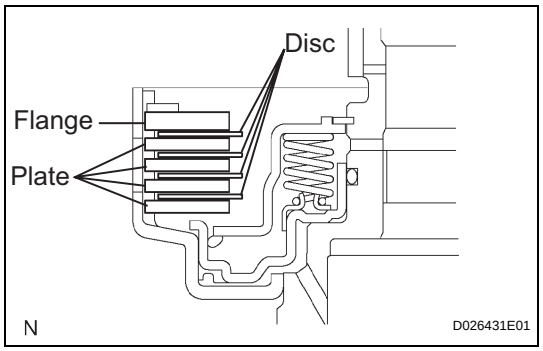

4. INSTALL NO. 1 UNDERDRIVE CLUTCH DISC

(a) Coat the 4 discs with ATF.

(b) Install the 4 plates, 4 discs and flange to the underdrive clutch drum.

NOTICE:

Make sure that the plates, discs and flange are installed as shown in the illustration.

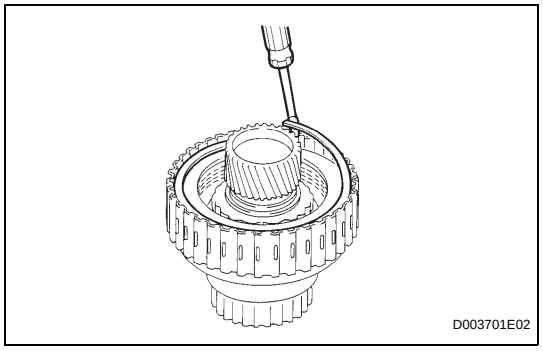

5. INSTALL 1ST AND REVERSE BRAKE RETURN SPRING SHAFT SNAP RING

(a) Using a screwdriver, install the underdrive clutch flange hole snap ring.

(b) Check that the end gap of the snap ring is not aligned with one of the cutouts.

NOTICE:

The snap ring should be fully engaged in the groove of the drum.

6. INSPECT UNDERDRIVE PACK CLEARANCE (See page AX-276)

UNDERDRIVE PLANETARY GEAR

COMPONENTS

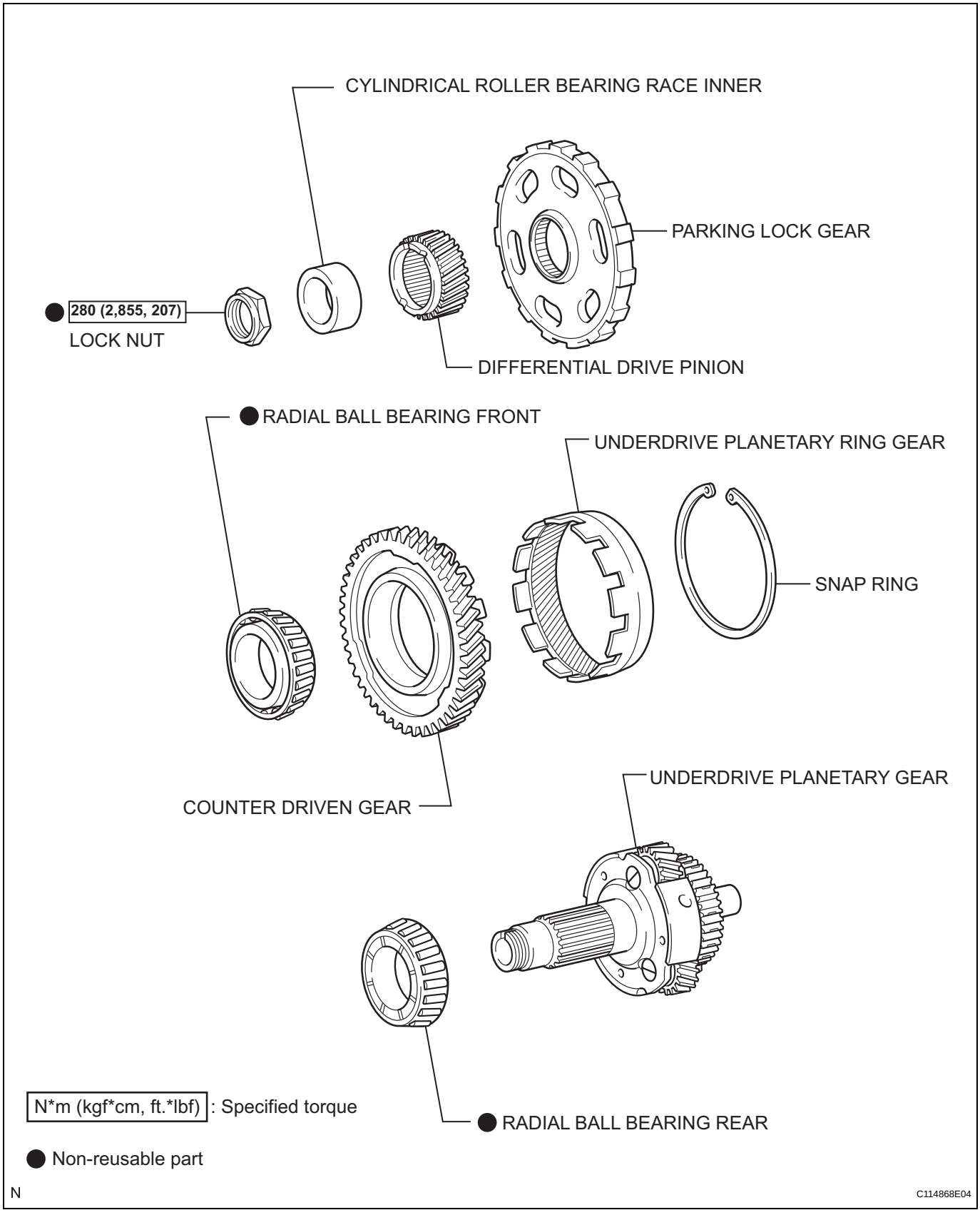

DISASSEMBLY

1. INSPECT UNDERDRIVE PLANETARY GEAR PRELOAD (See page AX-270)

2. REMOVE FRONT PLANETARY GEAR NUT

(a) Using SST, loosen the staked part of the lock nut.

SST 09930-00010 (09931-00010, 09931-00020), 09387-00050

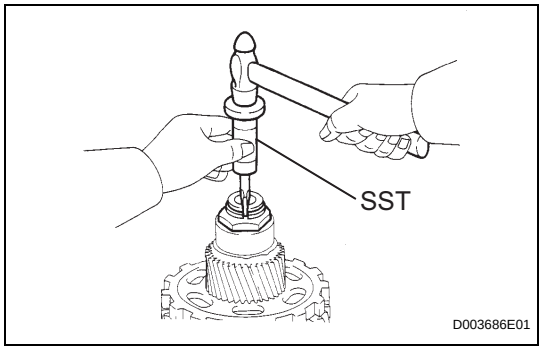

(b) Place the underdrive planetary gear in a soft jaw vise.

NOTICE:
Be careful not to damage the differential drive pinion.

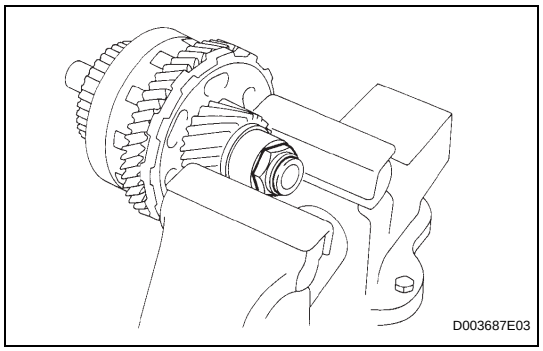

(c) Using a socket wrench, remove the lock nut.

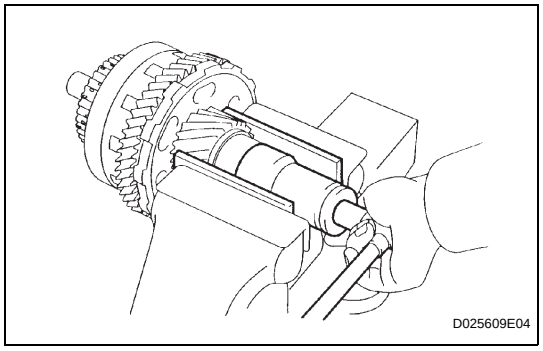

3. REMOVE CYLINDRICAL ROLLER BEARING RACE INNER

(a) Using SST, remove the cylindrical roller bearing race inner.

SST 09950-00020, 09950-00030, 09950-60010 (09951-00320, 09957-04010)

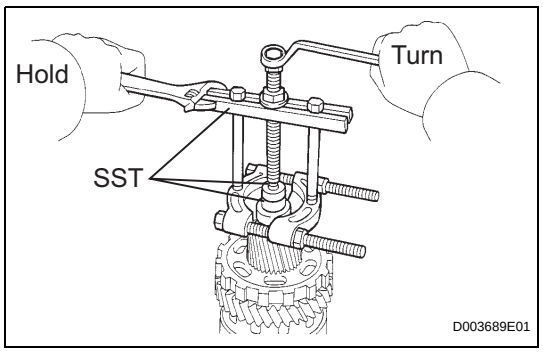

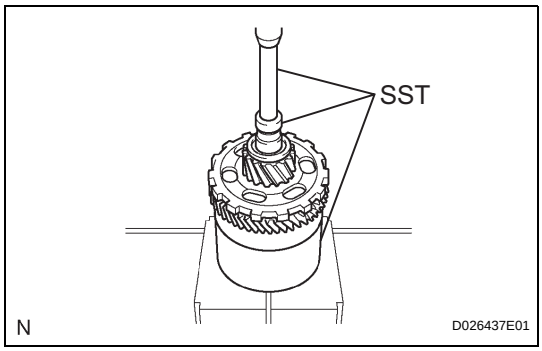

4. REMOVE UNDERDRIVE PLANETARY GEAR ASSEMBLY

(a) Using SST and a press, press out the differential drive pinion, parking lock gear, counter driven gear with underdrive planetary ring gear and radial ball bearing front.

SST 09950-60010 (09951-00320), 09387-00050, 09950-00020, 09950-00030, 09950-40011 (09957-04010)

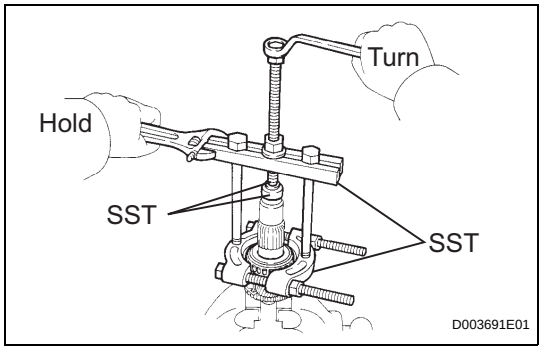

(b) Place the underdrive planetary gear in a soft jaw vise.

(c) Using SST, remove the radial ball bearing rear from the underdrive planetary gear.

SST 09950-60010 (09951-00320), 09950-00030, 09950-40011 (09957-04010)

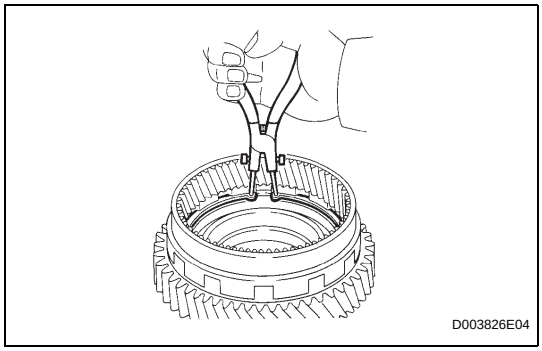

5. REMOVE UNDERDRIVE PLANETARY RING GEAR

(a) Using snap ring pliers, remove the snap ring.

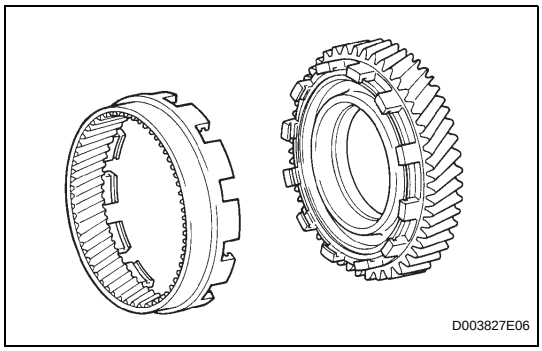

(b) Remove the underdrive planetary ring gear from the counter driven gear.

INSPECTION

1. INSPECT UNDERDRIVE PLANETARY GEAR PRELOAD

(a) Using SST, fix the underdrive planetary gear.

SST 09387-00050

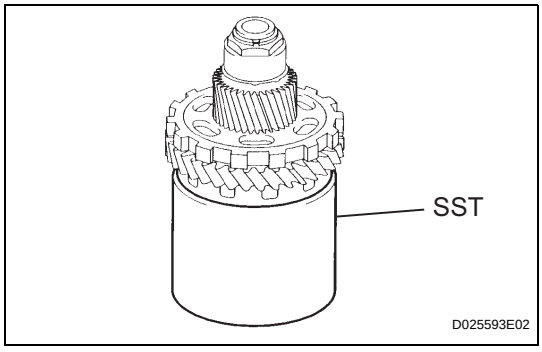

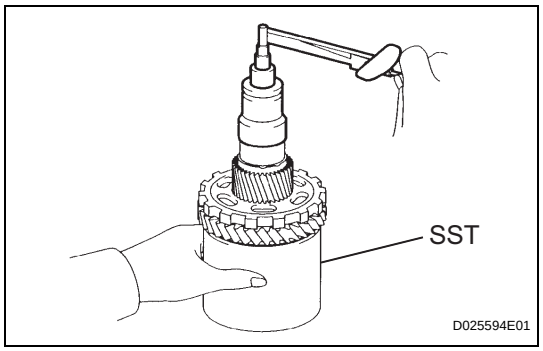

(b) Using SST and a torque wrench, measure the turning torque of the underdrive planetary gear assembly while rotating the torque wrench at 60 rpm.
SST 09387-00050
Torque: Standard turning torque at 60 rpm
0.50 to 1.42 N*m (5.1 to 14.5 kgf*cm, 4.4 to 12.6 in.*lbf)

REASSEMBLY

1. INSTALL UNDERDRIVE PLANETARY RING GEAR

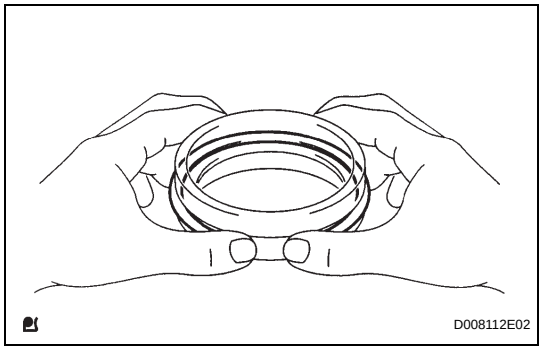

(a) Install a new snap ring to the outer race of the radial ball bearing rear.
HINT:
When replacing the bearing, also replace the counter driven gear with a new one.

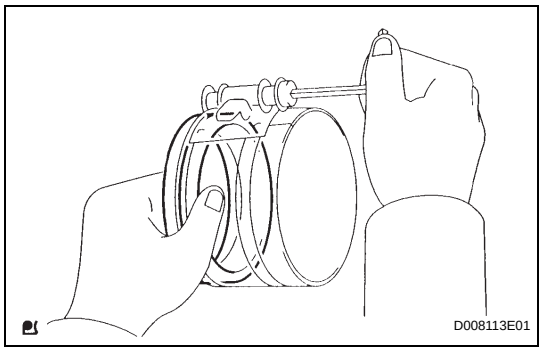

(b) Using a piston ring compressor, squeeze the snap ring.

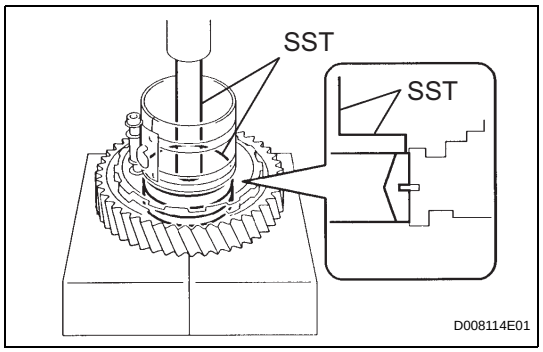

(c) Using SST and a press, press in the outer race of the radial ball bearing rear.
SST 09950-60020 (09951-00890), 09950-70010 (09951-07100)
NOTICE:
Be sure not to damage the snap ring during outer race installation.

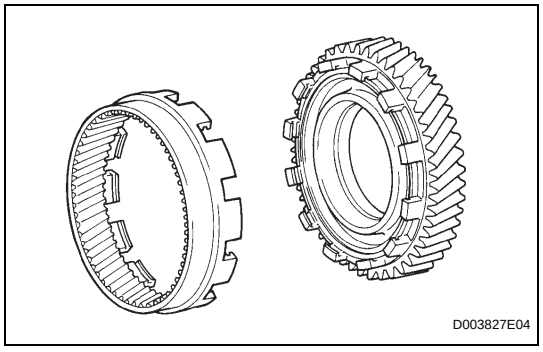

(d) Install the underdrive planetary ring gear to the counter driven gear.

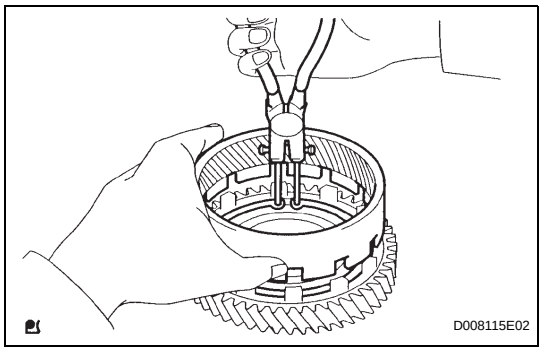

(e) Using snap ring pliers, install the snap ring.

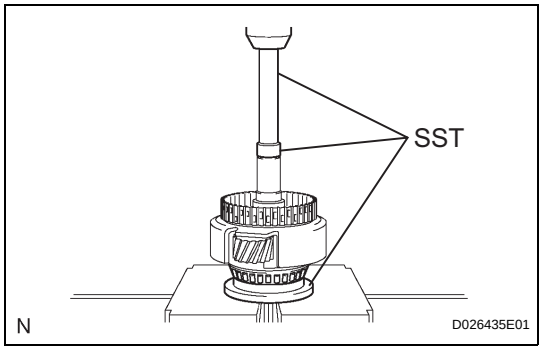

2. INSTALL UNDERDRIVE PLANETARY GEAR ASSEMBLY

(a) Using SST and a press, press in the radial ball bearing rear to the underdrive planetary gear.

SST 09502-12010, 09950-60010 (09951-00260), 09950-70010 (09951-07100)

NOTICE:

Press the bearing until it becomes flat at the bottom.

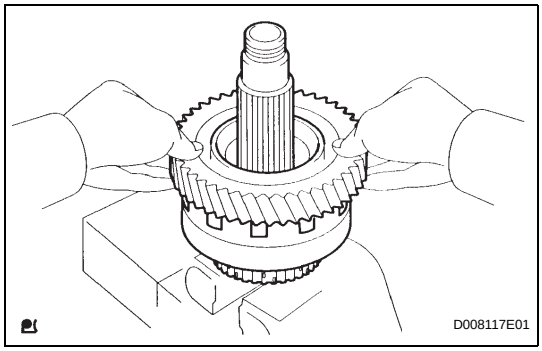

(b) Install the counter driven gear with planetary ring gear to the underdrive planetary gear.

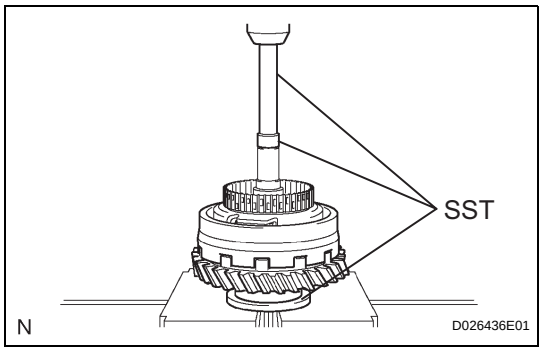

(c) Using SST and a press, press in the radial ball bearing front.

SST 09502-12010, 09950-60010 (09951-00260), 09950-70010 (09951-07100)

NOTICE:

Press the counter driven gear while rotating it.

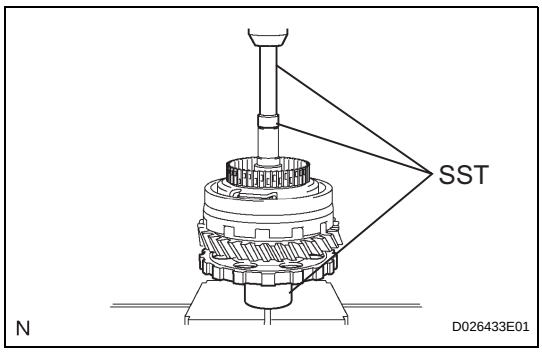

(d) Using SST and a press, press in the parking lock gear.

SST 09502-12010, 09950-60010 (09951-00260), 09950-70010 (09951-07100)

NOTICE:

Press the counter driven gear while rotating it.

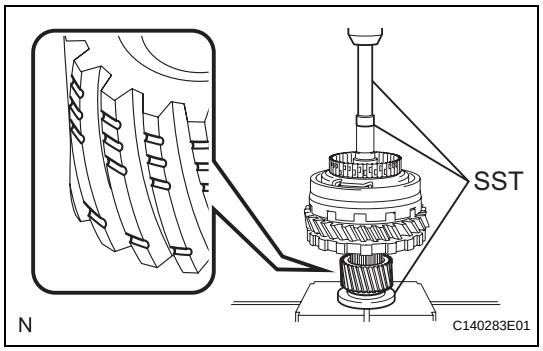

3. INSTALL DIFFERENTIAL DRIVE PINION

(a) Using SST and a press, press in the differential drive pinion.

SST 09726-40010, 09950-60010 (09951-00260), 09950-70010 (09951-07100)

NOTICE:

- **Press the counter driven gear while rotating it.**
- **Check the position and number of the grooves on each end face of the differential drive pinion gear.**

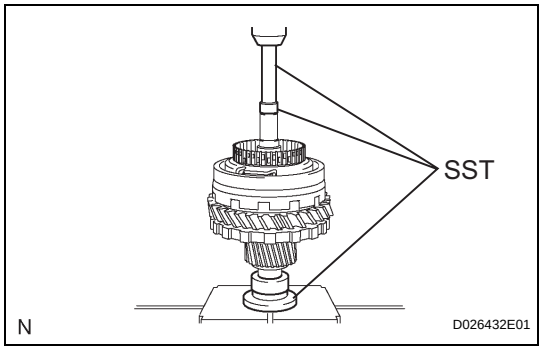

4. INSTALL CYLINDRICAL ROLLER BEARING RACE INNER

(a) Using SST and a press, press in the cylindrical roller bearing race inner.

SST 09506-35010, 09950-60010 (09951-00260), 09950-70010 (09951-07100)

NOTICE:

Press the counter driven gear while rotating it.

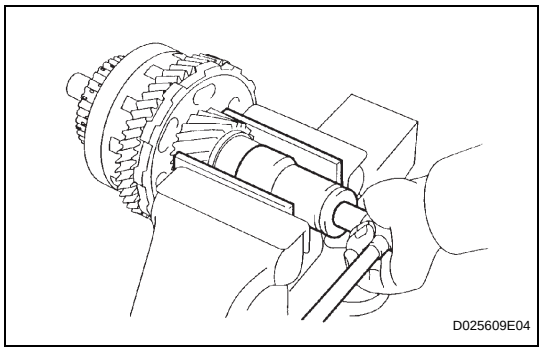

5. INSTALL FRONT PLANETARY GEAR NUT

(a) Place the underdrive planetary gear in a soft jaw vise.

NOTICE:

Be careful not to damage the differential drive pinion.

(b) Using a socket wrench, install a new lock nut.

Torque: 280 N*m (2,885 kgf*cm, 207 ft.*lbf)

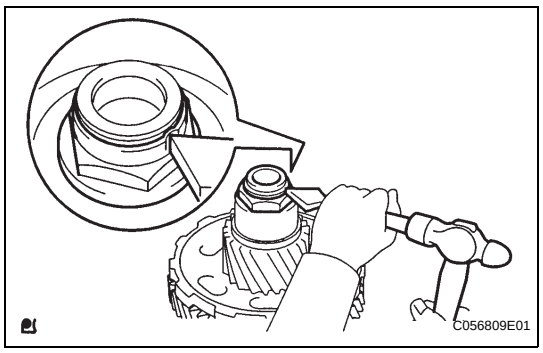

(c) Using a pin punch and hammer, stake the lock nut.

NOTICE:

Be sure that there are no cracks on the nut.

6. INSPECT UNDERDRIVE PLANETARY GEAR PRELOAD (See page AX-270)

REMOVAL

1. DISCONNECT CABLE FROM NEGATIVE BATTERY TERMINAL

CAUTION:

Wait at least 90 seconds after disconnecting the cable from the negative (-) battery terminal to prevent airbag and seat belt pretensioner activation.

2. REMOVE NO. 1 ENGINE UNDER COVER

3. DRAIN AUTOMATIC TRANSAXLE FLUID

(a) Remove the drain plug and gasket, and drain the ATF.

(b) Install a new gasket and the drain plug.

Torque: 47 N*m (479 kgf*cm, 35 ft.*lbf)

4. REMOVE AUTOMATIC TRANSAXLE OIL PAN SUB-ASSEMBLY

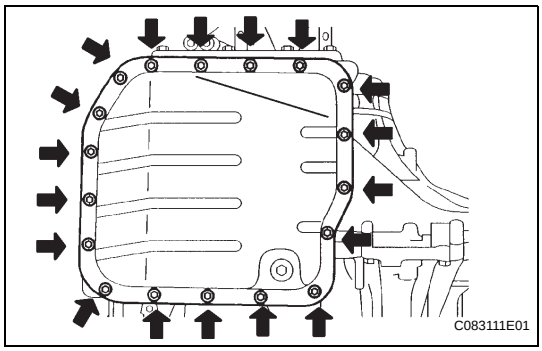

(a) Remove the 18 bolts, oil pan and gasket.

NOTICE:

Some fluid will remain in the oil pan. Carefully remove the oil pan sub-assembly.

(b) Remove the 2 magnets from the oil pan.

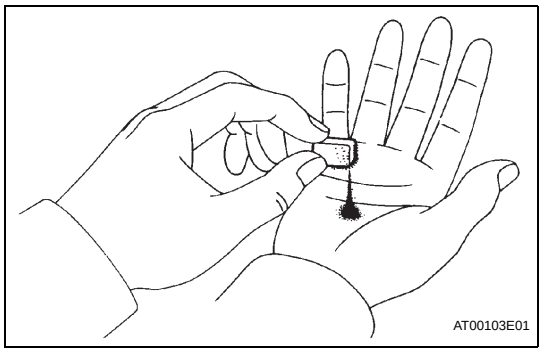

(c) Examine the particles in the pan.

(1) Use the removed magnets to collect any steel chips. Look carefully at the chips and particles in the pan and on the magnet to anticipate what type of wear you will find in the transaxle.
Steel (magnetic): bearing, gear and plate wear
Brass (non-magnetic): bush wear

5. REMOVE VALVE BODY OIL STRAINER ASSEMBLY

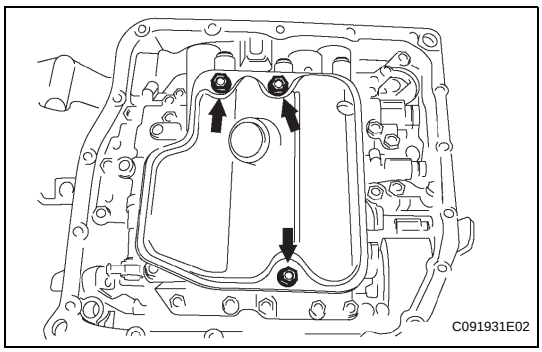

(a) Remove the 3 bolts and oil strainer.

NOTICE:

Be careful as some fluid will come out with the oil strainer.

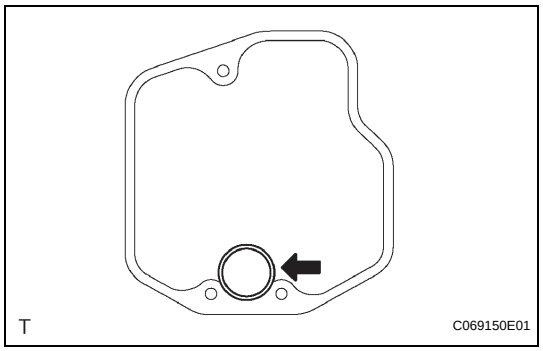

(b) Remove the O-ring from the oil strainer.

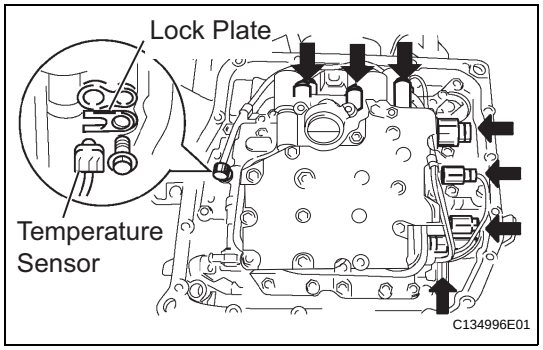

6. DISCONNECT TRANSMISSION WIRE

(a) Disconnect the 7 connectors.

(b) Remove the bolt and lock plate, and remove the ATF temperature sensor.

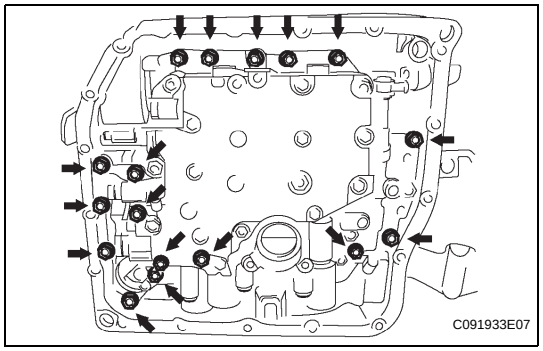

7. REMOVE TRANSMISSION VALVE BODY ASSEMBLY

(a) Support the valve body and remove the 17 bolts and valve body.

NOTICE:

Be careful not to drop the check valve body, spring and accumulator piston.

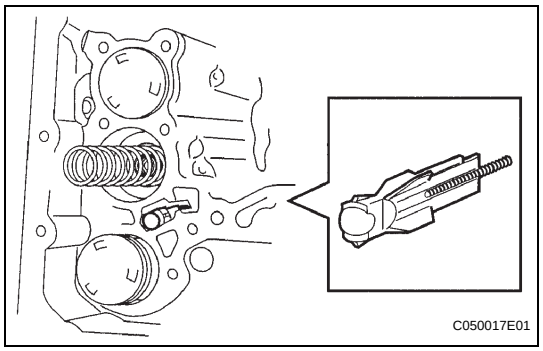

(b) Remove the check ball body and spring.

INSTALLATION

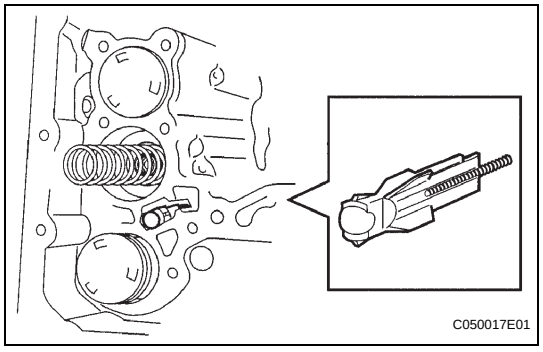

1. INSTALL TRANSMISSION VALVE BODY ASSEMBLY

(a) Install the spring and check ball body.

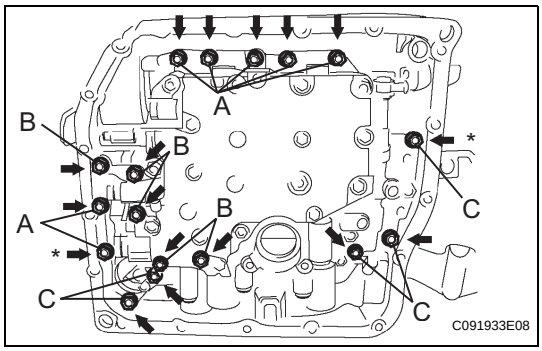

(b) Align the groove of the manual valve with the pin of the lever.
(c) Apply ATF to the 17 bolts.
(d) Install the 17 bolts.
Torque: 11 N*m (112 kgf*cm, 8 ft.*lbf)
NOTICE:
- **Push the valve body against the accumulator piston spring and the check ball body to install it.**
- **Tighten the bolts marked by * in the illustration first temporarily because they are positioning bolts.**

HINT:
Each bolt length is indicated below.
Bolt length:
25 mm (0.984 in.) for bolt A
57 mm (2.244 in.) for bolt B
41 mm (1.614 in.) for bolt C

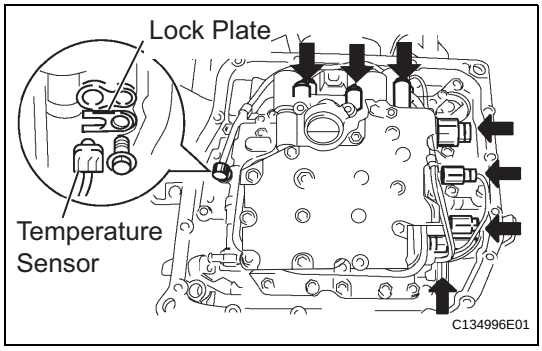

2. CONNECT TRANSMISSION WIRE
(a) Coat the O-ring with ATF.
(b) Apply ATF to the bolt.
(c) Install the ATF temperature sensor with the lock plate and bolt.
Torque: 6.6 N*m (67 kgf*cm, 58 in.*lbf)
(d) Connect the 7 shift solenoid valve connectors.

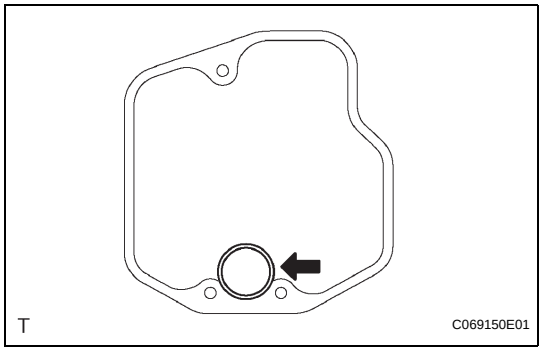

3. INSTALL VALVE BODY OIL STRAINER ASSEMBLY
(a) Coat a new O-ring with ATF.
(b) Install the O-ring to the oil strainer.
(c) Apply ATF to the 3 bolts.

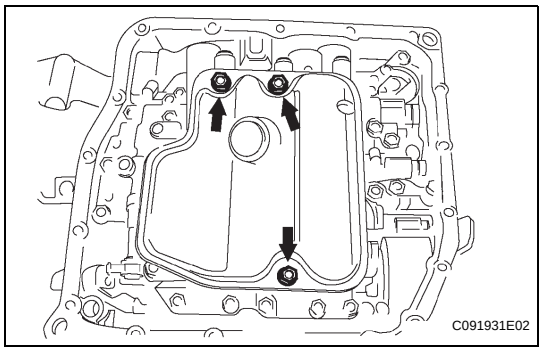

(d) Install the oil strainer with the 3 bolts.
Torque: 11 N*m (112 kgf*cm, 8 ft.*lbf)

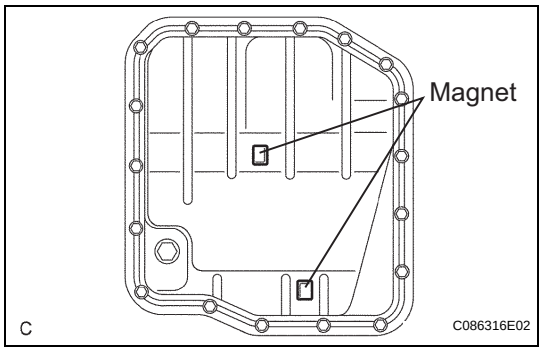

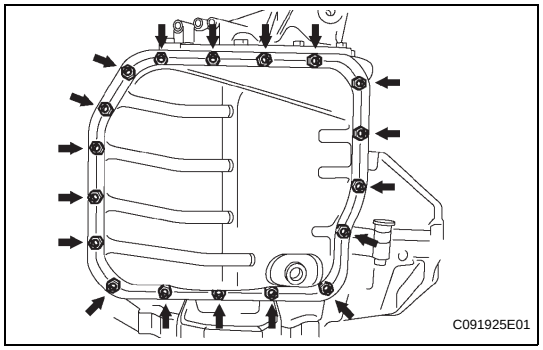

4. INSTALL AUTOMATIC TRANSAXLE OIL PAN SUB-ASSEMBLY

(a) Install the 2 magnets in the oil pan.

(b) Install a new gasket and the oil pan with the 18 bolts.
Torque: 7.6 N*m (77 kgf*cm, 67 in.*lbf)

5. INSTALL NO. 1 ENGINE UNDER COVER

6. CONNECT CABLE TO NEGATIVE BATTERY TERMINAL

7. ADD AUTOMATIC TRANSAXLE FLUID
Fluid type:
Toyota Genuine ATF WS

8. INSPECT TRANSAXLE FLUID LEVEL

(a) Inspect the fluid level (see page AX-126).

9. PERFORM RESET MEMORY

(a) Perform the RESET MEMORY procedures (A/T initialization) (see page AX-20).

VALVE BODY ASSEMBLY

COMPONENTS

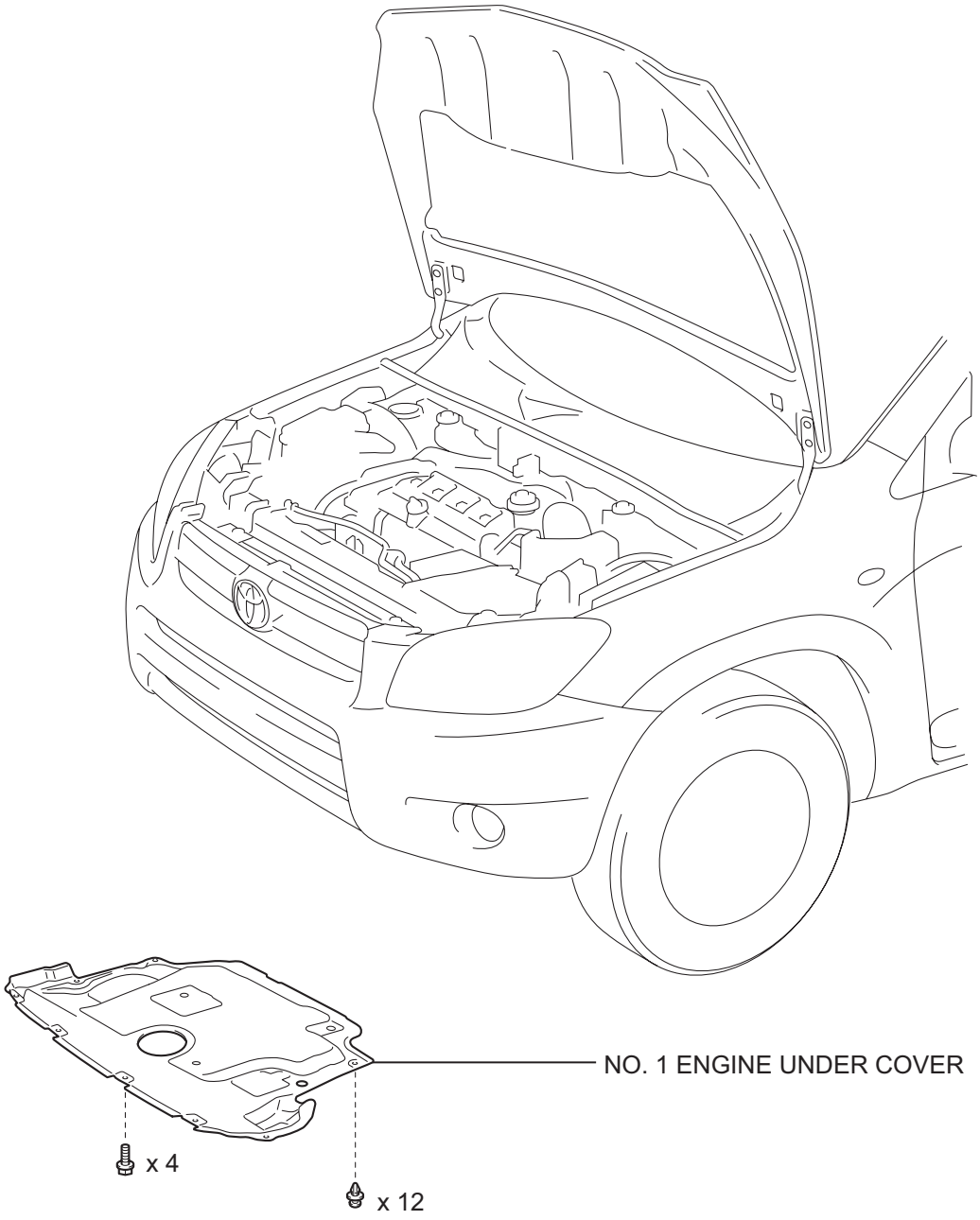

Y

C138664E01

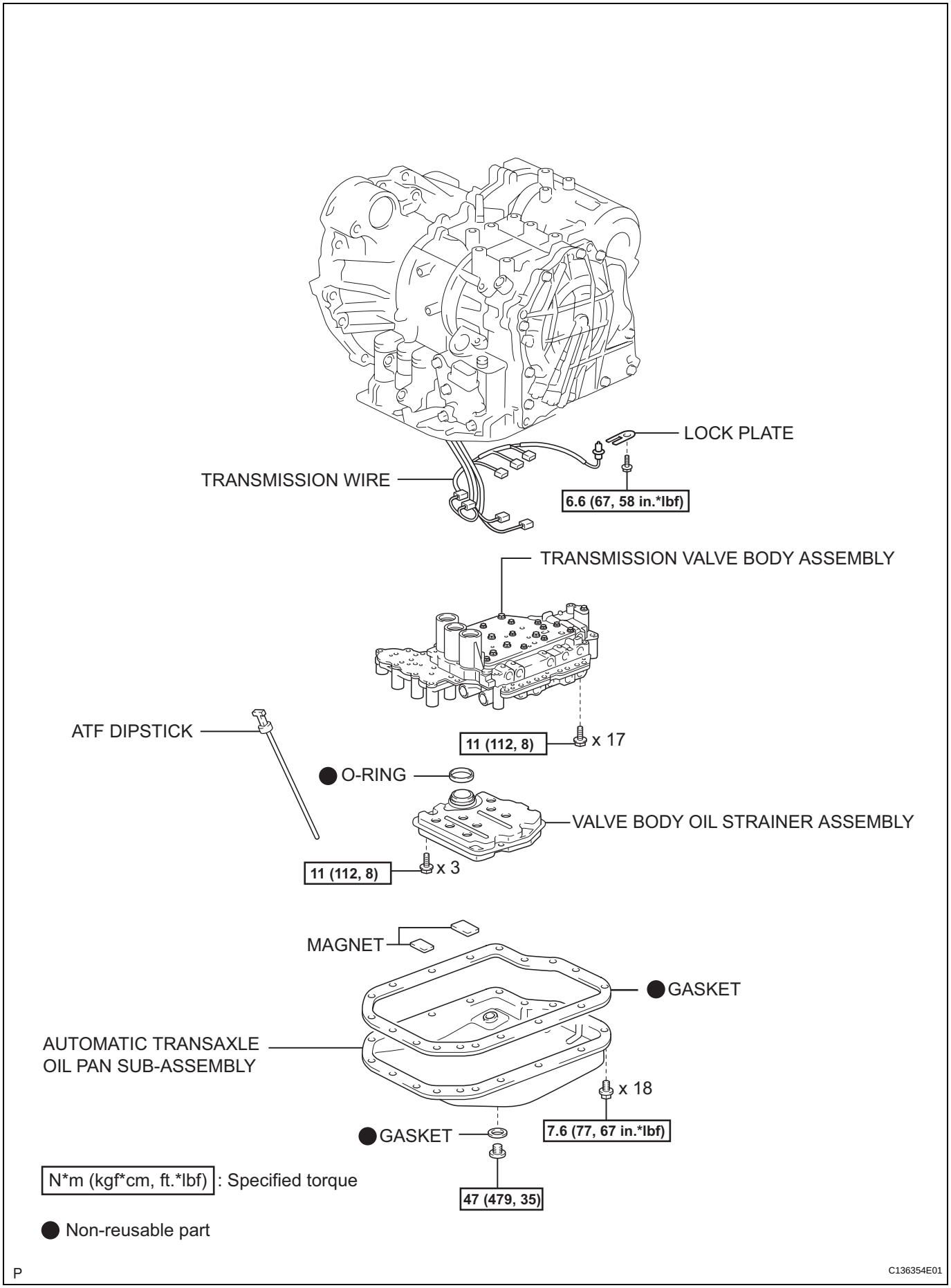
LOCK PLATE
TRANSMISSION WIRE
6.6 (67, 58 in.*lbf)
TRANSMISSION VALVE BODY ASSEMBLY
ATF DIPSTICK
11 (112, 8)
x 17
O-RING
VALVE BODY OIL STRAINER ASSEMBLY
11 (112, 8)
x 3
MAGNET
GASKET
AUTOMATIC TRANSAXLE
OIL PAN SUB-ASSEMBLY
x 18
GASKET
7.6 (77, 67 in.*lbf)
47 (479, 35)
N*m (kgf*cm, ft.*lbf) : Specified torque
Non-reusable part
P
C136354E01

VALVE BODY

COMPONENTS

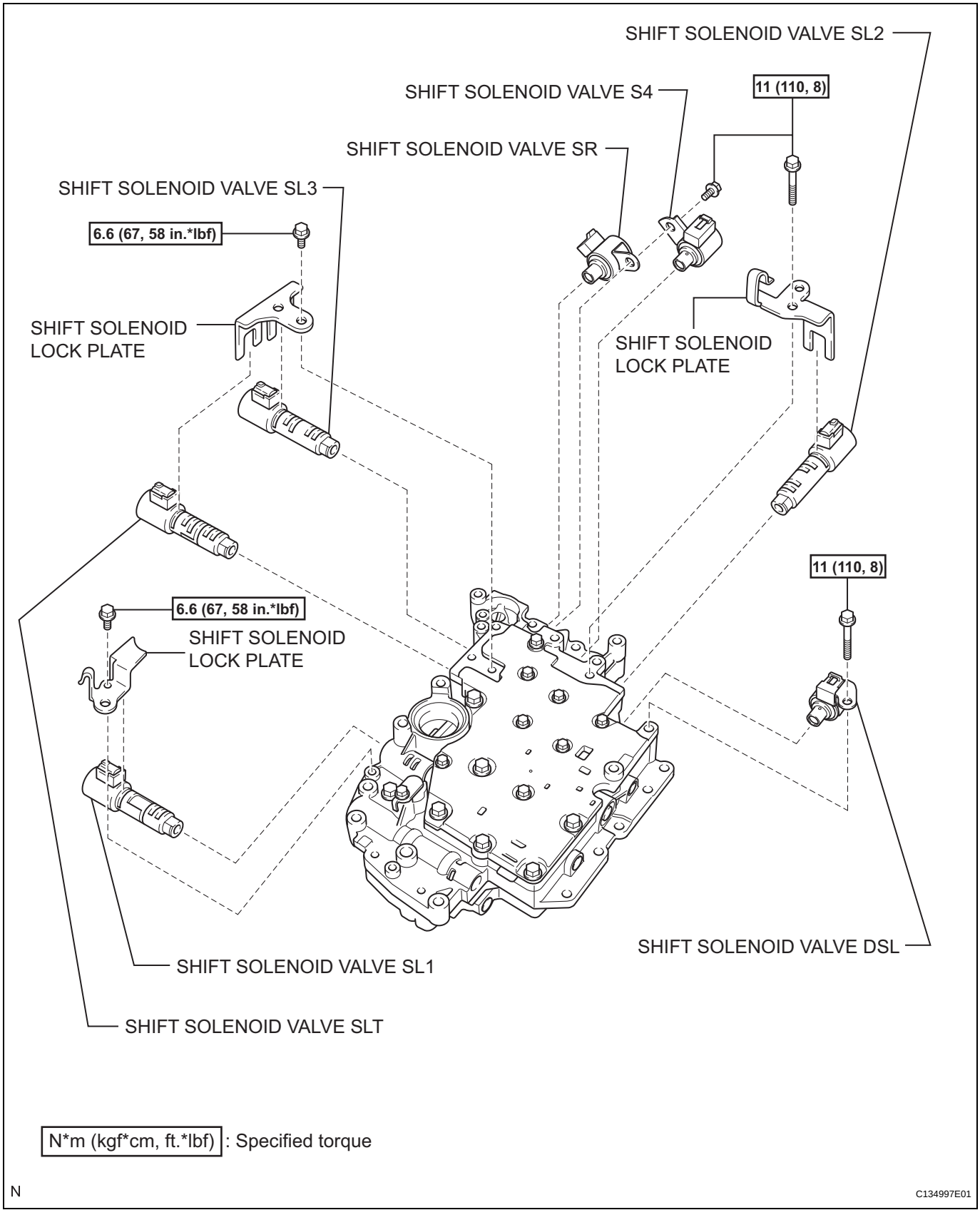

N*m (kgf*cm, ft.*lbf) : Specified torque

AX

N

C134997E01

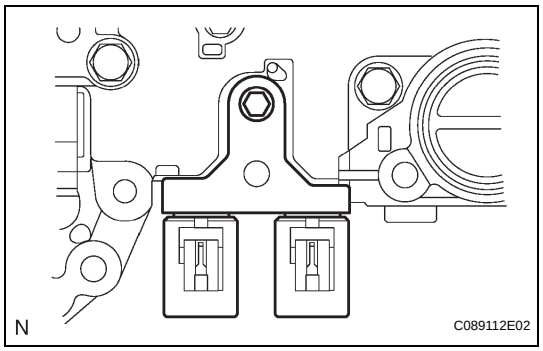

DISASSEMBLY

1. REMOVE SHIFT SOLENOID VALVE SLT AND SL3

(a) Remove the bolt, lock plate and shift solenoid valve SL3 and SLT from the valve body.

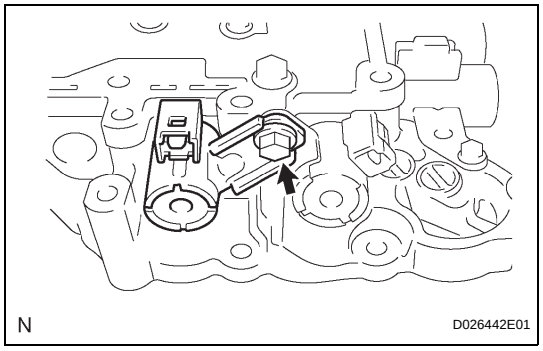

2. REMOVE SHIFT SOLENOID VALVE S4

(a) Remove the bolt and shift solenoid valve S4 from the valve body.

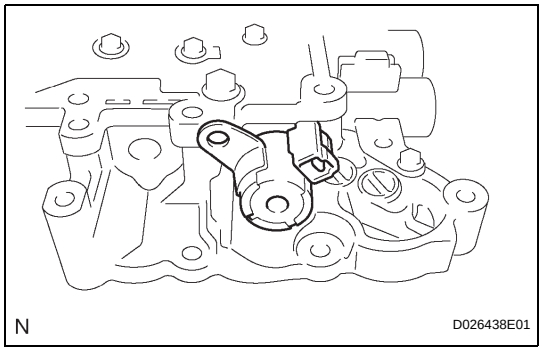

3. REMOVE SHIFT SOLENOID VALVE SR

(a) Remove the shift solenoid valve SR from the valve body.

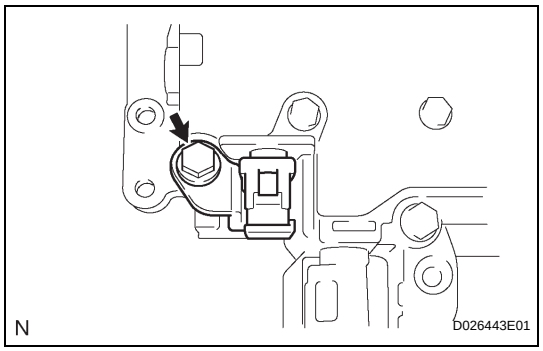

4. REMOVE SHIFT SOLENOID VALVE DSL

(a) Remove the bolt and shift solenoid valve DSL from the valve body.

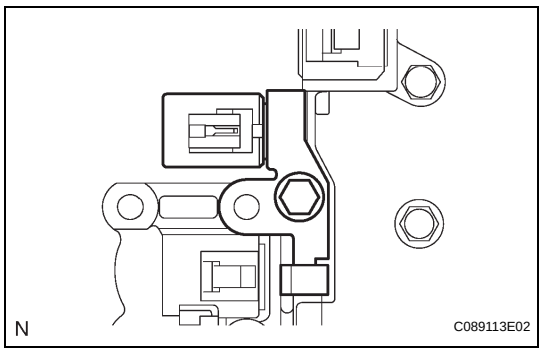

5. REMOVE SHIFT SOLENOID VALVE SL2

(a) Remove the bolt, lock plate and shift solenoid valve SL2 from the valve body.

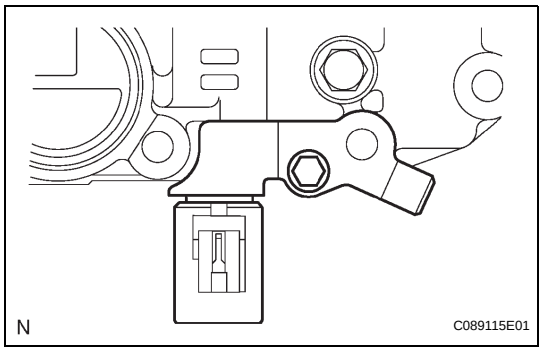

6. REMOVE SHIFT SOLENOID VALVE SL1

(a) Remove the bolt, lock plate and shift solenoid valve SL1 from the valve body.

REASSEMBLY

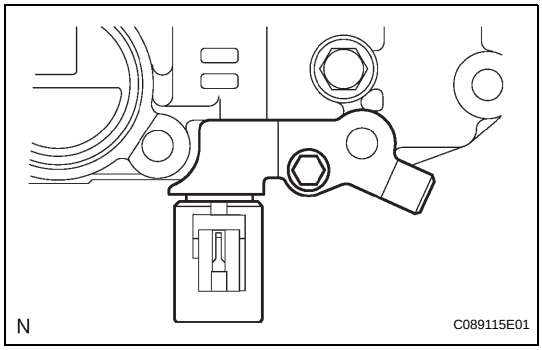

1. INSTALL SHIFT SOLENOID VALVE SL1

(a) Install the shift solenoid valve SL1 and lock plate to the valve body with the bolt.
Torque: 6.6 N*m (67 kgf*cm, 58 in.*lbf)

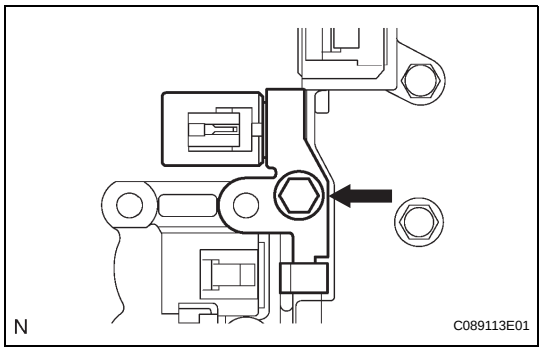

2. INSTALL SHIFT SOLENOID VALVE SL2

(a) Install the shift solenoid valve SL2 and lock plate to the valve body with the bolt.
Torque: 11 N*m (110 kgf*cm, 8 ft.*lbf)

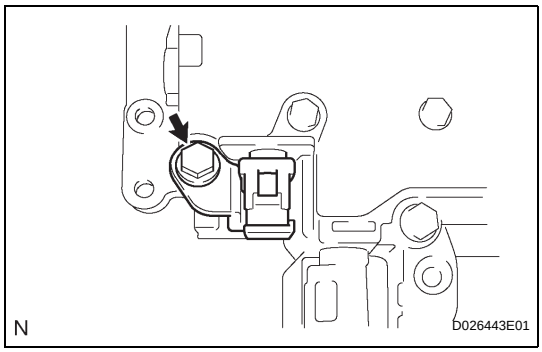

3. INSTALL SHIFT SOLENOID VALVE DSL

(a) Install the shift solenoid valve DSL and lock plate to the valve body with the bolt.
Torque: 11 N*m (110 kgf*cm, 8 ft.*lbf)

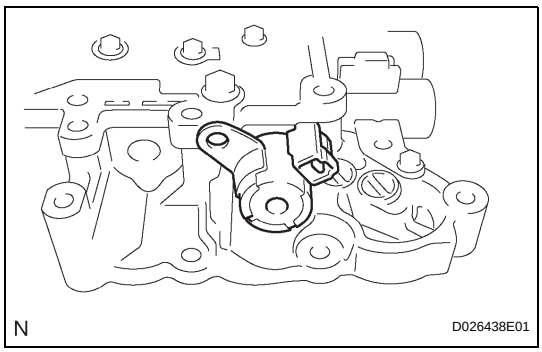

4. INSTALL SHIFT SOLENOID VALVE SR

(a) Install the shift solenoid valve SR to the valve body.

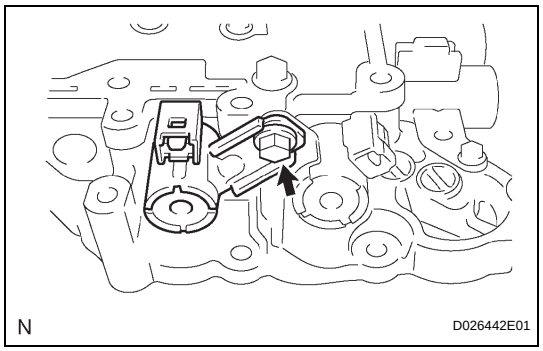

5. INSTALL SHIFT SOLENOID VALVE S4

(a) Install the shift solenoid valve S4 to the valve body with the bolt.
Torque: 11 N*m (110 kgf*cm, 8 ft.*lbf)

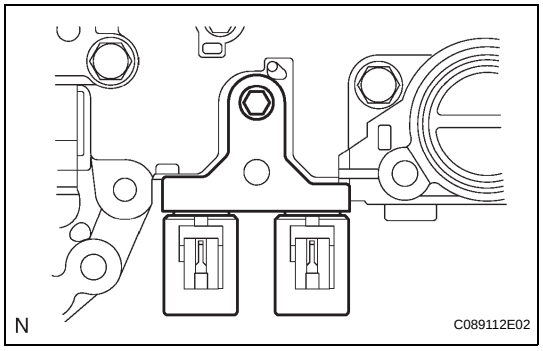

6. INSTALL SHIFT SOLENOID VALVE SL3 AND SLT

(a) Install the shift solenoid valve SL3 and SLT and lock plate to the valve body with the bolt.
Torque: 6.6 N*m (67 kgf*cm, 58 in.*lbf)

REMOVAL

1. DISCONNECT CABLE FROM NEGATIVE BATTERY TERMINAL

CAUTION:

Wait at least 90 seconds after disconnecting the cable from the negative (-) battery terminal to prevent airbag and seat belt pretensioner activation.

2. REMOVE NO. 1 ENGINE UNDER COVER

3. DRAIN AUTOMATIC TRANSAXLE FLUID

(a) Remove the drain plug and gasket, and drain the ATF.

(b) Install a new gasket and the drain plug.

Torque: 47 N*m (479 kgf*cm, 35 ft.*lbf)

4. REMOVE AUTOMATIC TRANSAXLE OIL PAN SUB-ASSEMBLY

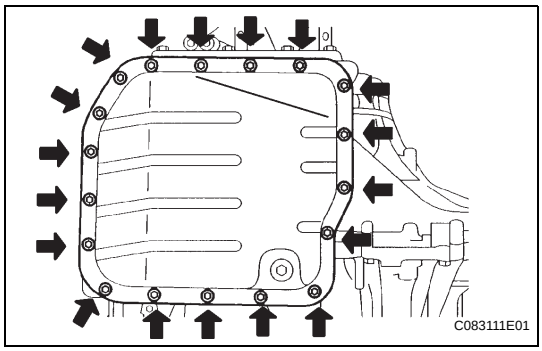

(a) Remove the 18 bolts, oil pan and gasket.

NOTICE:

Some fluid will remain in the oil pan. Carefully remove the oil pan sub-assembly.

(b) Remove the 2 magnets from the oil pan.

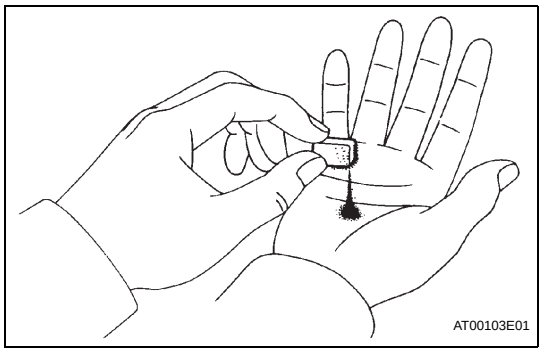

(c) Examine the particles in the pan.

(1) Use the removed magnets to collect any steel chips. Look carefully at the chips and particles in the pan and on the magnet to anticipate what type of wear you will find in the transaxle.
Steel (magnetic): bearing, gear and plate wear
Brass (non-magnetic): bush wear

5. REMOVE VALVE BODY OIL STRAINER ASSEMBLY

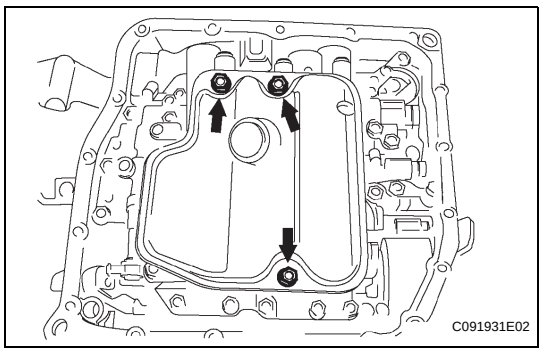

(a) Remove the 3 bolts and oil strainer.

NOTICE:

Be careful as some fluid will come out with the oil strainer.

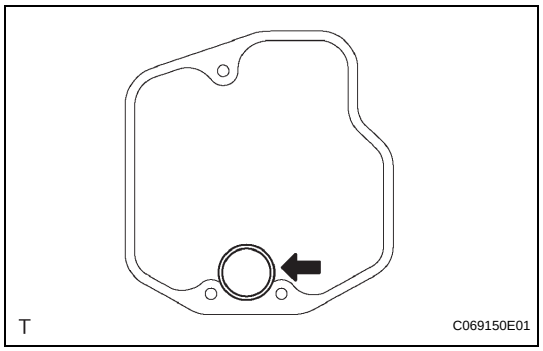

(b) Remove the O-ring from the oil strainer.

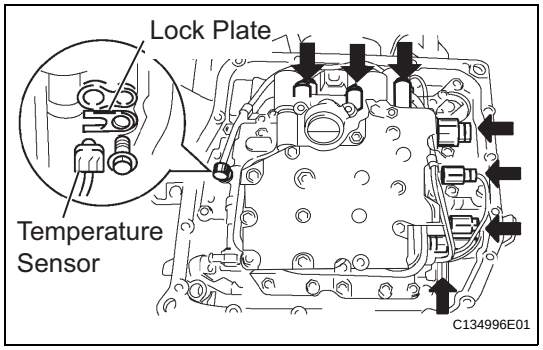

6. DISCONNECT TRANSMISSION WIRE

(a) Disconnect the 7 connectors.

(b) Remove the bolt and lock plate, and remove the ATF temperature sensor.

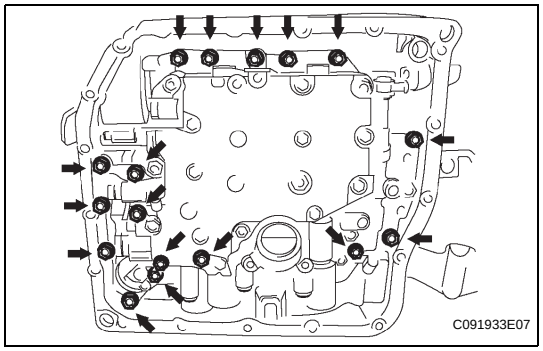

7. REMOVE TRANSMISSION VALVE BODY ASSEMBLY

(a) Support the valve body and remove the 17 bolts and valve body.

NOTICE:

Be careful not to drop the check valve body, spring and accumulator piston.

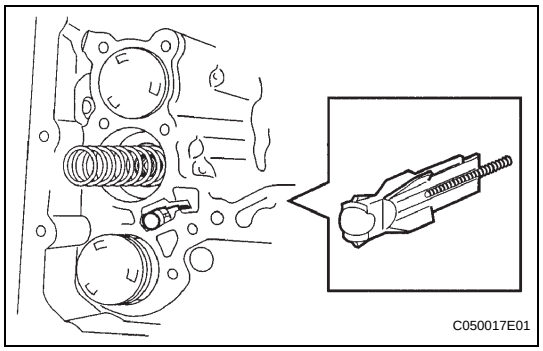

(b) Remove the check ball body and spring.

INSTALLATION

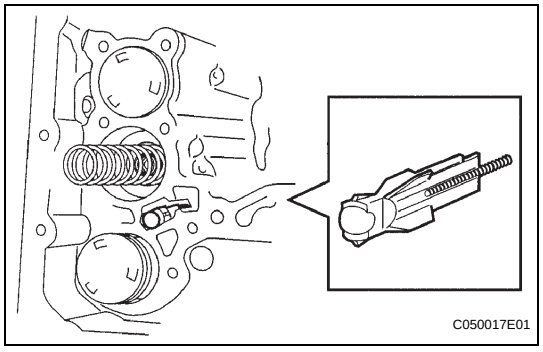

1. INSTALL TRANSMISSION VALVE BODY ASSEMBLY

(a) Install the spring and check ball body.

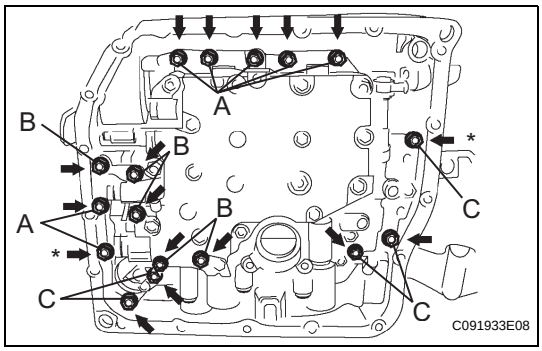

(b) Align the groove of the manual valve with the pin of the lever.
(c) Apply ATF to the 17 bolts.
(d) Install the 17 bolts.
Torque: 11 N*m (112 kgf*cm, 8 ft.*lbf)
NOTICE:
- **Push the valve body against the accumulator piston spring and the check ball body to install it.**
- **Tighten the bolts marked by * in the illustration first temporarily because they are positioning bolts.**

HINT:
Each bolt length is indicated below.
Bolt length:
25 mm (0.984 in.) for bolt A
57 mm (2.244 in.) for bolt B
41 mm (1.614 in.) for bolt C

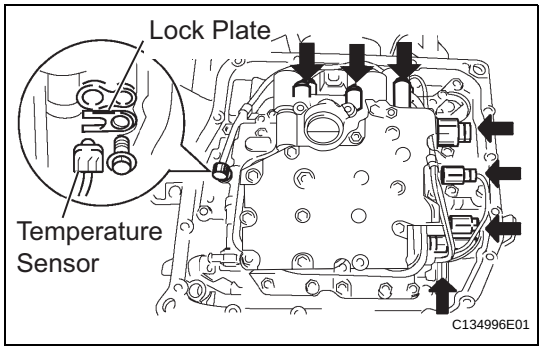

2. CONNECT TRANSMISSION WIRE
(a) Coat the O-ring with ATF.
(b) Apply ATF to the bolt.
(c) Install the ATF temperature sensor with the lock plate and bolt.
Torque: 6.6 N*m (67 kgf*cm, 58 in.*lbf)
(d) Connect the 7 shift solenoid valve connectors.

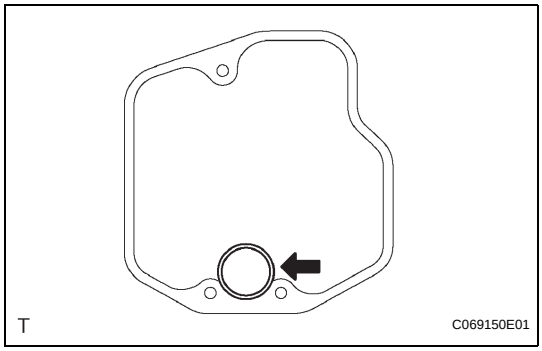

3. INSTALL VALVE BODY OIL STRAINER ASSEMBLY
(a) Coat a new O-ring with ATF.
(b) Install the O-ring to the oil strainer.
(c) Apply ATF to the 3 bolts.

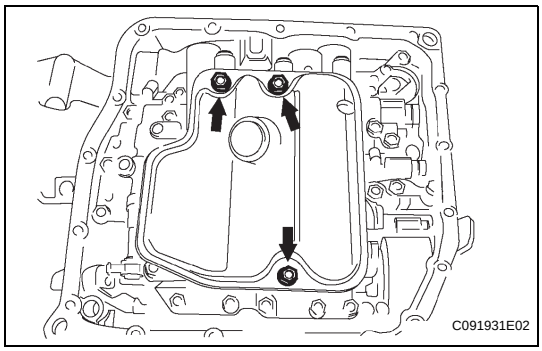

(d) Install the oil strainer with the 3 bolts.
Torque: 11 N*m (112 kgf*cm, 8 ft.*lbf)

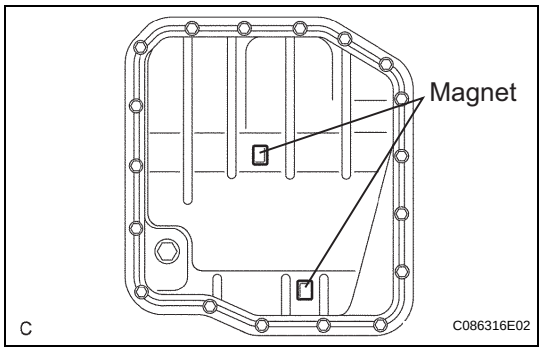

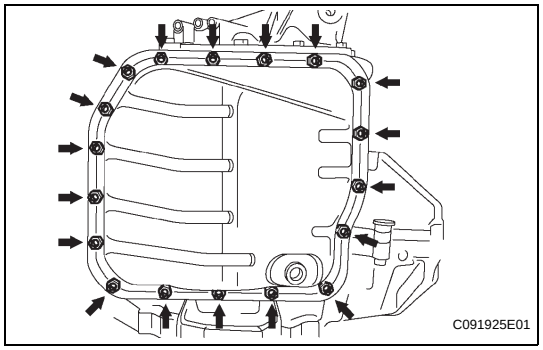

4. INSTALL AUTOMATIC TRANSAXLE OIL PAN SUB-ASSEMBLY

(a) Install the 2 magnets in the oil pan.

(b) Install a new gasket and the oil pan with the 18 bolts.
Torque: 7.6 N*m (77 kgf*cm, 67 in.*lbf)

5. INSTALL NO. 1 ENGINE UNDER COVER

6. CONNECT CABLE TO NEGATIVE BATTERY TERMINAL

7. ADD AUTOMATIC TRANSAXLE FLUID
Fluid type:
Toyota Genuine ATF WS

8. INSPECT TRANSAXLE FLUID LEVEL

(a) Inspect the fluid level (see page AX-126).

9. PERFORM RESET MEMORY

(a) Perform the RESET MEMORY procedures (A/T initialization) (see page AX-20).

VALVE BODY ASSEMBLY

COMPONENTS

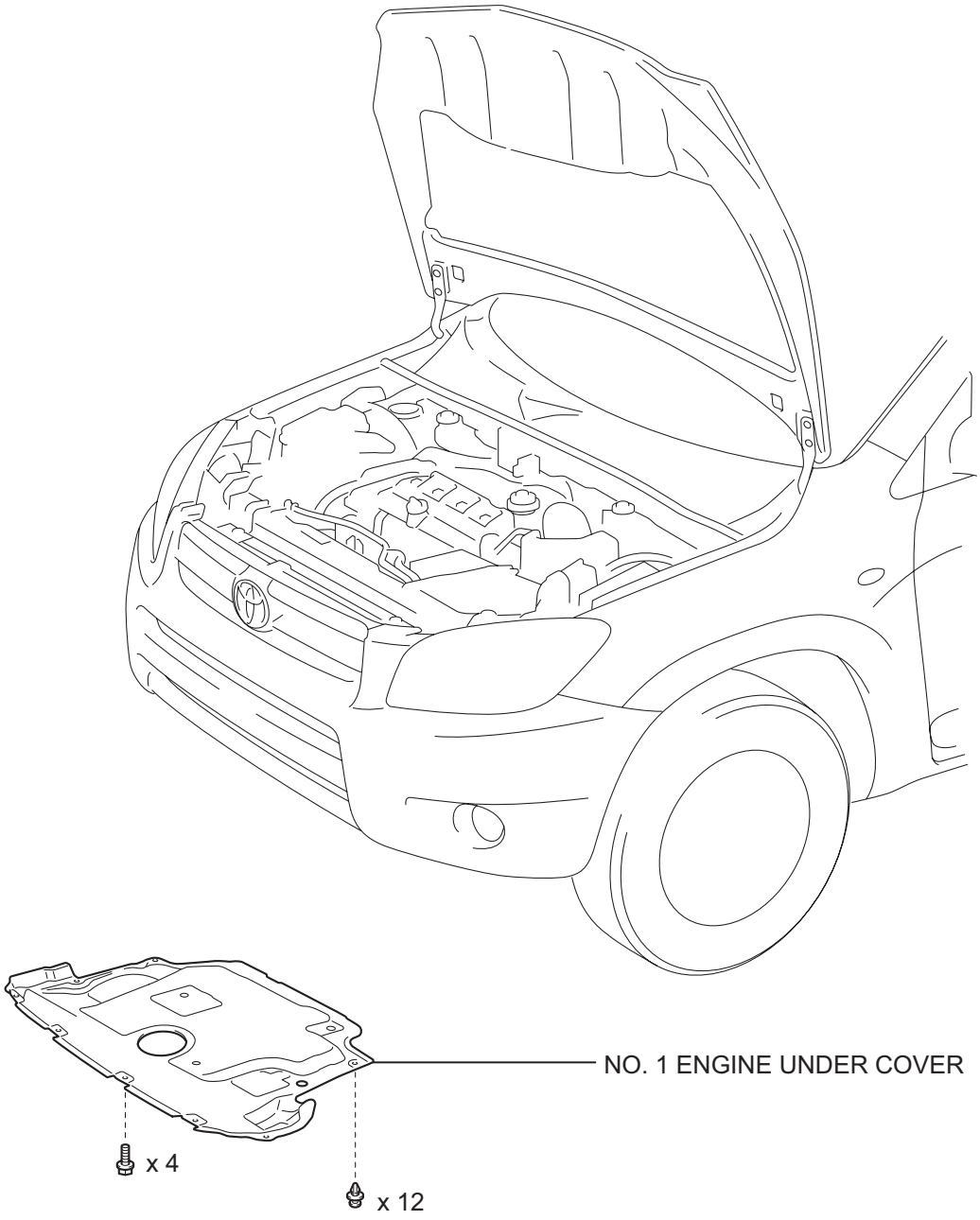

Y

C138664E01

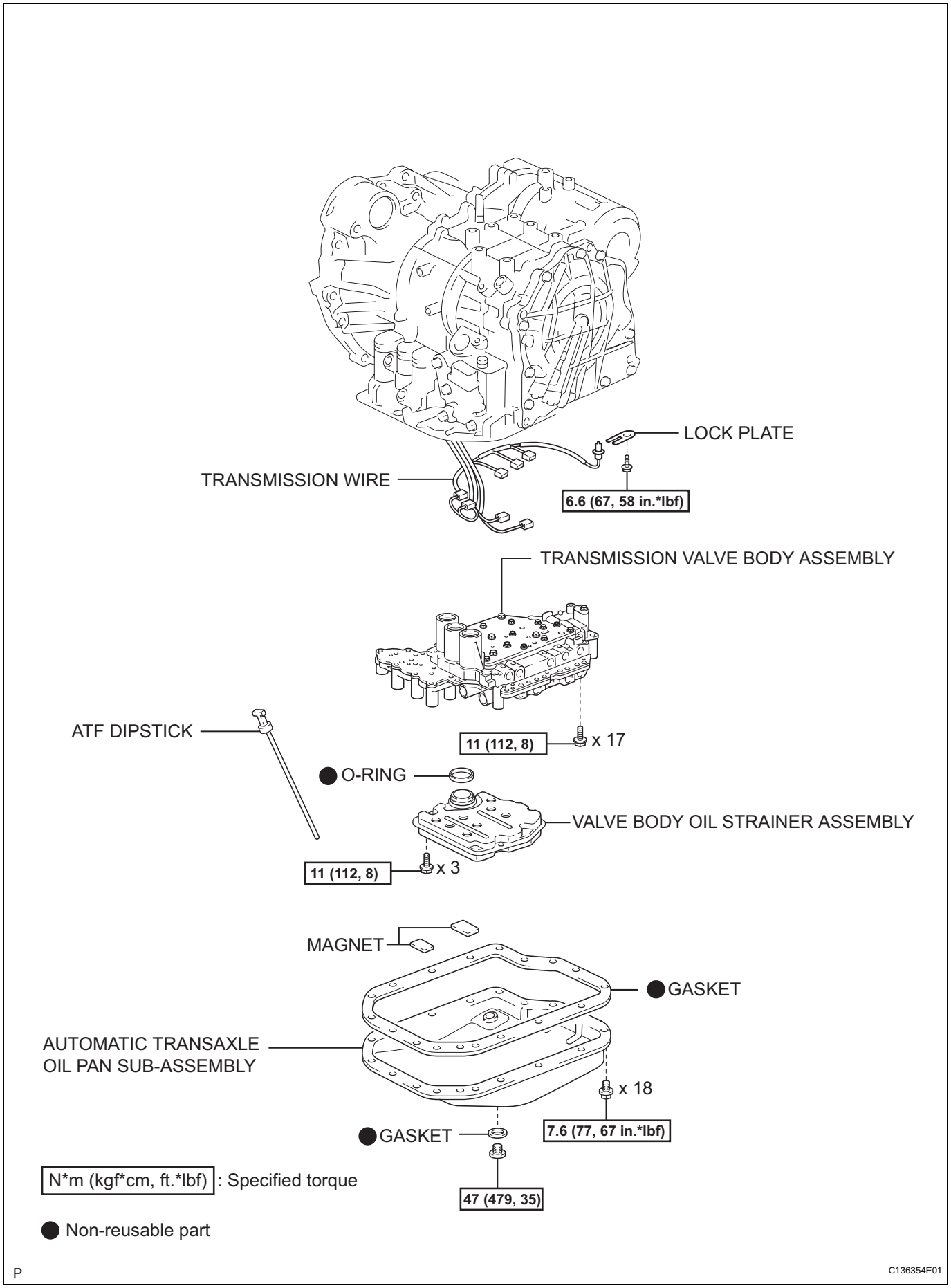
LOCK PLATE
TRANSMISSION WIRE
6.6 (67, 58 in.*lbf)
TRANSMISSION VALVE BODY ASSEMBLY
ATF DIPSTICK
11 (112, 8)
x 17
O-RING
VALVE BODY OIL STRAINER ASSEMBLY
11 (112, 8)
x 3
MAGNET
GASKET
AUTOMATIC TRANSAXLE
OIL PAN SUB-ASSEMBLY
x 18
GASKET
7.6 (77, 67 in.*lbf)
47 (479, 35)
N*m (kgf*cm, ft.*lbf) : Specified torque
Non-reusable part
P
C136354E01

AX

INSTALLATION

1. INSPECT TORQUE CONVERTER CLUTCH ASSEMBLY

(a) Inspect the torque converter clutch (see page AX-179).

2. INSTALL TORQUE CONVERTER CLUTCH ASSEMBLY

(a) Install the torque converter clutch to the automatic transaxle.

(b) Using a vernier caliper, measure dimension A between the transaxle and end surface of the drive plate.

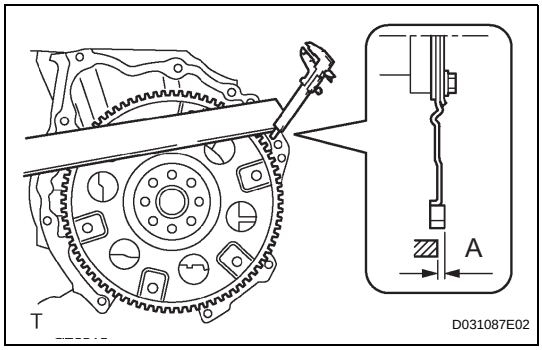

(c) Using a vernier caliper and straightedge, measure dimension B shown in the illustration and check that B is greater than A.
Standard dimension:
A + 1.0 mm (0.039 in.) or more

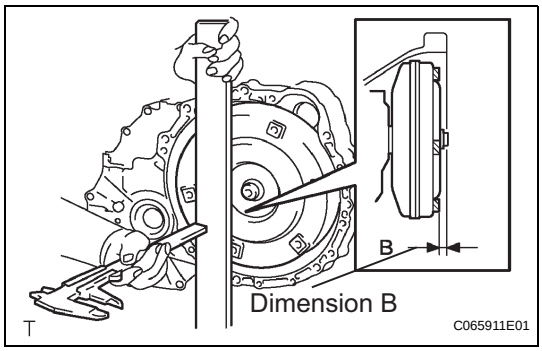

3. INSTALL AUTOMATIC TRANSMISSION CASE PROTECTOR

(a) Install the protector with the 2 bolts.
Torque: 23 N*m (235 kgf*cm, 17 ft.*lbf)

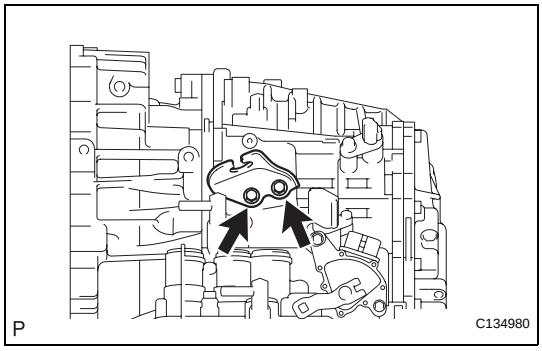

4. INSTALL NO. 1 TRANSMISSION CONTROL CABLE BRACKET

(a) Install the cable bracket with the 2 bolts.
Torque: 12 N*m (122 kgf*cm, 9 ft.*lbf)

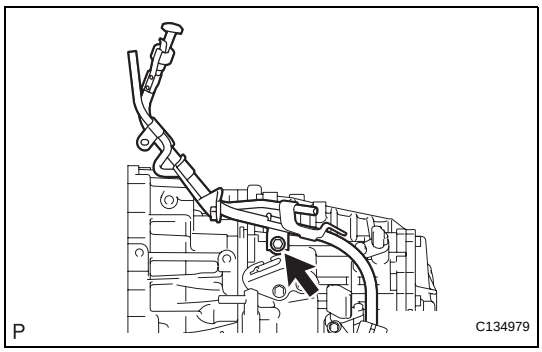

5. INSTALL TRANSMISSION OIL FILLER TUBE SUB-ASSEMBLY

(a) Install the filler tube with the bolt.
Torque: 5.5 N*m (56 kgf*cm, 49 in.*lbf)

(b) Install the ATF dipstick.

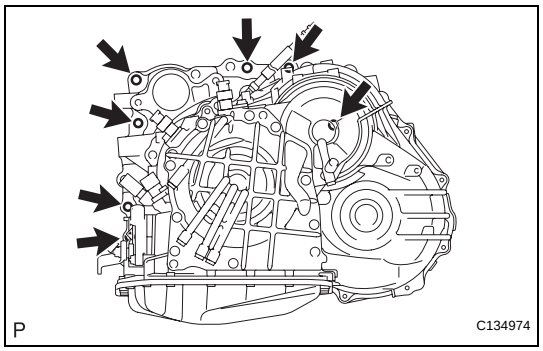

6. INSTALL AUTOMATIC TRANSAXLE ASSEMBLY

(a) Install the automatic transaxle to the engine with the 7 upper side mounting bolts.
Torque: 64 N*m (653 kgf*cm, 47 ft.*lbf)

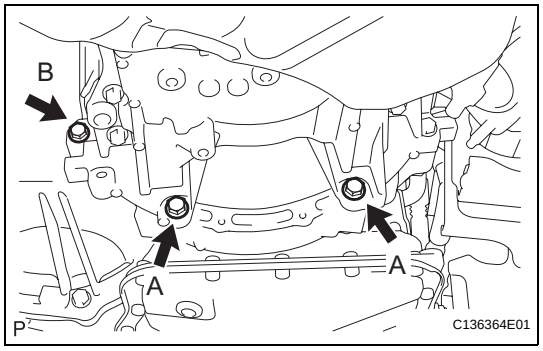

(b) Install the 3 lower side mounting bolts.
Torque: 37 N*m (377 kgf*cm, 27 ft.*lbf) for bolt A
46 N*m (469 kgf*cm, 34 ft.*lbf) for bolt B

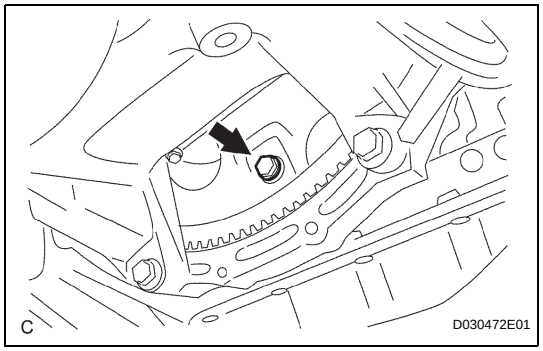

(c) Install the 6 torque converter clutch mounting bolts.
Torque: 41 N*m (418 kgf*cm, 30 ft.*lbf)
HINT:
First install the green colored bolt and then the other 5 bolts.

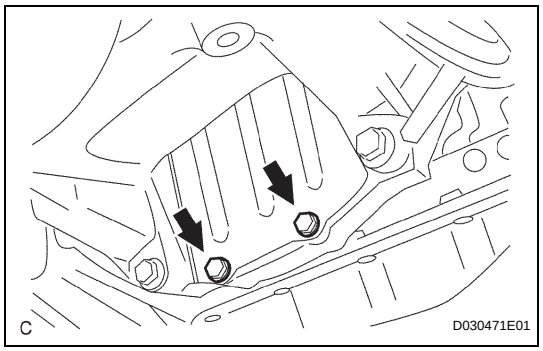

(d) Install the flywheel housing under cover with the 2 bolts.
Torque: 7.8 N*m (80 kgf*cm, 69 in.*lbf)

7. INSTALL TRANSFER ASSEMBLY

(a) Install the transfer (see page TF-75).

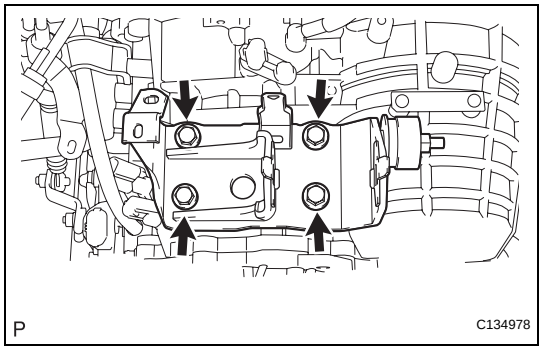

8. INSTALL ENGINE MOUNTING BRACKET LH

(a) Install the mounting bracket with the 4 bolts.
Torque: 64 N*m (653 kgf*cm, 47 ft.*lbf)

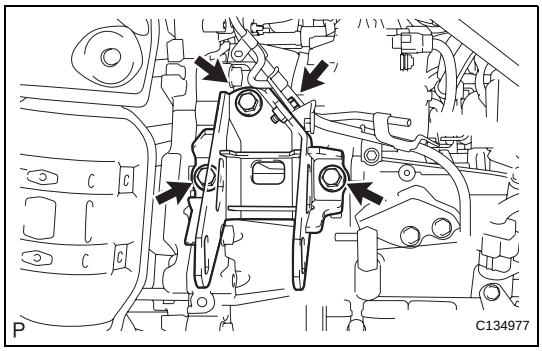

9. INSTALL FRONT ENGINE MOUNTING BRACKET

(a) Install the mounting bracket with the 4 bolts.
Torque: 64 N*m (657 kgf*cm, 47 ft.*lbf)
Torque: 5.5 N*m (56 kgf*cm, 49 in.*lbf) for filler tube bolt

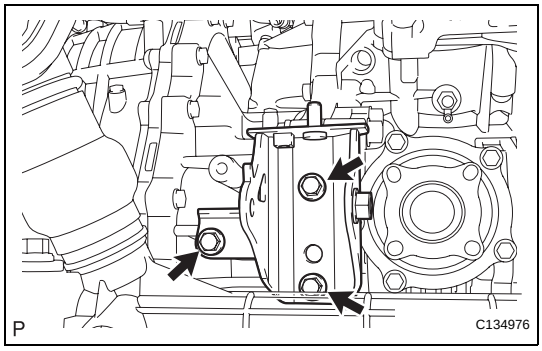

10. INSTALL REAR ENGINE MOUNTING BRACKET

(a) Install the mounting bracket with the 3 bolts.
Torque: 45 N*m (459 kgf*cm, 33 ft.*lbf)

11. INSTALL TRANSMISSION OIL COOLER HOSES AND TUBE

(a) Install the transmission oil cooler hoses and tube (see page AX-152).

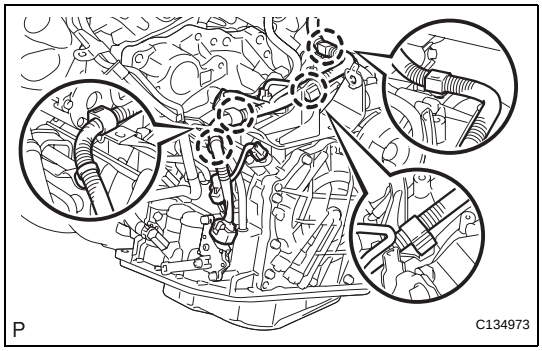

12. CONNECT WIRE HARNESS

(a) Connect the wire harness clamps.
(b) Connect the 2 speed sensor connectors.
(c) Connect the transaxle wire connector.
(d) Connect the park/neutral position switch connector.

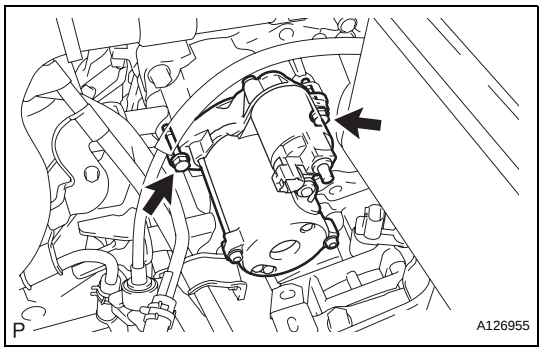

13. INSTALL STARTER ASSEMBLY

(a) Install the starter with the 2 bolts.
Torque: 37 N*m (377 kgf*cm, 27 ft.*lbf)
(b) Connect the starter connector.

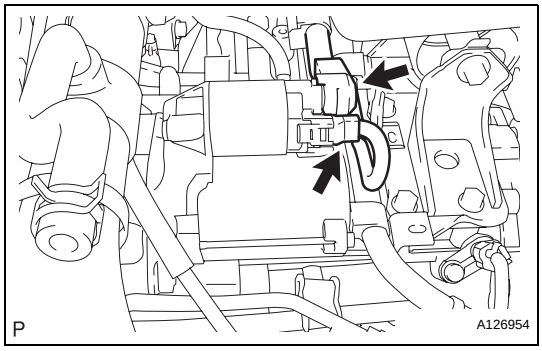

(c) Install the terminal nut and cover the nut with the cap.
Torque: 9.8 N*m (100 kgf*cm, 88 in.*lbf)

14. INSTALL ENGINE ASSEMBLY WITH TRANSAXLE

(a) Install the engine with transaxle (see page EM-31).

15. ADD AUTOMATIC TRANSAXLE FLUID
Fluid type:
Toyota Genuine ATF WS

16. INSPECT AUTOMATIC TRANSAXLE FLUID

(a) Inspect the automatic transaxle fluid (see page AX-126).

17. PERFORM RESET MEMORY

(a) Perform the RESET MEMORY procedures (A/T initialization) (see page AX-20).

AUTOMATIC TRANSAXLE ASSEMBLY

COMPONENTS

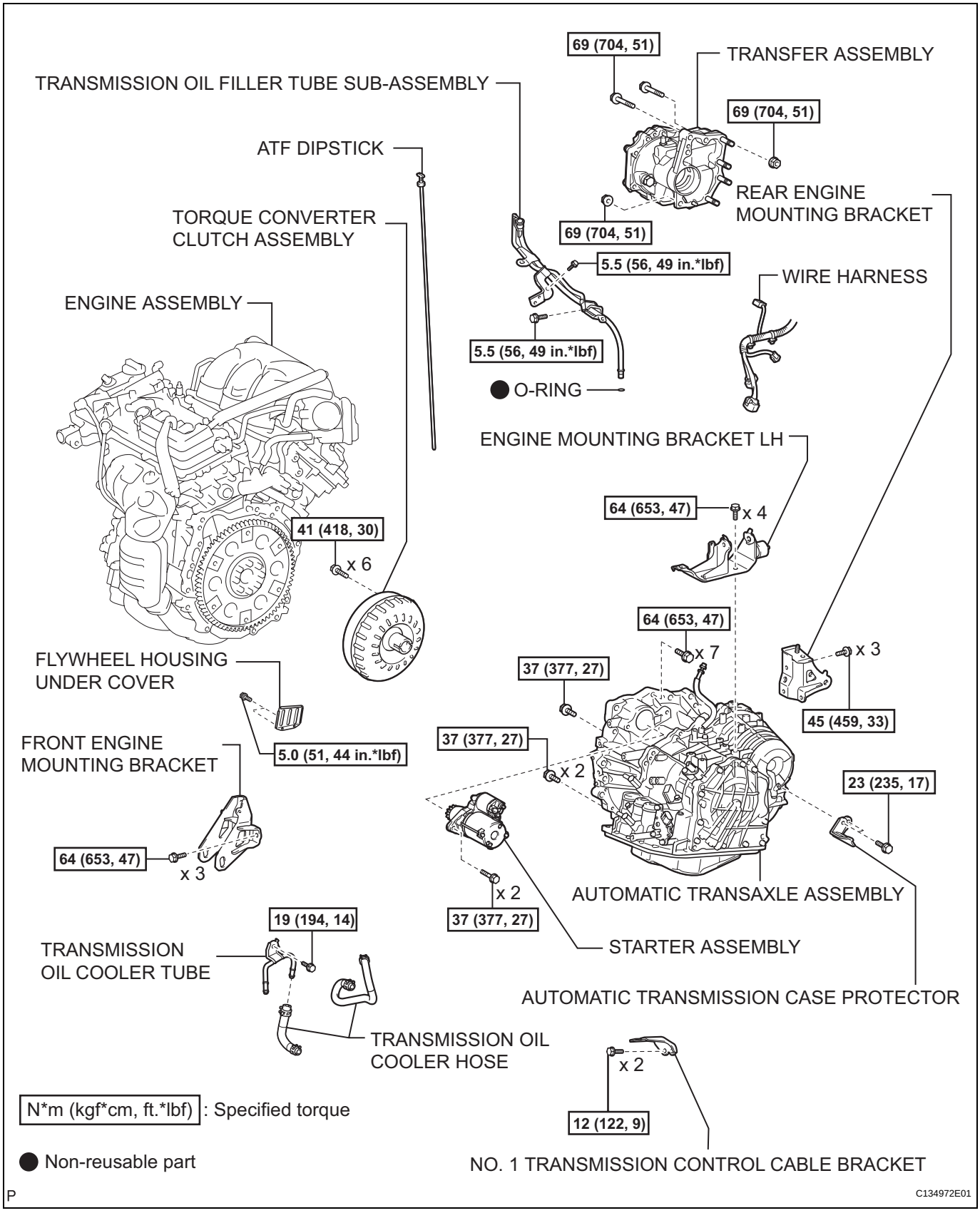

REMOVAL

1. REMOVE ENGINE ASSEMBLY WITH TRANSAXLE

(a) Remove the engine with transaxle (see page EM-21).

2. DRAIN AUTOMATIC TRANSAXLE FLUID

(a) Remove the drain plug and gasket, and drain the ATF.

(b) Install a new gasket and the drain plug.
Torque: 47 N*m (479 kgf*cm, 35 ft.*lbf)

3. REMOVE STARTER ASSEMBLY

(a) Disconnect the starter connector.

(b) Open the terminal cap, and remove the nut and disconnect the starter wire.

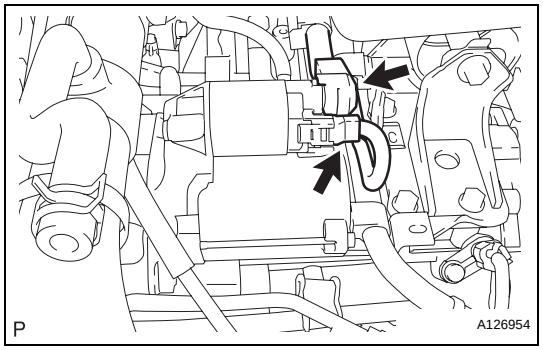

(c) Remove the 2 bolts and starter.

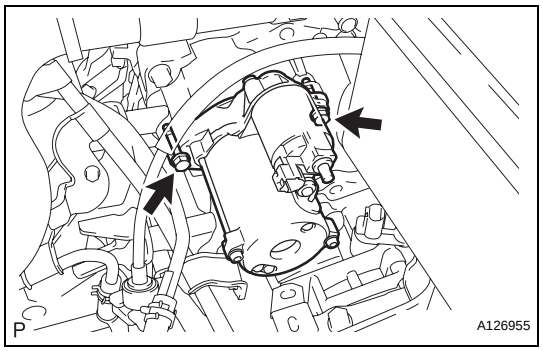

4. DISCONNECT WIRE HARNESS

(a) Disconnect the park/neutral position switch connector.

(b) Disconnect the transaxle wire connector.

(c) Disconnect the 2 speed sensor connectors.

(d) Disconnect the wire harness clamps.

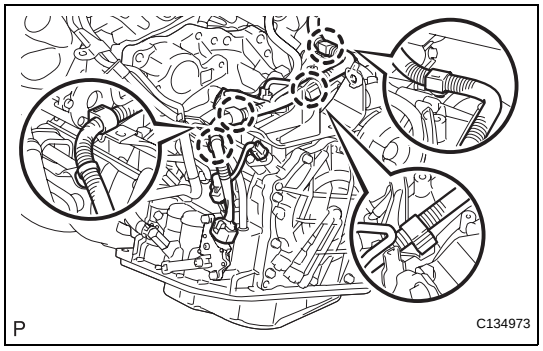

5. REMOVE TRANSMISSION OIL COOLER HOSE AND TUBE

(a) Remove the oil cooler hoses and tube (see page AX-151).

6. REMOVE REAR ENGINE MOUNTING BRACKET

(a) Remove the 3 bolts and mounting bracket.

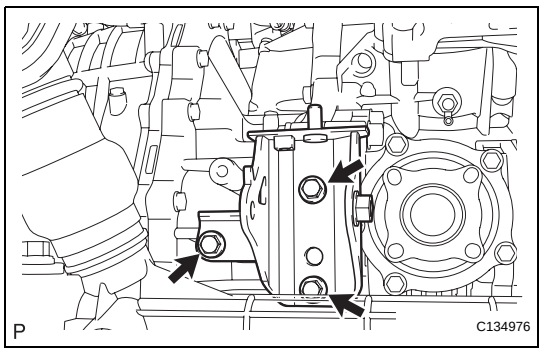

AX

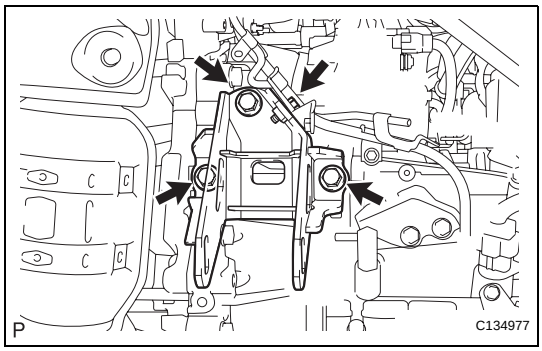

7. REMOVE FRONT ENGINE MOUNTING BRACKET

(a) Remove the 4 bolts and mounting bracket.

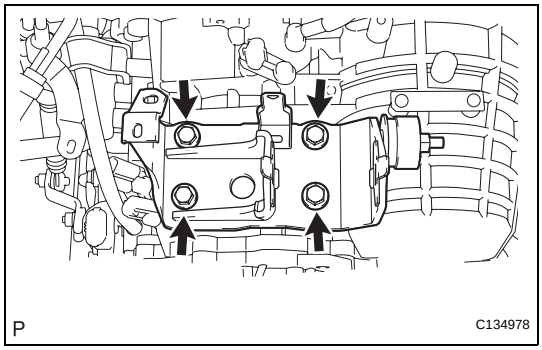

8. REMOVE ENGINE MOUNTING BRACKET LH

(a) Remove the 4 bolts and mounting bracket.

9. REMOVE TRANSFER ASSEMBLY

(a) Remove the transfer (see page TF-59).

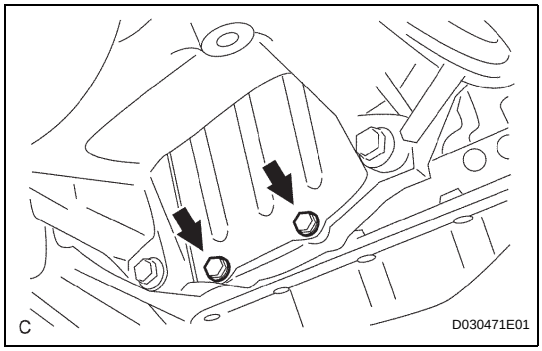

10. REMOVE AUTOMATIC TRANSAXLE ASSEMBLY

(a) Remove the 2 bolts and flywheel housing under cover.

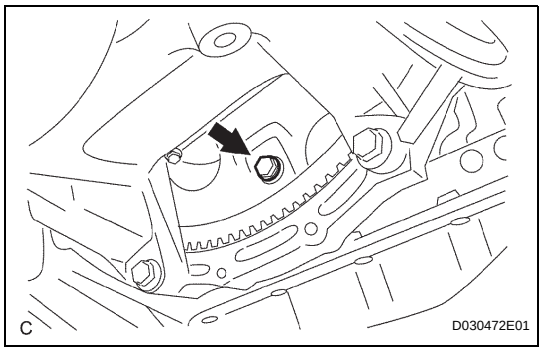

(b) Turn the crankshaft to gain access and remove the 6 bolts while holding the crankshaft pulley bolt with a wrench.

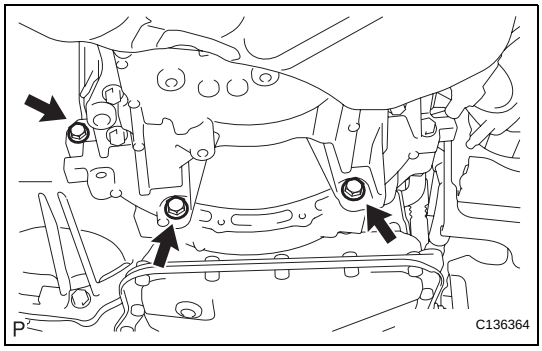

(c) Remove the 3 lower side mounting bolts.

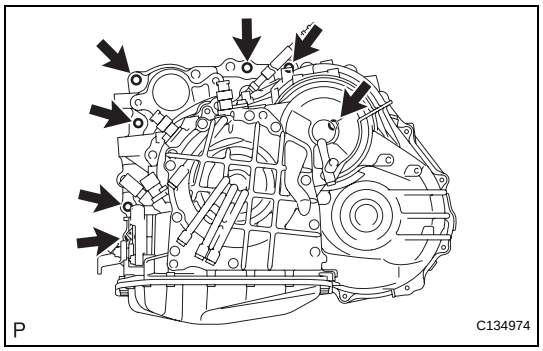

(d) Remove the 7 upper side mounting bolts.
(e) Separate and remove the automatic transaxle.

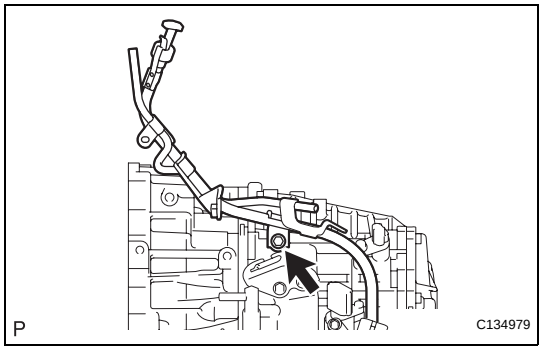

11. REMOVE TRANSMISSION OIL FILLER TUBE SUB-ASSEMBLY

(a) Remove the ATF dipstick.
(b) Remove the bolt and oil filler tube.

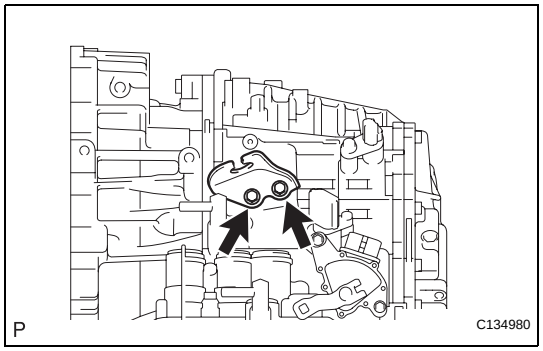

12. REMOVE NO. 1 TRANSMISSION CONTROL CABLE BRACKET

(a) Remove the 2 bolts and cable bracket.

13. REMOVE AUTOMATIC TRANSMISSION CASE PROTECTOR

(a) Remove the 2 bolts and protector.

14. REMOVE TORQUE CONVERTER CLUTCH ASSEMBLY

AUTOMATIC TRANSAXLE FLUID

ON-VEHICLE INSPECTION

1. CHECK FLUID LEVEL

HINT:

Drive the vehicle so that the engine and transaxle are at normal operating temperature.

Fluid temperature:

70 to 80°C (158 to 176°F)

(a) Park the vehicle on a level surface and set the parking brake.

(b) With the engine idling and the brake pedal depressed, move the shift lever to each position from the P to L position, and return it to the P position.

(c) Take out the dipstick and wipe it clean.

(d) Fully push the dipstick back into the pipe.

(e) Take the dipstick out and check that the fluid level is in the HOT range.

If the level is not in the HOT range, add transaxle fluid.

CAUTION:

Wear gloves when working.

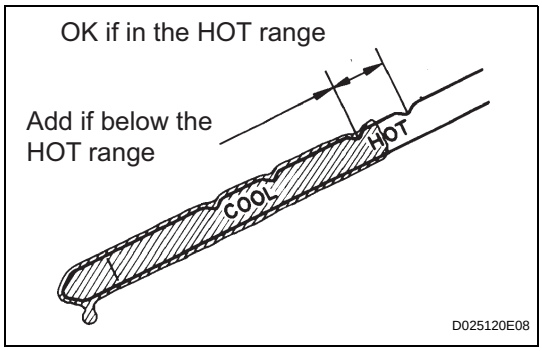

DEFINITION OF TERMS

Term	Definition
Monitor description	Description of what the ECM monitors and how it detects malfunctions (monitoring purpose and its details).
Related DTCs	Diagnostic code.
Typical enabling condition	Preconditions that allow the ECM to detect malfunctions. With all preconditions satisfied, the ECM sets the DTC when the monitored value(s) exceeds the malfunction threshold(s).
Sequence of operation	The priority order that is applied to monitoring, if multiple sensors and components are used to detect the malfunction. While another sensor is being monitored, the next sensor or component will not be monitored.
Required sensor/Components	The sensors and components that are used by the ECM to detect malfunctions.
Frequency of operation	The number of times that the ECM checks for malfunctions per driving cycle. "Once per driving cycle" means that the ECM detects malfunction only 1 time during a single driving cycle. "Continuous" means that the ECM detects a malfunction every time the enabling condition is met.
Duration	The minimum time that the ECM must sense a continuous deviation in the monitored value(s) before setting a DTC. This timing begins after the "typical enabling conditions" are met.
Malfunction thresholds	Beyond this value, the ECM will conclude that there is a malfunction and set a DTC.
MIL operation	MIL illumination timing after a defect is detected. "Immediate" means that the ECM illuminates the MIL the instant the ECM determines that there is a malfunction. "2 driving cycle" means that the ECM illuminates the MIL if the same malfunction is detected again in the 2nd driving cycle.
Component operating range	Normal operation range of sensors and solenoids under normal driving conditions. Use these ranges as a reference. They cannot be used to judge if a sensor or solenoid is defective or not.

PARTS LOCATION

AX

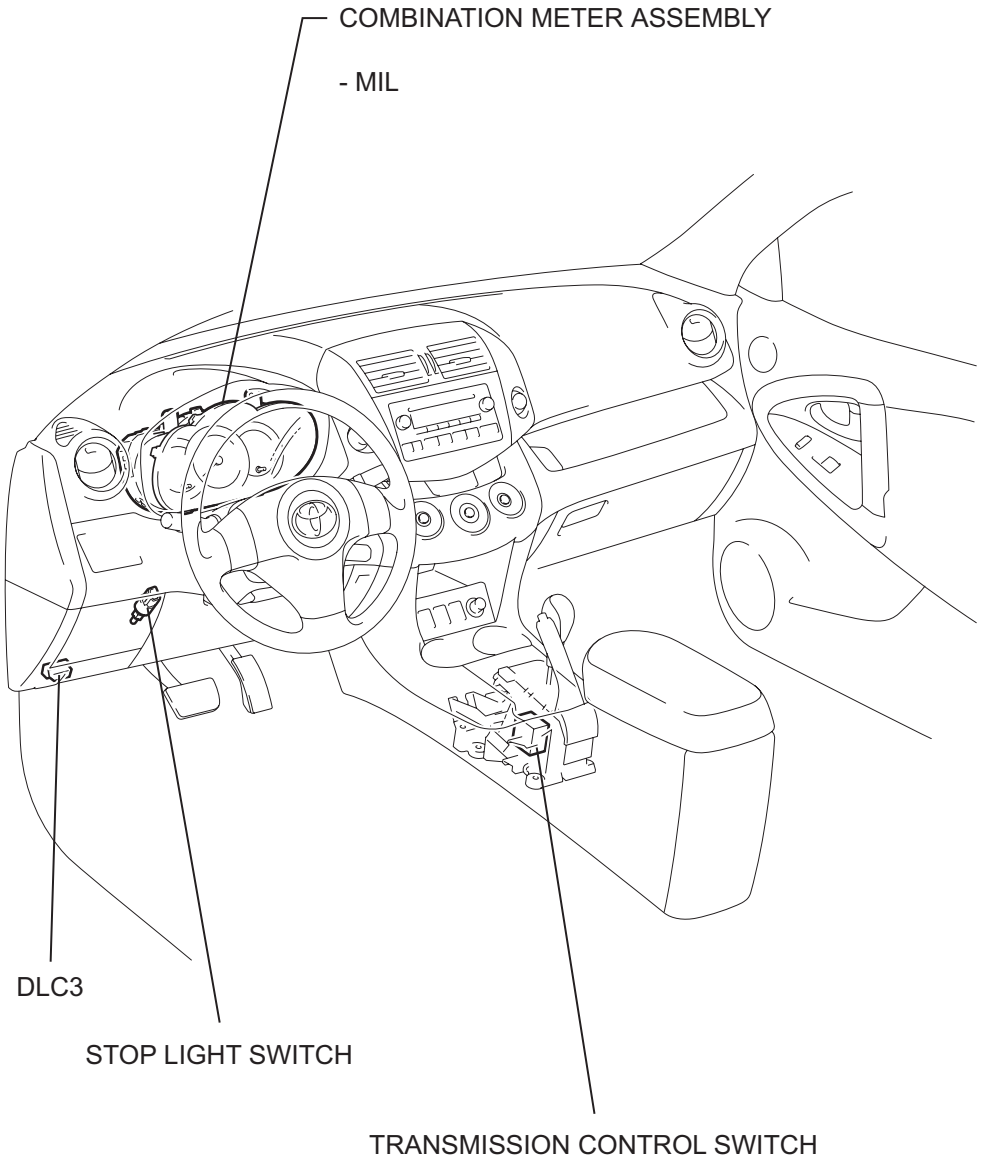

P

C127571E01

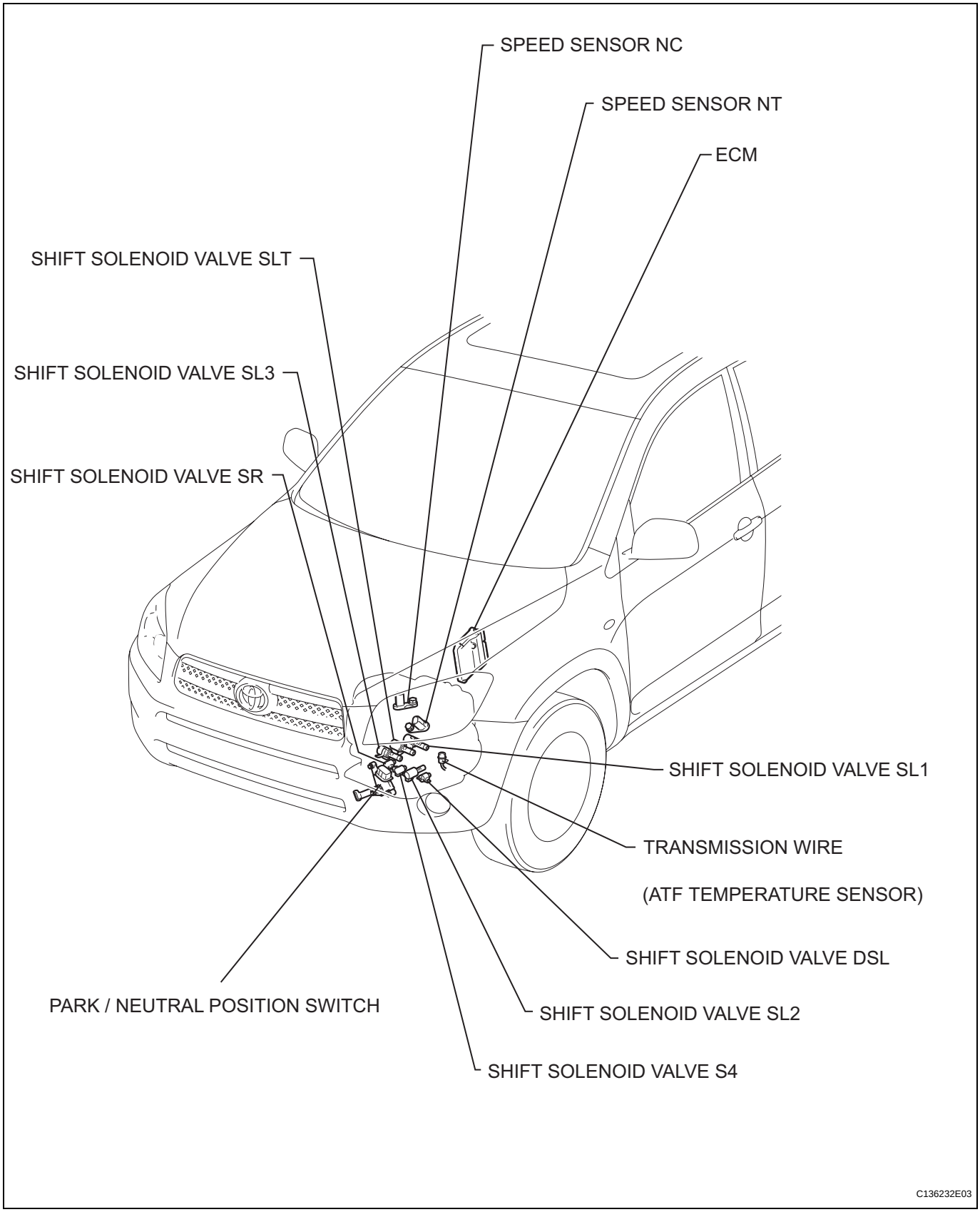
SPEED SENSOR NC
SPEED SENSOR NT
ECM
SHIFT SOLENOID VALVE SLT
SHIFT SOLENOID VALVE SL3
SHIFT SOLENOID VALVE SR
SHIFT SOLENOID VALVE SL1
TRANSMISSION WIRE
(ATF TEMPERATURE SENSOR)
SHIFT SOLENOID VALVE DSL
PARK / NEUTRAL POSITION SWITCH
SHIFT SOLENOID VALVE SL2
SHIFT SOLENOID VALVE S4
C136232E03

SYSTEM DIAGRAM

The configuration of the electronic control system in the U151F automatic transaxle is as shown in the following chart.

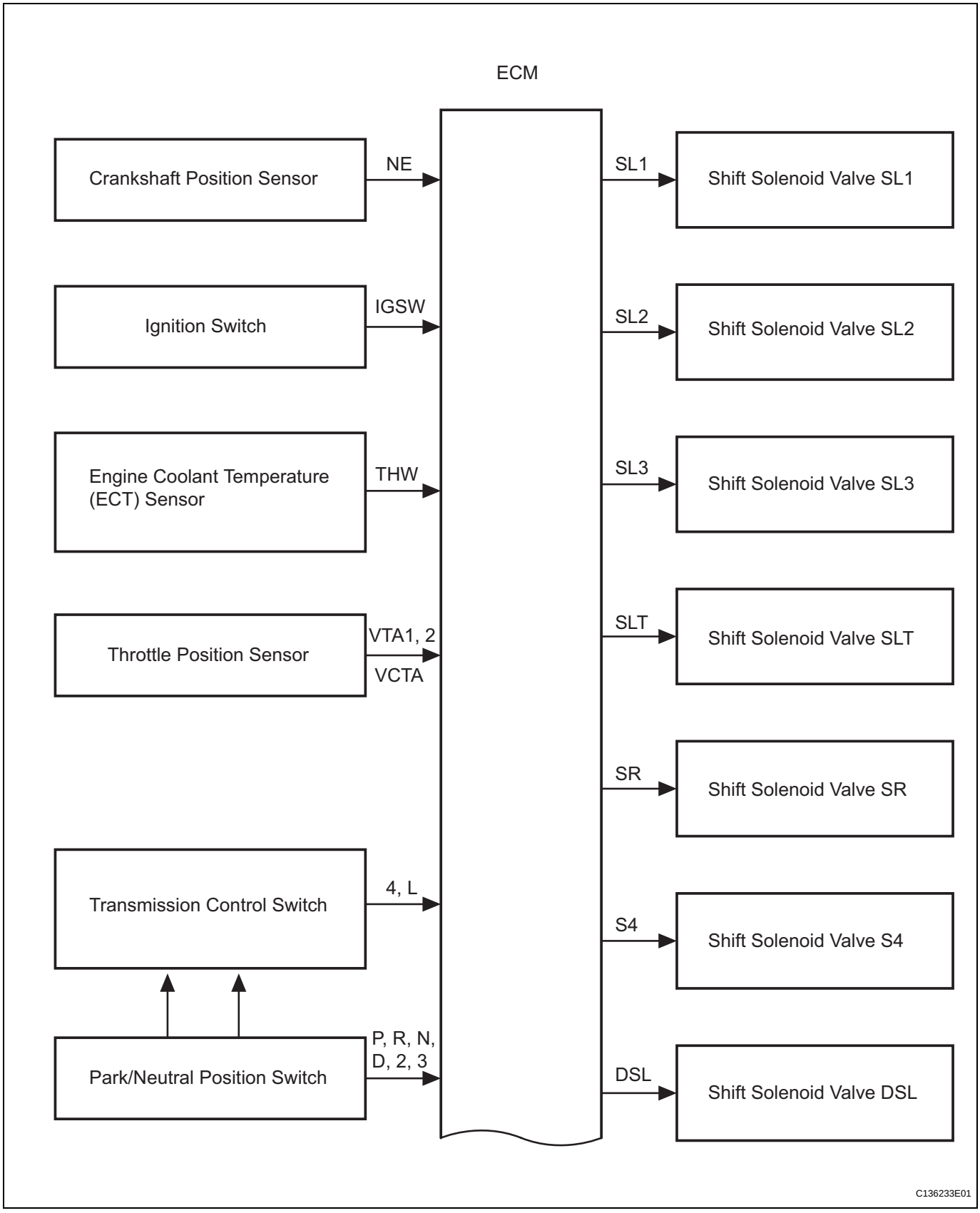

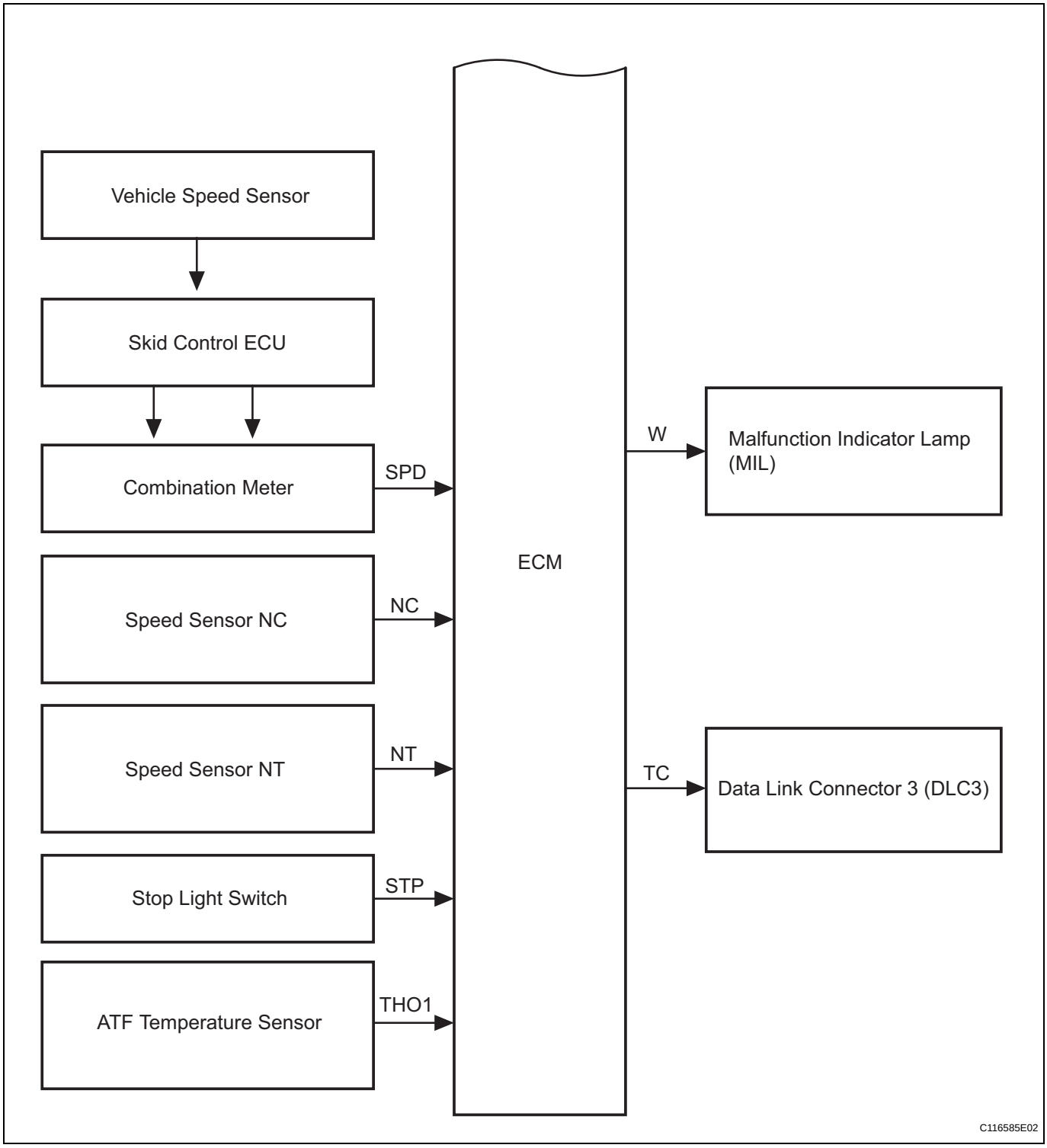
Vehicle Speed Sensor
Skid Control ECU
Combination Meter
Speed Sensor NC
Speed Sensor NT
Stop Light Switch
ATF Temperature Sensor
SPD
NC
NT
STP
THO1
ECM
W
Malfunction Indicator Lamp (MIL)
TC
Data Link Connector 3 (DLC3)
C116585E02

AX

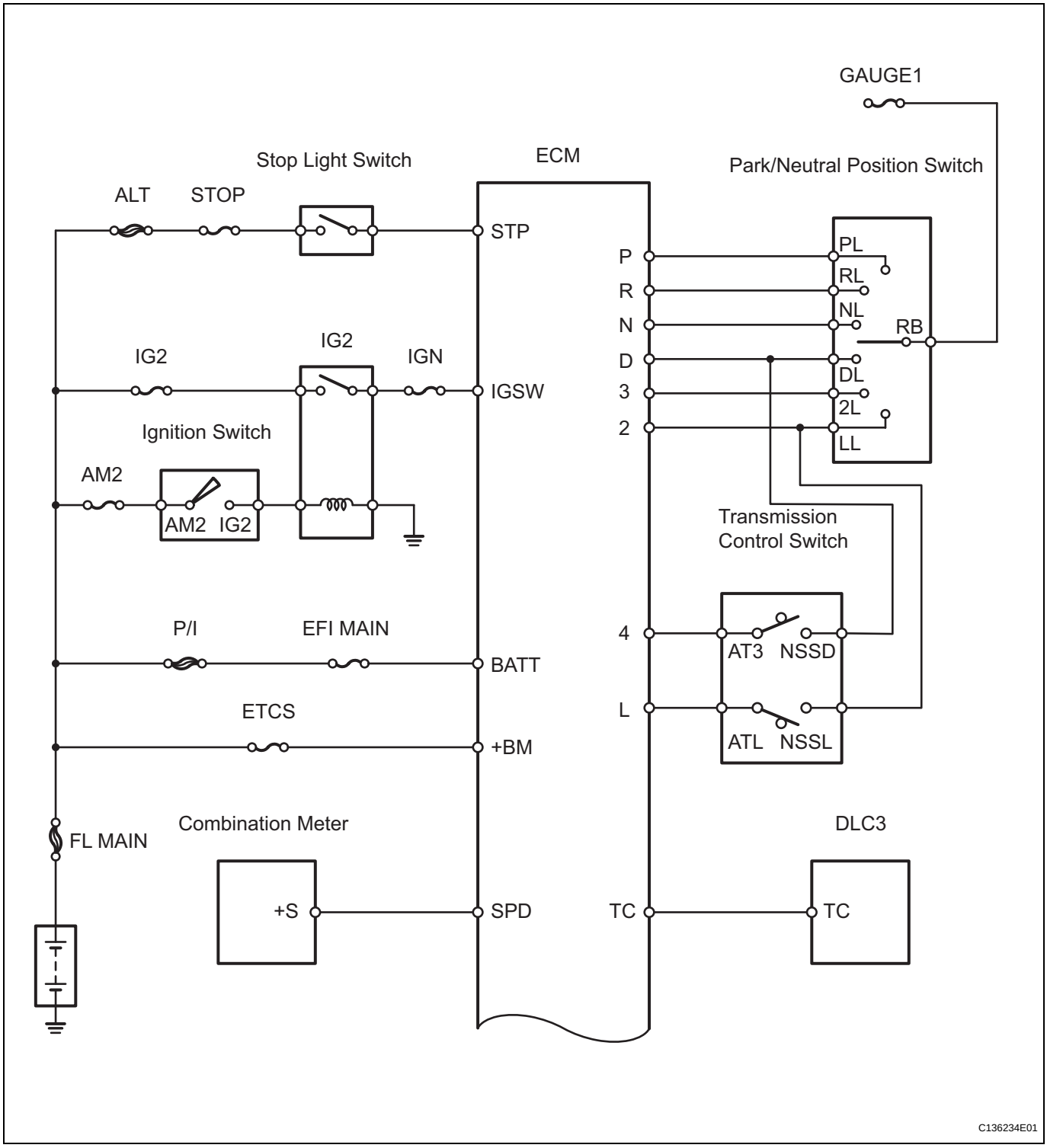
GAUGE1
Stop Light Switch
ECM
Park/Neutral Position Switch
ALT
STOP
STP
P
R
N
D
3
2
PL
RL
NL
RB
DL
2L
LL
IG2
IG2
IGN
IGSW
Ignition Switch
AM2
AM2
IG2
Transmission
Control Switch
4
L
AT3
NSSD
ATL
NSSL
P/I
EFI MAIN
BATT
ETCS
+BM
FL MAIN
Combination Meter
DLC3
+S
SPD
TC
TC
C136234E01

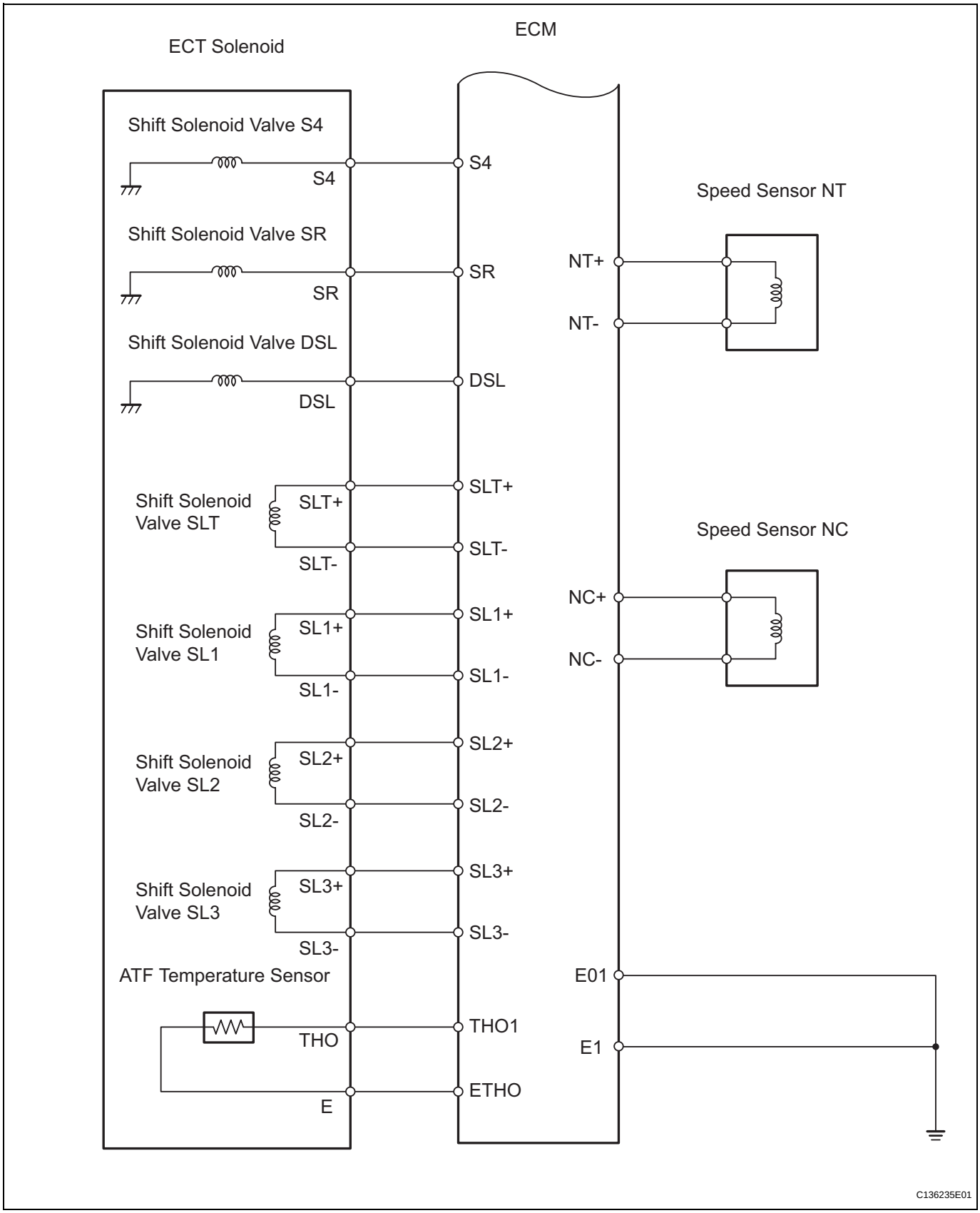
ECT Solenoid
ECM
Shift Solenoid Valve S4
S4
S4
Shift Solenoid Valve SR
SR
SR
Shift Solenoid Valve DSL
DSL
DSL
Shift Solenoid Valve SLT
SLT+
SLT-
SLT+
SLT-
Shift Solenoid Valve SL1
SL1+
SL1-
SL1+
SL1-
Shift Solenoid Valve SL2
SL2+
SL2-
SL2+
SL2-
Shift Solenoid Valve SL3
SL3+
SL3-
SL3+
SL3-
ATF Temperature Sensor
THO
E
THO1
ETHO
Speed Sensor NT
NT+
NT-
Speed Sensor NC
NC+
NC-
E01
E1
C136235E01

AX

SYSTEM DESCRIPTION

1. SYSTEM DESCRIPTION

(a) The Electronic Controlled Automatic Transaxle (ECT) is an automatic transaxle that electronically controls shift timing using the Engine Control Module (ECM). The ECM detects electrical signals that indicate engine and driving conditions, and controls the shift point based on driver habits and road conditions. As a result, fuel efficiency and power transaxle performance are improved.
Shift shock is reduced by controlling the engine and transaxle simultaneously.
In addition, the ECT has the following features:

- Diagnostic function.
- Fail-safe function when a malfunction occurs.

HOW TO PROCEED WITH TROUBLESHOOTING

HINT:

- The ECM of this system is connected to the CAN and multiplex communication system. Therefore, before starting troubleshooting, make sure to check that there is no trouble in the CAN and multiplex communication systems.
- *: Use the intelligent tester.

1	VEHICLE BROUGHT TO WORKSHOP

NEXT

2	CUSTOMER PROBLEM ANALYSIS

NEXT

3	INSPECT BATTERY VOLTAGE

Standard voltage:
11 to 14 V

If the voltage is below 11 V, recharge or replace the battery before proceeding.

NEXT

4	CONNECT INTELLIGENT TESTER TO DLC3*

NEXT

5	CHECK AND CLEAR DTCS AND FREEZE FRAME DATA*

(a) Refer to the DTC CHECK / CLEAR (see page AX-33).

NEXT

6	VISUAL INSPECTION

NEXT

7	SETTING CHECK MODE DIAGNOSIS*

(a) Refer to the CHECK MODE PROCEDURE (see page AX-34).

NEXT

8	PROBLEM SYMPTOM CONFIRMATION

AX

(a) Refer to the ROAD TEST (see page AX-13).
Result

Result	Proceed to
Symptom does not occur	A
Symptom occurs	B

B → GO TO STEP 10

A

9	SYMPTOM SIMULATION

(a) Refer to the ELECTRONIC CIRCUIT INSPECTION PROCEDURE (see page IN-37).

NEXT

10	DTC CHECK*

(a) Refer to the DTC CHECK / CLEAR (see page AX-33).
Result

Result	Proceed to
DTC is not output	A
DTC is output	B

B → GO TO STEP 18

A

11	BASIC INSPECTION

(a) Refer to the AUTOMATIC TRANSMISSION FLUID (see page AX-126).
(b) Refer to the PARK/NEUTRAL POSITION SWITCH (see page AX-132).
(c) Refer to the FLOOR SHIFT ASSEMBLY (see page AX-162).

NG → GO TO STEP 21

OK

12	MECHANICAL SYSTEM TESTS

(a) Refer to the MECHANICAL SYSTEM TESTS (see page AX-16).

NG → GO TO STEP 17

OK

13	HYDRAULIC TEST

(a) Refer to the HYDRAULIC TEST (see page AX-18).

NG → GO TO STEP 17

OK

14	MANUAL SHIFTING TEST

(a) Refer to the MANUAL SHIFTING TEST (see page AX-19).

NG → GO TO STEP 16

OK

15	PROBLEM SYMPTOMS TABLE CHAPTER 1

(a) Refer to the PROBLEM SYMPTOMS TABLE (see page AX-23).

NG → GO TO STEP 19

OK

16	PROBLEM SYMPTOMS TABLE CHAPTER 2

(a) Refer to the PROBLEM SYMPTOMS TABLE (see page AX-23).

NEXT

17	PART INSPECTION

NG → GO TO STEP 21

OK

18	DTC CHART

(a) Refer to the DIAGNOSTIC TROUBLE CODE CHART (see page AX-40).

NEXT

19	CIRCUIT INSPECTION

NEXT

AX

20	IDENTIFICATION OF PROBLEM

NEXT

21	REPAIR OR REPLACE

NEXT

22	CONFIRMATION TEST

NEXT

END

ROAD TEST

1. PROBLEM SYMPTOM CONFIRMATION

(a) Based on the result of the customer problem analysis, try to reproduce the symptoms. If the problem is that the transaxle does not shift up, shift down, or the shift point is too high or too low, conduct the following road test referring to the automatic shift schedule and simulate the problem symptoms.

2. ROAD TEST

NOTICE:

Perform the test at the normal operating ATF temperature of 50 to 80°C (122 to 176°F).

(a) D position test:

Move the shift lever to D and fully depress the accelerator pedal. Check the following:

(1) Check up-shift operation.

Check that the 1 → 2, 2 → 3, 3 → 4 and 4 → 5th up-shifts take place at the shift point shown in the automatic shift schedule (see page SS-49).

HINT:

5th Gear Up-shift Prohibition Control

- Engine coolant temperature is 55°C (131°F) or less and vehicle speed is at 80 km/h (50 mph) or less.
- ATF temperature is -2°C (28°F) or less.

4th Gear Up-shift Prohibition Control

- Engine coolant temperature is 47°C (117°F) or less and vehicle speed is at 55 km/h (34 mph) or less.

5th and 4th Gear Lock-up Prohibition Control

- Brake pedal is depressed.
- Accelerator pedal is released.
- Engine coolant temperature is 60°C (140°F) or less.

(2) Check for shift shock and slip.

Check for shock and slip at the 1 → 2, 2 → 3, 3 → 4 and 4 → 5th up-shifts.

(3) Check for abnormal noise and vibration.

Check for abnormal noise and vibration when up-shifting from 1 → 2, 2 → 3, 3 → 4 and 4 → 5th while driving with the shift lever on D, and check while driving in the lock-up condition.

HINT:

The check for the cause of abnormal noise and vibration must be done thoroughly as it could also be due to loss of balance in the differential, torque converter clutch, etc.

(4) Check kick-down operation.
While driving the vehicle in the 2nd, 3rd, 4th and 5th gears with the shift lever on D, check that the possible kick-down vehicle speed limits for 2 → 1, 3 → 2, 4 → 3 and 5 → 4 kick-downs conform to those indicated in the automatic shift schedule (see page SS-49).
(5) Check for abnormal shock and slip at kick-down.
(6) Check the lock-up mechanism.
- Drive the vehicle in the 5th gear with the shift lever on D. Maintain a steady speed (lock-up ON).
- Lightly depress the accelerator pedal and check that the engine speed does not change abruptly.

HINT:
- There is no lock-up in the 1st, 2nd and 3rd gear.
- 4th lock-up operates while uphill-downhill control is active with the shift lever on D.
- If there is a sudden increase in engine speed, there is no lock-up.

(b) 4 (O/D OFF) position test:
Move the shift lever to 4 and fully depress the accelerator pedal. Check the following:
(1) Check up-shift operation.
Check that the 1 → 2, 2 → 3 and 3 → 4 up-shifts take place and that the shift point conforms to the automatic shift schedule (see page SS-49).
HINT:
There is no 5th up-shift in the 4 position.
(2) Check engine braking.
While driving the vehicle in the 4th gear with the shift lever on 4, release the accelerator pedal and check the engine braking effect.
(3) Check for abnormal noise during acceleration and deceleration, and for shock at up-shift and down-shift.

(c) 3 position test:
Move the shift lever to 3 and fully depress the accelerator pedal. Check the following:
(1) Check up-shift operation.
Check that the 1 → 2 and 2 → 3 up-shifts take place and that the shift point conforms to the automatic shift schedule (see page SS-49).
HINT:
There is no 3rd up-shift and lock-up in the 3 position.
(2) Check engine braking.
While driving the vehicle in the 3rd gear with the shift lever on 3, release the accelerator pedal and check the engine braking effect.

(3) Check for abnormal noise during acceleration and deceleration, and for shock at up-shift and down-shift.

(d) 2 position test:
Move the shift lever to 2 and fully depress the accelerator pedal. Check the following:
(1) Check up-shift operation.
Check that the 1 →2 up-shifts take place and that the shift point conforms to the automatic shift schedule (see page SS-49).
HINT:
There is no 3rd up-shift and lock-up when the shift lever is on 2.
(2) Check engine braking.
While driving the vehicle in the 2nd gear with the shift lever on 2, release the accelerator pedal and check the engine braking effect.
(3) Check for abnormal noise during acceleration and deceleration, and for shock at up-shift and down-shift.

(e) L position test:
Move the shift lever to L and fully depress the accelerator pedal. Check the following:
(1) Check no up-shift.
While driving the vehicle with the shift lever on L, check that there is no up-shift to 2nd gear.
HINT:
There is no lock-up in L.
(2) Check engine braking.
While driving the vehicle with the shift lever on L, release the accelerator pedal and check the engine braking effect.
(3) Check for abnormal noises during acceleration and deceleration.

(f) R position test:
Move the shift lever to R and lightly depress the accelerator pedal. Check that the vehicle moves backward without any abnormal noise or vibration.
CAUTION:
Before conducting this test, ensure that no people or obstacles are in the test area.

(g) P position test:
Stop the vehicle on an incline (more than 5°). Then move the shift lever to P and release the parking brake. Check that the parking lock pawl holds the vehicle in place.

(h) Uphill/downhill control function test:
(1) Check that the gear does not up-shift to the 4th or 5th gear while the vehicle is driving uphill.
(2) Check that the gear automatically down-shifts from 5 → 4 or from 4 → 3 when the brake is applied while the vehicle is driving downhill.

AX

MECHANICAL SYSTEM TESTS

1. STALL SPEED TEST

HINT:

This test is to check the overall performance of the engine and transaxle.

NOTICE:

- **Do not perform the stall speed test longer than 10 seconds.**
- **To ensure safety, perform this test in an open and level area that provides good traction.**
- **The stall speed test should always be performed with at least 2 people. One person should observe the condition of the wheels and wheel chocks while the other is performing the test.**

(a) Connect the intelligent tester to the CAN VIM. Then connect the CAN VIM to the DLC3.

(b) Run the vehicle until the transmission fluid temperature has reached 50 to 80°C (122 to 176°F).

(c) Allow the engine to idle with the air conditioning OFF.

(d) Chock all 4 wheels.

(e) Set the parking brake and keep the brake pedal depressed firmly with your left foot.

(f) Move the shift lever to the D position.

(g) Depress the accelerator pedal as much as possible with your right foot.

(h) Read the engine rpm (stall speed) and release the accelerator pedal immediately.

Standard value:

2,450 to 2,750 rpm

Evaluation:

Test Result	Possible Cause
Stall speed is lower than standard value	• Engine power output may be insufficient • Stator one-way clutch not operating properly HINT: If the value is less than the specified value by 600 rpm or more, the torque converter could be faulty.
Stall speed is higher than standard value	• Line pressure is too low • Forward clutch slipping • U/D (underdrive) brake slipping • U/D (underdrive) one-way clutch is not operating properly • No. 1 one-way clutch not operating properly • Improper fluid level

NOTICE:

Perform the test at the normal operating ATF temperature of 50 to 80°C (122 to 176°F).

2. SHIFT TIME LAG TEST

HINT:

This test is to check the condition of the direct clutch, forward clutch, 1st brake and reverse brake.

(a) Connect the intelligent tester to the CAN VIM. Then connect the CAN VIM to the DLC3.

(b) Run the vehicle until the transmission fluid temperature has reached 50 to 80°C (122 to 176°F).

(c) Allow the engine to idle with the air conditioning OFF.
(d) Set the parking brake and keep the brake pedal depressed firmly.
(e) Check the D range time lag.
  (1) Move the shift lever to N and wait for 1 minute.
  (2) Move the shift lever to D and measure the time until the shock is felt.
  (3) Repeat the 2 procedures above 3 times, and calculate the average time of the 3 tests.
(f) Check the R range time lag.
  (1) Move the shift lever to N and wait for 1 minute.
  (2) Move the shift lever to R and measure the time until the shock is felt.
  (3) Repeat the 2 procedures above 3 times, and calculate the average time of the 3 tests.

Standard value:

D range time lag is less than 1.2 seconds
R range time lag is less than 1.5 seconds

Evaluation:

Test Result	Possible Cause
D range time lag exceeds standard value	• Line pressure is too low • Forward clutch worn • No. 1 one-way clutch is not operating properly • U/D (underdrive) one-way clutch is not operating • U/D (underdrive) brake worn
R range time lag exceeds standard value	• Line pressure is too low • Reverse clutch worn • 1st and reverse brake worn • U/D (underdrive) brake worn

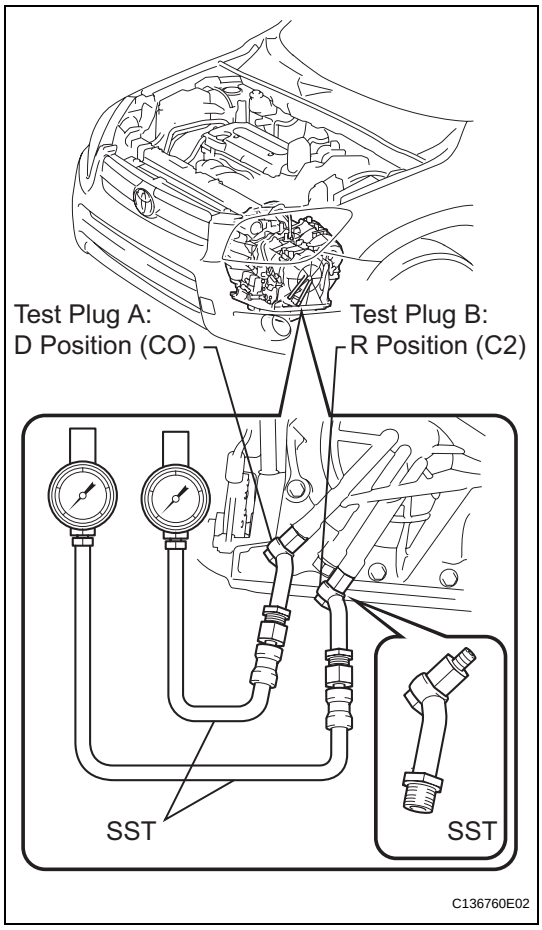

HYDRAULIC TEST

1. PERFORM HYDRAULIC TEST

(a) Measure the line pressure.

NOTICE:

- **Perform the test at the normal operating ATF temperature: 50 to 80°C (122 to 176°F).**
- **The line pressure test should always be performed with at least 2 people. One person should observe the condition of the wheels or wheel chocks while the other is performing the test.**
- **Be careful to prevent SST's hose from interfering with the exhaust pipe.**
- **This test must be performed after checking and adjusting the engine.**
- **Perform the test with the A/C OFF.**
- **When conducting the stall test, do not continue for more than 10 seconds.**

(1) Warm up the ATF (Automatic Transmission Fluid).

(2) Lift the vehicle up.

(3) Remove the engine under cover.

(4) Connect the intelligent tester to the DLC3.

(5) Remove the test plug A on the transaxle case front left side and install SST.

SST 09992-00095 (09992-00231, 09992-00271)

NOTICE:

There is a difference between the installation point of the D position and R position.

(6) Start the engine.

(7) Using intelligent tester, shift to D position and hold 3rd gear by active test, and measure the line pressure in idling.

Specified line pressure:

Condition	D position kPa (kgf/cm^2, psi)
Idling	372 to 412 kPa (3.8 to 4.2 kgf/cm^2, 54 to 60 psi)

(8) Turn the ignition switch off.

(9) Disconnect the connector of the transmission wire.

HINT:

Disconnect the connector only when performing the position stall test.

(10) Start the engine.

(11) Firmly depress the brake pedal, shift to the D position, depress the accelerator pedal all the way down and check the line pressure while the stall test is performed.

Specified line pressure:

Condition	D position kPa (kgf/cm^2, psi)
Stall test	931 to 1,031 kPa (9.5 to 10.5 kgf/cm^2, 135 to 150 psi)

(12)Turn the ignition switch off.
(13)Remove SST, and install the test plug A.
(14)Remove the test plug B, install SST and start the engine.
SST 09992-00095 (09992-00231, 09992-00271)
(15)Connect the transmission wire connector, depress the brake pedal firmly, shift to the R position and check the line pressure while the engine is idling and during the stall test.
Specified line pressure:

Condition	R position kPa (kgf/cm^2, psi)
Idling	672 to 742 kPa (6.9 to 7.6 kgf/cm^2, 97 to 108 psi)
Stall test	1,768 to 1,968 kPa (18.0 to 20.0 kgf/cm^2, 256 to 285 psi)

(16)Remove SST, and install the test plug B.
(17)Clear the DTC.

Evaluation:

Problem	Possible cause
Measured values at all positions are higher than specified	• Shift solenoid valve SLT defective • Regulator valve defective
Measured values at all positions are lower than specified	• Shift solenoid valve SLT defective • Regulator valve defective • Oil pump defective • U/D (underdrive) direct clutch defective
Pressure is low when shift lever is on D only	• D position circuit fluid leak • Forward clutch defective
Pressure is low when shift lever is on R only	• R position circuit fluid leak • Reverse clutch defective • 1st and reverse brake defective

AX

MANUAL SHIFTING TEST

1. MANUAL SHIFTING TEST

HINT:

- Through this test, it can be determined whether the trouble occurs in the electrical circuit or if it is a mechanical problem in the transaxle.
- If any abnormalities are found in the following test, the problem is in the transaxle itself.

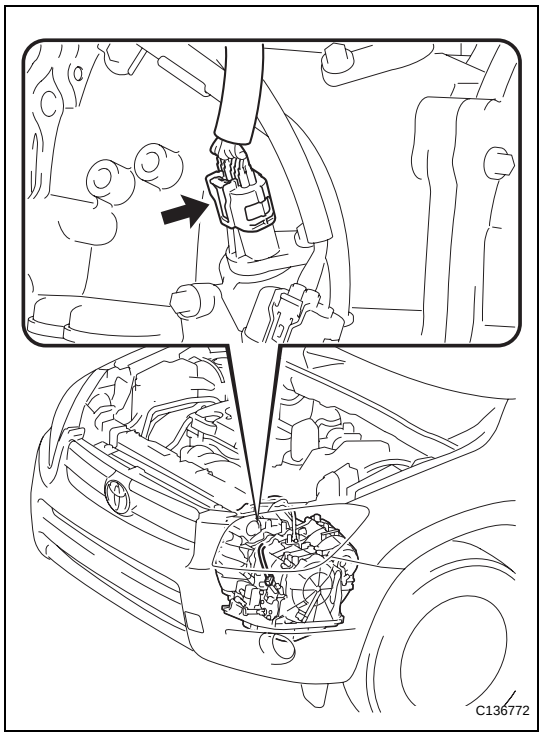

(a) Disconnect the connector of the transmission wire.
HINT:
It is possible to deactivate the electrical shift control by disconnecting the transmission wire. The gear positions can then be changed mechanically with the shift lever.

(b) Drive with the transmission wire disconnected. Move the shift lever to each position to check whether the gear position changes as shown in the table below.

Shift Lever Position	Shifting Condition
L ⟷ 2	Not Shift (Not Change)
2 ⟷ 3	Down Shift ⟷ Up Shift
3 ⟷ 4 ⟷ D	Not Shift (Not Change)

HINT:
While driving with the transmission wire disconnected:

- When the shift lever position is in L or 2, the gear position is held in 3rd.
- When the shift lever position is in 3, 4 or D, the gear position is held in 4th.
- When the shift lever position is in R or P, the operation is the same as usual.

(c) Connect the connector of the transmission wire.

(d) Clear the DTC (see page AX-33).

INITIALIZATION

1. RESET MEMORY

NOTICE:

- **Perform the RESET MEMORY procedures (A/T initialization) when replacing the automatic transaxle assembly, engine assembly or ECM.**
- **RESET MEMORY can be performed only with the intelligent tester.**

HINT:

The ECM memorizes the vehicle conditions when the ECT controls the automatic transaxle assembly and engine assembly. Therefore, when the automatic transaxle assembly, engine assembly, or ECM has been replaced, it is necessary to reset the memory so that the ECM can memorize the new information.

The reset procedures are as follows.

(a) Turn the ignition switch OFF.

(b) Connect the intelligent tester to the CAN VIM. Then connect the CAN VIM to the DLC3.

(c) Turn the ignition switch ON and turn the tester ON.

(d) Enter the following menus: DIAGNOSIS / ENHANCED OBD II.

(e) Perform the reset memory procedures from the Engine menu.

CAUTION:

After performing the RESET MEMORY procedures, be sure to perform the ROAD TEST (see page AX-13) as described earlier.

HINT:

The ECM learns through the ROAD TEST.

AX

Tester Menu Flow:

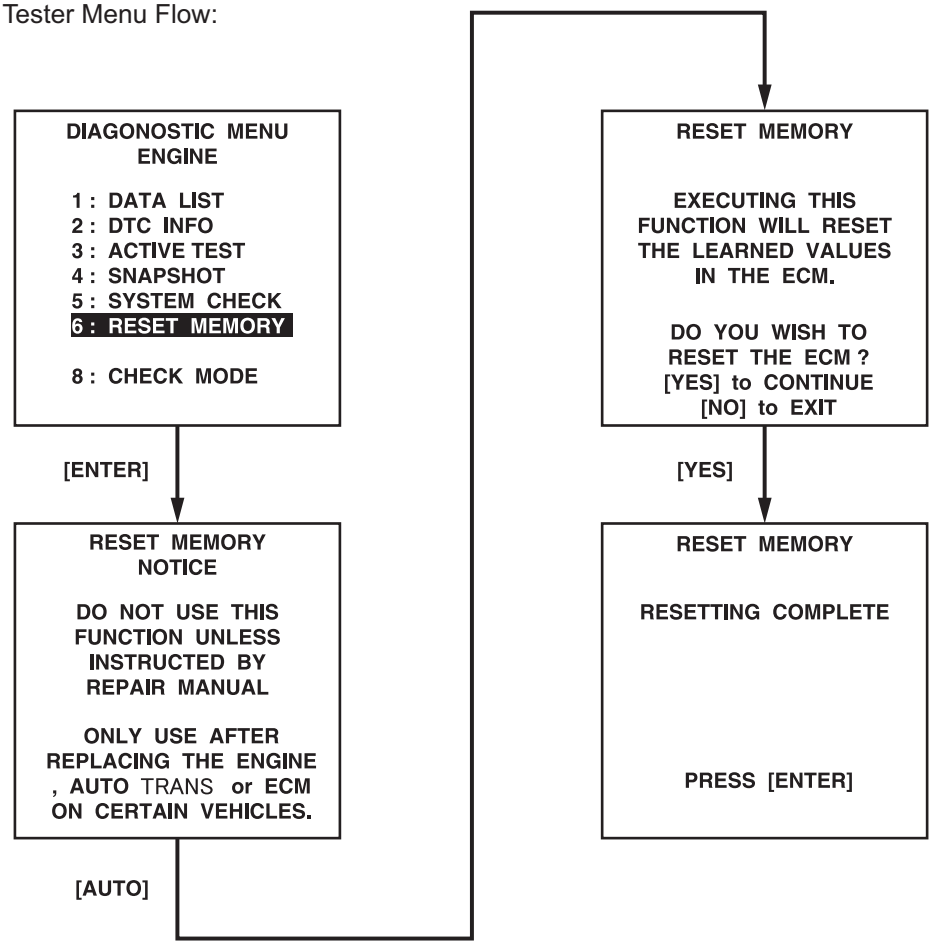

P

C115865E02

MONITOR DRIVE PATTERN

1. TEST MONITOR DRIVE PATTERN FOR ECT

CAUTION:

Perform this drive pattern on a level surface and strictly observe the posted speed limits and traffic laws while driving.

HINT:

Performing this drive pattern is one method to simulate the ECT's malfunction detection conditions.

The DTCs may not be detected through ordinary, everyday driving. Also, DTCs may not be detected through this drive pattern.

(a) Preparation for driving

(1) Warm up the engine sufficiently (engine coolant temperature is 60°C (140°F) or higher).

(2) Drive the vehicle when the atmospheric temperature is -10°C (14°F) or higher. Malfunction is not detected when the atmospheric temperature is less than -10°C (14°F).

(b) Drive pattern

(1) Drive the vehicle through all the gears. Stop → 1st → 2nd → 3rd → 4th → 5th → 5th (lock-up ON).

(2) Repeat the above drive pattern 3 times or more.

NOTICE:

- **When using the intelligent tester, the monitor status can be found in "ENHANCED OBD II / DATA LIST" or under "CARB OBD II".**
- **In the event that the drive pattern must be interrupted (due to traffic conditions or other factors), the drive pattern can be resumed and, in most cases, the monitor can be completed.**

CAUTION:

Perform this drive pattern on a level road as much as possible and strictly observe the posted speed limits and traffic laws while driving.

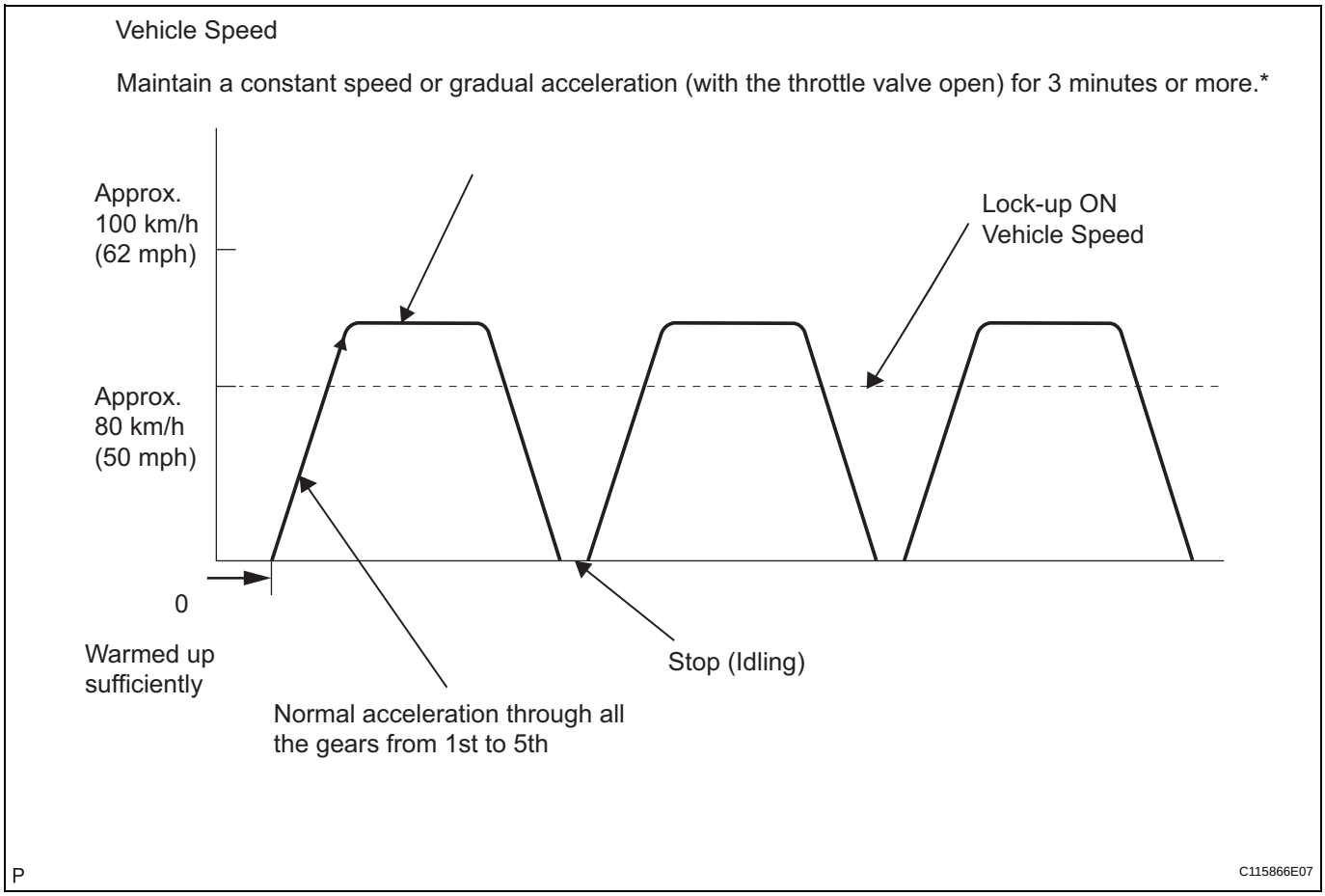

HINT:
*: Drive at such a speed in the uppermost gear to engage lock-up. The vehicle can be driven at a speed lower than the speed shown in the above diagram under the lock-up condition.

NOTICE:

It is necessary to drive the vehicle for approximately 30 minutes to detect DTC P0711 (Transmission fluid temperature sensor "A" performance).

PROBLEM SYMPTOMS TABLE

HINT:

- Use the table below to help determine the cause of the problem symptom. The potential causes of the symptoms are listed in order of probability in the "Suspected area" column of the table. Check each symptom by checking the suspected areas in the order they are listed. Replace parts as necessary.
- The Matrix Chart is divided into 2 chapters. When troubleshooting, check Chapter 1 first. If instructions are given in Chapter 1 to proceed to 2, proceed as instructed.
- If the instruction "Proceed to next circuit inspection shown in problem symptoms table" is given in the flowchart for each circuit, proceed to the next suspected area in the table.
- If the problem still occurs even though there are no malfunctions in any of the circuits, check the ECM and replace it if necessary.

1. Chapter 1: Electronic Circuit Matrix Chart

Symptom	Suspected area	See page
No down-shift (a particular gear, from 1st to 4th gear, is not down-shifted)	ECM	IN-37
No down-shift (5th -> 4th)	1. Transmission control switch (4 <--> D position) circuit	AX-44
	2. Shift solenoid valve S4 circuit*	AX-106
	3. ECM	IN-37
No up-shift (a particular gear, from 1st to 4th gear, is not up-shifted)	ECM	IN-37
No up-shift (4th -> 5th)	1. Transmission control switch (4 <--> D position) circuit	AX-44
	2. Shift solenoid valve S4 circuit*	AX-106
	3. ECM	IN-37
No lock-up	1. Stop light switch circuit*	AX-62
	2. Engine coolant temperature sensor circuit*	ES-56
	3. ECM	IN-37
No lock-up off	ECM	IN-37
Shift point too high or too low	1. Throttle position sensor circuit*	ES-56
	2. ECM	IN-37
Up-shift to 5th from 4th while shift lever on 4	1. Transmission control switch (4 <--> D position) circuit	AX-44
	2. ECM	IN-37
Up-shift to 5th from 4th while engine is cold	1. Engine coolant temperature sensor circuit*	ES-56
	2. ECM	IN-37
Up-shift to 2nd from 1st while shift lever is on L	1. Transmission control switch (2 <--> L position) circuit*	AX-44
	2. ECM	IN-37
Harsh engagement (N -> D)	1. Shift solenoid valve SL1 circuit*	AX-76
	2. ECM	IN-37
Harsh engagement (lock-up)	ECM	IN-37
Harsh engagement (any driving position)	ECM	IN-37
Poor acceleration	ECM	IN-37
No kick-down	ECM	IN-37
Engine stalls when starting off or stopping	ECM	IN-37
Malfunction in shifting	1. Park/Neutral position switch circuit*	AX-44
	2. Transmission control switch (4 <--> D position) circuit	AX-44
	3. ECM	IN-37

HINT:
*: When the circuit is defective, a DTC may be output.

2. Chapter 2: On-Vehicle Repair and Off-Vehicle Repair

Symptom	Suspected area	See page
Vehicle does not move in any forward position and with the shift lever on R	1. Valve body assembly	AX-142
	2. B3 U/D brake	AX-181
	3. Torque converter clutch	AX-179
Vehicle does not move with shift lever on R	1. Valve body assembly	AX-142
	2. C2 reverse clutch	AX-181
	3. B2 1st and reverse brake	AX-181
No up-shift (1st -> 2nd)	1. Valve body assembly	AX-142
	2. B1 2nd and O/D brake	AX-181
No up-shift (2nd -> 3rd)	1. Valve body assembly	AX-142
	2. C0 direct and O/D clutch	AX-181
No up-shift (3rd -> 4th)	1. Valve body assembly	AX-142
	2. B1 2nd and O/D brake	AX-181
No up-shift (4th -> 5th)	1. Shift solenoid valve S4	AX-79
	2. Valve body assembly	AX-142
	3. C3 U/D clutch	AX-181
No down-shift (5th -> 4th)	1. Shift solenoid valve S4	AX-79
	2. Valve body assembly	AX-142
No down-shift (4th -> 3rd)	Valve body assembly	AX-142
No down-shift (3rd -> 2nd)	Valve body assembly	AX-142
No down-shift (2nd -> 1st)	Valve body assembly	AX-142
No lock-up or no lock-up off	1. Shift solenoid valve DSL	AX-65
	2. Valve body assembly	AX-142
	3. Torque converter clutch	AX-179
Harsh engagement (N -> D)	1. Shift solenoid valve SL1	AX-72
	2. Valve body assembly	AX-142
	3. C1 accumulator	AX-181
	4. C1 forward clutch	AX-181
	5. F1 No. 1 one-way clutch	AX-181
	6. F2 U/D one-way clutch	AX-181
Harsh engagement (lock-up)	1. Shift solenoid valve SL2	AX-87
	2. Valve body assembly	AX-142
	3. Torque converter clutch	AX-179
Harsh engagement (N -> R)	1. Valve body assembly	AX-142
	2. C2 accumulator	AX-181
	3. C2 reverse clutch	AX-181
	4. B2 1st and reverse brake	AX-181
Harsh engagement (1st -> 2nd -> 3rd -> 4th -> 5th)	1. Shift solenoid valve SLT	AX-120
	2. Valve body assembly	AX-142
Harsh engagement (1st -> 2nd)	1. Valve body assembly	AX-142
	2. B1 2nd and O/D brake	AX-181
Harsh engagement (2nd -> 3rd)	1. Valve body assembly	AX-142
	2. C0 accumulator	AX-181
	3. C0 direct and O/D clutch	AX-181
Harsh engagement (3rd -> 4th)	1. Valve body assembly	AX-142
	2. B1 2nd and O/D brake	AX-181

Symptom	Suspected area	See page
Harsh engagement (4th -> 5th)	1. Valve body assembly	AX-142
	2. C3 accumulator	AX-181
	3. B3 U/D clutch	AX-181
Harsh engagement (5th -> 4th)	1. Valve body assembly	AX-142
	2. B3 accumulator	AX-181
Slip or shudder (forward and reverse: after warm-up)	1. Valve body assembly	AX-142
	2. Oil strainer	AX-142
	3. C0 direct and O/D clutch	AX-181
	4. C1 forward clutch	AX-181
	5. C3 U/D clutch	AX-181
	6. B1 2nd and brake	AX-181
	7. B3 U/D brake	AX-181
	8. F1 No. 1 one-way clutch	AX-181
	9. F2 U/D one-way clutch	AX-181
	10. Torque converter clutch	AX-179
Slip or shudder (particular position: just after engine starts)	Torque converter clutch	AX-179
Slip or shudder (shift lever on R)	1. C2 reverse clutch	AX-181
	2. B2 1st and reverse brake	AX-181
Slip or shudder (1st)	1. C1 forward clutch	AX-181
	2. F1 No. 1 one-way clutch	AX-181
	3. F2 U/D one-way clutch	AX-181
Slip or shudder (2nd)	B1 2nd and O/D brake	AX-181
Slip or shudder (3rd)	C0 direct and O/D clutch	AX-181
Slip or shudder (4th)	B1 2nd and O/D brake	AX-181
Slip or shudder (5th)	C3 U/D clutch	AX-181
Shift position too high or too low	Shift solenoid valve SLT	AX-120
No engine braking (1st to 4th/shift lever on D)	B3 U/D brake	AX-181
No engine braking (1st/shift lever on L)	1. Valve body assembly	AX-142
	2. B2 1st and reverse brake	AX-181
No engine braking (2nd/shift lever on 2)	1. Valve body assembly	AX-142
	2. B1 2nd and O/D brake	AX-181
No engine braking (3rd/shift lever on 3)	B3 U/D brake	AX-181
No kick-down	Valve body assembly	AX-142
Poor acceleration (all positions)	1. Shift solenoid valve SLT	AX-120
	2. Torque converter clutch	AX-179
Poor acceleration (5th)	1. C3 U/D clutch	AX-181
	2. U/D planetary gear unit	AX-181
Engine stalls when starting off or stopping	1. Shift solenoid valve DSL	AX-65
	2. Torque converter clutch	AX-179

TERMINALS OF ECM

1. CHECK ECM

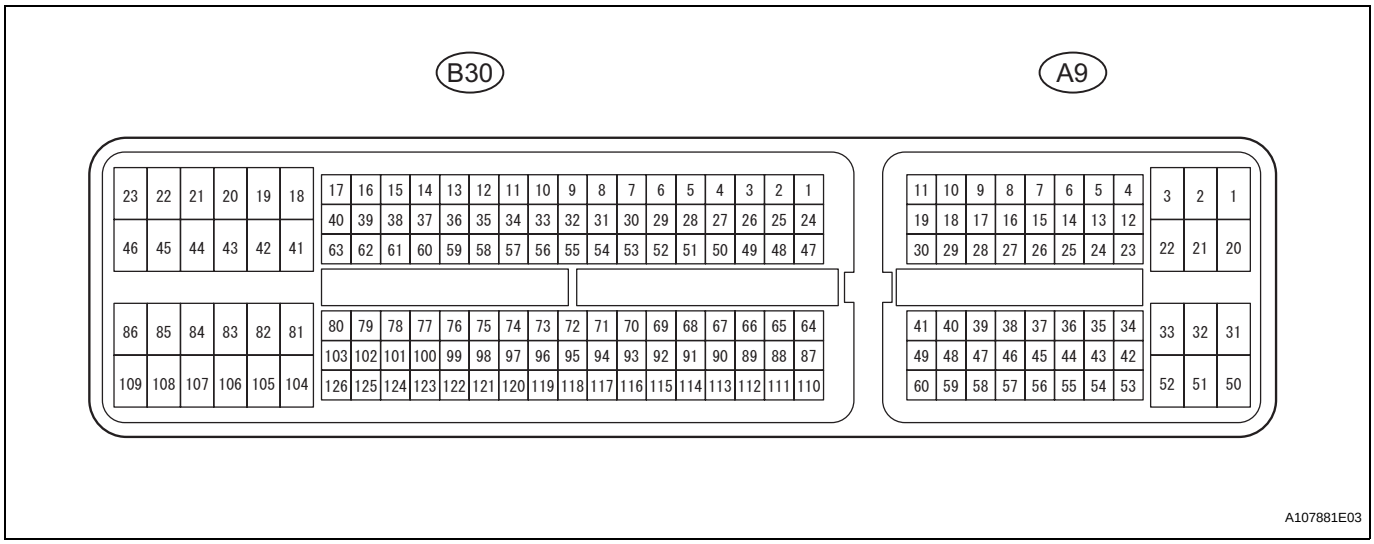

(a) Measure the voltage of the ECM connector.
HINT:
Each ECM terminal's standard voltage is shown in the table below.
In the table, first follow the information under "Condition". Look under "Symbols (Terminal No.)" for the terminals to be inspected. The standard voltage between the terminals is shown under "Specified Condition".
Use the illustration above as a reference for the ECM terminals.

Symbols (Terminal No.)	Wiring Color	Terminal Description	Condition	Specified Condition
P (B30-24) - E1 (B30-81)	R - BR	P shift position switch signal	Ignition switch ON and transfer shift lever on P	10 to 14 V
P (B30-24) - E1 (B30-81)	R - BR	P shift position switch signal	Ignition switch ON and transfer shift lever not on P	Below 1 V
R (B30-25) - E1 (B30-81)	B - BR	R shift position switch signal	Ignition switch ON and transfer shift lever on R	10 to 14 V
R (B30-25) - E1 (B30-81)	B - BR	R shift position switch signal	Ignition switch ON and transfer shift lever not on R	Below 1 V
N (B30-27) - E1 (B30-81)	L-B - BR	N shift position switch signal	Ignition switch ON and transfer shift lever on N	10 to 14 V
N (B30-27) - E1 (B30-81)	L-B - BR	N shift position switch signal	Ignition switch ON and transfer shift lever not on N	Below 1 V
D (B30-26) - E1 (B30-81)	L - BR	D shift position switch signal	Ignition switch ON and transfer shift lever on D or 3	10 to 14 V
D (B30-26) - E1 (B30-81)	L - BR	D shift position switch signal	Ignition switch ON and transfer shift lever not on D or 3	Below 1 V
4 (A9-25) - E1 (B30-81)	P - BR	4 shift position switch signal	Ignition switch ON and transfer shift lever on 4	10 to 14 V
4 (A9-25) - E1 (B30-81)	P - BR	4 shift position switch signal	Ignition switch ON and transfer shift lever not on 4	Below 1 V

Symbols (Terminal No.)	Wiring Color	Terminal Description	Condition	Specified Condition
3 (B30-29) - E1 (B30-81)	LG - BR	3 shift position switch signal	Ignition switch ON and transfer shift lever on 3	10 to 14 V
3 (B30-29) - E1 (B30-81)	LG - BR	3 shift position switch signal	Ignition switch ON and transfer shift lever not on 3	Below 1 V
2 (B30-28) - E1 (B30-81)	V - BR	2 shift position switch signal	Ignition switch ON and transfer shift lever on 2 and L	10 to 14 V
2 (B30-28) - E1 (B30-81)	V - BR	2 shift position switch signal	Ignition switch ON and transfer shift lever not on 2 and L	Below 1 V
L (A9-26) - E1 (B30-81)	V - BR	L shift position switch signal	Ignition switch ON and transfer shift lever on L	10 to 14 V
L (A9-26) - E1 (B30-81)	V - BR	L shift position switch signal	Ignition switch ON and transfer shift lever not on L	Below 1 V
STP (A9-36) - E1 (B30-81)	L - BR	Stop light switch signal	Brake pedal is depressed	Between 10 V and 14 V
STP (A9-36) - E1 (B30-81)	L - BR	Stop light switch signal	Brake pedal is released	Below 1 V
SL1+ (B30-16) - SL1- (B30-17)	P - LG	SL1 solenoid signal	Engine idle speed	Pulse generation (see waveform 1)
SL1+ (B30-16) - SL1- (B30-17)	P - LG	SL1 solenoid signal	Ignition switch ON	Pulse generation (see waveform 1)
SL1+ (B30-16) - SL1- (B30-17)	P - LG	SL1 solenoid signal	1st gear	Pulse generation (see waveform 1)
SL1+ (B30-16) - SL1- (B30-17)	P - LG	SL1 solenoid signal	Not on 1st gear	Below 1 V
SL2+ (B30-12) - SL2- (B30-13)	BR - R	SL2 solenoid signal	Engine idle speed	Pulse generation (see waveform 2)
SL2+ (B30-12) - SL2- (B30-13)	BR - R	SL2 solenoid signal	Ignition switch ON	Pulse generation (see waveform 2)
SL2+ (B30-12) - SL2- (B30-13)	BR - R	SL2 solenoid signal	1st or 2nd gear	Pulse generation (see waveform 2)
SL2+ (B30-12) - SL2- (B30-13)	BR - R	SL2 solenoid signal	3rd, 4th or 5th gear	Below 1 V
SL3+ (B30-14) - SL3- (B30-15)	GR - G-R	SL3 solenoid signal	Engine idle speed	Pulse generation (see waveform 3)
SL3+ (B30-14) - SL3- (B30-15)	GR - G-R	SL3 solenoid signal	Ignition switch ON	Pulse generation (see waveform 3)
SL3+ (B30-14) - SL3- (B30-15)	GR - G-R	SL3 solenoid signal	1st or 2nd gear	Pulse generation (see waveform 3)
SL3+ (B30-14) - SL3- (B30-15)	GR - G-R	SL3 solenoid signal	3rd, 4th or 5th gear	Below 1 V
DSL (B30-9) - E01 (B30-22)	V - BR	DSL solenoid signal	Vehicle speed 65 km/h (40 mph), lock-up (ON to OFF)	Below 1 V
DSL (B30-9) - E01 (B30-22)	V - BR	DSL solenoid signal	Vehicle driving under lock-up position	Pulse generation (see waveform 4)
SLT+ (B30-11) - SLT- (B30-10)	L - W	SLT solenoid signal	Engine idle speed	Pulse generation (see waveform 5)
SR (B30-8) - E01 (B30-22)	G - BR	SR solenoid signal	Ignition switch ON	Below 1 V
SR (B30-8) - E01 (B30-22)	G - BR	SR solenoid signal	3th, 4th or 5th gear	10 to 14 V
SR (B30-8) - E01 (B30-22)	G - BR	SR solenoid signal	1st or 2nd gear	Below 1 V
S4 (B30-7) - E01 (B30-22)	L-B - BR	S4 solenoid signal	Ignition switch ON	Below 1 V
S4 (B30-7) - E01 (B30-22)	L-B - BR	S4 solenoid signal	5th gear	10 to 14 V
S4 (B30-7) - E01 (B30-22)	L-B - BR	S4 solenoid signal	Not on 5th gear	Below 1 V
THO1 (B30-126) - ETHO (B30-124)	Y - B	ATF temperature sensor signal	ATF temperature 115°C (239°F) or more	Below 1.5 V
NT+ (B30-6) - NT- (B30-5)	B - G	Speed sensor (NT) signal	Vehicle speed 20 km/h (12 mph)	Pulse generation (see waveform 6)

Symbols (Terminal No.)	Wiring Color	Terminal Description	Condition	Specified Condition
NC+ (B30-4) - NC- (B30-3)	W - Y	Speed sensor (NC) signal	Vehicle speed 30 km/h (19 mph) (3rd gear) Engine speed 1,400 rpm	Pulse generation (see waveform 7)

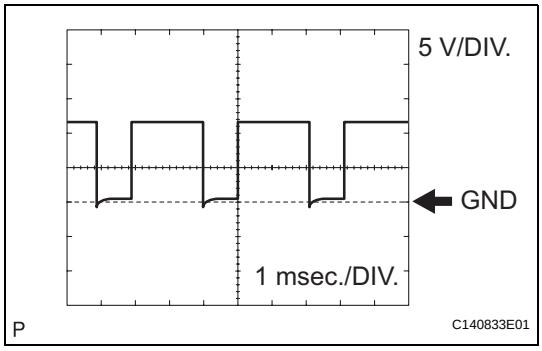

(b) Using an oscilloscope, check the waveform 1.
Waveform 1 (Reference)

Item	Content
Symbols (Terminal No.)	SL1+ (B30-16) - SL1- (B30-17)
Tool Setting	5 V/DIV., 1 msec./DIV.
Condition	Engine idle speed

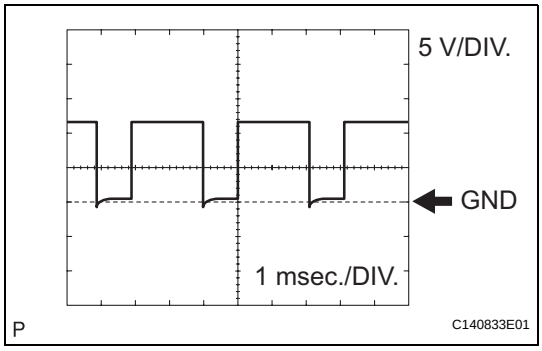

(c) Using an oscilloscope, check the waveform 2.
Waveform 2 (Reference)

Item	Content
Symbols (Terminal No.)	SL2+ (B30-12) - SL2- (B30-13)
Tool Setting	5 V/DIV., 1 msec./DIV.
Condition	Engine idle speed

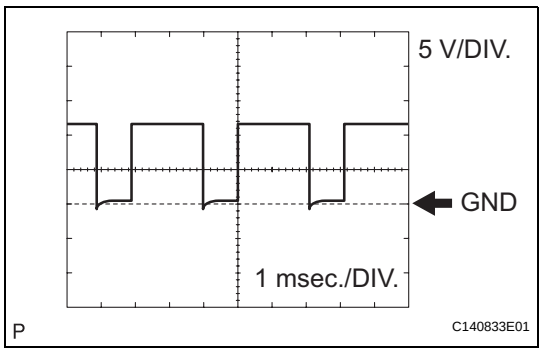

(d) Using an oscilloscope, check the waveform 3.
Waveform 3 (Reference)

Item	Content
Symbols (Terminal No.)	SL3+ (B30-14) - SL3- (B30-15)
Tool Setting	5 V/DIV., 1 msec./DIV.
Condition	Engine idle speed

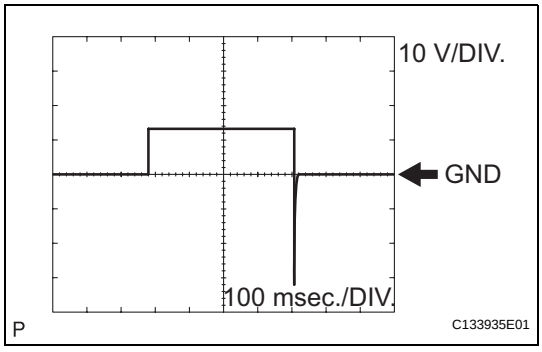

(e) Using an oscilloscope, check the waveform 4.
Waveform 4 (Reference)

Item	Content
Symbols (Terminal No.)	DSL (B30-9) - E01 (B30-22)
Tool Setting	10 V/DIV., 100 msec./DIV.
Condition	Vehicle speed 65 km/h (40 mph), lock-up (ON to OFF)

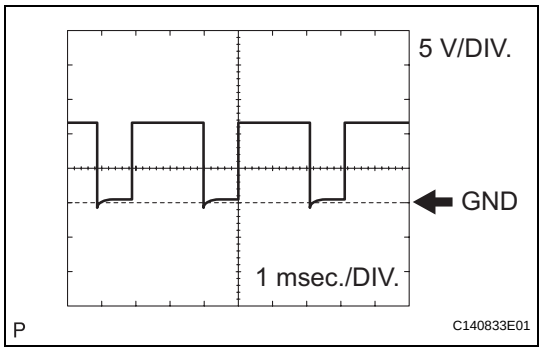

(f) Using an oscilloscope, check the waveform 5.
Waveform 5 (Reference)

Item	Content
Symbols (Terminal No.)	SLT+ (B30-11) - SLT- (B30-10)
Tool Setting	5 V/DIV., 1 msec./DIV.
Condition	Engine idle speed

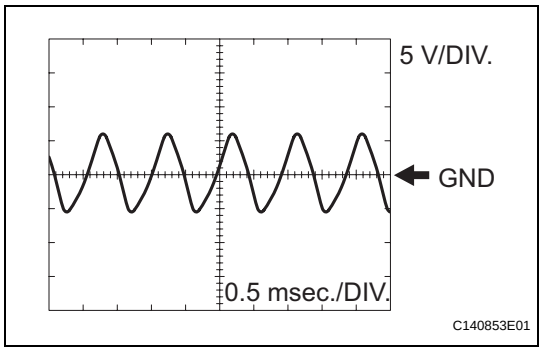

(g) Using an oscilloscope, check the waveform 6.
Waveform 6 (Reference)

Item	Content
Symbols (Terminal No.)	NT+ (B30-6) - NT- (B30-5)
Tool Setting	5 V/DIV., 0.5 msec./DIV.
Condition	Vehicle speed 20 km/h (12 mph)

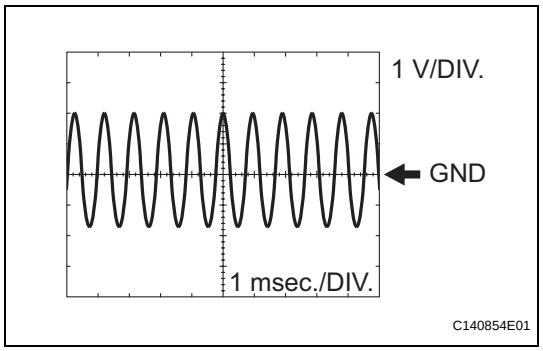

(h) Using an oscilloscope, check the waveform 7.
Waveform 7 (Reference)

Item	Content
Symbols (Terminal No.)	NC+ (B30-4) - NC- (B30-3)
Tool Setting	1 V/DIV., 1 msec./DIV.
Condition	Vehicle speed 30 km/h (19 mph) (3rd gear) Engine speed 1,400 rpm

AX

AX

DIAGNOSIS SYSTEM

1. DESCRIPTION

(a) When troubleshooting On-Board Diagnostic (OBD II) vehicles, the vehicle must be connected to the OBD II scan tool (complying with SAE J1987). Various data output from the vehicle's ECM can then be read.

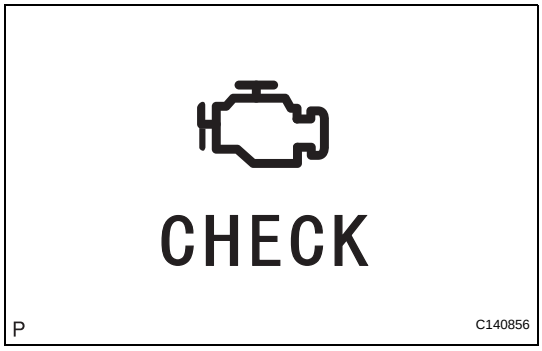

(b) OBD II regulations require that the vehicle's on-board computer illuminates the Malfunction Indicator Lamp (MIL) on the instrument panel when the computer detects a malfunction in:
(1) The emission control system/components
(2) The powertrain control components (which affect vehicle emissions)
(3) The computer
In addition, the applicable Diagnostic Trouble Codes (DTCs) prescribed by SAE J2012 are recorded in the ECM memory.
When the malfunction does not reoccur, the MIL stays illuminated until the ignition switch is turned OFF, and the MIL turns OFF when the engine is started. However, the DTCs remain recorded in the ECM memory.

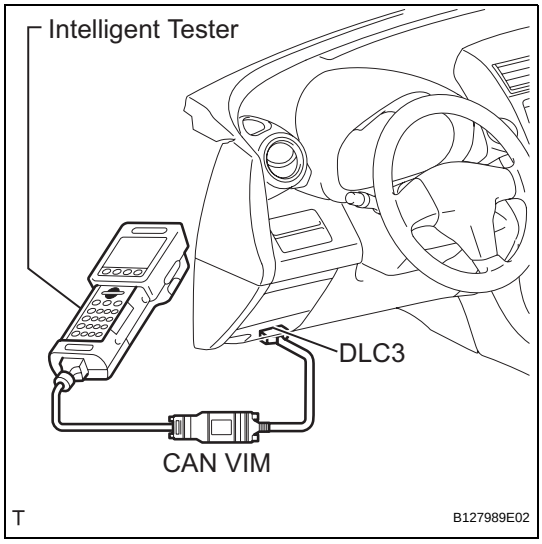

(c) To check DTCs, connect the intelligent tester to the Data Link Connector 3 (DLC3) of the vehicle. The tester displays DTCs, the freeze frame data and a variety of the engine data.
The DTCs and freeze frame data can be erased with the tester (see page AX-40).

2. NORMAL MODE AND CHECK MODE

(a) The diagnosis system operates in "normal mode" during normal vehicle use. In normal mode, "2 trip detection logic" is used to ensure accurate detection of malfunctions. "Check mode" is also available to technicians as an option. In check mode, "1 trip detection logic" is used for simulating malfunction symptoms and increasing the system's ability to detect malfunctions, including intermittent malfunctions.

3. 2 TRIP DETECTION LOGIC

(a) When a malfunction is first detected, the malfunction is temporarily stored in the ECM memory (1st trip). If the same malfunction is detected during the next drive cycle, the MIL is illuminated (2nd trip).

4. FREEZE FRAME DATA

(a) Freeze frame data records the engine conditions (fuel system, calculated load, engine coolant temperature, fuel trim, engine speed, vehicle speed, etc.) when a malfunction is detected. When troubleshooting, freeze frame data can help determine if the vehicle was running or stopped, if the engine was warmed up or not, if the air-fuel ratio was lean or rich, and other data from the time the malfunction occurred.

(b) The intelligent tester records freeze frame data in 5 different instances: 1) 3 times before the DTC is set, 2) once when the DTC is set, and 3) once after the DTC is set. These data can be used to simulate the vehicle's condition around the time when the malfunction occurred. The data may help find the cause of the malfunction, or judge if the DTC is being caused by a temporary malfunction or not.

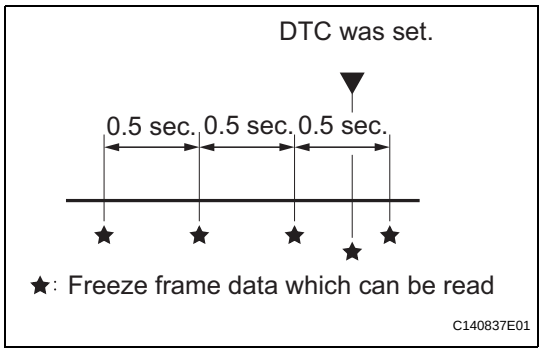

5. DATA LINK CONNECTOR 3 (DLC3)

(a) The vehicle's ECM uses the ISO 15765-4 for communication protocol. The terminal arrangement of the DLC3 complies with SAE J1962 and matches the ISO 15765-4 format.

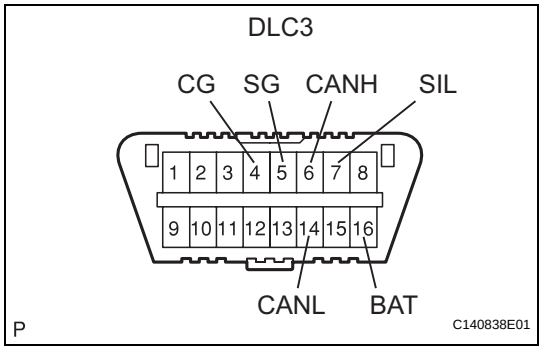

Terminal of DLC3

Symbols (Terminal No.)	Terminal Description	Condition	Specified Condition
SIL (7) - SG (5)	Bus "+" line	During transmission	Pulse generation
CG (4) - Body ground	Chassis ground	Always	Below 1 Ω
SG (5) - Body ground	Signal ground	Always	Below 1 Ω
BAT (16) - Body ground	Battery positive	Always	9 to 14 V
CANH (6) - CANL (14)	CAN bus line	Ignition switch OFF*	54 to 69 Ω
CANH (6) - Battery positive	HIGH-level CAN bus line	Ignition switch OFF*	6 kΩ or higher
CANH (6) - CG (4)	HIGH-level CAN bus line	Ignition switch OFF*	200 Ω or higher
CANL (14) - Battery positive	LOW-level CAN bus line	Ignition switch OFF*	6 kΩ or higher
CANL (14) - CG (4)	LOW-level CAN bus line	Ignition switch OFF*	200 Ω or higher

NOTICE:

***: Before measuring the resistance, leave the vehicle as is for at least 1 minute and do not operate the ignition switch, any other switches or the doors.**

If the result is not as specified, the DLC3 may have a malfunction. Repair or replace the harness and connector.

AX

HINT:
Connect the cable of the intelligent tester to the DLC3, turn the ignition switch ON and attempt to use the tester. If the screen displays UNABLE TO CONNECT TO VEHICLE, a problem exists in the vehicle side or the tester side.
If communication is normal when the tester is connected to another vehicle, inspect the DLC3 on the original vehicle.
If communication is still not possible when the tester is connected to another vehicle, the problem is probably in the tester itself. Consult the Service Department listed in the tester's instruction manual.

6. CHECK MIL

(a) Check that the MIL illuminates when turning the ignition switch ON.
If the MIL does not illuminate, there is a problem in the MIL circuit (see page ES-430).

(b) When the engine is started, the MIL should turn off.

7. ALL READINESS

(a) For this vehicle, using the intelligent tester allows readiness codes corresponding to all DTCs to be read. When the diagnosis (normal or malfunctioning) has been completed, readiness codes are set. Enter the following menus: ENHANCED OBD II / MONITOR STATUS.

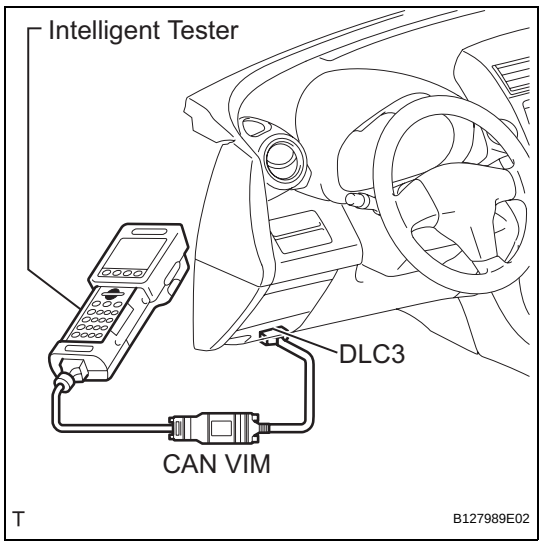

DTC CHECK / CLEAR

1. CHECK DTC

(a) DTCs which are stored in the ECM can be displayed with the intelligent tester.
The intelligent tester can display pending DTCs and current DTCs. Some DTCs are not stored unless a malfunction is detected in consecutive driving cycles. When a malfunction is detected in only one driving cycle, it is stored as a pending DTC.

(1) Connect the intelligent tester to the CAN VIM. Then connect the CAN VIM to the DLC3.

(2) Turn the ignition switch ON and turn the tester ON.

(3) Enter the following menus: DIAGNOSIS / ENHANCED OBD II / DTC INFO / CURRENT CODES (or PENDING CODE).

(4) Confirm the DTCs and freeze frame data, and then write them down.

(5) Confirm the details of the DTCs (see page AX-40).

NOTICE:
When simulating a symptom with the scan tool to check for DTCs, use normal mode. For codes on the DIAGNOSTIC TROUBLE CODE CHART subject to "2 trip detection logic", perform the following actions.

Turn the ignition switch OFF after the symptom is simulated once. Then repeat the simulation process. When the symptom has been simulated twice, the MIL illuminates and the DTCs are recorded in the ECM.

2. CLEAR DTC

(a) When using the intelligent tester:

(1) Connect the intelligent tester to the CAN VIM. Then connect the CAN VIM to the DLC3.

(2) Turn the ignition switch ON and turn the tester ON.

(3) Enter the following menus: DIAGNOSIS / ENHANCED OBD II / DTC INFO / CLEAR CODES. Then press YES.
HINT:
When operating the tester to erase the codes, the DTCs and freeze frame data will be erased.

(b) When not using the intelligent tester:

(1) Disconnect the cable from the negative (-) battery terminal or remove the EFI MAIN and ETCS fuses from the engine room No. 1 relay block and engine room No. 1 junction block for 60 seconds or more. However, if you disconnect the cable from the negative (-) battery terminal, perform the "INITIALIZATION" procedure (see page AX-20).

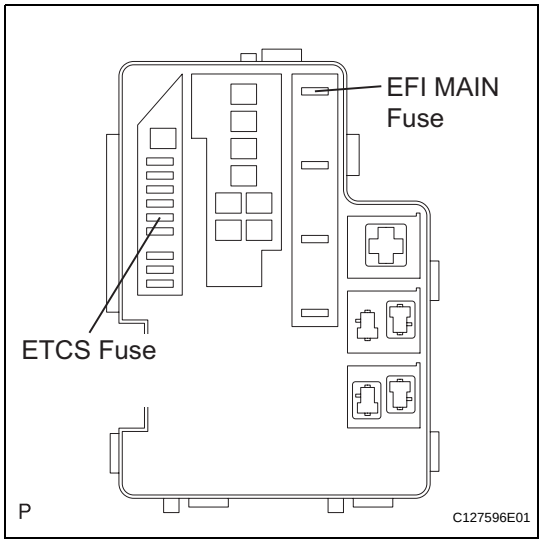

AX

CHECK MODE PROCEDURE

1. DESCRIPTION

(a) Check mode has a higher sensitivity to malfunctions and can detect malfunctions that normal mode cannot detect. Check mode can also detect all the malfunctions that normal mode can detect. In check mode, DTCs are detected with 1 trip detection logic.

2. CHECK MODE PROCEDURE

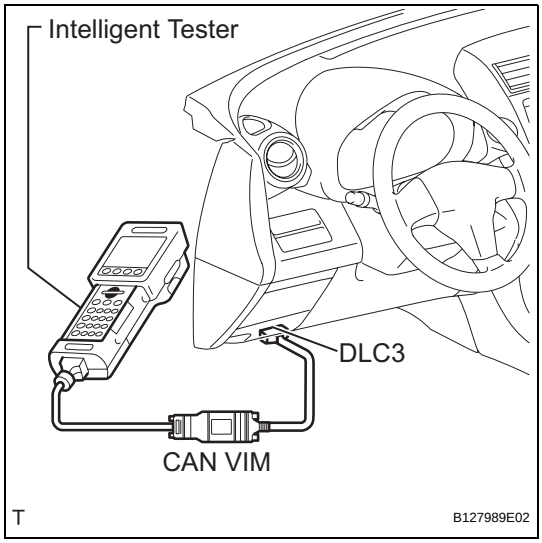

(a) Make sure that the following conditions below are met:
  (1) Battery positive voltage 11 V or more
  (2) Throttle valve fully closed
  (3) Transaxle in the P or N position
  (4) A/C OFF

(b) Turn the ignition switch OFF.

(c) Connect the intelligent tester to the CAN VIM. Then connect the CAN VIM to the DLC3.

(d) Turn the ignition switch ON and turn the tester ON.

(e) Enter the following menus: DIAGNOSIS / ENHANCED OBD II / CHECK MODE.

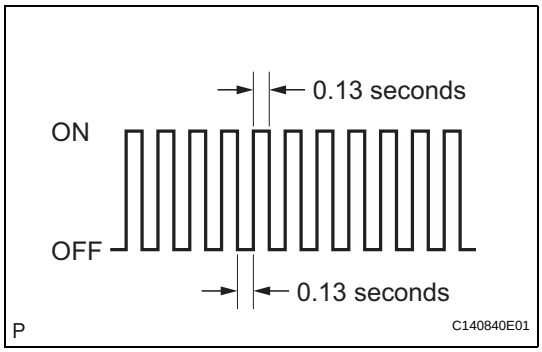

(f) Change the ECM to check mode. Make sure the MIL flashes as shown in the illustration.
NOTICE:
All DTCs and freeze frame data will be erased if: 1) the intelligent tester is used to change the ECM from normal mode to check mode or vice versa; or 2) during check mode, the ignition switch is turned from ON to ACC or OFF. Before check mode, make notes of the DTCs and freeze frame data.

(g) Start the engine. The MIL should turn off after the engine starts.

(h) Perform "MONITOR DRIVE PATTERN" for the ECT test (see page AX-21).
(Or, simulate the conditions of the malfunction described by the customer.)

(i) After simulating the malfunction conditions, use the tester to check the DTC and freeze frame data.

FAIL-SAFE CHART

1. FAIL-SAFE CHART

This function minimizes the loss of the ECT functions when a malfunction occurs in a sensor or solenoid.

(a) Automatic Transmission Fluid (ATF) temperature sensor:
When the ATF temperature sensor has a malfunction, 5th up-shift is prohibited.

(b) Counter gear speed sensor NC (Speed sensor NC):
When the counter gear speed sensor has a malfunction, 5th up-shift is prohibited.

(c) Shift solenoid valve DSL:
When the solenoid valve DSL has a malfunction, the current to the solenoid valve is stopped.
This stops lock-up control, then fuel economy decreases.

(d) Shift solenoid valve SL1, SL2, SL3 and S4:
If any of the shift solenoid valve circuits develops an open or short, the ECM turns the other shift solenoid "ON" and "OFF" in order to shift into the gear positions shown in the table below.
Manual shifting as shown in the following table must be done. In case of a short circuit, the ECM stops sending the current to the short circuited solenoid.
Even if starting the engine in the fail-safe mode, the gear position remains in the same position.

HINT:
FL: Flex Lock-up

Normal	Solenoid Valve	SL1	ON	OFF	ON	OFF	OFF
		SL2	ON	ON	OFF	FL	FL
		SL3	OFF	OFF	OFF	ON	ON
		S4	OFF	OFF	OFF	OFF	ON
	Gear Position		1st	2nd	3rd	4th	5th
SL1 Malfunction (During driving at 1st or 2nd)	Solenoid Valve	SL1	OFF				
		SL2	ON	ON	OFF to ON	FL to ON	FL to ON
		SL3	OFF	OFF	OFF	ON to OFF	ON to OFF
		S4	OFF	OFF	OFF	OFF	ON to OFF
	Gear Position		1st to 2nd	2nd	3rd to 2nd	4th to 2nd	5th to 2nd
SL1 Malfunction (During driving at 3rd)	Solenoid Valve	SL1	OFF				
		SL2	ON to FL	ON to FL	OFF to FL	FL	FL
		SL3	OFF	OFF	OFF	ON to FL	ON to FL
		S4	OFF to ON	OFF to ON	OFF to ON	OFF to ON	ON
	Gear Position		1st to 4th	2nd to 4th	3rd to 4th	4th	5th to 4th
SL1 Malfunction (During driving at 4th or 5th)	Solenoid Valve	SL1	OFF				
		SL2	ON to FL	ON to FL	OFF to FL	FL	FL
		SL3	OFF to ON	OFF to ON	OFF to ON	ON	ON
		S4	OFF	OFF	OFF	OFF	ON
	Gear Position		1st to 4th	2nd to 4th	3rd to 4th	4th	5th to 4th

SL2 Malfunction	Solenoid Valve	SL1	ON	OFF to ON	ON	OFF to ON	OFF to ON
		SL2	OFF				
		SL3	OFF	OFF	OFF	ON to OFF	ON to OFF
		S4	OFF to ON	OFF to ON	OFF to ON	OFF to ON	ON
	Gear Position		1st to 4th	2nd to 4th	3rd to 4th	4th	5th to 4th
SL3 Malfunction	Solenoid Valve	SL1	ON	OFF	ON	OFF to ON	OFF to ON
		SL2	ON	ON	OFF	FL	FL
		SL3	OFF				
		S4	OFF	OFF	OFF	OFF to ON	ON
	Gear Position		1st	2nd	3rd	4th	5th to 4th
S4 Malfunction	Solenoid Valve	SL1	ON	OFF	ON	OFF	OFF
		SL2	ON	ON	OFF	FL	FL
		SL3	OFF	OFF	OFF	ON	ON
		S4	OFF				
	Gear Position		1st	2nd	3rd	4th	5th to 4th
SL1, SL2, SL3, and S4 Malfunction	Solenoid Valve	SL1	OFF				
		SL2	OFF				
		SL3	OFF				
		S4	OFF				
	Gear Position		1st to 4th	2nd to 4th	3rd to 4th	4th	5th to 4th

DATA LIST / ACTIVE TEST

1. READ DATA LIST

HINT:

Using the intelligent tester's DATA LIST allows switch, sensor, actuator, and other item values to be read without removing any parts. Reading the DATA LIST early in troubleshooting is one way to save time.

NOTICE:

In the table below, the values listed under "Normal Condition" are reference values. Do not depend solely on these reference values when deciding whether a part is faulty or not.

(a) Warm up the engine.

(b) Turn the ignition switch OFF.

(c) Connect the intelligent tester to the CAN VIM. Then connect the CAN VIM to the DLC3.

(d) Turn the ignition switch ON and turn the tester ON.

(e) Enter the following menus: DIAGNOSIS / ENHANCED OBD II / DATA LIST.

(f) Follow the instructions on the tester and read the DATA LIST.

ECM:

Tester Display	Measurement Item/Range	Normal Condition	Diagnostic Note
SPD (NC)	Counter gear speed/ Min.: 0 rpm Max.: 12,750 rpm	3rd gear when shift lever is on D (after warming up the engine); Intermediate shaft speed (NC) becomes close to the engine speed	Data is displayed in increments of 50 rpm
SPD (NT)	Input turbine speed/ Min.: 0 rpm Max.: 12,750 rpm	• Lock-up ON (after warming up engine): Input turbine speed (NT) is equal to engine speed. • Lock-up OFF (idling with shift lever on N): Input turbine speed (NT) is nearly equal to engine speed.	Data is displayed in increments of 50 rpm
PNP SW [NSW]	PNP switch status/ ON or OFF	Shift lever is: On P or N: ON Not on P or N: OFF	When shift lever position displayed on intelligent tester differs from actual position, adjustment of PNP switch or shift cable may be incorrect HINT: When failure still occurs even after adjusting these parts, refer to DTC P0705 (see page AX-44)
STOP LIGHT SW	Stop light switch status/ ON or OFF	• Brake pedal is depressed: ON • Brake pedal is released: OFF	-
SHIFT	ECM gear shift command/ 1st, 2nd, 3rd, 4th and 5th	Shift lever position is: • On L: 1st • On 2: 1st or 2nd • On 3: 1st, 2nd or 3rd • On 4: 1st, 2nd, 3rd or 4th • On D: 1st, 2nd, 3rd, 4th or 5th	-

Tester Display	Measurement Item/Range	Normal Condition	Diagnostic Note
REVERSE	PNP switch status/ ON or OFF	Shift lever is: On R: ON Not on R: OFF	When shift lever position displayed on intelligent tester differs from actual position, adjustment of PNP switch or shift cable may be incorrect HINT: When failure still occurs even after adjusting these parts, refer to DTC P0705 (see page AX-44)
PARKING	PNP switch status/ ON or OFF	Shift lever is: On P: ON Not on P: OFF	When shift lever position displayed on intelligent tester differs from actual position, adjustment of PNP switch or shift cable may be incorrect HINT: When failure still occurs even after adjusting these parts, refer to DTC P0705 (see page AX-44)
NEUTRAL	PNP switch status/ ON or OFF	Shift lever is: On N: ON Not on N: OFF	When shift lever position displayed on intelligent tester differs from actual position, adjustment of PNP switch or shift cable may be incorrect HINT: When failure still occurs even after adjusting these parts, refer to DTC P0705 (see page AX-44)
DRIVE	PNP switch status/ ON or OFF	Shift lever is: On 4 or D: ON Not on 4 or D: OFF	When shift lever position displayed on intelligent tester differs from actual position, adjustment of PNP switch or shift cable may be incorrect HINT: When failure still occurs even after adjusting these parts, refer to DTC P0705 (see page AX-44
4TH/DRIVE	PNP switch status/ ON or OFF	Shift lever is: On 4: ON Not on 4: OFF	When shift lever position displayed on intelligent tester differs from actual position, adjustment of PNP switch or shift cable may be incorrect HINT: When failure still occurs even after adjusting these parts, refer to DTC P0705 (see page AX-44)
3RD	PNP switch status/ ON or OFF	Shift lever is: On 3: ON Not on 3: OFF	When shift lever position displayed on intelligent tester differs from actual position, adjustment of PNP switch or shift cable may be incorrect HINT: When failure still occurs even after adjusting these parts, refer to DTC P0705 (see page AX-44)
2ND	PNP switch status/ ON or OFF	Shift lever is: On 2 or L: ON Not on 2 or L: OFF	When shift lever position displayed on intelligent tester differs from actual position, adjustment of PNP switch or shift cable may be incorrect HINT: When failure still occurs even after adjusting these parts, refer to DTC P0705 (see page AX-44)

Tester Display	Measurement Item/Range	Normal Condition	Diagnostic Note
LOW	PNP switch status/ ON or OFF	Shift lever is: On L: ON Not on L: OFF	When shift lever position displayed on intelligent tester differs from actual position, adjustment of PNP switch or shift cable may be incorrect HINT: When failure still occurs even after adjusting these parts, refer to DTC P0705 (see page AX-44)
A/T OIL TEMP1	ATF temperature sensor value/ Min.: -40°C (-40°F) Max.: 215°C (419°F)	• After stall test: Approximately 80°C (176°F) • Equal to ambient temperature while engine is cold	If value is -40°C (-40°F) or "150°C (302°F) or more", ATF temperature sensor circuit is open or short circuited
LOCK UP SOL	Lock-up solenoid status/ ON or OFF	• Lock-up: ON • Not on lock-up: OFF	-
SOLENOID (SLT)	Shift solenoid SLT status/ ON or OFF	• Accelerator pedal is depressed: OFF • Accelerator pedal is released: ON	-

2. PERFORM ACTIVE TEST

HINT:

Performing the intelligent tester's ACTIVE TEST allows relay, VSV, actuator and other items to be operated without removing any parts. Performing the ACTIVE TEST early in troubleshooting is one way to save time. The DATA LIST can be displayed during the ACTIVE TEST.

(a) Warm up the engine.
(b) Turn the ignition switch OFF.
(c) Connect the intelligent tester to the CAN VIM. Then connect the CAN VIM to the DLC3.
(d) Turn the ignition switch ON and turn the tester ON.
(e) Enter the following menus: DIAGNOSIS / ENHANCED OBD II / ACTIVE TEST.
(f) Perform the ACTIVE TEST.

ECM:

Tester Display	Test Part	Control Range	Diagnostic Note
SHIFT	[Test Details] Operate shift solenoid valve and set each shift lever position by yourself [Vehicle Condition] • IDL: ON • 50 km/h (31 mph) or less [Other information] • Press "→" button: Shift up • Press "←" button: Shift down	-	Possible to check operation of shift solenoid valves
SOLENOID (S4)	[Test Details] Operate the shift solenoid S4 [Vehicle Condition] • Vehicle stopped • Shift lever P or N position	-	-
SOLENOID (SL1)	[Test Details] Operate the shift solenoid SL1 [Vehicle Condition] • Vehicle stopped • Shift lever P or N position	-	-

Tester Display	Test Part	Control Range	Diagnostic Note
SOLENOID (SL2)	[Test Details] Operate the shift solenoid SL2 [Vehicle Condition] • Vehicle stopped • Shift lever P or N position	-	-
SOLENOID (SL3)	[Test Details] Operate the shift solenoid SL3 [Vehicle Condition] • Vehicle stopped • Shift lever P or N position	-	-
LOCK UP	[Test Details] Control shift solenoid DSL to set automatic transaxle to the lock-up condition [Vehicle Condition] • Throttle valve opening angle: Less than 35% • Vehicle speed: 60 km/h (36 mph) or more	-	Possible to check shift solenoid valve DSL operation
SOLENOID (DSL)	[Test Details] Operate the shift solenoid DSL [Vehicle Condition] • Vehicle stopped • Shift lever P or N position	-	-
SOLENOID (SR)	[Test Details] Operate the shift solenoid SR [Vehicle Condition] • Vehicle stopped • Shift lever P or N position	-	-
SOLENOID (SLT)*	[Test Details] Operate shift solenoid SLT and raise line pressure [Vehicle Condition] • Vehicle stopped • IDL: ON HINT: OFF: Line pressure up (when Active Test "SOLENOID (SLT)" is performed, ECM commands SLT solenoid to turn OFF) ON: No action (normal operation)	-	-

HINT:
*: "SOLENOID (SLT)" in the ACTIVE TEST is performed to check the line pressure changes by connecting SST to the automatic transaxle, which is used in the HYDRAULIC TEST (see page AX-18) as well. Please note that the pressure values in the ACTIVE TEST and HYDRAULIC TEST are different.

DIAGNOSTIC TROUBLE CODE CHART

HINT:

- If a DTC is displayed during the DTC check, check the circuit listed in the table below and proceed to the page given.
- *1: "Comes on" means the Malfunction Indicator Lamp (MIL) illuminates.
- *2: "DTC stored" means the ECM memorizes the malfunction code if the ECM detects the DTC detection condition.
- These DTCs may be output when the clutch, brake, gear components, etc., inside the automatic transaxle are damaged.

Automatic transaxle system:

DTC No.	Detection Item	Trouble Area	MIL*1	Memory*2	See page
P0705	Transmission Range Sensor Circuit Malfunction (PRNDL Input)	- Open or short in park/neutral position switch circuit - Park/Neutral position switch - ECM	Comes on	DTC stored	AX-44
P0710	Transmission Fluid Temperature Sensor "A" Circuit	- Open or short in ATF temperature sensor circuit - ATF temperature sensor - ECM	Comes on	DTC stored	AX-51
P0711	Transmission Fluid Temperature Sensor "A" Performance	- Open or short in ATF temperature sensor circuit - ATF temperature sensor - ECM	Comes on	DTC stored	AX-55
P0712	Transmission Fluid Temperature Sensor "A" Circuit Low Input	- Short in ATF temperature sensor circuit - ATF temperature sensor - ECM	Comes on	DTC stored	AX-51
P0713	Transmission Fluid Temperature Sensor "A" Circuit High Input	- Open in ATF temperature sensor circuit - ATF temperature sensor - ECM	Comes on	DTC stored	AX-51
P0717	Input Speed Sensor Circuit No Signal	- Open or short in speed sensor NT circuit - Speed sensor NT - ECM	Comes on	DTC stored	AX-58
P0724	Brake Switch "B" Circuit High	- Short in stop light switch circuit - Stop light switch - ECM	Comes on	DTC stored	AX-62

DTC No.	Detection Item	Trouble Area	MIL*1	Memory*2	See page
P0741	Torque Converter Clutch Solenoid Performance (Shift Solenoid Valve DSL)	- Shift solenoid valve DSL remains open or closed - Valve body is blocked - Shift solenoid valve DSL - Torque converter clutch - Automatic transaxle (clutch, brake, gear, etc.) - Line pressure is too low - ECM	Comes on	DTC stored	AX-65
P0746	Pressure Control Solenoid "A" Performance (Shift Solenoid Valve SL1)	- Shift solenoid valve SL1 remains open or closed - Valve body is blocked - Shift solenoid valve SL1 - Automatic transaxle (clutch, brake, gear, etc.) - ECM	Comes on	DTC stored	AX-72
P0748	Pressure Control Solenoid "A" Electrical (Shift Solenoid Valve SL1)	- Open or short in shift solenoid valve SL1 circuit - Shift solenoid valve SL1 - ECM	Comes on	DTC stored	AX-76
P0766	Shift Solenoid "D" Performance (Shift Solenoid Valve S4)	- Shift solenoid valve S4 remains open or closed - Valve body is blocked - Shift solenoid valve S4 - Automatic transaxle (clutch, brake, gear, etc.) - ECM	Comes on	DTC stored	AX-79
P0771	Shift Solenoid "E" Performance (Shift Solenoid Valve SR)	- Shift solenoid valve SR remains open or closed - Valve body is blocked - Shift solenoid vavle SR - Automatic transaxle (clutch, brake, gear, etc.)	Comes on	DTC stored	AX-83
P0776	Pressure Control Solenoid "B" Performance (Shift Solenoid Valve SL2)	- Shift solenoid valve SL2 remains open or closed - Valve body is blocked - Shift solenoid valve SL2 - Automatic transaxle (clutch, brake, gear, etc.) - ECM	Comes on	DTC stored	AX-87

DTC No.	Detection Item	Trouble Area	MIL*1	Memory*2	See page
P0778	Pressure Control Solenoid "B" Electrical (Shift Solenoid Valve SL2)	- Open or short in shift solenoid valve SL2 circuit - Shift solenoid valve SL2 - ECM	Comes on	DTC stored	AX-92
P0793	Intermediate Shaft Speed Sensor "A"	- Open or short in speed sensor NC circuit - Speed sensor NC - ECM	Comes on	DTC stored	AX-95
P0796	Pressure Control Solenoid "C" Performance (Shift Solenoid Valve SL3)	- Shift solenoid valve SL3 remains open or closed - Valve body is blocked Automatic transaxle (clutch, brake, gear, etc.)	Comes on	DTC stored	AX-99
P0798	Pressure Control Solenoid "C" Electrical (Shift Solenoid Valve SL3)	- Open or short in shift solenoid valve SL3 circuit - Shift solenoid valve SL3 - ECM	Comes on	DTC stored	AX-103
P0982	Shift Solenoid "D" Control Circuit Low (Shift Solenoid Valve S4)	- Short in shift solenoid valve S4 circuit - Shift solenoid valve S4 - ECM	Comes on	DTC stored	AX-106
P0983	Shift Solenoid "D" Control Circuit High (Shift Solenoid Valve S4)	- Open in shift solenoid valve S4 circuit - Shift solenoid valve S4 - ECM	Comes on	DTC stored	AX-106
P0985	Shift Solenoid "E" Control Circuit Low (Shift Solenoid Valve SR)	- Short in shift solenoid valve SR circuit - Shift solenoid valve SR - ECM	Comes on	DTC stored	AX-110
P0986	Shift Solenoid "E" Control Circuit High (Shift Solenoid Valve SR)	- Open in shift solenoid valve SR circuit - Shift solenoid valve SR - ECM	Comes on	DTC stored	AX-110
P2714	Pressure Control Solenoid "D" Performance (Shift Solenoid Valve SLT)	- Shift solenoid valve SLT remains closed - Valve body is blocked - Torque converter clutch - Automatic transaxle (clutch, brake, gear, etc.) - ECM	Comes on	DTC stored	AX-114
P2716	Pressure Control Solenoid "D" Electrical (Shift Solenoid Valve SLT)	- Open or short in shift solenoid valve SLT circuit - Shift solenoid valve SLT - ECM	Comes on	DTC stored	AX-120

DTC No.	Detection Item	Trouble Area	MIL*1	Memory*2	See page
P2769	Torque Converter Clutch Solenoid Circuit Low (Shift Solenoid Valve DSL)	- Short in shift solenoid valve DSL circuit - Shift solenoid valve DSL - ECM	Comes on	DTC stored	AX-123
P2770	Torque Converter Clutch Solenoid Circuit High (Shift Solenoid Valve DSL)	- Open in shift solenoid valve DSL circuit - Shift solenoid valve DSL - ECM	Comes on	DTC stored	AX-123

DTC	P0705	Transmission Range Sensor Circuit Malfunction (PRNDL Input)

DESCRIPTION

The Park/Neutral Position (PNP) switch detects the shift lever position and sends signals to the ECM.

DTC No.	DTC Detection Condition	Trouble Area
P0705	When one of following conditions is met: (A) Any 2 or more of the P, N, R, D, 3 and 2 input signals are ON simultaneously (2 trip detection logic) (B) Any 2 or more of the NSW, R, D, 3 and 2 input signals are ON simultaneously (2 trip detection logic) (C) When both conditions below are met (2 trip detection logic) • One of the NSW, P, N or R input signal is ON • One of the 4 or L input signal is ON (D) All of the NSW, P, N, R, D, 3 and 2 input signals are OFF (2 trip detection logic)	• Open or short in park/neutral position switch circuit • Park/Neutral position switch • ECM

MONITOR DESCRIPTION

These DTCs indicate a problem with the park/neutral position switch and the wire harness in the park/neutral position switch circuit.
The park/neutral position switch detects the shift lever position and sends a signal to the ECM.
For security, the park/neutral position switch detects the shift lever position so that the engine can be started only when the shift lever is on P or N.
The park/neutral position switch sends a signal to the ECM according to the shift lever position (R, D, 4, 3, 2 or L).
The ECM determines that there is a problem with the switch or related parts if it receives more than 1 position signal simultaneously. The ECM will illuminate the MIL and store the DTC.

MONITOR STRATEGY

Related DTCs	P0705: Park/Neutral position switch/Verify switch input
Required sensors/Components	Park/Neutral position switch
Frequency of operation	Continuous
Duration	2 seconds: Condition (A), (B) and (C) 60 seconds: Condition (D)
MIL operation	2 driving cycles
Sequence of operation	None

TYPICAL ENABLING CONDITIONS

The monitor will run whenever this DTC is not present.	None
Ignition switch	ON
Battery voltage	10.5 V or more

TYPICAL MALFUNCTION THRESHOLDS

1. One of the following conditions is met: Condition (A), (B), (C) or (D)

Condition (A)

Number of the following signal input at the same time	2 or more
P switch	ON
R switch	ON

N switch	ON
D switch	ON
3 switch	ON
2 switch	ON

Condition (B)

Number of the following signal input at the same time	2 or more
NSW switch	ON
R switch	ON
D switch	ON
3 switch	ON
2 switch	ON

Condition (C)

Both of the following conditions are met:	Condition 1 and 2
1. One of the following conditions is met:	Condition (a), (b), (c) or (d)
(a) NSW switch	ON
(b) P switch	ON
(c) R switch	ON
(d) N switch	ON
2. One of the following conditions is met:	Condition (a) or (b)
(a) 4 switch	ON
(b) L switch	ON

Condition (D)

When all conditions below are met:	Condition (a), (b), (c), (d), (e), (f) and (g)
(a) NSW switch	OFF
(b) P switch	OFF
(c) R switch	OFF
(d) N switch	OFF
(e) D switch	OFF
(f) 3 switch	OFF
(g) 2 switch	OFF

COMPONENT OPERATING RANGE

Park/Neutral position switch	Park/Neutral position switch sends only one signal to ECM.

WIRING DIAGRAM

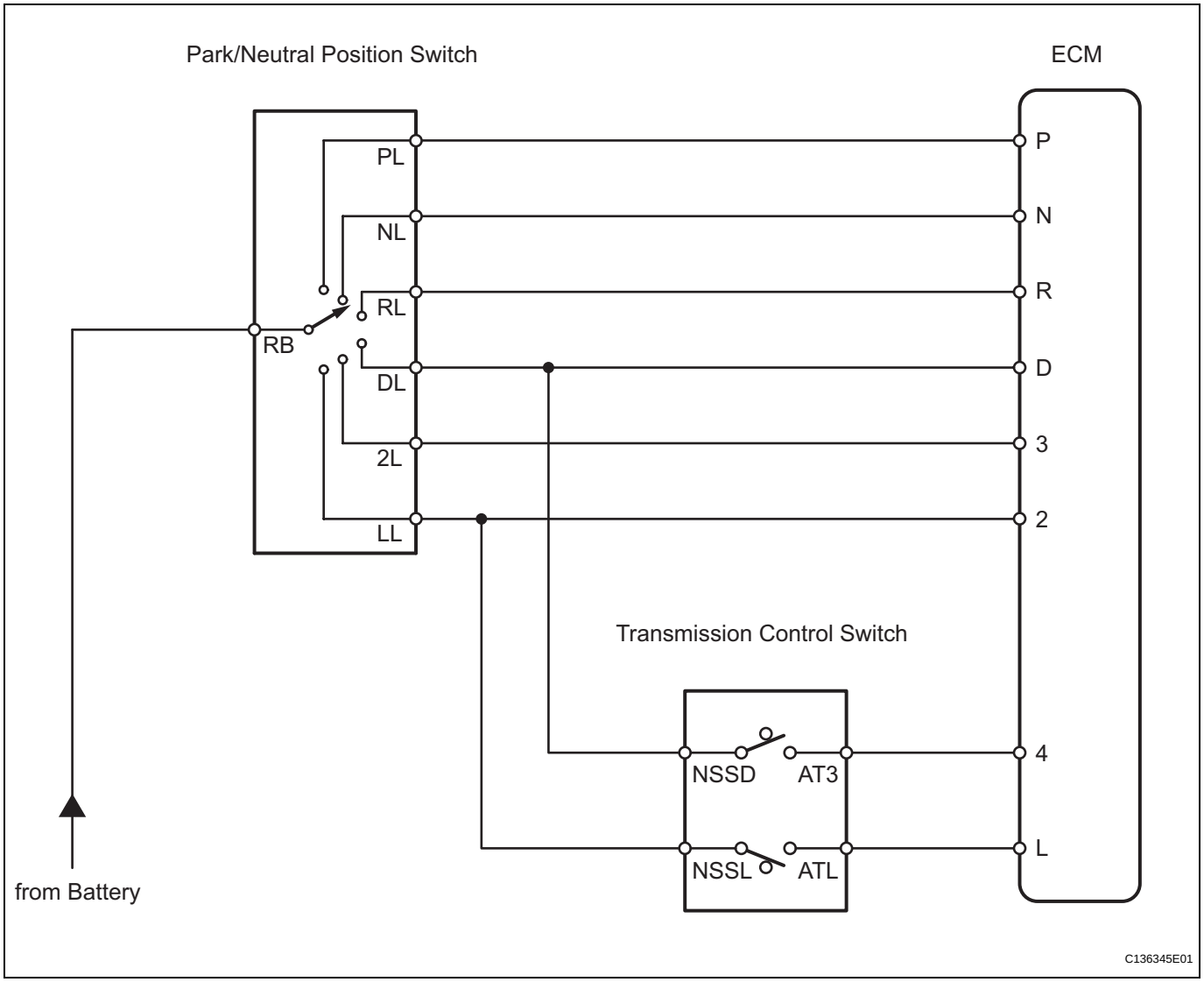

INSPECTION PROCEDURE

HINT:

Using the intelligent tester's DATA LIST allows switch, sensor, actuator and other item values to be read without removing any parts. Reading the DATA LIST early in troubleshooting is one way to save time.

NOTICE:

In the table below, the values listed under "Normal Condition" are reference values. Do not depend solely on these reference values when deciding whether a part is faulty or not.

1. Warm up the engine.
2. Turn the ignition switch OFF.
3. Connect the intelligent tester to the CAN VIM. Then connect the CAN VIM to the DLC3.
4. Turn the ignition switch ON and turn the tester ON.
5. Enter the following menus: DIAGNOSIS / ENHANCED OBD II / DATA LIST.
6. Follow the instructions on the tester and read the DATA LIST.

ECM:

Item	Measurement Item/ Range (Display)	Normal Condition	Diagnostic Note
PNP SW (NSW)	PNP switch status/ ON or OFF	Shift lever is: On P or N: ON Not on P or N: OFF	When shift lever position displayed on intelligent tester differs from actual position, adjustment of PNP switch or shift cable may be incorrect
REVERSE	PNP switch status/ ON or OFF	Shift lever is: On R: ON Not on R: OFF	When shift lever position displayed on intelligent tester differs from actual position, adjustment of PNP switch or shift cable may be incorrect
PARKING	PNP switch status/ ON or OFF	Shift lever is: On P: ON Not on P: OFF	When shift lever position displayed on intelligent tester differs from actual position, adjustment of PNP switch or shift cable may be incorrect
NEUTRAL	PNP switch status/ ON or OFF	Shift lever is: On N: ON Not on N: OFF	When shift lever position displayed on intelligent tester differs from actual position, adjustment of PNP switch or shift cable may be incorrect
4TH/DRIVE	PNP switch status/ ON or OFF	Shift lever is: On 4 or D: ON Not on 4 or D: OFF	When shift lever position displayed on intelligent tester differs from actual position, adjustment of PNP switch or shift cable may be incorrect
3RD	PNP switch status/ ON or OFF	Shift lever is: On 3: ON Not on 3: OFF	When shift lever position displayed on intelligent tester differs from actual position, adjustment of PNP switch or shift cable may be incorrect
2ND	PNP switch status/ ON or OFF	Shift lever is: On 2 or L: ON Not on 2 or L: OFF	When shift lever position displayed on intelligent tester differs from actual position, adjustment of PNP switch or shift cable may be incorrect
LOW	PNP switch status/ ON or OFF	Shift lever is: On L: ON Not on L: OFF	When shift lever position displayed on intelligent tester differs from actual position, adjustment of PNP switch or shift cable may be incorrect

1 CHECK WIRE HARNESS (PARK/NEUTRAL POSITION SWITCH - BATTERY)

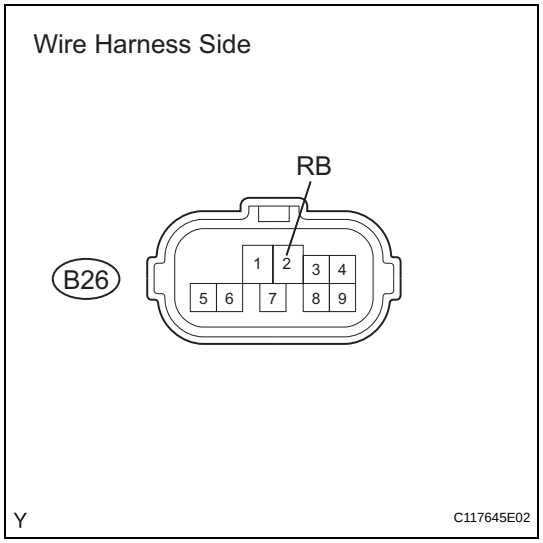

(a) Disconnect the B26 park/neutral position switch connector.
(b) Turn the ignition switch ON.
(c) Measure the voltage of the wire harness side connector.
Standard voltage

Tester Connection	Specified Condition
B26-2 (RB) - Body ground	10 to 14 V

NG → **CHECK POWER SOURCE OF ECM**

OK

2 INSPECT PARK/NEUTRAL POSITION SWITCH

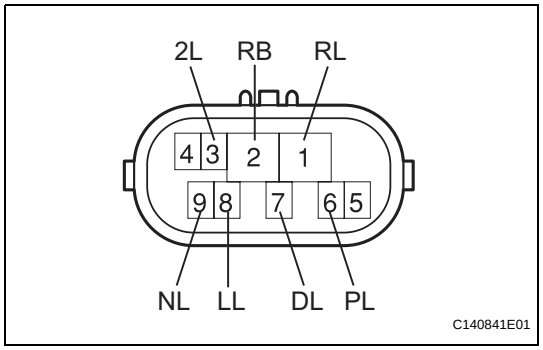

(a) Disconnect the B26 park/neutral position switch connector.
(b) Measure the resistance of the park/neutral position switch when the shift lever is moved to each position.
Standard resistance

Tester Connection	Shift Lever Position	Specified Condition
6 (PL) - 2 (RB)	P	Below 1 Ω
6 (PL) - 2 (RB)	Not on P	10 kΩ or higher
1 (RL) - 2 (RB)	R	Below 1 Ω
1 (RL) - 2 (RB)	Not on R	10 kΩ or higher
9 (NL) - 2 (RB)	N	Below 1 Ω
9 (NL) - 2 (RB)	Not on N	10 kΩ or higher
7 (DL) - 2 (RB)	D	Below 1 Ω
7 (DL) - 2 (RB)	Not on D	10 kΩ or higher
3 (2L) - 2 (RB)	2	Below 1 Ω
3 (2L) - 2 (RB)	Not on 2	10 kΩ or higher
8 (LL) - 2 (RB)	L	Below 1 Ω
8 (LL) - 2 (RB)	Not on L	10 kΩ or higher

NG → **REPLACE PARK/NEUTRAL POSITION SWITCH**

OK

3	CHECK WIRE HARNESS (ECM - BATTERY)

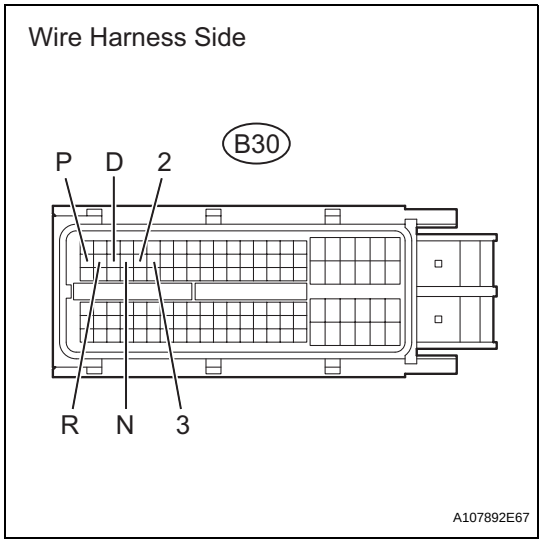

(a) Disconnect the B30 ECM connector.
(b) Turn the ignition switch ON.
(c) Measure the voltage of the wire harness side connector.

Standard voltage

Tester Connection	Shift Lever Position	Specified Condition
B30-24 (P) - Body ground	P	10 to 14 V
B30-24 (P) - Body ground	Not on P	Below 1 V
B30-25 (R) - Body ground	R	10 to 14 V*
B30-25 (R) - Body ground	Not on R	Below 1 V
B30-27 (N) - Body ground	N	10 to 14 V
B30-27 (N) - Body ground	Not on N	Below 1 V
B30-26 (D) - Body ground	D or 4	10 to 14 V
B30-26 (D) - Body ground	Not on D or 4	Below 1 V
B30-28 (2) - Body ground	2	10 to 14 V
B30-28 (2) - Body ground	Not on 2	Below 1 V
B30-29 (3) - Body ground	3 or L	10 to 14 V
B30-29 (3) - Body ground	Not on 3 or L	Below 1 V

HINT:
*: The voltage will drop slightly due to the illumination of the back-up light.

NG → **REPAIR OR REPLACE HARNESS AND CONNECTOR**

OK

4	CHECK WIRE HARNESS (PARK/NEUTRAL POSITION SWITCH - TRANSMISSION CONTROL SWITCH)

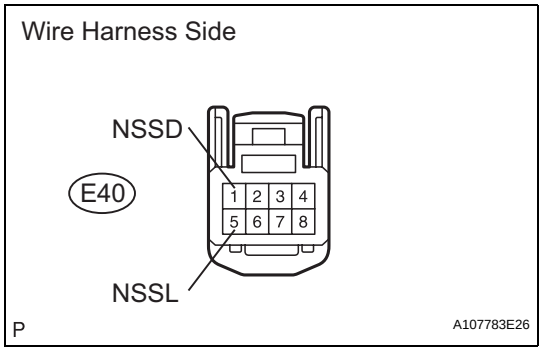

(a) Disconnect the E40 switch connector.
(b) Turn the ignition switch ON.
(c) Measure the voltage when the shift lever is moved to each position.

Standard voltage

Tester Connection	Shift Lever Position	Specified Condition
1 (NSSD) - Body ground	D and 4	10 to 14 V
1 (NSSD) - Body ground	Not on D and 4	Below 1 V
5 (NSSL) - Body ground	3 and L	10 to 14 V
5 (NSSL) - Body ground	Not on 3 and L	Below 1 V

NG → REPAIR OR REPLACE HARNESS AND CONNECTOR

OK

5 INSPECT TRANSMISSION CONTROL SWITCH

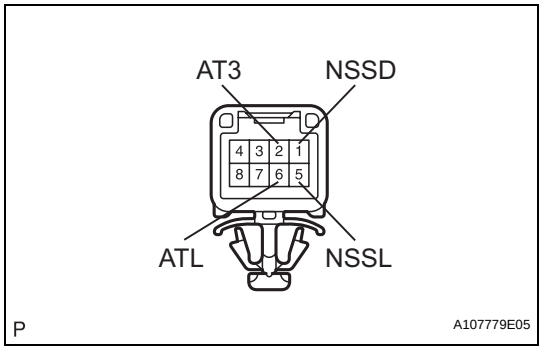

(a) Disconnect the E40 switch connector.
(b) Measure the resistance of the switch when the shift lever is moved to each position.

Standard resistance

Tester Connection	Shift Lever Position	Specified Condition
1 (NSSD) - 2 (AT3)	D	10 kΩ or higher
1 (NSSD) - 2 (AT3)	3	Below 1 Ω
5 (NSSL) - 6 (ATL)	D	10 kΩ or higher
5 (NSSL) - 6 (ATL)	3	Below 1 Ω

NG → REPLACE TRANSMISSION CONTROL SWITCH

OK

6 CHECK WIRE HARNESS (TRANSMISSION CONTROL SWITCH - BATTERY)

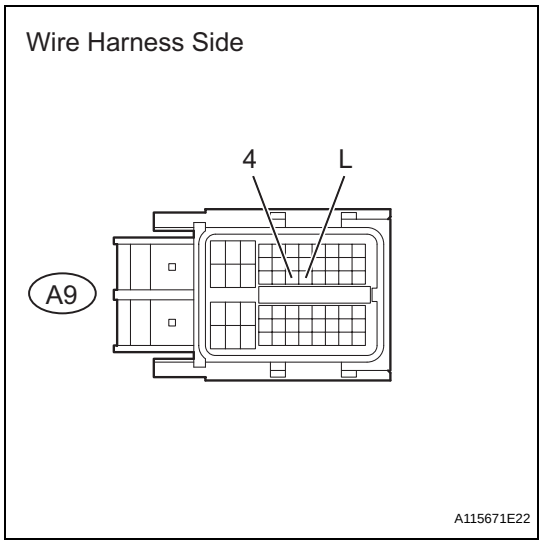

(a) Disconnect the A9 ECM connector.
(b) Turn the ignition switch ON.
(c) Measure the voltage of the wire harness side connector.

Standard voltage

Tester Connection	Shift Lever Position	Specified Condition
A9-25 (4) - Body ground	4	10 to 14 V
A9-25 (4) - Body ground	Not on 4	Below 1 V
A9-26 (L) - Body ground	L	10 to 14 V
A9-26 (L) - Body ground	Not on L	Below 1 V

HINT:
*: The voltage will drop slightly due to the illumination of the back-up light.

NG → REPAIR OR REPLACE HARNESS AND CONNECTOR

OK

REPLACE ECM

DTC	P0710	Transmission Fluid Temperature Sensor "A" Circuit

DTC	P0712	Transmission Fluid Temperature Sensor "A" Circuit Low Input

DTC	P0713	Transmission Fluid Temperature Sensor "A" Circuit High Input

DESCRIPTION

The Automatic Transmission Fluid (ATF) temperature sensor converts the ATF temperature into a resistance value which is input into the ECM.
The ECM applies a voltage to the temperature sensor through ECM terminal THO1.
The sensor resistance changes with the ATF temperature.
One terminal of the sensor is grounded so that the sensor resistance and voltage decrease as the temperature becomes higher.
The ECM calculates the ATF temperature based on the voltage signal.

DTC No.	DTC Detection Condition	Trouble Area
P0710	ATF temperature sensor resistance changes from (a) to (b) or from (b) to (a) in less than 0.5 sec., and P0712 and P0713 are not detected (1 trip detection logic): (a) ATF temperature sensor resistance is less than 79 Ω (b) ATF temperature sensor resistance is more than 156 kΩ	• Open or short in ATF temperature sensor circuit • ATF temperature sensor • ECM
P0712	ATF temperature sensor resistance is less than 79 Ω for 0.5 sec. or more (1 trip detection logic)	• Short in ATF temperature sensor circuit • ATF temperature sensor • ECM
P0713	15 minutes or more after the engine start, ATF temperature sensor resistance is more than 156 kΩ for 0.5 sec. or more (1 trip detection logic)	• Open in ATF temperature sensor circuit • ATF temperature sensor • ECM

MONITOR DESCRIPTION

ATF temperature sensor converts ATF temperature to an electrical resistance value. Based on the resistance, the ECM determines the ATF temperature, and the ECM detects an open or short in the ATF temperature circuit. If the resistance value of the ATF temperature is less than 79 Ω*1 or more than 156 kΩ*2, the ECM interprets this as a fault in the ATF sensor or wiring. The ECM will illuminate the MIL and store the DTC.
HINT:

- *1: 150°C (302°F) or more is indicated regardless of the actual ATF temperature.
- *2: -40°C (-40°F) is indicated regardless of the actual ATF temperature.
- The ATF temperature can be checked on the intelligent tester display.

MONITOR STRATEGY

Related DTCs	P0710: ATF temperature sensor/Range check (Chattering) P0712: ATF temperature sensor/Range check (Low resistance) P0713: ATF temperature sensor/Range check (High resistance)
Required sensors/Components	ATF temperature sensor
Frequency of operation	Continuous
Duration	0.5 sec.

MIL operation	Immediate
Sequence of operation	None

TYPICAL ENABLING CONDITIONS

P0710, P0712: Range check (Chattering, Low resistance)

The monitor will run whenever this DTC is not present.	None
The typical enabling condition is not available.	-

P0713: Range check (High resistance)

The monitor will run whenever this DTC is not present.	None
Time after engine start	15 min. or more

TYPICAL MALFUNCTION THRESHOLDS

P0710: Range check (Chattering)

ATF temperature sensor resistance	Less than 79 Ω or more than 156 kΩ

P0712: Range check (Low resistance)

ATF temperature sensor resistance	Less than 79 Ω

P0713: Range check (High resistance)

ATF temperature sensor resistance	More than 156 kΩ

COMPONENT OPERATING RANGE

ATF temperature sensor	Atmospheric temperature to approx. 130°C (266°F)

WIRING DIAGRAM

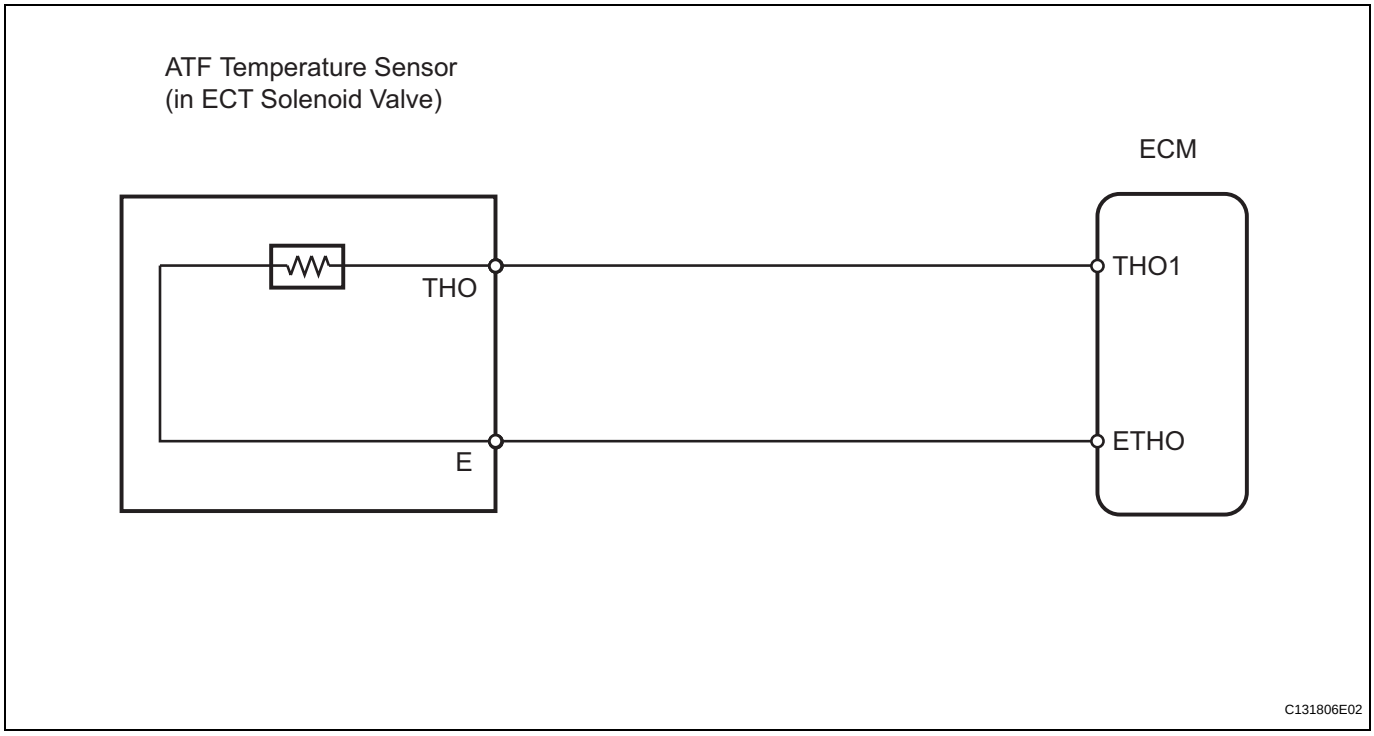

INSPECTION PROCEDURE

HINT:

Using the intelligent tester's DATA LIST allows switch, sensor, actuator and other item values to be read without removing any parts. Reading the DATA LIST early in troubleshooting is one way to save time.

NOTICE:

In the table below, the values listed under "Normal Condition" are reference values. Do not depend solely on these reference values when deciding whether a part is faulty or not.

1. Warm up the engine.
2. Turn the ignition switch OFF.
3. Connect the intelligent tester to the CAN VIM. Then connect the CAN VIM to the DLC3.
4. Turn the ignition switch ON and turn the tester ON.
5. Enter the following menus: DIAGNOSIS / ENHANCED OBD II / DATA LIST.
6. Follow the instructions on the tester and read the DATA LIST.

ECM:

Item	Measurement Item/ Range (Display)	Normal Condition	Diagnostic Note
A/T OIL TEMP1	ATF temperature sensor value/ Min.: -40°C (-40°F) Max.: 215°C (419°F)	• After stall test: Approximately 80°C (176°F) • Equal to ambient temperature while engine is cold	If value is -40°C (-40°F) or "150°C (302°F) or more", ATF temperature sensor circuit is open or short circuited

HINT:

- When DTC P0712 is output and the tester output is 150°C (302°F) or more, there is a short circuit.
- When DTC P0713 is output and the tester output is -40°C (-40°F), there is an open circuit. Measure the resistance between terminal THO1 (THO) and the body ground.

Temperature Displayed	Malfunction
-40°C (-40°F)	Open circuit
150°C (302°F) or more	Short circuit

HINT:

- If a circuit related to the ATF temperature sensor becomes open, P0713 is set in approximately 0.5 seconds.
- It is not necessary to inspect the circuit when P0711 is set.

1	INSPECT TRANSMISSION WIRE (ATF TEMPERATURE SENSOR)

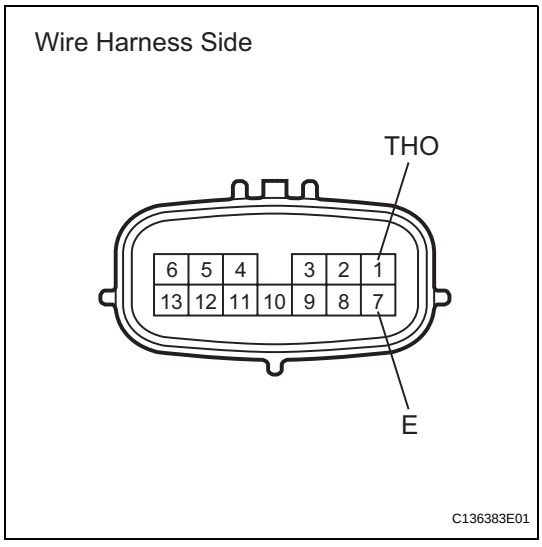

(a) Disconnect the B32 wire connector.

(b) Measure the resistance of the transmission wire.

Standard resistance

Tester Connection	Specified Condition
1 (THO) - 7 (E)	**79 Ω to 156 kΩ**
1 (THO) - Body ground	**1 MΩ or higher**
7 (E) - Body ground	**1 MΩ or higher**

HINT:

If the resistance is out of the specified range of either of the ATF temperatures shown in the table below, the driveability of the vehicle may decrease.

Standard resistance

ATF Temperature	Specified Condition
20°C (68°F)	**3 to 5 kΩ**
110°C (230°F)	**0.22 to 0.28 kΩ**

NG → **REPAIR OR REPLACE TRANSMISSION WIRE**

OK

2 CHECK WIRE HARNESS (TRANSMISSION WIRE - ECM)

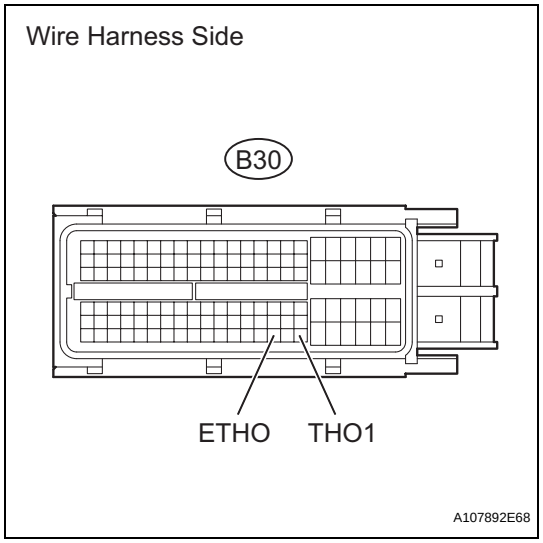

(a) Disconnect the B30 ECM connector.
(b) Measure the resistance of the wire harness side connector.

Standard resistance

Tester Connection	Specified Condition
B30-126 (THO1) - B30-124 (ETHO)	79 Ω to 156 kΩ
B30-126 (THO1) - Body ground	1 MΩ or higher
B30-124 (ETHO) - Body ground	1 MΩ or higher

NG → **REPAIR OR REPLACE HARNESS AND CONNECTOR**

OK

REPLACE ECM

DTC	P0711	Transmission Fluid Temperature Sensor "A" Performance

DESCRIPTION

AX

The ATF (Automatic Transmission Fluid) temperature sensor converts the fluid temperature into a resistance value which is input into the ECM.

DTC No.	DTC Detection Condition	Trouble Area
P0711	When either condition below is met: (A) Both (a) and (b) are detected: (2 trip detection logic) (a) Intake air and engine coolant temperatures are more than -10°C (14°F) at engine start (b) After normal driving for over 18 min. and 20 sec. and 9 km (5.6 mile) or more, ATF temp. is less than 20°C (68°F) (B) When engine coolant temp. is less that 35°C (95°F) at engine start, the ATF temp. is 110°C (230°F) or more after 17 min. of engine start (2 trip detection logic)	• Open or short in ATF temperature sensor circuit • ATF temperature sensor • ECM

MONITOR DESCRIPTION

The ATF temperature sensor converts the ATF temperature to an electrical resistance value. Based on the resistance, the ECM determines the ATF temperature and detects an open or short in the ATF temperature circuit or a fault in the ATF temperature sensor.
After running the vehicle for a certain period, the ATF temperature should increase. If the ATF temperature is below 20°C (68°F) after running the vehicle for a certain period, the ECM interprets this as a fault, and turns on the MIL.
When the ATF temperature is 110°C (230°F) or more after 17 minutes of engine cold start, the ECM also determines this as a fault, turns on the MIL, and stores the DTC.

MONITOR STRATEGY

Related DTCs	P0711: ATF temperature sensor/Rationality check
Required sensors/Components	ATF temperature sensor
Frequency of operation	Continuous
Duration	3 sec.: Condition (A) 10 sec.: Condition (B)
MIL operation	2 driving cycles
Sequence of operation	None

TYPICAL ENABLING CONDITIONS

All:

The monitor will run whenever this DTC is not present.	None
Time after engine start	16 min. and 40 sec. or more
ECT (Engine coolant temperature)	-15°C (5°F) or more
ATF sensor circuit	Not circuit malfunction
ECT sensor circuit	Not circuit malfunction
IAT sensor circuit	Not circuit malfunction
ETCS	Not circuit malfunction

Condition (A):

Time after engine start	18 min. and 20 sec.
Driving distance after engine start	9 km (5.6 mile) or more

IAT (Intake air temperature) (12 sec. after starting engine)	-10°C (14°F) or more
ECT (12 sec. after starting engine)	-10°C (14°F) or more

Condition (B):

ECT (Current temperature)	60°C (140°F) or more
ECT (12 sec. after engine start)	Less than 35°C (95°F)

TYPICAL MALFUNCTION THRESHOLDS

Condition (A):

ATF temperature sensor	Less than 20°C (68°F)

Condition (B):

ATF temperature sensor	110°C (230°F) or more

COMPONENT OPERATING RANGE

ATF temperature sensor	Atmospheric temperature - approximately 130°C (266°F)

WIRING DIAGRAM

Refer to DTC P0710 (see page AX-52).

INSPECTION PROCEDURE

HINT:
Using the intelligent tester's DATA LIST allows switch, sensor, actuator and other item values to be read without removing any parts. Reading the DATA LIST early in troubleshooting is one way to save time.
NOTICE:
In the table below, the values listed under "Normal Condition" are reference values. Do not depend solely on these reference values when deciding whether a part is faulty or not.

1. Warm up the engine.
2. Turn the ignition switch OFF.
3. Connect the intelligent tester to the CAN VIM. Then connect the CAN VIM to the DLC3.
4. Turn the ignition switch ON and turn the tester ON.
5. Enter the following menus: DIAGNOSIS / ENHANCED OBD II / DATA LIST.
6. Follow the instructions on the tester and read the DATA LIST.

ECM:

Item	Measurement Item/ Range (Display)	Normal Condition	Diagnostic Note
A/T OIL TEMP1	ATF temperature sensor value/ Min.: -40°C (-40°F) Max.: 215°C (419°F)	• After stall test: Approximately 80°C (176°F) • Equal to ambient temperature while engine is cold	If value is -40°C (-40°F) or "150°C (302°F) or more", ATF temperature sensor circuit is open or short circuited

HINT:
- When DTC P0712 is output and the tester output is 150°C (302°F) or more, there is a short circuit.
- When DTC P0713 is output and the tester output is -40°C (-40°F), there is an open circuit. Measure the resistance between terminal THO1 (THO) and the body ground.

Temperature Displayed	Malfunction
-40°C (-40°F)	Open circuit
150°C (302°F) or more	Short circuit

HINT:
- If a circuit related to the ATF temperature sensor becomes open, P0713 is set in approximately 0.5 seconds.
- It is not necessary to inspect the circuit when P0711 is set.

AX

1	CHECK OTHER DTC OUTPUT (IN ADDITION TO DTC P0711)

(a) Connect the intelligent tester to the CAN VIM. Then connect the CAN VIM to the DLC3.
(b) Turn the ignition switch ON and turn the tester ON.
(c) Enter the following menus: DIAGNOSIS / ENHANCED OBD II / DTC INFO / CURRENT CODES.
(d) Read the DTCs using the tester.

Result

Display (DTC output)	Proceed to
Only P0711 is output	A
P0711 and other DTCs are output	B

HINT:
If any other codes besides P0711 are output, perform troubleshooting for those DTCs first.

B → **GO TO DTC OUTPUT**

A

2	CHECK TRANSAXLE FLUID LEVEL

OK:
Automatic transaxle fluid level is correct.

NG → **ADD FLUID**

OK

REPAIR OR REPLACE TRANSMISSION WIRE

DTC	P0717	Input Speed Sensor Circuit No Signal

DESCRIPTION

This sensor detects the rotation speed of the turbine, which shows the input revolution of the transaxle. By comparing the input speed signal (NT) with the counter gear speed sensor signal (NC), the ECM detects the shift timing of the gears and controls the engine torque and hydraulic pressure according to various conditions. As a result, smooth gear shifting is achieved.

DTC No.	DTC Detection Condition	Trouble Area
P0717	ECM detects conditions (a), (b) and (c) continuously for 5 sec. or more (1 trip detection logic): (a) Vehicle speed: 50 km/h (31 mph) or more (b) Park/Neutral position switch (NSW, R and L) is OFF (c) Speed sensor NT: Less than 300 rpm	• Open or short in speed sensor NT circuit • Speed sensor NT • ECM

MONITOR DESCRIPTION

This DTC indicates that a pulse is not output from the speed sensor NT (input speed sensor) or is output only a little. The NT terminal of the ECM detects the revolving signal from the speed sensor (NT) (input RPM). The ECM outputs a gear shift signal comparing the input speed sensor (NT) with the output speed sensor (NC).

While the vehicle is operating in the 2nd, 3rd, 4th or 5th gear position with the shift lever on D, if the input shaft revolution is less than 300 rpm*1 and the output shaft revolution is 1,000 rpm or more*2, the ECM detects the trouble, illuminates the MIL and stores the DTC.

HINT:

*1: Pulse is not output or is irregularly output.

*2: The vehicle speed is approximately 50 km/h (31 mph) or more.

MONITOR STRATEGY

Related DTCs	P0717: Speed sensor (NT)/Verify pulse input
Required sensors/Components	Speed sensor (NT), Speed sensor (NC)
Frequency of operation	Continuous
Duration	5 sec.
MIL operation	Immediate
Sequence of operation	None

TYPICAL ENABLING CONDITIONS

The monitor will run whenever these DTCs are not present.	P0500 (VSS) P0748 - P0798 (Trans solenoid (Range))
Shift change	Shift change is completed before starting next shift change operation
ECM selected gear	2nd, 3rd, 4th or 5th
Output shaft rpm	1,000 rpm or more
NSW switch	OFF
R switch	OFF
L switch	OFF
Engine	Running
Ignition switch	ON
Starter	OFF

TYPICAL MALFUNCTION THRESHOLDS

Sensor signal rpm	Less than 300 rpm

COMPONENT OPERATING RANGE

AX

Speed sensor (NT)	Input speed is equal to engine speed when lock-up ON.

WIRING DIAGRAM

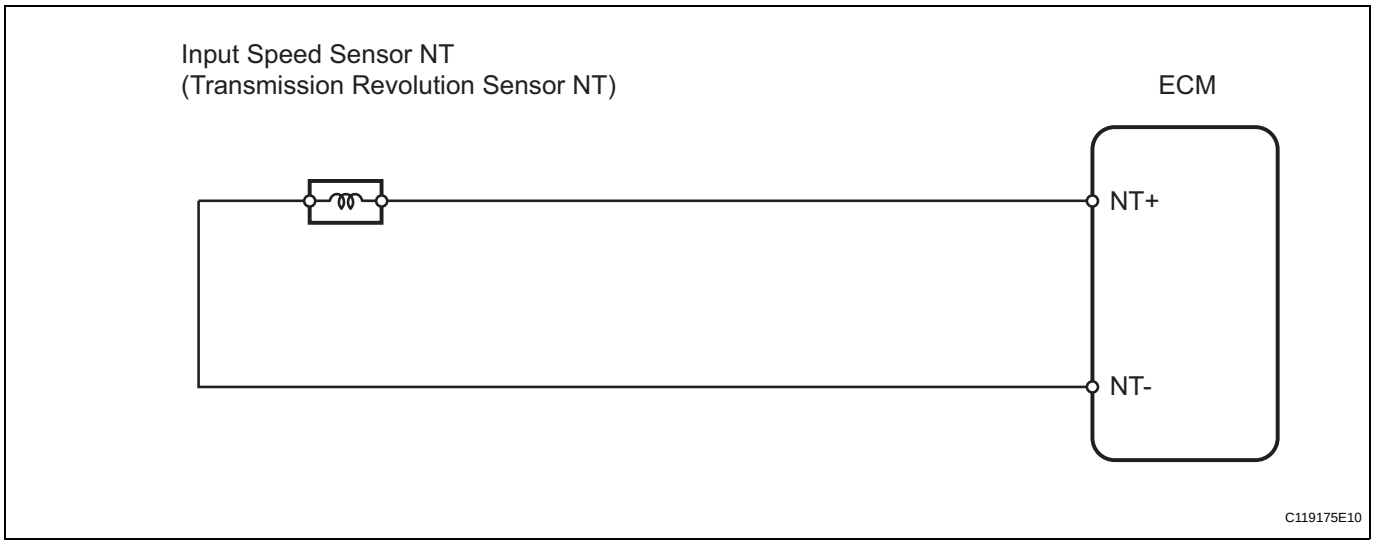

INSPECTION PROCEDURE

HINT:
Using the intelligent tester's DATA LIST allows switch, sensor, actuator and other item values to be read without removing any parts. Reading the DATA LIST early in troubleshooting is one way to save time.
NOTICE:
In the table below, the values listed under "Normal Condition" are reference values. Do not depend solely on these reference values when deciding whether a part is faulty or not.
1. Warm up the engine.
2. Turn the ignition switch OFF.
3. Connect the intelligent tester to the CAN VIM. Then connect the CAN VIM to the DLC3.
4. Turn the ignition switch ON and turn the tester ON.
5. Enter the following menus: DIAGNOSIS / ENHANCED OBD II / DATA LIST.
6. Follow the instructions on the tester and read the DATA LIST.

ECM:

Item	Measurement Item/ Range (Display)	Normal Condition	Diagnostic Note
SPD (NT)	Input turbine speed/ Min.: 0 rpm Max.: 12,750 rpm	• Lock-up ON (after warming up engine): Input turbine speed (NT) is equal to engine speed. • Lock-up OFF (idling with shift lever on N): Input turbine speed (NT) is nearly equal to engine speed.	Data is displayed in increments of 50 rpm

HINT:
- SPD (NT) is always 0 rpm while driving:
  Open or short in the sensor or circuit.

- SPD (NT) is always more than 0 rpm and less than 300 rpm while driving the vehicle at 50 km/h (31 mph) or more:
  Sensor trouble, improper installation, or intermittent connection trouble of the circuit.

1 INSPECT SPEED SENSOR (INSTALLATION)

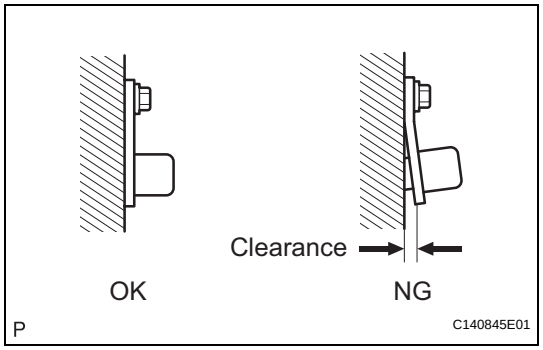

(a) Check the speed sensor NT installation.
OK:
Installation bolt is tightened properly and there is no clearance between the sensor and transaxle case.

NG → **SECURELY INSTALL SENSOR OR REPLACE SPEED SENSOR**

OK

2 INSPECT SPEED SENSOR NT

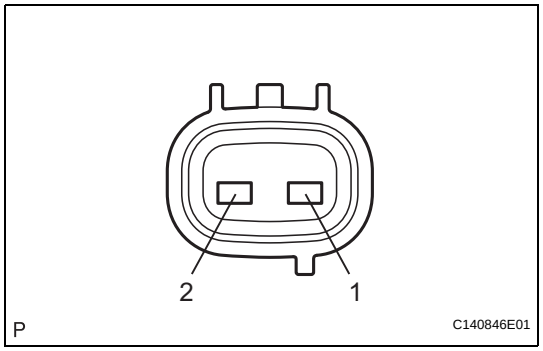

(a) Disconnect the B28 sensor connector from the transaxle.
(b) Measure the resistance of the sensor.
Standard resistance

Tester Connection	Condition	Specified Condition
1 - 2	20°C (68°F)	560 to 680 Ω

NG → **REPLACE SPEED SENSOR NT**

OK

3 CHECK WIRE HARNESS (SPEED SENSOR - ECM)

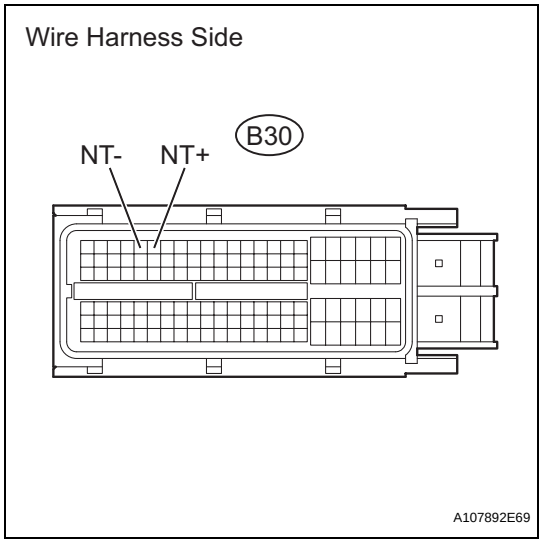

(a) Disconnect the B30 ECM connector.
(b) Measure the resistance of the wire harness side connector.
Standard resistance

Tester Connection	Condition	Specified Condition
B30-6 (NT+) - B30-5 (NT-)	20°C (68°F)	560 to 680 Ω
B30-6 (NT+) - Body ground	20°C (68°F)	10 kΩ or higher
B30-5 (NT-) - Body ground	20°C (68°F)	10 kΩ or higher

NG → **REPAIR OR REPLACE HARNESS AND CONNECTOR**

OK

REPLACE ECM

DTC	P0724	Brake Switch "B" Circuit High

DESCRIPTION

The purpose of this circuit is to prevent the engine from stalling while driving in the lock-up condition when the brakes are suddenly applied.
When the brake pedal is depressed, this switch sends a signal to the ECM. Then the ECM cancels the operation of the lock-up clutch while braking is in progress.

DTC No.	DTC Detection Condition	Trouble Area
P0724	Stop light switch remains ON even when vehicle is driven in GO (30 km/h (18.63 mph) or more) and STOP (less than 3 km/h (1.86 mph)) pattern 5 times (2 trip detection logic)	• Short in stop light switch signal circuit • Stop light switch • ECM

MONITOR DESCRIPTION

This DTC indicates that the stop light switch remains ON. When the stop light switch remains ON during GO and STOP driving, the ECM interprets this as a fault in the stop light switch. Then the MIL illuminates and the ECM stores the DTC. The vehicle must GO (30 km/h (18.63 mph) or more) and STOP (less than 3 km/h (1.86 mph)) 5 times for 2 driving cycles in order for the DTC to be output.

MONITOR STRATEGY

Related DTCs	P0724: Stop light switch/Range check/Rationality
Required sensors/Components	Stop light switch, Vehicle speed sensor
Frequency of operation	Continuous
Duration	GO and STOP 5 times
MIL operation	2 driving cycles
Sequence of operation	None

TYPICAL ENABLING CONDITIONS

The monitor will run whenever this DTC is not present.	None
Battery voltage	8 V or more
Starter	OFF
Ignition switch	ON
GO (Vehicle speed is 30 km/h (18.63 mph) or more)	Once
STOP (Vehicle speed is less than 3 km/h (1.86 mph))	Once

TYPICAL MALFUNCTION THRESHOLDS

Brake switch	Stuck ON

AX

WIRING DIAGRAM

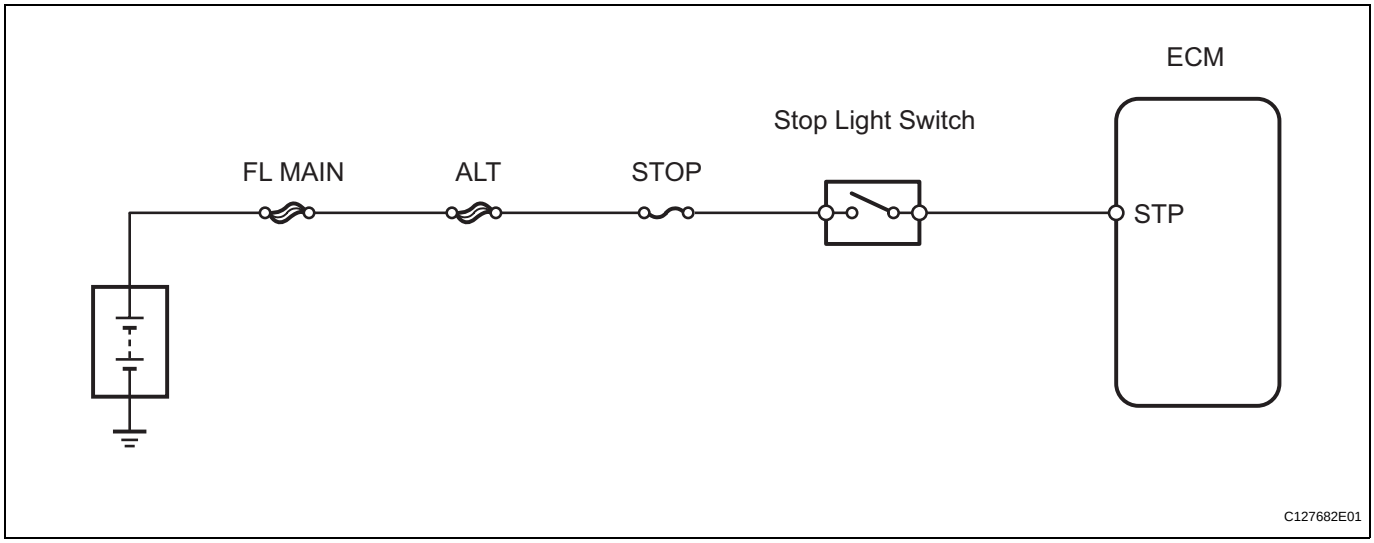

INSPECTION PROCEDURE

HINT:
Using the intelligent tester's DATA LIST allows switch, sensor, actuator and other item values to be read without removing any parts. Reading the DATA LIST early in troubleshooting is one way to save time.
NOTICE:
In the table below, the values listed under "Normal Condition" are reference values. Do not depend solely on these reference values when deciding whether a part is faulty or not.
1. Warm up the engine.
2. Turn the ignition switch OFF.
3. Connect the intelligent tester to the CAN VIM. Then connect the CAN VIM to the DLC3.
4. Turn the ignition switch ON and turn the tester ON.
5. Enter the following menus: DIAGNOSIS / ENHANCED OBD II / DATA LIST.
6. Follow the instructions on the tester and read the DATA LIST.

ECM:

Item	Measurement Item/ Range (Display)	Normal Condition	Diagnostic Note
STOP LIGHT SW	Stop light switch status/ ON or OFF	• Brake pedal is depressed: ON • Brake pedal is released: OFF	-

1	INSPECT STOP LIGHT SWITCH

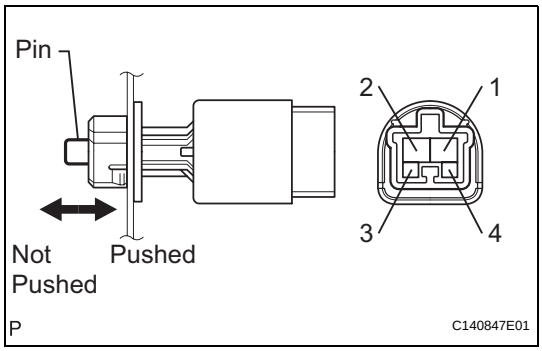

(a) Remove the A3 stop light switch.
(b) Measure the resistance of the switch.
Standard resistance

Tester Connection	Switch Condition	Specified Condition
1 - 2	Pin pushed (pedal released)	Below 1 Ω
1 - 2	Pin not pushed (pedal depressed)	10 kΩ or higher
3 - 4	Pin pushed (pedal released)	10 kΩ or higher
3 - 4	Pin not pushed (pedal depressed)	Below 1 Ω

NG → REPLACE STOP LIGHT SWITCH

OK

2 CHECK WIRE HARNESS (ECM - BATTERY)

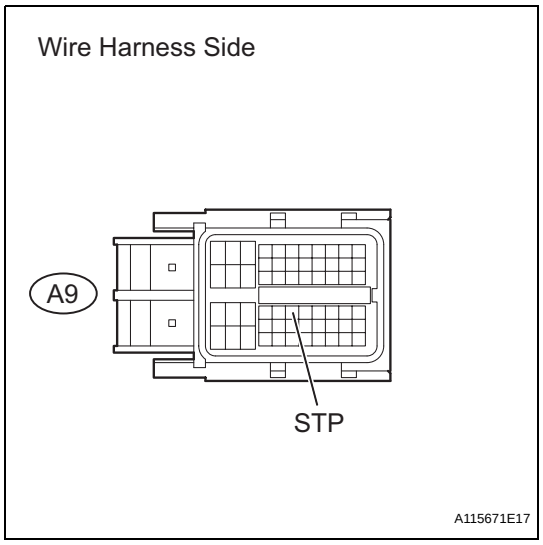

(a) Measure the voltage of the wire harness side connector.
Standard voltage

Tester Connection	Condition	Specified Condition
A9-36 (STP) - Body ground	Brake pedal is depressed	10 to 14 V
A9-36 (STP) - Body ground	Brake pedal is released	Below 1 V

NG → REPAIR OR REPLACE HARNESS AND CONNECTOR

OK

REPLACE ECM

AX

DTC	P0741	Torque Converter Clutch Solenoid Performance (Shift Solenoid Valve DSL)

DESCRIPTION

AX

The ECM uses the signals from the throttle position sensor, air-flow meter, turbine (input) speed sensor, intermediate (counter) shaft speed sensor and crankshaft position sensor to monitor the engagement condition of the lock-up clutch.
Then the ECM compares the engagement condition of the lock-up clutch with the lock-up schedule in the ECM memory to detect mechanical problems of the shift solenoid valve DSL, valve body and torque converter clutch.

DTC No.	DTC Detection Condition	Trouble Area
P0741	Lock-up does not occur when driving in the lock-up range (normal driving at 80 km/h [50 mph]), or lock up remains ON in the lock-up OFF range (2 trip detection logic)	• Shift solenoid valve DSL remains open or closed • Valve body is blocked • Shift solenoid valve DSL • Torque converter clutch • Automatic transaxle (clutch, brake, gear, etc.) • Line pressure is too low • ECM

MONITOR DESCRIPTION

Torque converter lock-up is controlled by the ECM based on the speed sensor (NT), speed sensor (NC), engine rpm, engine load, engine temperature, vehicle speed, transmission temperature, and gear selection. The ECM determines the lock-up status of the torque converter by comparing the engine rpm (NE) to the input turbine rpm (NT). The ECM calculates the actual transmission gear by comparing input turbine rpm (NT) to counter gear rpm (NC). When conditions are appropriate, the ECM requests "lock-up" by applying control voltage to the shift solenoid DSL. When the DSL is turned on, it applies pressure to the lock-up relay valve and locks the torque converter clutch.
If the ECM detects no lock-up after lock-up has been requested or if it detects lock-up when it is not requested, the ECM interprets this as a fault in the shift solenoid valve DSL or lock-up system performance. The ECM will turn on the MIL and store the DTC.
HINT:
Example:
When either of the following is met, the system judges it as a malfunction.

- There is a difference in rotation between the input side (engine speed) and output side (input turbine speed) of the torque converter when the ECM commands lock-up.
  (Engine speed is at least 75 rpm greater than input turbine speed.)
- There is no difference in rotation between the input side (engine speed) and output side (input turbine speed) of the torque converter when the ECM commands lock-up off.
  (The difference between engine speed and input turbine speed is less than 35 rpm.)

MONITOR STRATEGY

Related DTCs	P0741: Shift solenoid valve DSL/OFF malfunction Shift solenoid valve DSL/ON malfunction
Required sensors/Components	Shift solenoid valve DSL, Speed sensor (NT), Speed sensor (NC), Crankshaft position sensor (NE), Throttle position sensor (VPA1), Mass air flow sensor (MAF), Transmission temperature sensor (THO1), Engine coolant temperature sensor (ECT)
Frequency of operation	Continuous
Duration	OFF malfunction 3.5 sec. ON malfunction 1.8 sec.

MIL operation	2 driving cycles
Sequence of operation	None

TYPICAL ENABLING CONDITIONS

ALL:

The monitor will run whenever these DTCs are not present.	P0115 - P0118 (ECT sensor) P0125 (Insufficient ECT for closed loop) P0500 (VSS) P0748, P0778, P0798 (Shift solenoid valve (range))
ECT (Engine coolant temperature)	10°C (50°F) or more
Transmission range	"D"
ATF temperature	-20°C (-4°F) or more
ATF temperature sensor circuit	Not circuit malfunction
ECT sensor circuit	Not circuit malfunction
Turbine speed sensor circuit	Not circuit malfunction
Intermediate shaft speed sensor circuit	Not circuit malfunction
Output speed sensor circuit	Not circuit malfunction
Shift solenoid valve SL1 circuit	Not circuit malfunction
Shift solenoid valve SL2 circuit	Not circuit malfunction
Shift solenoid valve SL3 circuit	Not circuit malfunction
Shift solenoid valve S4 circuit	Not circuit malfunction
Shift solenoid valve SR circuit	Not circuit malfunction
Shift solenoid valve DSL circuit	Not circuit malfunction
Electronic throttle system	Not circuit malfunction

OFF malfunction

ECM lock-up command	ON
ECM selected gear	3rd, 4th or 5th
Vehicle speed	25 km/h (15.5 mph) or more

ON malfunction

ECM lock-up command	OFF
ECM selected gear	3rd, 4th or 5th
Throttle valve opening angle	7% or more
Vehicle speed	25 to 60 km/h (15.5 to 37.3 mph)

TYPICAL MALFUNCTION THRESHOLDS

Either of the following conditions is met: OFF malfunction or ON malfunction

OFF malfunction:

Engine Speed - Input (turbine) speed	100 rpm or more

ON malfunction:

Difference between engine speed and input (turbine) speed	Less than 35 rpm

WIRING DIAGRAM

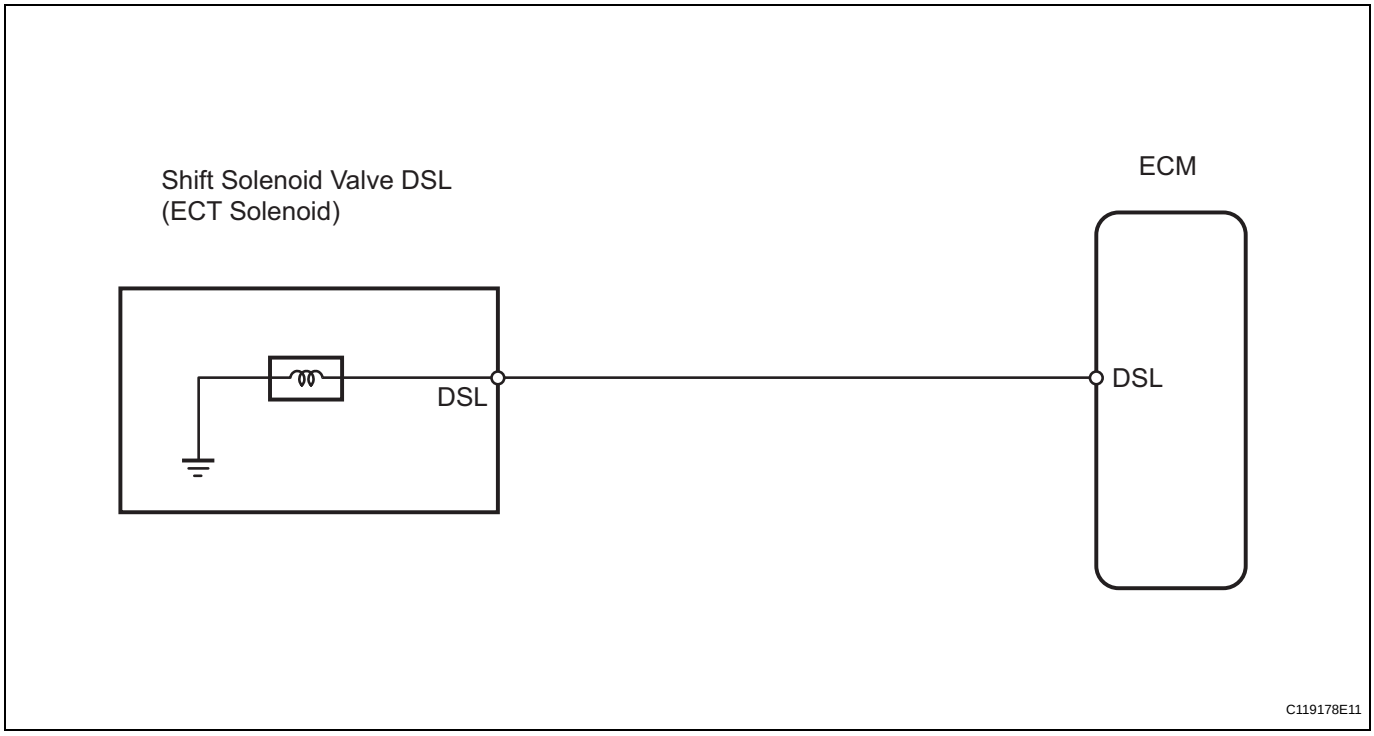

INSPECTION PROCEDURE

HINT:
Performing the intelligent tester's ACTIVE TEST allows relay, VSV, actuator and other items to be operated without removing any parts. Performing the ACTIVE TEST early in troubleshooting is one way to save time.
The DATA LIST can be displayed during the ACTIVE TEST.

1. Warm up the engine.
2. Turn the ignition switch OFF.
3. Connect the intelligent tester to the CAN VIM. Then connect the CAN VIM to the DLC3.
4. Turn the ignition switch ON and turn the tester ON.
5. Enter the following menus: DIAGNOSIS / ENHANCED OBD II / ACTIVE TEST.
6. Follow the instructions on the tester and perform the ACTIVE TEST.

ECM:

Item	Test Details	Diagnostic Note
LOCK UP	[Test Details] Control shift solenoid DSL to set automatic transaxle to the lock-up condition [Vehicle Condition] • Throttle valve opening angle: Less than 35% • Vehicle speed: 60 km/h (36 mph) or more	Possible to check shift solenoid valve DSL operation

HINT:
- This test can be conducted when the vehicle speed is 60 km/h (36 mph) or more.
- This test can be conducted in the 5th gear.

7. Lightly depress the accelerator pedal and check that the engine speed does not change abruptly.
   HINT:
   - When changing the accelerator pedal opening angle while driving, if the engine speed does not change, lock-up is ON.
   - Slowly release the accelerator pedal in order to decelerate. (Do not fully release the pedal as that will close the throttle valve and lock-up may be turned OFF.)

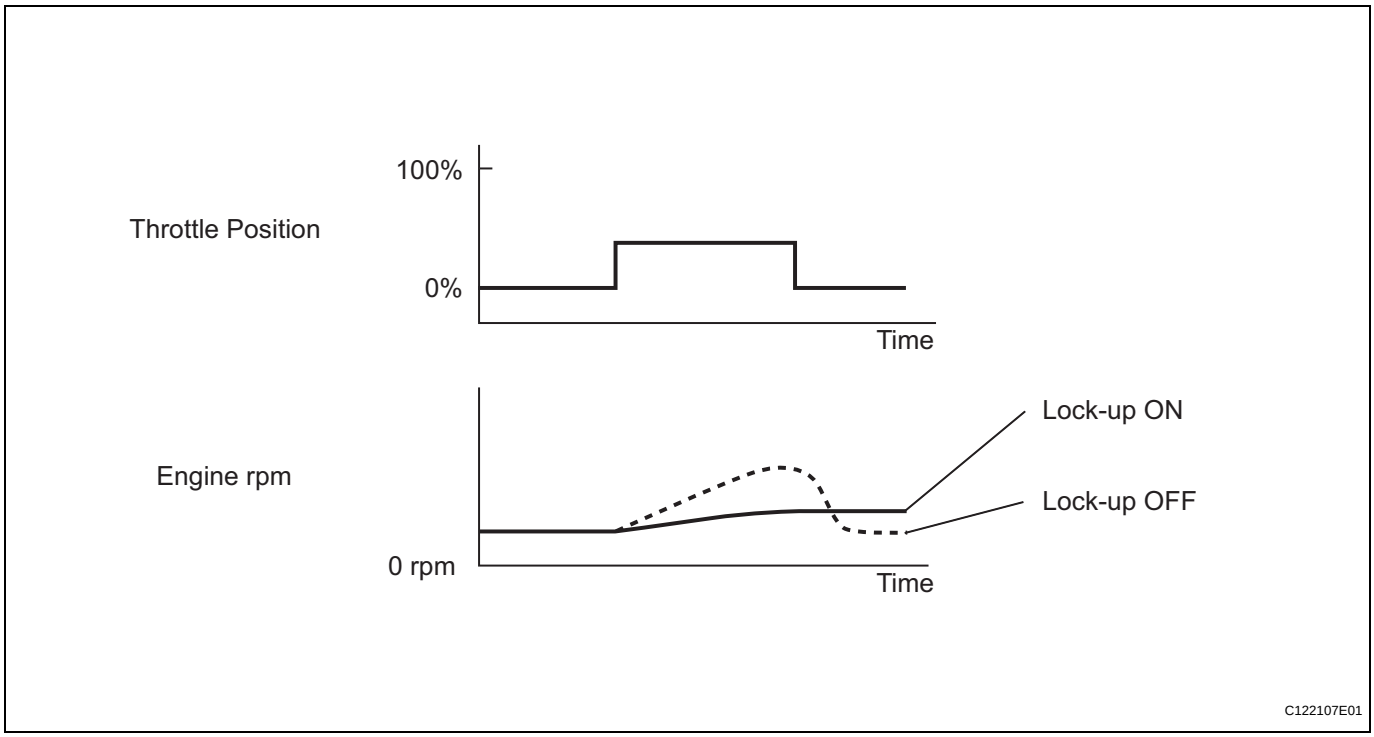

1	CHECK OTHER DTC OUTPUT (IN ADDITION TO DTC P0741)

(a) Connect the intelligent tester to the CAN VIM. Then connect the CAN VIM to the DLC3.
(b) Turn the ignition switch ON and turn the tester ON.
(c) Enter the following menus: DIAGNOSIS / ENHANCED OBD II / DTC INFO / CURRENT CODES.
(d) Read the DTCs using the tester.

Result

Display (DTC output)	Proceed to
Only P0741 is output	A
P0741 and other DTCs are output	B

HINT:
If any other codes besides P0741 are output, perform troubleshooting for those DTCs first.

B → GO TO DTC CHART

A

AX

2	INSPECT TRANSMISSION WIRE (SHIFT SOLENOID VALVE DSL)

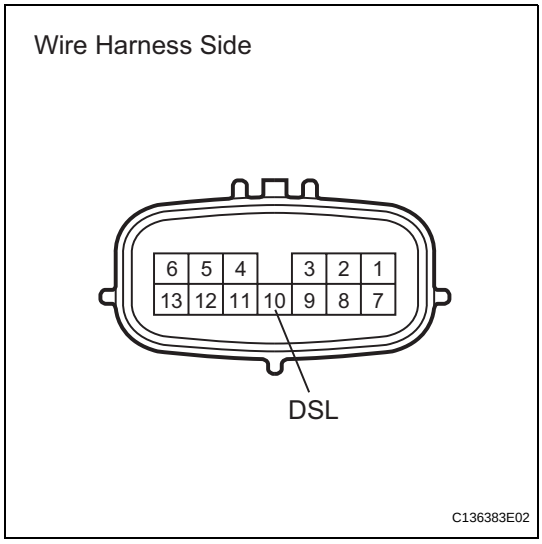

(a) Disconnect the B32 wire connector.
(b) Measure the resistance of the transmission wire.
Standard resistance

Tester Connection	Condition	Specified Condition
10 (DSL) - Body ground	20°C (68°F)	11 to 13 Ω

NG → **Go to step 4**

OK

3	CHECK WIRE HARNESS (TRANSMISSION WIRE - ECM)

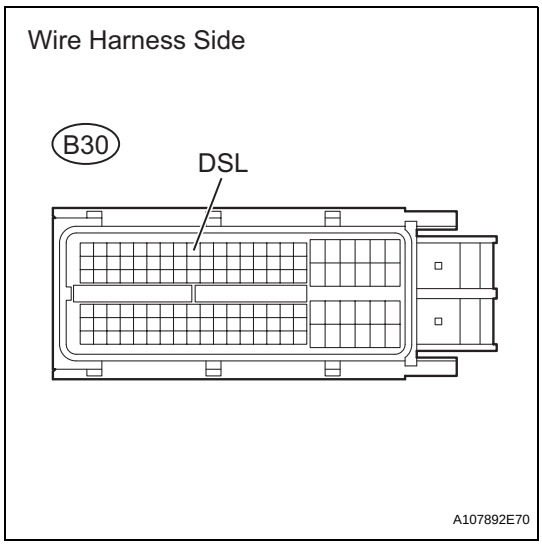

(a) Disconnect the B30 ECM connector.
(b) Measure the resistance of the wire harness side connector.
Standard resistance

Tester Connection	Condition	Specified Condition
B30-9 (DSL) - Body ground	20°C (68°F)	11 to 13 Ω

NG → **REPAIR OR REPLACE HARNESS AND CONNECTOR**

OK

REPLACE ECM

4	INSPECT SHIFT SOLENOID VALVE DSL

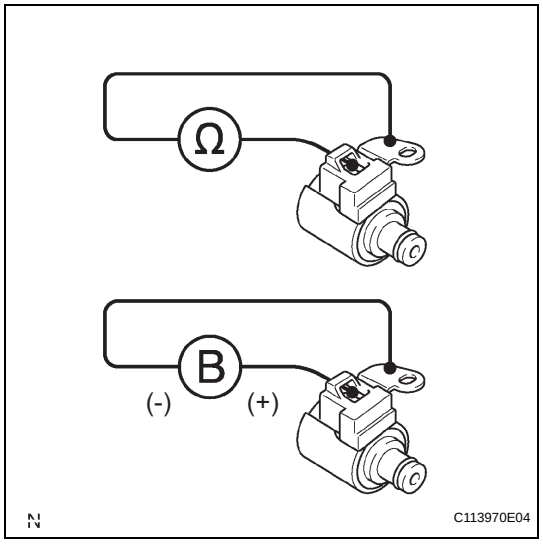

(a) Remove the shift solenoid valve DSL.
(b) Measure the resistance of the solenoid valve.
Standard resistance:
11 to 13 Ω at 20°C (68°F)
(c) Connect the battery's positive (+) lead to the terminal of the solenoid valve connector, and the negative (-) lead to the solenoid body. Then check that the valve moves and makes an operating noise.
OK:
Valve moves and makes operating noise.

NG → **REPLACE SHIFT SOLENOID VALVE DSL**

OK

5	CHECK TRANSMISSION WIRE

OK:
The connectors and pins are securely installed.
There is no open or short on the wire harness.

NG → **REPAIR OR REPLACE TRANSMISSION WIRE**

OK

6	INSPECT TRANSMISSION VALVE BODY ASSEMBLY

(a) Check the transmission valve body assembly.
OK:
There are no foreign objects on each valve.

NG → **REPAIR OR REPLACE TRANSMISSION VALVE BODY ASSEMBLY**

OK

7	INSPECT TORQUE CONVERTER CLUTCH ASSEMBLY

(a) Check the torque converter clutch assembly (see page AX-179).
OK:
The torque converter clutch operates normally.

NG → **REPLACE TORQUE CONVERTER CLUTCH ASSEMBLY**

OK

REPAIR AUTOMATIC TRANSAXLE ASSEMBLY

DTC	P0746	Pressure Control Solenoid "A" Performance (Shift Solenoid Valve SL1)

DESCRIPTION

The ECM uses signals from the vehicle speed sensor to detect the actual gear position (1st, 2nd, 3rd, 4th or 5th gear).
Then the ECM compares the actual gear with the shift schedule in the ECM memory to detect mechanical problems of the shift solenoid valves, valve body or automatic transaxle (clutch, brake, gear, etc.).

DTC No.	DTC Detection Condition	Trouble Area
P0746	Gear required by the ECM does not match the actual gear when driving (2 trip detection logic)	• Shift solenoid valve SL1 remains open or closed • Valve body is blocked • Shift solenoid valve SL1 • Automatic transaxle (clutch, brake, gear, etc.) • ECM

MONITOR DESCRIPTION

The ECM commands gear shifts by turning the shift solenoid valves ON/OFF. According to the input shaft revolution, intermediate (counter) shaft revolution and output shaft revolution, the ECM detects the actual gear position (1st, 2nd, 3rd, 4th or 5th gear position). When the gear position commanded by the ECM and the actual gear position are not the same, the ECM illuminates the MIL.
HINT:
Example:
When either condition (a) or (b) is met, the ECM detects a malfunction.
(a) The ECM commands the 1st gear, but the actual gear is 2nd.
(b) The ECM commands the 2nd gear, but the actual gear is 1st.

MONITOR STRATEGY

Related DTCs	P0746: Shift solenoid valve SL1/OFF malfunction Shift solenoid valve SL1/ON malfunction
Required sensors/Components	Shift solenoid valve SL1, Speed sensor (NT), Speed sensor (NC), Crankshaft position sensor (NE)
Frequency of operation	Continuous
Duration	0.8 sec.
MIL operation	2 driving cycles
Sequence of operation	None

TYPICAL ENABLING CONDITIONS

ALL:

The monitor will run whenever these DTCs are not present.	P0115 - P0118 (ECT sensor) P0125 (Insufficient ECT for closed loop) P0500 (VSS) P0748, P0778, P0798 (Shift solenoid valve (range))
ECT (Engine coolant temperature)	10°C (50°F) or more
Transmission range	"D"
ATF temperature	-20°C (-4°F) or more
ATF temperature sensor circuit	Not circuit malfunction
ECT sensor circuit	Not circuit malfunction
Turbine speed sensor circuit	Not circuit malfunction
Intermediate shaft speed sensor circuit	Not circuit malfunction

Output speed sensor circuit	Not circuit malfunction
Shift solenoid valve SL1 circuit	Not circuit malfunction
Shift solenoid valve SL2 circuit	Not circuit malfunction
Shift solenoid valve SL3 circuit	Not circuit malfunction
Shift solenoid valve S4 circuit	Not circuit malfunction
Shift solenoid valve SR circuit	Not circuit malfunction
Shift solenoid valve DSL circuit	Not circuit malfunction
Electronic throttle system	Not circuit malfunction

OFF malfunction:

ECM selected gear	1st
Vehicle speed	Less than 40 km/h (24.9 mph)
Throttle valve opening angle	4.5% or more at engine speed 1,900 rpm (Varies with engine speed)

ON malfunction:

ECM selected gear	2nd
Throttle valve opening angle	4.5% or more at engine speed 1,900 rpm (Varies with engine speed)

TYPICAL MALFUNCTION THRESHOLDS

Either of the following conditions is met: OFF malfunction or ON malfunction

OFF malfunction:

2 detections are necessary per driving cycle:

1st detection: temporary flag ON

2nd detection: pending fault code ON

Input (turbine) speed/Intermediate shaft speed	1.49 to 1.63

ON malfunction:

Input (turbine) speed/Intermediate shaft speed	2.72 to 2.86

INSPECTION PROCEDURE

HINT:

Performing the intelligent tester's ACTIVE TEST allows relay, VSV, actuator and other items to be operated without removing any parts. Performing the ACTIVE TEST early in troubleshooting is one way to save time.

The DATA LIST can be displayed during the ACTIVE TEST.

1. Warm up the engine.
2. Turn the ignition switch OFF.
3. Connect the intelligent tester to the CAN VIM. Then connect the CAN VIM to the DLC3.
4. Turn the ignition switch ON and turn the tester ON.
5. Enter the following menus: DIAGNOSIS / ENHANCED OBD II / ACTIVE TEST.
6. Follow the instructions on the tester and perform the ACTIVE TEST.

   HINT:

   While driving, the shift position can be forcibly changed with the tester. Comparing the shift position commanded by the ACTIVE TEST with the actual shift position enables you to confirm the problem (see page AX-35).

ECM:

Item	Test Details	Diagnostic Note
SHIFT	[Test Details] Operate shift solenoid valve and set each shift lever position by yourself [Vehicle Condition] • IDL: ON • 50 km/h (31 mph) or less [Other information] • Press "→" button: Shift up • Press "←" button: Shift down	Possible to check operation of shift solenoid valves

HINT:
- This test can be conducted when the vehicle speed is 50 km/h (31 mph) or more.
- This shift position commanded by the ECM is shown in the DATA LIST/SHIFT display on the tester.

1 CHECK OTHER DTC OUTPUT (IN ADDITION TO DTC P0746)

(a) Connect the intelligent tester to the CAN VIM. Then connect the CAN VIM to the DLC3.
(b) Turn the ignition switch ON and turn the tester ON.
(c) Enter the following menus: DIAGNOSIS / ENHANCED OBD II / DTC INFO / CURRENT CODES.
(d) Read the DTCs using the tester.

Result

Display (DTC output)	Proceed to
Only P0746 is output	A
P0746 and other DTCs are output	B

HINT:
If any other codes besides P0746 are output, perform the troubleshooting for those DTCs first.

B → **GO TO DTC CHART**

A

AX

2	INSPECT SHIFT SOLENOID VALVE SL1

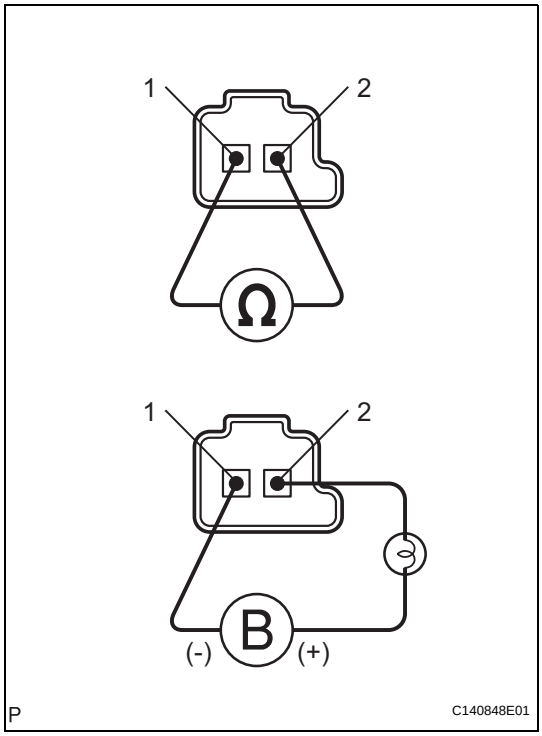

(a) Remove the shift solenoid valve SL1.
(b) Measure the resistance of the solenoid valve.
Standard resistance:
5.0 to 5.6 Ω at 20°C (68°F)
(c) Connect the battery's positive (+) lead with a 21 W bulb to terminal 2 and the negative (-) lead to terminal 1 of the solenoid valve connector. Then check that the valve moves and makes an operating noise.
OK:
Valve moves and makes operating noise.

NG → **REPLACE SHIFT SOLENOID VALVE SL1**

OK

3	INSPECT TRANSMISSION VALVE BODY ASSEMBLY

(a) Check the transmission valve body assembly.
OK:
There are no foreign objects on each valve.

NG → **REPAIR OR REPLACE TRANSMISSION VALVE BODY ASSEMBLY**

OK

4	INSPECT TORQUE CONVERTER CLUTCH ASSEMBLY

(a) Check the torque converter clutch assembly (see page AX-179).
OK:
The torque converter clutch operates normally.

NG → **REPLACE TORQUE CONVERTER CLUTCH ASSEMBLY**

OK

REPAIR OR REPLACE AUTOMATIC TRANSAXLE ASSEMBLY

DTC	P0748	Pressure Control Solenoid "A" Electrical (Shift Solenoid Valve SL1)

DESCRIPTION

Shifting from 1st to 5th is performed in combination with the ON and OFF operation of the shift solenoid valves SL1, SL2, SL3, S4 and SR, which are controlled by the ECM. If an open or short circuit occurs in any of the shift solenoid valves, the ECM controls the remaining normal shift solenoid valves to allow the vehicle to be operated safely (see page AX-35).

DTC No.	DTC Detection Condition	Trouble Area
P0748	Duty cycle to shift solenoid valve SL1 is 100% (1 trip detection logic)	• Open or short in shift solenoid valve SL1 circuit • Shift solenoid valve SL1 • ECM

MONITOR DESCRIPTION

The ECM commands gear shifts by turning the shift solenoid valves ON/OFF. When there is an open or short circuit in any shift solenoid valve circuit, the ECM detects the problem and illuminates the MIL and stores the DTC. And the ECM performs the fail-safe function and turns the other normal shift solenoid valves ON/OFF. In case of an open or short circuit, the ECM stops sending current to the circuit (see page AX-35).

MONITOR STRATEGY

Related DTCs	P0748: Shift solenoid valve SL1/Range check
Required sensors/Components	Shift solenoid valve SL1
Frequency of operation	Continuous
Duration	1 sec.
MIL operation	Immediate
Sequence of operation	None

TYPICAL ENABLING CONDITIONS

The monitor will run whenever this DTC is not present.	None
Battery voltage	10 V or more
Starter	OFF
Ignition switch	ON

TYPICAL MALFUNCTION THRESHOLDS

Output signal duty	100%

COMPONENT OPERATING RANGE

Output signal duty	Less than 100%

WIRING DIAGRAM

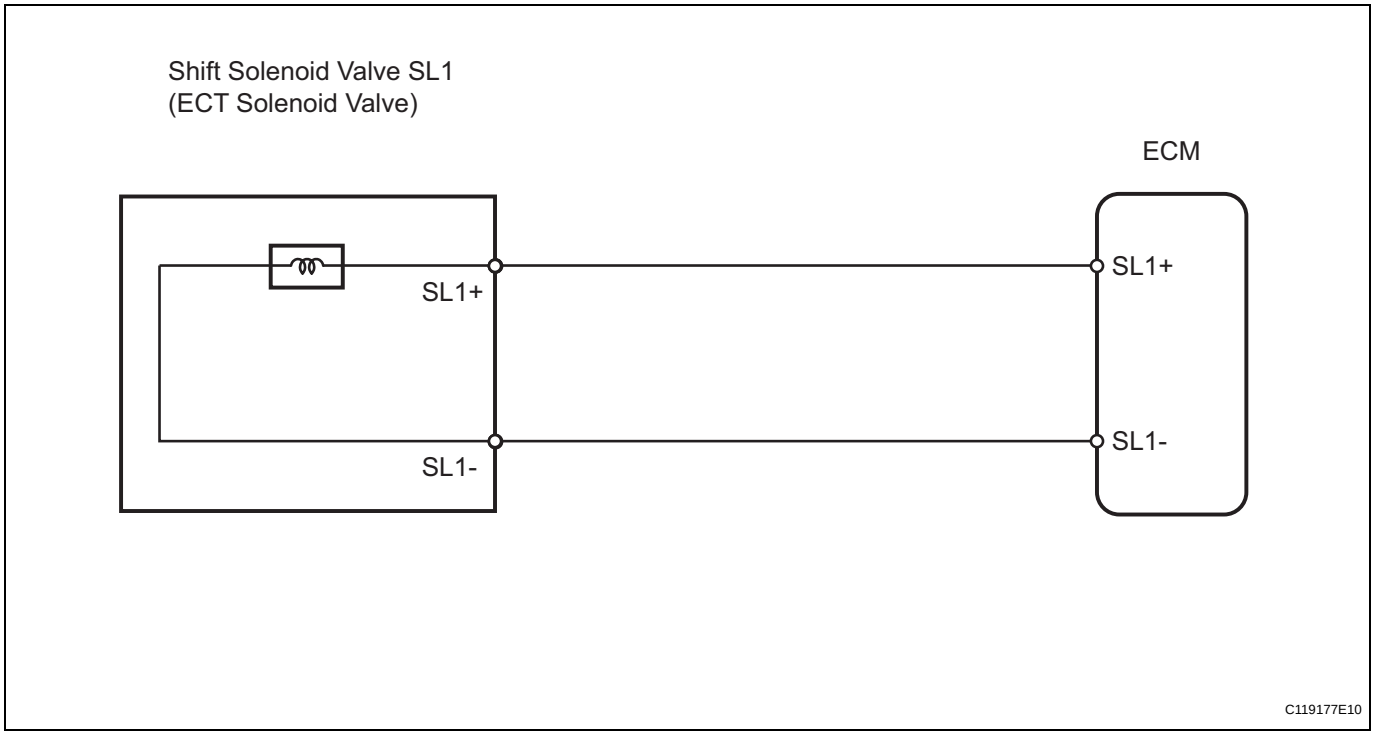

INSPECTION PROCEDURE

1	INSPECT TRANSMISSION WIRE (SHIFT SOLENOID VALVE SL1)

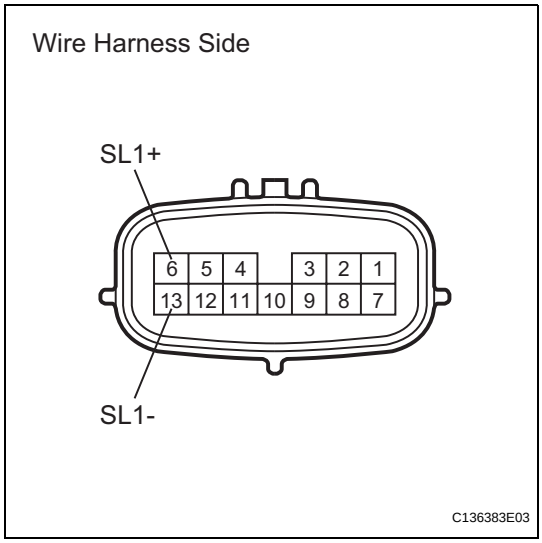

(a) Disconnect the B32 wire connector.
(b) Measure the resistance of the transmission wire.

Standard resistance

Tester Connection	Condition	Specified Condition
6 (SL1+) - 13 (SL1-)	20°C (68°F)	5.0 to 5.6 Ω
6 (SL1+) - Body ground	20°C (68°F)	1 MΩ or higher
13 (SL1-) - Body ground	20°C (68°F)	1 MΩ or higher

NG → **Go to step 3**

OK

2 CHECK WIRE HARNESS (TRANSMISSION WIRE - ECM)

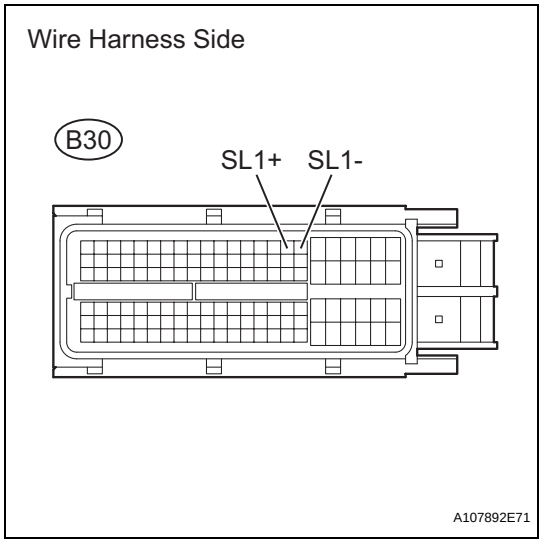

(a) Disconnect the B30 ECM connector.
(b) Measure the resistance of the wire harness side connector.
Standard resistance

Tester Connection	Condition	Specified Condition
B30-16 (SL1+) - B30-17 (SL1-)	20°C (68°F)	5.0 to 5.6 Ω
B30-16 (SL1+) - Body ground	20°C (68°F)	1 MΩ or higher
B30-17 (SL1-) - Body ground	20°C (68°F)	1 MΩ or higher

NG → **REPAIR OR REPLACE HARNESS AND CONNECTOR**

OK

REPLACE ECM

3 INSPECT SHIFT SOLENOID VALVE SL1

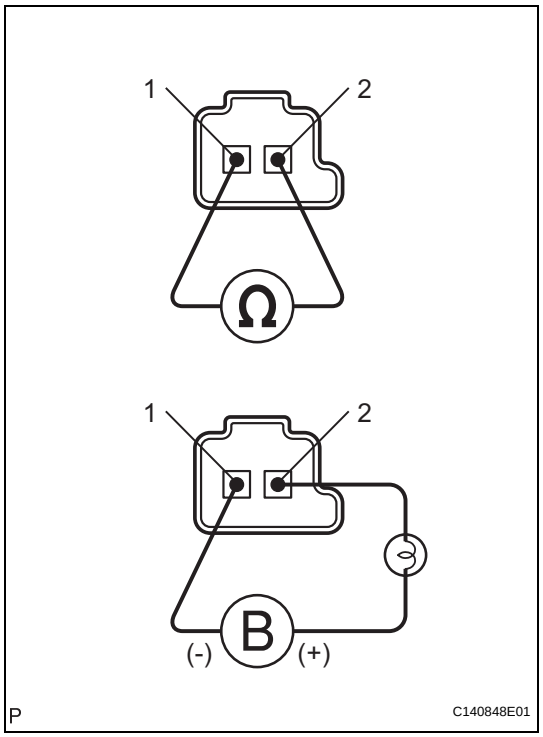

(a) Remove the shift solenoid valve SL1.
(b) Measure the resistance of the solenoid valve.
Standard resistance:
5.0 to 5.6 Ω at 20°C (68°F)
(c) Connect the battery's positive (+) lead with a 21 W bulb to terminal 2 and the negative (-) lead to terminal 1 of the solenoid valve connector. Then check that the valve moves and makes an operating noise.
OK:
Valve moves and makes operating noise.

NG → **REPLACE SHIFT SOLENOID VALVE SL1**

OK

REPAIR OR REPLACE TRANSMISSION WIRE

DTC	P0766	Shift Solenoid "D" Performance (Shift Solenoid Valve S4)

SYSTEM DESCRIPTION

AX

The ECM uses signals from the vehicle speed sensor to detect the actual gear position (1st, 2nd, 3rd, 4th or 5th gear).
Then the ECM compares the actual gear with the shift schedule in the ECM memory to detect mechanical problems of the shift solenoid valves, valve body or automatic transaxle (clutch, brake, gear, etc.).

DTC No.	DTC Detection Condition	Trouble Area
P0766	Gear required by the ECM does not match the actual gear when driving (2 trip detection logic)	• Shift solenoid valve S4 remains open or closed • Valve body is blocked • Shift solenoid valve S4 • Automatic transaxle (clutch, brake, gear, etc.) • ECM

MONITOR DESCRIPTION

The ECM commands gear shifts by turning the shift solenoid valves ON/OFF. According to the input shaft revolution, intermediate (counter) shaft revolution and output shaft revolution, the ECM detects the actual gear position (1st, 2nd, 3rd, 4th or 5th gear position). When the gear position commanded by the ECM and the actual gear position are not the same, the ECM illuminates the MIL and stores the DTC.

MONITOR STRATEGY

Related DTCs	P0766: Shift solenoid valve S4/OFF malfunction Shift solenoid valve S4/ON malfunction
Required sensors/Components	Shift solenoid valve S4, Speed sensor (NT), Speed sensor (NC), Crankshaft position sensor (NE)
Frequency of operation	Continuous
Duration	OFF malfunction (A) and ON malfunction (B) 1 sec. OFF malfunction (B) 1.2 sec. ON malfunction (A) 0.8 sec.
MIL operation	2 driving cycles
Sequence of operation	None

TYPICAL ENABLING CONDITIONS

All:

The monitor will run whenever these DTCs are not present.	P0115 - P0118 (ECT sensor) P0125 (Insufficient ECT for closed loop) P0500 (VSS) P0748, P0778, P0798 (Shift solenoid valve (range))
ECT (Engine coolant temperature)	10°C (50°F) or more
Transmission range	"D"
ATF temperature	-20°C (-4°F) or more
ATF temperature sensor circuit	Not circuit malfunction
ECT sensor circuit	Not circuit malfunction
Turbine speed sensor circuit	Not circuit malfunction
Intermediate shaft speed sensor circuit	Not circuit malfunction
Output speed sensor circuit	Not circuit malfunction

Shift solenoid valve SL1 circuit	Not circuit malfunction
Shift solenoid valve SL2 circuit	Not circuit malfunction
Shift solenoid valve SL3 circuit	Not circuit malfunction
Shift solenoid valve S4 circuit	Not circuit malfunction
Shift solenoid valve SR circuit	Not circuit malfunction
Shift solenoid valve DSL circuit	Not circuit malfunction
Electronic throttle system	Not circuit malfunction

OFF malfunction (A):

ECM selected gear	5th
Throttle valve opening angle	5% or more
Vehicle speed	10 km/h (6.2 mph) or more

OFF malfunction (B):

ECM lock-up command	ON
ECM selected gear	3rd, 4th or 5th
Throttle valve opening angle	10% or more
Vehicle speed	25 to 100 km/h (15.5 to 62.1 mph)

ON malfunction (A):

ECM selected gear	4th or 5th
Throttle valve opening angle	4.5% or more at engine speed 1,900 rpm (Varies with engine speed)

ON malfunction (B):

ECM selected gear	4th
Throttle valve opening angle	5% or more
Vehicle speed	10 km/h (6.2 mph) or more

TYPICAL MALFUNCTION THRESHOLDS

Either of the following conditions is met: OFF malfunction (A) and (B), or ON malfunction (A) and (B)

2 detections are necessary per driving cycle:
1st detection: temporary flag ON
2nd detection: pending fault code ON

OFF malfunction (A):

Intermediate shaft speed/Output speed	1.44 to 1.58

OFF malfunction (B):

Difference between engine speed and input (turbine) speed	Less than 35 rpm

ON malfunction (A):

Input (turbine) speed/Intermediate shaft speed	0.64 to 0.74

ON malfunction (B):

Intermediate shaft speed/Output speed	1.02 to 1.16

INSPECTION PROCEDURE

HINT:
Performing the intelligent tester's ACTIVE TEST allows relay, VSV, actuator and other items to be operated without removing any parts. Performing the ACTIVE TEST early in troubleshooting is one way to save time.
The DATA LIST can be displayed during the ACTIVE TEST.
1. Warm up the engine.

2. Turn the ignition switch OFF.
3. Connect the intelligent tester to the CAN VIM. Then connect the CAN VIM to the DLC3.
4. Turn the ignition switch ON and turn the tester ON.
5. Enter the following menus: DIAGNOSIS / ENHANCED OBD II / ACTIVE TEST.
6. Follow the instructions on the tester and perform the ACTIVE TEST.

HINT:

While driving, the shift position can be forcibly changed with the tester.
Comparing the shift position commanded by the ACTIVE TEST with the actual shift position enables you to confirm the problem (see page AX-35).

ECM:

Item	Test Details	Diagnostic Note
SHIFT	[Test Details] Operate the shift solenoid valve and set each shift lever position by yourself [Vehicle Condition] • IDL: ON • 50 km/h (31 mph) or less [Other information] • Press "→" button: Shift up • Press "←" button: Shift down	Possible to check the operation of the shift solenoid valves

HINT:

- This test can be conducted when the vehicle speed is 50 km/h (31 mph) or less.
- The shift position commanded by the ECM is shown in the DATA LIST/SHIFT display on the tester.

1 CHECK OTHER DTC OUTPUT (IN ADDITION TO DTC P0766)

(a) Connect the intelligent tester to the CAN VIM. Then connect the CAN VIM to the DLC3.
(b) Turn the ignition switch ON and turn the tester ON.
(c) Enter the following menus: DIAGNOSIS / ENHANCED OBD II / DTC INFO / CURRENT CODES.
(d) Read the DTCs using the tester.

Result

Display (DTC output)	Proceed to
Only P0766 is output	A
P0766 and other DTCs are output	B

HINT:

If any other codes besides P0766 are output, perform troubleshooting for those DTCs first.

B → **GO TO DTC CHART**

A

2	INSPECT SHIFT SOLENOID VALVE S4

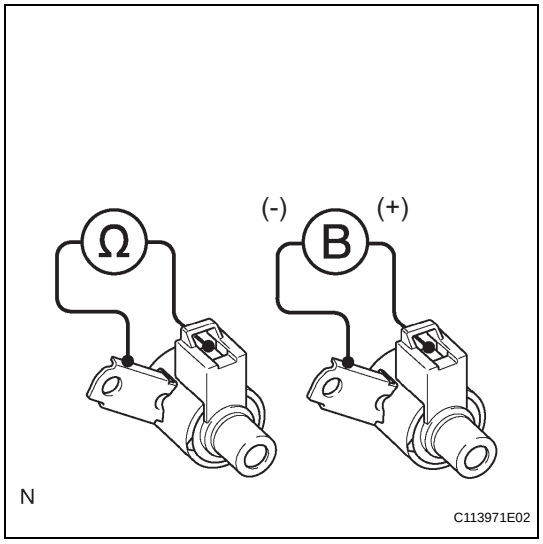

(a) Remove the shift solenoid valve S4.
(b) Measure the resistance between the solenoid valve terminal and solenoid valve body.
Standard resistance:
11 to 15 Ω at 20°C (68°F)
(c) Connect the battery's positive (+) lead to the terminal of the solenoid valve connector, and the negative (-) lead to the solenoid body. Then check that the valve moves and makes an operating noise.
OK:
Valve moves and makes operating noise.

NG → **REPLACE SHIFT SOLENOID VALVE S4**

OK

3	INSPECT TRANSMISSION VALVE BODY ASSEMBLY

(a) Check the transmission valve body assembly.
OK:
There are no foreign objects on each valve.

NG → **REPAIR OR REPLACE TRANSMISSION VALVE BODY ASSEMBLY**

OK

4	INSPECT TORQUE CONVERTER CLUTCH ASSEMBLY

(a) Check the torque converter clutch assembly (see page AX-179).
OK:
The torque converter clutch operates normally.

NG → **REPLACE TORQUE CONVERTER CLUTCH ASSEMBLY**

OK

REPAIR OR REPLACE AUTOMATIC TRANSAXLE ASSEMBLY

DTC	P0771	Shift Solenoid "E" Performance (Shift Solenoid Valve SR)

DESCRIPTION

AX

The ECM uses signals from the vehicle speed sensor to detect the actual gear position (1st, 2nd, 3rd, 4th or 5th gear).
Then the ECM compares the actual gear with the shift schedule in the ECM memory to detect mechanical problems of the shift solenoid valves, valve body or automatic transaxle (clutch, brake, gear, etc.).

DTC No.	DTC Detection Condition	Trouble Area
P0771	Gear required by the ECM does not match the actual gear when driving (2 trip detection logic)	• Shift solenoid valve SR remains open or closed • Valve body is blocked • Shift solenoid valve SR • Automatic transaxle (clutch, brake, gear, etc.)

MONITOR DESCRIPTION

The ECM commands gear shifts by turning the shift solenoid valves ON/OFF. According to the input shaft revolution, intermediate (counter) shaft revolution and output shaft revolution, the ECM detects the actual gear position (1st, 2nd, 3rd, 4th or 5th gear position). When the gear position commanded by the ECM and the actual gear position are not the same, the ECM illuminates the MIL and stores the DTC.

MONITOR STRATEGY

Related DTCs	P0771: Shift solenoid valve SR/Rationality check
Required sensors/Components	Shift solenoid valve SR, Speed sensor (NT), Speed sensor (NC), Crankshaft position sensor (NE)
Frequency of operation	Continuous
Duration	OFF malfunction (A) 1 sec. OFF malfunction (B) 3.5 sec. ON malfunction (A) Continuous ON malfunction (B) and (C) 0.8 sec.
MIL operation	2 driving cycles
Sequence of operation	None

TYPICAL ENABLING CONDITIONS

All:

The monitor will run whenever these DTCs are not present.	P0115 - P0118 (ECT sensor) P0125 (Insufficient ECT for closed loop) P0500 (VSS) P0748, P0778, P0798 (Shift solenoid valve (range))
ECT (Engine coolant temperature)	10°C (50°F) or more
Transmission range	"D"
ATF temperature	-20°C (-4°F) or more
ATF temperature sensor circuit	Not circuit malfunction
ECT sensor circuit	Not circuit malfunction
Turbine speed sensor circuit	Not circuit malfunction
Intermediate shaft speed sensor circuit	Not circuit malfunction
Output speed sensor circuit	Not circuit malfunction

Shift solenoid valve SL1 circuit	Not circuit malfunction
Shift solenoid valve SL2 circuit	Not circuit malfunction
Shift solenoid valve SL3 circuit	Not circuit malfunction
Shift solenoid valve S4 circuit	Not circuit malfunction
Shift solenoid valve SR circuit	Not circuit malfunction
Shift solenoid valve DSL circuit	Not circuit malfunction
Electronic throttle system	Not circuit malfunction

OFF malfunction (A):

ECM selected gear	5th
Throttle valve opening angle	5% or more
Vehicle speed	10 km/h (6.2 mph) or more

OFF malfunction (B):

ECM lock-up command	ON
ECM selected gear	3rd, 4th or 5th
Vehicle speed	25 km/h (15.5 mph) or more

ON malfunction (A):

ECM lock-up command	OFF

ON malfunction (B):

ECM selected gear	1st
Vehicle speed	Less than 40 km/h (24.9 mph)
Throttle valve opening angle	4.5% or more at engine speed 1,900 rpm (Varies with engine speed)

ON malfunction (C):

ECM selected gear	3rd
Throttle valve opening angle	4.5% or more at engine speed 1,900 rpm (Varies with engine speed)

ON malfunction (D):

Duration time from shift command of ECM	15 sec. or more
ECM selected gear	4th or 5th

TYPICAL MALFUNCTION THRESHOLDS

Either of the following conditions is met: OFF malfunction (A) and (B), or ON malfunction (A), (B), (C) and (D)

OFF malfunction (A):

Intermediate shaft speed/Output speed	1.44 to 1.58

OFF malfunction (B):

Engine speed - Input (turbine) speed	75 rpm or more

ON malfunction (A):

Difference between engine speed and input (turbine) speed	150 rpm or more

ON malfunction (B):

Input (turbine) speed/Intermediate shaft speed	0.93 to 1.07

ON malfunction (C):

Input (turbine) speed/Intermediate shaft speed	0.93 to 1.07

ON malfunction (D):

Input (turbine) speed/Intermediate shaft speed	0.64 to 0.74

INSPECTION PROCEDURE

HINT:
Performing the intelligent tester's ACTIVE TEST allows relay, VSV, actuator and other items to be operated without removing any parts. Performing the ACTIVE TEST early in troubleshooting is one way to save time.
The DATA LIST can be displayed during the ACTIVE TEST.

1. Warm up the engine.
2. Turn the ignition switch OFF.
3. Connect the intelligent tester to the CAN VIM. Then connect the CAN VIM to the DLC3.
4. Turn the ignition switch ON and turn the tester ON.
5. Enter the following menus: DIAGNOSIS / ENHANCED OBD II / ACTIVE TEST.
6. Follow the instructions on the tester and perform the ACTIVE TEST.

HINT:
While driving, the shift position can be forcibly changed with the tester.
Comparing the shift position commanded by the ACTIVE TEST with the actual shift position enables you to confirm the problem (see page AX-35).

ECM:

Item	Test Details	Diagnostic Note
SHIFT	[Test Details] Operate the shift solenoid valve and set each shift lever position by yourself [Vehicle Condition] • IDL: ON • 50 km/h (31 mph) or less [Other information] • Press "→" button: Shift up • Press "←" button: Shift down	Possible to check the operation of the shift solenoid valves

HINT:
- This test can be conducted when the vehicle speed is 50 km/h (31 mph) or less.
- The shift position commanded by the ECM is shown in the DATA LIST/SHIFT display on the tester.

1 CHECK OTHER DTC OUTPUT (IN ADDITION TO DTC P0771)

(a) Connect the intelligent tester to the CAN VIM. Then connect the CAN VIM to the DLC3.
(b) Turn the ignition switch ON and turn the tester ON.
(c) Enter the following menus: DIAGNOSIS / ENHANCED OBD II / DTC INFO / CURRENT CODES.
(d) Read the DTCs using the tester.

Result

Display (DTC output)	Proceed to
Only P0771 is output	**A**
P0771 and other DTCs are output	**B**

HINT:
If any other codes besides P0771 are output, perform troubleshooting for those DTCs first.

B → **GO TO DTC CHART**

A

2	INSPECT SHIFT SOLENOID VALVE SR

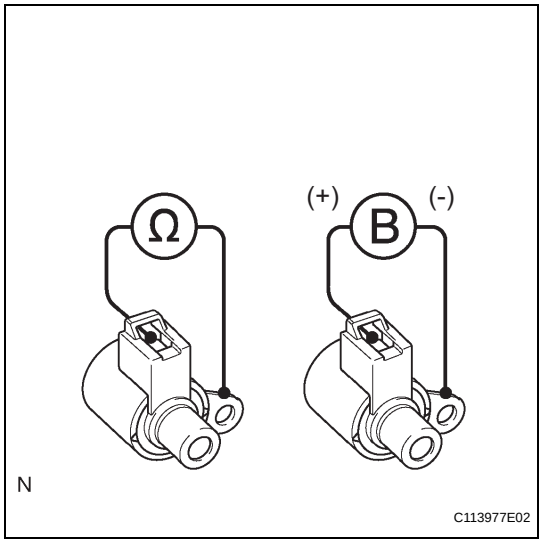

(a) Remove the shift solenoid valve SR.
(b) Measure the resistance between the solenoid valve terminal and solenoid valve body.
Standard resistance:
11 to 15 Ω at 20°C (68°F)
(c) Connect the battery's positive (+) lead to the terminal of the solenoid valve connector, and the negative (-) lead to the solenoid body. Then check that the valve moves and makes an operating noise.
OK:
Valve moves and makes operating noise.

NG → **REPLACE SHIFT SOLENOID VALVE SR**

OK

3	INSPECT TRANSMISSION VALVE BODY ASSEMBLY

(a) Check the transmission valve body assembly.
OK:
There are no foreign objects on each valve.

NG → **REPAIR OR REPLACE TRANSMISSION VALVE BODY ASSEMBLY**

OK

4	INSPECT TORQUE CONVERTER CLUTCH ASSEMBLY

(a) Check the torque converter clutch assembly (see page AX-179).
OK:
The torque converter clutch operates normally.

NG → **REPLACE TORQUE CONVERTER CLUTCH ASSEMBLY**

OK

REPAIR OR REPLACE AUTOMATIC TRANSAXLE ASSEMBLY

DTC	P0776	Pressure Control Solenoid "B" Performance (Shift Solenoid Valve SL2)

DESCRIPTION

AX

The ECM uses signals from the vehicle speed sensor to detect the actual gear position (1st, 2nd, 3rd, 4th or 5th gear).
Then the ECM compares the actual gear with the shift schedule in the ECM memory to detect mechanical problems of the shift solenoid valves, valve body or automatic transaxle (clutch, brake, gear, etc.).

DTC No.	DTC Detection Condition	Trouble Area
P0776	Gear required by the ECM does not match the actual gear when driving (2 trip detection logic)	• Shift solenoid valve SL2 remains open or closed • Valve body is blocked • Shift solenoid valve SL2 • Automatic transaxle (clutch, brake, gear, etc.) • ECM

MONITOR DESCRIPTION

The ECM commands gear shifts by turning the shift solenoid valves ON/OFF. According to the input shaft revolution, intermediate (counter) shaft revolution and output shaft revolution, the ECM detects the actual gear position (1st, 2nd, 3rd, 4th or 5th gear position). When the gear position commanded by the ECM and the actual gear position are not the same, the ECM illuminates the MIL and stores the DTC.

MONITOR STRATEGY

Related DTCs	P0776: Shift solenoid valve SL2/ON malfunction Shift solenoid valve SL2/OFF malfunction
Required sensors/Components	Shift solenoid valve SL2, Speed sensor (NT), Speed sensor (NC), Crankshaft position sensor (NE)
Frequency of operation	Continuous
Duration	OFF malfunction (A) 1.8 sec. OFF malfunction (B) and (C) 0.8 sec. ON malfunction (A) and (B) 0.8 sec. ON malfunction (C) 0.4 sec.
MIL operation	2 driving cycles
Sequence of operation	None

TYPICAL ENABLING CONDITIONS

All:

The monitor will run whenever these DTCs are not present.	P0115 - P0118 (ECT sensor) P0125 (Insufficient ECT for closed loop) P0500 (VSS) P0748, P0778, P0798 (Shift solenoid valve (range))
ECT (Engine coolant temperature)	10°C (50°F) or more
Transmission range	"D"
ATF temperature	-20°C (-4°F) or more
ATF temperature sensor circuit	Not circuit malfunction
ECT sensor circuit	Not circuit malfunction
Turbine speed sensor circuit	Not circuit malfunction
Intermediate shaft speed sensor circuit	Not circuit malfunction

Output speed sensor circuit	Not circuit malfunction
Shift solenoid valve SL1 circuit	Not circuit malfunction
Shift solenoid valve SL2 circuit	Not circuit malfunction
Shift solenoid valve SL3 circuit	Not circuit malfunction
Shift solenoid valve S4 circuit	Not circuit malfunction
Shift solenoid valve SR circuit	Not circuit malfunction
Shift solenoid valve DSL circuit	Not circuit malfunction
Electronic throttle system	Not circuit malfunction

OFF malfunction (A):

ECM lock-up command	OFF
Vehicle speed	Less than 60 km/h (37.3 mph)
Throttle valve opening angle	7% or more

OFF malfunction (B):

ECM selected gear	1st
Vehicle speed	Less than 40 km/h (24.9 mph)
Throttle valve opening angle	4.5% or more at engine speed 1,900 rpm (Varies with engine speed)

OFF malfunction (C):

ECM selected gear	3rd
Throttle valve opening angle	4.5% or more at engine speed 1,900 rpm (Varies with engine speed)

OFF malfunction (D):

Duration time from shift command of ECM	15 sec. or more
ECM selected gear	4th or 5th

ON malfunction (A):

ECM selected gear	1st
Vehicle speed	Less than 40 km/h (24.9 mph)
Throttle valve opening angle	4.5% or more at engine speed 1,900 rpm (Varies with engine speed)

ON malfunction (B):

ECM selected gear	3rd
Throttle valve opening angle	5.0% or more at output speed 1,400 rpm (Varies with engine speed)
Malfunction of pressure control solenoid "B" (SL2) and "C" (SL3)	Not detected

ON malfunction (C):

Throttle valve opening angle	7.0% or more at output speed 1,050 rpm (Varies with engine speed)
Malfunction of pressure control solenoid "B" (SL2)	Not detected

TYPICAL MALFUNCTION THRESHOLDS

Either of the following conditions is met: OFF malfunction (A), (B), (C) and (D), or ON malfunction (A), (B) and (C)

OFF malfunction (A):

Difference between engine speed and input (turbine) speed	Less than 35 rpm

OFF malfunction (B) and (C):

Input (turbine) speed/Intermediate shaft speed	0.93 to 1.07

OFF malfunction (D):

Input (turbine) speed/Intermediate shaft speed	0.64 to 0.74

ON malfunction (A):

Input (turbine) speed/Intermediate shaft speed	2.72 to 2.86

AX

ON malfunction (B):

Input (turbine) speed - Intermediate shaft speed	700 rpm or more

ON malfunction (C):

Input (turbine) speed - Intermediate shaft speed	Less than -500 rpm or 700 rpm or more

INSPECTION PROCEDURE

HINT:
Performing the intelligent tester's ACTIVE TEST allows relay, VSV, actuator and other items to be operated without removing any parts. Performing the ACTIVE TEST early in troubleshooting is one way to save time.
The DATA LIST can be displayed during the ACTIVE TEST.

1. Warm up the engine.
2. Turn the ignition switch OFF.
3. Connect the intelligent tester to the CAN VIM. Then connect the CAN VIM to the DLC3.
4. Turn the ignition switch ON and turn the tester ON.
5. Enter the following menus: DIAGNOSIS / ENHANCED OBD II / ACTIVE TEST.
6. Follow the instructions on the tester and perform the ACTIVE TEST.

HINT:
While driving, the shift position can be forcibly changed with the tester.
Comparing the shift position commanded by the ACTIVE TEST with the actual shift position enables you to confirm the problem (see page AX-35).

ECM:

Item	Test Details	Diagnostic Note
SHIFT	[Test Details] Operate the shift solenoid valve and set each shift lever position by yourself [Vehicle Condition] • IDL: ON • 50 km/h (31 mph) or less [Other information] • Press "→" button: Shift up • Press "←" button: Shift down	Possible to check the operation of the shift solenoid valves

HINT:

- This test can be conducted when the vehicle speed is 50 km/h (31 mph) or less.
- The shift position commanded by the ECM is shown in the DATA LIST/SHIFT display on the tester.

1	**CHECK OTHER DTC OUTPUT (IN ADDITION TO DTC P0776)**

(a) Connect the intelligent tester to the CAN VIM. Then connect the CAN VIM to the DLC3.
(b) Turn the ignition switch ON and turn the tester ON.
(c) Enter the following menus: DIAGNOSIS / ENHANCED OBD II / DTC INFO / CURRENT CODES.
(d) Read the DTCs using the tester.

Result

Display (DTC output)	Proceed to
Only P0776 is output	A
P0776 and other DTCs are output	B

HINT:
If any other codes besides P0776 are output, perform troubleshooting for those DTCs first.

AX

B → **GO TO DTC CHART**

A

2 INSPECT SHIFT SOLENOID VALVE SL2

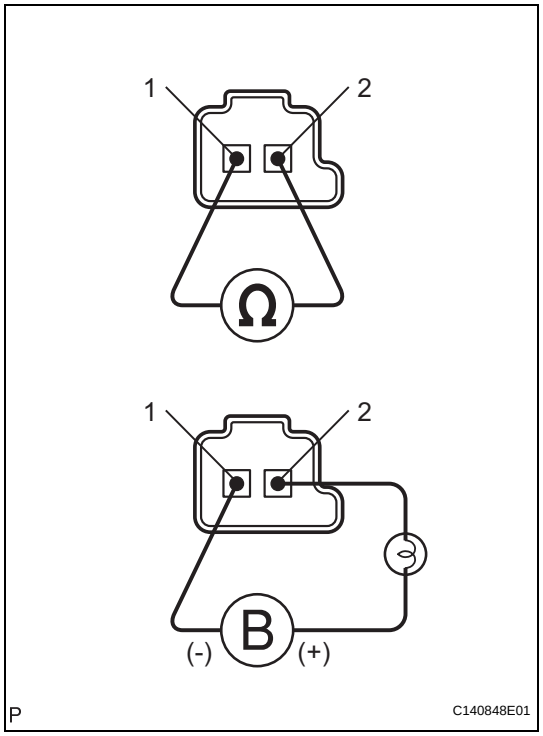

(a) Remove the shift solenoid valve SL2.
(b) Measure the resistance of the solenoid valve.
Standard resistance:
5.0 to 5.6 Ω at 20°C (68°F)
(c) Connect the battery's positive (+) lead with a 21 W bulb to terminal 2 and the negative (-) lead to terminal 1 of the solenoid valve connector. Then check that the valve moves and makes an operating noise.
OK:
Valve moves and makes operating noise.

NG → **REPLACE SHIFT SOLENOID VALVE SL2**

OK

3 INSPECT TRANSMISSION VALVE BODY ASSEMBLY

(a) Check the transmission valve body assembly.
OK:
There are no foreign objects on each valve.

NG → **REPAIR TRANSMISSION VALVE BODY ASSEMBLY**

OK

4	INSPECT TORQUE CONVERTER CLUTCH ASSEMBLY

(a) Check the torque converter clutch assembly (see page AX-179).

OK:

The torque converter clutch operates normally.

NG → **REPLACE TORQUE CONVERTER CLUTCH ASSEMBLY**

OK

REPAIR OR REPLACE AUTOMATIC TRANSAXLE ASSEMBLY

DTC	P0778	Pressure Control Solenoid "B" Electrical (Shift Solenoid Valve SL2)

DESCRIPTION

Shifting from 1st to 5th is performed in combination with the ON and OFF operation of the shift solenoid valves SL1, SL2, SL3, S4 and SR, which are controlled by the ECM. If an open or short circuit occurs in any of the shift solenoid valves, the ECM controls the remaining normal shift solenoid valves to allow the vehicle to be operated safely (see page AX-35).

DTC No.	DTC Detection Condition	Trouble Area
P0778	ECM checks for an open or short circuit in shift solenoid valves SL2 (1 trip detection logic) Hybrid IC for solenoid indicates fail	• Open or short in shift solenoid valve SL2 circuit • Shift solenoid valve SL2 • ECM

MONITOR DESCRIPTION

The ECM commands gear shifts by turning the shift solenoid valves ON/OFF. When there is an open or short circuit in any shift solenoid valve circuit, the ECM detects the problem and illuminates the MIL and stores the DTC. And the ECM performs the fail-safe function and turns the other normal shift solenoid valves ON/OFF. In case of an open or short circuit, the ECM stops sending current to the circuit (see page AX-35).

MONITOR STRATEGY

Related DTCs	P0778: Shift solenoid valve SL2/Range check
Required sensors/Components	Shift solenoid valve SL2
Frequency of operation	Continuous
Duration	1 sec.
MIL operation	Immediate
Sequence of operation	None

TYPICAL ENABLING CONDITIONS

The monitor will run whenever this DTC is not present.	None
Battery voltage	11 V or more
Starter	OFF
Ignition switch	ON
Solenoid current cut status	Not cut
CPU commanded duty	19% or more

TYPICAL MALFUNCTION THRESHOLDS

Solenoid status from MIC	Fail

COMPONENT OPERATING RANGE

Output signal duty	Less than 100%

WIRING DIAGRAM

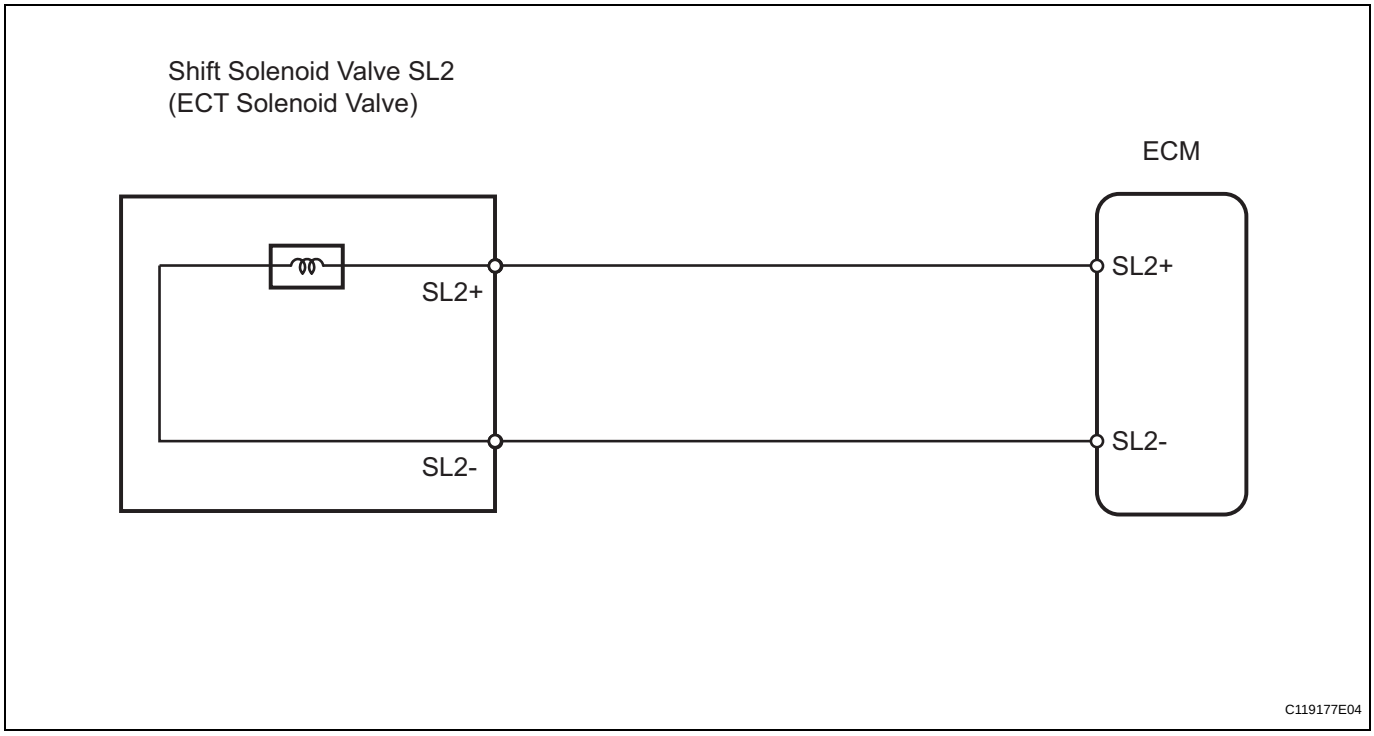

INSPECTION PROCEDURE

1	INSPECT TRANSMISSION WIRE (SHIFT SOLENOID VALVE SL2)

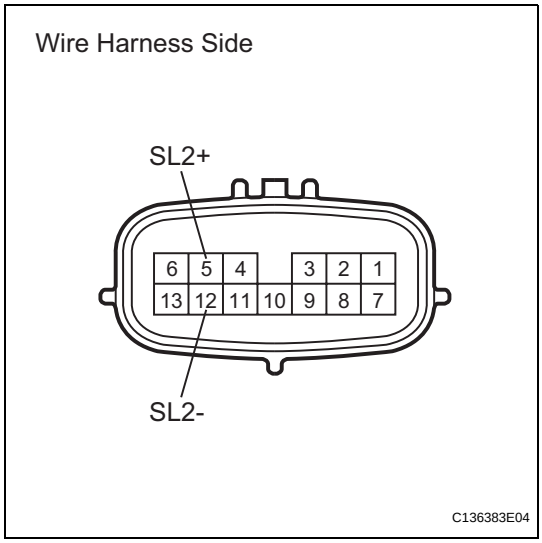

(a) Disconnect the B32 wire connector.
(b) Measure the resistance of the transmission wire.

Standard resistance

Tester Connection	Condition	Specified Condition
5 (SL2+) - 12 (SL2-)	20°C (68°F)	5.0 to 5.6 Ω
5 (SL2+) - Body ground	20°C (68°F)	1 MΩ or higher
12 (SL2-) - Body ground	20°C (68°F)	1 MΩ or higher

NG → **Go to step 3**

OK

2 CHECK WIRE HARNESS (TRANSMISSION WIRE - ECM)

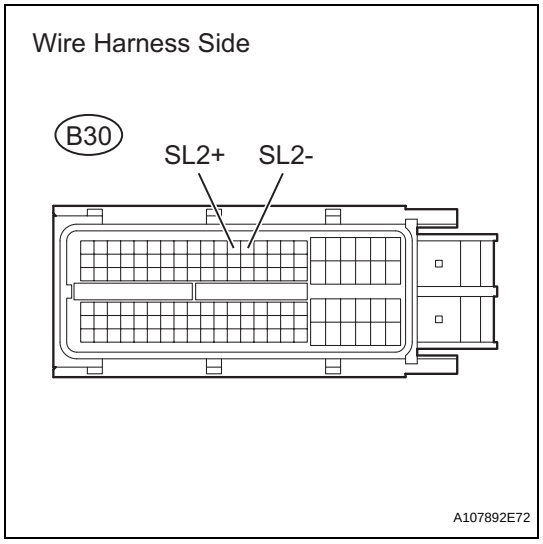

(a) Disconnect the B30 ECM connector.
(b) Measure the resistance of the wire harness side connector.
Standard resistance

Tester Connection	Condition	Specified Condition
B30-12 (SL2+) - B30-13 (SL2-)	20°C (68°F)	5.0 to 5.6 Ω
B30-12 (SL2+) - Body ground	20°C (68°F)	1 MΩ or higher
B30-13 (SL2-) - Body ground	20°C (68°F)	1 MΩ or higher

NG → **REPAIR OR REPLACE HARNESS AND CONNECTOR**

OK

REPLACE ECM

3 INSPECT SHIFT SOLENOID VALVE SL2

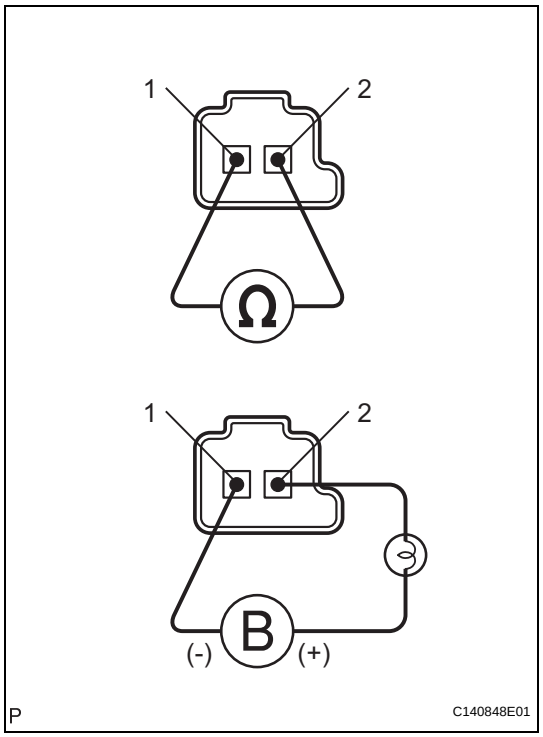

(a) Remove the shift solenoid valve SL2.
(b) Measure the resistance of the solenoid valve.
Standard resistance:
5.0 to 5.6 Ω at 20°C (68°F)
(c) Connect the battery's positive (+) lead with a 21 W bulb to terminal 2 and the negative (-) lead to terminal 1 of the solenoid valve connector. Then check that the valve moves and makes an operating noise.
OK:
Valve moves and makes operating noise.

NG → **REPLACE SHIFT SOLENOID VALVE SL2**

OK

REPAIR OR REPLACE TRANSMISSION WIRE

DTC	P0793	Intermediate Shaft Speed Sensor "A"

DESCRIPTION

This sensor detects the rotation speed of the counter gear. By comparing the counter gear speed signal (NC) with the direct clutch speed sensor signal (NT), the ECM detects the shift timing of the gears and approximately controls the engine torque and hydraulic pressure according to various conditions. Thus smooth gear shifting is performed.

DTC No.	DTC Detection Condition	Trouble Area
P0793	ECM detects conditions (a), (b) and (c) continuously for 5 sec. or more (1 trip detection logic): (a) Vehicle speed: 50 km/h (31 mph) or more (b) Park/Neutral position switch (NSW) is OFF (c) Speed sensor NC: Less than 300 rpm	• Open or short in speed sensor NC circuit • Speed sensor NC • ECM

MONITOR DESCRIPTION

The NC terminal of the ECM detects revolution signals from speed sensor NC (counter gear rpm). The ECM calculates gear shifts by comparing speed sensor NT with speed sensor NC.
While the vehicle is operating in the 2nd, 3rd, 4th or 5th gear position with the shift lever on D, if the counter gear revolution is less than 300 rpm*1 and the output shaft revolution is more than 1,000 rpm*2, the ECM detects the trouble, illuminates the MIL and stores the DTC.
*1: Pulse is not output or is irregularly output.
*2: The vehicle speed is 50 km/h (31 mph) or more.

MONITOR STRATEGY

Related DTCs	P0793: Speed sensor (NC)/Verify pulse input
Required sensors/Components	Speed sensor (NC), Speed sensor (NT), NSW switch
Frequency of operation	Continuous
Duration	5 sec.
MIL operation	Immediate
Sequence of operation	None

TYPICAL ENABLING CONDITIONS

The monitor will run whenever these DTCs are not present.	P0500 (VSS) P0748 - P0798 (Trans solenoid (Range))
Engine	Running
NSW switch	OFF
Output shaft rpm	1,000 rpm or more

TYPICAL MALFUNCTION THRESHOLDS

Sensor signal rpm	Less than 300 rpm

COMPONENT OPERATING RANGE

Counter gear speed sensor (NC)	3rd gear when shift lever is on D (after warming up the engine); Intermediate shaft speed (NC) becomes close to the engine speed

WIRING DIAGRAM

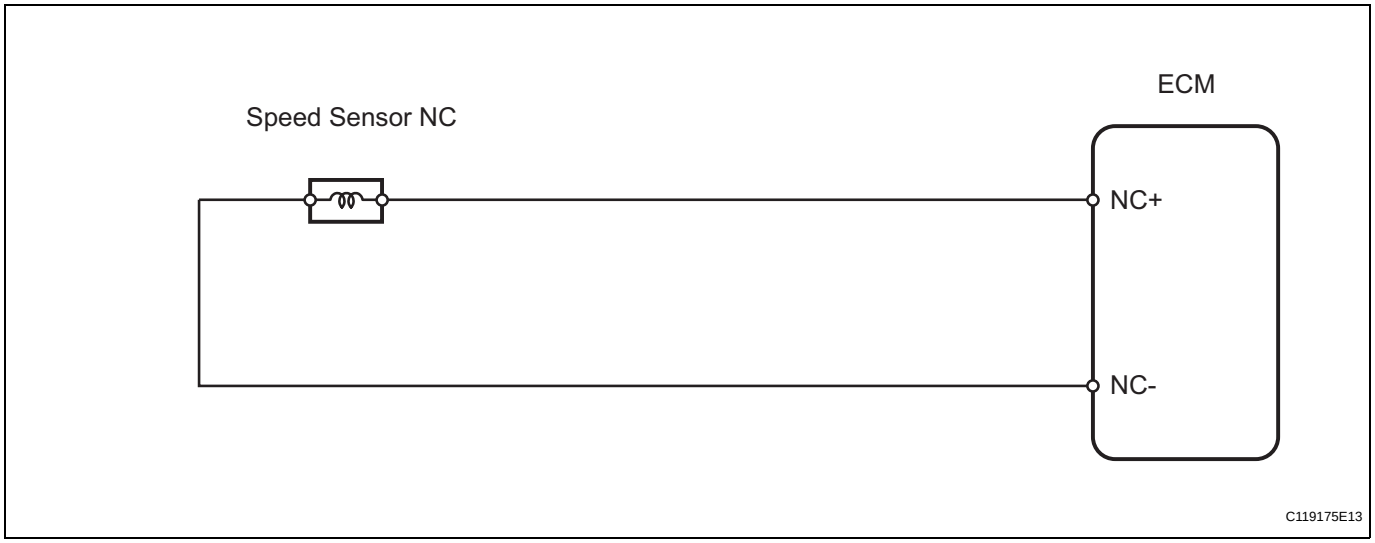

INSPECTION PROCEDURE

HINT:
Using the intelligent tester's DATA LIST allows switch, sensor, actuator and other item values to be read without removing any parts. Reading the DATA LIST early in troubleshooting is one way to save time.
NOTICE:
In the table below, the values listed under "Normal Condition" are reference values. Do not depend solely on these reference values when deciding whether a part is faulty or not.

1. Warm up the engine.
2. Turn the ignition switch OFF.
3. Connect the intelligent tester to the CAN VIM. Then connect the CAN VIM to the DLC3.
4. Turn the ignition switch ON and turn the tester ON.
5. Enter the following menus: DIAGNOSIS / ENHANCED OBD II / DATA LIST.
6. Follow the instructions on the tester and read the DATA LIST.

ECM:

Item	Measurement Item/ Range (Display)	Normal Condition	Diagnostic Note
SPD (NC)	Counter gear speed/ Min.: 0 rpm Max.: 12,750 rpm	3rd gear when shift lever is on D (after warming up the engine); Intermediate shaft speed (NC) becomes close to the engine speed	Data is displayed in increments of 50 rpm

HINT:

- SPD (NC) is always 0 rpm while driving:
  Open or short in the sensor or circuit.
- SPD (NC) is always more than 0 and less than 300 rpm while driving the vehicle at 50 km/h (31 mph) or more:
  Sensor trouble, improper installation, or intermittent connection trouble of the circuit.

AX

1	INSPECT SPEED SENSOR (INSTALLATION)

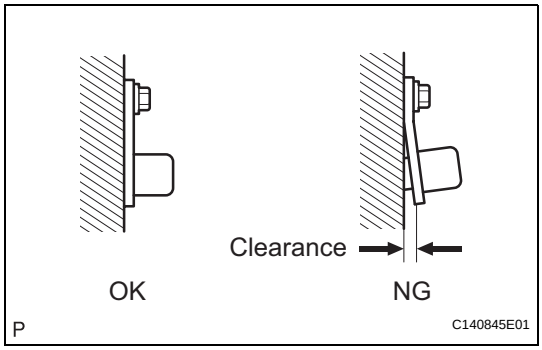

(a) Check the speed sensor NC installation.
OK:
Installation bolt is tightened properly and there is no clearance between the sensor and transaxle case.

NG → **REPLACE SPEED SENSOR NC**

OK

2	INSPECT SPEED SENSOR NC

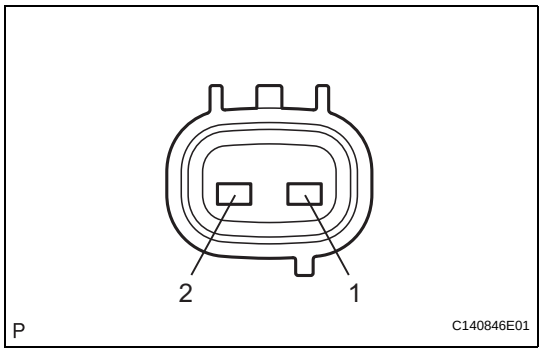

(a) Disconnect the B24 sensor connector from the transaxle.
(b) Measure the resistance of the sensor.
Standard resistance

Tester Connection	Condition	Specified Condition
1 - 2	20°C (68°F)	560 to 680 Ω

NG → **REPLACE SPEED SENSOR NC**

OK

3	CHECK WIRE HARNESS (SPEED SENSOR - ECM)

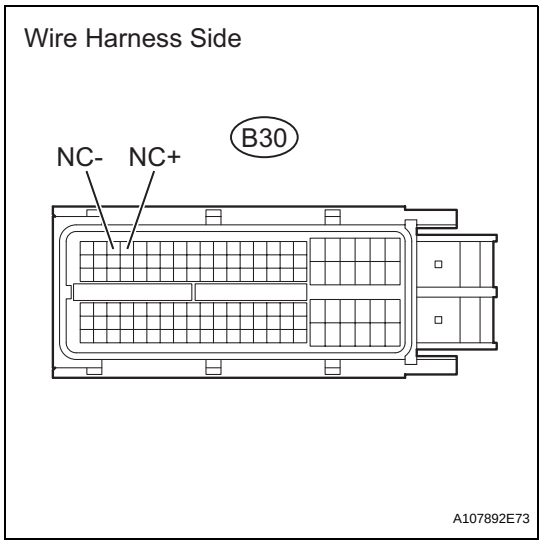

(a) Disconnect the B30 ECM connector.
(b) Measure the resistance of the wire harness side connector.
Standard resistance

Tester Connection	Specified Condition
B30-4 (NC+) - B30-3 (NC-)	560 to 680 Ω
B30-4 (NC+) - Body ground	10 kΩ or higher
B30-3 (NC-) - Body ground	10 kΩ or higher

NG → **REPAIR OR REPLACE HARNESS AND CONNECTOR**

OK

REPLACE ECM

DTC	P0796	Pressure Control Solenoid "C" Performance (Shift Solenoid Valve SL3)

DESCRIPTION

AX

The ECM uses signals from the vehicle speed sensor to detect the actual gear position (1st, 2nd, 3rd, 4th or 5th gear).
Then the ECM compares the actual gear with the shift schedule in the ECM memory to detect mechanical problems of the shift solenoid valves, valve body or automatic transaxle (clutch, brake, gear, etc.).

DTC No.	DTC Detection Condition	Trouble Area
P0796	Gear required by the ECM does not match the actual gear when driving (2 trip detection logic)	• Shift solenoid valve SL3 remains open or closed • Valve body is blocked • Automatic transaxle (clutch, brake, gear, etc.)

MONITOR DESCRIPTION

The ECM commands gear shifts by turning the shift solenoid valves ON/OFF. According to the input shaft revolution, intermediate (counter) shaft revolution and output shaft revolution, the ECM detects the actual gear position (1st, 2nd, 3rd, 4th or 5th gear position). When the gear position commanded by the ECM and the actual gear position are not the same, the ECM illuminates the MIL and stores the DTC.

MONITOR STRATEGY

Related DTCs	P0796: Shift solenoid valve SL3/OFF malfunction Shift solenoid valve SL3/ON malfunction
Required sensors/Components	Shift solenoid valve SL3, Speed sensor (NT), Speed sensor (NC), Crankshaft position sensor (NE)
Frequency of operation	Continuous
Duration	OFF malfunction (A) 0.8 sec. OFF malfunction (B) 1 sec. ON malfunction (A) and (B) 0.8 sec. ON malfunction (C) 0.4 sec.
MIL operation	2 driving cycles
Sequence of operation	None

TYPICAL ENABLING CONDITIONS

All:

The monitor will run whenever these DTCs are not present.	P0115 - P0118 (ECT sensor) P0125 (Insufficient ECT for closed loop) P0500 (VSS) P0748, P0778, P0798 (Shift solenoid valve (range))
ECT (Engine coolant temperature)	10°C (50°F) or more
Transmission range	"D"
ATF temperature	-20°C (-4°F) or more
ATF temperature sensor circuit	Not circuit malfunction
ECT sensor circuit	Not circuit malfunction
Turbine speed sensor circuit	Not circuit malfunction
Intermediate shaft speed sensor circuit	Not circuit malfunction
Output speed sensor circuit	Not circuit malfunction

Shift solenoid valve SL1 circuit	Not circuit malfunction
Shift solenoid valve SL2 circuit	Not circuit malfunction
Shift solenoid valve SL3 circuit	Not circuit malfunction
Shift solenoid valve S4 circuit	Not circuit malfunction
Shift solenoid valve SR circuit	Not circuit malfunction
Shift solenoid valve DSL circuit	Not circuit malfunction
Electronic throttle system	Not circuit malfunction

OFF malfunction (A):

ECM selected gear	4th or 5th
Throttle valve opening angle	4.5% or more at engine speed 1,900 rpm (Varies with engine speed)

OFF malfunction (B):

ECM selected gear	4th
Throttle valve opening angle	5% or more
Vehicle speed	10 km/h (6.2 mph) or more

ON malfunction (A):

ECM selected gear	1st
Vehicle speed	Less than 40 km/h (24.9 mph)
Throttle valve opening angle	4.5% or more at engine speed 1,900 rpm (Varies with engine speed)

ON malfunction (B):

ECM selected gear	3rd
Throttle valve opening angle	5.0% or more at output speed 1,400 rpm (Varies with engine speed)
Malfunction of pressure control solenoid "B" (SL2) and "C" (SL3)	Not detected

ON malfunction (C):

Throttle valve opening angle	7.0% or more at output speed 1,050 rpm (Varies with engine speed)
Malfunction of pressure control solenoid "B" (SL2)	Not detected

TYPICAL MALFUNCTION THRESHOLDS

Either of the following conditions is met: OFF malfunction (A) and (B), or ON malfunctions (A), (B) and (C)

2 detections are necessary per driving cycle:

1st detection: temporary flag ON

2nd detection: pending fault code ON

OFF malfunction (A):

Input (turbine) speed/Intermediate shaft speed	0.93 to 1.07

OFF malfunction (B):

Intermediate shaft speed/Output speed	1.02 to 1.16

ON malfunction (A):

Input (turbine) speed/Intermediate shaft speed	0.93 to 1.07

ON malfunction (B):

Input (turbine) speed - Intermediate shaft speed	700 rpm or more

ON malfunction (C):

Input (turbine) speed - Intermediate shaft speed	Less than -500 rpm or 700 rpm or more

INSPECTION PROCEDURE

HINT:
Performing the intelligent tester's ACTIVE TEST allows relay, VSV, actuator and other items to be operated without removing any parts. Performing the ACTIVE TEST early in troubleshooting is one way to save time.
The DATA LIST can be displayed during the ACTIVE TEST.

1. Warm up the engine.
2. Turn the ignition switch OFF.
3. Connect the intelligent tester to the CAN VIM. Then connect the CAN VIM to the DLC3.
4. Turn the ignition switch ON and turn the tester ON.
5. Enter the following menus: DIAGNOSIS / ENHANCED OBD II / ACTIVE TEST.
6. Follow the instructions on the tester and perform the ACTIVE TEST.

HINT:
While driving, the shift position can be forcibly changed with the tester.
Comparing the shift position commanded by the ACTIVE TEST with the actual shift position enables you to confirm the problem (see page AX-35).

ECM:

Item	Test Details	Diagnostic Note
SHIFT	[Test Details] Operate the shift solenoid valve and set each shift lever position by yourself [Vehicle Condition] • IDL: ON • 50 km/h (31 mph) or less [Other information] • Press "→" button: Shift up • Press "←" button: Shift down	Possible to check the operation of the shift solenoid valves

HINT:
- This test can be conducted when the vehicle speed is 50 km/h (31 mph) or less.
- The shift position commanded by the ECM is shown in the DATA LIST/SHIFT display on the tester.

1 CHECK OTHER DTCS OUTPUT (IN ADDITION TO DTC P0796)

(a) Connect the intelligent tester to the CAN VIM. Then connect the CAN VIM to the DLC3.
(b) Turn the ignition switch ON and turn the tester ON.
(c) Enter the following menus: DIAGNOSIS / ENHANCED OBD II / DTC INFO / CURRENT CODES.
(d) Read the DTCs using the tester.

Result

Display (DTC output)	Proceed to
Only P0796 is output	A
P0796 and other DTCs are output	B

HINT:
If any other codes besides P0796 are output, perform troubleshooting for those DTCs first.

B → **GO TO DTC CHART**

A

2	INSPECT SHIFT SOLENOID VALVE SL3

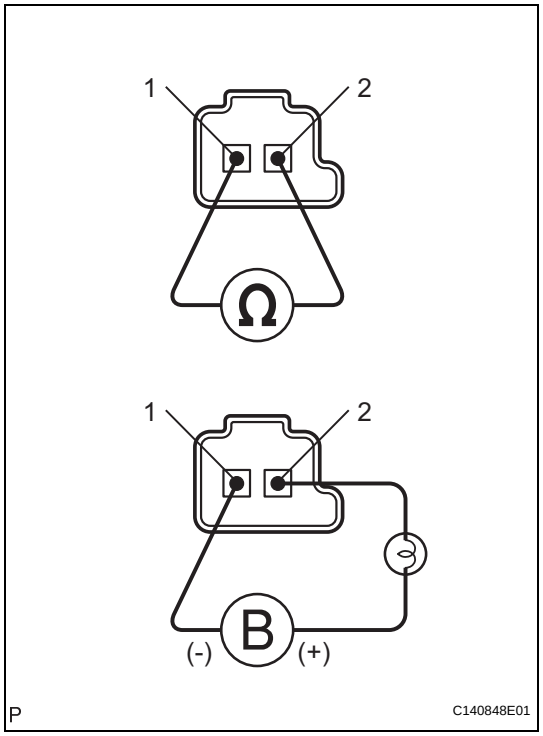

(a) Remove the shift solenoid valve SL3.
(b) Measure the resistance of the solenoid valve.
Standard resistance:
5.0 to 5.6 Ω at 20°C (68°F)
(c) Connect the battery's positive (+) lead with a 21 W bulb to terminal 2 and the negative (-) lead to terminal 1 of the solenoid valve connector. Then check that the valve moves and makes an operating noise.
OK:
Valve moves and makes operating noise.

NG → **REPLACE SHIFT SOLENOID VALVE SL3**

OK

3	INSPECT TRANSMISSION VALVE BODY ASSEMBLY

(a) Check the transmission valve body assembly.
OK:
There are no foreign objects on each valve.

NG → **REPAIR OR REPLACE TRANSMISSION VALVE BODY ASSEMBLY**

OK

4	INSPECT TORQUE CONVERTER CLUTCH ASSEMBLY

(a) Check the torque converter clutch assembly (see page AX-179).
OK:
The torque converter clutch operates normally.

NG → **REPLACE TORQUE CONVERTER CLUTCH ASSEMBLY**

OK

REPAIR OR REPLACE AUTOMATIC TRANSAXLE ASSEMBLY

DTC	P0798	Pressure Control Solenoid "C" Electrical (Shift Solenoid Valve SL3)

DESCRIPTION

AX

Shifting from 1st to 5th is performed in combination with the ON and OFF operation of the shift solenoid valves SL1, SL2, SL3, S4 or SR which are controlled by the ECM. If an open or short circuit occurs in any of the shift solenoid valves, the ECM controls the remaining normal shift solenoid valves to allow the vehicle to be operated safely (see page AX-35).

DTC No.	DTC Detection Condition	Trouble Area
P0798	The ECM checks for an open or short in the shift solenoid valve SL3 circuit while driving and shifting gears (1 trip detection logic)	• Open or short in shift solenoid valve SL3 circuit • Shift solenoid valve SL3 • ECM

MONITOR DESCRIPTION

The ECM commands gear shifts by turning the shift solenoid valves ON/OFF. When there is an open or short circuit in any shift solenoid valve circuit, the ECM detects the problem and illuminates the MIL and stores the DTC. And the ECM performs the fail-safe function and turns the other normal shift solenoid valves ON/OFF. In case of an open or short circuit, the ECM stops sending current to the circuit (see page AX-35).

MONITOR STRATEGY

Related DTCs	P0798: Shift solenoid valve SL3/Range check
Required sensors/Components	Shift solenoid valve SL3
Frequency of operation	Continuous
Duration	1 sec.
MIL operation	Immediate
Sequence of operation	None

TYPICAL ENABLING CONDITIONS

The monitor will run whenever this DTC is not present.	None
Battery voltage	10 V or more
Ignition switch	ON
Starter	OFF

TYPICAL MALFUNCTION THRESHOLDS

Output signal duty	100%

COMPONENT OPERATING RANGE

Output signal duty	Less than 100%

WIRING DIAGRAM

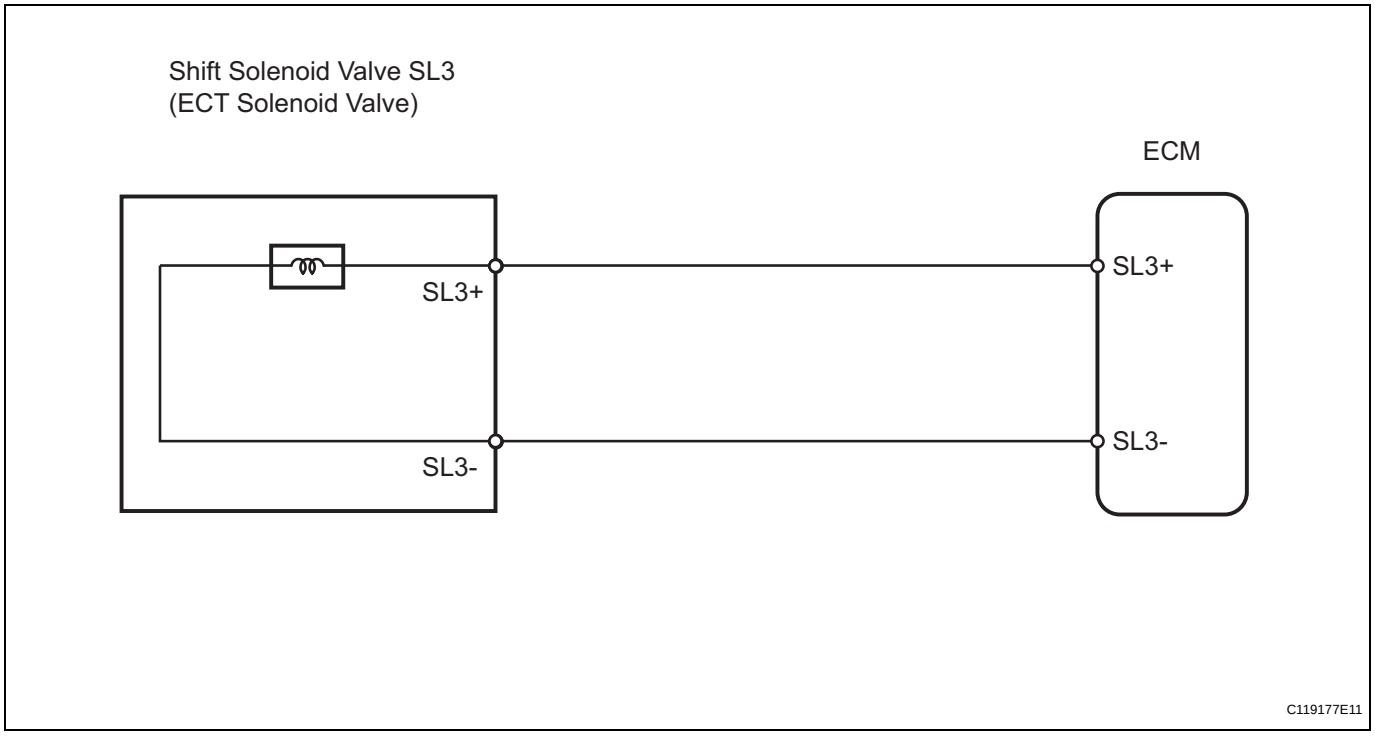

AX

INSPECTION PROCEDURE

1	INSPECT TRANSMISSION WIRE (SHIFT SOLENOID VALVE SL3)

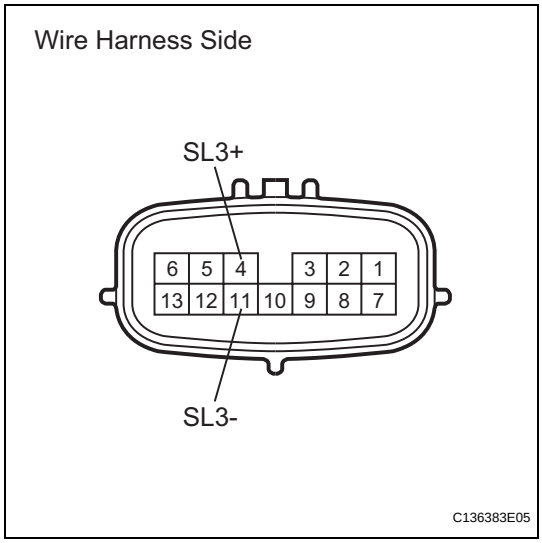

(a) Disconnect the B32 wire connector.
(b) Measure the resistance of the transmission wire.

Standard resistance

Tester Connection	Condition	Specified Condition
4 (SL3+) - 11 (SL3-)	20°C (68°F)	5.0 to 5.6 Ω
4 (SL3+) - Body ground	20°C (68°F)	1 MΩ or higher
11 (SL3-) - Body ground	20°C (68°F)	1 MΩ or higher

NG → **Go to step 3**

OK

AX

2 CHECK WIRE HARNESS (TRANSMISSION WIRE - ECM)

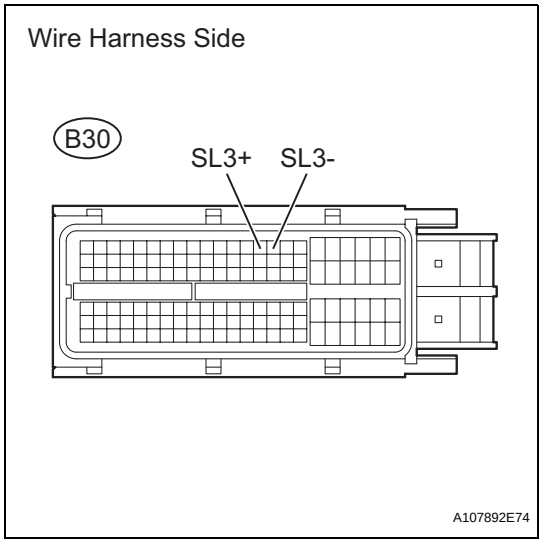

(a) Disconnect the B30 ECM connector.
(b) Measure the resistance of the wire harness side connector.
Standard resistance

Tester Connection	Condition	Specified Condition
B30-14 (SL3+) - B30-15 (SL3-)	20°C (68°F)	5.0 to 5.6 Ω
B30-14 (SL3+) - Body ground	20°C (68°F)	1 MΩ or higher
B30-15 (SL3-) - Body ground	20°C (68°F)	1 MΩ or higher

NG → **REPAIR OR REPLACE HARNESS AND CONNECTOR**

OK

REPLACE ECM

3 INSPECT SHIFT SOLENOID VALVE SL3

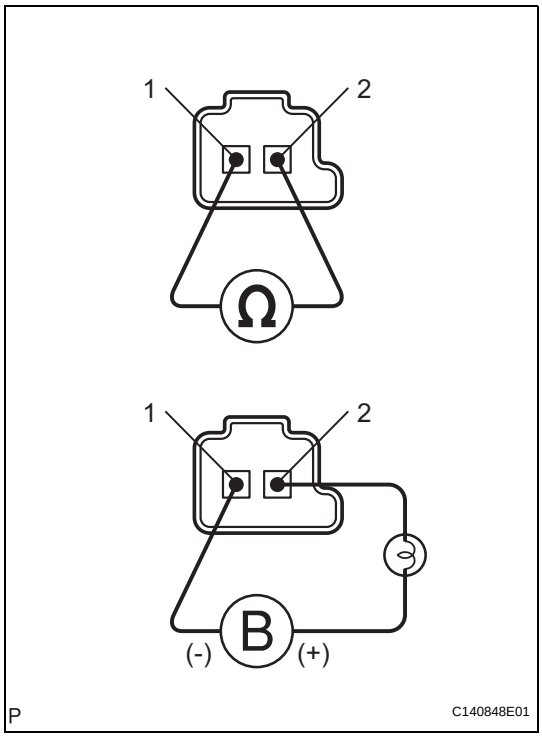

(a) Remove the shift solenoid valve SL3.
(b) Measure the resistance of the solenoid valve.
Standard resistance:
5.0 to 5.6 Ω at 20°C (68°F)
(c) Connect the battery's positive (+) lead with a 21 W bulb to terminal 2 and the negative (-) lead to terminal 1 of the solenoid valve connector. Then check that the valve moves and makes an operating noise.
OK:
Valve moves and makes operating noise.

NG → **REPLACE SHIFT SOLENOID VALVE SL3**

OK

REPAIR OR REPLACE TRANSMISSION WIRE

DTC	P0982	Shift Solenoid "D" Control Circuit Low (Shift Solenoid Valve S4)

DTC	P0983	Shift Solenoid "D" Control Circuit High (Shift Solenoid Valve S4)

DESCRIPTION

Shifting from 1st to 5th is performed in combination with the ON and OFF operation of the shift solenoid valves SL1, SL2, SL3, S4 or SR, which are controlled by the ECM. If an open or short circuit occurs in any of the shift solenoid valves, the ECM controls the remaining normal shift solenoid valves to allow the vehicle to be operated safely (see page AX-35).

DTC No.	DTC Detection Condition	Trouble Area
P0982	ECM detects short in solenoid valve S4 circuit 2 times when solenoid valve S4 is operated (1 trip detection logic)	• Short in shift solenoid valve S4 circuit • Shift solenoid valve S4 • ECM
P0983	ECM detects open in solenoid valve S4 circuit 2 times when solenoid valve S4 is not operated (1 trip detection logic)	• Open in shift solenoid valve S4 circuit • Shift solenoid valve S4 • ECM

MONITOR DESCRIPTION

This DTC indicates an open or short in the shift solenoid valve S4 circuit. The ECM commands gear shifts by turning the shift solenoid valves ON/OFF. When there is an open or short circuit in any shift solenoid valve circuit, the ECM detects the problem, illuminates the MIL and stores the DTC. Also, the ECM performs the fail-safe function and turns the other normal shift solenoid valves ON/OFF. In case of an open or short circuit, the ECM stops sending current to the circuit (see page AX-35).

MONITOR STRATEGY

Related DTCs	P0982: Shift solenoid valve S4/Range check (Low resistance) P0983: Shift solenoid valve S4/Range check (High resistance)
Required sensors/Components	Shift solenoid valve S4
Frequency of operation	Continuous
Duration	0.064 sec.
MIL operation	Immediate
Sequence of operation	None

TYPICAL ENABLING CONDITIONS

P0982: Range check (Low resistance)

The monitor will run whenever this DTC is not present.	None
Shift solenoid valve S4	ON
Battery voltage	8 V or more
Ignition switch	ON
Starter	OFF

P0983: Range check (High resistance)

The monitor will run whenever this DTC is not present.	None
Shift solenoid valve S4	OFF
Battery voltage	8 V or more
Ignition switch	ON
Starter	OFF

TYPICAL MALFUNCTION THRESHOLDS

P0982: Range check (Low resistance)

Shift solenoid valve S4 resistance	8 Ω or less

P0983: Range check (High resistance)

Shift solenoid valve S4 resistance	100 kΩ or more

COMPONENT OPERATING RANGE

Shift solenoid valve S4	Resistance: 11 to 15 Ω at 20°C (68°F)

WIRING DIAGRAM

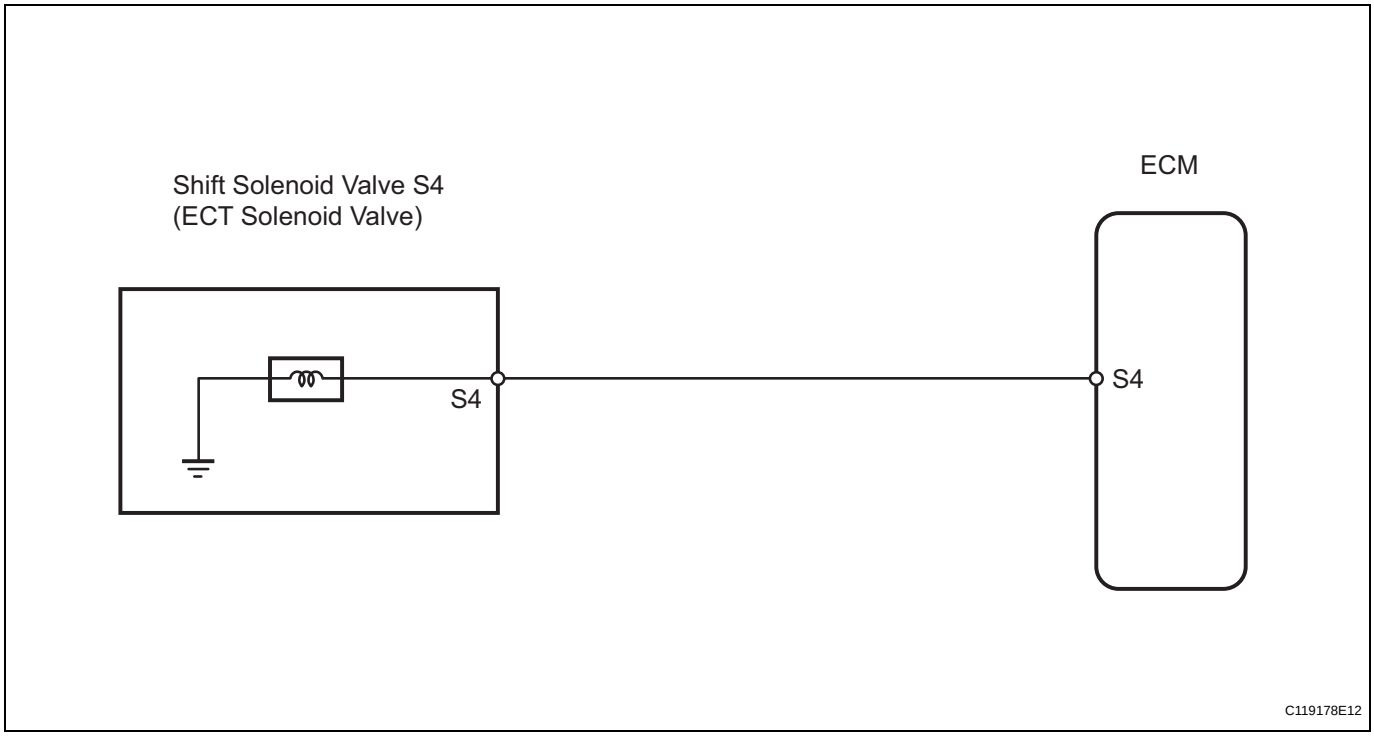

INSPECTION PROCEDURE

1 INSPECT TRANSMISSION WIRE (SHIFT SOLENOID VALVE S4)

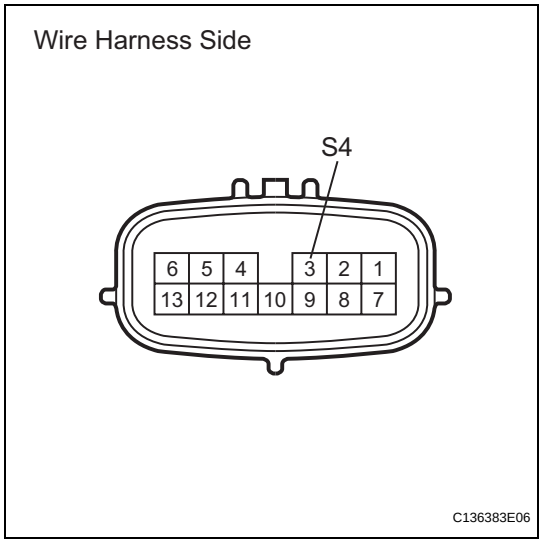

(a) Disconnect the B32 wire connector.
(b) Measure the resistance of the transmission wire.

Standard resistance

Tester Connection	Condition	Specified Condition
3 (S4) - Body ground	20°C (68°F)	11 to 15 Ω

NG → **Go to step 3**

OK

2 CHECK WIRE HARNESS (TRANSMISSION WIRE - ECM)

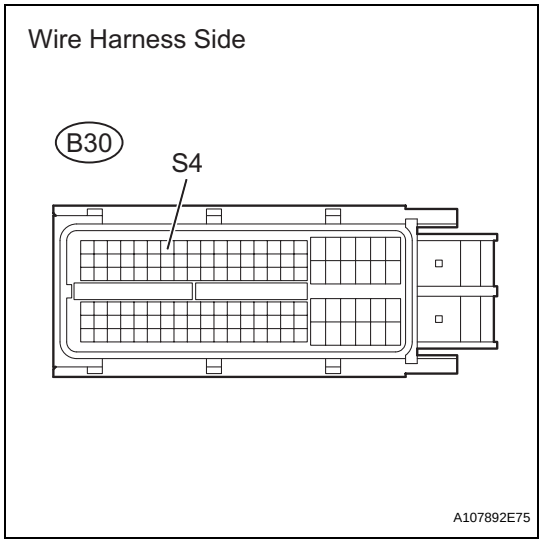

(a) Disconnect the B30 ECM connector.
(b) Measure the resistance of the wire harness side connector.

Standard resistance

Tester Connection	Condition	Specified Condition
B30-7 (S4) - Body ground	20°C (68°F)	11 to 15 Ω

NG → **REPAIR OR REPLACE HARNESS AND CONNECTOR**

OK

REPLACE ECM

3	INSPECT SHIFT SOLENOID VALVE S4

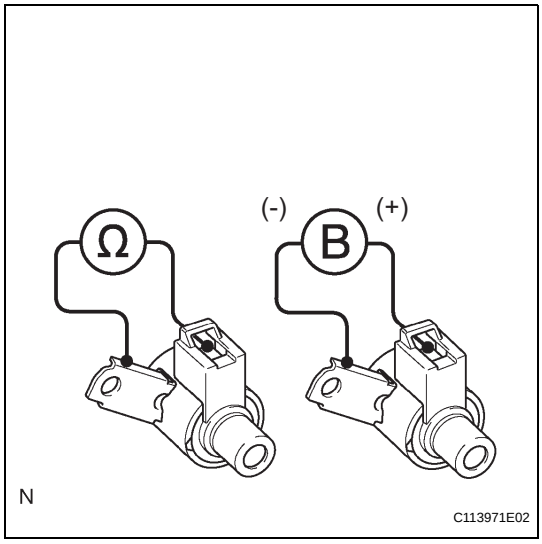

(a) Remove the shift solenoid valve S4.
(b) Measure the resistance of the solenoid valve.
Standard resistance:
11 to 15 Ω at 20°C (68°F)
(c) Connect the battery's positive (+) lead to the terminal of the solenoid valve connector, and the negative (-) lead to the solenoid body. Then check that the valve moves and makes an operating noise.
OK:
Valve moves and makes operating noise.

NG → **REPLACE SHIFT SOLENOID VALVE S4**

OK

REPAIR OR REPLACE TRANSMISSION WIRE

DTC	P0985	Shift Solenoid "E" Control Circuit Low (Shift Solenoid Valve SR)

DTC	P0986	Shift Solenoid "E" Control Circuit High (Shift Solenoid Valve SR)

DESCRIPTION

Shifting from 1st to 5th is performed in combination with the ON and OFF operation of the shift solenoid valves SL1, SL2, SL3, S4 or SR, which are controlled by the ECM. If an open or short circuit occurs in any of the shift solenoid valves, the ECM controls the remaining normal shift solenoid valves to allow the vehicle to be operated safely (see page AX-35).

DTC No.	DTC Detection Condition	Trouble Area
P0985	ECM detects short in solenoid valve SR circuit 2 times when solenoid valve SR is operated (1 trip detection logic)	• Short in shift solenoid valve SR circuit • Shift solenoid valve SR • ECM
P0986	ECM detects open in solenoid valve SR circuit 2 times when solenoid valve SR is not operated (1 trip detection logic)	• Open in shift solenoid valve SR circuit • Shift solenoid valve SR • ECM

MONITOR DESCRIPTION

The ECM commands gear shifts by turning the shift solenoid valves ON/OFF. When there is an open or short circuit in any shift solenoid valve circuit, the ECM detects the problem and illuminates the MIL and stores the DTC. And the ECM performs the fail-safe function and turns the other normal shift solenoid valves ON/OFF. In case of an open or short circuit, the ECM stops sending current to the circuit (see page AX-35).

MONITOR STRATEGY

Related DTCs	P0985: Shift solenoid valve SR/Range check (Low resistance) P0986: Shift solenoid valve SR/Range check (High resistance)
Required sensors/Components	Shift solenoid valve SR
Frequency of operation	Continuous
Duration	0.064 sec.
MIL operation	Immediate
Sequence of operation	None

TYPICAL ENABLING CONDITIONS

P0985: Range check (Low resistance):

The monitor will run whenever this DTC is not present.	None
Shift solenoid valve SR	ON
Battery voltage	8 V or more
Ignition switch	ON
Starter	OFF

P0986: Range check (High resistance):

The monitor will run whenever this DTC is not present.	None
Shift solenoid valve SR	OFF
Battery voltage	8 V or more
Ignition switch	ON
Starter	OFF

TYPICAL MALFUNCTION THRESHOLDS

P0985: Range check (Low resistance):

Shift solenoid valve SR resistance	8 Ω or less

P0986: Range check (High resistance):

Shift solenoid valve SR resistance	100 kΩ or more

COMPONENT OPERATING RANGE

Shift solenoid valve SR	Resistance: 11 to 15 Ω at 20°C (68°F)

WIRING DIAGRAM

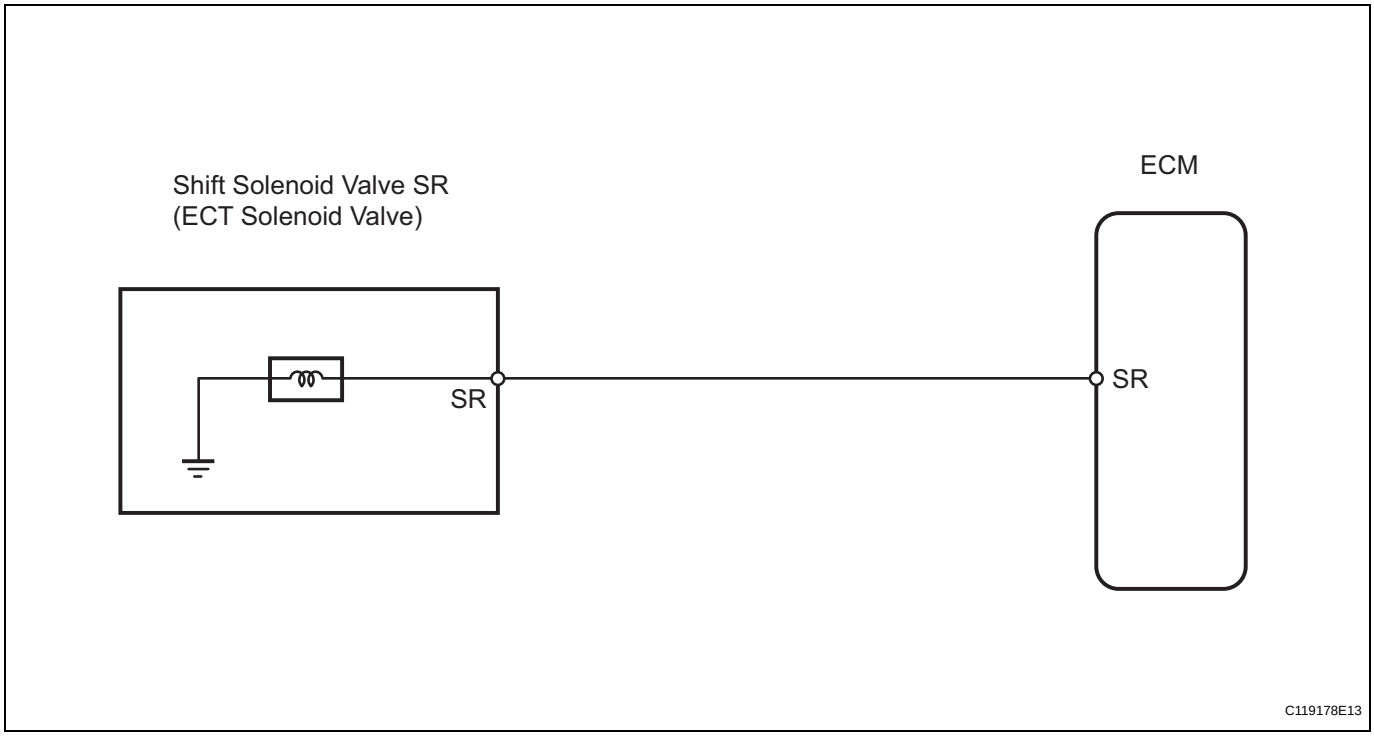

INSPECTION PROCEDURE

1 INSPECT TRANSMISSION WIRE (SHIFT SOLENOID VALVE SR)

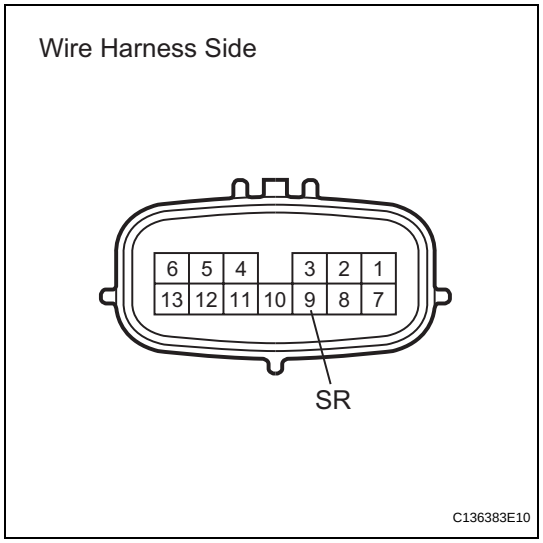

(a) Disconnect the B32 wire connector.
(b) Measure the resistance of the transmission wire.

Standard resistance

Tester Connection	Condition	Specified Condition
9 (SR) - Body ground	20°C (68°F)	11 to 15 Ω

NG → **Go to step 3**

OK

2 CHECK WIRE HARNESS (TRANSMISSION - ECM)

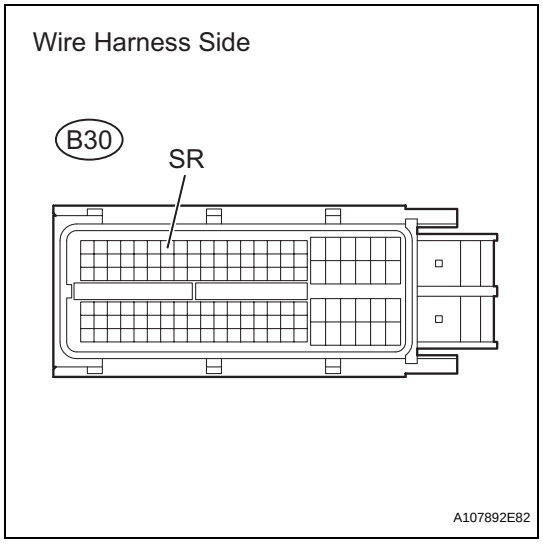

(a) Disconnect the B30 ECM connector.
(b) Measure the resistance of the wire harness side connector.

Standard resistance

Tester Connection	Condition	Specified Condition
B30-8 (SR) - Body ground	20°C (68°F)	11 to 15 Ω

NG → **REPAIR OR REPLACE HARNESS AND CONNECTOR**

OK

REPLACE ECM

3	INSPECT SHIFT SOLENOID VALVE SR

AX

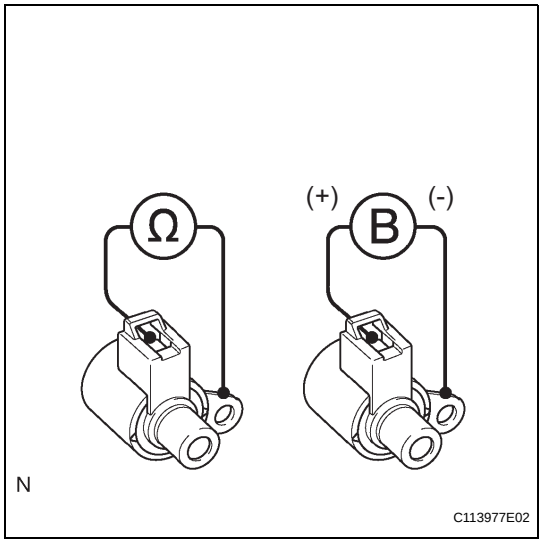

(a) Remove the shift solenoid valve SR.
(b) Measure the resistance of the solenoid valve.
Standard resistance:
11 to 15 Ω at 20°C (68°F)
(c) Connect the battery's positive (+) lead to the terminal of the solenoid valve connector, and the negative (-) lead to the solenoid body. Then check that the valve moves and makes an operating noise.
OK:
Valve moves and makes operating noise.

NG → **REPLACE SHIFT SOLENOID VALVE SR**

OK

REPAIR OR REPLACE TRANSMISSION WIRE

DTC	P2714	Pressure Control Solenoid "D" Performance (Shift Solenoid Valve SLT)

DESCRIPTION

The linear solenoid valve (SLT) controls the transmission line pressure for smooth transmission operation based on signals from the throttle position sensor and the vehicle speed sensor. The ECM adjusts the duty ratio* of the SLT solenoid valve to control hydraulic line pressure coming from the primary regulator valve. Appropriate line pressure assures smooth shifting with varying engine outputs.

HINT:

*: The duty ratio is the ratio of the current ON time (A) to the total of the current ON and OFF time (A + B).

Duty Ratio (%) = A / (A + B) x 100

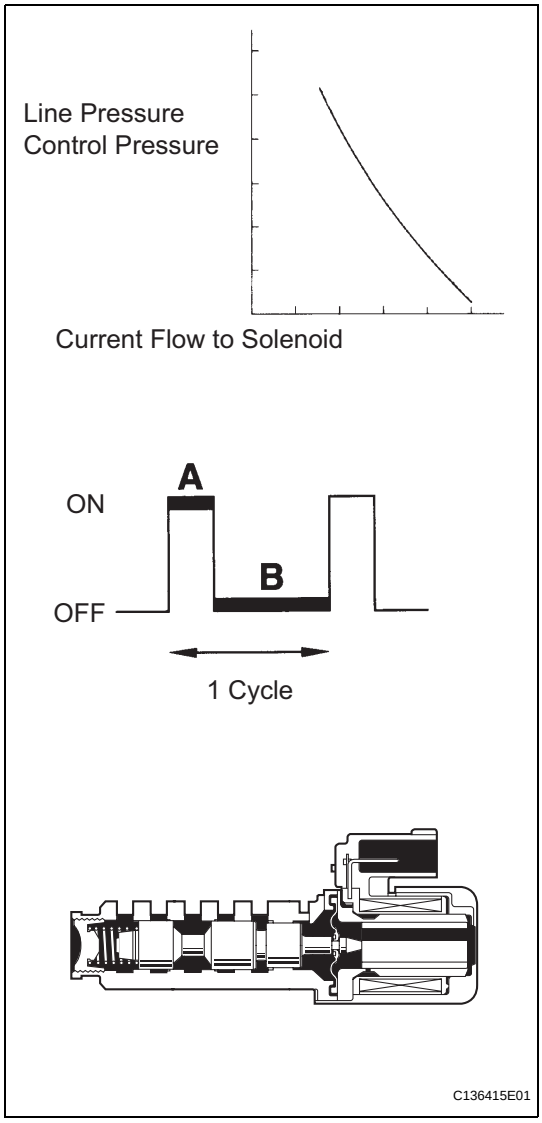

DTC No.	DTC Detection Condition	Trouble Area
P2714	ECM detects malfunction on SLT (ON side) according to difference in revolutions of turbine (input), intermediate and output shaft (2 trip detection logic)	• Shift solenoid valve SLT remains closed • Valve body is blocked • Torque converter clutch • Automatic transaxle (clutch, brake, gear, etc.) • ECM

MONITOR DESCRIPTION

In any forward position, when the difference between the revolutions of the turbine, intermediate and output shaft exceeds the specified value (varies with intermediate, output speed) determined by the ECM, the ECM illuminates the MIL and outputs the DTC. When shift solenoid valve SLT remains on, the oil pressure goes down and the clutch engagement force decreases.

NOTICE:

If you continue driving under these conditions, the clutch will burn out and the vehicle will no longer be drivable.

MONITOR STRATEGY

Related DTCs	P2714: Shift solenoid valve SLT/ON malfunction
Required sensors/Components	Shift solenoid valve SLT, Speed sensor (NT), Speed sensor (NC), Crankshaft position sensor (NE)
Frequency of operation	Continuous
Duration	0.5 sec.
MIL operation	2 driving cycles
Sequence of operation	None

TYPICAL ENABLING CONDITIONS

ON malfunction:

The monitor will run whenever this DTC is not present.	None
Transmission range	"D"
ATF temperature	-20°C (-4°F) or more
ATF temperature sensor circuit	Not circuit malfunction
Turbine speed sensor circuit	Not circuit malfunction
Intermediate shaft speed sensor circuit	Not circuit malfunction
Output speed sensor circuit	Not circuit malfunction
Shift solenoid valve SL1 circuit	Not circuit malfunction
Shift solenoid valve SL2 circuit	Not circuit malfunction
Shift solenoid valve SL3 circuit	Not circuit malfunction
Shift solenoid valve S4 circuit	Not circuit malfunction
Shift solenoid valve SR circuit	Not circuit malfunction
Shift solenoid valve DSL circuit	Not circuit malfunction
Shift solenoid valve SLT circuit	Not circuit malfunction
Electronic throttle system	Not circuit malfunction

ON malfunction (a):

ECM gearshift command	2nd
Temporary MAIN gear	1st, 2nd, 3rd or 4th
NT - NC x Temporary MAIN gear ratio NT: Input (turbine) speed NC: Intermediate shaft speed	100 rpm or more at intermediate shaft speed 1,000 rpm
Temporary U/D gear	Low or High
NC - NO x Temporary U/D gear ratio NO: Output speed	300 rpm or more at output speed 1,000 rpm
TT: Turbine Torque	192 N*m or more
NT	250 rpm or more
NC	250 rpm or more
NO	250 rpm or more

ON malfunction (b):

ECM gearshift command	1st, 3rd or 3.5th (MAIN: 3rd and U/D: High)

Temporary MAIN gear	1st, 2nd, 3rd or 4th
NT - NC x Temporary MAIN gear ratio NT: Input (turbine) speed NC: Intermediate shaft speed	100 rpm or more at intermediate shaft speed 1,000 rpm
Temporary U/D gear	Low or High
NC - NO x Temporary U/D gear ratio NO: Output speed	300 rpm or more at output speed 1,000 rpm
TT: Turbine Torque	900 N*m or more
NT	250 rpm or more
NC	250 rpm or more
NO	250 rpm or more

ON malfunction (c):

ECM gearshift command	4th or 5th
Temporary MAIN gear	1st, 2nd, 3rd or 4th
NT - NC x Temporary MAIN gear ratio NT: Input (turbine) speed NC: Intermediate shaft speed	100 rpm or more at intermediate shaft speed 1,000 rpm
Temporary U/D gear	Low or High
NC - NO x Temporary U/D gear ratio NO: Output speed	300 rpm or more at output speed 1,000 rpm
TT: Turbine Torque	189 N*m or more
NT	250 rpm or more
NC	250 rpm or more
NO	250 rpm or more

TYPICAL MALFUNCTION THRESHOLDS

[ON malfunction]

Detection condition: Total accumulated time of ON malfunctions (a), (b) and (c) is 1 second or more

ON malfunction (a):

NT - NC x 2nd gear ratio	100 rpm or more at intermediate shaft speed 1,000 rpm
NC - NO x Low gear ratio	300 rpm or more at output speed 1,000 rpm
Duration	1 sec. or more

ON malfunction (b):

NT - NC x 1st gear ratio, NT - NC x 3rd gear ratio or NT - NC x 3.5th gear ratio	100 rpm or more at intermediate shaft speed 1,000 rpm
NC - NO x Low gear ratio or NC - NO x High gear ratio	300 rpm or more at output speed 1,000 rpm
Duration	1 sec. or more

ON malfunction (c):

NT - NC x 4th gear ratio or NT - NC x 5th gear ratio	100 rpm or more at intermediate shaft speed 1,000 rpm
NC - NO x Low gear ratio or NC - NO x High gear ratio	300 rpm or more at output speed 1,000 rpm
Duration	1 sec. or more

WIRING DIAGRAM

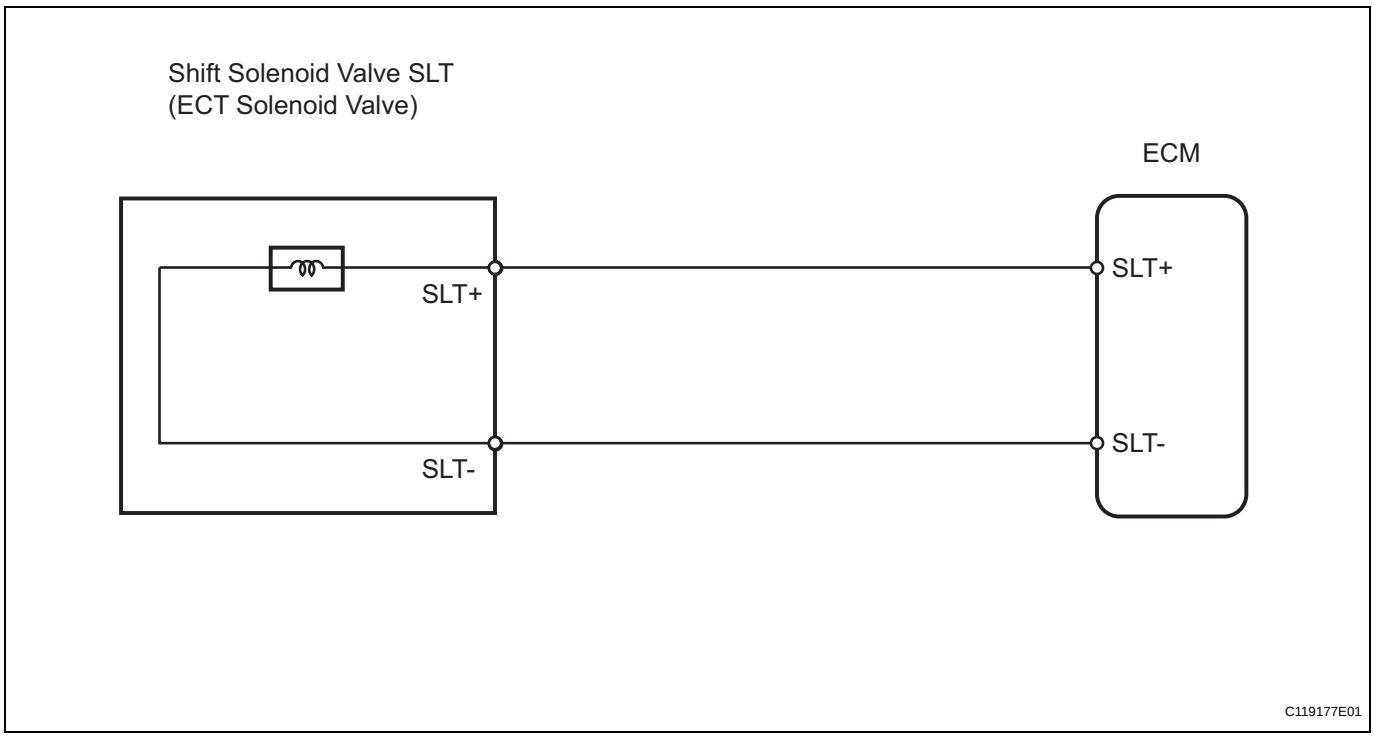

INSPECTION PROCEDURE

HINT:
Performing the intelligent tester's ACTIVE TEST allows relay, VSV, actuator and other items to be operated without removing any parts. Performing the ACTIVE TEST early in troubleshooting is one way to save time.
The DATA LIST can be displayed during the ACTIVE TEST.

1. Warm up the engine.
2. Turn the ignition switch OFF.
3. Connect the intelligent tester to the CAN VIM. Then connect the CAN VIM to the DLC3.
4. Turn the ignition switch ON and turn the tester ON.
5. Enter the following menus: DIAGNOSIS / ENHANCED OBD II / ACTIVE TEST.
6. Perform the ACTIVE TEST.

ECM:

Item	Test Details	Diagnostic Note
SOLENOID (SLT)*	[Test Details] Operate shift solenoid SLT and raise line pressure [Vehicle Condition] • Vehicle stopped • IDL: ON HINT: OFF: Line pressure up (when Active Test "SOLENOID (SLT)" is performed, ECM commands SLT solenoid to turn OFF) ON: No action (normal operation)	-

HINT:
*: "SOLENOID (SLT)" in the ACTIVE TEST is performed to check the line pressure changes by connecting SST to the automatic transaxle, which is used in the HYDRAULIC TEST (see page AX-18) as well. Please note that the pressure values in the ACTIVE TEST and HYDRAULIC TEST are different.

1	CHECK OTHER DTCS OUTPUT (IN ADDITION TO DTC P2714)

(a) Connect the intelligent tester to the CAN VIM. Then connect the CAN VIM to the DLC3.
(b) Turn the ignition switch ON and turn the tester ON.
(c) Enter the following menus: DIAGNOSIS / ENHANCED OBD II / DTC INFO / CURRENT CODES.
(d) Read the DTCs using the tester.

Result

Display (DTC output)	Proceed to
Only P2714 is output	A
P2714 and other DTCs are output	B

HINT:
If any other codes besides P2714 are output, perform troubleshooting for those DTCs first.

B → GO TO DTC CHART

A

2	INSPECT SHIFT SOLENOID VALVE SLT

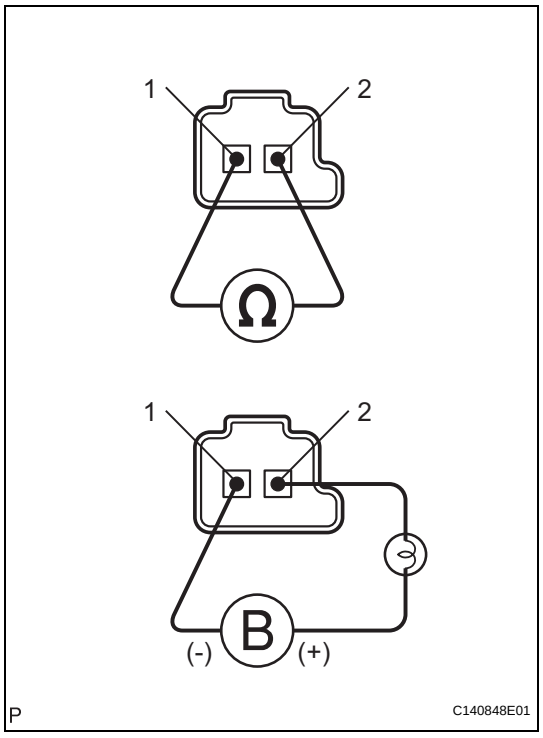

(a) Remove the shift solenoid valve SLT.
(b) Measure the resistance of the solenoid valve.
Standard resistance:
5.0 to 5.6 Ω at 20°C (68°F)
(c) Connect the battery's positive (+) lead with a 21 W bulb to terminal 2 and the negative (-) lead to terminal 1 of the solenoid valve connector. Then check that the valve moves and makes an operating noise.
OK:
Valve moves and makes operating noise.

NG → REPLACE SHIFT SOLENOID VALVE SLT

OK

3	INSPECT TRANSMISSION VALVE BODY ASSEMBLY

(a) Check the transmission valve body assembly.
OK:
There are no foreign objects on each valve.

NG → **REPAIR OR REPLACE TRANSMISSION VALVE BODY ASSEMBLY**

OK

AX

4	INSPECT TORQUE CONVERTER CLUTCH ASSEMBLY

(a) Check the torque converter clutch assembly (see page AX-179).

OK:

The torque converter clutch operates normally.

NG → **REPLACE TORQUE CONVERTER CLUTCH ASSEMBLY**

OK

REPAIR OR REPLACE AUTOMATIC TRANSAXLE ASSEMBLY

DTC	P2716	Pressure Control Solenoid "D" Electrical (Shift Solenoid Valve SLT)

DESCRIPTION

Refer to DTC P2714 (see page AX-114).

DTC No.	DTC Detection Condition	Trouble Area
P2716	Conditions (a) and (b) below are detected for 1 sec. or more (1 trip detection logic): (a) SLT - terminal: 0 V (b) SLT - terminal: 12 V	• Open or short in shift solenoid valve SLT circuit • Shift solenoid valve SLT • ECM

MONITOR DESCRIPTION

When an open or short in the shift solenoid valve SLT circuit is detected, the ECM interprets this as a fault. The ECM will illuminate the MIL and store the DTC.

MONITOR STRATEGY

Related DTCs	P2716: Shift solenoid valve SLT/Range check
Required sensors/Components	Shift solenoid valve SLT
Frequency of operation	Continuous
Duration	1 sec.
MIL operation	Immediate
Sequence of operation	None

TYPICAL ENABLING CONDITIONS

The monitor will run whenever this DTC is not present.	None
Battery voltage	11 V or more
Solenoid current cut status	Not cut
CPU command duty ratio to SLT	19% or more
Starter	OFF
Ignition switch	ON

TYPICAL MALFUNCTION THRESHOLDS

Solenoid status from IC	Fail (open or short)

COMPONENT OPERATING RANGE

Shift solenoid valve SLT	Resistance: 5.0 to 5.6 Ω at 20°C (68°F)

WIRING DIAGRAM

Refer to DTC P2714 (see page AX-117).

INSPECTION PROCEDURE

1 **INSPECT TRANSMISSION WIRE (SHIFT SOLENOID VALVE SLT)**

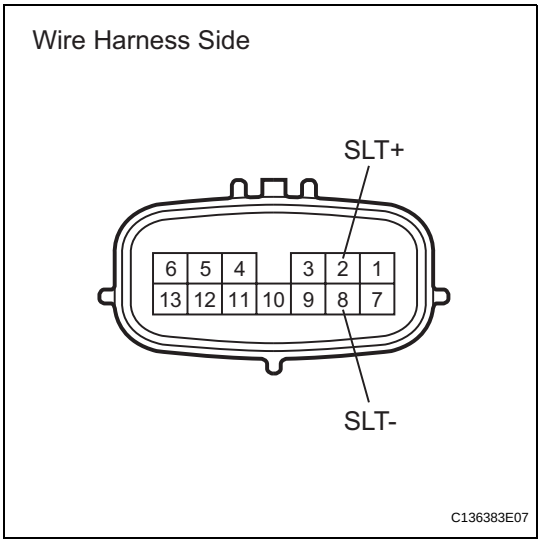

(a) Disconnect the B32 wire connector.
(b) Measure the resistance of the transmission wire.

Standard resistance

Tester Connection	Condition	Specified Condition
2 (SLT+) - 8 (SLT-)	20°C (68°F)	5.0 to 5.6 Ω
2 (SLT+) - Body ground	20°C (68°F)	1 MΩ or higher
8 (SLT-) - Body ground	20°C (68°F)	1 MΩ or higher

NG → **Go to step 3**

OK

2 **CHECK WIRE HARNESS (TRANSMISSION WIRE - ECM)**

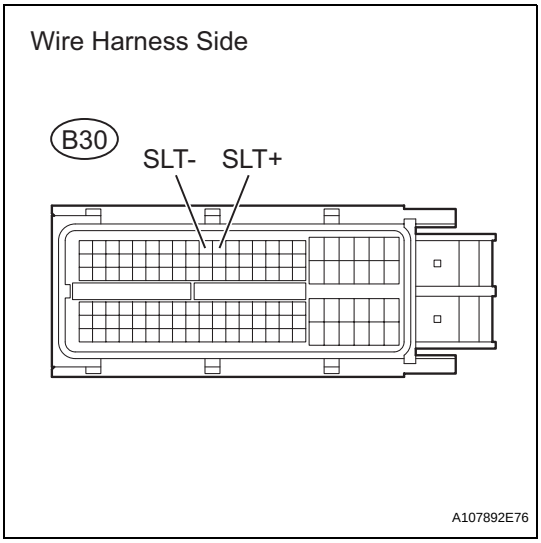

(a) Disconnect the B30 ECM connector.
(b) Measure the resistance of the wire harness side connector.

Standard resistance

Tester Connection	Condition	Specified Condition
B30-11 (SLT+) - B30-10 (SLT-)	20°C (68°F)	5.0 to 5.6 Ω
B30-11 (SLT+) - Body ground	20°C (68°F)	1 MΩ or higher
B30-10 (SLT-) - Body ground	20°C (68°F)	1 MΩ or higher

NG → **REPAIR OR REPLACE HARNESS AND CONNECTOR**

OK

REPLACE ECM

3	INSPECT SHIFT SOLENOID VALVE SLT

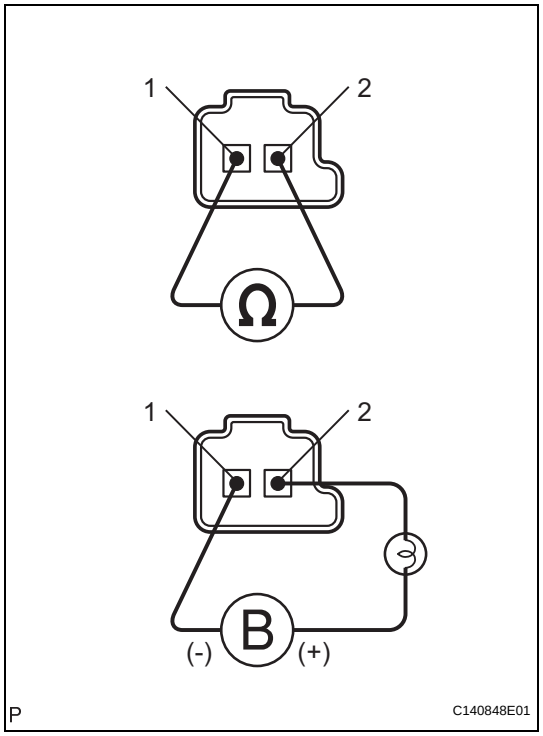

(a) Remove the shift solenoid valve SLT.
(b) Measure the resistance of the solenoid valve.
Standard resistance:
5.0 to 5.6 Ω at 20°C (68°F)
(c) Connect the battery's positive (+) lead with a 21 W bulb to terminal 2 and the negative (-) lead to terminal 1 of the solenoid valve connector. Then check that the valve moves and makes an operating noise.
OK:
Valve moves and makes operating noise.

NG → **REPLACE SHIFT SOLENOID VALVE SLT**

OK

REPAIR OR REPLACE TRANSMISSION WIRE

AX

DTC	P2769	Torque Converter Clutch Solenoid Circuit Low (Shift Solenoid Valve DSL)

DTC	P2770	Torque Converter Clutch Solenoid Circuit High (Shift Solenoid Valve DSL)

DESCRIPTION

The shift solenoid valve DSL is turned ON and OFF by signals from the ECM to control the hydraulic pressure acting on the lock-up relay valve, which then controls operation of the lock-up clutch.

DTC No.	DTC Detection Condition	Trouble Area
P2769	ECM detects short in shift solenoid valve DSL circuit when shift solenoid valve DSL is operated (2 trip detection logic)	• Short in shift solenoid valve DSL circuit • Shift solenoid valve DSL • ECM
P2770	ECM detects open in shift solenoid valve DSL circuit when shift solenoid valve DSL is not operated (2 trip detection logic)	• Open in shift solenoid valve DSL circuit • Shift solenoid valve DSL • ECM

Fail-safe function:
If the ECM detects a malfunction, it turns the shift solenoid valve DSL OFF.

MONITOR DESCRIPTION

Torque converter lock-up is controlled by the ECM based on engine rpm, engine load, engine temperature, vehicle speed, transmission temperature, and shift position selection. The ECM determines the lock-up status of the torque converter by comparing the engine rpm (NE) to the input rpm (NT). The ECM calculates the actual transmission gear by comparing the input rpm (NT) to the output rpm (SP2). When conditions are appropriate, the ECM requests "lock-up" by applying control voltage to the shift solenoid valve DSL. When the shift solenoid valve DSL is opened, the shift solenoid valve DSL applies pressure to the lock-up relay valve and locks the torque converter clutch. If the ECM detects an open or short in the shift solenoid valve DSL circuit, the ECM interprets this as a fault in the shift solenoid valve DSL or its circuit. The ECM will illuminate the MIL and store a DTC.

MONITOR STRATEGY

Related DTCs	P2769: Shift solenoid valve DSL/Range check (Low resistance) P2770: Shift solenoid valve DSL/Range check (High resistance)
Requires sensors/Components	Shift solenoid valve DSL
Frequency of operation	Continuous
Duration	0.064 sec.
MIL operation	2 driving cycles
Sequence of operation	None

TYPICAL ENABLING CONDITIONS

P2769: Range check (Low resistance)

The monitor will run whenever this DTC is not present	None
Shift solenoid valve DSL	ON
Solenoid current cut status	Not cut
Battery voltage	8 V or more
Starter	OFF
Ignition switch	ON

P2770: Range check (High resistance)

The monitor will run whenever this DTC is not present	None

Shift solenoid valve DSL	ON
Battery voltage	8 V or more
Starter	OFF
Ignition switch	ON

AX

TYPICAL MALFUNCTION THRESHOLDS

P2769: Range check (Low resistance)

Shift solenoid valve DSL resistance	8 Ω or less

P2770: Range check (High resistance)

Shift solenoid valve DSL resistance	100 kΩ or more

COMPONENT OPERATING RANGE

Shift solenoid valve DSL	Resistance: 11 to 13 Ω at 20°C (68°F)

WIRING DIAGRAM

Refer to DTC P0741 (see page AX-67).

INSPECTION PROCEDURE

1 INSPECT TRANSMISSION WIRE (SHIFT SOLENOID VALVE DSL)

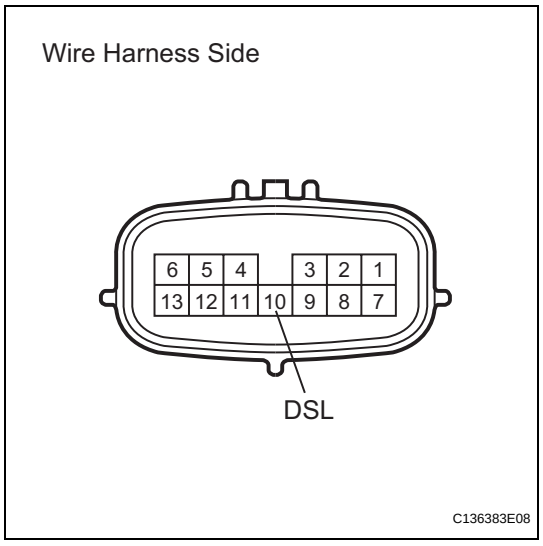

(a) Disconnect the B32 wire connector.
(b) Measure the resistance of the transmission wire.

Standard resistance

Tester Connection	Condition	Specified Condition
10 (DSL) - Body ground	20°C (68°F)	11 to 13 Ω

NG → **Go to step 3**

OK

AX

2	CHECK WIRE HARNESS (TRANSMISSION WIRE - ECM)

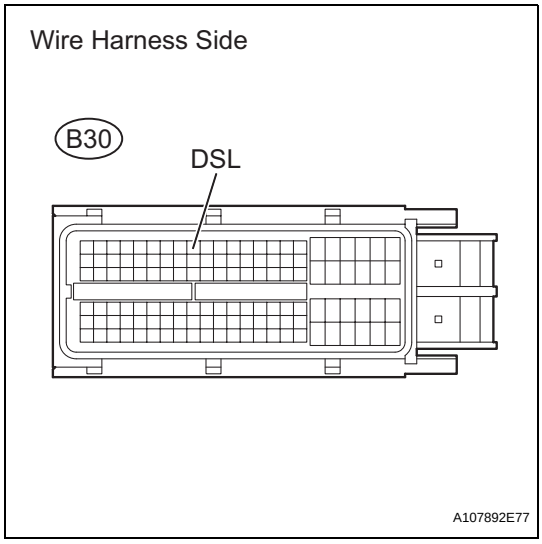

(a) Disconnect the B30 ECM connector.
(b) Measure the resistance of the wire harness side connector.

Standard resistance

Tester Connection	Condition	Specified Condition
B30-9 (DSL) - Body ground	20°C (68°F)	11 to 13 Ω

NG → **REPAIR OR REPLACE HARNESS AND CONNECTOR**

OK

REPLACE ECM

3	INSPECT SHIFT SOLENOID VALVE DSL

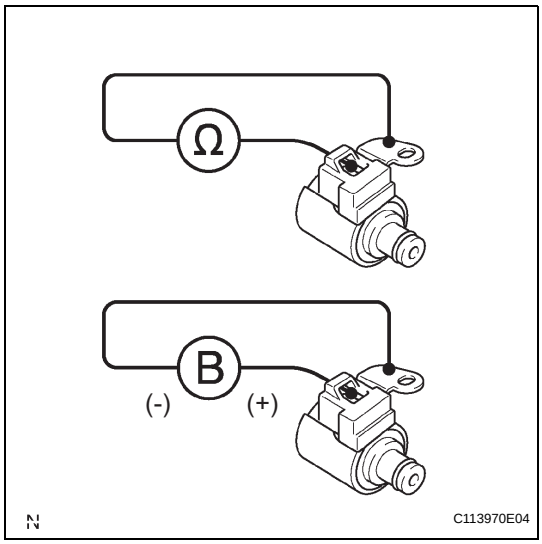

(a) Remove the shift solenoid valve DSL.
(b) Measure the resistance between the solenoid valve terminal and solenoid valve body.

Standard resistance:

11 to 13 Ω at 20°C (68°F)

(c) Connect the battery's positive (+) lead to the terminal of the solenoid valve connector, and the negative (-) lead to the solenoid body. Then check that the valve moves and makes an operating noise.

OK:

Valve moves and makes operating noise.

NG → **REPLACE SHIFT SOLENOID VALVE DSL**

OK

REPAIR OR REPLACE TRANSMISSION WIRE

AUTOMATIC TRANSAXLE SYSTEM

PRECAUTION

NOTICE:

- **Perform the RESET MEMORY procedures (A/T initialization) when replacing the automatic transaxle assembly, engine assembly or ECM (see page AX-20).**
- **Perform the REGISTRATION (VIN registration) when replacing the ECM (see page ES-14).**

HINT:

RESET MEMORY cannot be completed by only reconnecting the cable to the negative (-) battery terminal.

CAUTION:

When using compressed air, always aim away from yourself to prevent Automatic Transmission Fluid (ATF) or kerosene from spraying on your face.

NOTICE:

- **The automatic transaxle is composed of precision-made parts, necessitating careful inspection before reassembly because even a small nick could cause fluid leakage or affect performance.**
- **The procedures are organized so that you work on only one component group at a time. This will help avoid confusion with similar-looking parts of different sub-assemblies being on your workbench at the same time.**
- **The component groups are inspected and repaired from the converter housing side.**
- **Whenever possible, complete the inspection, repair and reassembly before proceeding to the next component group. If a defect is found in a certain component group during reassembly, inspect and repair this group immediately. If a component group cannot be assembled because parts are being ordered, be sure to keep all parts of the group in a separate container while proceeding with disassembly, inspection, repair and reassembly of other component groups.**
- **Use of Toyota Genuine ATF WS is recommended.**
- **All disassembled parts should be washed clean, and compressed air should be blown through any fluid passages and holes.**
- **Dry all parts with compressed air. Never use cloth.**
- **The recommended ATF or kerosene should be used for cleaning.**
- **After cleaning, the parts should be arranged in the order they were removed for efficient inspection, repairs, and reassembly.**
- **When disassembling a valve body, be sure to match each valve with its corresponding spring.**

- **New discs for the brakes and clutches that will be used for replacement must be soaked in ATF for at least 15 minutes before reassembly.**
- **All oil seal rings, clutch discs, clutch plates, rotating parts, and sliding surfaces should be coated with ATF prior to reassembly.**
- **All old gaskets and rubber O-rings must be replaced.**
- **Do not apply adhesive cement to gaskets and similar parts.**
- **Make sure that the ends of the snap rings are not aligned with any cutouts. Also make sure that snap rings are correctly installed into the grooves.**
- **If a worn bushing is to be replaced, the sub-assembly containing the bushing must also be replaced.**
- **Check the thrust bearings and races for wear or damage. Replace them if necessary.**
- **Use petroleum jelly to keep parts in place.**
- **When working with FIPG material, perform the following:**
  Using a razor blade and gasket scraper, remove all old FIPG material from the gasket surface.
  Clean all components thoroughly to remove all foreign matter.
  Clean both sealing surfaces with a non-residue solvent.
  Apply FIPG material in a continuous line approximately 1 mm (0.04 in.) in diameter on the sealing surface.
  Reassemble parts within 10 minutes of applying FIPG material. Failing to do so will require the FIPG material to be removed and reapplied.

AX

DISASSEMBLY

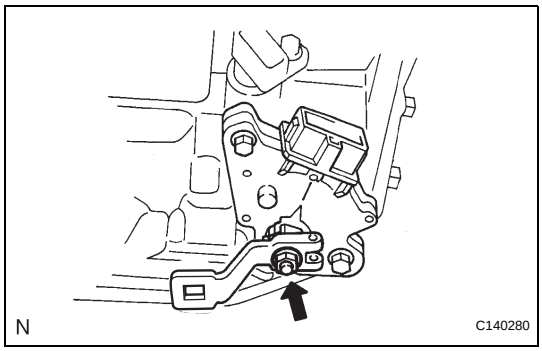

1. REMOVE PARK/NEUTRAL POSITION SWITCH ASSEMBLY

(a) Remove the nut, washer and control shaft lever.

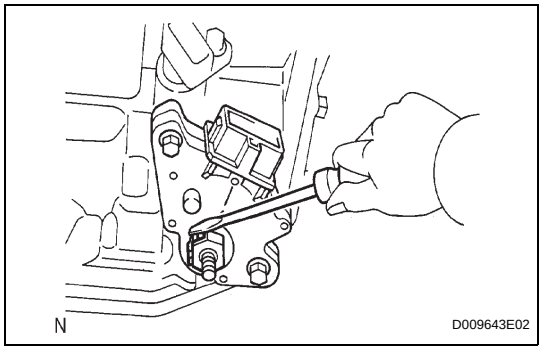

(b) Using a screwdriver, pry off the lock plate.
(c) Remove the nut and lock plate.

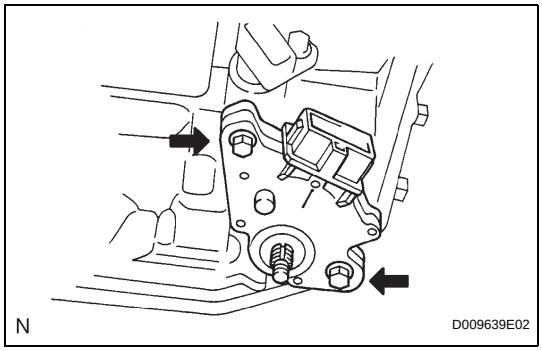

(d) Remove the 2 bolts and pull out the switch.

2. REMOVE BREATHER PLUG HOSE

(a) Remove the breather plug hose from the transaxle case.

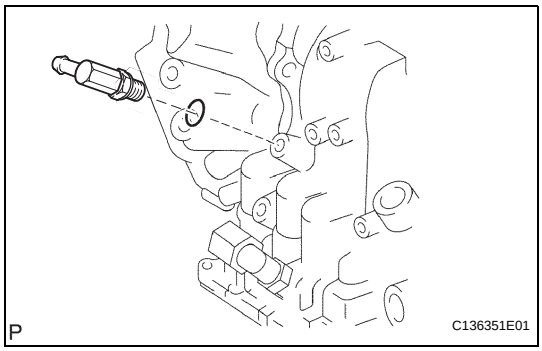

3. REMOVE OIL COOLER OUTLET TUBE ELBOW

(a) Remove the elbow.
(b) Remove the O-ring from the elbow.

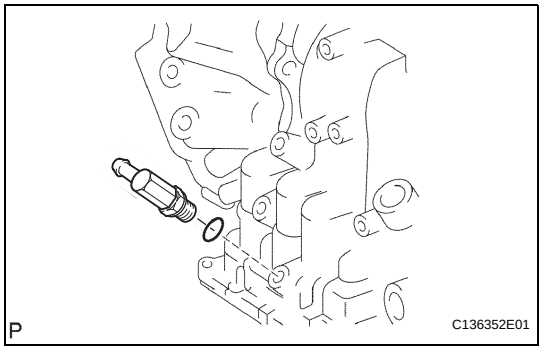

4. REMOVE OIL COOLER INLET TUBE ELBOW

(a) Remove the elbow.
(b) Remove the O-ring from the elbow.

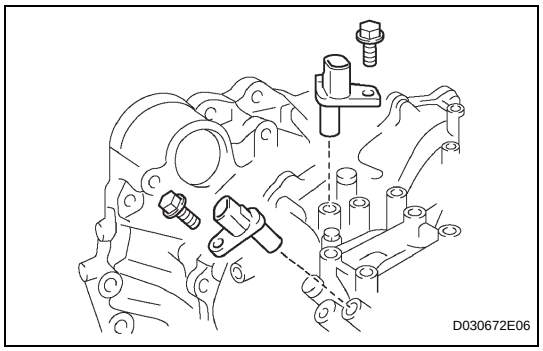

5. REMOVE SPEED SENSOR

(a) Remove the 2 bolts and the 2 speed sensors from the transaxle.

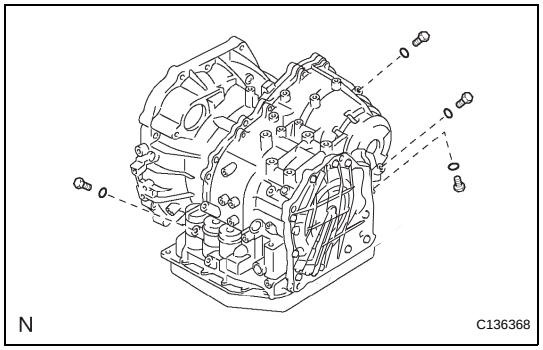

6. REMOVE NO. 1 TRANSAXLE CASE PLUG

(a) Remove the 4 plugs from the transaxle case.

(b) Remove the 4 O-rings from the 4 plugs.

7. REMOVE SPEEDOMETER DRIVEN HOLE COVER SUB-ASSEMBLY

(a) Remove the bolt and cover.

(b) Remove the O-ring from the cover.

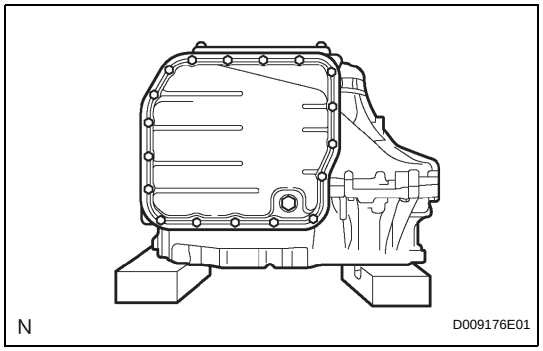

8. FIX AUTOMATIC TRANSAXLE ASSEMBLY

(a) Fix the transaxle.

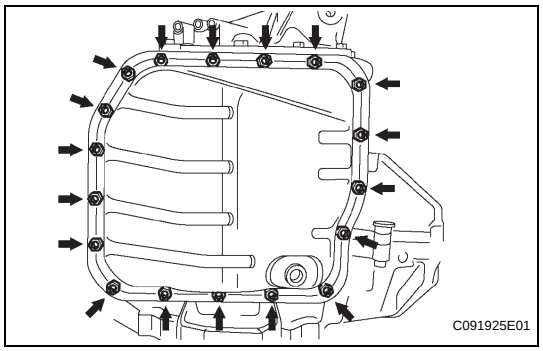

9. REMOVE AUTOMATIC TRANSAXLE OIL PAN SUB-ASSEMBLY

(a) Remove the 18 bolts, oil pan and gasket.

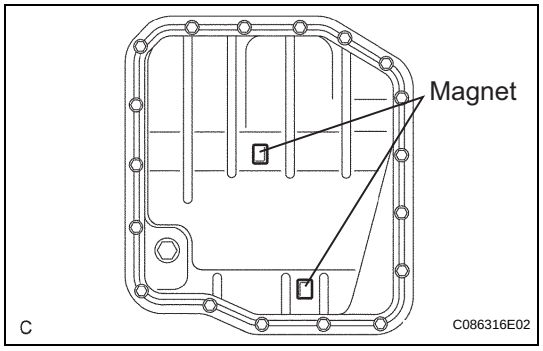

(b) Remove the 2 magnets from the oil pan.

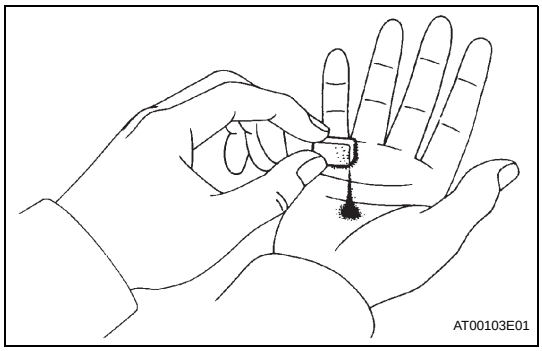

10. INSPECT TRANSMISSION OIL CLEANER MAGNET

(a) Remove the magnets and use them to collect any steel chips. Examine the chips and particles in the pan and on the magnet to determine what type of wear has occurred in the transaxle.

Result:

Steel (magnetic):

Wear of the bearing, gear and plate

Brass (non-magnetic):

Wear of the bush

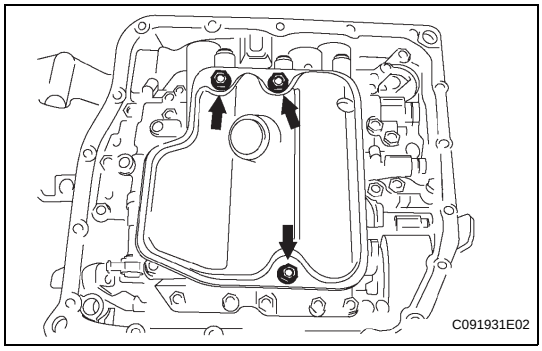

11. REMOVE VALVE BODY OIL STRAINER ASSEMBLY

(a) Remove the 3 bolts and oil strainer.

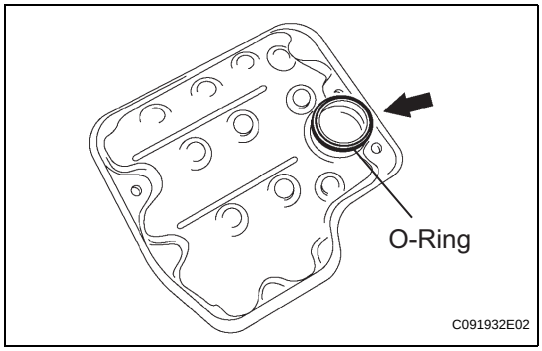

(b) Remove the O-ring from the oil strainer.

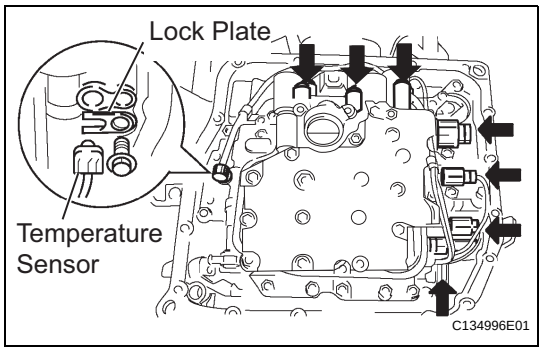

12. REMOVE TRANSMISSION WIRE

(a) Remove the 7 connectors from the shift solenoid valves.

(b) Remove the bolt, lock plate and temperature sensor.

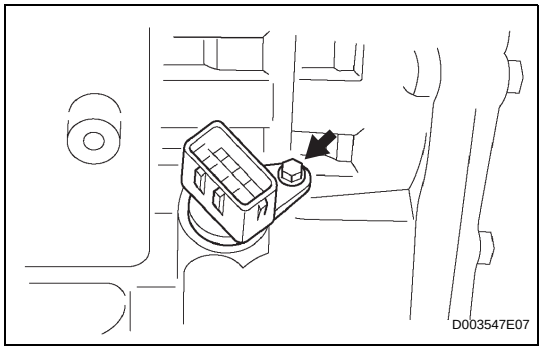

(c) Remove the bolt and transmission wire from the transaxle case.

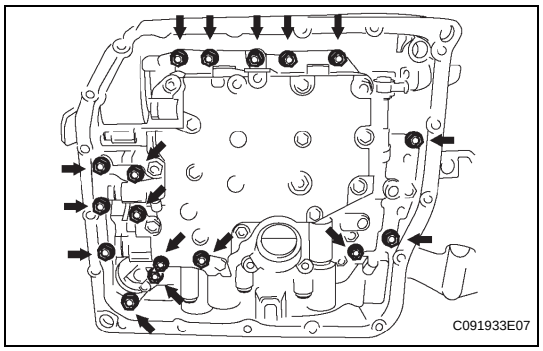

13. REMOVE TRANSMISSION VALVE BODY ASSEMBLY

(a) Support the valve body and remove the 17 bolts and valve body.

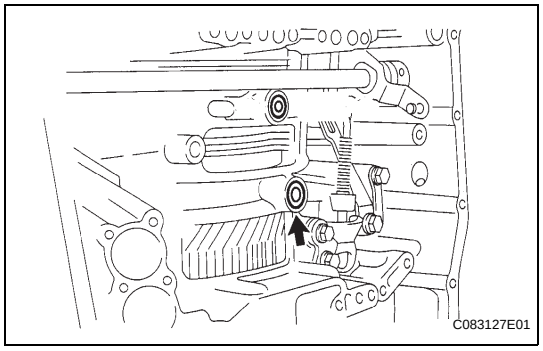

14. REMOVE NO. 1 GOVERNOR APPLY GASKET

(a) Remove the gasket from the transaxle case.

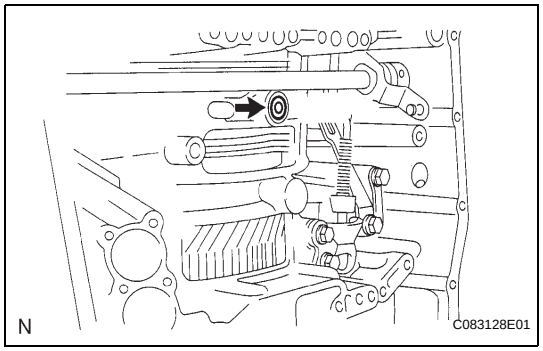

15. REMOVE TRANSAXLE CASE 2ND BRAKE GASKET

(a) Remove the gasket from the transaxle case.

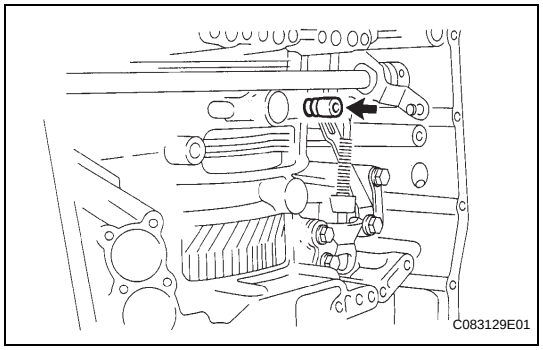

16. REMOVE BRAKE DRUM GASKET

(a) Remove the gasket from the transaxle case.

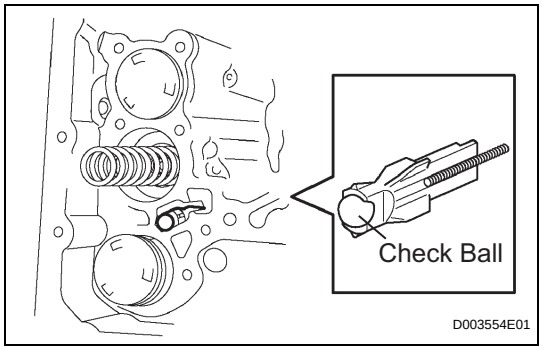

17. REMOVE CHECK BALL BODY

(a) Remove the check ball body and spring from the transaxle case.

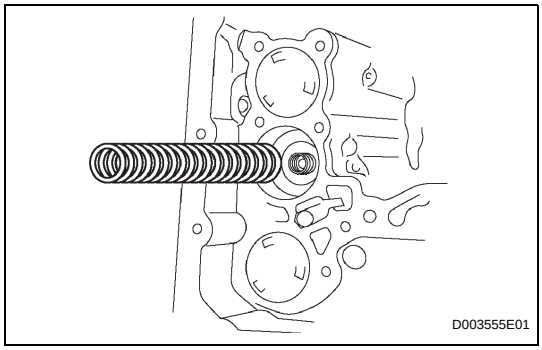

18. REMOVE C-3 ACCUMULATOR PISTON

(a) Remove the spring from the C-3 accumulator piston.

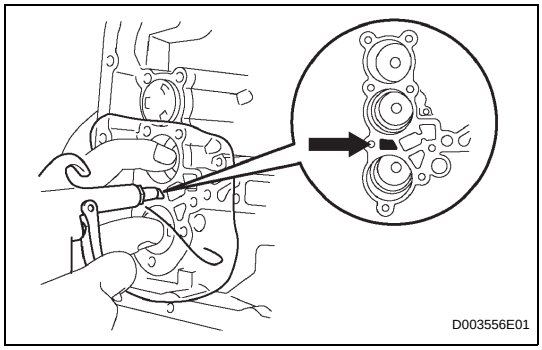

(b) Apply compressed air (392 kPa, 4.0 kgf/cm^2, 57 psi) to the oil hole and remove the C-3 accumulator piston.

NOTICE:

- **Applying compressed air may cause the piston to jump out. When removing the piston, hold it using a waste cloth.**
- **Take care not to splash ATF when applying compressed air.**

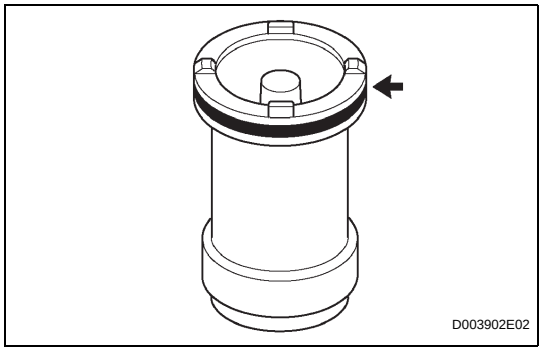

(c) Remove the O-ring from the C-3 accumulator piston.

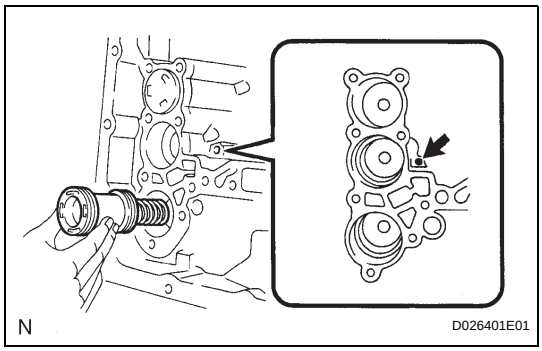

19. REMOVE REVERSE CLUTCH ACCUMULATOR PISTON

(a) Apply compressed air (392 kPa, 4.0 kgf/cm^2, 57 psi) to the oil hole and remove the reverse accumulator piston and spring.

NOTICE:

- **Applying compressed air may cause the piston to jump out. When removing the piston, hold it using a waste cloth.**
- **Take care not to splash ATF when applying compressed air.**

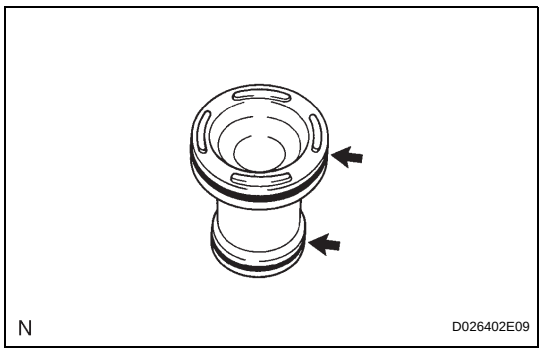

(b) Remove the 2 O-rings from the reverse clutch accumulator piston.

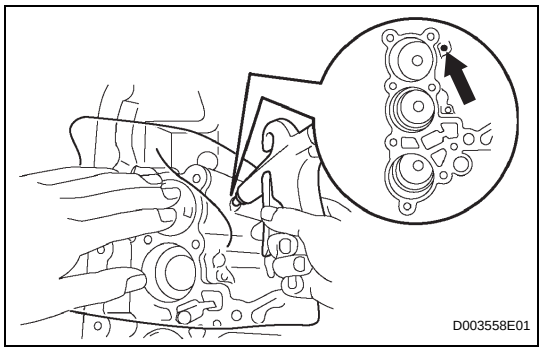

20. REMOVE B-3 ACCUMULATOR PISTON

(a) Apply compressed air (392 kPa, 4.0 kgf/cm^2, 57 psi) to the oil hole and remove the B-3 accumulator piston and 2 springs.

NOTICE:

- **Applying compressed air may cause the piston to jump out. When removing the piston, hold it using a waste cloth.**
- **Take care not to splash ATF when applying compressed air.**

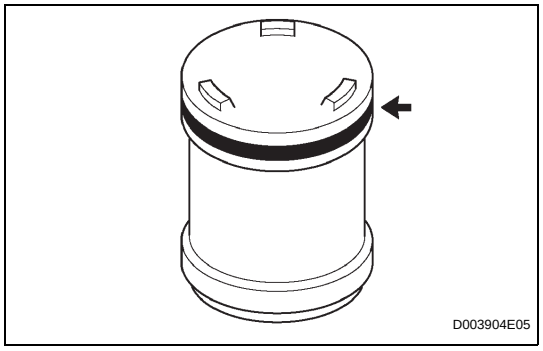

(b) Remove the O-ring from the B-3 accumulator piston.

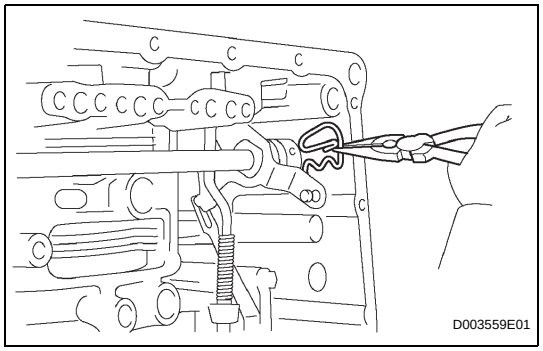

21. REMOVE MANUAL VALVE LEVER SHAFT RETAINER SPRING

(a) Using needle-nose pliers, remove the manual valve lever shaft retainer spring.

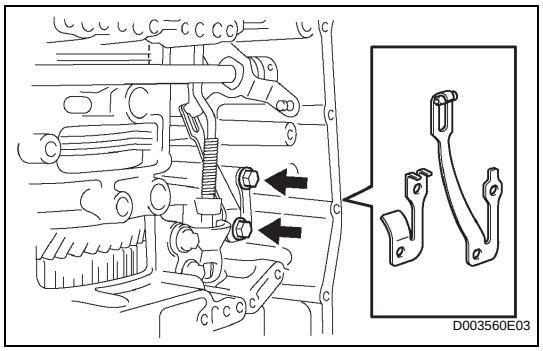

22. REMOVE MANUAL DETENT SPRING SUB-ASSEMBLY

(a) Remove the 2 bolts, manual detent spring and cover.

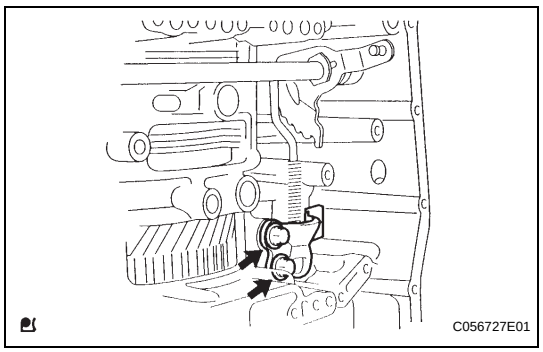

23. REMOVE PARKING LOCK PAWL BRACKET

(a) Remove the 2 bolts and parking lock pawl bracket.

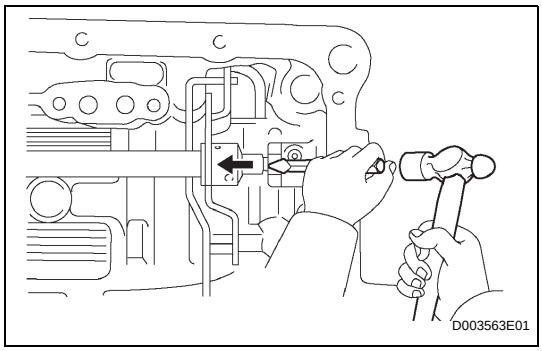

24. REMOVE MANUAL VALVE LEVER SUB-ASSEMBLY

(a) Using a chisel and hammer, cut off and remove the spacer.

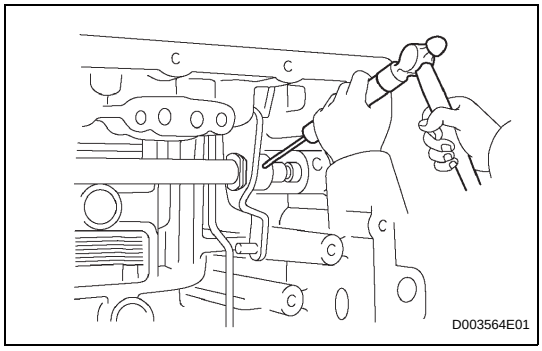

(b) Using a pin punch (ϕ35 mm) and hammer, drive out the pin.
HINT:
Slowly drive out the pin so that it does not fall into the transaxle case.

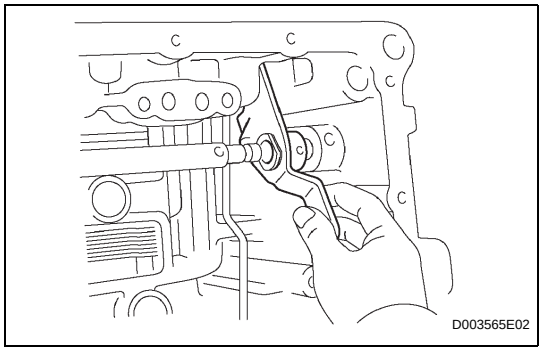

(c) Remove the manual valve lever shaft and manual valve lever.

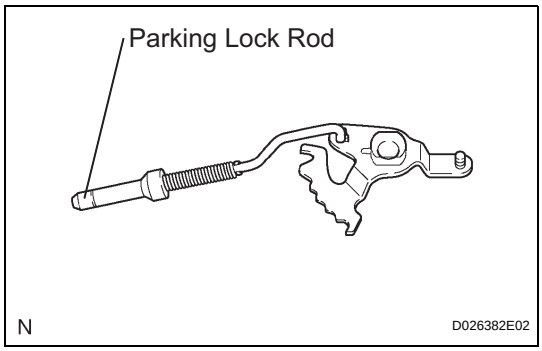

25. REMOVE PARKING LOCK ROD SUB-ASSEMBLY

(a) Remove the parking lock rod from the manual valve lever.

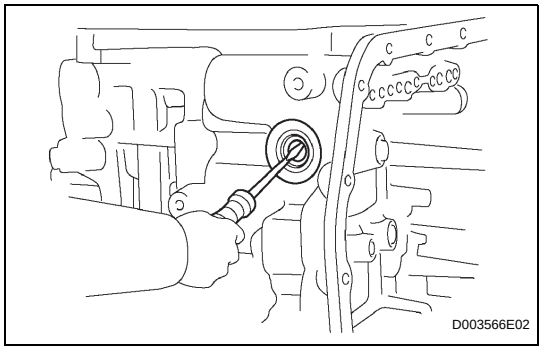

26. REMOVE MANUAL VALVE LEVER SHAFT OIL SEAL

(a) Using a screwdriver, pry out the oil seal from the transaxle case.
NOTICE:
Do not apply excessive force when removing the oil seal.

27. FIX AUTOMATIC TRANSAXLE ASSEMBLY

(a) Fix the transaxle case in place with the oil pump side facing up.

28. INSPECT INPUT SHAFT ENDPLAY (See page AX-213)

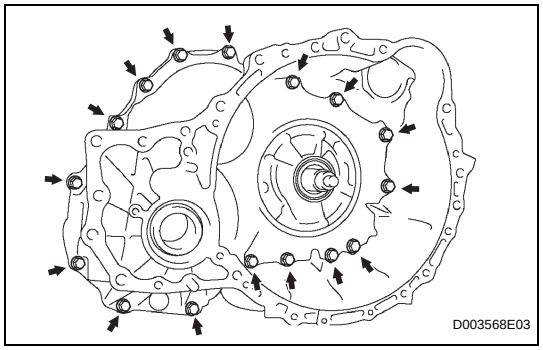

29. REMOVE TRANSAXLE HOUSING

(a) Remove the 16 bolts.

(b) Tap on the circumference of the transaxle housing with a plastic-faced hammer to remove the transaxle housing from the transaxle case.

NOTICE:

The differential may be accidentally removed when the transaxle housing is removed.

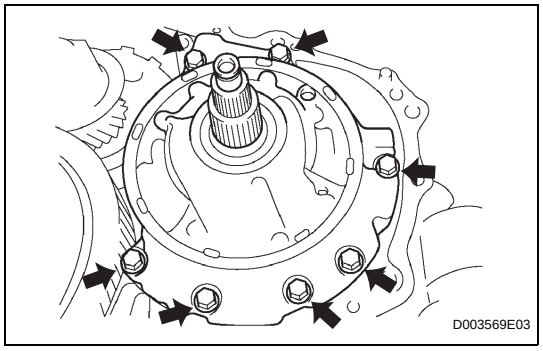

30. REMOVE OIL PUMP ASSEMBLY

(a) Remove the 7 bolts and oil pump from the transaxle case.

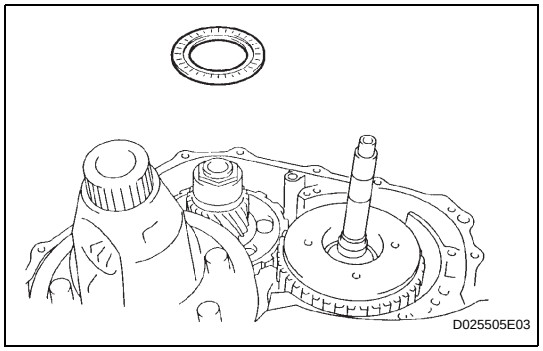

31. REMOVE THRUST NEEDLE ROLLER BEARING

(a) Remove the thrust needle roller bearing from the underdrive planetary gear.

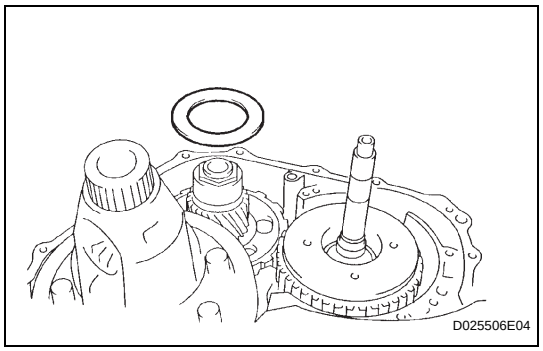

32. REMOVE NO. 2 THRUST BEARING UNDERDRIVE RACE

(a) Remove the thrust bearing race from the underdrive planetary gear.

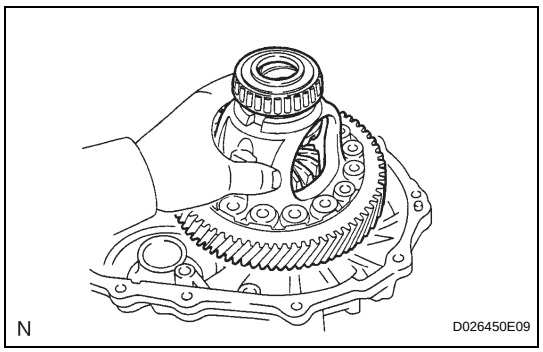

33. REMOVE DIFFERENTIAL GEAR ASSEMBLY

(a) Remove the differential gear from the transaxle case.

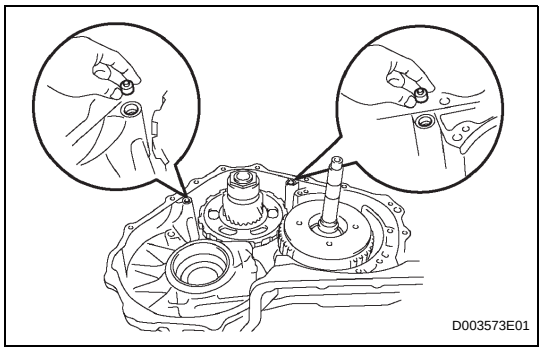

34. REMOVE OVERDRIVE BRAKE GASKET

(a) Remove the 2 overdrive brake gaskets from the transaxle case.

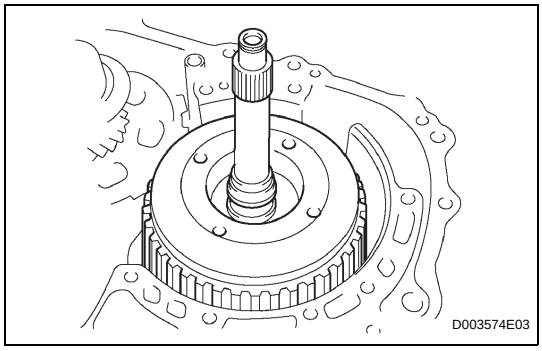

35. REMOVE FORWARD CLUTCH ASSEMBLY

(a) Remove the forward clutch from the transaxle case.

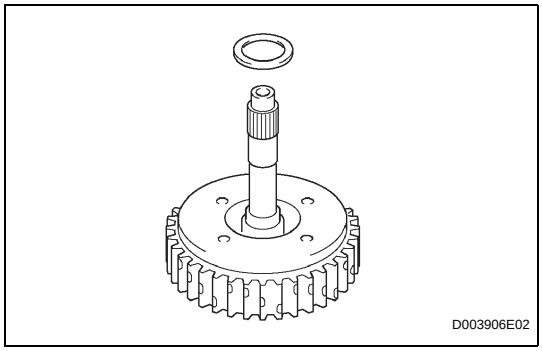

(b) Remove the thrust needle roller bearing from the forward clutch.

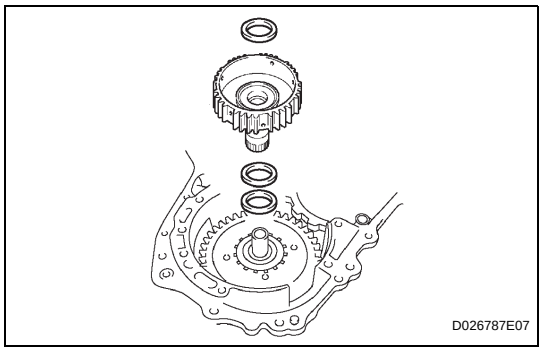

36. REMOVE MULTIPLE DISC CLUTCH HUB

(a) Remove the thrust needle roller bearing, multiple disc clutch hub, thrust needle roller bearing and No. 1 thrust bearing race from the transaxle case.

37. INSPECT MULTIPLE DISC CLUTCH HUB (See page AX-210)

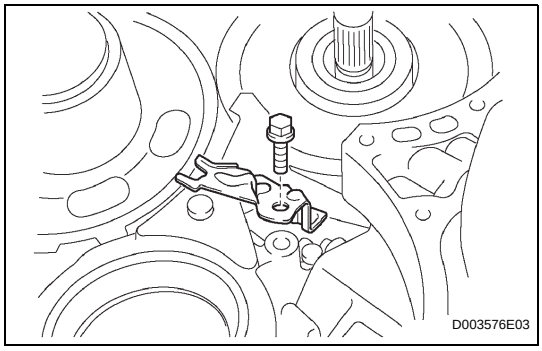

38. REMOVE UNDERDRIVE PLANETARY GEAR ASSEMBLY

(a) Remove the bolt and pawl shaft clamp.

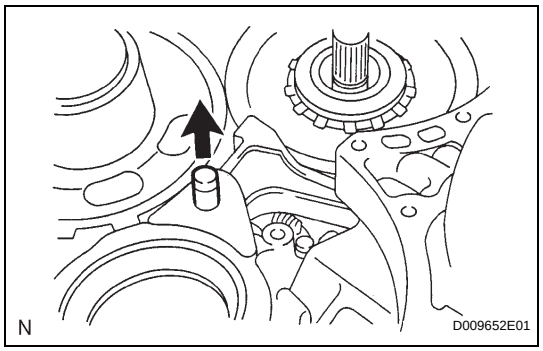

(b) Remove the parking lock pawl shaft.

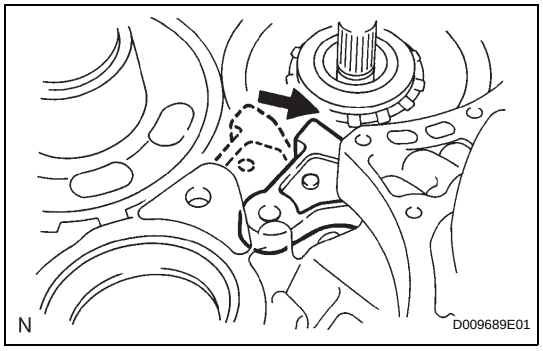

(c) Push the parking lock pawl.
HINT:
Failure to do so will cause interference when the underdrive planetary gear is removed.

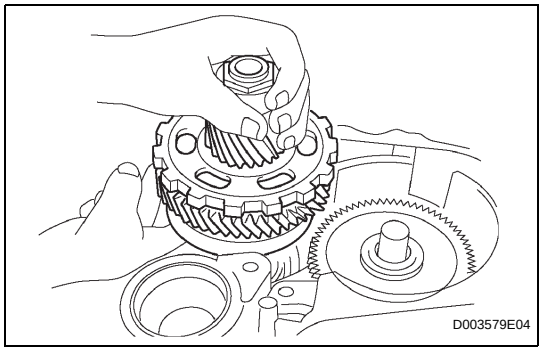

(d) Remove the underdrive planetary gear from the transaxle case.
NOTICE:
Make sure that the underdrive planetary gear does not fall out.

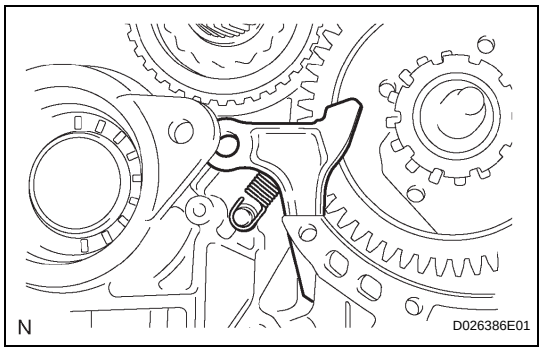

39. REMOVE PARKING LOCK PAWL

(a) Remove the spring, pawl pin and parking lock pawl.

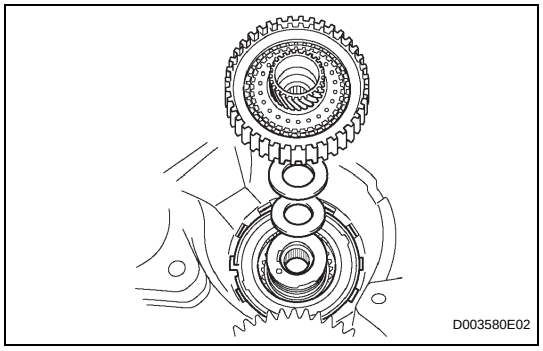

40. REMOVE UNDERDRIVE CLUTCH ASSEMBLY

(a) Remove the underdrive clutch, thrust bearing and bearing race from the transaxle case.

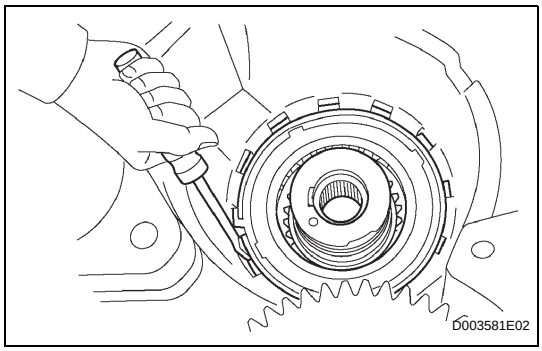

41. REMOVE UNDERDRIVE 1-WAY CLUTCH ASSEMBLY

(a) Using a screwdriver, remove the snap ring from the transaxle case.

NOTICE:
Do not apply excessive force when removing the snap ring.

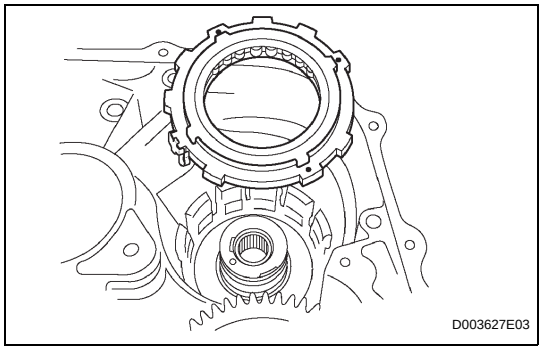

(b) Remove the underdrive 1-way clutch from the transaxle case.

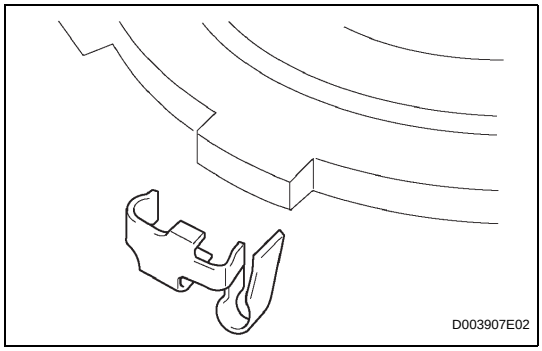

(c) Remove the outer race retainer from the 1-way clutch.

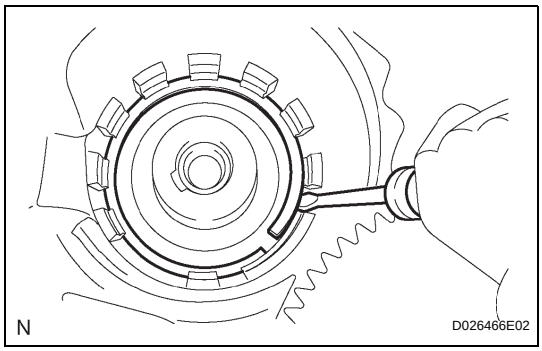

42. REMOVE NO. 2 UNDERDRIVE CLUTCH DISC

(a) Using a screwdriver, remove the snap ring.

NOTICE:
Do not apply excessive force when removing the snap ring.

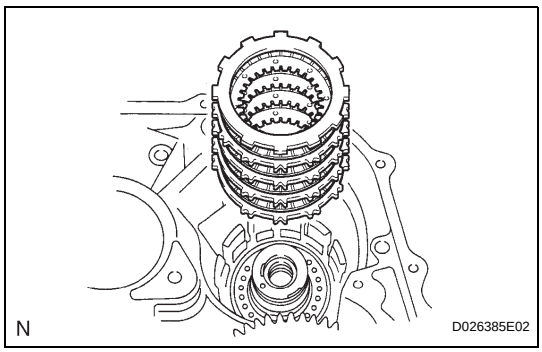

(b) Remove the flange, 4 discs and 4 plates from the transaxle case.

43. INSPECT NO. 2 UNDERDRIVE CLUTCH DISC (See page AX-210)

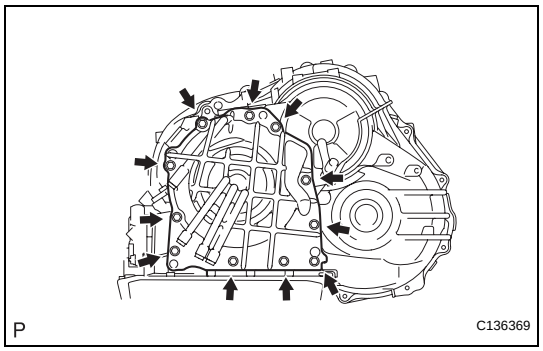

44. REMOVE TRANSAXLE REAR COVER SUB-ASSEMBLY

(a) Remove the 11 bolts.

(b) Tap on the circumference of the rear cover with a plastic hammer to remove the transaxle rear cover from the transaxle case.

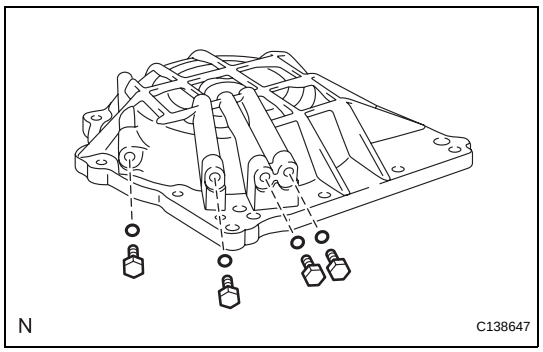

45. REMOVE NO. 1 TRANSAXLE CASE PLUG

(a) Remove the 4 plugs from the transaxle rear cover.

(b) Remove the 4 O-rings from the 4 plugs.

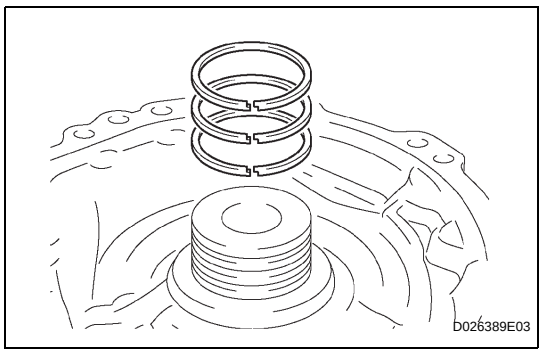

46. REMOVE REAR CLUTCH OIL SEAL RING OUTER

(a) Remove the 3 rear clutch oil seal rings from the transaxle rear cover.

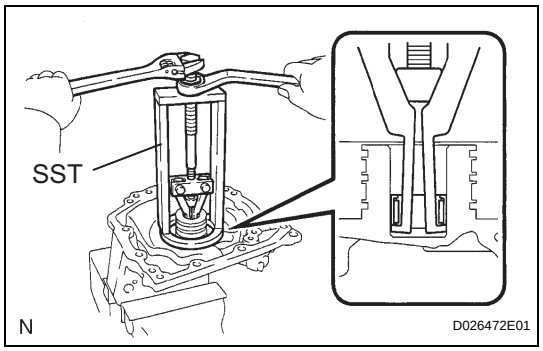

47. REMOVE NEEDLE ROLLER BEARING

(a) Using SST, remove the bearing from the transaxle rear cover.

SST 09387-00041 (09387-01021, 09387-01030, 09387-01040)

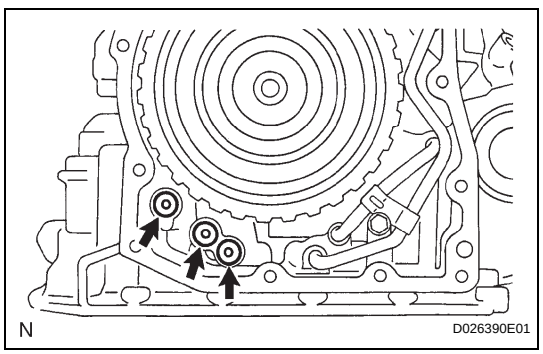

48. REMOVE NO. 1 GOVERNOR APPLY GASKET

(a) Using a screwdriver, remove the 3 apply gaskets.

AX

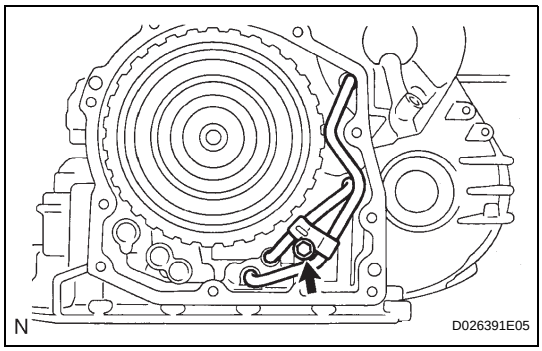

49. REMOVE BRAKE APPLY TUBE

(a) Remove the bolt, clamp and brake apply tube.
(b) Remove the clutch apply tube.
(c) Remove the brake apply tube from the clamp.

NOTICE:
Do not bend the tubes.

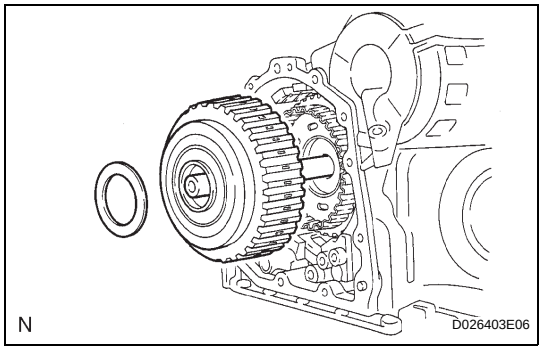

50. REMOVE DIRECT CLUTCH ASSEMBLY

(a) Remove the thrust bearing and the direct clutch from the transaxle case.

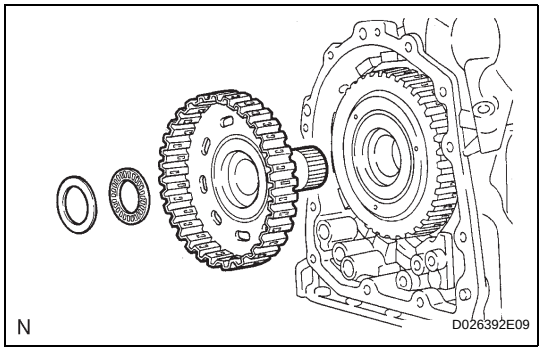

51. REMOVE OVERDRIVE DIRECT CLUTCH HUB SUB-ASSEMBLY

(a) Remove the thrust bearing race, thrust bearing and overdrive direct clutch hub from the planetary gear.

52. INSPECT OVERDRIVE DIRECT CLUTCH DRUM SUB-ASSEMBLY (See page AX-210)

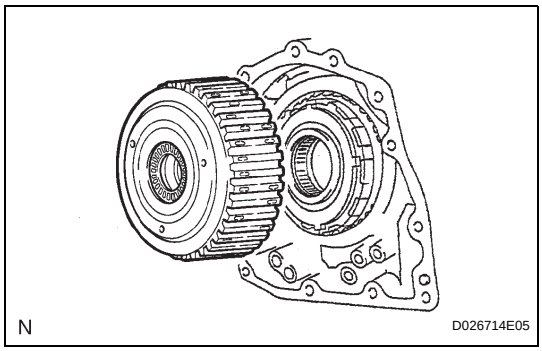

53. REMOVE REAR PLANETARY SUN GEAR ASSEMBLY

(a) Remove the rear planetary sun gear from the transaxle case.

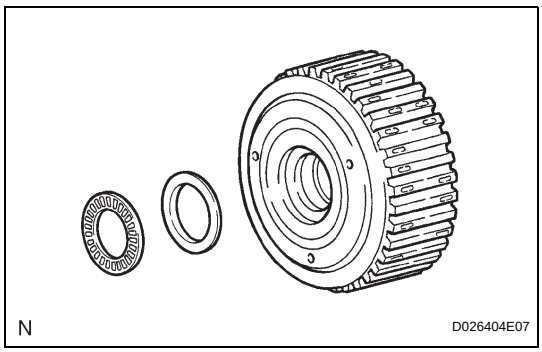

(b) Remove the thrust needle roller bearing and thrust bearing race from the rear planetary sun gear.

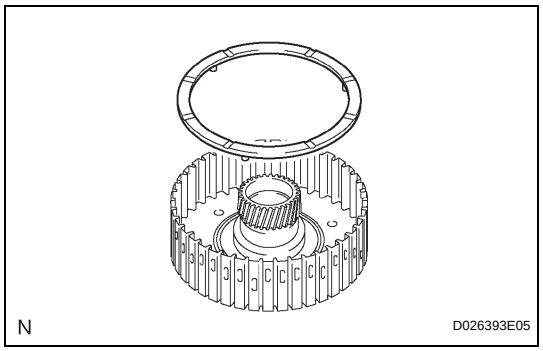

(c) Remove the planetary carrier thrust washer from the rear planetary sun gear.

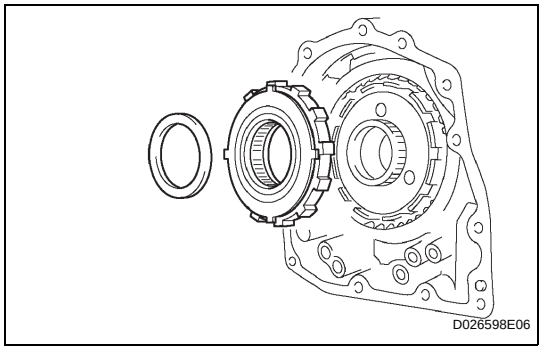

54. REMOVE 1-WAY CLUTCH ASSEMBLY

(a) Remove the 1-way clutch and thrust needle roller bearing from the transaxle case.

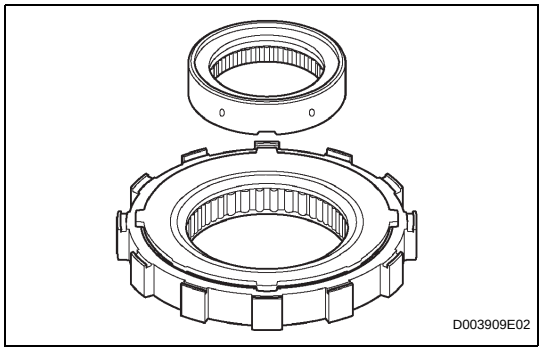

(b) Remove the 1-way clutch inner race from the 1-way clutch.

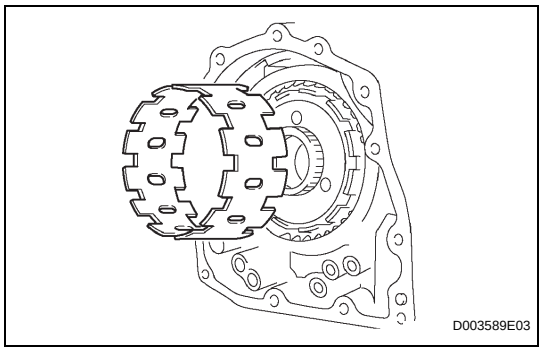

55. REMOVE 1-WAY CLUTCH SLEEVE OUTER

(a) Remove the 1-way clutch sleeve outer from the transaxle case.

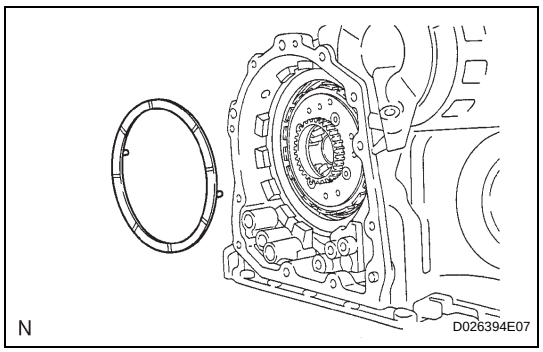

56. REMOVE NO. 1 PLANETARY CARRIER THRUST WASHER

(a) Remove the planetary carrier thrust washer from the planetary gear.

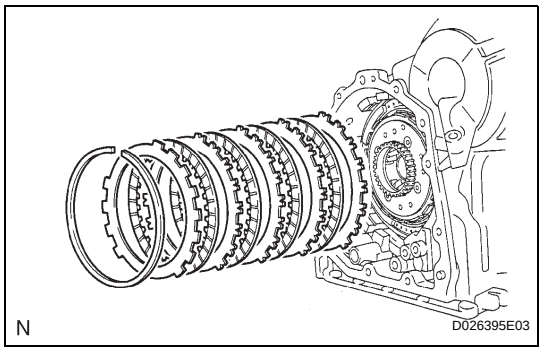

57. REMOVE 2ND BRAKE CLUTCH DISC

(a) Using a screwdriver, remove the snap ring.

(b) Remove the flange, 4 discs and 4 plates from the transaxle case.

58. INSPECT 2ND BRAKE CLUTCH DISC (See page AX-211)

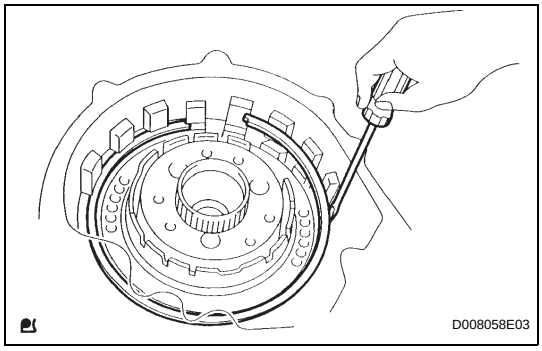

59. REMOVE 2ND BRAKE PISTON ASSEMBLY

(a) Using a screwdriver, remove the snap ring.

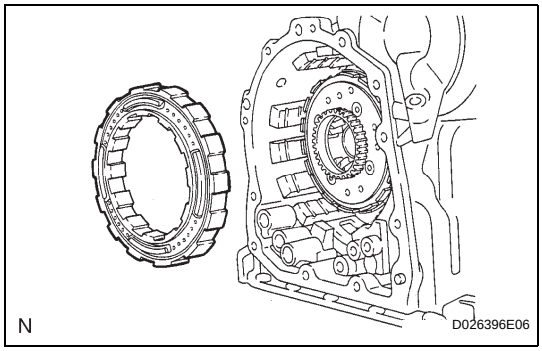

(b) Remove the 2nd brake piston from the transaxle case.

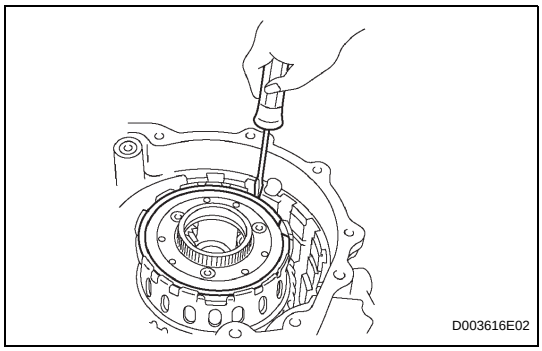

60. REMOVE REAR PLANETARY GEAR ASSEMBLY

(a) Using a screwdriver, remove the snap ring.

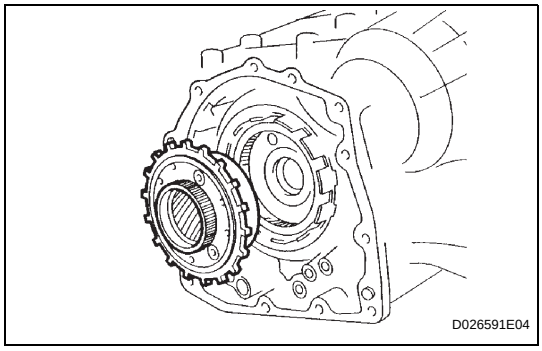

(b) Remove the rear planetary gear from the transaxle case.

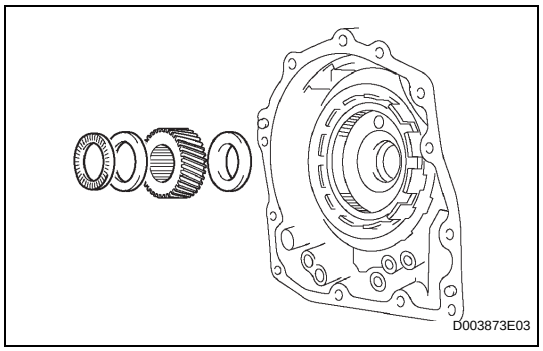

61. REMOVE INPUT SUN GEAR

(a) Remove the 2 thrust needle roller bearings, thrust bearing race and the input sun gear from the transaxle case.

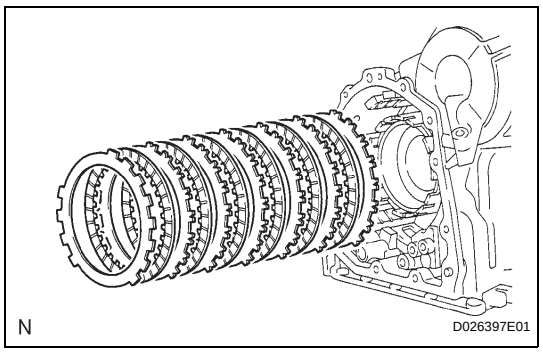

62. REMOVE 1ST AND REVERSE BRAKE CLUTCH DISC

(a) Remove the flange, 6 discs and 6 plates from the transaxle case.

63. INSPECT 1ST AND REVERSE BRAKE CLUTCH DISC (See page AX-211)

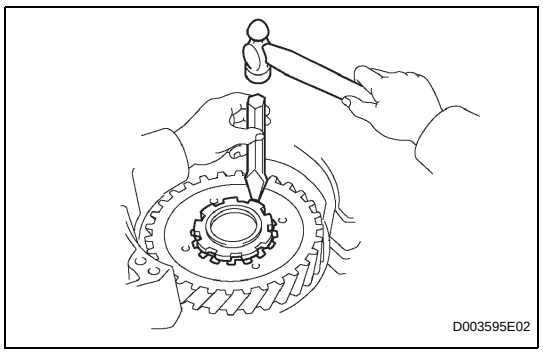

64. REMOVE FRONT PLANETARY GEAR ASSEMBLY

(a) Using a chisel and hammer, unstake the lock washer.

NOTICE:
Push down all the claws of the washer. Otherwise SST cannot be fully pressed against the nut, and cannot loosen the nut.

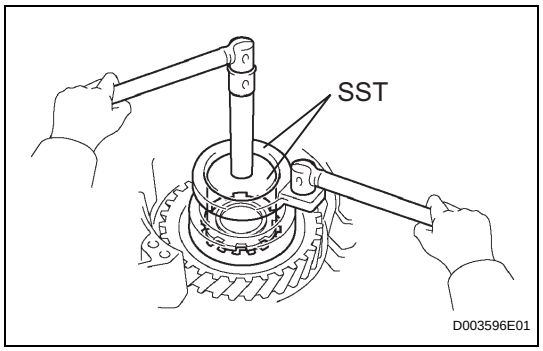

(b) Using SST, remove the nut.
SST 09387-00030, 09387-00080

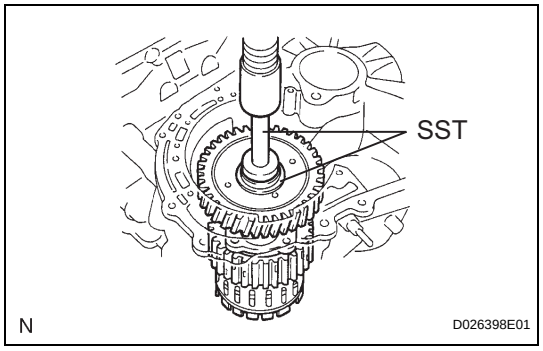

(c) Using SST and a press, press out the front planetary gear from the counter drive gear.
SST 09950-60010 (09951-00450), 09950-70010 (09951-07100)

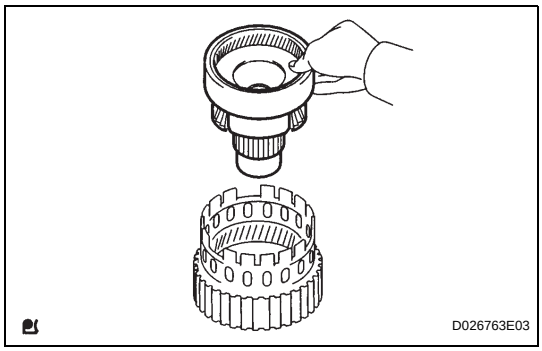

(d) Remove the front planetary gear from the brake hub.

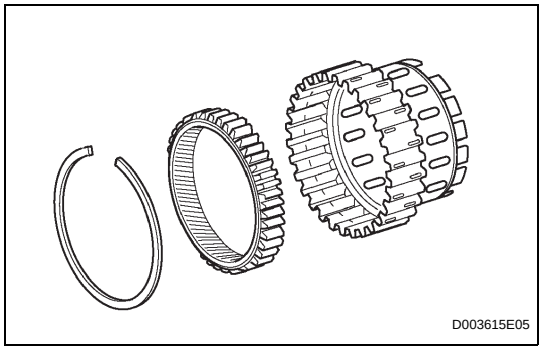

65. REMOVE FRONT PLANETARY RING GEAR

(a) Using a screwdriver, remove the snap ring and front planetary ring gear from the brake hub.

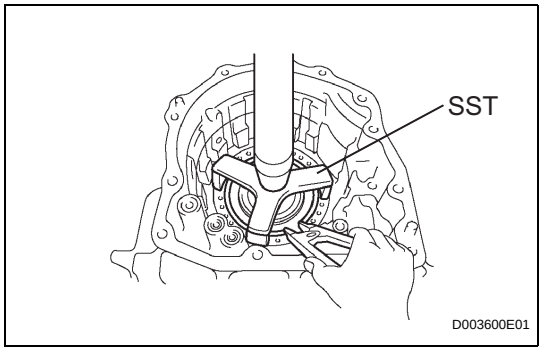

66. REMOVE 1ST AND REVERSE BRAKE RETURN SPRING SUB-ASSEMBLY

(a) Place SST on the return spring, and compress the return spring with a press.

NOTICE:

Stop the press when the spring seat is lowered 1 to 2 mm (0.039 to 0.078 in.) from the snap ring groove, to prevent the spring seat from being deformed.

SST 09387-00070

(b) Using a snap ring expander, remove the snap ring.

NOTICE:

Do not expand the snap ring excessively.

67. INSPECT 1ST AND REVERSE BRAKE RETURN SPRING SUB-ASSEMBLY (See page AX-211)

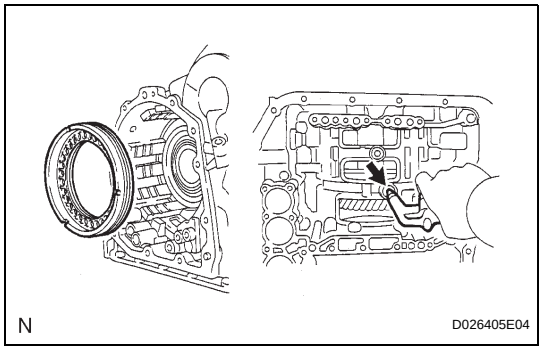

68. REMOVE 1ST AND REVERSE BRAKE PISTON

(a) Apply compressed air (392 kPa, 4.0 kgf/cm^2, 57 psi) to the transaxle case to remove the 1st and reverse brake piston.

NOTICE:

- **Applying compressed air may cause the piston to jump out. When removing the piston, hold it using a waste cloth.**
- **Take care not to splash ATF when applying compressed air.**

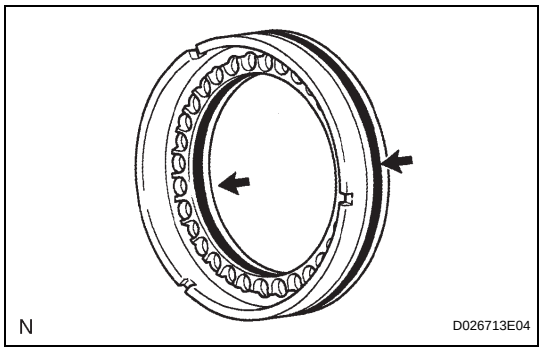

(b) Remove the 2 O-rings from the 1st and reverse brake piston.

69. REMOVE COUNTER DRIVE GEAR

(a) Using SST and a press, remove the counter drive gear from the transaxle case.
SST 09950-60010 (09951-00590), 09950-70010 (09951-07100)

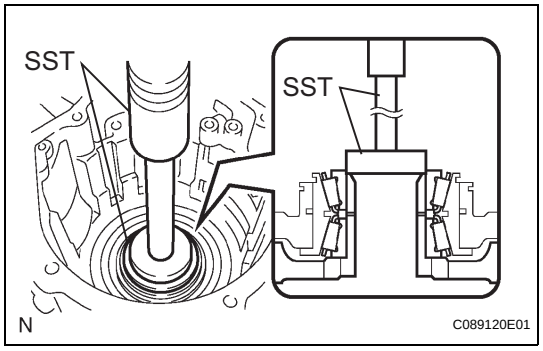

(b) As shown in the illustration, tighten the 2 bolts evenly and make a clearance of approximately. 20.0 mm (0.787 in.) between the counter drive gear and the inner race.

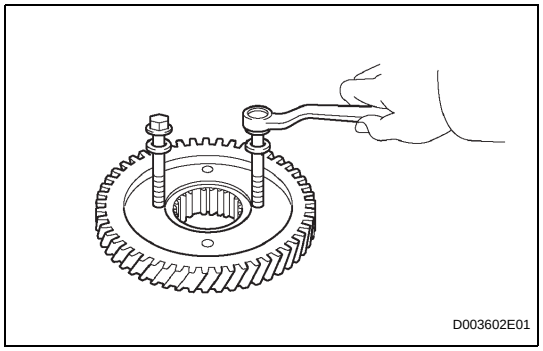

(c) Using SST, remove the tapered roller bearing.
SST 09950-60010 (09951-00590), 09950-00020, 09950-00030, 09950-40011 (09957-04010)

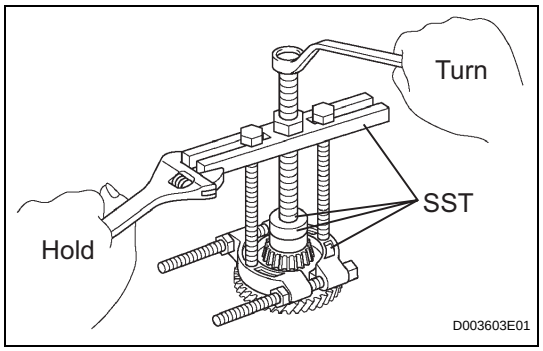

70. REMOVE TRANSFER DRIVEN PINION FRONT BEARING

(a) Using a snap ring expander, remove the snap ring.

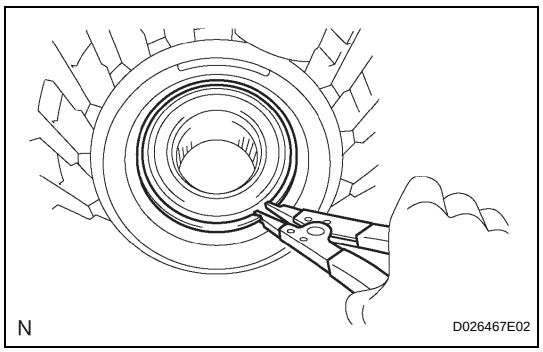

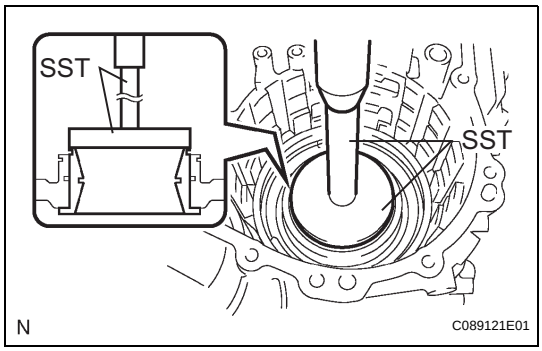

(b) Using SST and a press, press out the bearing outer race.
SST 09950-60020 (09951-00910)

71. REMOVE NO. 2 BREATHER PLUG

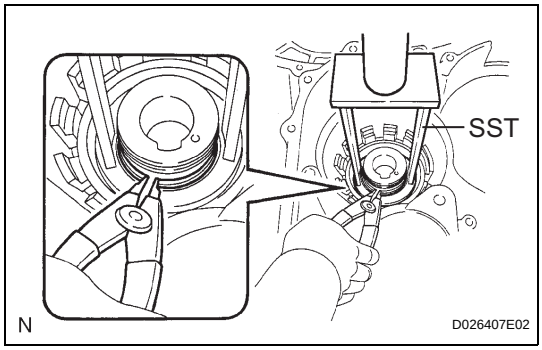

72. REMOVE UNDERDRIVE BRAKE RETURN SPRING SUB-ASSEMBLY

(a) Place SST on the return spring, and compress the return spring with a press.
NOTICE:
Stop the press when the spring seat is lowered 1 to 2 mm (0.039 to 0.078 in.) from the snap ring groove to prevent the spring seat from being deformed.
SST 09387-00020

(b) Using a snap ring expander, remove the snap ring.
NOTICE:
Do not expand the snap ring excessively.

73. INSPECT UNDERDRIVE BRAKE RETURN SPRING SUB-ASSEMBLY (See page AX-211)

74. REMOVE UNDERDRIVE BRAKE PISTON

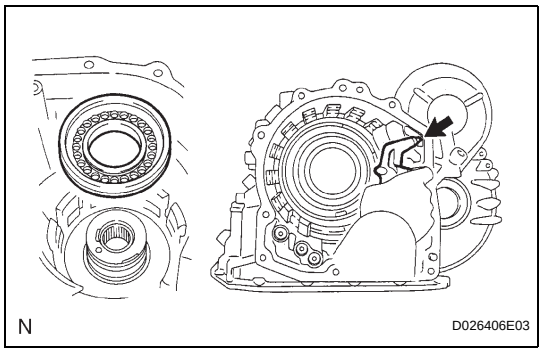

(a) Apply compressed air (392 kPa, 4.0 kgf/cm^2, 57 psi) to the transaxle case to remove the underdrive brake piston.

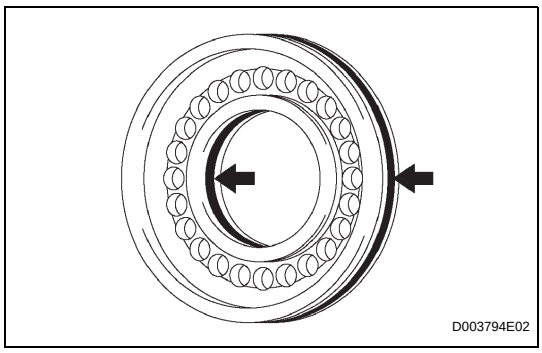

(b) Remove the 2 O-rings from the underdrive brake piston.

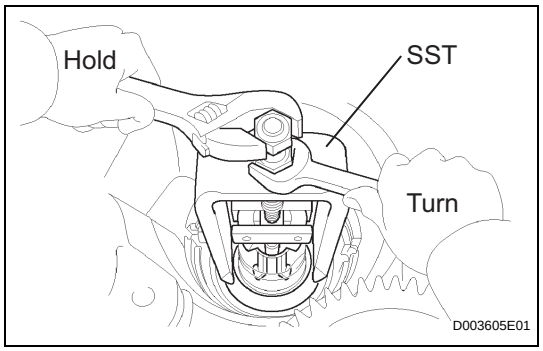

75. REMOVE NEEDLE ROLLER BEARING

(a) Using SST, remove the needle roller bearing from the transaxle case.

SST 09387-00041 (09387-01010, 09387-01030, 09387-01040)

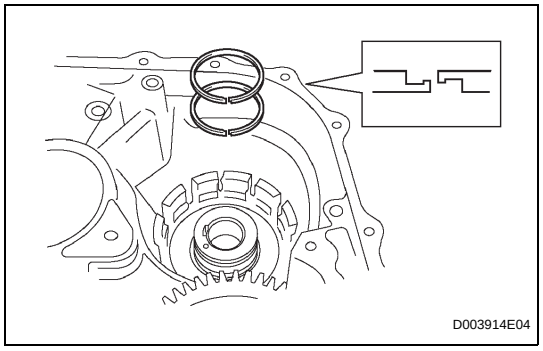

76. REMOVE UNDERDRIVE CLUTCH DRUM OIL SEAL RING

(a) Remove the 2 oil seal rings from the transaxle case.

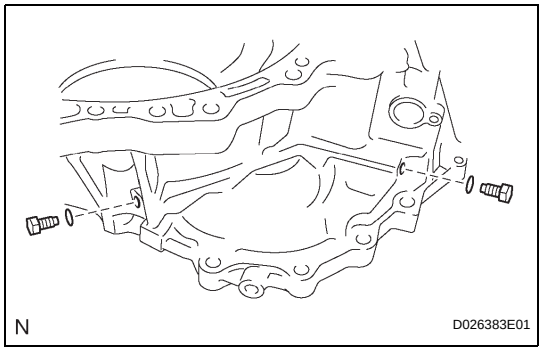

77. REMOVE NO. 1 TRANSAXLE CASE PLUG

(a) Remove the 2 transaxle case plugs.

(b) Remove the 2 O-rings from the 2 plugs.

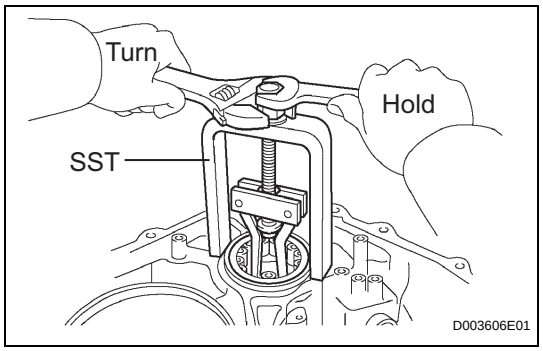

78. REMOVE UNDERDRIVE CYLINDRICAL ROLLER BEARING

(a) Using SST, remove the underdrive cylindrical roller bearing from the transaxle case.

SST 09514-35011

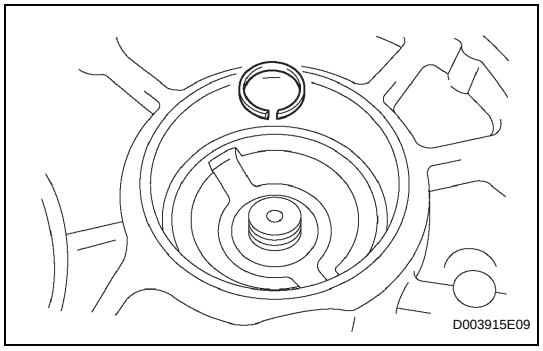

79. REMOVE UNDERDRIVE OUTPUT SHAFT OIL SEAL RING

(a) Remove the oil seal ring from the transaxle housing.

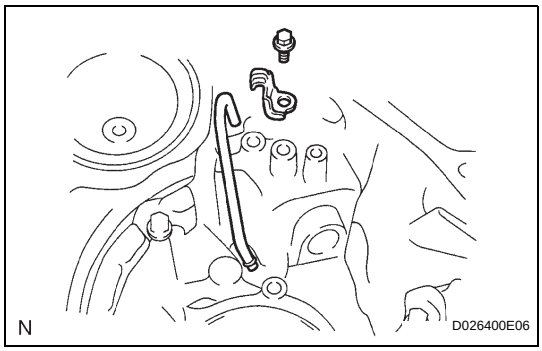

80. REMOVE DIFFERENTIAL GEAR LUBE APPLY TUBE

(a) Remove the bolt, transaxle apply tube clamp and differential gear lube apply tube from the transaxle housing.

NOTICE:

Do not bend the tubes.

INSPECTION

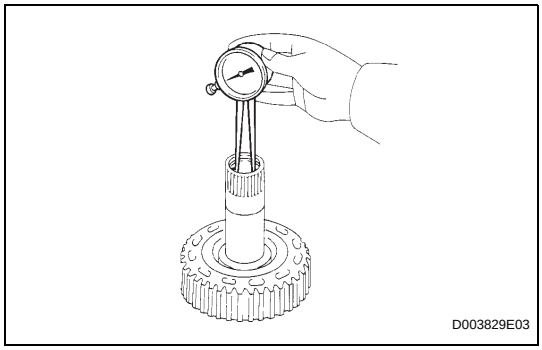

1. INSPECT MULTIPLE DISC CLUTCH HUB

(a) Using a caliper gauge, measure the inside diameter of the forward clutch hub bushing.

Standard inside diameter:

23.03 to 23.05 mm (0.9067 to 0.9075 in.)

Maximum inside diameter:

23.09 mm (0.9091 in.)

NOTICE:

Check the contact surface of the bushing in the direct clutch shaft. If any scratch or discoloration is found, replace the direct clutch sub-assembly with a new one.

If the inside diameter is greater than the maximum, replace the forward clutch hub with a new one.

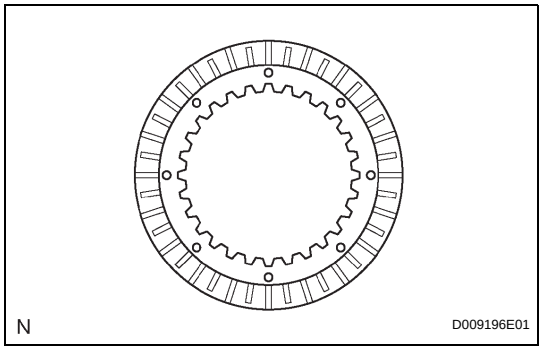

2. INSPECT NO. 2 UNDERDRIVE CLUTCH DISC

(a) Check if the sliding surfaces of the disc, plate and flange are worn or burnt.

If necessary, replace them.

NOTICE:

- **If the lining of the disc comes off or is discolored, or if a part of the groove is worn, replace the all discs.**
- **Before installing new discs, immerse them in ATF for at least 15 minutes.**

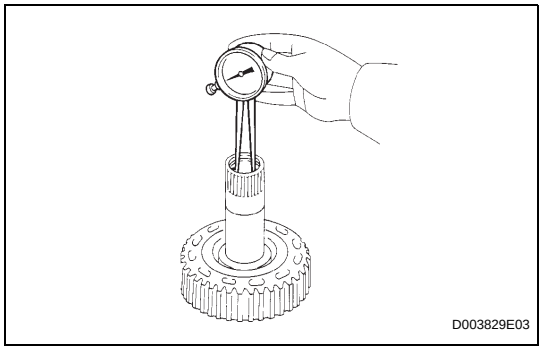

3. INSPECT OVERDRIVE DIRECT CLUTCH DRUM SUB-ASSEMBLY

(a) Using a caliper gauge, measure the inside diameter of the forward clutch hub bushing.

Standard inside diameter:

23.025 to 23.046 mm (0.9065 to 0.9073 in.)

Maximum inside diameter:

23.09 mm (0.9091 in.)

NOTICE:

Check the contact surface of the bushing in the direct clutch shaft. If any scratch or discoloration is found, replace the direct clutch sub-assembly with a new one.

If the inside diameter is greater than the maximum, replace the forward clutch hub with a new one.

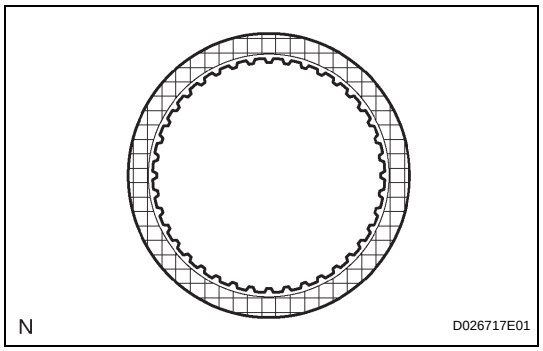

4. INSPECT 2ND BRAKE CLUTCH DISC

(a) Check if the sliding surface of the disc, plate and flange are worn or burnt.
If necessary, replace them.
NOTICE:
- **If the lining of the disc comes off or is discolored, or if a part of the groove is worn, replace all the discs.**
- **Before installing new discs, immerse them in ATF for at least 15 minutes.**

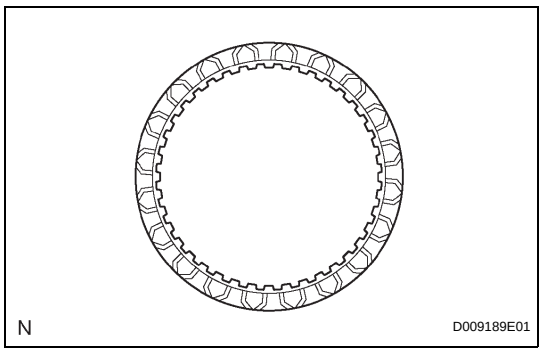

5. INSPECT 1ST AND REVERSE BRAKE CLUTCH DISC

(a) Check if the sliding surface of the disc, plate and flange are worn or burnt.
If necessary, replace them.
NOTICE:
- **If the lining of the disc comes off or is discolored, or if a part of the groove is worn, replace all the discs.**
- **Before installing new discs, immerse them in ATF for at least 15 minutes.**

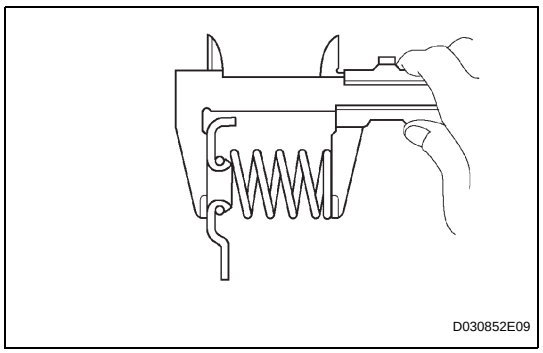

6. INSPECT 1ST AND REVERSE BRAKE RETURN SPRING SUB-ASSEMBLY

(a) Using a vernier caliper, measure the free length of the spring together with the spring seat.
Standard free length:
17.61 mm (0.6933 in.)
If the result is not as specified, replace the spring.

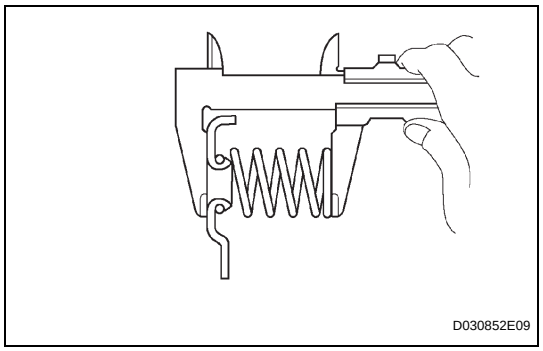

7. INSPECT UNDERDRIVE BRAKE RETURN SPRING SUB-ASSEMBLY

(a) Using a vernier caliper, measure the free length of the spring together with the spring seat.
Standard free length:
13.24 mm (0.5213 in.)
If the result is not as specified, replace the spring.

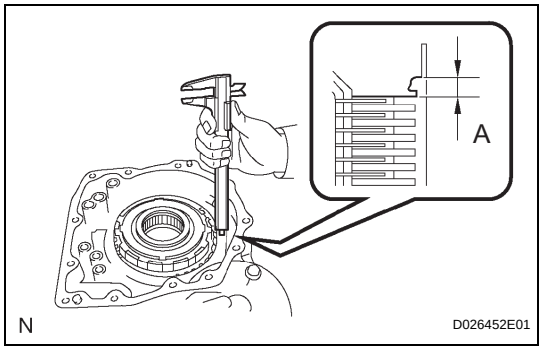

8. INSPECT PACK CLEARANCE OF 1ST AND REVERSE BRAKE

(a) Using a vernier caliper, measure the distance between the disc surface and the contact surface of the 2nd brake cylinder and transaxle case (Dimension A).

(b) Select an appropriate flange so that the pack clearance will meet the specified value.
Standard pack clearance:
1.16 to 1.35 mm (0.0457 to 0.0531 in.)

HINT:
Piston stroke = Dimension A - Flange thickness
Standard flange thickness

Mark	Thickness	Mark	Thickness
1	1.8 mm (0.071 in.)	5	2.2 mm (0.087 in.)
2	1.9 mm (0.075 in.)	6	2.3 mm (0.091 in.)
3	2.0 mm (0.079 in.)	7	2.4 mm (0.094 in.)
4	2.1 mm (0.083 in.)	8	2.5 mm (0.098 in.)

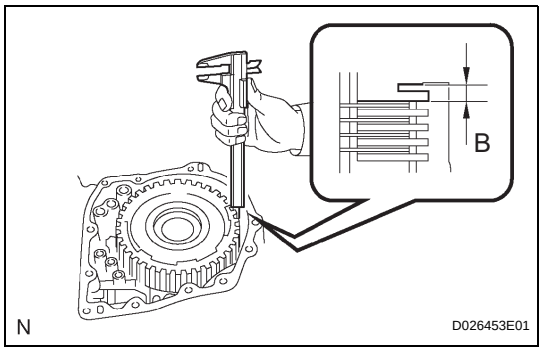

9. INSPECT PACK CLEARANCE OF 2ND BRAKE

(a) Using a vernier caliper, measure the distance between the disc surface and snap ring surface (Dimension B).

(b) Select an appropriate flange so that the pack clearance will meet the specified value.
Standard pack clearance:
0.62 to 0.91 mm (0.0244 to 0.0358 in.)
HINT:
Piston stroke = Dimension B - Flange thickness - Snap ring thickness 1.6 mm (0.063 in.)
Standard flange thickness

Mark	Thickness	Mark	Thickness
1	3.0 mm (0.118 in.)	5	3.4 mm (0.134 in.)
2	3.1 mm (0.122 in.)	6	3.5 mm (0.138 in.)
3	3.2 mm (0.126 in.)	7	3.6 mm (0.142 in.)
4	3.3 mm (0.130 in.)	-	-

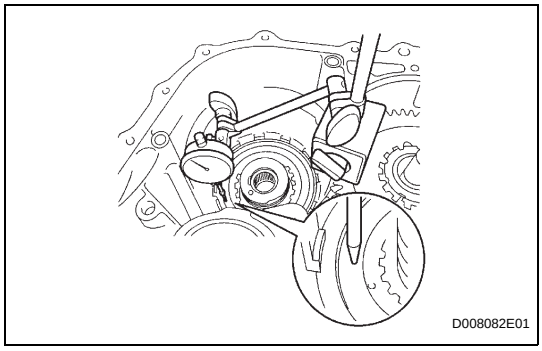

10. INSPECT PACK CLEARANCE OF UNDERDRIVE BRAKE

(a) Using a dial indicator, measure the underdrive brake pack clearance while applying and releasing compressed air (392 kPa, 4.0 kgf/cm^2, 57 psi).
Standard pack clearance:
1.81 to 2.20 mm (0.0713 to 0.0866 in.)
HINT:
Select an appropriate flange from the table below so that it will meet the specified value.
Standard flange thickness

Mark	Thickness	Mark	Thickness
1	3.0 mm (0.118 in.)	4	3.1 mm (0.122 in.)
2	3.2 mm (0.126 in.)	5	3.3 mm (0.130 in.)
3	3.4 mm (0.134 in.)	-	-

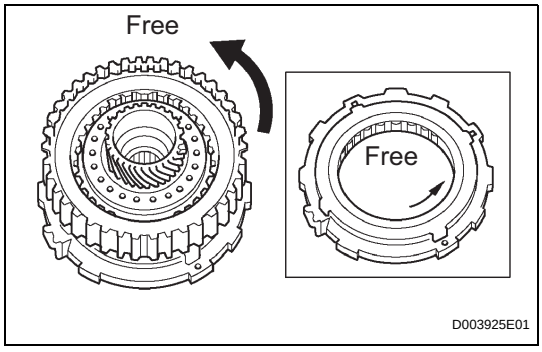

11. INSPECT UNDERDRIVE 1-WAY CLUTCH ASSEMBLY

(a) Install the underdrive clutch assembly to the 1-way clutch.

(b) Check that the underdrive 1-way clutch locks when turned clockwise and rotates freely when turned counterclockwise as shown in the illustration.
If the result is not as specified, replace the underdrive 1-way clutch.

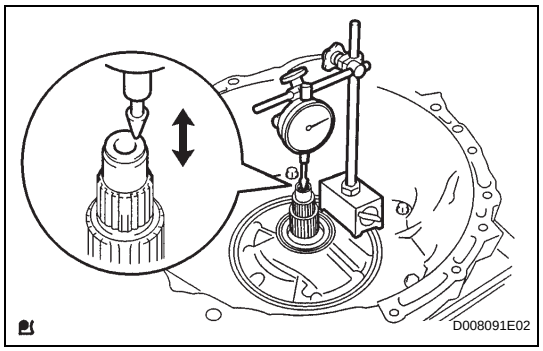

12. INSPECT INPUT SHAFT END PLAY

(a) Using a dial indicator, measure the input shaft end play.

Standard end play:

0.262 to 1.244 mm (0.01 to 0.049 in.)

If the result is not as specified, replace the input shaft or thrust needle roller bearing.

REASSEMBLY

1. BEARING POSITION

AX

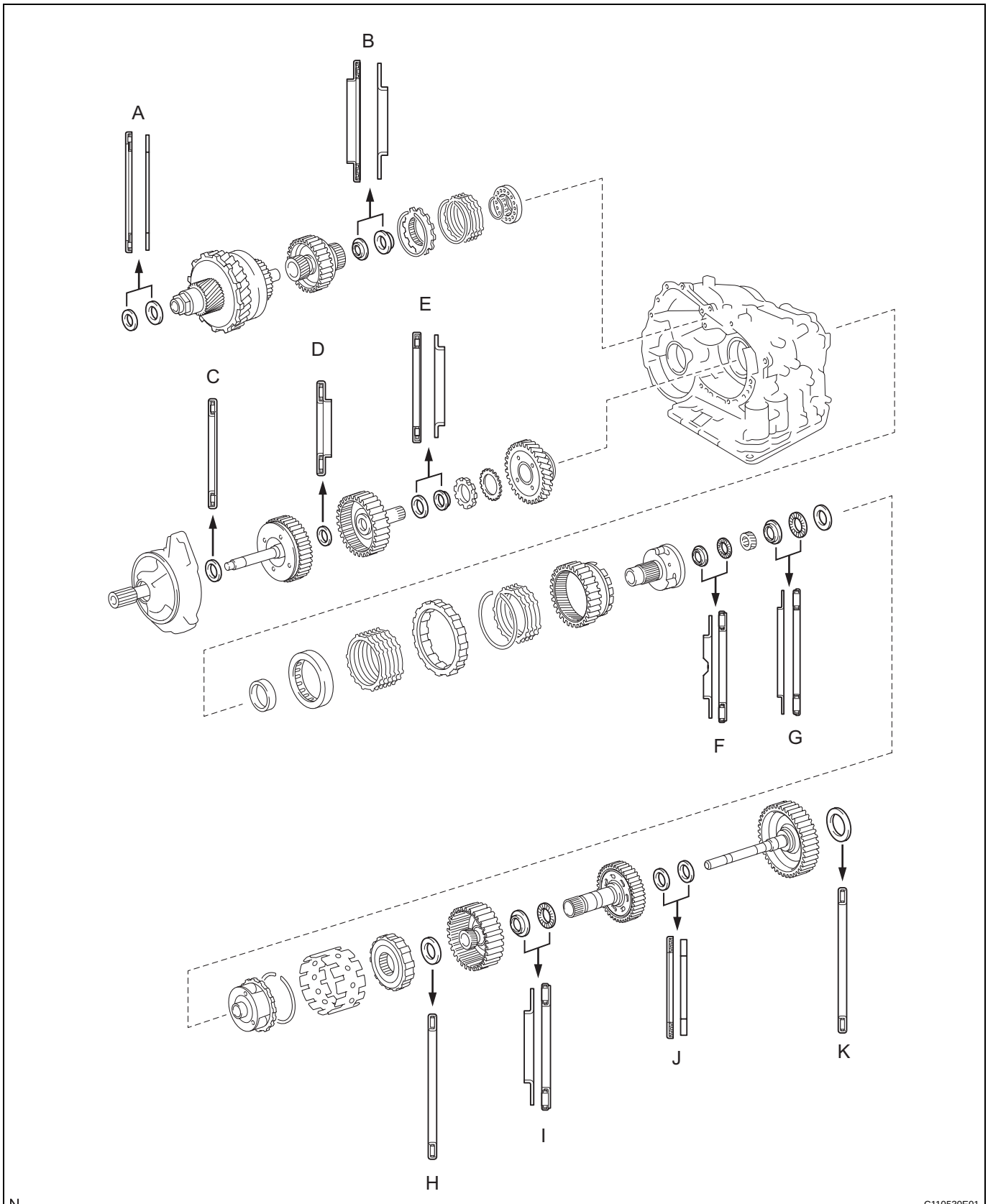

Standard bearing position

Mark	Front Race Diameter Inside / Outside	Thrust Bearing Diameter Inside / Outside	Rear Race Diameter Inside / Outside
A	-	57.2 mm (2.252 in.) / 84.96 mm (3.3449 in.)	56.4 mm (2.220 in.) / 83.0 mm (3.268 in.)
B	-	37.73 mm (1.4854 in.) / 58.0 mm (2.283 in.)	-
C	-	33.85 mm (1.3327 in.) / 52.2 mm (2.055 in.)	-
D	24.94 mm (0.982 in.)	23.5 mm (0.925 in.) / 44.0mm (1.732 in.)	-
E	-	36.3 mm (1.429 in.) / 51.93 mm (2.0445 in.)	34.5 mm (1.358 in.) / 48.35 mm (1.904 in.)
F	34.35 mm (1.3524 in.) / 56.57 mm (2.2272 in.)	32.45 mm (1.2776 in.) / 56.48 mm (2.2236 in.)	-
G	40.15 mm (1.5807 in.) / 59.25 mm (2.3327 in.)	38.65 mm (1.5217 in.) / 59.79 mm (2.3539 in.)	38.65 mm (1.5217 in.) / 59.25 mm (2.3327 in.)
H	-	53.6 mm (2.110 in.) / 69.6 mm (2.740 in.)	-
I	33.02 mm (1.3000 in.) / 45.8 mm (1.803 in.)	31.85 mm (1.2539 in.) / 57.3 mm (2.256 in.)	-
J	-	24.79 mm (0.9760 in.) / 39.5 mm (1.555 in.)	23.6 mm (0.929 in.) / 37.95 mm (1.4941 in.)
K	-	56.3 mm (2.216 in.) / 75.96 mm (2.9905 in.)	-

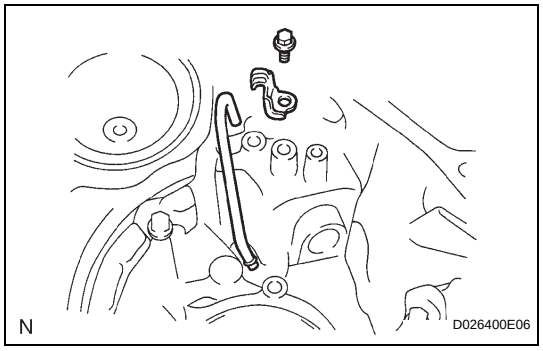

2. INSTALL DIFFERENTIAL GEAR LUBE APPLY TUBE

(a) Install the differential gear lube apply tube and transaxle apply tube clamp to the transaxle housing with the bolt.

Torque: 9.8 N*m (100 kgf*cm, 87 in.*lbf)

NOTICE:

Make sure to insert the pipe to the stopper.

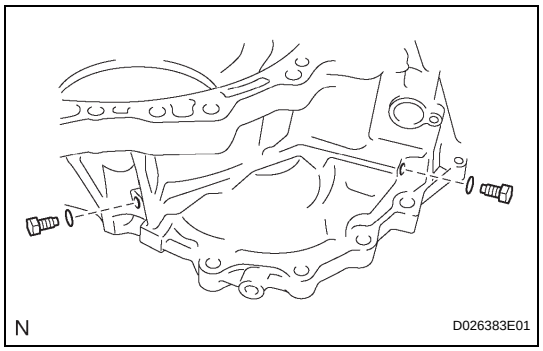

3. INSTALL NO. 1 TRANSAXLE CASE PLUG

(a) Install 2 new O-rings to the 2 plugs.

(b) Install the 2 plugs to the transaxle rear cover.

Torque: 7.4 N*m (75 kgf*cm, 65 in.*lbf)

AX

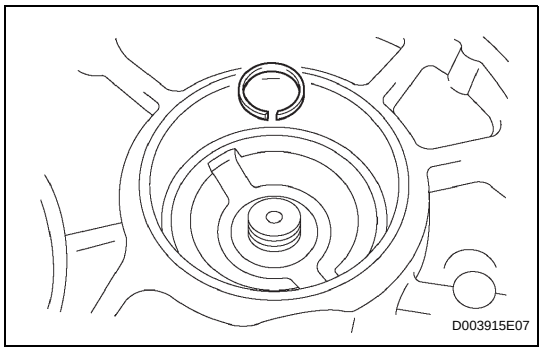

4. INSTALL UNDERDRIVE OUTPUT SHAFT OIL SEAL RING

(a) Coat a new oil seal ring with ATF and install it to the transaxle housing.

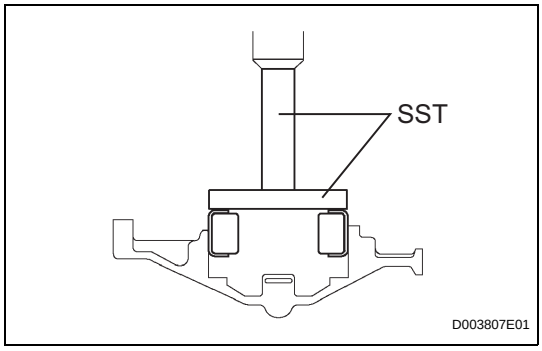

5. INSTALL UNDERDRIVE CYLINDRICAL ROLLER BEARING

(a) Coat the underdrive cylindrical roller bearing with ATF.

(b) Using SST and a press, press in the underdrive cylindrical roller bearing.

SST 09950-60020 (09951-00810), 09950-70010 (09951-07100)

NOTICE:

Do not apply excessive pressure to the bearing.

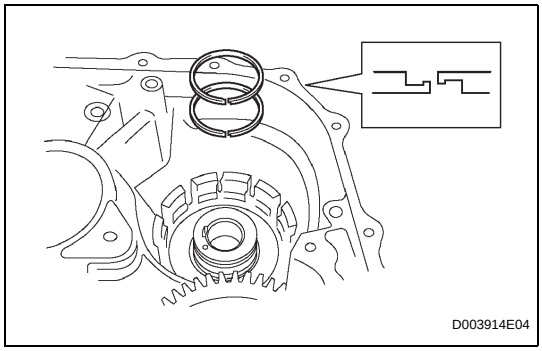

6. INSTALL UNDERDRIVE CLUTCH DRUM OIL SEAL RING

(a) Coat 2 new oil seal rings with ATF, and install them to the transaxle rear cover.

NOTICE:

- **Do not expand the end gap of the oil seal ring too much.**
- **Fix the hooks firmly. Confirm that the oil seal ring rotates freely in its groove.**

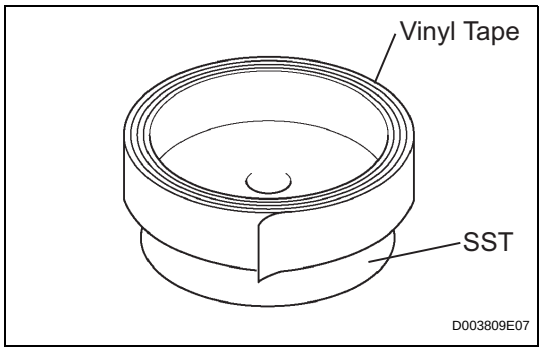

7. INSTALL NEEDLE ROLLER BEARING

(a) Wrap vinyl tape around SST 4.0 mm (0.157 in.) from the bottom of SST until the thickness of the tape is about 5.0 mm (0.197 in.).

SST 09950-60010 (09951-00320), 09950-70010 (09951-07100)

NOTICE:

Clean SST to remove deposited oil before wrapping vinyl tape.

(b) Coat the needle roller bearing with ATF.

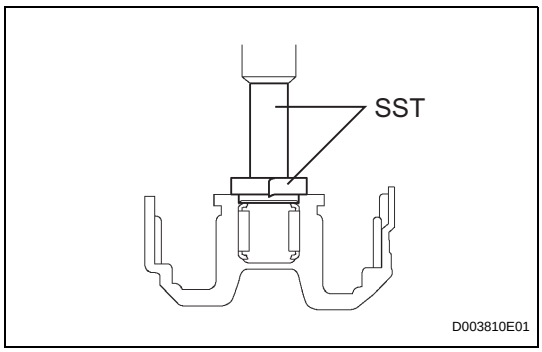

(c) Using SST and a press, press in the needle-roller bearing to the transaxle case.

SST 09950-60010 (09951-00320), 09950-70010 (09951-07100)

NOTICE:

When the wrapped vinyl tape contacts the transaxle case, stop press-fitting.

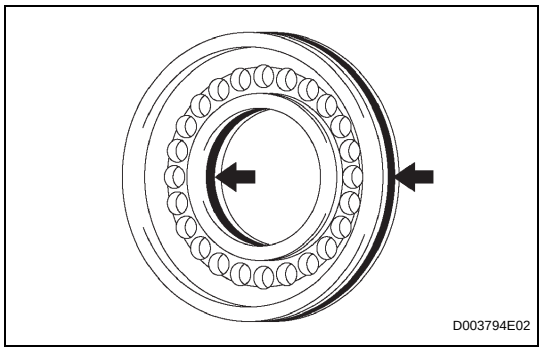

8. INSTALL UNDERDRIVE BRAKE PISTON

(a) Coat 2 new O-rings with ATF, and install them to the underdrive brake piston.

NOTICE:

- **Make sure that the O-rings are not twisted or pinched when they are installed.**
- **Apply sufficient ATF to the O-ring before installing.**

(b) Coat the underdrive brake piston with ATF.

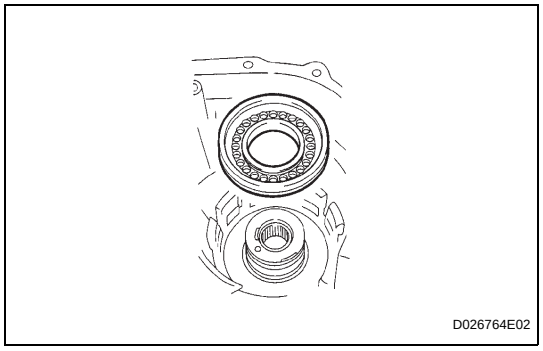

(c) Install the underdrive brake piston to the transaxle case.

NOTICE:

Be careful not to damage the O-ring.

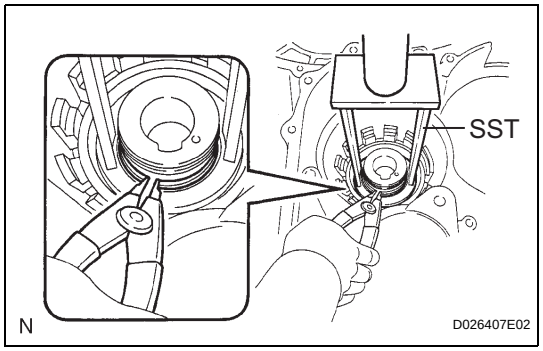

9. INSTALL UNDERDRIVE BRAKE RETURN SPRING SUB-ASSEMBLY

(a) Place SST on the return spring and compress the return spring with a press.

SST 09387-00020

NOTICE:

- **Stop the press when the spring seat is lowered to a position 1 to 2 mm (0.039 to 0.078 in.) from the snap ring groove to prevent the spring seat from being deformed.**
- **After installing the return spring, check that all the return spring's springs fit in the piston correctly.**

(b) Using a snap ring expander, press in the snap ring to the transaxle case.

NOTICE:

The snap ring must be fully engaged in the groove of the transaxle case.

10. INSTALL NO. 2 BREATHER PLUG

11. INSTALL COUNTER DRIVE GEAR BEARING

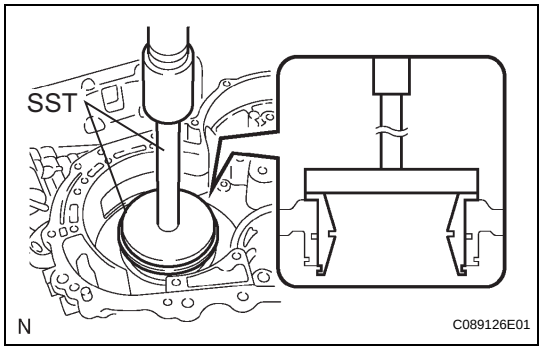

(a) Coat the counter drive gear bearing with ATF.

(b) Using SST and a press, press in the bearing outer race.

SST 09950-60020 (09951-01030), 09950-70010 (09951-07150), 09649-17010

NOTICE:

- **Do not apply excessive pressure to the bearing.**
- **Press-fit the bearing outer race until it contacts the transaxle case.**

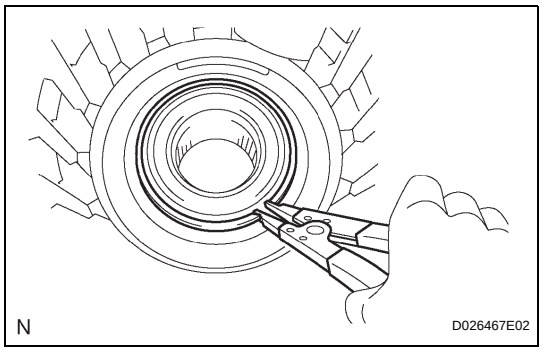

(c) Using a snap ring expander, install the snap ring.
NOTICE:
The white mark side of the snap ring should face upward.

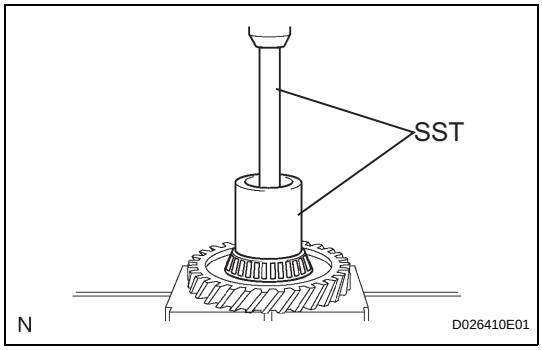

12. INSTALL COUNTER DRIVE GEAR

(a) Coat the counter drive gear with ATF.

(b) Using SST and a press, press in the tapered roller bearing to the counter drive gear.
SST 09950-70010 (09951-07150), 09649-17010
NOTICE:
Do not apply excessive pressure to the bearing.

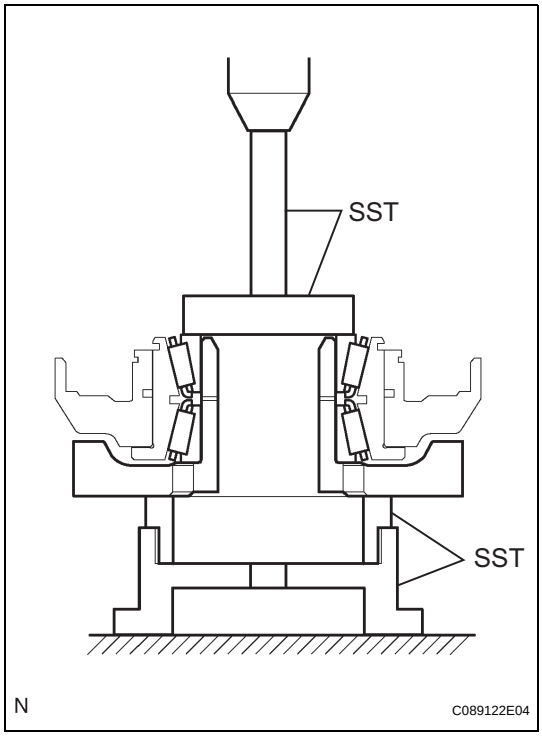

(c) Using SST and a press, press in the counter drive gear and bearing to the transaxle case.
SST 09950-70010 (09951-07150), 09223-15030, 09527-17011, 09950-60020 (09951-00750)
NOTICE:
Do not apply excessive pressure to the counter drive gear.

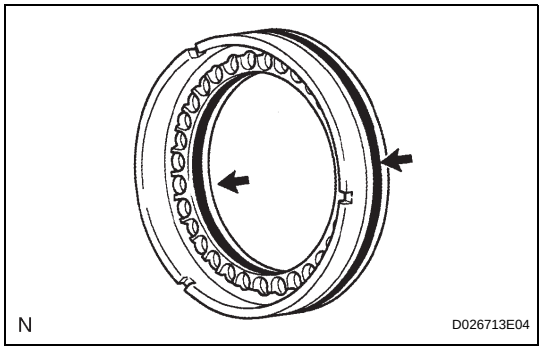

13. INSTALL 1ST AND REVERSE BRAKE PISTON

(a) Coat 2 new O-rings with ATF.

(b) Install the 2 O-rings to the 1st and reverse brake piston.
NOTICE:
- **Make sure that the O-rings are not twisted or pinched when they are installed.**
- **Apply sufficient ATF to the O-ring prior to assembling.**

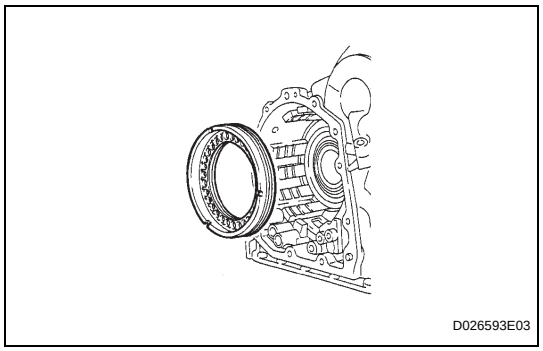

(c) Coat the 1st and reverse brake piston with ATF, and install it to the transaxle case.
NOTICE:
Be careful not to damage the O-ring.

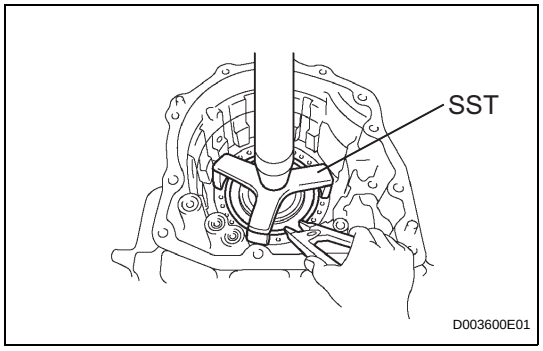

14. INSTALL 1ST AND REVERSE BRAKE RETURN SPRING SUB-ASSEMBLY

(a) Place SST on the return spring and compress the return spring with a press.
SST 09387-00070
NOTICE:
- **Stop the press when the spring seat is lowered to a position 1 to 2 mm (0.039 to 0.078 in.) from the snap ring groove to prevent the spring seat from being deformed.**
- **After installing the return spring, check that all the return spring's springs fit in the piston correctly.**

(b) Using a snap ring expander, press in the snap ring to the transaxle case.
NOTICE:
- **The snap ring must be fully engaged in the groove of the transaxle case.**
- **Fix the snap ring to the inside of the claw of the spring seat firmly.**

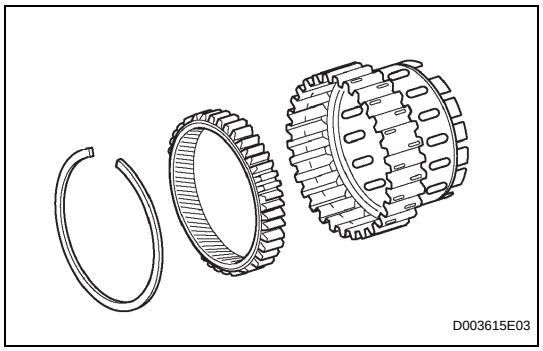

15. INSTALL FRONT PLANETARY RING GEAR

(a) Using a screwdriver, install the front planetary ring gear and snap ring to the brake hub.
NOTICE:
Confirm that the snap ring is engaged in the groove of the brake hub correctly.

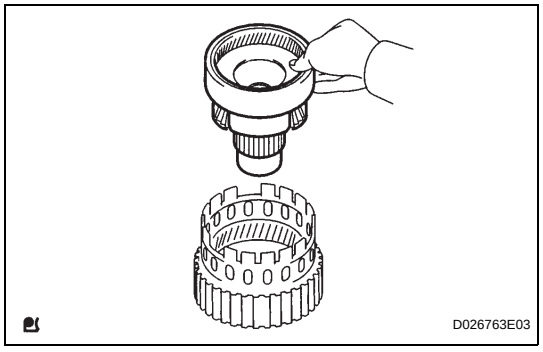

16. INSTALL FRONT PLANETARY GEAR ASSEMBLY

(a) Install the front planetary gear to the brake hub.

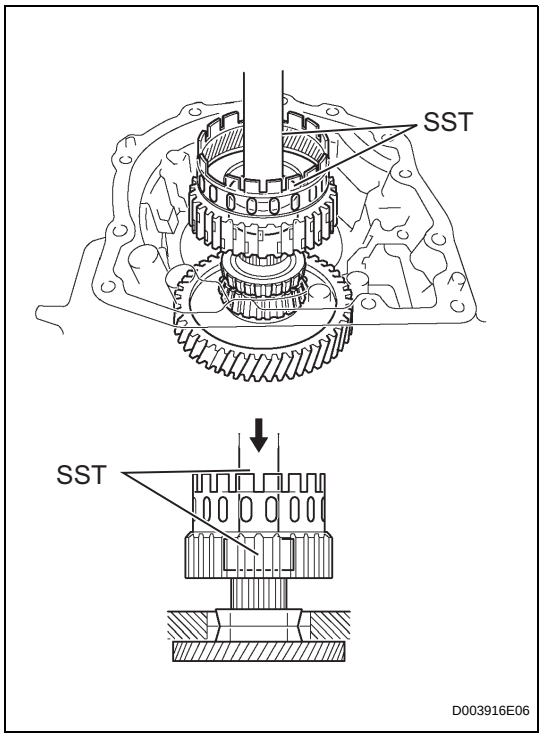

(b) Using SST and a press, press-fit the front planetary gear.

SST 09950-60010 (09951-00500), 09950-70010 (09951-07100)

NOTICE:

- **Do not apply excessive pressure to the planetary gear.**
- **Press the inner race of the LH tapered roller bearing, counter gear and front planetary gear to the position where no preload should be applied to one pair of tapered roller bearings (left and right).**

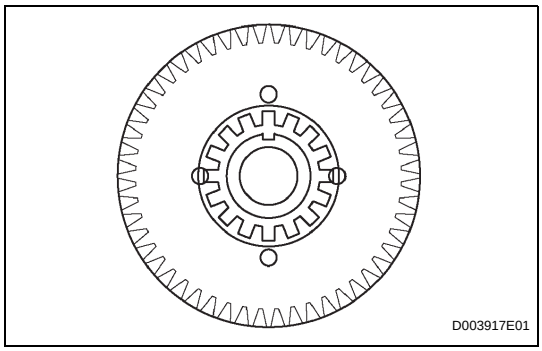

(c) Install a new washer as shown in the illustration.

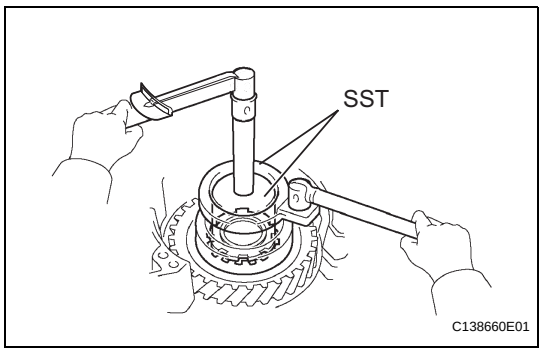

(d) Using SST, install the nut.

SST 09387-00030, 09387-00080

Torque: 280 N*m (3,355 kgf*cm, 207 ft.*lbf)

NOTICE:

Assemble the washer after pressing each part, then tighten the nut to the standard torque.

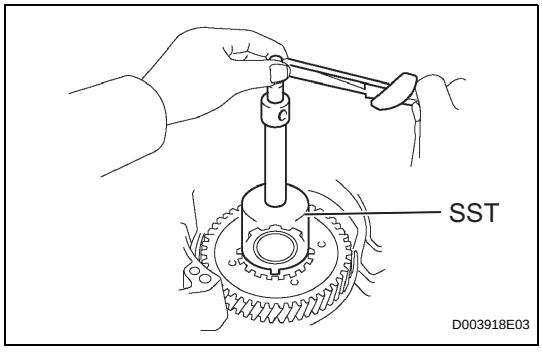

(e) Using SST and a torque wrench, measure the turning torque of the bearing while rotating SST at 60 rpm. When the measured value is not as specified, gradually tighten the nut until it reaches the specified value.

SST 09387-00080

Standard turning torque at 60 rpm:

0.51 to 1.02 N*m (5.1 to 10.0 kgf*cm, 4.4 to 8.7 in.*lbf) for new bearing

0.26 to 0.51 N*m (2.7 to 5.2 kgf*cm, 2.3 to 4.5 in.*lbf) for used bearing

(f) Tighten the nut gradually until the specified turning torque of the tapered roller bearing is measured.
Torque: 350 N*m (3,569 kgf*cm, 258 ft.*lbf)

(g) Using a chisel and hammer, stake the front lock washer.

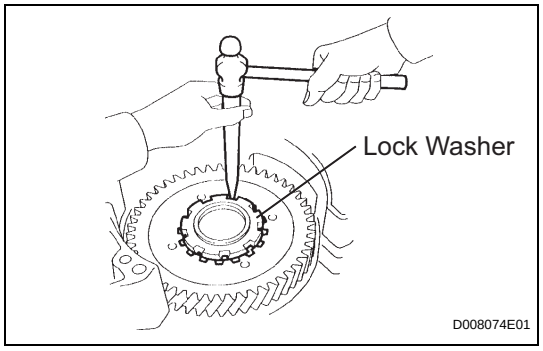

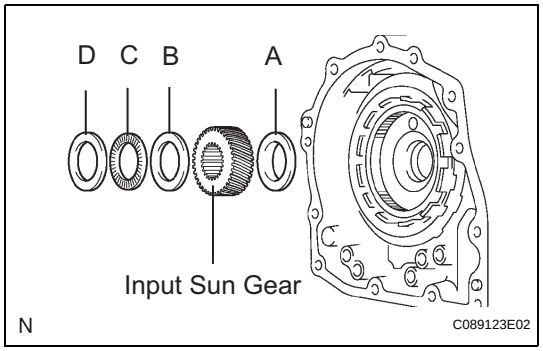

17. INSTALL INPUT SUN GEAR

(a) Coat the 2 thrust bearings with ATF.

(b) Install the 2 thrust bearings, bearing race and input sun gear to the front planetary gear.

NOTICE:

- **Install the bearing race on the side of the front planetary carrier. Be careful of the direction of the race.**
- **When installing the thrust bearing and front sun gears, be careful about the direction of the parts.**
- **When installing the bearing race on the side of the front sun gear, be careful of the direction of the race.**
- **Install the thrust bearing and the race after holding the parts on the input sun gear by applying grease. Make sure that the assembling order is correct.**

Standard thrust bearing and bearing race diameter

Item	Inside	Outside
Thrust Bearing, A	32.5 mm (1.28 in.)	56.5 mm (2.224 in.)
Thrust Bearing, C	38.6 mm (1.520 in.)	59.7 mm (2.35 in.)
Bearing Race, B	40.2 mm (1.583 in.)	59.3 mm (2.335 in.)
Bearing Race, D	38.6 mm (1.520 in.)	59.3 mm (2.335 in.)

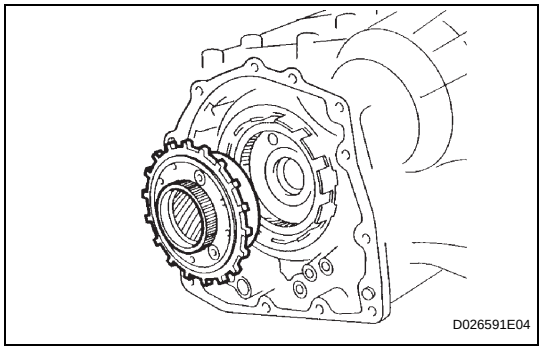

18. INSTALL REAR PLANETARY GEAR ASSEMBLY

(a) Install the rear planetary gear to the rear planetary ring gear.

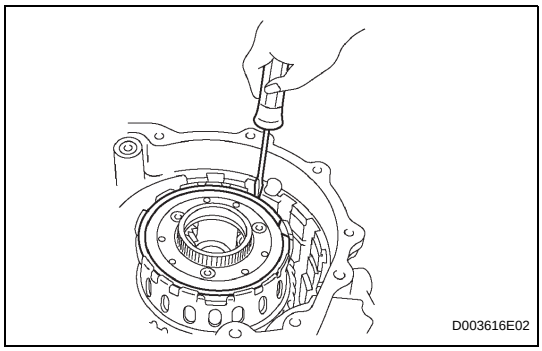

(b) Using a screwdriver, install the snap ring.
NOTICE:
Confirm that the snap ring is fixed in the groove of the 1st and reverse brake hub correctly.

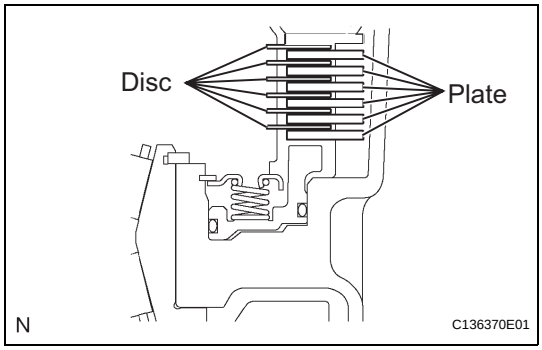

19. INSTALL 1ST AND REVERSE BRAKE CLUTCH DISC

(a) Coat the 6 discs with ATF.
(b) Install the 6 plates and 6 discs.
NOTICE:
Make sure that the plates and discs are installed as shown in the illustration.

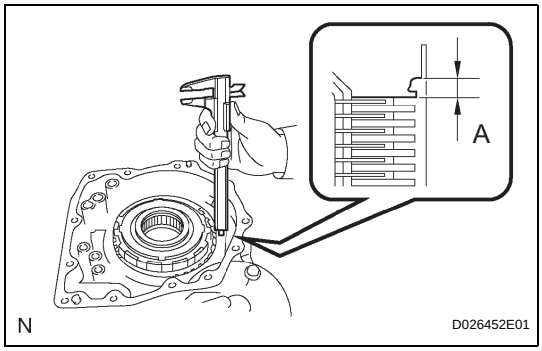

20. INSPECT PACK CLEARANCE OF FIRST AND REVERSE BRAKE

(a) Using a vernier caliper, measure the distance between the disc surface and the contact surface of the 2nd brake cylinder and transaxle case (Dimension A).
(b) Select an appropriate flange so that the pack clearance will meet the specified value.
Standard pack clearance:
1.16 to 1.35 mm (0.0457 to 0.0531 in.)
HINT:
Piston stroke = Dimension A - Flange thickness
Standard flange thickness

Mark	Thickness	Mark	Thickness
1	1.8 mm (0.071 in.)	5	2.2 mm (0.087 in.)
2	1.9 mm (0.075 in.)	6	2.3 mm (0.091 in.)
3	2.0 mm (0.079 in.)	7	2.4 mm (0.094 in.)
4	2.1 mm (0.083 in.)	8	2.5 mm (0.098 in.)

(c) Install the flange.

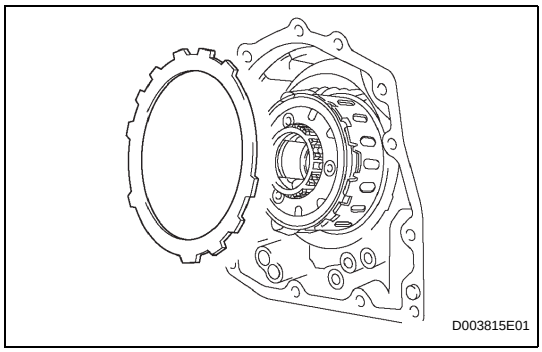

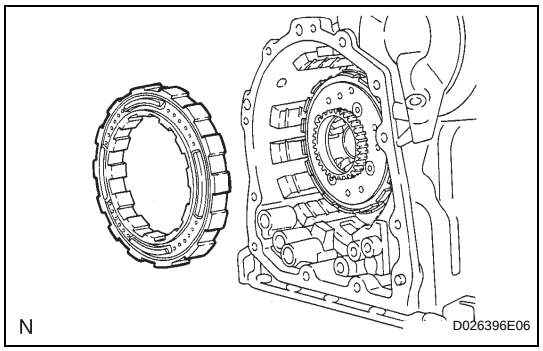

21. INSTALL SECOND BRAKE PISTON ASSEMBLY

(a) Install the second brake piston to the transaxle case.

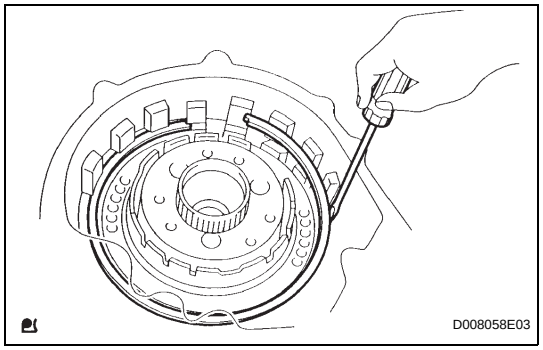

(b) Install the snap ring and measure the inside diameter.

Inside diameter:

Greater than 167 mm (6.57 in.)

NOTICE:

- **Make sure that the taper snap ring is installed in the correct direction.**
- **When the diameter does not meet the specified value, replace the snap ring with a new one.**
- **After installing the snap ring, confirm that there is no clearance between the 2nd brake cylinder and the fitting surface of the cylinder in the transaxle case.**

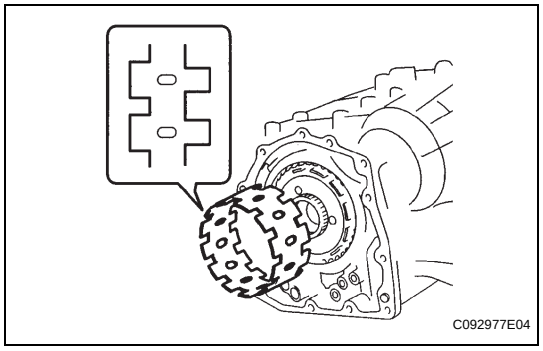

22. INSTALL 1-WAY CLUTCH SLEEVE OUTER

(a) Install the 1-way clutch sleeve outer to the 2nd brake cylinder.

NOTICE:

Make sure that the outer sleeve is installed in the correct direction.

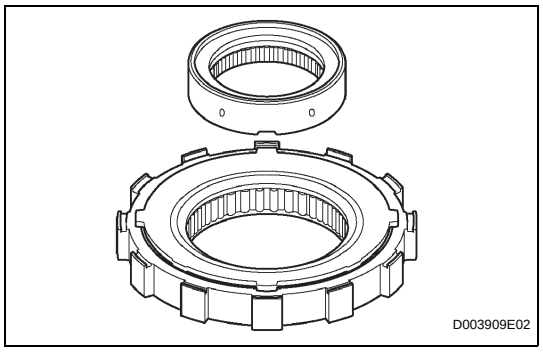

23. INSTALL 1-WAY CLUTCH ASSEMBLY

(a) Install the 1-way clutch inner race to the 1-way clutch.

NOTICE:

- **Make sure that the inner race is installed in the correct direction.**
- **Confirm that the discrimination mark is visible.**

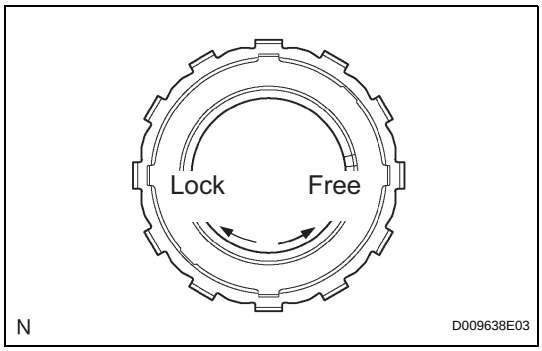

(b) Check that the 1-way clutch locks when turned clockwise and rotates freely when turned counterclockwise as shown in the illustration..
HINT:
If the result is not as specified, replace the 1-way clutch.

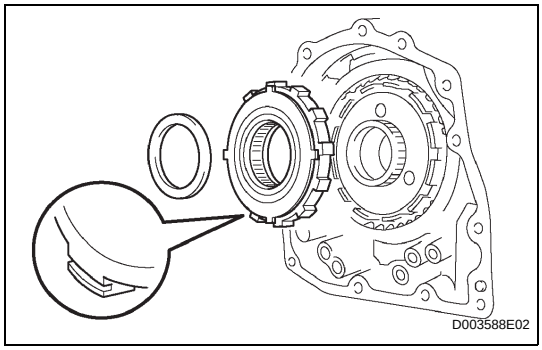

(c) Install the 1-way clutch and thrust needle roller bearing to the 1-way clutch sleeve outer.
Standard bearing diameter

Item	Inside	Outside
Bearing	53.6 mm (2.110 in.)	69.4 mm (2.732 in.)

NOTICE:
Install the thrust bearing properly so that the non-colored race will be visible.

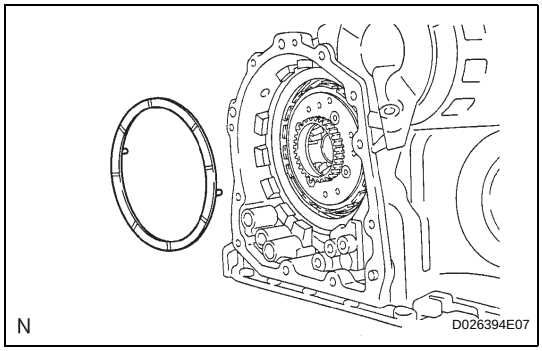

24. INSTALL NO. 1 PLANETARY CARRIER THRUST WASHER

(a) Coat the planetary carrier thrust washer with yellow petrolatum, and install the washer onto the planetary sun gear.
NOTICE:
After installing the washer, confirm that the projection of the washer is fixed firmly in the hole of the planetary sun gear.

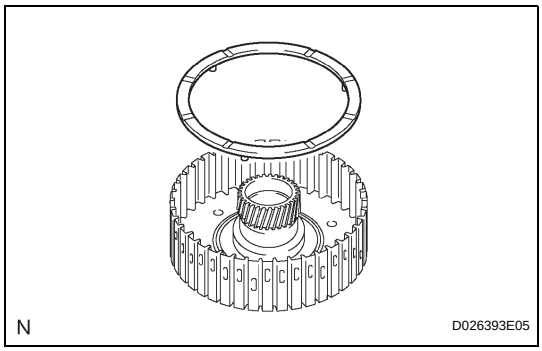

25. REMOVE REAR PLANETARY SUN GEAR ASSEMBLY

(a) Coat the planetary carrier thrust washer with yellow petrolatum, and install the washer onto the rear planetary sun gear.

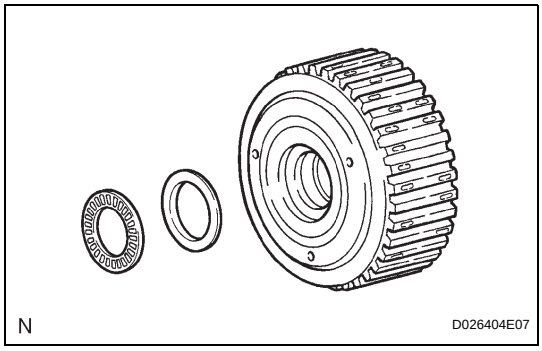

(b) Coat the bearing with yellow petrolatum, and install the bearing onto the rear planetary sun gear.
Standard bearing diameter

Item	Inside	Outside
Race	33.0 mm (1.299 in.)	45.4 mm (1.787 in.)
Bearing	31.85 mm (1.254 in.)	45.2 mm (1.78 in.)

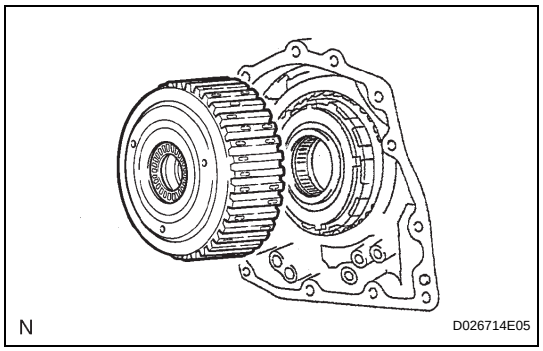

(c) Install the rear planetary sun gear to the rear planetary gear.
NOTICE:
After installing the rear planetary sun gear, make sure that the B1 discs are engaged.

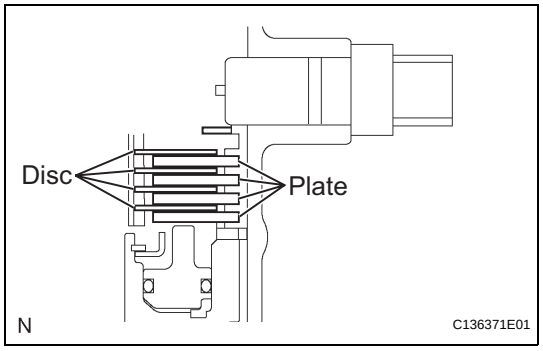

26. INSTALL 2ND BRAKE CLUTCH DISC

(a) Coat the 4 discs with ATF.
(b) Install the 4 plates, 4 discs and flange to the transaxle case.
(c) Temporarily install the snap ring.

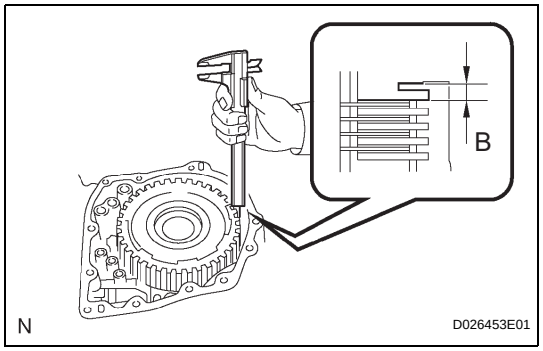

27. INSPECT PACK CLEARANCE OF 2ND BRAKE

(a) Using a vernier caliper, measure the distance between the disc surface and snap ring surface (Dimension B).
(b) Select an appropriate flange so that the pack clearance will meet the specified value.
Standard clearance:
0.62 to 0.91 mm (0.0244 to 0.0358 in.)
HINT:
Piston stroke = Dimension B - Flange thickness - Snap ring thickness 1.6 mm (0.063 in.)
Standard flange thickness

Mark	Thickness	Mark	Thickness
1	3.0 mm (0.118 in.)	5	3.4 mm (0.134 in.)
2	3.1 mm (0.122 in.)	6	3.5 mm (0.138 in.)
3	3.2 mm (0.126 in.)	7	3.6 mm (0.142 in.)
4	3.3 mm (0.130 in.)	8	-

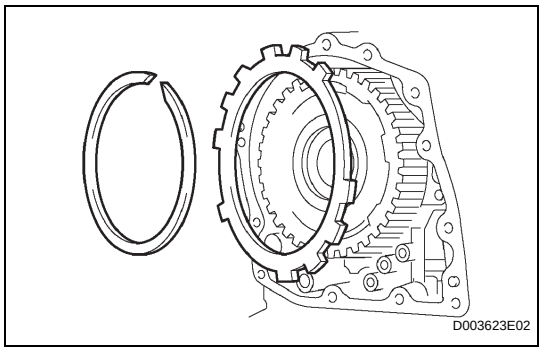

(c) Temporarily remove the snap ring, attach the selected flange and reinstall the snap ring.
NOTICE:
Secure the snap ring so that the ends are visible through the groove of the transaxle case.

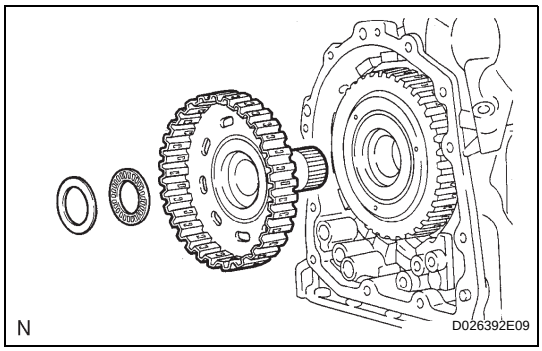

28. INSTALL OVERDRIVE DIRECT CLUTCH HUB SUB-ASSEMBLY

(a) Install the direct clutch hub to the planetary gear.
NOTICE:
Be careful not to damage the bushing inside the overdrive clutch hub during installation.

(b) Coat the thrust bearing with ATF.

(c) Install the bearing race and the thrust bearing to the direct clutch hub.
NOTICE:
Be careful not to drop the bearing when it is installed.
Standard bearing and race diameter

Item	Inside	Outside
Bearing	24.7 mm (0.972 in.)	39.5 mm (1.555 in.)
Race	23.6 mm (0.929 in.)	38.0 mm (1.496 in.)

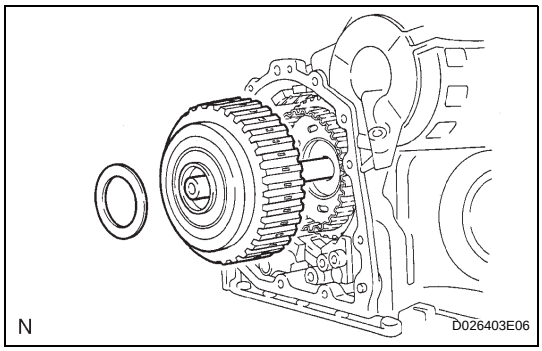

29. INSTALL DIRECT CLUTCH ASSEMBLY

(a) Coat the thrust bearing with ATF.

(b) Install the direct clutch and thrust bearing to the rear planetary sun gear.
NOTICE:
The disc in the direct clutch should completely match with the hub attached outside the rear planetary sun gear. Otherwise, the rear cover cannot be installed.

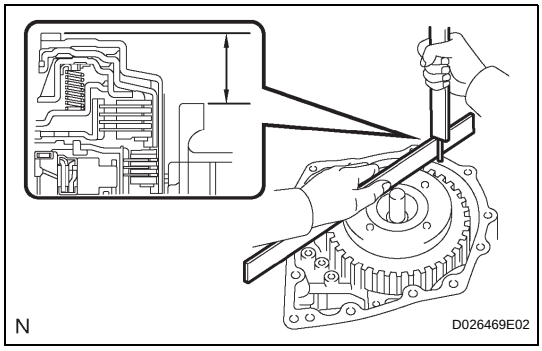

(c) Clean the connecting part of the transaxle case and the rear cover.

(d) As shown in the illustration, place a straightedge on the direct clutch drum and measure the distance between the transaxle case and the straightedge using a vernier caliper (Dimension D).

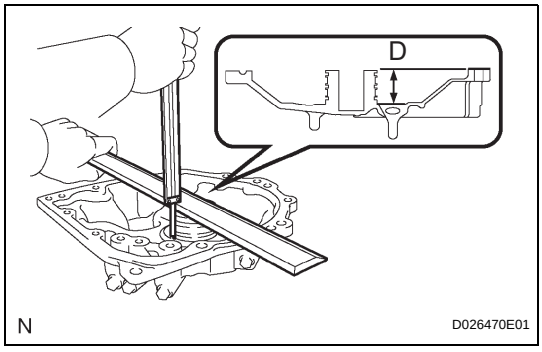

(e) Using a vernier caliper and straightedge, measure the dimension shown in the illustration.

(f) Calculate the end play value using the following formula. Select a thrust bearing which satisfies the end play value and install the selected bearing.
Standard end play:
0.244 to 0.901 mm (0.0096 to 0.0355 in.)
NOTICE:
Make sure that the non-collared race side is facing the direct clutch.
HINT:
End play = Dimension D - Dimension C
Standard bearing thickness and diameter

Thickness	Inside	Outside
3.6 mm (0.1417 in.)	56.3 mm (2.217 in.)	75.7 mm (2.980 in.)

Thickness	Inside	Outside
3.8 mm (0.1496 in.)	56.3 mm (2.217 in.)	75.7 mm (2.980 in.)

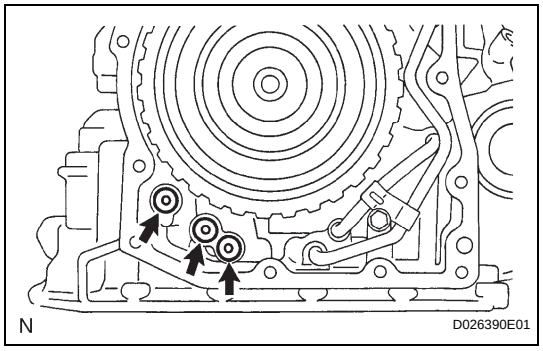

30. INSTALL NO. 1 GOVERNOR APPLY GASKET

(a) Install 3 new governor apply gaskets to the transaxle case.

31. INSTALL BRAKE APPLY TUBE

(a) Install the clamp to the brake apply tube.
NOTICE:
Make sure to install the clamp to the apply tube before installing the apply tube to the transaxle case. This prevents the apply tube from being deformed or damaged.

(b) Install the clutch apply tube.

(c) Install the brake apply tube to the transaxle case with a bolt.
Torque: 5.4 N*m (55 kgf*cm, 48 in.*lbf)
NOTICE:
The tube should be securely inserted until it reaches the stopper.

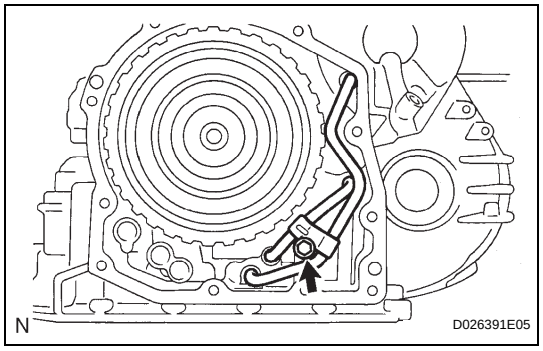

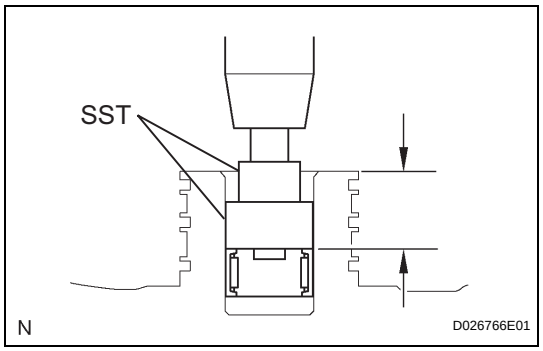

32. INSTALL NEEDLE ROLLER BEARING

(a) Using SST and a press, press the needle roller bearing into the transaxle rear cover.
SST 09950-60010 (09951-00230, 09952-06010)
Standard depth:
20.55 to 21.25 mm (0.8091 to 0.8366 in.)
NOTICE:
- **The engraved mark side of the bearing should face upward.**
- **Continue pressing until the specified value is obtained.**

(b) Coat a needle roller bearing with ATF.

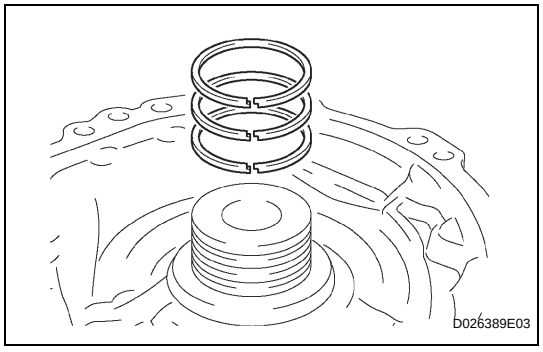

33. INSTALL REAR CLUTCH OIL SEAL RING OUTER

(a) Coat 3 new rear clutch oil seal rings with ATF, and install them to the transaxle rear cover.
NOTICE:
The snap ring should be fully engaged in the groove of the drum.

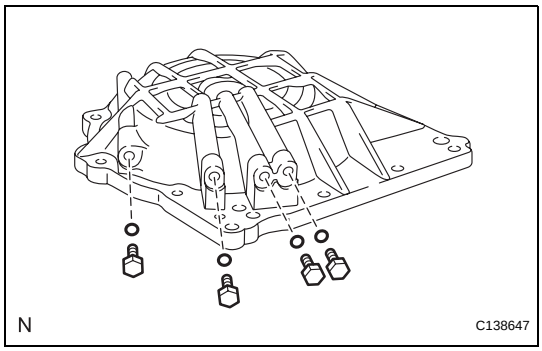

34. INSTALL NO. 1 TRANSAXLE CASE PLUG

(a) Coat 4 new O-rings with ATF.

(b) Install the 4 O-rings to the 4 plugs.

(c) Install the 4 plugs to the transaxle rear cover.

Torque: 7.4 N*m (75 kgf*cm, 65 in.*lbf)

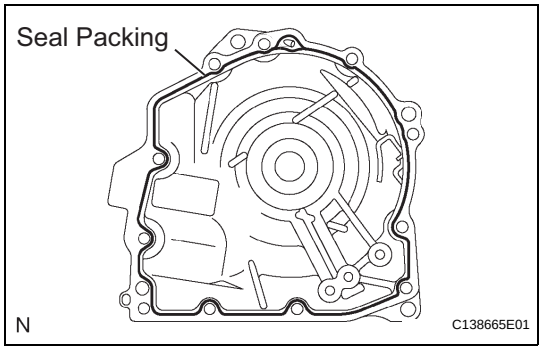

35. INSTALL TRANSAXLE REAR COVER SUB-ASSEMBLY

(a) Remove any packing material and be careful not to spill oil on the contact surfaces of the transaxle rear cover or the transaxle case.

(b) Apply seal packing to the cover.

Seal packing:

Toyota Genuine Seal Packing 1281,
Three Bond 1281 or Equivalent

NOTICE:

Make sure that the seal packing is applied in a bead (section diameter: ϕ1.2 mm (0.047 in.)) so that the entire sealing surface will be evenly sealed. The seal packing should also protrude slightly from the flange after the installation of the cover has been completed.

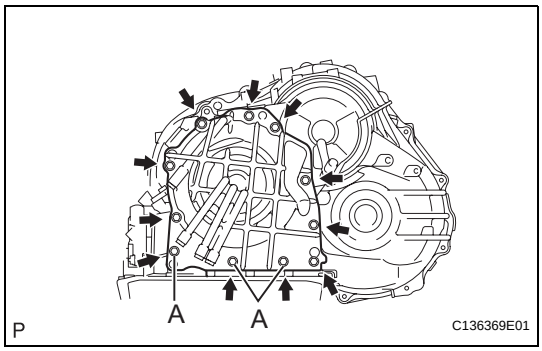

(c) Apply adhesive to the bolt threads of bolt A.

Adhesive:

Toyota Genuine Adhesive 1344,
Three Bond 1344 or Equivalent

(d) Install the 11 bolts.

Torque: 19 N*m (190 kgf*cm, 14 ft.*lbf) for bolt A
25 N*m (250 kgf*cm, 18 ft.*lbf) for other bolts

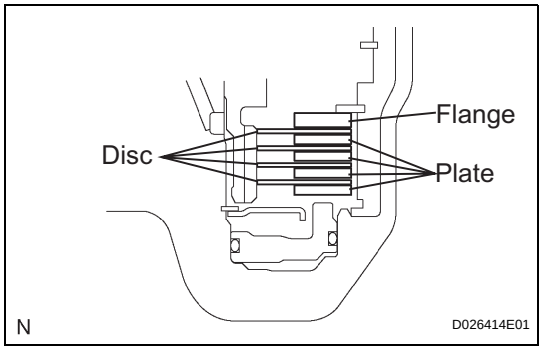

36. INSTALL NO. 2 UNDERDRIVE CLUTCH DISC

(a) Coat the 4 discs with ATF.

(b) Install the 4 discs, 4 plates and flange to the transaxle case.

NOTICE:

Be careful of the order of the discs, plate and flange.

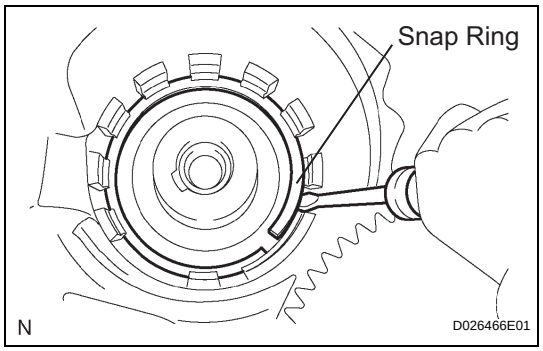

(c) Using a screwdriver, install the snap ring.
NOTICE:
The snap ring should be fully engaged in the groove of the drum.

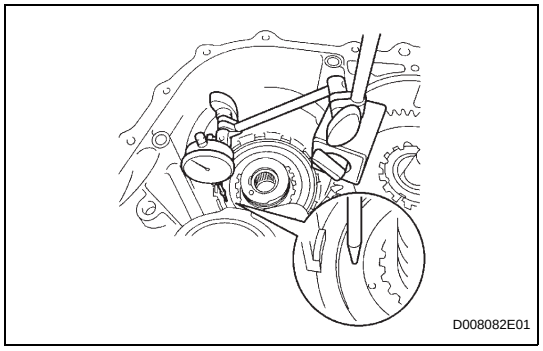

37. INSPECT PACK CLEARANCE OF UNDERDRIVE BRAKE

(a) Using a dial indicator, measure the underdrive brake pack clearance while applying and releasing compressed air (392 kPa, 4.0 kgf/cm^2, 57 psi).
Standard pack clearance:
1.81 to 2.20 mm (0.0713 to 0.0866 in.)
HINT:
Select an appropriate flange from the table below so that it will meet the specified value.
Standard flange thickness

Mark	Thickness	Mark	Thickness
1	3.0 mm (0.118 in.)	4	3.1 mm (0.122 in.)
2	3.2 mm (0.126 in.)	5	3.3 mm (0.130 in.)
3	3.4 mm (0.134 in.)	-	-

(b) Temporarily remove the snap ring, attach the selected flange and reinstall the snap ring.
(c) Reinstall the snap ring.

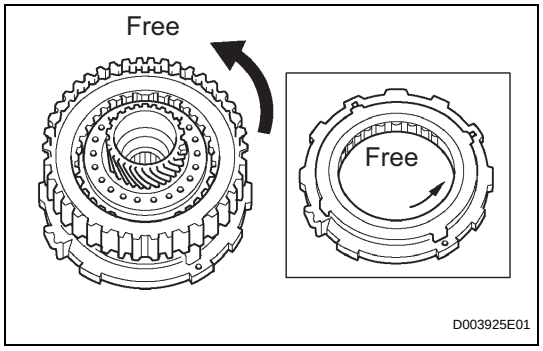

38. INSPECT UNDERDRIVE 1-WAY CLUTCH ASSEMBLY

(a) Install the underdrive clutch to the 1-way clutch.
(b) Check that the underdrive 1-way clutch locks when turned clockwise and rotates freely when turned counterclockwise as shown in the illustration.
If the result is not as specified, replace the underdrive 1-way clutch.

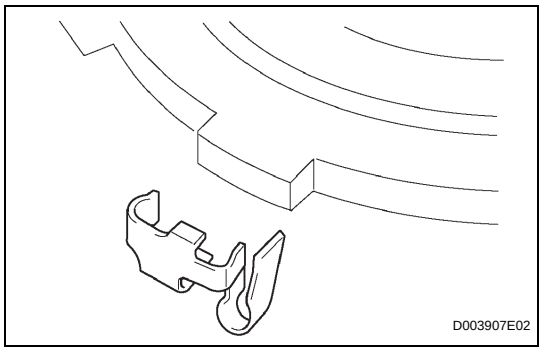

39. INSTALL UNDERDRIVE 1-WAY CLUTCH ASSEMBLY

(a) Install the outer race retainer to the 1-way clutch.
NOTICE:
Fix the outer race retainer to the external tooth of the 1-way clutch firmly.

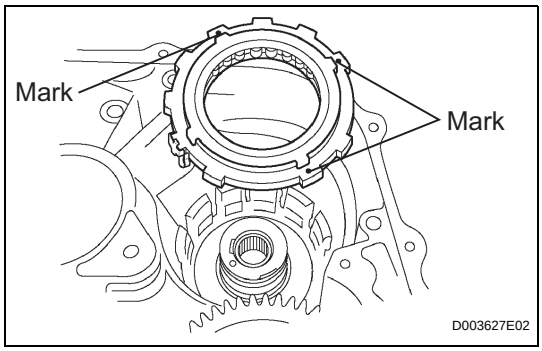

(b) Install the 1-way clutch to the transaxle case.
NOTICE:
Make sure that the mark on the 1-way clutch outer race is visible.

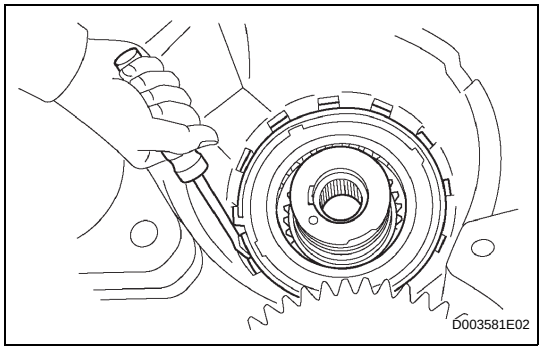

(c) Using a screwdriver, install the snap ring to the transaxle case.
NOTICE:
The snap ring should be fully engaged in the groove of the transaxle case.

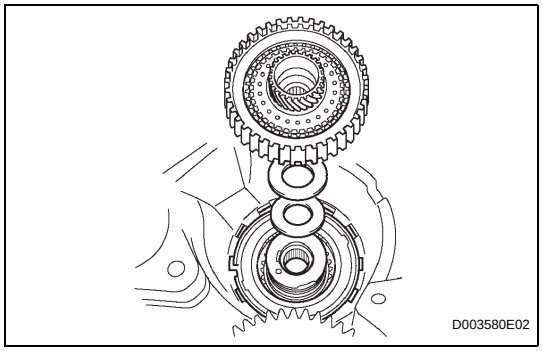

40. INSTALL UNDERDRIVE CLUTCH ASSEMBLY

(a) Coat the bearing and bearing race with petrolatum, and install them onto the underdrive clutch.
Standard bearing and bearing race diameter

Item	Inside	Outside
Bearing	37.73 mm (1.4854 in.)	58.0 mm (2.2835 in.)
Race	29.9 mm (1.1772 in.)	55.5 mm (2.185 in.)

(b) Install the underdrive clutch to the transaxle case.
NOTICE:
Do not damage the oil seal when installing the underdrive clutch drum.

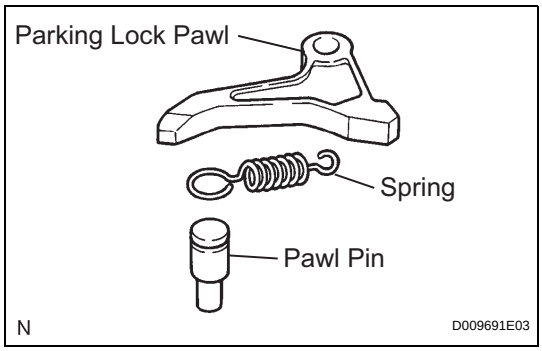

41. INSTALL PARKING LOCK PAWL

(a) Install the pawl pin and spring to the parking lock pawl.

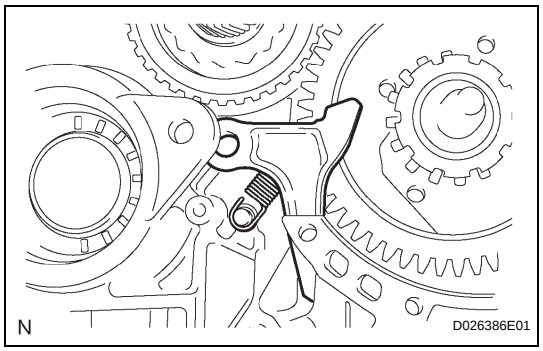

(b) Temporarily install the parking lock pawl, shaft and spring to the transaxle case, as shown in the illustration.

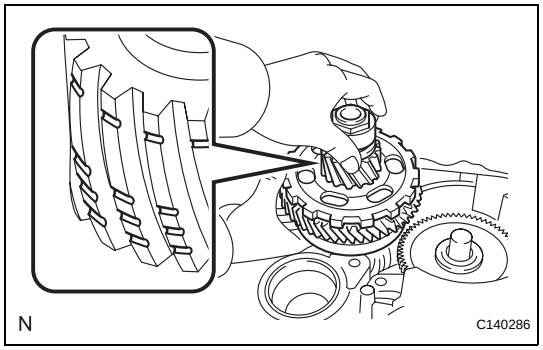

42. INSTALL UNDERDRIVE PLANETARY GEAR ASSEMBLY

(a) Install the underdrive planetary gear to the transaxle case.

NOTICE:

- **Check the position and number of the grooves on each end face of the differential drive pinion gear.**
- **Fully engage all the discs of underdrive clutch and hub splines of the underdrive planetary gear and install them securely.**

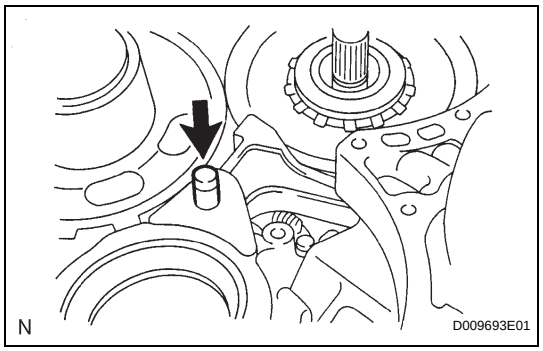

(b) Install the parking lock pawl shaft.

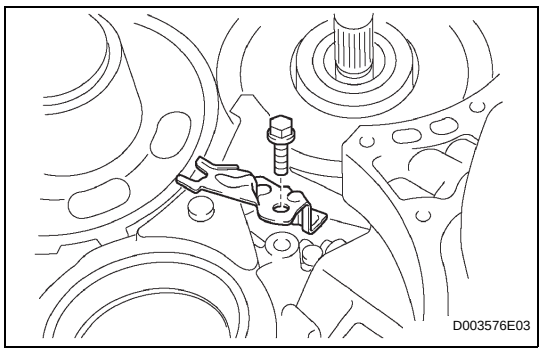

(c) Install the pawl shaft clamp with the bolt.
Torque: 9.8 N*m (100 kgf*cm, 87 in.*lbf)

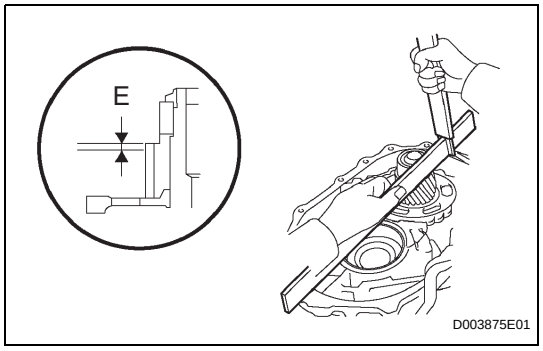

(d) Using a straightedge and vernier caliper as shown in the illustration, measure the gap between the top of the differential drive pinion in the underdrive planetary gear and the contact surface of the transaxle case and housing (Dimension E).

NOTICE:
Record dimension E for the following process.

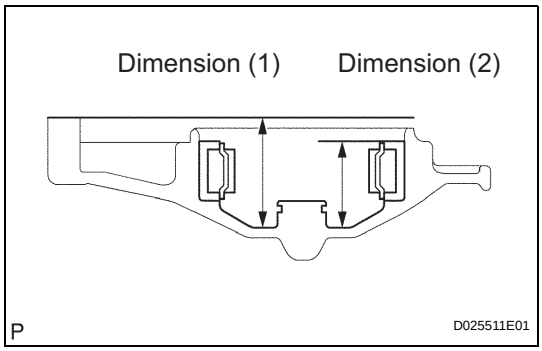

(e) As shown in the illustration, measure the 2 places of the transaxle housing, and calculate dimension F using the formula below.
NOTICE:
Record dimension F for the following process.
HINT:
Dimension F = Dimension (1) - Dimension (2)

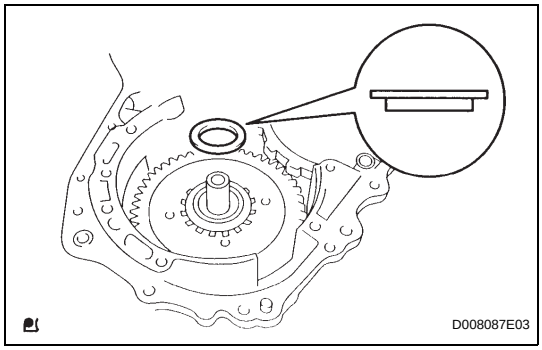

43. INSTALL MULTIPLE DISC CLUTCH HUB

(a) Install the thrust bearing race to the transaxle case while checking its direction.
Standard bearing race diameter

Item	Inside	Outside
Bearing race	39.5 mm (1.555 in.)	45.8 mm (1.803 in.)

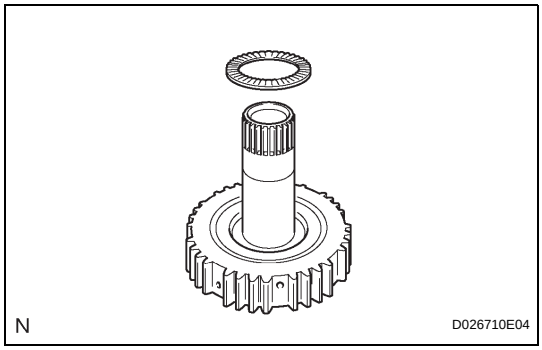

(b) Coat the thrust needle roller bearing and race with yellow petrolatum, and install them onto the multiple disc clutch hub.
Standard thrust bearing and race diameter

Item	Inside	Outside
Thrust Bearing	36.4 mm (1.433 in.)	52.2 mm (2.055 in.)

(c) Coat the needle roller bearing with ATF.

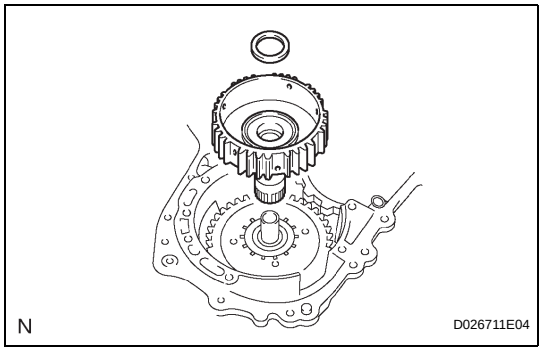

(d) Install the needle roller bearing to the multiple clutch hub.
Standard bearing diameter

Item	Inside	Outside
Bearing	23.6 mm (0.929 in.)	44 mm (1.732 in.)

(e) Install the multiple clutch hub to the transaxle case.

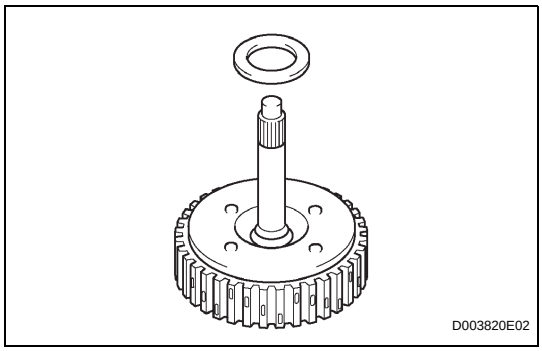

44. INSTALL FORWARD CLUTCH ASSEMBLY

(a) Coat the thrust needle roller bearing with ATF.
(b) Install the thrust needle roller bearing to the forward clutch.
Standard thrust bearing diameter

Item	Inside	Outside
Thrust Bearing	33.58 mm (1.3220 in.)	51.9 mm (2.043 in.)

NOTICE:
Install the thrust bearing properly so that the non-collared race or blue ink jet race will be visible.

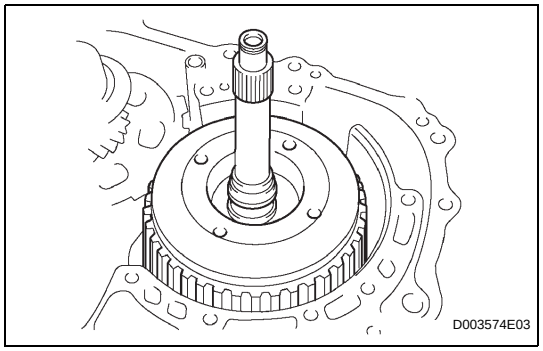

(c) Install the forward clutch to the transaxle case.
NOTICE:
- **Align the splines of all discs in the forward clutch with those of multiple clutch hub to install them securely.**
- **Be careful not to damage the bushing inside of the forward clutch hub during installation.**

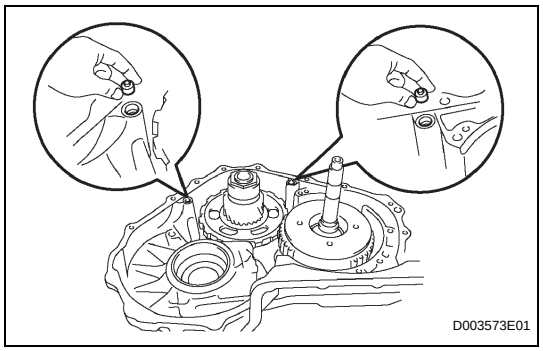

45. INSTALL OVERDRIVE BRAKE GASKET
(a) Install 2 new overdrive brake gaskets.

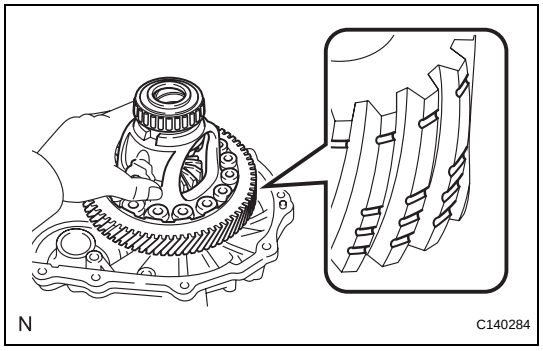

46. INSTALL DIFFERENTIAL GEAR ASSEMBLY
(a) Install the differential gear to the transaxle case.
NOTICE:
Check the position and number of the grooves on each end face of the differential ring gear.

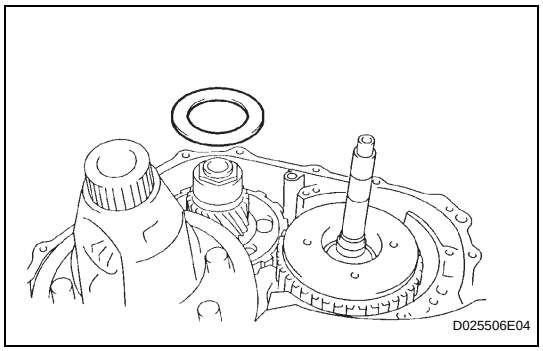

47. INSTALL NO. 2 THRUST BEARING UNDERDRIVE RACE
(a) Install the thrust bearing underdrive race to the underdrive planetary gear.

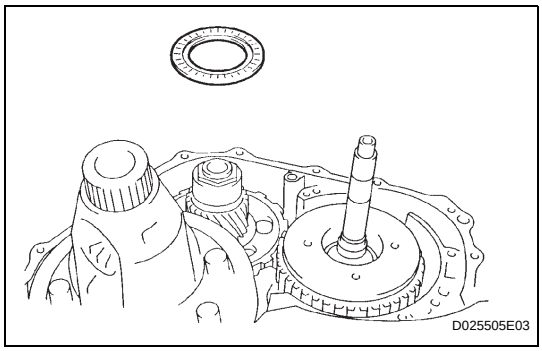

48. INSTALL THRUST NEEDLE ROLLER BEARING

(a) Coat the thrust needle roller bearing with ATF.

(b) Calculate the end play value using the following formula and values of Dimension E and F that were measured when installing the cylindrical roller bearing and underdrive planetary gear. Select an appropriate underdrive planetary gear thrust bearing race which satisfies the specified end play value, and install the selected bearing race.

Standard end play:

0.498 to 0.993 mm (0.01961 to 0.03909 in.)

HINT:

End play = Dimension F - Dimension E - thrust bearing thickness 2.5 mm (0.0984 in.) - underdrive thrust bearing race thickness.

Standard race thickness

F - E	Thickness
Less than 7.72 mm (0.3039 in.)	3.5 mm (0.138 in.)
7.72 mm (0.3039 in.)	3.8 mm (0.150 in.)

Standard bearing and bearing race diameter

Item	Inside	Outside
Bearing	57.2 mm (2.252 in.)	84.96 mm (3.345 in.)
Bearing race	56.4 mm (2.22 in.)	83 mm (3.268 in.)

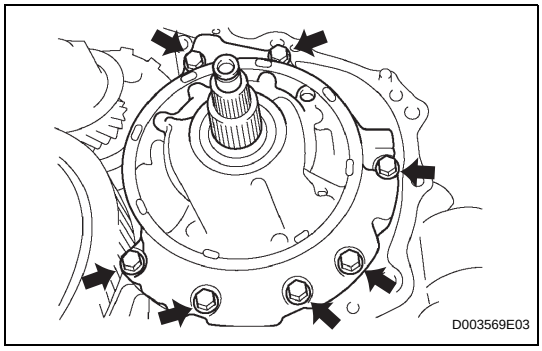

49. INSTALL OIL PUMP ASSEMBLY

(a) Install the oil pump to the transaxle case with the 7 bolts.

Torque: 22 N*m (226 kgf*cm, 16 ft.*lbf)

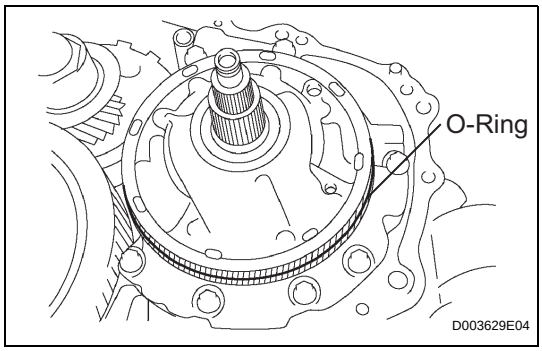

(b) Coat the O-ring of oil pump with ATF.

NOTICE:

Confirm that the input shaft rotates smoothly by manual operation after installing the oil pump.

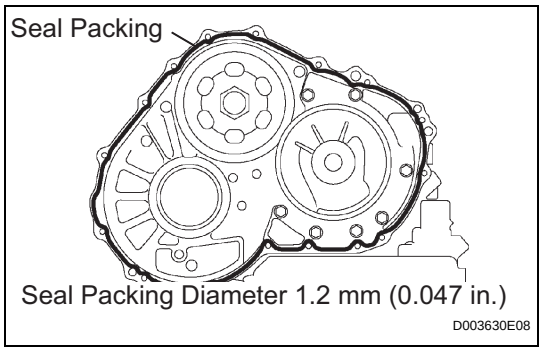

50. INSTALL TRANSAXLE HOUSING

(a) Remove any packing material and be careful not to spill oil on the contact surface of the transaxle case or transaxle housing.

(b) Apply seal packing to the transaxle case.

Seal packing:
Toyota Genuine Seal Packing 1281,
Three Bond 1281 or Equivalent

(c) Apply adhesive or equivalent to bolts A and D.

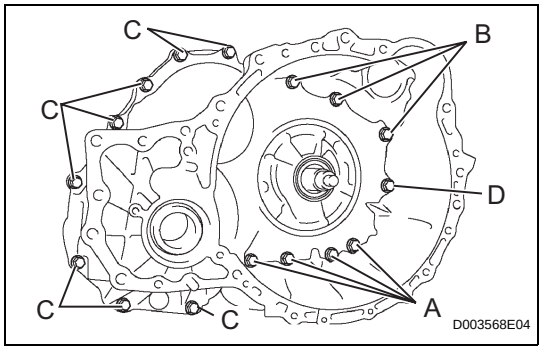

(d) Install the transaxle housing and 16 bolts to the transaxle case.

Torque: 22 N*m (224 kgf*cm, 16 ft.*lbf) for bolt A
29 N*m (295 kgf*cm, 21 ft.*lbf) for bolt B
29 N*m (295 kgf*cm, 21 ft.*lbf) for bolt C
22 N*m (226 kgf*cm, 16 ft.*lbf) for bolt D

Adhesive:
Toyota Genuine Adhesive 1344,
Three Bond 1344 or Equivalent

HINT:
Each bolt length is indicated below.

Bolt length:
50 mm (1.97 in.) for bolt A
50 mm (1.97 in.) for bolt B
42 mm (1.65 in.) for bolt C
72 mm (2.84 in.) for bolt D

NOTICE:
Tighten the bolts within 10 minutes of adhesive application.

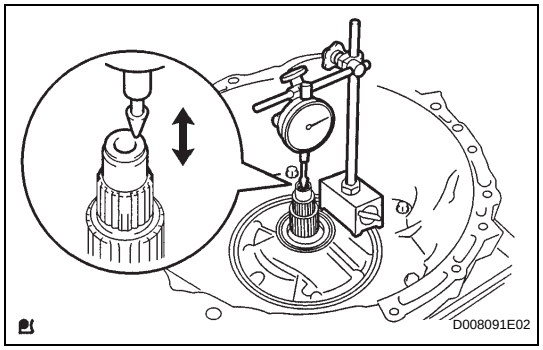

51. INSPECT INPUT SHAFT END PLAY

(a) Using a dial indicator, measure the input shaft end play.

Standard end play:
0.262 to 1.249 mm (0.0100 to 0.0494 in.)

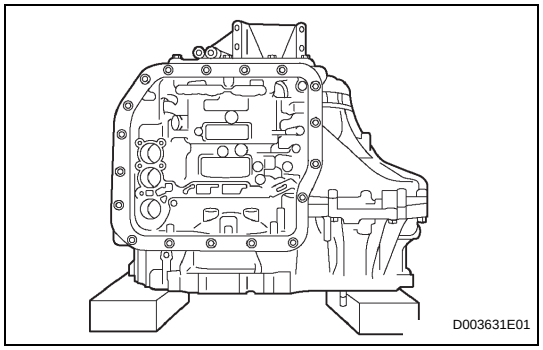

52. FIX AUTOMATIC TRANSAXLE ASSEMBLY

(a) Fix the transaxle.

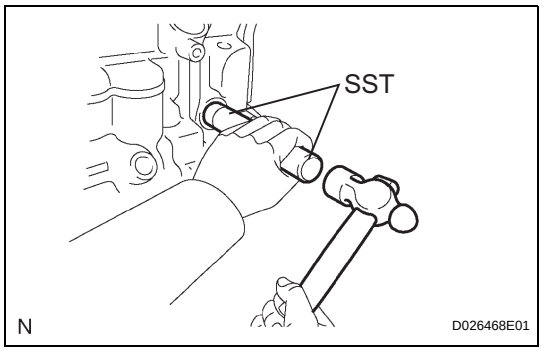

53. INSTALL MANUAL VALVE LEVER SHAFT OIL SEAL

(a) Coat a new oil seal with MP grease.

(b) Install the oil seal to the transaxle case.

SST 09950-60010 (09951-00230), 09950-70010 (09951-07100)

Standard depth:

0 +- 0.5 mm (0 +- 0.197 in.)

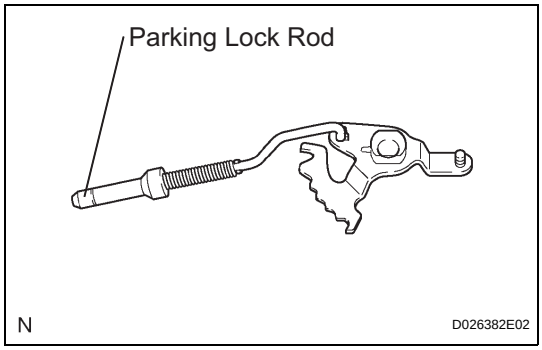

54. INSTALL PARKING LOCK ROD SUB-ASSEMBLY

(a) Install the parking lock rod to the manual valve lever.

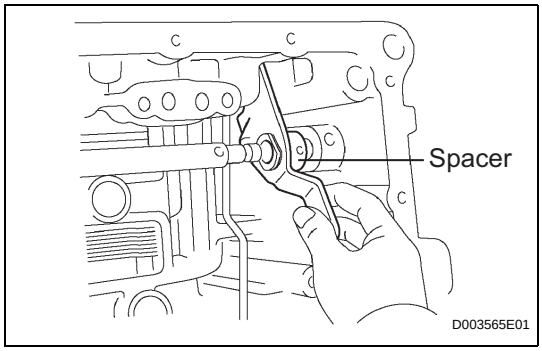

55. INSTALL MANUAL VALVE LEVER SUB-ASSEMBLY

(a) Install a new spacer and manual valve lever shaft to the transaxle case.

NOTICE:

Do not damage the oil seal when installing the shaft to the transaxle case.

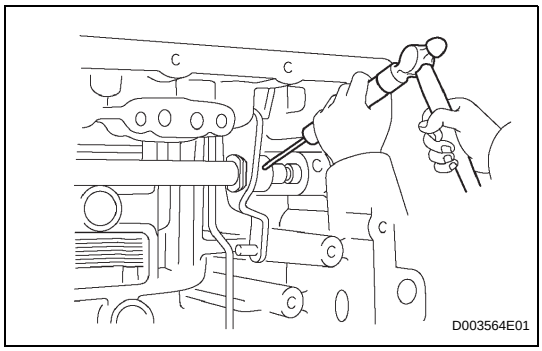

(b) Using a pin punch and hammer, drive in a new pin.

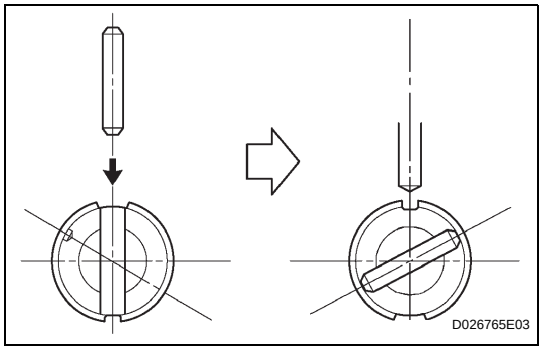

(c) Turn the spacer and the lever shaft to align the small hole (for locating the staking position in the spacer) with the staking position mark on the lever shaft.

(d) Using a pin punch, stake the spacer through the small hole.

(e) Check that the spacer does not turn.

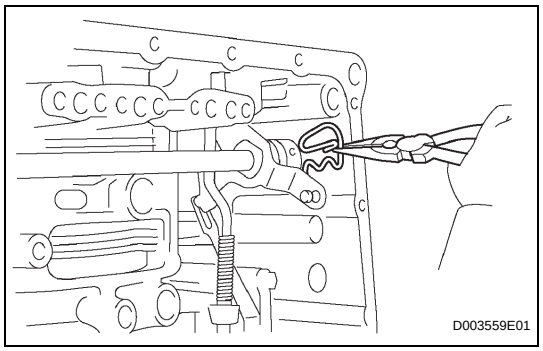

56. INSTALL MANUAL VALVE LEVER SHAFT RETAINER SPRING

(a) Using needle-nose pliers, install the retainer spring.

NOTICE:

Hang the spring on the shaft firmly.

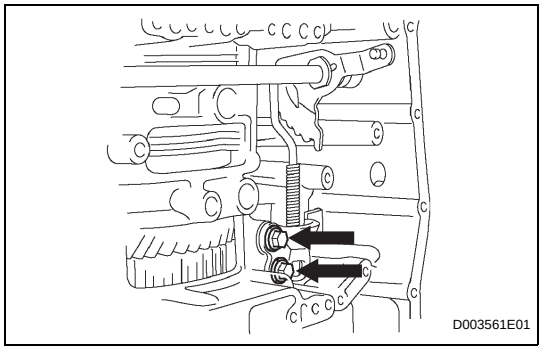

57. INSTALL PARKING LOCK PAWL BRACKET

(a) Install the parking lock pawl bracket with the 2 bolts.

Torque: 20 N*m (205 kgf*cm, 15 ft.*lbf)

HINT:

The bolt length is indicated below.

Bolt length:

25 mm (0.984 in.)

NOTICE:

Make sure that the parking rod is placed between the parking pawl and the guide of the parking bracket when the parking bracket is installed.

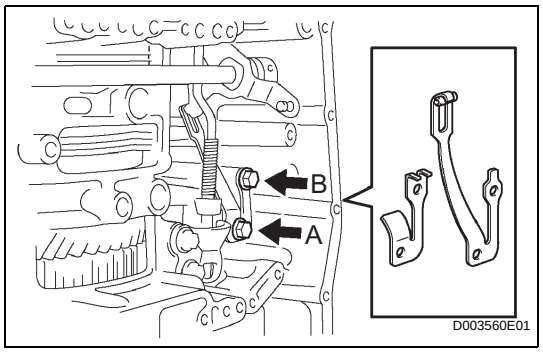

58. INSTALL MANUAL DETENT SPRING SUB-ASSEMBLY

(a) Install the manual detent spring and cover with the 2 bolts.

NOTICE:

Make sure to install the manual detent spring and cover in this order.

HINT:

Tighten bolt A first, and then bolt B.

Torque: 20 N*m (204 kgf*cm, 15 ft.*lbf) for bolt A

12 N*m (122 kgf*cm, 9 ft.*lbf) for bolt B

HINT:

Each bolt length is indicated below.

Bolt length:

27 mm (1.06 in.) for bolt A

16 mm (0.63 in.) for bolt B

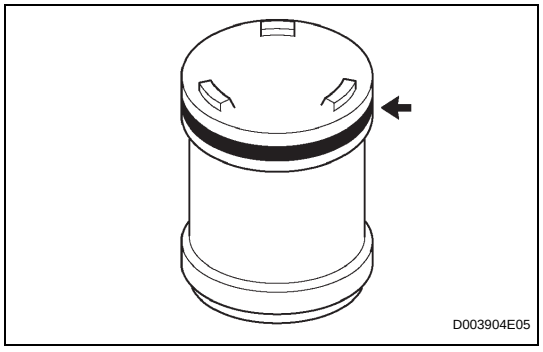

59. INSTALL B-3 ACCUMULATOR PISTON

(a) Coat a new O-ring with ATF, and install it to the B-3 accumulator piston.

NOTICE:

Make sure that the O-ring is not twisted and that it does not protrude abnormally from the accumulator piston. Apply sufficient ATF before installing the O-ring. The O-ring must be installed in the correct position.

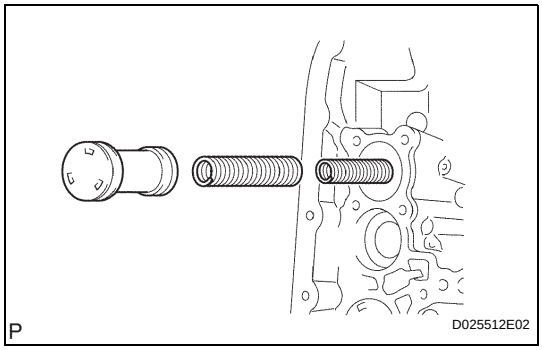

(b) Install the accumulator piston to the transaxle case.
(1) Coat the piston with ATF.
(2) Install the 2 springs to the piston, and install the piston (with springs) to the transaxle case.
NOTICE:
Before installing the springs, check the identification color of each spring.
Standard accumulator spring

Spring	Free length / Outer diameter	Identification Color
Inner	62.00 mm (2.4409 in.) / 15.50 mm (0.610 in.)	Purple
Outer	74.23 mm (2.9224 in.) / 21.70 mm (0.854 in.)	

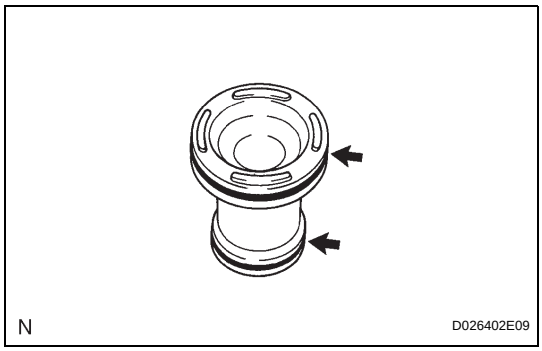

60. INSTALL REVERSE CLUTCH ACCUMULATOR PISTON

(a) Coat 2 new O-rings with ATF, and install them to the reverse accumulator piston.
NOTICE:
Make sure that the O-ring is not twisted and that it does not protrude abnormally from the accumulator piston. Apply sufficient ATF before installing the O-ring. The O-ring must be installed in the correct position.

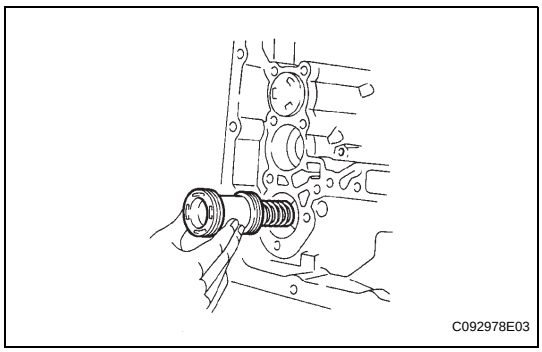

(b) Install the piston to the transaxle case.
(1) Coat the accumulator piston with ATF.
(2) Install the spring to the piston, and install the piston (with spring) to the transaxle case.
NOTICE:
Before installing the spring, check the identification color of the spring.
Standard accumulator spring

Free length Outer diameter	Identification Color
60.96 mm (2.3999 in.) / 14.10 mm (0.555 in.)	Yellow

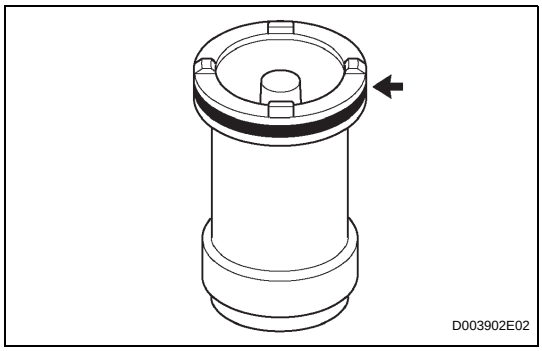

61. INSTALL C-3 ACCUMULATOR PISTON

(a) Coat a new O-ring with ATF, and install it to the C-3 accumulator piston.
NOTICE:
Make sure that the O-ring is not twisted and that it does not protrude abnormally from the accumulator piston. Apply sufficient ATF before installing the O-ring. The O-ring must be installed in the correct position.

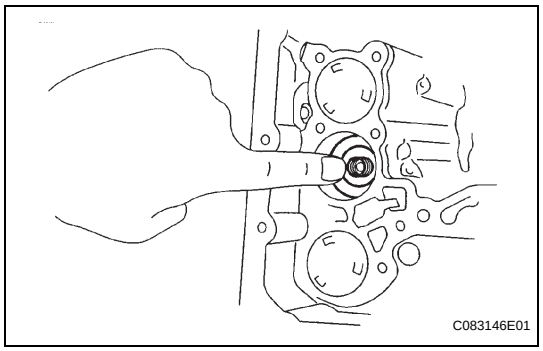

(b) Coat the piston with ATF, install it to the transaxle case.
NOTICE:
Install the springs to each accumulator piston, checking the identification color of each spring.
Standard accumulator spring
Standard accumulator spring

Free length Outer diameter	Color
72.20 mm (2.8425 in.) / 19.0 mm (0.748 in.)	Colorless

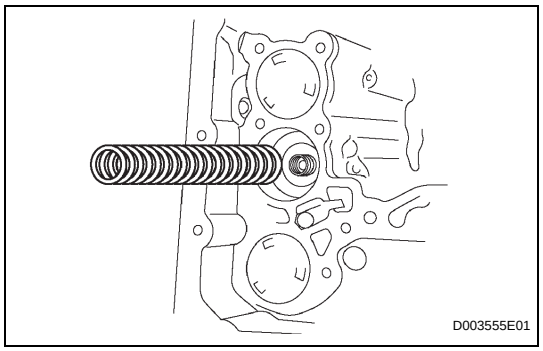

(c) Install the spring to the C-3 accumulator piston.
NOTICE:
Install the springs to each accumulator piston, checking the identification color of each spring.

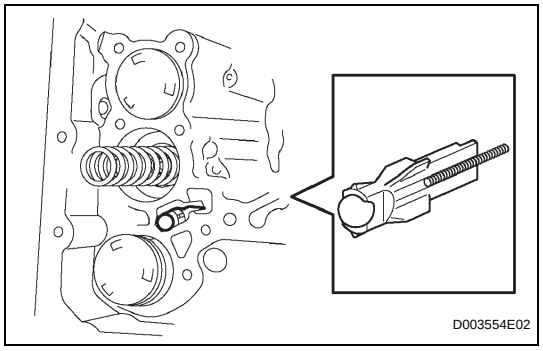

62. INSTALL CHECK BALL BODY
(a) Coat the check ball body with ATF.
(b) Install the check ball body and spring.
NOTICE:
Be sure to place the spring in the hole in the check ball body. Be careful of the direction of the parts.

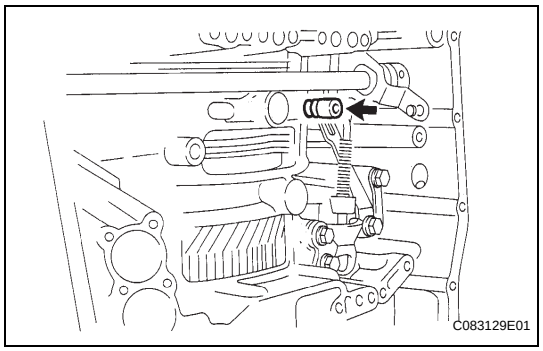

63. INSTALL BRAKE DRUM GASKET
(a) Coat a new brake drum gasket with ATF, and install it to the transaxle case.
NOTICE:
Be sure not to damage the lip of the transaxle case brake gasket when inserting the gasket to the case. Apply sufficient ATF to the gasket before installation. Be careful of the direction of parts.

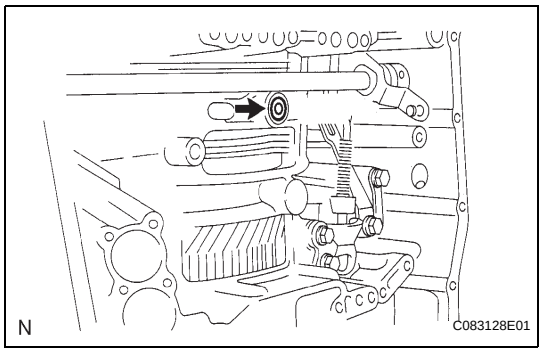

64. INSTALL TRANSAXLE CASE 2ND BRAKE GASKET
(a) Coat a new transaxle case 2nd brake gasket with ATF, and install it to the transaxle case.
NOTICE:
Be sure not to damage the lip of the transaxle case brake gasket when inserting the gasket to the case. Apply sufficient ATF to the gasket before installation. Be careful of the direction of parts.

AX

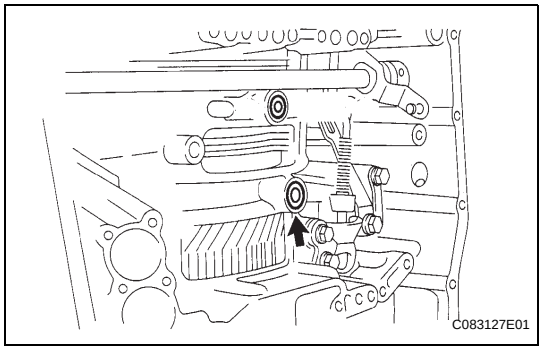

65. INSTALL NO. 1 GOVERNOR APPLY GASKET

(a) Coat a new governor apply gasket with ATF, and install it to the transaxle case.

NOTICE:

Be sure not to damage the lip of the transaxle case brake gasket when inserting the gasket to the case. Apply sufficient ATF to the gasket before installation. Be careful of the direction of parts.

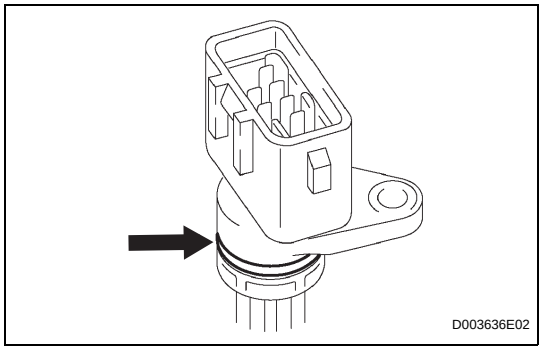

66. INSTALL TRANSMISSION WIRE

(a) Coat a new O-ring with ATF, and install it to the transmission wire.

NOTICE:

Make sure that the O-ring is not twisted, protruded, or pinched when installing the wire transmission to the transaxle case. Apply sufficient ATF to the O-ring before installation.

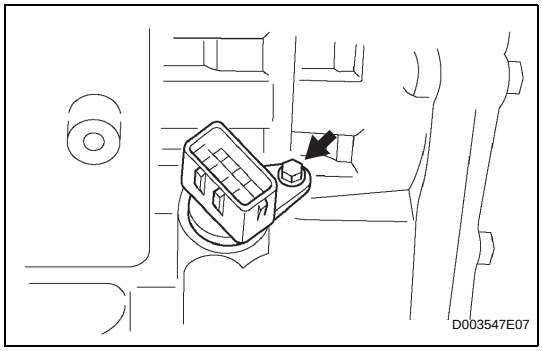

(b) Install the transmission wire retaining bolt.

Torque: 5.4 N*m (55 kgf*cm, 48 in.*lbf)

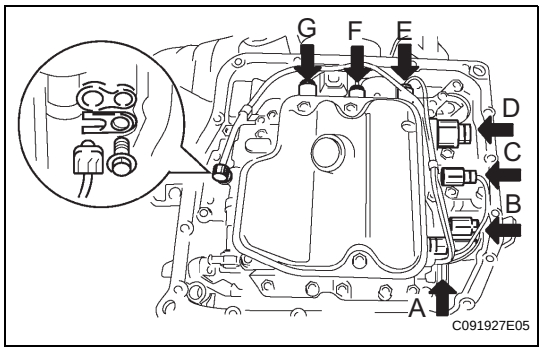

67. CONNECT TRANSMISSION WIRE

(a) Coat the O-ring of the ATF temperature sensor with ATF.

(b) Apply ATF to the bolt.

(c) Install the ATF temperature sensor with the lock plate and bolt.

Torque: 6.6 N*m (67 kgf*cm, 58 in.*lbf)

(d) Connect the 7 solenoid valve connectors.

68. INSTALL TRANSMISSION VALVE BODY ASSEMBLY

(a) Apply ATF to the 17 bolts.

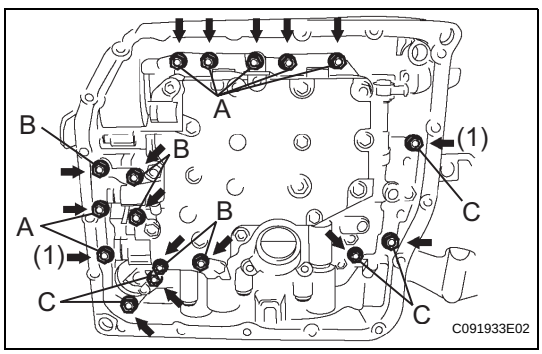

(b) While positioning the manual valve lever position, install the valve body to the transaxle case with the 17 bolts.

Torque: 11 N*m (112 kgf*cm, 8 ft.*lbf)

HINT:

Each bolt length is indicated below.

Bolt length:

25 mm (0.984 in.) for bolt A
57 mm (2.244 in.) for bolt B
41 mm (1.614 in.) for bolt C

NOTICE:
- **Push the valve body against the accumulator piston spring and the check ball body to install the valve body.**
- **When installing the valve body to the transaxle case, do not hold the solenoids.**
- **Temporarily tighten the bolts marked with (1) in the illustration first because they are positioning bolts.**

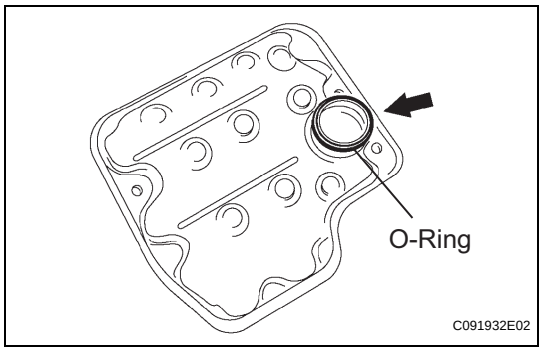

69. INSTALL VALVE BODY OIL STRAINER ASSEMBLY

(a) Coat a new O-ring with ATF and install it to the oil strainer.

NOTICE:
Make sure that the O-ring is not twisted or pinched. Apply sufficient ATF to the O-ring before installation.

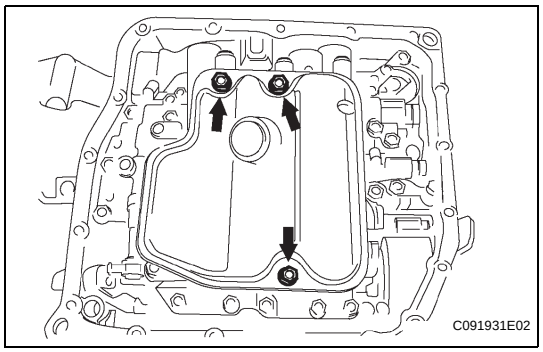

(b) Install the oil strainer to the valve body with the 3 bolts.

Torque: 11 N*m (112 kgf*cm, 8 ft.*lbf)
NOTICE:
Apply ATF to the bolts.

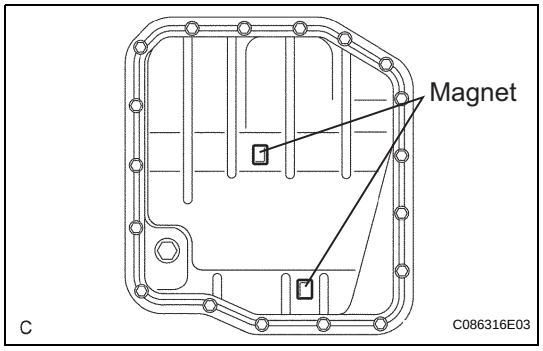

70. INSTALL AUTOMATIC TRANSAXLE OIL PAN SUB-ASSEMBLY

(a) Install the 2 magnets to the oil pan.

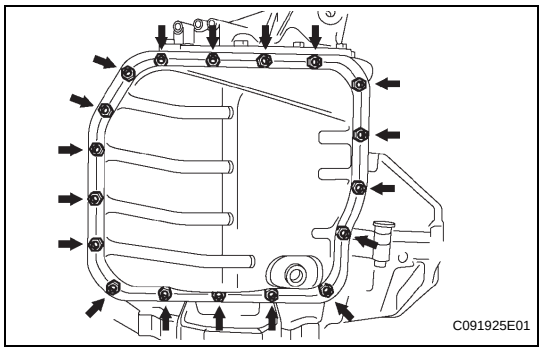

(b) Install the oil pan and new oil pan gasket to the transaxle case with the 18 bolts.

Torque: 7.8 N*m (80 kgf*cm, 69 in.*lbf)
NOTICE:
Completely remove any oil or grease from the contact surface of the transaxle case and the oil pan with the gasket before installing the oil pan to the case.

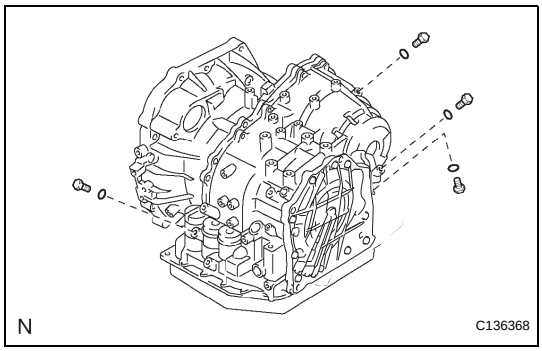

71. INSTALL NO. 1 TRANSAXLE CASE PLUG

(a) Coat 4 new O-rings with ATF, and install them to the 4 plugs.

(b) Install the 4 plugs to the transaxle case.
Torque: 7.4 N*m (75 kgf*cm, 65 in.*lbf)

72. INSTALL SPEEDOMETER DRIVEN HOLE COVER SUB-ASSEMBLY

(a) Coat a new O-ring with ATF, and install it to the cover.

(b) Install the cover with the bolt.
Torque: 5.5 N*m (56 kgf*cm, 49 in.*lbf)

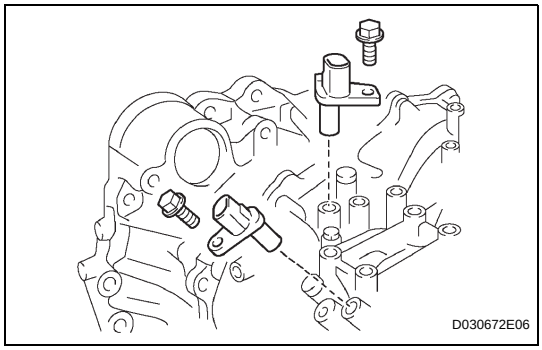

73. INSTALL SPEED SENSOR

(a) Coat 2 new O-rings with ATF and install them to the 2 sensors.

(b) Install the 2 sensors to the transaxle case with the 2 bolts.
Torque: 11 N*m (112 kgf*cm, 8 ft.*lbf)

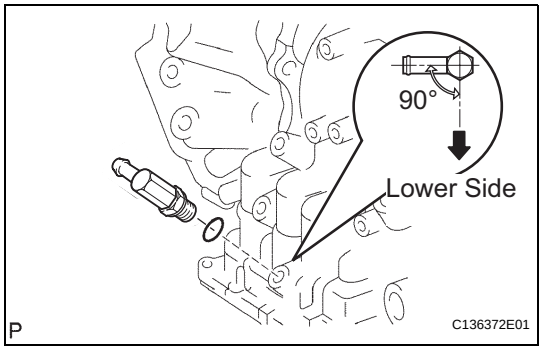

74. INSTALL OIL COOLER INLET TUBE ELBOW

(a) Coat a new O-ring with ATF, and install it to the elbow.

(b) Install the elbow to the transaxle case.
Torque: 27 N*m (276 kgf*cm, 20 ft.*lbf)

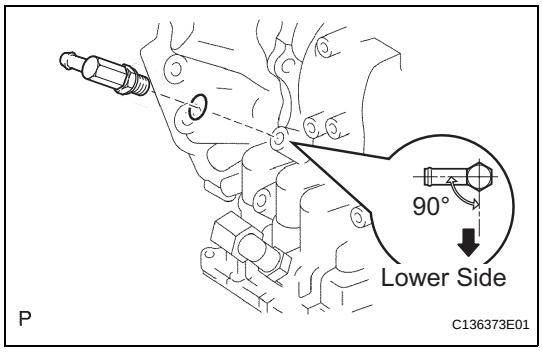

75. INSTALL OIL COOLER OUTLET TUBE ELBOW

(a) Coat a new O-ring with ATF, and install it to the elbow.

(b) Install the elbow to the transaxle case.
Torque: 27 N*m (276 kgf*cm, 20 ft.*lbf)

76. INSTALL BREATHER PLUG HOSE

(a) Install the breather plug hose to the transaxle case firmly.

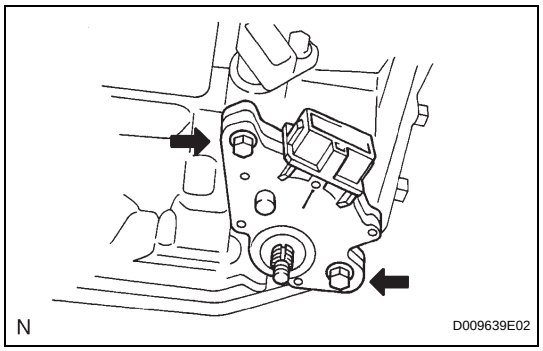

77. INSTALL PARK/NEUTRAL POSITION SWITCH ASSEMBLY

(a) Install the switch to the manual valve shaft.
(b) Temporarily install the 2 bolts.
(c) Install a new lock washer and tighten the manual valve shaft nut.
Torque: 5.4 N*m (55 kgf*cm, 48 in.*lbf)

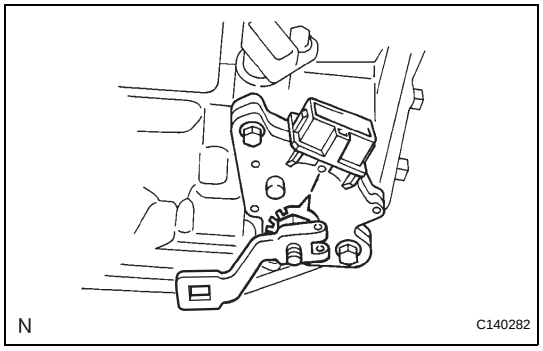

(d) Temporarily install the control shaft lever.

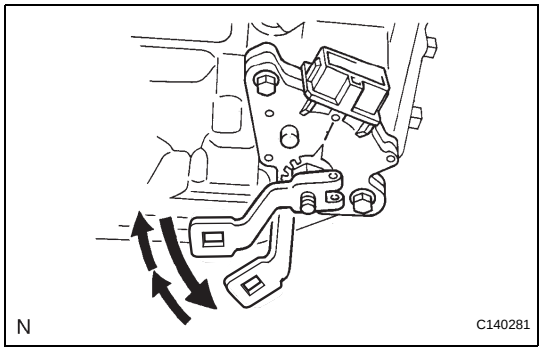

(e) Turn the lever counterclockwise until it stops, and then turn it clockwise 2 notches.
(f) Remove the control shaft lever.

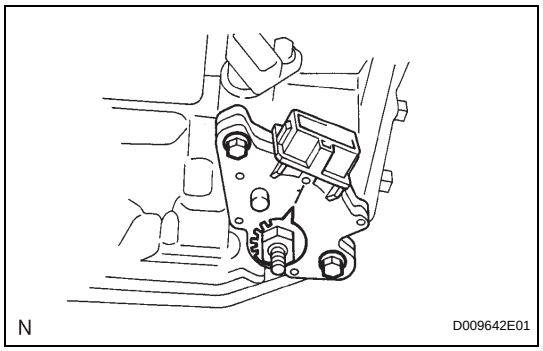

(g) Align the groove and neutral basic line.
(h) Hold the switch in this position and tighten the 2 bolts.
Torque: 6.9 N*m (70 kgf*cm, 61 in.*lbf)

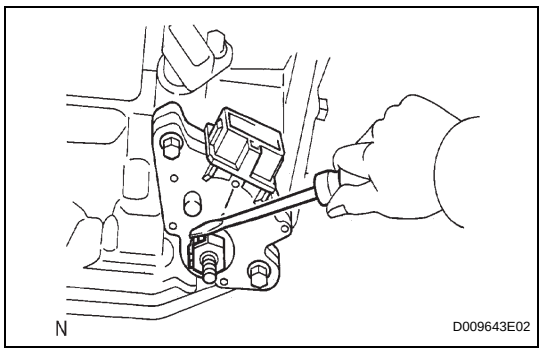

(i) Using a screwdriver, stake the nut with the lock washer.

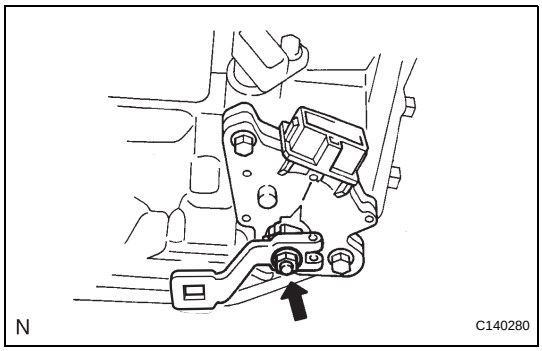

(j) Install the control shaft lever with the washer and nut.
Torque: 13 N*m (130 kgf*cm, 9 ft.*lbf)

78. INSTALL SPEEDOMETER DRIVEN HOLE COVER SUB-ASSEMBLY

(a) Coat a new O-ring with ATF and install it to the speedometer driven hole cover.

(b) Install the bolt and hole cover to the transaxle.
Torque: 6.9 N*m (70 kgf*cm, 61 in.*lbf)

AUTOMATIC TRANSAXLE UNIT

COMPONENTS

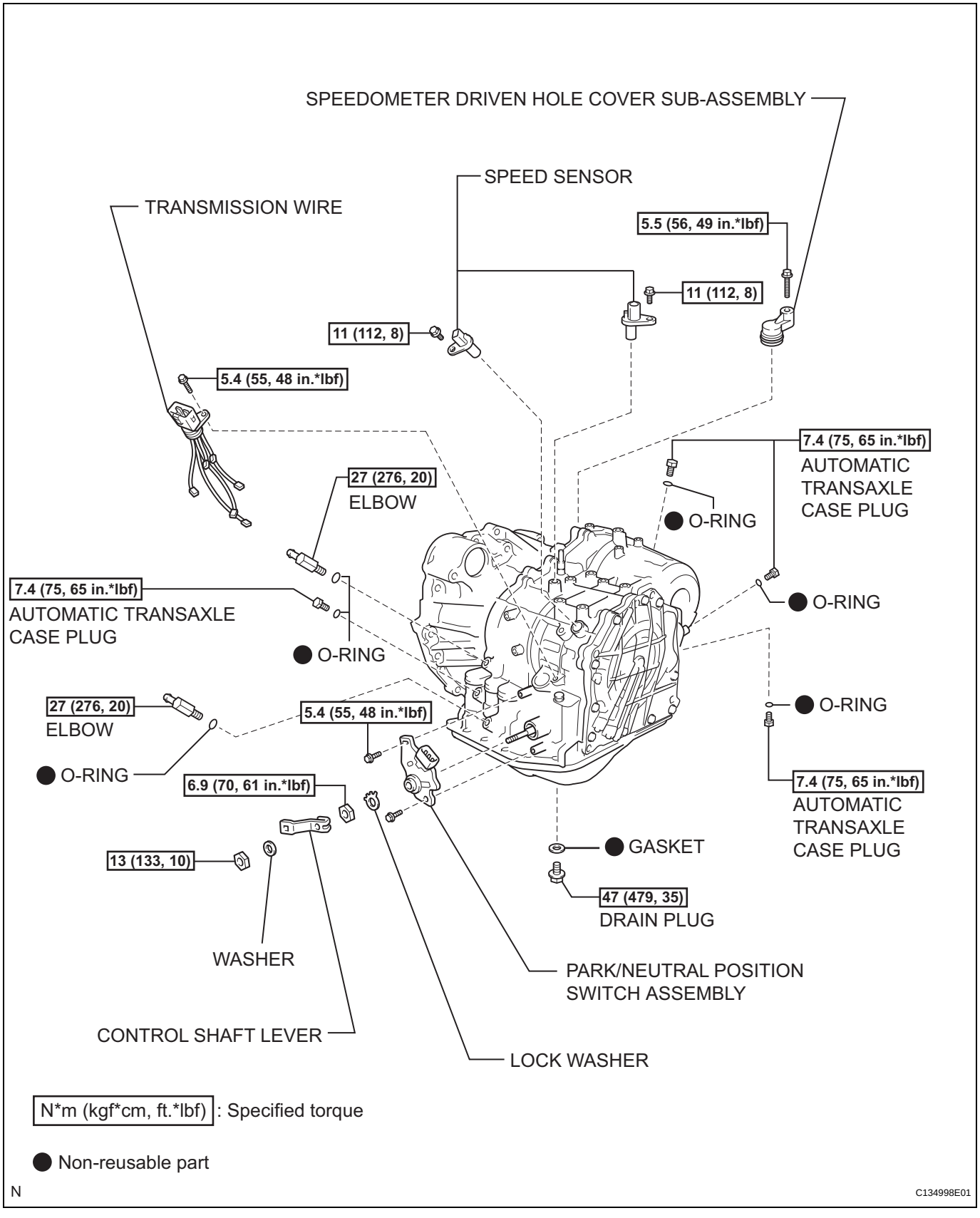

AX

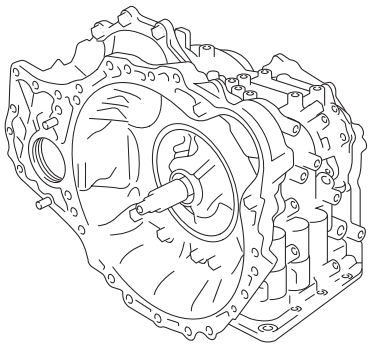

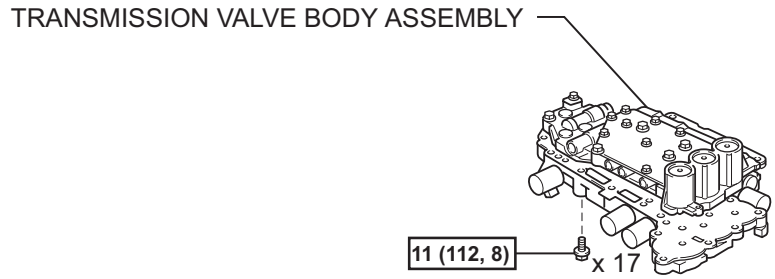

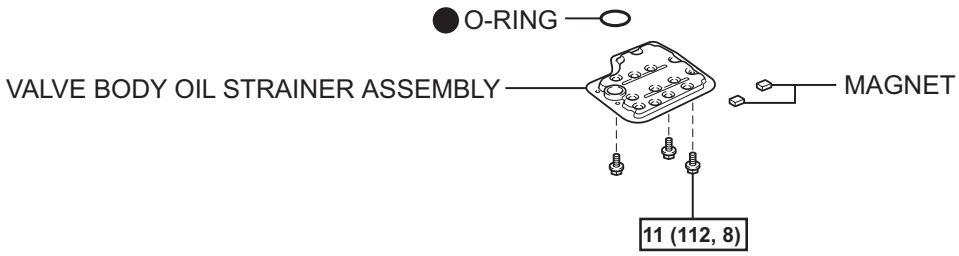

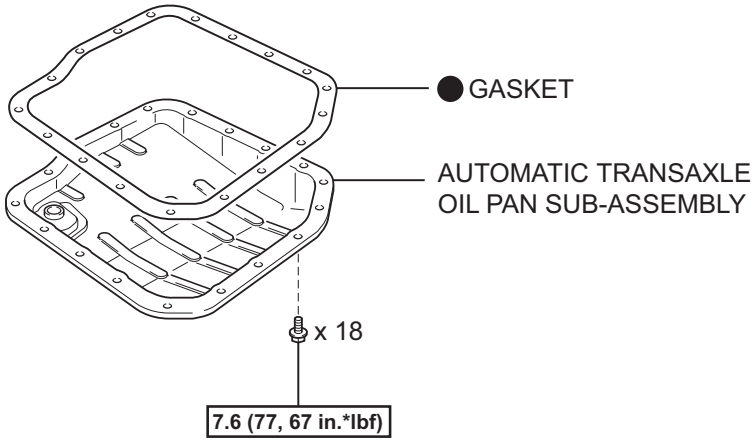

N*m (kgf*cm, ft.*lbf) : Specified torque

● Non-reusable part

N

C138656E01

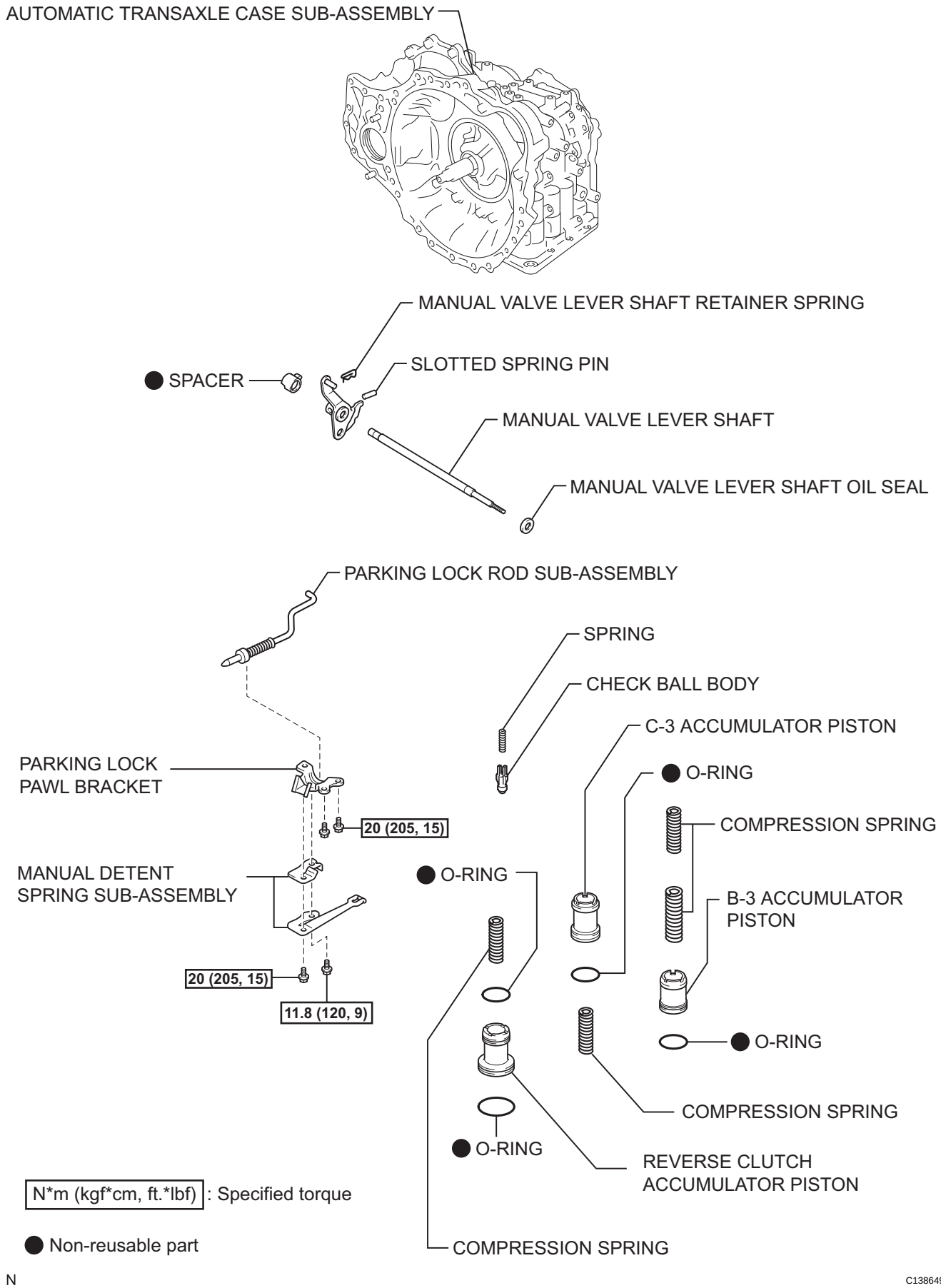
AUTOMATIC TRANSAXLE CASE SUB-ASSEMBLY
MANUAL VALVE LEVER SHAFT RETAINER SPRING
SLOTTED SPRING PIN
● SPACER
MANUAL VALVE LEVER SHAFT
MANUAL VALVE LEVER SHAFT OIL SEAL
PARKING LOCK ROD SUB-ASSEMBLY
SPRING
CHECK BALL BODY
C-3 ACCUMULATOR PISTON
● O-RING
COMPRESSION SPRING
PARKING LOCK PAWL BRACKET
20 (205, 15)
MANUAL DETENT SPRING SUB-ASSEMBLY
● O-RING
B-3 ACCUMULATOR PISTON
20 (205, 15)
11.8 (120, 9)
● O-RING
COMPRESSION SPRING
● O-RING
REVERSE CLUTCH ACCUMULATOR PISTON
N*m (kgf*cm, ft.*lbf) : Specified torque
● Non-reusable part
COMPRESSION SPRING
N
C138649E01

AX

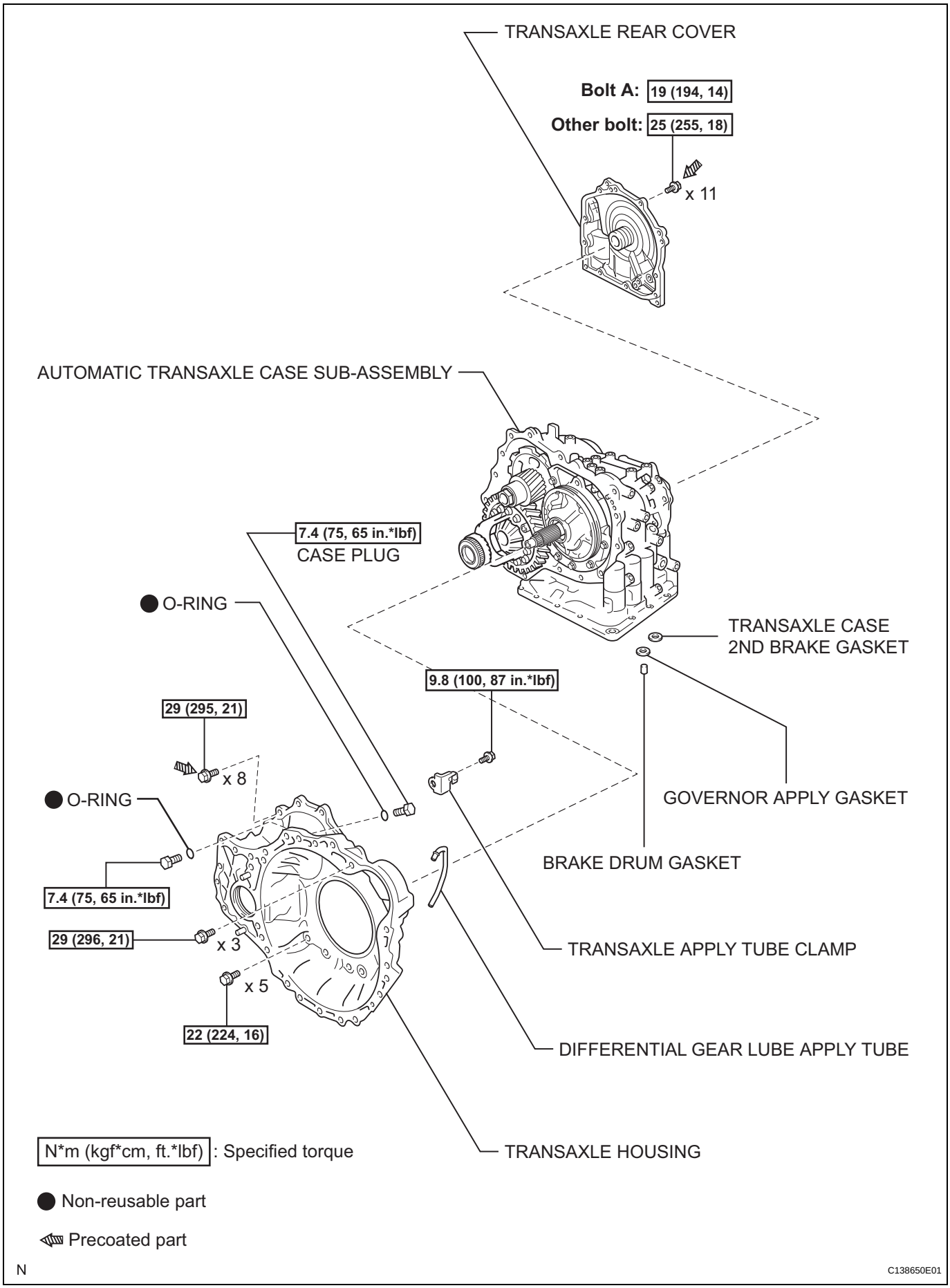

N

C138650E01

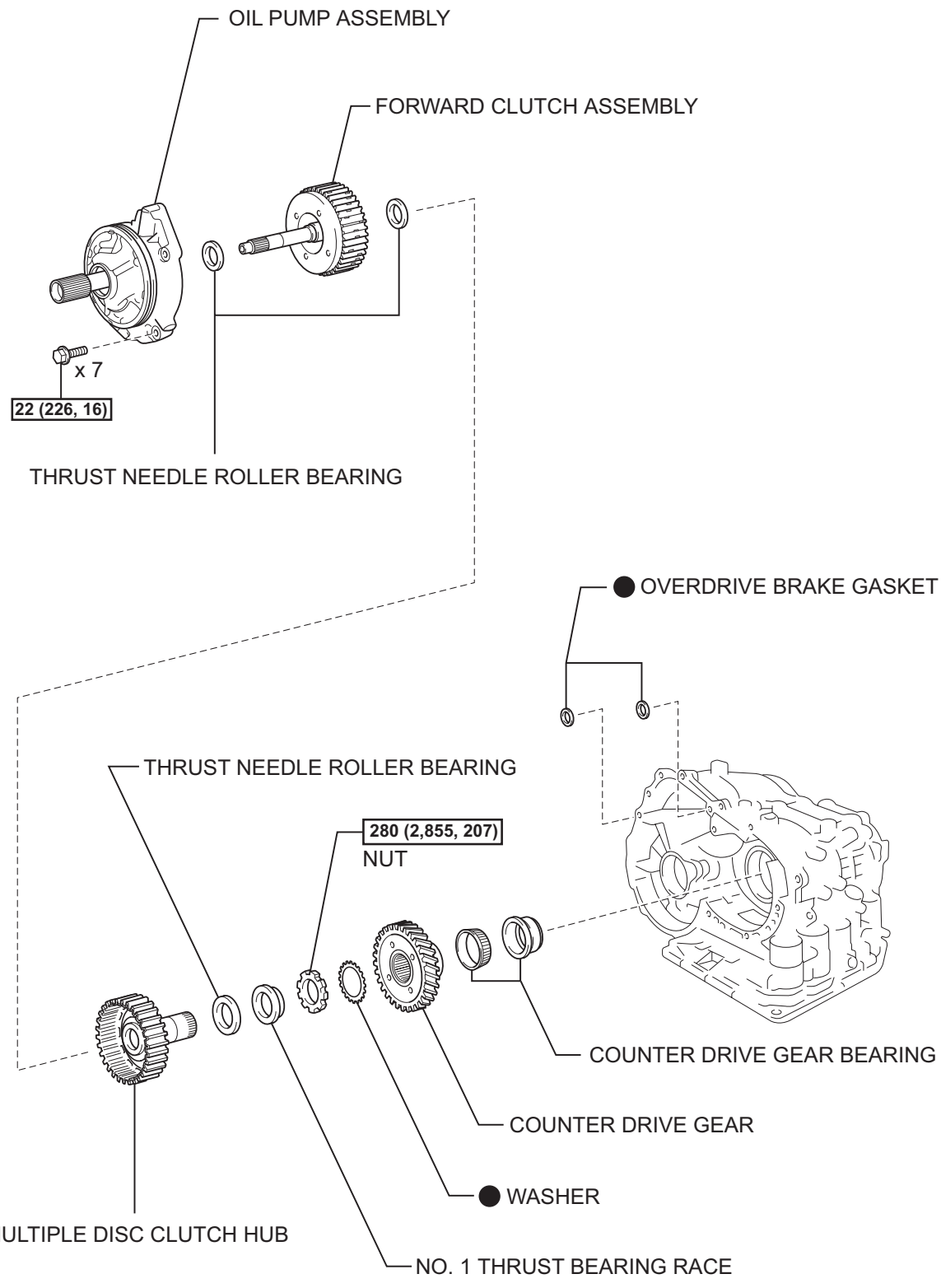

N*m (kgf*cm, ft.*lbf) : Specified torque

● Non-reusable part

N

C136346E02

AX

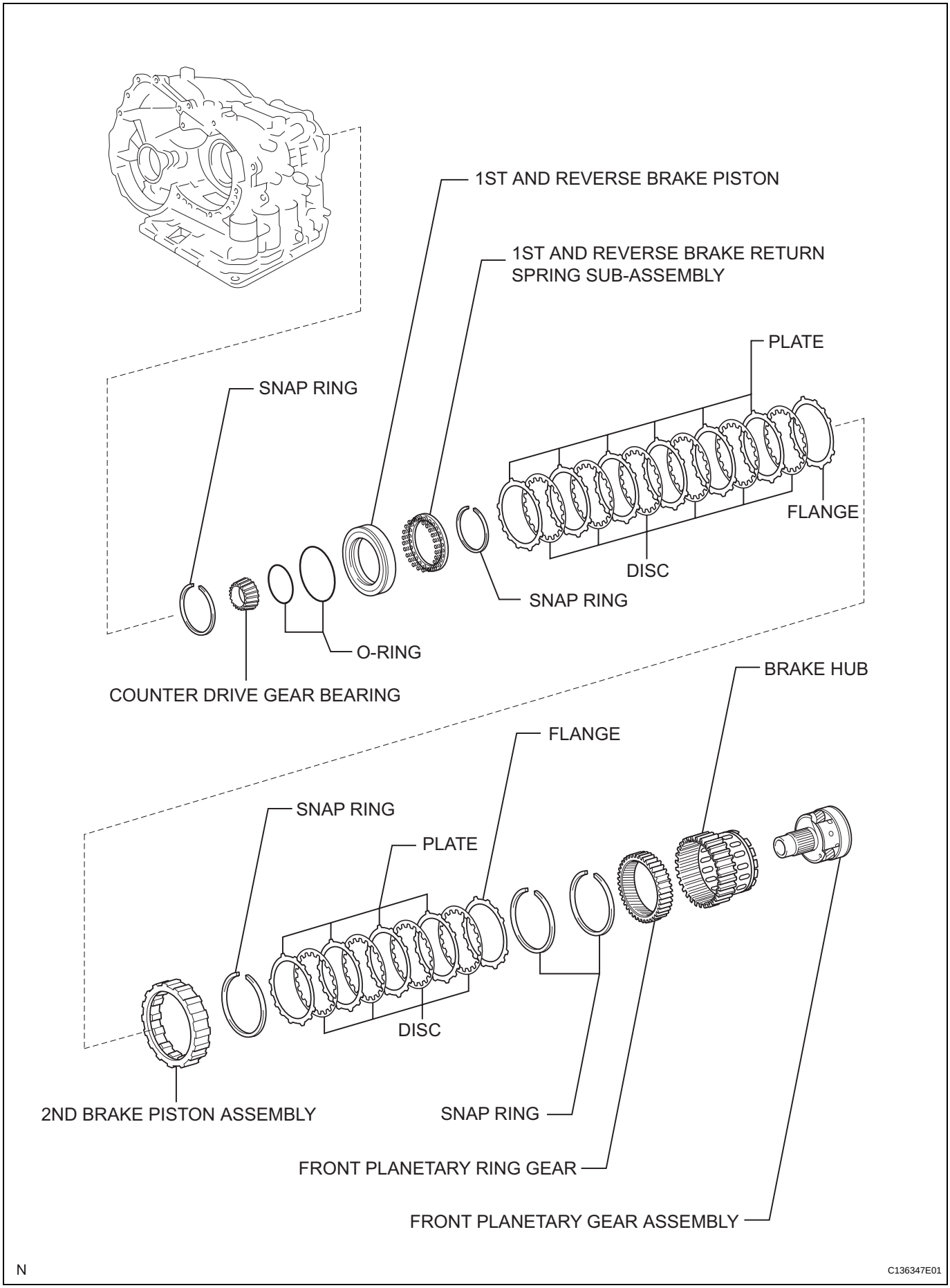

N

C136347E01

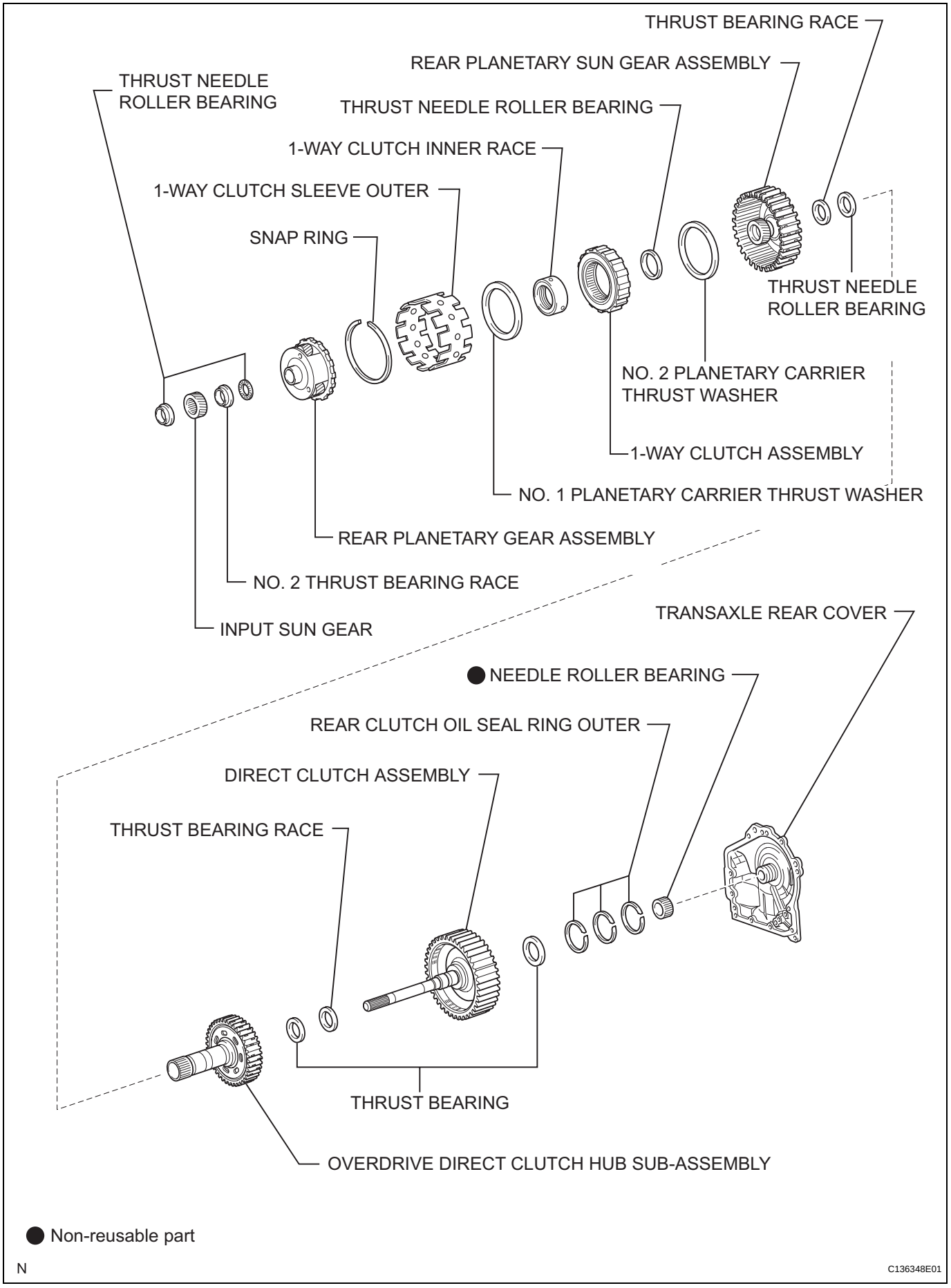
THRUST BEARING RACE
REAR PLANETARY SUN GEAR ASSEMBLY
THRUST NEEDLE ROLLER BEARING
THRUST NEEDLE ROLLER BEARING
1-WAY CLUTCH INNER RACE
1-WAY CLUTCH SLEEVE OUTER
SNAP RING
THRUST NEEDLE ROLLER BEARING
NO. 2 PLANETARY CARRIER THRUST WASHER
1-WAY CLUTCH ASSEMBLY
NO. 1 PLANETARY CARRIER THRUST WASHER
REAR PLANETARY GEAR ASSEMBLY
NO. 2 THRUST BEARING RACE
INPUT SUN GEAR
TRANSAXLE REAR COVER
● NEEDLE ROLLER BEARING
REAR CLUTCH OIL SEAL RING OUTER
DIRECT CLUTCH ASSEMBLY
THRUST BEARING RACE
THRUST BEARING
OVERDRIVE DIRECT CLUTCH HUB SUB-ASSEMBLY
● Non-reusable part
N
C136348E01

AX

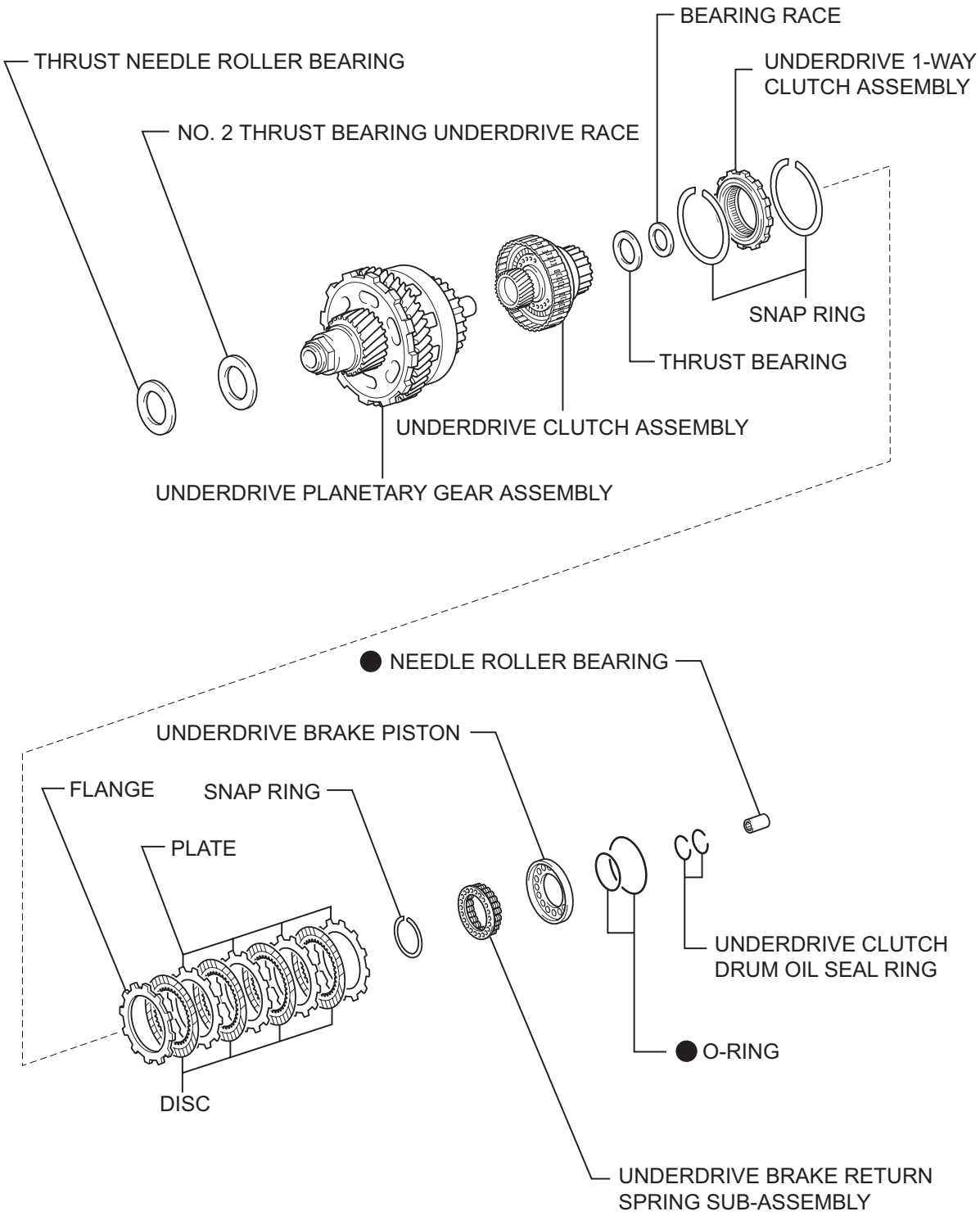

● Non-reusable part

N

C136349E01

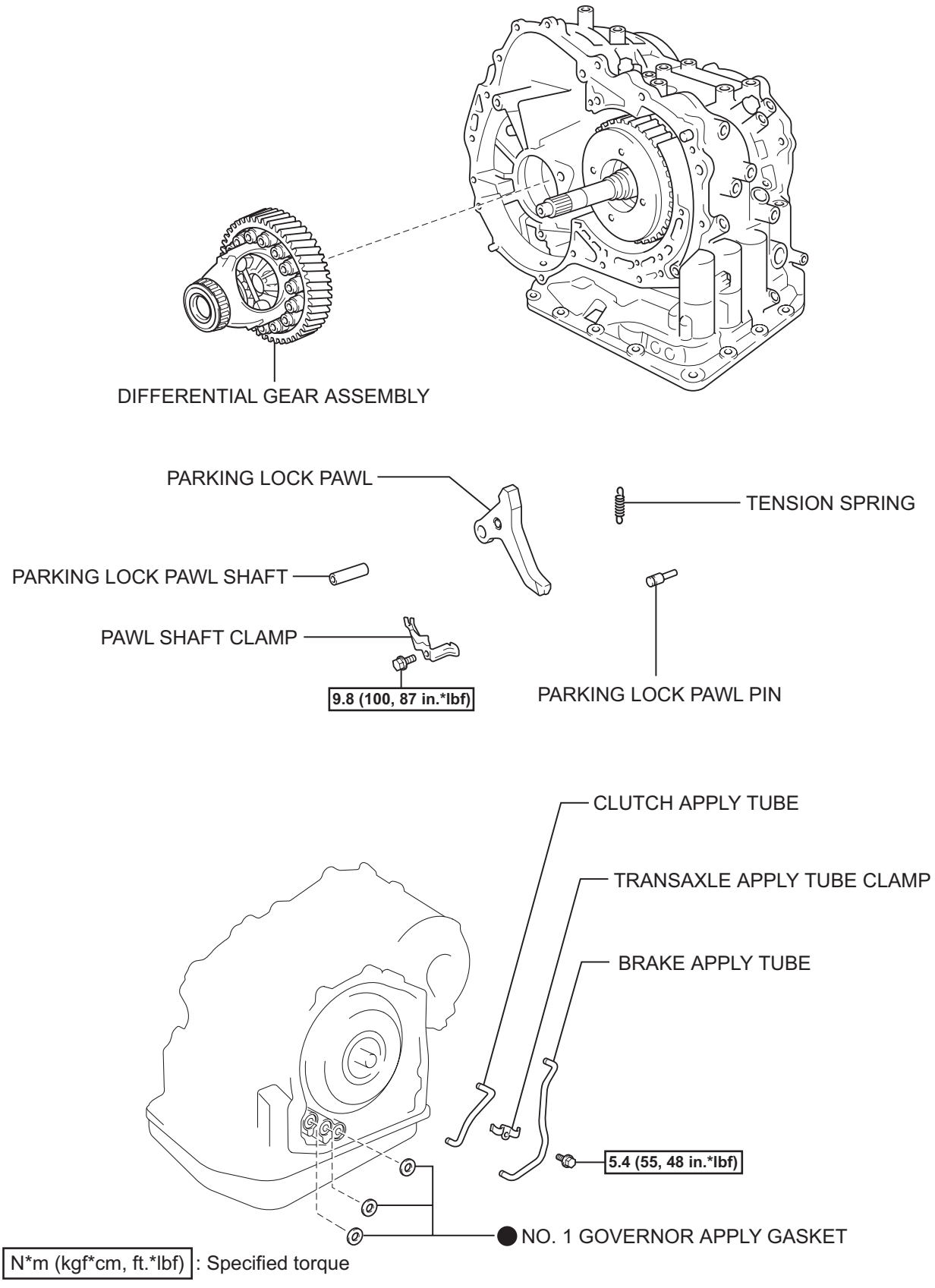

N

C136350E01

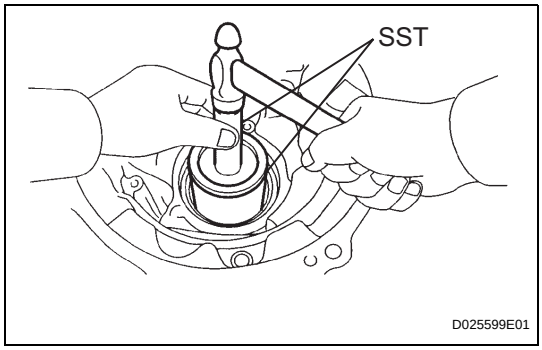

7. REMOVE TRANSAXLE HOUSING OIL SEAL

(a) Using SST and a hammer, tap out the oil seal.
SST 09950-70010 (09951-07100), 09215-00013 (09215-00471)

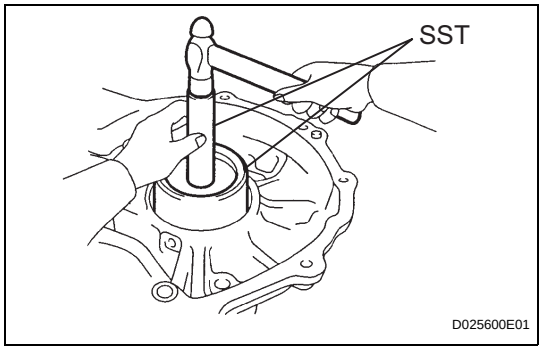

8. REMOVE DIFFERENTIAL SIDE BEARING RETAINER OIL SEAL

(a) Using SST and a hammer, tap out the oil seal.
SST 09950-70010 (09951-07100), 09608-10010

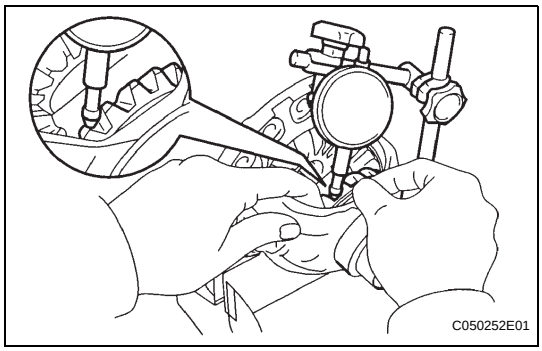

INSPECTION

1. INSPECT DIFFERENTIAL SIDE GEAR BACKLASH

(a) Using a dial indicator, measure the backlash of the side gear.
Standard backlash:
0.05 to 0.20 mm (0.0020 to 0.0070 in.)
Standard thrust washer thickness:
1.625 mm (0.0640 in.)
1.725 mm (0.0679 in.)
1.825 mm (0.0719 in.)

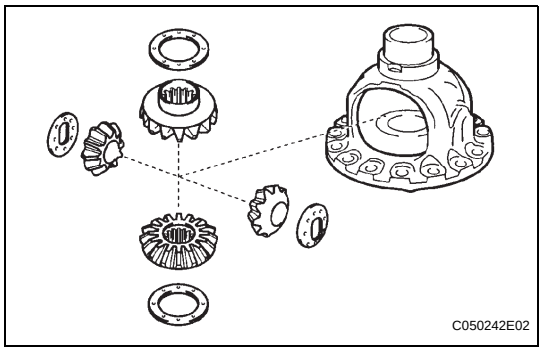

REASSEMBLY

1. INSTALL FRONT DIFFERENTIAL SIDE GEAR

(a) Coat the 2 front differential side gears, 2 side gear thrust washers, 2 front differential pinions and 2 pinion thrust washers with ATF and install them to the differential case.

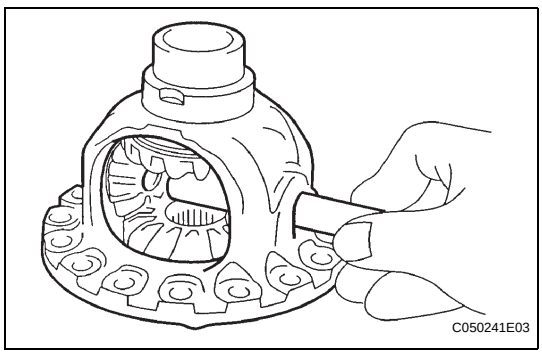

2. INSTALL NO. 1 FRONT DIFFERENTIAL PINION SHAFT

(a) Coat the No. 1 front differential pinion shaft with ATF, and install it to the differential case.

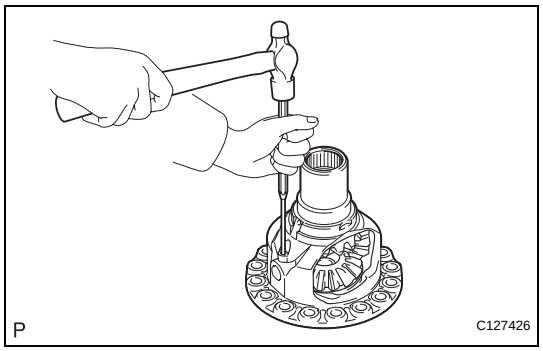

3. INSTALL FRONT DIFFERENTIAL PINION SHAFT STRAIGHT PIN

(a) Using a pin punch and a hammer, tap in the pinion shaft straight pin.

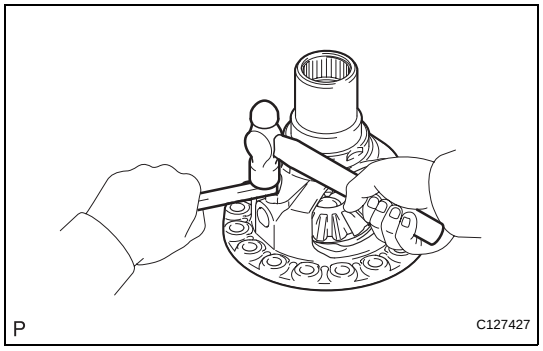

(b) Using a chisel and a hammer, stake the differential case.

NOTICE:
Stake it after adjusting the backlash.

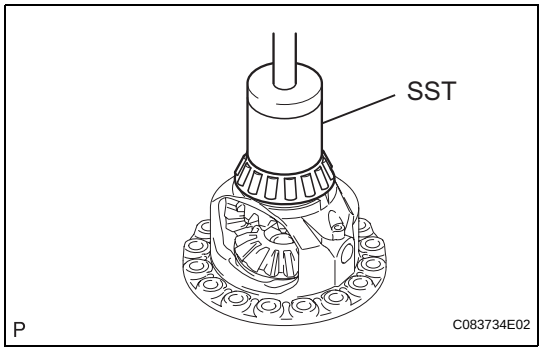

4. INSTALL FRONT DIFFERENTIAL CASE REAR TAPERED ROLLER BEARING

(a) Using SST and a press, press in the front differential case rear tapered roller bearing to the differential case.

SST 09550-60010, 09950-60020 (09951-00680), 09950-70010 (09951-07100)

NOTICE:
- **When replacing the bearing, be sure to replace it together with the outer race.**
- **When replacing a bearing of the differential case, replace both the front and rear bearings together.**

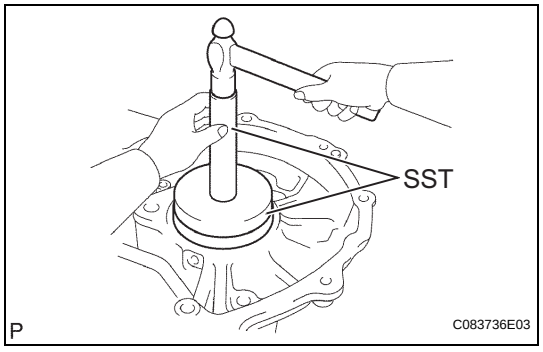

(b) Using SST and a hammer, tap in the front differential case rear tapered roller bearing outer race to the transaxle housing.

SST 09550-60010, 09950-60020 (09951-00680), 09950-70010 (09951-07100, 09951-00890)

NOTICE:
When replacing the bearing, be sure to replace it together with the outer race.

AX

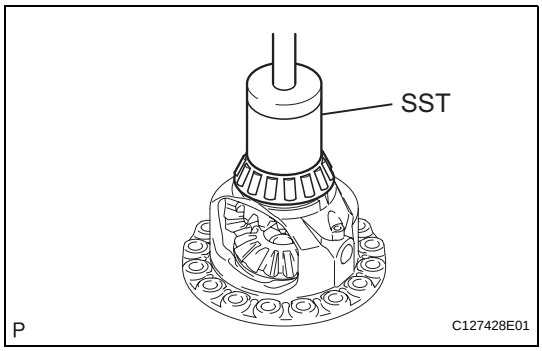

5. INSTALL FRONT DIFFERENTIAL CASE FRONT TAPERED ROLLER BEARING

(a) Using SST and a press, press in the front differential case front tapered roller bearing to the differential case.

SST 09550-60010, 09950-60020 (09951-00680), 09950-70010 (09951-07100, 09951-00890)

NOTICE:

- **When replacing the bearing, be sure to replace it together with the outer race.**
- **When replacing a bearing of the differential case, replace both the front and rear bearings together.**

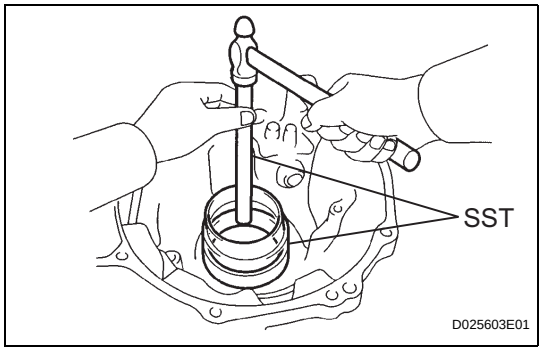

(b) Using SST and a hammer, tap in the front differential case front tapered roller bearing outer race to the transaxle housing.

SST 09550-60010, 09950-60020 (09951-00680), 09950-70010 (09951-07100, 09951-00890)

NOTICE:

- **When replacing the bearing, be sure to replace it together with the outer race.**
- **Clearance is not allowed between the bearing and transaxle housing.**

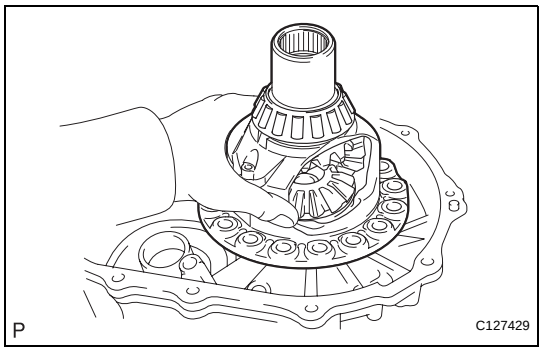

6. ADJUST DIFFERENTIAL SIDE BEARING PRELOAD

(a) Install the differential assembly to the transaxle case.

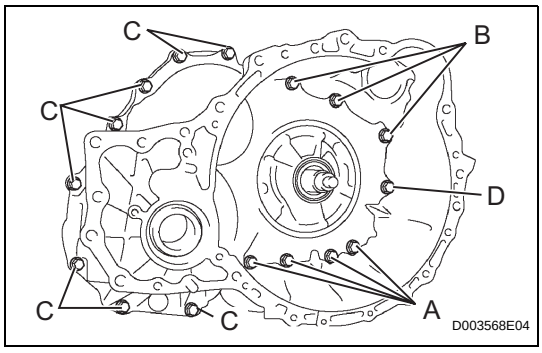

(b) Clean the matching surfaces of the transaxle case and transaxle housing.

(c) Install the transaxle housing to the transaxle case and tighten them with the 16 bolts.

Torque: 22 N*m (224 kgf*cm, 16 ft.*lbf) for bolt A
29 N*m (295 kgf*cm, 21 ft.*lbf) for bolt B
29 N*m (295 kgf*cm, 21 ft.*lbf) for bolt C
22 N*m (224 kgf*cm, 16 ft.*lbf) for bolt D

HINT:

- Each bolt length is indicated below.
  Bolt length:
  50 mm (1.97 in.) for bolt A
  50 mm (1.97 in.) for bolt B
  42 mm (1.65 in.) for bolt C
  72 mm (2.84 in.) for bolt D
- Usually, bolt A is a non-reusable bolt. In this case, however, it can be used after cleaning it.

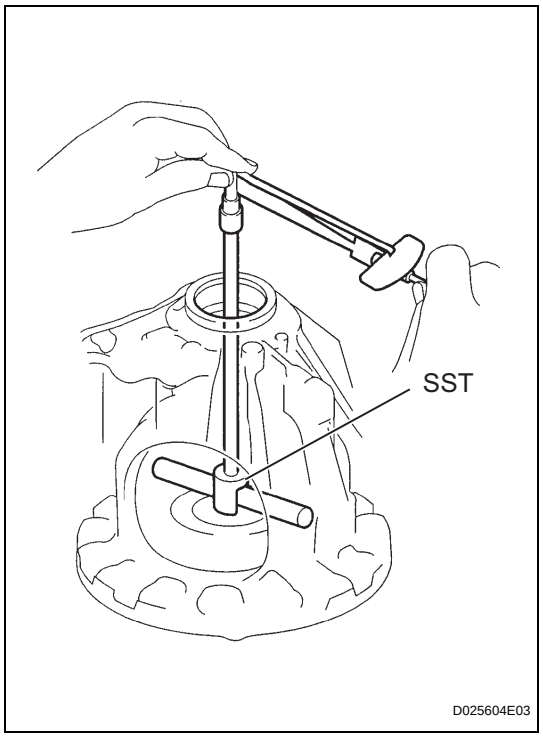

(d) Using SST, turn the differential assembly right and left 2 or 3 times to allow the bearing to settle.
SST 09564-32011

(e) Using SST and a torque wrench, measure the turning torque of the differential.
SST 09564-32011
Torque: Standard turning torque at 60 rpm
0.20 to 0.69 N*m (2.0 to 7.0 kgf*cm, 1.8 to 6.1 in.*lbf)

HINT:
If the turning torque is not within the specified value, refer to the table below and select a thrust washer so that the turning torque is within the specified value.

Flange thickness

Mark	Thickness	Mark	Thickness
0	2.00 mm (0.0787 in.)	J	2.025 mm (0.07972 in.)
1	2.05 mm (0.0807 in.)	K	2.075 mm (0.08169 in.)
2	2.10 mm (0.0827 in.)	L	2.125 mm (0.08366 in.)
3	2.15 mm (0.0846 in.)	M	2.175 mm (0.08563 in.)
4	2.20 mm (0.0866 in.)	N	2.225 mm (0.08760 in.)
5	2.25 mm (0.0886 in.)	P	2.275 mm (0.08957 in.)
6	2.30 mm (0.0906 in.)	Q	2.325 mm (0.09154 in.)
7	2.35 mm (0.0925 in.)	R	2.375 mm (0.09350 in.)
8	2.40 mm (0.0945 in.)	S	2.425 mm (0.09547 in.)
9	2.45 mm (0.0965 in.)	T	2.475 mm (0.09744 in.)
A	2.50 mm (0.0984 in.)	U	2.525 mm (0.09941 in.)
B	2.55 mm (0.1004 in.)	V	2.575 mm (0.10138 in.)
C	2.60 mm (0.1024 in.)	W	2.625 mm (0.10335 in.)
D	2.65 mm (1.1043 in.)	X	2.675 mm (0.10531 in.)
E	2.70 mm (0.1063 in.)	Y	2.725 mm (0.10728 in.)
F	2.75 mm (0.1083 in.)	AA	2.775 mm (0.10925 in.)
G	2.80 mm (0.1102 in.)	AB	2.825 mm (0.11122 in.)
H	2.85 mm (0.1122 in.)	-	-

AX

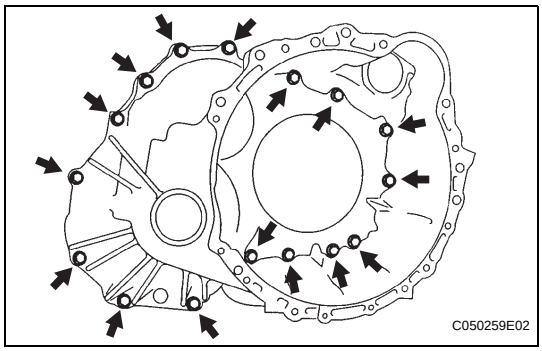

(f) Remove the 16 bolts and the transaxle housing.

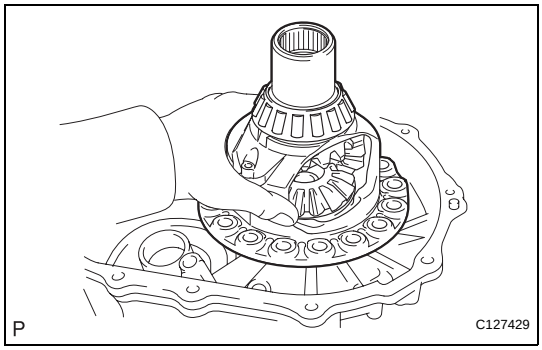

(g) Remove the differential assembly.

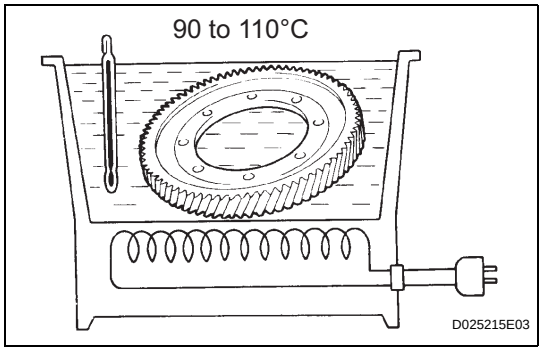

7. INSTALL FRONT DIFFERENTIAL RING GEAR

(a) Using ATF and a heater, heat the front differential ring gear to 90 to 110°C (194.0 to 230.0°F).
NOTICE:
Do not overheat the ring gear to 110°C (230.0°F) or more.

(b) Clean the contract surface of the front differential case.

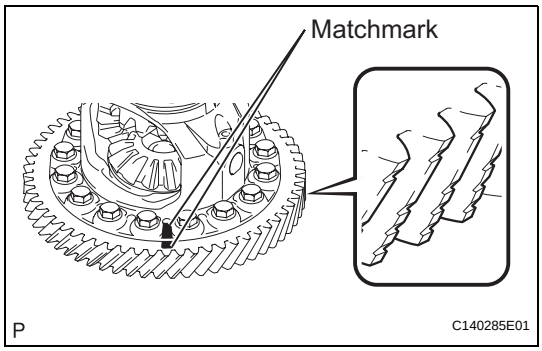

(c) Align the matchmarks, and install the front differential ring gear case quickly.
NOTICE:
- **Check the position and number of the grooves on each end face of the differential ring gear.**
- **Do not install the bolts while the ring gear is hot.**

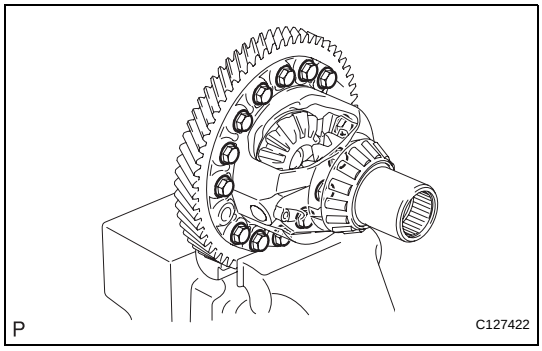

(d) Tighten the 14 bolts.
Torque: 95 N*m (969 kgf*cm, 70 ft.*lbf)
NOTICE:
Tighten the bolts a little at a time in diagonal order.

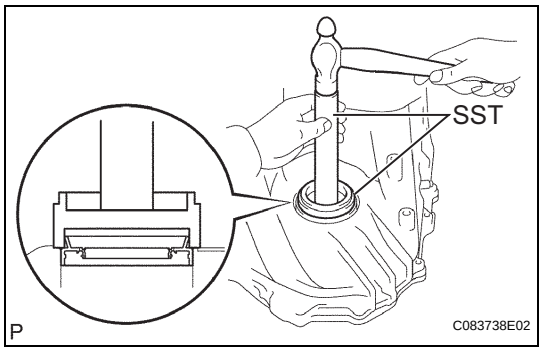

8. INSTALL DIFFERENTIAL SIDE BEARING RETAINER OIL SEAL

(a) Coat the lip of a new oil seal with a small amount of MP grease.

(b) Using SST and a hammer, tap in the oil seal.
SST 09223-15020, 09950-70010 (09951-07100)

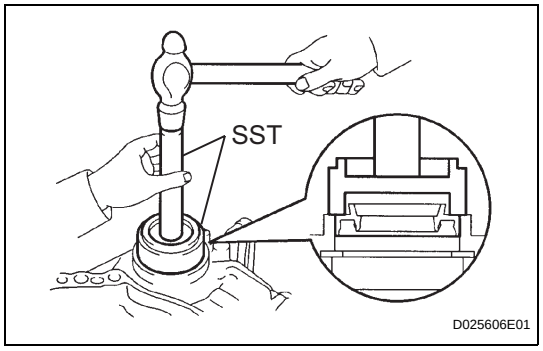

9. REMOVE TRANSAXLE HOUSING OIL SEAL

(a) Coat the lip of a new oil seal with a small amount of MP grease.

(b) Using SST and a hammer, tap in the oil seal.
SST 09710-30050, 09950-70010 (09951-07100)

DIFFERENTIAL CASE

COMPONENTS

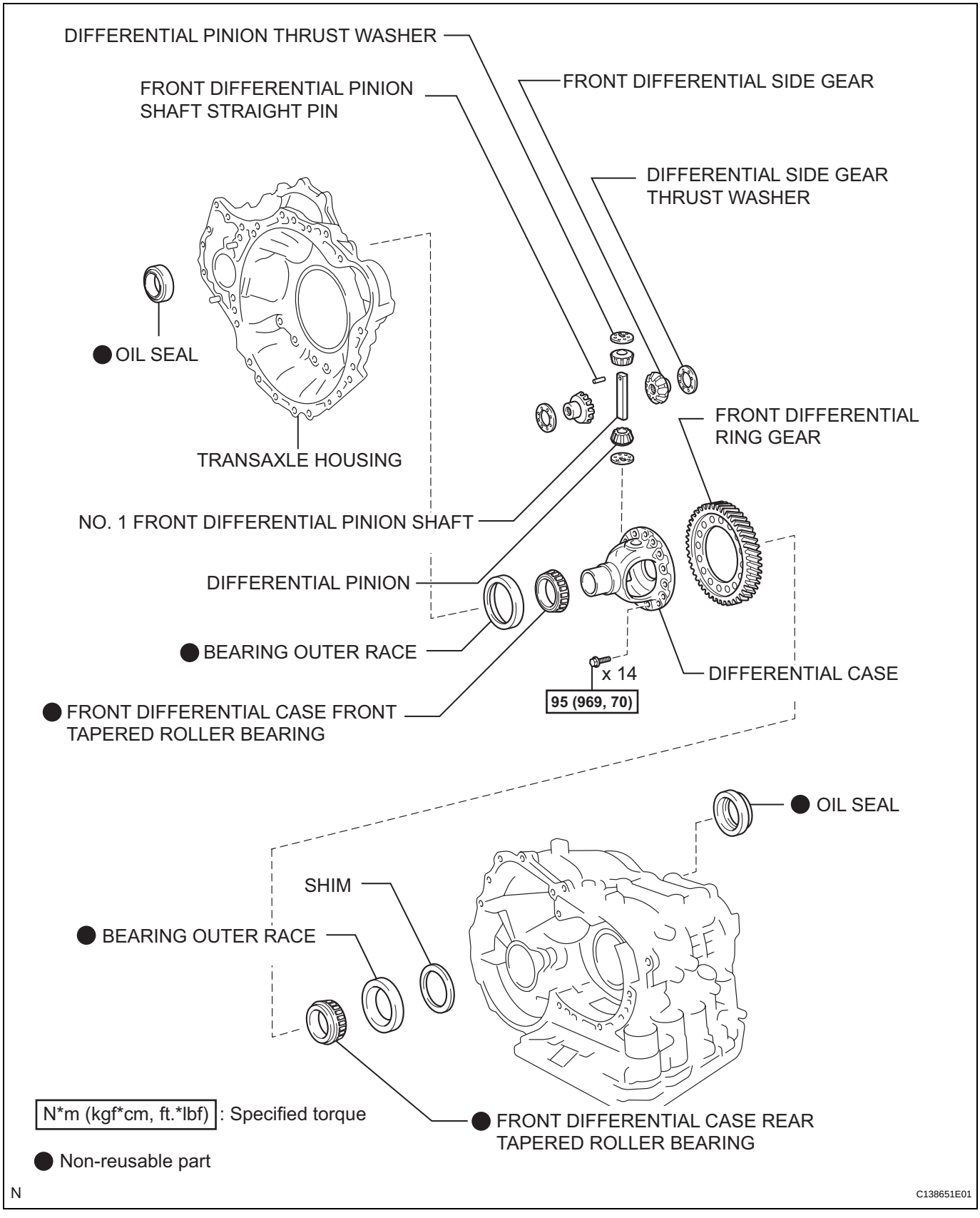

AX

DISASSEMBLY

1. REMOVE FRONT DIFFERENTIAL RING GEAR

(a) Place matchmarks on the ring gear and differential case.

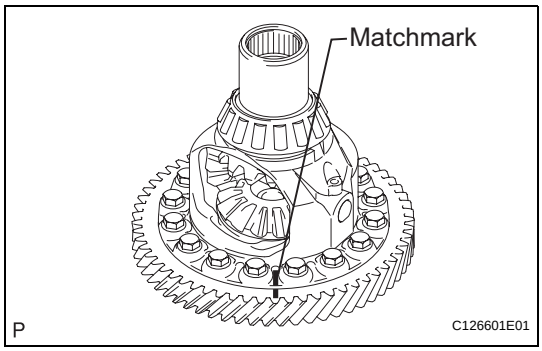

(b) Remove the 14 bolts.

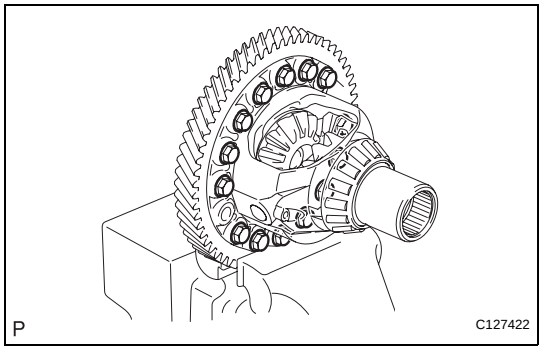

(c) Using a plastic-faced hammer, tap on the ring gear to remove it from the case.

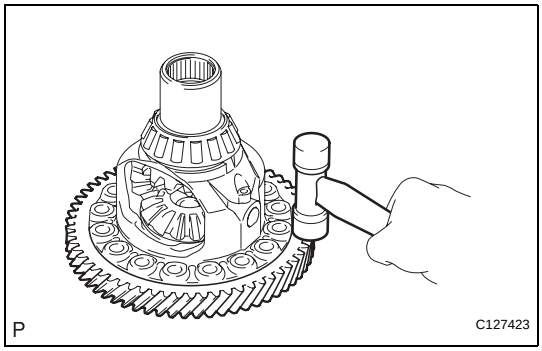

2. REMOVE FRONT DIFFERENTIAL CASE FRONT TAPERED ROLLER BEARING

(a) Using SST, tap out the front differential case front tapered roller bearing from the differential case.
SST 09950-00020, 09950-00030, 09950-60010 (09951-00500)

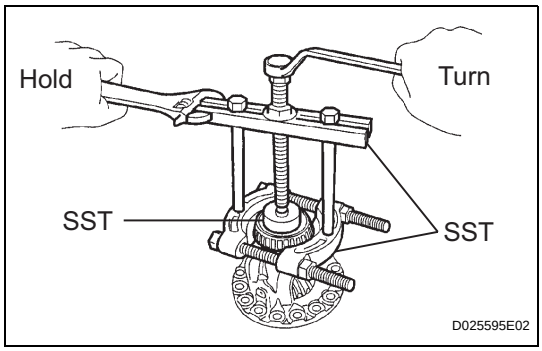

(b) Using SST, remove the front differential case front tapered roller bearing outer race.
SST 09308-00010

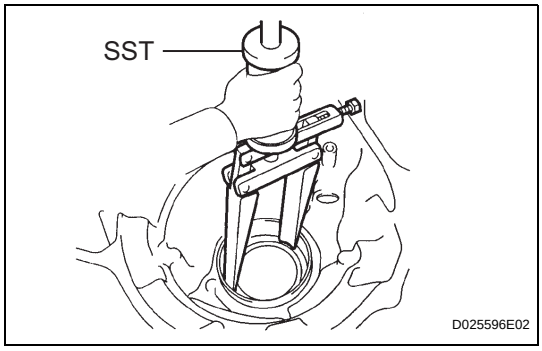

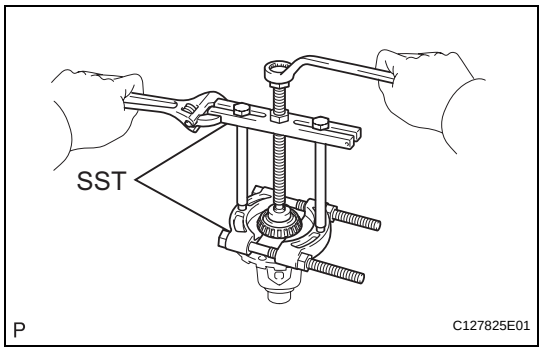

3. REMOVE FRONT DIFFERENTIAL CASE REAR TAPERED ROLLER BEARING

(a) Using SST, remove the front differential case rear tapered roller bearing from the differential case.
SST 09950-00020, 09950-00030, 09950-60010 (09951-00500)

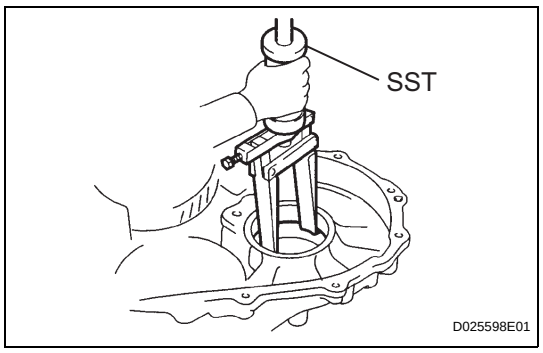

(b) Using SST, tap out the front differential case rear tapered roller bearing outer race.
SST 09308-00010

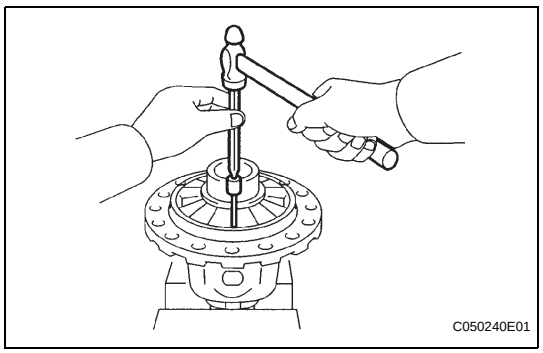

4. REMOVE FRONT DIFFERENTIAL PINION SHAFT STRAIGHT PIN

(a) Using a pin punch and hammer, remove the straight pin.
NOTICE:
Before removing the straight pin, unstake it with a pin punch.

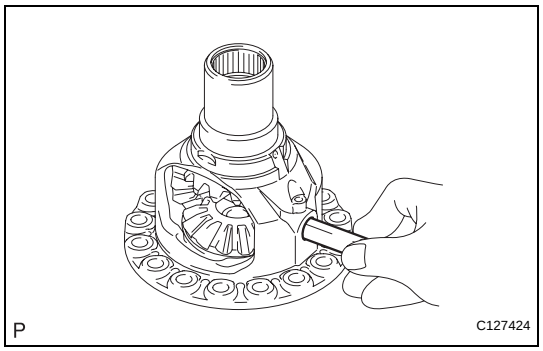

5. REMOVE NO. 1 FRONT DIFFERENTIAL PINION SHAFT

(a) Remove the front differential pinion shaft from the differential case.

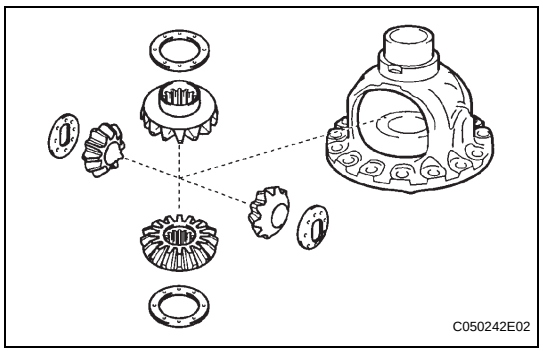

6. REMOVE FRONT DIFFERENTIAL SIDE GEAR

(a) Remove the 2 front differential pinions, 2 pinion thrust washers, 2 front differential side gears and 2 side gear thrust washers from the differential case.

AX

REPLACEMENT

1. REPLACE TRANSAXLE HOUSING OIL SEAL LH

(a) Drain the automatic transaxle fluid.
  (1) Remove the drain plug and gasket, and drain the ATF.
  (2) Install a new gasket and drain plug.
  Torque: 47 N*m (479 kgf*cm, 35 ft.*lbf)

(b) Remove the front drive shaft LH (see page DS-41).

(c) Remove the transaxle housing oil seal LH.
  (1) Using SST, tap out the oil seal.
  SST 09308-00010

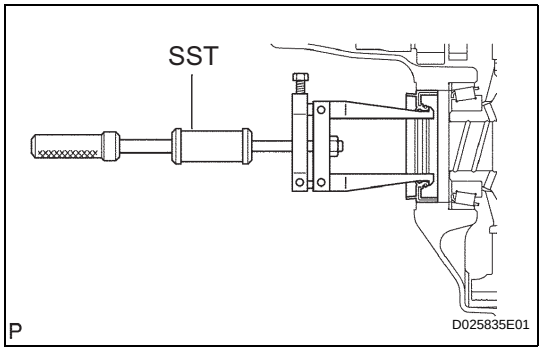

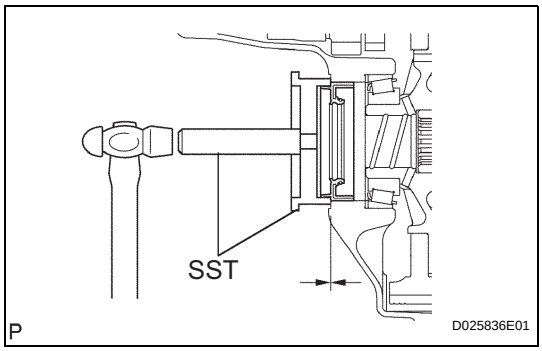

(d) Install a new transaxle housing oil seal LH.
  (1) Coat the lip of a new oil seal with MP grease.
  (2) Using SST and a hammer, tap in the oil seal.
  SST 09223-15020, 09950-70010 (09951-07200)
  Standard depth:
  0 +-0.5 mm (0 +-0.020 in.)

(e) Install the front drive shaft LH (see page DS-66).

(f) Add automatic transaxle fluid.
  Fluid type:
  Toyota Genuine ATF WS

(g) Inspect the transaxle fluid level (see page AX-126).

2. REPLACE TRANSAXLE HOUSING OIL SEAL RH

(a) Remove the engine assembly with transaxle (see page EM-21).

(b) Drain the automatic transaxle fluid.
  (1) Remove the drain plug and gasket, and drain the ATF.
  (2) Install a new gasket and the drain plug.
  Torque: 47 N*m (479 kgf*cm, 35 ft.*lbf)

(c) Remove the 3 bolts and drive shaft bearing bracket.

(d) Remove the 3 bolts and rear engine mounting bracket.

(e) Remove the transfer assembly (see page TF-59).

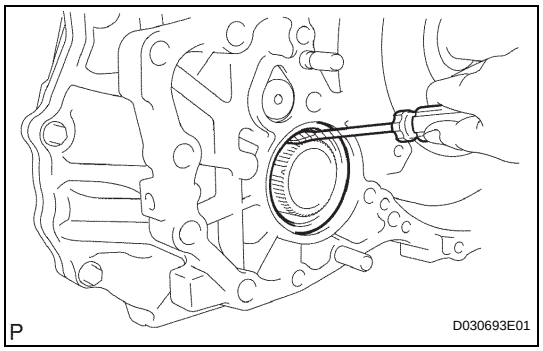

(f) Remove the transaxle housing oil seal RH.
  (1) Using a screwdriver with vinyl tape wound around its tip, remove the oil seal.
  NOTICE:
  Be careful not to damage the housing.

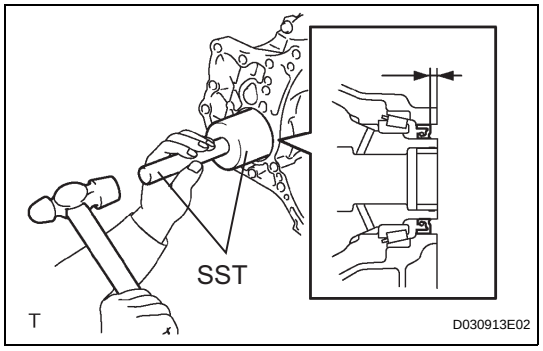

(g) Install a new transaxle housing oil seal RH.
  (1) Coat the lip of a new oil seal with MP grease.
  (2) Using SST and a hammer, tap in the oil seal.
  SST 09649-17010, 09950-70010 (09951-07200)
  Standard depth:
  6.0 +-0.5 mm (0.236 +-0.020 in.)
(h) Install the transfer assembly (see page TF-75).
(i) Install the rear engine mounting bracket with the 3 bolts.
  Torque: 64 N*m (652 kgf*cm, 47 ft.*lbf)
(j) Install the drive shaft bearing bracket with the 3 bolts.
  Torque: 64 N*m (653 kgf*cm, 47 ft.*lbf)
(k) Install the engine with transaxle (see page EM-31).
(l) Add automatic transaxle fluid.
  Fluid type:
  Toyota Genuine ATF WS
(m) Inspect the fluid level (see page AX-126).

DIFFERENTIAL OIL SEAL

COMPONENTS

for LH Side

AX

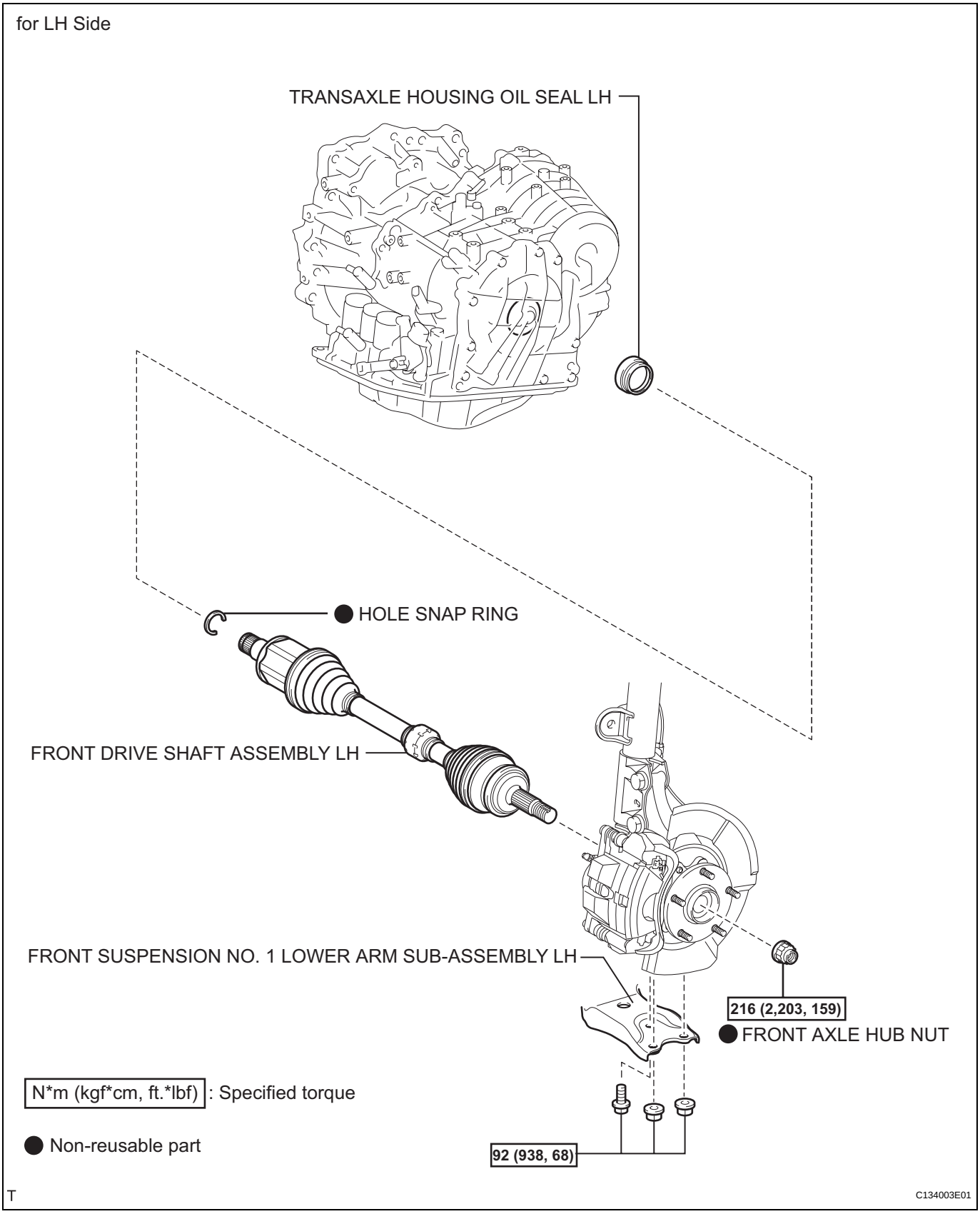

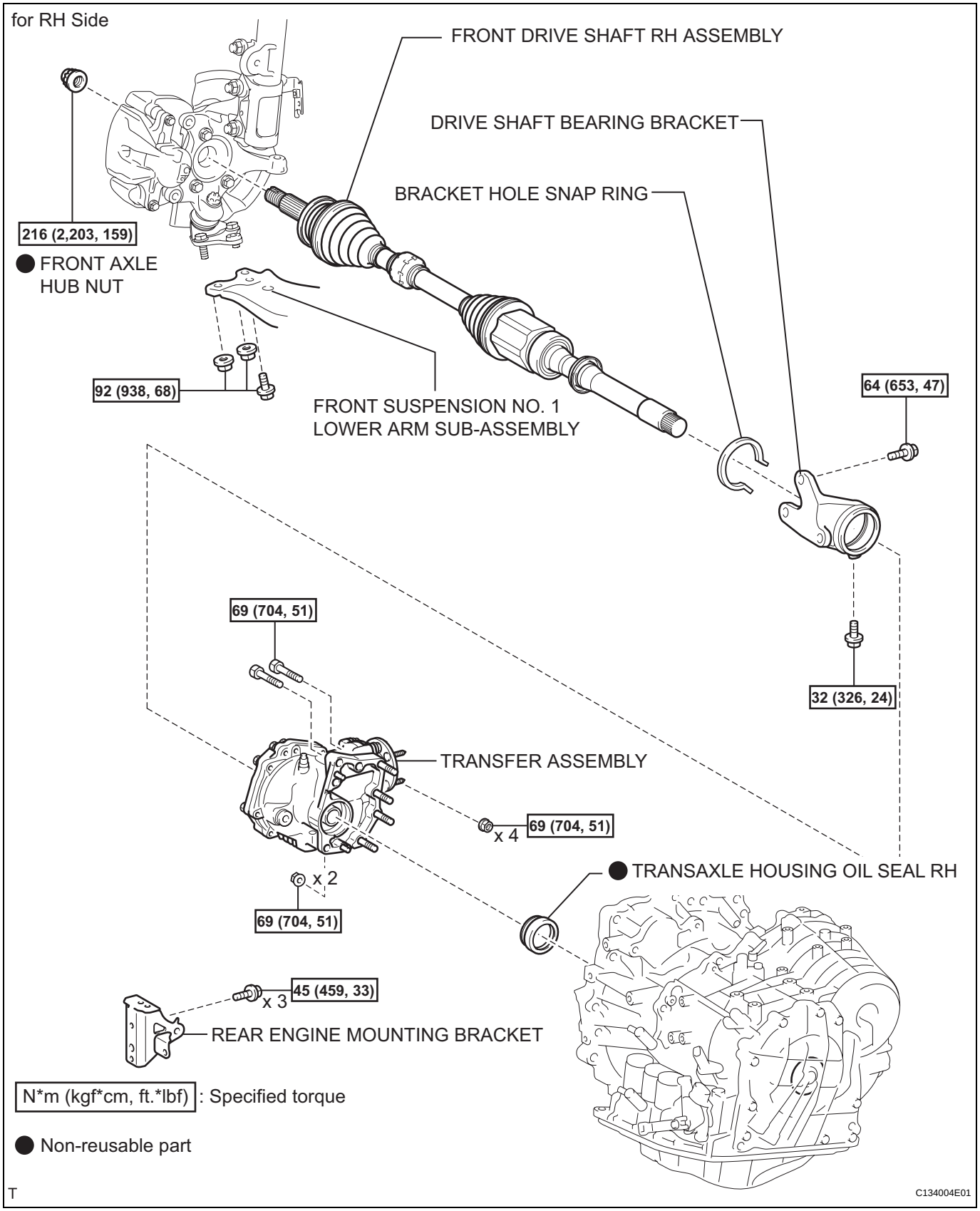
for RH Side
FRONT DRIVE SHAFT RH ASSEMBLY
DRIVE SHAFT BEARING BRACKET
BRACKET HOLE SNAP RING
216 (2,203, 159)
● FRONT AXLE HUB NUT
92 (938, 68)
FRONT SUSPENSION NO. 1 LOWER ARM SUB-ASSEMBLY
64 (653, 47)
32 (326, 24)
69 (704, 51)
TRANSFER ASSEMBLY
x 4
69 (704, 51)
x 2
69 (704, 51)
● TRANSAXLE HOUSING OIL SEAL RH
45 (459, 33)
x 3
REAR ENGINE MOUNTING BRACKET
N*m (kgf*cm, ft.*lbf) : Specified torque
● Non-reusable part
T
C134004E01

DIRECT CLUTCH

COMPONENTS

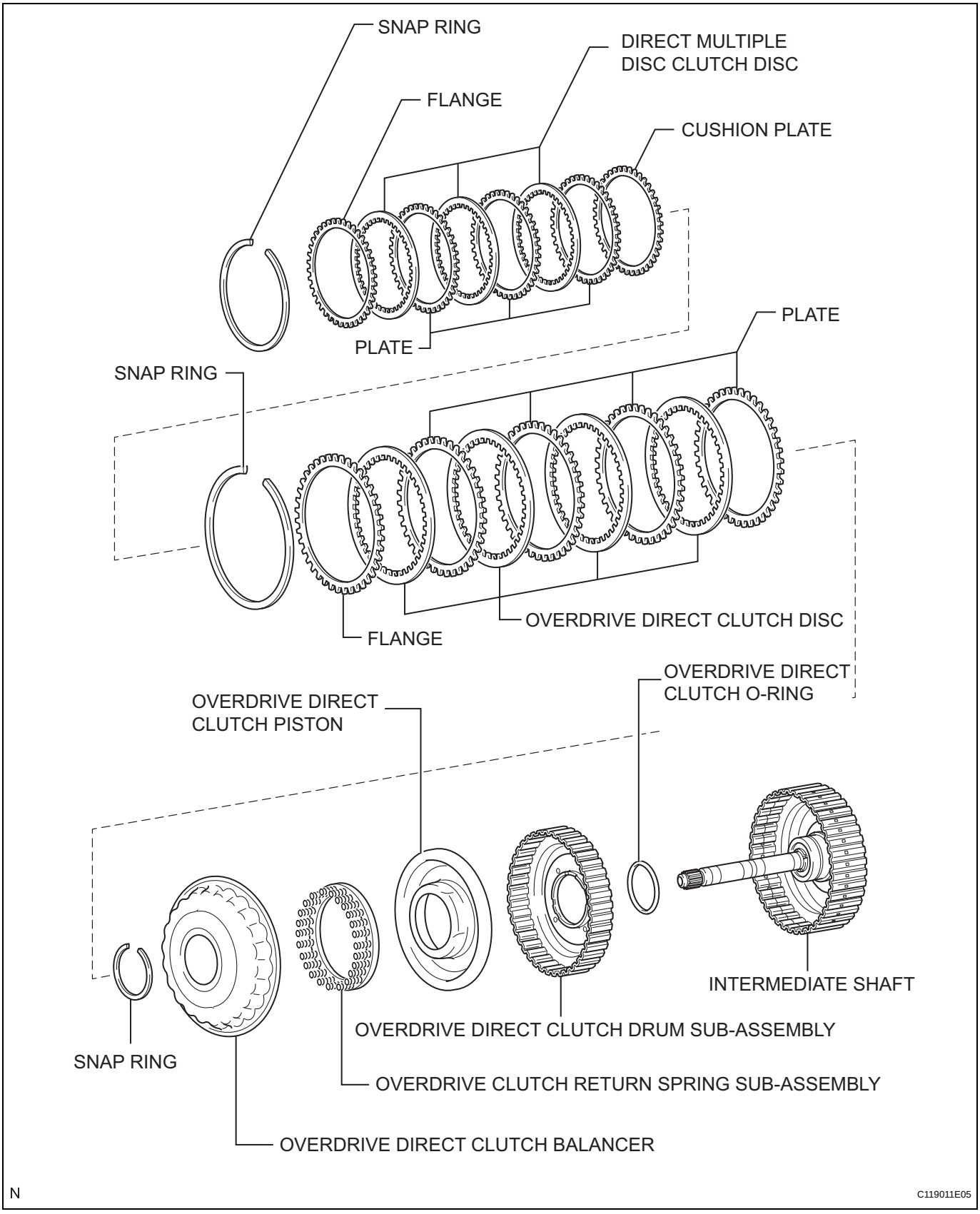

DISASSEMBLY

1. **INSPECT PACK CLEARANCE OF REVERSE CLUTCH (See page AX-263)**

2. **INSPECT PACK CLEARANCE OF DIRECT CLUTCH AND OVERDRIVE CLUTCH (See page AX-263)**

3. **REMOVE DIRECT MULTIPLE DISC CLUTCH DISC**

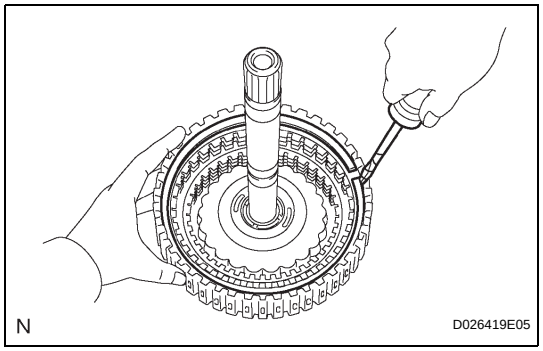

(a) Using a screwdriver, remove the snap ring from the intermediate shaft.

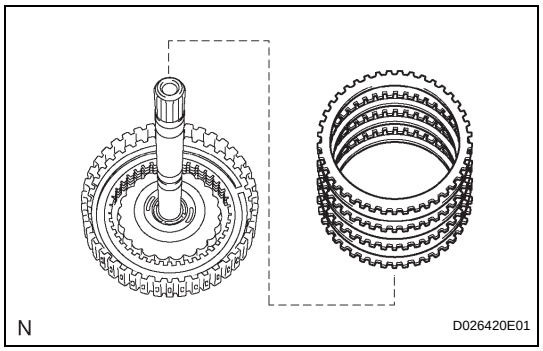

(b) Remove the flange, 3 discs, 3 plates and cushion plate from the intermediate shaft.

4. **REMOVE OVERDRIVE DIRECT CLUTCH DISC**

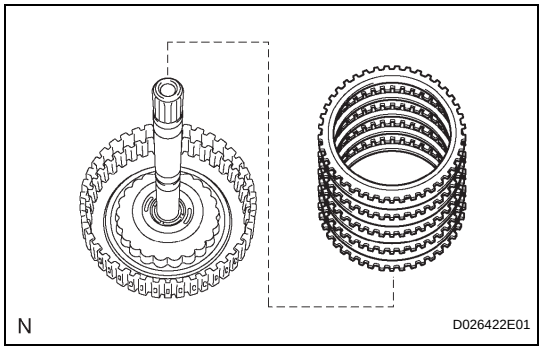

(a) Using a screwdriver, remove the snap ring from the intermediate shaft.

(b) Remove the flange, 4 discs and 4 plates from the intermediate shaft.

5. **REMOVE OVERDRIVE CLUTCH RETURN SPRING SUB-ASSEMBLY**

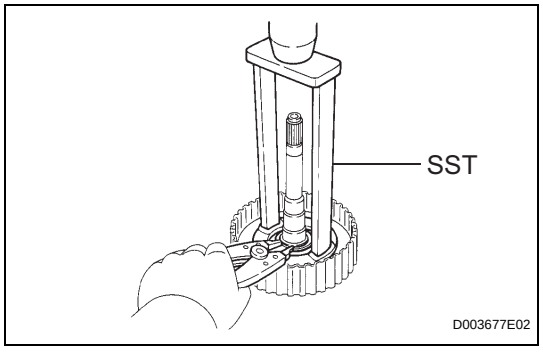

(a) Place SST on the clutch balancer and compress the spring with a press.
SST 09387-00020

(b) Using a snap ring expander, remove the snap ring from the direct clutch drum.
NOTICE:
- **Stop the press when the spring seat is lowered to a position 1 to 2 mm (0.039 to 0.078 in.) from the snap ring groove. This prevents the spring seat from being deformed.**
- **Do not expand the snap ring excessively.**

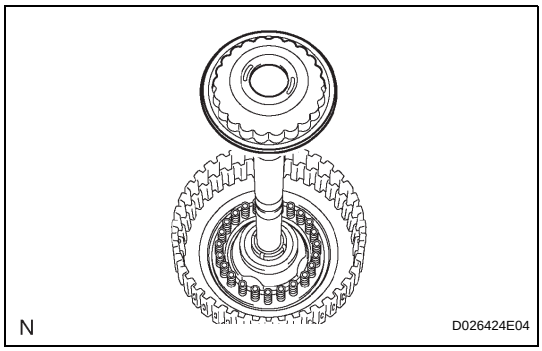

(c) Remove the clutch balancer from the direct clutch drum.

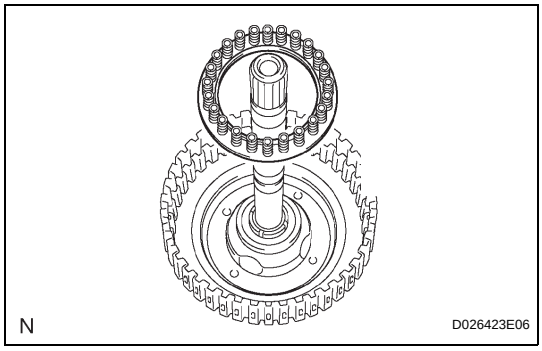

(d) Remove the overdrive clutch return spring from the direct clutch drum.

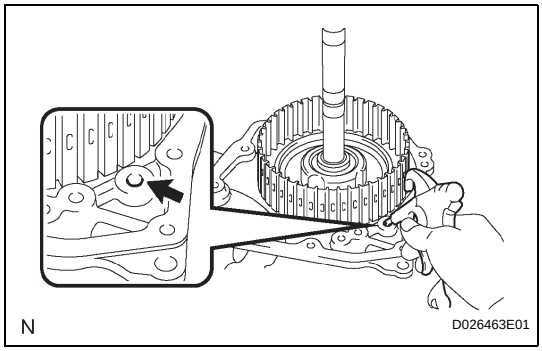

6. REMOVE OVERDRIVE DIRECT CLUTCH PISTON

(a) Install the intermediate shaft on the transaxle rear cover.

(b) Holding the direct clutch piston with your hand, apply compressed air (392 kPa, 4.0 kgf/cm^2, 57 psi) to the transaxle rear cover to remove the direct clutch piston.

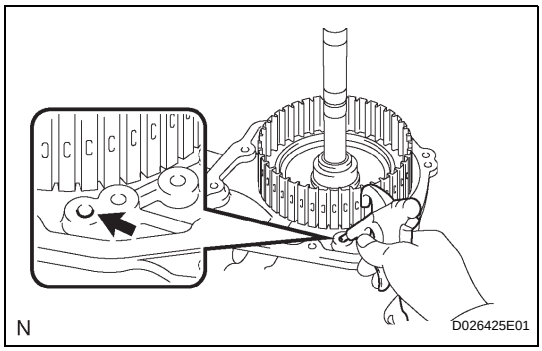

7. REMOVE OVERDRIVE DIRECT CLUTCH DRUM SUB-ASSEMBLY

(a) Holding the direct clutch drum by hand, apply compressed air (392 kPa, 4.0 kgf/cm^2, 57 psi) to the transaxle rear cover to remove the direct clutch drum.

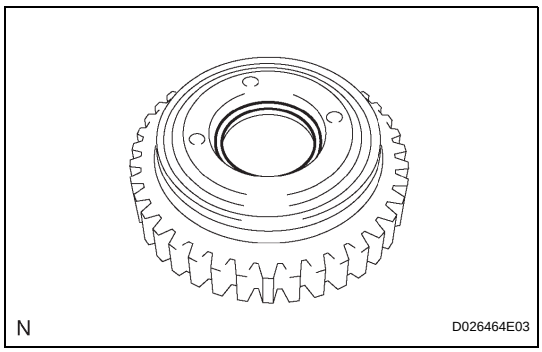

8. REMOVE OVERDRIVE DIRECT CLUTCH O-RING

(a) Using a screwdriver, remove the O-ring from the direct clutch drum.

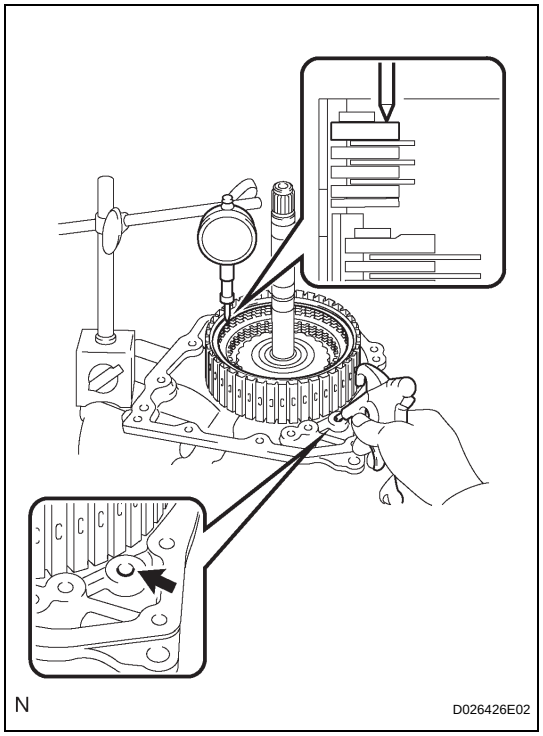

INSPECTION

1. INSPECT PACK CLEARANCE OF REVERSE CLUTCH

(a) Install the intermediate shaft and needle roller bearing onto the transaxle rear cover.

(b) Using a dial indicator, measure the reverse clutch pack clearance while applying and releasing compressed air (392 kPa, 4.0 kgf/cm^2, 57 psi).

Standard pack clearance:

0.60 to 0.82 mm (0.0236 to 0.0323 in.)

If the pack clearance is not as specified, inspect the discs, plates and flange.

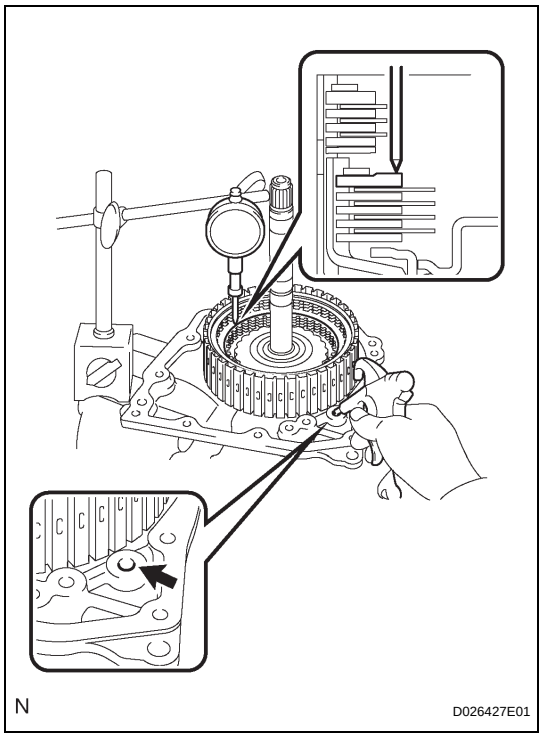

2. INSPECT PACK CLEARANCE OF DIRECT CLUTCH AND OVERDRIVE CLUTCH

(a) Using a dial indicator, measure the direct clutch and overdrive clutch pack clearance while applying and releasing compressed air (392 kPa, 4.0 kgf/cm^2, 57 psi).

Standard pack clearance:

0.61 to 0.83 mm (0.0240 to 0.0327 in.)

If the pack clearance is not as specified, inspect the discs, plates and flange.

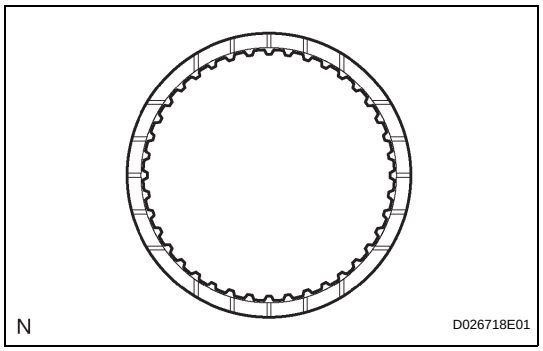

3. INSPECT DIRECT MULTIPLE DISC CLUTCH DISC

(a) Check if the sliding surfaces of the disc, plate and flange are worn or burnt.

If necessary, replace them.

NOTICE:

- **If the lining of the disc comes off or is discolored, or if a part of the groove is worn, replace all the discs.**
- **Before installing new discs, immerse them in ATF for at least 15 minutes.**

AX

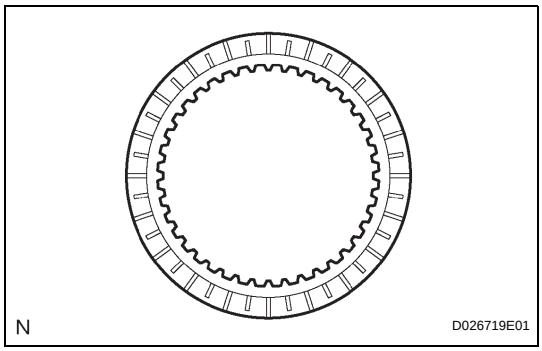

4. INSPECT OVERDRIVE DIRECT CLUTCH DISC

(a) Check if the sliding surface of the disc, plate and flange are worn or burnt.
If necessary, replace them.
NOTICE:
- **If the lining of the disc comes off or is discolored, or if a part of the groove is worn, replace all the discs.**
- **Before installing new discs, immerse them in ATF for at least 15 minutes.**

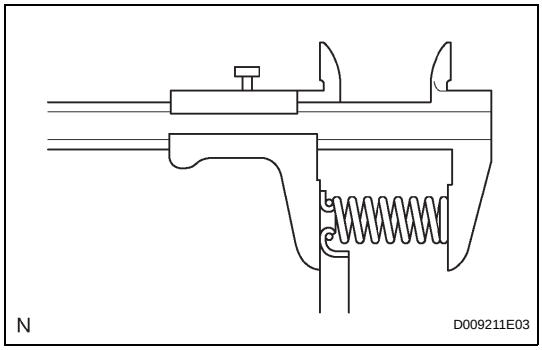

5. INSPECT OVERDRIVE CLUTCH RETURN SPRING SUB-ASSEMBLY

(a) Using a vernier caliper, measure the free length of the spring together with the spring seat.
Standard free length:
25.91 mm (1.0201 in.)

REASSEMBLY

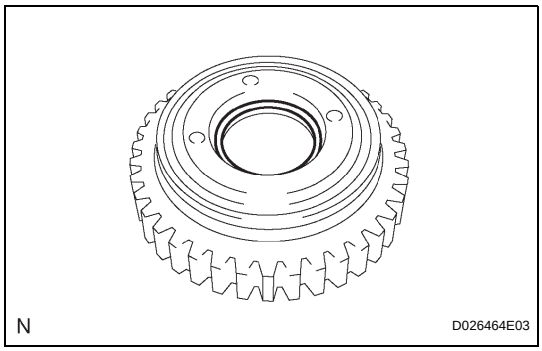

1. INSTALL OVERDRIVE DIRECT CLUTCH O-RING

(a) Coat the O-ring with ATF, and install it to the direct clutch drum.
NOTICE:
Make sure that the O-ring is not twisted or pinched when it is installed.

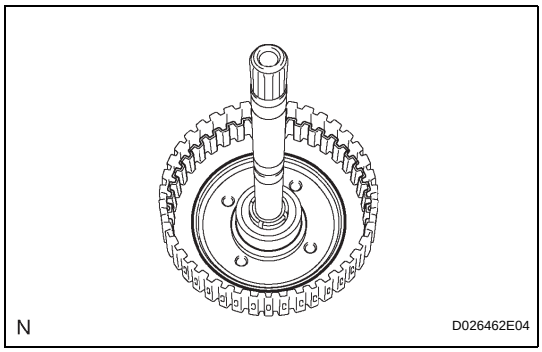

2. INSTALL OVERDRIVE DIRECT CLUTCH DRUM SUB-ASSEMBLY

(a) Coat the direct clutch drum with ATF, and install it to the intermediate shaft.
NOTICE:
- **Be careful not to damage the O-ring.**
- **Be careful not to damage the lip of the direct clutch drum.**

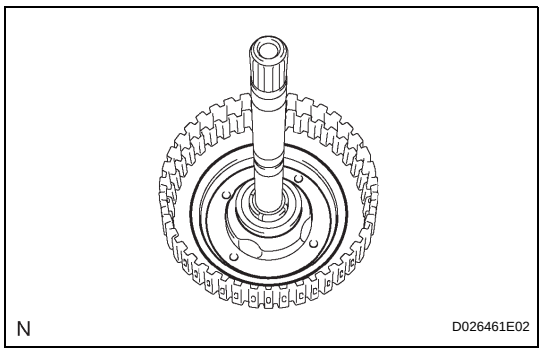

3. INSTALL OVERDRIVE DIRECT CLUTCH PISTON

(a) Coat the overdrive direct clutch piston with ATF, and install it to the direct clutch drum.

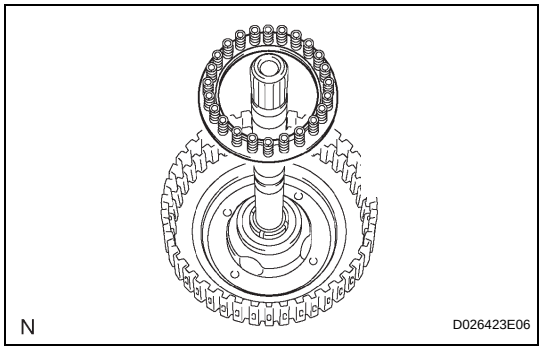

4. INSTALL OVERDRIVE CLUTCH RETURN SPRING SUB-ASSEMBLY

(a) Install the overdrive clutch return spring to the direct clutch drum.

NOTICE:

After installing the spring sub-assembly, check that all of the springs fit in the piston correctly.

(b) Coat the clutch balancer with ATF.

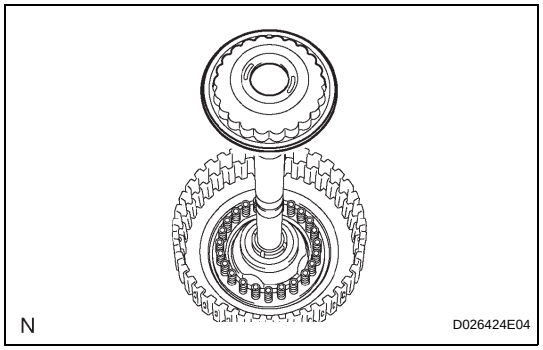

(c) Install the clutch balancer to the direct clutch drum.

NOTICE:

- **Be careful not to damage the lip of the direct clutch balancer.**
- **Make sure that the lip of the seal is not pinched and that it has no other defects.**
- **Apply sufficient ATF to the sealing lip before installing the clutch balancer.**

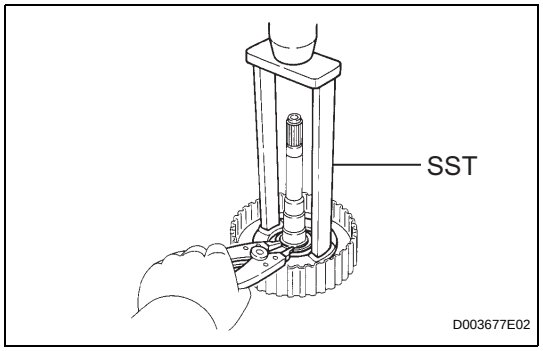

(d) Place SST on the clutch balancer and compress the overdrive clutch return spring with a press.

SST 09387-00020

(e) Using a snap ring expander, install the snap ring to the direct clutch drum.

(f) Be sure that the end gap of the snap ring is not aligned with the spring retainer claw.

NOTICE:

- **Stop the press when the spring seat is lowered to a position 1 to 2 mm (0.039 to 0.078 in.) from the snap ring groove. This prevents the spring seat from being deformed.**
- **Do not expand the snap ring excessively.**

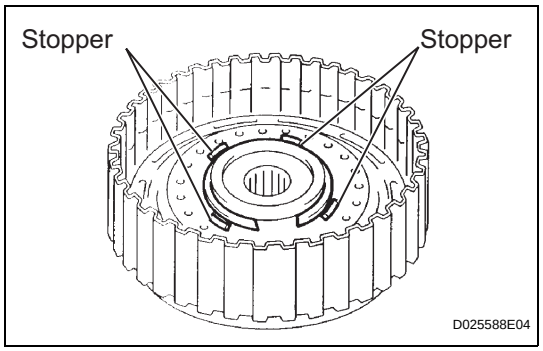

(g) Set the end gap of the snap ring in the piston shown in the illustration.

NOTICE:

The end gap of the snap ring should not align with any of the stoppers.

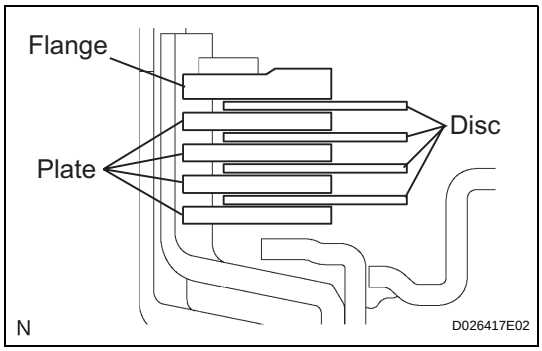

5. INSTALL OVERDRIVE DIRECT CLUTCH DISC

(a) Coat the 4 discs with ATF.

(b) Install the 4 plates, 4 discs and flange to the intermediate shaft.

NOTICE:

Make sure that the plates, discs and flange are installed as shown in the illustration.

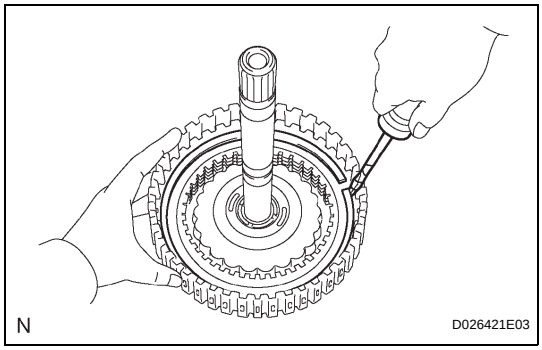

(c) Using a screwdriver, install the snap ring.

(d) Check that the end gap of the snap ring is not aligned with one of the cutouts.

NOTICE:

The snap ring should be fully engaged in the groove of the drum.

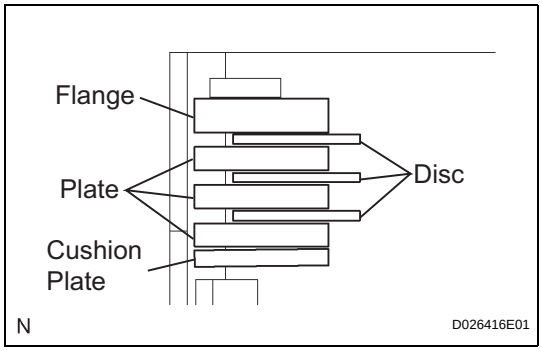

6. INSTALL DIRECT MULTIPLE DISC CLUTCH DISC

(a) Coat the 3 discs with ATF.

(b) Install the cushion plate, 3 plates, 3 discs and flange to the intermediate shaft.

NOTICE:

- **Install the cushion plate with the mark on the white surface facing towards the plate.**
- **Be careful of the order of cushion plate discs, plate and flange.**

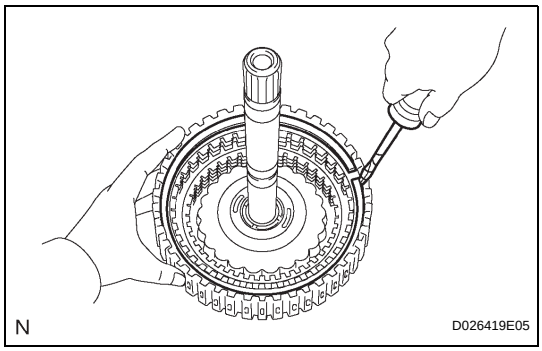

(c) Using a screwdriver, install the snap ring.

(d) Check that the end gap of the snap ring is not aligned with one of the cutouts.

NOTICE:

The snap ring should be fully engaged in the groove of the drum.

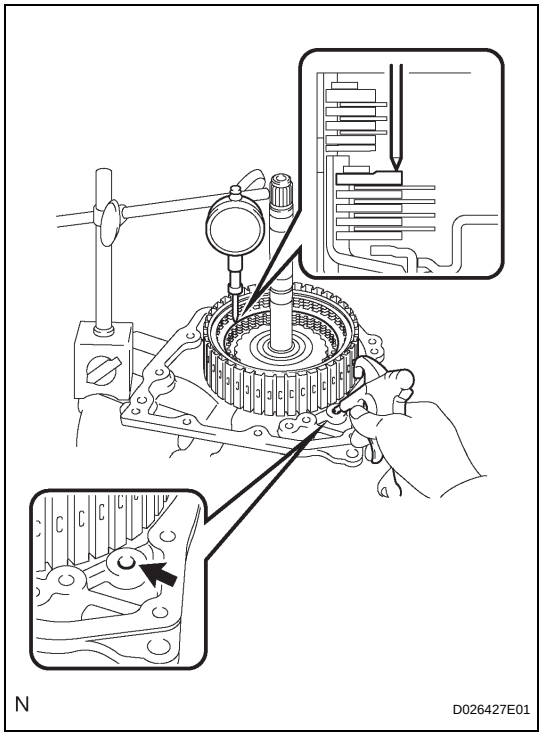

7. INSPECT PACK CLEARANCE OF DIRECT CLUTCH AND OVERDRIVE CLUTCH

(a) Using a dial indicator, measure the direct clutch and overdrive clutch pack clearance while applying and releasing compressed air (392 kPa, 4.0 kgf/cm^2, 57 psi).

Standard pack clearance:

0.61 to 0.83 mm (0.0240 to 0.0327 in.)

If the pack clearance is less than the minimum, parts may have been assembled incorrectly, so check and reassemble them again. If the clearance is not as specified, select another flange.

HINT:

There are 7 different thicknesses of flanges available.

Standard flange thickness

No.	Thickness	No.	Thickness
0	2.5 mm (0.098 in.)	4	2.9 mm (0.114 in.)
1	2.6 mm (0.102 in.)	5	3.0 mm (0.118 in.)
2	2.7 mm (0.106 in.)	6	3.1 mm (0.122 in.)
3	2.8 mm (0.110 in.)	-	-

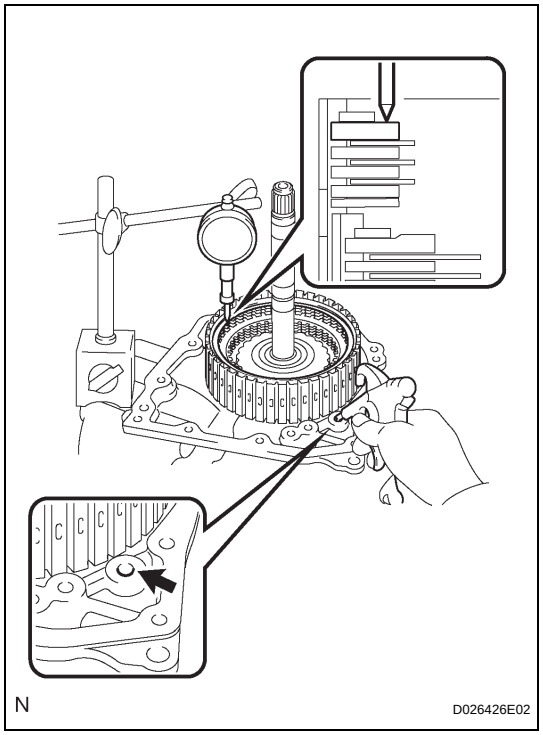

8. INSPECT PACK CLEARANCE OF REVERSE CLUTCH

(a) Install the intermediate shaft onto the transaxle rear cover.

(b) Using a dial indicator, measure the direct clutch pack clearance while applying and releasing compressed air (392 kPa, 4.0 kgf/cm^2, 57 psi).

Standard clearance:

0.60 to 0.82 mm (0.0236 to 0.0323 in.)

If the pack clearance is less than the minimum, parts may have been assembled incorrectly, so check and reassemble them again. If the clearance is not as specified, select another flange.

HINT:

There are 7 different thicknesses of flanges available.

Standard flange thickness

No.	Thickness	No.	Thickness
1	3.0 mm (0.118 in.)	5	3.4 mm (0.134 in.)
2	3.1 mm (0.122 in.)	6	3.5 mm (0.138 in.)
3	3.2 mm (0.126 in.)	7	3.6 mm (0.142 in.)
4	3.3 mm (0.130 in.)	-	-

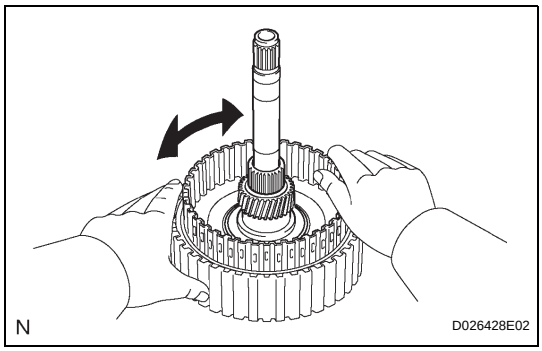

9. INSPECT DIRECT CLUTCH ASSEMBLY

(a) Check that the disc rotates when rotating the disc after inserting the rear planetary sun gear.

NOTICE:

Do not place the rear planetary sun gear in a vise.

AX

REMOVAL

1. **DISCONNECT CABLE FROM NEGATIVE BATTERY TERMINAL**
   CAUTION:
   Wait at least 90 seconds after disconnecting the cable from the negative (-) battery terminal to prevent airbag and seat belt pretensioner activation.
2. **REMOVE SHIFT LEVER KNOB SUB-ASSEMBLY**
3. **REMOVE REAR CONSOLE BOX SUB-ASSEMBLY**
   (a) Remove the console box (see page IP-20).
4. **DISCONNECT TRANSMISSION CONTROL CABLE ASSEMBLY**
   (a) Disconnect the control cable from the shift lever.

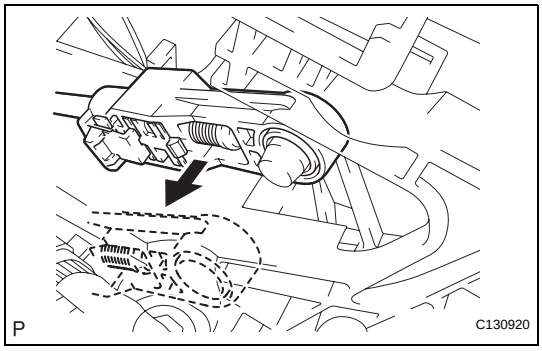

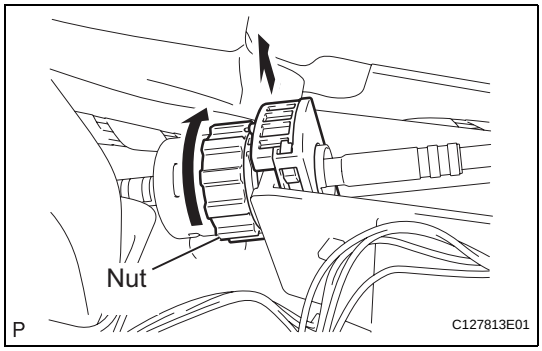

   (b) Turn the nut and disconnect the control cable from the shift lever retainer.
5. **REMOVE FLOOR SHIFT ASSEMBLY**
   (a) Remove the 4 bolts and floor shift.

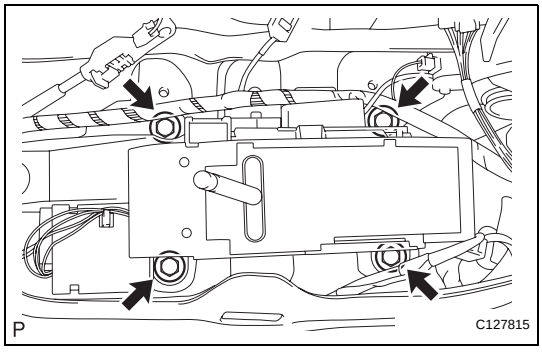

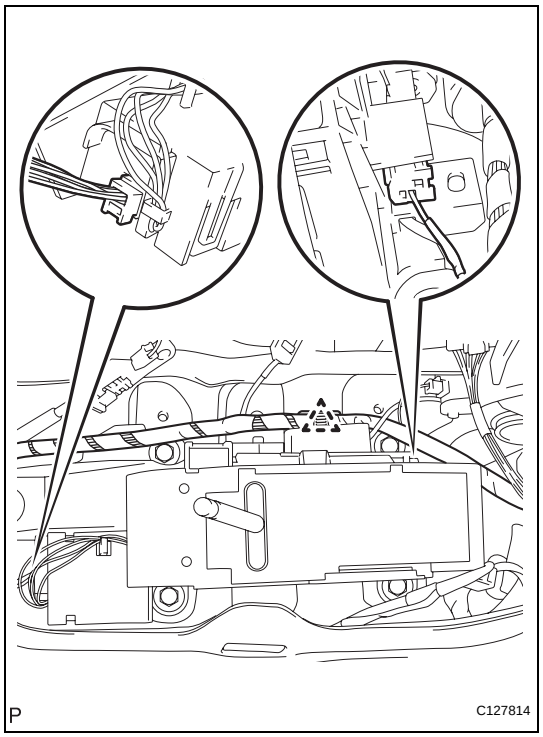

(b) Disconnect the 2 connectors and detach the clamp.

DISASSEMBLY

1. REMOVE LOWER POSITION INDICATOR HOUSING

(a) Detach the 4 claws and remove the housing.

(b) Remove the position indicator slide cover with slide No. 2 cover.

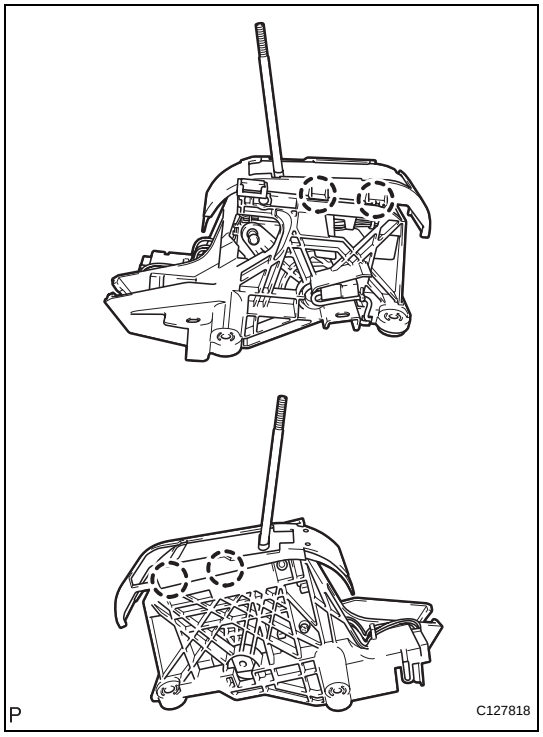

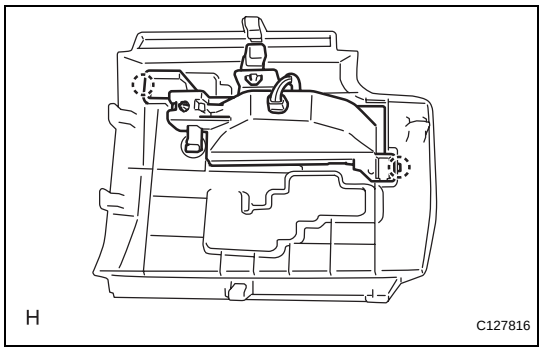

2. REMOVE POSITION INDICATOR LIGHT HOUSING

(a) Detach the 2 claws and remove the indicator light housing from the floor shift position indicator housing.

3. REMOVE INDICATOR LIGHT WIRE SUB-ASSEMBLY

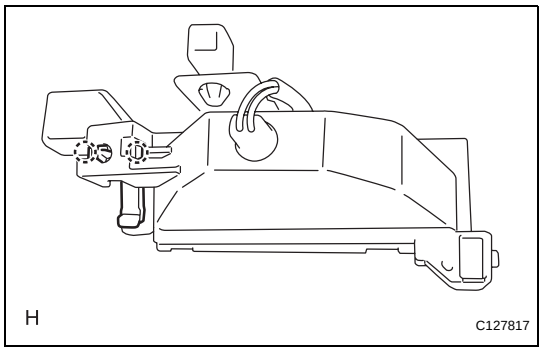

4. REMOVE SHIFT LOCK RELEASE BUTTON

(a) Detach the 2 claws and remove the button and spring from the position indicator light housing.

ADJUSTMENT

1. INSPECT SHIFT LEVER POSITION

(a) When shifting the lever from P to the R position with the ignition switch ON and the brake pedal depressed, make sure that the shift lever moves smoothly and moves correctly into position.

(b) Start the engine and make sure that the vehicle moves forward when shifting the lever from N to the D position and moves rearward when shifting the lever to the R position.
If the operation cannot be performed as specified, inspect the park/neutral position switch assembly and check the shift lever assembly installation condition.

2. ADJUST SHIFT LEVER POSITION

(a) Shift the shift lever to the N position.

(b) Slide the adjuster case cover in the direction shown in the illustration and pull out the lock piece.

(c) Gently pull the cable rod toward the rear of the vehicle by hand to pull the cable taut.

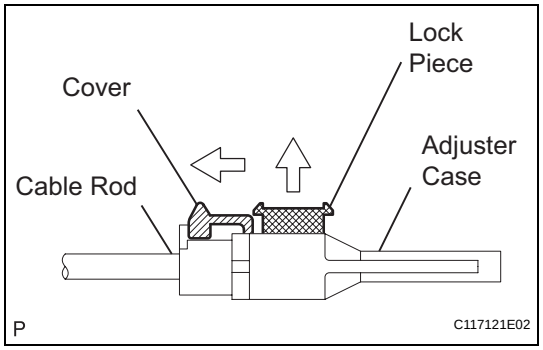

(d) Press the lock piece into the adjuster case and lock it.

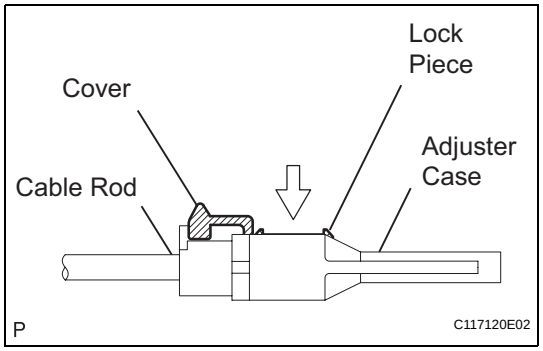

(e) Slide the cover in the direction shown in the illustration.
NOTICE:
Slide the cover past the protrusion of the lock piece.

(f) Inspect the operation.

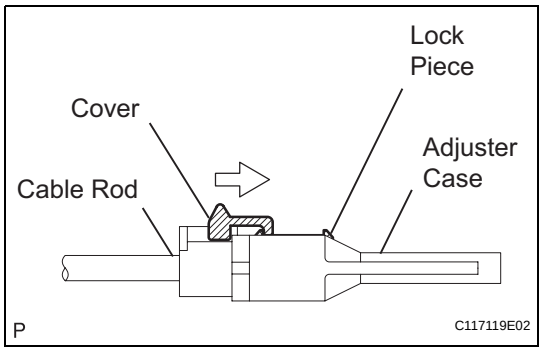

AX

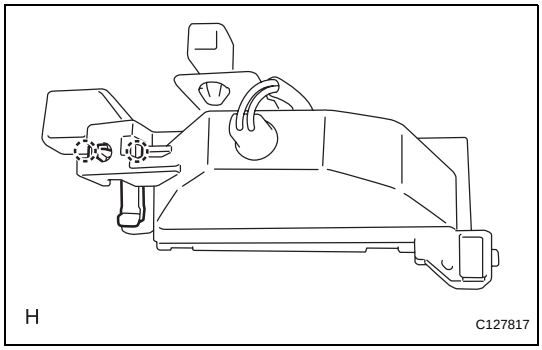

REASSEMBLY

1. INSTALL SHIFT LOCK RELEASE BUTTON

(a) Install the spring and button and attach the claws to the position indicator light housing.

2. INSTALL INDICATOR LIGHT WIRE SUB-ASSEMBLY

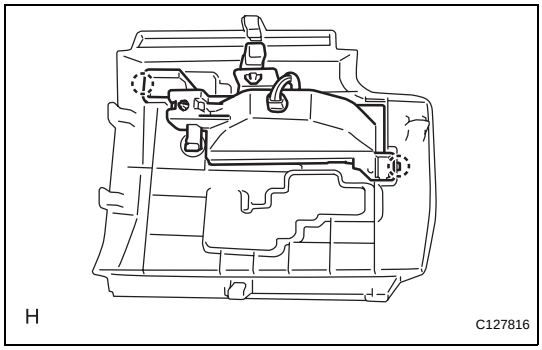

3. INSTALL POSITION INDICATOR LIGHT HOUSING

(a) Install the indicator light housing and attach the 2 claws to the shift position indicator housing.

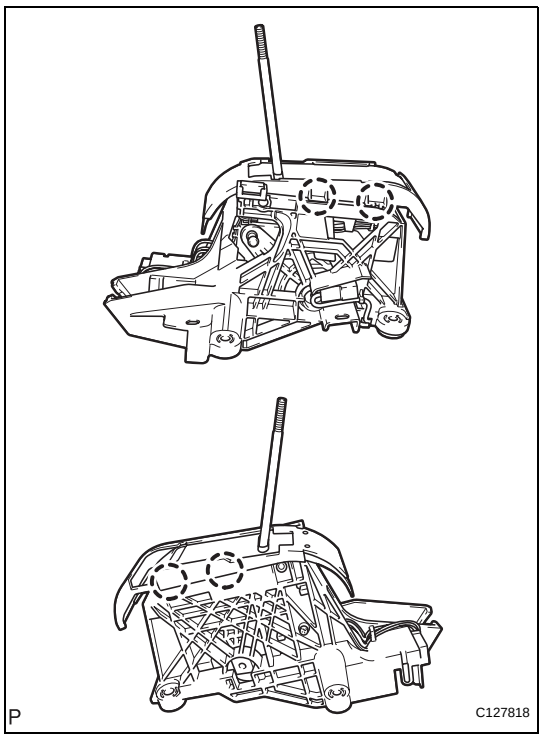

4. INSTALL LOWER POSITION INDICATOR HOUSING

(a) Install the position indicator slide cover with slide No. 2 cover to the indicator housing.

(b) Install the housing and attach the 4 claws to the floor shift assembly.

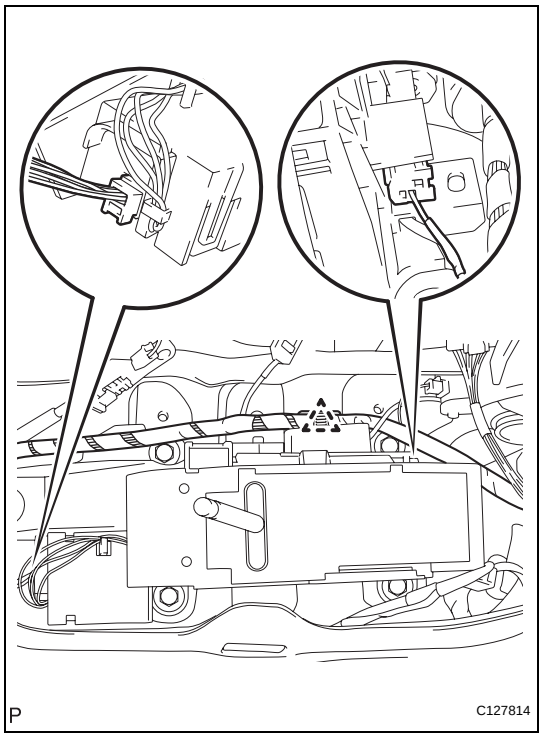

INSTALLATION

1. INSTALL FLOOR SHIFT ASSEMBLY

(a) Connect the 2 connectors and attach the clamp.

(b) Install the floor shift with the 4 bolts.
Torque: 12 N*m (122 kgf*cm, 9 ft.*lbf)

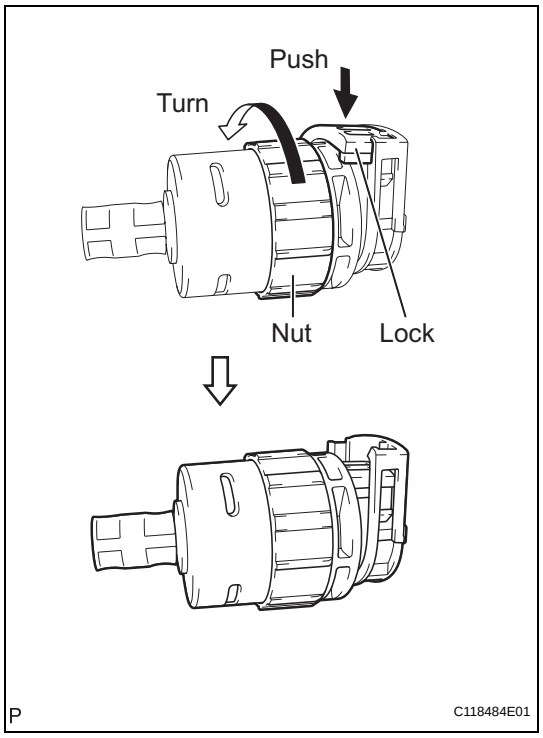

2. CONNECT TRANSMISSION CONTROL CABLE ASSEMBLY

(a) Turn the nut of the control cable and push in the lock.

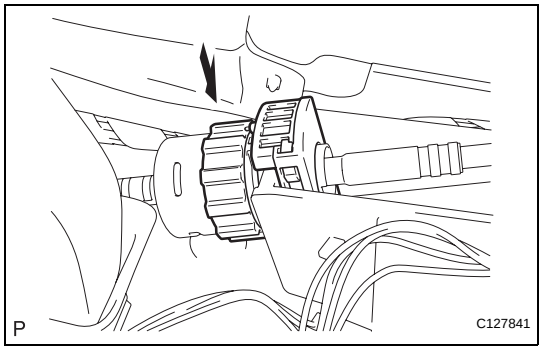

(b) Install the control cable onto the shift lever retainer.
NOTICE:
- **Install the cable with the protruding portion of the cable outer facing upward.**

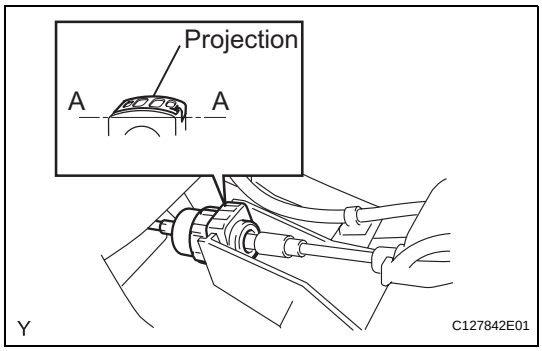

- **After installing, check that the lock of the cable outer is protruding beyond portion A-A, as shown in the illustration.**

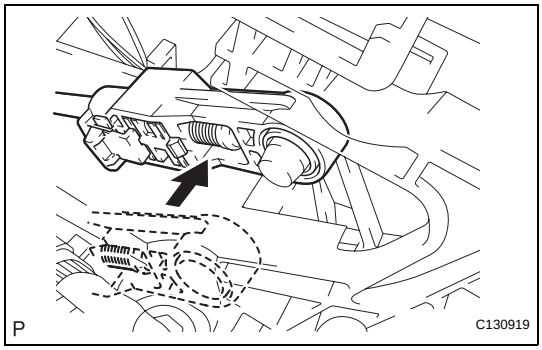

(c) Connect the control cable to the shift lever.
NOTICE:
Connect the control cable so that the adjusting mechanism lock of the control cable is installed on the driver side of the vehicle.

3. **CONNECT CABLE TO NEGATIVE BATTERY TERMINAL**
4. **INSPECT SHIFT LEVER POSITION (See page AX-164)**
5. **ADJUST SHIFT LEVER POSITION (See page AX-164)**
6. **INSTALL REAR CONSOLE BOX SUB-ASSEMBLY**
   (a) Install the rear console box (see page IP-26).
7. **INSTALL SHIFT LEVER KNOB SUB-ASSEMBLY**

FLOOR SHIFT ASSEMBLY

COMPONENTS

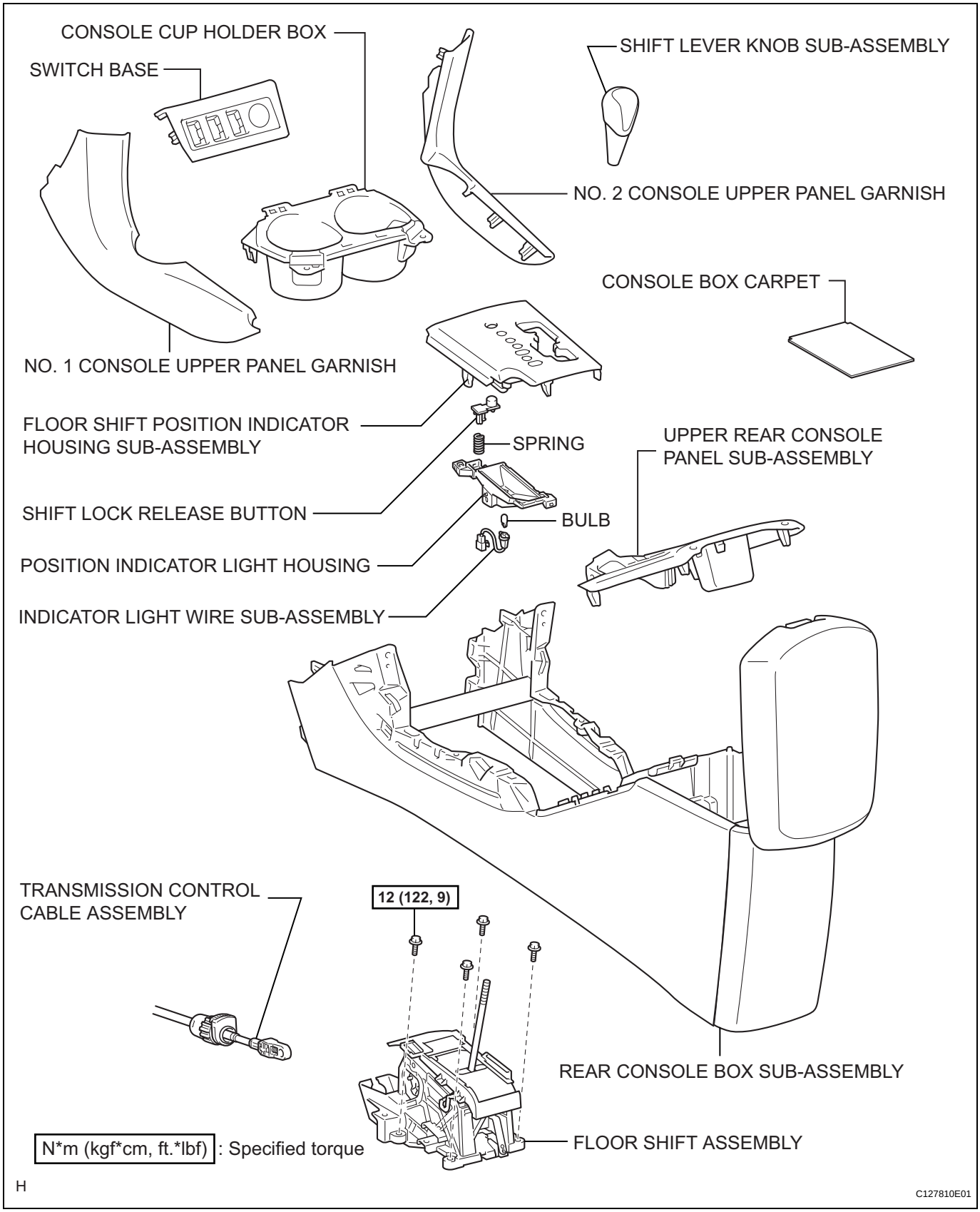

AX

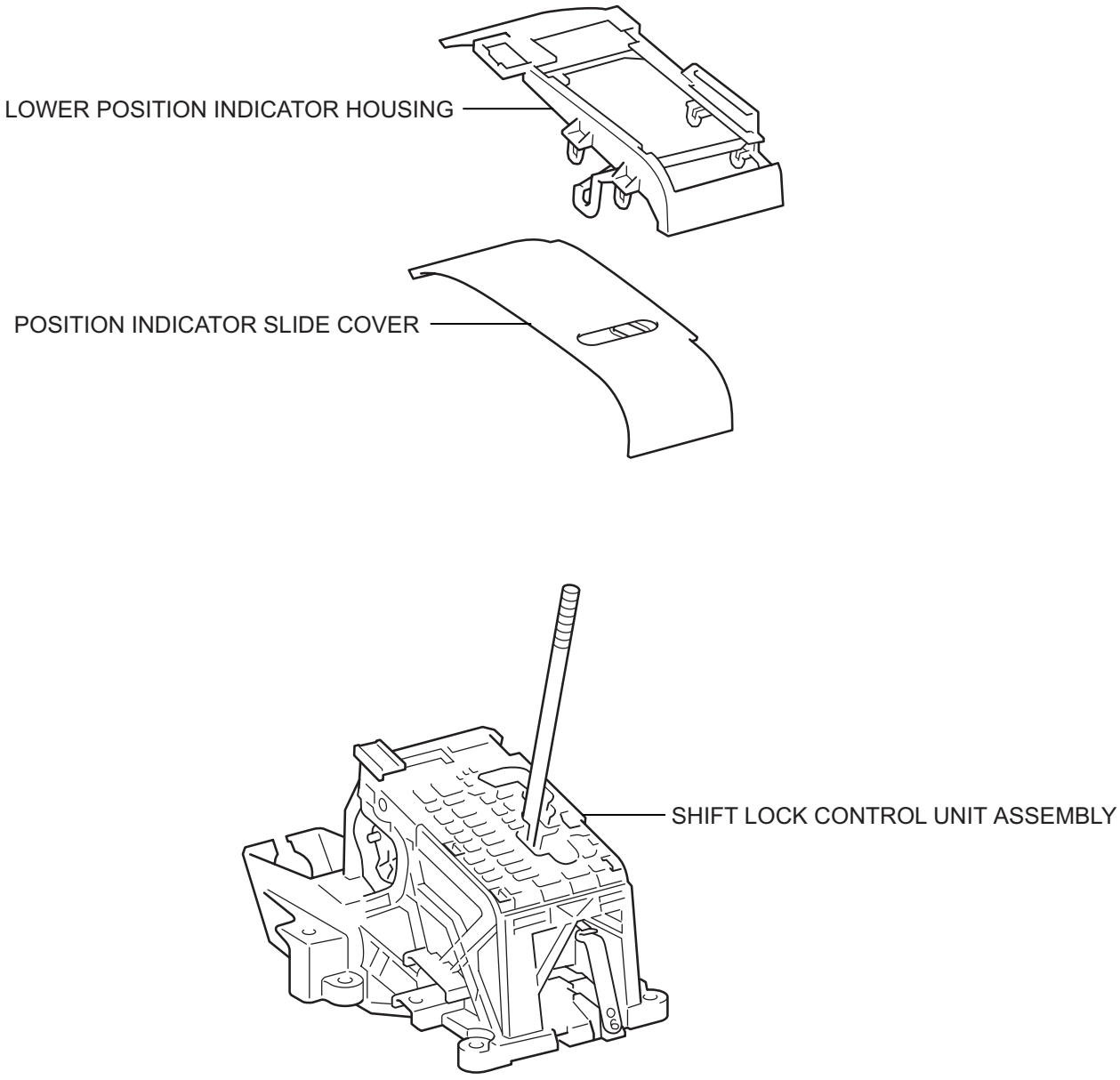

H

C127811E01

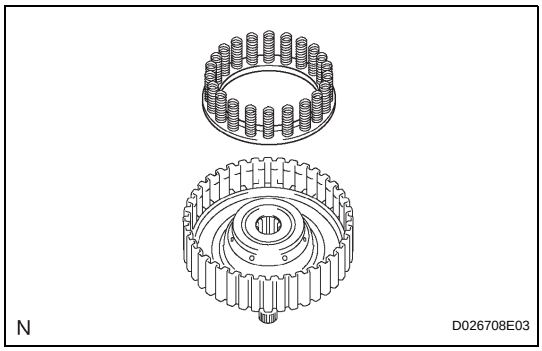

(d) Remove the forward clutch return spring from the input shaft.

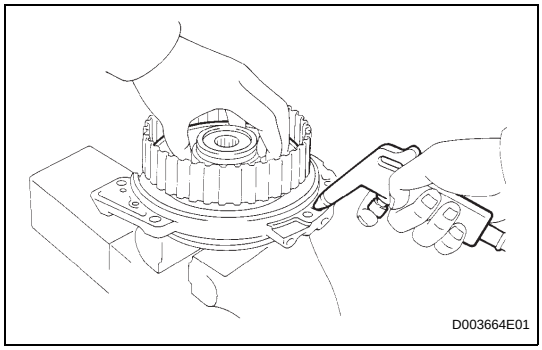

4. REMOVE FORWARD CLUTCH RETURN SPRING SUB-ASSEMBLY

(a) Place the forward clutch drum onto the oil pump.

(b) Holding the forward clutch piston by hand, apply compressed air (392 kPa, 4.0 kgf/cm^2, 57 psi) to the oil pump to remove the forward clutch piston.
HINT:
When the piston cannot be removed because it is slanted, blow air again with the protruding side pushed, or remove the piston using needle nose pliers with vinyl tape on the tip.

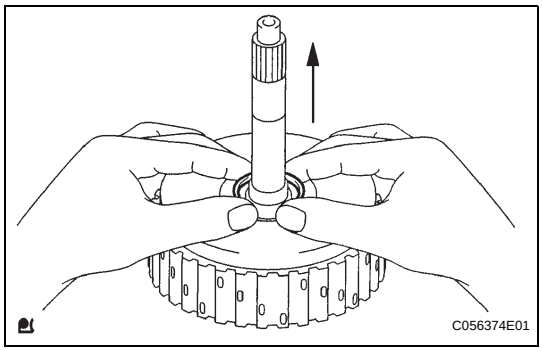

5. REMOVE INPUT SHAFT OIL SEAL RING

(a) Remove the input shaft oil seal ring from the input shaft.

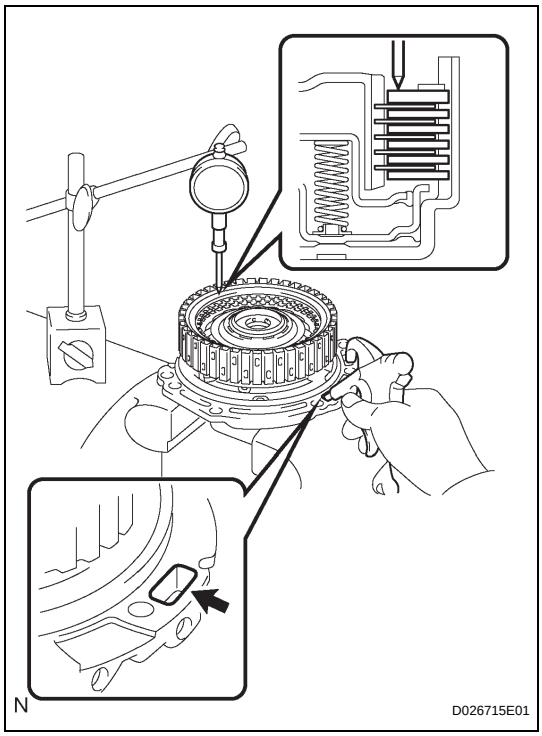

INSPECTION

1. INSPECT PACK CLEARANCE OF FORWARD CLUTCH

(a) Install the forward clutch on the oil pump.
NOTICE:
Be careful not to damage the oil seal ring of the oil pump.

(b) Using a dial indicator, measure the forward clutch pack clearance while applying and releasing compressed air (392 kPa, 4.0 kgf/cm^2, 57 psi).
Standard pack clearance:
1.00 to 1.25 mm (0.0394 to 0.4921 in.)
If the clearance is not as specified, inspect the discs, plates and flange.
HINT:
If the opening is large, cover it with a piece of cloth to prevent the compressed air from being released.

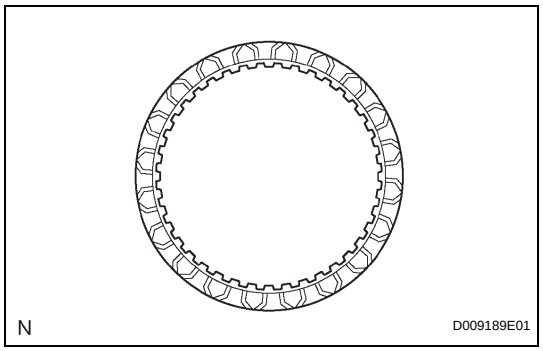

2. INSPECT FORWARD MULTIPLE DISC CLUTCH DISC

(a) Check if the sliding surface of the disc, plate and flange are worn or burnt.
If necessary, replace them.
NOTICE:
- **If the lining of the disc comes off or is discolored, or if a part of the groove is worn, replace all the discs.**
- **Before installing new discs, immerse them in ATF for at least 15 minutes.**

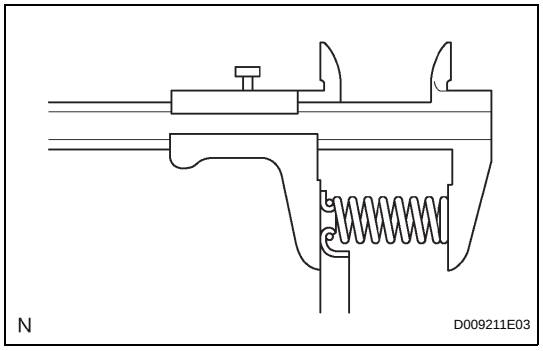

3. INSPECT FORWARD CLUTCH RETURN SPRING SUB-ASSEMBLY

(a) Using a vernier caliper, measure the free length of the spring together with the spring seat.
Standard free length:
26.74 mm (1.0528 in.)

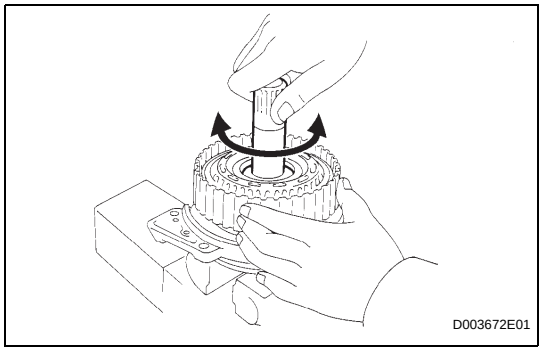

4. INSPECT FORWARD MULTIPLE DISC CLUTCH DISC

(a) Check if the disc lightly rotates when rotating the forward clutch after inserting the multiple disc clutch into it.
NOTICE:
Do not place the forward clutch in a vise.

REASSEMBLY

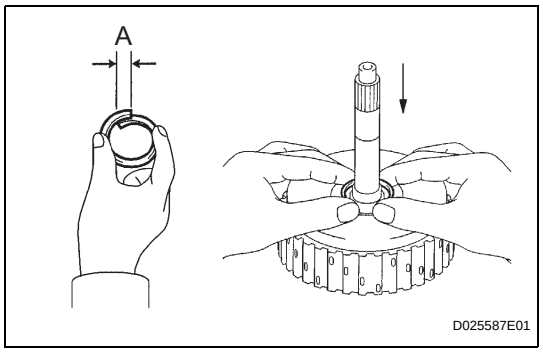

1. INSTALL INPUT SHAFT OIL SEAL RING

(a) Compress a new input shaft oil seal ring from both sides to reduce dimension A.
Dimension A:
5.0 mm (0.197 in.)

(b) Coat the oil seal ring with ATF and install it to the forward clutch drum.
NOTICE:
Do not expand the end gap of the oil seal ring too much. Fix the hooks firmly.

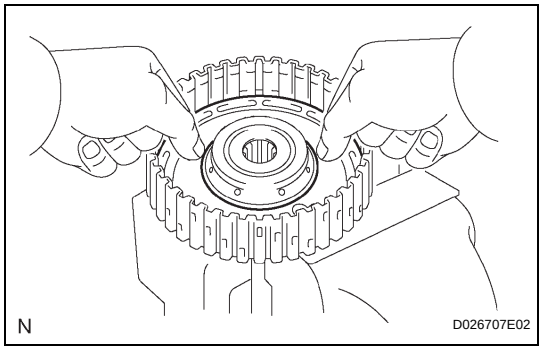

2. INSTALL FORWARD CLUTCH PISTON SUB-ASSEMBLY

(a) Coat the forward clutch piston with ATF, and install it to the forward clutch drum.
NOTICE:
Be careful not to damage the lip of the forward clutch piston.

AX

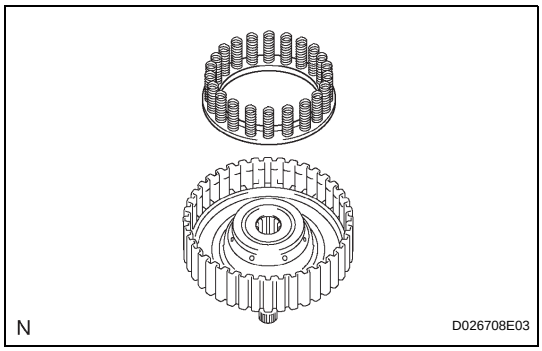

3. INSTALL FORWARD CLUTCH RETURN SPRING SUB-ASSEMBLY

(a) Install the return spring to the forward clutch drum.
NOTICE:
After installing the spring, check that all of the springs fit in the piston correctly.

(b) Coat the clutch balancer with ATF.

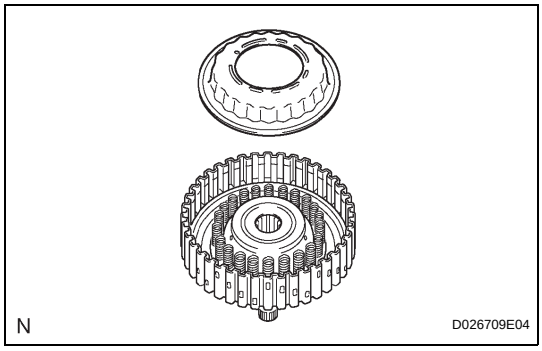

(c) Install the clutch balancer to the forward clutch drum.
NOTICE:
- **Be careful not to damage the lip of the forward clutch balancer.**
- **Make sure that the clutch balancer is not pinched and that there are no other defects on the lip.**
- **Apply sufficient ATF to the sealing lip before installation.**

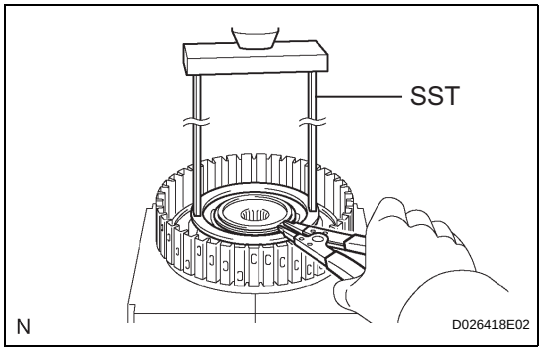

(d) Place SST on the clutch balancer, and compress the clutch balancer with a press.
SST 09387-00020

(e) Install the snap ring with a snap ring expander.

(f) Be sure that the end gap of the snap ring is not aligned with the spring retainer claw.
NOTICE:
- **Stop the press when the spring seat is lowered to a position 1 to 2 mm (0.039 to 0.078 in.) from the snap ring groove. This prevents the spring seat from being deformed.**
- **Do not expand the snap ring excessively.**

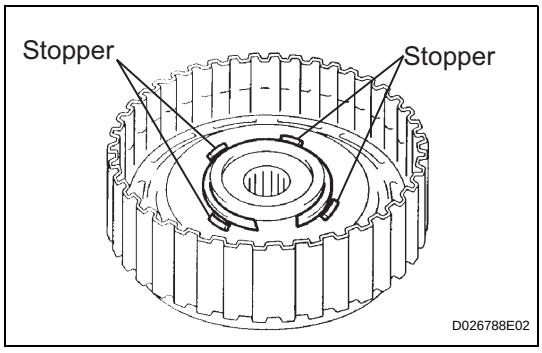

(g) Set the end gap of the snap ring in the piston as shown in the illustration.
NOTICE:
The end gap of the snap ring should not align with any of the stoppers.

4. INSTALL FORWARD MULTIPLE DISC CLUTCH DISC

(a) Coat the 5 discs with ATF.

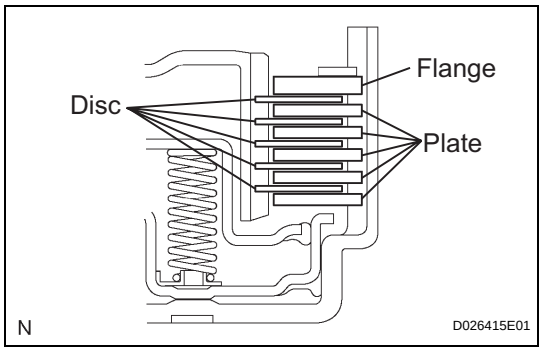

(b) Install the 5 plates, 5 discs and flange to the forward clutch drum.
NOTICE:
Make sure that the plates, discs, and flange are installed as shown in the illustration.

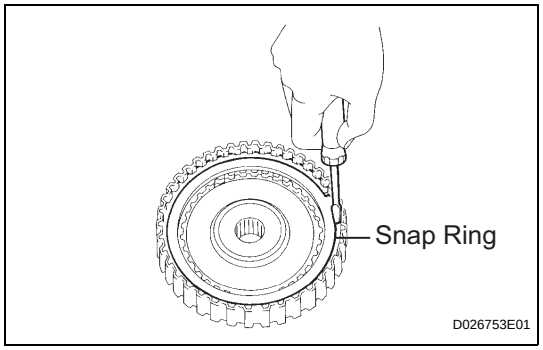

(c) Using a screwdriver, install the snap ring.
(d) Check that the end gap of the snap ring is not aligned with one of the cutouts.
NOTICE:
The snap ring should be fully engaged in the groove of the drum.

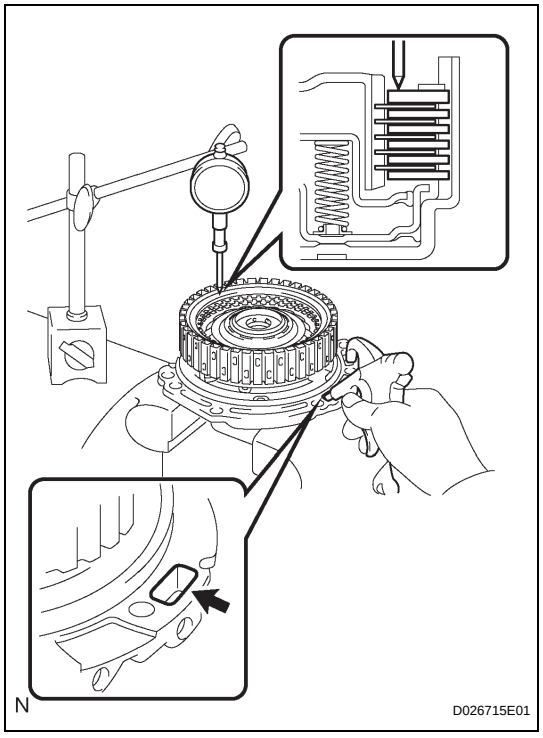

5. INSPECT PACK CLEARANCE OF FORWARD CLUTCH

(a) Using a dial indicator, measure the forward clutch pack clearance while applying and releasing compressed air (392 kgf/cm^2, 4.0 kPa, 57 psi).
Pack clearance:
1.00 to 1.25 mm (0.0394 to 0.4921 in.)
If the piston stroke is less than the minimum, parts may be assembled incorrectly. Check and reassemble the parts again.
If the clearance is not as specified, select another flange.
HINT:
There are 5 different thicknesses of flanges available.
Standard flange thickness

No.	Thickness	No.	Thickness
1	3.00 mm (0.1181 in.)	4	3.45 mm (0.1358 in.)
2	3.15 mm (0.1240 in.)	5	3.60 mm (0.1417 in.)
3	3.30 mm (0.1299 in.)	-	-

6. INSPECT FORWARD MULTIPLE DISC CLUTCH DISC (See page AX-257)

FORWARD CLUTCH

COMPONENTS

AX

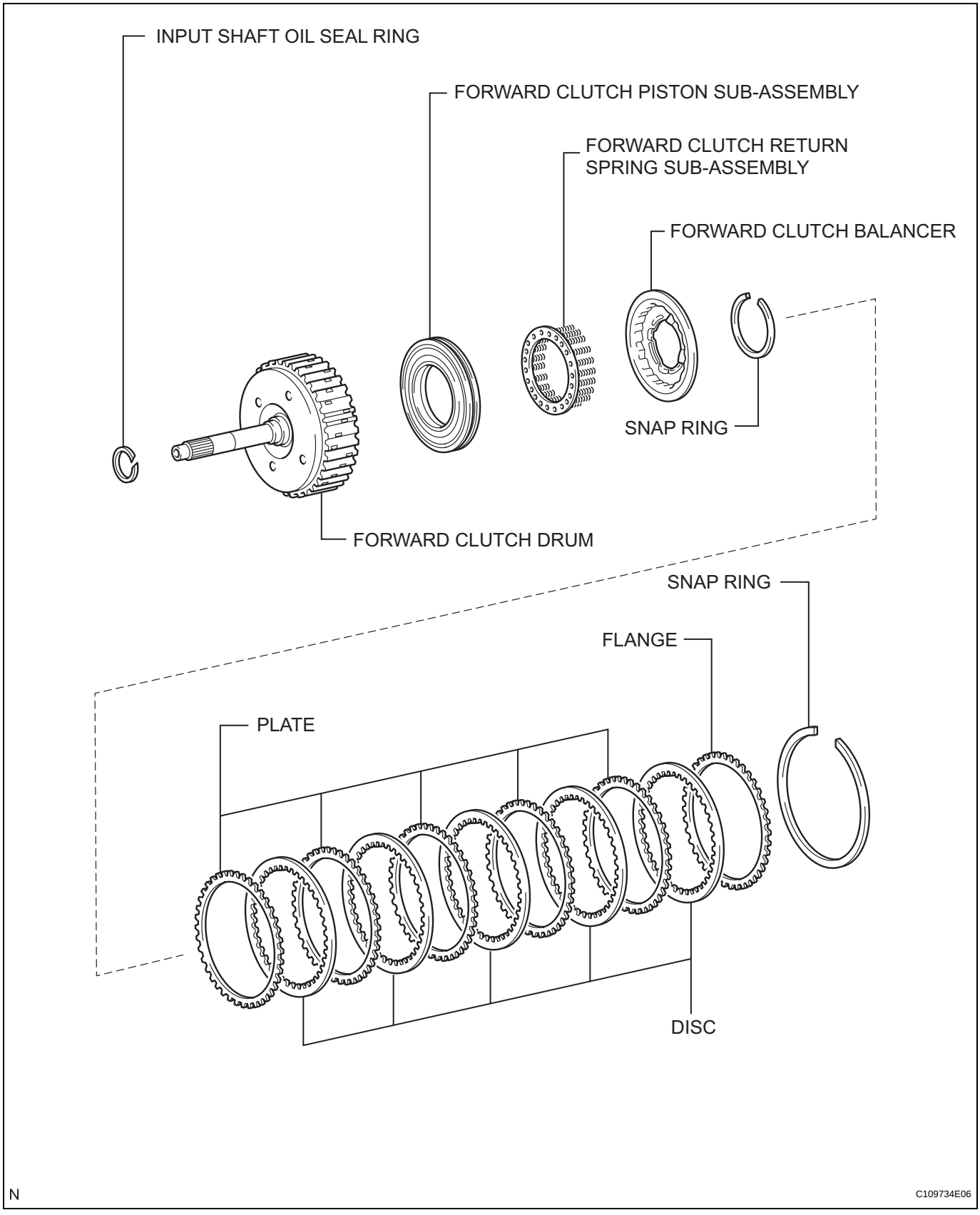

DISASSEMBLY

1. INSPECT PACK CLEARANCE OF FORWARD CLUTCH (See page AX-256)

2. REMOVE FORWARD MULTIPLE DISC CLUTCH DISC

(a) Using a screwdriver, remove the snap ring.

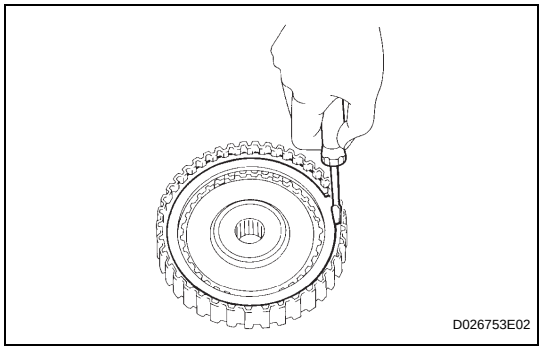

(b) Remove the flange, 5 discs and 5 plates from the forward clutch drum.

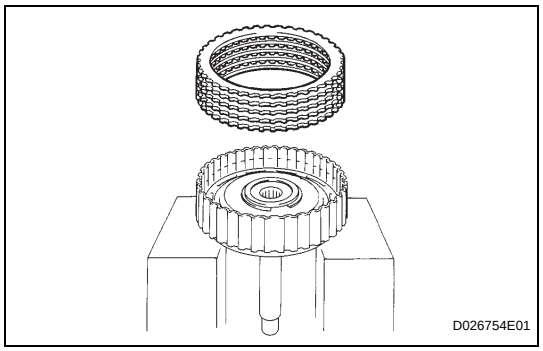

3. REMOVE FORWARD CLUTCH RETURN SPRING SUB-ASSEMBLY

(a) Place SST on the spring retainer and compress the return spring with a press.
SST 09387-00020

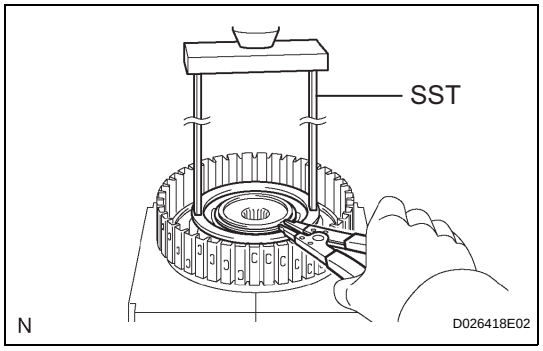

(b) Using a snap ring expander, remove the snap ring.
NOTICE:
- **Stop the press when the spring seat is lowered to a position 1 to 2 mm (0.039 to 0.078 in.) from the snap ring groove to prevent the spring seat from being deformed.**
- **Do not expand the snap ring excessively.**

(c) Remove the clutch balancer from the forward clutch drum.

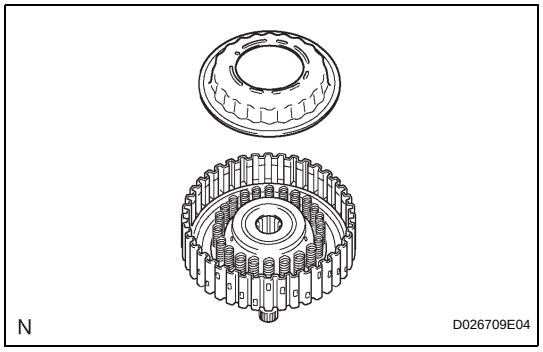

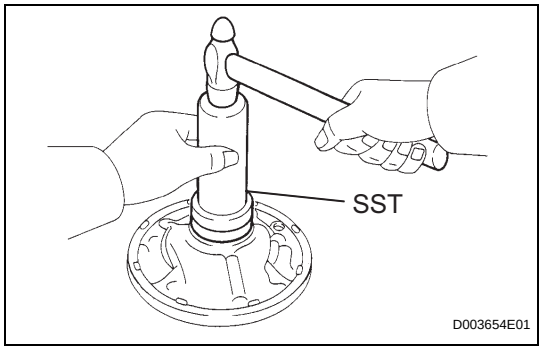

REASSEMBLY

1. INSTALL FRONT OIL PUMP OIL SEAL

(a) Using SST and a hammer, tap in a new oil seal to the oil pump body.
SST 09350-32014 (09351-32140)
HINT:
The seal end should be flat with the outer edge of the oil pump.

(b) Coat the lip of the oil seal with MP grease.

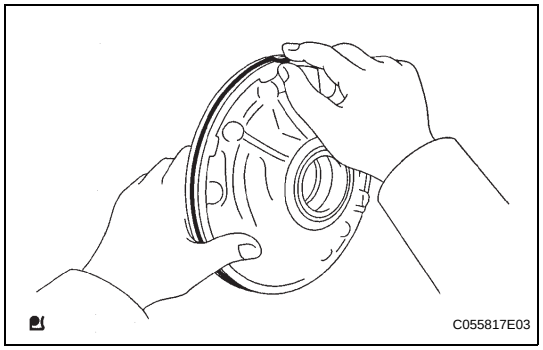

2. INSTALL FRONT OIL PUMP BODY O-RING

(a) Coat a new O-ring with ATF, and install it to the oil pump body.
NOTICE:
- **Make sure that the O-ring is not twisted or pinched.**
- **Apply enough ATF to the O-ring before installation.**

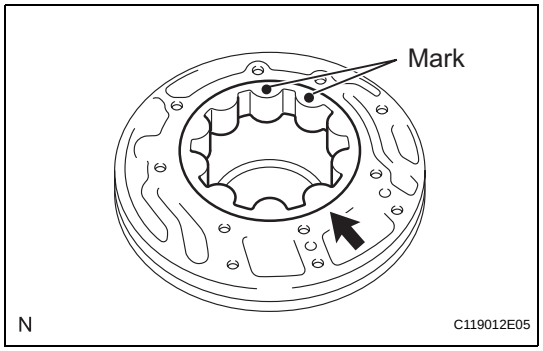

3. INSTALL FRONT OIL PUMP DRIVEN GEAR

(a) Coat the front oil pump driven gear with ATF, and install it to the oil pump body with the marked side facing upward.

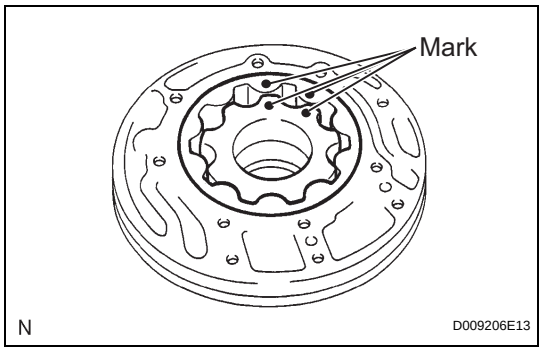

4. INSTALL FRONT OIL PUMP DRIVE GEAR

(a) Coat the front oil pump drive gear with ATF, and install it to the oil pump body with the marked side facing upward.

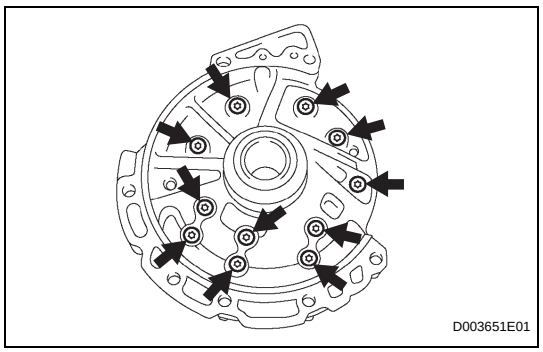

5. INSTALL STATOR SHAFT ASSEMBLY

(a) Set the stator shaft and align it with each bolt hole.

(b) Using a T30 "torx" socket, install the 11 bolts.
Torque: 9.8 N*m (100 kgf*cm, 87 in.*lbf)

AX

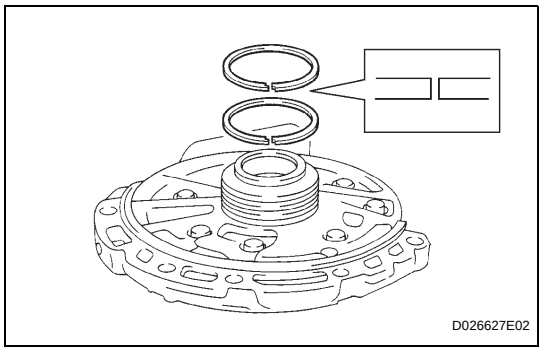

6. INSTALL CLUTCH DRUM OIL SEAL RING

(a) Coat 2 new oil seal rings with ATF.

(b) Install 2 new clutch drum oil seal rings.

NOTICE:

Do not expand the ring ends excessively.

7. INSPECT OIL PUMP ASSEMBLY (See page AX-247)

OIL PUMP

COMPONENTS

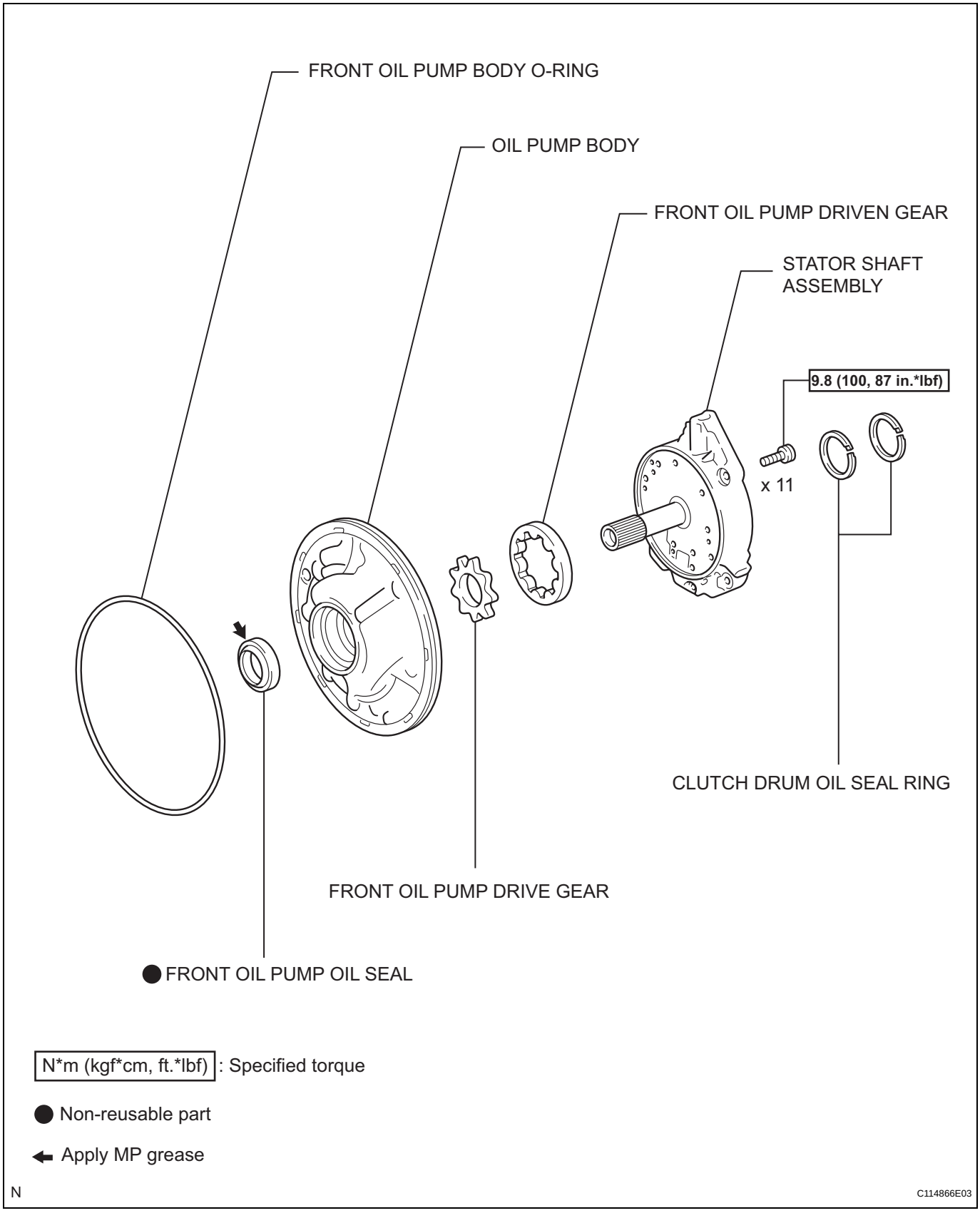

AX

DISASSEMBLY

1. **INSPECT OIL PUMP ASSEMBLY (See page AX-247)**

2. **REMOVE CLUTCH DRUM OIL SEAL RING**
   (a) Remove the 2 clutch drum oil seal rings.

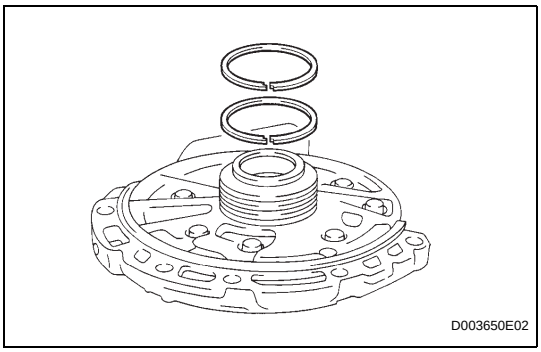

3. **REMOVE STATOR SHAFT ASSEMBLY**
   (a) Using a T30 "torx" socket, remove the 11 bolts and stator shaft.

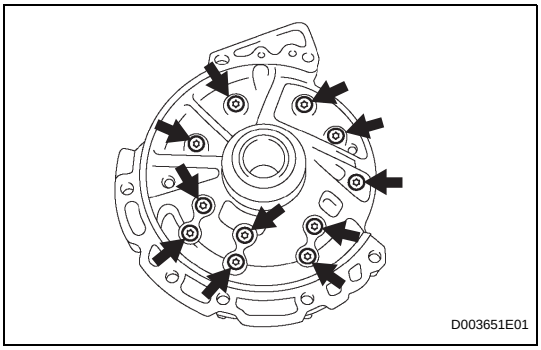

4. **INSPECT CLEARANCE OF OIL PUMP ASSEMBLY (See page AX-247)**

5. **REMOVE FRONT OIL PUMP DRIVE GEAR**

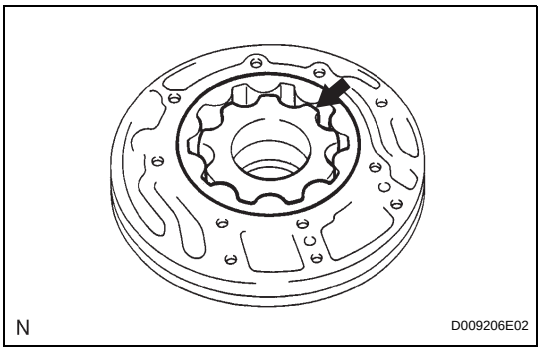

6. **REMOVE FRONT OIL PUMP DRIVEN GEAR**

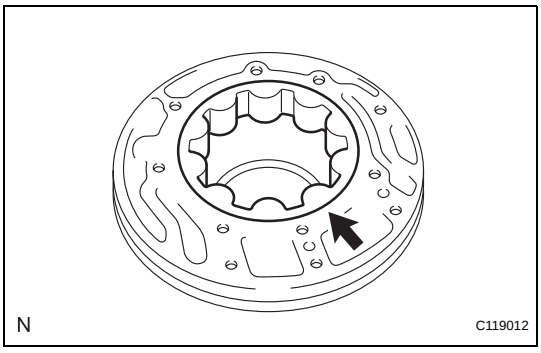

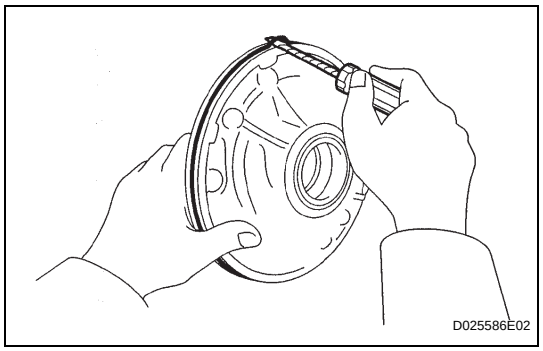

7. REMOVE FRONT OIL PUMP BODY O-RING

(a) Using a screwdriver, pry out the O-ring.
HINT:
Tape the screwdriver tip before use.

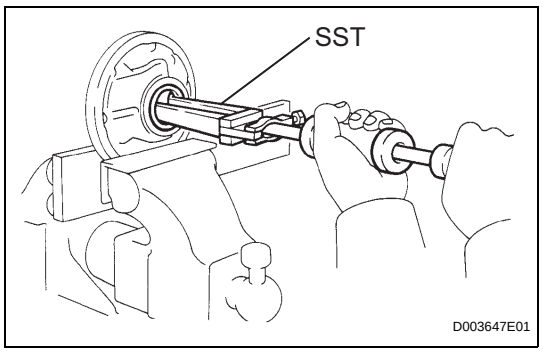

8. REMOVE FRONT OIL PUMP OIL SEAL

(a) Mount the oil pump in a soft jaw vise.
(b) Using SST, remove the oil seal from the oil pump body.
SST 09308-00010

INSPECTION

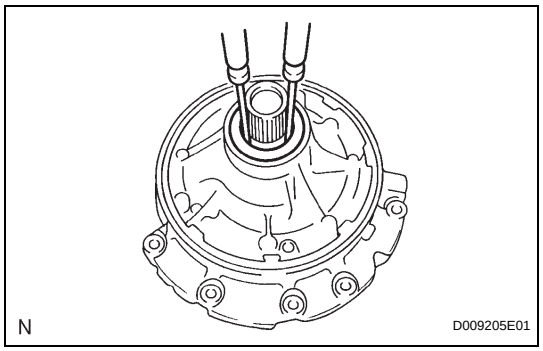

1. INSPECT OIL PUMP ASSEMBLY

(a) Turn the drive gear with 2 screwdrivers and make sure that it rotates smoothly.
NOTICE:
Be careful not to damage the lip of the oil seal.

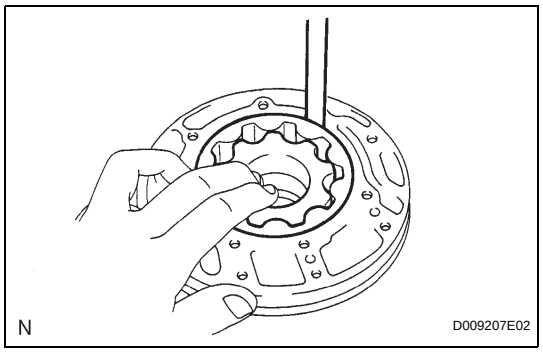

2. INSPECT CLEARANCE OF OIL PUMP ASSEMBLY

(a) Push the driven gear to one side of the body.
(b) Using a feeler gauge, measure the body clearance between the driven gear and oil pump body.
Standard body clearance:
0.10 to 0.17 mm (0.0039 to 0.0067 in.)
Maximum body clearance:
0.17 mm (0.0067 in.)
If the body clearance is greater than the maximum, replace the oil pump body sub-assembly.

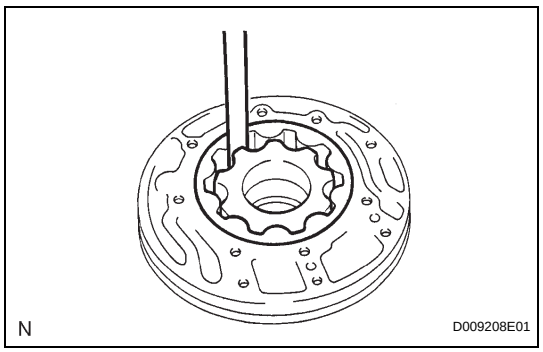

(c) Using a feeler gauge, measure the tip clearance between the driven gear teeth and drive gear teeth.
Standard tip clearance:
0.07 to 0.15 mm (0.0028 to 0.0059 in.)
Maximum tip clearance:
0.15 mm (0.0059 in.)
If the tip clearance is greater than the maximum, replace the oil pump body.

AX

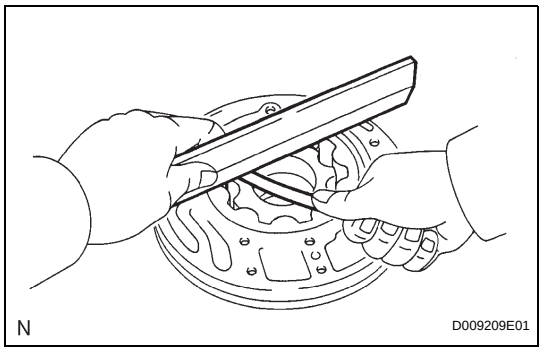

(d) Using a straightedge and feeler gauge, measure the side clearance of both gears.

Standard side clearance:
0.02 to 0.05 mm (0.0008 to 0.0020 in.)
Maximum side clearance:
0.05 mm (0.0020 in.)

Standard drive gear thickness

Mark	Thickness
A	11.690 to 11.699 mm (0.4602 to 0.4606 in.)
B	11.700 to 11.709 mm (0.4606 to 0.4610 in.)
C	11.710 to 11.720 mm (0.4610 to 0.4614 in.)
D	11.721 to 11.730 mm (0.4615 to 0.4618 in.)
E	11.731 to 11.740 mm (0.4619 to 0.4622 in.)

Standard driven gear thickness

Mark	Thickness
A	11.690 to 11.699 mm (0.4602 to 0.4606 in.)
B	11.700 to 11.709 mm (0.4606 to 0.4610 in.)
C	11.710 to 11.720 mm (0.4610 to 0.4614 in.)
D	11.721 to 11.730 mm (0.4615 to 0.4618 in.)
E	11.731 to 11.740 mm (0.4619 to 0.4622 in.)

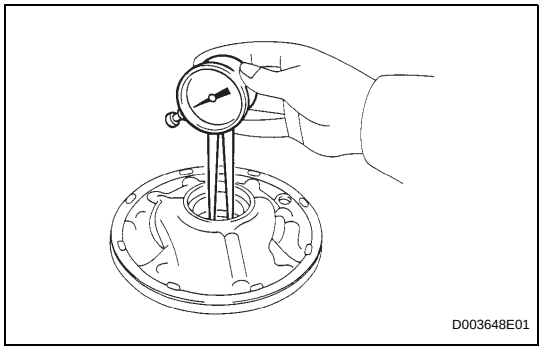

3. INSPECT FRONT OIL PUMP AND GEAR BODY SUB-ASSEMBLY

(a) Using a caliper gauge, measure the inside diameter of the oil pump body bushing.

Standard inside diameter:
38.113 to 38.138 mm (1.5005 to 1.5015 in.)
Maximum inside diameter:
38.188 mm (1.5035 in.)

If the inside diameter is greater than the maximum, replace the oil pump body sub-assembly.

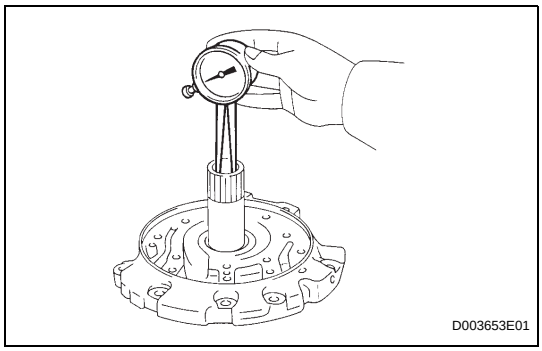

4. INSPECT STATOR SHAFT ASSEMBLY

(a) Using a caliper gauge, measure the inside diameter of the stator shaft.

Standard inside diameter:
21.500 to 21.526 mm (0.8465 to 0.8475 in.)
Maximum inside diameter:
21.57 mm (0.8492 in.)

If the inside diameter is greater than the maximum, replace the stator shaft.

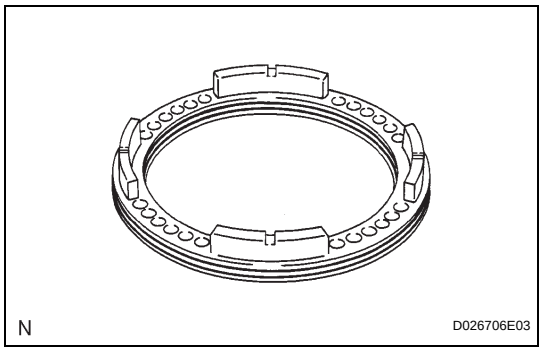

REASSEMBLY

1. INSTALL 2ND BRAKE PISTON O-RING

(a) Coat 2 new O-rings with ATF, and install them in the 2nd brake piston.

NOTICE:

Make sure that the O-ring is not twisted or pinched.

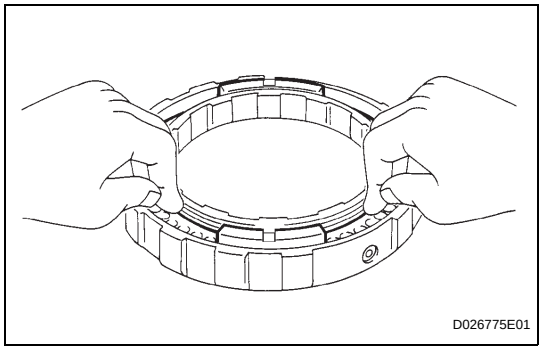

2. INSTALL 2ND BRAKE PISTON

(a) Coat the 2nd brake piston with ATF, and install it to the 2nd brake cylinder.

NOTICE:

Be careful not to damage the O-ring.

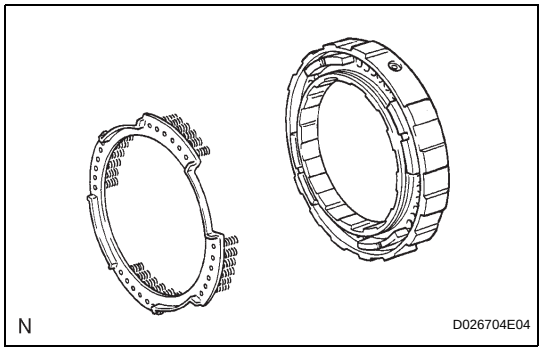

3. INSTALL 2ND BRAKE PISTON RETURN SPRING SUB-ASSEMBLY

(a) Install the 2nd brake piston return spring.

NOTICE:

After installing the spring, check that all of the springs fit in the piston correctly.

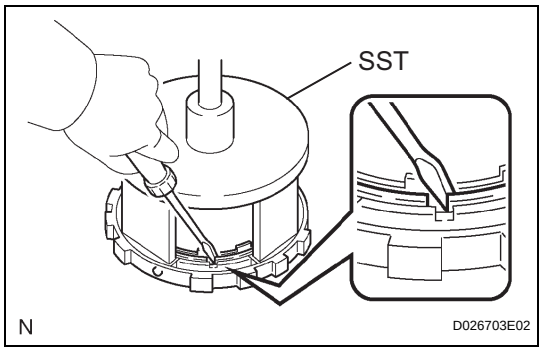

(b) Place SST on the piston return spring, and compress the piston return spring with a press.

SST 09387-00060

(c) Using a screwdriver, install the snap ring.

(d) Be sure that the end gap of the snap ring is not aligned with the spring retainer claw.

NOTICE:

Stop the press when the spring seat is lowered to a position 1 to 2 mm (0.039 to 0.078 in.) from the snap ring groove. This prevents the spring seat from being deformed.

SECOND BRAKE PISTON

COMPONENTS

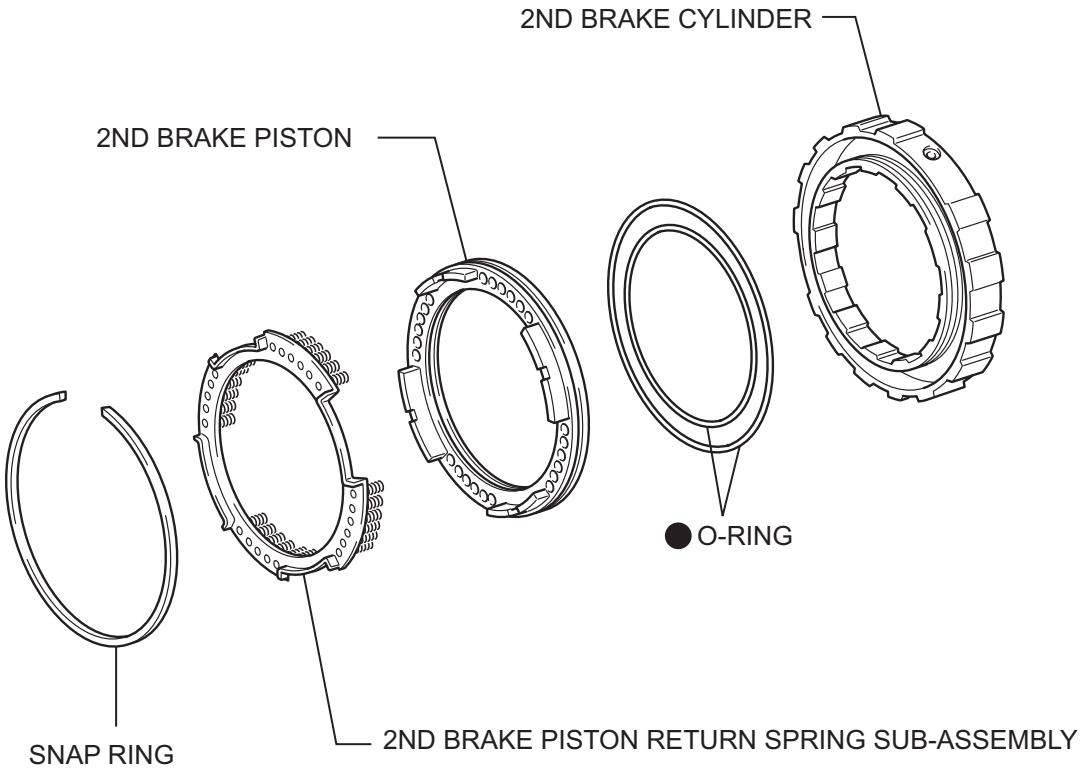

● Non-reusable part

N

C109736E07

AX

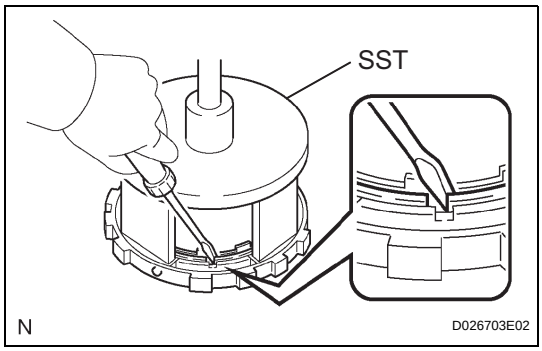

DISASSEMBLY

1. REMOVE 2ND BRAKE PISTON RETURN SPRING SUB-ASSEMBLY

(a) Place SST on the return spring and compress the return spring with a press.
SST 09387-00060

(b) Using a screwdriver, remove the snap ring.

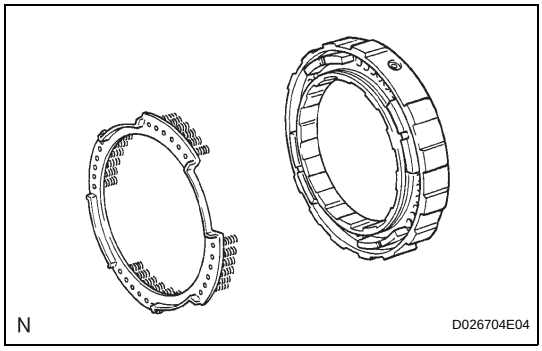

(c) Remove the 2nd brake piston return spring.

2. REMOVE 2ND BRAKE PISTON

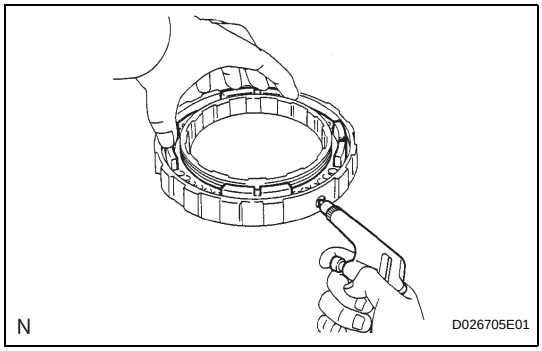

(a) Hold the 2nd brake piston and apply compressed air (392 kPa, 4.0 kgf/cm^2, 57 psi) to the 2nd brake cylinder to remove the 2nd brake piston.
NOTICE:
Hold the piston with a shop rag or a piece of cloth when removing the piston. Failure to do so may result in the piston jumping out from the cylinder.

3. REMOVE 2ND BRAKE PISTON O-RING

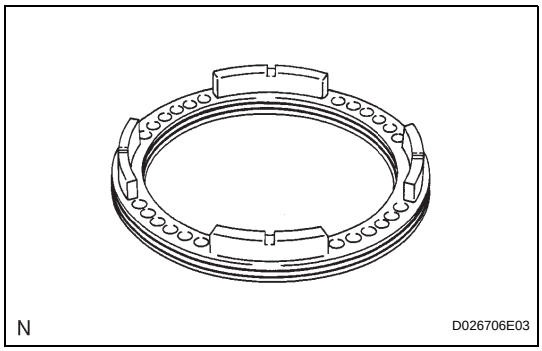

(a) Remove the 2 O-rings from the 2nd brake piston.

INSPECTION

1. INSPECT 2ND BRAKE PISTON RETURN SPRING SUB-ASSEMBLY

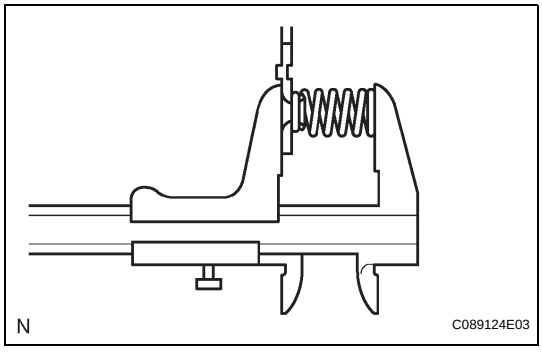

(a) Using a vernier caliper, measure the free length of the spring together with the spring seat.
Standard free length:
16.61 mm (0.6539 in.)

AX

ON-VEHICLE INSPECTION

1. CHECK SHIFT LOCK OPERATION

(a) Move the shift lever to P.
(b) Turn the ignition switch OFF.
(c) Check that the shift lever cannot be moved to any position other than P.
(d) Turn the ignition switch ON, depress the brake pedal and check that the shift lever can be moved to other positions.

2. CHECK SHIFT LOCK RELEASE BUTTON OPERATION

(a) When operating the shift lever with the shift lock release button pressed, check that the lever can be moved to any position other than P. If the operation cannot be performed as specified, check the shift lever assembly.

3. REMOVE KEY INTERLOCK OPERATION

(a) Turn the ignition switch ON.
(b) Depress the brake pedal and move the shift lever to any position other than P. Check that the ignition switch cannot be turned OFF.
(c) Move the shift lever to P, turn the ignition switch OFF and check that the key can be removed. If the results are not as specified, inspect the shift lock control unit.

4. CHECK SHIFT LOCK CONTROL UNIT ASSEMBLY

(a) Measure the voltage of the connector.
HINT:
Do not disconnect the shift lock control ECU connector.
Standard voltage

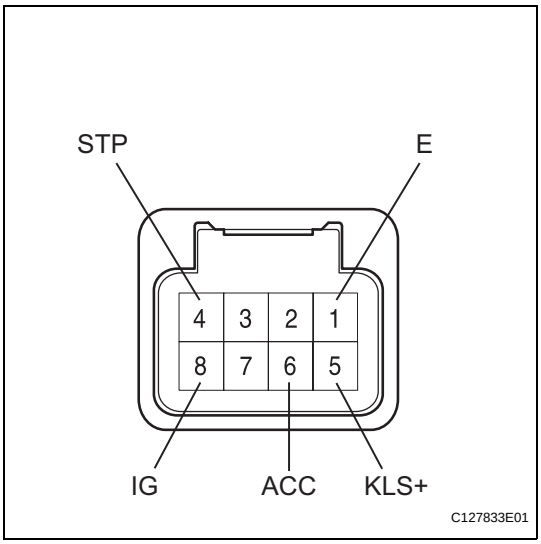

Tester Connection	Condition	Specified Condition
6 (ACC) - 1 (E)	Ignition switch ON	10 to 14 V
6 (ACC) - 1 (E)	Ignition switch ACC	10 to 14 V
6 (ACC) - 1 (E)	Ignition switch OFF	Below 1 V
4 (STP) - 1 (E)	Depress brake pedal	10 to 14 V
4 (STP) - 1 (E)	Release brake pedal	Below 1 V
5 (KLS+) - 1 (E)	Ignition switch ACC and shift lever on P	Below 1 V
5 (KLS+) - 1 (E)	Ignition switch ACC and shift lever not on P	7.5 to 11 V
5 (KLS+) - 1 (E)	Ignition switch ACC and shift lever not on P (after approx. 1 second)	6 to 9 V
8 (IG) - 1 (E)	Ignition switch ON	10 to 14 V
8 (IG) - 1 (E)	Ignition switch OFF	Below 1 V

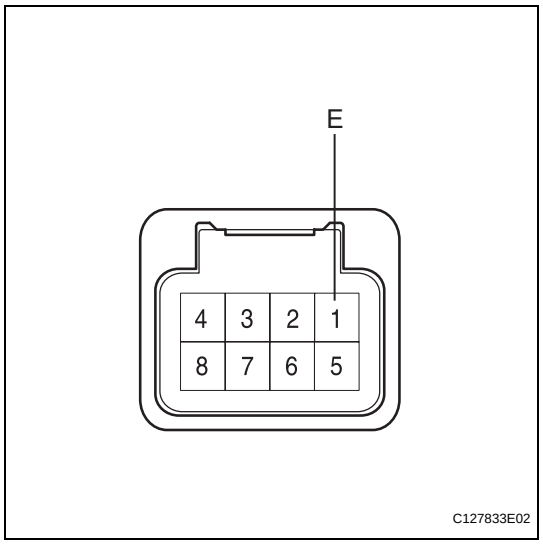

(b) Measure the resistance of the connector.
HINT:
Do not disconnect the shift lock control ECU connector.
Standard resistance

Tester Connection	Measuring Condition	Specified Condition
1 (E) - Body ground	Always	Below 1 Ω

If the result is not as specified, replace the shift lock control ECU.

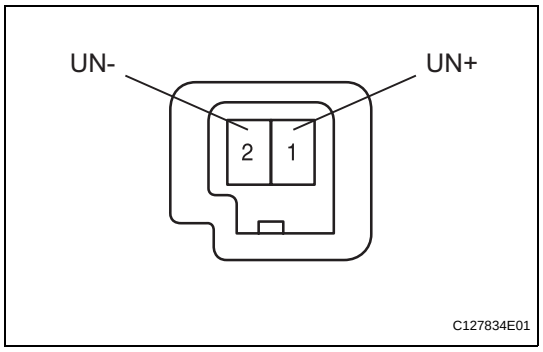

INSPECTION

1. INSPECT KEY INTERLOCK SOLENOID

(a) Disconnect the solenoid connector.

(b) Connect the battery's positive (+) lead to terminal 1 (UN+) and the battery's negative (-) lead to terminal 2 (UN-). Check that the operating noise of the solenoid can be heard.
If the result is not as specified, replace the solenoid.

SHIFT LOCK SYSTEM

PARTS LOCATION

AX

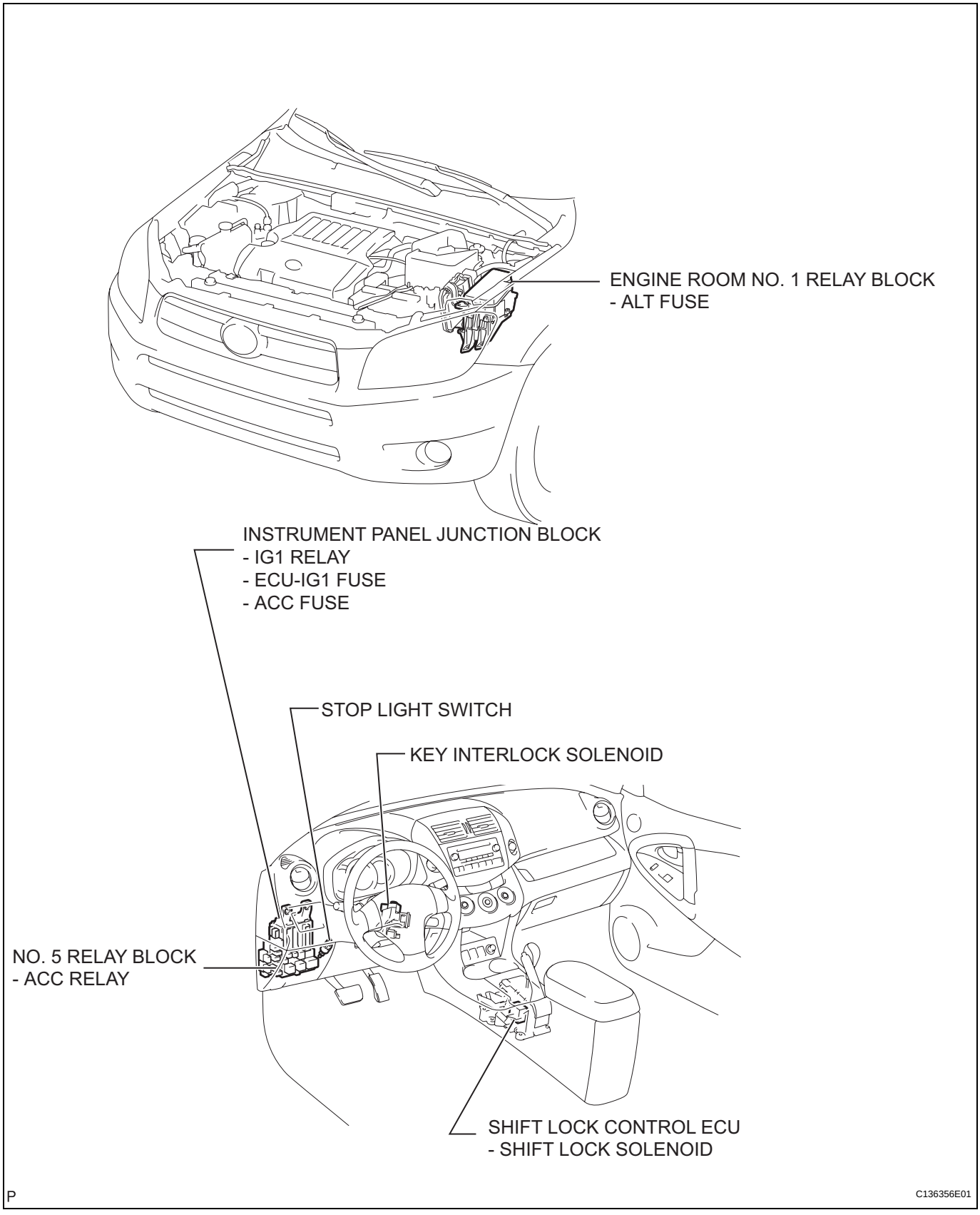

SYSTEM DIAGRAM

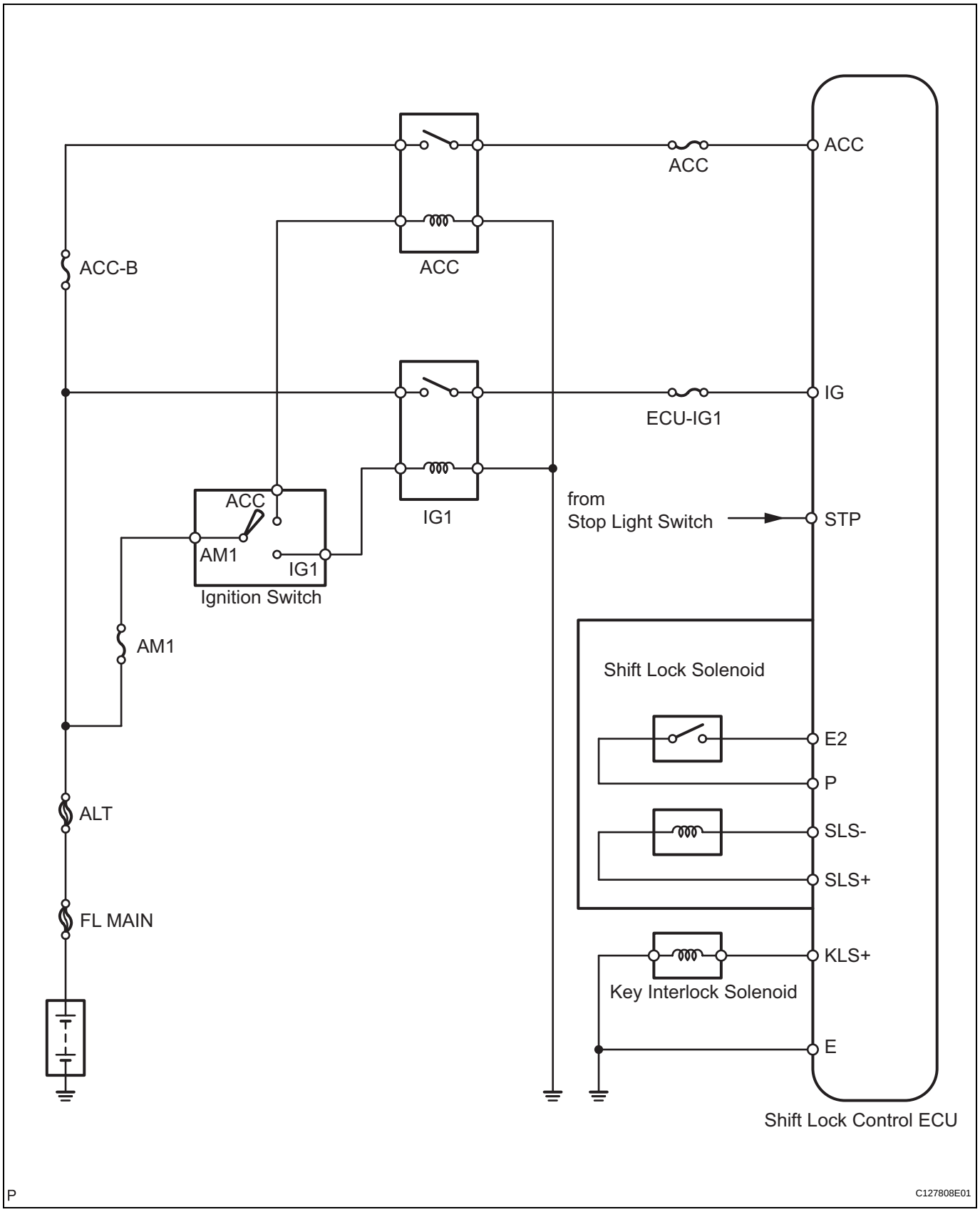

SPEED SENSOR

COMPONENTS

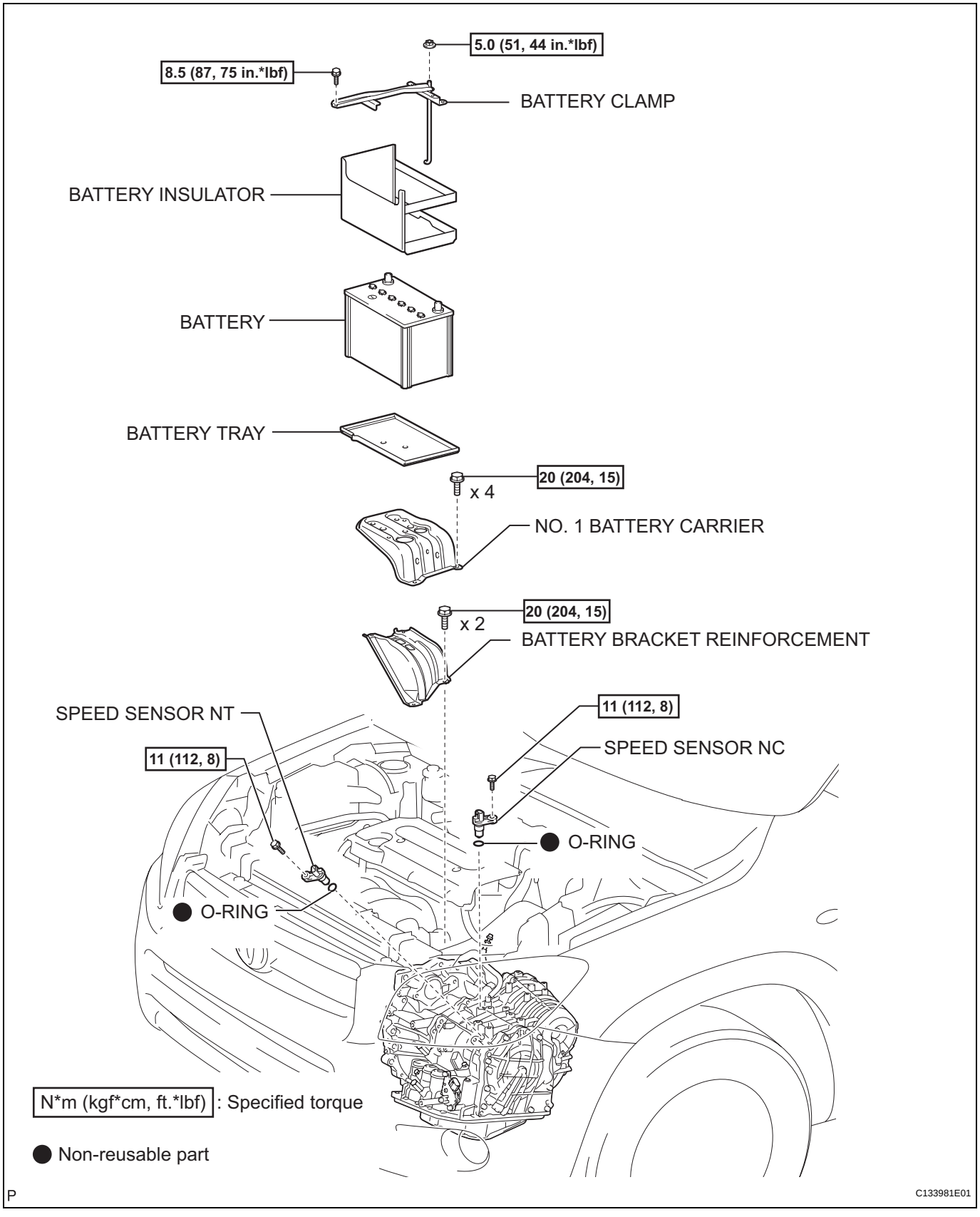

AX

REMOVAL

1. DISCONNECT CABLE FROM NEGATIVE BATTERY TERMINAL

CAUTION:

Wait at least 90 seconds after disconnecting the cable from the negative (-) battery terminal to prevent airbag and seat belt pretensioner activation.

2. REMOVE BATTERY

(a) Loosen the nut and remove the bolt and battery clamp.
(b) Remove the battery and insulator.
(c) Remove the battery tray.
(d) Remove the 4 bolts and battery carrier.
(e) Remove the 2 bolts and battery bracket reinforcement.

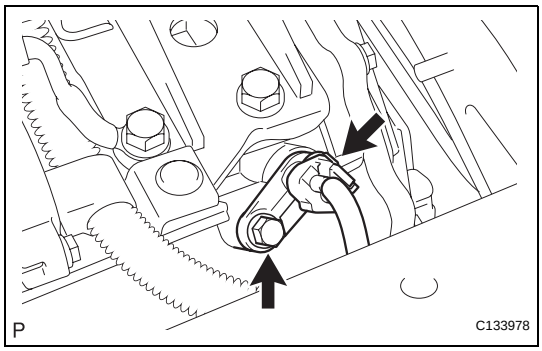

3. REMOVE SPEED SENSOR NT

(a) Disconnect the sensor connector.
(b) Remove the bolt and sensor.
(c) Remove the O-ring from the sensor.

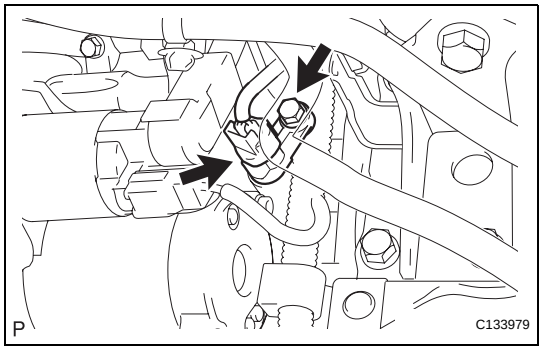

4. REMOVE SPEED SENSOR NC

(a) Disconnect the sensor connector.
(b) Remove the bolt and sensor.
(c) Remove the O-ring from the sensor.

INSPECTION

1. INSPECT SPEED SENSOR NT

Measure the resistance of the sensor.

Standard resistance

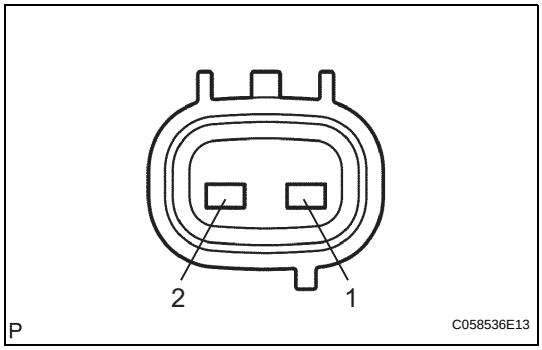

Tester Connection	Condition	Specified Condition
1 - 2	20°C (68°F)	560 to 680 Ω

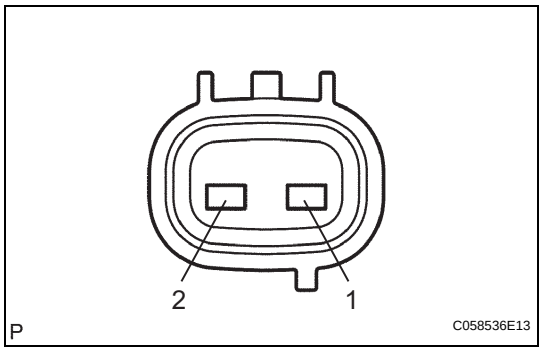

2. INSPECT SPEED SENSOR NC

Measure the resistance of the sensor.

Standard resistance

Tester Connection	Condition	Specified Condition
1 - 2	20°C (68°F)	560 to 680 Ω

AX

INSTALLATION

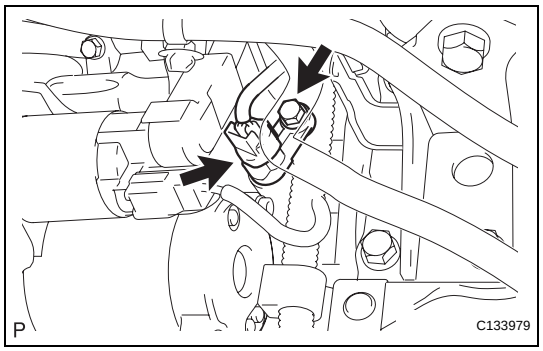

1. INSTALL SPEED SENSOR NC

(a) Coat a new O-ring with ATF.
(b) Install the O-ring to the sensor.
(c) Install the sensor with the bolt.
Torque: 11 N*m (112 kgf*cm, 8 ft.*lbf)
(d) Connect the sensor connector.

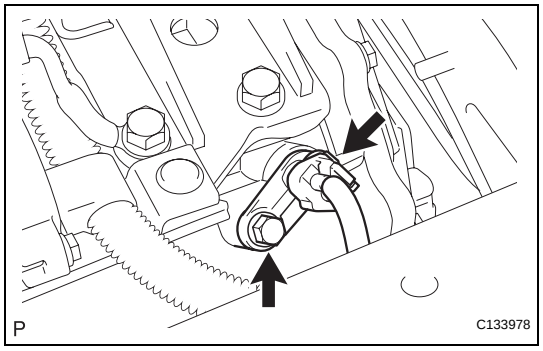

2. INSTALL SPEED SENSOR NT

(a) Coat a new O-ring with ATF.
(b) Install the O-ring to the sensor.
(c) Install the sensor with the bolt.
Torque: 11 N*m (112 kgf*cm, 8 ft.*lbf)
(d) Connect the sensor connector.

3. INSTALL BATTERY

(a) Install the battery bracket reinforcement with the 2 bolts.
Torque: 20 N*m (204 kgf*cm, 15 ft.*lbf)
(b) Install the battery carrier with the 4 bolts.
Torque: 20 N*m (204 kgf*cm, 15 ft.*lbf)
(c) Install the battery tray.
(d) Install the battery and insulator with the battery clamp.
Torque: 8.5 N*m (87 kgf*cm, 75 in.*lbf) for bolt
5.0 N*m (51 kgf*cm, 44 in.*lbf) for nut

4. CONNECT CABLE TO NEGATIVE BATTERY TERMINAL

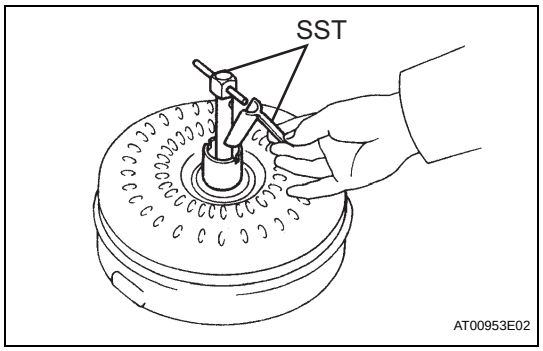

TORQUE CONVERTER AND DRIVE PLATE

INSPECTION

1. INSPECT TORQUE CONVERTER CLUTCH ASSEMBLY

(a) Inspect the one-way clutch.

(1) Install SST to the inner race of the one-way clutch.

SST 09350-32014 (09351-32010)

(2) Set SST so that it fits in the notch of the converter hub and in the outer race of the one-way clutch.

SST 09350-32014 (09351-32020)

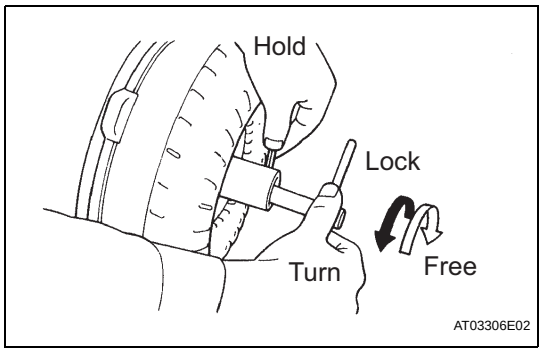

(3) With the torque converter standing on its side, check that the clutch locks when SST is turned counterclockwise and rotates freely and smoothly when turned clockwise. If the results are not as specified, clean the converter and recheck the one-way clutch. If the results still are not as specified, replace the converter.

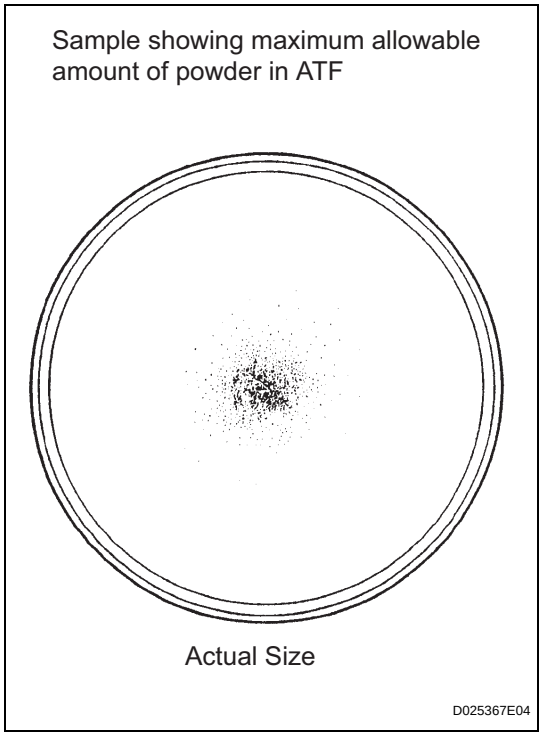

(b) Determine the condition of the torque converter clutch.

(1) Check that the following conditions are met:

- During the stall test or when the shift lever is on N, metallic sounds are not emitted from the torque converter clutch.
- The one-way clutch turns in one direction and locks in the other direction.
- The amount of powder in the ATF is not greater than the sample shown in the illustration.

If the results are not as specified, replace the torque converter clutch assembly.

HINT:

The sample illustration shows approximately 0.25 liters (0.26 US qts, 0.22 Imp. qts) of the ATF taken from a removed torque converter clutch.

(c) Replace the ATF in the torque converter clutch.

(1) If the ATF is discolored and/or has a foul odor, stir the ATF in the torque converter clutch thoroughly and drain the ATF with the torque converter facing upward.

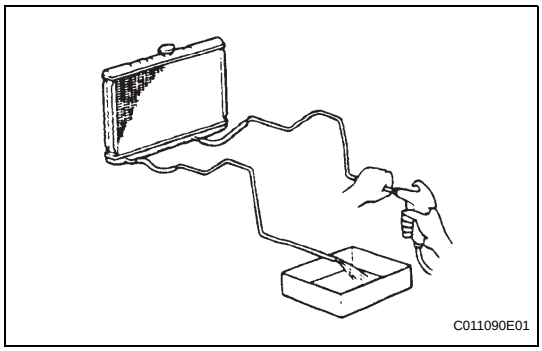

(d) Clean and check the oil cooler and oil pipe line.
  (1) If the torque converter clutch is inspected or the ATF is replaced, clean the oil cooler and oil pipe line.
    - Apply compressed air of 196 kPa (2 kgf/cm^2, 28 psi) into the inlet hose.
    - If a large amount of powder is found in the ATF, add new ATF using a bucket pump and clean the oil cooler and oil pipe line again.
  (2) If the ATF is cloudy, inspect the oil cooler (radiator).

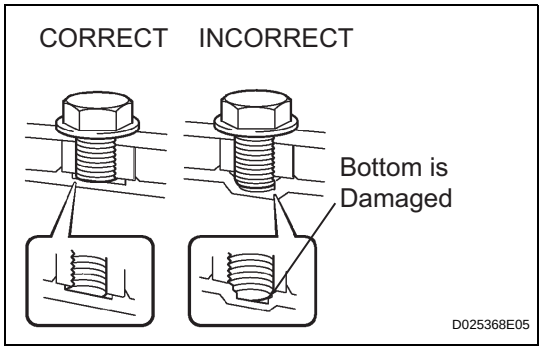

(e) Prevent deformation of the torque converter clutch and damage to the oil pump gear.
  (1) When any marks due to interference are found on the end of the bolt for the torque converter clutch and on the bottom of the bolt hole, replace the bolt and torque converter clutch.
  (2) All of the bolts should be the same length.
  (3) Make sure no spring washers are missing.

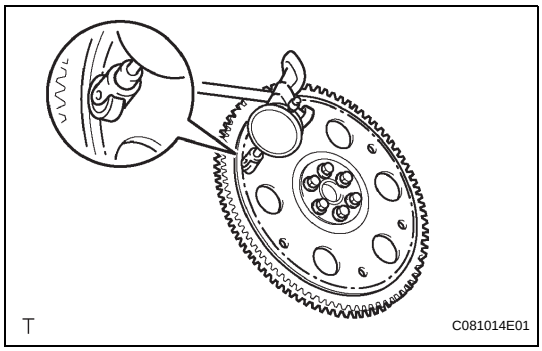

2. INSPECT DRIVE PLATE AND RING GEAR SUB-ASSEMBLY

(a) Set up a dial indicator and measure the drive plate runout.

Maximum runout:

0.30 mm (0.0118 in.)

If the runout is greater than the maximum or if the ring gear is damaged, replace the drive plate. If installing a new drive plate, be careful of the orientation of the spacers and tighten the bolts.

Torque: 98 N*m (999 kgf*cm, 72 ft.*lbf)

(b) Check the ring gear for any damage.

If the ring gear is damaged, replace the drive plate.

AX

TRANSMISSION CONTROL CABLE ASSEMBLY

REPLACEMENT

1. **REMOVE REAR CONSOLE BOX SUB-ASSEMBLY**
   (a) Remove the console box (see page IP-20).

2. **DISCONNECT CABLE FROM NEGATIVE BATTERY TERMINAL**
   CAUTION:
   Wait at least 90 seconds after disconnecting the cable from the negative (-) battery terminal to prevent airbag and seat belt pretensioner activation.

3. **REMOVE BATTERY**
   (a) Loosen the nut and remove the bolt and battery clamp.
   (b) Remove the battery and insulator.
   (c) Remove the battery tray.
   (d) Remove the 4 bolts and battery carrier.
   (e) Remove the 2 bolts and battery bracket reinforcement.

4. **REMOVE AIR CLEANER ASSEMBLY**
   (a) Disconnect the mass air flow meter connector.
   (b) Disconnect the VSV connector.
   (c) Disconnect the wire harness clamp and 3 vacuum hoses.
   (d) Disconnect the No. 2 ventilation hose from the air cleaner hose.
   (e) Loosen the No. 1 air cleaner hose clamp.
   (f) Unfasten the 2 hook clamps, and then remove the air cleaner cap.
   (g) Remove the air cleaner filter element from the air cleaner case.
   (h) Disconnect the harness clamp.
   (i) Remove the 3 bolts and air cleaner case.

5. **REMOVE TRANSAXLE CONTROL CABLE ASSEMBLY**
   (a) Remove the nut and disconnect the control cable from the control shaft lever.

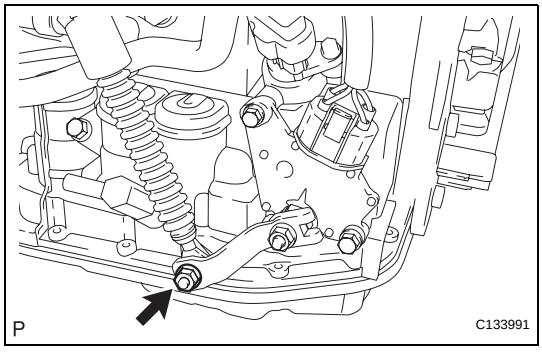

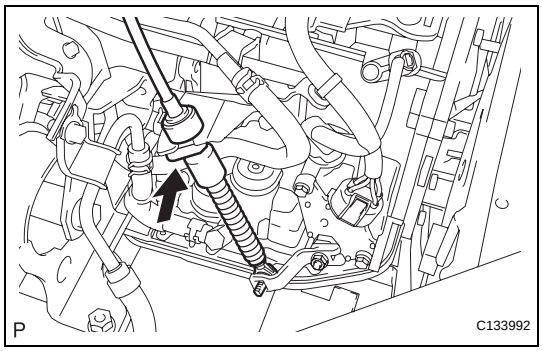

(b) Remove the clip and disconnect the control cable from the control cable bracket.

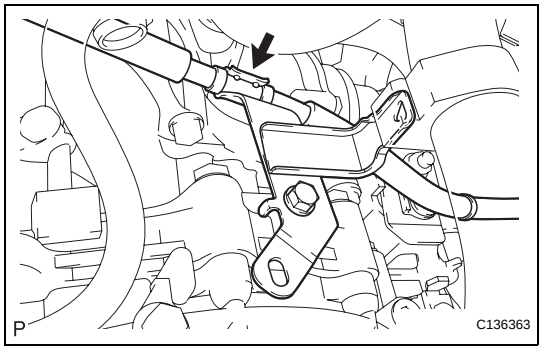

(c) Disconnect the control cable from the control cable support.

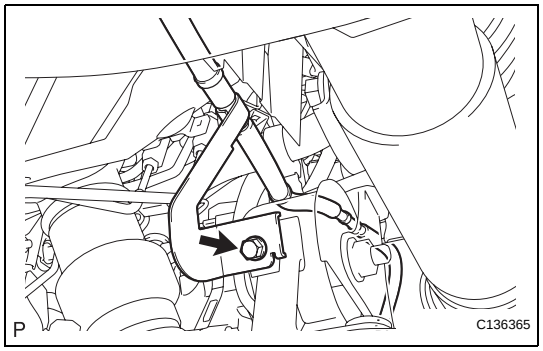

(d) Remove the bolt and disconnect the clamp of the control cable.

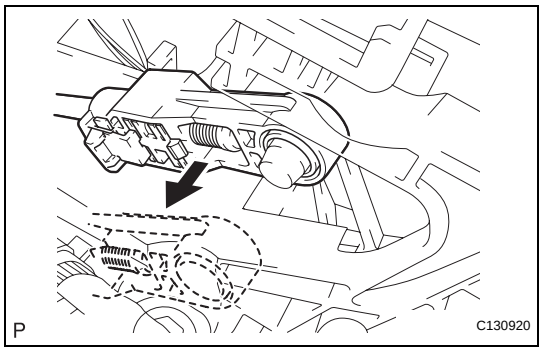

(e) Disconnect the control cable from the shift lever.

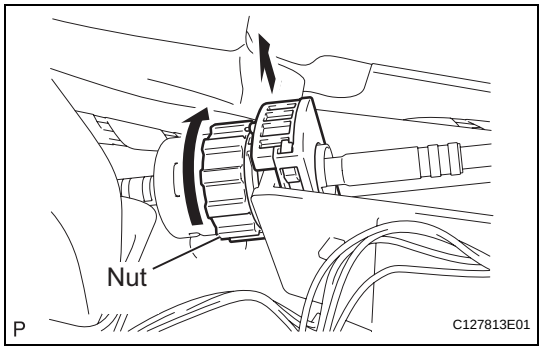

(f) Turn the nut and disconnect the control cable from the shift lever retainer.

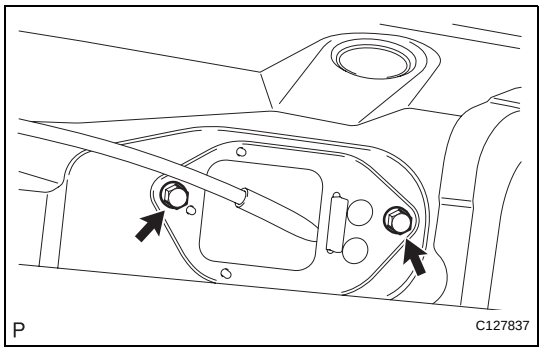

(g) Remove the 2 bolts and control cable.

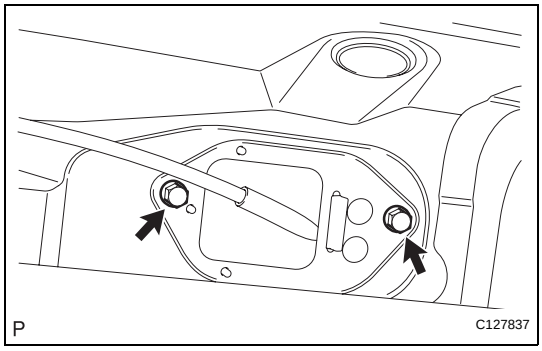

6. INSTALL TRANSAXLE CONTROL CABLE ASSEMBLY

(a) Install the control cable with the 2 bolts.
Torque: 5.0 N*m (51 kgf*cm, 44 in.*lbf)

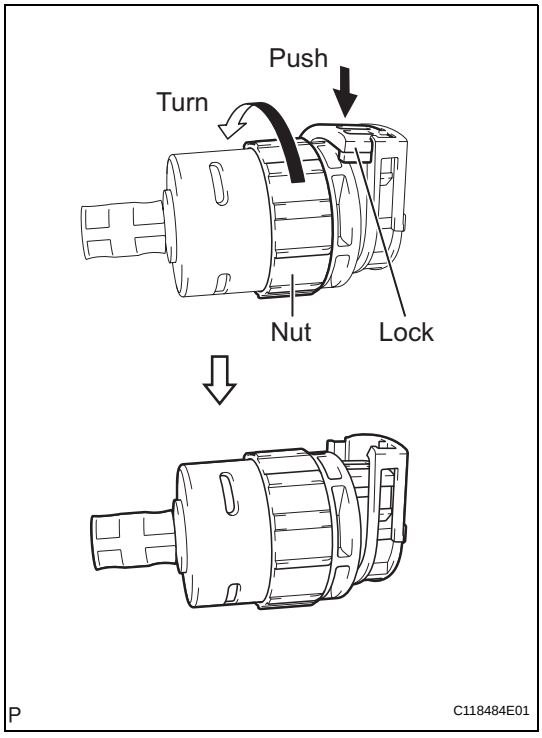

(b) Turn the nut of the control cable and push in the lock.

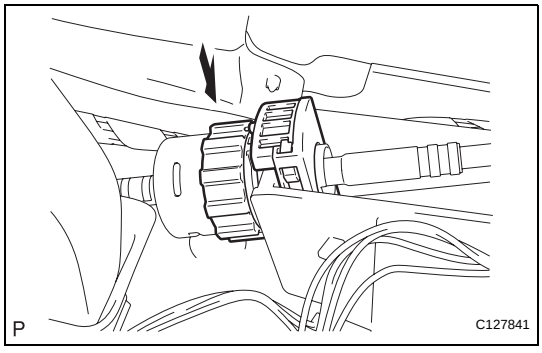

(c) Install the control cable onto the shift lever retainer.

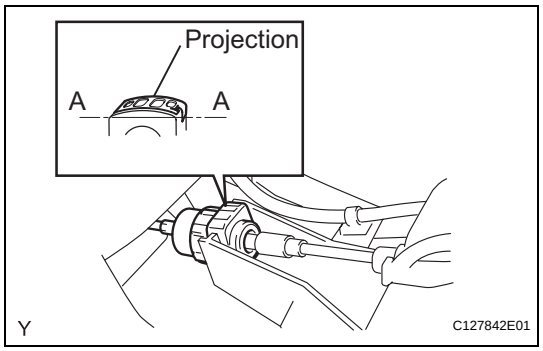

NOTICE:
- **Install the cable with the protruding portion of the cable outer facing upward.**
- **After installing, check that the lock of the cable outer is protruding beyond portion A-A, as shown in the illustration.**

AX

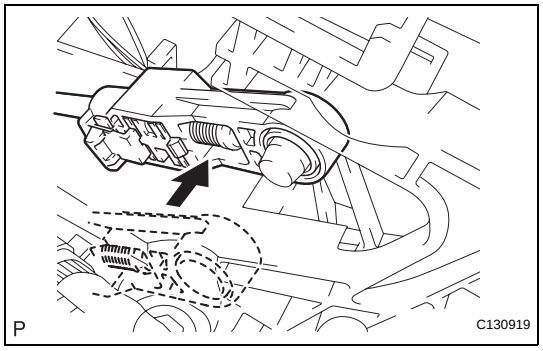

(d) Connect the control cable to the shift lever.
NOTICE:
Connect the control cable so that the adjusting mechanism lock of the control cable is installed on the driver side of the vehicle.

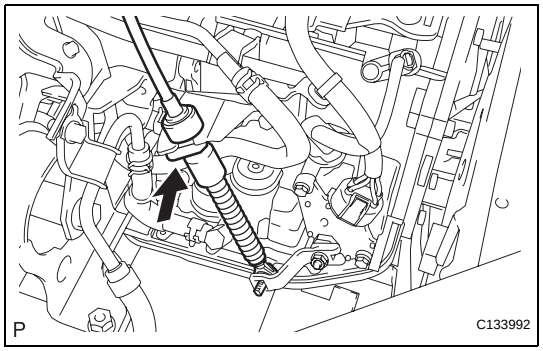

(e) Fix the control cable onto the control cable bracket with the clip.

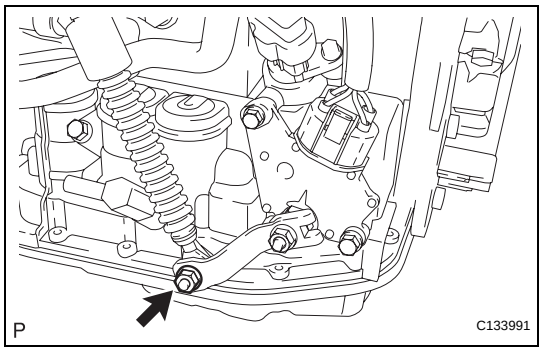

(f) Connect the control cable onto the control shaft lever with the nut.
Torque: 12 N*m (122 kgf*cm, 9 ft.*lbf)

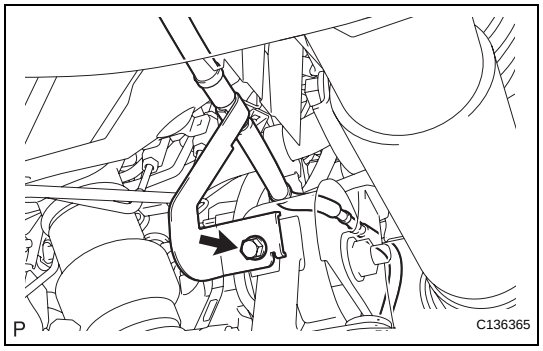

(g) Connect the clamp of the control cable with the bolt.
Torque: 15 N*m (153 kgf*cm, 11 ft.*lbf)

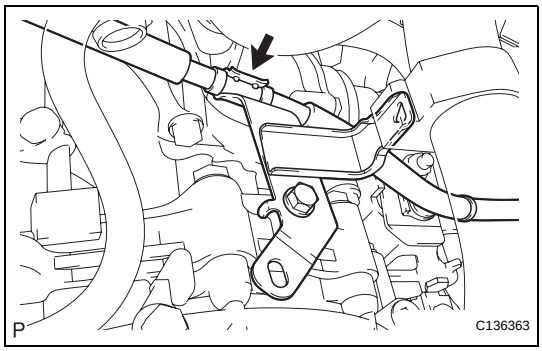

(h) Connect the control cable to the cable support.

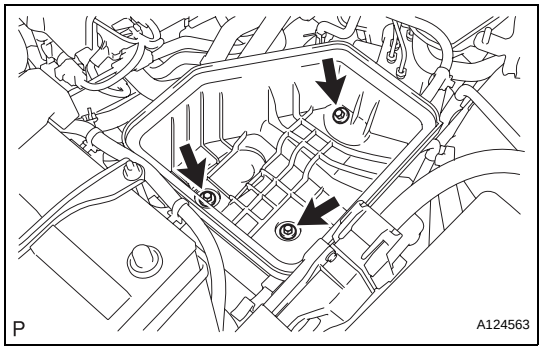

7. INSTALL AIR CLEANER ASSEMBLY

(a) Install the air cleaner case with the 3 bolts.
Torque: 5.0 N*m (51 kgf*cm, 44 in.*lbf)
(b) Connect the harness clamp.
(c) Install the air cleaner filter element onto the air cleaner case.

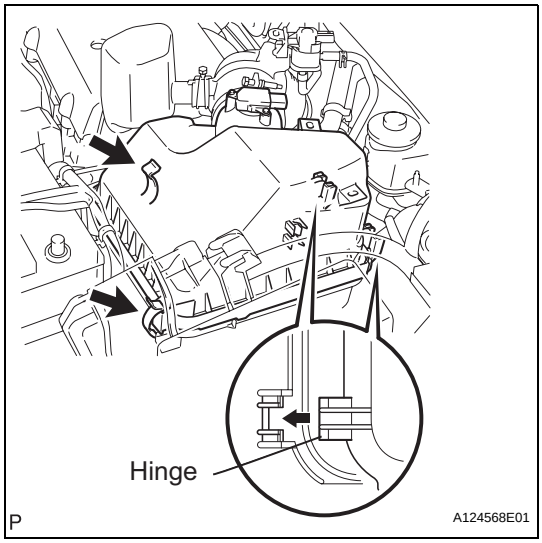

(d) Insert the hinge part of the air cleaner cap into the air cleaner case, then hang the 2 hook clamps.
(e) Tighten the No. 1 air cleaner hose clamp.
(f) Connect the No. 2 ventilation hose to the air cleaner hose.
(g) Connect the wire harness clamp and 3 vacuum hoses.
(h) Connect the VSV connector.
(i) Connect the mass air flow meter connector.

8. INSTALL BATTERY

(a) Install the battery bracket reinforcement with the 2 bolts.
Torque: 20 N*m (204 kgf*cm, 15 ft.*lbf)
(b) Install the battery carrier with the 4 bolts.
Torque: 20 N*m (204 kgf*cm, 15 ft.*lbf)
(c) Install the battery tray.
(d) Connect the 2 clamps of the engine wire.
(e) Install the battery and insulator with the battery clamp.
Torque: 8.5 N*m (87 kgf*cm, 75 in.*lbf) for bolt
5.0 N*m (51 kgf*cm, 44 in.*lbf) for nut

9. CONNECT CABLE TO NEGATIVE BATTERY TERMINAL

10. INSPECT SHIFT LEVER POSITION

(a) When shifting the lever from P to the R position with the ignition switch ON and the brake pedal depressed, make sure that the shift lever moves smoothly and moves correctly into position.

(b) Start the engine and make sure that the vehicle moves forward when shifting the lever from N to the D position and moves rearward when shifting the lever to the R position.
If the operation cannot be performed as specified, inspect the park/neutral position switch and check the shift lever installation condition.

11. ADJUST SHIFT LEVER POSITION (See page AX-164)

12. INSTALL REAR CONSOLE BOX SUB-ASSEMBLY

(a) Install the rear console box (see page IP-26).

TRANSMISSION OIL COOLER

COMPONENTS

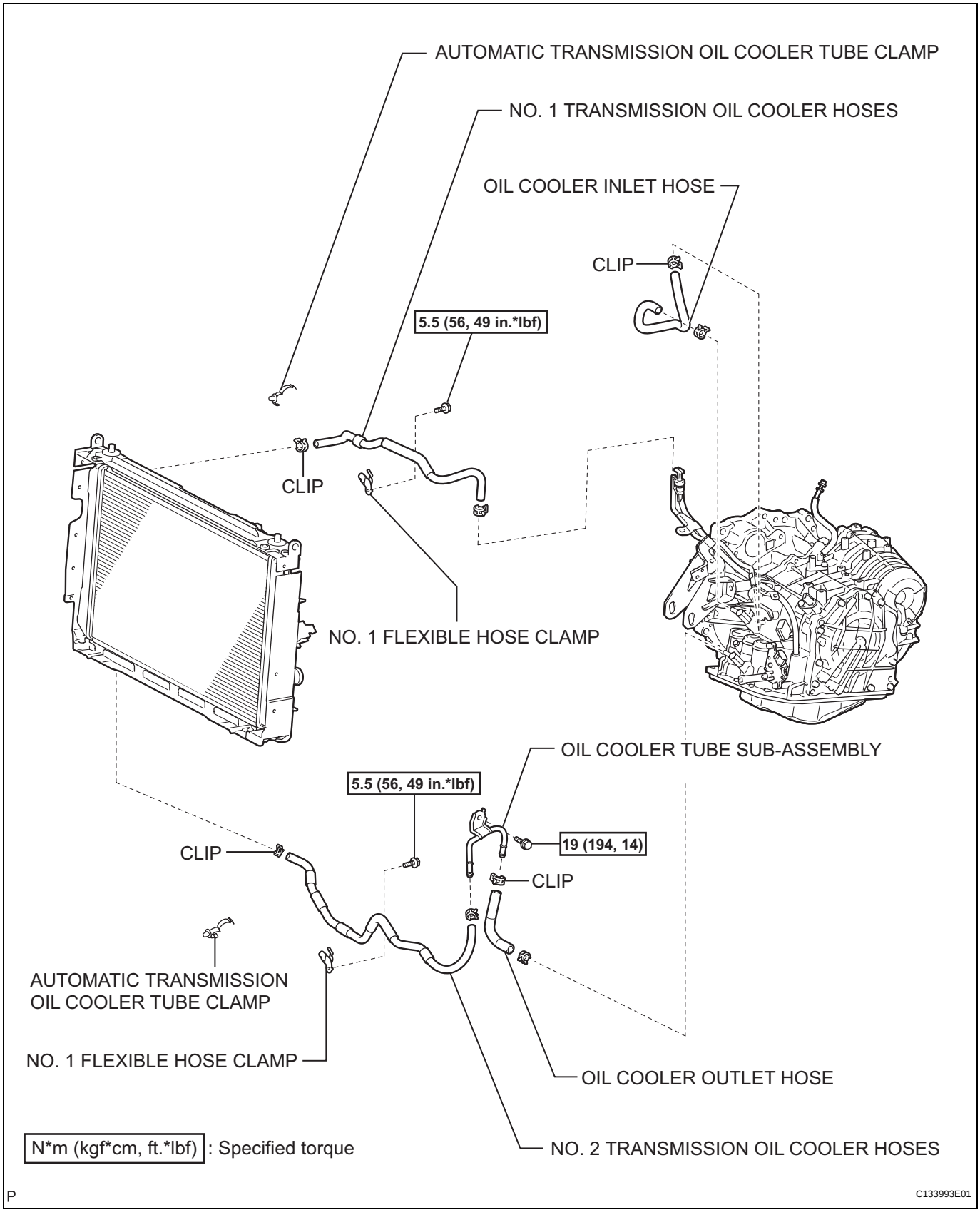

REMOVAL

1. DISCONNECT NO. 1 AND NO. 2 TRANSMISSION OIL COOLER HOSES

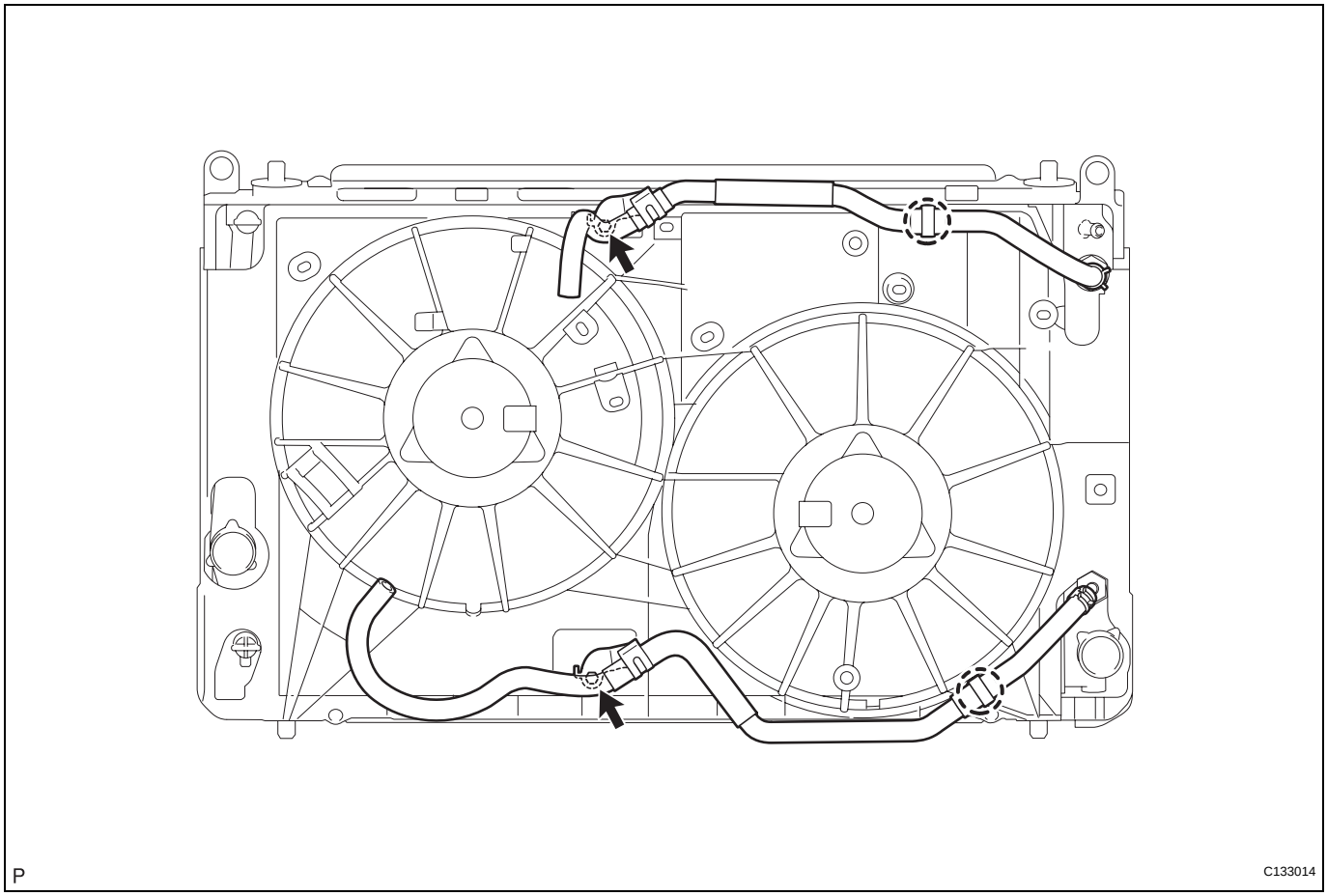

(a) Disconnect the 2 hoses from the 2 No. 1 flexible hose clamps.
(b) Detach the 2 claws to open the 2 automatic transmission oil cooler tube clamps.
(c) Disconnect the 2 hoses from the radiator.
(d) Remove the 2 bolts and 2 No. 1 flexible hose clamps.
(e) Remove the 2 automatic transmission oil cooler tube clamps.

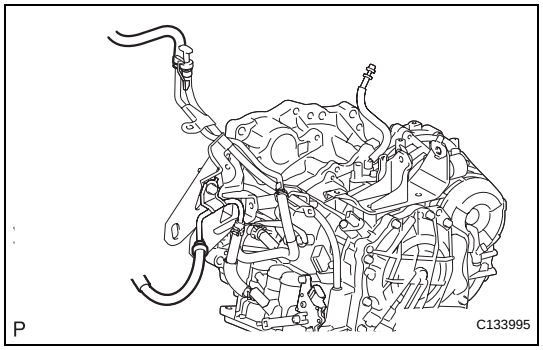

(f) Disconnect the 2 hoses from the transmission oil filler tube and oil cooler tube.

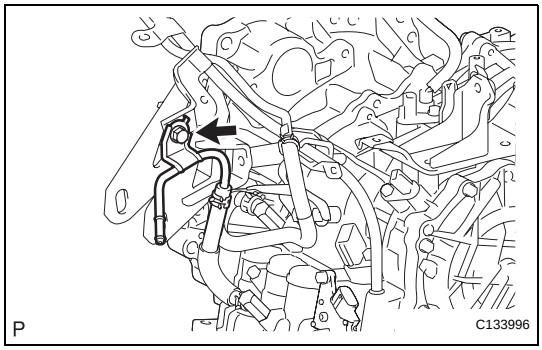

2. DISCONNECT OIL COOLER TUBE SUB-ASSEMBLY

(a) Disconnect the oil cooler outlet hose from the oil cooler tube and transaxle.

(b) Remove the bolt and oil cooler tube.

3. DISCONNECT OIL COOLER OUTLET HOSE

(a) Disconnect the oil cooler outlet hose from the transaxle.

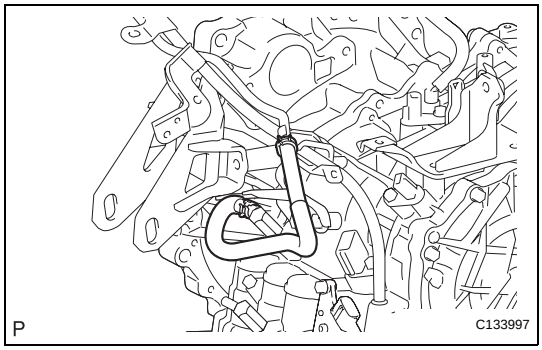

4. DISCONNECT OIL COOLER INLET HOSE

(a) Disconnect the hose from the transmission oil filler tube and transaxle, and remove it.

INSTALLATION

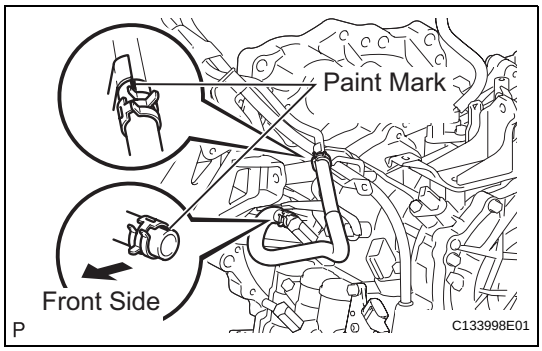

1. CONNECT OIL COOLER INLET HOSE

(a) Connect the hose to the transaxle and transmission oil filler tube.

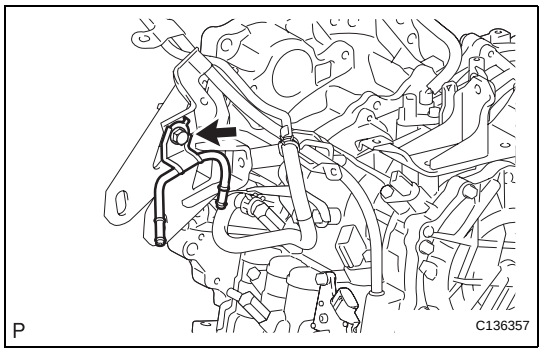

2. INSTALL OIL COOLER TUBE SUB-ASSEMBLY

(a) Install the tube with the bolt.

Torque: 19 N*m (194 kgf*cm, 14 ft.*lbf)

NOTICE:

Make sure the rotation stopper of the tube contacts the top part of the front engine mounting bracket.

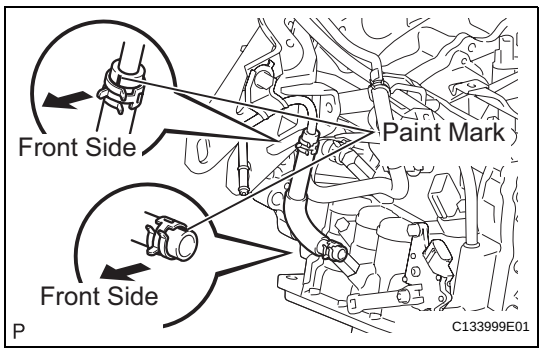

3. CONNECT OIL COOLER OUTLET HOSE

(a) Connect the hose to the transaxle and oil cooler tube.

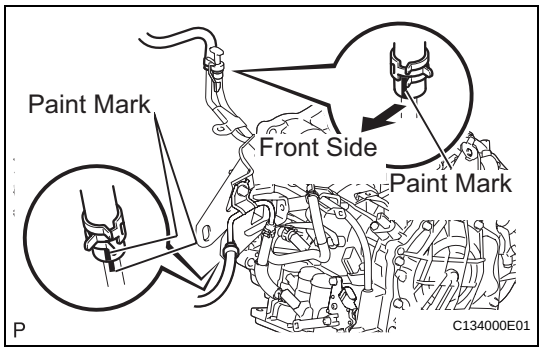

4. CONNECT NO. 1 AND NO. 2 TRANSMISSION OIL COOLER HOSES

(a) Connect the 2 hoses to the transmission oil filler tube and oil cooler tube.

(b) Install the 2 automatic transmission oil cooler tube clamps to the radiator.

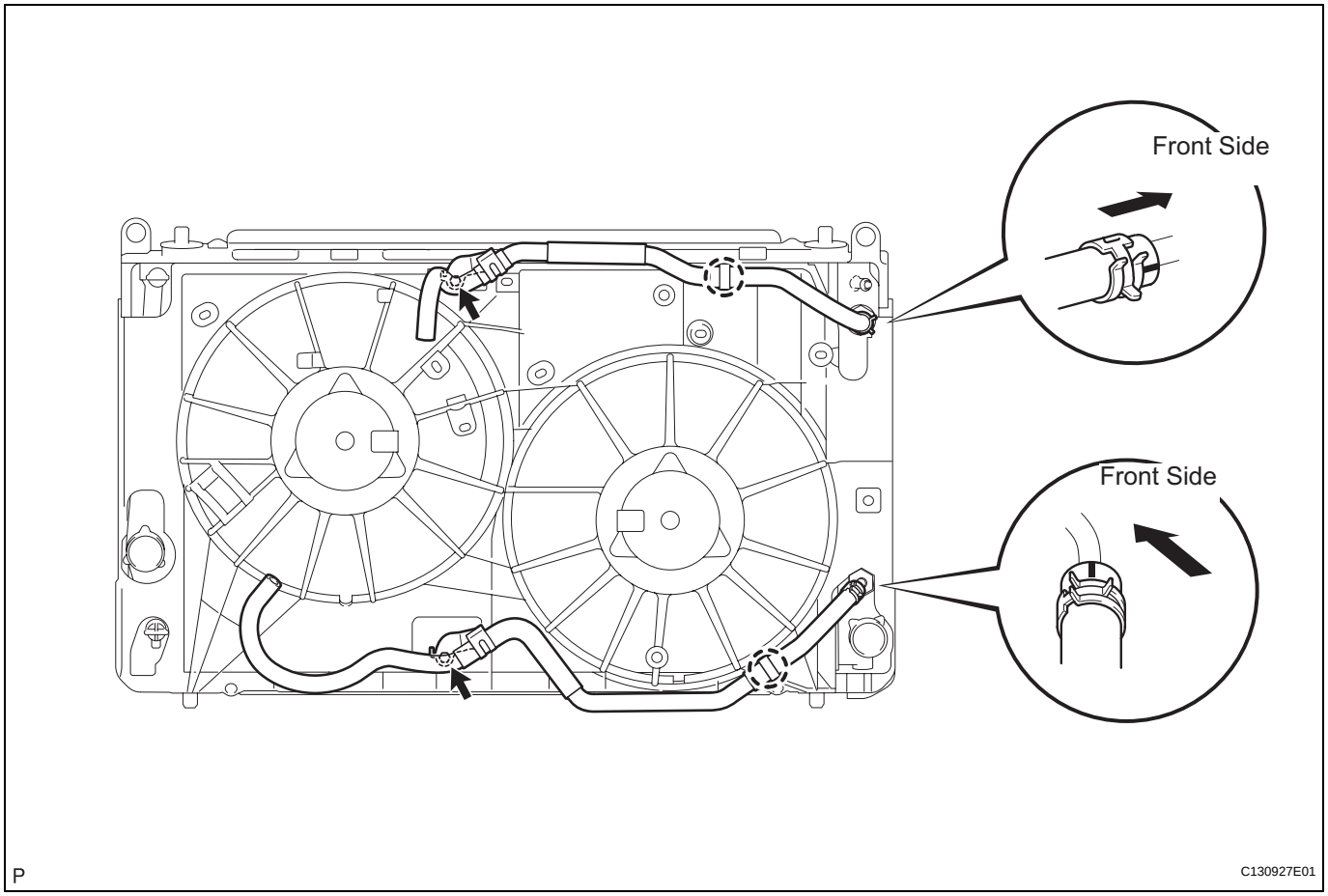

(c) Install the 2 No. 1 flexible hose clamps to the radiator with the 2 bolts.
Torque: 5.5 N*m (56 kgf*cm, 49 in.*lbf)

(d) Connect the 2 hoses to the radiator.

(e) Pass the 2 hoses through the 2 automatic transmission oil cooler tube clamps.

(f) Connect the 2 hoses to the 2 No. 1 flexible hose clamps, and close the 2 clamps.

5. ADD AUTOMATIC TRANSAXLE FLUID

6. INSPECT AUTOMATIC TRANSAXLE FLUID

(a) Inspect the automatic transaxle fluid (see page AX-126).

REMOVAL

1. DISCONNECT CABLE FROM NEGATIVE BATTERY TERMINAL

CAUTION:

Wait at least 90 seconds after disconnecting the cable from the negative (-) battery terminal to prevent airbag and seat belt pretensioner activation.

2. REMOVE NO. 1 ENGINE UNDER COVER

3. DRAIN AUTOMATIC TRANSAXLE FLUID

(a) Remove the drain plug and gasket, and drain the ATF.

(b) Install a new gasket and the drain plug.
Torque: 47 N*m (479 kgf*cm, 35 ft.*lbf)

4. REMOVE AUTOMATIC TRANSAXLE OIL PAN SUB-ASSEMBLY

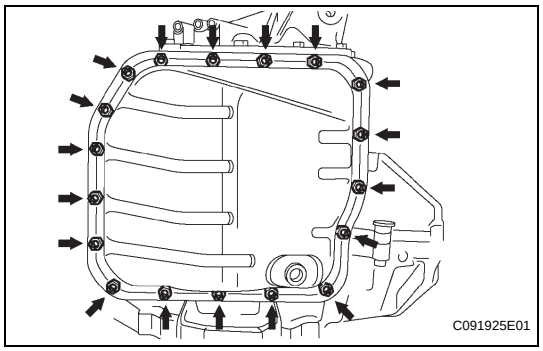

(a) Remove the 18 bolts, oil pan and gasket.
NOTICE:
Some fluid will remain in the oil pan. Carefully remove the oil pan.

(b) Remove the 2 magnets from the oil pan.

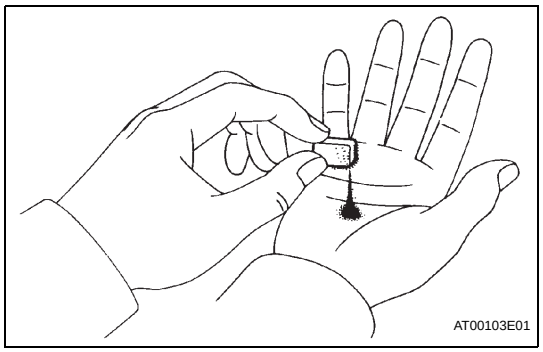

(c) Examine the particles in the pan.

(1) Use the removed magnets to collect any steel chips. Look carefully at the chips and particles in the pan and on the magnet to anticipate what type of wear you will find in the transaxle.
Steel (magnetic): bearing, gear and plate wear
Brass (non-magnetic): bush wear

5. REMOVE TRANSMISSION WIRE

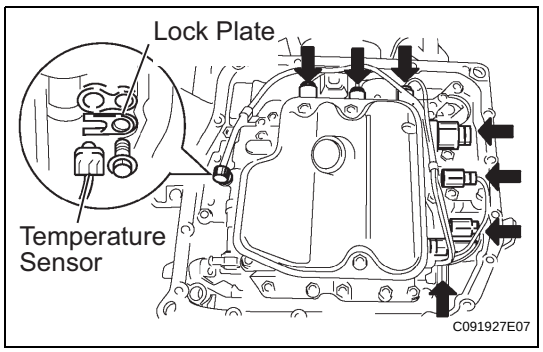

(a) Disconnect the 7 shift solenoid valve connectors.

(b) Remove the bolt, lock plate and ATF temperature sensor.

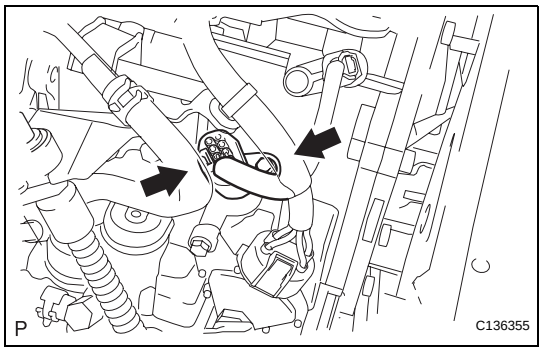

(c) Disconnect the transmission wire connector.
(d) Remove the bolt and transmission wire connector.

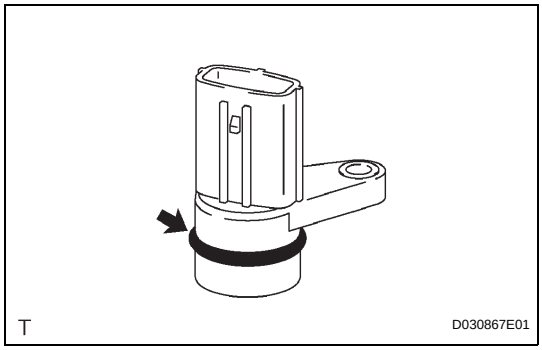

(e) Remove the O-ring from the transmission wire.

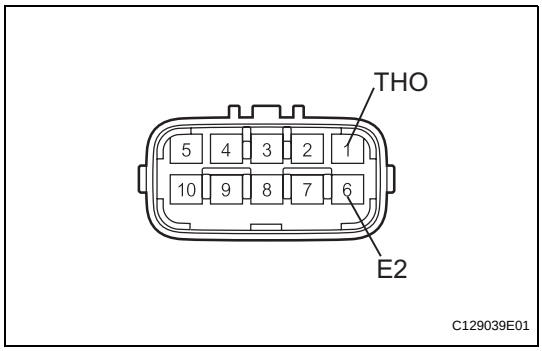

INSPECTION

1. INSPECT TRANSMISSION WIRE

(a) Measure the resistance of the transmission wire.
Standard resistance

Tester Connection	Specified Condition
1 (THO) - 6 (E2)	90 Ω to 156 kΩ
1 (THO) - Body ground	1 MΩ or higher
6 (E2) - Body ground	1 MΩ or higher

If the result is not as specified, replace the wire.
HINT:
If the resistance is not as specified for either of the ATF temperatures shown in the table below, the drivability of the vehicle may decrease.
Standard resistance

ATF Temperature	Specified Condition
10°C (68°F)	6.4 kΩ
110°C (230°F)	0.2 kΩ

INSTALLATION

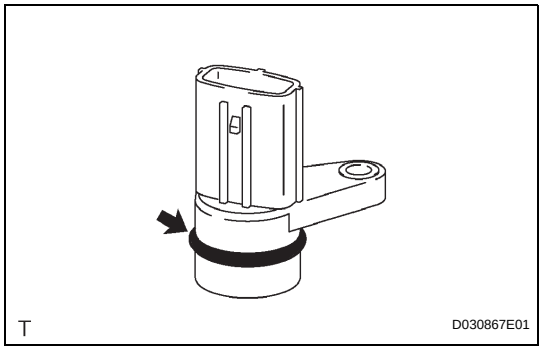

1. INSTALL TRANSMISSION WIRE

(a) Coat a new O-ring of the transmission wire connector with ATF.
(b) Install the O-ring to the transmission wire connector.

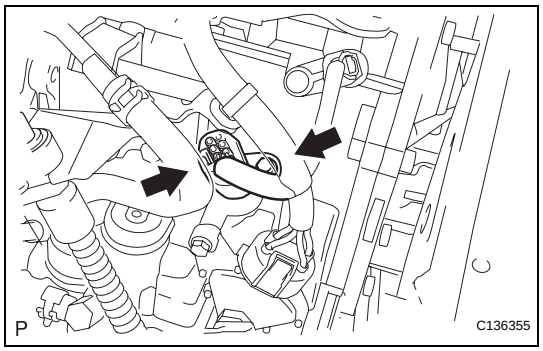

(c) Install the transmission wire.
(d) Install the bolt.
(e) Connect the connector.

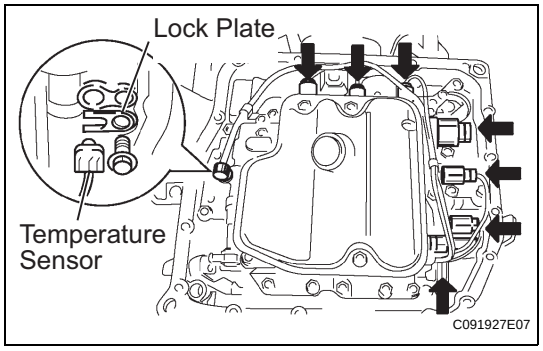

(f) Coat the O-ring of the ATF temperature sensor with ATF.
(g) Apply ATF to the bolt.
(h) Install the ATF temperature sensor with the lock plate and bolt.
Torque: 6.6 N*m (67 kgf*cm, 58 in.*lbf)
(i) Connect the 7 shift solenoid valve connectors.

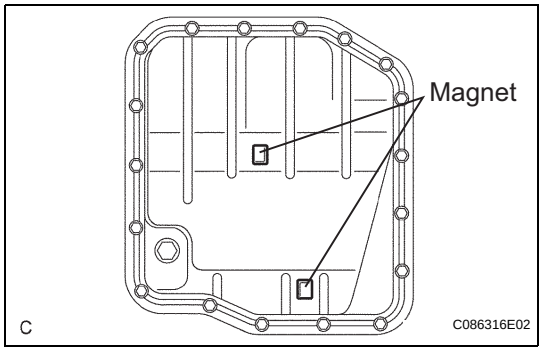

2. INSTALL AUTOMATIC TRANSAXLE OIL PAN SUB-ASSEMBLY
(a) Install the 2 magnets in the oil pan.

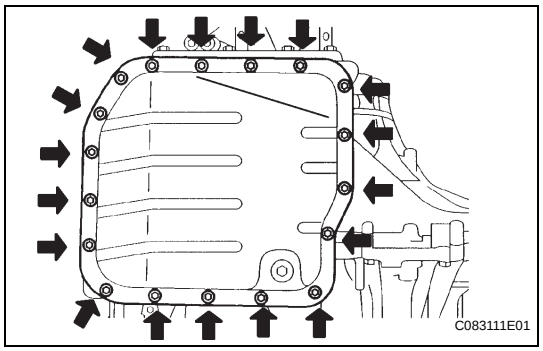

(b) Install a new gasket and the oil pan with the 18 bolts.
Torque: 7.6 N*m (77 kgf*cm, 67 in.*lbf)

3. INSTALL NO. 1 ENGINE UNDER COVER

4. CONNECT CABLE TO NEGATIVE BATTERY TERMINAL

5. ADD AUTOMATIC TRANSAXLE FLUID
Fluid type:
Toyota Genuine ATF WS

6. INSPECT TRANSAXLE FLUID LEVEL
(a) Inspect the fluid level (see page AX-126).

7. PERFORM RESET MEMORY
(a) Perform the RESET MEMORY procedures (A/T initialization) (see page AX-20).

TRANSMISSION WIRE

COMPONENTS

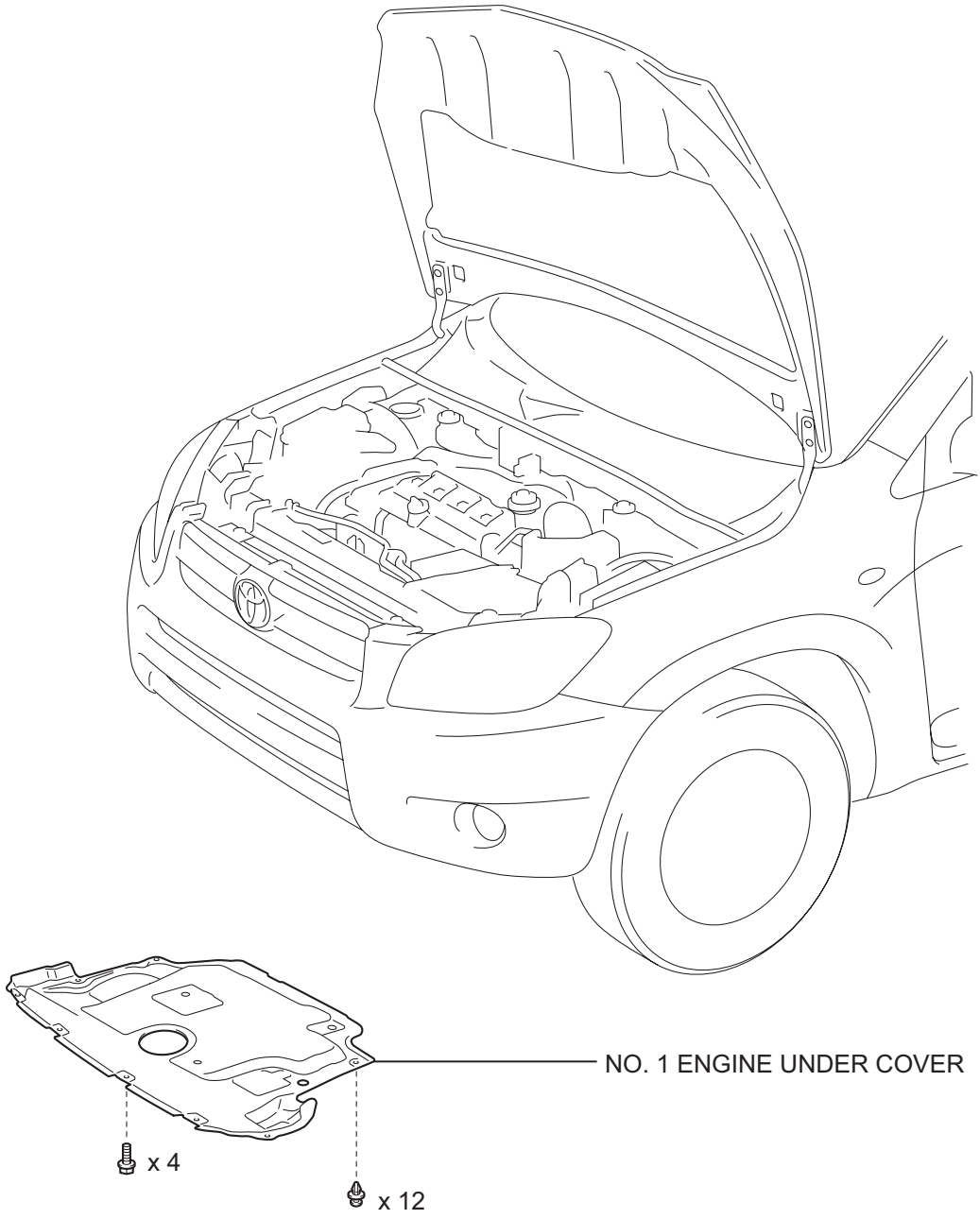

Y

C138664E01

AX

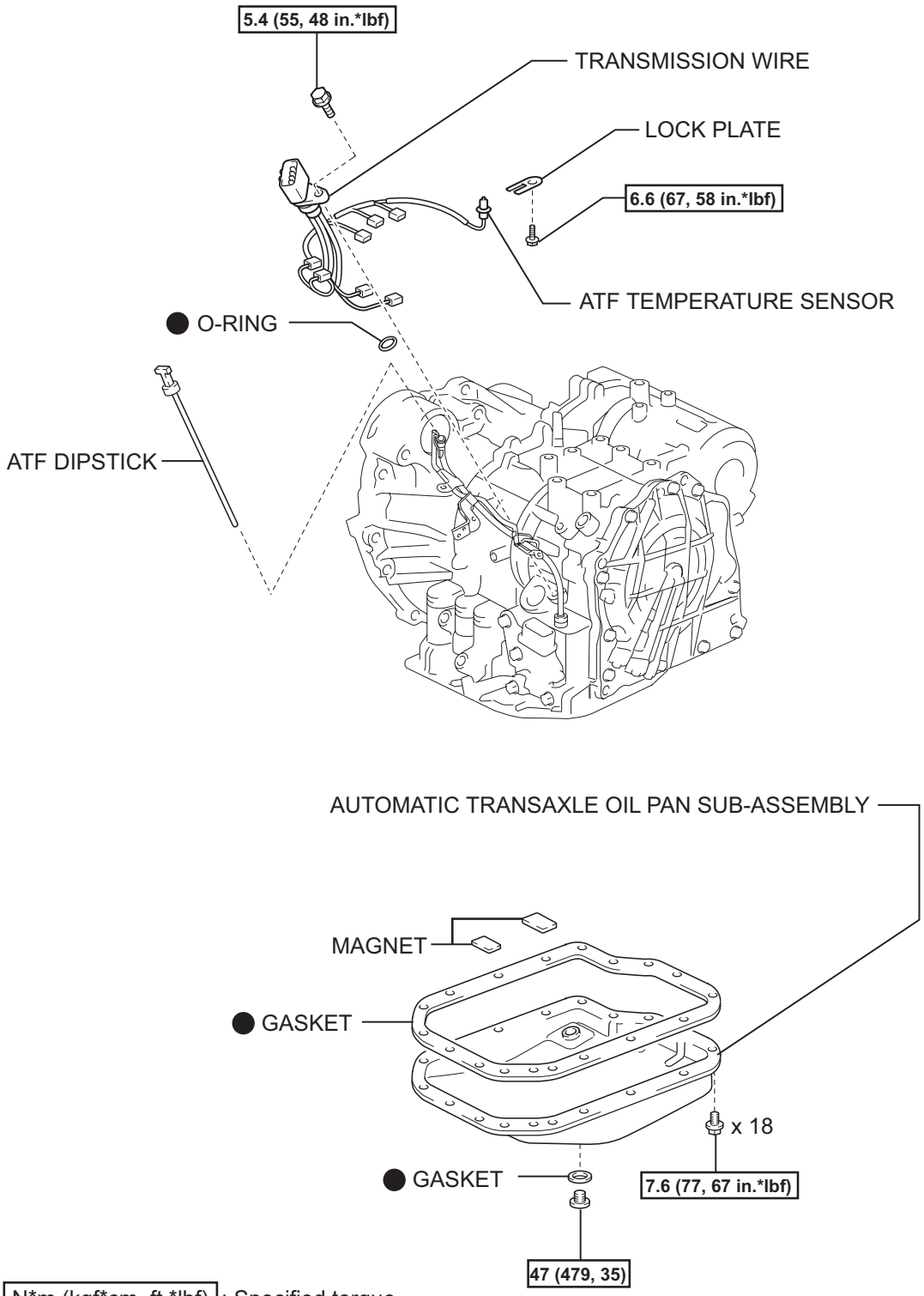

N*m (kgf*cm, ft.*lbf) : Specified torque

● Non-reusable part

P

C136353E01

UNDERDRIVE CLUTCH

COMPONENTS

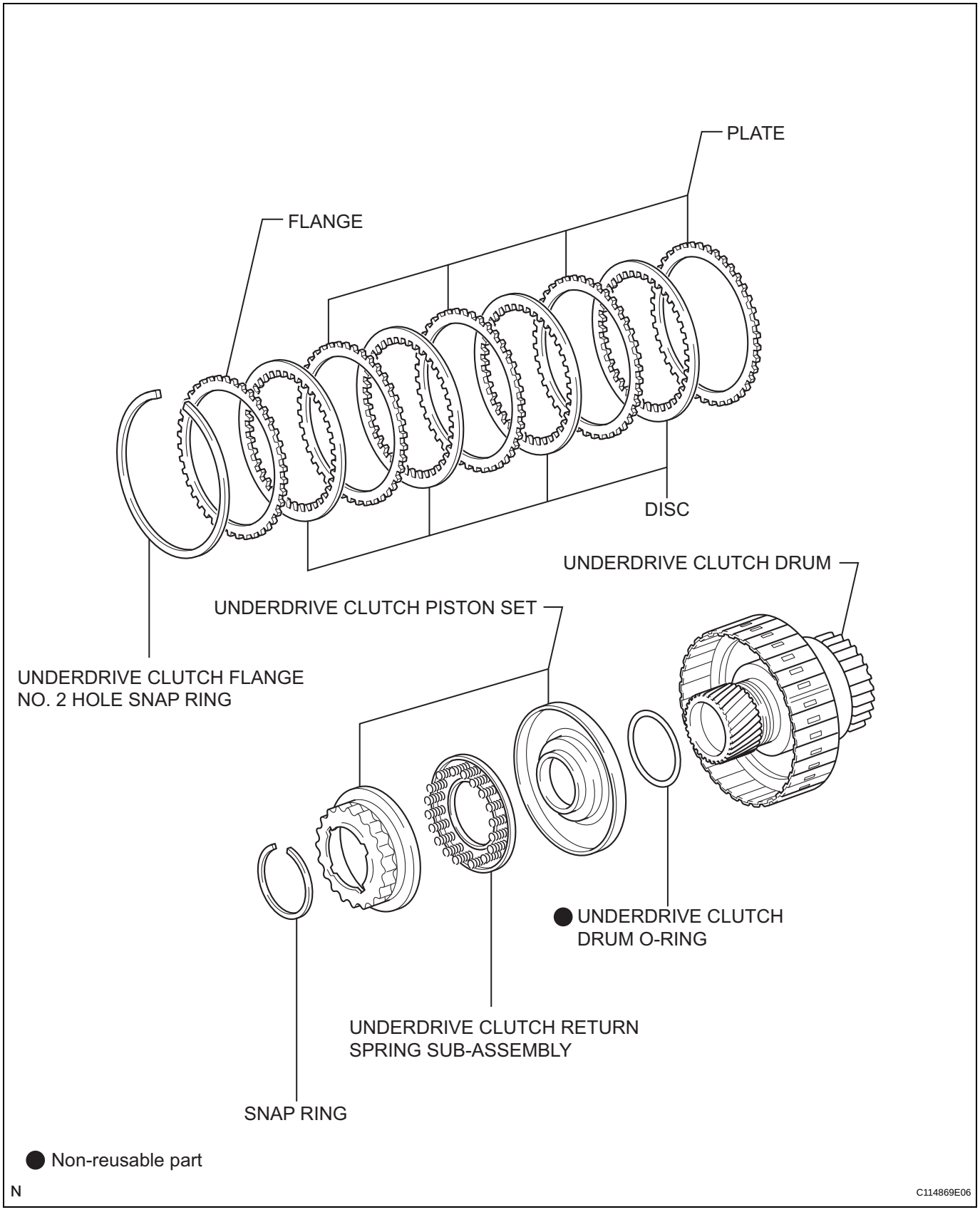

AX

DISASSEMBLY

1. **INSPECT UNDERDRIVE PACK CLEARANCE (See page AX-277)**

2. **REMOVE UNDERDRIVE CLUTCH FLANGE NO. 2 HOLE SNAP RING**
   (a) Using a screwdriver, remove the snap ring.

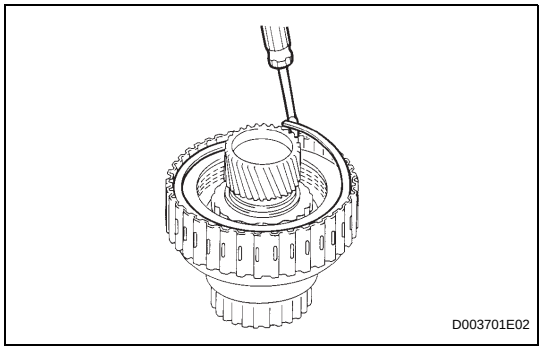

3. **REMOVE NO. 1 UNDERDRIVE CLUTCH DISC**
   (a) Remove the flange, 4 discs and 4 plates from the underdrive clutch drum.

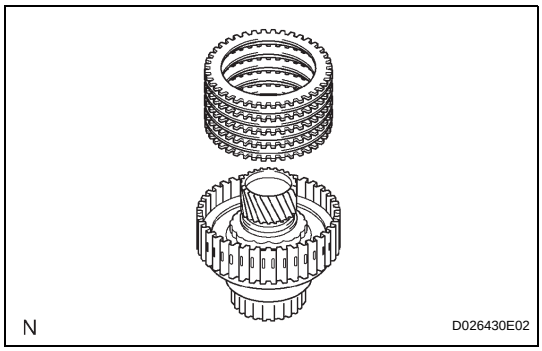

4. **REMOVE UNDERDRIVE CLUTCH RETURN SPRING SUB-ASSEMBLY**
   (a) Place SST on the clutch balancer and compress the spring with a press.
   SST 09350-32014
   (b) Using a snap ring expander, remove the snap ring.
   NOTICE:
   - **Stop the press when the spring seat is lowered to a position 1 to 2 mm (0.039 to 0.078 in.) from the snap ring groove. This prevents the spring seat from being deformed.**
   - **Do not expand the snap ring excessively.**

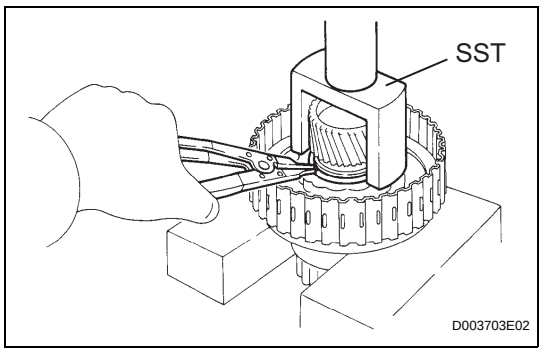

   (c) Remove the clutch balancer from the underdrive clutch drum.

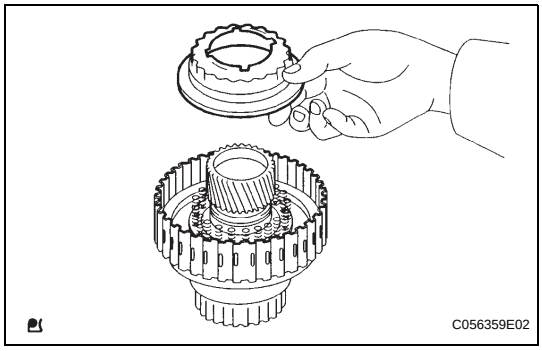

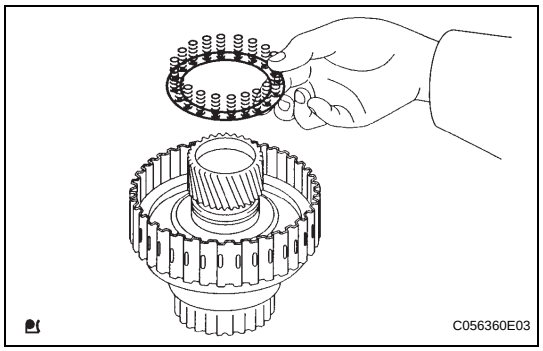

(d) Remove the return spring from the underdrive clutch drum.

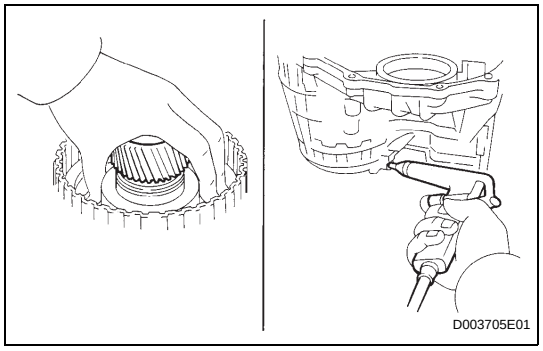

5. REMOVE UNDERDRIVE CLUTCH PISTON SET

(a) Install the underdrive clutch to the transaxle case.
NOTICE:
Be careful not to damage the oil seal ring.

(b) Holding the underdrive clutch piston by hand, apply compressed air (392 kPa, 4.0 kgf/cm^2, 57 psi) to the transaxle case to remove the underdrive clutch piston.

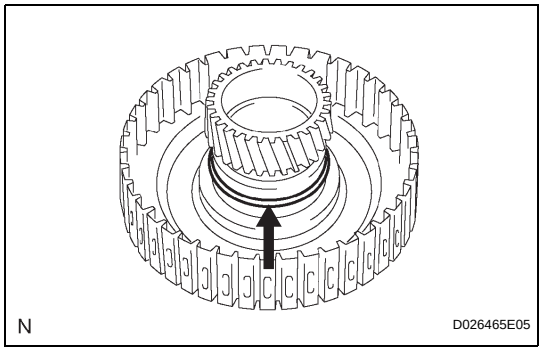

6. REMOVE UNDERDRIVE CLUTCH DRUM O-RING

(a) Using a screwdriver, remove the O-ring from the underdrive clutch drum.

INSPECTION

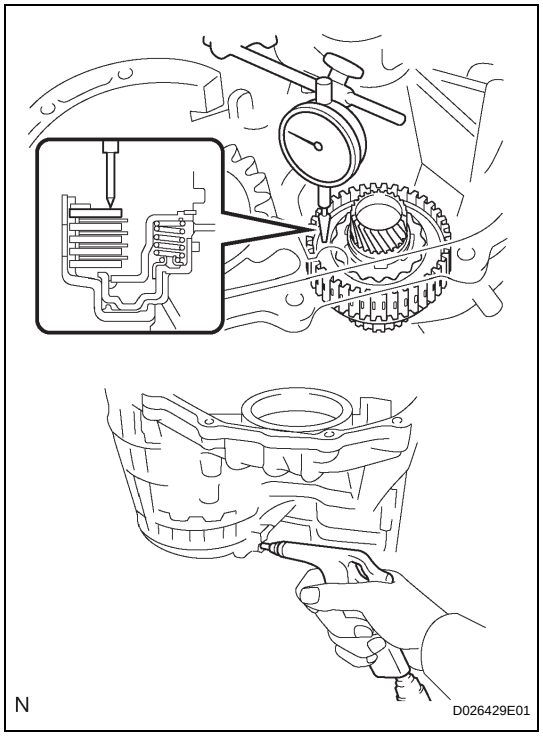

1. INSPECT UNDERDRIVE PACK CLEARANCE

(a) Install the underdrive clutch to the transaxle case.
NOTICE:
Be careful not to damage the oil seal rings.

(b) Install a dial indicator as shown in the illustration.

(c) Measure the underdrive clutch pack clearance while applying and releasing compressed air (392 kPa, 4.0 kgf/cm^2, 57 psi).
Standard pack clearance:
1.51 to 1.71 mm (0.0594 to 0.0673 in.)
If the pack clearance is not as specified, inspect the discs, plates and flange.
HINT:
There are 5 different thicknesses flanges available.
Standard flange thickness

Mark	Thickness	Mark	Thickness
1	3.0 mm (0.118 in.)	4	3.6 mm (0.122 in.)
2	3.2 mm (0.126 in.)	5	3.8 mm (0.130 in.)
3	3.4 mm (0.134 in.)	-	-

AX

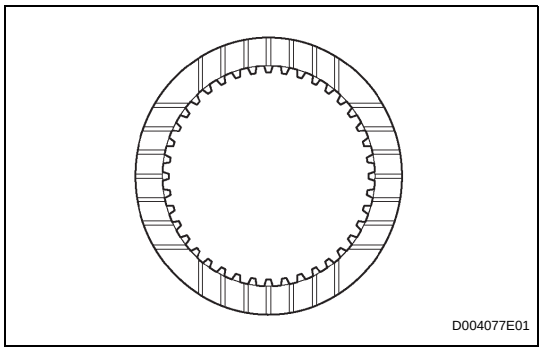

2. INSPECT NO. 1 UNDERDRIVE CLUTCH DISC

(a) Check if the sliding surface of the disc, plate and flange are worn or burnt. If necessary, replace them.

NOTICE:

- **If the lining of the disc comes off or is discolored, or if a part of the groove is worn, replace all the discs.**
- **Before installing new discs, immerse them in ATF for at least 15 minutes.**

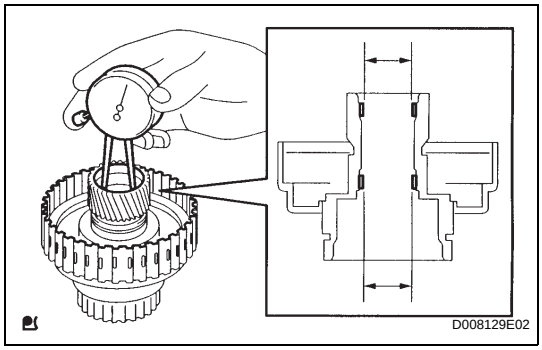

3. INSPECT UNDERDRIVE CLUTCH DRUM SUB-ASSEMBLY

(a) Using a caliper gauge, measure the inside diameter of the underdrive clutch drum bushing.

Standard drum bushing:
37.06 to 37.08 mm (1.4591 to 1.4598 in.)
Maximum drum bushing:
37.13 mm (1.4618 in.)

If the inside diameter is greater than the maximum, replace the underdrive clutch drum sub-assembly.

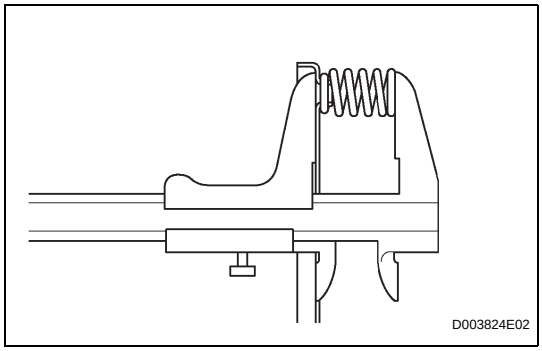

4. INSPECT UNDERDRIVE CLUTCH RETURN SPRING SUB-ASSEMBLY

(a) Using a vernier caliper, measure the free length of the spring together with the spring seat.

Standard free length:
17.14 mm (0.6752 in.)

REASSEMBLY

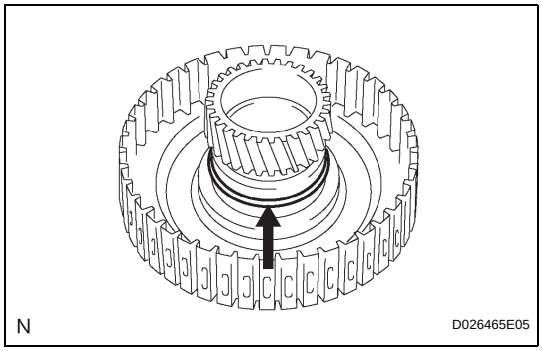

1. INSTALL UNDERDRIVE CLUTCH DRUM O-RING

(a) Coat a new O-ring with ATF, and install it to the underdrive clutch drum.

NOTICE:
Make sure that the O-ring is not twisted or pinched.

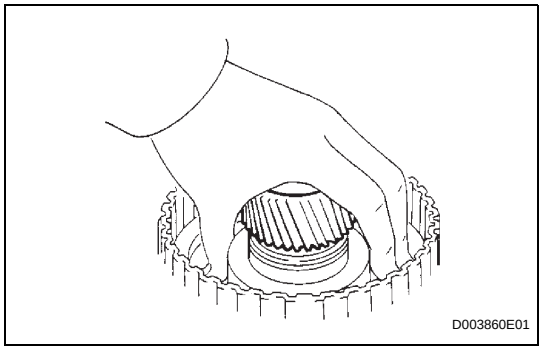

2. INSTALL UNDERDRIVE CLUTCH PISTON SET

(a) Coat the underdrive clutch piston with ATF, and install it to the underdrive clutch piston drum.

NOTICE:

- **Be careful not to damage the O-ring.**
- **Be careful not to damage the lip of the piston.**

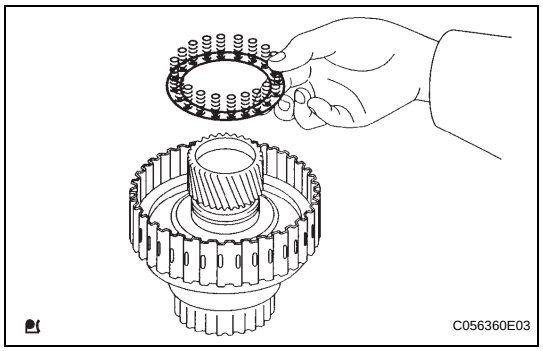

3. INSTALL UNDERDRIVE CLUTCH RETURN SPRING SUB-ASSEMBLY

(a) Install the return spring to the underdrive clutch drum.

NOTICE:

After installing the spring sub-assembly, check that all of the springs fit in the piston correctly.

(b) Coat the clutch balancer with ATF.

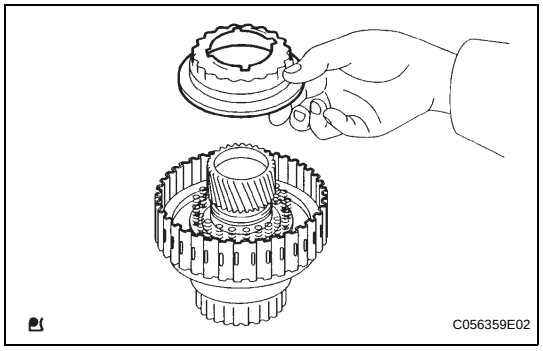

(c) Install the clutch balancer to the underdrive clutch drum.

NOTICE:

Be careful not to damage the lip of the clutch balancer.

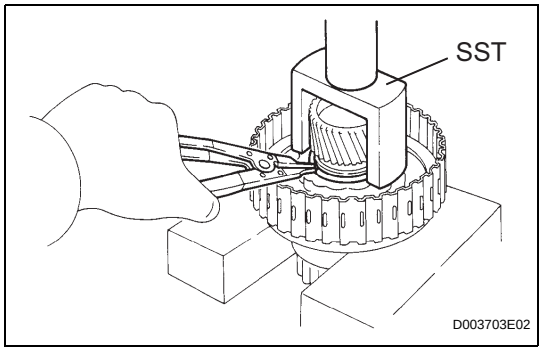

(d) Place SST on the clutch balancer and compress the piston return spring with a press.

SST 09350-32014 (09351-32070)

(e) Using a snap ring expander, install the snap ring to the underdrive clutch drum.

(f) Be sure that the end gap of the snap ring is not aligned with the spring retainer claw.

NOTICE:

- **Stop the press when the spring seat is lowered to a position 1 to 2 mm (0.039 to 0.078 in.) from the snap ring groove. This prevents the spring seat from being deformed.**
- **Do not expand the snap ring excessively.**

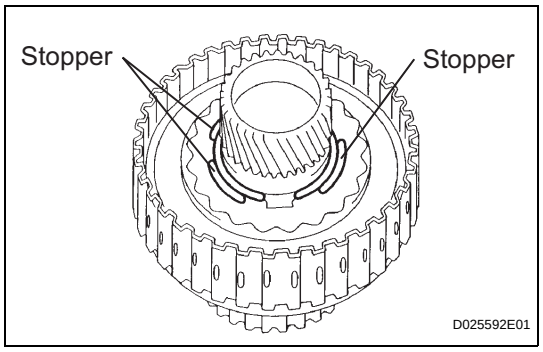

(g) Set the end gap of the snap ring in the underdrive clutch drum as shown in the illustration.

NOTICE:

The end gap of the snap ring should not align with any of the stoppers.

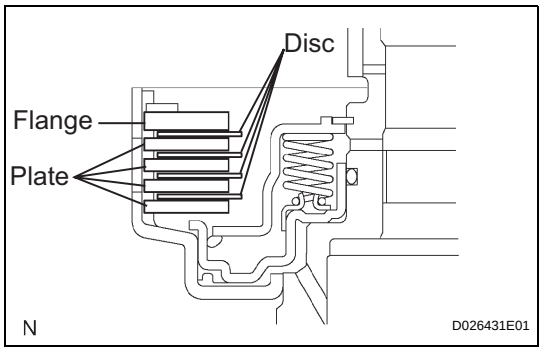

4. INSTALL NO. 1 UNDERDRIVE CLUTCH DISC

(a) Coat the 4 discs with ATF.

(b) Install the 4 plates, 4 discs and flange to the underdrive clutch drum.

NOTICE:

Make sure that the plates, discs and flange are installed as shown in the illustration.

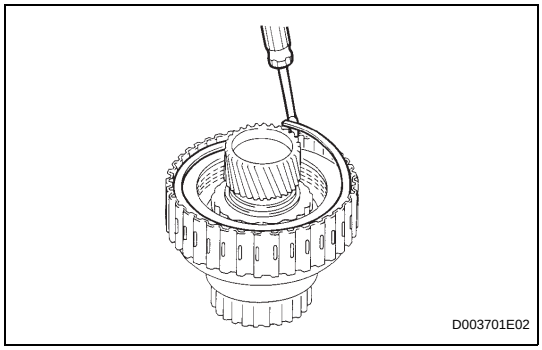

5. INSTALL 1ST AND REVERSE BRAKE RETURN SPRING SHAFT SNAP RING

(a) Using a screwdriver, install the underdrive clutch flange hole snap ring.

(b) Check that the end gap of the snap ring is not aligned with one of the cutouts.

NOTICE:

The snap ring should be fully engaged in the groove of the drum.

6. INSPECT UNDERDRIVE PACK CLEARANCE (See page AX-277)

UNDERDRIVE PLANETARY GEAR

COMPONENTS

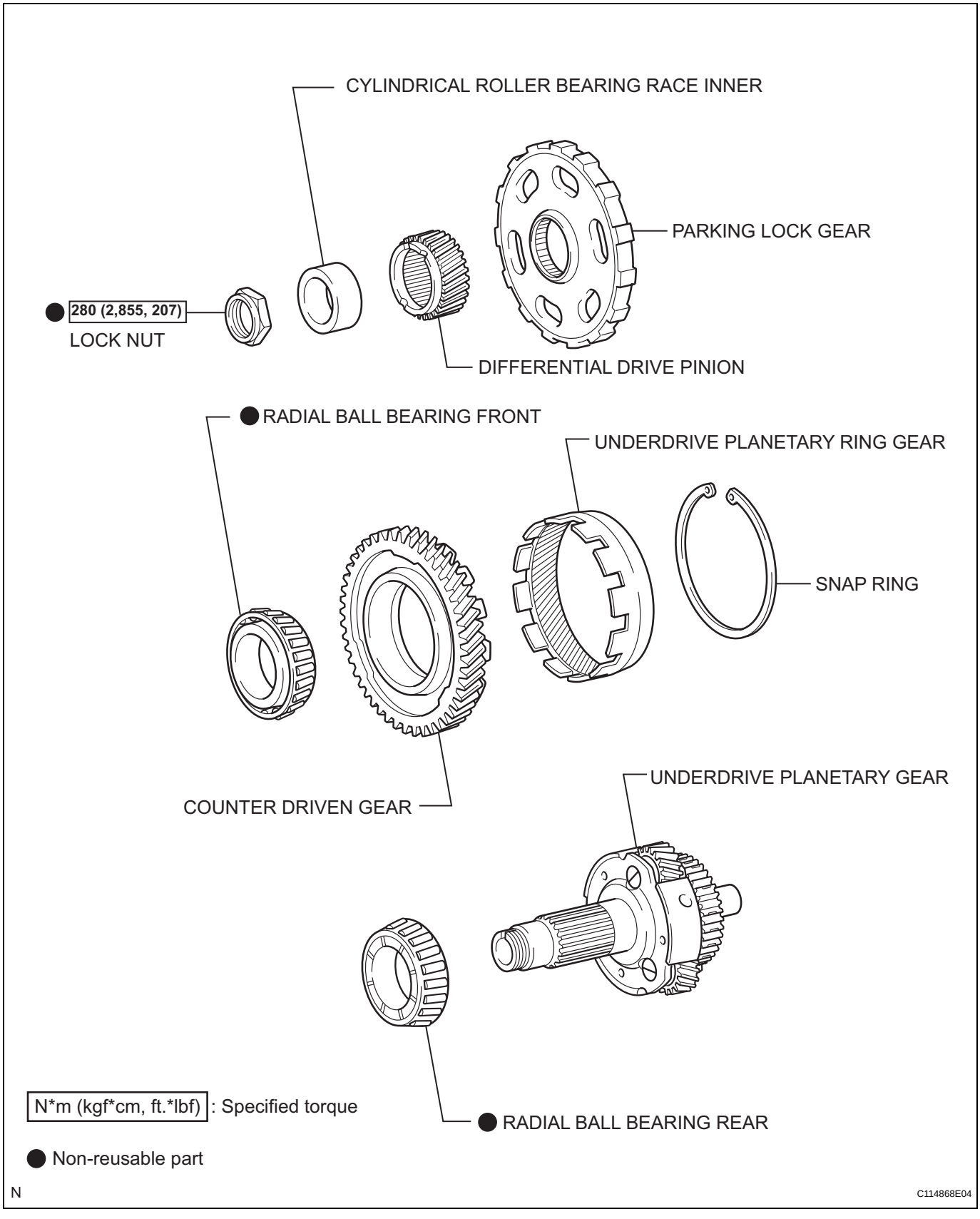

AX

DISASSEMBLY

1. INSPECT UNDERDRIVE PLANETARY GEAR PRELOAD (See page AX-271)

2. REMOVE FRONT PLANETARY GEAR NUT

(a) Using SST, loosen the staked part of the lock nut.

SST 09930-00010 (09931-00010, 09931-00020), 09387-00050

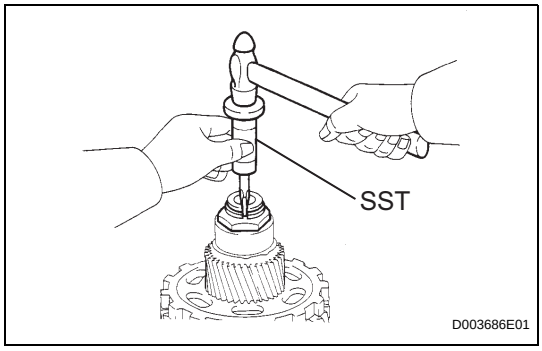

(b) Place the underdrive planetary gear in a soft jaw vise.

NOTICE:
Be careful not to damage the differential drive pinion.

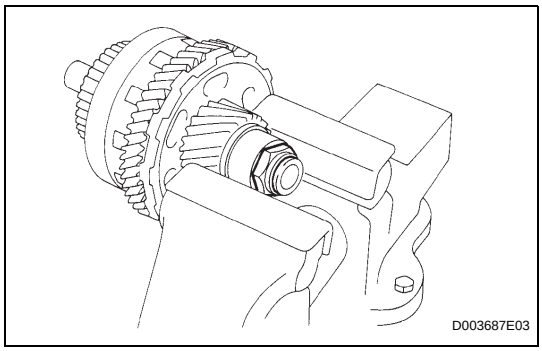

(c) Using a socket wrench, remove the lock nut.

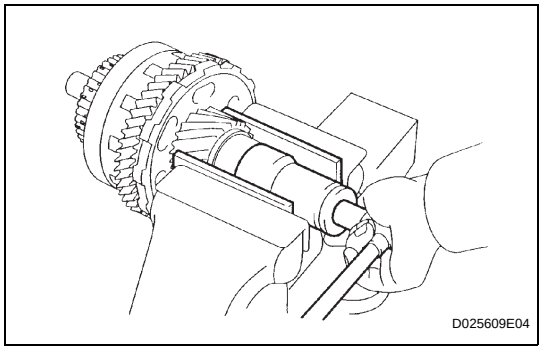

3. REMOVE CYLINDRICAL ROLLER BEARING RACE INNER

(a) Using SST, remove the cylindrical roller bearing race inner.

SST 09950-00020, 09950-00030, 09950-60010 (09951-00320, 09957-04010)

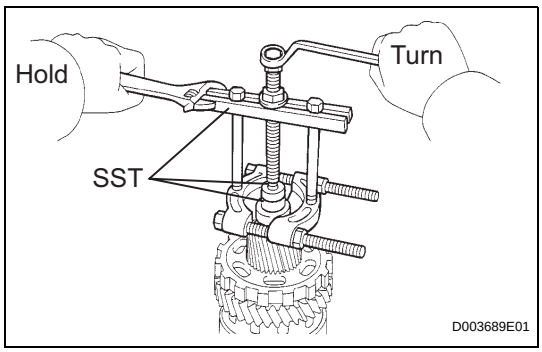

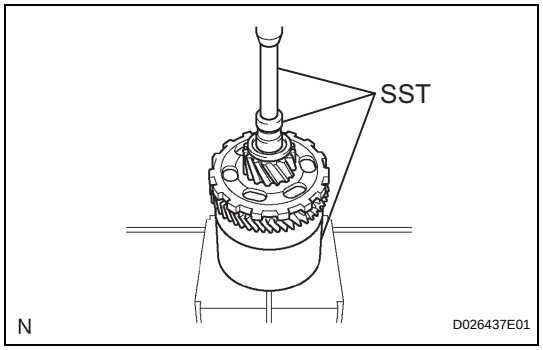

4. REMOVE UNDERDRIVE PLANETARY GEAR ASSEMBLY

(a) Using SST and a press, press out the differential drive pinion, parking lock gear, counter driven gear with underdrive planetary ring gear and radial ball bearing front.

SST 09950-60010 (09951-00320), 09387-00050, 09950-00020, 09950-00030, 09950-40011 (09957-04010)

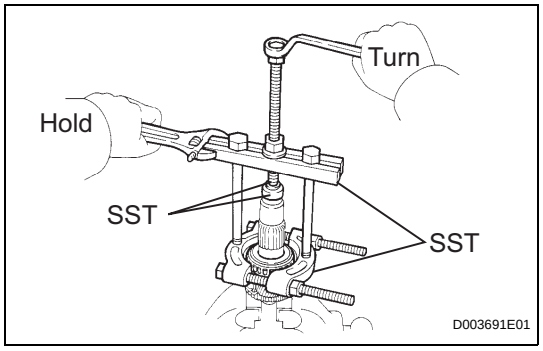

(b) Place the underdrive planetary gear in a soft jaw vise.

(c) Using SST, remove the radial ball bearing rear from the underdrive planetary gear.

SST 09950-60010 (09951-00320), 09950-00030, 09950-40011 (09957-04010)

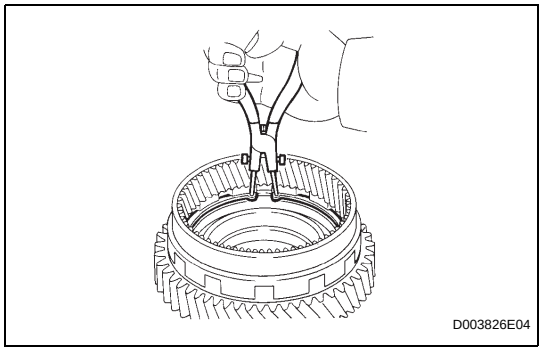

5. REMOVE UNDERDRIVE PLANETARY RING GEAR

(a) Using snap ring pliers, remove the snap ring.

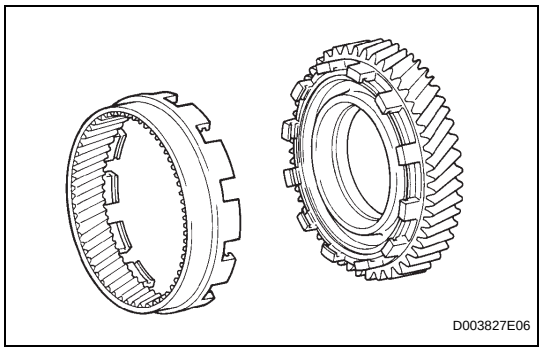

(b) Remove the underdrive planetary ring gear from the counter driven gear.

INSPECTION

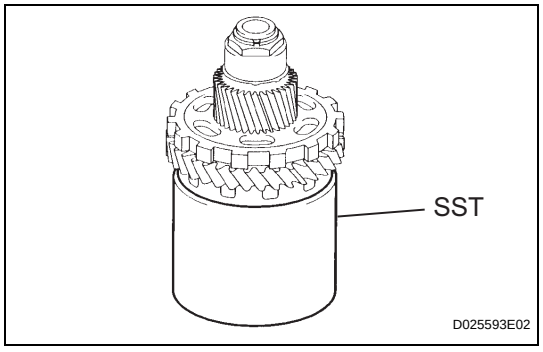

1. INSPECT UNDERDRIVE PLANETARY GEAR PRELOAD

(a) Using SST, fix the underdrive planetary gear.

SST 09387-00050

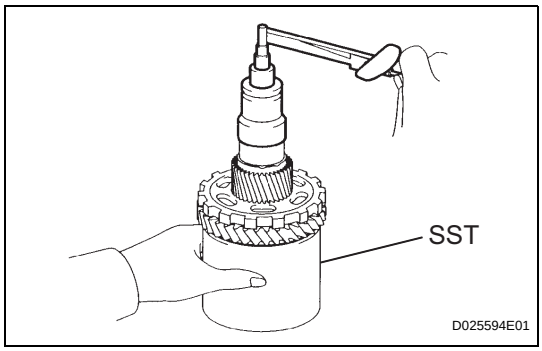

(b) Using SST and a torque wrench, measure the turning torque of the underdrive planetary gear assembly while rotating the torque wrench at 60 rpm.
SST 09387-00050
Torque: Standard turning torque at 60 rpm
0.50 to 1.42 N*m (5.1 to 14.5 kgf*cm, 4.4 to 12.6 in.*lbf)

REASSEMBLY

1. INSTALL UNDERDRIVE PLANETARY RING GEAR

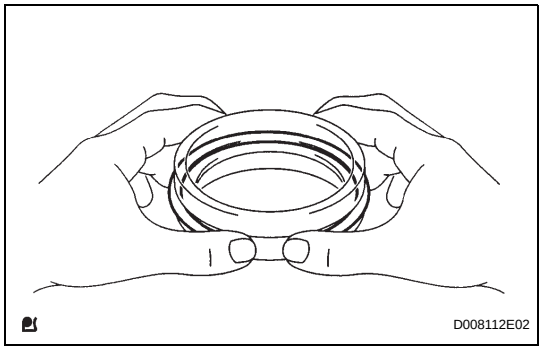

(a) Install a new snap ring to the outer race of the radial ball bearing rear.
HINT:
When replacing the bearing, also replace the counter driven gear with a new one.

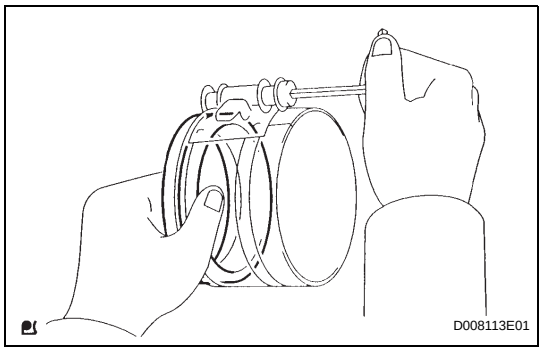

(b) Using a piston ring compressor, squeeze the snap ring.

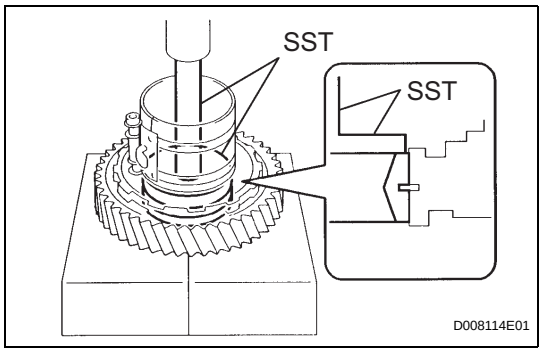

(c) Using SST and a press, press in the outer race of the radial ball bearing rear.
SST 09950-60020 (09951-00890), 09950-70010 (09951-07100)
NOTICE:
Be sure not to damage the snap ring during outer race installation.

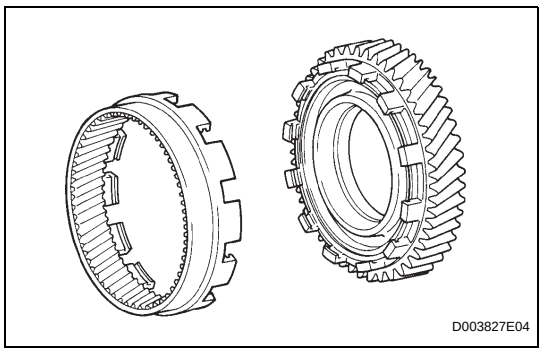

(d) Install the underdrive planetary ring gear to the counter driven gear.

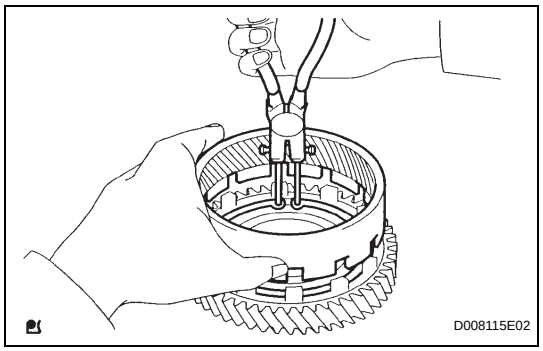

(e) Using snap ring pliers, install the snap ring.

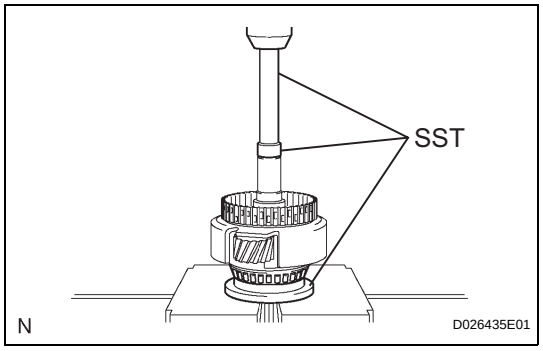

2. INSTALL UNDERDRIVE PLANETARY GEAR ASSEMBLY

(a) Using SST and a press, press in the radial ball bearing rear to the underdrive planetary gear.

SST 09502-12010, 09950-60010 (09951-00260), 09950-70010 (09951-07100)

NOTICE:

Press the bearing until it becomes flat at the bottom.

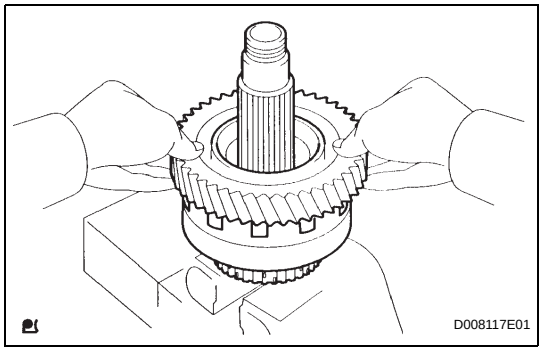

(b) Install the counter driven gear with planetary ring gear to the underdrive planetary gear.

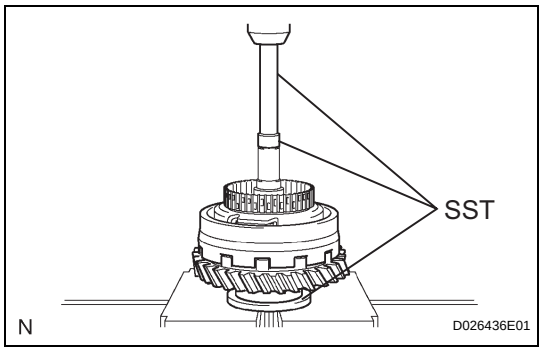

(c) Using SST and a press, press in the radial ball bearing front.

SST 09502-12010, 09950-60010 (09951-00260), 09950-70010 (09951-07100)

NOTICE:

Press the counter driven gear while rotating it.

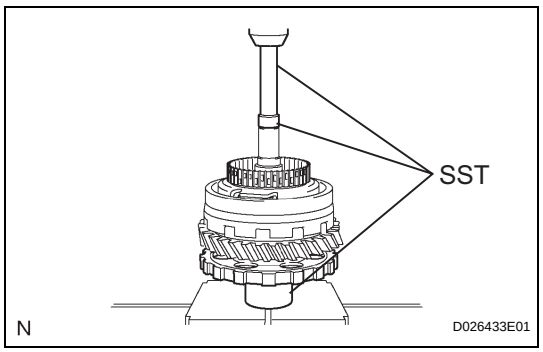

(d) Using SST and a press, press in the parking lock gear.

SST 09502-12010, 09950-60010 (09951-00260), 09950-70010 (09951-07100)

NOTICE:

Press the counter driven gear while rotating it.

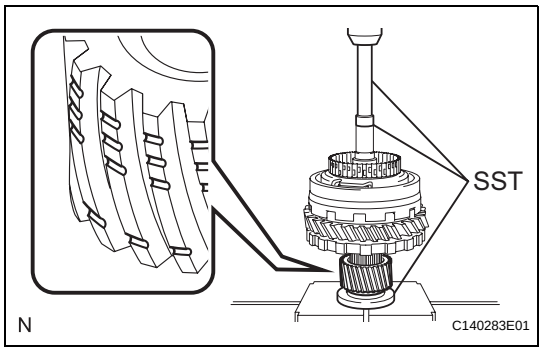

3. INSTALL DIFFERENTIAL DRIVE PINION

(a) Using SST and a press, press in the differential drive pinion.

SST 09726-40010, 09950-60010 (09951-00260), 09950-70010 (09951-07100)

NOTICE:

- **Check the position and number of the grooves on each end face of the differential drive pinion gear.**
- **Press the counter driven gear while rotating it.**

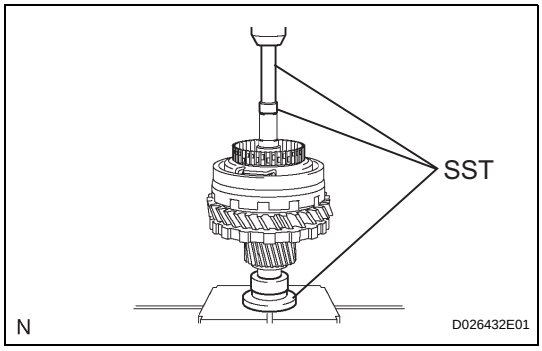

4. INSTALL CYLINDRICAL ROLLER BEARING RACE INNER

(a) Using SST and a press, press in the cylindrical roller bearing race inner.

SST 09506-35010, 09950-60010 (09951-00260), 09950-70010 (09951-07100)

NOTICE:

Press the counter driven gear while rotating it.

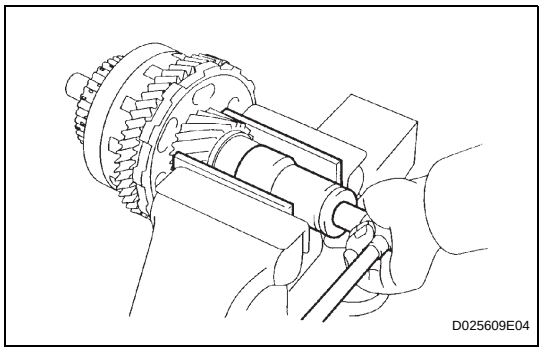

5. INSTALL FRONT PLANETARY GEAR NUT

(a) Place the underdrive planetary gear in a soft jaw vise.

NOTICE:

Be careful not to damage the differential drive pinion.

(b) Using a socket wrench, install a new lock nut.

Torque: 280 N*m (2,885 kgf*cm, 207 ft.*lbf)

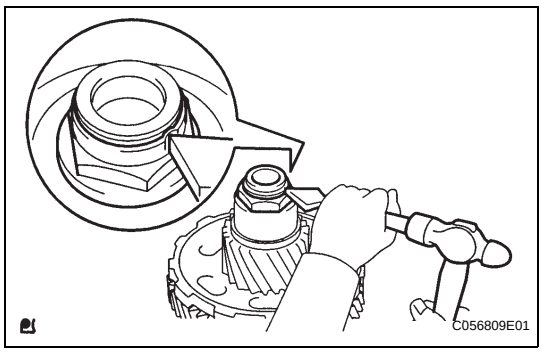

(c) Using a pin punch and hammer, stake the lock nut.

NOTICE:

Be sure that there are no cracks on the nut.

6. INSPECT UNDERDRIVE PLANETARY GEAR PRELOAD (See page AX-271)

AX

REMOVAL

1. DISCONNECT CABLE FROM NEGATIVE BATTERY TERMINAL

CAUTION:

Wait at least 90 seconds after disconnecting the cable from the negative (-) battery terminal to prevent airbag and seat belt pretensioner activation.

2. REMOVE NO. 1 ENGINE UNDER COVER

3. DRAIN AUTOMATIC TRANSAXLE FLUID

(a) Remove the drain plug and gasket, and drain the ATF.

(b) Install a new gasket and the drain plug.

Torque: 47 N*m (479 kgf*cm, 35 ft.*lbf)

4. REMOVE AUTOMATIC TRANSAXLE OIL PAN SUB-ASSEMBLY

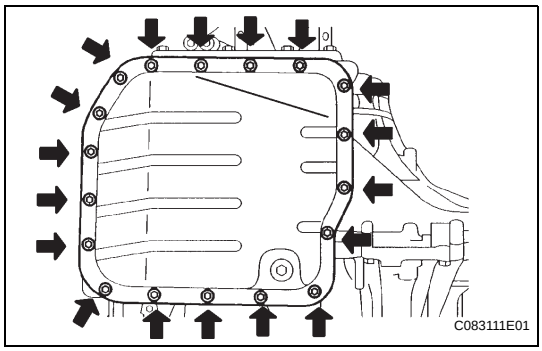

(a) Remove the 18 bolts, oil pan and gasket.

NOTICE:

Some fluid will remain in the oil pan. Carefully remove the oil pan sub-assembly.

(b) Remove the 2 magnets from the oil pan.

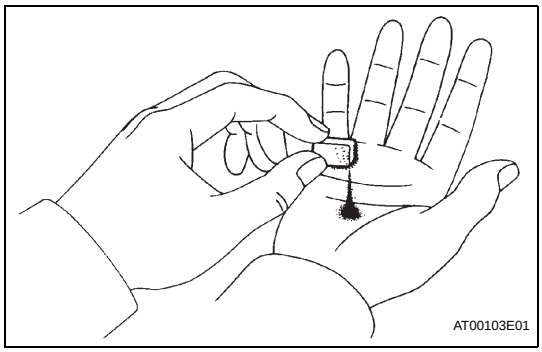

(c) Examine the particles in the pan.

(1) Use the removed magnets to collect any steel chips. Look carefully at the chips and particles in the pan and on the magnet to anticipate what type of wear you will find in the transaxle.
Steel (magnetic): bearing, gear and plate wear
Brass (non-magnetic): bush wear

5. REMOVE VALVE BODY OIL STRAINER ASSEMBLY

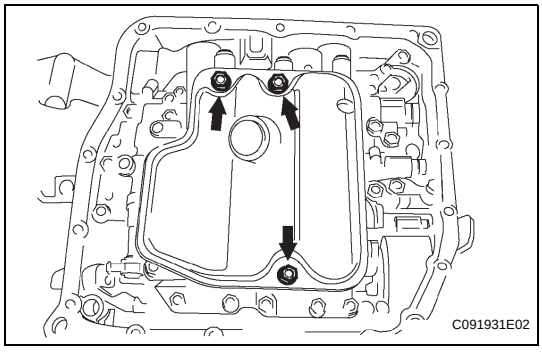

(a) Remove the 3 bolts and oil strainer.

NOTICE:

Be careful as some fluid will come out with the oil strainer.

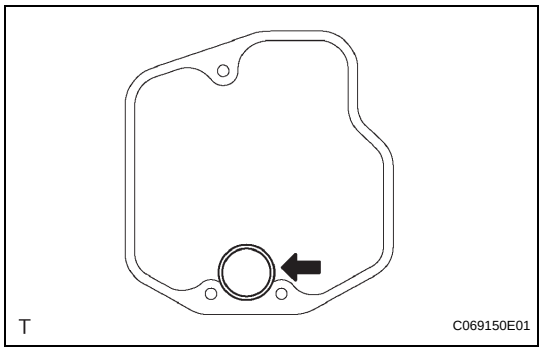

(b) Remove the O-ring from the oil strainer.

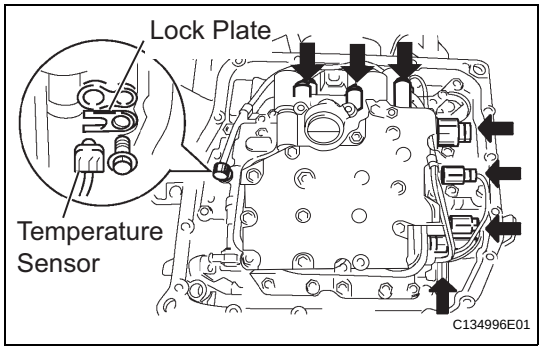

6. DISCONNECT TRANSMISSION WIRE

(a) Disconnect the 7 connectors.

(b) Remove the bolt and lock plate, and remove the ATF temperature sensor.

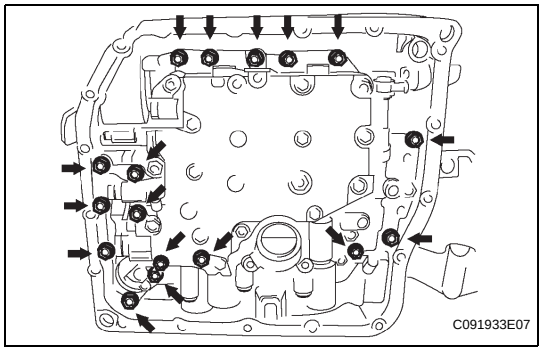

7. REMOVE TRANSMISSION VALVE BODY ASSEMBLY

(a) Support the valve body and remove the 17 bolts and valve body.

NOTICE:

Be careful not to drop the check valve body, spring and accumulator piston.

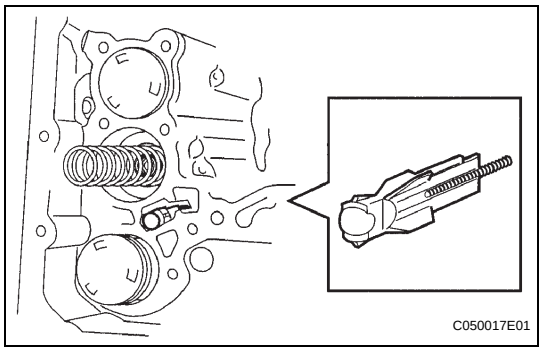

(b) Remove the check ball body and spring.

INSTALLATION

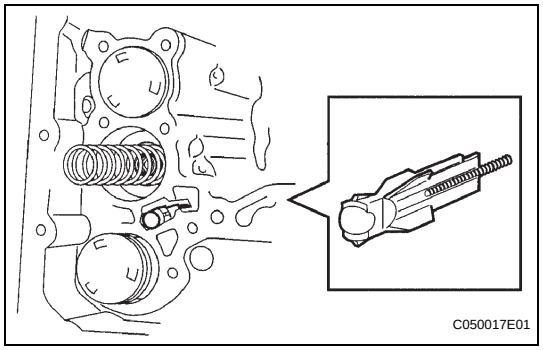

1. INSTALL TRANSMISSION VALVE BODY ASSEMBLY

(a) Install the spring and check ball body.

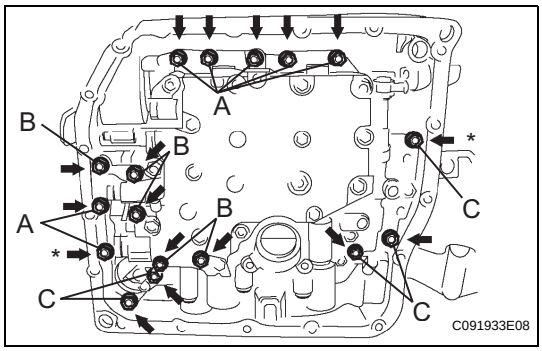

(b) Align the groove of the manual valve with the pin of the lever.
(c) Apply ATF to the 17 bolts.
(d) Install the 17 bolts.
Torque: 11 N*m (112 kgf*cm, 8 ft.*lbf)
NOTICE:
- **Push the valve body against the accumulator piston spring and the check ball body to install it.**
- **Tighten the bolts marked by * in the illustration first temporarily because they are positioning bolts.**

HINT:
Each bolt length is indicated below.
Bolt length:
25 mm (0.984 in.) for bolt A
57 mm (2.244 in.) for bolt B
41 mm (1.614 in.) for bolt C

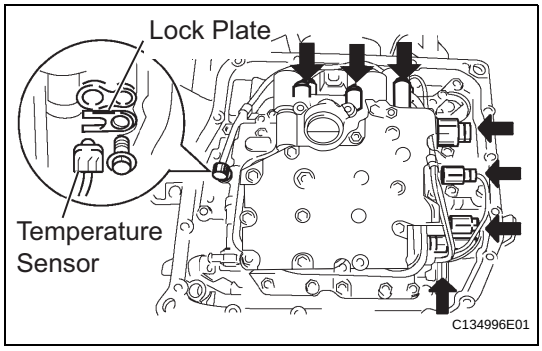

2. CONNECT TRANSMISSION WIRE
(a) Coat the O-ring with ATF.
(b) Apply ATF to the bolt.
(c) Install the ATF temperature sensor with the lock plate and bolt.
Torque: 6.6 N*m (67 kgf*cm, 58 in.*lbf)
(d) Connect the 7 shift solenoid valve connectors.

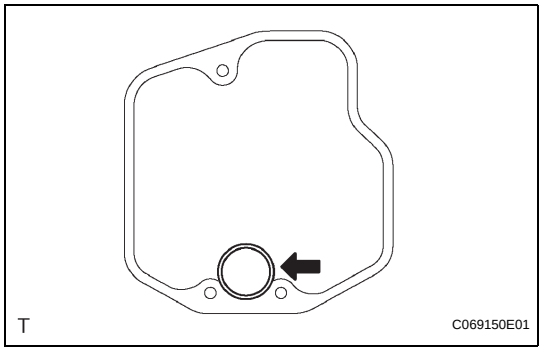

3. INSTALL VALVE BODY OIL STRAINER ASSEMBLY
(a) Coat a new O-ring with ATF.
(b) Install the O-ring to the oil strainer.
(c) Apply ATF to the 3 bolts.

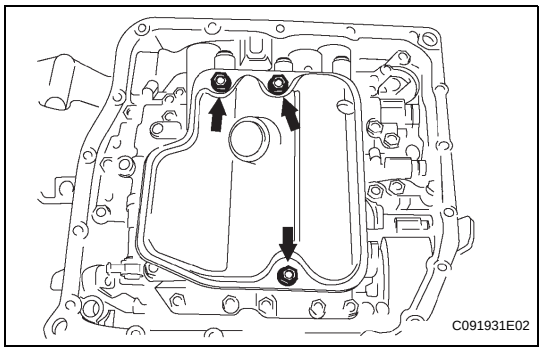

(d) Install the oil strainer with the 3 bolts.
Torque: 11 N*m (112 kgf*cm, 8 ft.*lbf)

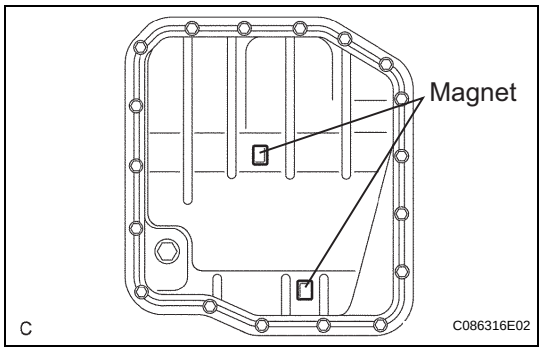

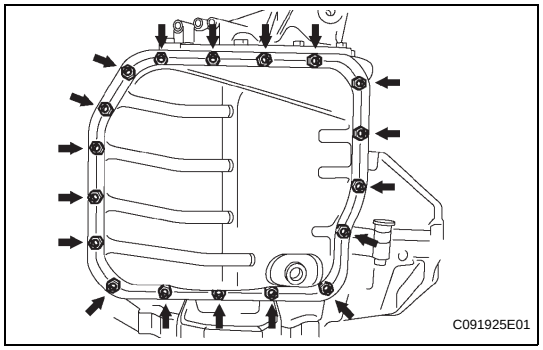

4. INSTALL AUTOMATIC TRANSAXLE OIL PAN SUB-ASSEMBLY

(a) Install the 2 magnets in the oil pan.

(b) Install a new gasket and the oil pan with the 18 bolts.
Torque: 7.6 N*m (77 kgf*cm, 67 in.*lbf)

5. INSTALL NO. 1 ENGINE UNDER COVER

6. CONNECT CABLE TO NEGATIVE BATTERY TERMINAL

7. ADD AUTOMATIC TRANSAXLE FLUID
Fluid type:
Toyota Genuine ATF WS

8. INSPECT TRANSAXLE FLUID LEVEL

(a) Inspect the fluid level (see page AX-126).

9. PERFORM RESET MEMORY

(a) Perform the RESET MEMORY procedures (A/T initialization) (see page AX-20).

AX

VALVE BODY ASSEMBLY

COMPONENTS

AX

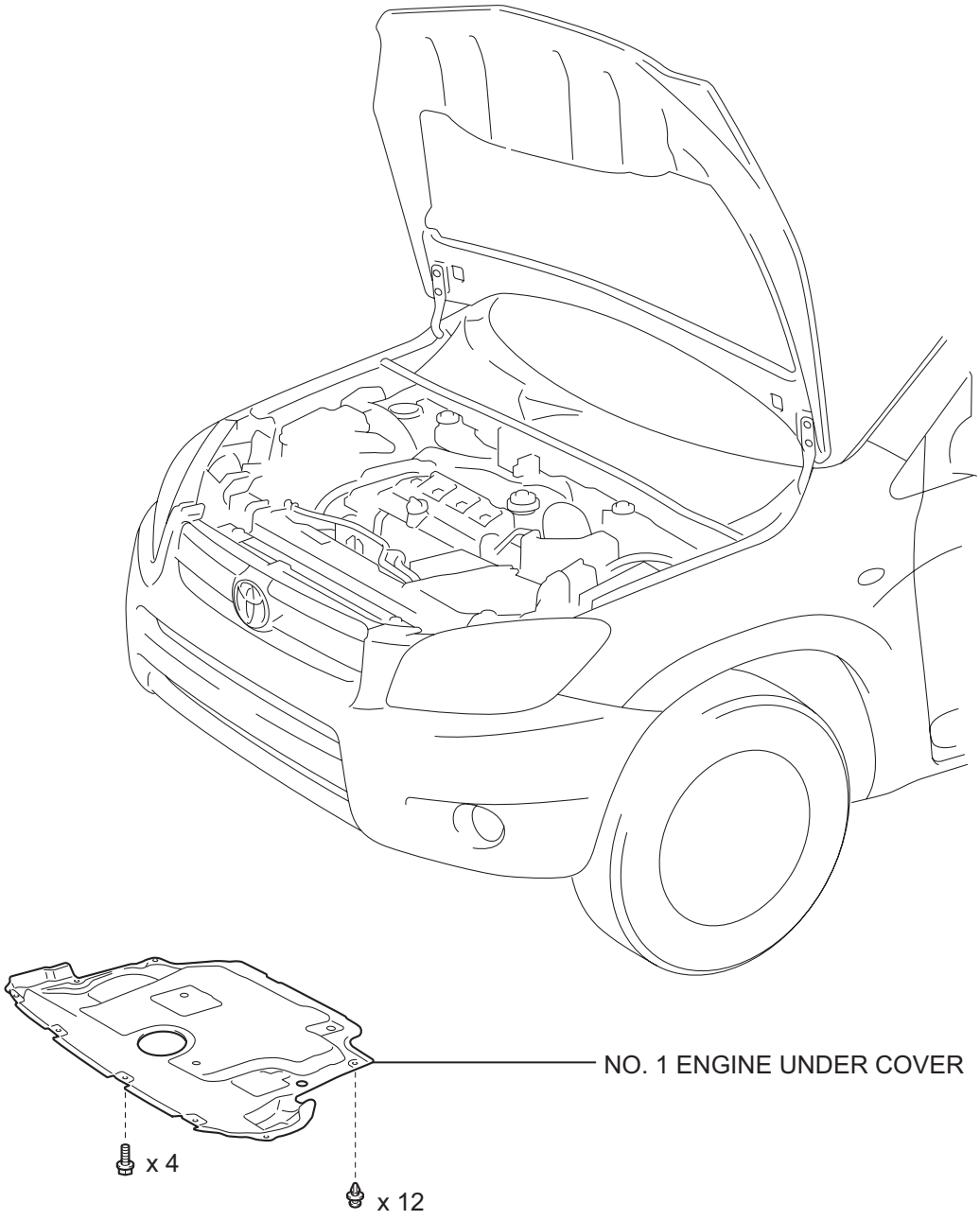

Y

C138664E01

AX

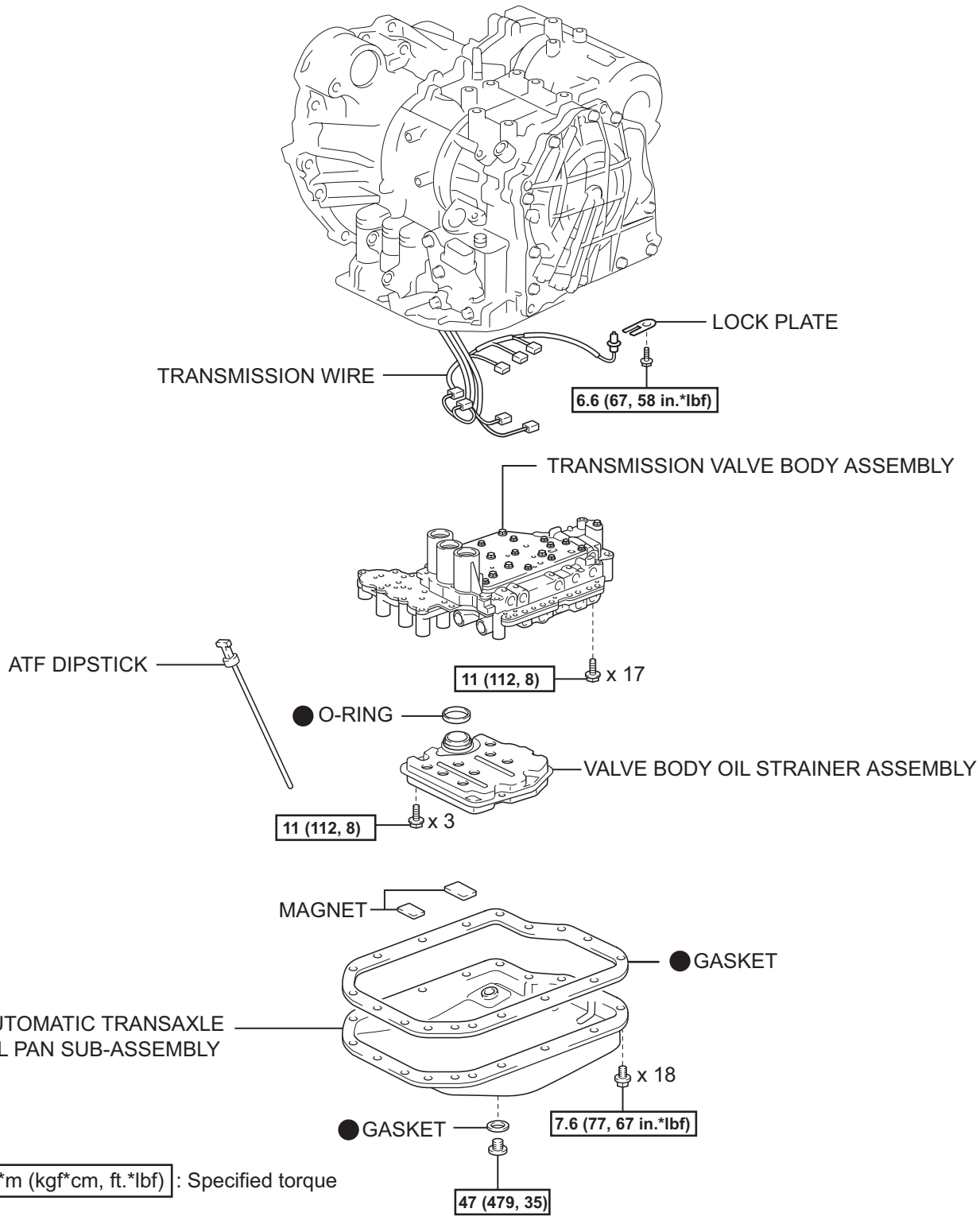

P

C136354E01

VALVE BODY

COMPONENTS

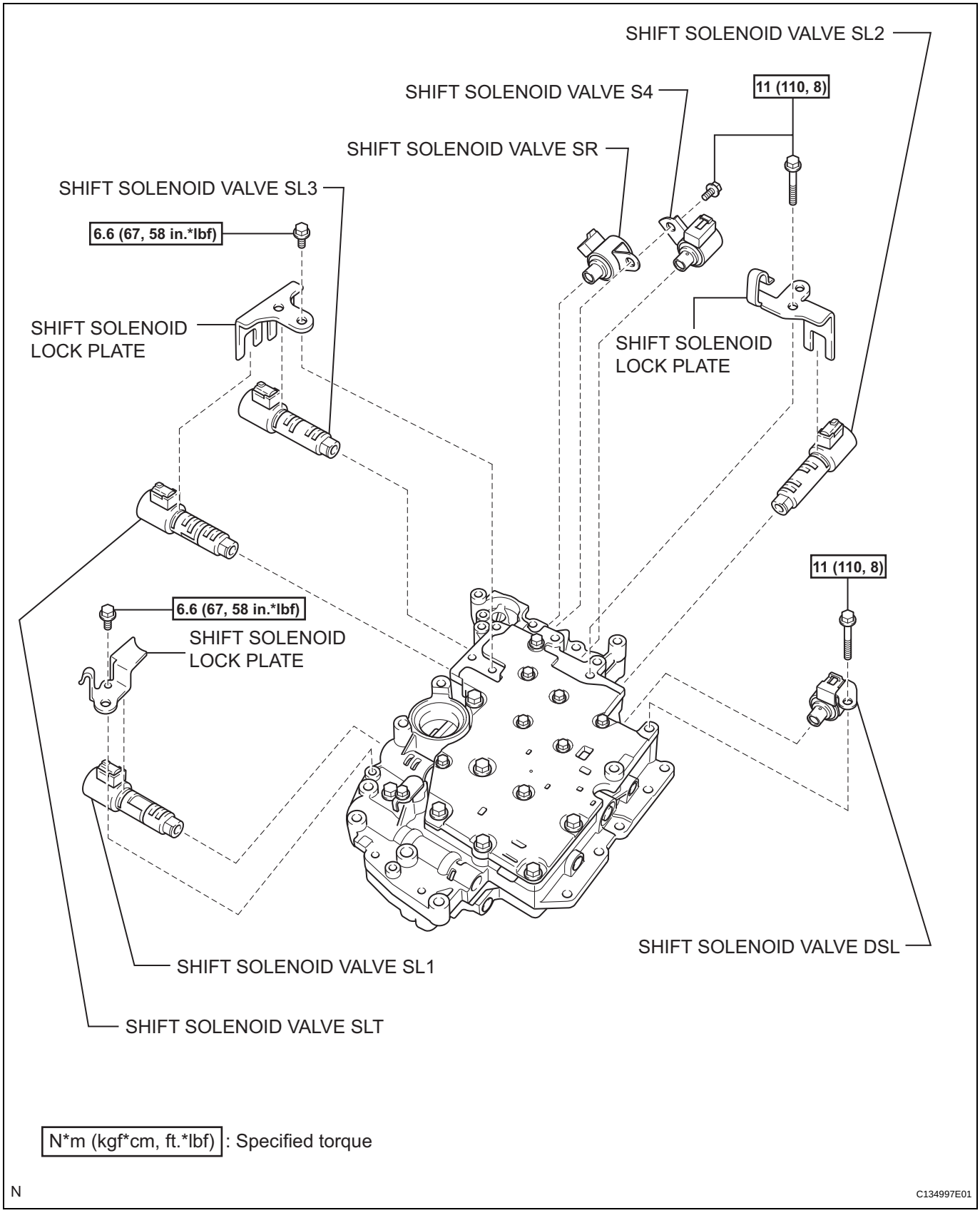

AX

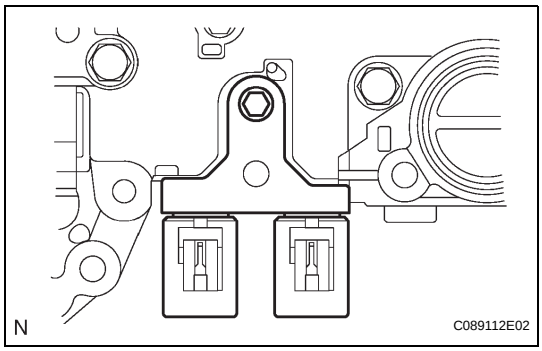

DISASSEMBLY

1. REMOVE SHIFT SOLENOID VALVE SLT AND SL3

(a) Remove the bolt, lock plate and shift solenoid valve SL3 and SLT from the valve body.

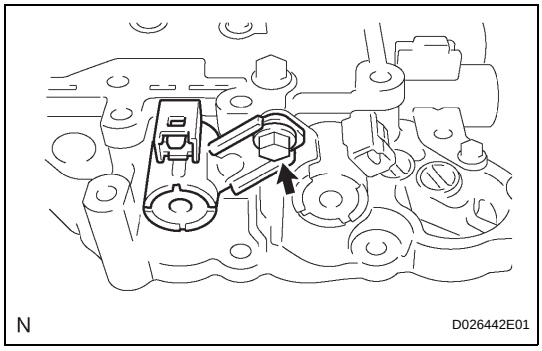

2. REMOVE SHIFT SOLENOID VALVE S4

(a) Remove the bolt and shift solenoid valve S4 from the valve body.

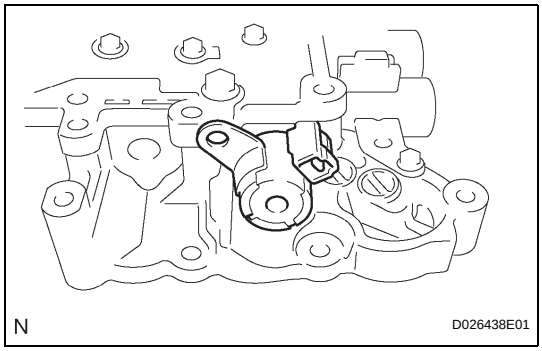

3. REMOVE SHIFT SOLENOID VALVE SR

(a) Remove the shift solenoid valve SR from the valve body.

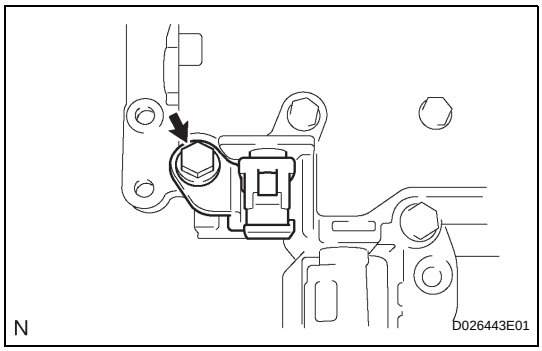

4. REMOVE SHIFT SOLENOID VALVE DSL

(a) Remove the bolt and shift solenoid valve DSL from the valve body.

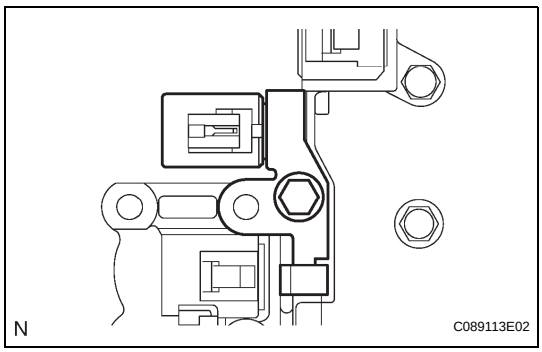

5. REMOVE SHIFT SOLENOID VALVE SL2

(a) Remove the bolt, lock plate and shift solenoid valve SL2 from the valve body.

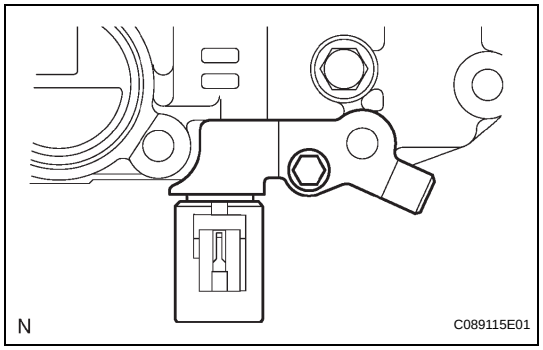

6. REMOVE SHIFT SOLENOID VALVE SL1

(a) Remove the bolt, lock plate and shift solenoid valve SL1 from the valve body.

REASSEMBLY

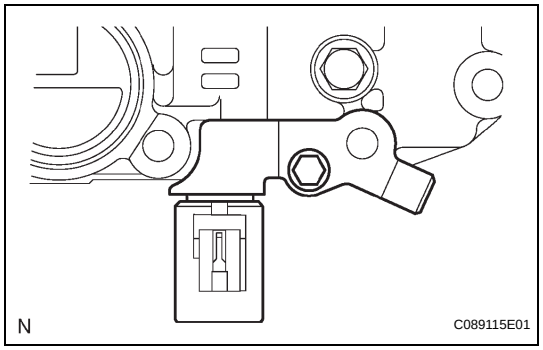

1. INSTALL SHIFT SOLENOID VALVE SL1

(a) Install the shift solenoid valve SL1 and lock plate to the valve body with the bolt.
Torque: 6.6 N*m (67 kgf*cm, 58 in.*lbf)

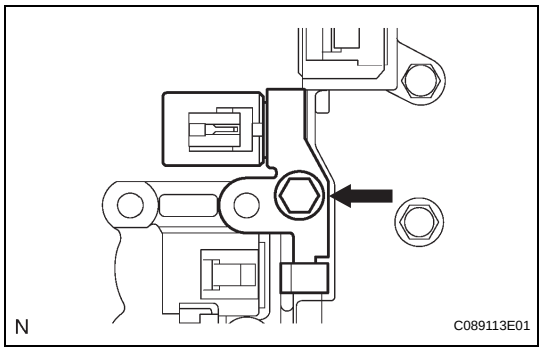

2. INSTALL SHIFT SOLENOID VALVE SL2

(a) Install the shift solenoid valve SL2 and lock plate to the valve body with the bolt.
Torque: 11 N*m (110 kgf*cm, 8 ft.*lbf)

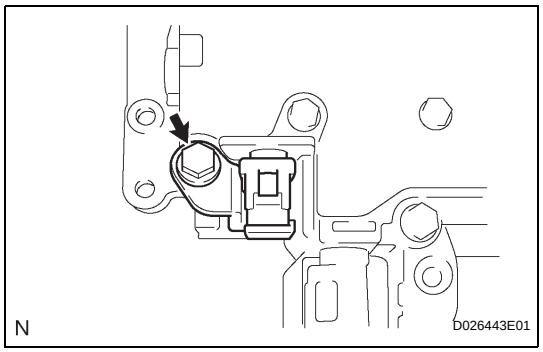

3. INSTALL SHIFT SOLENOID VALVE DSL

(a) Install the shift solenoid valve DSL and lock plate to the valve body with the bolt.
Torque: 11 N*m (110 kgf*cm, 8 ft.*lbf)

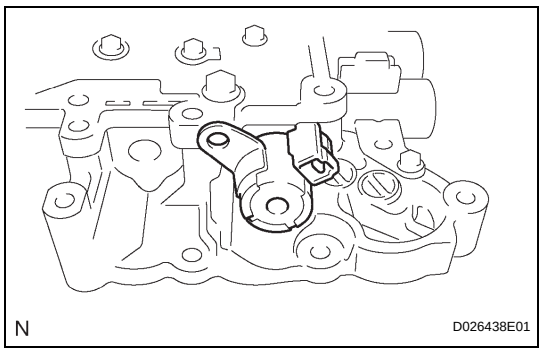

4. INSTALL SHIFT SOLENOID VALVE SR

(a) Install the shift solenoid valve SR to the valve body.

AX

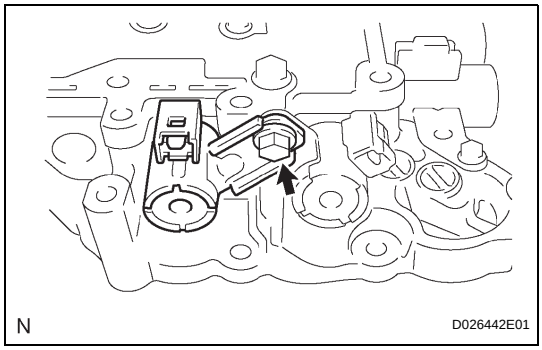

5. INSTALL SHIFT SOLENOID VALVE S4

(a) Install the shift solenoid valve S4 to the valve body with the bolt.
Torque: 11 N*m (110 kgf*cm, 8 ft.*lbf)

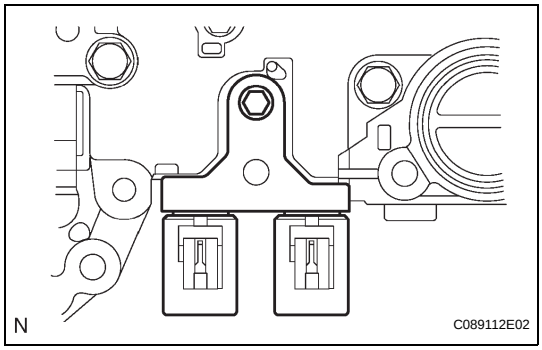

6. INSTALL SHIFT SOLENOID VALVE SL3 AND SLT

(a) Install the shift solenoid valve SL3 and SLT and lock plate to the valve body with the bolt.
Torque: 6.6 N*m (67 kgf*cm, 58 in.*lbf)

AX

REMOVAL

1. DISCONNECT CABLE FROM NEGATIVE BATTERY TERMINAL

CAUTION:

Wait at least 90 seconds after disconnecting the cable from the negative (-) battery terminal to prevent airbag and seat belt pretensioner activation.

2. REMOVE NO. 1 ENGINE UNDER COVER

3. DRAIN AUTOMATIC TRANSAXLE FLUID

(a) Remove the drain plug and gasket, and drain the ATF.

(b) Install a new gasket and the drain plug.

Torque: 47 N*m (479 kgf*cm, 35 ft.*lbf)

4. REMOVE AUTOMATIC TRANSAXLE OIL PAN SUB-ASSEMBLY

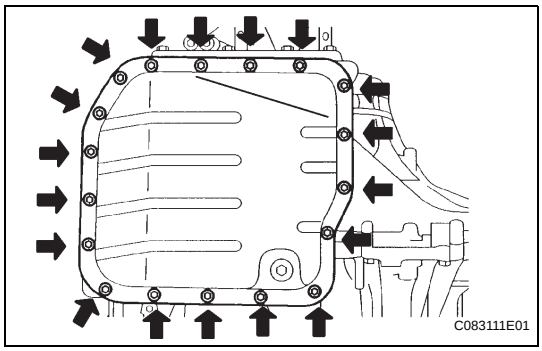

(a) Remove the 18 bolts, oil pan and gasket.

NOTICE:

Some fluid will remain in the oil pan. Carefully remove the oil pan sub-assembly.

(b) Remove the 2 magnets from the oil pan.

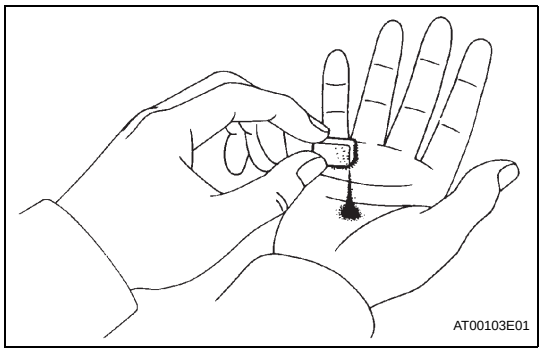

(c) Examine the particles in the pan.

(1) Use the removed magnets to collect any steel chips. Look carefully at the chips and particles in the pan and on the magnet to anticipate what type of wear you will find in the transaxle.
Steel (magnetic): bearing, gear and plate wear
Brass (non-magnetic): bush wear

5. REMOVE VALVE BODY OIL STRAINER ASSEMBLY

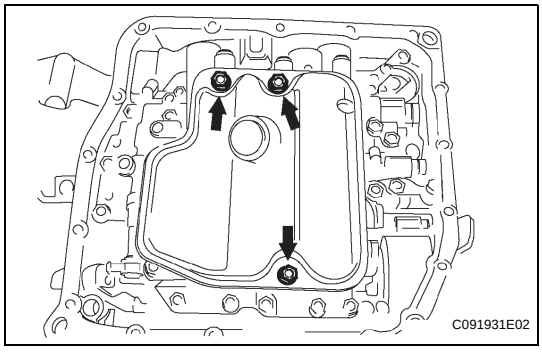

(a) Remove the 3 bolts and oil strainer.

NOTICE:

Be careful as some fluid will come out with the oil strainer.

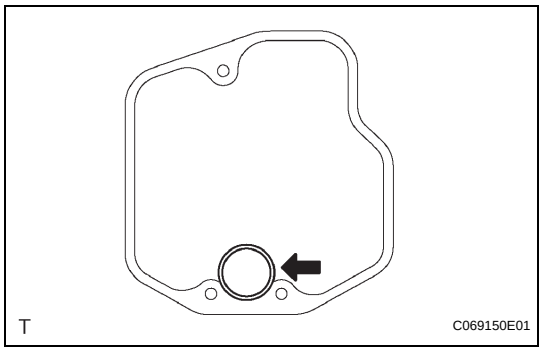

(b) Remove the O-ring from the oil strainer.

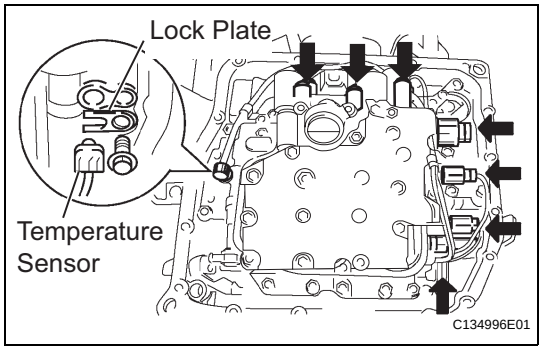

6. DISCONNECT TRANSMISSION WIRE

(a) Disconnect the 7 connectors.

(b) Remove the bolt and lock plate, and remove the ATF temperature sensor.

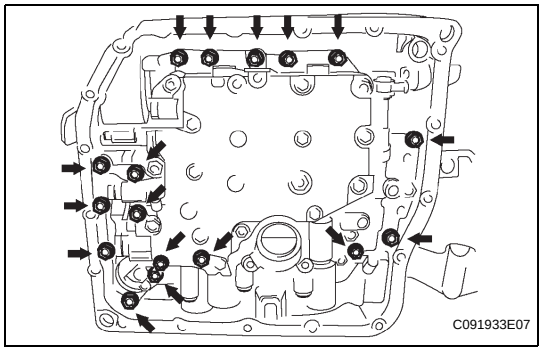

7. REMOVE TRANSMISSION VALVE BODY ASSEMBLY

(a) Support the valve body and remove the 17 bolts and valve body.

NOTICE:

Be careful not to drop the check valve body, spring and accumulator piston.

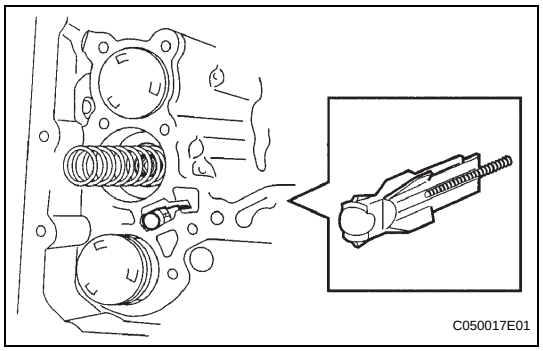

(b) Remove the check ball body and spring.

INSTALLATION

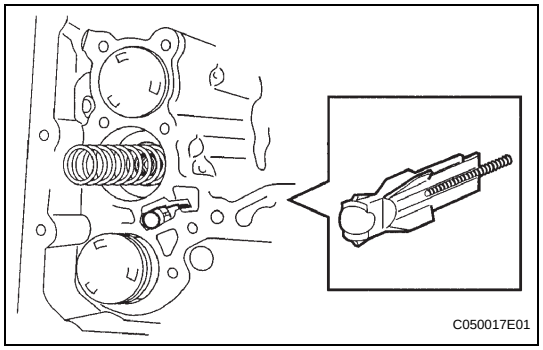

1. INSTALL TRANSMISSION VALVE BODY ASSEMBLY

(a) Install the spring and check ball body.

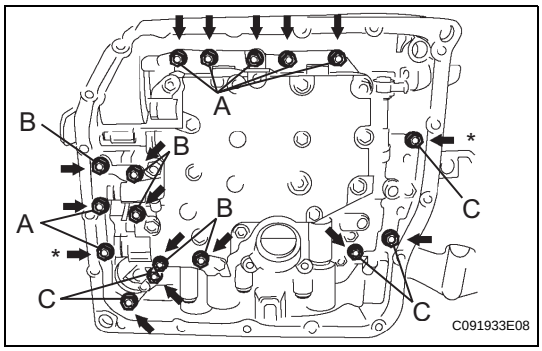

(b) Align the groove of the manual valve with the pin of the lever.
(c) Apply ATF to the 17 bolts.
(d) Install the 17 bolts.
Torque: 11 N*m (112 kgf*cm, 8 ft.*lbf)
NOTICE:
- **Push the valve body against the accumulator piston spring and the check ball body to install it.**
- **Tighten the bolts marked by * in the illustration first temporarily because they are positioning bolts.**

HINT:
Each bolt length is indicated below.
Bolt length:
25 mm (0.984 in.) for bolt A
57 mm (2.244 in.) for bolt B
41 mm (1.614 in.) for bolt C

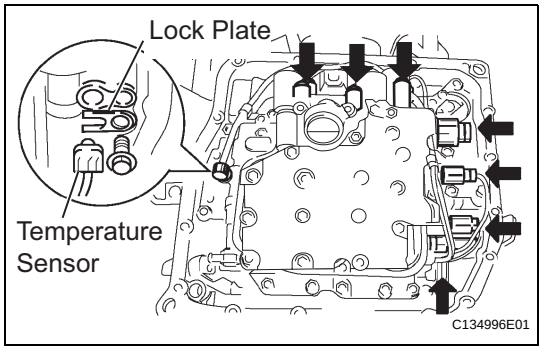

2. CONNECT TRANSMISSION WIRE
(a) Coat the O-ring with ATF.
(b) Apply ATF to the bolt.
(c) Install the ATF temperature sensor with the lock plate and bolt.
Torque: 6.6 N*m (67 kgf*cm, 58 in.*lbf)
(d) Connect the 7 shift solenoid valve connectors.

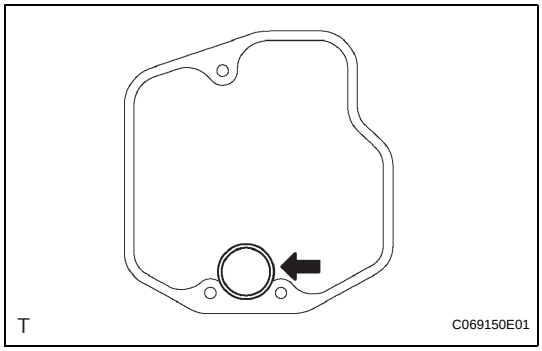

3. INSTALL VALVE BODY OIL STRAINER ASSEMBLY
(a) Coat a new O-ring with ATF.
(b) Install the O-ring to the oil strainer.
(c) Apply ATF to the 3 bolts.

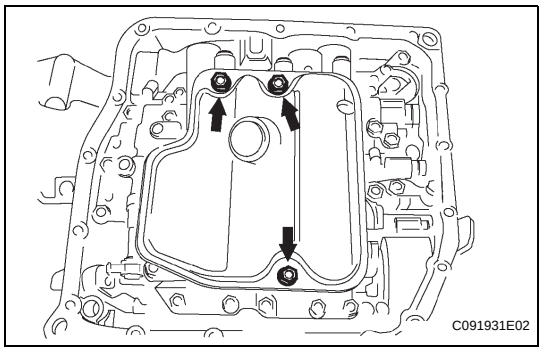

(d) Install the oil strainer with the 3 bolts.
Torque: 11 N*m (112 kgf*cm, 8 ft.*lbf)

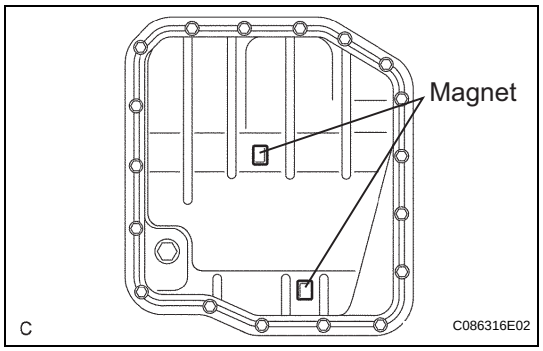

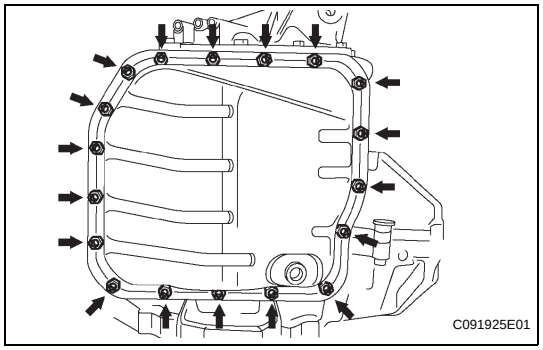

4. INSTALL AUTOMATIC TRANSAXLE OIL PAN SUB-ASSEMBLY

(a) Install the 2 magnets in the oil pan.

(b) Install a new gasket and the oil pan with the 18 bolts.
Torque: 7.6 N*m (77 kgf*cm, 67 in.*lbf)

5. INSTALL NO. 1 ENGINE UNDER COVER

6. CONNECT CABLE TO NEGATIVE BATTERY TERMINAL

7. ADD AUTOMATIC TRANSAXLE FLUID
Fluid type:
Toyota Genuine ATF WS

8. INSPECT TRANSAXLE FLUID LEVEL

(a) Inspect the fluid level (see page AX-126).

9. PERFORM RESET MEMORY

(a) Perform the RESET MEMORY procedures (A/T initialization) (see page AX-20).

AX

VALVE BODY ASSEMBLY

COMPONENTS

AX

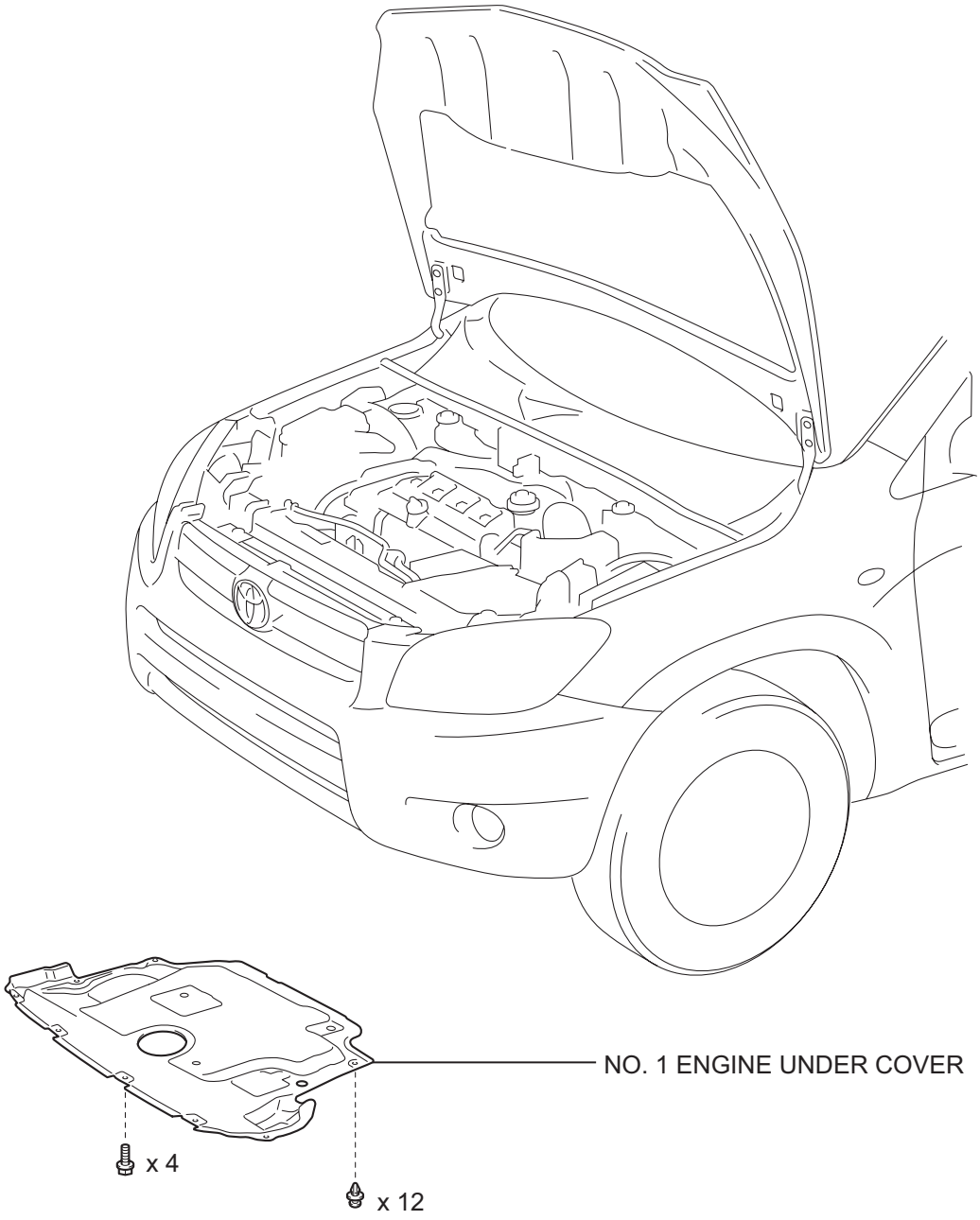

Y

C138664E01

AX

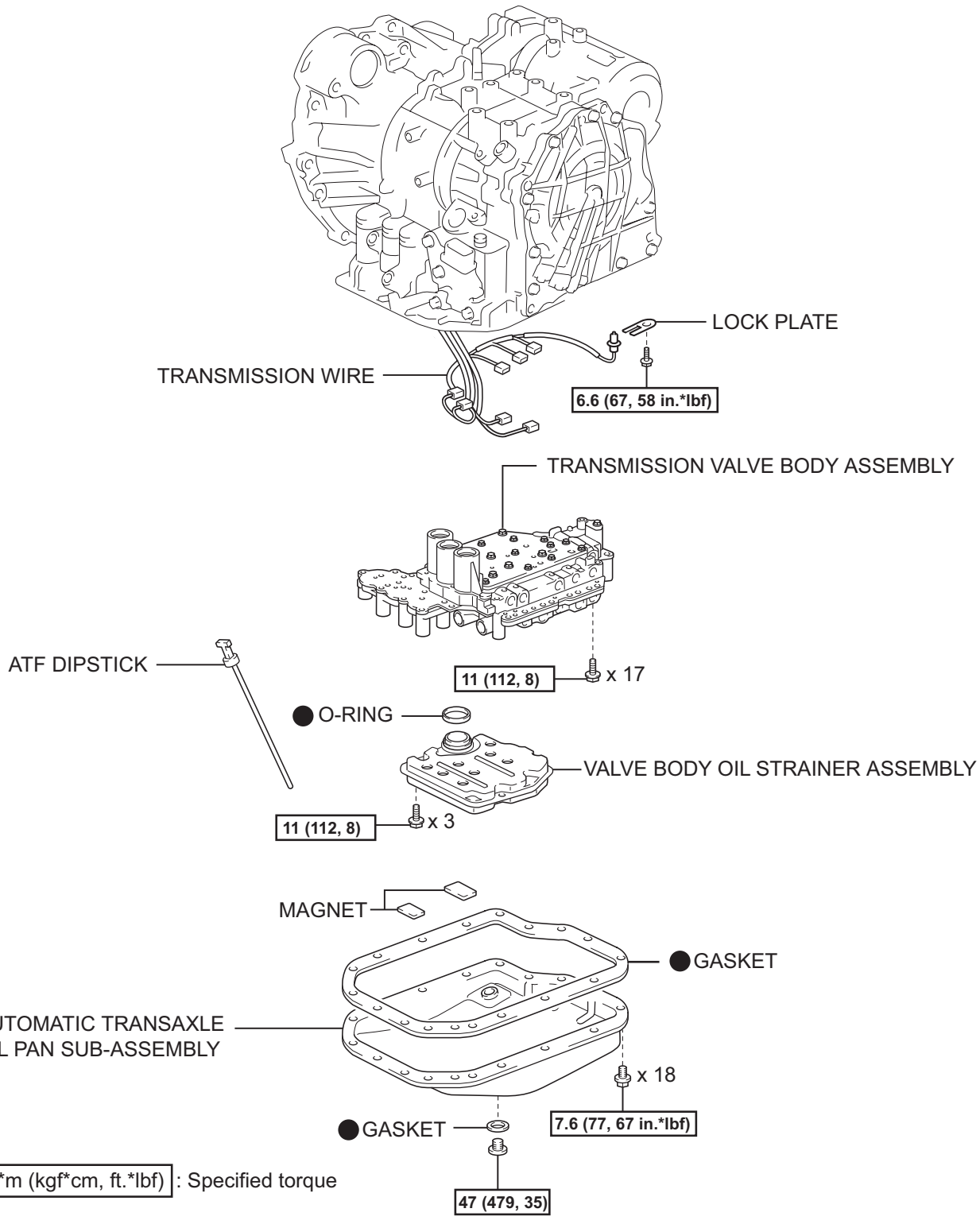

P

C136354E01

INSTALLATION

1. INSPECT TORQUE CONVERTER CLUTCH ASSEMBLY

(a) Inspect the torque converter (see page AX-152).

2. INSTALL TORQUE CONVERTER CLUTCH ASSEMBLY

(a) Install the torque converter clutch to the automatic transaxle.

(b) Using a vernier caliper, measure dimension A between the transaxle and the end surface of the drive plate.

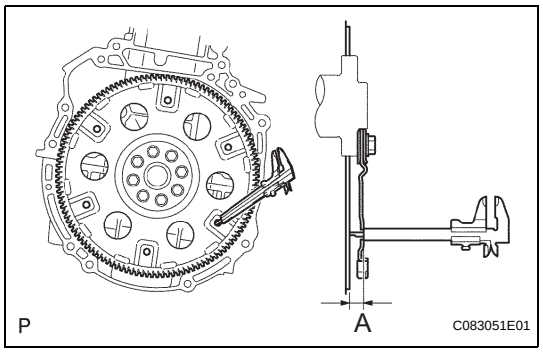

(c) Using a vernier caliper and straightedge, measure the dimension B shown in the illustration and check that B is greater than A.

Standard dimension:

A + 1.0 mm (0.039 in.) or more

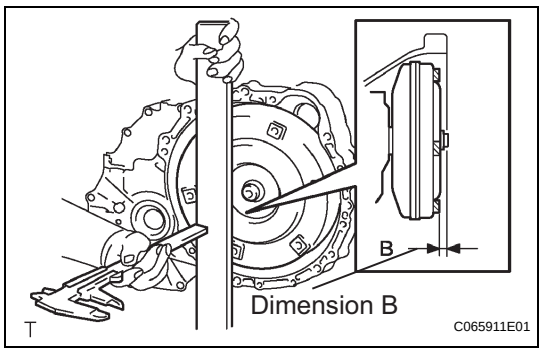

3. INSTALL NO. 1 TRANSMISSION CONTROL CABLE BRACKET

(a) Install the cable bracket with the 2 bolts.

Torque: 12 N*m (122 kgf*cm, 9 ft.*lbf)

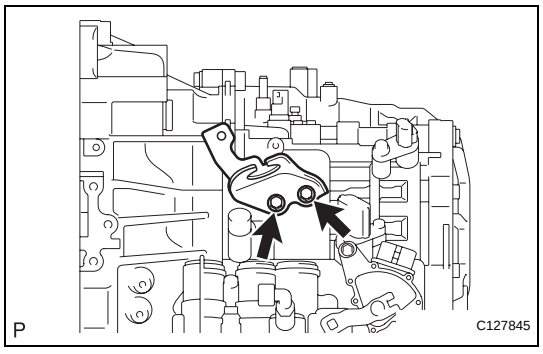

4. INSTALL TRANSMISSION OIL FILLER TUBE SUB-ASSEMBLY

(a) Install the filler tube with the bolt.

Torque: 5.5 N*m (56 kgf*cm, 49 in.*lbf)

(b) Install the ATF dipstick.

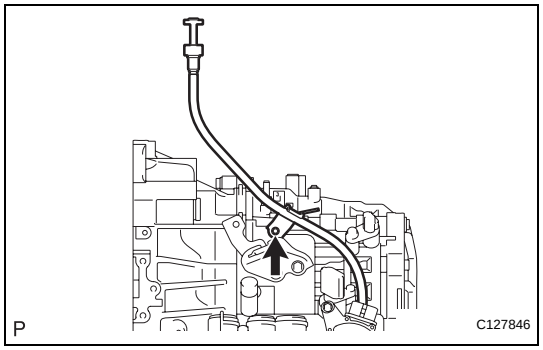

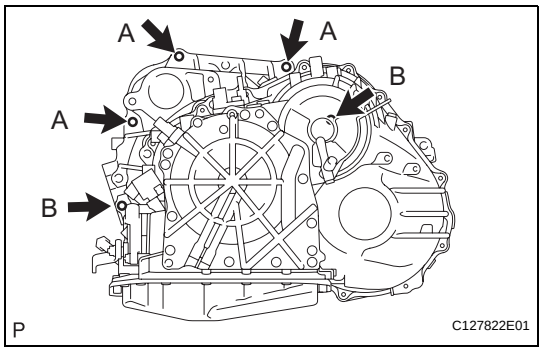

5. INSTALL AUTOMATIC TRANSAXLE ASSEMBLY

(a) Install the automatic transaxle with the 5 upper side mounting bolts to the engine.
Torque: 64 N*m (653 kgf*cm, 47 ft.*lbf) for bolt A
46 N*m (469 kgf*cm, 34 ft.*lbf) for bolt B

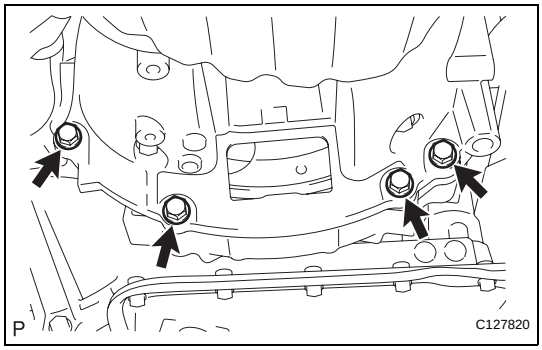

(b) Install the 4 lower side mounting bolts.
Torque: 37 N*m (377 kgf*cm, 27 ft.*lbf)

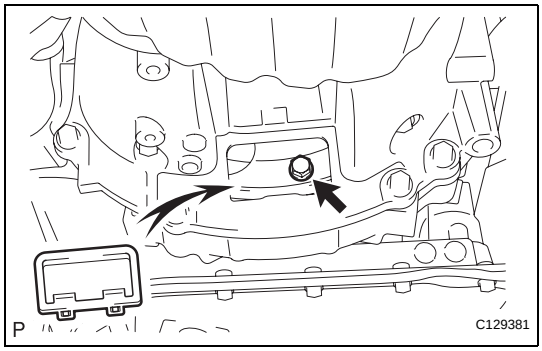

(c) Install the 6 torque converter clutch mounting bolts.
Torque: 41 N*m (418 kgf*cm, 30 ft.*lbf)
HINT:
First install the green colored bolt and then the 5 bolts.

(d) Install the flywheel housing under cover.

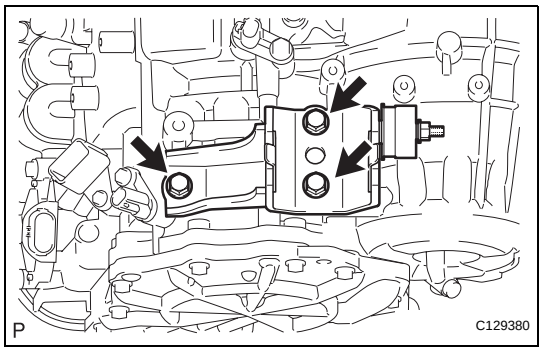

6. INSTALL ENGINE MOUNTING BRACKET LH

(a) Install the mounting bracket with the 3 bolts.
Torque: 64 N*m (653 kgf*cm, 47 ft.*lbf)

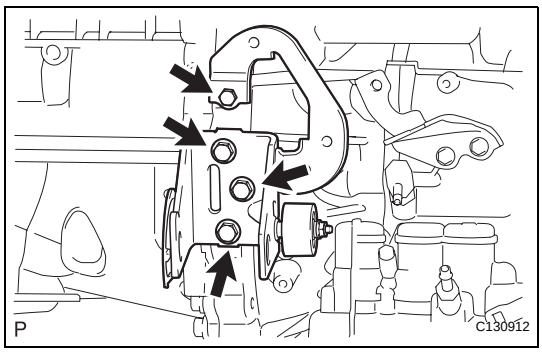

7. INSTALL ENGINE MOUNTING BRACKET FR

(a) Install the mounting bracket with the 4 bolts.
Torque: 64 N*m (657 kgf*cm, 47 ft.*lbf) for 14 mm head bolt
12 N*m (122 kgf*cm, 9 ft.*lbf) for 12 mm head bolt

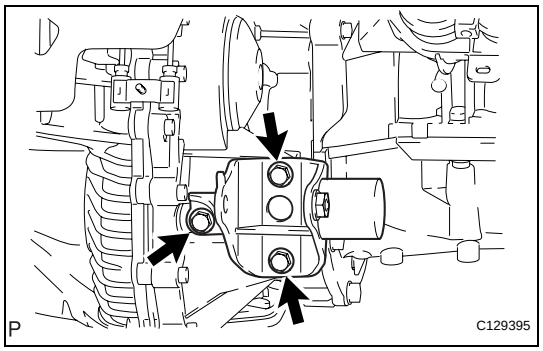

8. INSTALL ENGINE MOUNTING BRACKET RR

(a) Install the mounting bracket with the 3 bolts.
Torque: 45 N*m (459 kgf*cm, 33 ft.*lbf)

9. INSTALL TRANSMISSION OIL COOLER

(a) Install the oil cooler (see page AX-127).

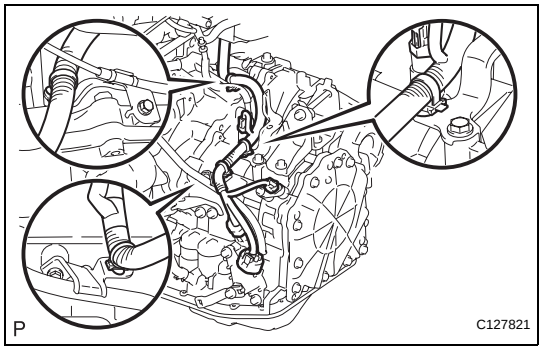

10. CONNECT WIRE HARNESS

(a) Connect the wire harness clamps.
(b) Connect the speed sensor connectors.
(c) Connect the transaxle wire connector.
(d) Connect the park/neutral position switch connector.

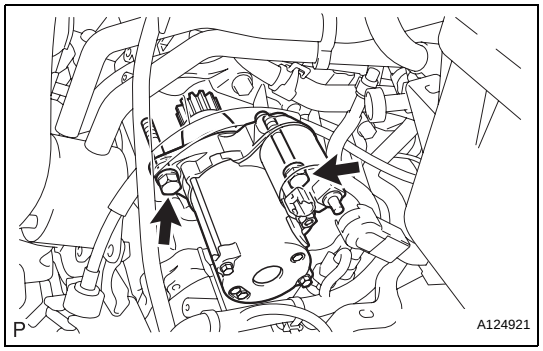

11. INSTALL STARTER ASSEMBLY

(a) Install the starter with the 2 bolts.
Torque: 37 N*m (377 kgf*cm, 27 ft.*lbf)

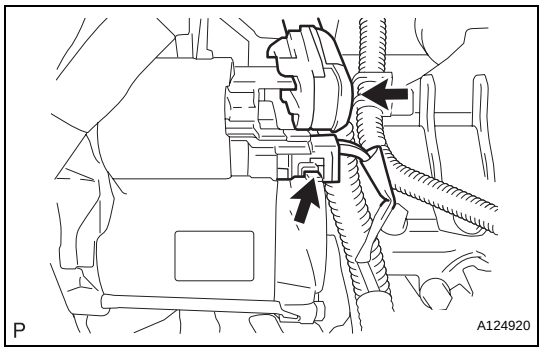

(b) Connect the starter wire with the nut.
Torque: 13 N*m (133 kgf*cm, 10 ft.*lbf)
(c) Connect the starter connector.
(d) Install the terminal nut and cover the nut with the cap.
Torque: 9.8 N*m (100 kgf*cm, 7 in.*lbf)

12. INSTALL ENGINE ASSEMBLY WITH TRANSAXLE

(a) Install the engine with transaxle (see page EM-105).

13. ADD AUTOMATIC TRANSAXLE FLUID
Fluid type:
Toyota Genuine ATF WS

14. INSPECT AUTOMATIC TRANSAXLE FLUID

(a) Inspect the automatic transaxle fluid (see page AX-102).

15. PERFORM RESET MEMORY

(a) Perform the RESET MEMORY procedures (A/T initialization) (see page AX-18).

AX

AUTOMATIC TRANSAXLE ASSEMBLY

COMPONENTS

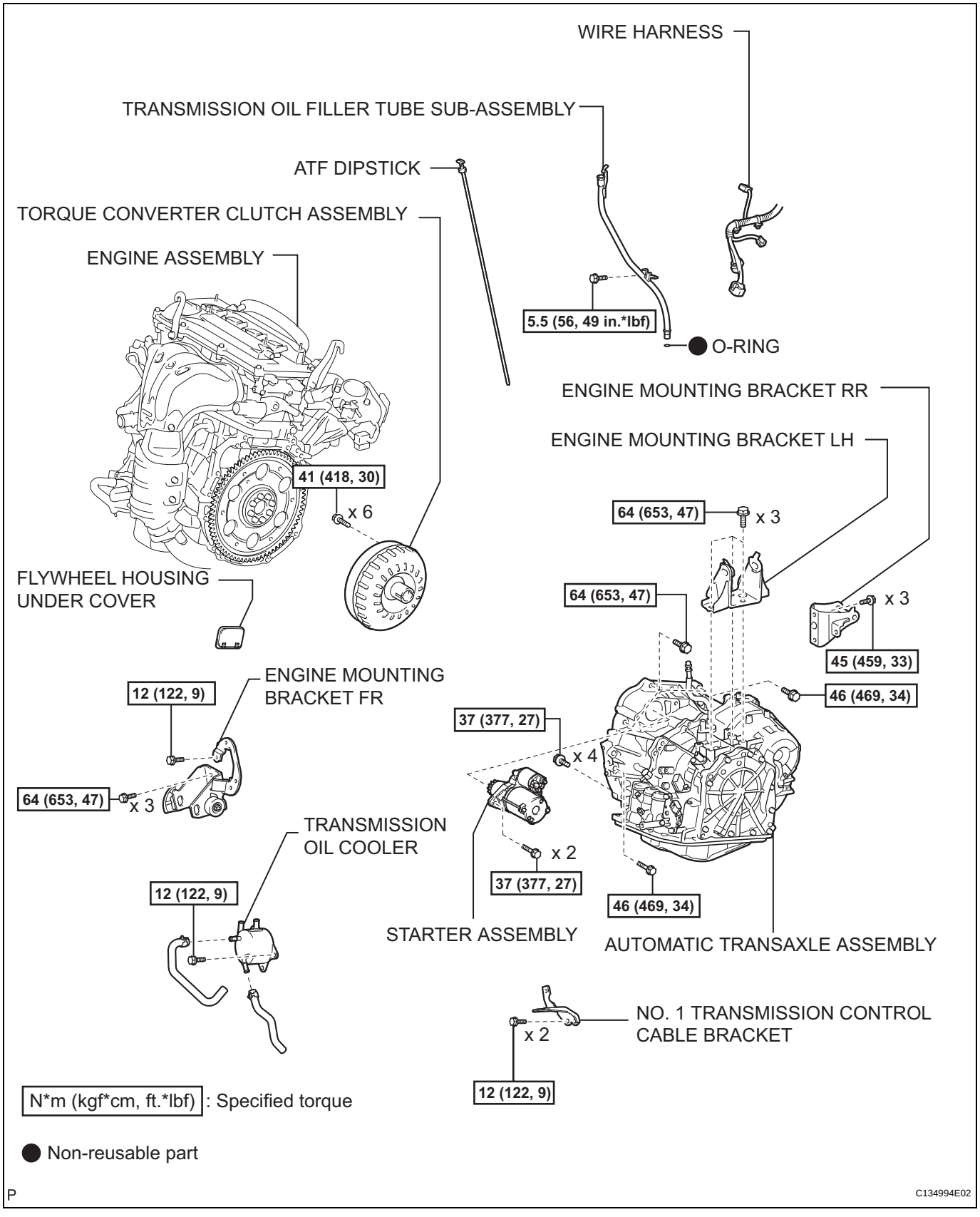

AX

REMOVAL

1. REMOVE ENGINE ASSEMBLY WITH TRANSAXLE

(a) Remove the engine with transaxle (see page EM-98).

2. DRAIN AUTOMATIC TRANSAXLE FLUID

(a) Remove the drain plug and gasket, and drain ATF.

(b) Install a new gasket and the drain plug.
Torque: 47 N*m (479 kgf*cm, 35 ft.*lbf)

3. REMOVE STARTER ASSEMBLY

(a) Disconnect the starter connector.

(b) Open the terminal cap, and remove the nut and disconnect the starter wire.

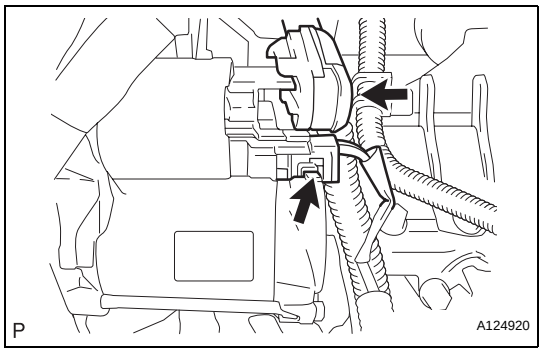

(c) Remove the 2 bolts and starter.

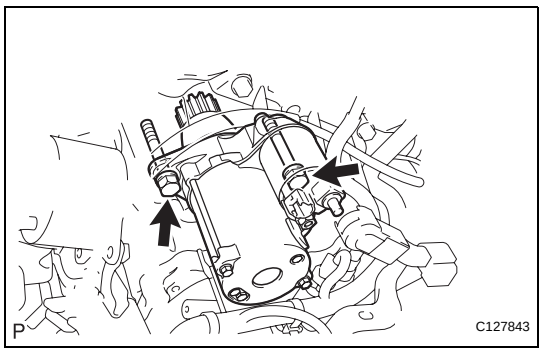

4. DISCONNECT WIRE HARNESS

(a) Disconnect the park/neutral position switch connector.

(b) Disconnect the transaxle wire connector.

(c) Disconnect the speed sensor connectors.

(d) Disconnect the wire harness clamps.

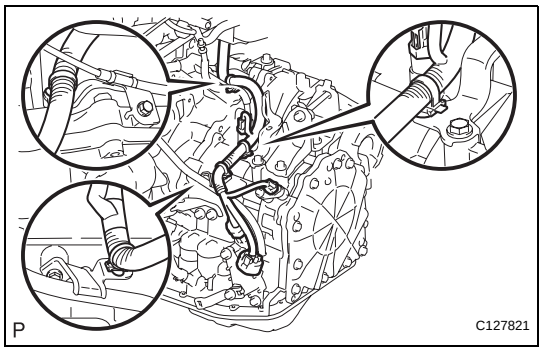

5. REMOVE TRANSMISSION OIL COOLER

(a) Remove the oil cooler (see page AX-127).

6. REMOVE ENGINE MOUNTING BRACKET RR

(a) Remove the 3 bolts and mounting bracket.

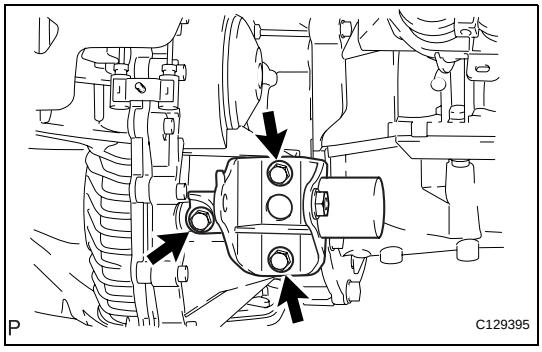

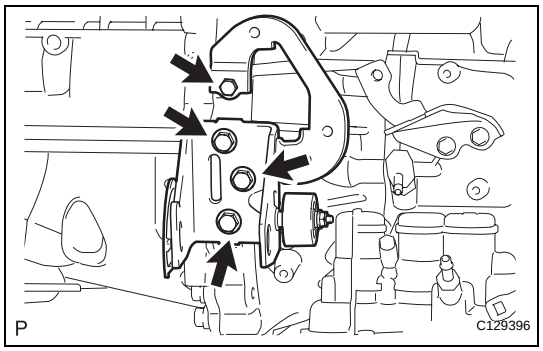

7. REMOVE ENGINE MOUNTING BRACKET FR

(a) Remove the 4 bolts and mounting bracket.

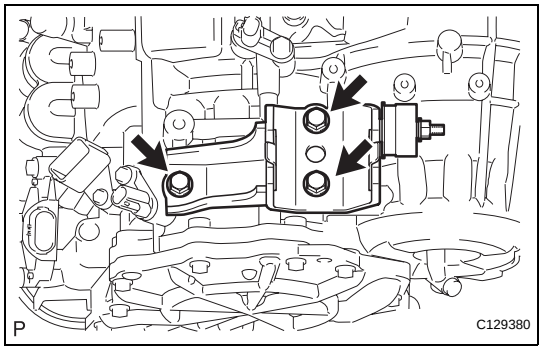

8. REMOVE ENGINE MOUNTING BRACKET LH

(a) Remove the 3 bolts and mounting bracket.

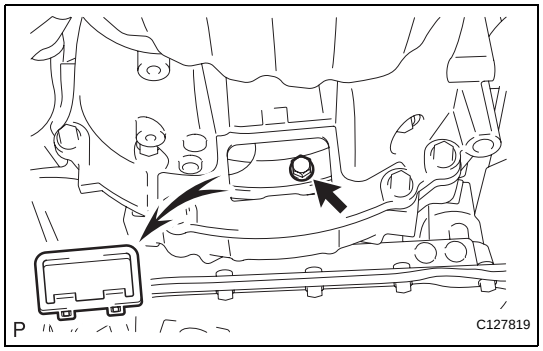

9. REMOVE AUTOMATIC TRANSAXLE ASSEMBLY

(a) Remove the flywheel housing under cover.

(b) Turn the crankshaft to gain access and remove the 6 bolts while holding the crankshaft pulley bolt with a wrench.

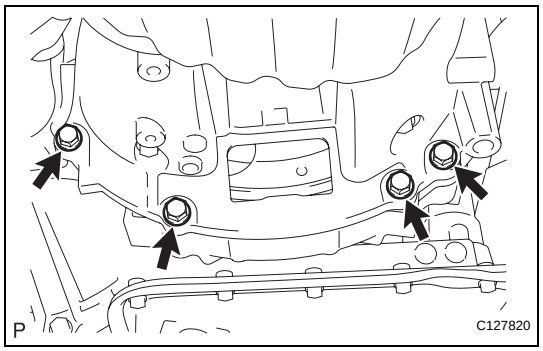

(c) Remove the 4 lower side mounting bolts.

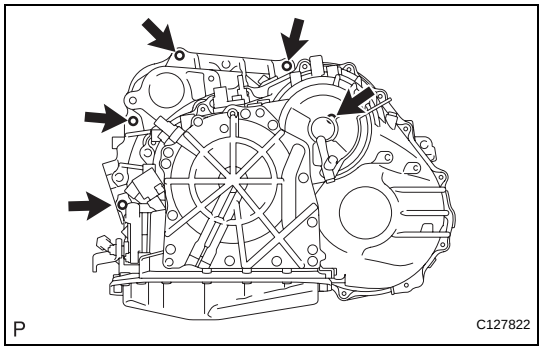

(d) Remove the 5 upper side mounting bolts.

(e) Separate and remove the automatic transaxle.

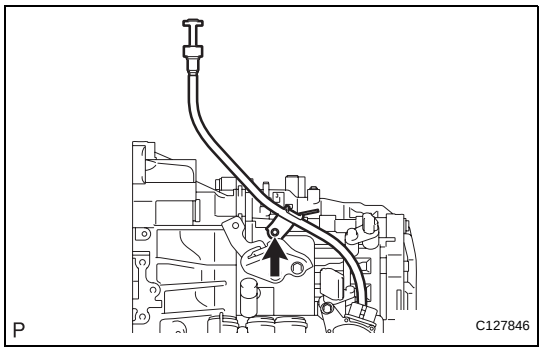

10. REMOVE TRANSMISSION OIL FILLER TUBE SUB-ASSEMBLY

(a) Remove the ATF dipstick.

(b) Remove the bolt and oil filler tube.

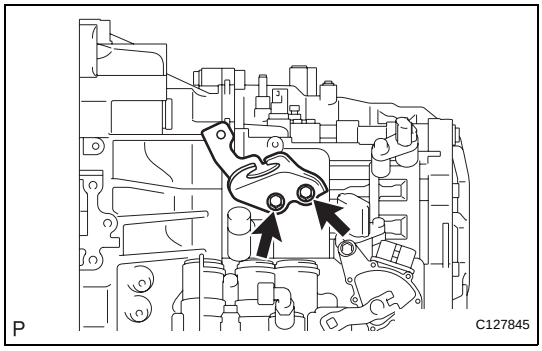

11. REMOVE NO. 1 TRANSMISSION CONTROL CABLE BRACKET

(a) Remove the 2 bolts and cable bracket.

12. REMOVE TORQUE CONVERTER CLUTCH ASSEMBLY

AUTOMATIC TRANSAXLE FLUID

ON-VEHICLE INSPECTION

1. CHECK TRANSAXLE FLUID LEVEL

HINT:

Drive the vehicle so that the engine and transaxle are at normal operating temperature.

Fluid temperature:

70 to 80°C (158 to 176°F)

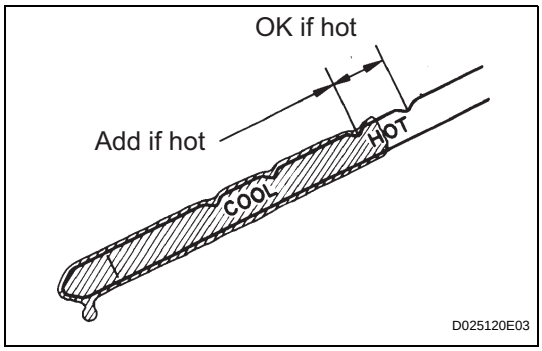

(a) Park the vehicle on a level surface and set the parking brake.

(b) With the engine idling and the brake pedal depressed, move the shift lever to each position from P to L position, and return it to the P position.

(c) Take out the ATF dipstick and wipe it clean.

(d) Fully push the dipstick back into the pipe.

(e) Take it out and check that the fluid level is at the HOT position.

If there are leaks, it is necessary to repair or replace O-rings, FIPGs, oil seals, plugs and/or other parts.

DEFINITION OF TERMS

Term	Definition
Monitor description	Description of what the ECM monitors and how it detects malfunctions (monitoring purpose and its details).
Related DTCs	Diagnostic code.
Typical enabling condition	Preconditions that allow the ECM to detect malfunctions. With all preconditions satisfied, the ECM sets the DTC when the monitored value(s) exceeds the malfunction threshold(s).
Sequence of operation	The priority order that is applied to monitoring, if multiple sensors and components are used to detect the malfunction. While another sensor is being monitored, the next sensor or component will not be monitored.
Required sensor/Components	The sensors and components that are used by the ECM to detect malfunctions.
Frequency of operation	The number of times that the ECM checks for malfunctions per driving cycle. "Once per driving cycle" means that the ECM detects malfunction only 1 time during a single driving cycle. "Continuous" means that the ECM detects a malfunction every time the enabling condition is met.
Duration	The minimum time that the ECM must sense a continuous deviation in the monitored value(s) before setting a DTC. This timing begins after the "typical enabling conditions" are met.
Malfunction thresholds	Beyond this value, the ECM will conclude that there is a malfunction and set a DTC.
MIL operation	MIL illumination timing after a defect is detected. "Immediate" means that the ECM illuminates the MIL the instant the ECM determines that there is a malfunction. "2 driving cycle" means that the ECM illuminates the MIL if the same malfunction is detected again in the 2nd driving cycle.
Component operating range	Normal operation range of sensors and solenoids under normal driving conditions. Use these ranges as a reference. They cannot be used to judge if a sensor or solenoid is defective or not.

PARTS LOCATION

AX

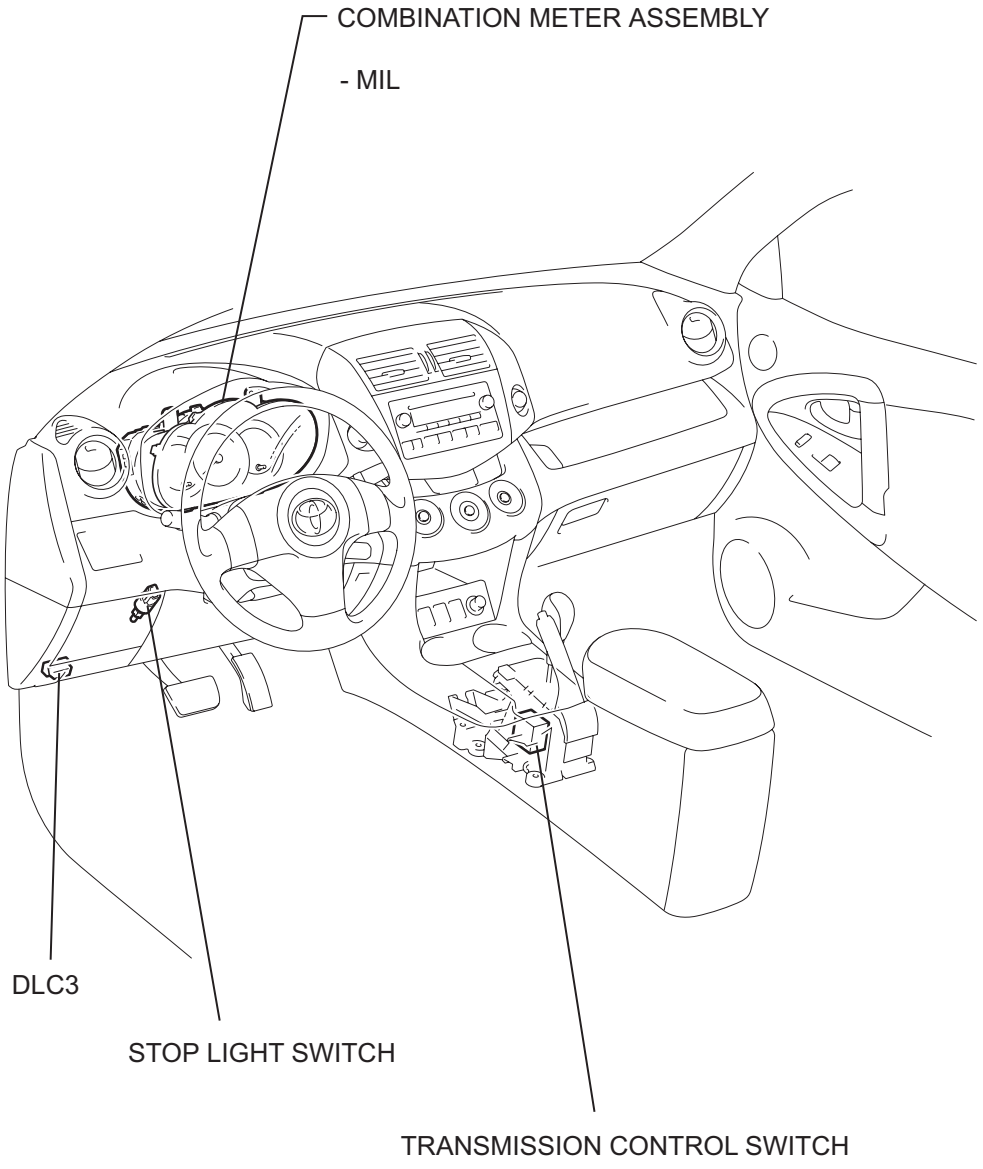

P

C127571E03

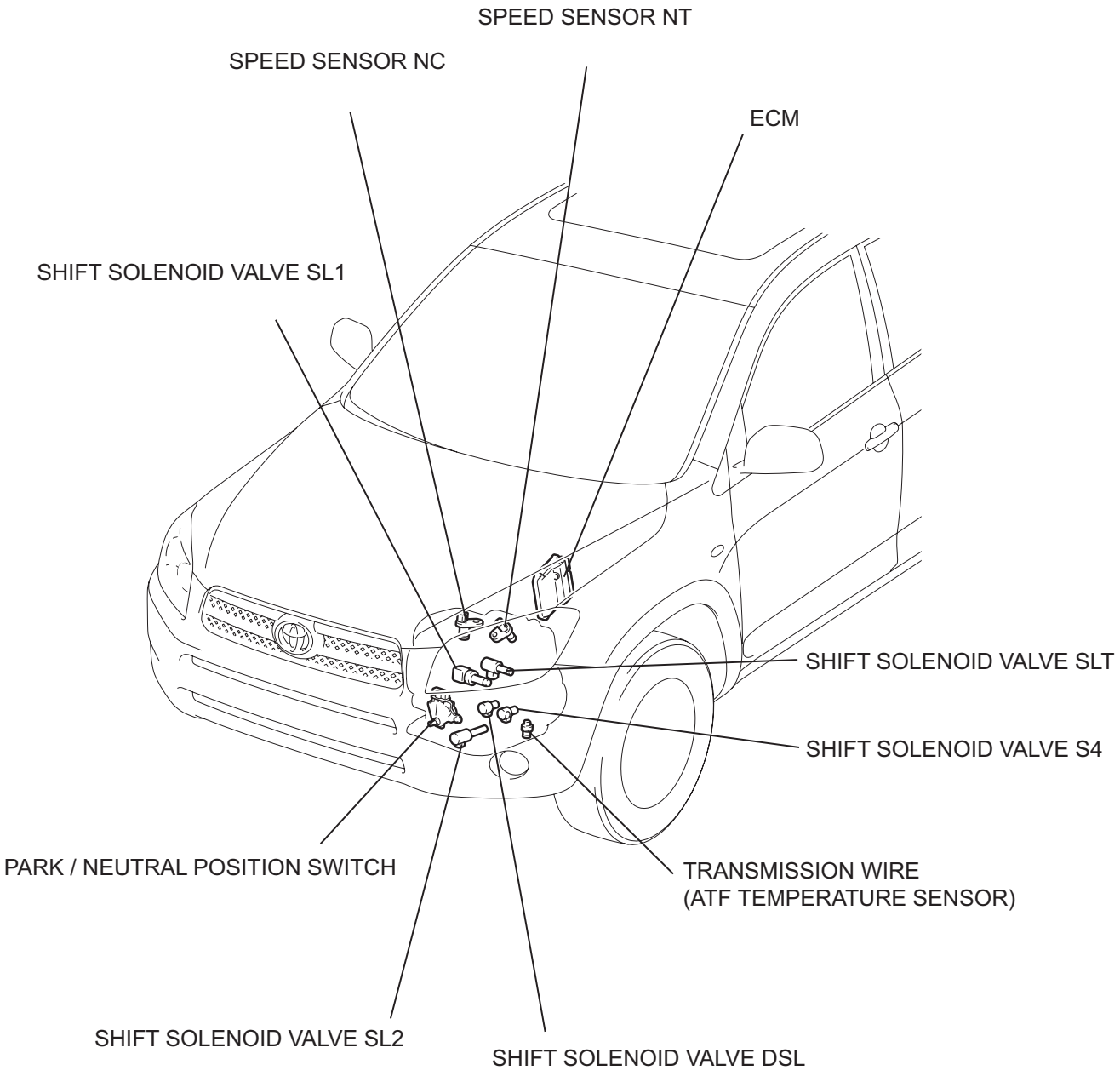

P

C127581E03

SYSTEM DIAGRAM

The configuration of the electronic control system in the U241E automatic transaxle is as shown in the following chart.

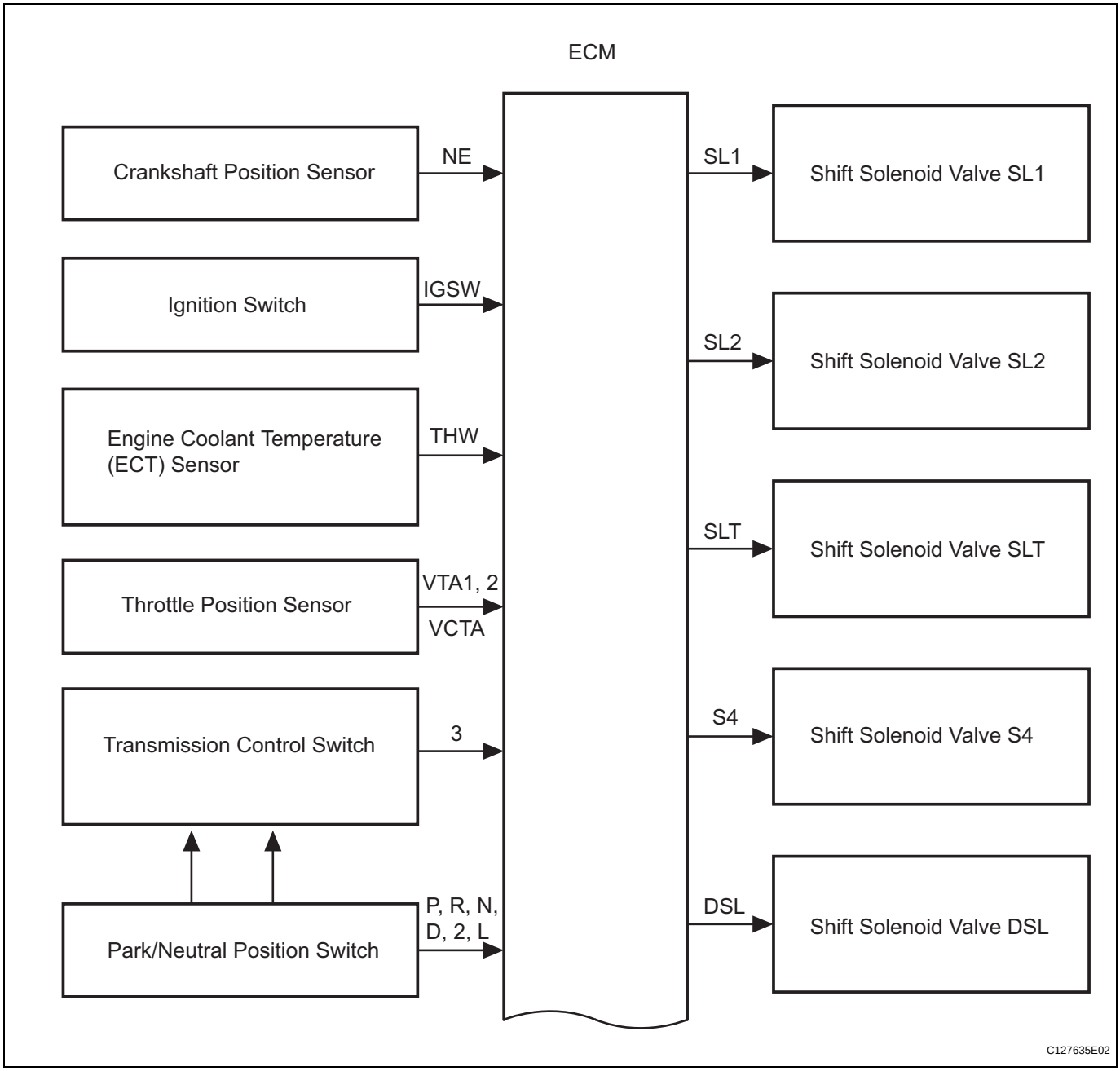

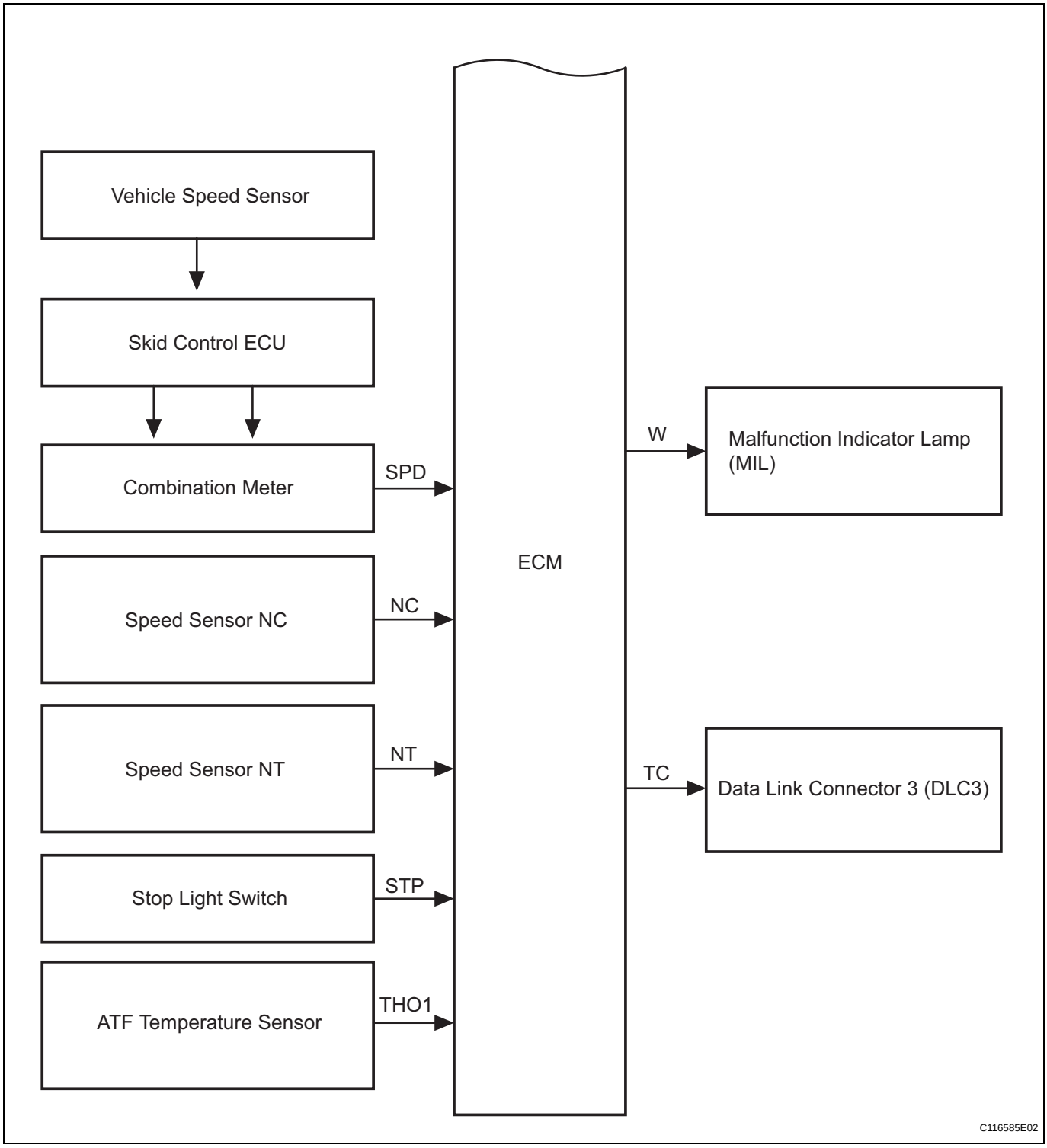
Vehicle Speed Sensor
Skid Control ECU
Combination Meter
Speed Sensor NC
Speed Sensor NT
Stop Light Switch
ATF Temperature Sensor
SPD
NC
NT
STP
THO1
ECM
W
Malfunction Indicator Lamp (MIL)
TC
Data Link Connector 3 (DLC3)
C116585E02

AX

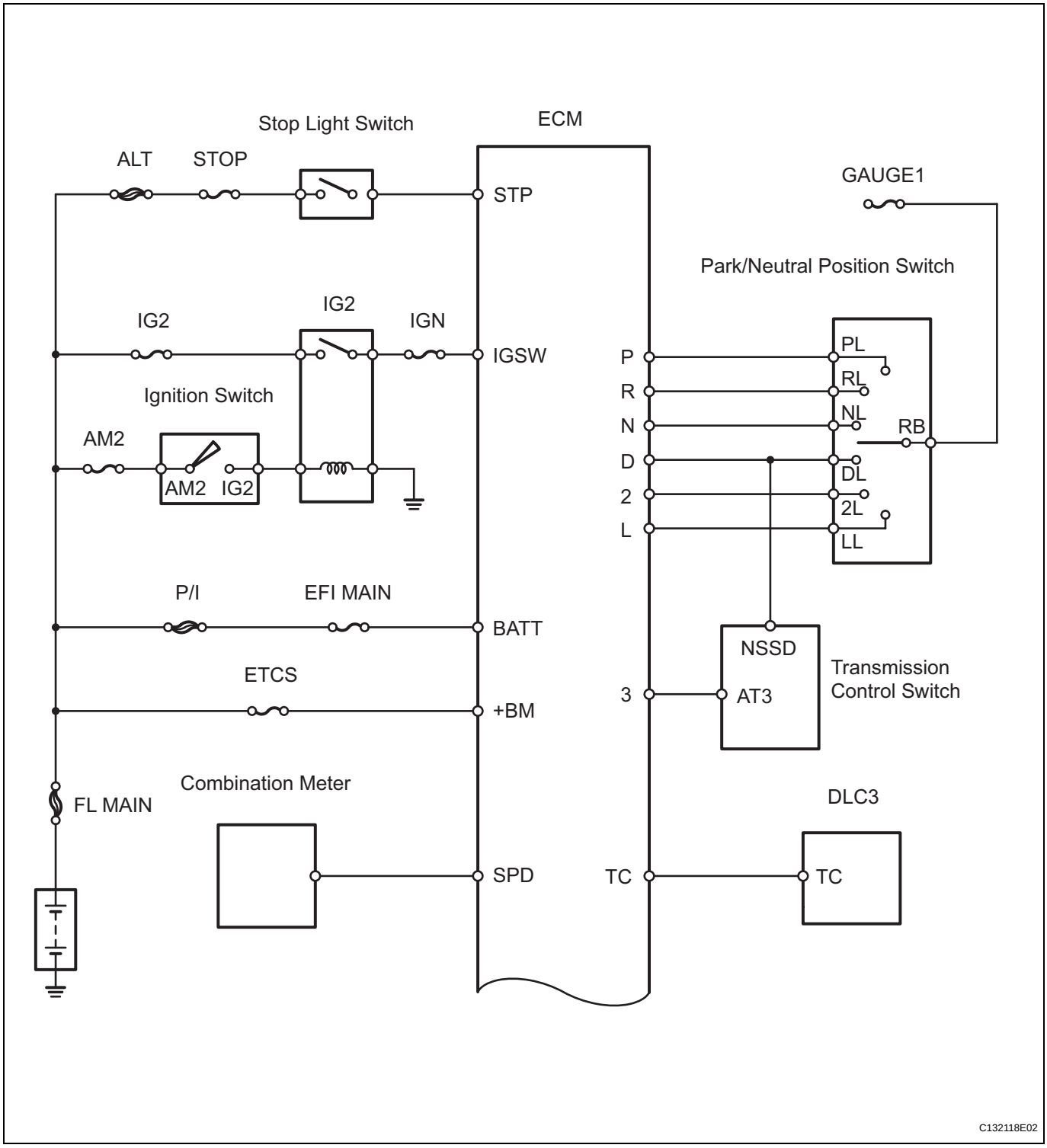
Stop Light Switch
ECM
ALT
STOP
STP
GAUGE1
Park/Neutral Position Switch
IG2
IG2
IGN
IGSW
P
R
N
D
2
L
PL
RL
NL
RB
DL
2L
LL
Ignition Switch
AM2
AM2
IG2
P/I
EFI MAIN
BATT
NSSD
Transmission
Control Switch
ETCS
+BM
3
AT3
Combination Meter
FL MAIN
DLC3
SPD
TC
TC
C132118E02

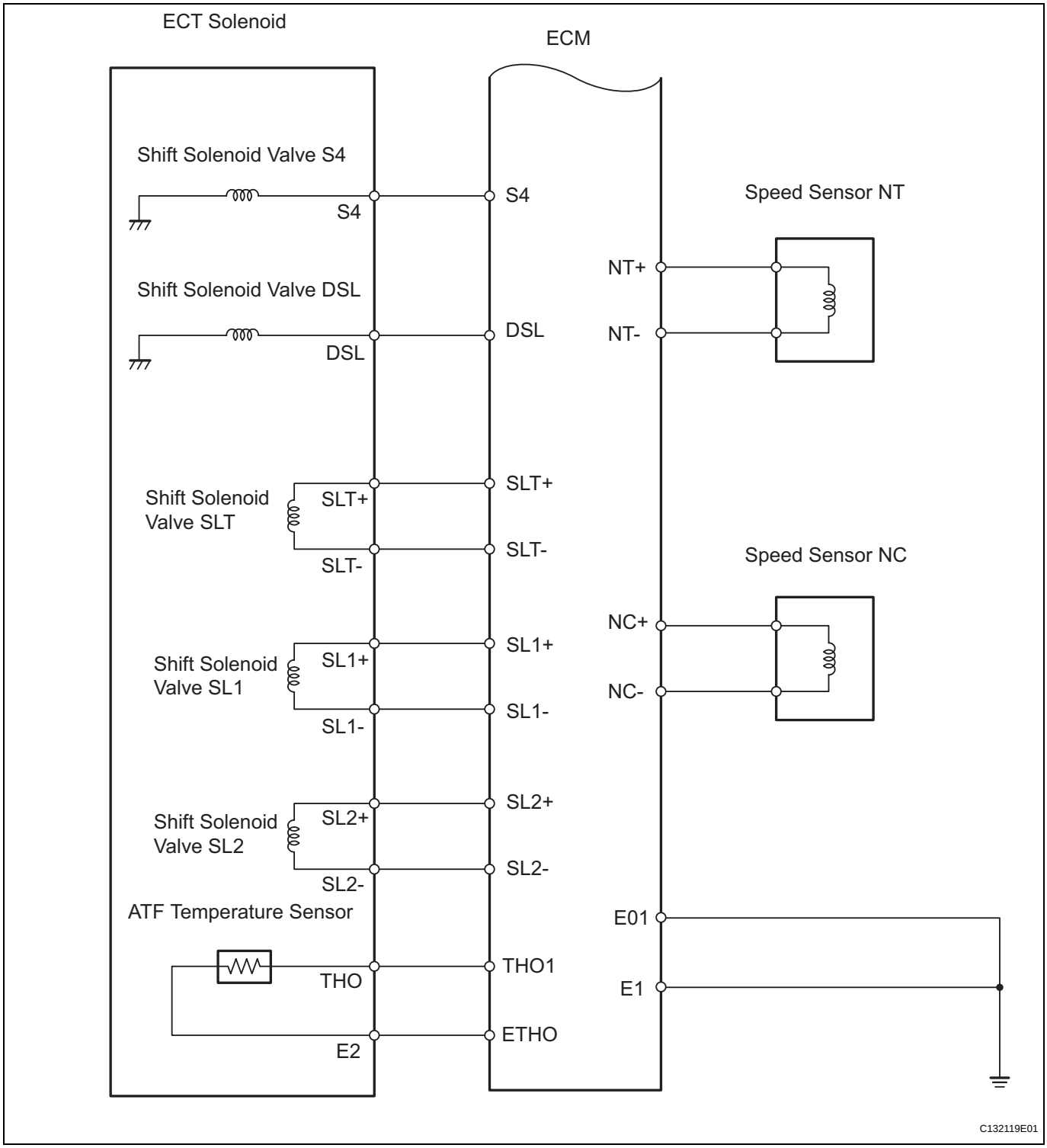
ECT Solenoid
ECM
Shift Solenoid Valve S4
S4
S4
Speed Sensor NT
NT+
NT-
Shift Solenoid Valve DSL
DSL
DSL
Shift Solenoid Valve SLT
SLT+
SLT-
SLT+
SLT-
Speed Sensor NC
NC+
NC-
Shift Solenoid Valve SL1
SL1+
SL1-
SL1+
SL1-
Shift Solenoid Valve SL2
SL2+
SL2-
SL2+
SL2-
ATF Temperature Sensor
THO
E2
THO1
ETHO
E01
E1
C132119E01

AX

SYSTEM DESCRIPTION

1. SYSTEM DESCRIPTION

(a) The Electronic Controlled Automatic Transaxle (ECT) is an automatic transaxle that electronically controls shift timing using the Engine Control Module (ECM). The ECM detects electrical signals that indicate engine and driving conditions, and controls the shift point based on driver habits and road conditions. As a result, fuel efficiency and power transaxle performance are improved.
Shift shock is reduced by controlling the engine and transaxle simultaneously.
In addition, the ECT has the following features:

- Diagnostic function.
- Fail-safe function when a malfunction occurs.

HOW TO PROCEED WITH TROUBLESHOOTING

HINT:

- The ECM of this system is connected to the CAN and multiplex communication system. Therefore, before starting troubleshooting, make sure to check that there is no trouble in the CAN and multiplex communication systems.
- *: Use the intelligent tester.

1	VEHICLE BROUGHT TO WORKSHOP

NEXT

2	CUSTOMER PROBLEM ANALYSIS

NEXT

3	INSPECT BATTERY VOLTAGE

Standard voltage:
11 to 14 V

If the voltage is below 11 V, recharge or replace the battery before proceeding.

NEXT

4	CONNECT INTELLIGENT TESTER TO DLC3*

NEXT

5	CHECK AND CLEAR DTCS AND FREEZE FRAME DATA*

(a) Refer to the DTC CHECK / CLEAR (see page AX-29).

NEXT

6	VISUAL INSPECTION

NEXT

7	SETTING CHECK MODE DIAGNOSIS*

(a) Refer to the CHECK MODE PROCEDURE (see page AX-30).

NEXT

8	PROBLEM SYMPTOM CONFIRMATION

(a) Refer to the ROAD TEST (see page AX-12).

Result

Result	Proceed to
Symptom does not occur	A
Symptom occurs	B

B → GO TO STEP 10

A

9	SYMPTOM SIMULATION

(a) Refer to the ELECTRONIC CIRCUIT INSPECTION PROCEDURE (see page IN-37).

NEXT

10	DTC CHECK*

(a) Refer to the DTC CHECK / CLEAR (see page AX-29).

Result

Result	Proceed to
DTC is not output	A
DTC is output	B

B → GO TO STEP 18

A

11	BASIC INSPECTION

(a) Refer to the AUTOMATIC TRANSMISSION FLUID (see page AX-102).

(b) Refer to the PARK/NEUTRAL POSITION SWITCH (see page AX-108).

(c) Refer to the FLOOR SHIFT ASSEMBLY (see page AX-136).

NG → GO TO STEP 21

OK

12	MECHANICAL SYSTEM TESTS

(a) Refer to the MECHANICAL SYSTEM TESTS (see page AX-15).

NG → GO TO STEP 17

OK

13 HYDRAULIC TEST

(a) Refer to the HYDRAULIC TEST (see page AX-16).

NG → GO TO STEP 17

OK

14 MANUAL SHIFTING TEST

(a) Refer to the MANUAL SHIFTING TEST (see page AX-17).

NG → GO TO STEP 16

OK

15 PROBLEM SYMPTOMS TABLE CHAPTER 1

(a) Refer to the PROBLEM SYMPTOMS TABLE (see page AX-21).

NG → GO TO STEP 19

OK

16 PROBLEM SYMPTOMS TABLE CHAPTER 2

(a) Refer to the PROBLEM SYMPTOMS TABLE (see page AX-21).

NEXT

17 PART INSPECTION

NG → GO TO STEP 21

OK

18 DTC CHART

(a) Refer to the DIAGNOSTIC TROUBLE CODE CHART (see page AX-35).

NEXT

19	CIRCUIT INSPECTION

NEXT

AX

20	IDENTIFICATION OF PROBLEM

NEXT

21	REPAIR OR REPLACE

NEXT

22	CONFIRMATION TEST

NEXT

END

ROAD TEST

1. PROBLEM SYMPTOM CONFIRMATION

(a) Based on the result of the customer problem analysis, try to reproduce the symptoms. If the problem is that the transaxle does not shift up, shift down, or the shift point is too high or too low, conduct the following road test referring to the automatic shift schedule and simulate the problem symptoms.

2. ROAD TEST

NOTICE:

Perform the test at the normal operating ATF temperature of 50 to 80°C (122 to 176°F).

(a) D position test

Move the shift lever to D and fully depress the accelerator pedal. Check the following:

(1) Check up-shift operation.

Check that the 1 → 2, 2 → 3 and 3 → O/D up-shifts take place at the shift point shown in the automatic shift schedule (see page SS-60).

HINT:

O/D Gear Up-shift Prohibition Control

- Engine coolant temperature is 55°C (131°F) or less and vehicle speed is at 70 km/h (43 mph) or less.
- ATF temperature is 5°C (41°F) or less.

O/D Gear Lock-up Prohibition Control

- Brake pedal is depressed.
- Accelerator pedal is released.
- Engine coolant temperature is 60°C (140°F) or less.

(2) Check for shift shock and slip.

Check for shock and slip at the 1 → 2, 2 → 3 and 3 → O/D up-shifts.

(3) Check for abnormal noise and vibration.

Check for abnormal noise and vibration when up-shifting from 1 → 2, 2 → 3 and 3 → O/D while driving with the shift lever on D, and check while driving in the lock-up condition.

HINT:

The check for the cause of abnormal noise and vibration must be done thoroughly as it could also be due to loss of balance in the differential, torque converter clutch, etc.

(4) Check kick-down operation.

While driving the vehicle in the 2nd, 3rd and O/D gears with the shift lever on D, check that the possible kick-down vehicle speed limits for 2 → 1, 3 → 2 and O/D → 3 kick-downs conform to those indicated in the automatic shift schedule (see page SS-60).

(5) Check for abnormal shock and slip at kick-down.

(6) Check the lock-up mechanism.
- Drive the vehicle in the O/D gear with the shift lever on D. Maintain a steady speed (lock-up ON).
- Lightly depress the accelerator pedal and check that the engine speed does not change abruptly.

HINT:
- There is no lock-up function in the 1st and 2nd gear.
- If there is a sudden increase in engine speed, there is no lock-up.

(b) 3 position test

Move the shift lever to 3 and fully depress the accelerator pedal. Check the following:

(1) Check up-shift operation.
Check that the 1 → 2 and 2 → 3 up-shifts take place and that the shift point conforms to the automatic shift schedule (see page SS-60).

(2) Check engine braking.
While driving the vehicle in the 3rd gear with the shift lever on 3, release the accelerator pedal and check the engine braking effect.

(3) Check for abnormal noises during acceleration and deceleration, and for shock at up-shift and down-shift.

(c) 2 position test

Move the shift lever to 2 and fully depress the accelerator pedal. Check the following:

(1) Check up-shift operation.
Check that the 1 → 2 up-shift takes place and that the shift point conforms to the automatic shift schedule (see page SS-60).
HINT:
There is no O/D up-shift and lock-up when the shift lever is on 2.

(2) Check engine braking.
While driving the vehicle in the 2nd gear with the shift lever on 2, release the accelerator pedal and check the engine braking effect.

(3) Check for abnormal noises during acceleration and deceleration, and for shock at up-shift and down-shift.

(d) L position test

Move the shift lever to L and fully depress the accelerator pedal. Check the following:

(1) Check that there is no up-shift.
While driving the vehicle with the shift lever on L, check that there is no up-shift to 2nd gear.
HINT:
There is no lock-up in L.

(2) Check engine braking.
While driving the vehicle with the shift lever on L, release the accelerator pedal and check the engine braking effect.

(3) Check for abnormal noises during acceleration and deceleration.

(e) R position test
Move the shift lever to R and lightly depress the accelerator pedal. Check that the vehicle moves backward without any abnormal noise or vibration.
CAUTION:
Before conducting this test, ensure that no people or obstacles are in the test area.

(f) P position test
Stop the vehicle on an incline (more than 5°). Then move the shift lever to P and release the parking brake. Check that the parking lock pawl holds the vehicle in place.

MECHANICAL SYSTEM TESTS

1. STALL SPEED TEST

HINT:

This test is to check the overall performance of the engine and transaxle.

NOTICE:

- **Do not perform the stall speed test longer than 5 seconds.**
- **To ensure safety, perform this test in an open and level area that provides good traction.**
- **The stall speed test should always be performed with at least 2 people. One person should observe the condition of the wheels and wheel chocks while the other is performing the test.**

(a) Connect the intelligent tester to the CAN VIM. Then connect the CAN VIM to the DLC3.

(b) Run the vehicle until the transmission fluid temperature has reached 50 to 80°C (122 to 176°F).

(c) Allow the engine to idle with the air conditioning OFF.

(d) Chock all 4 wheels.

(e) Set the parking brake and keep the brake pedal depressed firmly with your left foot.

(f) Move the shift lever to the D position.

(g) Depress the accelerator pedal as much as possible with your right foot.

(h) Read the engine rpm (stall speed) and release the accelerator pedal immediately.

Standard value:

2,150 to 2,450 rpm

Evaluation:

Test Result	Possible Cause
Stall speed is lower than standard value	• Stator one-way clutch is not operating properly • Torque converter is faulty (stall speed is less than standard value by 600 rpm or more) • Engine power may be insufficient
Stall speed is higher than standard value	• Line pressure is low • C1 clutch slipping • F3 one-way clutch is not operating properly • F4 one-way clutch is not operating properly

NOTICE:

Perform the test at the normal operating ATF temperature of 50 to 80°C (122 to 176°F).

2. SHIFT TIME LAG TEST

HINT:

This test is to check the condition of the direct clutch, forward clutch, 1st brake and reverse brake.

(a) Connect the intelligent tester to the CAN VIM. Then connect the CAN VIM to the DLC3.

(b) Run the vehicle until the transmission fluid temperature has reached 50 to 80°C (122 to 176°F).

(c) Allow the engine to idle with the air conditioning OFF.

(d) Set the parking brake and keep the brake pedal depressed firmly.
(e) Check the D range time lag.
  (1) Move the shift lever to N and wait for 1 minute.
  (2) Move the shift lever to D and measure the time until the shock is felt.
  (3) Repeat the 2 procedures above 3 times, and calculate the average time of the 3 tests.
(f) Check the R range time lag.
  (1) Move the shift lever to N and wait for 1 minute.
  (2) Move the shift lever to R and measure the time until the shock is felt.
  (3) Repeat the 2 procedures above 3 times, and calculate the average time of the 3 tests.
  Standard value:
  D range time lag is less than 1.2 seconds
  R range time lag is less than 1.5 seconds

Evaluation:

Test Result	Possible Cause
D range time lag exceeds standard value	• Line pressure is low • C1 clutch is worn • F3 one-way clutch is not operating properly • F4 one-way clutch is not operating properly
R range time lag exceeds standard value	• Line pressure is low • C3 clutch is worn • B4 brake is worn • F1 one-way clutch is not operating properly

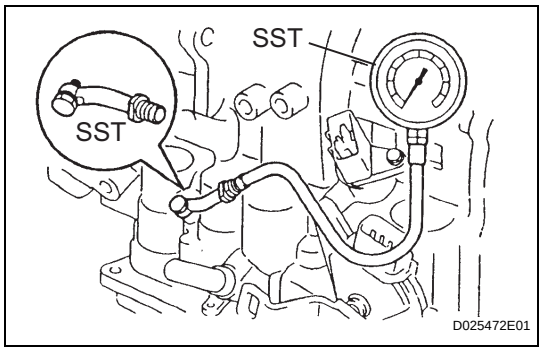

HYDRAULIC TEST

1. MEASURE LINE PRESSURE

NOTICE:

- **Perform the test at the normal operating ATF temperature: 50 to 80°C (122 to 176°F).**
- **The line pressure test should always be performed with at least 2 people. One person should observe the condition of the wheels or wheel chocks while the other is performing the test.**
- **Be careful to prevent SST's hose from interfering with the exhaust pipe.**
- **This test must be performed after checking and adjusting the engine.**
- **Perform the test with the A/C OFF.**
- **When conducting the stall test, do not continue for more than 10 seconds.**

(a) Warm up the ATF.
(b) Remove the test plug on the transaxle case center right side and connect SST.
  SST 09992-00095 (09992-00231, 09992-00271)
(c) Fully apply the parking brake and chock the 4 wheels.
(d) Start the engine and check the idling speed.
(e) Keep your left foot firmly on the brake pedal and move the shift lever to D.
(f) Measure the line pressure when the engine is idling.

(g) Depress the accelerator pedal as much as possible with your right foot. Quickly read the highest line pressure reading when the engine speed reaches stall speed.
(h) Perform the measure line pressure test again with the shift lever on R.

Specified line pressure:

AX

Condition	Shift Lever on D	Shift Lever on R
Idling	372 to 412 kPa (3.8 to 4.2 kgf/cm^2, 54 to 60 psi)	672 to 742 kPa (6.9 to 7.6 kgf/cm^2, 97 to 108 psi)
Stall	931 to 1,031 kPa (9.5 to 10.5 kgf/cm^2, 135 to 150 psi)	1,768 to 1,968 kPa (18.0 to 20.0 kgf/cm^2, 256 to 285 psi)

Evaluation:

Problem	Possible Cause
Measured values at all positions are higher than specified	• Shift solenoid valve SLT defective • Regulator valve defective
Measured values at all positions are lower than specified	• Shift solenoid valve SLT defective • Regulator valve defective • Oil pump defective • U/D (underdrive) direct clutch defective
Pressure is low when shift lever is on D only	• D position circuit fluid leak • Forward clutch defective
Pressure is low when shift lever is on R only	• R position circuit fluid leak • Direct clutch defective • 1st and reverse brake defective

MANUAL SHIFTING TEST

1. MANUAL SHIFTING TEST

HINT:

- Through this test, it can be determined whether the trouble occurs in the electrical circuit or if it is a mechanical problem in the transaxle.
- If any abnormalities are found in the following test, the problem is in the transaxle itself.

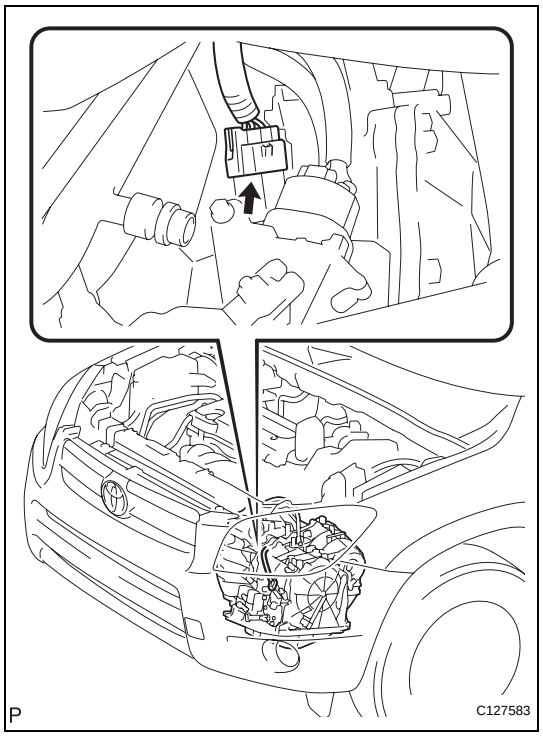

(a) Disconnect the connector of the transmission wire.
HINT:
It is possible to deactivate the electrical shift control by disconnecting the transmission wire. The gear positions can then be changed mechanically with the shift lever.

(b) Drive with the transmission wire disconnected. Move the shift lever to each position to check whether the gear position changes as shown in the table below.

Shift Lever Position	Gear Position
D	3rd
2	3rd
L	3rd
R	R
P	P

(c) Connect the connector of the transmission wire.

(d) Clear the DTC (see page AX-29).

INITIALIZATION

1. RESET MEMORY

NOTICE:

- **Perform the RESET MEMORY procedures (A/T initialization) when replacing the automatic transaxle assembly, engine assembly or ECM.**
- **RESET MEMORY can be performed only with the intelligent tester.**

HINT:

The ECM memorizes the vehicle conditions when the ECT controls the automatic transaxle assembly and engine assembly. Therefore, when the automatic transaxle assembly, engine assembly, or ECM has been replaced, it is necessary to reset the memory so that the ECM can memorize the new information.

The reset procedures are as follows.

(a) Turn the ignition switch OFF.

(b) Connect the intelligent tester to the CAN VIM. Then connect the CAN VIM to the DLC3.

(c) Turn the ignition switch ON and turn the tester ON.

(d) Enter the following menus: DIAGNOSIS / ENHANCED OBD II.

(e) Perform the reset memory procedures from the Engine menu.

CAUTION:

After performing the RESET MEMORY procedures, be sure to perform the ROAD TEST (see page AX-12) as described earlier.

HINT:

The ECM learns through the ROAD TEST.

Tester Menu Flow:

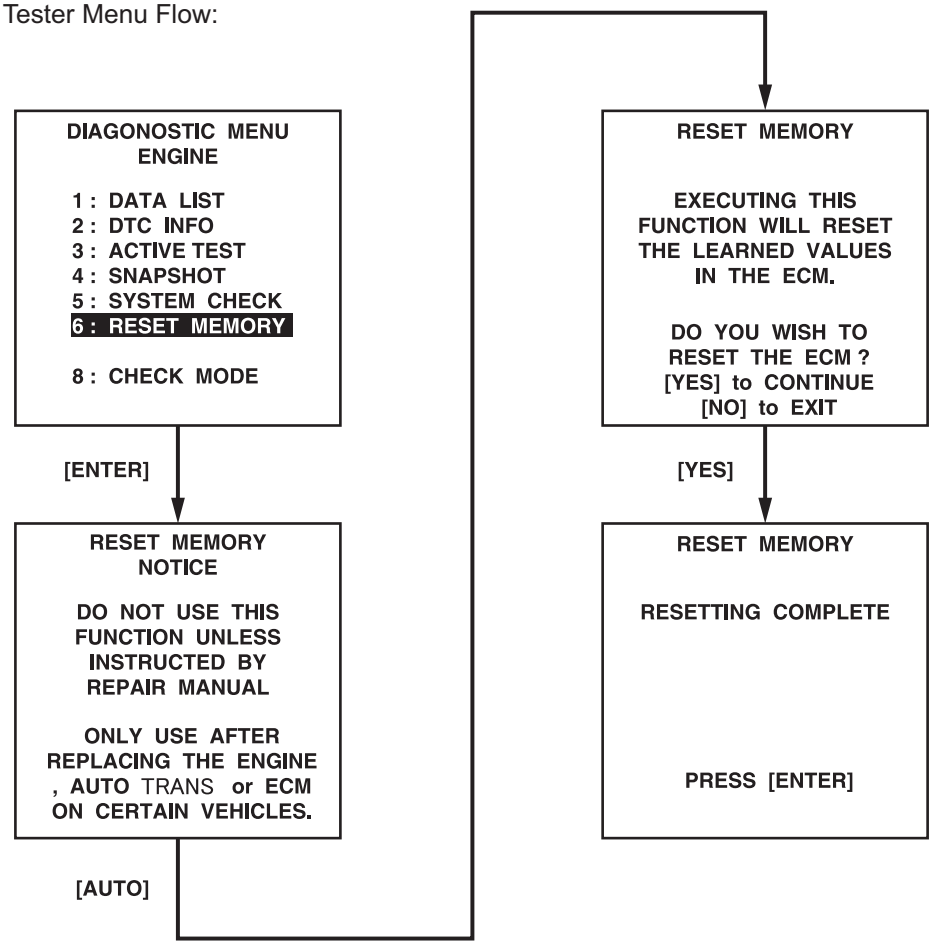

P

C115865E02

MONITOR DRIVE PATTERN

1. TEST MONITOR DRIVE PATTERN FOR ECT

CAUTION:

Perform this drive pattern on a level surface and strictly observe the posted speed limits and traffic laws while driving.

HINT:

Performing this drive pattern is one method to simulate the ECT's malfunction detection conditions.

The DTCs may not be detected through ordinary, everyday driving. Also, DTCs may not be detected through this drive pattern.

(a) Preparation for driving

(1) Warm up the engine sufficiently (engine coolant temperature is 60°C (140°F) or higher).

(2) Drive the vehicle when the atmospheric temperature is -10°C (14°F) or higher. Malfunction is not detected when the atmospheric temperature is less than -10°C (14°F).

(b) Drive pattern

(1) Drive the vehicle through all the gears. Stop → 1st → 2nd → 3rd → O/D → O/D (lock-up ON).

(2) Repeat the above drive pattern 3 times or more.

NOTICE:

- **When using the intelligent tester, the monitor status can be found in "ENHANCED OBD II / DATA LIST" or under "CARB OBD II".**
- **In the event that the drive pattern must be interrupted (due to traffic conditions or other factors), the drive pattern can be resumed and, in most cases, the monitor can be completed.**

CAUTION:

Perform this drive pattern on a level road as much as possible and strictly observe the posted speed limits and traffic laws while driving.

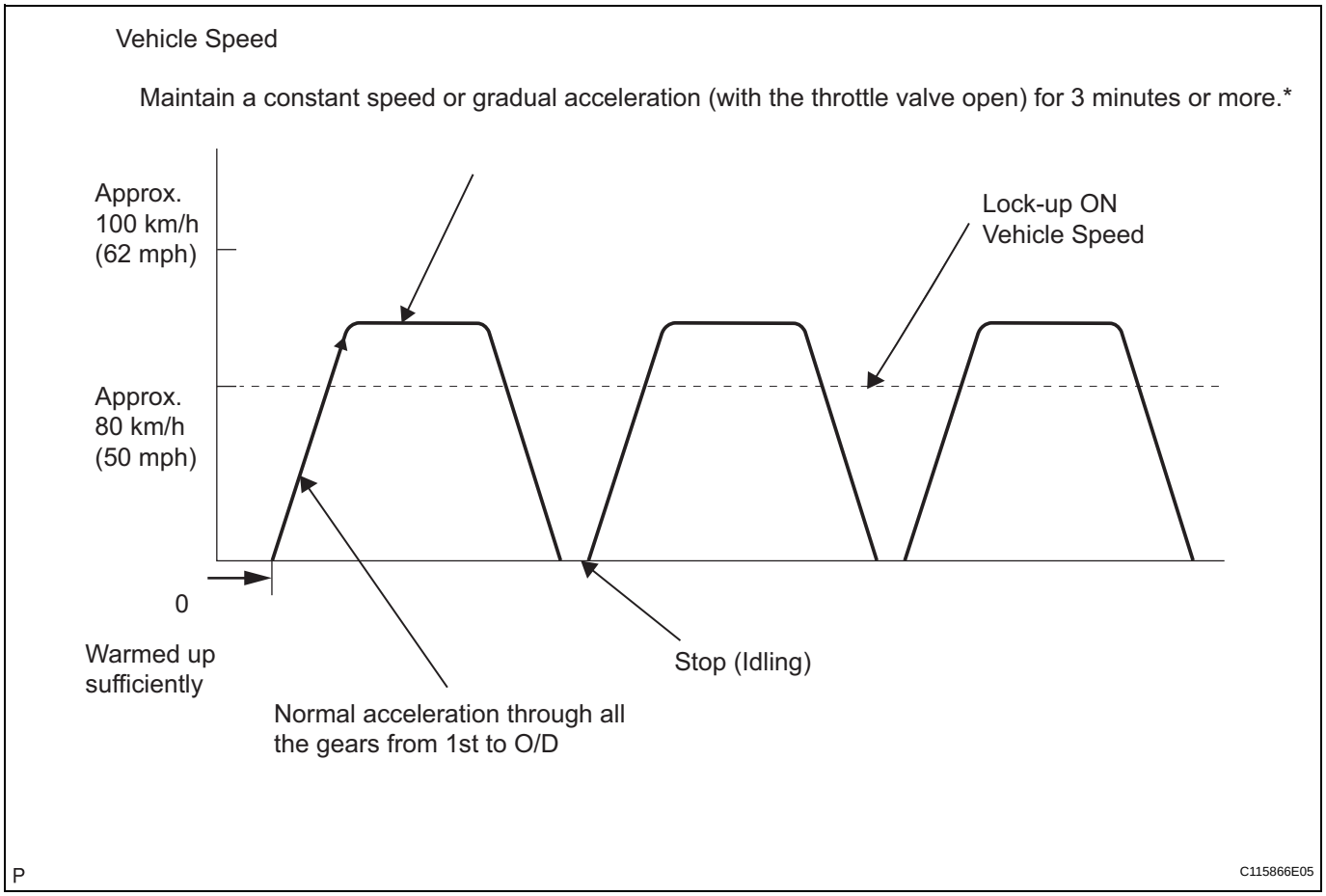

HINT:
*: Drive at such a speed in the uppermost gear to engage lock-up. The vehicle can be driven at a speed lower than the speed shown in the above diagram under the lock-up condition.

NOTICE:

It is necessary to drive the vehicle for approximately 30 minutes to detect DTC P0711 (Transmission fluid temperature sensor "A" performance).

AX

PROBLEM SYMPTOMS TABLE

HINT:

- Use the table below to help determine the cause of the problem symptom. The potential causes of the symptoms are listed in order of probability in the "Suspected area" column of the table. Check each symptom by checking the suspected areas in the order they are listed. Replace parts as necessary.
- The Matrix Chart is divided into 2 chapters. When troubleshooting, check Chapter 1 first. If instructions are given in Chapter 1 to proceed to 2, proceed as instructed.
- If the instruction "Proceed to next circuit inspection shown in problem symptoms table" is given in the flowchart for each circuit, proceed to the next suspected area in the table.
- If the problem still occurs even though there are no malfunctions in any of the circuits, check the ECM and replace it if necessary.

CHAPTER 1: ELECTRICAL CIRCUIT MATRIX CHART

Symptom	Suspected area	See page
No up-shift (1st -> 2nd)	ECM	IN-37
No up-shift (2nd -> 3rd)	ECM	IN-37
No up-shift (3rd -> O/D)	1. Park/Neutral position switch circuit*	AX-39
	2. ECM	IN-37
No down-shift (O/D -> 3rd)	ECM	IN-37
No down-shift (3rd -> 2nd)	ECM	IN-37
No down-shift (2nd -> 1st)	ECM	IN-37
No lock-up or no lock-up off	ECM	IN-37
Shift point too high or too low	ECM	IN-37
Up-shift to O/D from 3rd while shift lever is on 3	1. Park/Neutral position switch circuit*	AX-39
	2. ECM	IN-37
Up-shift to O/D from 3rd while engine is cold	1. Engine coolant temp. sensor circuit*	ES-51
	2. ECM	IN-37
Harsh engagement (N -> D)	ECM	IN-37
Harsh engagement (lock-up)	ECM	IN-37
Harsh engagement (any driving position)	ECM	IN-37
Poor acceleration	ECM	IN-37
Engine stalls when starting off or stopping	ECM	IN-37
Malfunction in shifting	1. Park/Neutral position switch circuit*	AX-39
	2. ECM	IN-37

HINT:

*: When the circuit is defective, a DTC may be output.

CHAPTER 2: ON-VEHICLE REPAIR AND OFF-VEHICLE REPAIR

Symptom	Suspected area	See page
Vehicle does not move in all positions other than P and N	1. Manual valve	AX-154
	2. Primary regulator valve	AX-154
	3. Front and rear planetary gear	AX-154
	4. U/D planetary gear	AX-154
	5. F2 U/D one-way clutch	AX-154
	6. C1 forward clutch	AX-154
	7. B3 U/D brake	AX-154

Symptom	Suspected area	See page
Vehicle does not move with shift lever on R	1. Front and rear planetary gear	AX-154
	2. U/D planetary gear	AX-154
	3. C2 direct clutch	AX-154
	4. C3 U/D brake	AX-154
	5. B2 1st and reverse brake	AX-154
No up-shift (1st -> 2nd)	1. Valve body assembly	AX-118
	2. F1 No. 1 one-way clutch	AX-154
	3. B1 2nd brake	AX-154
No up-shift (2nd -> 3rd)	1. Valve body assembly	AX-118
	2. C2 direct clutch	AX-154
No up-shift (3rd -> O/D)	1. 3-4 shift valve	AX-154
	2. C3 U/D clutch	AX-154
No down-shift (O/D -> 3rd)	3-4 shift valve	AX-154
No down-shift (3rd -> 2nd)	Valve body assembly	AX-118
No down-shift (2nd -> 1st)	Valve body assembly	AX-118
No lock-up or no lock-up off	1. Lock-up relay valve	AX-154
	2. Torque converter clutch	AX-152
Harsh engagement (N -> D)	1. C1 accumulator	AX-154
	2. Valve body assembly	AX-118
	3. C1 forward clutch	AX-154
	4. F2 U/D one-way clutch	AX-154
	5. F1 No. 1 one-way clutch	AX-154
Harsh engagement (N -> R)	1. Valve body assembly	AX-118
	2. C2 direct clutch	AX-154
	3. B2 1st and reverse brake	AX-154
Harsh engagement (Lock-up)	1. Lock-up relay valve	AX-154
	2. Torque converter clutch	AX-152
Harsh engagement (2nd -> 3rd)	Valve body assembly	AX-118
Harsh engagement (3rd -> O/D)	Valve body assembly	AX-118
Harsh engagement (O/D -> 3rd)	Valve body assembly	AX-118
Slip or shudder (forward position, after warm-up)	1. Oil strainer	AX-118
	2. Torque converter clutch	AX-152
	3. C1 forward clutch	AX-154
	4. C2 direct clutch	AX-154
	5. C3 U/D brake	AX-154
	6. F1 No. 1 one-way clutch	AX-154
	7. F2 U/D one-way clutch	AX-154
Slip or shudder (shift lever on R)	1. Oil strainer	AX-118
	2. C2 direct clutch	AX-154
	3. B2 1st and reverse brake	AX-154
Slip or shudder (1st)	F1 No. 1 one-way clutch	AX-154
Slip or shudder (2nd)	1. F2 U/D one-way clutch	AX-154
	2. B1 2nd brake	AX-154
Slip or shudder (3rd)	C2 direct clutch	AX-154
Slip or shudder (O/D)	C3 U/D clutch	AX-154
No engine braking (1st to 3rd/shift lever on D)	B3 U/D brake	AX-154
No engine braking (1st/shift lever on L)	B2 1st and reverse brake	AX-154
No engine braking (2nd/shift lever on 2)	B1 2nd brake	AX-154

Symptom	Suspected area	See page
Poor acceleration (all positions)	1. Torque converter clutch	AX-152
	2. U/D planetary gear	AX-154
Poor acceleration (O/D)	1. C3 U/D clutch	AX-154
	2. U/D planetary gear	AX-154
Large shift shock or engine stalls when starting off or stopping	Torque converter clutch	AX-152
No kick-down	Valve body assembly	AX-118

TERMINALS OF ECM

1. CHECK ECM

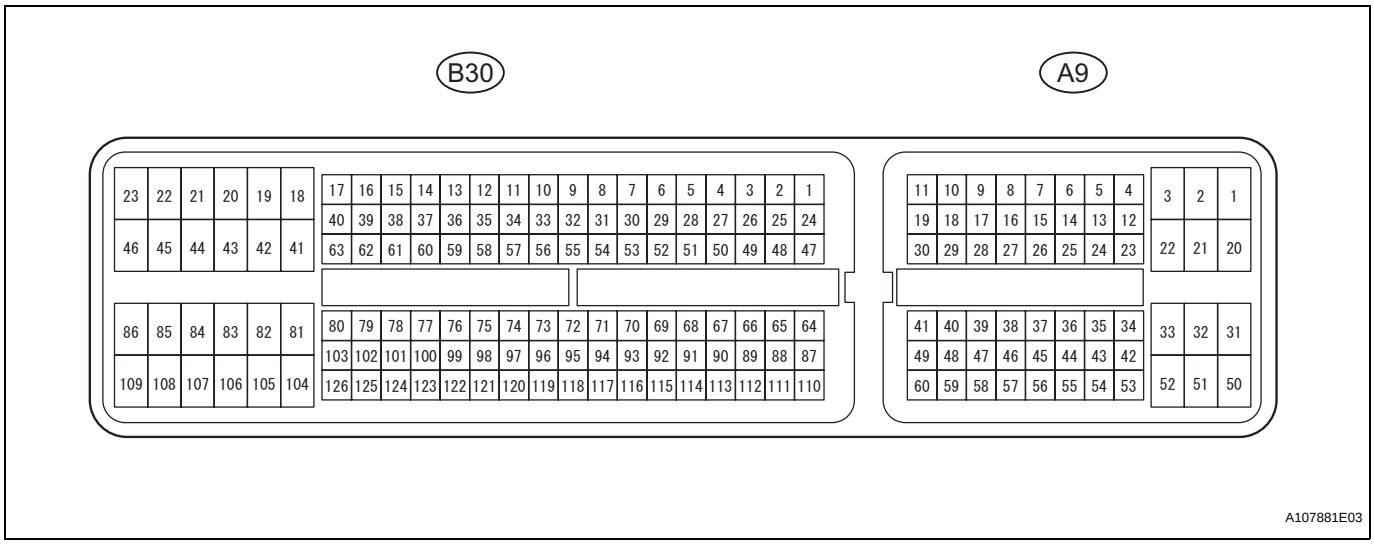

(a) Measure the voltage of the ECM connector.
HINT:
Each ECM terminal's standard voltage is shown in the table below.
In the table, first follow the information under "Condition". Look under "Symbols (Terminal No.)" for the terminals to be inspected. The standard voltage between the terminals is shown under "Specified Condition".
Use the illustration above as a reference for the ECM terminals.

Symbols (Terminal No.)	Wiring Color	Terminal Description	Condition	Specified Condition
STAR (B30-52) - E1 (B30-104)	W - BR	Park/Neutral position switch signal	Ignition switch ON and shift lever on P or N	Below 2 V
STAR (B30-52) - E1 (B30-104)	W - BR	Park/Neutral position switch signal	Ignition switch ON and shift lever not on P or N	10 to 14 V
P (B30-73) - E1 (B30-104)	L - BR	P shift position switch signal	Ignition switch ON and transfer shift lever on P	10 to 14 V
P (B30-73) - E1 (B30-104)	L - BR	P shift position switch signal	Ignition switch ON and transfer shift lever not on P	Below 1 V
R (B30-53) - E1 (B30-104)	R - BR	R shift position switch signal	Ignition switch ON and transfer shift lever on R	10 to 14 V
R (B30-53) - E1 (B30-104)	R - BR	R shift position switch signal	Ignition switch ON and transfer shift lever not on R	Below 1 V
N (B30-54) - E1 (B30-104)	Y - BR	N shift position switch signal	Ignition switch ON and transfer shift lever on N	10 to 14 V
N (B30-54) - E1 (B30-104)	Y - BR	N shift position switch signal	Ignition switch ON and transfer shift lever not on N	Below 1 V
D (B30-56) - E1 (B30-104)	B - BR	D shift position switch signal	Ignition switch ON and transfer shift lever on D or 3	10 to 14 V
D (B30-56) - E1 (B30-104)	B - BR	D shift position switch signal	Ignition switch ON and transfer shift lever not on D or 3	Below 1 V

Symbols (Terminal No.)	Wiring Color	Terminal Description	Condition	Specified Condition
3 (A9-26) - E1 (B30-104)	P - BR	3 shift position switch signal	Ignition switch ON and transfer shift lever on 3	10 to 14 V
3 (A9-26) - E1 (B30-104)	P - BR	3 shift position switch signal	Ignition switch ON and transfer shift lever not on 3	Below 1 V
2 (B30-55) - E1 (B30-104)	P - BR	2 shift position switch signal	Ignition switch ON and transfer shift lever on 2 and L	10 to 14 V
2 (B30-55) - E1 (B30-104)	P - BR	2 shift position switch signal	Ignition switch ON and transfer shift lever not on 2 and L	Below 1 V
L (B30-74) - E1 (B30-104)	LG - BR	L shift position switch signal	Ignition switch ON and transfer shift lever on L	10 to 14 V
L (B30-74) - E1 (B30-104)	LG - BR	L shift position switch signal	Ignition switch ON and transfer shift lever not on L	Below 1 V
STP (A9-36) - E1 (B30-104)	L - BR	Stop light switch signal	Brake pedal is depressed	Between 10 V and 14 V
STP (A9-36) - E1 (B30-104)	L - BR	Stop light switch signal	Brake pedal is released	Below 1 V
SL1+ (B30-57) - SL1- (B30-77)	V - P	SL1 solenoid signal	Engine idle speed	Pulse generation (see waveform 1)
SL1+ (B30-57) - SL1- (B30-77)	V - P	SL1 solenoid signal	Ignition switch ON	Pulse generation (see waveform 1)
SL1+ (B30-57) - SL1- (B30-77)	V - P	SL1 solenoid signal	1st gear	Pulse generation (see waveform 1)
SL1+ (B30-57) - SL1- (B30-77)	V - P	SL1 solenoid signal	Not on 1st gear	Below 1 V
SL2+ (B30-58) - SL2- (B30-59)	Y - L	SL2 solenoid signal	Engine idle speed	Pulse generation (see waveform 2)
SL2+ (B30-58) - SL2- (B30-59)	Y - L	SL2 solenoid signal	Ignition switch ON	Pulse generation (see waveform 2)
SL2+ (B30-58) - SL2- (B30-59)	Y - L	SL2 solenoid signal	1st or 2nd gear	Pulse generation (see waveform 2)
SL2+ (B30-58) - SL2- (B30-59)	Y - L	SL2 solenoid signal	3rd or O/D gear	Below 1 V
DSL (B30-79) - E01 (B30-45)	G - BR	DSL solenoid signal	Vehicle speed 65 km/h (40 mph), lock-up (ON to OFF)	Below 1 V
DSL (B30-79) - E01 (B30-45)	G - BR	DSL solenoid signal	Vehicle driving under lock-up position	Pulse generation (see waveform 3)
SLT+ (B30-76) - SLT- (B30-75)	R - GR	SLT solenoid signal	Engine idle speed	Pulse generation (see waveform 4)
S4 (B30-78) - E01 (B30-45)	W - BR	S4 solenoid signal	Ignition switch ON	Below 1 V
S4 (B30-78) - E01 (B30-45)	W - BR	S4 solenoid signal	O/D gear	10 to 14 V
S4 (B30-78) - E01 (B30-45)	W - BR	S4 solenoid signal	Not on O/D gear	Below 1 V
THO1 (B30-72) - ETHO (B30-95)	LG- BR	ATF temperature sensor signal	ATF temperature: 115°C (239°F) or more	Below 1.5 V
NT+ (B30-125) - NT- (B30-124)	W - R	Speed sensor (NT) signal	Vehicle speed 20 km/h (12 mph)	Pulse generation (see waveform 5)
NC+ (B30-101) - NC- (B30-102)	R - W	Speed sensor (NC) signal	Vehicle speed 30 km/h (19 mph): (3rd gear) Engine speed 1,400 rpm	Pulse generation (see waveform 6)

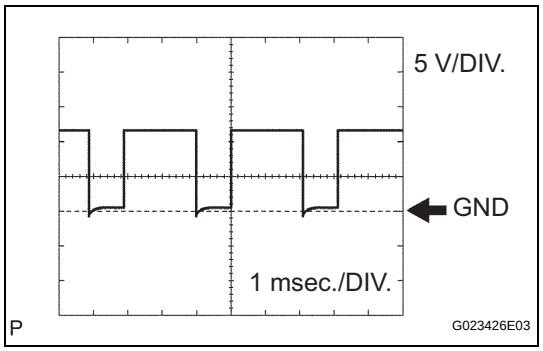

(b) Using an oscilloscope, check the waveform 1.
Waveform 1 (Reference)

Item	Content
Symbols (Terminal No.)	SL1+ (B30-57) - SL1- (B30-77)
Tool Setting	5 V/DIV., 1 msec./DIV.
Condition	Engine idle speed

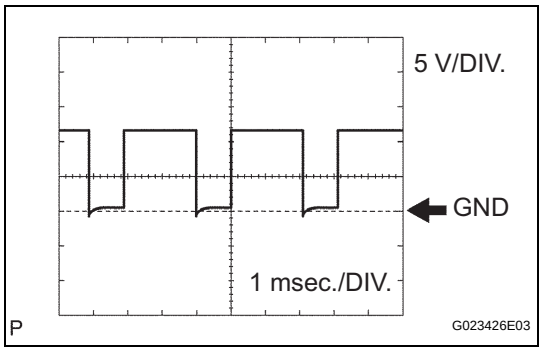

(c) Using an oscilloscope, check the waveform 2.
Waveform 2 (Reference)

Item	Content
Symbols (Terminal No.)	SL2+ (B30-58) - SL2- (B30-59)
Tool Setting	5 V/DIV., 1 msec./DIV.
Condition	Engine idle speed

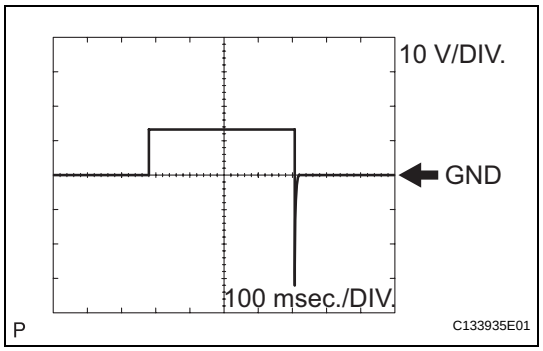

(d) Using an oscilloscope, check the waveform 3.
Waveform 3 (Reference)

Item	Content
Symbols (Terminal No.)	DSL (B30-79) - E01 (B30-45)
Tool Setting	10 V/DIV., 100 msec./DIV.
Condition	Vehicle speed 65 km/h (40 mph), lock-up (ON to OFF)

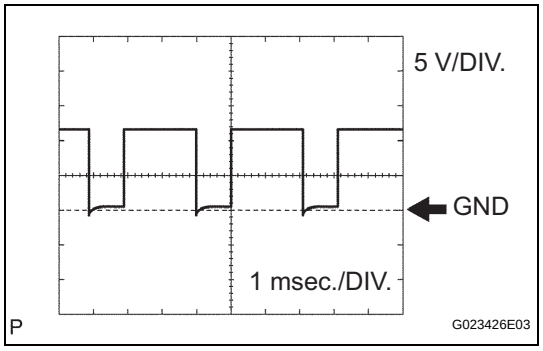

(e) Using an oscilloscope, check the waveform 4.
Waveform 4 (Reference)

Item	Content
Symbols (Terminal No.)	SLT+ (B30-76) - SLT- (B30-75)
Tool Setting	5 V/DIV., 1 msec./DIV.
Condition	Engine idle speed

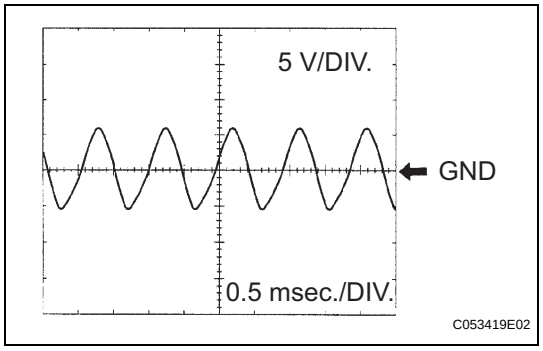

(f) Using an oscilloscope, check the waveform 5.
Waveform 5 (Reference)

Item	Content
Symbols (Terminal No.)	NT+ (B30-125) - NT- (B30-124)
Tool Setting	5 V/DIV., 0.5 msec./DIV.
Condition	Vehicle speed 20 km/h (12 mph)

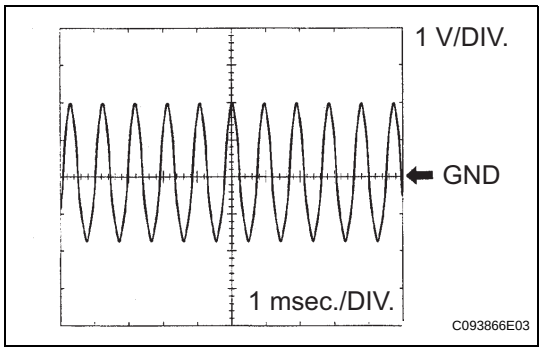

(g) Using an oscilloscope, check the waveform 6.
Waveform 6 (Reference)

Item	Content
Symbols (Terminal No.)	NC+ (B30-101) - NC- (B30-102)
Tool Setting	1 V/DIV., 1 msec./DIV.
Condition	Vehicle speed 30 km/h (19 mph): (3rd gear) Engine speed 1,400 rpm

AX

DIAGNOSIS SYSTEM

1. DESCRIPTION

(a) When troubleshooting On-Board Diagnostic (OBD II) vehicles, the vehicle must be connected to the OBD II scan tool (complying with SAE J1987). Various data output from the vehicle's ECM can then be read.

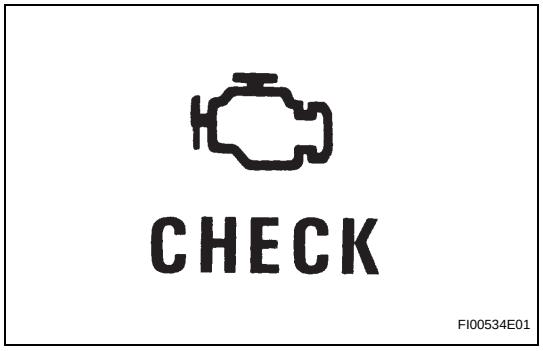

(b) OBD II regulations require that the vehicle's on-board computer illuminates the Malfunction Indicator Lamp (MIL) on the instrument panel when the computer detects a malfunction in:
(1) The emission control system/components
(2) The powertrain control components (which affect vehicle emissions)
(3) The computer
In addition, the applicable Diagnostic Trouble Codes (DTCs) prescribed by SAE J2012 are recorded in the ECM memory.
When the malfunction does not reoccur, the MIL stays illuminated until the ignition switch is turned OFF, and the MIL turns OFF when the engine is started. However, the DTCs remain recorded in the ECM memory.

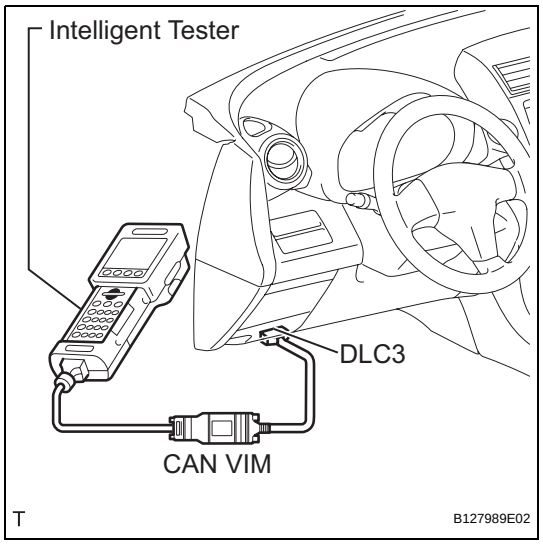

(c) To check DTCs, connect the intelligent tester to the Data Link Connector 3 (DLC3) of the vehicle. The tester displays DTCs, the freeze frame data and a variety of the engine data.
The DTCs and freeze frame data can be erased with the tester (see page AX-29).

2. NORMAL MODE AND CHECK MODE

(a) The diagnosis system operates in "normal mode" during normal vehicle use. In normal mode, "2 trip detection logic" is used to ensure accurate detection of malfunctions. "Check mode" is also available to technicians as an option. In check mode, "1 trip detection logic" is used for simulating malfunction symptoms and increasing the system's ability to detect malfunctions, including intermittent malfunctions.

3. 2 TRIP DETECTION LOGIC

(a) When a malfunction is first detected, the malfunction is temporarily stored in the ECM memory (1st trip). If the same malfunction is detected during the next drive cycle, the MIL is illuminated (2nd trip).

AX

4. FREEZE FRAME DATA

(a) Freeze frame data records the engine conditions (fuel system, calculated load, engine coolant temperature, fuel trim, engine speed, vehicle speed, etc.) when a malfunction is detected. When troubleshooting, freeze frame data can help determine if the vehicle was running or stopped, if the engine was warmed up or not, if the air-fuel ratio was lean or rich, and other data from the time the malfunction occurred.

(b) The intelligent tester records freeze frame data in 5 different instances: 1) 3 times before the DTC is set, 2) once when the DTC is set, and 3) once after the DTC is set. These data can be used to simulate the vehicle's condition around the time when the malfunction occurred. The data may help find the cause of the malfunction, or judge if the DTC is being caused by a temporary malfunction or not.

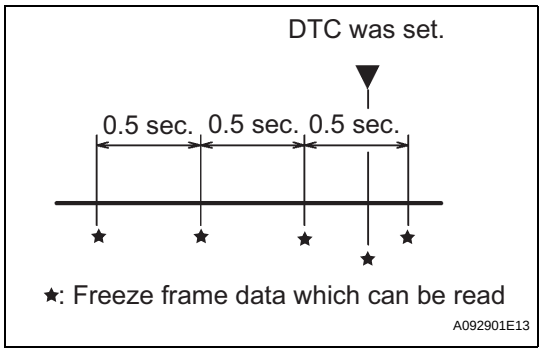

5. DATA LINK CONNECTOR 3 (DLC3)

(a) The vehicle's ECM uses the ISO 15765-4 for communication protocol. The terminal arrangement of the DLC3 complies with SAE J1962 and matches the ISO 15765-4 format.

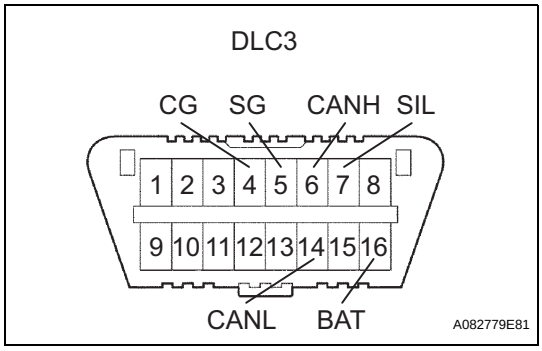

Symbols (Terminal No.)	Terminal Description	Condition	Specified Condition
SIL (7) - SG (5)	Bus "+" line	During transmission	Pulse generation
CG (4) - Body ground	Chassis ground	Always	Below 1 Ω
SG (5) - Body ground	Signal ground	Always	Below 1 Ω
BAT (16) - Body ground	Battery positive	Always	9 to 14 V
CANH (6) - CANL (14)	HIGH-level CAN bus line	Ignition switch OFF	54 to 69 Ω
CANH (6) - Battery positive	HIGH-level CAN bus line	Ignition switch OFF	1 MΩ or higher
CANH (6) - CG (4)	HIGH-level CAN bus line	Ignition switch OFF	200 Ω or higher
CANL (14) - Battery positive	LOW-level CAN bus line	Ignition switch OFF	1 MΩ or higher
CANL (14) - CG (4)	LOW-level CAN bus line	Ignition switch OFF	200 Ω or higher

HINT:
*: Before measuring the resistance, leave the vehicle as is for at least 1 minute and do not operate the ignition switch, other switches or doors.
If the result is not as specified, the DLC3 may have a malfunction. Repair or replace the harness and connector.
HINT:
Connect the cable of the intelligent tester to the DLC3, turn the ignition switch ON and attempt to use the tester. If the screen displays UNABLE TO CONNECT TO VEHICLE, a problem exists in the vehicle side or the tester side.

If communication is normal when the tester is connected to another vehicle, inspect the DLC3 on the original vehicle.
If communication is still not possible when the tester is connected to another vehicle, the problem is probably in the tester itself. Consult the Service Department listed in the tester's instruction manual.

6. CHECK MIL

(a) Check that the MIL illuminates when turning the ignition switch ON.
If the MIL does not illuminate, there is a problem in the MIL circuit (see page ES-386).

(b) When the engine is started, the MIL should turn off.

7. ALL READINESS

(a) For this vehicle, using the intelligent tester allows readiness codes corresponding to all DTCs to be read. When the diagnosis (normal or malfunctioning) has been completed, readiness codes are set. Enter the following menus: ENHANCED OBD II / MONITOR STATUS.

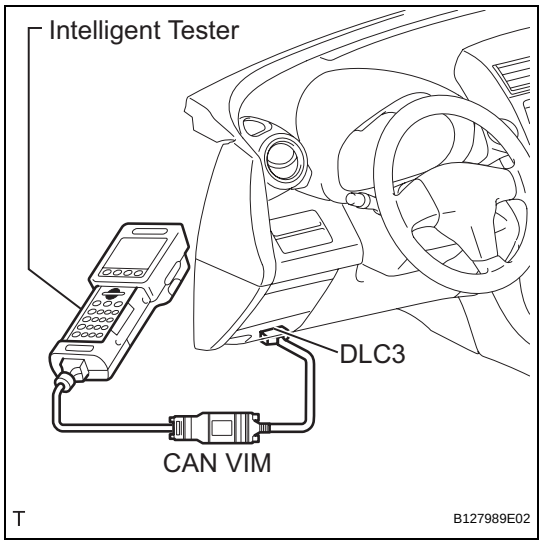

DTC CHECK / CLEAR

1. CHECK DTC

(a) DTCs which are stored in the ECM can be displayed with the intelligent tester.
The intelligent tester can display pending DTCs and current DTCs. Some DTCs are not stored unless a malfunction is detected in consecutive driving cycles. When a malfunction is detected in only one driving cycle, it is stored as a pending DTC.

(1) Connect the intelligent tester to the CAN VIM. Then connect the CAN VIM to the DLC3.

(2) Turn the ignition switch ON and turn the tester ON.

(3) Enter the following menus: DIAGNOSIS / ENHANCED OBD II / DTC INFO / CURRENT CODES (or PENDING CODE).

(4) Confirm the DTCs and freeze frame data and then write them down.

(5) Confirm the details of the DTCs (see page AX-35).

NOTICE:
When simulating a symptom with the scan tool to check for DTCs, use normal mode. For codes on the DIAGNOSTIC TROUBLE CODE CHART subject to "2 trip detection logic", perform the following actions.
Turn the ignition switch OFF after the symptom is simulated once. Then repeat the simulation process again. When the symptom has been simulated twice, the MIL illuminates and the DTCs are recorded in the ECM.

AX

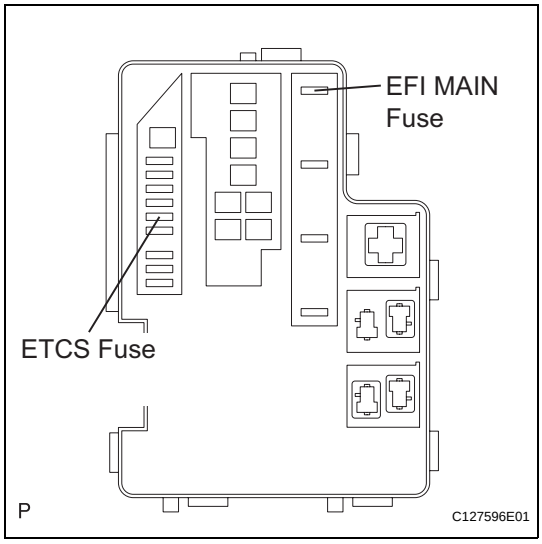

2. CLEAR DTC

(a) When using the intelligent tester:

(1) Connect the intelligent tester to the CAN VIM. Then connect the CAN VIM to the DLC3.

(2) Turn the ignition switch ON and turn the tester ON.

(3) Enter the following menus: DIAGNOSIS / ENHANCED OBD II / DTC INFO / CLEAR CODES. Then and press YES.
HINT:
When operating the tester to erase the codes, the DTCs and freeze frame data will be erased.

(b) When not using the intelligent tester:

(1) Disconnect the battery terminal or remove the EFI MAIN and ETCS fuses from the engine room No. 1 relay block and engine room No. 1 junction block for 60 seconds or more. However, if you disconnect the battery terminal, perform the "INITIALIZATION" procedure (see page AX-18).

CHECK MODE PROCEDURE

1. DESCRIPTION

(a) Check mode has a higher sensitivity to malfunctions and can detect malfunctions that normal mode cannot detect. Check mode can also detect all the malfunctions that normal mode can detect. In check mode, DTCs are detected with 1 trip detection logic.

2. CHECK MODE PROCEDURE

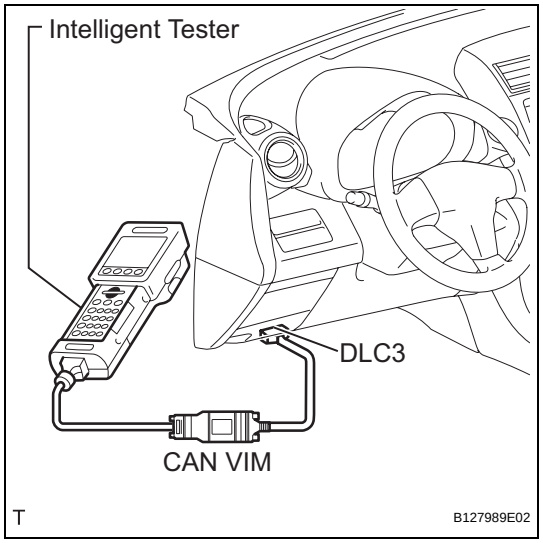

(a) Make sure that the following conditions below are met:
  (1) Battery positive voltage 11 V or more
  (2) Throttle valve fully closed
  (3) Transaxle in the P or N position
  (4) A/C OFF

(b) Turn the ignition switch OFF.

(c) Connect the intelligent tester to the CAN VIM. Then connect the CAN VIM to the DLC3.

(d) Turn the ignition switch ON and turn the tester ON.

(e) Enter the following menus: DIAGNOSIS / ENHANCED OBD II / CHECK MODE.

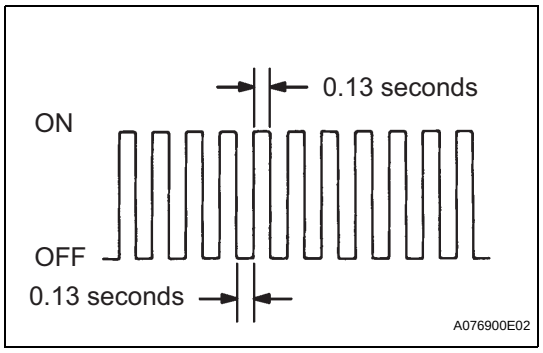

(f) Change the ECM to check mode. Make sure the MIL flashes as shown in the illustration.

NOTICE:

All DTCs and freeze frame data recorded will be erased if: 1) the intelligent tester is used to change the ECM from normal mode to check mode or vice versa; or 2) during check mode, the ignition switch is turned from ON to ACC or OFF.

Before check mode, make notes of the DTCs and freeze frame data.

(g) Start the engine. The MIL should turn off after the engine starts.

(h) Perform "MONITOR DRIVE PATTERN" for the ECT test (see page AX-19).
(Or, simulate the conditions of the malfunction described by the customer.)

(i) After simulating the malfunction conditions, use the tester to check the DTC and freeze frame data.

AX

FAIL-SAFE CHART

1. FAIL-SAFE CHART

This function minimizes the loss of the ECT functions when a malfunction occurs in a sensor or solenoid.

(a) Automatic Transmission Fluid (ATF) temperature sensor:
When the ATF temperature sensor has a malfunction, O/D up-shift is prohibited.

(b) Counter gear speed sensor NC (Speed sensor NC):
When the counter gear speed sensor has a malfunction, O/D up-shift is prohibited.

(c) Shift solenoid valve DSL:
When the solenoid valve DSL has a malfunction, the current to the solenoid valve is stopped.
This stops lock-up control, then fuel economy decreases.

(d) Shift solenoid valve SL1, SL2 and S4:
If any of the shift solenoid valve circuits develops an open or short, the ECM turns the other shift solenoid "ON" and "OFF" in order to shift into the gear positions shown in the table below.
Manual shifting as shown in the following table must be done. In case of a short circuit, the ECM stops sending the current to the short circuited solenoid.
Even if starting the engine in the fail-safe mode, the gear position remains in the same position.

Normal				**Shift Solenoid Valve SL1**				**Shift Solenoid Valve SL2**				**Shift Solenoid Valve S4**			
Gear	**Solenoid Valve**			**Gear**	**Solenoid Valve**			**Gear**	**Solenoid Valve**			**Gear**	**Solenoid Valve**		
	SL1	**SL2**	**S4**		**SL1**	**SL2**	**S4**		**SL1**	**SL2**	**S4**		**SL1**	**SL2**	**S4**
1st	ON	ON	OFF	2nd	X	ON	OFF	3rd	ON ↓ OFF	X	OFF	1st	ON	ON	X
2nd	OFF	ON	OFF	2nd	X	ON	OFF	3rd	OFF	X	OFF	2nd	OFF	ON	X
3rd	OFF	OFF	OFF	3rd	X	OFF ↓ ON	OFF ↓ ON	3rd	OFF	X	OFF	3rd	OFF	OFF	X
O/D	OFF	OFF	ON	3rd	X	OFF ↓ ON	ON	O/D	OFF	X	ON	3rd	OFF	OFF	X

Shift Solenoid Valve SL1 and SL2				**Shift Solenoid Valve SL1 and S4**				**Shift Solenoid Valve SL2 and S4**				**Shift Solenoid Valve SL1, SL2 and S4**			
Gear	**Solenoid Valve**			**Gear**	**Solenoid Valve**			**Gear**	**Solenoid Valve**			**Gear**	**Solenoid Valve**		
	SL1	**SL2**	**S4**		**SL1**	**SL2**	**S4**		**SL1**	**SL2**	**S4**		**SL1**	**SL2**	**S4**
3rd	X	X	OFF	2nd	X	ON	X	3rd	ON ↓ OFF	X	X	3rd	X	X	X
3rd	X	X	OFF	2nd	X	ON	X	3rd	OFF	X	X	3rd	X	X	X
3rd	X	X	OFF	2nd	X	OFF ↓ ON	X	3rd	OFF	X	X	3rd	X	X	X
O/D	X	X	ON	2nd	X	OFF ↓ ON	X	3rd	OFF	X	X	3rd	X	X	X

HINT:

- ↓: Condition in the normal operation is shown above the "↓".
- ↓: Condition in the fail-safe mode is shown beneath the "↓".
- E/B: Engine brake.

DATA LIST / ACTIVE TEST

1. READ DATA LIST

HINT:

Using the intelligent tester's DATA LIST allows switch, sensor, actuator, and other item values to be read without removing any parts. Reading the DATA LIST early in troubleshooting is one way to save time.

NOTICE:

In the table below, the values listed under "Normal Condition" are reference values. Do not depend solely on these reference values when deciding whether a part is faulty or not.

(a) Warm up the engine.

(b) Turn the ignition switch OFF.

(c) Connect the intelligent tester to the CAN VIM. Then connect the CAN VIM to the DLC3.

(d) Turn the ignition switch ON and turn the tester ON.

(e) Enter the following menus: DIAGNOSIS / ENHANCED OBD II / DATA LIST.

(f) Follow the instructions on the tester and read the DATA LIST.

Item	Measurement Item/ Range (Display)	Normal Condition	Diagnostic Note
SPD (NC)	Counter gear speed/ Min.: 0 rpm Max.: 12,750 rpm	4th (O/D) when shift lever is on D (after warming up the engine); Intermediate shaft speed (NC) becomes close to the engine speed	Data is displayed in increments of 50 rpm
SPD (NT)	Input turbine speed/ Min.: 0 rpm Max.: 12,750 rpm	• Lock-up ON (after warming up engine): Input turbine speed (NT) equal to engine speed. • Lock-up OFF (idling with shift lever on N): Input turbine speed (NT) is nearly equal to engine speed.	Data is displayed in increments of 50 rpm
PNP SW (NSW)	PNP switch status/ ON or OFF	Shift lever is: On P or N: ON Not on P or N: OFF	When shift lever position displayed on intelligent tester differs from actual position, adjustment of PNP switch or shift cable may be incorrect HINT: When failure still occurs even after adjusting these parts, see page AX-39
STOP LIGHT SW	Stop light switch status/ ON or OFF	• Brake pedal is depressed: ON • Brake pedal is released: OFF	-
SHIFT	ECM gear shift command/ 1st, 2nd, 3rd or 4th	Shift lever position is: • On L: 1st • On 2: 1st or 2nd • On 3: 1st, 2nd or 3rd • On D: 1st, 2nd, 3rd or 4th	-

Item	Measurement Item/ Range (Display)	Normal Condition	Diagnostic Note
REVERSE	PNP switch status/ ON or OFF	Shift lever is: On R: ON Not on R: OFF	When shift lever position displayed on intelligent tester differs from actual position, adjustment of PNP switch or shift cable may be incorrect HINT: When failure still occurs even after adjusting these parts, see page AX-39
PARKING	PNP switch status/ ON or OFF	Shift lever is: On P: ON Not on P: OFF	When shift lever position displayed on intelligent tester differs from actual position, adjustment of PNP switch or shift cable may be incorrect HINT: When failure still occurs even after adjusting these parts, see page AX-39
NEUTRAL	PNP switch status/ ON or OFF	Shift lever is: On N: ON Not on N: OFF	When shift lever position displayed on intelligent tester differs from actual position, adjustment of PNP switch or shift cable may be incorrect HINT: When failure still occurs even after adjusting these parts, see page AX-39
DRIVE	PNP switch status/ ON or OFF	Shift lever is: On D: ON Not on D: OFF	When shift lever position displayed on intelligent tester differs from actual position, adjustment of PNP switch or shift cable may be incorrect HINT: When failure still occurs even after adjusting these parts, see page AX-39
3RD	PNP switch status/ ON or OFF	Shift lever is: On 3: ON Not on 3: OFF	When shift lever position displayed on intelligent tester differs from actual position, adjustment of PNP switch or shift cable may be incorrect HINT: When failure still occurs even after adjusting these parts, see page AX-39
2ND	PNP switch status/ ON or OFF	Shift lever is: On 2: ON Not on 2: OFF	When shift lever position displayed on intelligent tester differs from actual position, adjustment of PNP switch or shift cable may be incorrect HINT: When failure still occurs even after adjusting these parts, see page AX-39
LOW	PNP switch status/ ON or OFF	Shift lever is: On L: ON Not on L: OFF	When shift lever position displayed on intelligent tester differs from actual position, adjustment of PNP switch or shift cable may be incorrect HINT: When failure still occurs even after adjusting these parts, see page AX-39

Item	Measurement Item/ Range (Display)	Normal Condition	Diagnostic Note
A/T OIL TEMP1	ATF temperature sensor value/ Min.: -40°C (-40°F) Max.: 215°C (419°F)	• After stall test: Approximately 80°C (176°F) • Equal to ambient temperature while engine is cold	If value is -40°C (-40°F) or "150°C (302°F) or more", ATF temperature sensor circuit is open or short circuited
LOCK UP SOL	Lock-up solenoid status/ ON or OFF	• Lock-up: ON • Not on lock-up: OFF	-
SOLENOID (SLT)	Shift solenoid SLT status/ ON or OFF	• Accelerator pedal is depressed: OFF • Accelerator pedal is released: ON	-

AX

2. PERFORM ACTIVE TEST

HINT:

Performing the intelligent tester's ACTIVE TEST allows relay, VSV, actuator and other items to be operated without removing any parts. Performing the ACTIVE TEST early in troubleshooting is one way to save time. The DATA LIST can be displayed during the ACTIVE TEST.

(a) Warm up the engine.
(b) Turn the ignition switch OFF.
(c) Connect the intelligent tester to the CAN VIM. Then connect the CAN VIM to the DLC3.
(d) Turn the ignition switch ON and turn the tester ON.
(e) Enter the following menus: DIAGNOSIS / ENHANCED OBD II / ACTIVE TEST.
(f) Perform the ACTIVE TEST.

Item	Test Details	Diagnostic Note
SHIFT	[Test Details] Operate shift solenoid valve and set each shift lever position by yourself [Vehicle Condition] • IDL: ON • 50 km/h (31 mph) or less [Other information] • Press "→" button: Shift up • Press "←" button: Shift down	Possible to check operation of shift solenoid valves
SOLENOID (S4)	[Test Details] Operate the shift solenoid S4 [Vehicle Condition] • Vehicle stopped • Shift lever P or N position	-
SOLENOID (SL1)	[Test Details] Operate the shift solenoid SL1 [Vehicle Condition] • Vehicle stopped • Shift lever P or N position	-
SOLENOID (SL2)	[Test Details] Operate the shift solenoid SL2 [Vehicle Condition] • Vehicle stopped • Shift lever P or N position	-
LOCK UP	[Test Details] Control shift solenoid DSL to set automatic transaxle to the lock-up condition [Vehicle Condition] • Throttle valve opening angle: Less than 35% • Vehicle speed: 60 km/h (36 mph) or more	Possible to check shift solenoid valve DSL operation

Item	Test Details	Diagnostic Note
SOLENOID (DSL)	[Test Details] Operate the shift solenoid DSL [Vehicle Condition] • Vehicle stopped • Shift lever P or N position	-
SOLENOID (SLT)*	[Test Details] Operate shift solenoid SLT and raise line pressure [Vehicle Condition] • Vehicle stopped • IDL: ON HINT: OFF: Line pressure up (when Active Test "SOLENOID (SLT)" is performed, ECM commands SLT solenoid to turn OFF) ON: No action (normal operation)	-

HINT:
*: "SOLENOID (SLT)" in the ACTIVE TEST is performed to check the line pressure changes by connecting SST to the automatic transaxle, which is used in the HYDRAULIC TEST (see page AX-16) as well. Please note that the pressure values in the ACTIVE TEST and HYDRAULIC TEST are different.

AX

DIAGNOSTIC TROUBLE CODE CHART

If a DTC is displayed during the DTC check, check the circuit listed in the table below and proceed to the page given.
HINT:

- *1: "Comes on" means the Malfunction Indicator Lamp (MIL) illuminates.
- *2: "DTC stored" means the ECM memorizes the malfunction code if the ECM detects the DTC detection condition.
- These DTCs may be output when the clutch, brake, gear components, etc., inside the automatic transaxle are damaged.

DTC No.	Detection Item	Trouble Area	MIL*1	Memory*2	See page
P0705	Transmission Range Sensor Circuit Malfunction (PRNDL Input)	- Open or short in park/neutral position switch circuit - Park/Neutral position switch - ECM	Comes on	DTC stored	AX-39
P0710	Transmission Fluid Temperature Sensor "A" Circuit	- Open or short in ATF temperature sensor circuit - ATF temperature sensor - ECM	Comes on	DTC stored	AX-46
P0711	Transmission Fluid Temperature Sensor "A" Performance	- Open or short in No. 1 ATF temperature sensor circuit - No. 1 ATF temperature sensor - ECM	Comes on	DTC stored	AX-50
P0712	Transmission Fluid Temperature Sensor "A" Circuit Low Input	- Short in ATF temperature sensor circuit - ATF temperature sensor - ECM	Comes on	DTC stored	AX-46
P0713	Transmission Fluid Temperature Sensor "A" Circuit High Input	- Open in ATF temperature sensor circuit - ATF temperature sensor - ECM	Comes on	DTC stored	AX-46
P0717	Input Speed Sensor Circuit No Signal	- Open or short in speed sensor NT circuit - Speed sensor NT - ECM	Comes on	DTC stored	AX-53
P0724	Brake Switch "B" Circuit High	- Short in stop light switch circuit - Stop light switch - ECM	Comes on	DTC stored	AX-57

DTC No.	Detection Item	Trouble Area	MIL*1	Memory*2	See page
P0741	Torque Converter Clutch Solenoid Performance (Shift Solenoid Valve DSL)	- Shift solenoid valve DSL remains open or closed - Valve body is blocked - Shift solenoid valve DSL - Torque converter clutch - Automatic transaxle (clutch, brake, gear, etc.) - Line pressure is too low - ECM	Comes on	DTC stored	AX-60
P0746	Pressure Control Solenoid "A" Performance (Shift Solenoid Valve SL1)	- Shift solenoid valve SL1 remains open or closed - Valve body is blocked - Shift solenoid valve SL1 - Automatic transaxle (clutch, brake, gear, etc.) - ECM	Comes on	DTC stored	AX-66
P0748	Pressure Control Solenoid "A" Electrical (Shift Solenoid Valve SL1)	- Open or short in shift solenoid valve SL1 circuit - Shift solenoid valve SL1 - ECM	Comes on	DTC stored	AX-70
P0766	Shift Solenoid "D" Performance (Shift Solenoid Valve S4)	- Shift solenoid valve S4 remains open or closed - Valve body is blocked - Shift solenoid valve S4 - Automatic transaxle (clutch, brake, gear, etc.) - ECM	Comes on	DTC stored	AX-73
P0776	Pressure Control Solenoid "B" Performance (Shift Solenoid Valve SL2)	- Shift solenoid valve SL2 remains open or closed - Valve body is blocked - Shift solenoid valve SL2 - Automatic transaxle (clutch, brake, gear, etc.) - ECM	Comes on	DTC stored	AX-77
P0778	Pressure Control Solenoid "B" Electrical (Shift Solenoid Valve SL2)	- Open or short in shift solenoid valve SL2 circuit - Shift solenoid valve SL2 - ECM	Comes on	DTC stored	AX-81
P0793	Intermediate Shaft Speed Sensor "A"	- Open or short in speed sensor NC circuit - Speed sensor NC - ECM	Comes on	DTC stored	AX-84

DTC No.	Detection Item	Trouble Area	MIL*1	Memory*2	See page
P0982	Shift Solenoid "D" Control Circuit Low (Shift Solenoid Valve S4)	- Short in shift solenoid valve S4 circuit - Shift solenoid valve S4 - ECM	Comes on	DTC stored	AX-88
P0983	Shift Solenoid "D" Control Circuit High (Shift Solenoid Valve S4)	- Open in shift solenoid valve S4 circuit - Shift solenoid valve S4 - ECM	Comes on	DTC stored	AX-88
P2714	Pressure Control Solenoid "D" Performance (Shift Solenoid Valve SLT)	- Shift solenoid valve SLT remains open or closed - Valve body is blocked - Torque converter clutch - Automatic transaxle (clutch, brake, gear, etc.) - ECM	Comes on	DTC stored	AX-91
P2716	Pressure Control Solenoid "D" Electrical (Shift Solenoid Valve SLT)	- Open or short in shift solenoid valve SLT circuit - Shift solenoid valve SLT - ECM	Comes on	DTC stored	AX-96
P2769	Torque Converter Clutch Solenoid Circuit Low (Shift Solenoid Valve DSL)	- Short in shift solenoid valve DSL circuit - Shift solenoid valve DSL - ECM	Comes on	DTC stored	AX-99
P2770	Torque Converter Clutch Solenoid Circuit High (Shift Solenoid Valve DSL)	- Open in shift solenoid valve DSL circuit - Shift solenoid valve DSL - ECM	Comes on	DTC stored	AX-99

DTC	P0705	Transmission Range Sensor Circuit Malfunction (PRNDL Input)

DESCRIPTION

The Park/Neutral Position (PNP) switch detects the shift lever position and sends signals to the ECM.

DTC No.	DTC Detection Condition	Trouble Area
P0705	When one of following conditions is met: (A) Any 2 or more of the following signals are ON simultaneously (2 trip detection logic) • P input signal is ON • N input signal is ON • R input signal is ON • D input signal is ON • 2 input signal is ON • L input signal is ON (B) Any 2 or more of the following signals are ON simultaneously (2 trip detection logic) • NSW input signal is ON • R input signal is ON • D input signal is ON • 2 input signal is ON • L input signal is ON (C) All of the signals are OFF simultaneously (2 trip detection logic) • P input signal is OFF • N input signal is OFF • NSW input signal is OFF • R input signal is OFF • D input signal is OFF • 2 input signal is OFF • L input signal is OFF (D) Both 1 and 2 are met (2 trip detection logic) 1. Either of the following is met (a) NSW input signal is ON (b) P input signal is ON (c) N input signal is ON (d) R input signal is ON 2. Either of the following is met (a) 3 input signal is ON (b) L input signal is ON	• Open or short in park/neutral position switch circuit • Park/Neutral position switch • ECM

AX

MONITOR DESCRIPTION

These DTCs indicate a problem with the park/neutral position switch and the wire harness in the park/neutral position switch circuit.
The park/neutral position switch detects the shift lever position and sends a signal to the ECM.
For security, the park/neutral position switch detects the shift lever position so that the engine can be started only when the shift lever is on P or N.
The park/neutral position switch sends a signal to the ECM according to the shift lever position (R, D, 3, 2 or L).
The ECM determines that there is a problem with the switch or related parts if it receives more than 1 position signal simultaneously. The ECM will illuminate the MIL and store the DTC.

MONITOR STRATEGY

Related DTCs	P0705: Park/Neutral position switch/Verify switch input
Required sensors/Components	Park/Neutral position switch
Frequency of operation	Continuous
Duration	2 seconds or 60 seconds
MIL operation	2 driving cycles

Sequence of operation	None

TYPICAL ENABLING CONDITIONS

The monitor will run whenever this DTC is not present.	None
Ignition switch	ON
Battery voltage	10.5 V or more

AX

TYPICAL MALFUNCTION THRESHOLDS

Condition (A)

Number of the following signal input at the same time	2 or more
P switch	ON
N switch	ON
R switch	ON
D switch	ON
2 switch	ON
L switch	ON

Condition (B)

Number of the following signal input at the same time	2 or more
NSW switch	ON
R switch	ON
D switch	ON
2 switch	ON
L switch	ON

Condition (C)

When all of the following conditions are met	-
P switch	OFF
N switch	OFF
NSW switch	OFF
R switch	OFF
D switch	OFF
2 switch	OFF
L switch	OFF

Condition (D)

When both conditions (a) and (b) are met	-
(a) When one of following condition is met	-
NSW switch	ON
P switch	ON
N switch	ON
R switch	ON
(b) When one of following condition is met	-
3 switch	ON
L switch	ON

COMPONENT OPERATING RANGE

Park/Neutral position switch	Park/Neutral position switch sends only one signal to ECM.

WIRING DIAGRAM

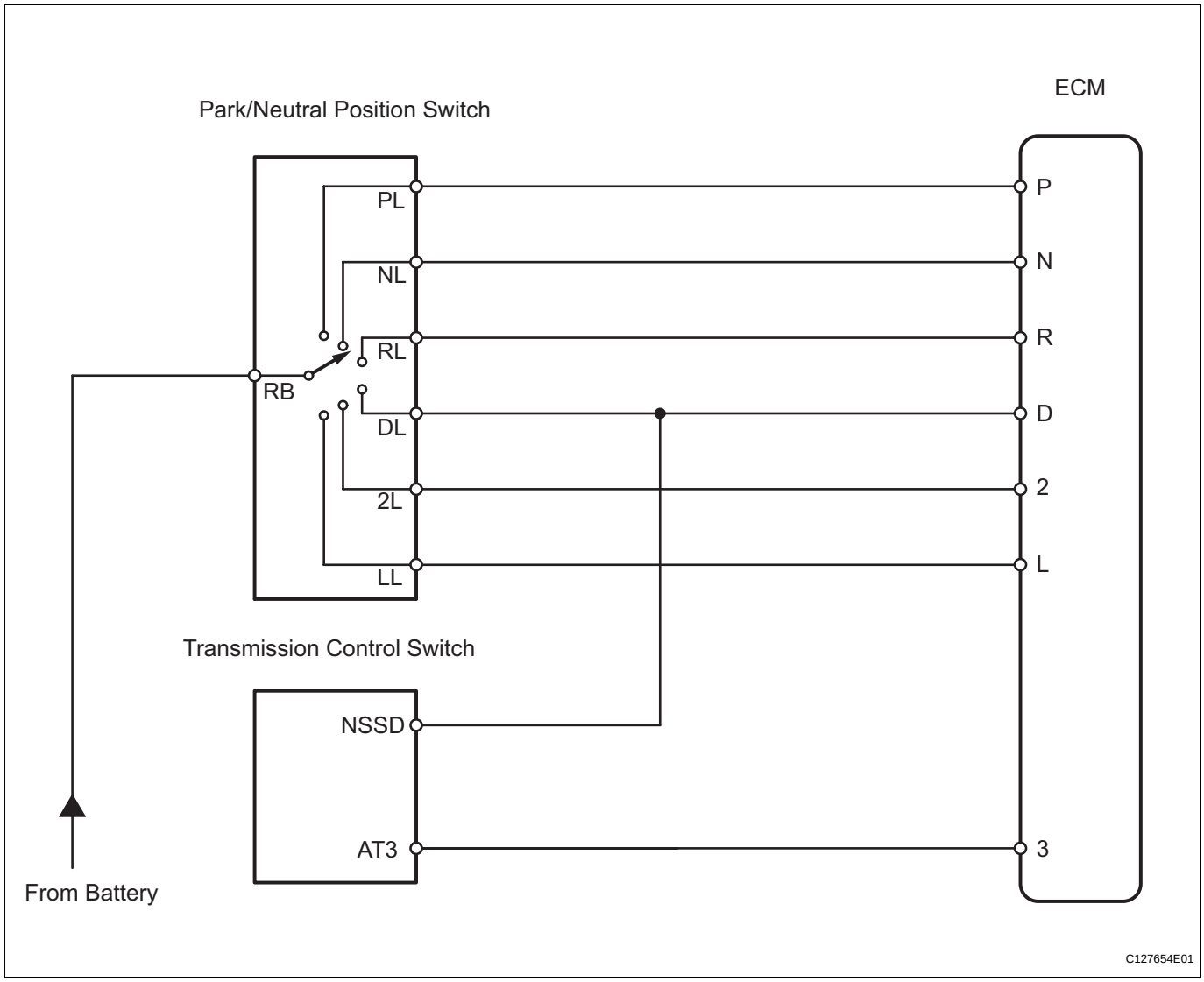

INSPECTION PROCEDURE

HINT:

Using the intelligent tester's DATA LIST allows switch, sensor, actuator and other item values to be read without removing any parts. Reading the DATA LIST early in troubleshooting is one way to save time.

NOTICE:

In the table below, the values listed under "Normal Condition" are reference values. Do not depend solely on these reference values when deciding whether a part is faulty or not.

1. Warm up the engine.
2. Turn the ignition switch OFF.
3. Connect the intelligent tester to the CAN VIM. Then connect the CAN VIM to the DLC3.
4. Turn the ignition switch ON and turn the tester ON.
5. Enter the following menus: DIAGNOSIS / ENHANCED OBD II / DATA LIST.
6. Follow the instructions on the tester and read the DATA LIST.

Item	Measurement Item/ Range (Display)	Normal Condition	Diagnostic Note
PNP SW (NSW)	PNP switch status/ ON or OFF	Shift lever is: On P or N: ON Not on P or N: OFF	When shift lever position displayed on intelligent tester differs from actual position, adjustment of PNP switch or shift cable may be incorrect

Item	Measurement Item/ Range (Display)	Normal Condition	Diagnostic Note
REVERSE	PNP switch status/ ON or OFF	Shift lever is: On R: ON Not on R: OFF	When shift lever position displayed on intelligent tester differs from actual position, adjustment of PNP switch or shift cable may be incorrect
PARKING	PNP switch status/ ON or OFF	Shift lever is: On P: ON Not on P: OFF	When shift lever position displayed on intelligent tester differs from actual position, adjustment of PNP switch or shift cable may be incorrect
NEUTRAL	PNP switch status/ ON or OFF	Shift lever is: On N: ON Not on N: OFF	When shift lever position displayed on intelligent tester differs from actual position, adjustment of PNP switch or shift cable may be incorrect
DRIVE	PNP switch status/ ON or OFF	Shift lever is: On D: ON Not on D: OFF	When shift lever position displayed on intelligent tester differs from actual position, adjustment of PNP switch or shift cable may be incorrect
3RD	PNP switch status/ ON or OFF	Shift lever is: On 3: ON Not on 3: OFF	When shift lever position displayed on intelligent tester differs from actual position, adjustment of PNP switch or shift cable may be incorrect
2ND	PNP switch status/ ON or OFF	Shift lever is: On 2: ON Not on 2: OFF	When shift lever position displayed on intelligent tester differs from actual position, adjustment of PNP switch or shift cable may be incorrect
LOW	PNP switch status/ ON or OFF	Shift lever is: On L: ON Not on L: OFF	When shift lever position displayed on intelligent tester differs from actual position, adjustment of PNP switch or shift cable may be incorrect

AX

1 CHECK WIRE HARNESS (PARK/NEUTRAL POSITION SWITCH - BATTERY)

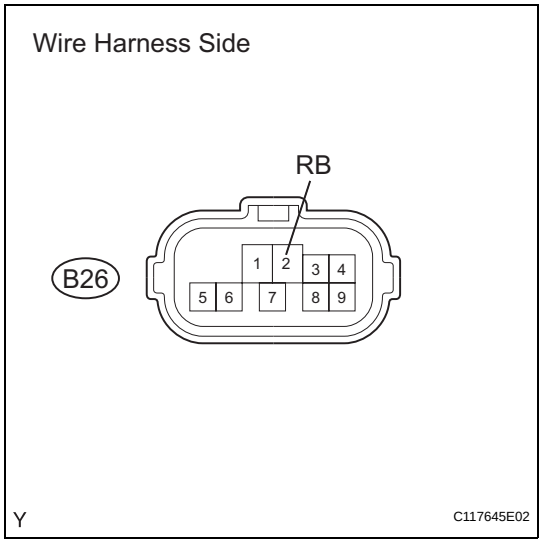

(a) Disconnect the B26 park/neutral position switch connector.
(b) Turn the ignition switch ON.
(c) Measure the voltage.

Standard voltage

Tester Connection	Specified Condition
2 (RB) - Body ground	10 to 14 V

NG → **CHECK POWER SOURCE OF ECM**

OK

2 INSPECT PARK/NEUTRAL POSITION SWITCH

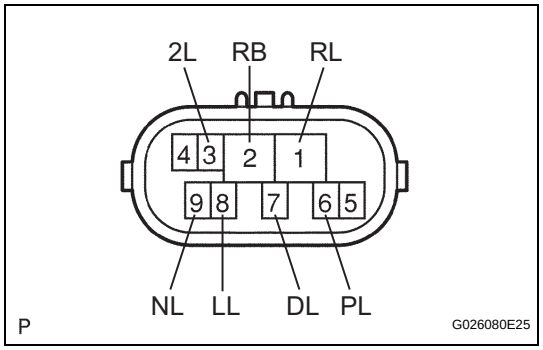

(a) Disconnect the B26 park/neutral position switch connector.
(b) Measure the resistance of the park/neutral position switch when the shift lever is moved to each position.

Standard resistance

Tester Connection	Shift Lever Position	Specified Condition
6 (PL) - 2 (RB)	P	Below 1 Ω
6 (PL) - 2 (RB)	Not on P	10 kΩ or higher
1 (RL) - 2 (RB)	R	Below 1 Ω
1 (RL) - 2 (RB)	Not on R	10 kΩ or higher
9 (NL) - 2 (RB)	N	Below 1 Ω
9 (NL) - 2 (RB)	Not on N	10 kΩ or higher
7 (DL) - 2 (RB)	D	Below 1 Ω
7 (DL) - 2 (RB)	Not on D	10 kΩ or higher
3 (2L) - 2 (RB)	2	Below 1 Ω
3 (2L) - 2 (RB)	Not on 2	10 kΩ or higher
8 (LL) - 2 (RB)	L	Below 1 Ω
8 (LL) - 2 (RB)	Not on L	10 kΩ or higher

NG → **REPLACE PARK/NEUTRAL POSITION SWITCH**

OK

3 CHECK WIRE HARNESS (ECM - BATTERY AND BODY GROUND)

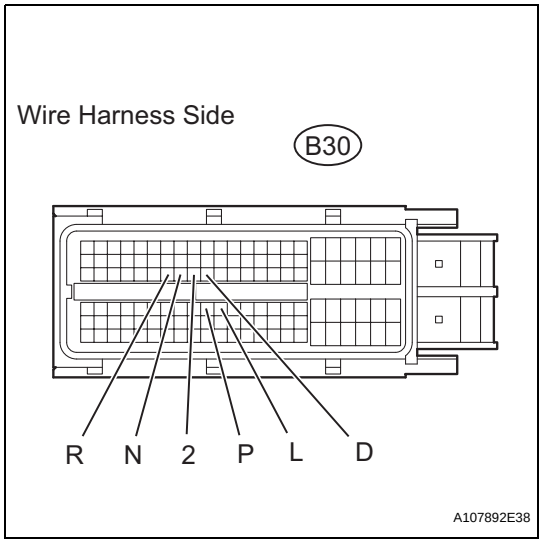

(a) Disconnect the B30 ECM connector.
(b) Turn the ignition switch ON.
(c) Measure the voltage of the wire harness side connector.

Standard voltage

Tester Connection	Shift Lever Position	Specified Condition
B30-73 (P) - Body ground	P	10 to 14 V
B30-73 (P) - Body ground	Not on P	Below 1 V
B30-53 (R) - Body ground	R	10 to 14 V*
B30-53 (R) - Body ground	Not on R	Below 1 V
B30-54 (N) - Body ground	N	10 to 14 V
B30-54 (N) - Body ground	Not on N	Below 1 V
B30-56 (D) - Body ground	D or 3	10 to 14 V
B30-56 (D) - Body ground	Not on D or 3	Below 1 V
B30-55 (2) - Body ground	2	10 to 14 V

Tester Connection	Shift Lever Position	Specified Condition
B30-55 (2) - Body ground	Not on 2	Below 1 V
B30-74 (L) - Body ground	L	10 to 14 V
B30-74 (L) - Body ground	Not on L	Below 1 V

AX

HINT:
*: The voltage will drop slightly due to the illumination of the back-up light.

NG → **REPAIR OR REPLACE HARNESS AND CONNECTOR**

OK

4 CHECK WIRE HARNESS (PARK/NEUTRAL POSITION SWITCH - TRANSMISSION CONTROL SWITCH)

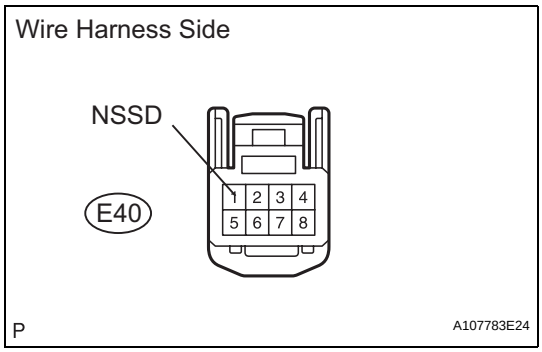

(a) Disconnect the E40 switch connector.
(b) Turn the ignition switch ON.
(c) Measure the voltage when the shift lever is moved to each position.

Standard voltage

Tester Connection	Shift Lever Position	Specified Condition
1 (NSSD) - Body ground	D and 3	10 to 14 V
1 (NSSD) - Body ground	Not on D and 3	Below 1 V

NG → **REPAIR OR REPLACE HARNESS AND CONNECTOR**

OK

5 INSPECT TRANSMISSION CONTROL SWITCH

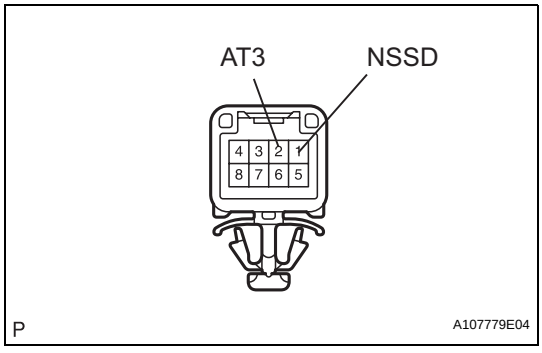

(a) Disconnect the E40 switch connector.
(b) Measure the resistance of the switch when the shift lever is moved to each position.

Standard resistance

Tester Connection	Shift Lever Position	Specified Condition
1 (NSSD) - 2 (AT3)	D	10 kΩ or higher
1 (NSSD) - 2 (AT3)	3	Below 1 Ω

NG → **REPLACE TRANSMISSION CONTROL SWITCH**

OK

6	CHECK WIRE HARNESS (TRANSMISSION CONTROL SWITCH - BATTERY AND BODY GROUND)

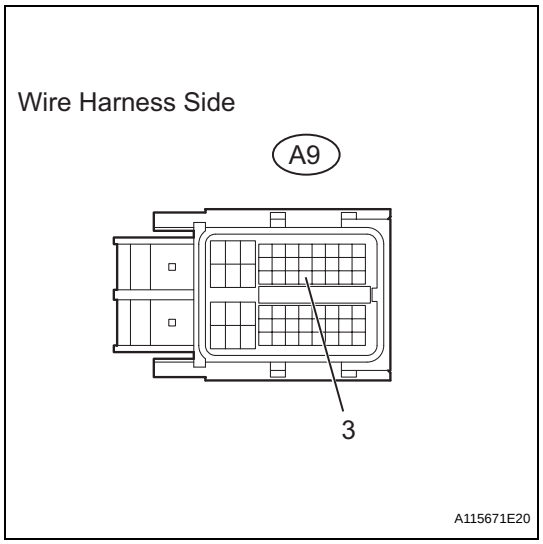

(a) Disconnect the A9 ECM connector.
(b) Turn the ignition switch ON.
(c) Measure the voltage of the wire harness side connector.

Standard voltage

Tester Connection	Shift Lever Position	Specified Condition
A9-26 (3) - Body ground	3	10 to 14 V
A9-26 (3) - Body ground	Not on 3	Below 1 V

HINT:
*: The voltage will drop slightly due to the illumination of the back-up light.

NG → **REPAIR OR REPLACE HARNESS AND CONNECTOR**

OK

REPLACE ECM

AX

DTC	P0710	Transmission Fluid Temperature Sensor "A" Circuit

DTC	P0712	Transmission Fluid Temperature Sensor "A" Circuit Low Input

AX

DTC	P0713	Transmission Fluid Temperature Sensor "A" Circuit High Input

DESCRIPTION

The Automatic Transmission Fluid (ATF) temperature sensor converts the ATF temperature into a resistance value which is input into the ECM.
The ECM applies a voltage to the temperature sensor through ECM terminal THO1.
The sensor resistance changes with the ATF temperature.
One terminal of the sensor is grounded so that the sensor resistance and voltage decrease as the temperature becomes higher.
The ECM calculates the ATF based on the voltage signal.

DTC No.	DTC Detection Condition	Trouble Area
P0710	ATF temperature sensor resistance changes from (a) to (b) or from (b) to (a) in less than 0.5 sec., and P0712 and P0713 are not detected (1 trip detection logic): (a) ATF temperature sensor resistance is less than 79 Ω (b) ATF temperature sensor resistance is more than 156 kΩ	• Open or short in ATF temperature sensor circuit • ATF temperature sensor • ECM
P0712	ATF temperature sensor resistance is less than 79 Ω for 0.5 sec. or more (1 trip detection logic)	• Short in ATF temperature sensor circuit • ATF temperature sensor • ECM
P0713	15 minutes or more after the engine start, ATF temperature sensor resistance is more than 156 kΩ for 0.5 sec. or more (1 trip detection logic)	• Open in ATF temperature sensor circuit • ATF temperature sensor • ECM

MONITOR DESCRIPTION

ATF temperature sensor converts ATF temperature to an electrical resistance value. Based on the resistance, the ECM determines the ATF temperature, and the ECM detects an open or short in the ATF temperature circuit. If the resistance value of the ATF temperature is less than 79 Ω*1 or more than 156 kΩ*2, the ECM interprets this as a fault in the ATF sensor or wiring. The ECM will illuminate the MIL and store the DTC.
HINT:

- *1: 150°C (302°F) or more is indicated regardless of the actual ATF temperature.
- *2: -40°C (-40°F) is indicated regardless of the actual ATF temperature.
- The ATF temperature can be checked on the intelligent tester display.

MONITOR STRATEGY

Related DTCs	P0710: ATF temperature sensor/Range check (Chattering) P0712: ATF temperature sensor/Range check (Low resistance) P0713: ATF temperature sensor/Range check (High resistance)
Required sensors/Components	ATF temperature sensor
Frequency of operation	Continuous
Duration	0.5 sec.

MIL operation	Immediate
Sequence of operation	None

TYPICAL ENABLING CONDITIONS

P0710, P0712: Range check (Chattering, Low resistance)

The monitor will run whenever the following DTCs are not present.	None
The typical enabling condition is not available.	-

P0713: Range check (High resistance)

The monitor will run whenever the following DTCs are not present.	None
Time after engine start	15 min. or more

TYPICAL MALFUNCTION THRESHOLDS

P0710: Range check (Chattering)

ATF temperature sensor resistance	Less than 79 Ω or more than 156 kΩ

P0712: Range check (Low resistance)

ATF temperature sensor resistance	Less than 79 Ω

P0713: Range check (High resistance)

ATF temperature sensor resistance	More than 156 kΩ

COMPONENT OPERATING RANGE

ATF temperature sensor	79 Ω to 156 kΩ

WIRING DIAGRAM

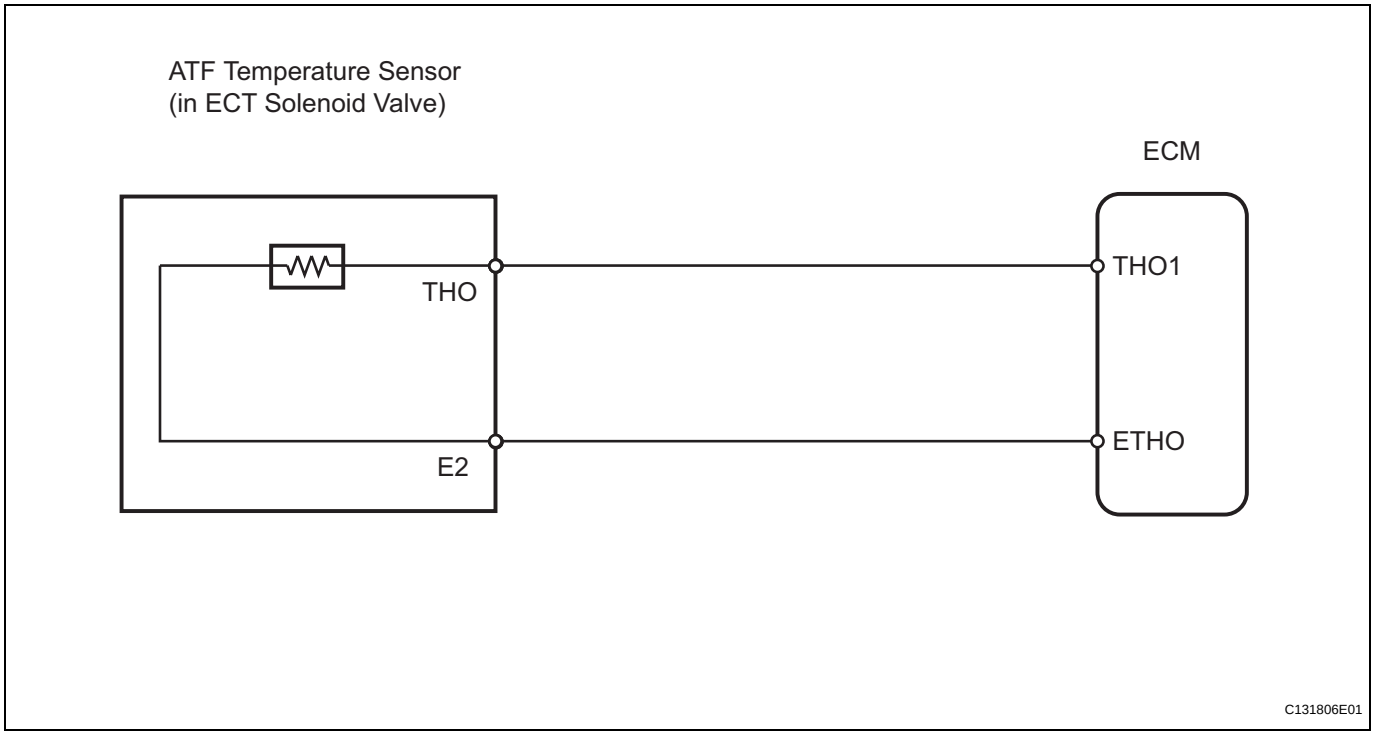

INSPECTION PROCEDURE

HINT:
Using the intelligent tester's DATA LIST allows switch, sensor, actuator and other item values to be read without removing any parts. Reading the DATA LIST early in troubleshooting is one way to save time.
NOTICE:
In the table below, the values listed under "Normal Condition" are reference values. Do not depend solely on these reference values when deciding whether a part is faulty or not.

AX

1. Warm up the engine.
2. Turn the ignition switch OFF.
3. Connect the intelligent tester to the CAN VIM. Then connect the CAN VIM to the DLC3.
4. Turn the ignition switch ON and turn the tester ON.
5. Enter the following menus: DIAGNOSIS / ENHANCED OBD II / DATA LIST.
6. Follow the instructions on the tester and read the DATA LIST.

Item	Measurement Item/ Range (Display)	Normal Condition	Diagnostic Note
A/T OIL TEMP1	ATF temperature sensor value/ Min.: -40°C (-40°F) Max.: 215°C (419°F)	• After stall test: Approximately 80°C (176°F) • Equal to ambient temperature while engine is cold	If value is -40°C (-40°F) or "150°C (302°F) or more", ATF temperature sensor circuit is open or short circuited

HINT:
- When DTC P0712 is output and the tester output is 150°C (302°F) or more, there is a short circuit.
- When DTC P0713 is output and the tester output is -40°C (-40°F), there is an open circuit. Measure the resistance between terminal THO1 (THO) and the body ground.

Temperature Displayed	Malfunction
-40°C (-40°F)	Open circuit
150°C (302°F) or more	Short circuit

HINT:
If a circuit related to the ATF temperature sensor becomes open, P0713 is set in approximately 0.5 seconds. It is not necessary to inspect the circuit when P0711 is set.

1	INSPECT TRANSMISSION WIRE (ATF TEMPERATURE SENSOR)

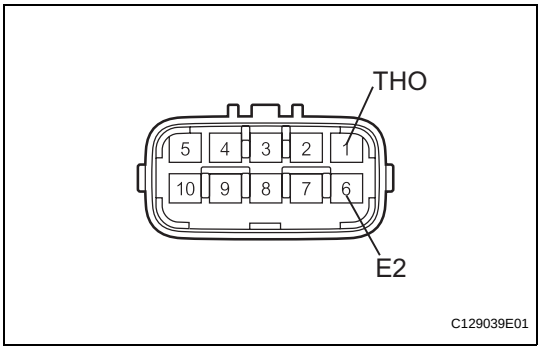

(a) Disconnect the B27 wire connector.
(b) Measure the resistance of the transmission wire.
Standard resistance

Tester Connection	Specified Condition
1 (THO) - 6 (E2)	90 Ω to 156 kΩ
1 (THO) - Body ground	1 MΩ or higher
6 (E2) - Body ground	1 MΩ or higher

HINT:
If the resistance is out of the specified range of either of the ATF temperatures shown in the table below, the driveability of the vehicle may decrease.
Standard resistance

ATF Temperature	Specified Condition
10°C (68°F)	6.4 kΩ
110°C (230°F)	0.2 kΩ

NG → **REPAIR OR REPLACE TRANSMISSION WIRE**

OK

2	CHECK WIRE HARNESS (TRANSMISSION WIRE - ECM)

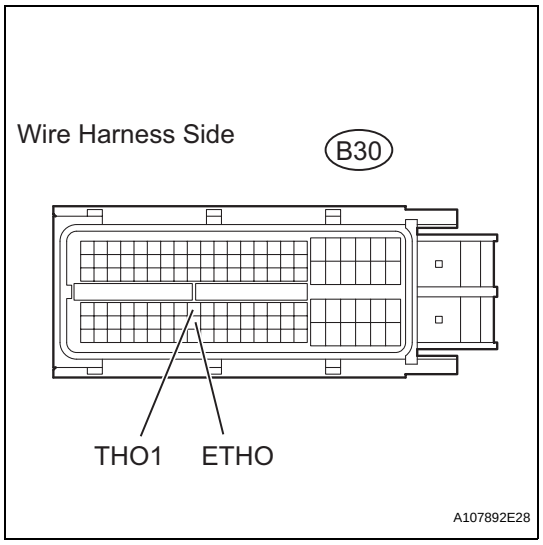

(a) Disconnect the B30 ECM connector.
(b) Measure the resistance of the wire harness side connector.

Standard resistance

Tester Connection	Specified Condition
B30-72 (THO1) - B30-95 (ETHO)	90 Ω to 156 kΩ
B30-72 (THO1) - Body ground	1 MΩ or higher
B30-95 (ETHO) - Body ground	1 MΩ or higher

NG → **REPAIR OR REPLACE HARNESS AND CONNECTOR**

OK

REPLACE ECM

AX

DTC	P0711	Transmission Fluid Temperature Sensor "A" Performance

DESCRIPTION

Refer to DTC P0710 (see page AX-46).

DTC No.	DTC Detection Condition	Trouble Area
P0711	Case 1 (2 trip detection logic): First, ECM checks for following conditions: (a) 17 minutes or more after engine is started and after 9 km (5.6 miles) or more of driving, ECT is -15°C (5°F) or more (b) After starting engine and certain period of time has elapsed, ECT and IAT are -10°C (14°F) or more If conditions are met, ECM then checks if ATF temperature is less than 20°C (68°F). If so, ECM interprets this as fault and illuminates MIL. Case 2 (2 trip detection logic): First, ECM checks for following conditions: (a) ECT is 60°C (140°F) or more (b) After starting engine and certain period of time has elapsed, ECT is less than 35°C (95°F) If conditions are met, ECM then checks if ATF temperature is 100°C (212°F) or more. If so, ECM interprets this as fault and illuminates MIL.	• Open or short in No. 1 ATF temperature sensor circuit • No. 1 ATF temperature sensor • ECM

MONITOR DESCRIPTION

This DTC indicates that there is a problem with output from the ATF temperature sensor and that the sensor itself is defective. The ATF temperature sensor converts the ATF temperature to an electrical resistance value. Based on the resistance, the ECM determines the ATF temperature, detects open or short circuits of the ATF temperature circuit, and detects faults in the ATF temperature sensor.
Case 1 (2 trip detection logic):
First, the ECM checks for the following conditions:
(a) 17 minutes or more after the engine is started and after 9 km (5.6 miles) or more of driving, the ECT is -15°C (5°F) or more.
(b) After starting the engine and a certain period of time has elapsed, the ECT and IAT are -10°C (14°F) or more.
If the conditions are met, the ECM then checks if the ATF temperature is less than 20°C (68°F). If so, the ECM interprets this as a fault and illuminates the MIL.
Case 2 (2 trip detection logic):
First, the ECM checks for the following conditions:
(a) ECT is 60°C (140°F) or more.
(b) After starting the engine and a certain period of time has elapsed, the ECT is less than 35°C (95°F).
If the conditions are met, the ECM then checks if the ATF temperature is 100°C (212°F) or more. If so, the ECM interprets this as a fault and illuminates the MIL.

MONITOR STRATEGY

Related DTCs	P0711: ATF temperature sensor/Rationality check
Required sensors/Components	ATF temperature sensor
Frequency of operation	Continuous
Duration	Condition 1: 3 seconds Condition 2: 10 seconds
MIL operation	2 driving cycles

Sequence of operation	None

TYPICAL ENABLING CONDITIONS

All

The monitor will run whenever this DTC is not present	None P0110-P0113: IAT sensor P0115-P0118: ECT sensor P0710-P0713: Trans fluid temperature sensor

Condition 1

Time after engine start	17 minutes or more
ECT	-15°C (5°F) or more
Driving distance after engine start	9 km (5.6 miles) or more
IAT (12 sec. after engine start)	-10°C (14°F) or more
ECT (12 sec. after engine start)	-10°C (14°F) or more

Condition 2

ECT	60°C (140°F) or more
ECT (12 sec. after engine start)	Less than 35°C (95°F)

TYPICAL MALFUNCTION THRESHOLDS

Condition 1

ATF temperature	Less than 20°C (68°F)

Condition 2

ATF temperature	100°C (212°F) or more

COMPONENT OPERATING RANGE

ATF temperature	Atmospheric temperature - approximately 130°C (266°F)

WIRING DIAGRAM

Refer to DTC P0710 (see page AX-47).

INSPECTION PROCEDURE

HINT:

Using the intelligent tester's DATA LIST allows switch, sensor, actuator and other item values to be read without removing any parts. Reading the DATA LIST early in troubleshooting is one way to save time.

NOTICE:

In the table below, the values listed under "Normal Condition" are reference values. Do not depend solely on these reference values when deciding whether a part is faulty or not.

1. Warm up the engine.
2. Turn the ignition switch OFF.
3. Connect the intelligent tester to the CAN VIM. Then connect the CAN VIM to the DLC3.
4. Turn the ignition switch ON and turn the tester ON.
5. Enter the following menus: DIAGNOSIS / ENHANCED OBD II / DATA LIST.
6. Follow the instructions on the tester and read the DATA LIST.

Item	Measurement Item/ Range (Display)	Normal Condition	Diagnostic Note
A/T OIL TEMP1	ATF temperature sensor value/ Min.: -40°C (-40°F) Max.: 215°C (419°F)	• After stall test: Approximately 80°C (176°F) • Equal to ambient temperature while engine is cold	If value is -40°C (-40°F) or "150°C (302°F) or more", ATF temperature sensor circuit is open or short circuited

HINT:
- When DTC P0712 is output and the tester output is 150°C (302°F) or more, there is a short circuit.
- When DTC P0713 is output and the tester output is -40°C (-40°F), there is an open circuit.
  Measure the resistance between terminal THO1 (THO) and the body ground.

Temperature Displayed	Malfunction
-40°C (-40°F)	Open circuit
150°C (302°F) or more	Short circuit

AX

HINT:
If a circuit related to the ATF temperature sensor becomes open, P0713 is set in approximately 0.5 seconds.
It is not necessary to inspect the circuit when P0711 is set.

1 CHECK OTHER DTC OUTPUT (IN ADDITION TO DTC P0711)

(a) Connect the intelligent tester to the CAN VIM. Then connect the CAN VIM to the DLC3.
(b) Turn the ignition switch ON and turn the tester ON.
(c) Enter the following menus: DIAGNOSIS / ENHANCED OBD II / DTC INFO / CURRENT CODES.
(d) Read the DTCs using the tester.

Result

Display (DTC output)	Proceed to
Only P0711 is output	A
P0711 and other DTCs are output	B

HINT:
If any other codes besides P0711 are output, perform troubleshooting for those DTCs first.

B → **GO TO DTC OUTPUT**

A

2 CHECK TRANSAXLE FLUID LEVEL

OK:
Automatic transaxle fluid level is correct.

NG → **ADD FLUID**

OK

REPAIR OR REPLACE TRANSMISSION WIRE

DTC	P0717	Input Speed Sensor Circuit No Signal

DESCRIPTION

This sensor detects the rotation speed of the turbine, which shows the input revolution of the transaxle. By comparing the input speed signal (NT) with the counter gear speed sensor signal (NC), the ECM detects the shift timing of the gears and controls the engine torque and hydraulic pressure according to various conditions. As a result, smooth gear shifting is achieved.

DTC No.	DTC Detection Condition	Trouble Area
P0717	ECM detects conditions (a), (b) and (c) continuously for 5 sec. or more (1 trip detection logic): (a) Vehicle speed: 50 km/h (31 mph) or more (b) Park/Neutral position switch (NSW, R and L) is OFF (c) Speed sensor NT: Less than 300 rpm	• Open or short in speed sensor NT circuit • Speed sensor NT • ECM

MONITOR DESCRIPTION

This DTC indicates that a pulse is not output from the speed sensor NT (input speed sensor) or is output only a little. The NT terminal of the ECM detects the revolving signal from the speed sensor (NT) (input RPM). The ECM outputs a gear shift signal comparing the input speed sensor (NT) with the output speed sensor (NC).

While the vehicle is operating in the 2nd, 3rd or O/D gear position with the shift lever on D, if the input shaft revolution is less than 300 rpm*1 and the output shaft revolution is 1,000 rpm or more*2, the ECM detects the trouble, illuminates the MIL and stores the DTC.

HINT:

*1: Pulse is not output or is irregularly output.

*2: The vehicle speed is approximately 50 km/h (31 mph) or more.

MONITOR STRATEGY

Related DTCs	P0717: Speed sensor (NT)/Verify pulse input
Required sensors/Components	Speed sensor (NT), Speed sensor (NC)
Frequency of operation	Continuous
Duration	5 sec.
MIL operation	Immediate
Sequence of operation	None

TYPICAL ENABLING CONDITIONS

The monitor will run whenever the following DTCs are not present.	P0500: VSS P0748: Shift solenoid SL1 P0778: Shift solenoid SL2 P0982, P0983: Shift solenoid S4
Shift change	Shift change is completed before starting next shift change operation
ECM selected gear	2nd, 3rd or 4th
Output shaft rpm	1,000 rpm or more
NSW switch	OFF
R switch	OFF
L switch	OFF
Engine	Running
Ignition switch	ON
Starter	OFF

TYPICAL MALFUNCTION THRESHOLDS

Sensor signal rpm	Less than 300 rpm

COMPONENT OPERATING RANGE

Speed sensor (NT)	Input speed is equal to engine speed when lock-up ON.

AX

WIRING DIAGRAM

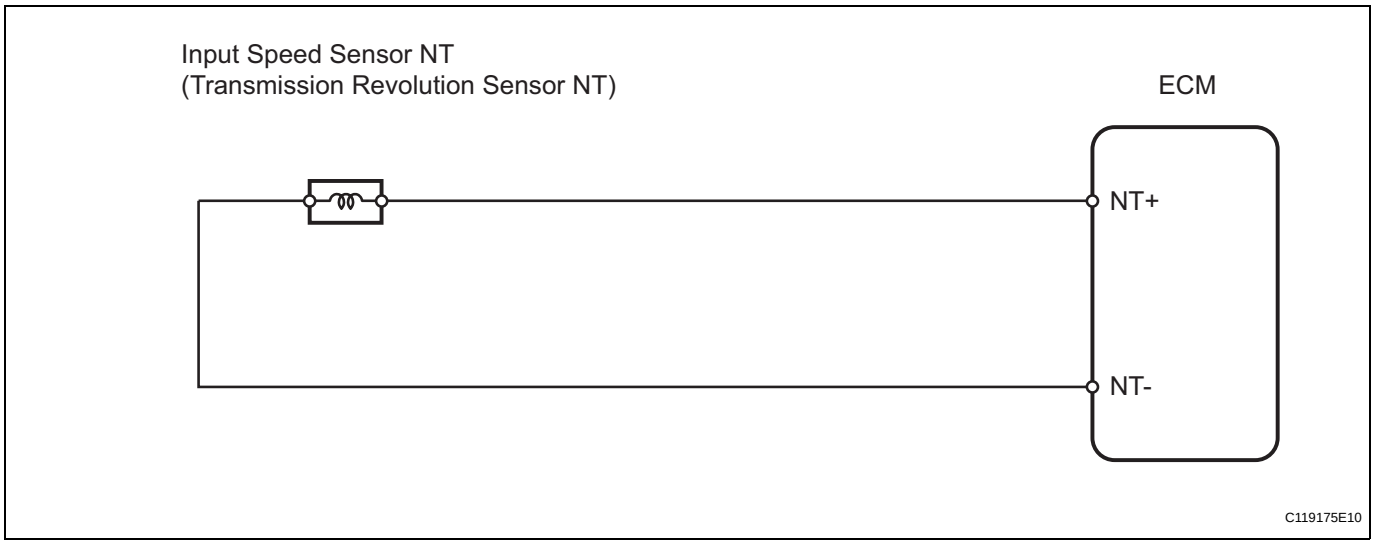

INSPECTION PROCEDURE

HINT:
Using the intelligent tester's DATA LIST allows switch, sensor, actuator and other item values to be read without removing any parts. Reading the DATA LIST early in troubleshooting is one way to save time.
NOTICE:
In the table below, the values listed under "Normal Condition" are reference values. Do not depend solely on these reference values when deciding whether a part is faulty or not.

1. Warm up the engine.
2. Turn the ignition switch OFF.
3. Connect the intelligent tester to the CAN VIM. Then connect the CAN VIM to the DLC3.
4. Turn the ignition switch ON and turn the tester ON.
5. Enter the following menus: DIAGNOSIS / ENHANCED OBD II / DATA LIST.
6. Follow the instructions on the tester and read the DATA LIST.

Item	Measurement Item/ Range (Display)	Normal Condition	Diagnostic Note
SPD (NT)	Input turbine speed/ Min.: 0 rpm Max.: 12,750 rpm	• Lock-up ON (after warming up engine): Input turbine speed (NT) equal to engine speed. • Lock-up OFF (idling with shift lever on N): Input turbine speed (NT) is nearly equal to engine speed.	Data is displayed in increments of 50 rpm

HINT:

- SPD (NT) is always 0 rpm while driving:
  Open or short in the sensor or circuit.

- SPD (NT) is always more than 0 rpm and less than 300 rpm while driving the vehicle at 50 km/h (31 mph) or more:
  Sensor trouble, improper installation, or intermittent connection trouble of the circuit.

1 INSPECT SPEED SENSOR (INSTALLATION)

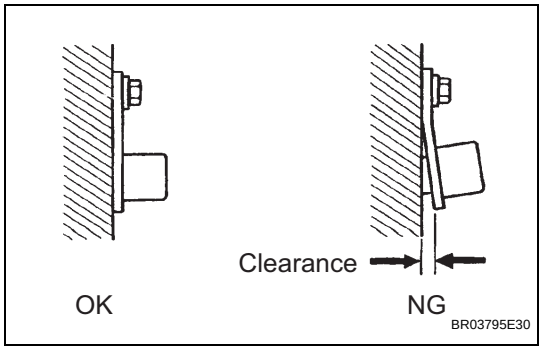

(a) Check the speed sensor NT installation.
OK:
Installation bolt is tightened properly and there is no clearance between the sensor and transaxle case.

NG → **SECURELY INSTALL SENSOR OR REPLACE SPEED SENSOR**

OK

2 INSPECT SPEED SENSOR NT

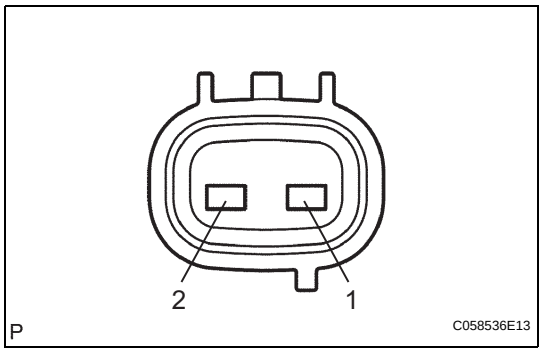

(a) Disconnect the B28 sensor connector from the transaxle.
(b) Measure the resistance of the sensor.
Standard resistance

Tester Connection	Condition	Specified Condition
1 - 2	20°C (68°F)	560 to 680 Ω

NG → **REPLACE SPEED SENSOR NT**

OK

3 CHECK WIRE HARNESS (SPEED SENSOR - ECM)

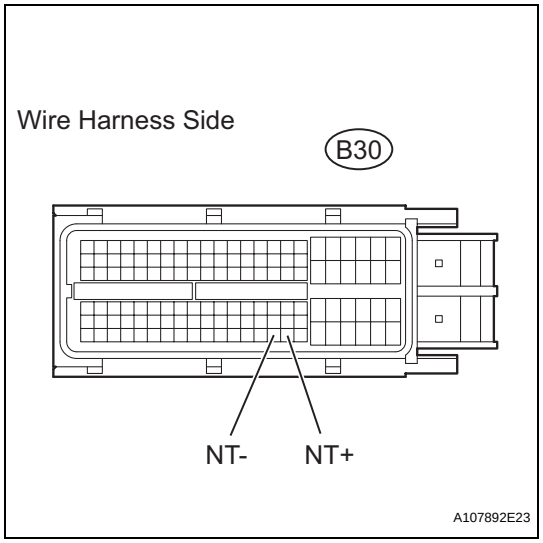

(a) Disconnect the B30 ECM connector.
(b) Measure the resistance of the wire harness side connector.
Standard resistance

Tester Connection	Condition	Specified Condition
B30-125 (NT+) - B30-124 (NT-)	20°C (68°F)	560 to 680 Ω
B30-125 (NT+) - Body ground	20°C (68°F)	10 kΩ or higher
B30-124 (NT-) - Body ground	20°C (68°F)	10 kΩ or higher

NG → **REPAIR OR REPLACE HARNESS AND CONNECTOR**

OK

REPLACE ECM

DTC	P0724	Brake Switch "B" Circuit High

DESCRIPTION

The purpose of this circuit is to prevent the engine from stalling while driving in the lock-up condition when the brakes are suddenly applied.
When the brake pedal is depressed, this switch sends a signal to the ECM. Then the ECM cancels the operation of the lock-up clutch while braking is in progress.

DTC No.	DTC Detection Condition	Trouble Area
P0724	Stop light switch remains ON even when vehicle is driven in GO (30 km/h (18.63 mph) or more) and STOP (less than 3 km/h (1.86 mph)) pattern 5 times (2 trip detection logic)	• Short in stop light switch signal circuit • Stop light switch • ECM

MONITOR DESCRIPTION

This DTC indicates that the stop light switch remains ON. When the stop light switch remains ON during GO and STOP driving, the ECM interprets this as a fault in the stop light switch. Then the MIL illuminates and the ECM stores the DTC. The vehicle must GO (30 km/h (18.63 mph) or more) and STOP (less than 3 km/h (1.86 mph)) 5 times for 2 driving cycles in order for the DTC to be output.

MONITOR STRATEGY

Related DTCs	P0724: Stop light switch/Range check/Rationality
Required sensors/Components	Stop light switch, Vehicle speed sensor
Frequency of operation	Continuous
Duration	GO and STOP 5 times
MIL operation	2 driving cycles
Sequence of operation	None

TYPICAL ENABLING CONDITIONS

The monitor will run whenever this DTC is not present.	None
Battery voltage	8 V or more
Starter	OFF
Ignition switch	ON
GO (Vehicle speed is 30 km/h (18.63 mph) or more)	Once
STOP (Vehicle speed is less than 3 km/h (1.86 mph))	Once

TYPICAL MALFUNCTION THRESHOLDS

Brake switch	Stuck ON

WIRING DIAGRAM

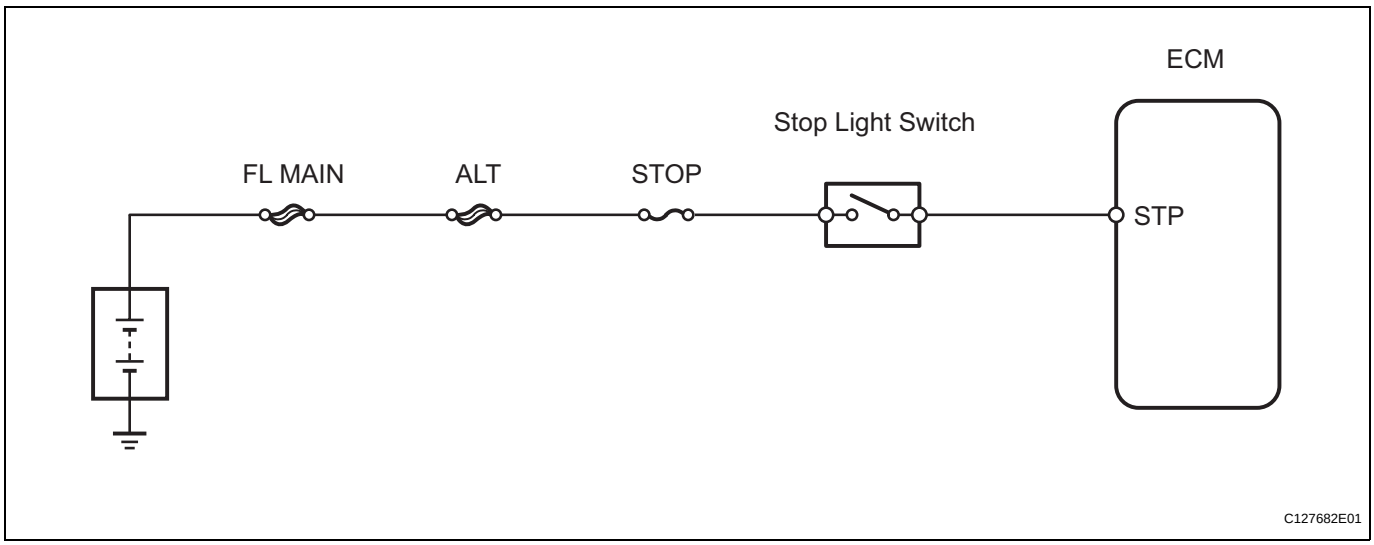

AX

INSPECTION PROCEDURE

HINT:
Using the intelligent tester's DATA LIST allows switch, sensor, actuator and other item values to be read without removing any parts. Reading the DATA LIST early in troubleshooting is one way to save time.
NOTICE:
In the table below, the values listed under "Normal Condition" are reference values. Do not depend solely on these reference values when deciding whether a part is faulty or not.

1. Warm up the engine.
2. Turn the ignition switch OFF.
3. Connect the intelligent tester to the CAN VIM. Then connect the CAN VIM to the DLC3.
4. Turn the ignition switch ON and turn the tester ON.
5. Enter the following menus: DIAGNOSIS / ENHANCED OBD II / DATA LIST.
6. Follow the instructions on the tester and read the DATA LIST.

Item	Measurement Item/ Range (Display)	Normal Condition	Diagnostic Note
STOP LIGHT SW	Stop light switch status/ ON or OFF	• Brake pedal is depressed: ON • Brake pedal is released: OFF	-

1	INSPECT STOP LIGHT SWITCH

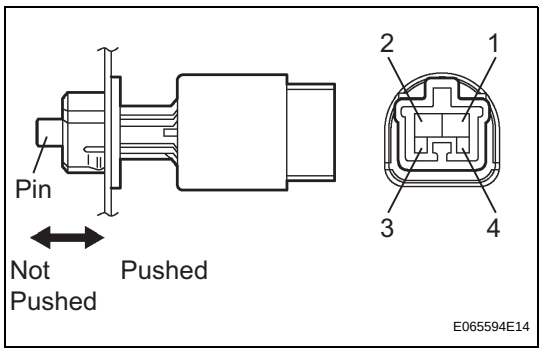

(a) Remove the A3 stop light switch.
(b) Measure the resistance of the switch.
Standard resistance

Tester Connection	Switch Condition	Specified Condition
1 - 2	Pin pushed (pedal released)	Below 1 Ω
1 - 2	Pin not pushed (pedal depressed)	10 kΩ or higher
3 - 4	Pin pushed (pedal released)	10 kΩ or higher
3 - 4	Pin not pushed (pedal depressed)	Below 1 Ω

NG → REPLACE STOP LIGHT SWITCH

OK

2	CHECK WIRE HARNESS (ECM - BATTERY)

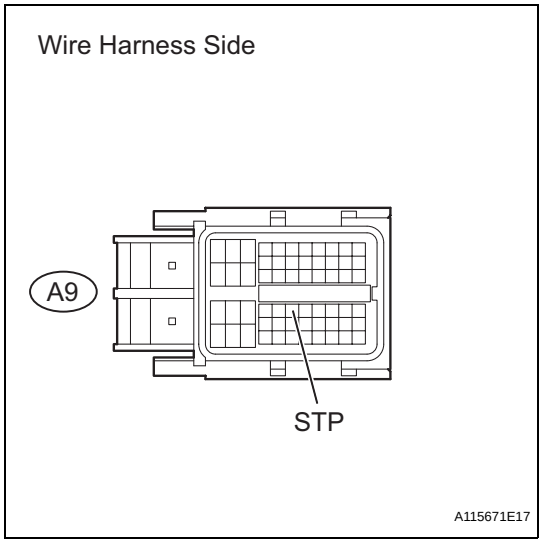

(a) Measure the voltage of the wire harness side connector.
Standard voltage

Tester Connection	Condition	Specified Condition
A9-36 (STP) - Body ground	Brake pedal is depressed	10 to 14 V
A9-36 (STP) - Body ground	Brake pedal is released	Below 1 V

NG → **REPAIR OR REPLACE HARNESS AND CONNECTOR**

OK

REPLACE ECM

AX

DTC	P0741	Torque Converter Clutch Solenoid Performance (Shift Solenoid Valve DSL)

DESCRIPTION

The ECM uses the signals from the throttle position sensor, air-flow meter, turbine (input) speed sensor, intermediate (counter) shaft speed sensor and crankshaft position sensor to monitor the engagement condition of the lock-up clutch.

AX

Then the ECM compares the engagement conditions of the lock-up clutch with the lock-up schedule in the ECM memory to detect mechanical problems of the shift solenoid valve DSL, valve body and torque converter clutch.

DTC No.	DTC Detection Condition	Trouble Area
P0741	Lock-up does not occur when driving in lock-up range Lock-up remains ON in lock-up OFF range (2 trip detection logic)	• Shift solenoid valve DSL remains open or closed • Valve body is blocked • Shift solenoid valve DSL • Torque converter clutch • Automatic transaxle (clutch, brake, gear, etc.) • Line pressure is too low • ECM

MONITOR DESCRIPTION

Torque converter lock-up is controlled by the ECM based on the speed sensor (NT), speed sensor (NC), engine rpm, engine load, engine temperature, vehicle speed, transmission temperature and gear selection.

The ECM determines the lock-up status of the torque converter by comparing the engine rpm (NE) to the input turbine rpm (NT). The ECM calculates the actual transmission gear by comparing input turbine rpm control voltage to counter gear rpm (NC). When conditions are appropriate, the ECM requests "lock-up" by applying control voltage to the shift solenoid valve DSL. When the DSL is turned on, it applies pressure to the lock-up relay valve and locks the torque converter clutch.

If the ECM detects no lock-up after lock-up has been requested or if it detects lock-up when it is not requested, the ECM interprets this as a fault in the shift solenoid valve DSL or lock-up system performance.

The ECM will illuminate the MIL and store the DTC.

Example:

When any of the following is met, the system judges it as a malfunction.

1. There is a difference in rotation between the input side (engine speed) and output side (input turbine speed) of the torque converter when the ECM commands lock-up.
   (Engine speed is at least 100 rpm greater than input turbine speed.)
2. There is no difference in rotation between the input side (engine speed) and output side (input turbine speed) of the torque converter when the ECM commands lock-up OFF.
   (The difference between engine speed and input turbine speed is less than 35 rpm.)

MONITOR STRATEGY

Related DTCs	P0741: Shift solenoid valve DSL/OFF malfunction Shift solenoid valve DSL/ON malfunction
Required sensors/Components	Shift solenoid valve DSL, Speed sensor (NT), Speed sensor (NC), Crankshaft position sensor (NE), Throttle position sensor (VPA1), Mass air flow sensor (MAF), Transmission temperature sensor (THO1), Engine coolant temperature sensor (ECT)
Frequency of operation	Continuous

Duration	OFF malfunction 3.5 sec. ON malfunction 1.8 sec.
MIL operation	2 driving cycles
Sequence of operation	None

TYPICAL ENABLING CONDITIONS

All

The monitor will run when ever this DTC is no present	P0115-P0118: ECT sensor P0125: Insufficient ECT for Closed Loop P0500: VSS P0748-P0799: Trans solenoid (range)
Transmission range	"D"
ECT (Engine coolant temperature)	60°C (140°F) or higher
ATF temperature	-20°C (-4°F) or higher
ATF temperature sensor circuit	Not circuit malfunction
ECT sensor circuit	Not circuit malfunction
Turbine speed sensor circuit	Not circuit malfunction
Intermediate shaft speed sensor circuit	Not circuit malfunction
Output speed sensor circuit	Not circuit malfunction
Shift solenoid valve SL1 circuit	Not circuit malfunction
Shift solenoid valve SL2 circuit	Not circuit malfunction
Shift solenoid valve S4 circuit	Not circuit malfunction
Shift solenoid valve DSL circuit	Not circuit malfunction
Electronic throttle system	Not circuit malfunction

OFF malfunction

ECM lock-up command	ON
ECM selected gear	3rd or 4th
Vehicle speed	25 km/h (15.5 mph) or more

ON malfunction

ECM lock-up command	OFF
ECM selected gear	3rd or 4th
Vehicle speed	25 to 60 km/h (15.5 to 37.2 mph)
Throttle valve opening angle	8% or more

TYPICAL MALFUNCTION THRESHOLDS

Either of the following conditions is met: OFF malfunction or ON malfunction

OFF malfunction

Engine speed - input (turbine) speed	100 rpm or more

ON malfunction

2 detections are necessary per driving cycle:
1st detection: temporary flag ON
2nd detection: pending fault code ON
Vehicle speed must be under 10 km/h (6.2 mph) once before 2nd detection

Difference between engine speed and input (turbine) speed	Less than 35 rpm

WIRING DIAGRAM

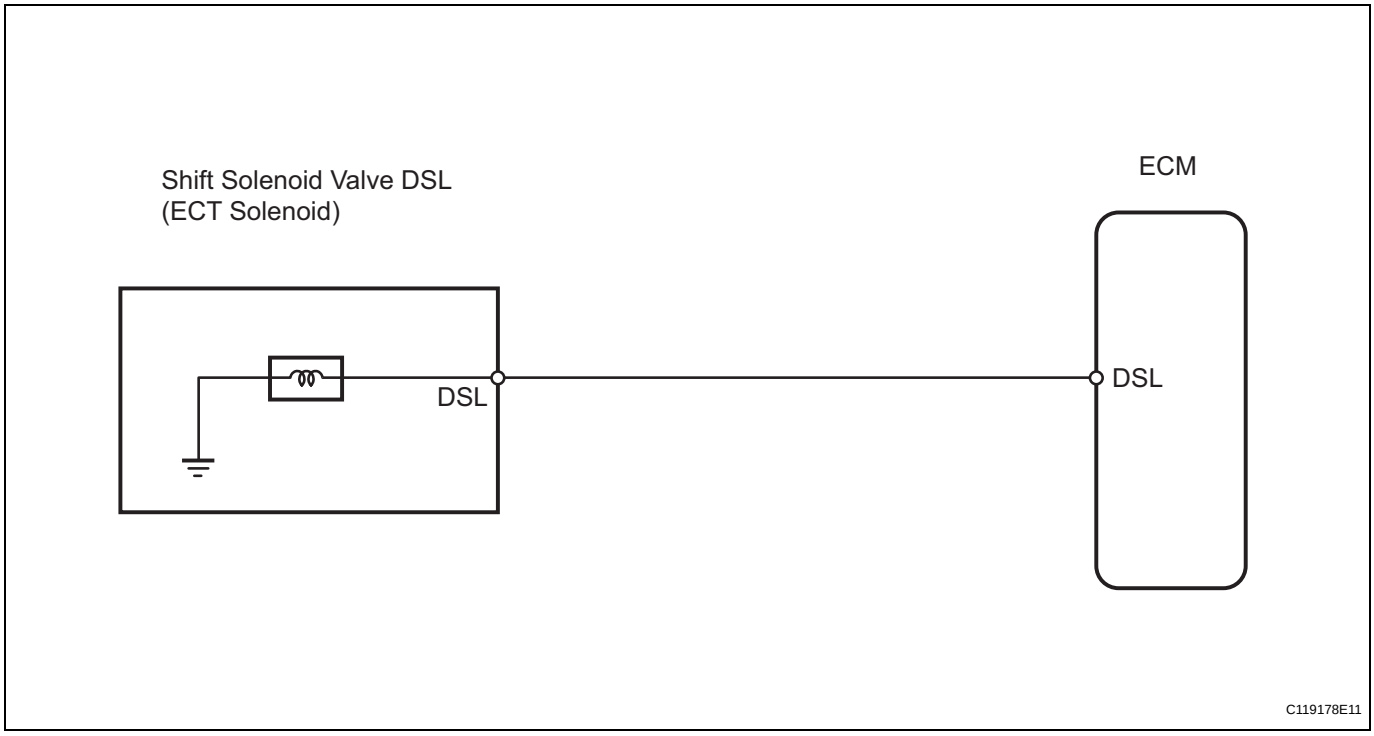

INSPECTION PROCEDURE

HINT:
Performing the intelligent tester's ACTIVE TEST allows relay, VSV, actuator and other items to be operated without removing any parts. Performing the ACTIVE TEST early in troubleshooting is one way to save time.
The DATA LIST can be displayed during the ACTIVE TEST.

1. Warm up the engine.
2. Turn the ignition switch OFF.
3. Connect the intelligent tester to the CAN VIM. Then connect the CAN VIM to the DLC3.
4. Turn the ignition switch ON and turn the tester ON.
5. Enter the following menus: DIAGNOSIS / ENHANCED OBD II / ACTIVE TEST.
6. Follow the instructions on the tester and read the ACTIVE TEST.

Item	Test Detail	Diagnostic Note
LOCK UP	[Test Details] Control shift solenoid DSL to set automatic transaxle to the lock-up condition [Vehicle Condition] • Throttle valve opening angle: Less than 35% • Vehicle speed: 60 km/h (36 mph) or more	Possible to check shift solenoid valve DSL operation

HINT:
- This test can be conducted when the vehicle speed is 60 km/h (36 mph) or more.
- This test can be conducted in the 3rd or O/D gear.

7. Lightly depress the accelerator pedal and check that the engine speed does not change abruptly.
HINT:
- When changing the accelerator pedal opening angle while driving, if the engine speed does not change, lock-up is ON.
- Slowly release the accelerator pedal in order to decelerate. (Do not fully release the pedal as that will close the throttle valve and lock-up may be turned OFF.)

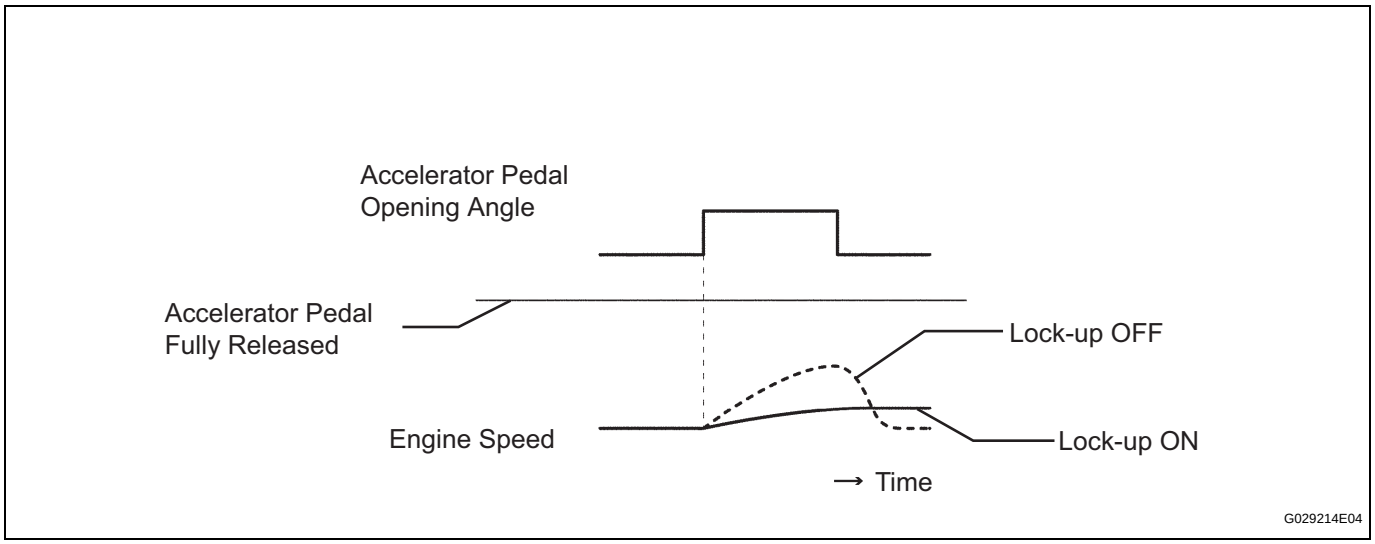

AX

1	CHECK OTHER DTC OUTPUT (IN ADDITION TO DTC P0741)

(a) Connect the intelligent tester to the CAN VIM. Then connect the CAN VIM to the DLC3.
(b) Turn the ignition switch ON and turn the tester ON.
(c) Enter the following menus: DIAGNOSIS / ENHANCED OBD II / DTC INFO / CURRENT CODES.
(d) Read the DTCs using the tester.

Result

Display (DTC output)	Proceed to
Only P0741 is output	A
P0741 and other DTCs are output	B

HINT:
If any other codes besides P0741 are output, perform troubleshooting for those DTCs first.

B → **GO TO DTC CHART**

A

2	INSPECT TRANSMISSION WIRE (SHIFT SOLENOID VALVE DSL)

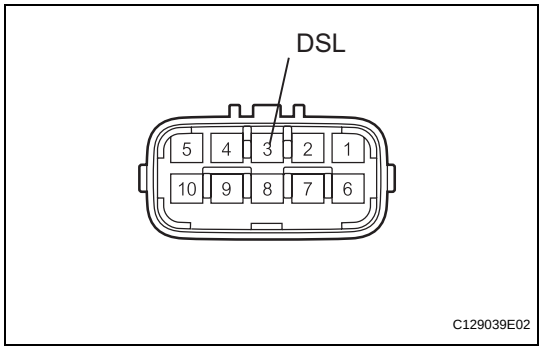

(a) Disconnect the B27 wire connector.
(b) Measure the resistance of the transmission wire.

Standard resistance

Tester Connection	Condition	Specified Condition
3 (DSL) - Body ground	20°C (68°F)	11 to 13 Ω

NG → **Go to step 4**

OK

3	CHECK WIRE HARNESS (TRANSMISSION WIRE - ECM)

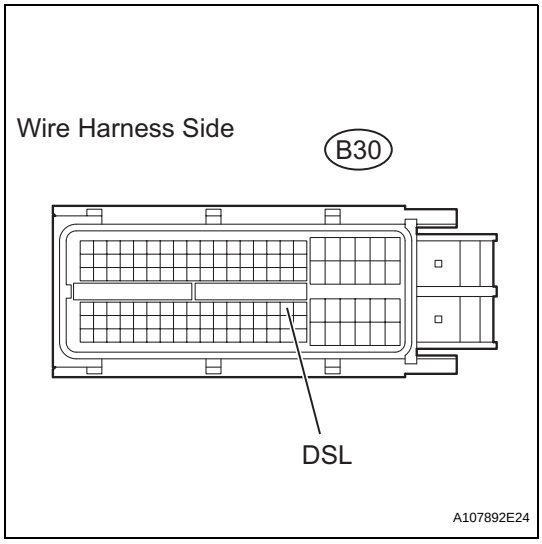

(a) Disconnect the B30 ECM connector.
(b) Measure the resistance of the wire harness side connector.
Standard resistance

Tester Connection	Condition	Specified Condition
B30-79 (DSL) - Body ground	20°C (68°F)	11 to 13 Ω

NG → **REPAIR OR REPLACE HARNESS AND CONNECTOR**

OK

REPLACE ECM

4	INSPECT SHIFT SOLENOID VALVE DSL

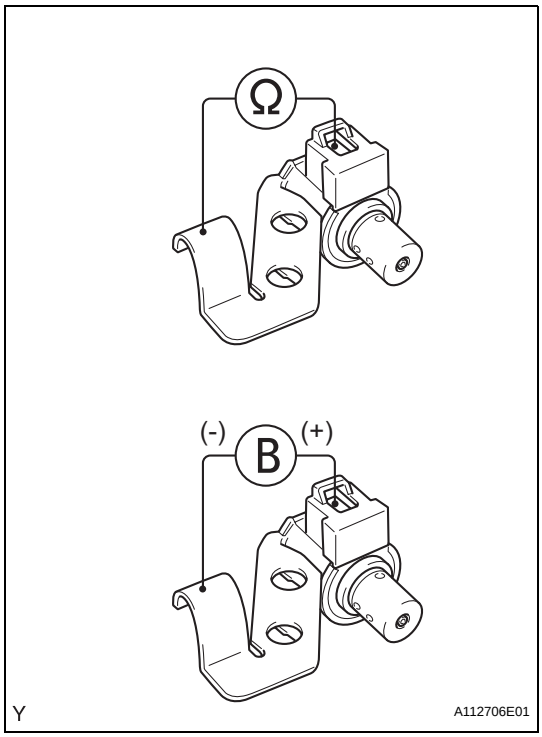

(a) Remove the shift solenoid valve DSL.
(b) Measure the resistance of the solenoid valve.
Standard resistance:
11 to 13 Ωat 20°C (68°F)
(c) Connect the battery's positive (+) lead to the terminal of the solenoid valve connector, and the negative (-) lead to the solenoid body. Then check that the valve moves and makes an operating noise.
OK:
Valve moves and makes operating noise.

NG → **REPLACE SHIFT SOLENOID VALVE DSL**

OK

5	CHECK TRANSMISSION WIRE

OK:
The connectors and pins are securely installed.
There is no open or short on the wire harness.

NG → **REPAIR OR REPLACE TRANSMISSION WIRE**

OK

6	INSPECT TRANSMISSION VALVE BODY ASSEMBLY

(a) Check the transmission valve body assembly.
OK:
There are no foreign objects on each valve.

NG → **REPAIR OR REPLACE TRANSMISSION VALVE BODY ASSEMBLY**

OK

7	INSPECT TORQUE CONVERTER CLUTCH ASSEMBLY

(a) Check the torque converter clutch assembly (see page AX-152).
OK:
The torque converter clutch operates normally.

NG → **REPLACE TORQUE CONVERTER CLUTCH ASSEMBLY**

OK

REPAIR AUTOMATIC TRANSAXLE ASSEMBLY

DTC	P0746	Pressure Control Solenoid "A" Performance (Shift Solenoid Valve SL1)

DESCRIPTION

The ECM uses signals from the vehicle speed sensor to detect the actual gear position (1st, 2nd, 3rd or O/D gear).

AX

Then the ECM compares the actual gear with the shift schedule in the ECM memory to detect mechanical problems of the shift solenoid valves, valve body or automatic transaxle (clutch, brake, gear, etc.).

DTC No.	DTC Detection Condition	Trouble Area
P0746	Gear required by the ECM does not match the actual gear when driving (2 trip detection logic)	• Shift solenoid valve SL1 remains open or closed • Valve body is blocked • Shift solenoid valve SL1 • Automatic transaxle (clutch, brake, gear, etc.) • ECM

MONITOR DESCRIPTION

The ECM commands gear shifts by turning the shift solenoid valves ON/OFF. According to the input shaft revolution, intermediate (counter) shaft revolution and output shaft revolution, the ECM detects the actual gear position (1st, 2nd, 3rd or O/D gear position). When the gear position commanded by the ECM and the actual gear position are not the same, the ECM illuminates the MIL.

Example:

When either condition (a) or (b) is met, the ECM detects a malfunction.

(a) The ECM commands the 1st gear, but the actual gear is 2nd.

(b) The ECM commands the 2nd gear, but the actual gear is 1st.

MONITOR STRATEGY

Related DTCs	P0746: Shift solenoid valve SL1/OFF malfunction Shift solenoid valve SL1/ON malfunction
Required sensors/Components	Shift solenoid valve SL1, Speed sensor (NT), Speed sensor (NC), Crankshaft position sensor (NE)
Frequency of operation	Continuous
Duration	OFF malfunction, ON malfunction (A) 0.8 sec. ON malfunction (B) 1 sec.
MIL operation	2 driving cycles
Sequence of operation	None

TYPICAL ENABLING CONDITIONS

All

Transmission range	"D"
ECT (Engine coolant temperature)	60°C (140°F) or more
ATF temperature	-20°C (-4°F) or more
ATF temperature sensor circuit	Not circuit malfunction
ECT sensor circuit	Not circuit malfunction
Turbine speed sensor circuit	Not circuit malfunction
Intermediate shaft speed sensor circuit	Not circuit malfunction
Output speed sensor circuit	Not circuit malfunction
Shift solenoid valve SL1 circuit	Not circuit malfunction

Shift solenoid valve SL2 circuit	Not circuit malfunction
Shift solenoid valve S4 circuit	Not circuit malfunction
Electronic throttle system	Not circuit malfunction

OFF malfunction

ECM selected gear	1st
Vehicle speed	10 to 40 km/h (6.2 to 24.9 mph)
Throttle valve opening angle	4.5% or more (varies with engine speed)

ON malfunction (A)

ECM selected gear	2nd
Vehicle speed	10 km/h (6.2 mph) or more
Throttle valve opening angle	4.5% or more (varies with engine speed)

ON malfunction (B)

ECM lock-up command	OFF
ECM selected gear	3rd or 4th

TYPICAL MALFUNCTION THRESHOLDS

Either of the following conditions is met:
OFF malfunction, or ON malfunction (A) and (B)
2 detections are necessary per driving cycle:
1st detection: temporary flag ON
2nd detection: pending fault code ON

OFF malfunction

Input (turbine) speed/Intermediated shaft speed	1.49 to 1.63

ON malfunction (A)

Input (turbine) speed/Intermediated shaft speed	2.72 to 2.86

ON malfunction (B)

Engine speed - Input (turbine) speed	250 rpm or more

INSPECTION PROCEDURE

HINT:
Performing the intelligent tester's ACTIVE TEST allows relay, VSV, actuator and other items to be operated without removing any parts. Performing the ACTIVE TEST early in troubleshooting is one way to save time.
The DATA LIST can be displayed during the ACTIVE TEST.

1. Warm up the engine.
2. Turn the ignition switch OFF.
3. Connect the intelligent tester to the CAN VIM. Then connect the CAN VIM to the DLC3.
4. Turn the ignition switch ON and turn the tester ON.
5. Enter the following menus: DIAGNOSIS / ENHANCED OBD II / ACTIVE TEST.
6. Follow the instructions on the tester and read the ACTIVE TEST.
   HINT:
   While driving, the shift position can be forcibly changed with the tester. Comparing the shift position commanded by the ACTIVE TEST with the actual shift position enables you to confirm the problem (see page AX-31).

Item	Test Detail	Diagnostic Note
SHIFT	[Test Details] Operate shift solenoid valve and set each shift lever position by yourself [Vehicle Condition] • IDL: ON • 50 km/h (31 mph) or less [Other information] • Press "→" button: Shift up • Press "←" button: Shift down	Possible to check operation of shift solenoid valves

AX

HINT:
- This test can be conducted when the vehicle speed is 50 km/h (31 mph) or more.
- This shift position commanded by the ECM is shown in the DATA LIST/SHIFT display on the tester.

1 CHECK OTHER DTC OUTPUT (IN ADDITION TO DTC P0746)

(a) Connect the intelligent tester to the CAN VIM. Then connect the CAN VIM to the DLC3.
(b) Turn the ignition switch ON and turn the tester ON.
(c) Enter the following menus: DIAGNOSIS / ENHANCED OBD II / DTC INFO / CURRENT CODES.
(d) Read the DTCs using the tester.

Result

Display (DTC output)	Proceed to
Only P0746 is output	A
P0746 and other DTCs are output	B

HINT:
If any other codes besides P0746 are output, perform the troubleshooting for those DTCs first.

B → GO TO DTC CHART

A

2	INSPECT SHIFT SOLENOID VALVE SL1

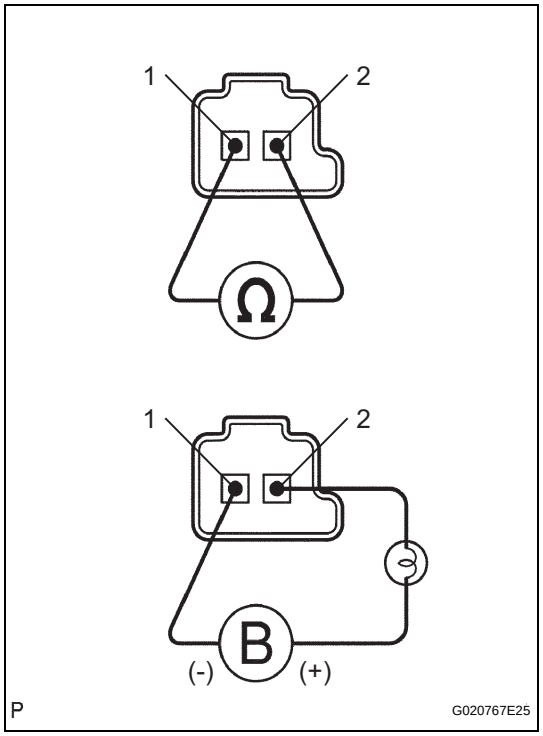

(a) Remove the shift solenoid valve SL1.
(b) Measure the resistance of the solenoid valve.
Standard resistance:
5.0 to 5.6 Ωat 20°C (68°F)
(c) Connect the battery's positive (+) lead with a 21 W bulb to terminal 2 and the negative (-) lead to terminal 1 of the solenoid valve connector. Then check that the valve moves and makes an operating noise.
OK:
Valve moves and makes operating noise.

NG → **REPLACE SHIFT SOLENOID VALVE SL1**

OK

3	INSPECT TRANSMISSION VALVE BODY ASSEMBLY

(a) Check the transmission valve body assembly.
OK:
There are no foreign objects on each valve.

NG → **REPAIR OR REPLACE TRANSMISSION VALVE BODY ASSEMBLY**

OK

4	INSPECT TORQUE CONVERTER CLUTCH ASSEMBLY

(a) Check the torque converter clutch assembly (see page AX-152).
OK:
The torque converter clutch operates normally.

NG → **REPLACE TORQUE CONVERTER CLUTCH ASSEMBLY**

OK

REPAIR OR REPLACE AUTOMATIC TRANSAXLE ASSEMBLY

DTC	P0748	Pressure Control Solenoid "A" Electrical (Shift Solenoid Valve SL1)

DESCRIPTION

Shifting from 1st to O/D is performed in combination with the ON and OFF operation of the shift solenoid valves SL1 and SL2, which are controlled by the ECM. If an open or short circuit occurs in any of the shift solenoid valves, the ECM controls the remaining normal shift solenoid valves to allow the vehicle to be operated safely (see page AX-31).

DTC No.	DTC Detection Condition	Trouble Area
P0748	Duty cycle to shift solenoid valve SL1 is 100% (1 trip detection logic)	• Open or short in shift solenoid valve SL1 circuit • Shift solenoid valve SL1 • ECM

MONITOR DESCRIPTION

This DTC indicates an open or short in the shift solenoid valve SL1 circuit. The ECM commands gear shifts by turning the shift solenoid valves ON/OFF. When there is an open or short circuit in any shift solenoid valve circuit, the ECM detects the problem, illuminates the MIL and stores the DTC. Also, the ECM performs the fail-safe function and turns the other normal shift solenoid valves ON/OFF. In case of an open or short circuit, the ECM stops sending current to the circuit (see page AX-31).

MONITOR STRATEGY

Related DTCs	P0748: Shift solenoid valve SL1/Range check
Required sensors/Components	Shift solenoid valve SL1
Frequency of operation	Continuous
Duration	1 sec.
MIL operation	Immediate
Sequence of operation	None

TYPICAL ENABLING CONDITIONS

The monitor will run whenever this DTC is not present.	None
Battery voltage	11 V or more
Starter	OFF
Ignition switch	ON

TYPICAL MALFUNCTION THRESHOLDS

Solenoid status	Fail

COMPONENT OPERATING RANGE

Output signal duty	Less than 100%

WIRING DIAGRAM

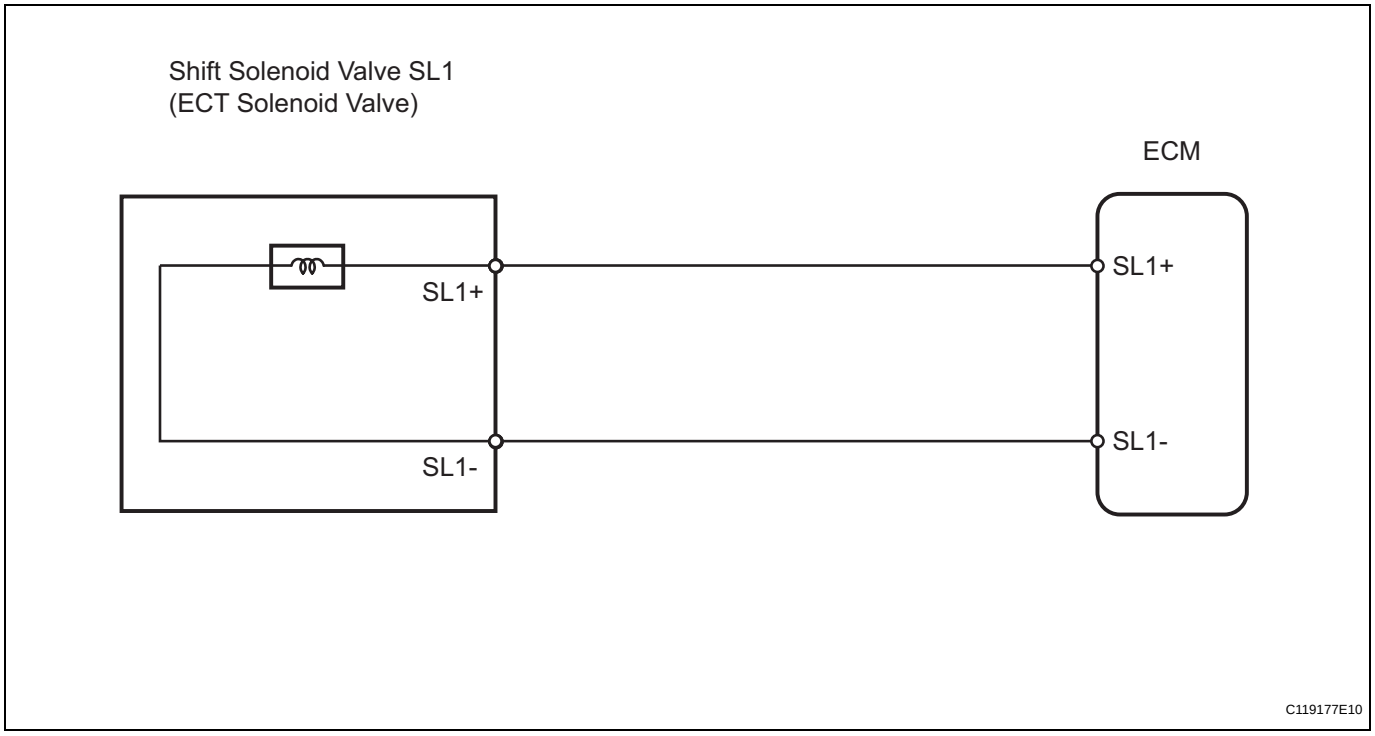

AX

INSPECTION PROCEDURE

1	INSPECT TRANSMISSION WIRE (SHIFT SOLENOID VALVE SL1)

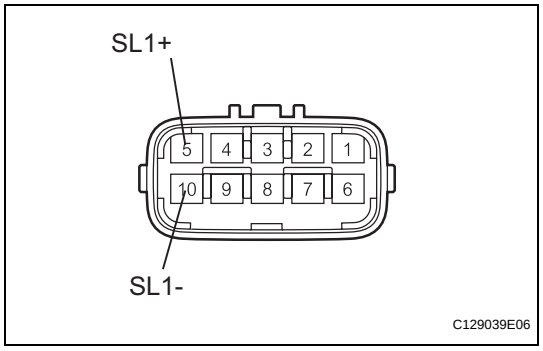

(a) Disconnect the B27 wire connector.
(b) Measure the resistance of the transmission wire.

Standard resistance

Tester Connection	Condition	Specified Condition
5 (SL1+) - 10 (SL1-)	20°C (68°F)	5.0 to 5.6 Ω
5 (SL1+) - Body ground	20°C (68°F)	1 MΩ or higher
10 (SL1-) - Body ground	20°C (68°F)	1 MΩ or higher

NG → **Go to step 3**

OK

2	CHECK WIRE HARNESS (TRANSMISSION WIRE - ECM)

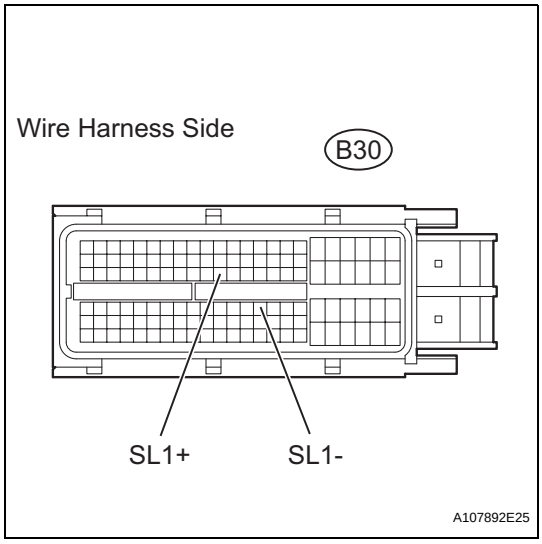

(a) Disconnect the B30 ECM connector.
(b) Measure the resistance of the wire harness side connector.
Standard resistance

Tester Connection	Condition	Specified Condition
B30-57 (SL1+) - B30-77 (SL1-)	20°C (68°F)	5.0 to 5.6 Ω
B30-57 (SL1+) - Body ground	20°C (68°F)	1 MΩ or higher
B30-77 (SL1-) - Body ground	20°C (68°F)	1 MΩ or higher

NG → **REPAIR OR REPLACE HARNESS AND CONNECTOR**

OK

REPLACE ECM

3	INSPECT SHIFT SOLENOID VALVE SL1

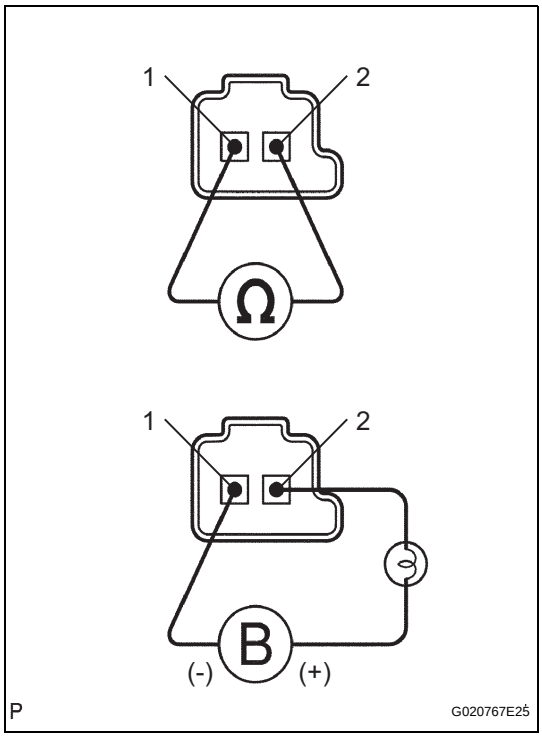

(a) Remove the shift solenoid valve SL1.
(b) Measure the resistance of the solenoid valve.
Standard resistance:
5.0 to 5.6 Ωat 20°C (68°F)
(c) Connect the battery's positive (+) lead with a 21 W bulb to terminal 2 and the negative (-) lead to terminal 1 of the solenoid valve connector. Then check that the valve moves and makes an operating noise.
OK:
Valve moves and makes operating noise.

NG → **REPLACE SHIFT SOLENOID VALVE SL1**

OK

REPAIR OR REPLACE TRANSMISSION WIRE

DTC	P0766	Shift Solenoid "D" Performance (Shift Solenoid Valve S4)

SYSTEM DESCRIPTION

The ECM uses signals from the output shaft speed sensor and input speed sensor to detect the actual gear position (1st, 2nd, 3rd or O/D gear).
Then the ECM compares the actual gear with the shift schedule in the ECM memory to detect mechanical problems of the shift solenoid valves, valve body or automatic transaxle (clutch, brake, gear, etc.).

DTC No.	DTC Detection Condition	Trouble Area
P0766	Gear required by the ECM does not match the actual gear when driving (2 trip detection logic)	• Shift solenoid valve S4 remains open or closed • Valve body is blocked • Shift solenoid valve S4 • Automatic transaxle (clutch, brake, gear, etc.) • ECM

MONITOR DESCRIPTION

This DTC indicates a stuck OFF malfunction of the shift solenoid valve S4, stuck ON malfunction of the shift solenoid valve SL2, or brake control valve malfunction. The ECM commands gear shifts by turning the shift solenoid valves ON/OFF. When the gear position commanded by the ECM and the actual gear position are not the same, the ECM illuminates the MIL and stores the DTC.

MONITOR STRATEGY

Related DTCs	P0766: Shift solenoid valve S4/ON malfunction Shift solenoid valve S4/OFF malfunction
Required sensors/Components	Shift solenoid valve S4, Speed sensor (NT), Speed sensor (NC), Crankshaft position sensor (NE)
Frequency of operation	Continuous
Duration	1 sec.
MIL operation	2 driving cycles
Sequence of operation	None

TYPICAL ENABLING CONDITIONS

All

Transmission range	"D"
ECT (Engine coolant temperature)	60°C (140°F) or more
ATF temperature	-20°C (-4°F) or more
ATF temperature circuit	Not circuit malfunction
ECT sensor circuit	Not circuit malfunction
Turbine speed sensor circuit	Not circuit malfunction
Intermediate shaft speed sensor circuit	Not circuit malfunction
Output speed sensor circuit	Not circuit malfunction
Shift solenoid valve SL1 circuit	Not circuit malfunction
Shift solenoid valve SL2 circuit	Not circuit malfunction
Shift solenoid valve S4 circuit	Not circuit malfunction
Electric throttle control system	Not circuit malfunction

OFF malfunction

ECM selected gear	4th

Vehicle speed	10 km/h (6.2 mph) or more
Throttle valve opening angle	5% or more

ON malfunction

ECM selected gear	3rd
Vehicle speed	10 km/h (6.2 mph) or more
Throttle valve opening angle	5% or more

TYPICAL MALFUNCTION THRESHOLDS

Either of the following conditions is met:
OFF malfunction or ON malfunction
2 detections are necessary per driving cycle:
1st detection: temporary flag ON
2nd detection: pending fault code ON

OFF malfunction

Intermediate shaft speed/Output speed	1.34 to 1.48

ON malfunction

Intermediate shaft speed/Output speed	0.95 to 1.09

INSPECTION PROCEDURE

HINT:
Performing the intelligent tester's ACTIVE TEST allows relay, VSV, actuator and other items to be operated without removing any parts. Performing the ACTIVE TEST early in troubleshooting is one way to save time.
The DATA LIST can be displayed during the ACTIVE TEST.

1. Warm up the engine.
2. Turn the ignition switch OFF.
3. Connect the intelligent tester to the CAN VIM. Then connect the CAN VIM to the DLC3.
4. Turn the ignition switch ON and turn the tester ON.
5. Enter the following menus: DIAGNOSIS / ENHANCED OBD II / ACTIVE TEST.
6. Follow the instructions on the tester and perform the ACTIVE TEST.

HINT:
While driving, the shift position can be forcibly changed with the tester.
Comparing the shift position commanded by the ACTIVE TEST with the actual shift position enables you to confirm the problem (see page AX-31).

Item	Test Details	Diagnostic Note
SHIFT	[Test Details] Operate the shift solenoid valve and set each shift lever position by yourself [Vehicle Condition] • IDL: ON • 50 km/h (31 mph) or less [Other information] • Press "→" button: Shift up • Press "←" button: Shift down	Possible to check the operation of the shift solenoid valves

HINT:

- This test can be conducted when the vehicle speed is 50 km/h (31 mph) or less.
- The shift position commanded by the ECM is shown in the DATA LIST/SHIFT display on the tester.

1	CHECK OTHER DTC OUTPUT (IN ADDITION TO DTC P0766)

(a) Connect the intelligent tester to the CAN VIM. Then connect the CAN VIM to the DLC3.
(b) Turn the ignition switch ON and turn the tester ON.
(c) Enter the following menus: DIAGNOSIS / ENHANCED OBD II / DTC INFO / CURRENT CODES.
(d) Read the DTCs using the tester.

Result

Display (DTC output)	Proceed to
Only P0766 is output	A
P0766 and other DTCs are output	B

HINT:
If any other codes besides P0766 are output, perform troubleshooting for those DTCs first.

B → **GO TO DTC CHART**

A

2	INSPECT SHIFT SOLENOID VALVE S4

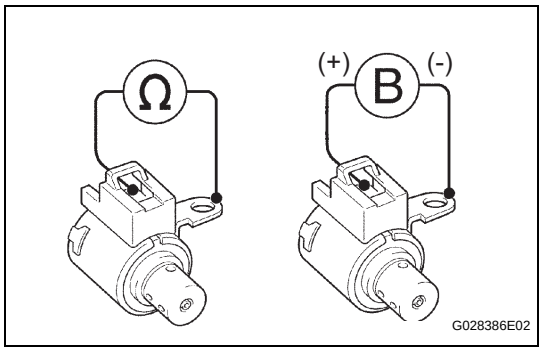

(a) Remove the shift solenoid valve S4.
(b) Measure the resistance between the solenoid valve terminal and solenoid valve body.
Standard resistance:
11 to 15 Ω at 20°C (68°F)
(c) Connect the battery's positive (+) lead to the terminal of the solenoid valve connector, and the negative (-) lead to the solenoid body. Then check that the valve moves and makes an operating noise.
OK:
Valve moves and makes operating noise.

NG → **REPLACE SHIFT SOLENOID VALVE S4**

OK

3	INSPECT TRANSMISSION VALVE BODY ASSEMBLY

(a) Check the transmission valve body assembly.
OK:
There are no foreign objects on each valve.

NG → **REPAIR OR REPLACE TRANSMISSION VALVE BODY ASSEMBLY**

OK

4	INSPECT TORQUE CONVERTER CLUTCH ASSEMBLY

(a) Check the torque converter clutch assembly (see page AX-152).

OK:

The torque converter clutch operates normally.

NG → **REPLACE TORQUE CONVERTER CLUTCH ASSEMBLY**

OK

REPAIR OR REPLACE AUTOMATIC TRANSAXLE ASSEMBLY

DTC	P0776	Pressure Control Solenoid "B" Performance (Shift Solenoid Valve SL2)

DESCRIPTION

The ECM uses signals from the output shaft speed sensor and input speed sensor to detect the actual gear position (1st, 2nd, 3rd or O/D gear).
Then the ECM compares the actual gear with the shift schedule in the ECM memory to detect mechanical problems of the shift solenoid valves, valve body or automatic transaxle (clutch, brake, gear, etc.).

DTC No.	DTC Detection Condition	Trouble Area
P0776	Gear required by the ECM does not match the actual gear when driving (2 trip detection logic)	• Shift solenoid valve SL2 remains open • Valve body is blocked • Automatic transaxle (clutch, brake, gear, etc.) • ECM

MONITOR DESCRIPTION

This DTC indicates a stuck ON malfunction or stuck OFF malfunction of the shift solenoid valve SL2.
The ECM commands gear shifts by turning the shift solenoid valves ON/OFF. When the gear position commanded by the ECM and the actual gear position are not the same, the ECM illuminates the MIL and stores the DTC.

MONITOR STRATEGY

Related DTCs	P0776: Shift solenoid valve SL2/ON malfunction Shift solenoid valve SL2/OFF malfunction
Required sensors/Components	Shift solenoid valve SL2, Speed sensor (NT), Speed sensor (NO), Crankshaft position sensor (NE)
Frequency of operation	Continuous
Duration	0.8 sec.
MIL operation	2 driving cycles
Sequence of operation	None

TYPICAL ENABLING CONDITIONS

All

Transmission range	"D"
ECT (Engine coolant temperature)	60°C (140°F) or more
ATF temperature	-20°C (-4°F) or more
ATF temperature circuit	Not circuit malfunction
ECT sensor circuit	Not circuit malfunction
Turbine speed sensor circuit	Not circuit malfunction
Intermediate shaft speed sensor circuit	Not circuit malfunction
Output speed sensor circuit	Not circuit malfunction
Shift solenoid valve SL1 circuit	Not circuit malfunction
Shift solenoid valve SL2 circuit	Not circuit malfunction
Shift solenoid valve S4 circuit	Not circuit malfunction
Electric throttle control system	Not circuit malfunction

OFF malfunction

ECM selected gear	1st
Vehicle speed	10 to 40 km/h (6.2 to 24.9 mph)
Throttle valve opening angle	4.5% or more (varies with engine speed)

ON malfunction

ECM selected gear	3rd or 4th
Vehicle speed	10 km/h (6.2 mph) or more
Throttle valve opening angle	4.5% or more (varies with engine speed)

TYPICAL MALFUNCTION THRESHOLDS

AX

Either of the following conditions is met:
OFF malfunction or ON malfunction
2 detections are necessary per driving cycle:
1st detection: temporary flag ON
2nd detection: pending fault code ON

OFF malfunction

Input (turbine) speed/Intermediate shaft speed	0.93 to 1.07

ON malfunction

Input (turbine) speed/Intermediate shaft speed	1.49 to 1.63

INSPECTION PROCEDURE

HINT:
Performing the intelligent tester's ACTIVE TEST allows relay, VSV, actuator and other items to be operated without removing any parts. Performing the ACTIVE TEST early in troubleshooting is one way to save time.
The DATA LIST can be displayed during the ACTIVE TEST.

1. Warm up the engine.
2. Turn the ignition switch OFF.
3. Connect the intelligent tester to the CAN VIM. Then connect the CAN VIM to the DLC3.
4. Turn the ignition switch ON and turn the tester ON.
5. Enter the following menus: DIAGNOSIS / ENHANCED OBD II / ACTIVE TEST.
6. Follow the instructions on the tester and perform the ACTIVE TEST.

HINT:
While driving, the shift position can be forcibly changed with the tester.
Comparing the shift position commanded by the ACTIVE TEST with the actual shift position enables you to confirm the problem (see page AX-31).

Item	Test Details	Diagnostic Note
SHIFT	[Test Details] Operate the shift solenoid valve and set each shift lever position by yourself [Vehicle Condition] • IDL: ON • 50 km/h (31 mph) or less [Other information] • Press "→" button: Shift up • Press "←" button: Shift down	Possible to check the operation of the shift solenoid valves

HINT:
- This test can be conducted when the vehicle speed is 50 km/h (31 mph) or less.
- The shift position commanded by the ECM is shown in the DATA LIST/SHIFT display on the tester.

1	**CHECK OTHER DTC OUTPUT (IN ADDITION TO DTC P0776)**

(a) Connect the intelligent tester to the CAN VIM. Then connect the CAN VIM to the DLC3.
(b) Turn the ignition switch ON and turn the tester ON.

(c) Enter the following menus: DIAGNOSIS / ENHANCED OBD II / DTC INFO / CURRENT CODES.
(d) Read the DTCs using the tester.
Result

Display (DTC output)	Proceed to
Only P0776 is output	A
P0776 and other DTCs are output	B

HINT:
If any other codes besides P0776 are output, perform troubleshooting for those DTCs first.

B → **GO TO DTC CHART**

A

2 INSPECT SHIFT SOLENOID VALVE SL2

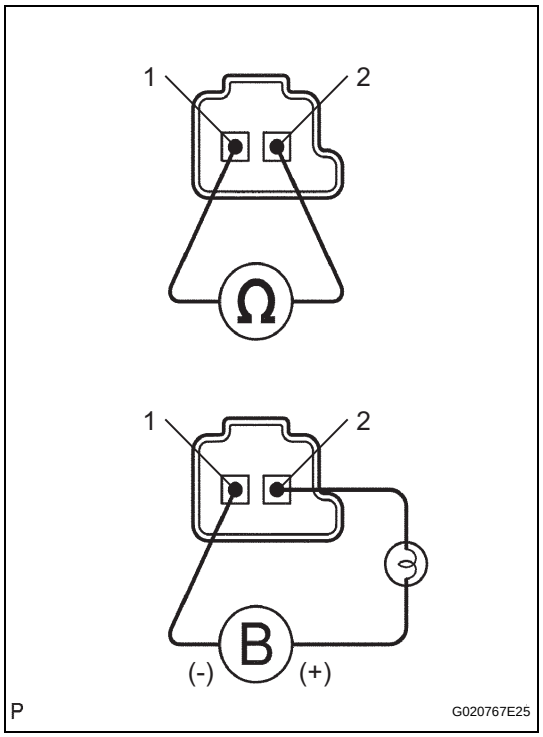

(a) Remove the shift solenoid valve SL2.
(b) Measure the resistance of the solenoid valve.
Standard resistance:
5.0 to 5.6 Ωat 20°C (68°F)
(c) Connect the battery's positive (+) lead with a 21 W bulb to terminal 2 and the negative (-) lead to terminal 1 of the solenoid valve connector. Then check that the valve moves and makes an operating noise.
OK:
Valve moves and makes operating noise.

NG → **REPLACE SHIFT SOLENOID VALVE SL2**

OK

3 INSPECT TRANSMISSION VALVE BODY ASSEMBLY

(a) Check the transmission valve body assembly.
OK:
There are no foreign objects on each valve.

NG → **REPAIR TRANSMISSION VALVE BODY ASSEMBLY**

OK

4	INSPECT TORQUE CONVERTER CLUTCH ASSEMBLY

(a) Check the torque converter clutch assembly (see page AX-152).

OK:

The torque converter clutch operates normally.

NG → **REPLACE TORQUE CONVERTER CLUTCH ASSEMBLY**

OK

REPAIR OR REPLACE AUTOMATIC TRANSAXLE ASSEMBLY

DTC	P0778	Pressure Control Solenoid "B" Electrical (Shift Solenoid Valve SL2)

DESCRIPTION

Shifting from 1st to O/D is performed in combination with the ON and OFF operation of the shift solenoid valves SL1 and SL2, which are controlled by the ECM. If an open or short circuit occurs in any of the shift solenoid valves, the ECM controls the remaining normal shift solenoid valves to allow the vehicle to be operated safely (see page AX-31).

DTC No.	DTC Detection Condition	Trouble Area
P0778	Duty cycle to shift solenoid valve SL2 is 100% (1 trip detection logic)	• Open or short in shift solenoid valve SL2 circuit • Shift solenoid valve SL2 • ECM

MONITOR DESCRIPTION

This DTC indicates an open or short in the shift solenoid valve SL2 circuit. The ECM commands gear shifts by turning the shift solenoid valves ON/OFF. When there is an open or short circuit in any shift solenoid valve circuit, the ECM detects the problem, illuminates the MIL and stores the DTC. Also, the ECM performs the fail-safe function and turns the other normal shift solenoid valves ON/OFF. In case of an open or short circuit, the ECM stops sending current to the circuit (see page AX-31).

MONITOR STRATEGY

Related DTCs	P0778: Shift solenoid valve SL2/Range check
Required sensors/Components	Shift solenoid valve SL2
Frequency of operation	Continuous
Duration	1 sec.
MIL operation	Immediate
Sequence of operation	None

TYPICAL ENABLING CONDITIONS

The monitor will run whenever this DTC is not present.	None
Battery voltage	11 V or more
Starter	OFF
Ignition switch	ON

TYPICAL MALFUNCTION THRESHOLDS

Solenoid status	Fail

COMPONENT OPERATING RANGE

Output signal duty	Less than 100%

WIRING DIAGRAM

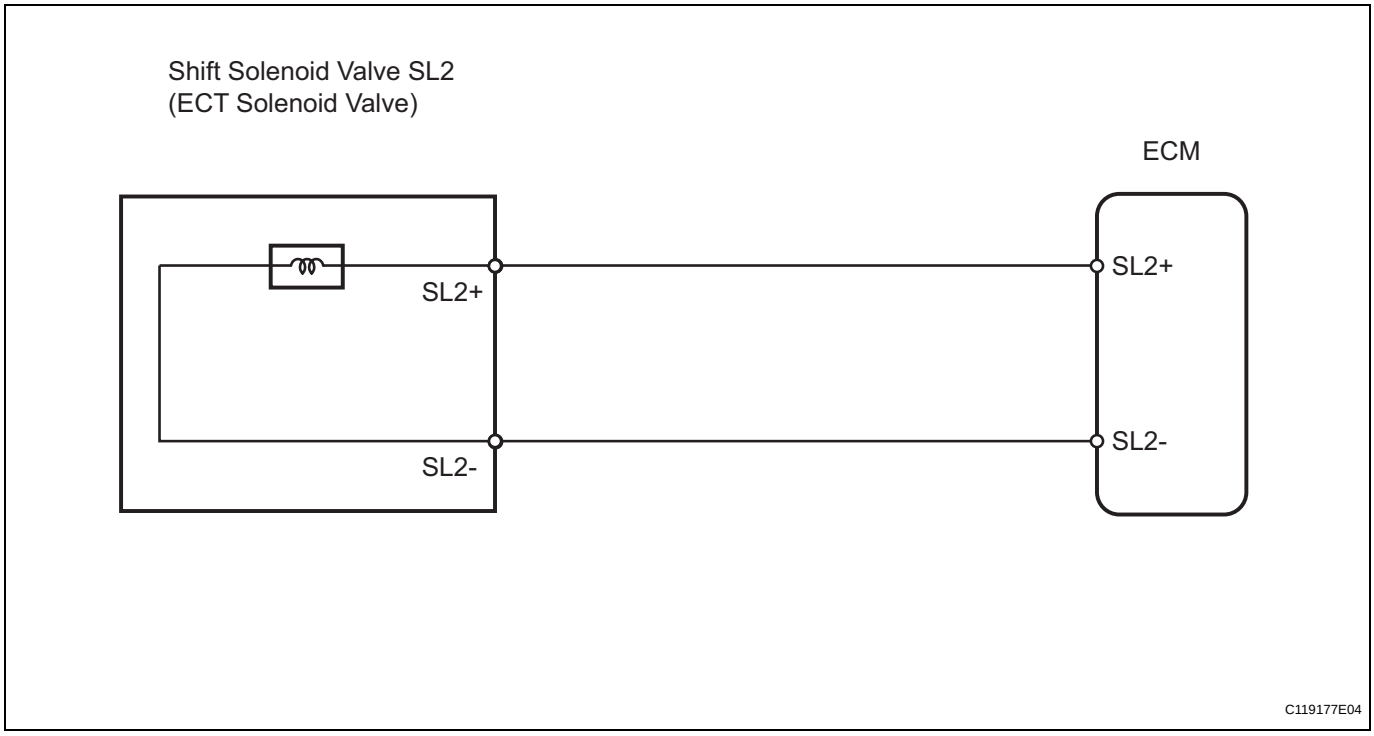

AX

INSPECTION PROCEDURE

1	INSPECT TRANSMISSION WIRE (SHIFT SOLENOID VALVE SL2)

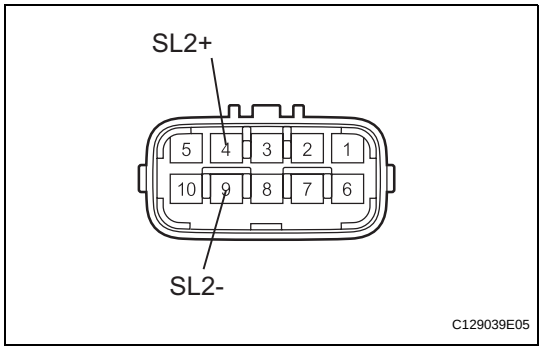

(a) Disconnect the B27 wire connector.
(b) Measure the resistance of the transmission wire.

Standard resistance

Tester Connection	Condition	Specified Condition
4 (SL2+) - 9 (SL2-)	20°C (68°F)	5.0 to 5.6 Ω
4 (SL2+) - Body ground	20°C (68°F)	1 MΩ or higher
9 (SL2-) - Body ground	20°C (68°F)	1 MΩ or higher

NG → **Go to step 3**

OK

2 CHECK WIRE HARNESS (TRANSMISSION WIRE - ECM)

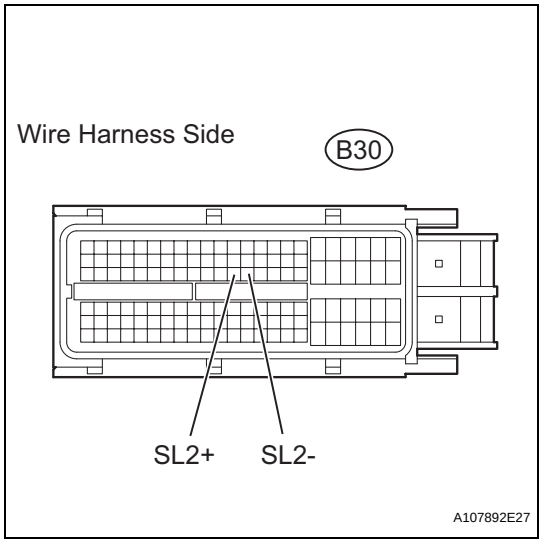

(a) Disconnect the B30 ECM connector.
(b) Measure the resistance of the wire harness side connector.
Standard resistance

Tester Connection	Condition	Specified Condition
B30-58 (SL2+) - B30-59 (SL2-)	20°C (68°F)	5.0 to 5.6 Ω
B30-58 (SL2+) - Body ground	20°C (68°F)	1 MΩ or higher
B30-59 (SL2-) - Body ground	20°C (68°F)	1 MΩ or higher

NG → **REPAIR OR REPLACE HARNESS AND CONNECTOR**

OK

REPLACE ECM

3 INSPECT SHIFT SOLENOID VALVE SL2

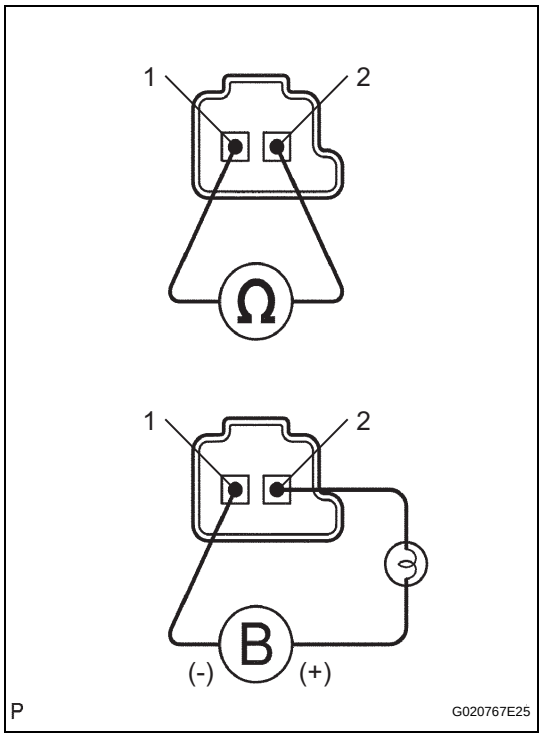

(a) Remove the shift solenoid valve SL2.
(b) Measure the resistance of the solenoid valve.
Standard resistance:
5.0 to 5.6 Ωat 20°C (68°F)
(c) Connect the battery's positive (+) lead with a 21 W bulb to terminal 2 and the negative (-) lead to terminal 1 of the solenoid valve connector. Then check that the valve moves and makes an operating noise.
OK:
Valve moves and makes operating noise.

NG → **REPLACE SHIFT SOLENOID VALVE SL2**

OK

REPAIR OR REPLACE TRANSMISSION WIRE

DTC	P0793	Intermediate Shaft Speed Sensor "A"

DESCRIPTION

This sensor detects the rotation speed of the counter gear. By comparing the counter gear speed signal (NC) with the direct clutch speed sensor signal (NT), the ECM detects the shift timing of the gears and approximately controls the engine torque and hydraulic pressure according to various conditions. Thus smooth gear shifting is performed.

DTC No.	DTC Detection Condition	Trouble Area
P0793	ECM detects conditions (a) and (b) continuously for 5 sec. or more (1 trip detection logic): (a) Park/Neutral position switch (NSW) is OFF (b) Speed sensor NC: Less than 300 rpm	• Open or short in speed sensor NC circuit • Speed sensor NC • ECM

MONITOR DESCRIPTION

The NC terminal of the ECM detects revolution signals from speed sensor NC (counter gear rpm). The ECM calculates gear shifts by comparing speed sensor NT with speed sensor NC.
While the vehicle is operating in the 2nd, 3rd or O/D gear position with the shift lever on D, if the counter gear revolution is less than 300 rpm*1 and the output shaft revolution is more than 1,000 rpm*2, the ECM detects the trouble, illuminates the MIL and stores the DTC.
*1: Pulse is not output or is irregularly output.
*2: The vehicle speed is 50 km/h (31 mph) or more.

MONITOR STRATEGY

Related DTCs	P0793: Speed sensor (NC)/Verify pulse input
Required sensors/Components	Speed sensor (NC), Speed sensor (NT), NSW switch
Frequency of operation	Continuous
Duration	5 sec.
MIL operation	Immediate
Sequence of operation	None

TYPICAL ENABLING CONDITIONS

The monitor will run whenever the following DTCs are not present.	P0500: VSS P0748: Shift solenoid SL1 P0778: Shift solenoid SL2 P0982, P0983: Shift solenoid S4
Engine	Running
NSW switch	OFF
Output shaft rpm	1,000 rpm or more

TYPICAL MALFUNCTION THRESHOLDS

Sensor signal rpm	Less than 300 rpm

COMPONENT OPERATING RANGE

Counter gear speed sensor (NC)	4th (O/D) when shift lever is on D (after warming up the engine); Intermediate shaft speed (NC) becomes close to the engine speed

WIRING DIAGRAM

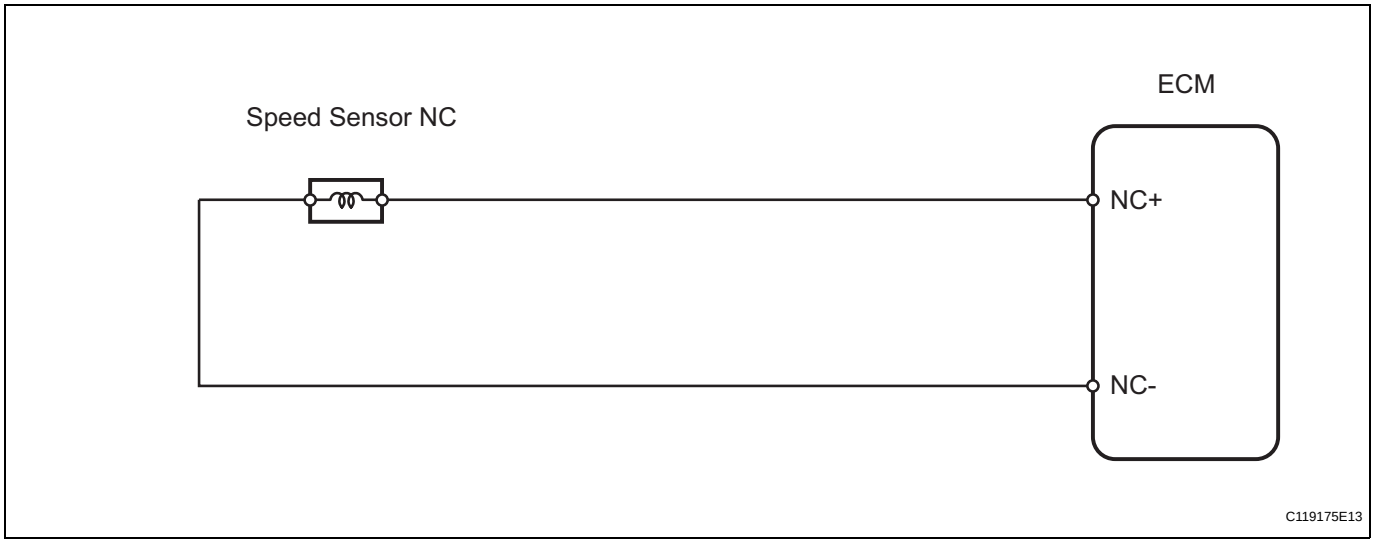

INSPECTION PROCEDURE

HINT:
Using the intelligent tester's DATA LIST allows switch, sensor, actuator and other item values to be read without removing any parts. Reading the DATA LIST early in troubleshooting is one way to save time.
NOTICE:
In the table below, the values listed under "Normal Condition" are reference values. Do not depend solely on these reference values when deciding whether a part is faulty or not.

1. Warm up the engine.
2. Turn the ignition switch OFF.
3. Connect the intelligent tester to the CAN VIM. Then connect the CAN VIM to the DLC3.
4. Turn the ignition switch ON and turn the tester ON.
5. Enter the following menus: DIAGNOSIS / ENHANCED OBD II / DATA LIST.
6. Follow the instructions on the tester and read the DATA LIST.

Item	Measurement Item/ Range (Display)	Normal Condition	Diagnostic Note
SPD (NC)	Counter gear speed/ Min.: 0 rpm Max.: 12,750 rpm	4th (O/D) when shift lever is on D (after warming up the engine); Intermediate shaft speed (NC) becomes close to the engine speed	Data is displayed in increments of 50 rpm

HINT:

- SPD (NC) is always 0 rpm while driving:
  Open or short in the sensor or circuit.
- SPD (NC) is always more than 0 and less than 300 rpm while driving the vehicle at 50 km/h (31 mph) or more:
  Sensor trouble, improper installation, or intermittent connection trouble of the circuit.

AX

1	INSPECT SPEED SENSOR (INSTALLATION)

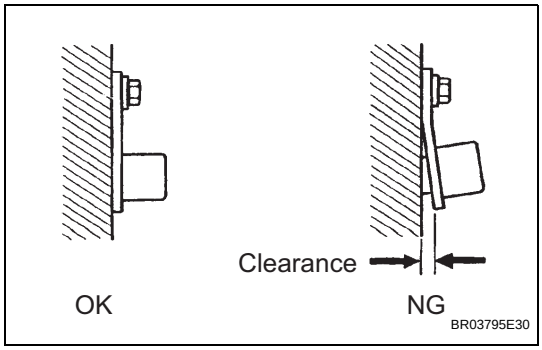

(a) Check the speed sensor NC installation.
OK:
Installation bolt is tightened properly and there is no clearance between the sensor and transaxle case.

NG → **REPLACE SPEED SENSOR NC**

OK

2	INSPECT SPEED SENSOR NC

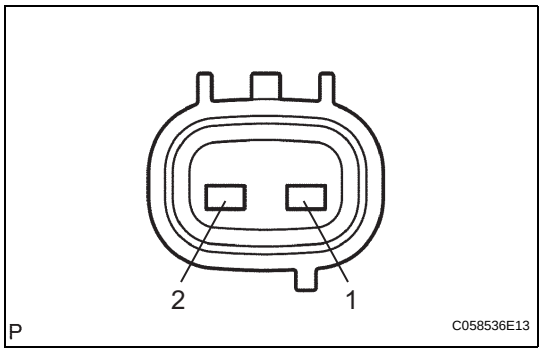

(a) Disconnect the B24 sensor connector from the transaxle.
(b) Measure the resistance of the sensor.
Standard resistance

Tester Connection	Condition	Specified Condition
1 - 2	20°C (68°F)	560 to 680 Ω

NG → **REPLACE SPEED SENSOR NC**

OK

3	CHECK WIRE HARNESS (SPEED SENSOR - ECM)

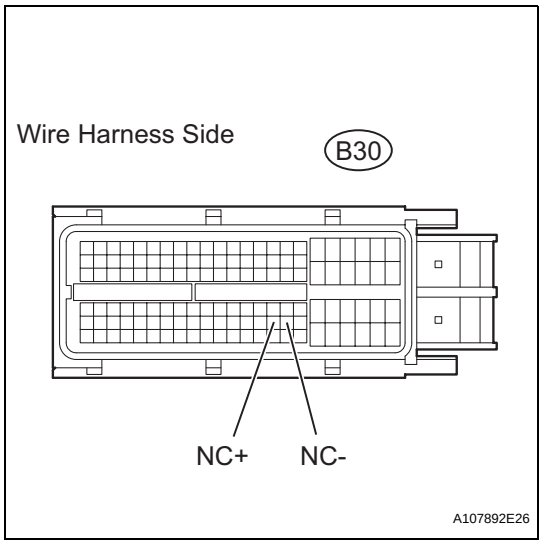

(a) Disconnect the B30 ECM connector.
(b) Measure the resistance of the wire harness side connector.
Standard resistance

Tester Connection	Specified Condition
B30-101 (NC+) - B30-102 (NC-)	560 to 680 Ω
B30-101 (NC+) - Body ground	10 kΩ or higher
B30-102 (NC-) - Body ground	10 kΩ or higher

NG → **REPAIR OR REPLACE HARNESS AND CONNECTOR**

OK

REPLACE ECM

DTC	P0982	Shift Solenoid "D" Control Circuit Low (Shift Solenoid Valve S4)

DTC	P0983	Shift Solenoid "D" Control Circuit High (Shift Solenoid Valve S4)

AX

DESCRIPTION

Shifting from 1st to O/D is performed in combination with the ON and OFF operation of the shift solenoid valves SL1 and SL2, which are controlled by the ECM. If an open or short circuit occurs in any of the shift solenoid valves, the ECM controls the remaining normal shift solenoid valves to allow the vehicle to be operated safely (see page AX-31).

DTC No.	DTC Detection Condition	Trouble Area
P0982	ECM detects short in solenoid valve S4 circuit 2 times when solenoid valve S4 is operated (1 trip detection logic)	• Short in shift solenoid valve S4 circuit • Shift solenoid valve S4 • ECM
P0983	ECM detects open in solenoid valve S4 circuit 2 times when solenoid valve S4 is not operated (1 trip detection logic)	• Open in shift solenoid valve S4 circuit • Shift solenoid valve S4 • ECM

MONITOR DESCRIPTION

This DTC indicates an open or short in the shift solenoid valve S4 circuit. The ECM commands gear shifts by turning the shift solenoid valves ON/OFF. When there is an open or short circuit in any shift solenoid valve circuit, the ECM detects the problem, illuminates the MIL and stores the DTC. Also, the ECM performs the fail-safe function and turns the other normal shift solenoid valves ON/OFF. In case of an open or short circuit, the ECM stops sending current to the circuit (see page AX-31).

MONITOR STRATEGY

Related DTCs	P0982: Shift solenoid valve S4/Range check (Low resistance) P0983: Shift solenoid valve S4/Range check (High resistance)
Required sensors/Components	Shift solenoid valve S4
Frequency of operation	Continuous
Duration	0.128 sec.
MIL operation	Immediate
Sequence of operation	None

TYPICAL ENABLING CONDITIONS

P0982: Range check (Low resistance)

The monitor will run whenever this DTC is not present.	None
Shift solenoid valve S4	ON
Battery voltage	8 V or more
Ignition switch	ON
Starter	OFF

P0983: Range check (High resistance)

The monitor will run whenever this DTC is not present	None
Shift solenoid valve S4	OFF
Battery voltage	8 V or more
Ignition switch	ON
Starter	OFF

TYPICAL MALFUNCTION THRESHOLDS

P0982: Range check (Low resistance)

Shift solenoid valve S4 resistance	8 Ω or less

P0983: Range check (High resistance)

Shift solenoid valve S4 resistance	100 kΩ or more

COMPONENT OPERATING RANGE

Shift solenoid valve S4	Resistance: 11 to 15 Ω at 20°C (68°F)

WIRING DIAGRAM

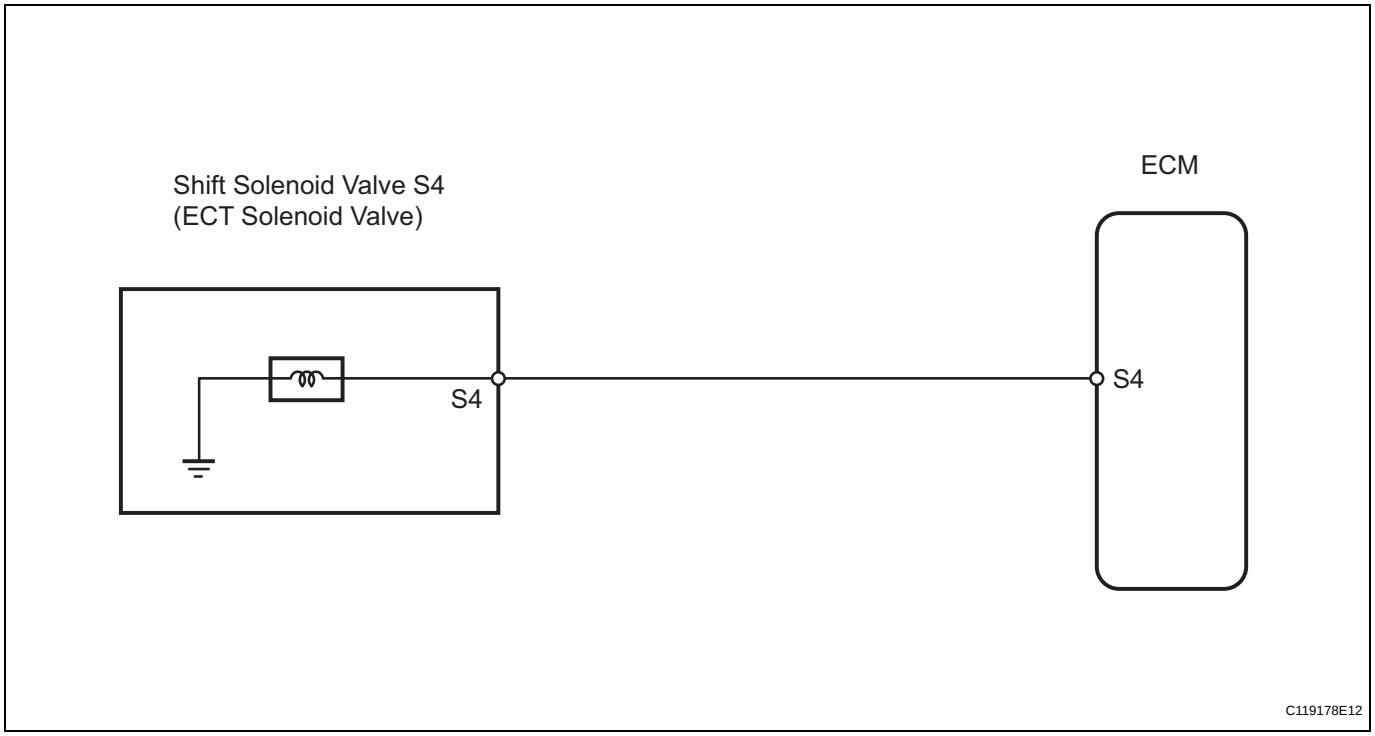

INSPECTION PROCEDURE

1	INSPECT TRANSMISSION WIRE (SHIFT SOLENOID VALVE S4)

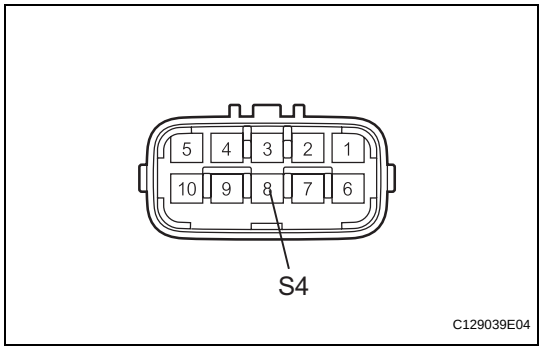

(a) Disconnect the B27 wire connector.
(b) Measure the resistance of the transmission wire.
Standard resistance

Tester Connection	Condition	Specified Condition
8 (S4) - Body ground	20°C (68°F)	11 to 15 Ω

NG → **Go to step 3**

OK

2	CHECK WIRE HARNESS (TRANSMISSION WIRE - ECM)

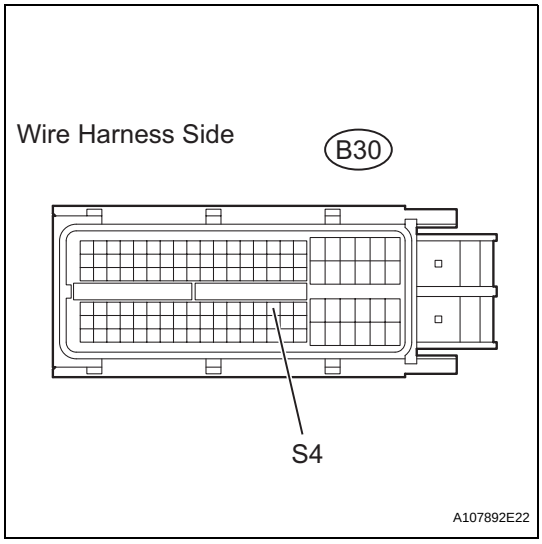

(a) Disconnect the B30 ECM connector.
(b) Measure the resistance of the wire harness side connector.
Standard resistance

Tester Connection	Condition	Specified Condition
B30-78 (S4) - Body ground	20°C (68°F)	11 to 15 Ω

NG → **REPAIR OR REPLACE HARNESS AND CONNECTOR**

OK

REPLACE ECM

3	INSPECT SHIFT SOLENOID VALVE S4

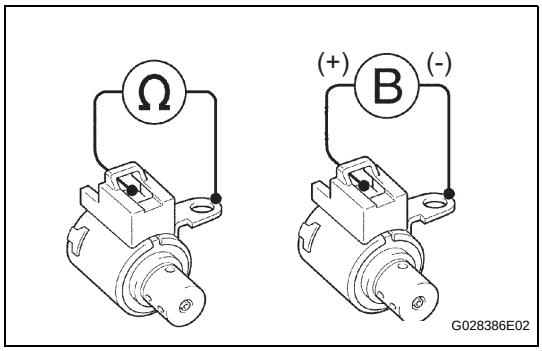

(a) Remove the shift solenoid valve S4.
(b) Measure the resistance of the solenoid valve.
Standard resistance:
11 to 15 Ω at 20°C (68°F)
(c) Connect the battery's positive (+) lead to the terminal of the solenoid valve connector, and the negative (-) lead to the solenoid body. Then check that the valve moves and makes an operating noise.
OK:
Valve moves and makes operating noise.

NG → **REPLACE SHIFT SOLENOID VALVE S4**

OK

REPAIR OR REPLACE TRANSMISSION WIRE

DTC	P2714	Pressure Control Solenoid "D" Performance (Shift Solenoid Valve SLT)

DESCRIPTION

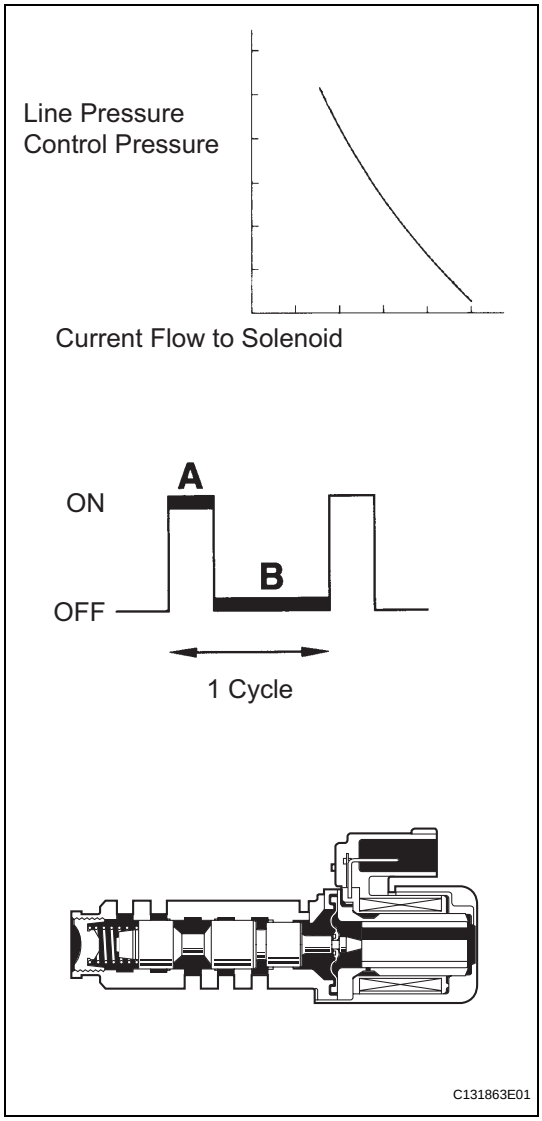

The throttle pressure that is applied to the primary regulator valve (which modulates the line pressure) causes the solenoid valve SLT, under electronic control, to precisely modulate and generate the line pressure according to the extent that the accelerator pedal is depressed or the output of engine power. This controls the line pressure and provides smooth shifting characteristics.
Upon receiving a signal of the throttle valve opening angle, the ECM controls the line pressure by sending a predetermined duty ratio* to the solenoid valve, modulating the line pressure and generating throttle pressure.
HINT:
*: The duty ratio is the ratio of the current ON time (A) to the total of the current ON and OFF time (A + B).
Duty Ratio (%) = A / (A + B) x 100

DTC No.	DTC Detection Condition	Trouble Area
P2714	ECM detects malfunction on SLT (ON side) according to difference in revolutions of turbine (input) and output shaft (2 trip detection logic)	• Shift solenoid valve SLT remains open or closed • Valve body is blocked • Torque converter clutch • Automatic transaxle (clutch, brake or gear etc.) • ECM

AX

MONITOR DESCRIPTION

In any forward position, when the difference between the revolutions of the turbine and output shaft exceeds the specified value (varies with output speed) determined by the ECM, the ECM illuminates the MIL and outputs the DTC. When shift solenoid valve SLT remains on, the oil pressure goes down and the clutch engagement force decreases.

MONITOR STRATEGY

Related DTCs	P2714: Shift solenoid valve SLT/ON malfunction
Required sensors/Components	Shift solenoid valve SLT, Speed sensor (NT), Speed sensor (SPD)
Frequency of operation	Continuous
Duration	1 second
MIL operation	2 driving cycles
Sequence of operation	None

TYPICAL ENABLING CONDITIONS

The following conditions are common to ON malfunctions (a), (b), (c) and (d).

The monitor runs whenever the following DTCs are not present	None
Transmission shift position	D
Time after shifting N to D	4.5 seconds or more
ATF (Automatic Transmission Fluid) temperature	-10°C (14°F) or more
ATF temperature sensor (TFT sensor) circuit	No circuit malfunction
Electronic Throttle Control System (if applicable)	No circuit malfunction
Shift solenoid valve S1 circuit	No circuit malfunction
Shift solenoid valve S2 circuit	No circuit malfunction
Shift solenoid valve SLU circuit	No circuit malfunction
Shift solenoid valve SLT circuit	No circuit malfunction
Speed sensor (NT) circuit	No circuit malfunction
Speed sensor (SPD) circuit	No circuit malfunction

ON malfunction (a):

ECM gearshift command	1st
Input (turbine) speed	300 rpm or more
Output speed	300 rpm or more

ON malfunction (b):

ECM gearshift command	2nd
Input (turbine) speed	300 rpm or more
Output speed	300 rpm or more

ON malfunction (c):

ECM gearshift command	3rd
Input (turbine) speed	300 rpm or more
Output speed	300 rpm or more

ON malfunction (d):

ECM gearshift command	4th
Input (turbine) speed	300 rpm or more
Output speed	300 rpm or more

TYPICAL MALFUNCTION THRESHOLDS

[ON malfunction]

Detection condition: Total accumulated time of ON malfunctions (a), (b), (c) and (d) is 1 second or more

ON malfunction (a):

NT - NC x 1st gear ratio (without counter gear and under drive gear) NT: Input (turbine) speed NC: Counter gear speed	More than 300 rpm at counter gear speed of 1,000 rpm (Conditions vary with counter gear speed)
Duration	0.85 seconds or more

ON malfunction (b):

NT - NC x 2nd gear ratio (without counter gear and under drive gear)	More than 300 rpm at counter gear speed of 1,000 rpm (Conditions vary with counter gear speed)
Duration	0.85 seconds or more

ON malfunction (c):

NT - NC x 3rd gear ratio (without counter gear and under drive gear)	More than 300 rpm at counter gear speed of 1,000 rpm (Conditions vary with counter gear speed)
Duration	0.85 seconds or more

ON malfunction (d):

NC - NO x Counter gear ratio x under drive gear ratio (Low or High)	More than 300 rpm at output speed of 1,000 rpm (Conditions vary with output speed)
Duration	0.85 seconds or more

WIRING DIAGRAM

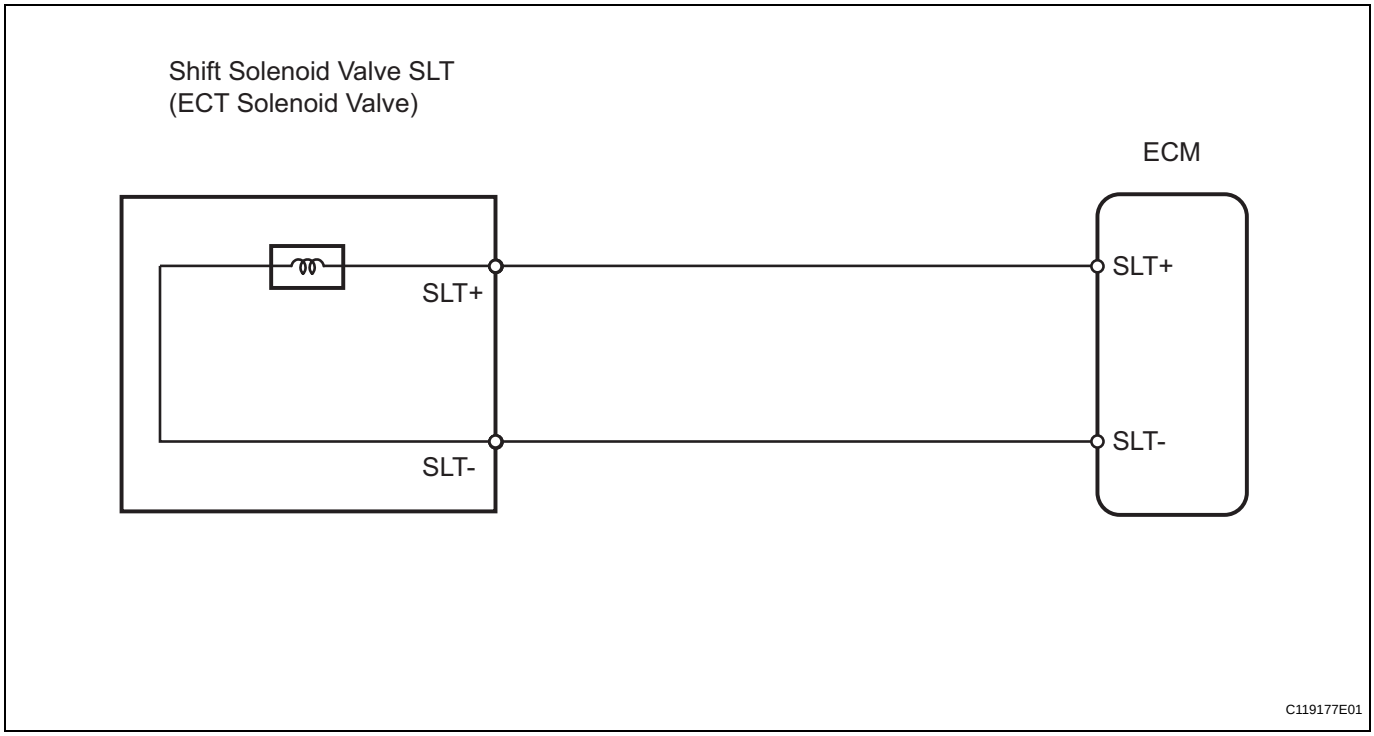

INSPECTION PROCEDURE

HINT:
Performing the intelligent tester's ACTIVE TEST allows relay, VSV, actuator and other items to be operated without removing any parts. Performing the ACTIVE TEST early in troubleshooting is one way to save time.
The DATA LIST can be displayed during the ACTIVE TEST.

1. Warm up the engine.
2. Turn the ignition switch OFF.
3. Connect the intelligent tester to the CAN VIM. Then connect the CAN VIM to the DLC3.
4. Turn the ignition switch ON and turn the tester ON.
5. Enter the following menus: DIAGNOSIS / ENHANCED OBD II / ACTIVE TEST.
6. Perform the ACTIVE TEST.

Item	Test Details	Diagnostic Note
SOLENOID (SLT)*	[Test Details] Operate shift solenoid SLT and raise line pressure [Vehicle Condition] • Vehicle stopped • IDL: ON HINT: OFF: Line pressure up (when Active Test "SOLENOID (SLT)" is performed, ECM commands SLT solenoid to turn OFF) ON: No action (normal operation)	-

HINT:
*: "SOLENOID (SLT)" in the ACTIVE TEST is performed to check the line pressure changes by connecting SST to the automatic transaxle, which is used in the HYDRAULIC TEST (see page AX-16) as well. Please note that the pressure values in the ACTIVE TEST and HYDRAULIC TEST are different.

1 CHECK OTHER DTCS OUTPUT (IN ADDITION TO DTC P2714)

(a) Connect the intelligent tester to the CAN VIM. Then connect the CAN VIM to the DLC3.
(b) Turn the ignition switch ON and turn the tester ON.
(c) Enter the following menus: DIAGNOSIS / ENHANCED OBD II / DTC INFO / CURRENT CODES.
(d) Read the DTCs using the tester.

Result

Display (DTC output)	Proceed to
Only P2714 is output	A
P2714 and other DTCs are output	B

HINT:
If any other codes besides P2714 are output, perform troubleshooting for those DTCs first.

B → GO TO DTC CHART

A

2	INSPECT SHIFT SOLENOID VALVE SLT

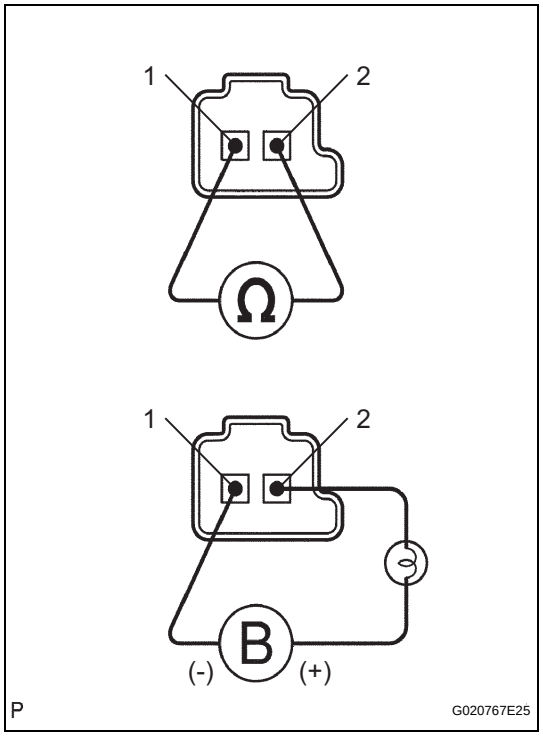

(a) Remove the shift solenoid valve SLT.
(b) Measure the resistance of the solenoid valve.
Standard resistance:
5.0 to 5.6 Ωat 20°C (68°F)
(c) Connect the battery's positive (+) lead with a 21 W bulb to terminal 2 and the negative (-) lead to terminal 1 of the solenoid valve connector. Then check that the valve moves and makes an operating noise.
OK:
Valve moves and makes operating noise.

NG → **REPLACE SHIFT SOLENOID VALVE SLT**

OK

3	INSPECT TRANSMISSION VALVE BODY ASSEMBLY

(a) Check the transmission valve body assembly.
OK:
There are no foreign objects on each valve.

NG → **REPAIR OR REPLACE TRANSMISSION VALVE BODY ASSEMBLY**

OK

4	INSPECT TORQUE CONVERTER CLUTCH ASSEMBLY

(a) Check the torque converter clutch assembly (see page AX-152).
OK:
The torque converter clutch operates normally.

NG → **REPLACE TORQUE CONVERTER CLUTCH ASSEMBLY**

OK

REPAIR OR REPLACE AUTOMATIC TRANSAXLE ASSEMBLY

DTC	P2716	Pressure Control Solenoid "D" Electrical (Shift Solenoid Valve SLT)

DESCRIPTION

Refer to DTC P2714 (see page AX-91).

DTC No.	DTC Detection Condition	Trouble Area
P2716	Condition (a) and (b) below is detected for 1 sec. or more (1 trip detection logic): (a) SLT - terminal: 0 V (b) SLT - terminal: 12 V	• Open or short in shift solenoid valve SLT circuit • Shift solenoid valve SLT • ECM

MONITOR DESCRIPTION

When an open or short in the shift solenoid valve SLT circuit is detected, the ECM interprets this as a fault. The ECM will illuminate the MIL and store the DTC.

MONITOR STRATEGY

Related DTCs	P2716: Shift solenoid valve SLT/Range check
Required sensors/Components	Shift solenoid valve SLT
Frequency of operation	Continuous
Duration	1 sec.
MIL operation	Immediate
Sequence of operation	None

TYPICAL ENABLING CONDITIONS

The monitor will run whenever this DTC is not present.	None
Battery voltage	11 V or more
Solenoid current cut status	Not cut
CPU command duty ratio to SLT	19% or more
Starter	OFF
Ignition switch	ON

TYPICAL MALFUNCTION THRESHOLDS

Solenoid status from IC	Fail (open or short)

COMPONENT OPERATING RANGE

Shift solenoid valve SLT	Resistance: 5.0 to 5.6 Ω at 20°C (68°F)

WIRING DIAGRAM

Refer to DTC P2714 (see page AX-91).

INSPECTION PROCEDURE

1 INSPECT TRANSMISSION WIRE (SHIFT SOLENOID VALVE SLT)

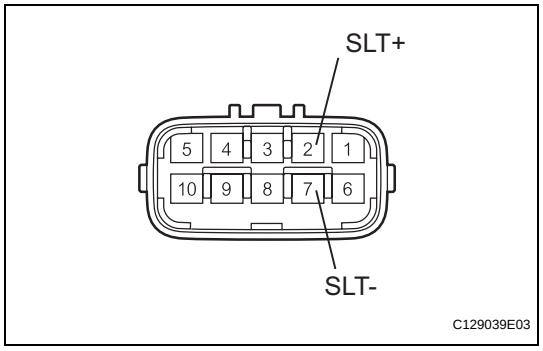

(a) Disconnect the B27 wire connector.
(b) Measure the resistance of the transmission wire.
Standard resistance

Tester Connection	Condition	Specified Condition
2 (SLT+) - 7 (SLT-)	20°C (68°F)	5.0 to 5.6 Ω
2 (SLT+) - Body ground	20°C (68°F)	1 MΩ or higher
7 (SLT-) - Body ground	20°C (68°F)	1 MΩ or higher

NG → **Go to step 3**

OK

2 CHECK WIRE HARNESS (TRANSMISSION WIRE - ECM)

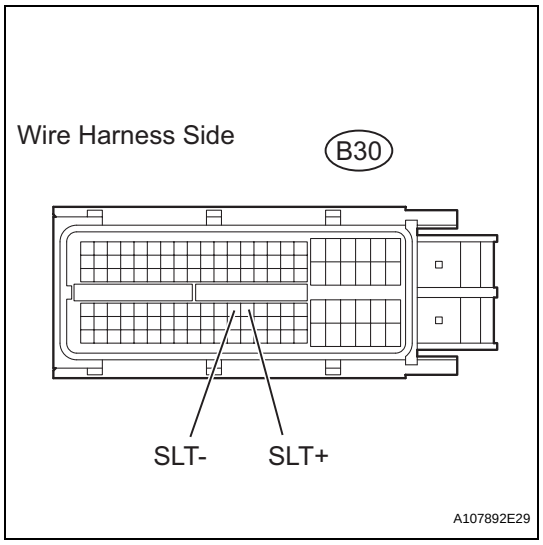

(a) Disconnect the B30 ECM connector.
(b) Measure the resistance of the wire harness side connector.
Standard resistance

Tester Connection	Condition	Specified Condition
B30-76 (SLT+) - B30-75 (SLT-)	20°C (68°F)	5.0 to 5.6 Ω
B30-76 (SLT+) - Body ground	20°C (68°F)	1 MΩ or higher
B30-75 (SLT-) - Body ground	20°C (68°F)	1 MΩ or higher

NG → **REPAIR OR REPLACE HARNESS AND CONNECTOR**

OK

REPLACE ECM

3	INSPECT SHIFT SOLENOID VALVE SLT

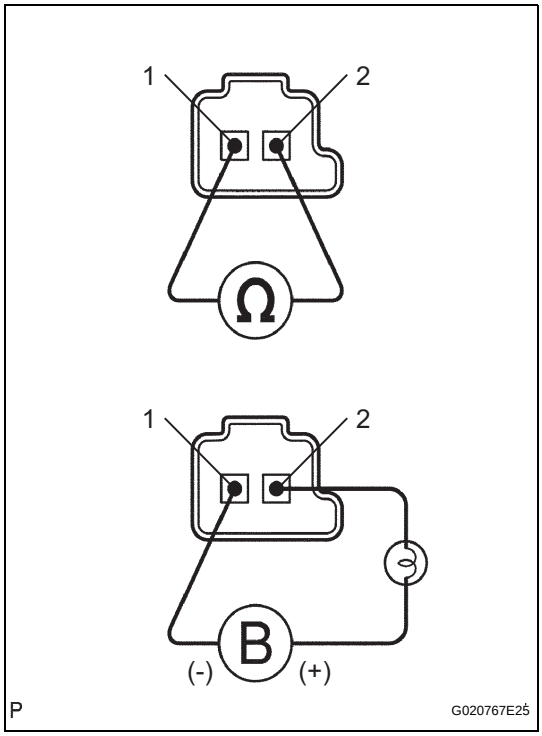

(a) Remove the shift solenoid valve SLT.
(b) Measure the resistance of the solenoid valve.
Standard resistance:
5.0 to 5.6 Ωat 20°C (68°F)
(c) Connect the battery's positive (+) lead with a 21 W bulb to terminal 2 and the negative (-) lead to terminal 1 of the solenoid valve connector. Then check that the valve moves and makes an operating noise.
OK:
Valve moves and makes operating noise.

NG → **REPLACE SHIFT SOLENOID VALVE SLT**

OK

REPAIR OR REPLACE TRANSMISSION WIRE

DTC	P2769	Torque Converter Clutch Solenoid Circuit Low (Shift Solenoid Valve DSL)

DTC	P2770	Torque Converter Clutch Solenoid Circuit High (Shift Solenoid Valve DSL)

DESCRIPTION

The shift solenoid valve DSL is turned ON and OFF by signals from the ECM to control the hydraulic pressure acting on the lock-up relay valve, which then controls operation of the lock-up clutch.

DTC No.	DTC Detection Condition	Trouble Area
P2769	ECM detects short in shift solenoid valve DSL circuit when shift solenoid valve DSL is operated (2 trip detection logic)	• Short in shift solenoid valve DSL circuit • Shift solenoid valve DSL • ECM
P2770	ECM detects open in shift solenoid valve DSL circuit when shift solenoid valve DSL is not operated (2 trip detection logic)	• Open in shift solenoid valve DSL circuit • Shift solenoid valve DSL • ECM

Fail-safe function:
If the ECM detects a malfunction, it turns the shift solenoid valve DSL OFF.

MONITOR DESCRIPTION

Torque converter lock-up is controlled by the ECM based on engine rpm, engine load, engine temperature, vehicle speed, transmission temperature, and shift position selection. The ECM determines the lock-up status of the torque converter by comparing the engine rpm (NE) to the input rpm (NT). The ECM calculates the actual transmission gear by comparing the input rpm (NT) to the output rpm (SP2). When conditions are appropriate, the ECM requests "lock-up" by applying control voltage to the shift solenoid valve DSL. When the shift solenoid valve DSL is opened, the shift solenoid valve DSL applies pressure to the lock-up relay valve and locks the torque converter clutch. If the ECM detects an open or short in the shift solenoid valve DSL circuit, the ECM interprets this as a fault in the shift solenoid valve DSL or its circuit. The ECM will illuminate the MIL and store a DTC.

MONITOR STRATEGY

Related DTCs	P2769: Shift solenoid valve DSL/Range check (Low resistance) P2770: Shift solenoid valve DSL/Range check (High resistance)
Requires sensors/Components	Shift solenoid valve DSL
Frequency of operation	Continuous
Duration	0.064 sec.
MIL operation	2 driving cycles
Sequence of operation	None

TYPICAL ENABLING CONDITIONS

P2769: Range check (Low resistance)

The monitor will run whenever this DTC is not present	None
Shift solenoid valve DSL	ON
Solenoid current cut status	Not cut
Battery voltage	8 V or more
Starter	OFF
Ignition switch	ON

P2770: Range check (High resistance)

The monitor will run whenever this DTC is not present	None

Shift solenoid valve DSL	ON
Battery voltage	8 V or more
Starter	OFF
Ignition switch	ON

TYPICAL MALFUNCTION THRESHOLDS

AX

P2769: Range check (Low resistance)

Shift solenoid valve DSL resistance	8 Ω or less

P2770: Range check (High resistance)

Shift solenoid valve DSL resistance	100 kΩ or more

COMPONENT OPERATING RANGE

Shift solenoid valve DSL	Resistance: 11 to 13 Ω at 20°C (68°F)

WIRING DIAGRAM

Refer to DTC P0741 (see page AX-62).

INSPECTION PROCEDURE

1 INSPECT TRANSMISSION WIRE (SHIFT SOLENOID VALVE DSL)

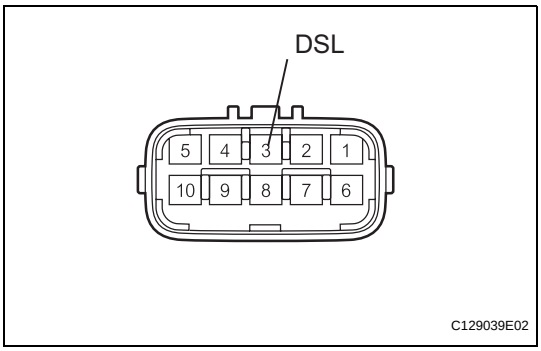

(a) Disconnect the B27 wire connector.
(b) Measure the resistance of the transmission wire.

Standard resistance

Tester Connection	Condition	Specified Condition
3 (DSL) - Body ground	20°C (68°F)	11 to 13 Ω

NG → **Go to step 3**

OK

2 CHECK WIRE HARNESS (TRANSMISSION WIRE - ECM)

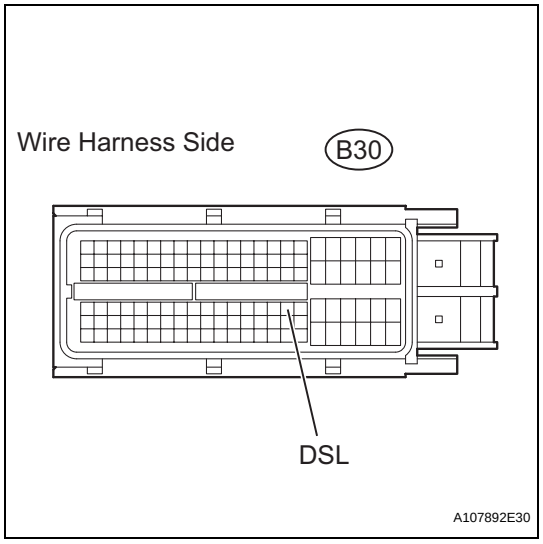

(a) Disconnect the B30 ECM connector.
(b) Measure the resistance of the wire harness side connector.
Standard resistance

Tester Connection	Condition	Specified Condition
B30-79 (DSL) - Body ground	20°C (68°F)	11 to 13 Ω

NG → **REPAIR OR REPLACE HARNESS AND CONNECTOR**

OK

REPLACE ECM

3 INSPECT SHIFT SOLENOID VALVE DSL

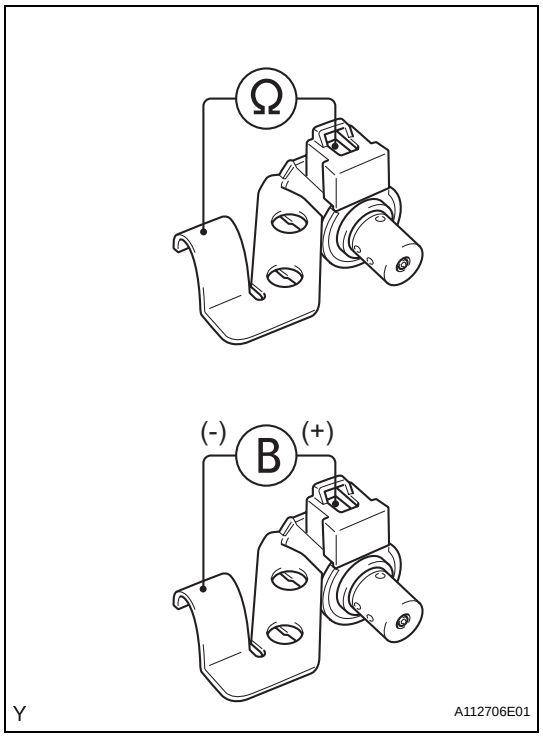

(a) Remove the shift solenoid valve DSL.
(b) Measure the resistance between the solenoid valve terminal and solenoid valve body.
Standard resistance:
11 to 13 Ω at 20°C (68°F)
(c) Connect the battery's positive (+) lead to the terminal of the solenoid valve connector, and the negative (-) lead to the solenoid body. Then check that the valve moves and makes an operating noise.
OK:
Valve moves and makes operating noise.

NG → **REPLACE SHIFT SOLENOID VALVE DSL**

OK

REPAIR OR REPLACE TRANSMISSION WIRE

AUTOMATIC TRANSAXLE SYSTEM

PRECAUTION

NOTICE:
Perform the RESET MEMORY procedures (A/T initialization) when replacing the automatic transaxle assembly, engine assembly or ECM (see page AX-18).
HINT:
RESET MEMORY cannot be completed by only reconnecting the cable to the negative (-) battery terminal.
CAUTION:
When using compressed air, always aim away from yourself to prevent Automatic Transmission Fluid (ATF) or kerosene from spraying on your face.
NOTICE:

- **The automatic transaxle is composed of precision-made parts, necessitating careful inspection before reassembly because even a small nick could cause fluid leakage or affect performance.**
- **The procedures are organized so that you work on only one component group at a time. This will help avoid confusion with similar-looking parts of different sub-assemblies being on your workbench at the same time.**
- **The component groups are inspected and repaired from the converter housing side.**
- **Whenever possible, complete the inspection, repair and reassembly before proceeding to the next component group. If a defect is found in a certain component group during reassembly, inspect and repair this group immediately. If a component group cannot be assembled because parts are being ordered, be sure to keep all parts of the group in a separate container while proceeding with disassembly, inspection, repair and reassembly of other component groups.**
- **Use of Toyota Genuine ATF WS is recommended.**
- **All disassembled parts should be washed clean, and compressed air should be blown through any fluid passages and holes.**
- **Dry all parts with compressed air. Never use cloth.**
- **The recommended ATF or kerosene should be used for cleaning.**
- **After cleaning, the parts should be arranged in the order they were removed for efficient inspection, repairs, and reassembly.**
- **When disassembling a valve body, be sure to match each valve with its corresponding spring.**
- **New discs for the brakes and clutches that will be used for replacement must be soaked in ATF for at least 15 minutes before reassembly.**

- **All oil seal rings, clutch discs, clutch plates, rotating parts, and sliding surfaces should be coated with ATF prior to reassembly.**
- **All old gaskets and rubber O-rings must be replaced.**
- **Do not apply adhesive cement to gaskets and similar parts.**
- **Make sure that the ends of the snap rings are not aligned with any cutouts. Also make sure that snap rings are correctly installed into the grooves.**
- **If a worn bushing is to be replaced, the sub-assembly containing the bushing must also be replaced.**
- **Check the thrust bearings and races for wear or damage. Replace them if necessary.**
- **Use petroleum jelly to keep parts in place.**
- **When working with FIPG material, perform the following:**
  Using a razor blade and gasket scraper, remove all old FIPG material from the gasket surface.
  Clean all components thoroughly to remove all foreign matter.
  Clean both sealing surfaces with a non-residue solvent.
  Apply FIPG material in a continuous line approximately 1 mm (0.04 in.) in diameter on the sealing surface.
  Reassemble parts within 10 minutes of applying FIPG material. Failing to do so will require the FIPG material to be removed and reapplied.

DISASSEMBLY

1. REMOVE SPEEDOMETER DRIVEN HOLE COVER SUB-ASSEMBLY

(a) Remove the bolt and hole cover from the transaxle.

(b) Remove the O-ring from the hole cover.

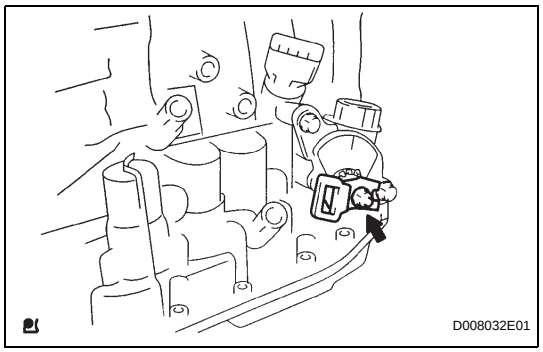

2. REMOVE PARK/NEUTRAL POSITION SWITCH ASSEMBLY

(a) Remove the nut, washer and control shaft lever.

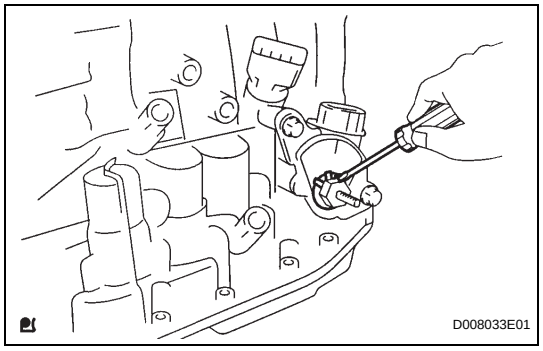

(b) Using a screwdriver, unstake the lock plate and remove the lock nut and lock plate.

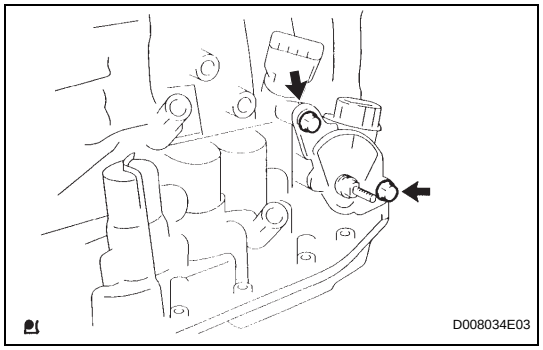

(c) Remove the 2 bolts and pull out the park/neutral position switch.

3. REMOVE BREATHER PLUG HOSE

(a) Remove the breather plug hose from the breather plug.

4. REMOVE OIL COOLER OUTLET TUBE UNION

(a) Remove the union.

(b) Remove the O-ring from the union.

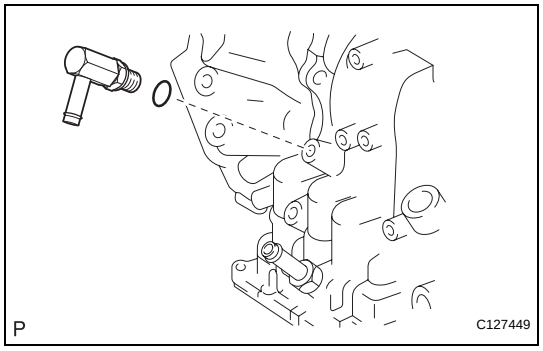

AX

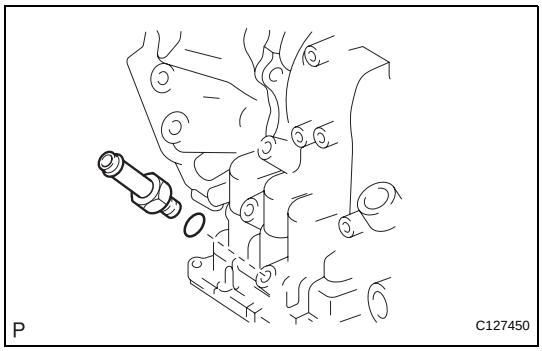

5. REMOVE OIL COOLER INLET TUBE UNION

(a) Remove the union.

(b) Remove the O-ring from the union.

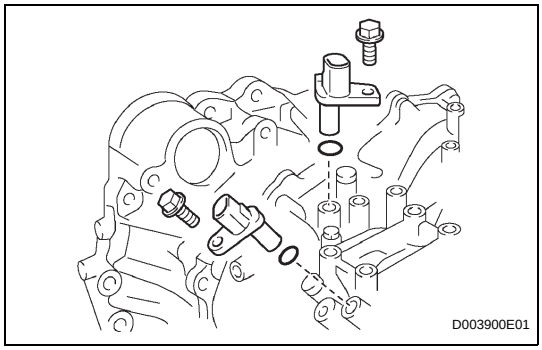

6. REMOVE SPEED SENSOR

(a) Remove the 2 bolts and 2 speed sensors from the transaxle.

(b) Remove the 2 O-rings from the sensors.

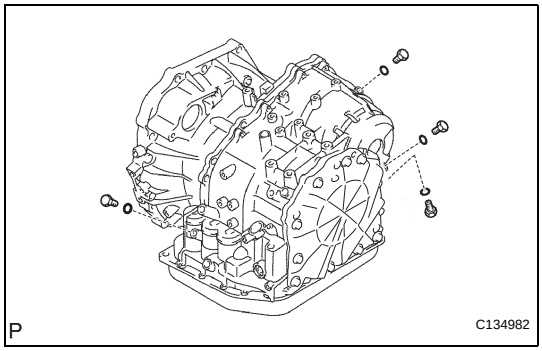

7. REMOVE NO. 1 TRANSAXLE CASE PLUG

(a) Remove the 4 plugs from the transaxle.

(b) Remove the 4 O-rings from the 4 plugs.

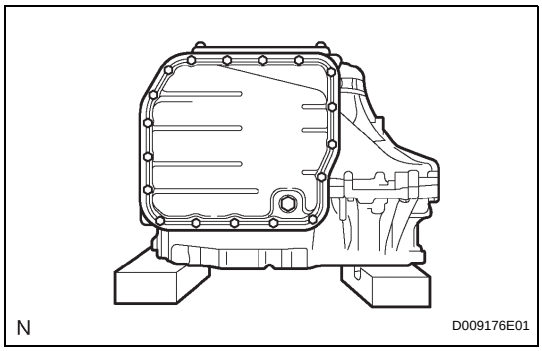

8. FIX AUTOMATIC TRANSAXLE ASSEMBLY

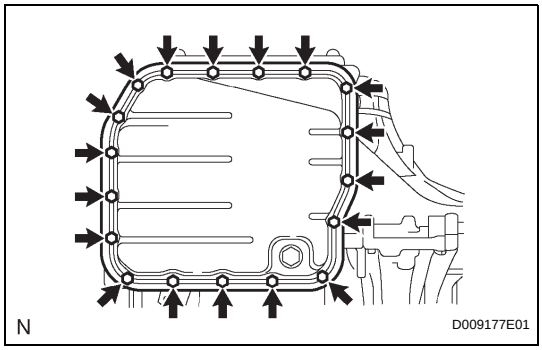

9. REMOVE AUTOMATIC TRANSAXLE OIL PAN SUB-ASSEMBLY

(a) Remove the 18 bolts.

(b) Remove the oil pan and 3 magnets.

(c) Remove the gasket from the oil pan.

10. INSPECT AUTOMATIC TRANSAXLE OIL PAN SUB-ASSEMBLY (See page AX-185)

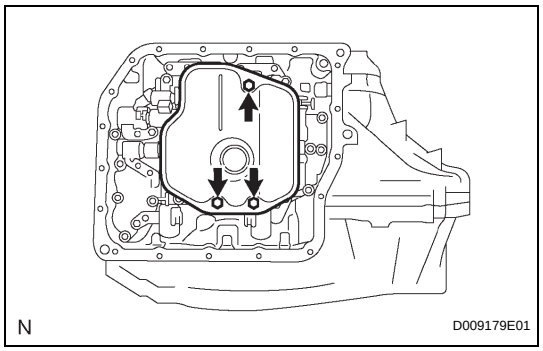

11. REMOVE VALVE BODY OIL STRAINER ASSEMBLY

(a) Remove the 3 bolts and oil strainer.

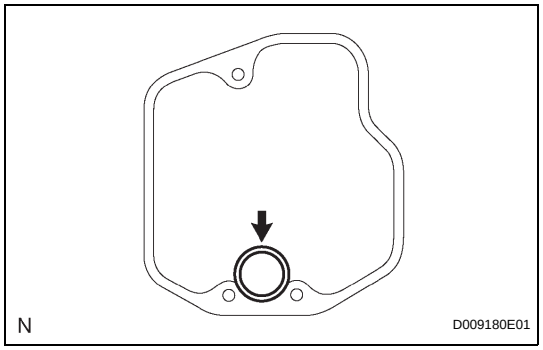

(b) Remove the O-ring from the oil strainer.

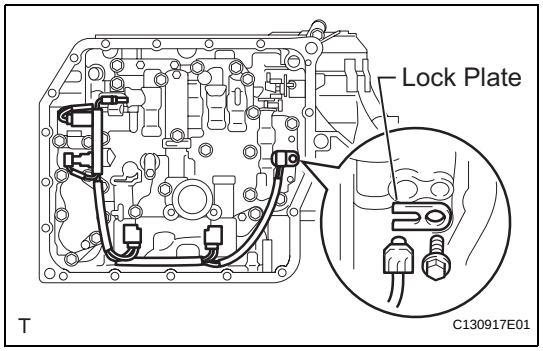

12. REMOVE TRANSMISSION WIRE

(a) Remove the 5 connectors from the shift solenoid valves.

(b) Remove the bolt, clamp and ATF temperature sensor.

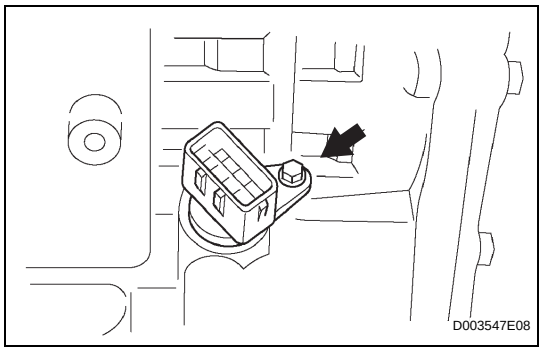

(c) Remove the bolt and transaxle solenoid wire from the transaxle.

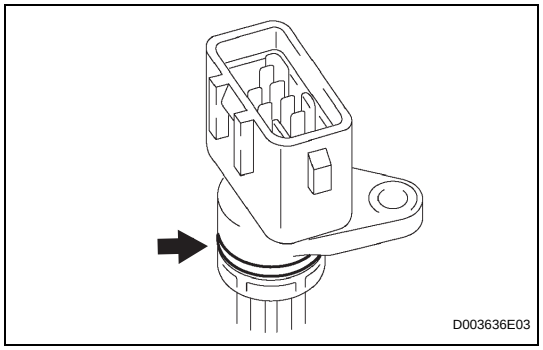

(d) Remove the O-ring from the transaxle solenoid wire.

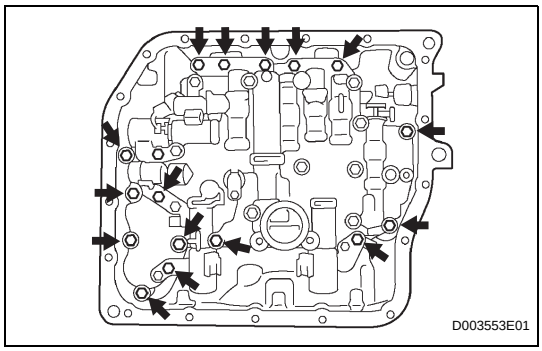

13. REMOVE TRANSMISSION VALVE BODY ASSEMBLY

(a) Support the valve body assembly and remove the 17 bolts and the valve body assembly.

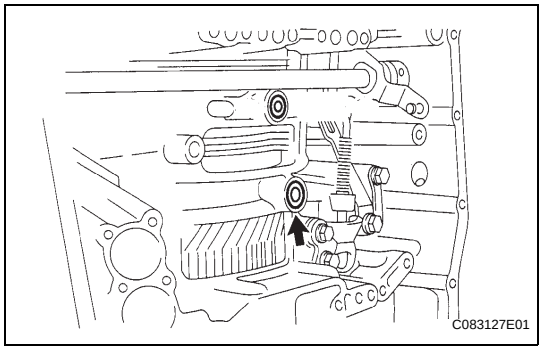

14. REMOVE NO. 1 GOVERNOR APPLY GASKET

(a) Remove the governor apply gasket from the transaxle.

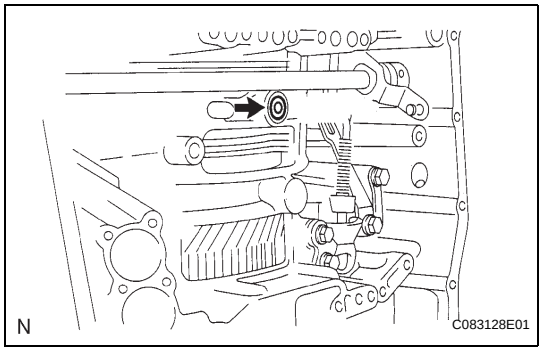

15. REMOVE TRANSAXLE CASE 2ND BRAKE GASKET

(a) Remove the 2nd brake gasket from the transaxle.

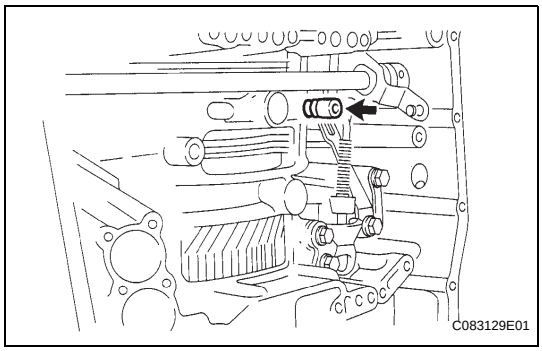

16. REMOVE BRAKE DRUM GASKET

(a) Remove the brake drum gasket from the transaxle.

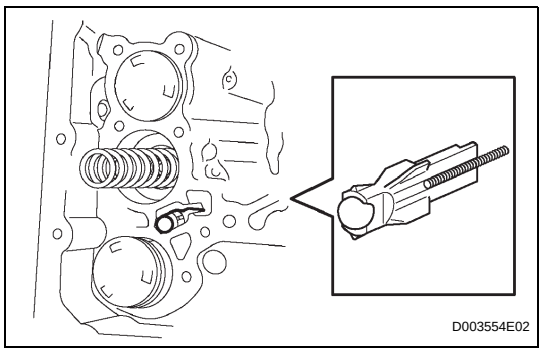

17. REMOVE CHECK BALL BODY

(a) Remove the check ball body and spring from the transaxle.

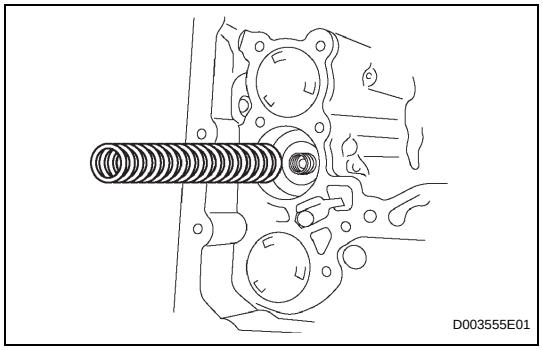

18. REMOVE C-3 ACCUMULATOR PISTON

(a) Remove the compression spring from the C-3 accumulator piston.

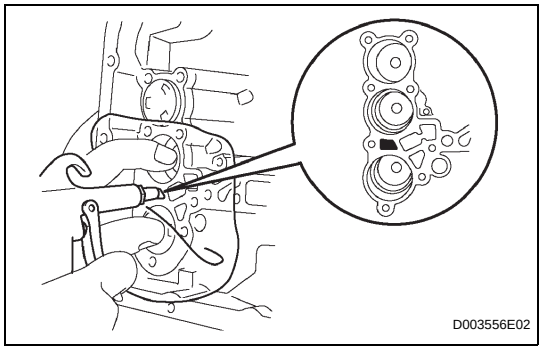

(b) Apply compressed air (392 kPa, 4.0 kgf/cm^2, 57 psi) to the oil hole and remove the C-3 accumulator piston.

NOTICE:

- **Applying compressed air may cause the piston to jump out. When removing the piston, hold it with your hand using a waste cloth.**
- **Make sure not to spatter ATF when applying compressed air.**

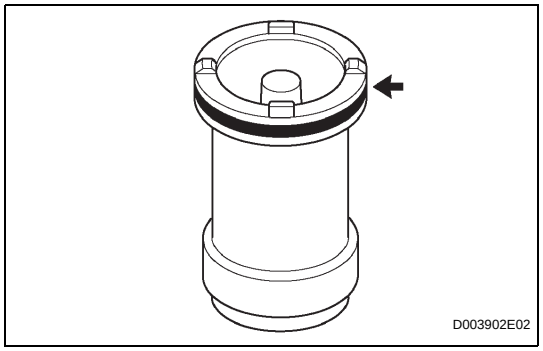

(c) Remove the O-ring from the C-3 accumulator piston.

19. REMOVE C-1 ACCUMULATOR PISTON

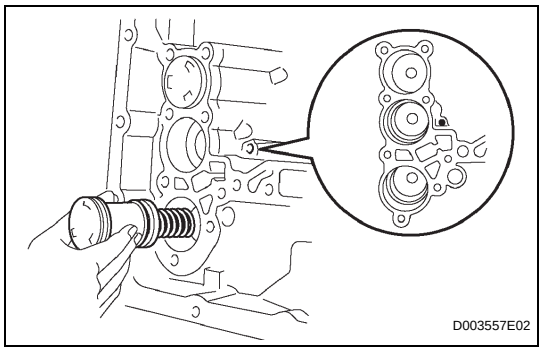

(a) Apply compressed air (392 kPa, 4.0 kgf/cm^2, 57 psi) to the oil hole and remove the C-1 accumulator piston and compression spring.

NOTICE:

- **Applying compressed air may cause the piston to jump out. When removing the piston, hold it with your hand using a waste cloth.**
- **Make sure not to spatter ATF when applying compressed air.**

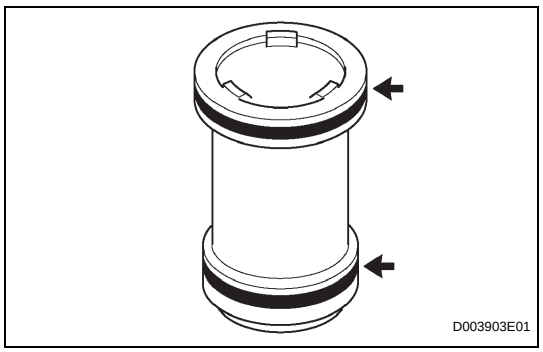

(b) Remove the 2 O-rings from the C-1 accumulator piston.

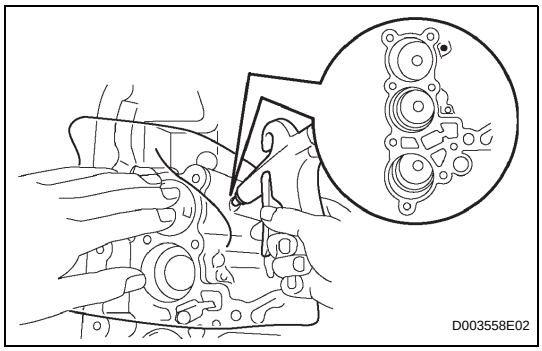

20. REMOVE B-3 ACCUMULATOR PISTON

(a) Apply compressed air (392 kPa, 4.0 kgf/cm^2, 57 psi) to the oil hole and remove the B-3 accumulator piston and 2 compression springs.

NOTICE:

- **Applying compressed air may cause the piston to jump out. When removing the piston, hold it with your hand using a waste cloth.**
- **Make sure not to spatter ATF when applying compressed air.**

(b) Remove the O-ring from the B-3 accumulator piston.

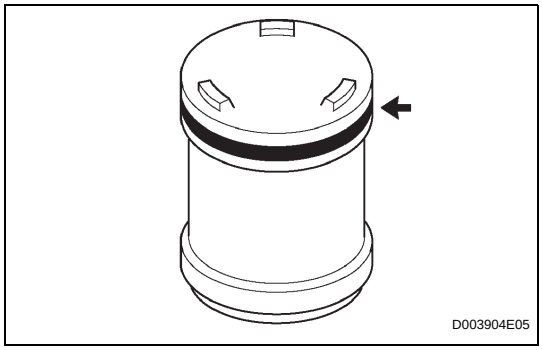

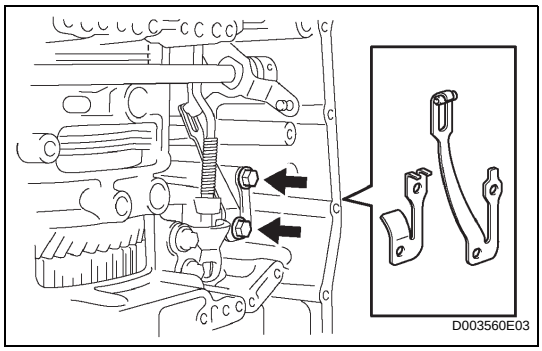

21. REMOVE MANUAL DETENT SPRING SUB-ASSEMBLY

(a) Remove the 2 bolts, manual detent spring and cover.

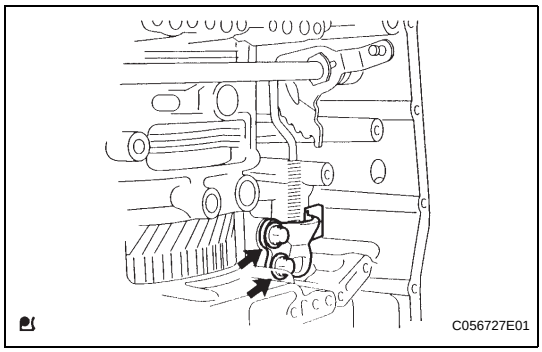

22. REMOVE PARKING LOCK PAWL BRACKET

(a) Remove the 2 bolts and parking lock pawl bracket.

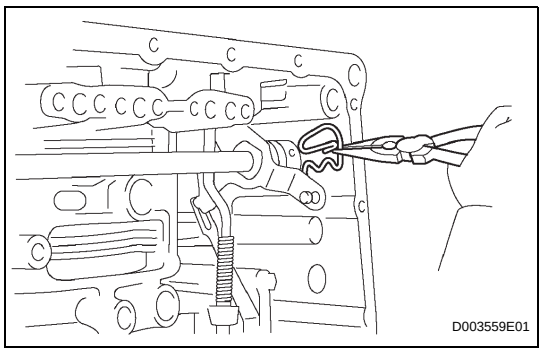

23. REMOVE MANUAL VALVE LEVER SHAFT RETAINER SPRING

(a) Using needle-nose pliers, remove the retainer spring.

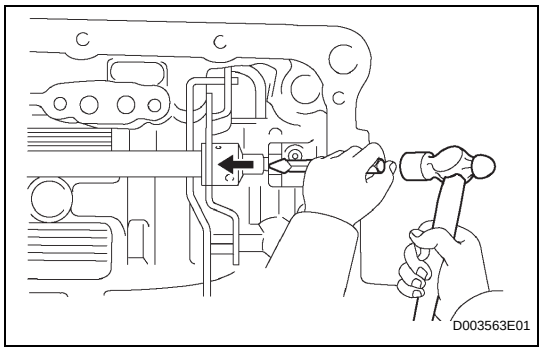

24. REMOVE MANUAL VALVE LEVER SUB-ASSEMBLY

(a) Using a chisel and hammer, unstake and remove the manual valve lever spacer.

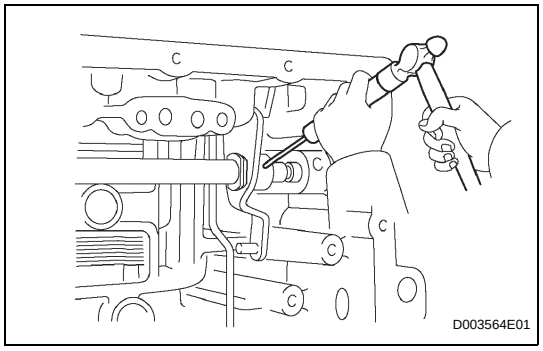

(b) Using a pin punch and hammer, tap out the manual valve lever shaft spring pin.
HINT:
Slowly drive out the pin so that it will not fall into the transaxle.

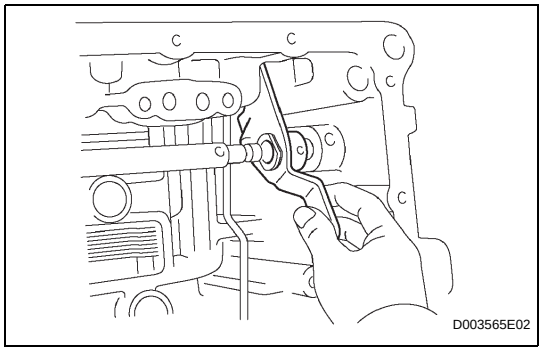

(c) Remove the manual valve lever shaft and manual valve lever.

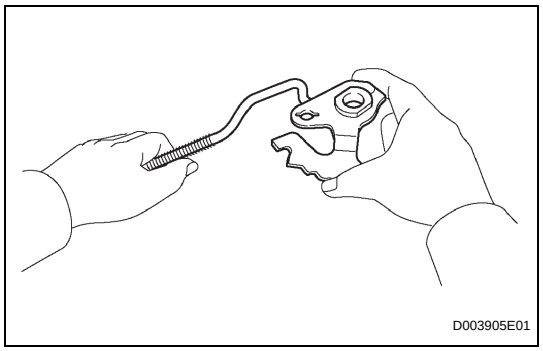

25. REMOVE PARKING LOCK ROD SUB-ASSEMBLY

(a) Remove the parking lock rod from the manual valve lever.

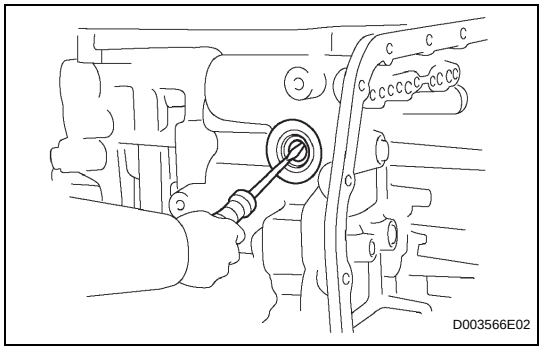

26. REMOVE MANUAL VALVE LEVER SHAFT OIL SEAL

(a) Using a screwdriver, pry out the oil seal from the transaxle.

27. INSPECT INPUT SHAFT END PLAY (See page AX-185)

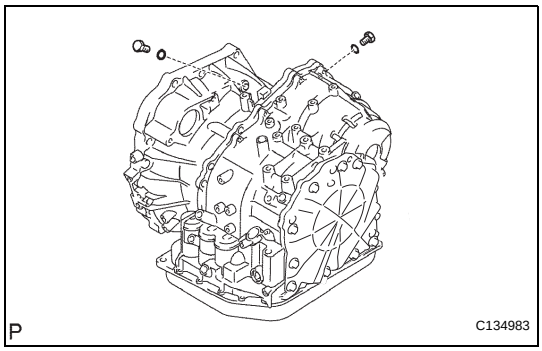

28. REMOVE NO. 1 TRANSAXLE CASE PLUG

(a) Remove the 2 plugs.

(b) Remove the 2 O-rings from the plug.

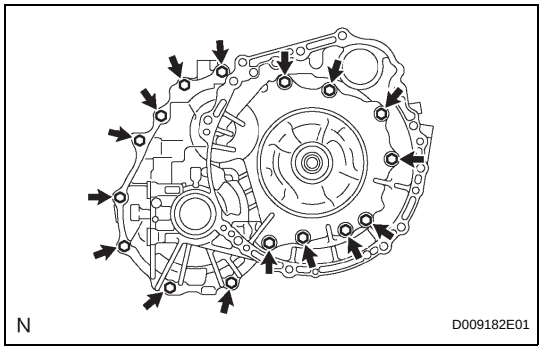

29. REMOVE TRANSAXLE HOUSING

(a) Remove the 16 bolts.

(b) Tap on the circumference of the transaxle housing with a plastic-faced hammer to remove the transaxle housing from the transaxle.

NOTICE:

Differential may be accidentally removed when the transaxle housing is removed.

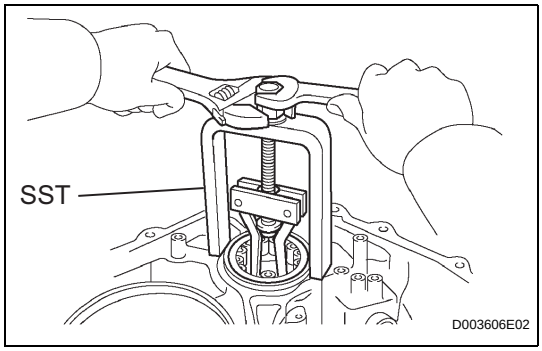

30. REMOVE UNDERDRIVE CYLINDRICAL ROLLER BEARING

(a) Using SST, remove the cylindrical roller bearing from the transaxle.

SST 09514-35011

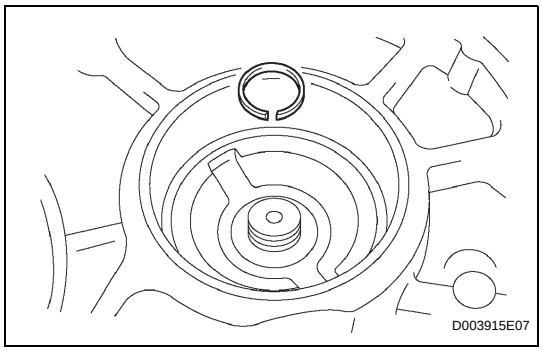

31. REMOVE UNDERDRIVE OUTPUT SHAFT OIL SEAL RING

(a) Remove the oil seal ring from the transaxle housing.

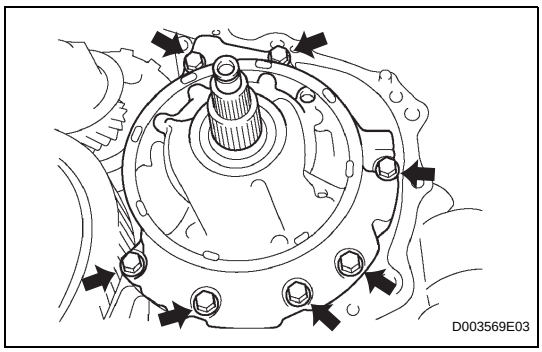

32. REMOVE OIL PUMP ASSEMBLY

(a) Remove the 7 bolts and oil pump assembly from the transaxle.

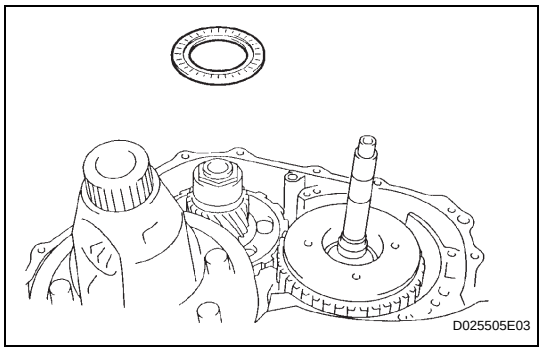

33. REMOVE THRUST NEEDLE ROLLER BEARING

(a) Remove thrust needle roller bearing from the underdrive planetary gear.

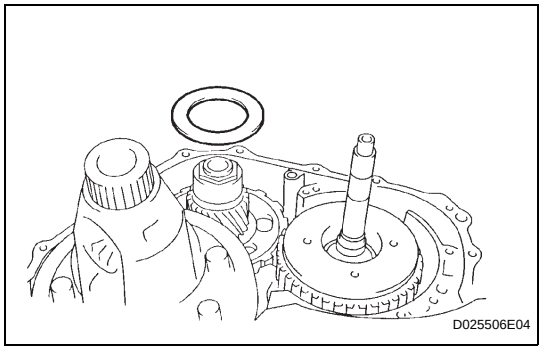

34. REMOVE NO. 2 THRUST BEARING UNDERDRIVE RACE

(a) Remove the thrust bearing race from the underdrive planetary gear.

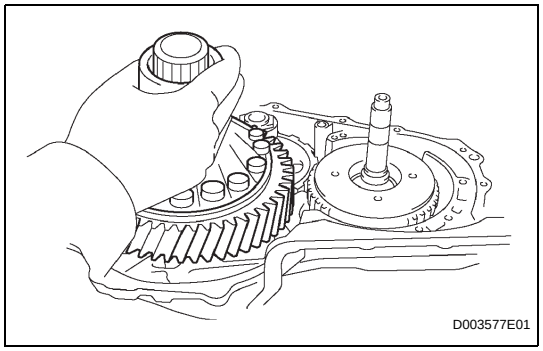

35. REMOVE FRONT DIFFERENTIAL ASSEMBLY

(a) Remove the front differential from the transaxle.

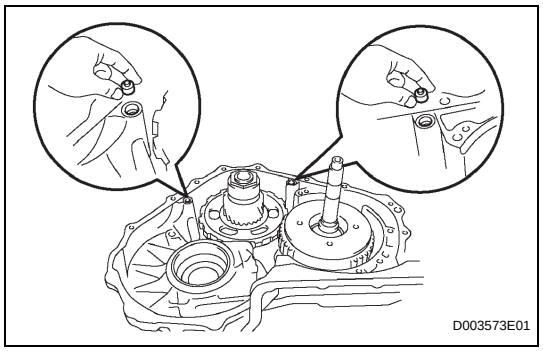

36. REMOVE OVERDRIVE BRAKE GASKET

(a) Remove the 2 overdrive brake gaskets from the transaxle.

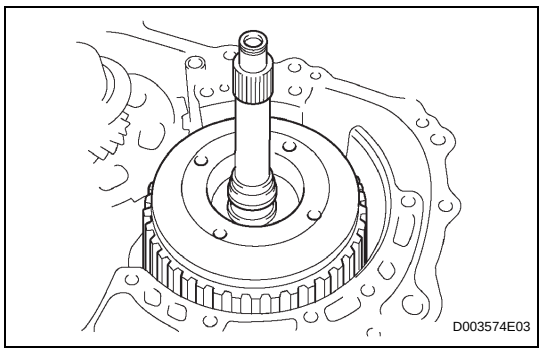

37. REMOVE FORWARD CLUTCH ASSEMBLY

(a) Remove the forward clutch from the transaxle.

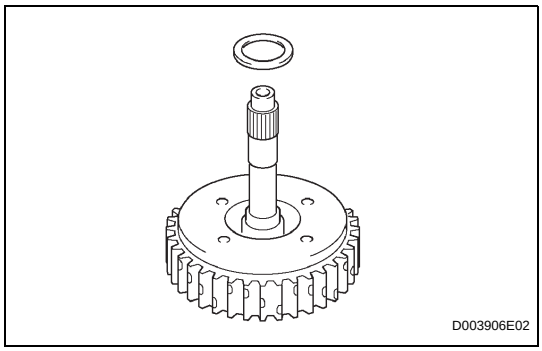

(b) Remove the thrust bearing from the forward clutch.

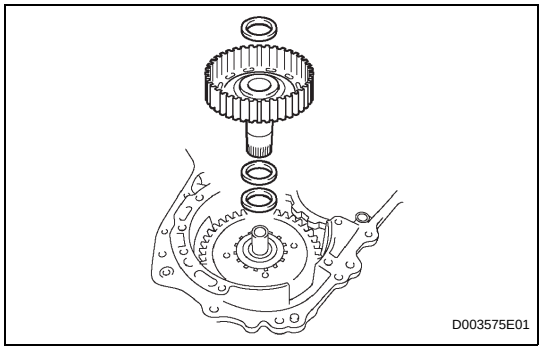

38. REMOVE MULTIPLE DISC CLUTCH CLUTCH HUB

(a) Remove the thrust bearing, multiple clutch hub, needle roller bearing and bearing race from the transaxle.

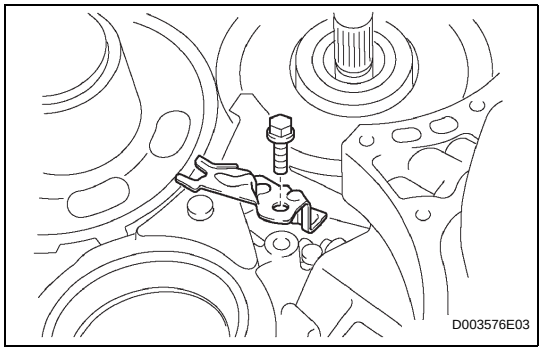

39. REMOVE UNDERDRIVE PLANETARY GEAR ASSEMBLY

(a) Remove the bolt and parking pawl shaft clamp.

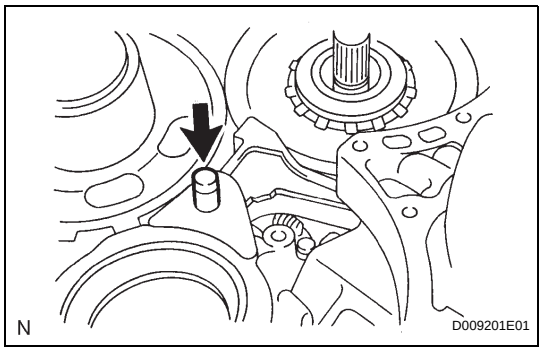

(b) Remove the parking lock pawl shaft.

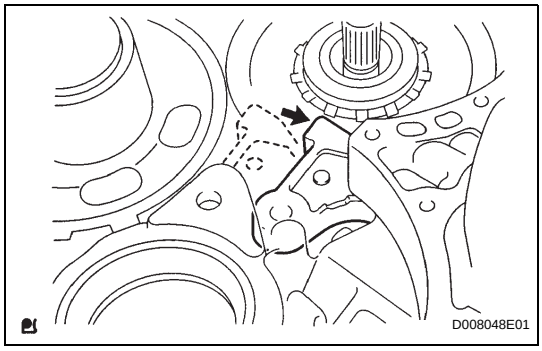

(c) Push the parking lock pawl.
HINT:
Failure to do so will cause the interference when the underdrive planetary gear is removed.

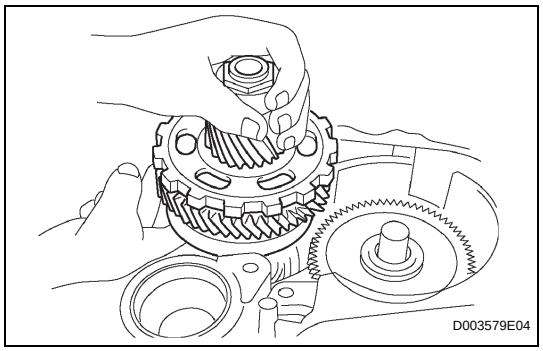

(d) Remove the underdrive planetary gear from the transaxle.
NOTICE:
Be careful so that the underdrive planetary gear assembly will not fall out.

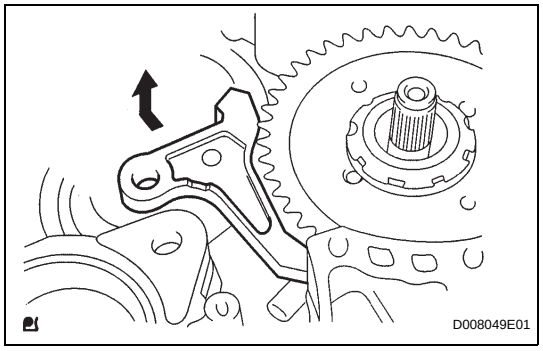

(e) Remove the spring, pawl pin and parking lock pawl.

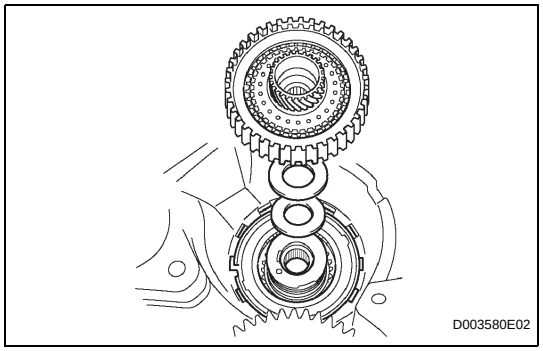

40. REMOVE UNDERDRIVE CLUTCH ASSEMBLY

(a) Remove the underdrive clutch assembly, needle roller bearing, thrust bearing underdrive race from the transaxle.

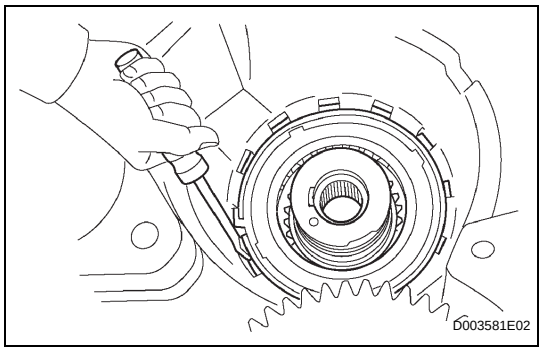

41. REMOVE UNDERDRIVE 1-WAY CLUTCH ASSEMBLY

(a) Using a screwdriver, pry out the snap ring from the transaxle.

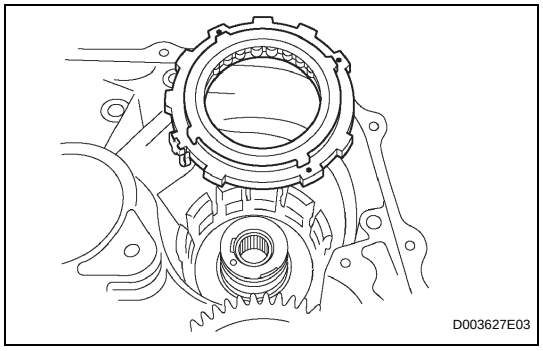

(b) Remove the 1-way clutch from the transaxle.

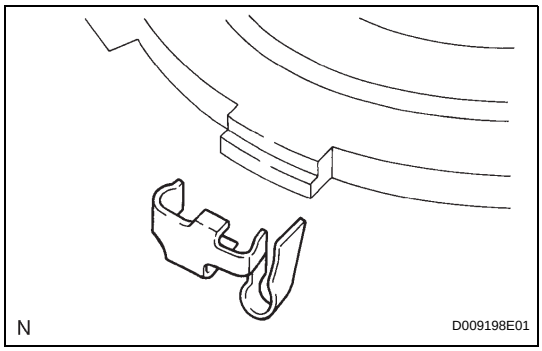

(c) Remove the outer race retainer from the 1-way clutch.

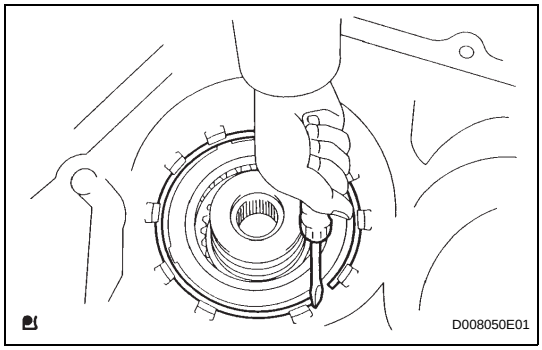

42. REMOVE NO. 2 UNDERDRIVE CLUTCH DISC

(a) Using a screwdriver, pry out the snap ring from the transaxle.

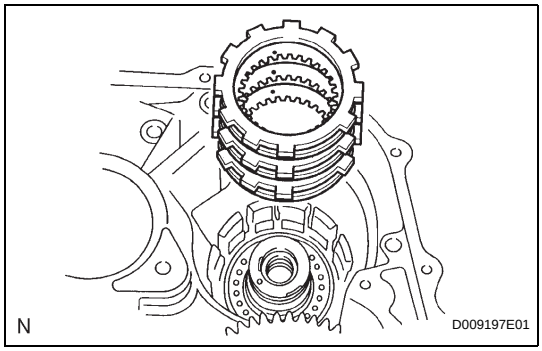

(b) Remove the flange, 3 discs and 3 plates from the transaxle.

43. INSPECT NO. 2 UNDERDRIVE CLUTCH DISC (See page AX-186)

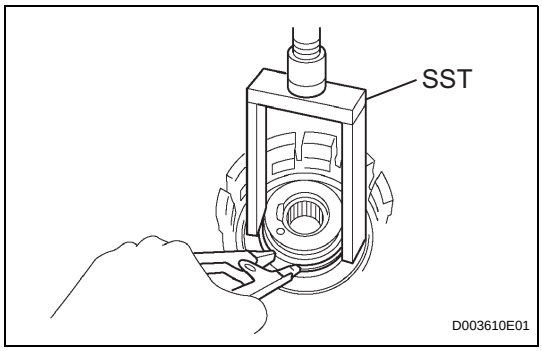

44. REMOVE UNDERDRIVE BRAKE RETURN SPRING SUB-ASSEMBLY

(a) Using SST, a snap ring expander and press, remove the snap ring from the transaxle.
SST 09387-00020

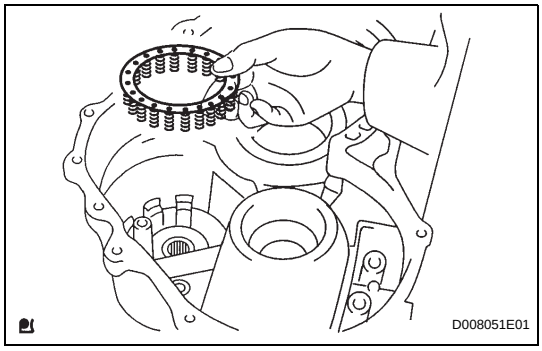

(b) Remove the underdrive brake return spring from the underdrive brake piston.

45. INSPECT UNDERDRIVE BRAKE RETURN SPRING SUB-ASSEMBLY (See page AX-186)

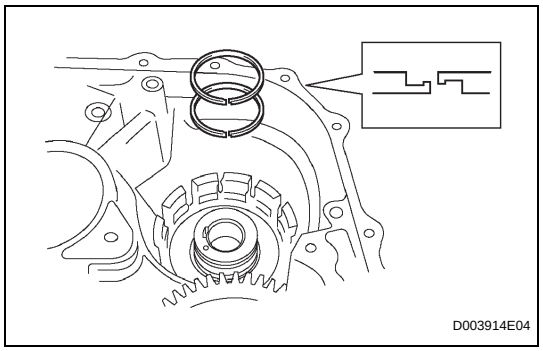

46. REMOVE UNDERDRIVE CLUTCH DRUM OIL SEAL RING

(a) Remove the 2 oil seal rings from the transaxle.

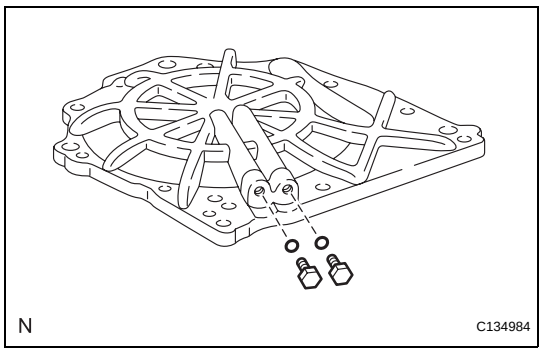

47. REMOVE NO. 1 TRANSAXLE CASE PLUG

(a) Remove the 2 plugs from the transaxle rear cover.

(b) Remove the 2 O-rings from the 2 plugs.

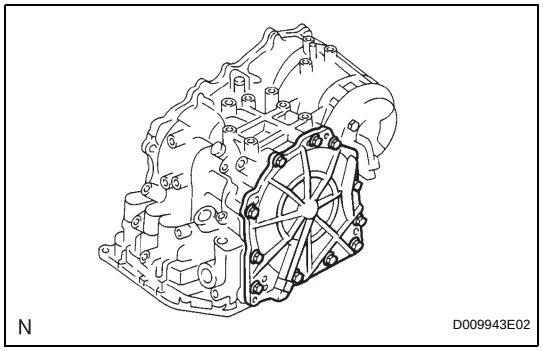

48. REMOVE REAR TRANSAXLE COVER SUB-ASSEMBLY

(a) Remove the 11 bolts.

(b) Tap the circumference of the rear cover with a plastic-faced hammer to remove the transaxle rear cover from the transaxle.

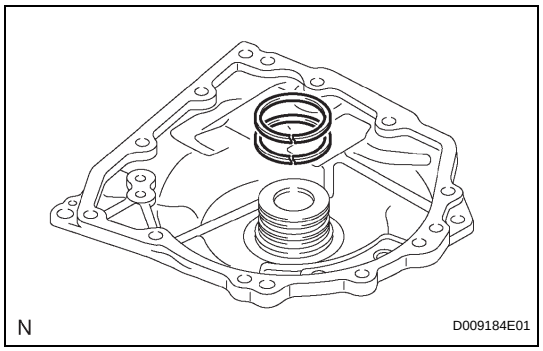

(c) Remove the 2 outer rear clutch oil seal rings from the transaxle rear cover.

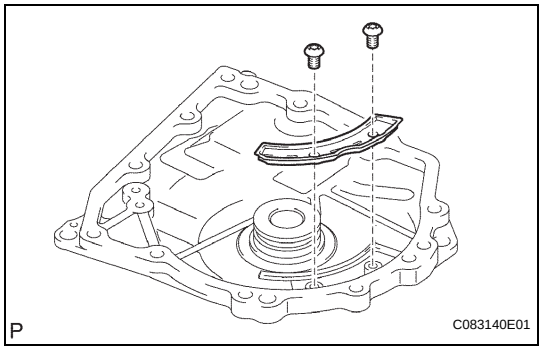

(d) Using a T30 "torx" socket wrench, remove the 2 screws and transaxle rear cover plate.

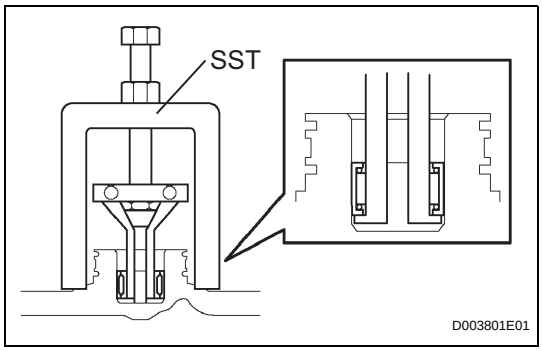

(e) Using SST, remove the needle-roller bearing from the transaxle rear cover.
SST 09387-00041 (09387-01010, 09387-01030, 09387-01040)

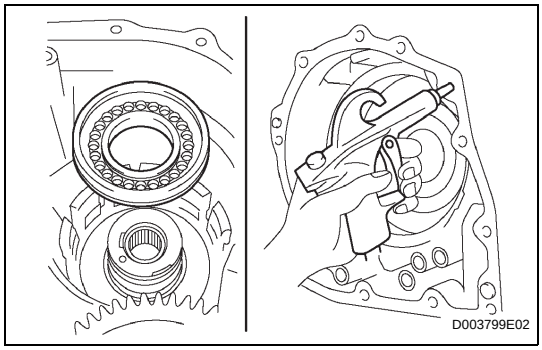

49. REMOVE UNDERDRIVE BRAKE PISTON

(a) Apply compressed air (392 kPa, 4.0 kgf/cm^2, 57 psi) to the transaxle case to remove the underdrive brake piston.

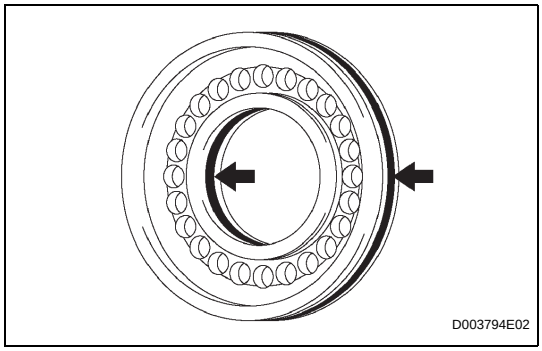

(b) Remove the 2 O-rings from the underdrive brake piston.

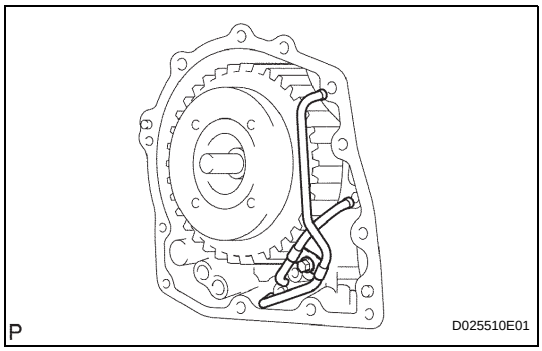

50. REMOVE BRAKE APPLY TUBE

(a) Remove the bolt, clamp and 2 brake apply tubes.
(b) Remove the brake apply tube from the clamp.

51. REMOVE FRONT CLUTCH APPLY TUBE

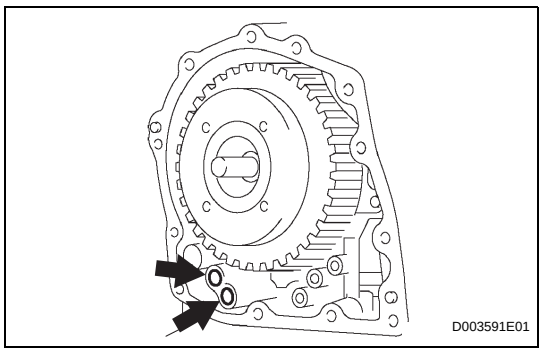

52. REMOVE NO. 1 GOVERNOR APPLY GASKET

(a) Using a screwdriver, remove the 2 governor apply gaskets.

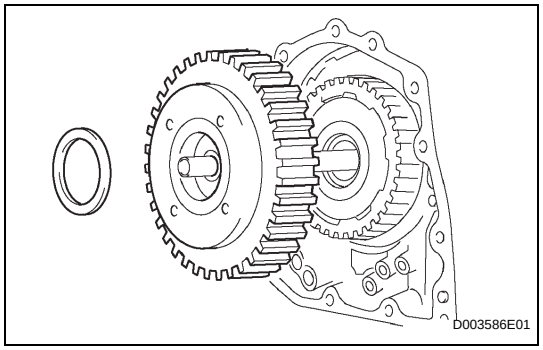

53. REMOVE DIRECT CLUTCH ASSEMBLY

(a) Remove the thrust bearing and direct clutch from the transaxle.

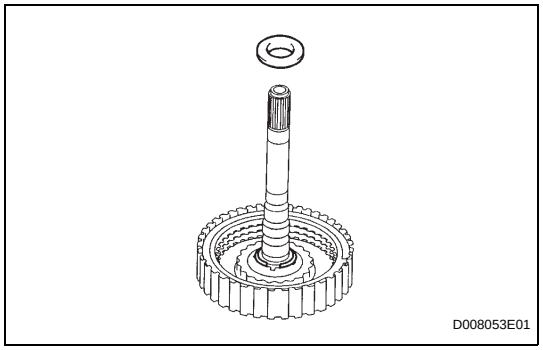

(b) Remove the bearing race from the direct clutch.

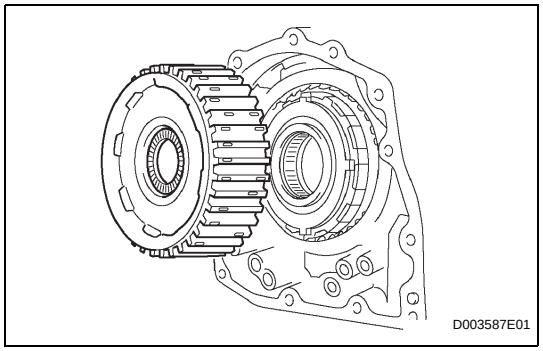

54. REMOVE REAR PLANETARY SUN GEAR ASSEMBLY

(a) Remove the rear planetary sun gear from the transaxle.

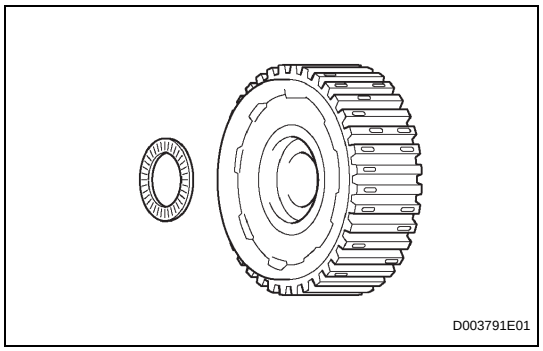

(b) Remove the rear planetary sun gear thrust bearing from the rear planetary sun gear.

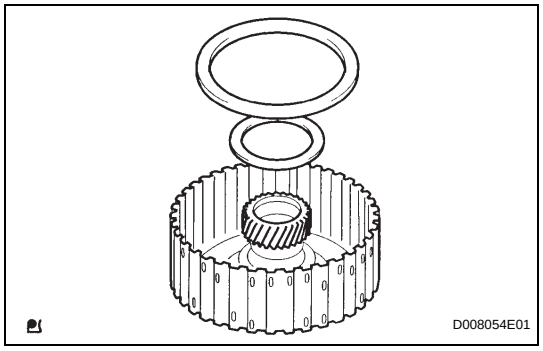

(c) Remove the No. 1 thrust washer and 1-way clutch thrust bearing from the rear planetary sun gear.

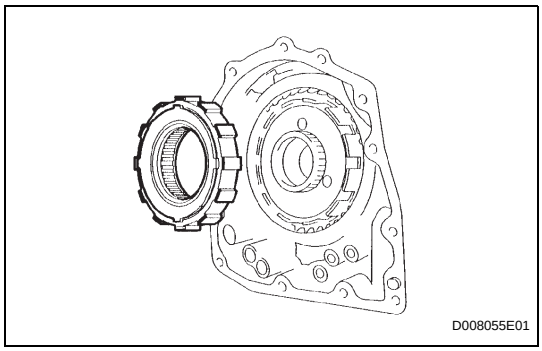

55. REMOVE 1-WAY CLUTCH ASSEMBLY

(a) Remove the 1-way clutch from the transaxle.

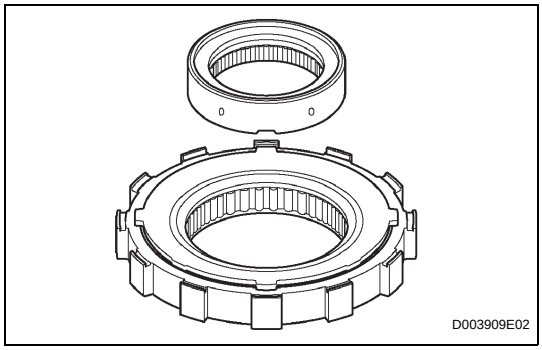

(b) Remove the 1-way clutch inner race from the 1-way clutch.

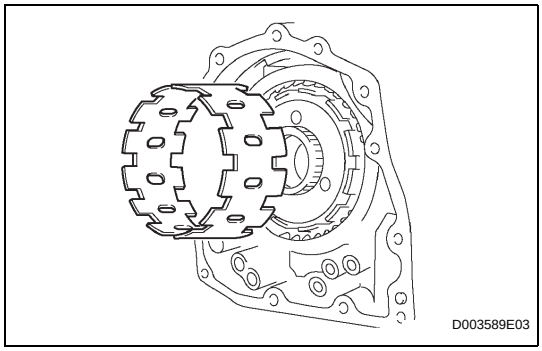

56. REMOVE 1-WAY CLUTCH SLEEVE OUTER

57. REMOVE 2ND BRAKE CLUTCH DISC

(a) Using a screwdriver, remove the 2nd brake hole snap ring.

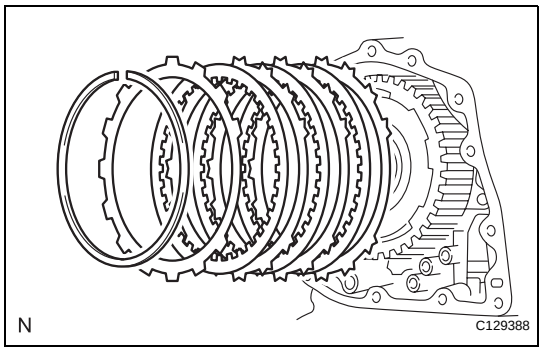

(b) Remove the flange, 3 discs and 3 plates from the transaxle.

58. INSPECT 2ND BRAKE CLUTCH DISC (See page AX-186)

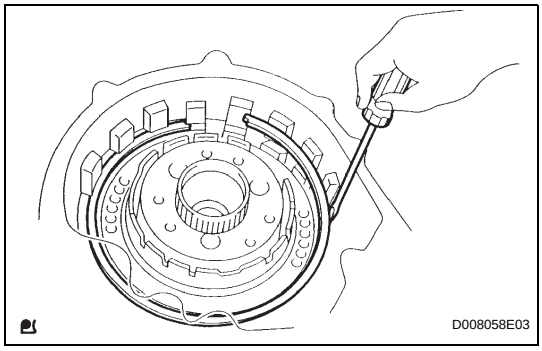

59. REMOVE 2ND BRAKE PISTON ASSEMBLY

(a) Using a screwdriver, pry out the snap ring.

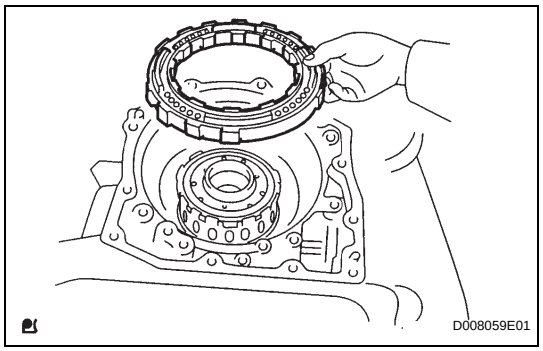

(b) Remove the 2nd brake piston from the transaxle.

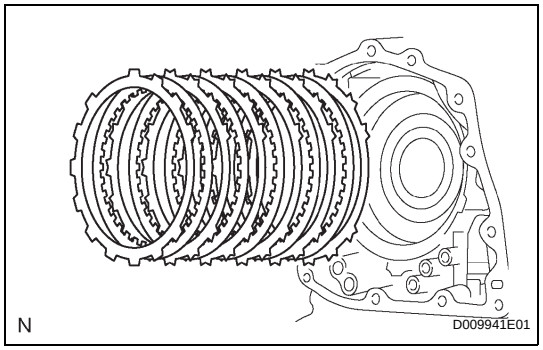

60. REMOVE 1ST AND REVERSE BRAKE CLUTCH DISC

(a) Remove the flange, 5 discs and 5 plates from the transaxle.

61. INSPECT 1ST AND REVERSE BRAKE CLUTCH DISC (See page AX-186)

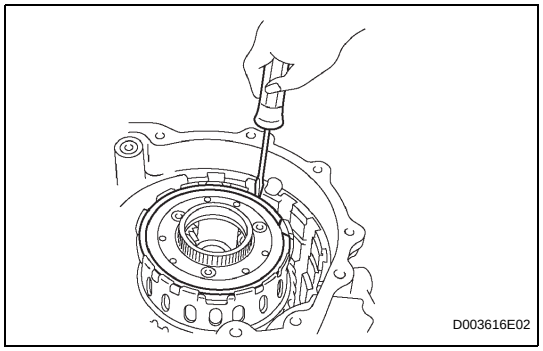

62. REMOVE REAR PLANETARY GEAR ASSEMBLY

(a) Using a screwdriver, pry out the snap ring from the brake hub.

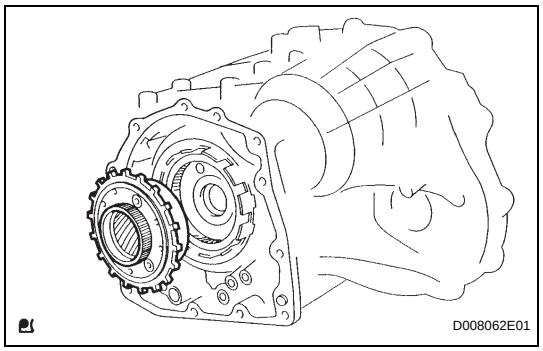

(b) Remove the rear planetary gear from the transaxle.

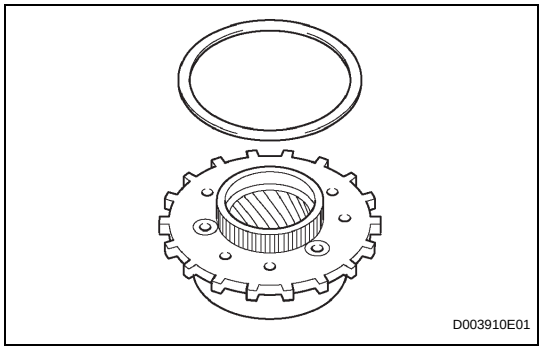

(c) Remove the thrust washer from the rear planetary gear.

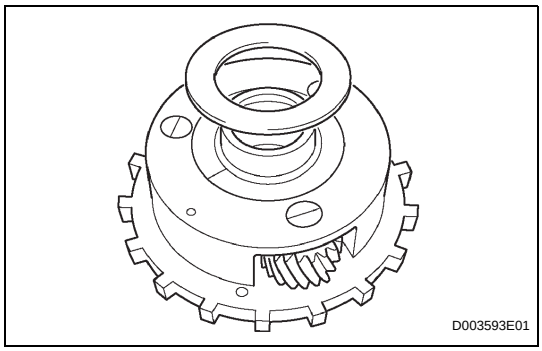

(d) Remove the thrust bearing race from the rear planetary gear.

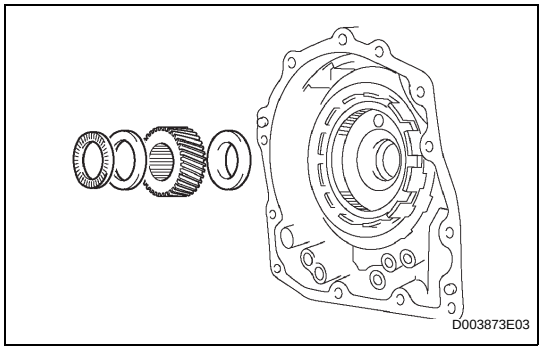

63. REMOVE INPUT SUN GEAR

(a) Remove the 2 thrust bearings, bearing race and input sun gear from the transaxle.

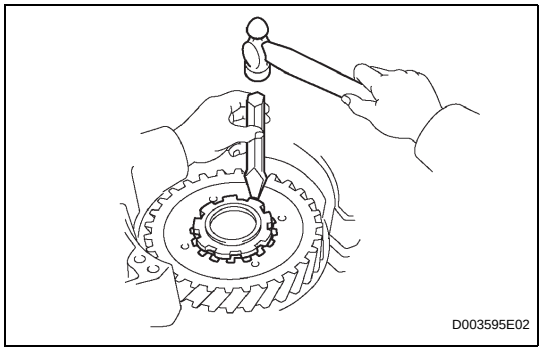

64. REMOVE FRONT PLANETARY GEAR ASSEMBLY

(a) Using a chisel and hammer, unstake the lock washer.

NOTICE:

Push down all claws of the washer. Otherwise SST cannot be fully pressed against the nut and cannot loosen the nut.

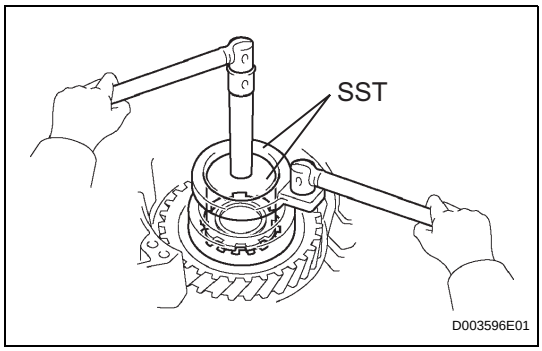

(b) Using SST, remove the nut.

SST 09387-00030, 09387-00080

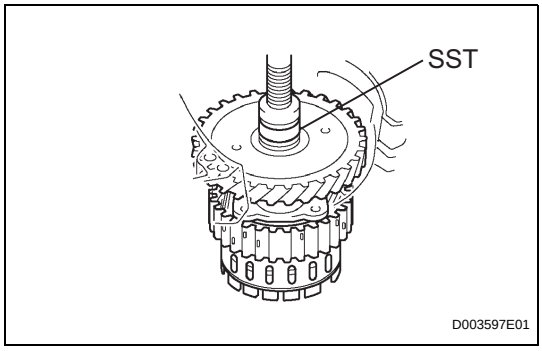

(c) Using SST and a press, remove the front planetary gear from the counter drive gear.

SST 09950-60010 (09951-00450)

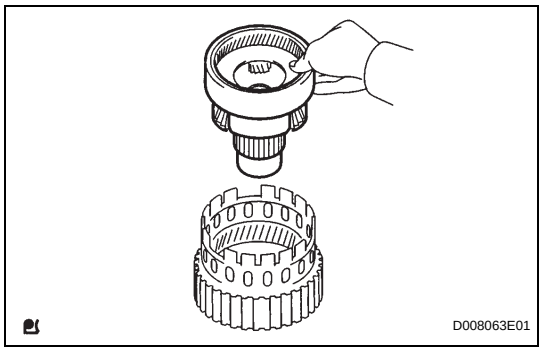

(d) Remove the front planetary gear from the brake hub.

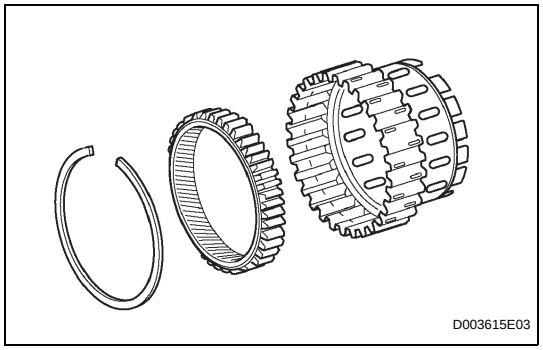

65. REMOVE FRONT PLANETARY RING GEAR

(a) Using a screwdriver, pry out the brake hub snap ring and front planetary ring gear from the brake hub.

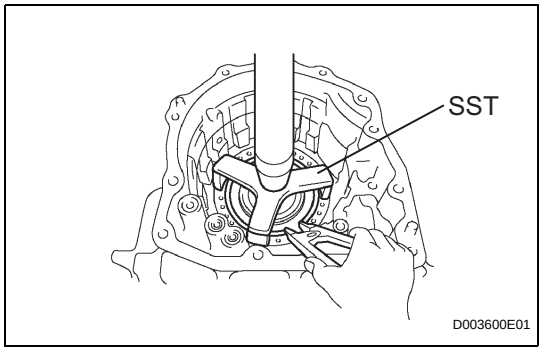

66. REMOVE 1ST AND REVERSE BRAKE PISTON

(a) Using SST, a press and ring expander, remove the snap ring and piston return spring.
SST 09387-00070
NOTICE:
- **Stop the press when the spring sheet is lowered 1 to 2 mm (0.039 to 0.078 in.) from the snap ring groove, preventing the spring sheet from deforming.**
- **Do not expand the snap ring excessively.**

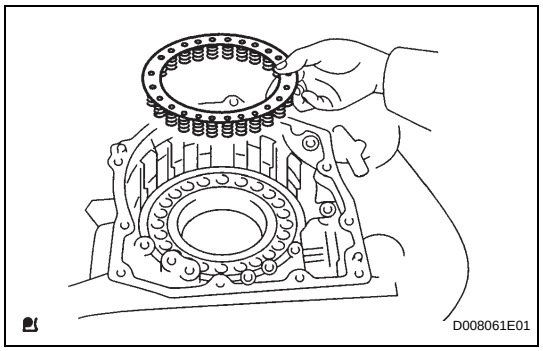

(b) Remove the 1st and reverse brake return spring from the 1st and reverse brake piston.

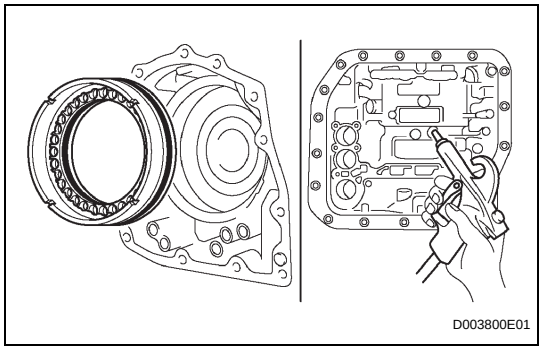

(c) Apply compressed air (392 kPa, 4.0 kgf/cm^2, 57 psi) to the transaxle to remove the 1st and reverse brake piston.
NOTICE:
- **Applying compressed air may cause the piston to jump out. When removing the piston, hold it with your hand using a waste cloth.**
- **Make sure not to spatter ATF when applying compressed air.**

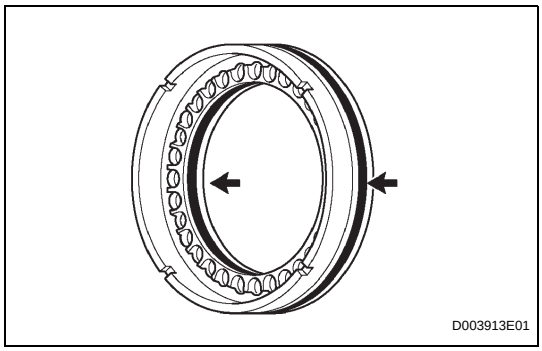

(d) Remove the 2 O-rings from the 1st and reverse brake piston.

67. INSPECT 1ST AND REVERSE BRAKE RETURN SPRING SUB-ASSEMBLY (See page AX-186)

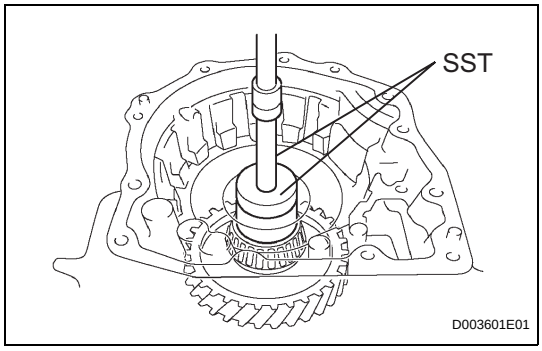

68. REMOVE COUNTER DRIVE GEAR

(a) Using SST and a press, press out the counter drive gear from the transaxle.
SST 09950-60010 (09951-00600), 09950-70010 (09951-07100)

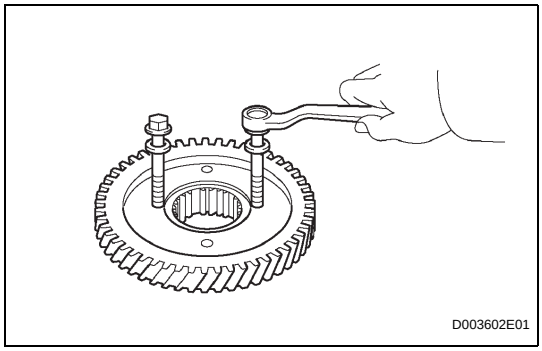

(b) As shown in the illustration, tighten the 2 bolts evenly and make a clearance of approximately. 20.0 mm (0.797 in.) between the counter drive gear and the inner race.

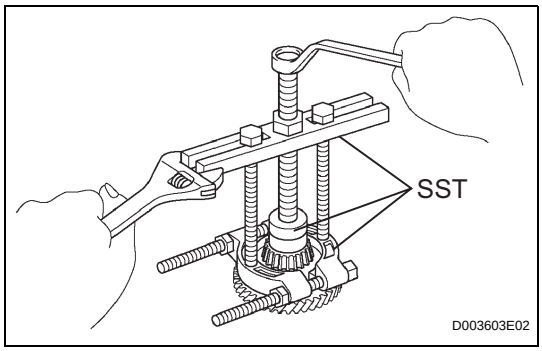

(c) Using SST, remove the tapered roller bearing.
SST 09950-60010 (09951-00600), 09950-40011 (09951-04010, 09952-04010, 09953-04020, 09954-04010, 09955-04011, 09958-04011)

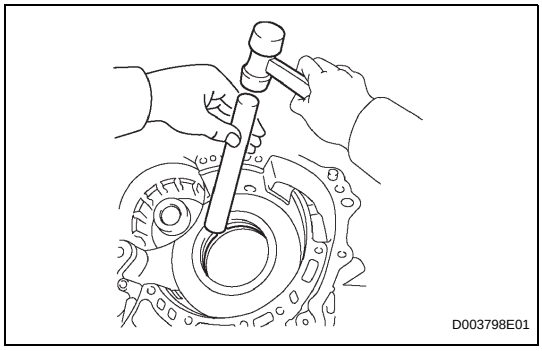

(d) Using a brass bar and hammer, tap out the 2 counter drive gear bearing outer races from the transaxle.

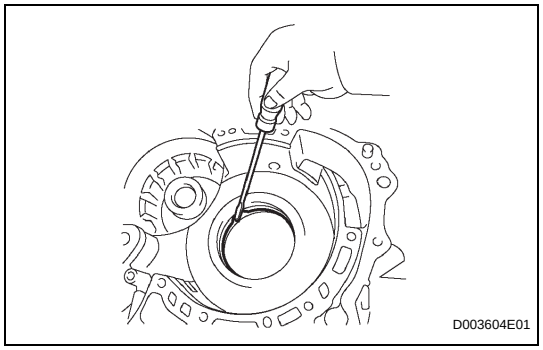

69. REMOVE COUNTER DRIVE GEAR HOLE SNAP RING

(a) Using a screwdriver, pry out the snap ring from the transaxle.

70. REMOVE NO. 2 BREATHER PLUG

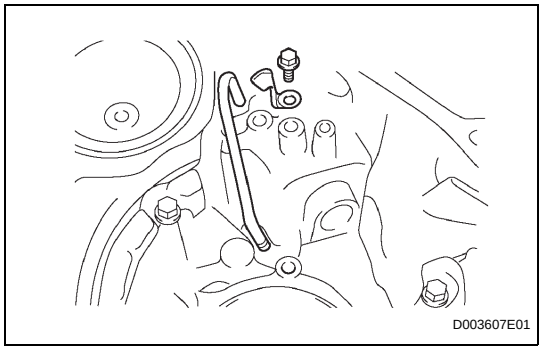

71. REMOVE DIFFERENTIAL GEAR LUBE APPLY TUBE

(a) Remove the bolt, the transaxle apply tube clamp and the differential gear lube apply tube from the transaxle.

INSPECTION

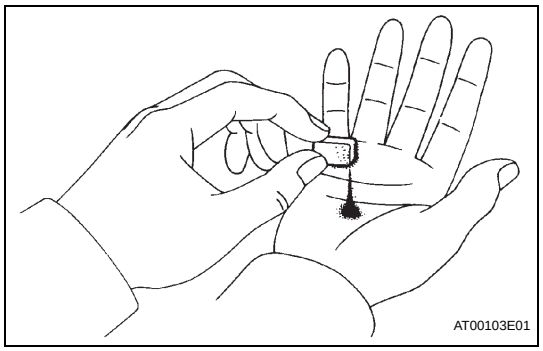

1. INSPECT AUTOMATIC TRANSAXLE OIL PAN SUB-ASSEMBLY

(a) Remove the magnets and use them to collect any steel chips. Examine the clips and particles in the pan and on the magnet to determine what type of wear has occurred in the transaxle.
Steel (magnetic): bearing, gear and plate wear
Brass (non-magnetic): bush wear

2. INSPECT INPUT SHAFT END PLAY

(a) Fix the transaxle case with the oil pump side facing up.

(b) Using a dial indicator, measure the input shaft end play.
Standard end play:
0.26 to 1.25 mm (0.0103 to 0.0492 in.)

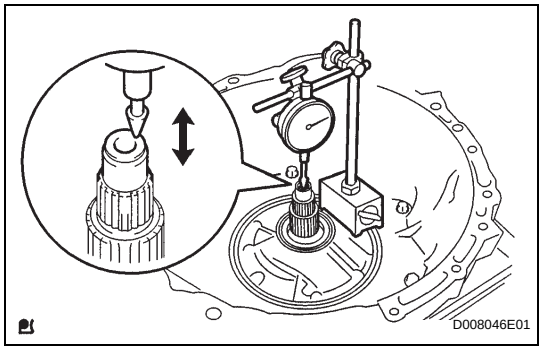

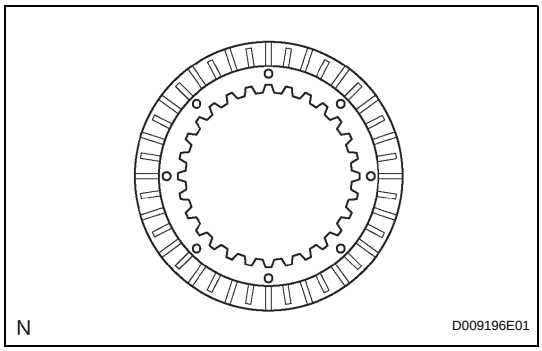

3. INSPECT NO. 2 UNDERDRIVE CLUTCH DISC

Check to see if the sliding surface of the disc, plate and flange are worn or burnt.

If necessary, replace them.

NOTICE:

- **If the lining of the disc is peeling off or discolored, or even if a part of the groove is defaced, replace all discs.**
- **Before assembling new discs, soak them in ATF for at least 15 minutes.**

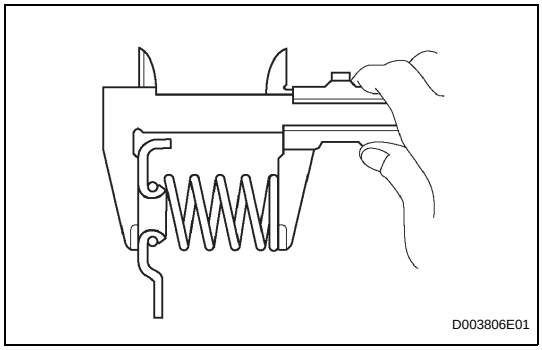

4. INSPECT UNDERDRIVE BRAKE RETURN SPRING SUB-ASSEMBLY

(a) Using a vernier caliper, measure the free length of the underdrive brake return spring together with the spring seat.

Standard free length:

14.04 mm (0.5213 in.)

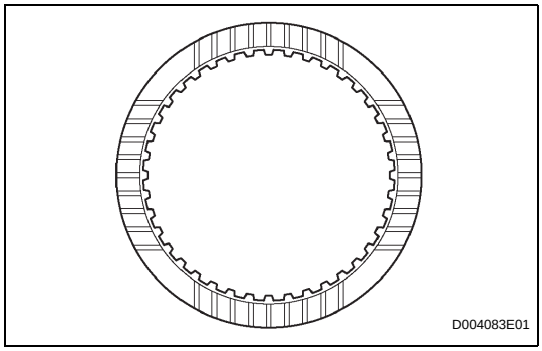

5. INSPECT 2ND BRAKE CLUTCH DISC

(a) Check to see if the sliding surface of the disc, plate and flange are worn or burnt.

If necessary, replace them.

NOTICE:

- **If the lining of the disc is peeling off or discolored, or even if a part of the printed number is defaced, replace all discs.**
- **Before assembling new discs, soak them in ATF for at least 15 minutes.**

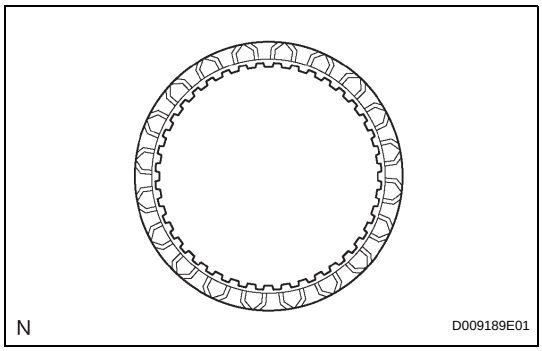

6. INSPECT 1ST AND REVERSE BRAKE CLUTCH DISC

(a) Check to see if the sliding surface of the disc, plate and flange are worn or burnt.

If necessary, replace them.

NOTICE:

- **If the lining of the disc is peeling off or discolored, or even if a part of the groove is defaced, replace all discs.**
- **Before assembling new discs, soak them in ATF for at least 15 minutes.**

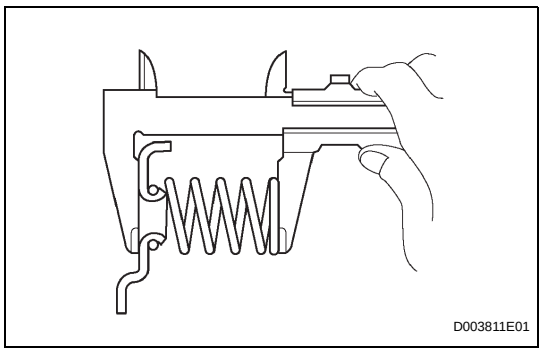

7. INSPECT 1ST AND REVERSE BRAKE RETURN SPRING SUB-ASSEMBLY

(a) Using a vernier caliper, measure the free length of the 1st and reverse brake return spring together with the spring seat.

Standard free length:

15.51 mm (0.6106 in.)

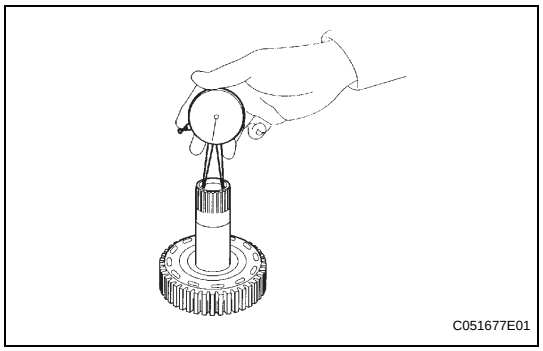

8. INSPECT MULTIPLE DISC CLUTCH CLUTCH HUB

(a) Using a caliper gauge, measure the inside diameter of the forward clutch hub bush.

Standard inside diameter:
23.025 to 23.045 mm (0.9065 to 0.9073 in.)

Maximum inside diameter:
23.09 mm (0.9091 in.)

NOTICE:

- **When the diameter is over the maximum, replace the multiple disc clutch hub with a new one.**
- **Check the contact surface of the bush in the direct clutch shaft. If any scratch or discolor is identified, replace the direct clutch sub-assembly with a new one.**

If the inside diameter is greater than the maximum, replace the forward clutch hub.

REASSEMBLY

1. BEARING POSITION

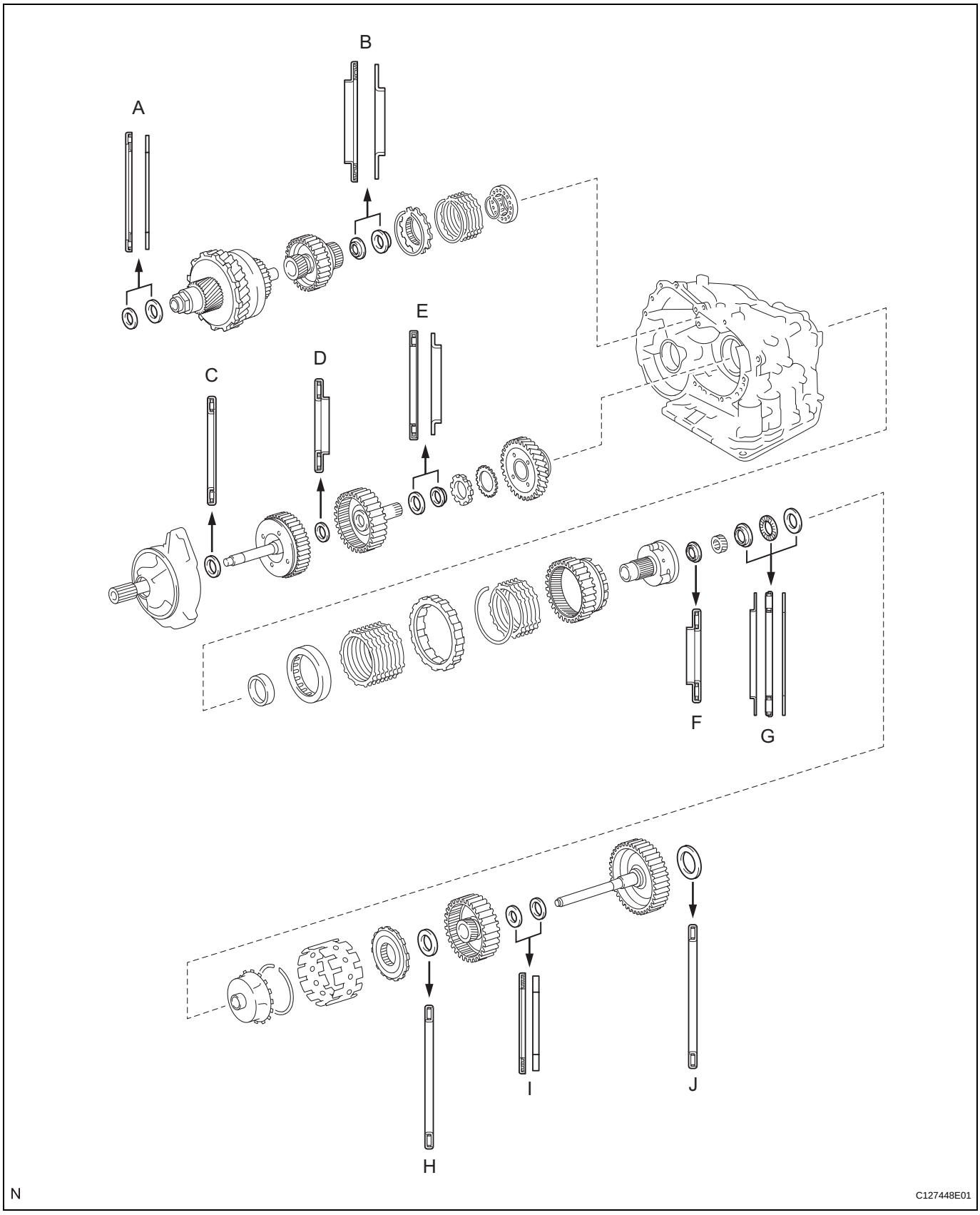

Standard bearing position

Mark	Front Race Diameter Inside / Outside	Thrust Bearing Diameter Inside / Outside	Rear Race Diameter Inside / Outside
A	-	53.0 mm (2.087 in.) / 78.2 mm (3.079 in.)	52.1 mm (2.051 in.) / 75.5 mm (2.972 in.)
B	-	37.73 mm (1.4854 in.) / 58.0 mm (2.283 in.)	29.9 mm (1.177 in.) / 55.5 mm (2.185 in.)
C	-	33.85 mm (1.3327 in.) / 52.2 mm (2.055 in.)	-
D	-	23.5 mm (0.925 in.) / 44.0 mm (1.732 in.)	-
E	-	36.3 mm (1.492 in.) / 52.2 mm (2.055 in.)	34.5 mm (1.358 in.) / 48.5 mm (1.909 in.)
F	-	34.6 mm (1.362 in.) / 52.2 mm (2.055 in.)	-
G	40.3 mm (1.587 in.) / 58.0 mm (2.283 in.)	38.6 mm (1.520 in.) / 60.0 mm (2.362 in.)	38.6 mm (1.520 in.) / 58.0 mm (2.283 in.)
H	-	53.6 mm (2.110 in.) / 69.6 mm (2.740 in.)	-
I	-	33.7 mm (1.327 in.) / 48.2 mm (1.898 in.)	30.3 mm (1.193 in.) / 46.0 mm (1.811 in.)
J	-	53.6 mm (2.110 in.) / 70.18 mm (2.763 in.) or 69.6 mm (2.740 in.)	-

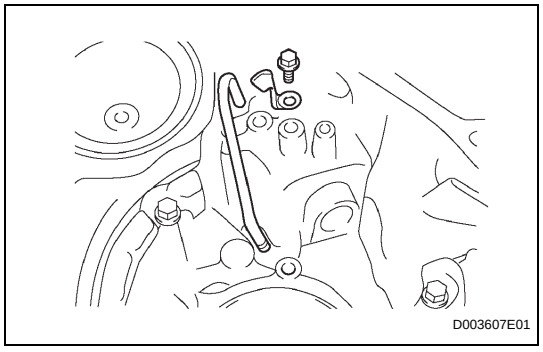

2. INSTALL DIFFERENTIAL GEAR LUBE APPLY TUBE

(a) Install the apply tube and apply tube clamp to the transaxle housing with the bolt.
Torque: 9.8 N*m (100 kgf*cm, 87 in.*lbf)
NOTICE:
Make sure to insert the tube to the stopper.

3. INSTALL NO. 2 BREATHER PLUG

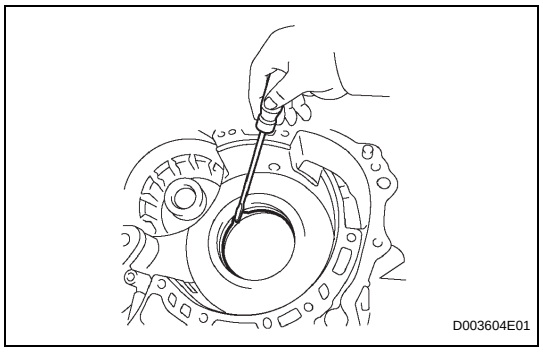

4. INSTALL COUNTER DRIVE GEAR HOLE SNAP RING

(a) Using a screwdriver, install the hole snap ring to the transaxle.

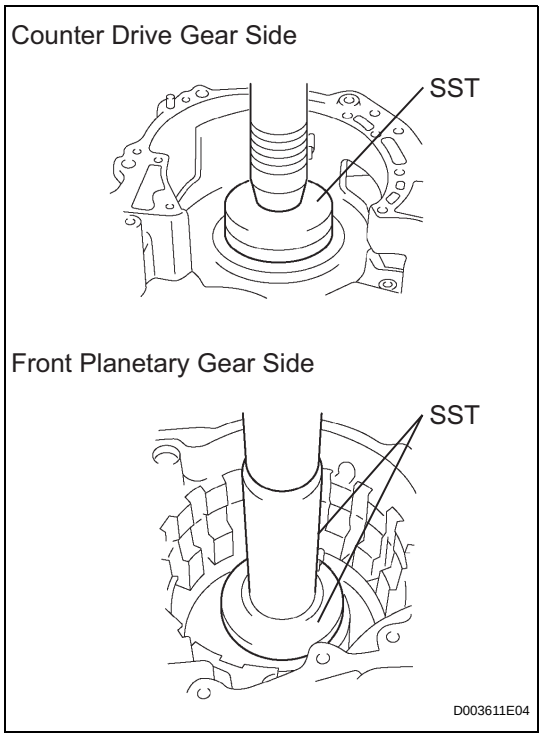

5. INSTALL COUNTER DRIVE GEAR

(a) Using SST and a press, press in the 2 counter drive gear bearings outer races to the transaxle.

NOTICE:

- **Press-fit the bearing race until it contacts the snap ring.**
- **Do not apply excessive pressure.**

SST 09950-60020 (09951-00890, 09951-07150)

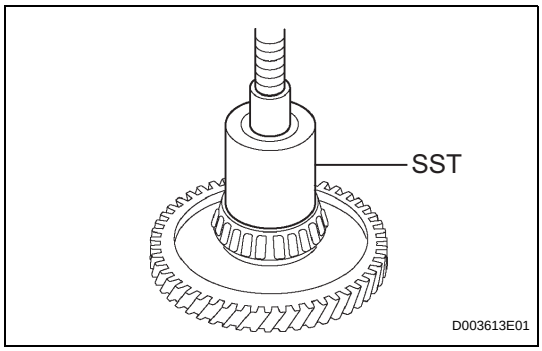

(b) Using SST and a press, press in the tapered roller bearing to the counter drive gear.

SST 09649-17010

NOTICE:

- **Press-fit the bearing inner race until it contacts the counter drive gear.**
- **Do not apply excessive pressure.**

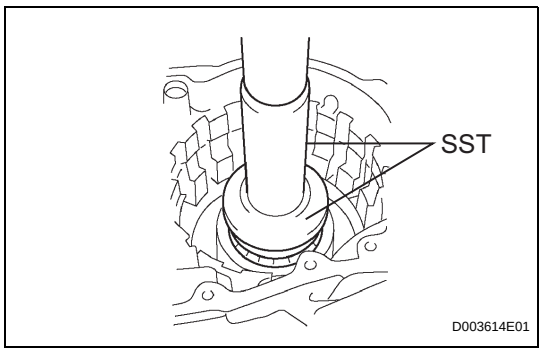

(c) Using SST and a press, press in the counter drive gear and bearing to the transaxle.

SST 09950-60020 (09951-00890), 09950-70010 (09951-07150)

NOTICE:

Do not apply excessive pressure.

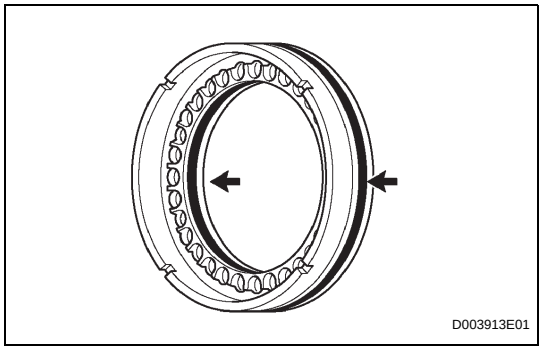

6. INSTALL 1ST AND REVERSE BRAKE PISTON

(a) Coat 2 new O-rings with ATF.

(b) Install the 2 O-ring to the 1st and reverse brake piston.

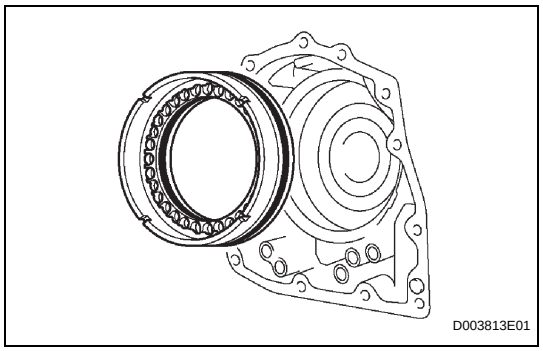

(c) Coat the 1st and reverse brake piston with ATF, and install it to the transaxle.

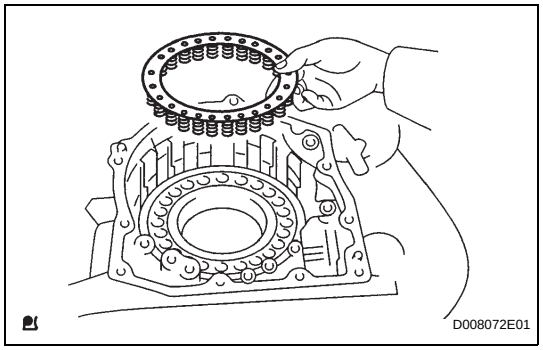

(d) Install the 1st and reverse brake return spring to the 1st and reverse brake piston.

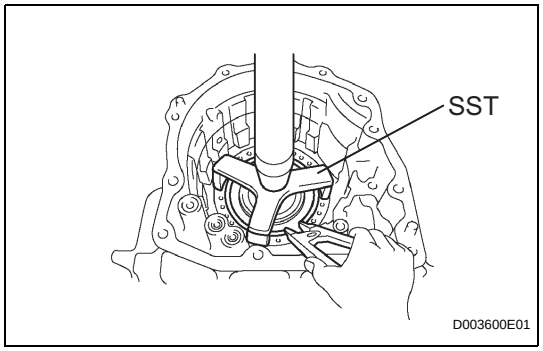

(e) Using SST, a press and snap ring expander, press the piston return spring and snap ring to the transaxle.
NOTICE:
- **Stop the press when the spring sheet is lowered to the place 1 to 2 mm (0.039 to 0.078 in.) from the snap ring groove, preventing the spring sheet from being deform.**
- **Do not expand the snap ring excessively.**

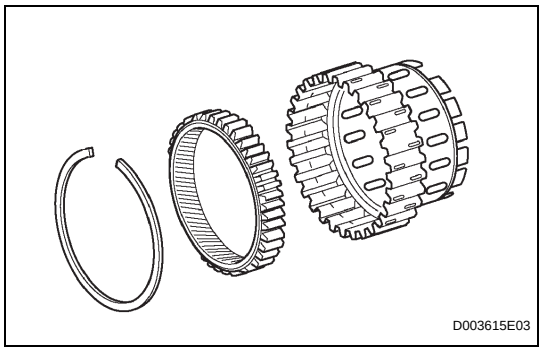

7. INSTALL FRONT PLANETARY RING GEAR

(a) Using a screwdriver, install the front planetary ring gear and brake hub snap ring to the brake hub.

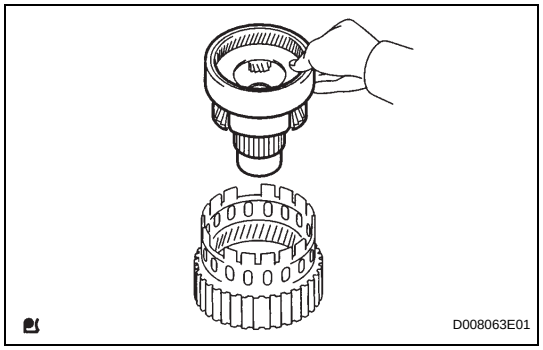

8. INSTALL FRONT PLANETARY GEAR ASSEMBLY

(a) Install the front planetary gear to the brake hub.

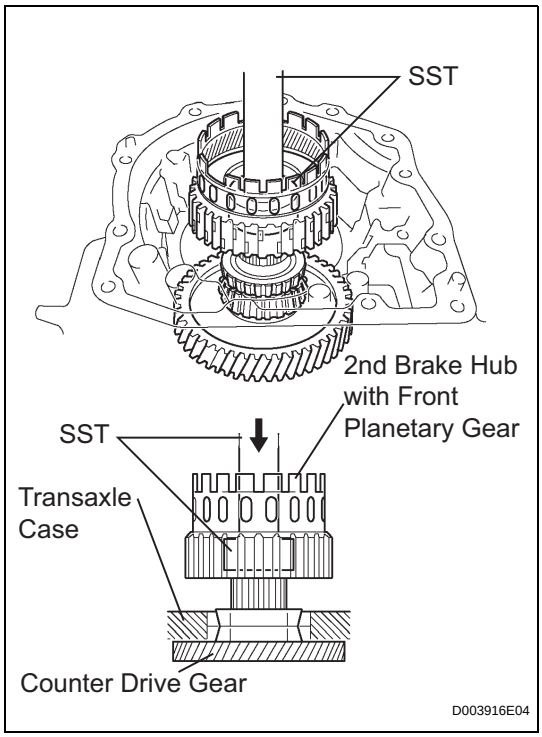

(b) Using SST and a press, press-fit the front planetary gear.
NOTICE:
Do not apply excessive pressure to it.

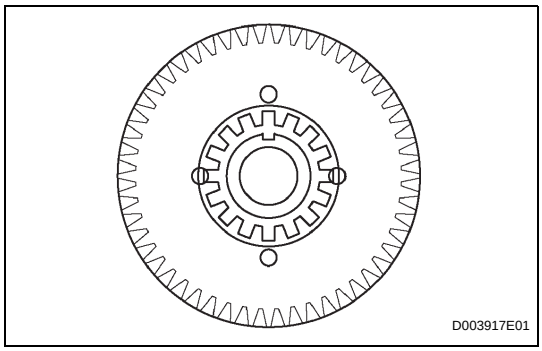

(c) Install the front planetary gear washer, as shown in the illustration.

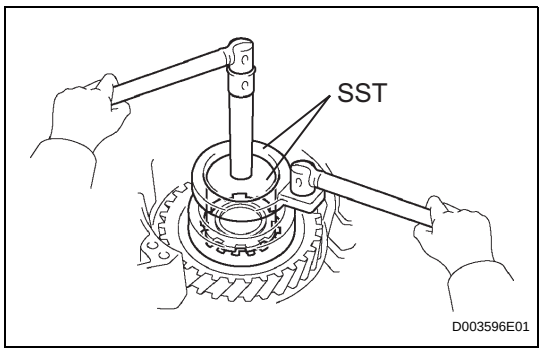

(d) Using SST, install the nut.
SST 09387-00030, 09387-00080
Torque: 280 N*m (2,855 kgf*cm, 206 ft.*lbf)

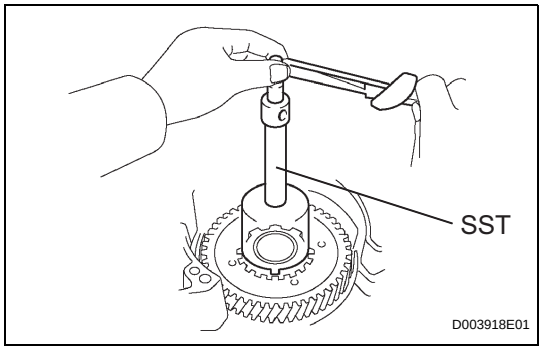

(e) Using SST and a torque wrench, measure the turning torque of the bearing while rotating SST at 60 rpm. When the measured value is not within the specified value, gradually tighten the nut until it reaches the specified value.
SST 09950-60010 (09951-00400), 09950-70010 (09951-07100), 09387-00030, 09387-00080

Torque: Turning torque at 60 rpm
0.5 to 1.0 N*m (5.1 to 10.0 kgf*cm, 4.4 to 8.7 in.*lbf) for new
0.3 to 0.5 N*m (3.1 to 5.1 kgf*cm, 2.7 to 4.4 in.*lbf) for used

(f) Using a chisel and hammer, stake the front planetary gear washer.

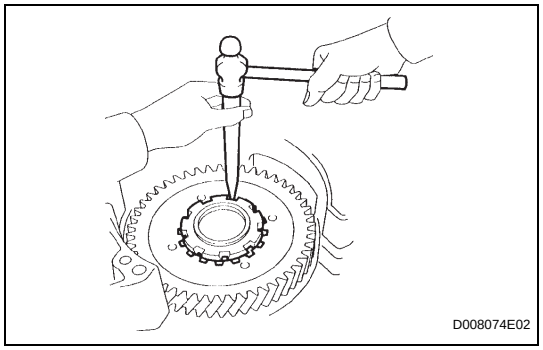

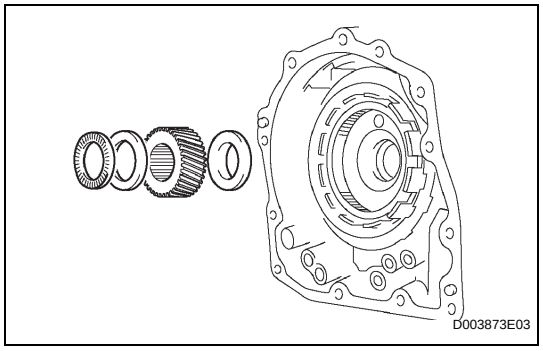

9. INSTALL INPUT SUN GEAR

(a) Install the 2 thrust bearings, bearing race and front planetary sun gear to the planetary gear.
Standard bearing race diameter

Item	Inside	Outside
Bearing	34.6 mm (1.362 in.)	52.2 mm (2.055 in.)
Race	40.3 mm (1.587 in.)	58.0 mm (2.283 in.)
Bearing	38.6 mm (1.520 in.)	60.0 mm (2.362 in.)

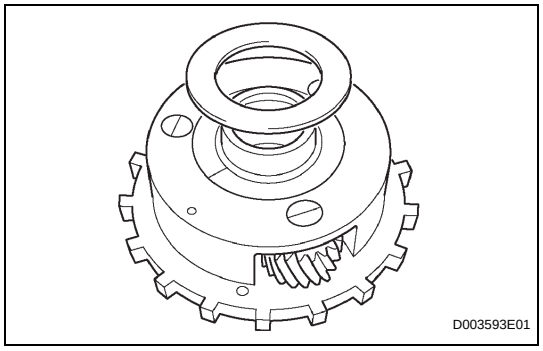

10. INSTALL REAR PLANETARY GEAR ASSEMBLY

(a) Coat the bearing race with ATF, and install it to the rear planetary gear.
Standard bearing race diameter

Item	Inside	Outside
Race	38.6 mm (1.520 in.)	58.0 mm (2.283 in.)

(b) Install the planetary carrier thrust washer to the planetary gear.

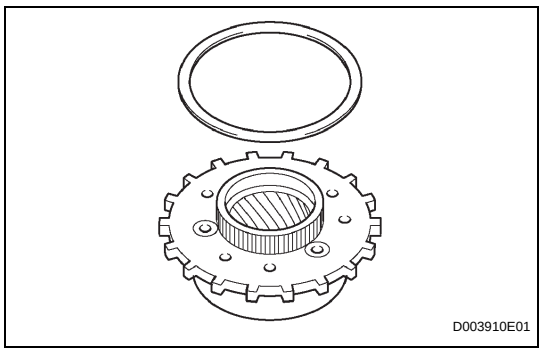

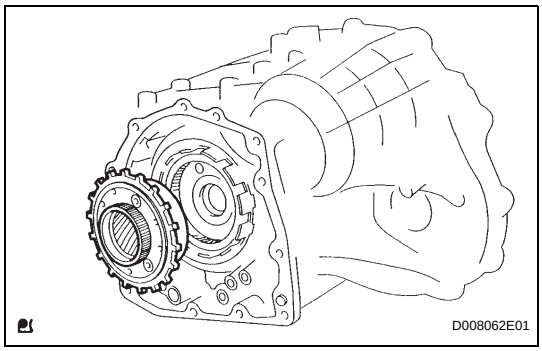

(c) Install the rear planetary gear to the rear planetary ring gear.

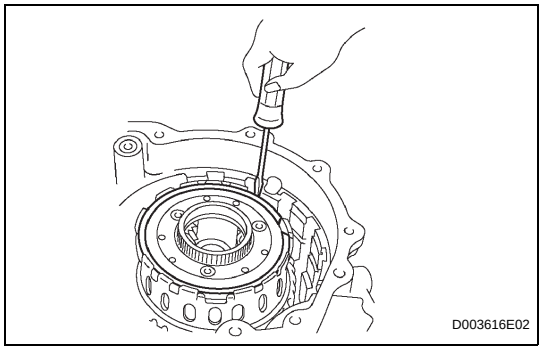

(d) Using a screwdriver, install the snap ring to the brake hub.

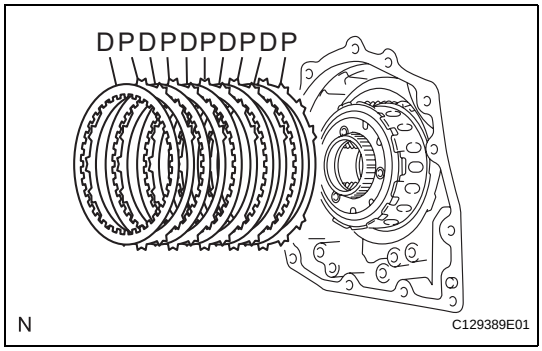

11. INSTALL 1ST AND REVERSE BRAKE CLUTCH DISC

(a) Install the 5 plates and 5 discs.
Install in order:
P - D - P - D - P - D - P - D - P - D
HINT:
P = Plate
D = Disc

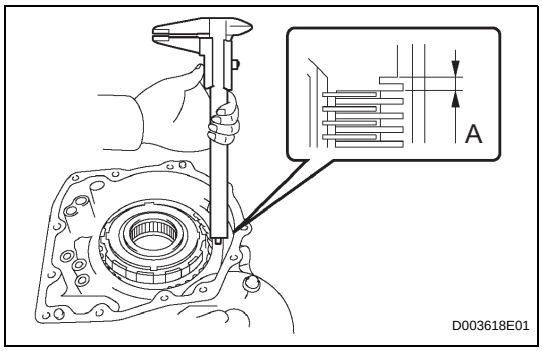

(b) Using a vernier caliper, measure the distance between the disc surface and the contact surface of the 2nd brake cylinder and transaxle (Dimension A).

(c) Select an appropriate flange so that the piston stroke will meet the specified value.
Pack clearance:
1.02 to 1.21 mm (0.0402 to 0.0476 in.)
HINT:
Piston stroke = Dimension A - Flange thickness
Standard flange thickness

Mark	Thickness	Mark	Thickness
1	1.8 mm (0.071 in.)	5	2.2 mm (0.087 in.)
2	1.9 mm (0.075 in.)	6	2.3 mm (0.091 in.)
3	2.0 mm (0.079 in.)	7	2.4 mm (0.094 in.)
4	2.1 mm (0.083 in.)	8	2.5 mm (0.098 in.)

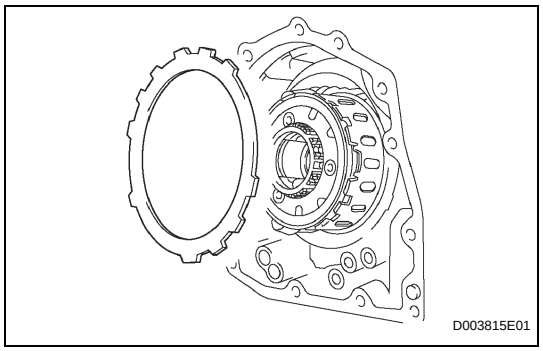

(d) Install the flange.

12. INSPECT PACK CLEARANCE OF 1ST AND REVERSE BRAKE

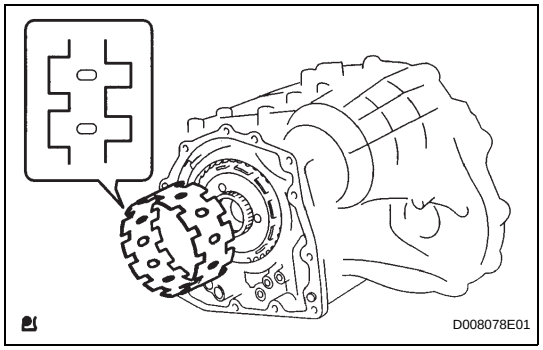

13. INSTALL 1-WAY CLUTCH SLEEVE OUTER

(a) Install the 1-way clutch outer sleeve to the 2nd brake cylinder.
NOTICE:
Check the positioning direction of the outer sleeve.

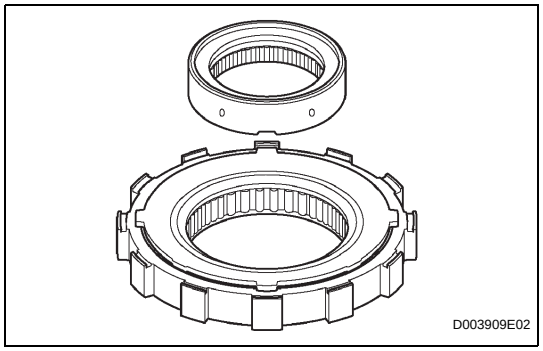

14. INSTALL 1-WAY CLUTCH ASSEMBLY

(a) Install the inner race to the 1-way clutch.
NOTICE:
Check the direction of the inner race.

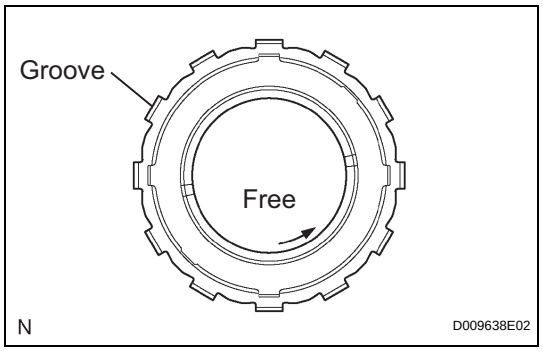

(b) Check the rotating direction of the 1-way clutch for the lock or free operation, as shown in illustration.

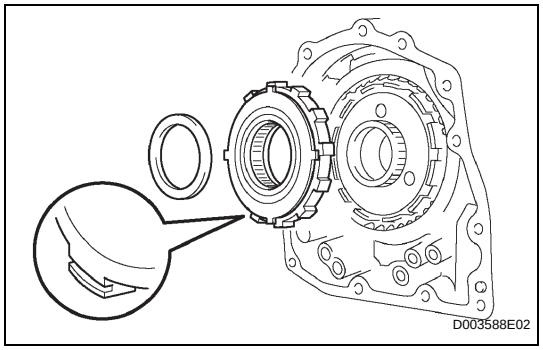

(c) Install the 1-way clutch and bearing to the 1-way clutch outer race sleeve.
Standard bearing diameter

Item	Inside	Outside
Bearing	53.6 mm (2.110 in.)	69.6 mm (2.740 in.)

NOTICE:
Install the thrust bearing properly so that no colored race will be visible.

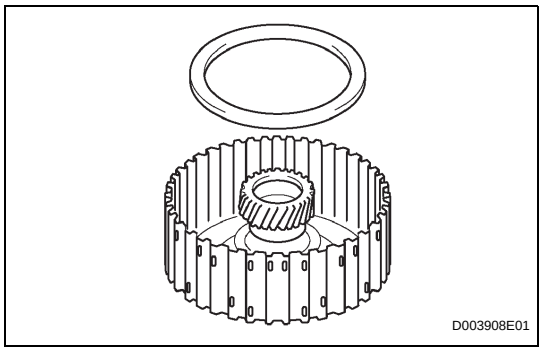

15. INSTALL REAR PLANETARY SUN GEAR ASSEMBLY

(a) Coat the No. 1 planetary carrier thrust washer with petroleum jelly, and install it onto the rear planetary sun gear.

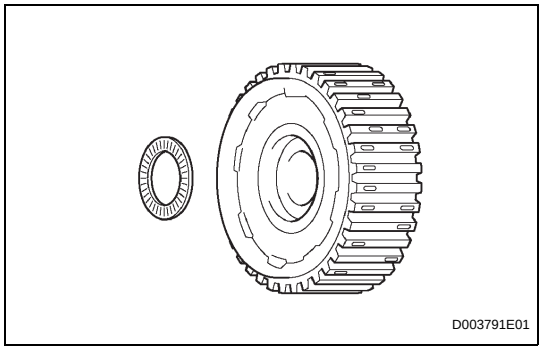

(b) Coat the bearing with petroleum jelly, and install it onto the rear planetary sun gear.

Standard bearing diameter

Item	Inside	Outside
Bearing	33.8 mm (1.331 in.)	48.2 mm (1.898 in.)

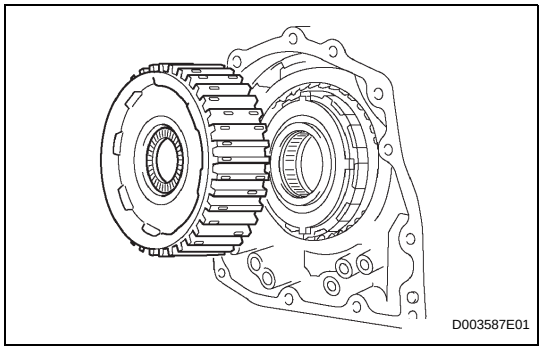

(c) Install the rear planetary sun gear to the rear planetary gear.

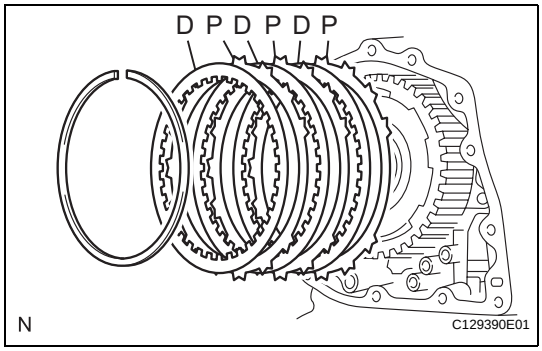

16. INSTALL 2ND BRAKE CLUTCH DISC

(a) Install the 3 discs and 3 plates to the transaxle.

Install in order:

P - D - P - D - P - D

HINT:

P = Plate

D = Disc

(b) Temporarily install the snap ring.

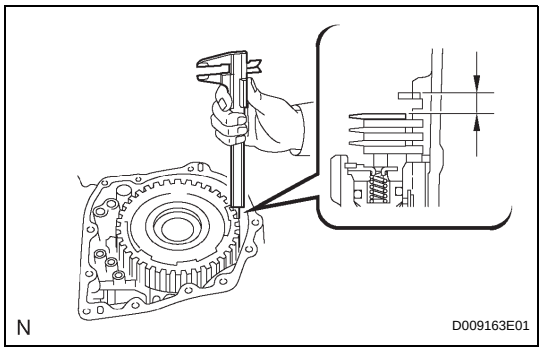

(c) Using a vernier caliper, measure the distance between the disc surface and snap ring surface.

(d) Select an appropriate flange so that the piston stroke will meet the specified value.

Standard pack clearance:

0.62 to 0.91 mm (0.0244 to 0.0358 in.)

HINT:

Piston stroke = Clearance - Flange thickness -Snap ring thickness 1.6 mm (0.063 in.)

Standard flange thickness

Mark	Thickness	Mark	Thickness
1	3.0 mm (0.118 in.)	5	3.4 mm (0.134 in.)
2	3.1 mm (0.122 in.)	6	3.5 mm (0.138 in.)
3	3.2 mm (0.126 in.)	7	3.6 mm (0.142 in.)
4	3.3 mm (0.130 in.)	8	-

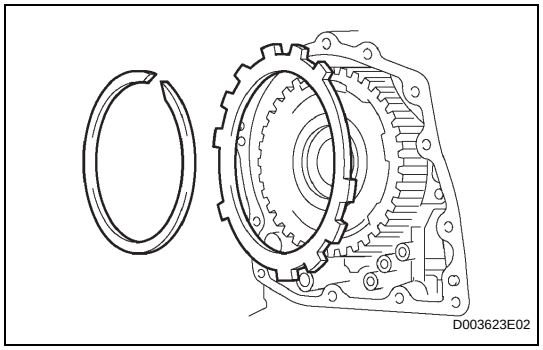

(e) Temporarily remove the snap ring, attach the selected flange and restore the snap ring.
NOTICE:
Secure the snap ring so that its gap is visible through the groove of the transaxle case.

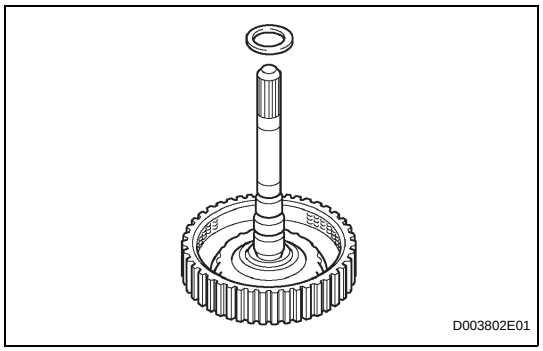

17. INSTALL DIRECT CLUTCH

(a) Install the bearing race to the direct clutch.
Standard bearing diameter

Item	Inside	Outside
Bearing race	30.3 mm (1.193 in.)	46.0 mm (1.811 in.)

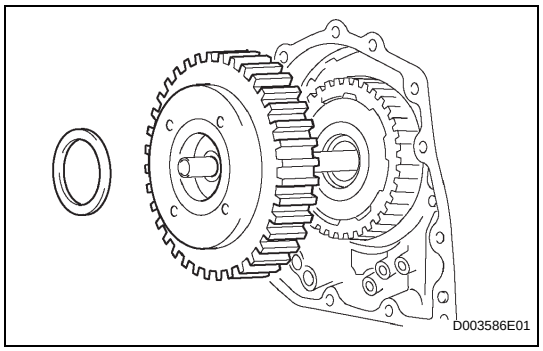

(b) Install the direct clutch and thrust needle roller bearing to the rear planetary sun gear.
NOTICE:
The disc in the direct clutch should completely align with the hub attached outside the rear planetary sun gear. Otherwise, the rear cover cannot be installed.

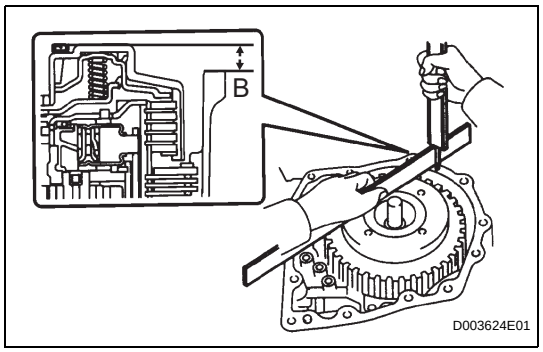

(c) Clean the connector part of the transaxle case and rear cover.

(d) As shown in the illustration, place a straightedge on the direct clutch drum and measure the distance between the transaxle case and the straightedge using a vernier caliper (Dimension B).

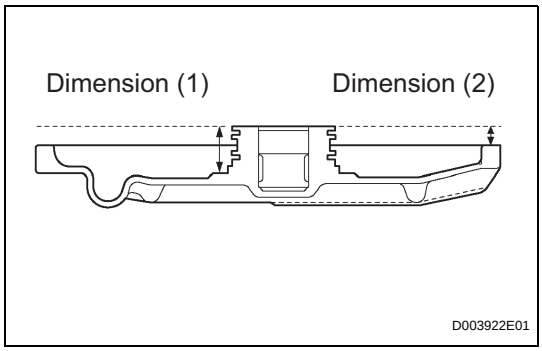

(e) Measure the 2 places of the rear cover as shown in the illustration and calculate a dimension C using the following formula.
HINT:
Dimension C = Dimension (1) - Dimension (2)

(f) Calculate the end play value using the following formula. Select a thrust bearing which satisfies the end play value and install it.
End play:
0.198 to 0.936 mm (0.00800 to 0.03685 in.)
NOTICE:
Make sure that the colored race side is facing the direct clutch assembly.
HINT:
End play = Dimension C - Dimension B
Standard bearing thickness and diameter

Thickness	Inside	Outside
3.58 mm (0.1409 in.)	53.6 mm (2.110 in.)	69.6 mm (2.740 in.)
3.88 mm (0.1528 in.)	53.6 mm (2.110 in.)	70.18 mm (2.763 in.)

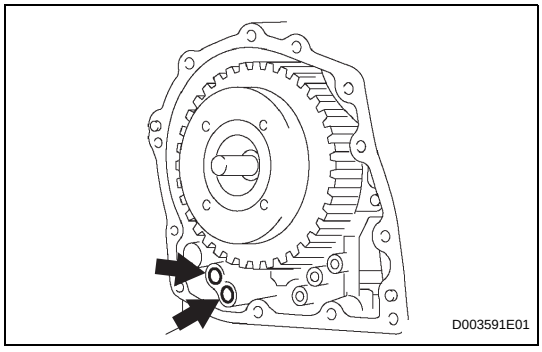

18. INSTALL NO. 1 GOVERNOR APPLY GASKET

(a) Install 2 new apply gaskets to the transaxle.

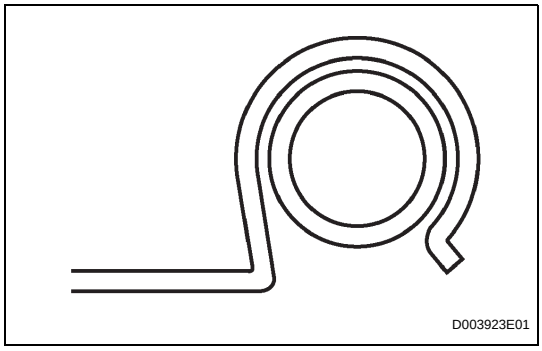

19. INSTALL FRONT CLUTCH APPLY TUBE

(a) Install the clamp to the front clutch apply tube.
NOTICE:
Make sure to install the clamp to the apply pipe before installing the apply pipe to the transaxle case. This prevents the apply pipe from being deformed or damaged.

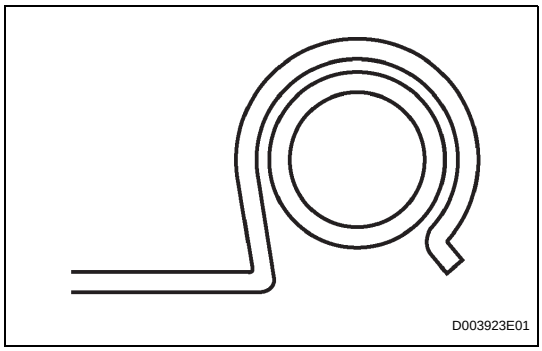

20. INSTALL BRAKE APPLY TUBE

(a) Install the clamp to the brake apply tube.
NOTICE:
Make sure to install the clamp to the apply pipe before installing the apply pipe to the transaxle case. This prevents the apply pipe from being deformed or damaged.

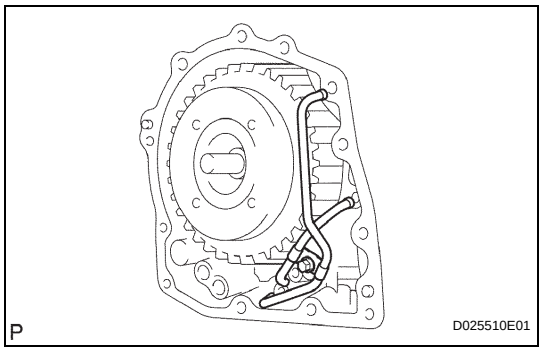

(b) Install the 2 apply tubes to the transaxle with the bolt.
Torque: 5.4 N*m (55 kgf*cm, 48 in.*lbf)
NOTICE:
Each pipe should be securely inserted until it reaches the stopper.

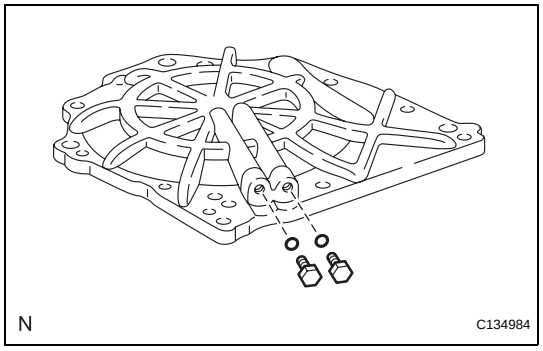

21. INSTALL NO. 1 TRANSAXLE CASE PLUG
(a) Install 2 new O-rings to the 2 plugs.
(b) Install the 2 plugs to the transaxle rear cover.
Torque: 7.4 N*m (75 kgf*cm, 65 in.*lbf)

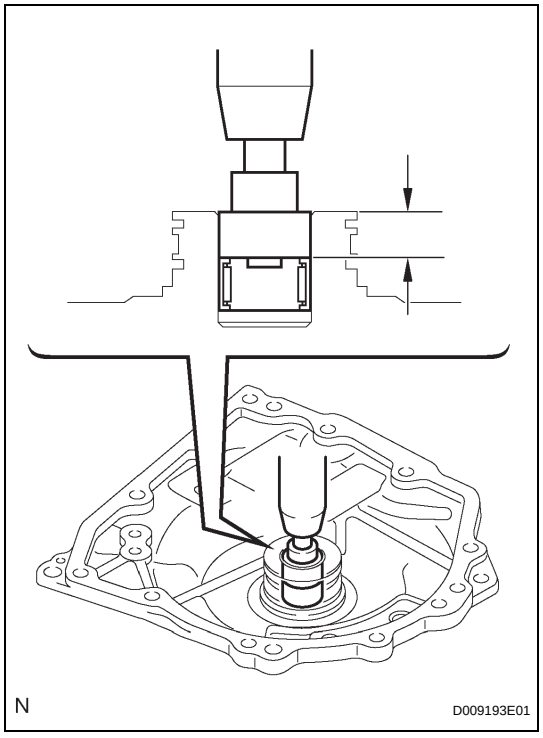

22. INSTALL TRANSAXLE REAR COVER SUB-ASSEMBLY
(a) Using SST and a press, press in the bearing.
SST 09950-60010 (09951-00230, 09951-00350)
Standard depth:
12.05 to 12.75 mm (0.4744 to 0.5020 in.)
NOTICE:
- **Face the inscribed mark side of the bearing race up.**
- **Repeat the press-fit until the specified value is obtained.**

(b) Apply adhesive to the 2 screws.
Adhesive:
Toyota Genuine Adhesive 1344,
Three Bond 1344 or Equivalent

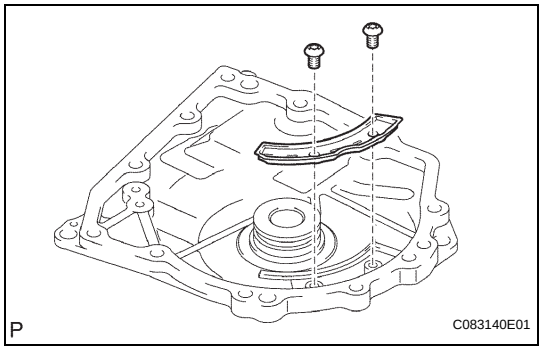

(c) Using a T30 "torx" socket, install the transaxle rear cover plate with the 2 screws.
Torque: 7.5 N*m (76 kgf*cm, 66 in.*lbf)

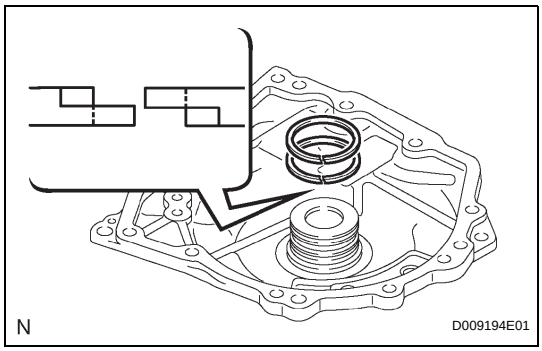

(d) Coat 2 new oil seal rings with ATF, and install them to the transaxle rear cover.

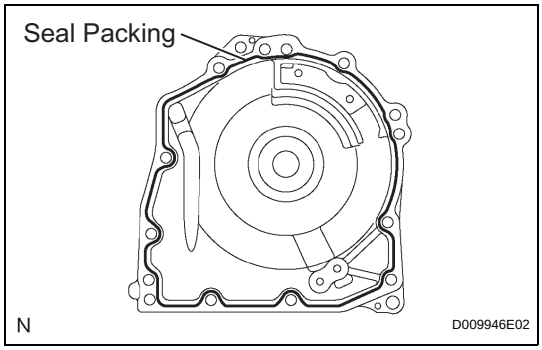

(e) Remove any packing material and be careful not to get oil on the contacting surfaces of the transaxle rear cover or the transaxle.

(f) Apply seal packing to the cover.
Seal packing:
Toyota Genuine Seal Packing 1281,
Three Bond 1281 or Equivalent

(g) Coat the needle roller bearing with ATF.

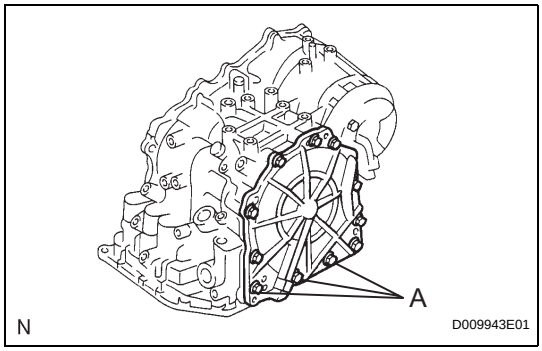

(h) Apply adhesive to the threads of the bolts labeled A.
Adhesive:
Toyota Genuine Adhesive 1344,
Three Bond 1344 or Equivalent

(i) Install the 11 bolts.
Torque: 19 N*m (194 kgf*cm, 14 ft.*lbf) for bolt A
25 N*m (255 kgf*cm, 18 ft.*lbf) for other bolt

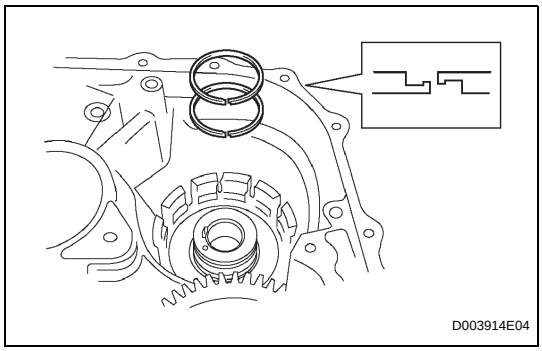

23. INSTALL UNDERDRIVE CLUTCH DRUM OIL SEAL RING

(a) Install 2 new oil seals to the transaxle.

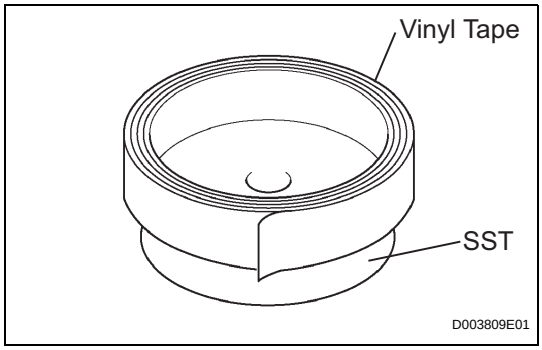

24. INSTALL UNDERDRIVE BRAKE PISTON

(a) Wind a vinyl tape around SST at the 4.0 mm (0.157 in.) above from the bottom end until the thickness of the wound tape is about 5.0 mm (0.197 in.).
SST 09550-60010 (09951-00320)
NOTICE:
Clean SST to remove deposited oil before winding a vinyl tape.

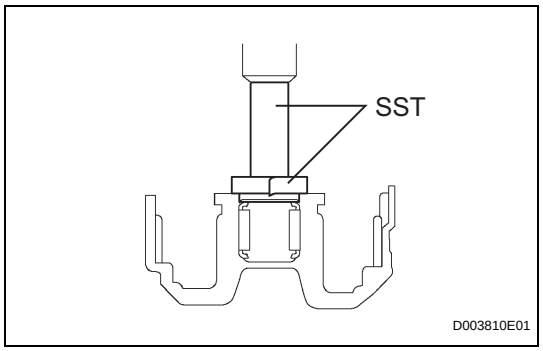

(b) Using SST and a press, press in the needle-roller bearing to the transaxle until the wound vinyl tape contacts the transaxle case.
SST 09550-60010 (09951-00320), 09950-70010 (09951-07100), 09387-00020

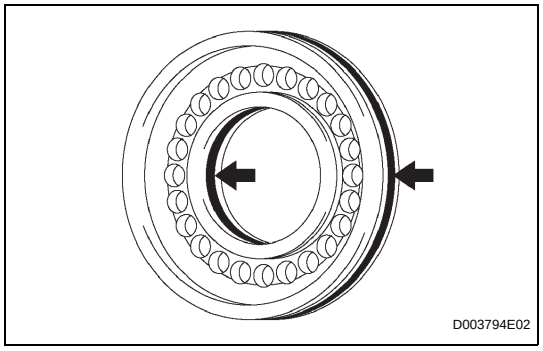

(c) Coat 2 new O-rings with ATF, and install them to the underdrive brake piston.

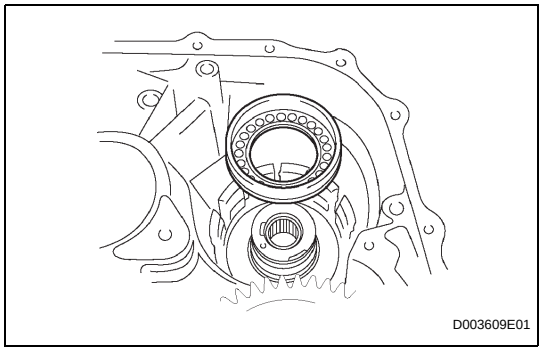

(d) Install the underdrive brake piston to the transaxle.

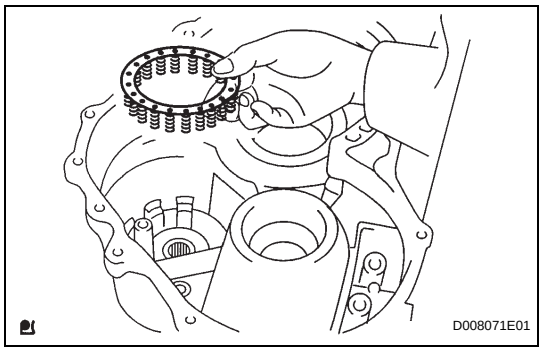

25. INSTALL UNDERDRIVE BRAKE RETURN SPRING SUB-ASSEMBLY

(a) Install the underdrive brake return spring to the underdrive brake piston.

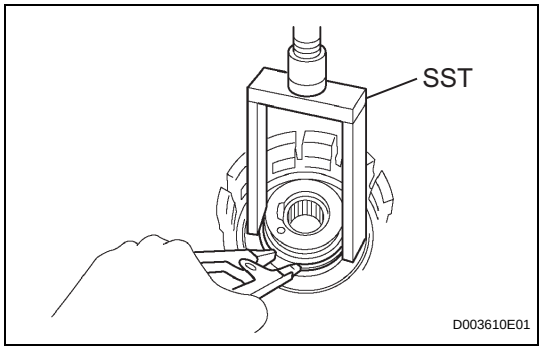

(b) Using SST, a snap ring expander and press, press the return spring and install the snap ring to the transaxle.
SST 09387-00020
NOTICE:
Do not apply excessive pressure.

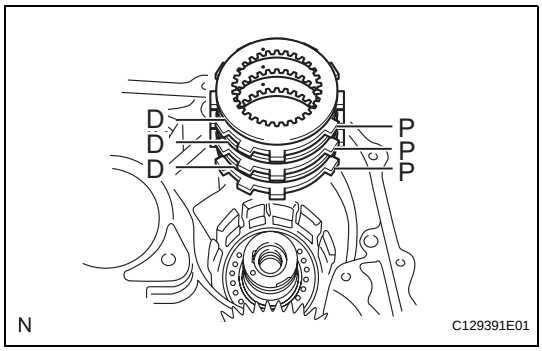

26. INSTALL NO. 2 UNDERDRIVE CLUTCH DISC

(a) Install the 3 discs and 3 plates to the transaxle.

Install in order:

P - D - P - D - P - D

HINT:

D = Disc

P = Plate

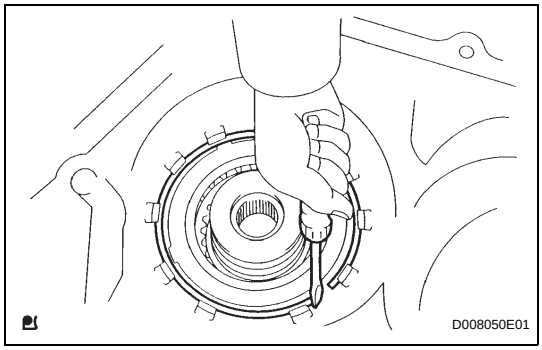

(b) Using a screwdriver, install the snap ring.

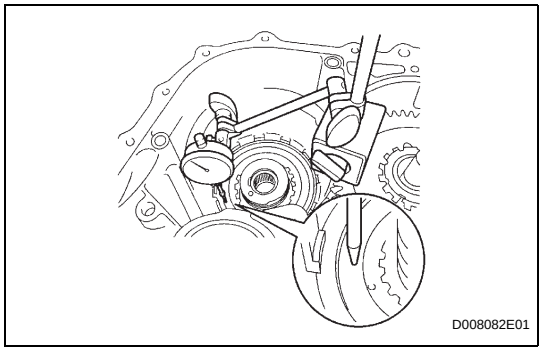

(c) Using a dial indicator, measure the underdrive brake piston stroke while applying and releasing compressed air (392 kPa, 4.0 kgf/cm^2, 57 psi).

Standard piston stroke:

1.81 to 2.20 mm (0.0713 to 0.0866 in.)

HINT:

Select an appropriate flange from the table below so that it will meet the specified value.

Standard flange thickness

Mark	Thickness	Mark	Thickness
1	3.0 mm (0.118 in.)	3	3.4 mm (0.134 in.)
2	3.2 mm (0.126 in.)	-	-

(d) Temporarily remove the snap ring and attach the flange. Restore the snap ring.

27. INSTALL UNDERDRIVE 1-WAY CLUTCH ASSEMBLY

(a) Install the outer race retainer to the 1-way clutch.

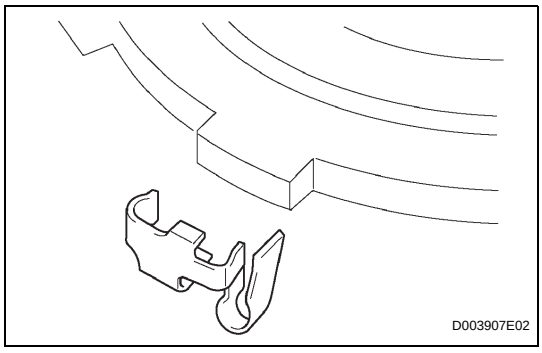

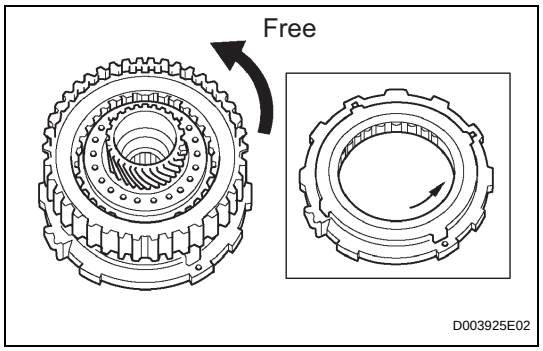

(b) Install the underdrive clutch assembly to the 1-way clutch. Rotate the underdrive clutch to check the rotating direction for the lock or free operation.

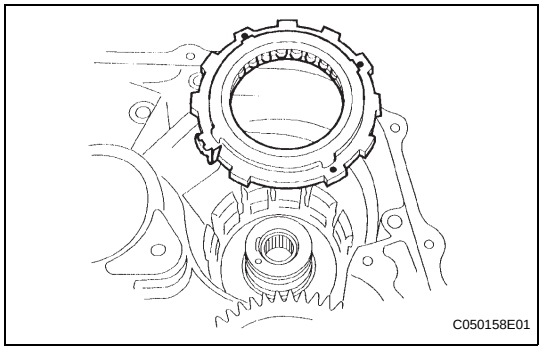

(c) Install the 1-way clutch to the transaxle.
NOTICE:
Make sure that the mark on the 1-way clutch outer race is visible.

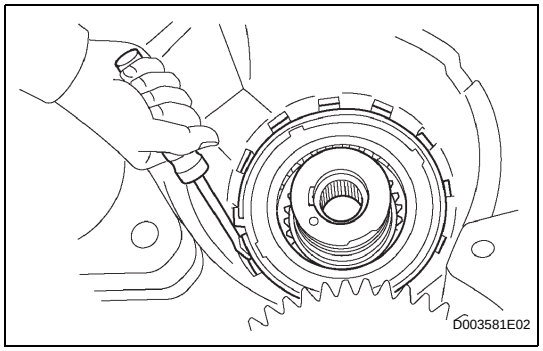

(d) Using a screwdriver, install the snap ring to the transaxle.

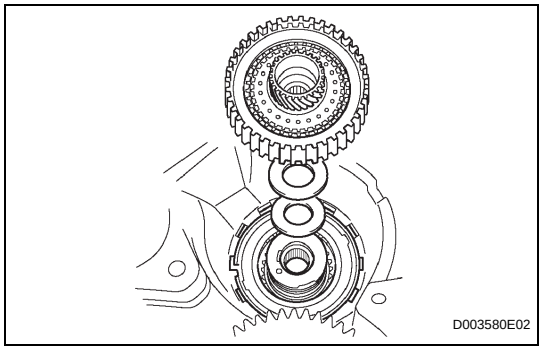

28. INSTALL UNDERDRIVE CLUTCH

(a) Coat the bearing and bearing race with petroleum jelly, and install them onto the underdrive clutch.
Standard race diameter

Item	Inside	Outside
Bearing	37.73 mm (1.4854 in.)	58.0 mm (2.283 in.)
Race	29.9 mm (1.177 in.)	55.5 mm (2.185 in.)

(b) Install the underdrive clutch assembly to the transaxle.

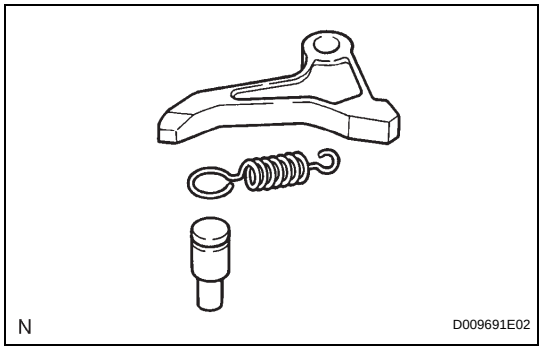

29. INSTALL UNDERDRIVE PLANETARY GEAR ASSEMBLY

(a) Install the parking lock pawl pin and torsion spring to the parking lock pawl.

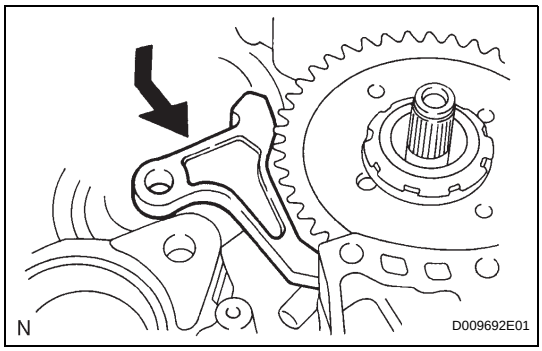

(b) Temporarily install the parking lock pawl, shaft and spring to the transaxle case as shown in the illustration.

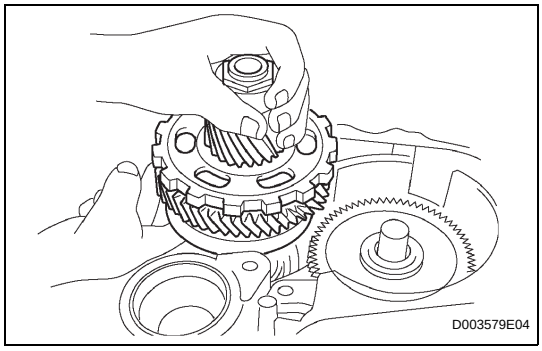

(c) Install the underdrive planetary gear assembly to the transaxle.
NOTICE:
Engage all the discs of the underdrive clutch and hub splines of the underdrive planetary gear assembly firmly and assemble them securely.

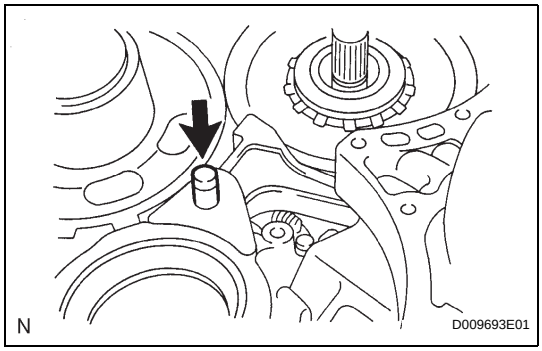

(d) Install the parking lock pawl shaft.

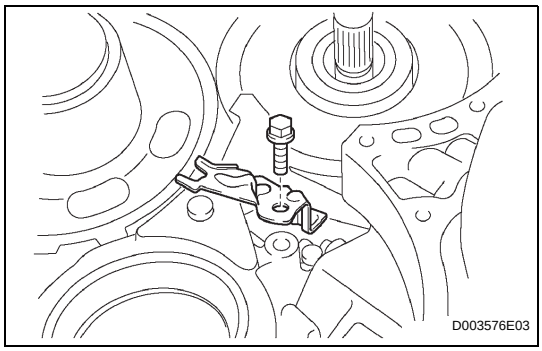

(e) Install the pawl shaft clamp with the bolt.
Torque: 9.8 N*m (100 kgf*cm, 87 in.*lbf)

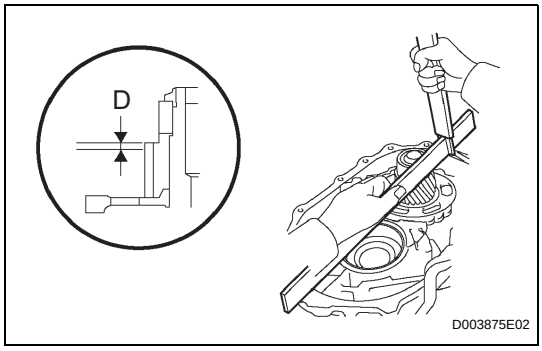

(f) Using a straightedge and vernier caliper as shown in the illustration, measure the gap between the top of the differential drive pinion in the underdrive planetary gear and contact surface of the transaxle and housing (Dimension D).
NOTICE:
Note down the dimension D as it is necessary for the following process.

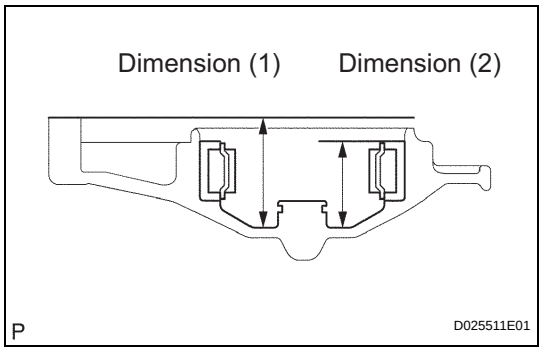

(g) As shown in the illustration, measure the 2 places of the transaxle housing. Calculate the dimension E using the formula.
NOTICE:
Note down the dimension E as it is necessary for the following process.
HINT:
Dimension E = Dimension (1) - Dimension (2)

30. INSPECT MULTIPLE DISC CLUTCH CLUTCH HUB (See page AX-187)

31. INSTALL MULTIPLE DISC CLUTCH CLUTCH HUB

(a) Install the bearing race to the transaxle while checking its direction.
Standard bearing diameter

Item	Inside	Outside
Bearing race	34.5 mm (1.358 in.)	48.5 mm (1.909 in.)

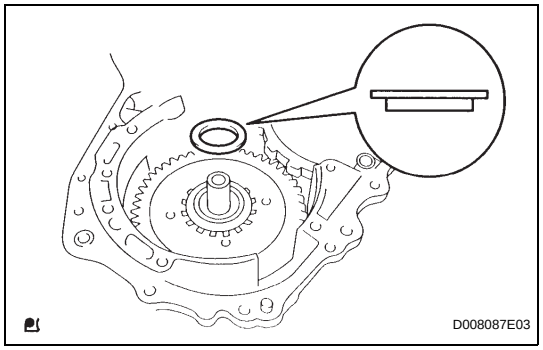

(b) Coat the thrust needle roller bearing and race with petroleum jelly, and install them onto the multiple disc clutch hub.
Standard thrust bearing and race diameter

Item	Inside	Outside
Bearing	36.3 mm (1.429 in.)	52.25 mm (2.055 in.)

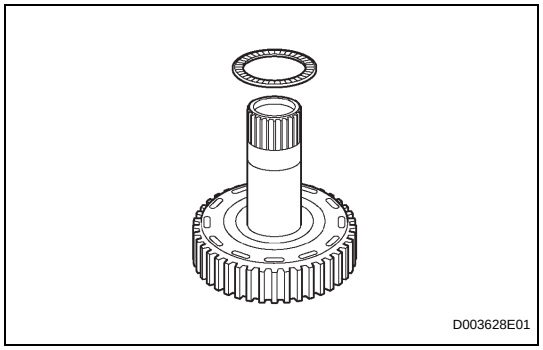

(c) Install the input shaft thrust bearing to the multiple clutch hub.
Standard bearing diameter

Item	Inside	Outside
Bearing	23.5 mm (0.925 in.)	44.0 mm (1.732 in.)

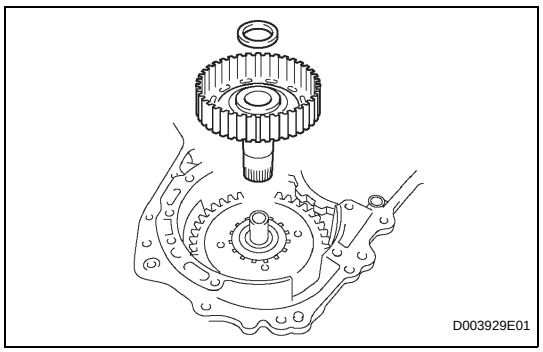

(d) Install the forward clutch hub to the transaxle.

32. INSTALL FORWARD CLUTCH ASSEMBLY

(a) Install the input shaft thrust bearing to the forward clutch.
Standard bearing diameter

Item	Inside	Outside
Bearing	33.85 mm (1.3327 in.)	52.2 mm (2.055 in.)

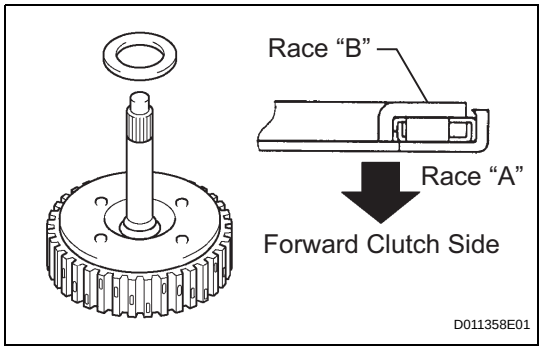

NOTICE:
Install the thrust bearing properly so that the race "B" will be visible.

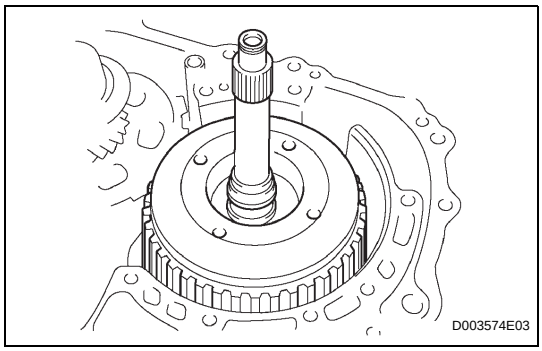

(b) Install the forward clutch to the multiple clutch hub.
NOTICE:
Align the splines of all discs in the forward clutch with those of multiple clutch hub to assemble them securely.

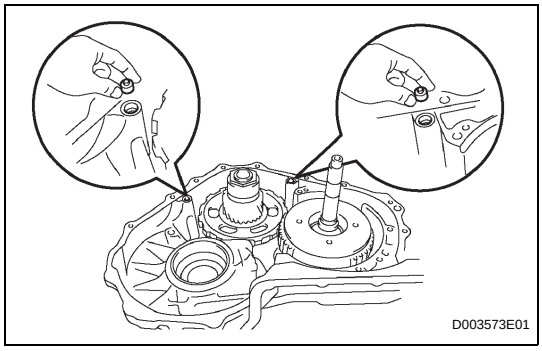

33. INSTALL OVERDRIVE BRAKE GASKET

(a) Install 2 new overdrive brake gaskets to the transaxle.

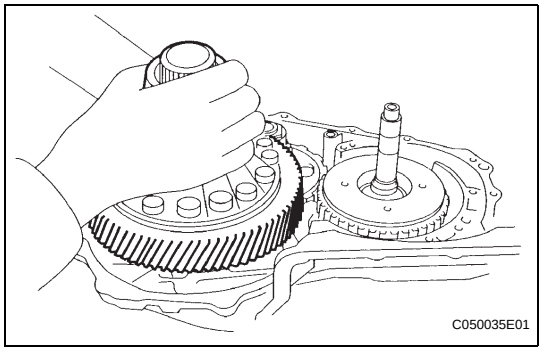

34. INSTALL FRONT DIFFERENTIAL ASSEMBLY

(a) Install the differential assembly to the transaxle.

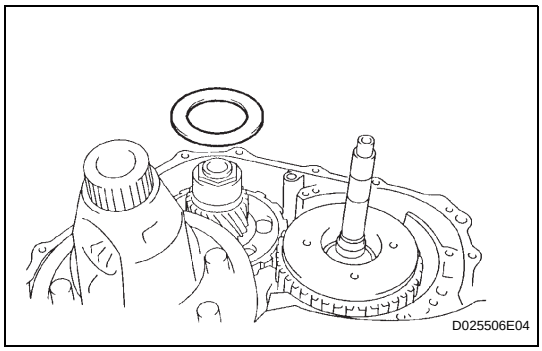

35. INSTALL NO. 2 THRUST BEARING UNDERDRIVE RACE

(a) Install the thrust bearing race to the underdrive planetary gear.

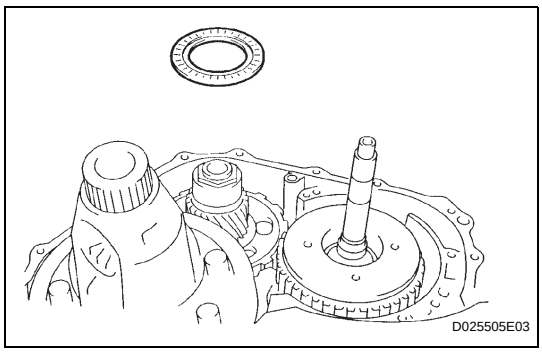

36. INSTALL THRUST NEEDLE ROLLER BEARING

(a) Calculate the end play value using the following formula and value of Dimensions D and E that were measured when installing the cylindrical roller bearing and underdrive planetary gear. Select an appropriate underdrive planetary gear thrust bearing race No. 2 which satisfies the specified end play value, and install it.
Standard end play:
0.498 to 0.993 mm (0.0194 to 0.0390 in.)

HINT:
End play = Dimension E - Dimension D - thrust bearing thickness 3.28 mm (0.1291 in.) - underdrive thrust bearing race thickness.

Standard race thickness

E - D	Thickness
Less then 7.34 mm (0.2890 in.)	3.5 mm (0.138 in.)
7.34 mm (0.2890 in.)	3.8 mm (0.150 in.)

Standard bearing and bearing race diameter

Item	Inside	Outside
Bearing	53.0 mm (2.087 in.)	78.2 mm (3.079 in.)
Bearing race	52.1 mm (2.051 in.)	75.5 mm (2.972 in.)

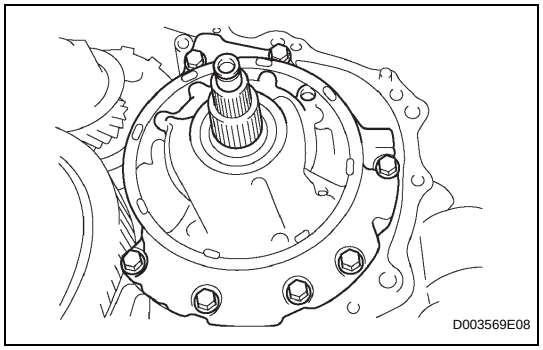

37. INSTALL OIL PUMP ASSEMBLY

(a) Install the oil pump to the transaxle with the 7 bolts.
Torque: 22 N*m (226 kgf*cm, 16 ft.*lbf)

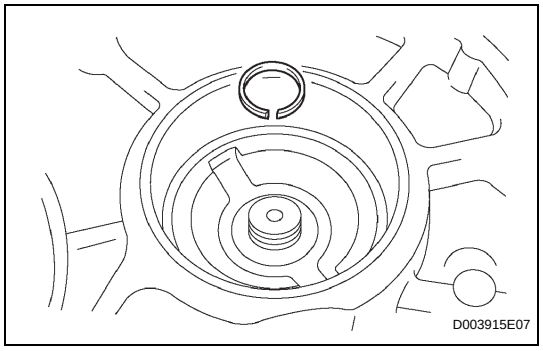

38. INSTALL UNDERDRIVE OUTPUT SHAFT OIL SEAL RING

(a) Install a new oil seal ring to the transaxle housing.

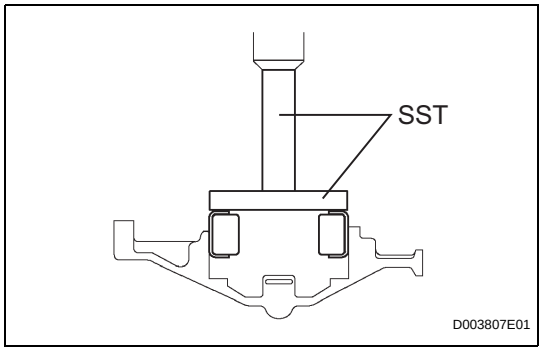

39. INSTALL UNDERDRIVE CYLINDRICAL ROLLER BEARING

(a) Using SST and a press, press in the underdrive cylindrical roller bearing.
SST 09950-60020, 09950-70010 (09951-07100, 09951-07100)
NOTICE:
Do not apply excessive pressure to it.

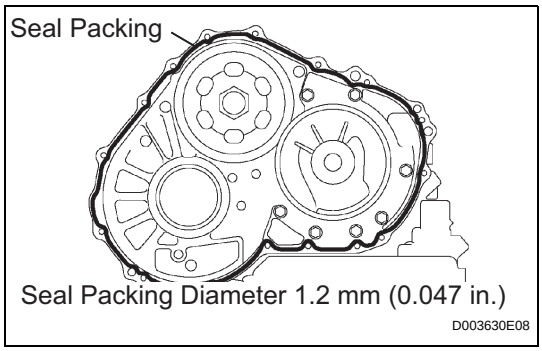

40. INSTALL TRANSAXLE HOUSING

(a) Remove any packing material and be careful not to get oil on the contacting surfaces of the transaxle case or transaxle housing.

(b) Apply seal packing to the transaxle case.

Seal packing:

Toyota Genuine Seal Packing 1281, Three Bond 1281 or Equivalent

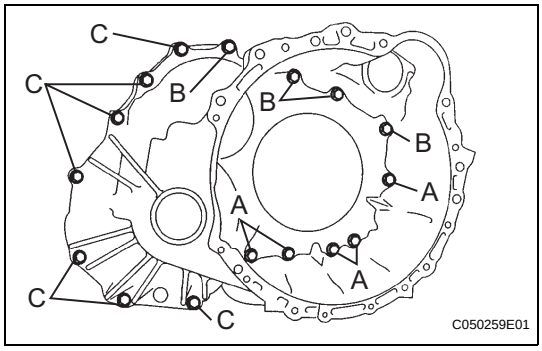

(c) Install the transaxle housing and to the transaxle with the 16 bolts.

Torque: 22 N*m (224 kgf*cm, 16 ft.*lbf) for bolt A
29 N*m (296 kgf*cm, 21 ft.*lbf) for bolt B and C

HINT:

Each bolt length is indicated below.

Bolt length:

50 mm (1.969 in.) for bolt A
50 mm (1.969 in.) for bolt B
42 mm (1.654 in.) for bolt C

NOTICE:

Because the bolt A is a seal bolt, apply the seal packing to new bolts and tighten them within 10 minutes after application.

Seal packing:

Toyota Genuine Seal Packing 1281, Three Bond 1281 or Equivalent

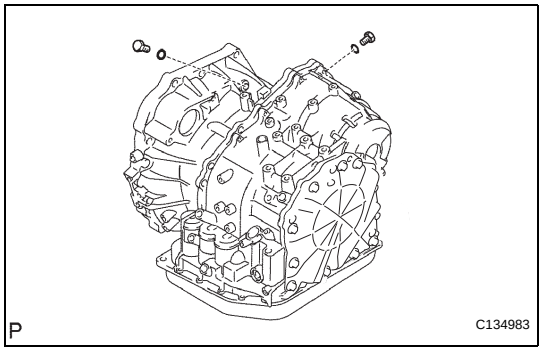

41. INSTALL NO. 1 TRANSAXLE CASE PLUG

(a) Install 2 new O-rings to the 2 plugs.

(b) Install the 2 plugs to the transaxle housing.

Torque: 7.4 N*m (75 kgf*cm, 65 in.*lbf)

42. INSPECT INPUT SHAFT END PLAY (See page AX-185)

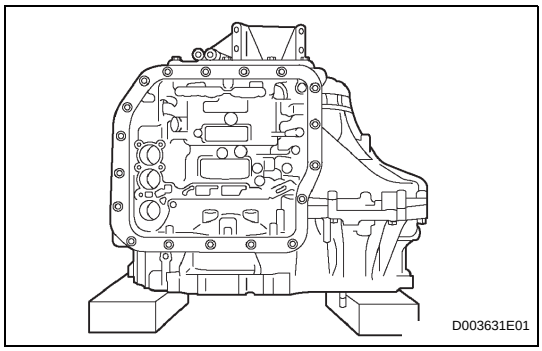

43. FIX AUTOMATIC TRANSAXLE ASSEMBLY

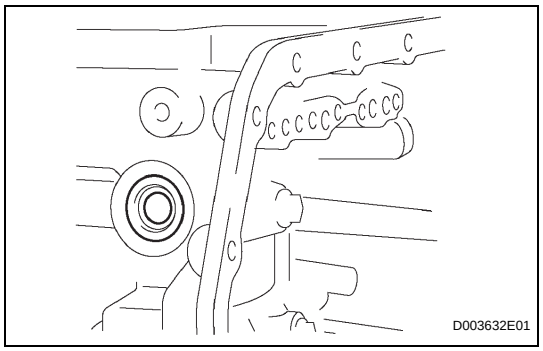

44. INSTALL MANUAL VALVE LEVER SHAFT OIL SEAL

(a) Coat a new oil seal with ATF, and install it to the transaxle.

(b) Install the oil seal to the transaxle.

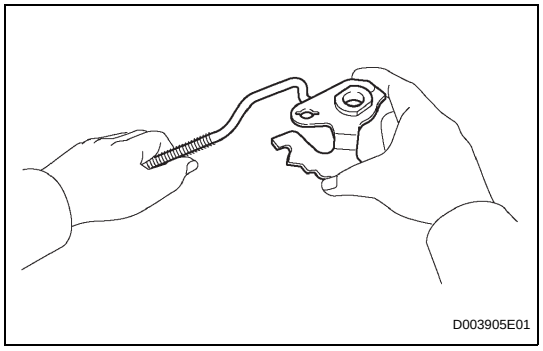

45. INSTALL PARKING LOCK ROD SUB-ASSEMBLY

(a) Install the parking lock rod to the manual valve lever.

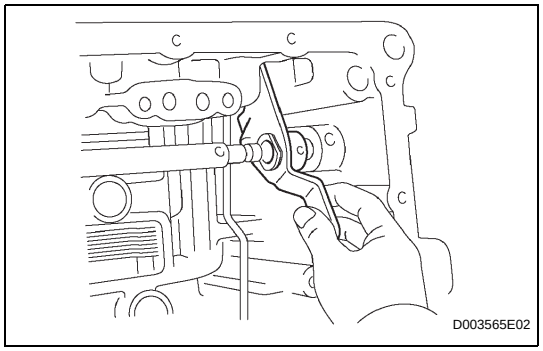

46. INSTALL MANUAL VALVE LEVER SUB-ASSEMBLY

(a) Install a new spacer and manual valve lever shaft to the transaxle.

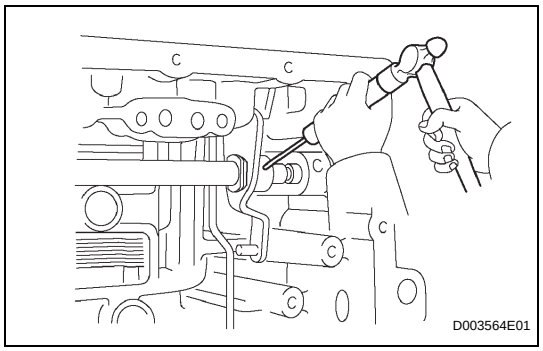

(b) Using a pin punch and hammer, tap in a new pin.

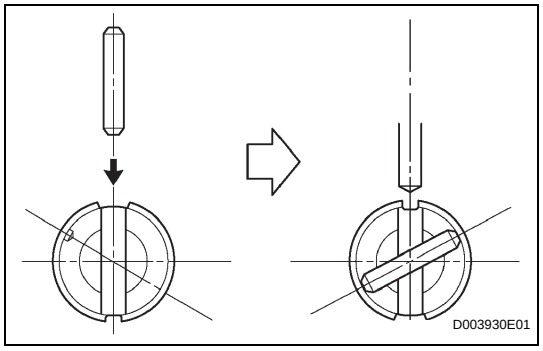

(c) Turn the spacer and lever shaft to align the small hole for locating the staking position in the spacer with the staking position mark on the lever shaft.

(d) Using a pin punch, stake the spacer through the small hole.

(e) Check that the spacer does not turn.

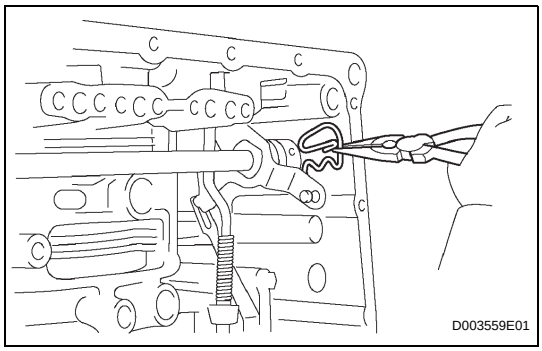

47. INSTALL MANUAL VALVE LEVER SHAFT RETAINER SPRING

(a) Using needle-nose pliers, install the retainer spring.

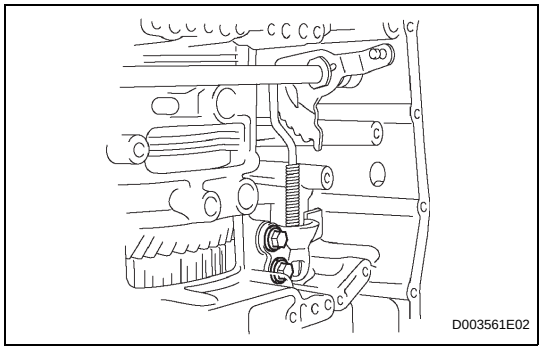

48. INSTALL PARKING LOCK PAWL BRACKET

(a) Install the parking lock pawl bracket with the 2 bolts.
Torque: 20 N*m (204 kgf*cm, 15 ft.*lbf)
Bolt length:
25 mm (0.984 in.)

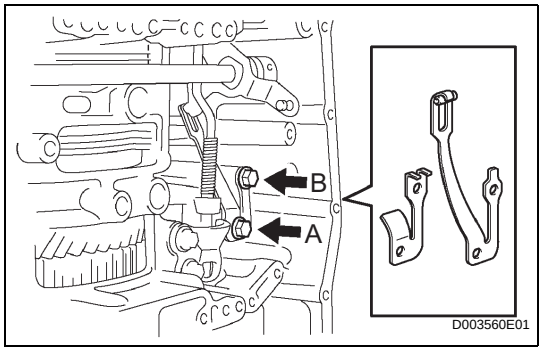

49. INSTALL MANUAL DETENT SPRING SUB-ASSEMBLY

(a) Install the manual detent spring with the 2 bolts.
NOTICE:
Make sure to install the manual detent spring and cover in this order.
Torque: 20 N*m (204 kgf*cm, 15 ft.*lbf) for bolt A
12 N*m (122 kgf*cm, 9 ft.*lbf) for bolt B
HINT:
Each bolt length is indicated below.
Bolt length:
27 mm (1.063 in.) for bolt A
16 mm (0.630 in.) for bolt B

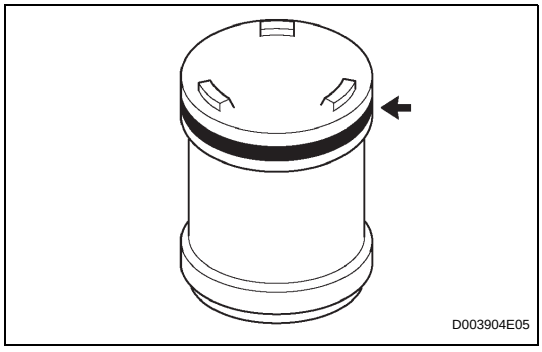

50. INSTALL B-3 ACCUMULATOR PISTON

(a) Coat a new O-ring with ATF, and install it to the B-3 accumulator piston.

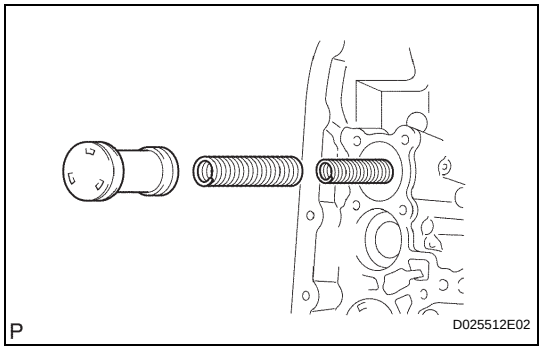

(b) Coat the accumulator B-3 piston and spring with ATF, and install them to the transaxle.

Standard accumulator spring

Spring	Free length Outer diameter	Color
B-3 Inner	60.24 mm (2.3716 in.) 15.9 mm (0.626)	Yellowish green
B-3 Outer	74.61 mm (2.9374 in.) 21.7 mm (0.854 in.)	Blue

AX

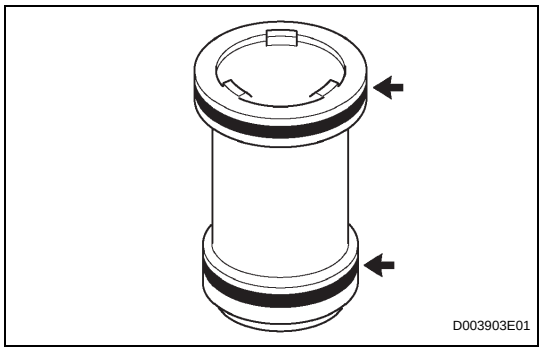

51. INSTALL C-1 ACCUMULATOR PISTON

(a) Coat 2 new O-rings with ATF, and install them to the C-1 accumulator piston.

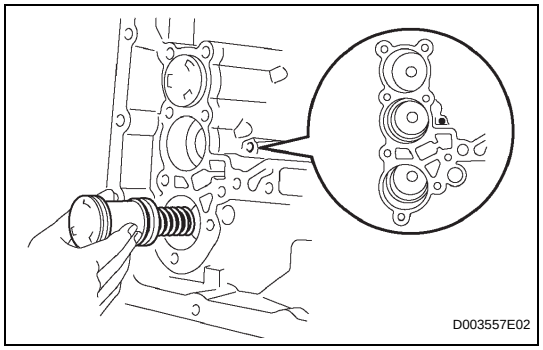

(b) Coat the accumulator C-1 piston with ATF, and install it to the transaxle.

Standard accumulator spring

Spring	Free length Outer diameter	Color
C-1	81.53 mm (3.2098 in.) 18.5 mm (0.728 in.)	Pink

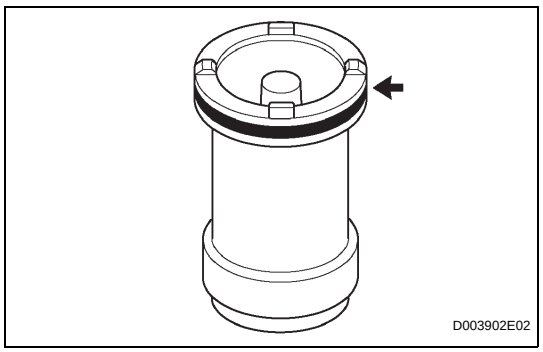

52. INSTALL C-3 ACCUMULATOR PISTON

(a) Coat a new O-ring with ATF, and install it to the C-3 accumulator piston.

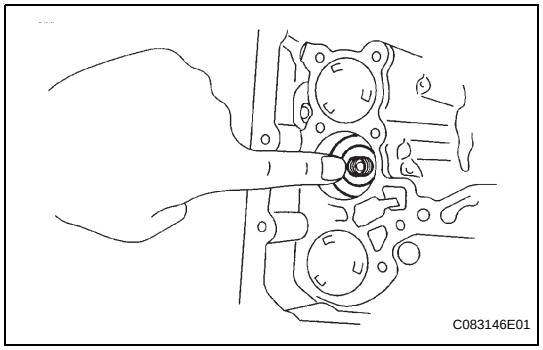

(b) Coat the C-3 accumulator piston with ATF, and install it to the transaxle.

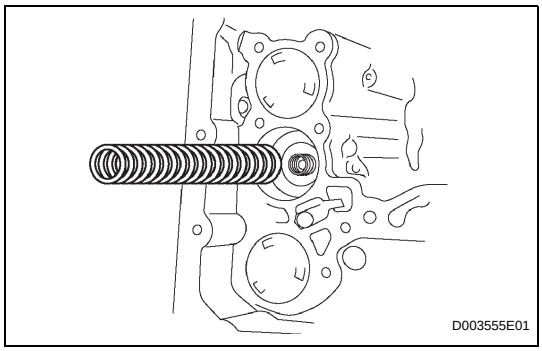

(c) Install the compression spring from the C-3 accumulator piston.

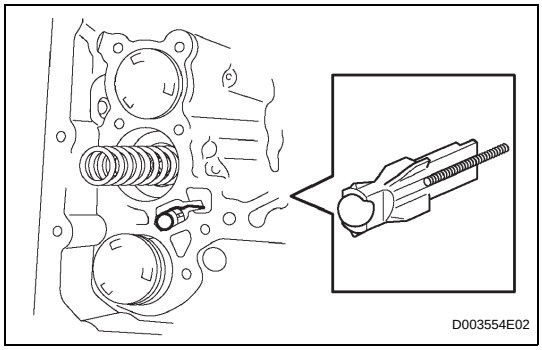

53. INSTALL CHECK BALL BODY

(a) Install the check ball body and spring.

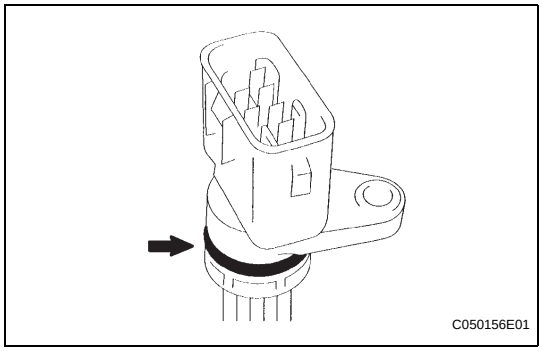

54. INSTALL TRANSMISSION WIRE

(a) Coat a new O-ring with ATF, and install it to the transaxle solenoid wire.

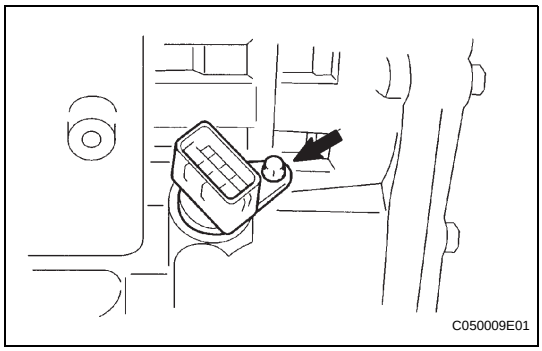

(b) Install the solenoid wire retaining bolt.
Torque: 5.4 N*m (55 kgf*cm, 48 in.*lbf)

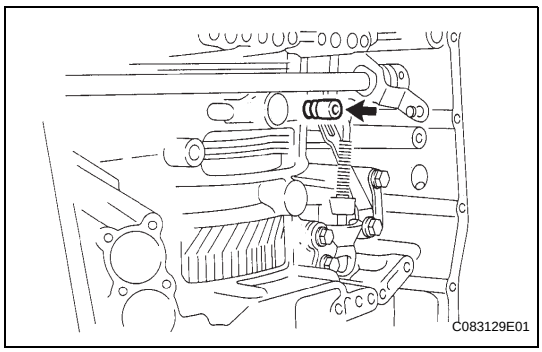

55. INSTALL BRAKE DRUM GASKET

(a) Coat a new brake drum gasket with ATF, and install it to the transaxle.

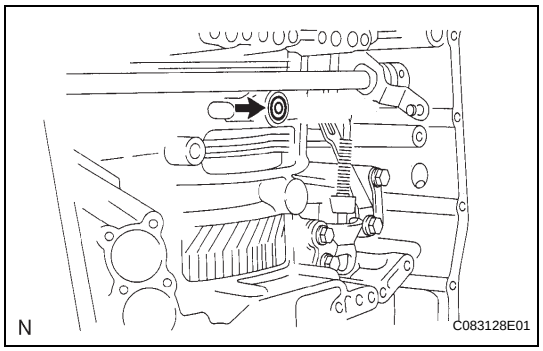

56. INSTALL TRANSAXLE CASE 2ND BRAKE GASKET

(a) Coat a new transaxle case 2nd brake gasket with ATF, and install it to the transaxle.

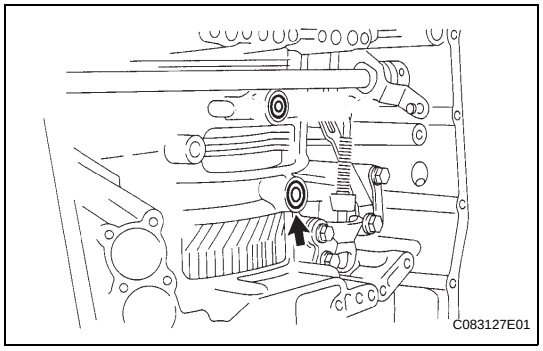

57. INSTALL NO. 1 GOVERNOR APPLY GASKET

(a) Coat a new governor apply gasket No. 1 with ATF, and install it to the transaxle.

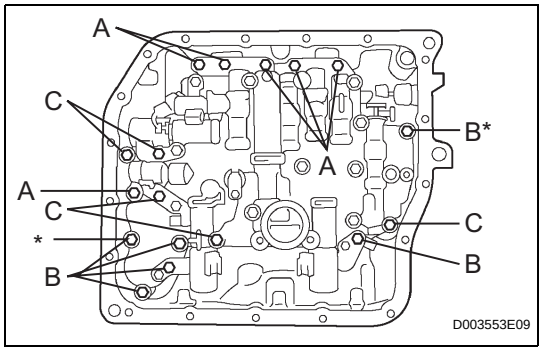

58. INSTALL TRANSMISSION VALVE BODY ASSEMBLY

(a) Make sure that the manual valve lever position, install the valve body with the 17 bolts to the transaxle.

Torque: 11 N*m (112 kgf*cm, 8 ft.*lbf)

HINT:

Each bolt length is indicated below.

Bolt length:

25 mm (0.984 in.) for bolt A
41 mm (1.614 in.) for bolt B
45 mm (1.771 in.) for bolt C

NOTICE:

- **Push the valve body against the accumulator piston spring and the check ball body to install it.**
- **When installing the valve body to the transaxle case, do not hold the solenoids.**
- **Tighten the bolts marked by * in the illustration first temporarily because they are positioning bolts.**

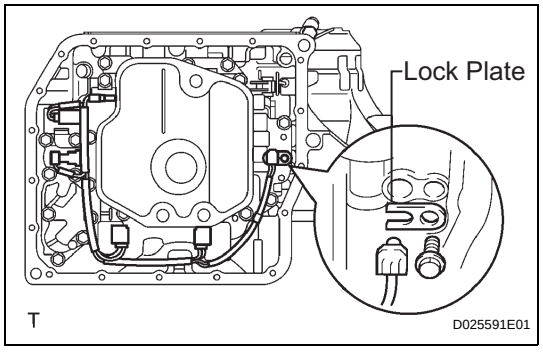

(b) Connect the 5 solenoid connectors.

(c) Install the ATF temperature sensor, clamp and bolt.

Torque: 6.6 N*m (67 kgf*cm, 58 in.*lbf)

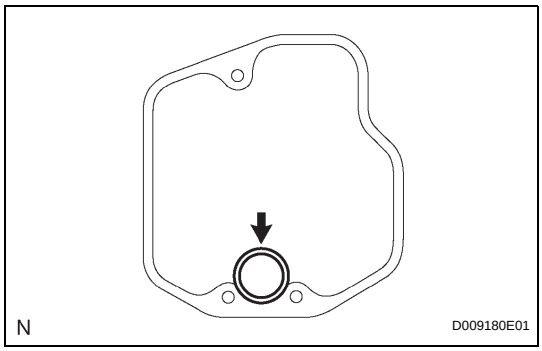

59. INSTALL VALVE BODY OIL STRAINER ASSEMBLY

(a) Coat a new O-ring with ATF, and install it to the oil strainer.

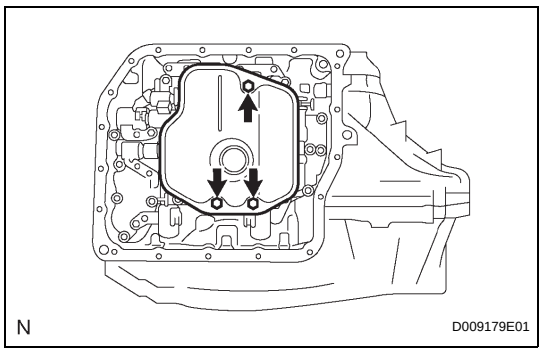

(b) Install the oil strainer and 3 bolts to the valve body.
Torque: 11 N*m (112 kgf*cm, 8 ft.*lbf)

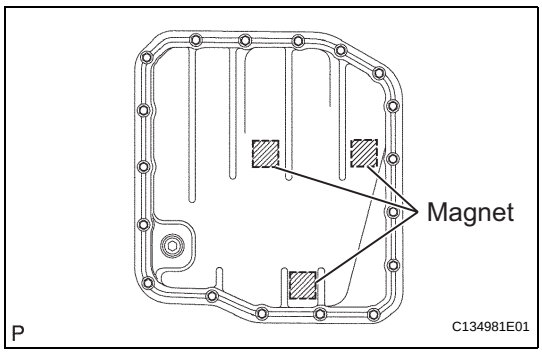

60. INSTALL AUTOMATIC TRANSAXLE OIL PAN SUB-ASSEMBLY

(a) Install the 3 magnets in the oil pan.

(b) Install a new oil pan gasket to the oil pan.

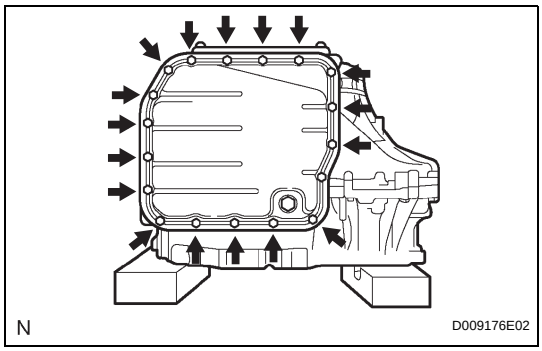

(c) Install the oil pan to the transaxle with the 18 bolts.
Torque: 7.6 N*m (77 kgf*cm, 67 in.*lbf)
NOTICE:
Because the bolts are seal bolts, apply seal packing to new bolts and tighten them within 10 minutes after application.

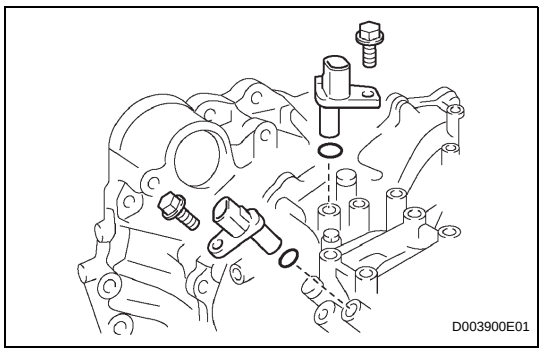

61. INSTALL SPEED SENSOR

(a) Coat 2 new O-rings with ATF, and install them to the 2 sensors.

(b) Install the 2 sensors with the 2 bolts to the transaxle.
Torque: 11 N*m (112 kgf*cm, 8 ft.*lbf)

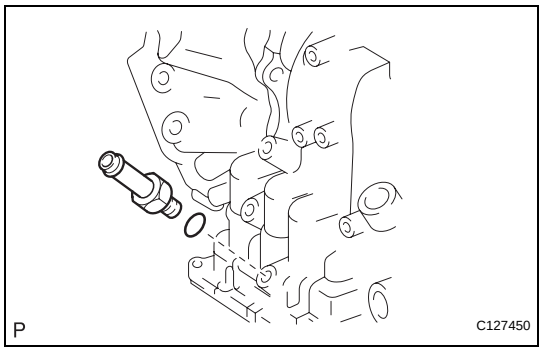

62. INSTALL OIL COOLER INLET TUBE UNION

(a) Coat a new O-ring with ATF, and install it to the union.

(b) Install the union to the transaxle.
Torque: 27 N*m (276 kgf*cm, 20 ft.*lbf)

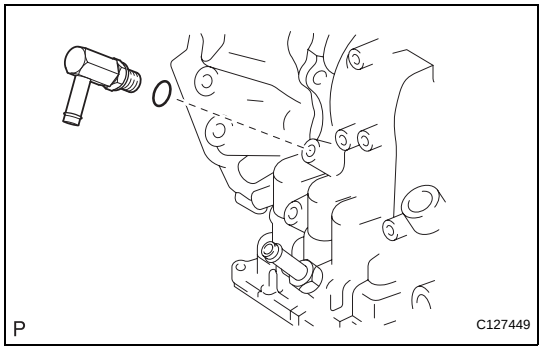

63. INSTALL OIL COOLER OUTLET TUBE UNION

(a) Coat a new O-ring with ATF, and install it to the union.

(b) Install the union to the transaxle case.
Torque: 25 N*m (255 kgf*cm, 18 ft.*lbf)

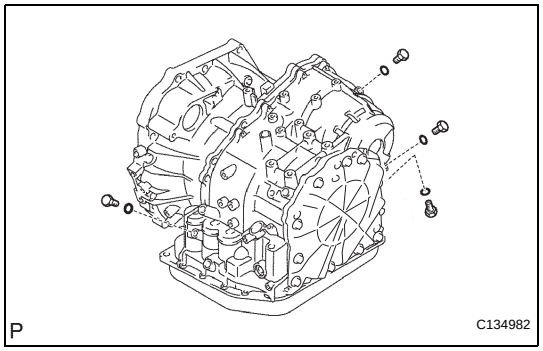

64. INSTALL NO. 1 TRANSAXLE CASE PLUG

(a) Coat 4 new O-rings with ATF, and install them to the 4 plugs.

(b) Install the 4 plugs to the transaxle.
Torque: 7.4 N*m (75 kgf*cm, 65 in.*lbf)

65. INSTALL BREATHER PLUG HOSE

(a) Install the breather plug hose to the breather plug.

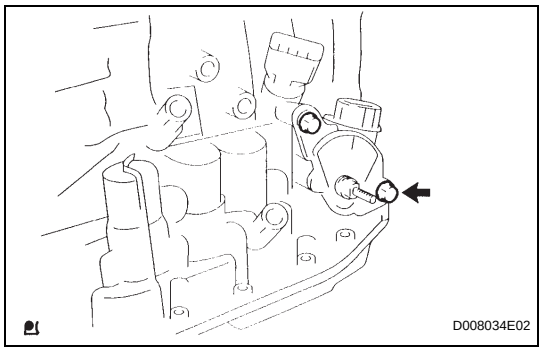

66. INSTALL PARK/NEUTRAL POSITION SWITCH ASSEMBLY

(a) Install the park/neutral position switch onto the manual valve lever shaft and temporarily install the 2 adjusting bolts.

(b) Install a new lock plate and the nut.
Torque: 5.4 N*m (55 kgf*cm, 48 in.*lbf)

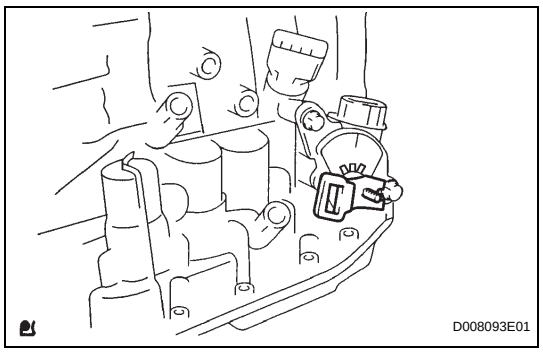

(c) Temporarily install the control shaft lever.

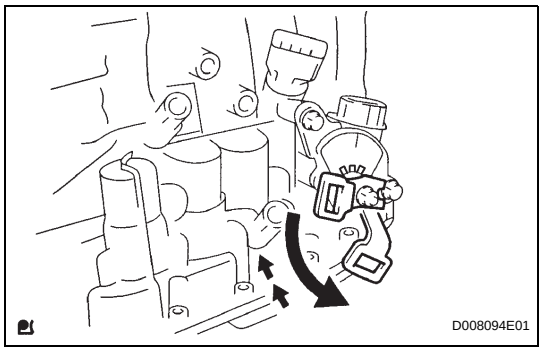

(d) Turn the lever counterclockwise until it stops, and then turn it clockwise 2 notches.
(e) Remove the control shaft lever.

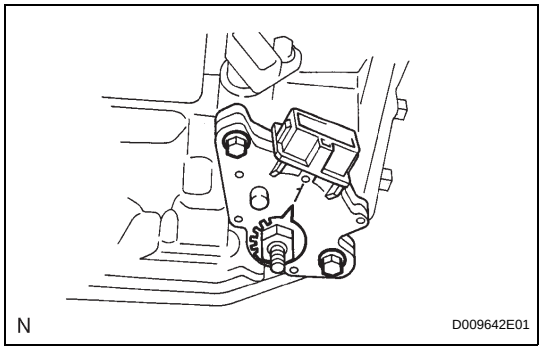

(f) Align the groove with neutral basic line.
(g) Tighten the 2 bolts.
Torque: 6.9 N*m (70 kgf*cm, 61 in.*lbf)

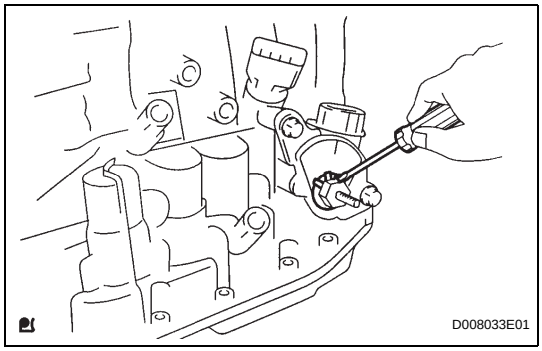

(h) Using a screwdriver, stake the nut with the lock plate.

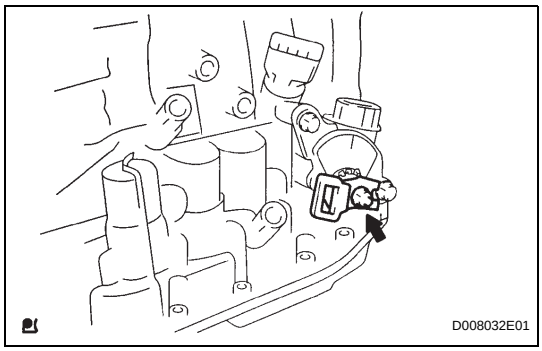

(i) Install the control shaft lever, washer and nut.
Torque: 13 N*m (133 kgf*cm, 10 ft.*lbf)

67. INSTALL SPEEDOMETER DRIVEN HOLE COVER SUB-ASSEMBLY

(a) Coat a new O-ring with ATF and install it to the hole cover.
(b) Install the hole cover to the transaxle with the bolt.

AUTOMATIC TRANSAXLE UNIT

COMPONENTS

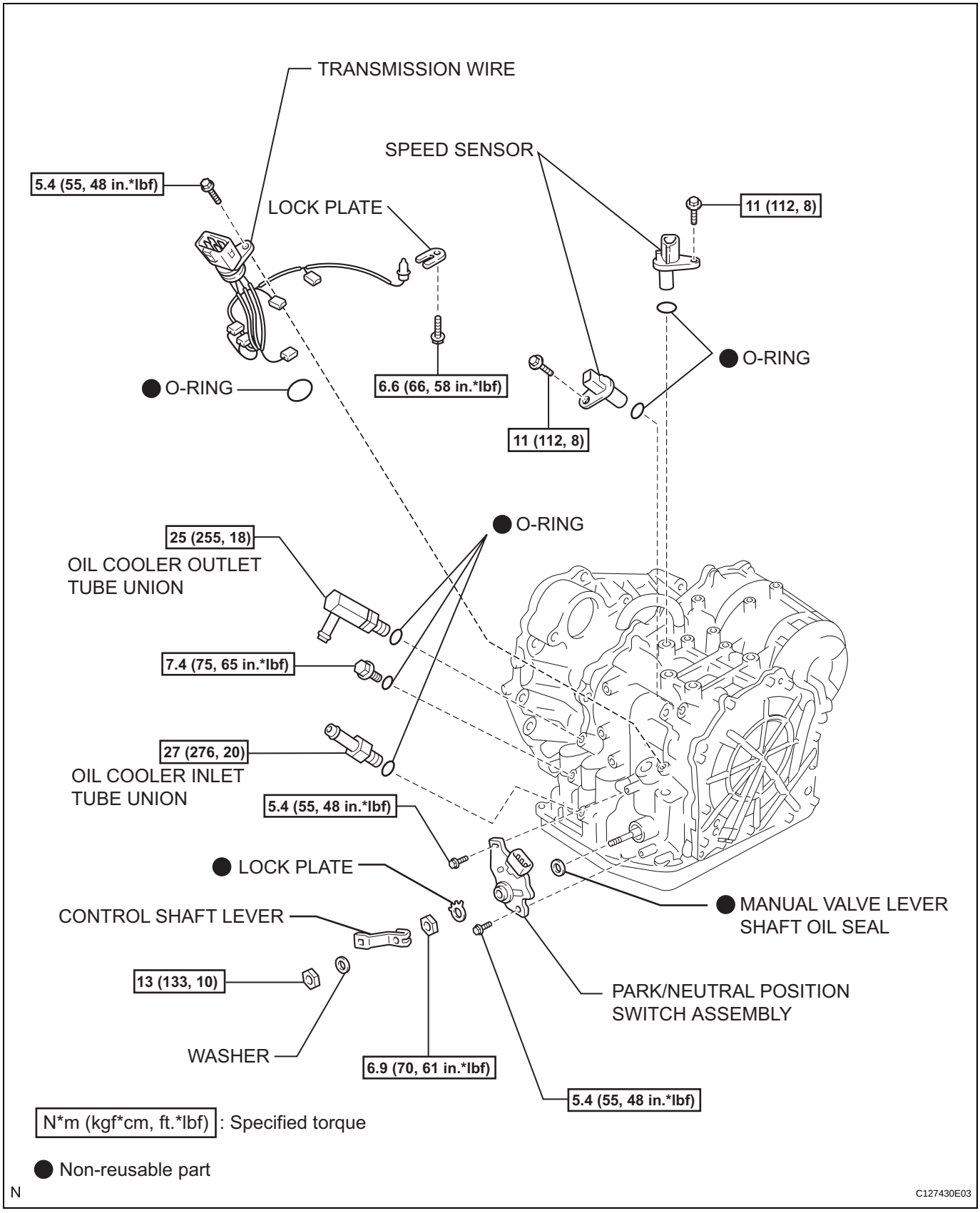

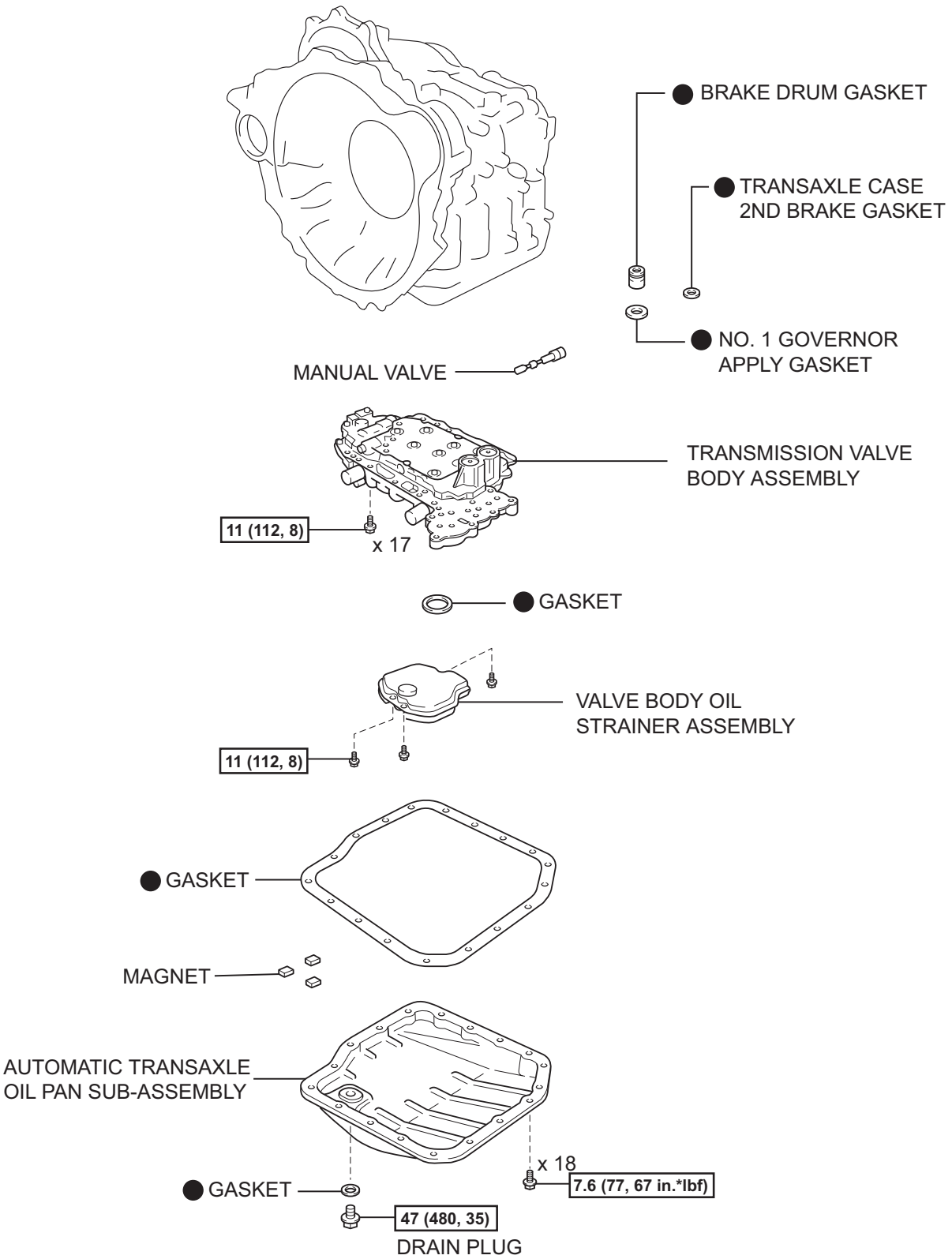

N*m (kgf*cm, ft.*lbf) : Specified torque

● Non-reusable part

N

C127431E03

AX

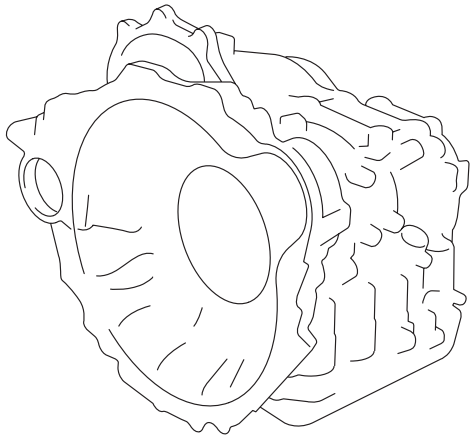

MANUAL VALVE LEVER SHAFT RETAINER SPRING

PIN

● SPACER

MANUAL VALVE LEVER SUB-ASSEMBLY

MANUAL VALVE LEVER SHAFT

PARKING LOCK ROD SUB-ASSEMBLY

PARKING LOCK PAWL BRACKET

SPRING

CHECK BALL BODY

MANUAL DETENT SPRING SUB-ASSEMBLY

20 (204, 15)

C-3 ACCUMULATOR PISTON

SPRING

SPRING COVER

● O-RING

20 (204, 15)

12 (122, 9)

C-1 ACCUMULATOR PISTON

B-3 ACCUMULATOR PISTON

SPRING

● O-RING

● O-RING

N*m (kgf*cm, ft.*lbf) : Specified torque

● Non-reusable part

N

C127432E03

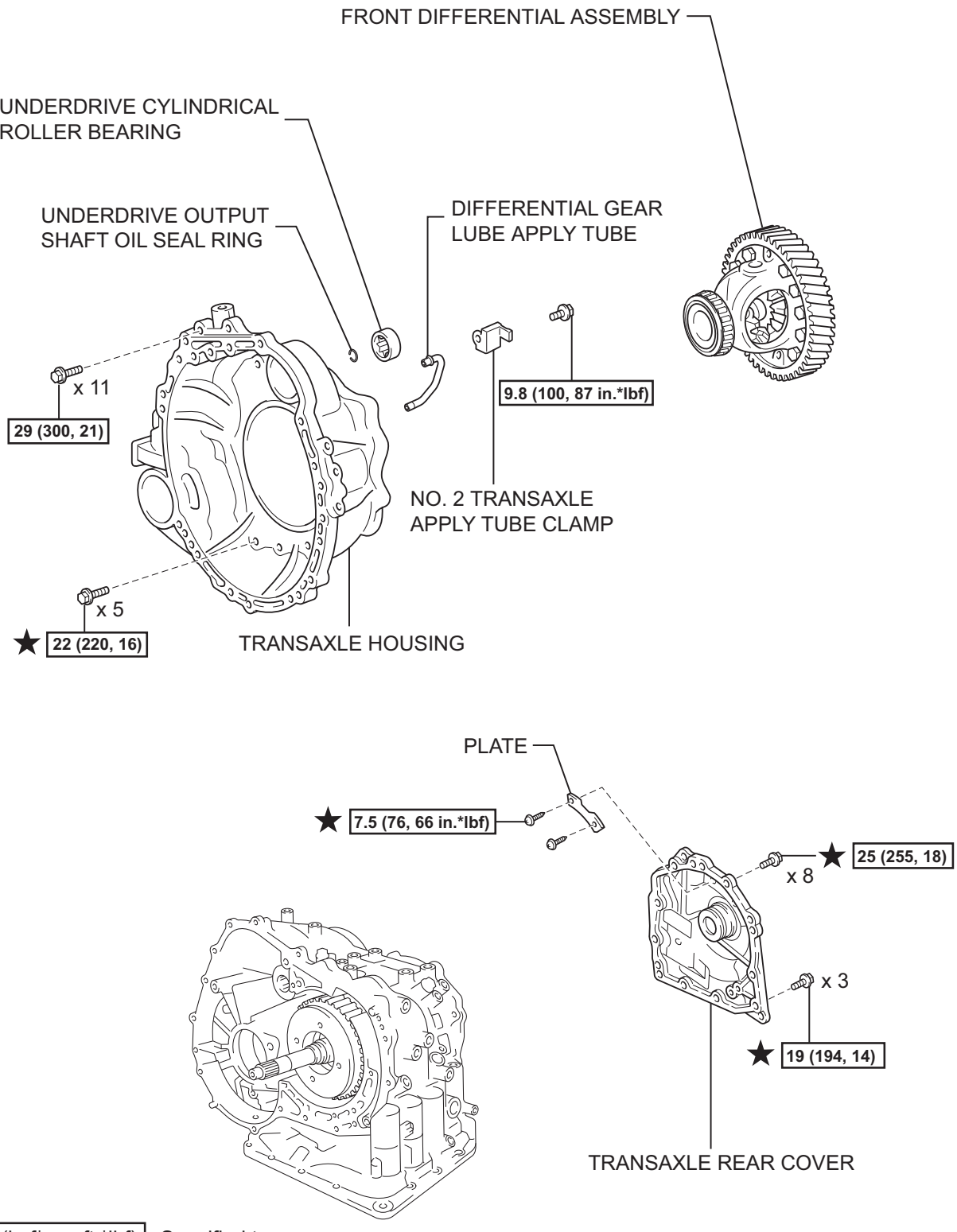

N*m (kgf*cm, ft.*lbf) : Specified torque

● Non-reusable part

★ Precoated part

N

C127433E03

AX

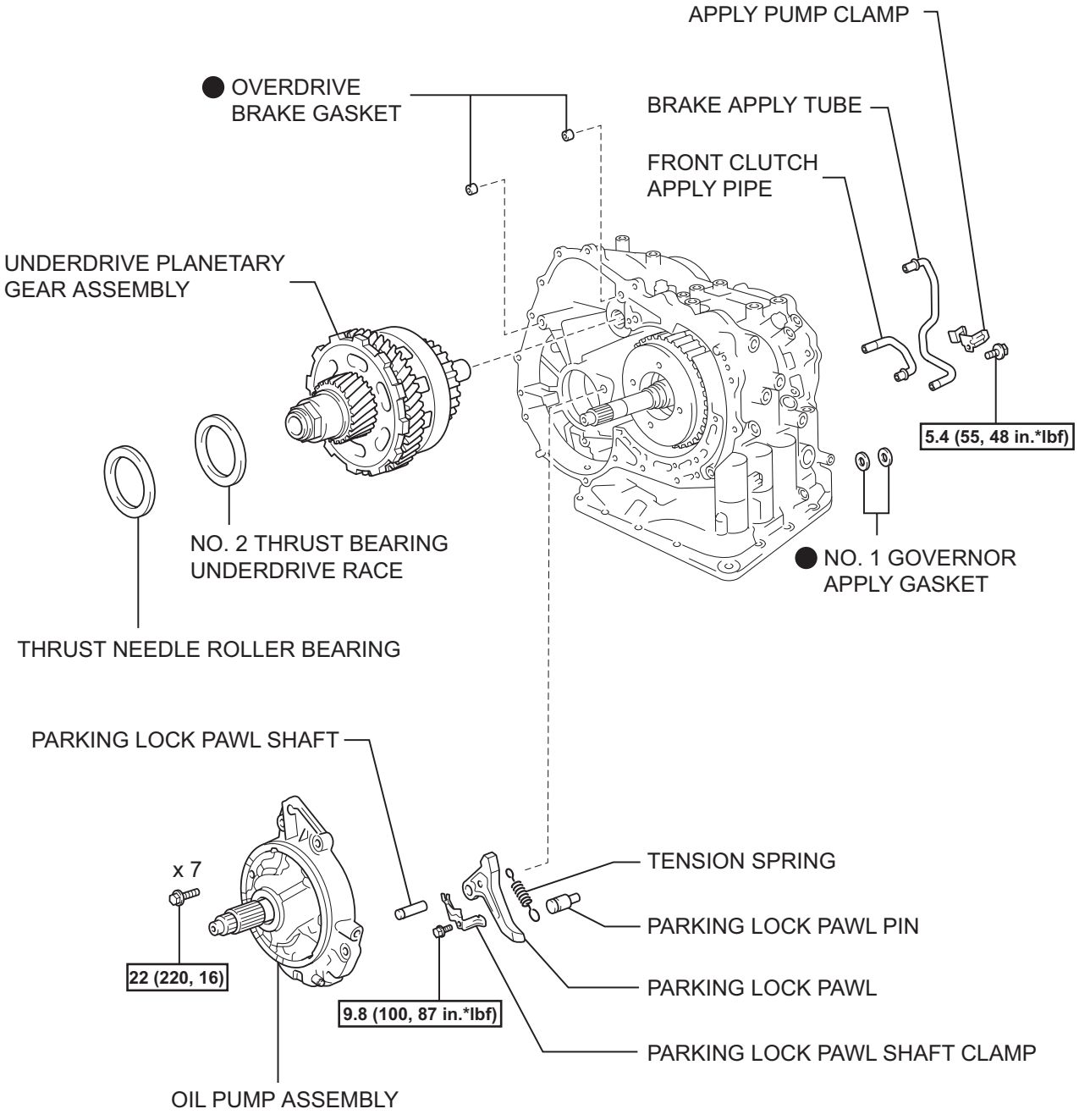

N*m (kgf*cm, ft.*lbf) : Specified torque

● Non-reusable part

N

C127434E03

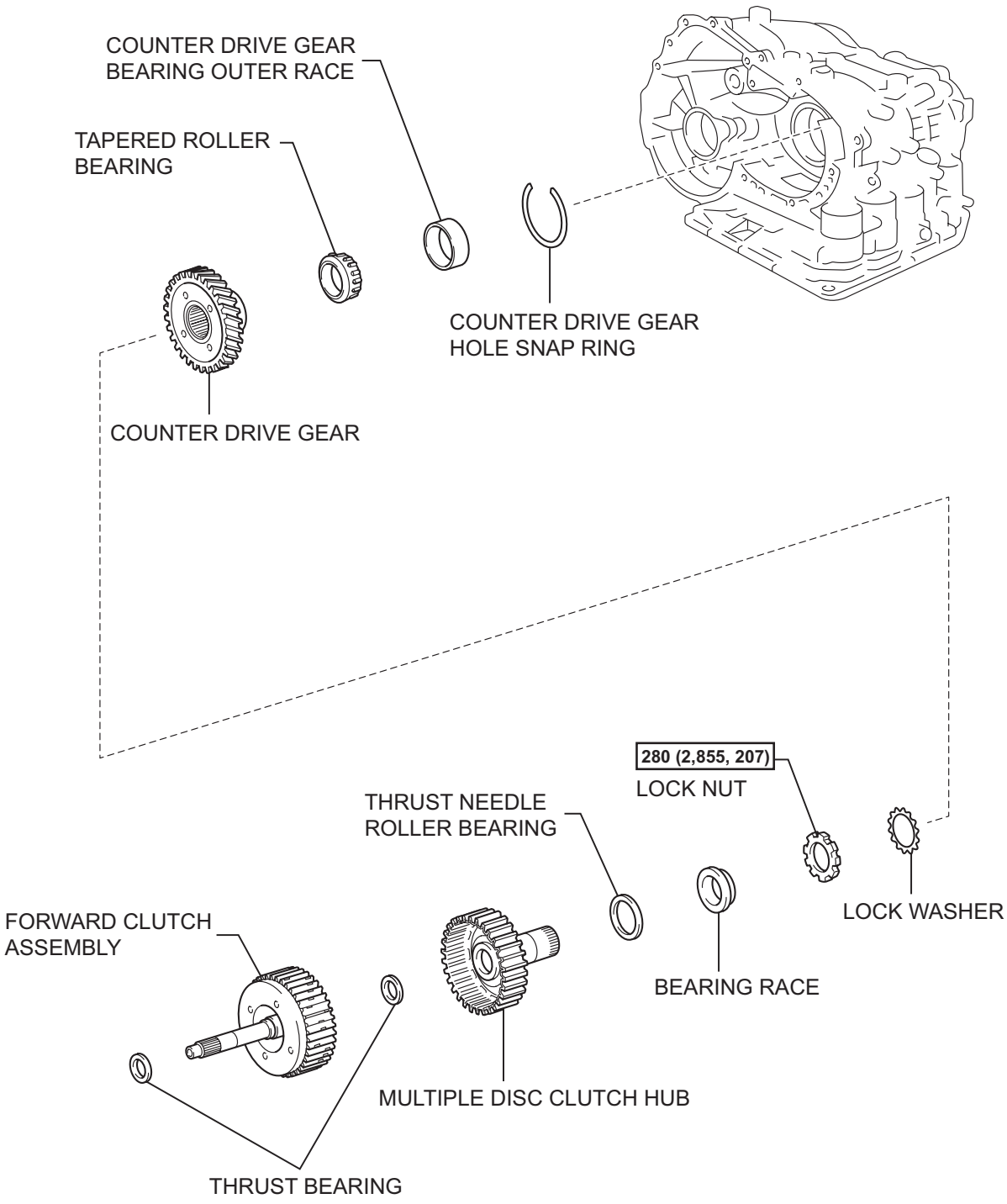

N*m (kgf*cm, ft.*lbf) : Specified torque

N

C127435E02

AX

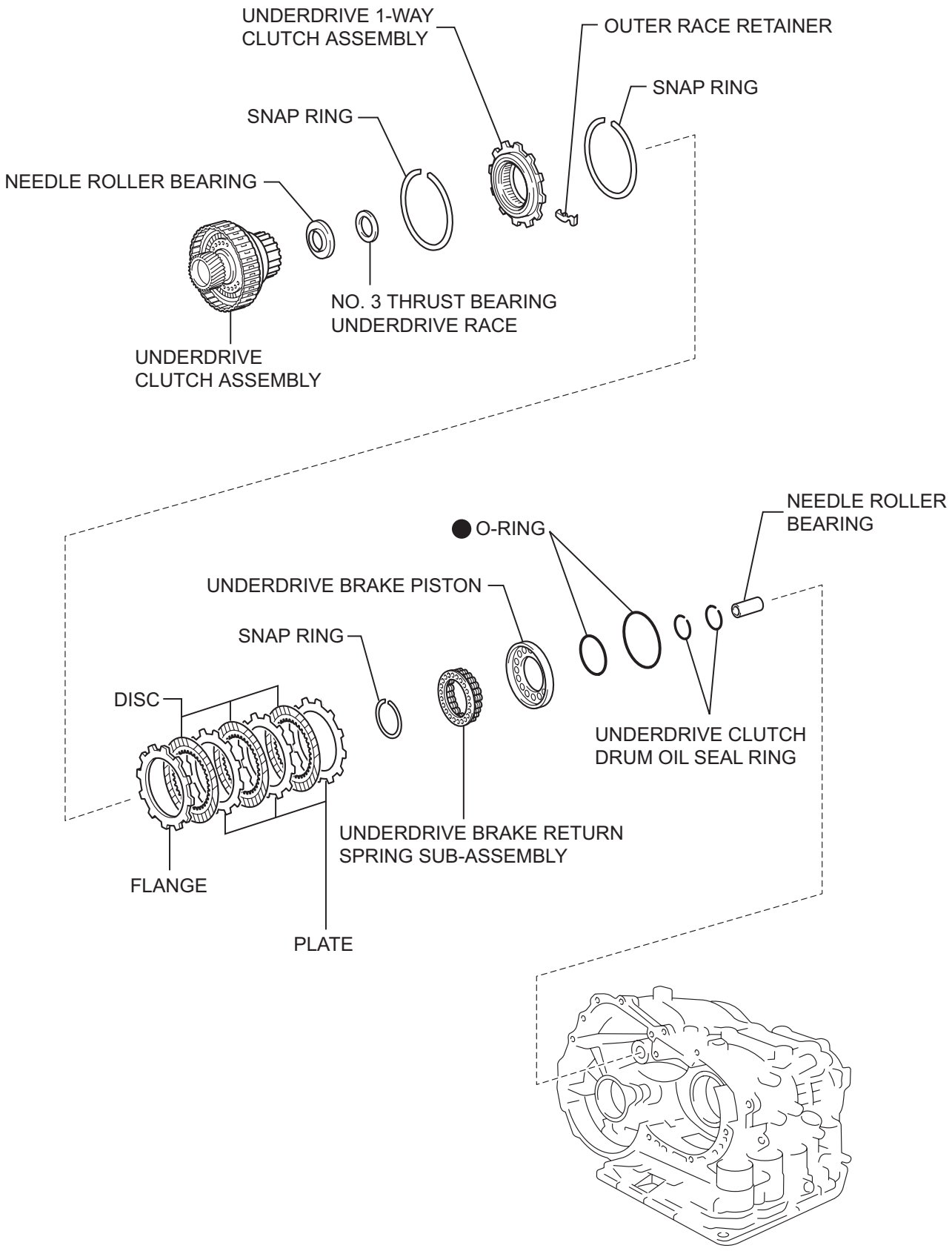

N

C127436E03

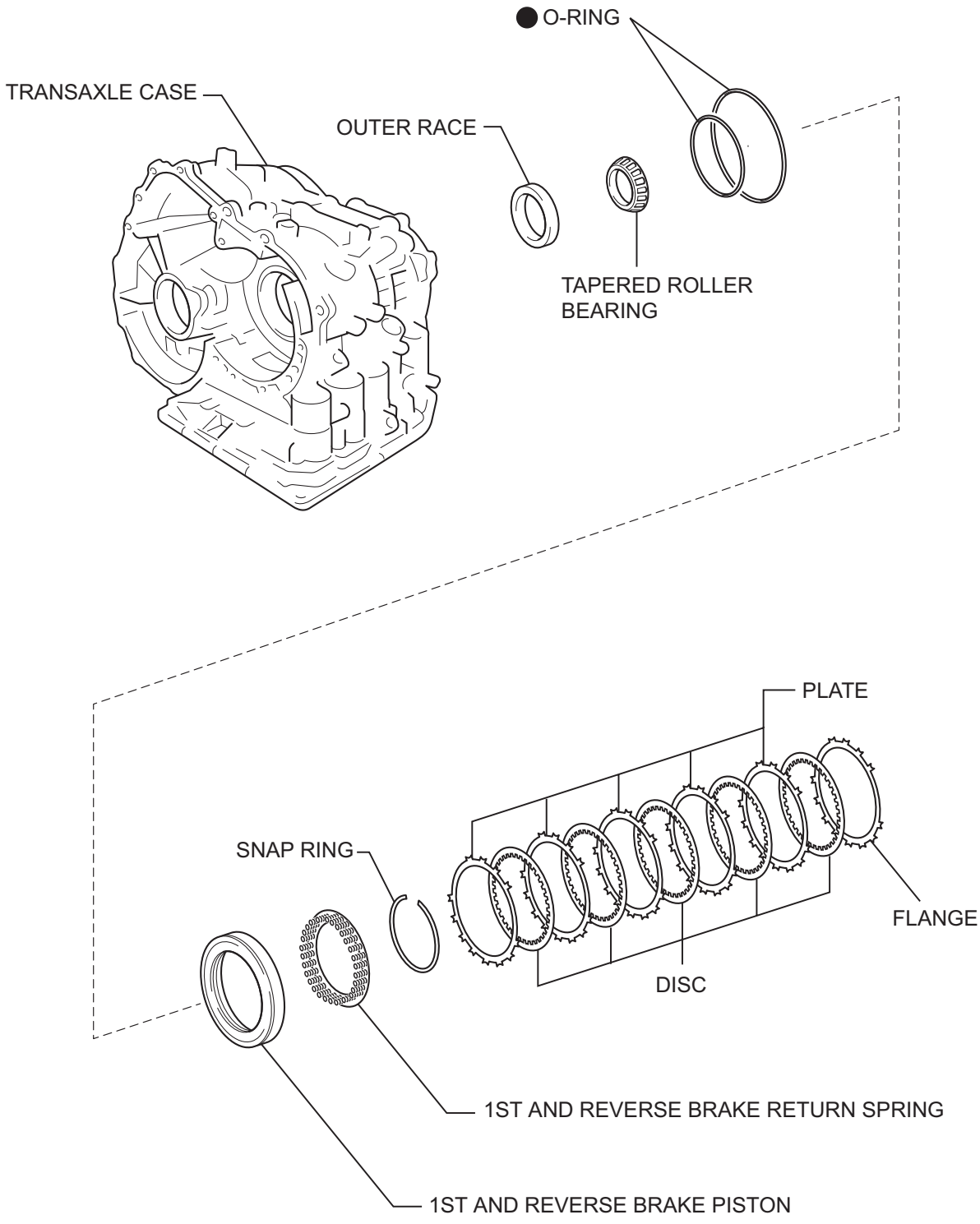

● Non-reusable part

N

C127437E03

AX

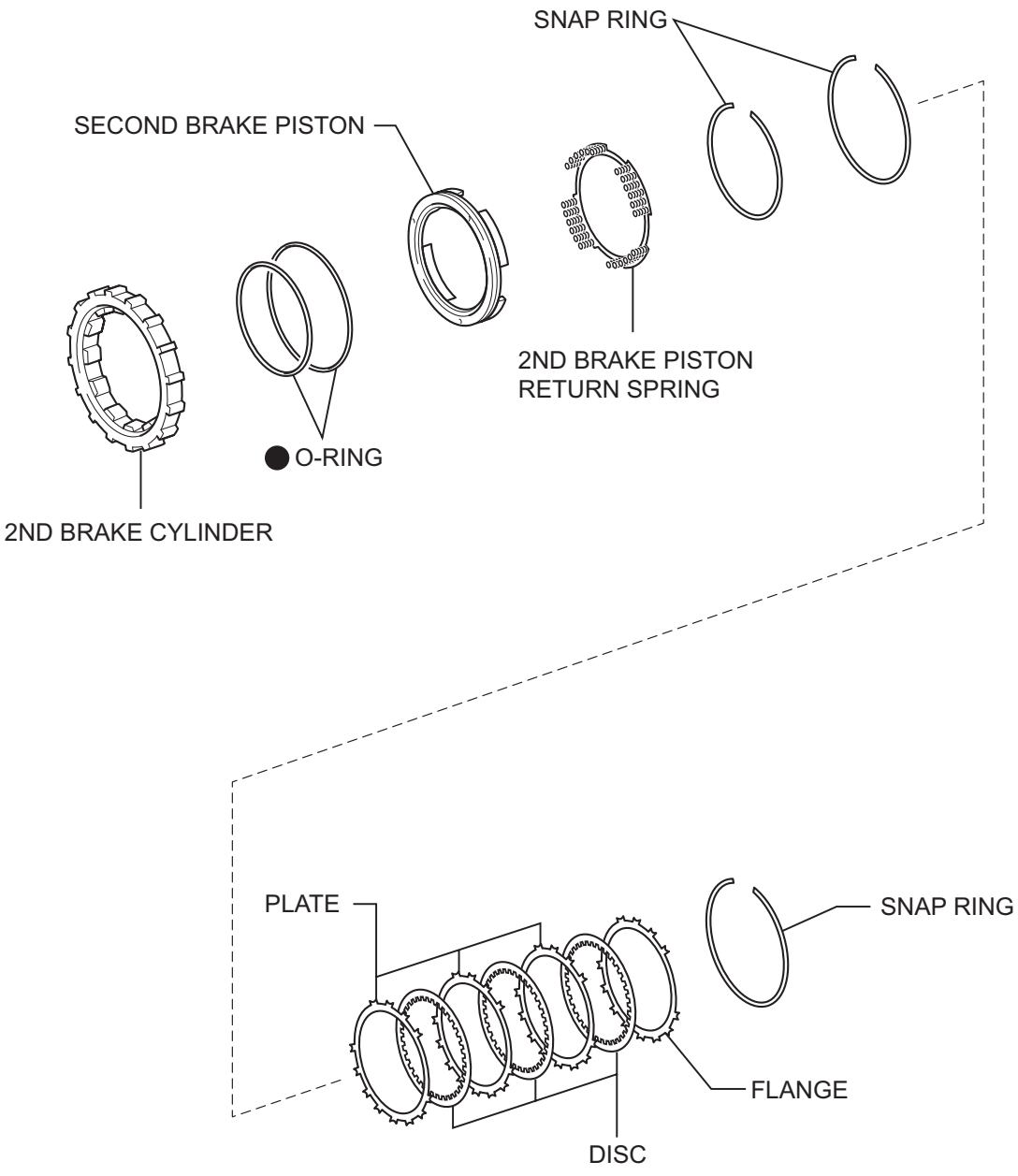

● Non-reusable part

N

C127438E03

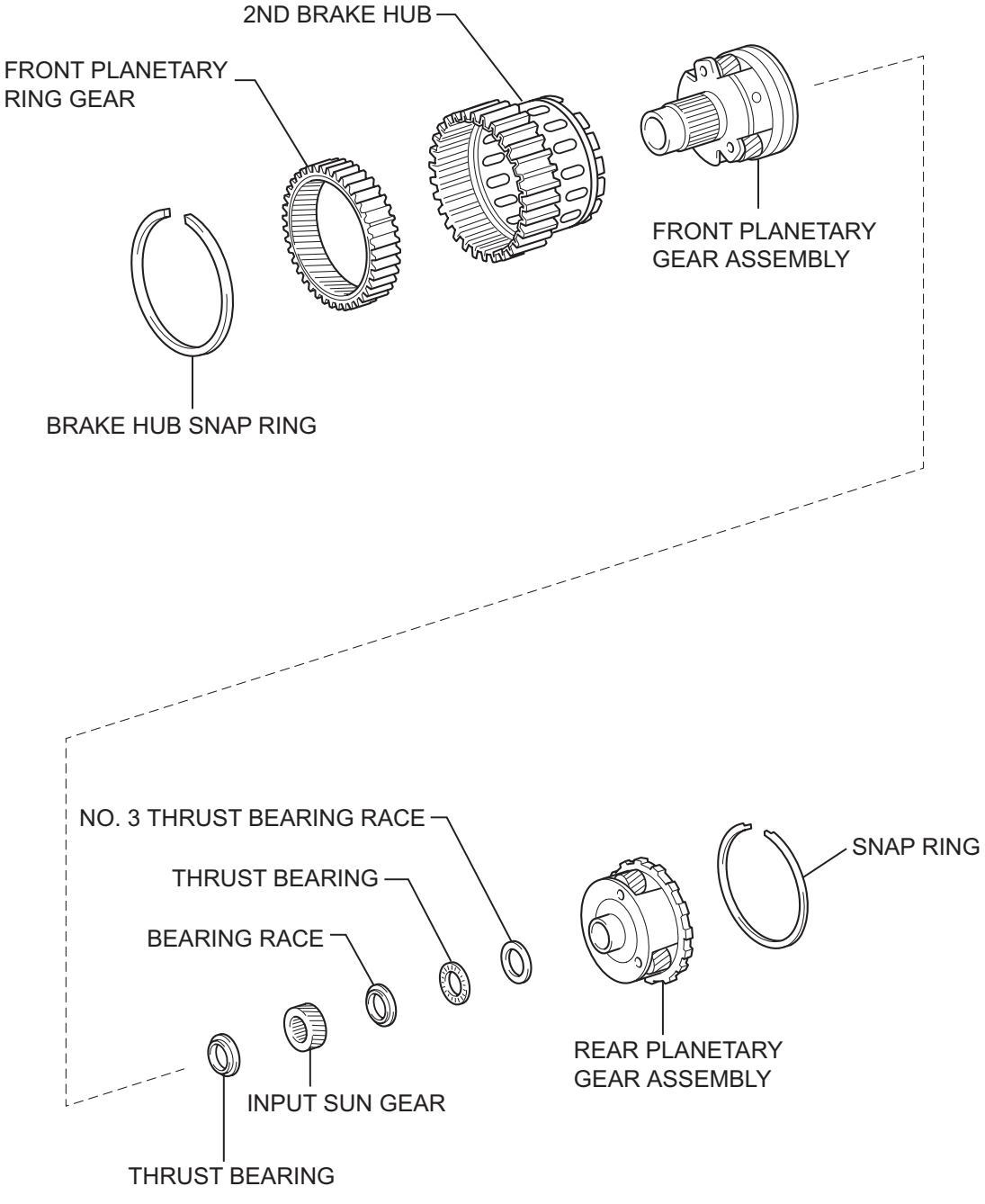

N

C127439E02

AX

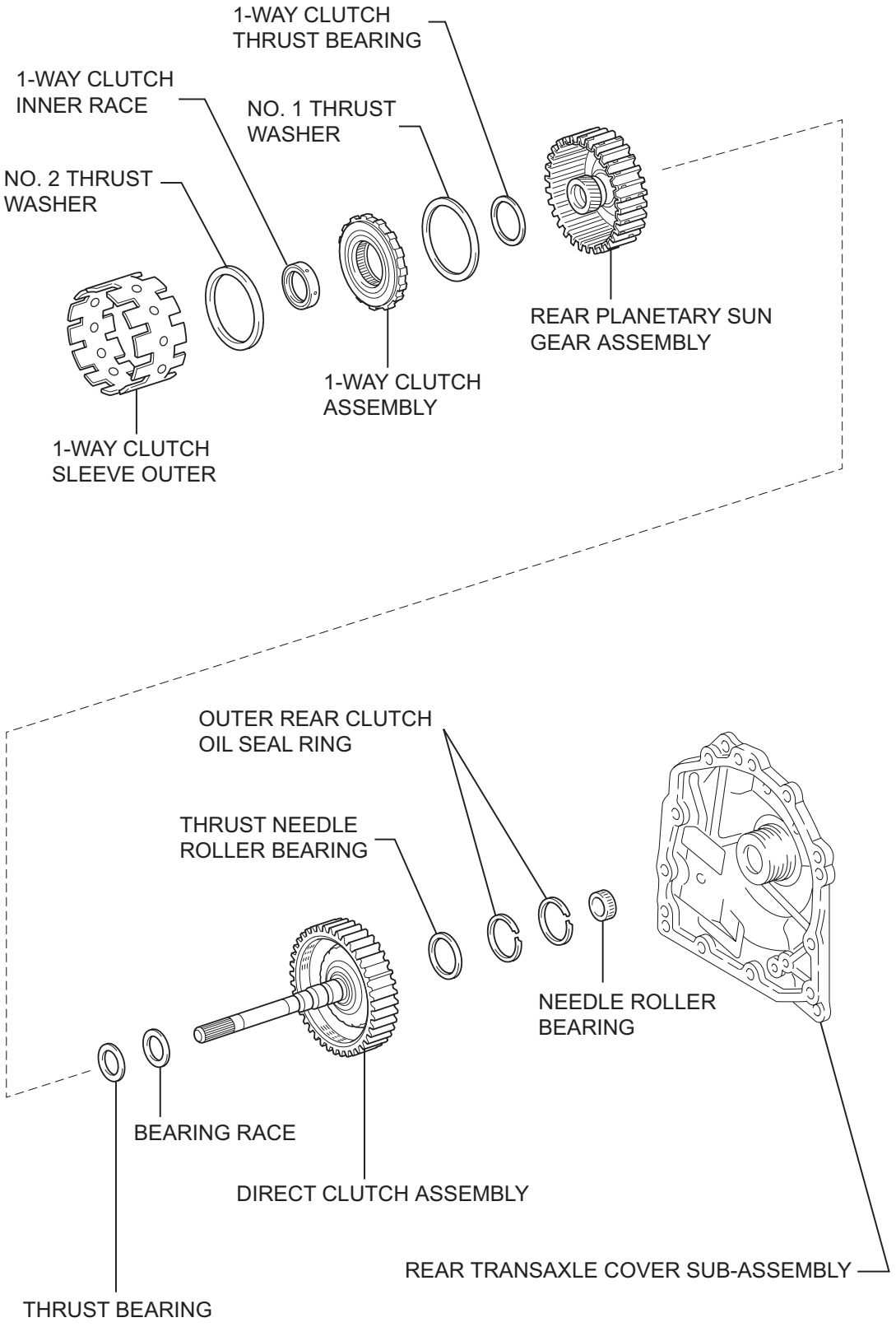

N

C127440E03

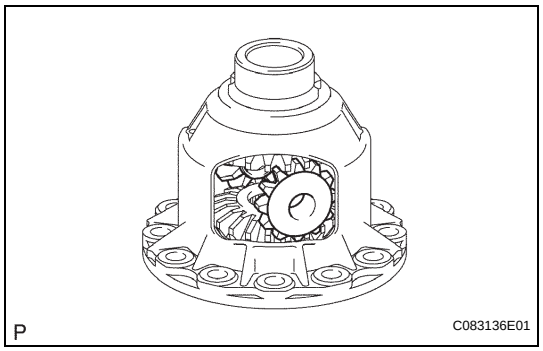

6. REMOVE FRONT DIFFERENTIAL SIDE GEAR

(a) Remove the 2 front differential pinions, 2 pinion thrust washers, 2 front differential side gears and 2 side gear thrust washers from the differential case.

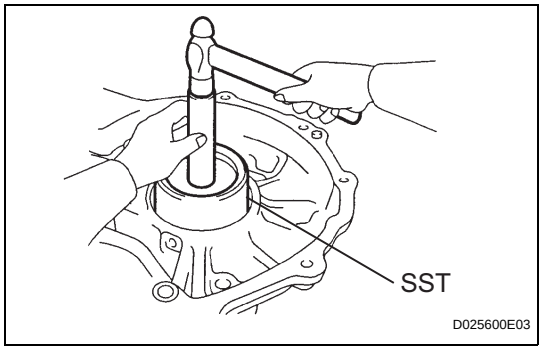

7. REMOVE DIFFERENTIAL SIDE BEARING RETAINER OIL SEAL

(a) Place the transaxle case in a vise.

(b) Using SST, remove the oil seal.

SST 09308-00010

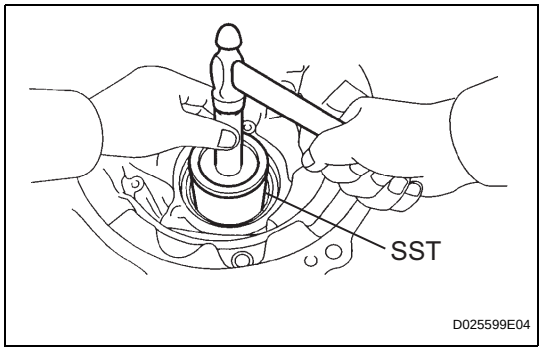

8. REMOVE TRANSAXLE HOUSING OIL SEAL

(a) Place the transaxle housing in a vise.

(b) Using SST, remove the oil seal.

SST 09308-00010

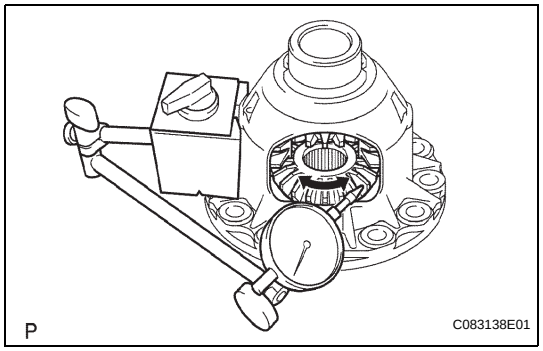

INSPECTION

1. INSPECT FRONT DIFFERENTIAL SIDE GEAR BACKLASH

(a) Using a dial indicator, measure the backlash of the side gear.

Standard backlash:

0.05 to 0.20 mm (0.0020 to 0.0070 in.)

Standard thrust washer thickness

Thickness	Thickness
1.0 mm (0.0394 in.)	1.2 mm (0.0472 in.)
1.1 mm (0.0433 in.)	1.3 mm (0.0512 in.)

AX

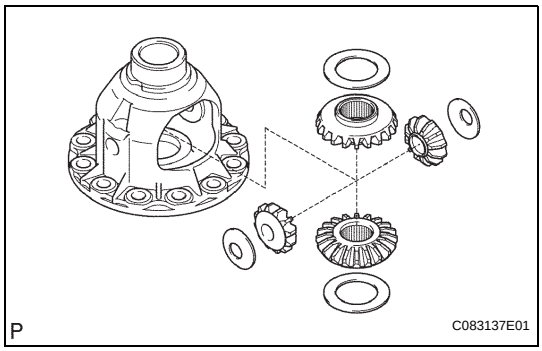

REASSEMBLY

1. INSTALL FRONT DIFFERENTIAL SIDE GEAR

(a) Coat the 2 front differential side gears, 2 side gear thrust washers, 2 front differential pinions and 2 pinion thrust washers with ATF, and install them to the differential case.

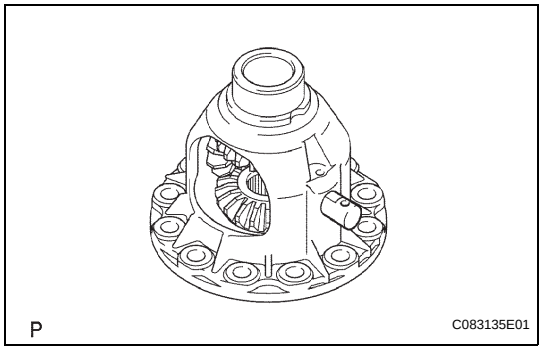

2. INSTALL NO. 1 FRONT DIFFERENTIAL PINION SHAFT

(a) Coat the front differential pinion shaft with ATF, and install it to the differential case.

3. INSPECT FRONT DIFFERENTIAL SIDE GEAR BACKLASH (See page AX-257)

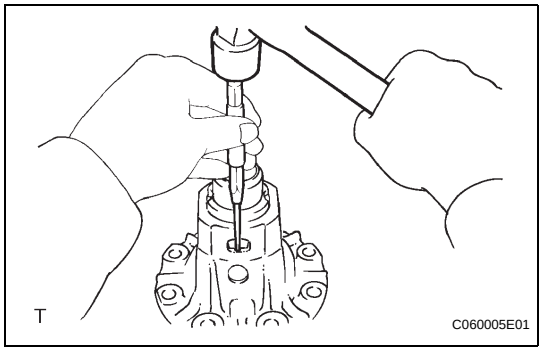

4. INSTALL FRONT DIFFERENTIAL PINION SHAFT STRAIGHT PIN

(a) Using a pin punch and hammer, tap in the pinion shaft straight pin.

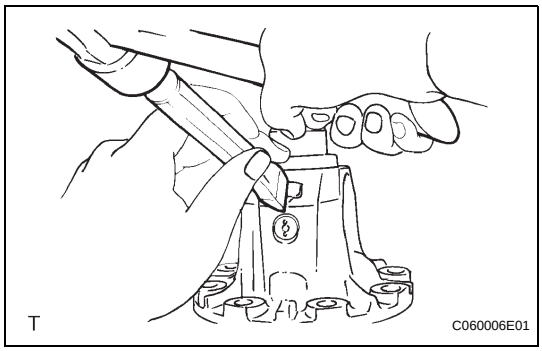

(b) Using a chisel and hammer, stake the differential case.

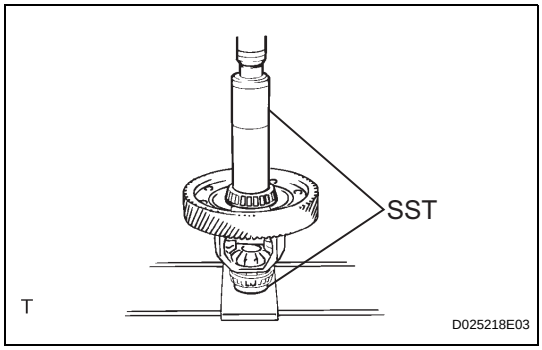

5. INSTALL FRONT DIFFERENTIAL CASE REAR TAPERED ROLLER BEARING

(a) Using SST and a press, press in the front differential case tapered roller bearing rear inner race to the differential case.

SST 09608-06041

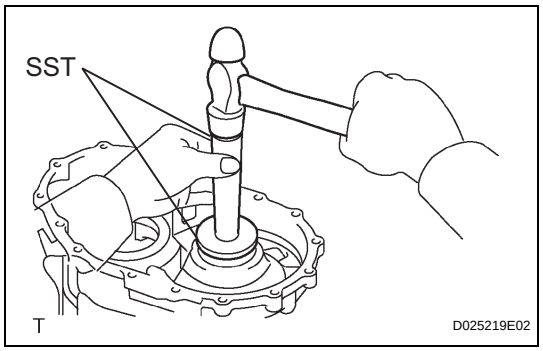

(b) Using SST and a hammer, tap in the case washer and front differential case tapered roller bearing rear outer race to the transaxle case.
SST 09950-60020 (09951-00710), 09950-70010 (09951-07100)

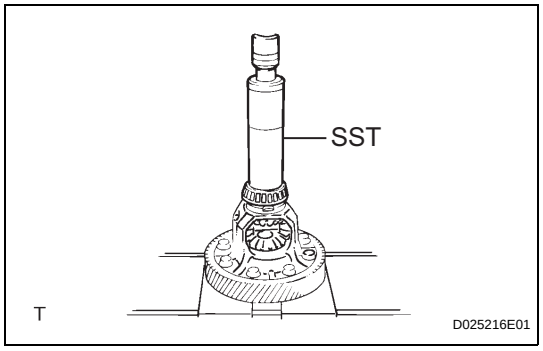

6. INSTALL FRONT DIFFERENTIAL CASE FRONT TAPERED ROLLER BEARING

(a) Using SST and a press, press in the front differential case tapered roller bearing front inner race to the differential case.
SST 09608-06041

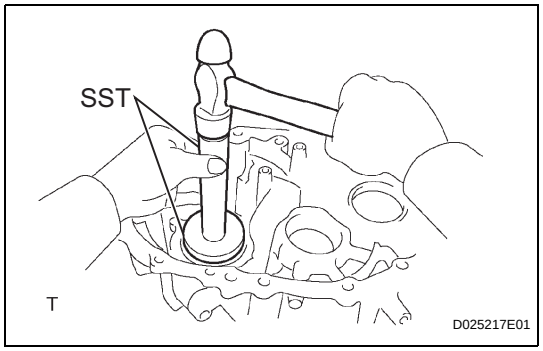

(b) Using SST and a hammer, tap in the front differential case tapered roller bearing front outer race to the transaxle housing.
SST 09950-60020 (09951-00680), 09950-70010 (09951-07100), 09950-60010 (09951-00340)

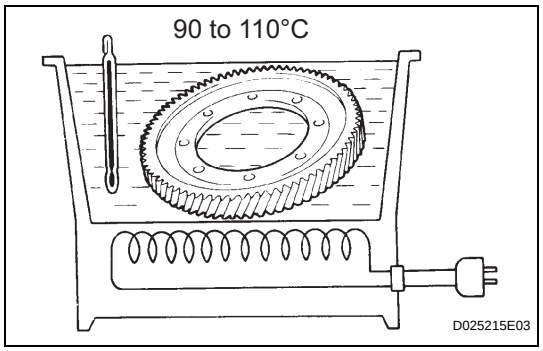

7. INSTALL FRONT DIFFERENTIAL RING GEAR

(a) Using ATF and heater, heat the front differential ring gear to 90 to 110°C (194.0 to 230.0°F).

(b) Clean the contact surface of the front differential case.

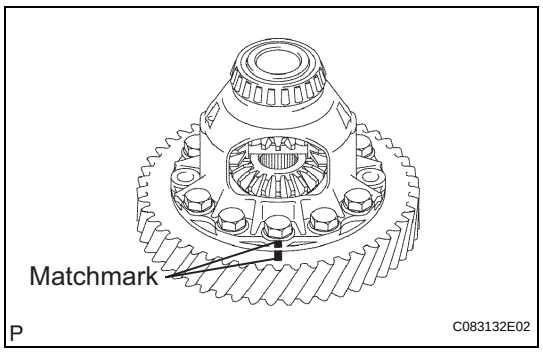

(c) Align the matchmarks, and install the front differential ring gear case quickly.

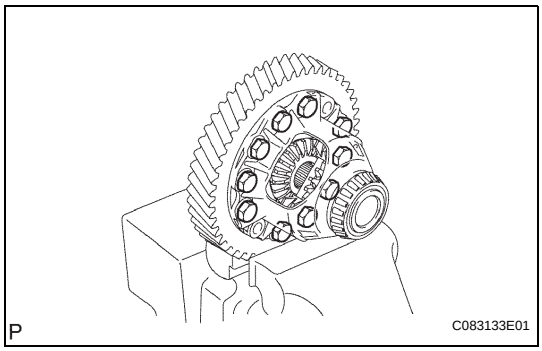

(d) Tighten the 10 bolts.
Torque: 95 N*m (969 kgf*cm, 70 ft.*lbf)

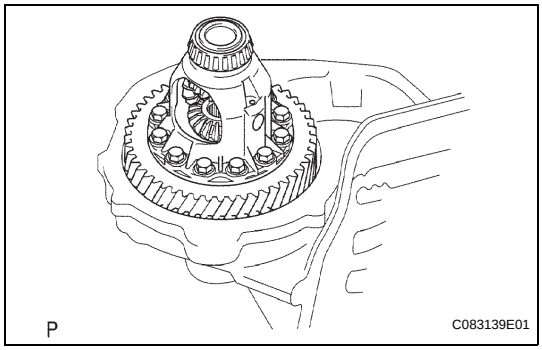

8. INSPECT TAPERED ROLLER BEARING PRELOAD

(a) Install the differential assembly to the transaxle case.

(b) Install the transaxle housing to the transaxle case.

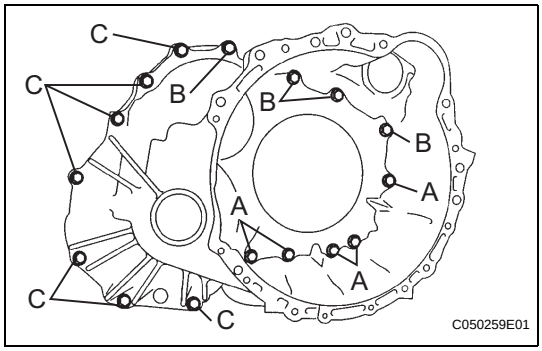

(c) Install the 16 bolts.
Torque: 22 N*m (224 kgf*cm, 16 ft.*lbf) for bolt A
29 N*m (296 kgf*cm, 21 ft.*lbf) for bolt B and C
HINT:
Each bolt length is indicated below.
Bolt length:
50 mm (1.97 in.) for bolt A and B
42 mm (1.65 in.) for bolt C

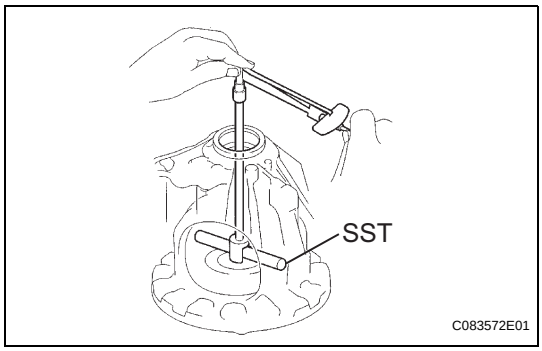

(d) Using SST, turn the differential.
SST 09564-32011

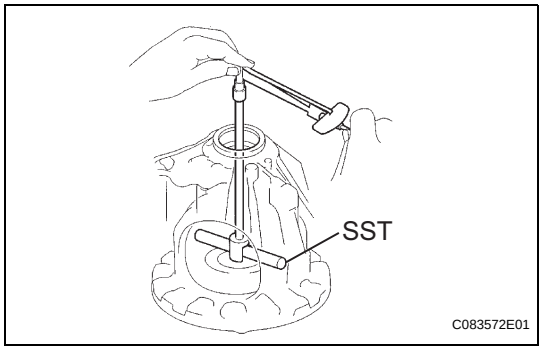

(e) Using SST and torque wrench, measure the preload of the differential.
SST 09564-32011
Torque: Standard turning torque at 60 rpm
0.20 to 0.69 N*m (2.0 to 7.0 kgf*cm, 1.8 to 6.1 in.*lbf) for new
0.10 to 0.35 N*m (1.0 to 3.6 kgf*cm, 0.9 to 3.1 in.*lbf) for used

Standard adjusting shim thickness

Mark	Thickness
0	1.90 mm (0.074 in.)
1	1.95 mm (0.077 in.)
2	2.00 mm (0.079 in.)
3	2.05 mm (0.081 in.)
4	2.10 mm (0.083 in.)
5	2.15 mm (0.085 in.)
6	2.20 mm (0.087 in.)
7	2.25 mm (0.089 in.)
8	2.30 mm (0.091 in.)
9	2.35 mm (0.093 in.)
A	2.40 mm (0.094 in.)
B	2.45 mm (0.096 in.)
C	2.50 mm (0.098 in.)
D	2.55 mm (0.100 in.)
E	2.60 mm (0.102 in.)
F	2.65 mm (0.104 in.)
G	2.70 mm (0.106 in.)
H	2.75 mm (0.108 in.)
J	2.80 mm (0.110 in.)

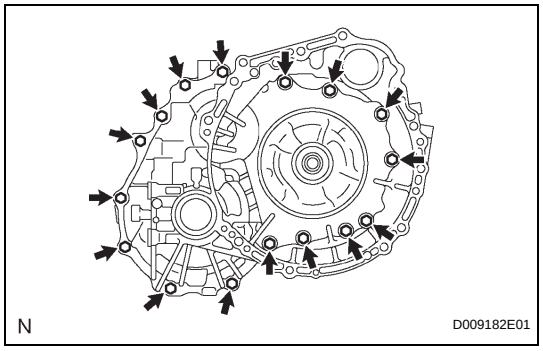

(f) Remove the 16 bolts.
(g) Using a practic-faced hammer, remove the transaxle housing.

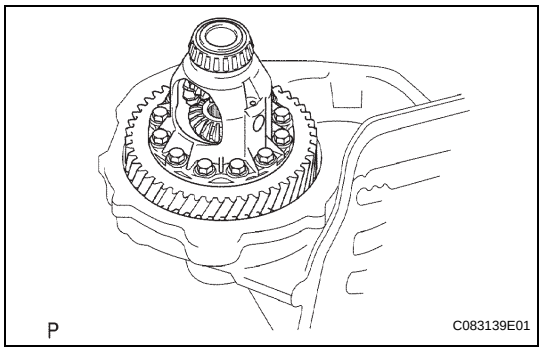

(h) Remove the differential.

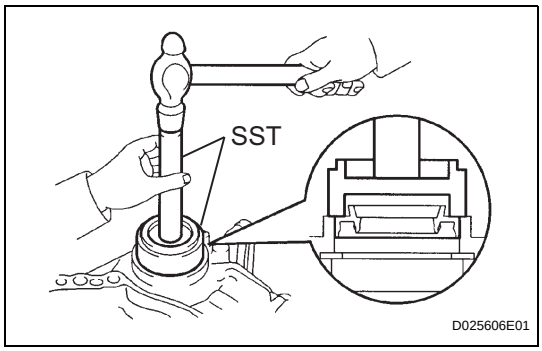

9. INSTALL TRANSAXLE HOUSING OIL SEAL

(a) Coat the lip of a new oil seal with a little amount of MP grease.

(b) Using SST and a hammer, tap in the oil seal.

SST 09350-32014 (09351-32150), 09950-70010 (09951-07150)

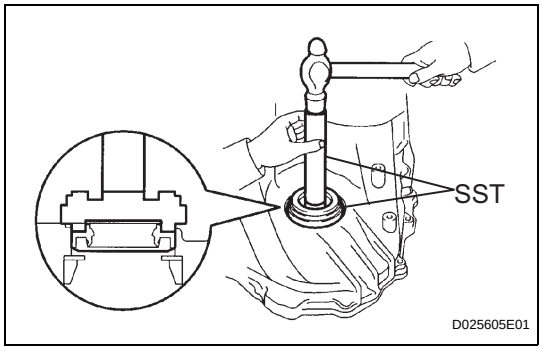

10. INSTALL DIFFERENTIAL SIDE BEARING RETAINER OIL SEAL

(a) Coat the lip of a new oil seal with a little amount of MP grease.

(b) Using SST and a hammer, tap in the oil seal.

SST 09350-32014 (09351-32150), 09950-70010 (09951-07150)

DIFFERENTIAL CASE

COMPONENTS

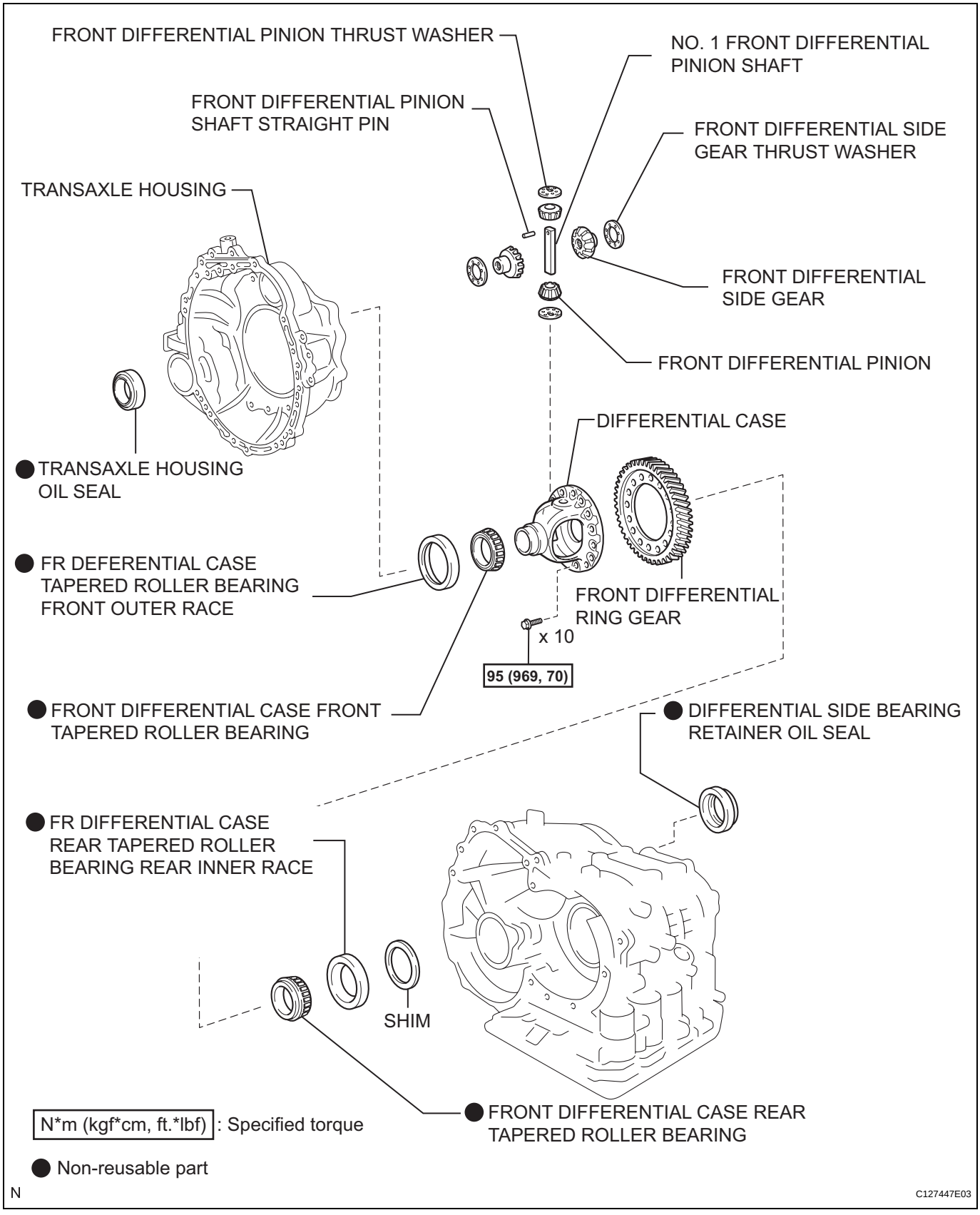

DISASSEMBLY

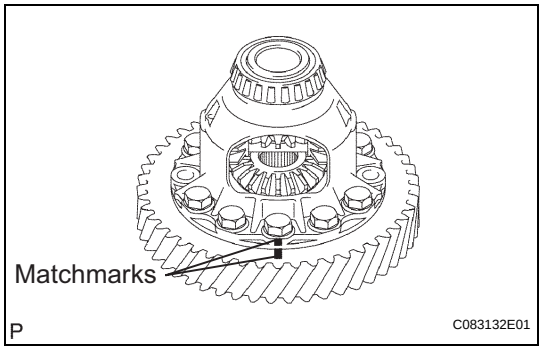

1. REMOVE FRONT DIFFERENTIAL RING GEAR

(a) Place the matchmarks on the ring gear and differential case.

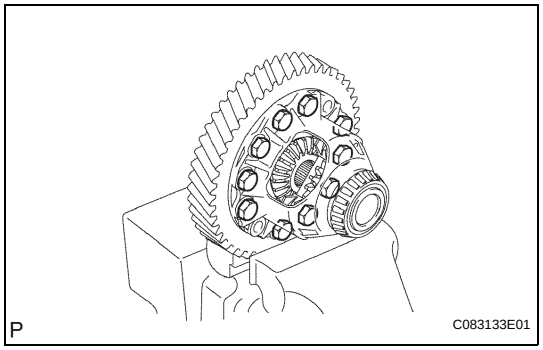

(b) Remove the 10 bolts.

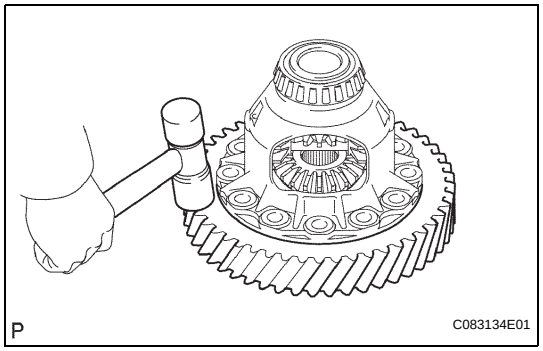

(c) Using a plastic-faced hammer, tap on the ring gear to remove it from the case.

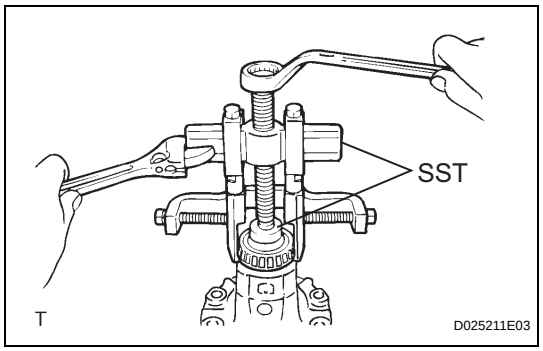

2. REMOVE FRONT DIFFERENTIAL CASE FRONT TAPERED ROLLER BEARING

(a) Using SST, remove the front differential case tapered roller bearing front inner race from the differential case.

SST 09950-40011 (09951-04020, 09952-04010, 09953-04020, 09954-04010, 09955-04061, 09957-04010, 09958-04011), 09950-60010 (09951-00340)

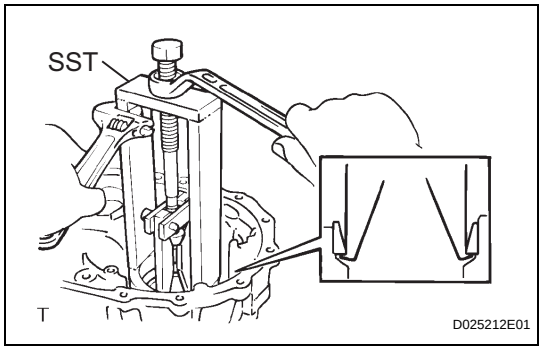

(b) Using SST, remove the front differential case tapered roller bearing front outer race and differential case washer.

SST 09387-00041 (09387-01030, 09387-01040, 09387-02010, 09387-02020)

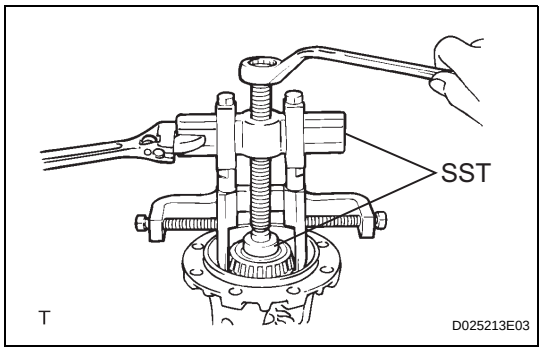

3. REMOVE FRONT DIFFERENTIAL CASE REAR TAPERED ROLLER BEARING

(a) Using SST, remove the front differential case tapered roller bearing rear inner race from the differential case.

SST 09950-40011 (09951-04020, 09952-04010, 09953-04020, 09954-04010, 09955-04061, 09957-04010, 09958-04011), 09950-60010 (09951-00340)

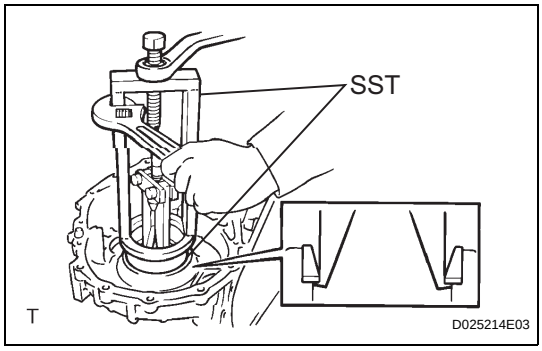

(b) Using SST, remove the front differential case tapered roller bearing rear outer race from the differential case washer.

SST 09387-00041 (09387-01030, 09387-01040, 09387-02010, 09387-02020)

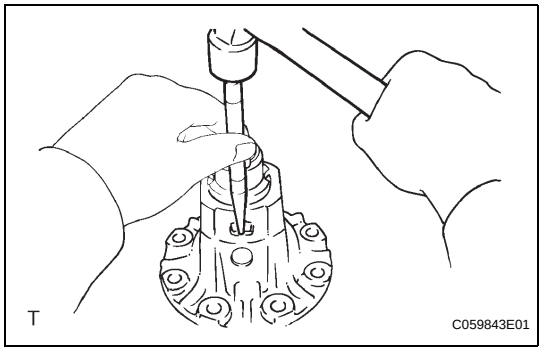

4. REMOVE FRONT DIFFERENTIAL PINION SHAFT STRAIGHT PIN

(a) Using a punch and hammer, loosen the staked part of the differential case.

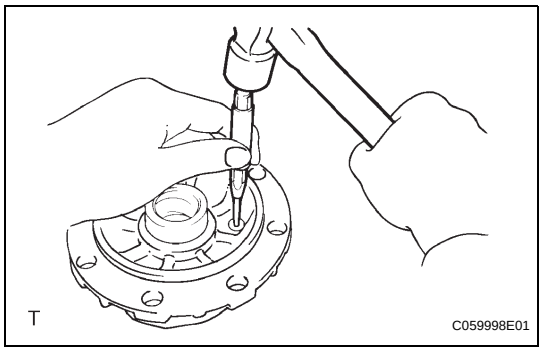

(b) Using a pin punch (5 mm), tap out the pin from the ring gear side.

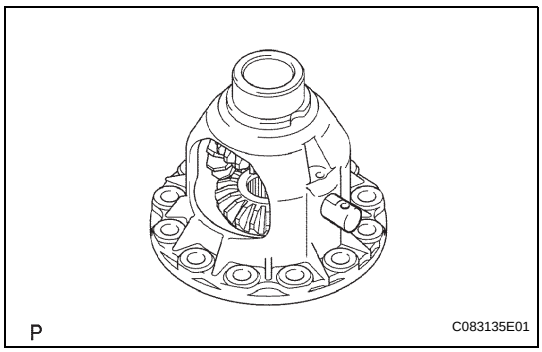

5. REMOVE NO. 1 FRONT DIFFERENTIAL PINION SHAFT

(a) Remove the front differential pinion shaft from the differential case.

DIFFERENTIAL OIL SEAL

COMPONENTS

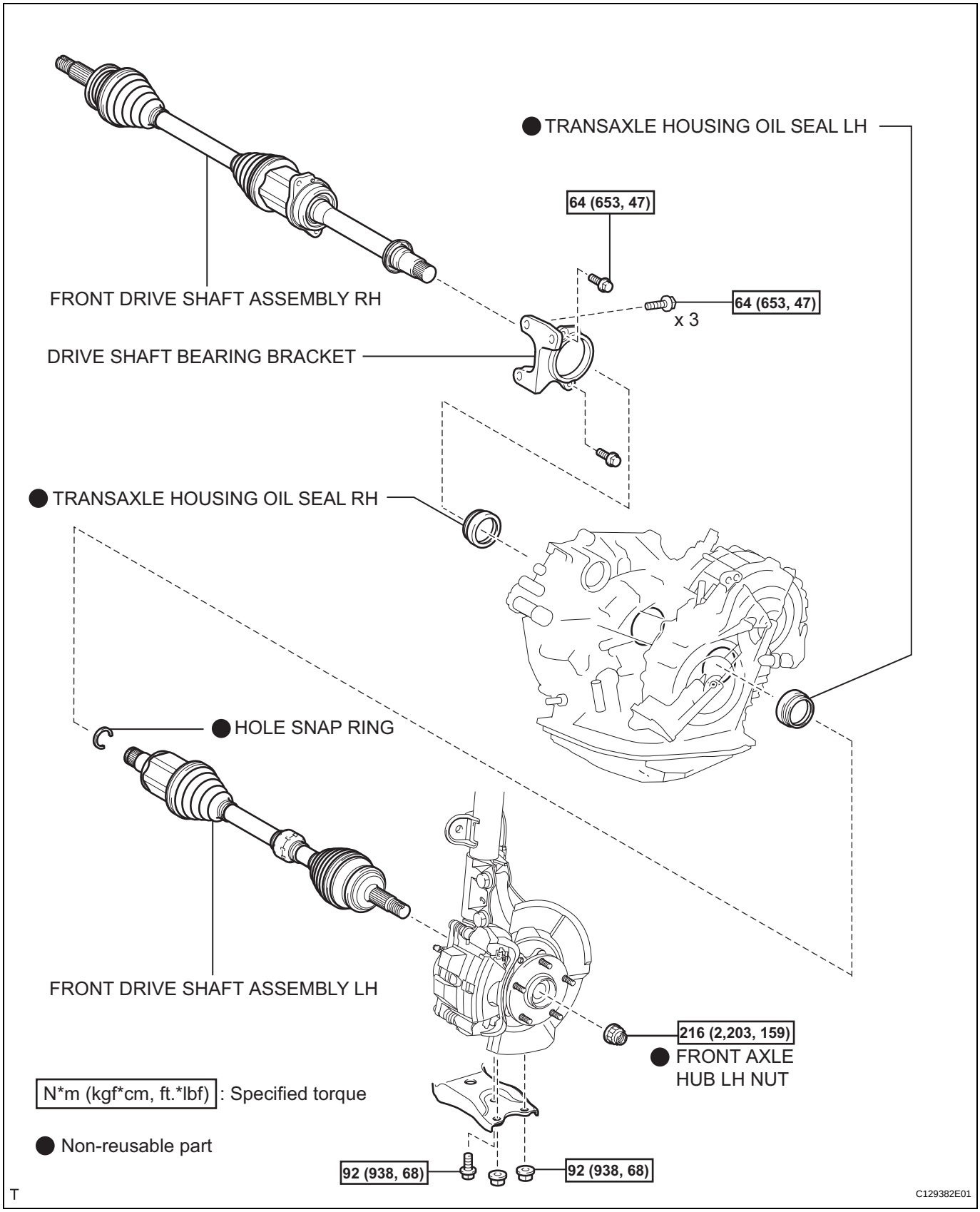

REPLACEMENT

1. DRAIN AUTOMATIC TRANSAXLE FLUID

(a) Remove the drain plug, gasket and drain ATF.

(b) Install a new gasket and drain plug.

Torque: 47 N*m (479 kgf*cm, 35 ft.*lbf)

2. REMOVE FRONT DRIVE SHAFT ASSEMBLY

(a) Remove the drive shaft (see page DS-7).

3. REMOVE DRIVE SHAFT BEARING BRACKET

(a) Remove the 3 bolts and bracket.

4. REMOVE TRANSAXLE HOUSING OIL SEAL LH AND RH

(a) Using SST, tap out the oil seal LH.

SST 09308-00010

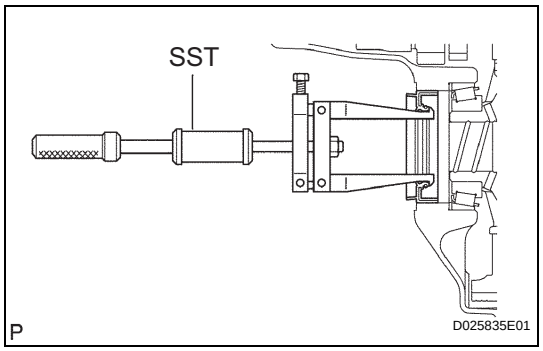

(b) Using SST, tap out the oil seal RH.

SST 09308-00010

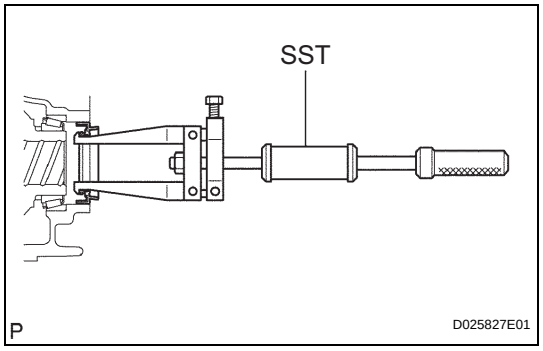

5. INSTALL TRANSAXLE HOUSING OIL SEAL LH AND RH

(a) Coat the lip of a new oil seal LH with MP grease.

(b) Using SST and a hammer, tap in the oil seal LH.

SST 09608-32010, 09950-70010 (09951-07150)

Standard depth:

0 +-0.5 mm (0 +-0.020 in.)

(c) Coat the lip of a new oil seal LH with MP grease.

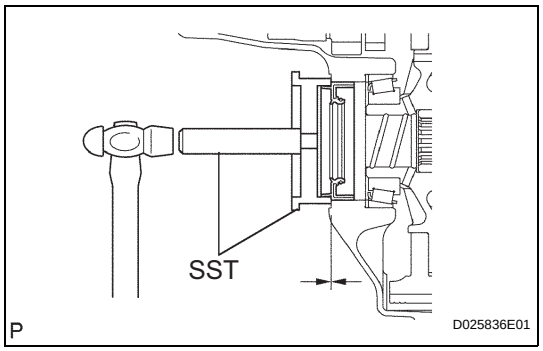

(d) Using SST and a hammer, tap in the oil seal RH.

SST 09608-32010, 09950-70010 (09951-07150)

Standard depth:

0 +-0.5 mm (0 +-0.020 in.)

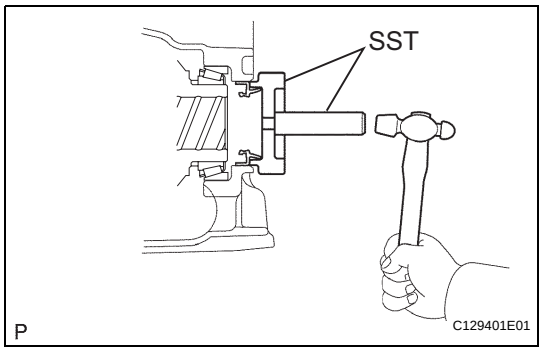

6. INSTALL DRIVE SHAFT BEARING BRACKET

(a) Install the bracket with the 3 bolts.

Torque: 64 N*m (653 kgf*cm, 47 ft.*lbf)

7. INSTALL FRONT DRIVE SHAFT ASSEMBLY

(a) Install the front drive shaft (see page DS-32).

8. ADD AUTOMATIC TRANSAXLE FLUID
Fluid type:
Toyota Genuine ATF WS

9. INSPECT TRANSAXLE FLUID LEVEL
(a) Inspect the transaxle fluid level (see page AX-102).

DIRECT CLUTCH

COMPONENTS

AX

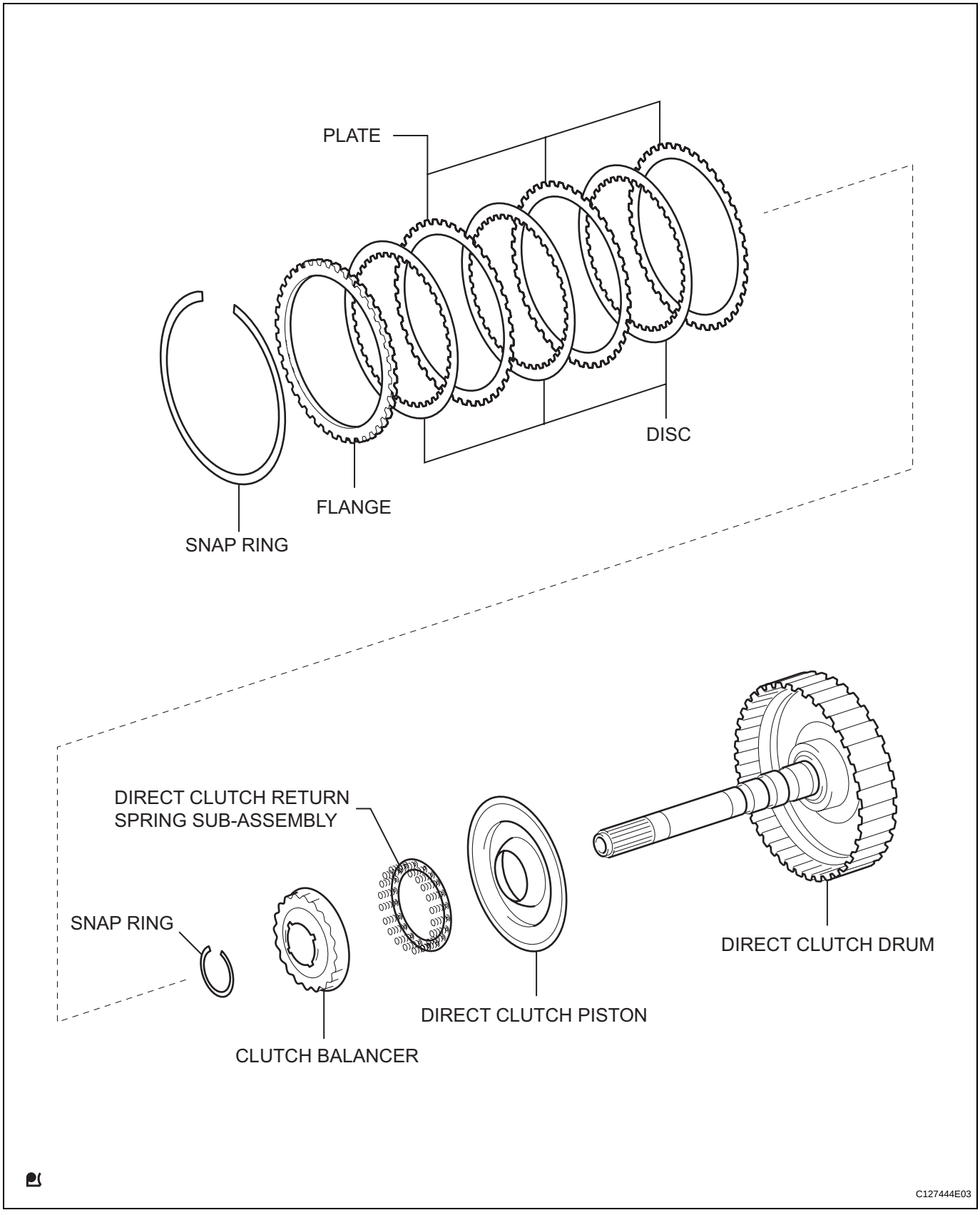

DISASSEMBLY

1. INSPECT PACK CLEARANCE OF DIRECT CLUTCH (See page AX-234)

2. REMOVE DIRECT MULTIPLE DISC CLUTCH DISC

(a) Using a screwdriver, pry out the snap ring from the direct clutch drum.

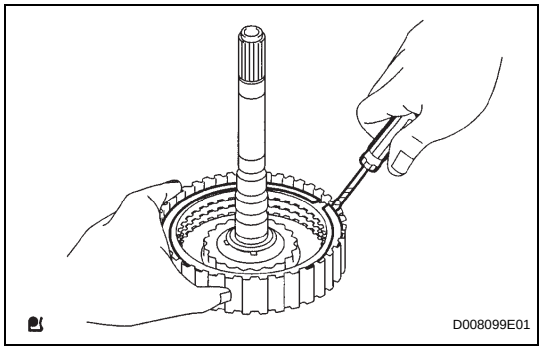

(b) Remove the flange, 3 discs and 3 plates from the direct clutch drum.

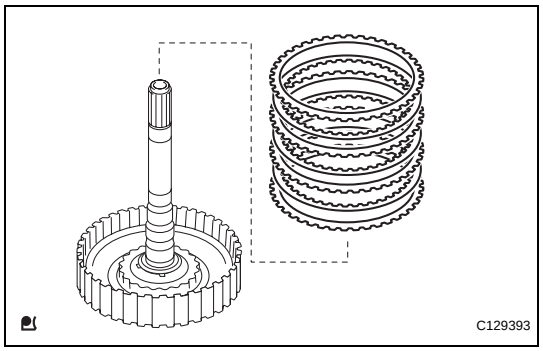

3. INSPECT DIRECT MULTIPLE DISC CLUTCH DISC (See page AX-234)

4. REMOVE DIRECT CLUTCH RETURN SPRING SUB-ASSEMBLY

(a) Place SST on the clutch balancer and compress the spring with a press.
SST 09387-00020

(b) Using a snap ring expander, remove the snap ring from the direct clutch drum.
HINT:
- Stop the press when the spring sheet is lowered to the place 1 to 2 mm (0.039 to 0.078 in.) from the snap ring groove.
- This prevents the spring sheet from being deformed.
- Do not expand the snap ring excessively.

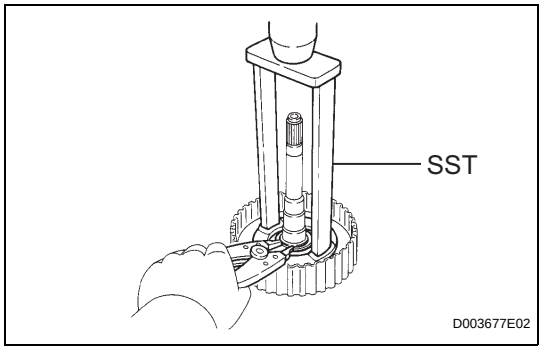

(c) Remove the clutch balancer from the direct clutch drum.

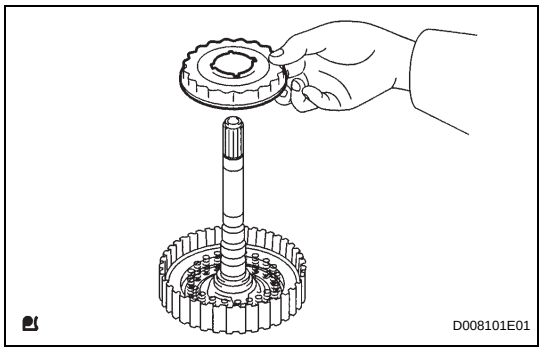

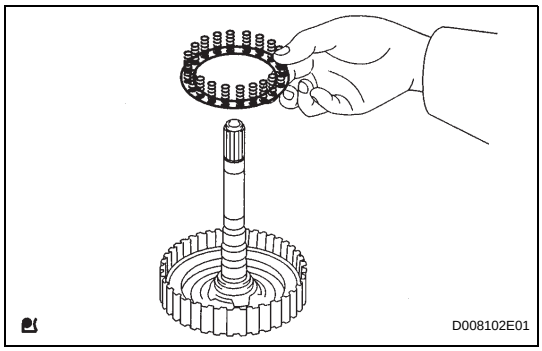

(d) Remove the piston return spring from the direct clutch drum.

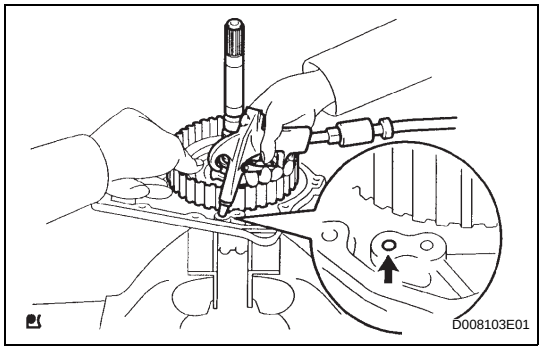

(e) Install the direct clutch drum on the transaxle rear cover.

(f) Holding the direct clutch piston with your hand, apply compressed air (392 kPa, 4.0 kgf/cm^2, 57 psi) to the transaxle rear cover to remove the direct clutch piston.

5. INSPECT DIRECT CLUTCH RETURN SPRING SUB-ASSEMBLY (See page AX-235)

INSPECTION

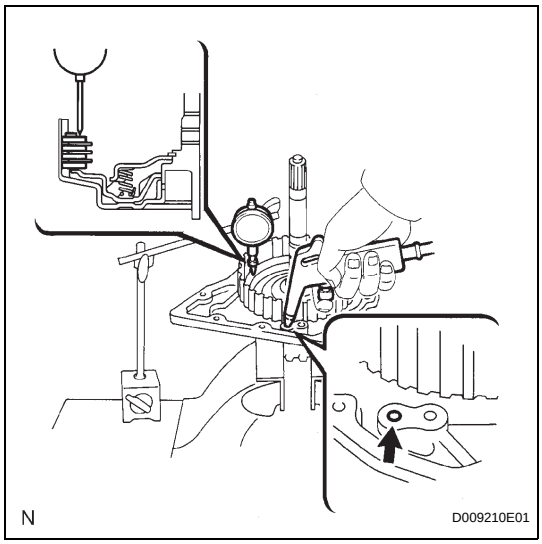

1. INSPECT PACK CLEARANCE OF DIRECT CLUTCH

(a) Install the direct clutch and needle roller bearing on the transaxle rear cover.

(b) Using a dial indicator, measure the direct clutch pack clearance while applying and releasing compressed air (392 kPa, 4.0 kgf/cm^2, 57 psi).

Standard pack clearance:
0.605 to 0.825 mm (0.0238 to 0.0325 in.)

If the pack clearance is not as specified, inspect the discs, plates and flange.

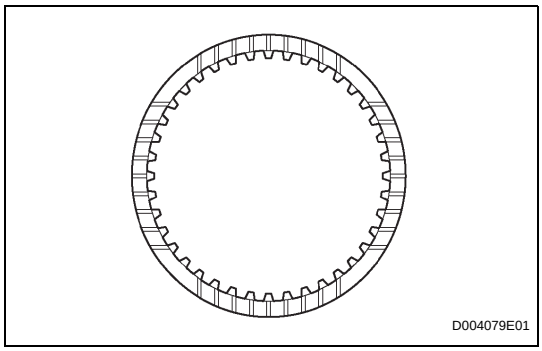

2. INSPECT DIRECT MULTIPLE DISC CLUTCH DISC

(a) Check to see if the sliding surface of the disc, plate and flange are worn or burnt.
If necessary, replace them.
HINT:
- If the lining of the disc is peeling off or discolored, or even if a part of the printed mark is defaced, replace all discs.
- Before assembling new discs, soak them in ATF for at least 15 minutes.

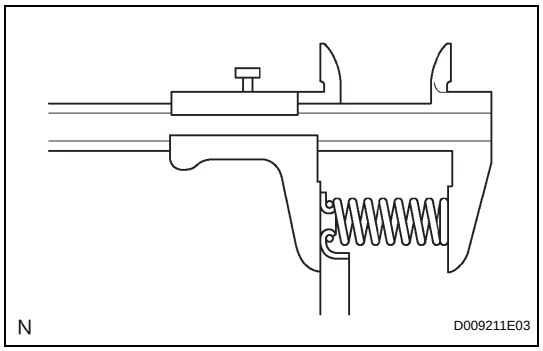

3. INSPECT DIRECT CLUTCH RETURN SPRING SUB-ASSEMBLY

(a) Using a vernier caliper, measure the free length of the spring together with the spring seat.
Standard free length:
22.58 mm (0.8890 in.)

REASSEMBLY

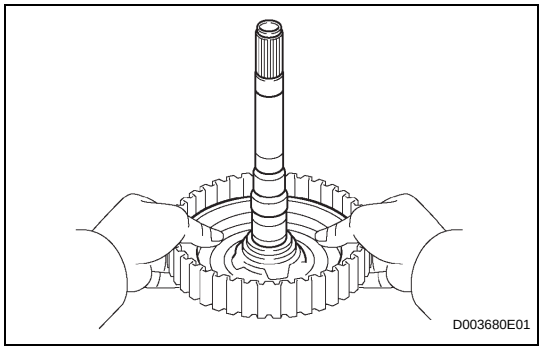

1. INSTALL DIRECT CLUTCH RETURN SPRING SUB-ASSEMBLY

(a) Coat the direct clutch piston with ATF, and install it to the direct clutch drum.
NOTICE:
Be careful not to damage the lip seal of the direct clutch piston.

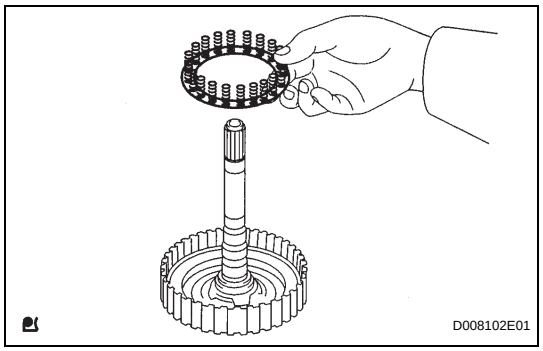

(b) Install the piston return spring to the direct clutch drum.

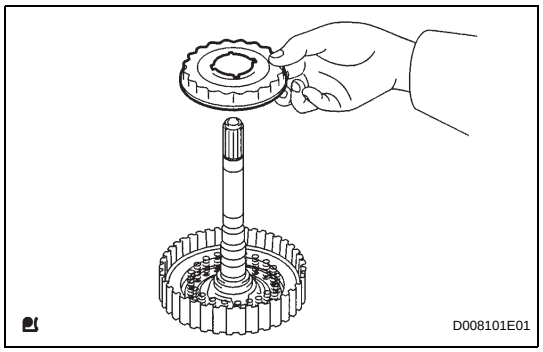

(c) Install the clutch balancer to the direct clutch drum.
NOTICE:
Be careful not to damage the lip seal of the direct clutch balancer.

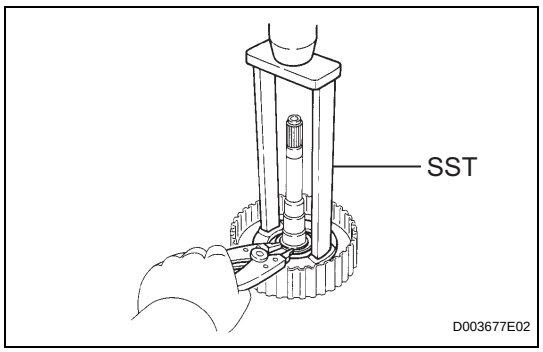

(d) Place SST on the clutch balancer and compress the piston return spring with a press.
SST 09387-00020

(e) Using a snap ring expander, install the snap ring to the direct clutch drum.
NOTICE:
- **Be sure the end gap of the snap ring is not aligned with the clutch balancer claw.**
- **Stop the press when the spring sheet is lowered to the place 1 to 2 mm (0.039 to 0.078 in.) from the snap ring groove.**

- **This prevents the spring sheet from being deformed.**
- **Do not expand the snap ring excessively.**

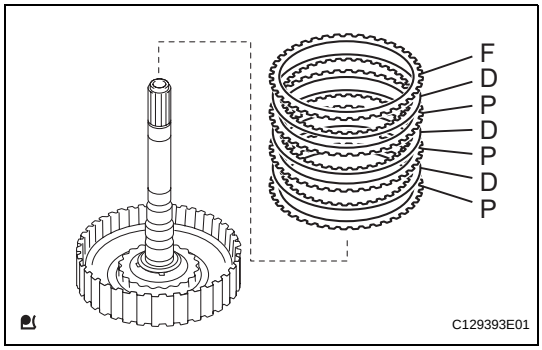

2. INSTALL DIRECT MULTIPLE DISC CLUTCH DISC

(a) Install the 3 plates, 3 discs and flange.

Install in order:

P - D - P - D - P - D - F

HINT:

P = Plate

D = Disc

F = Flange

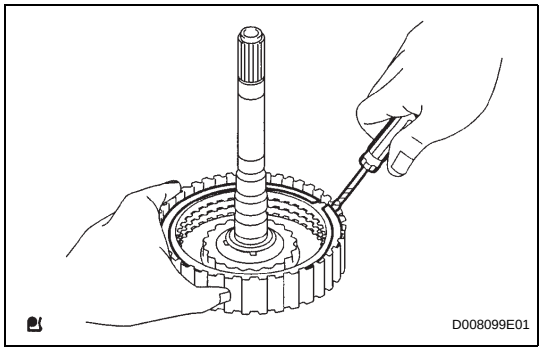

(b) Using a screwdriver, install the snap ring.

(c) Check that the end gap of the snap ring is not aligned with one of the cutouts.

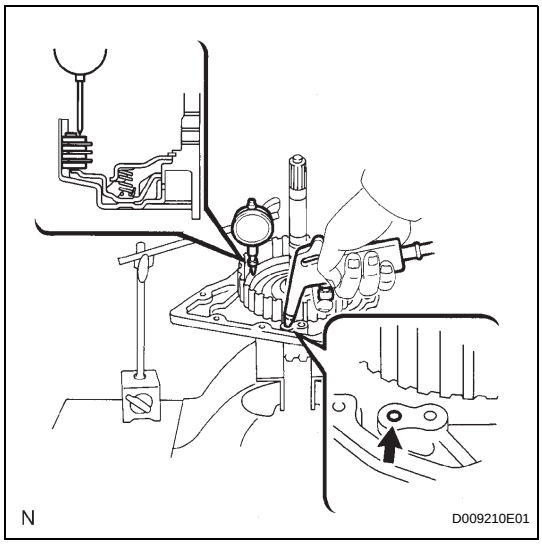

3. INSPECT PACK CLEARANCE OF DIRECT CLUTCH

(a) Install the direct clutch on the transaxle rear cover.

(b) Using a dial indicator, measure the direct clutch pack clearance while applying and releasing compressed air (392 kPa, 4.0 kgf/cm^2, 57 psi).

Standard pack clearance:

0.605 to 0.825 mm (0.02382 to 0.03248 in.)

If the pack clearance is less than the minimum, parts may have been assembled incorrectly, so check and reassemble again.

If the stroke is not as specified, select another flange.

HINT:

There are 6 flanges in different thickness.

Standard flange thickness

No.	Thickness	No.	Thickness
1	3.0 mm (0.118 in.)	4	3.3 mm (0.130 in.)
2	3.1 mm (0.122 in.)	5	3.4 mm (0.134 in.)
3	3.2 mm (0.126 in.)	6	3.5 mm (0.138 in.)

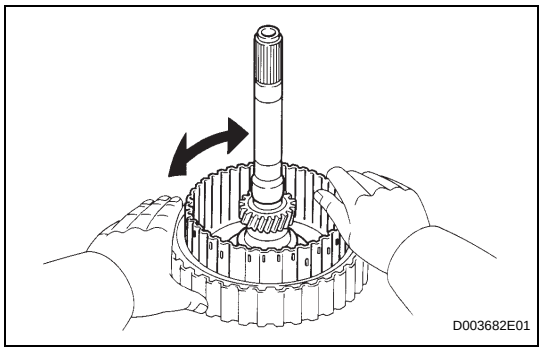

4. INSPECT DIRECT MULTIPLE DISC CLUTCH CLUTCH DISC

(a) Inspect the clutch disc rotation.

(1) Check that the disc rotates when rotating the disc after inserting the rear planetary sun gear.

NOTICE:

Do not place the rear planetary sun gear in a vise.

AX

REMOVAL

1. **DISCONNECT CABLE FROM NEGATIVE BATTERY TERMINAL**
   CAUTION:
   Wait at least 90 seconds after disconnecting the cable from the negative (-) battery terminal to prevent airbag and seat belt pretensioner activation.
2. **REMOVE SHIFT LEVER KNOB SUB-ASSEMBLY**
3. **REMOVE REAR CONSOLE BOX SUB-ASSEMBLY**
   (a) Remove the console box (see page IP-20).
4. **DISCONNECT TRANSMISSION CONTROL CABLE ASSEMBLY**
   (a) Disconnect the control cable from the shift lever.

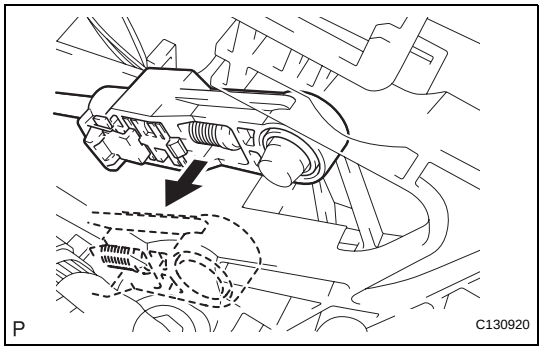

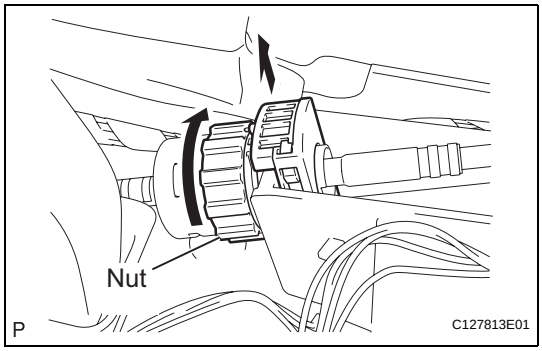

   (b) Turn the nut and disconnect the control cable from the shift lever retainer.

5. **REMOVE FLOOR SHIFT ASSEMBLY**
   (a) Remove the 4 bolts and floor shift.

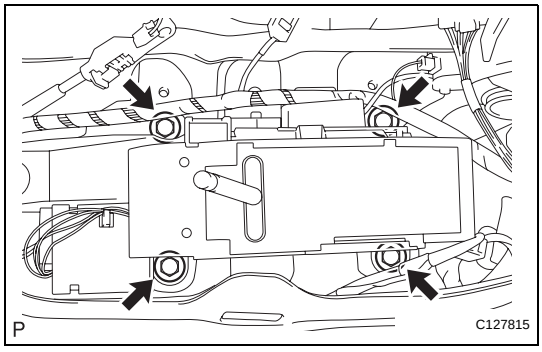

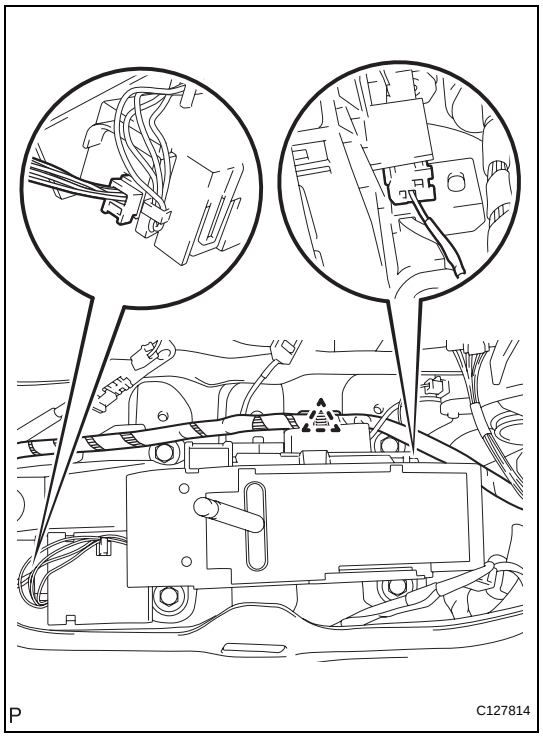

(b) Disconnect the 2 connectors and detach the clamp.

DISASSEMBLY

1. REMOVE LOWER POSITION INDICATOR HOUSING

(a) Detach the 4 claws and remove the housing.

(b) Remove the position indicator slide cover with slide No. 2 cover.

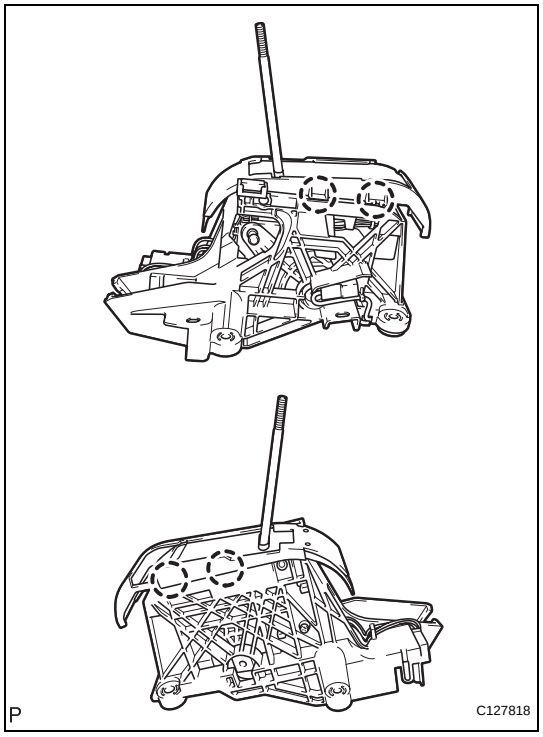

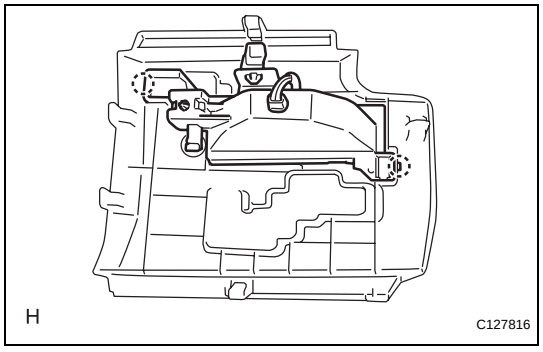

2. REMOVE POSITION INDICATOR LIGHT HOUSING

(a) Detach the 2 claws and remove the indicator light housing from the floor shift position indicator housing.

3. REMOVE INDICATOR LIGHT WIRE SUB-ASSEMBLY

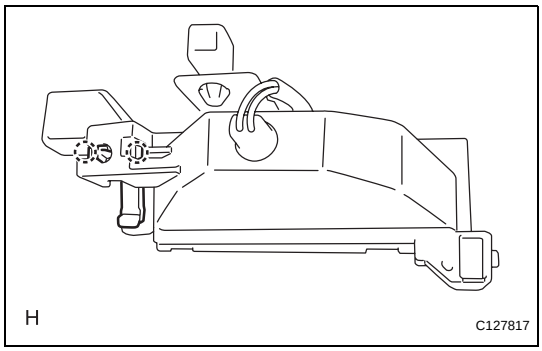

4. REMOVE SHIFT LOCK RELEASE BUTTON

(a) Detach the 2 claws and remove the button and spring from the position indicator light housing.

ADJUSTMENT

1. INSPECT SHIFT LEVER POSITION

(a) When shifting the lever from P to the R position with the ignition switch ON and the brake pedal depressed, make sure that the shift lever moves smoothly and moves correctly into position.

(b) Start the engine and make sure that the vehicle moves forward when shifting the lever from N to the D position and moves rearward when shifting the lever to the R position.
If the operation cannot be performed as specified, inspect the park/neutral position switch assembly and check the shift lever assembly installation condition.

2. ADJUST SHIFT LEVER POSITION

(a) Shift the shift lever to the N position

(b) Slide the adjuster case cover in the direction shown in the illustration and pull out the lock piece.

(c) Gently pull the cable rod toward the rear of the vehicle by hand to pull the cable taut.

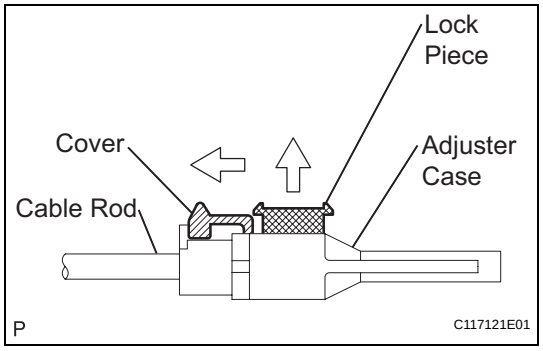

(d) Press the lock piece into the adjuster case and lock it.

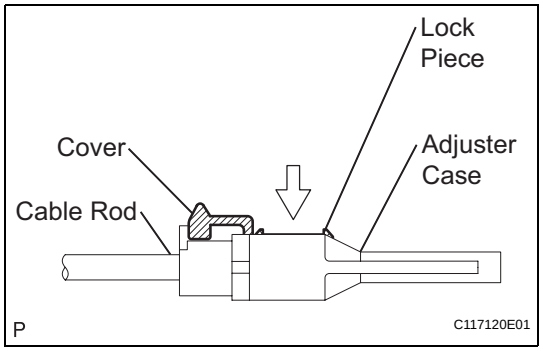

(e) Slide the cover in the direction shown in the illustration.
NOTICE:
Slide the cover past the protrusion of the lock piece.

(f) Inspect the operation after the adjustment.

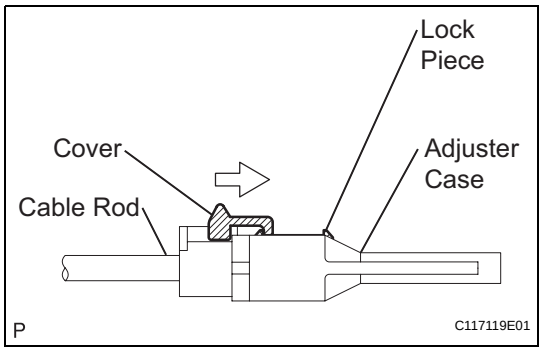

AX

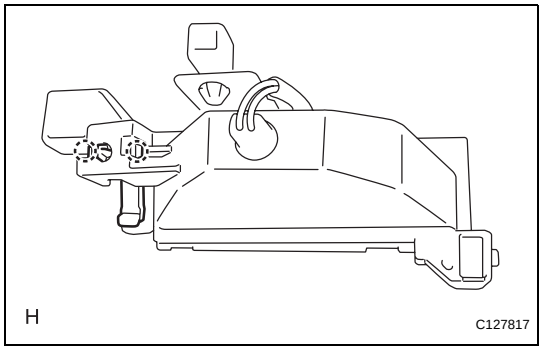

REASSEMBLY

1. INSTALL SHIFT LOCK RELEASE BUTTON

(a) Install the spring and button and attach the claws to the position indicator light housing.

2. INSTALL INDICATOR LIGHT WIRE SUB-ASSEMBLY

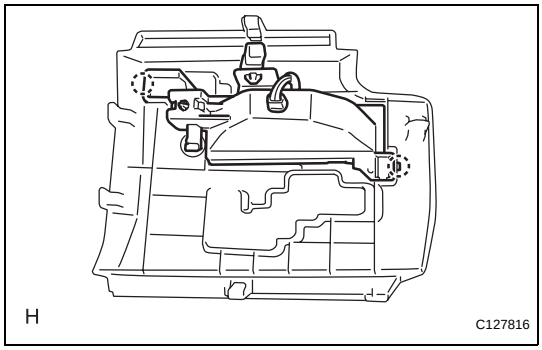

3. INSTALL POSITION INDICATOR LIGHT HOUSING

(a) Install the indicator light housing and the 2 claws to the shift position indicator housing.

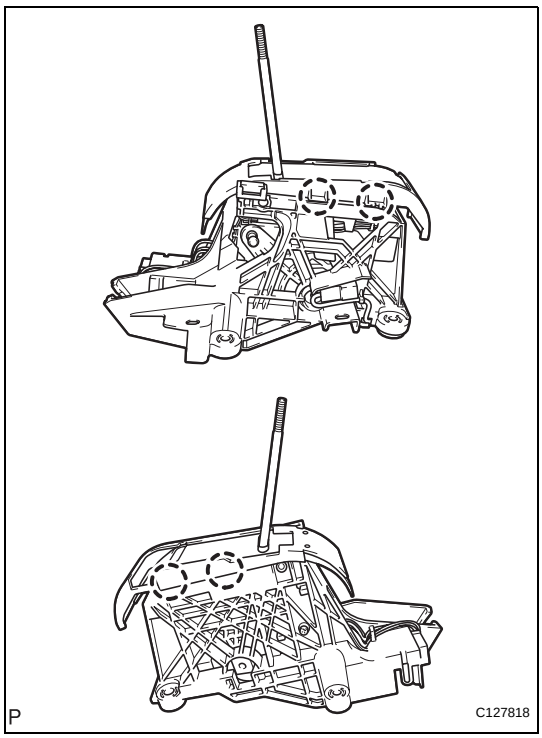

4. INSTALL LOWER POSITION INDICATOR HOUSING

(a) Install the position indicator slide cover with slide cover No. 2 to the indicator housing.

(b) Install the housing and attach the 4 claws to the floor shift assembly.

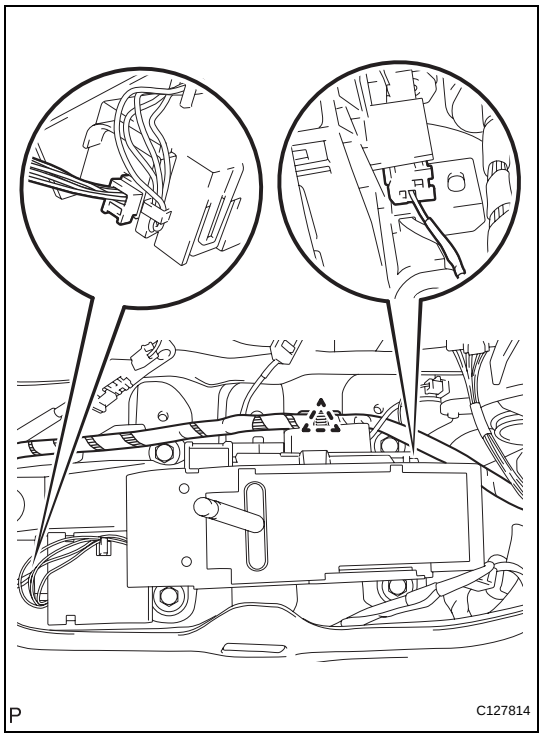

INSTALLATION

1. INSTALL FLOOR SHIFT ASSEMBLY

(a) Connect the 2 connectors and attach the clamp.

(b) Install the floor shift with the 4 bolts.

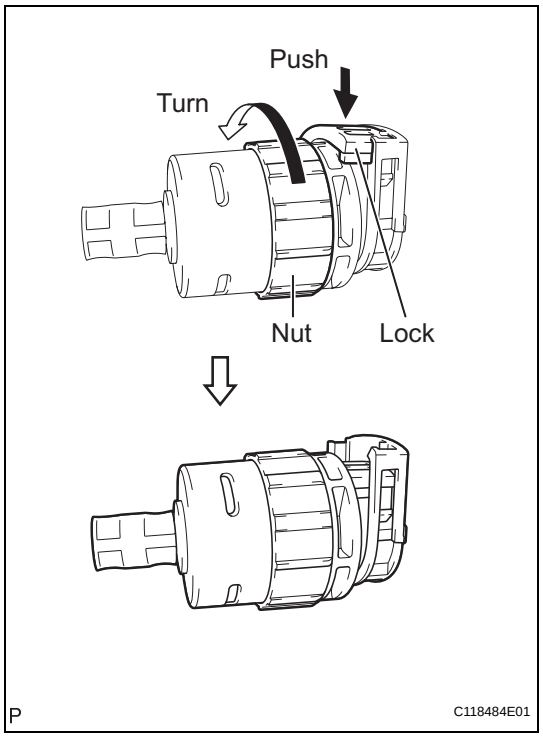

2. CONNECT TRANSMISSION CONTROL CABLE ASSEMBLY

(a) Turn the nut of the control cable and push in the lock.

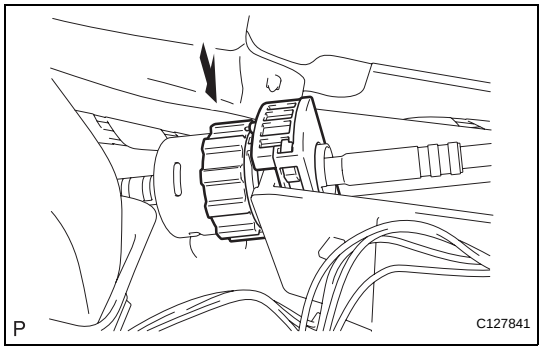

(b) Install the control cable onto the shift lever retainer.
NOTICE:
- **Install the cable with the protruding portion of the cable outer facing upward.**

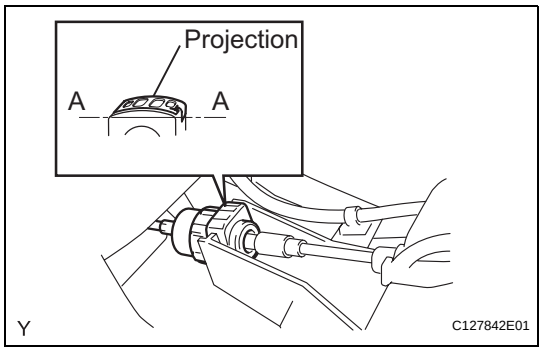

- **After installing, check that the lock of the cable outer is protruding beyond portion A-A, as shown in the illustration.**

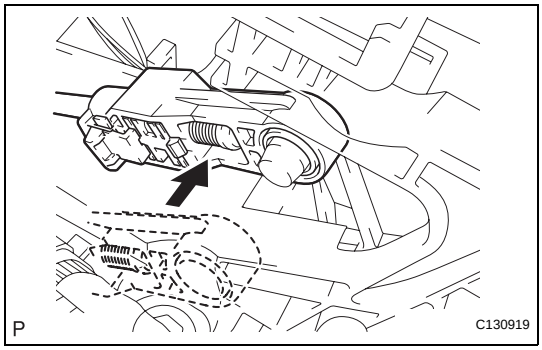

(c) Connect the control cable to the shift lever.
NOTICE:
Connect the control cable so that the adjusting mechanism lock of the control cable is installed on the driver side of the vehicle.

3. **CONNECT CABLE TO NEGATIVE BATTERY TERMINAL**
4. **INSPECT SHIFT LEVER POSITION (See page AX-138)**
5. **ADJUST SHIFT LEVER POSITION (See page AX-138)**
6. **INSTALL REAR CONSOLE BOX SUB-ASSEMBLY**
   (a) Install the rear console box (see page IP-26).
7. **INSTALL SHIFT LEVER KNOB SUB-ASSEMBLY**

FLOOR SHIFT ASSEMBLY

COMPONENTS

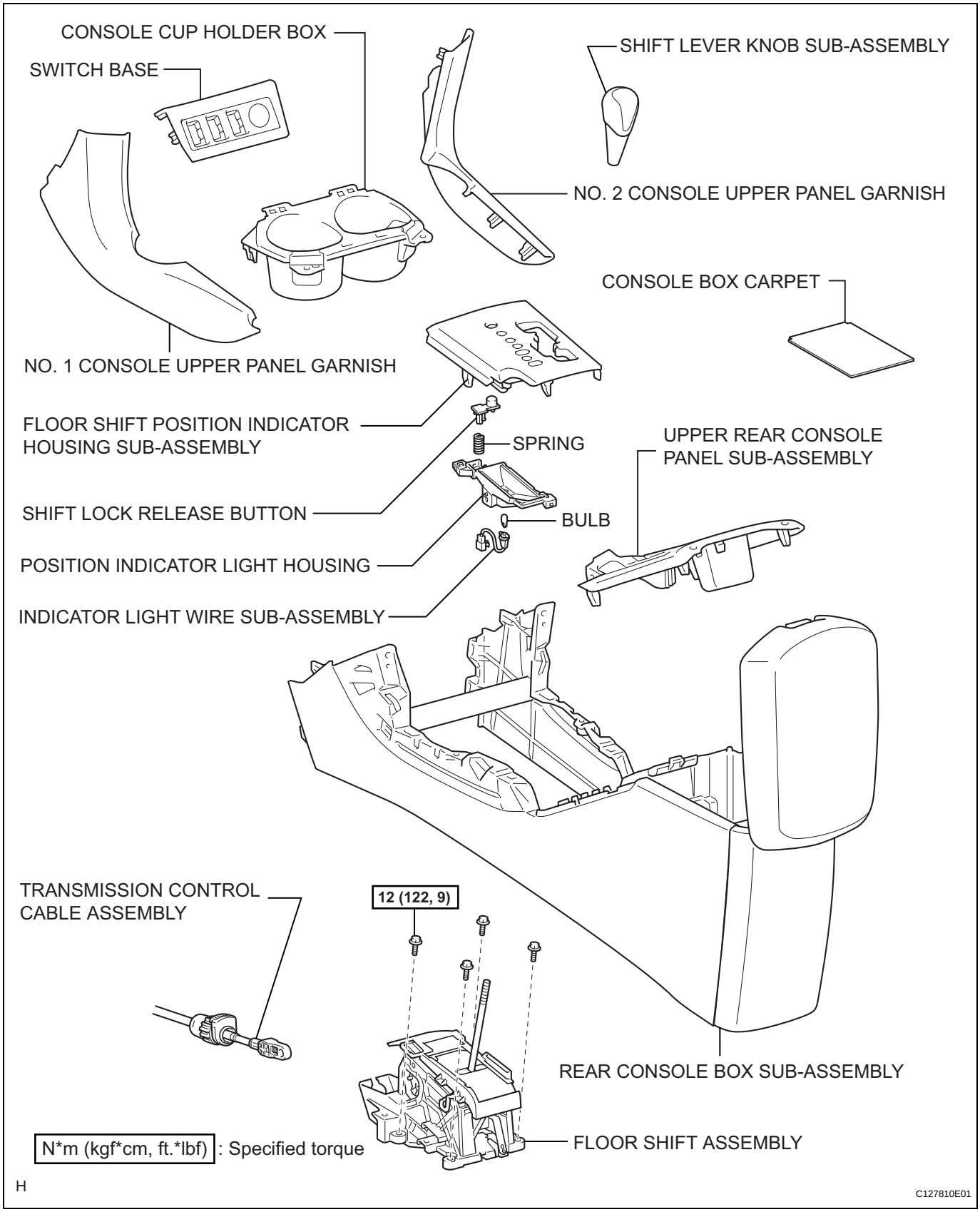

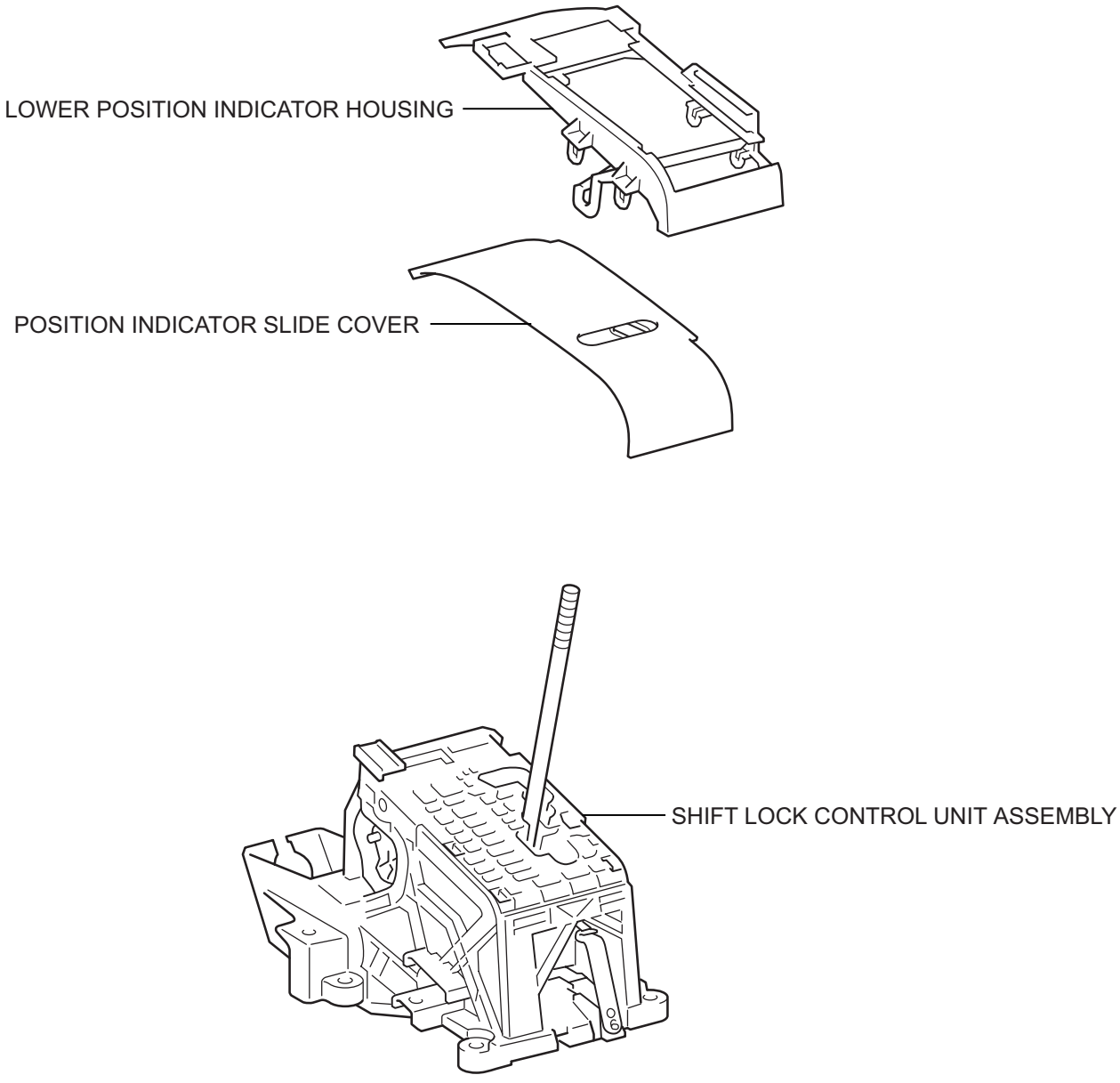

H

C127811E01

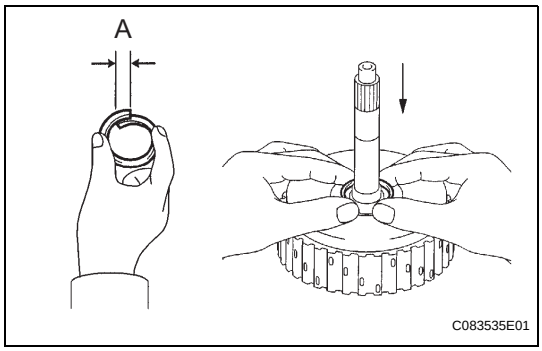

REASSEMBLY

1. INSTALL INPUT SHAFT OIL SEAL RING

(a) Compress the oil seal ring from both sides to reduce dimension A.
Dimension A:
5.0 mm (0.197 in.)

(b) Coat the oil seal ring with ATF and install it to the input shaft.

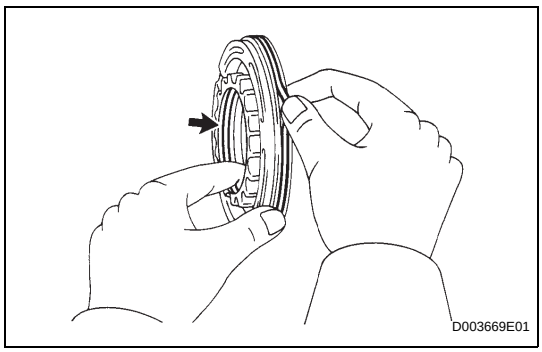

2. INSTALL FORWARD CLUTCH PISTON O-RING

(a) Coat 2 new O-rings with ATF, and install them to the forward clutch piston.

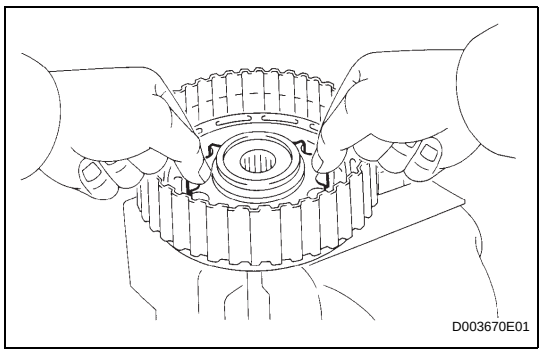

3. INSTALL FORWARD CLUTCH PISTON SUB-ASSEMBLY

(a) Install the forward clutch piston to the forward clutch drum.

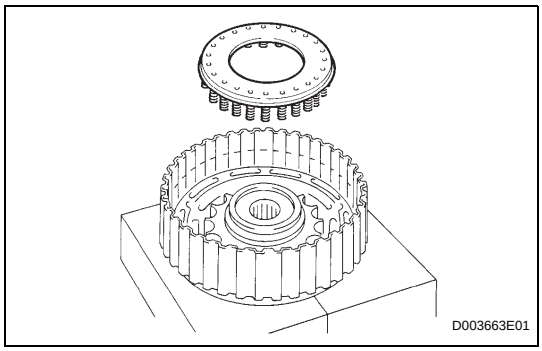

4. INSTALL FORWARD CLUTCH RETURN SPRING SUB-ASSEMBLY

(a) Place the forward clutch return spring onto the forward clutch piston.

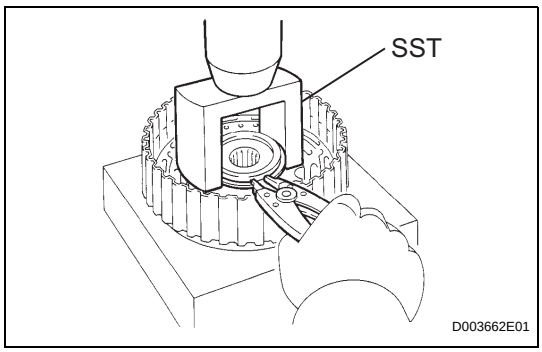

(b) Place SST on the return spring, and compress the return spring with a press.
SST 09350-32014 (09351-32070)

(c) Install the snap ring with a snap ring expander. Be sure the end gap of the snap ring is not aligned with the spring retainer claw.
NOTICE:
- **Stop the press when the spring sheet is lowered to the place 1 to 2 mm (0.039 to 0.078 in.) from the snap ring groove.**

- **This prevents the spring sheet from being deformed.**
- **Do not expand the snap ring excessively.**

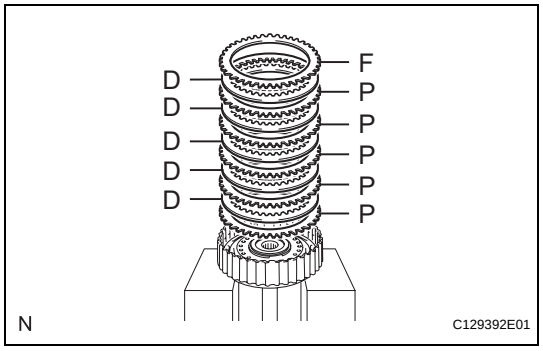

5. INSTALL FORWARD CLUTCH FLANGE HOLE SNAP RING

(a) Install the 5 plates, 5 discs and flange.

Install order:

P - D - P - D - P - D - P - D - P - D - F

HINT:

P = Plate

D = Disc

F = Flange

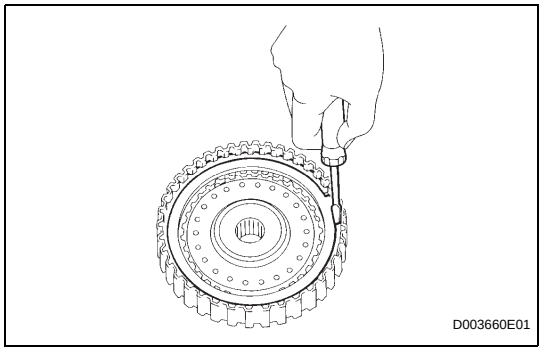

(b) Using a screwdriver, install the snap ring.

(c) Check that the end gap of the snap ring is not aligned with one of the cutouts.

6. INSPECT PACK CLEARANCE OF FORWARD CLUTCH (See page AX-228)

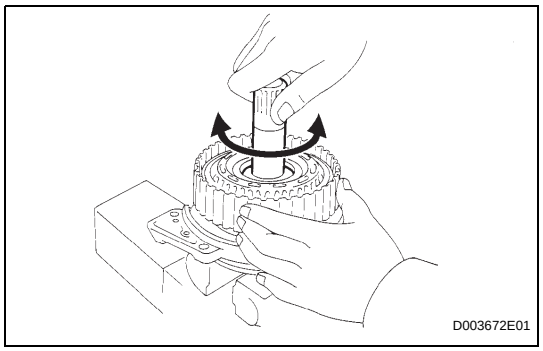

7. INSPECT FORWARD MULTIPLE DISC CLUTCH DISC

(a) Inspect the clutch disc rotation.

(1) After inserting the multiple disc clutch into the multiple disc clutch hub, rotate the forward clutch and check that the disc lightly rotates.

NOTICE:

Do not place the forward clutch in a vise.

AX

FORWARD CLUTCH

COMPONENTS

AX

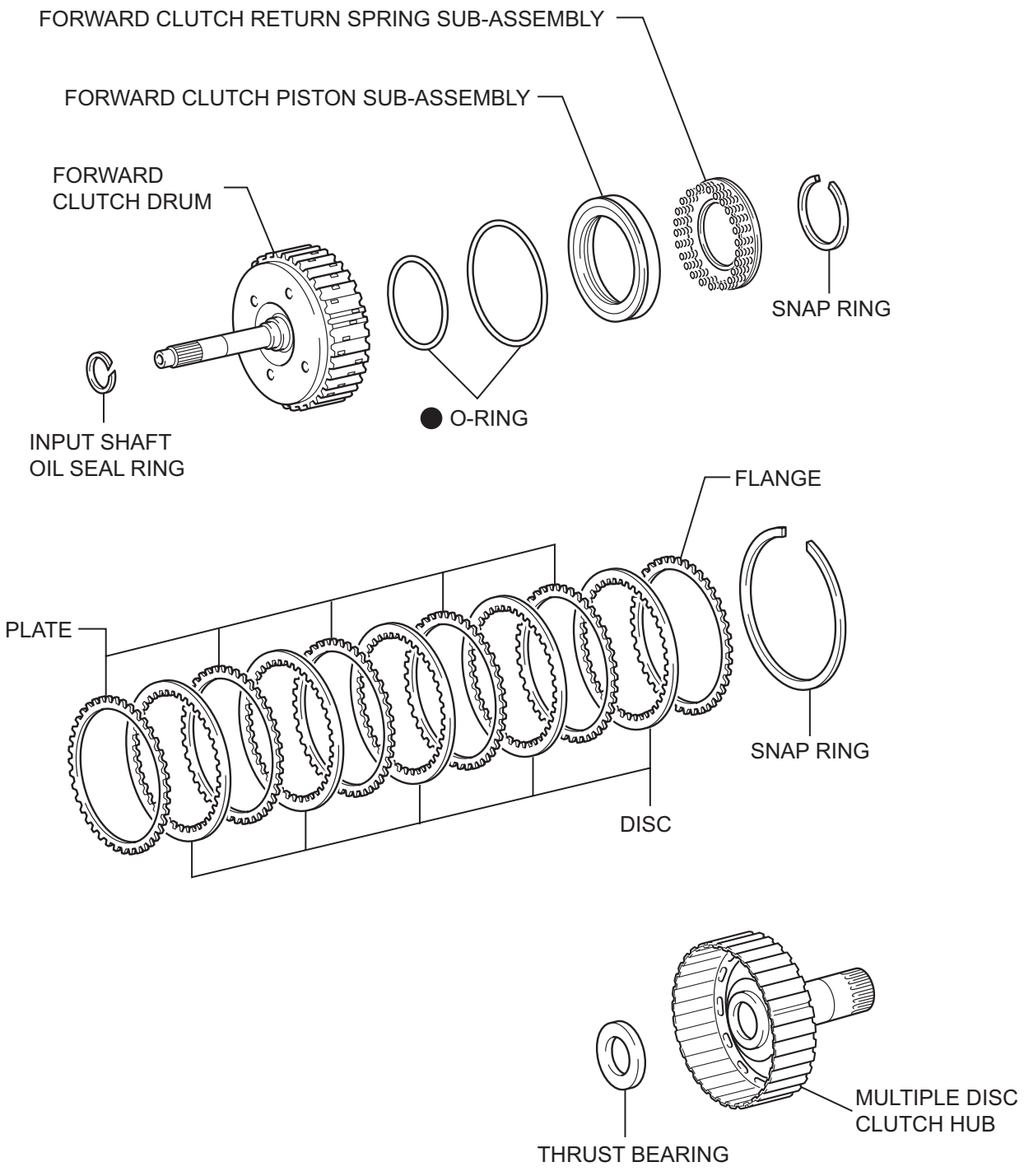

DISASSEMBLY

1. INSPECT PACK CLEARANCE OF FORWARD CLUTCH (See page AX-228)

2. REMOVE FORWARD MULTIPLE DISC CLUTCH DISC

(a) Using a screwdriver, remove the snap ring.

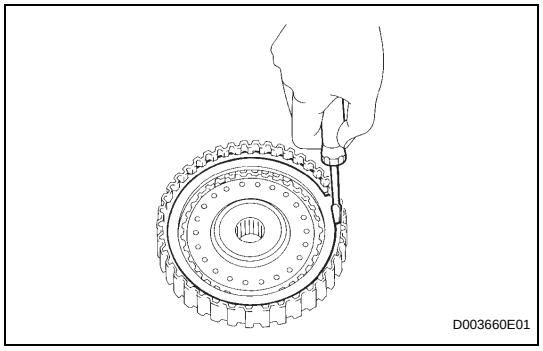

(b) Remove the flange, 5 discs and 5 plates.

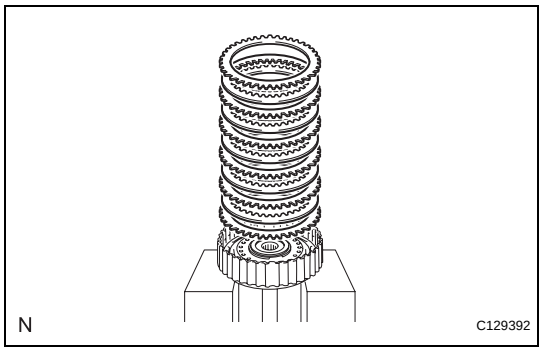

3. INSPECT FORWARD MULTIPLE DISC CLUTCH DISC (See page AX-229)

4. REMOVE FORWARD CLUTCH RETURN SPRING SUB-ASSEMBLY

(a) Place SST on the spring retainer and compress the return spring with a press.

SST 09350-32014 (09351-32070)

(b) Using a snap ring expander, remove the snap ring.

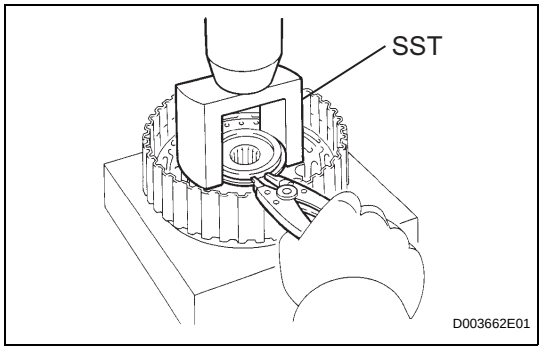

(c) Remove the piston return spring.

5. INSPECT FORWARD CLUTCH RETURN SPRING SUB-ASSEMBLY (See page AX-229)

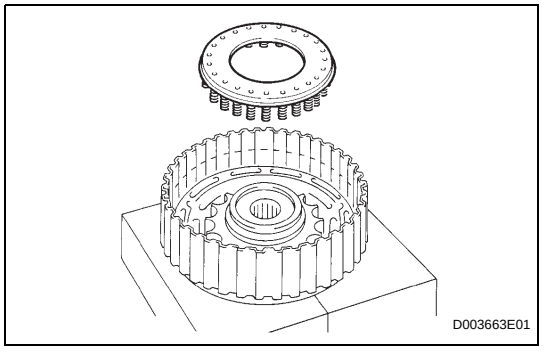

AX

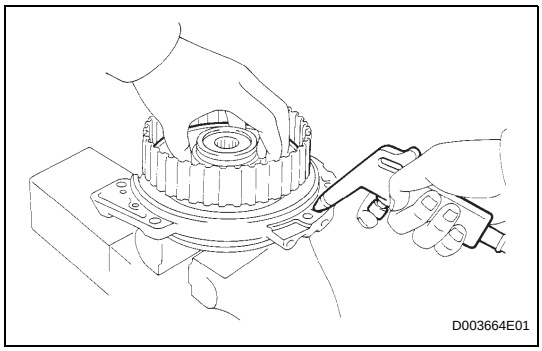

6. REMOVE FORWARD CLUTCH PISTON SUB-ASSEMBLY

(a) Place the forward clutch drum onto the oil pump.

(b) Holding the forward clutch piston with your hand, apply compressed air (392 kPa, 4.0 kgf/cm^2, 57 psi) to the oil pump to remove the forward clutch piston.
HINT:
When the piston is slanted and cannot be removed, remove it by pushing down the protruding side and applying compressed air again, or using need-nose pliers (with its tips wrapped in tape).

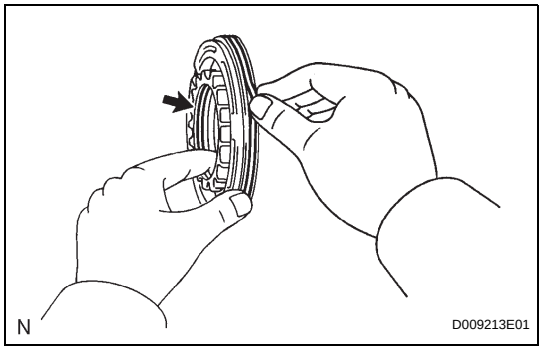

7. REMOVE FORWARD CLUTCH PISTON O-RING

(a) Remove the 2 O-rings.

8. INSPECT FORWARD CLUTCH PISTON SUB-ASSEMBLY (See page AX-229)

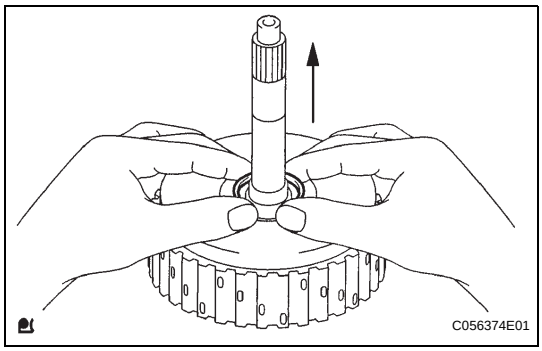

9. REMOVE INPUT SHAFT OIL SEAL RING

INSPECTION

1. INSPECT PACK CLEARANCE OF FORWARD CLUTCH

(a) Install the forward clutch on the oil pump.
NOTICE:
Be careful not to damage the oil seal ring of oil pump.

(b) Using a dial indicator, measure the forward clutch piston stroke while applying and releasing compressed air (392 kPa, 4.0 kgf/cm^2, 57 psi).
Standard piston stroke:
1.74 to 2.08 mm (0.0685 to 0.0819 in.)
If the piston stroke is less than the minimum, the parts may have been assembled incorrectly. Check and reassemble again.
If the clearance is not as specified, select another flange.
HINT:
There are 5 different flanges in thickness.

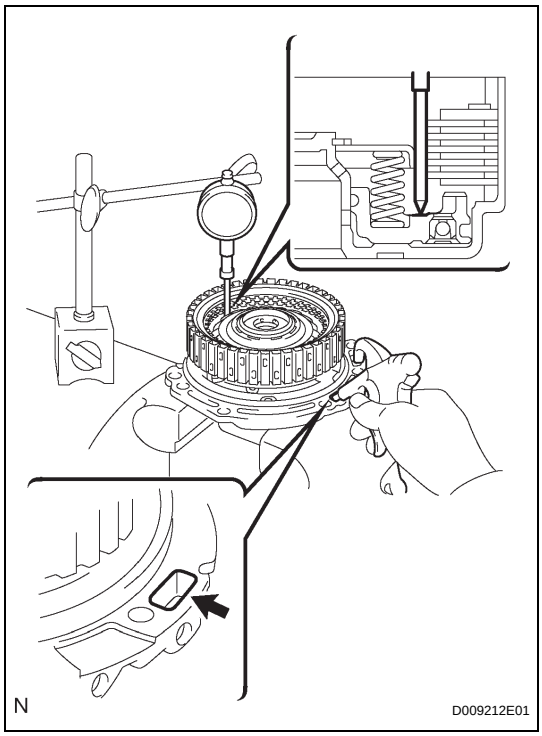

Standard flange thickness

No.	Thickness	No.	Thickness
1	3.00 mm (0.1181 in.)	4	3.45 mm (0.1358 in.)
2	3.15 mm (0.1240 in.)	5	3.60 mm (0.1417 in.)
3	3.30 mm (0.1299 in.)	-	-

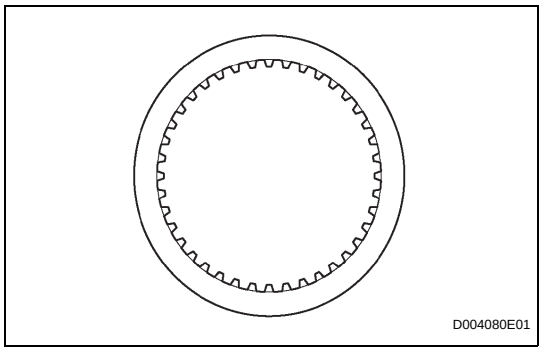

2. INSPECT FORWARD MULTIPLE DISC CLUTCH DISC

(a) Check to see if the sliding surface of the disc, plate and flange are worn or burnt.
If necessary, replace them.
HINT:
- If the lining of the disc is peeling off or discolored, replace all discs.
- Before assembling new discs, soak them in ATF for at least 15 minutes.

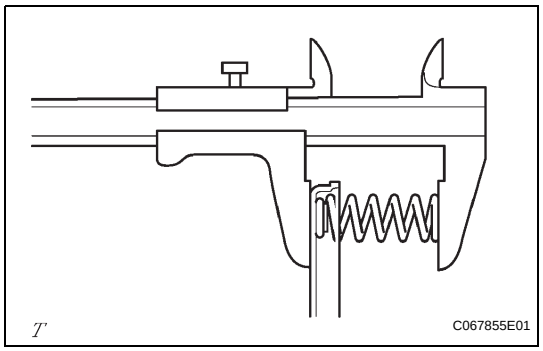

3. INSPECT FORWARD CLUTCH RETURN SPRING SUB-ASSEMBLY

(a) Using a vernier caliper, measure the free length of the spring together with the spring seat.
Standard free length:
28.23 mm (1.1114 in.)

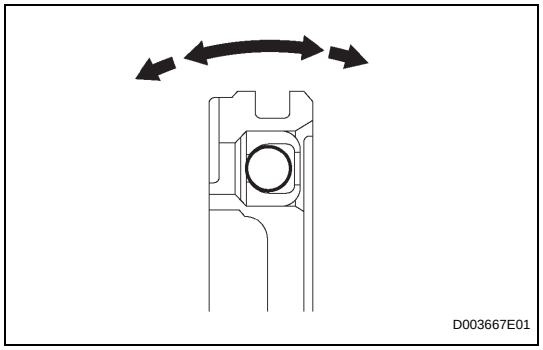

4. INSPECT FORWARD CLUTCH PISTON SUB-ASSEMBLY

(a) Shake the piston to check that the check ball is not stuck.

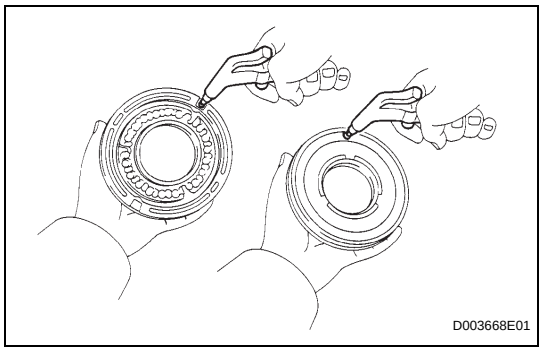

(b) Check that the value does not leak when applying low compressed air (392 kPa, 4.0 kgf/cm^2, 57 psi).

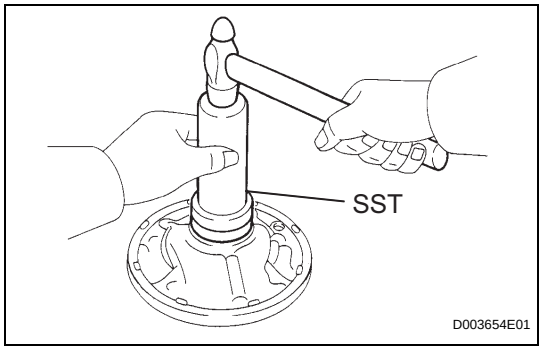

REASSEMBLY

1. INSTALL FRONT OIL PUMP OIL SEAL

(a) Using SST, install a new oil seal to the pump.
SST 09350-32014 (09351-32140)
HINT:
The seal end should be flush with the outer edge of the oil pump.

(b) Coat the lip of the oil seal with petroleum jelly.

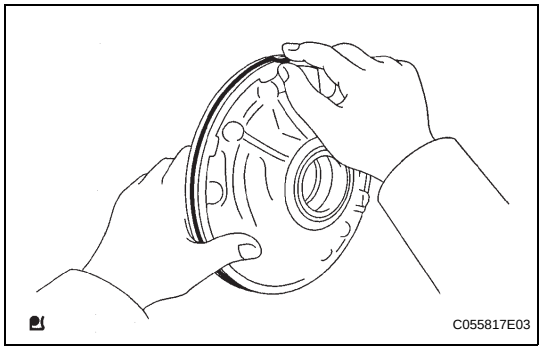

2. INSTALL FRONT OIL PUMP BODY O-RING

(a) Coat a new O-ring with ATF, and install it to the oil pump body.

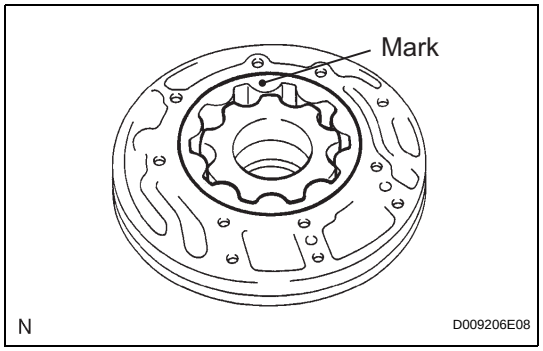

3. INSTALL FRONT OIL PUMP DRIVEN GEAR

(a) Coat the front oil pump driven gear with ATF, and install it to the oil pump body with the maked side facing up.

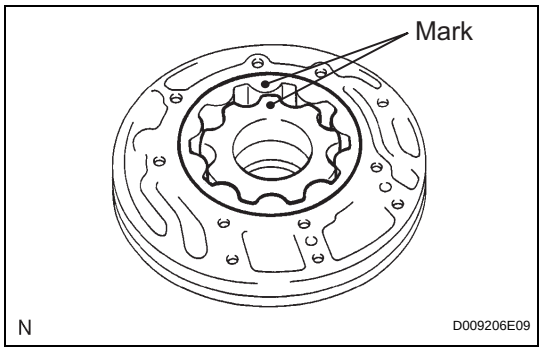

4. INSTALL FRONT OIL PUMP DRIVE GEAR

(a) Coat the front oil pump drive gear with ATF, and install it to the oil pump body with the maked side facing up.

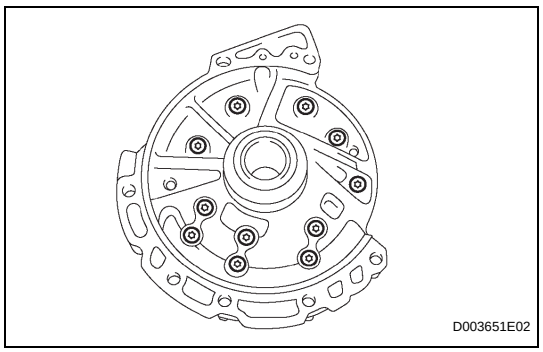

5. INSTALL STATOR SHAFT ASSEMBLY

(a) Set stator shaft by aligning each bolt hole.

(b) Using a T30 "torx" socket, install the 11 bolts.
Torque: 9.8 N*m (100 kgf*cm, 87 in.*lbf)

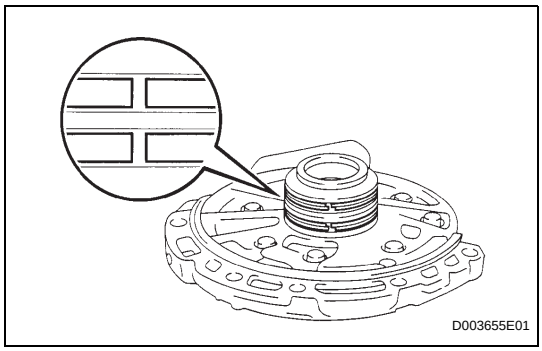

6. **INSTALL CLUTCH DRUM OIL SEAL RING**
   NOTICE:
   Do not expand the ring ends excessively.
   (a) Install the 2 clutch drum oil seal rings.

7. **INSPECT OIL PUMP ASSEMBLY (See page AX-219)**

OIL PUMP

COMPONENTS

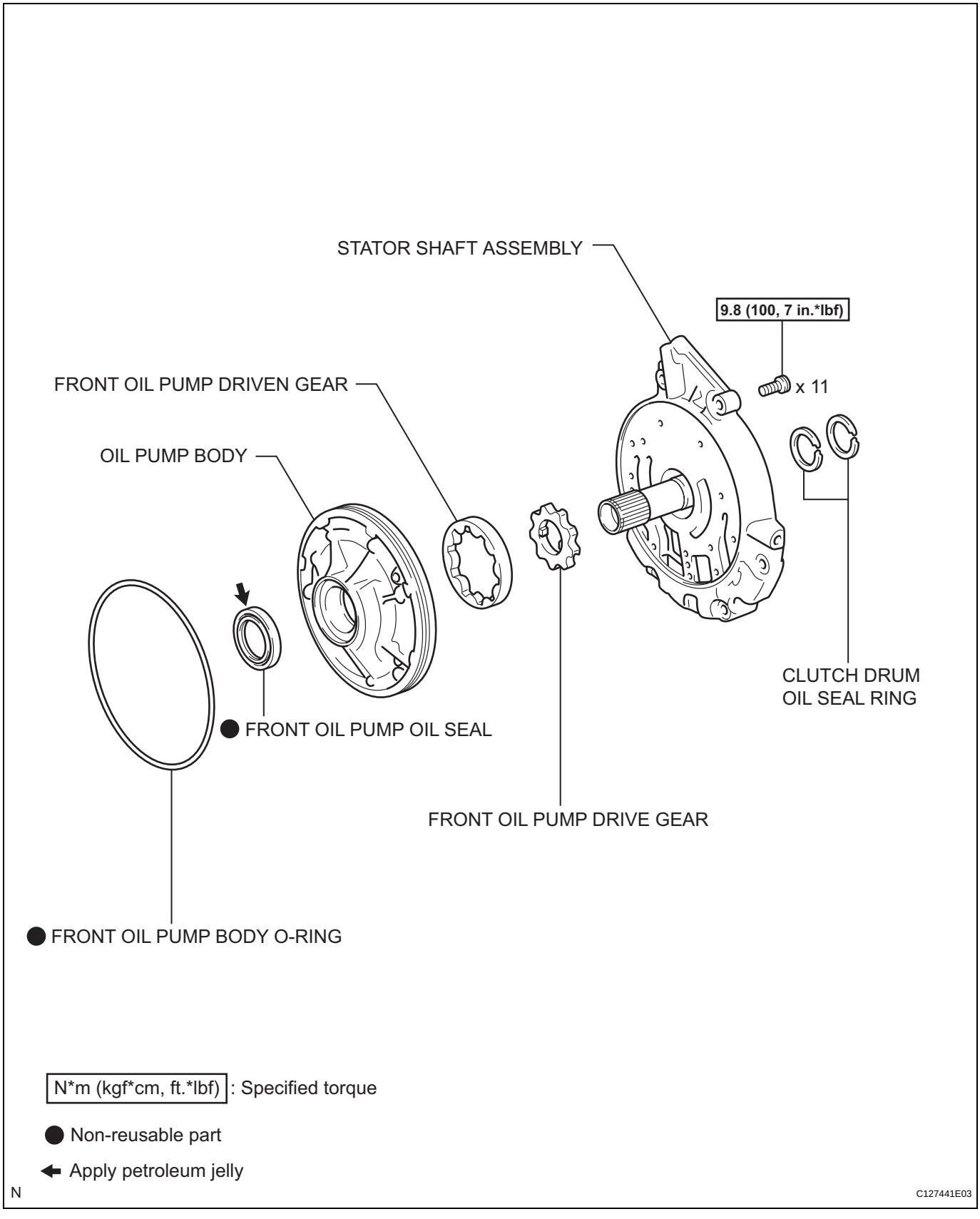

AX

DISASSEMBLY

1. **INSPECT OIL PUMP ASSEMBLY (See page AX-219)**

2. **REMOVE CLUTCH DRUM OIL SEAL RING**
   (a) Remove the 2 clutch drum oil seal rings.

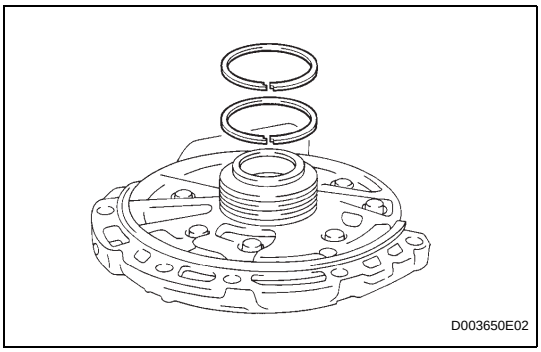

3. **REMOVE STATOR SHAFT ASSEMBLY**
   (a) Using a T30 "torx" socket, remove the 11 bolts and stator shaft.

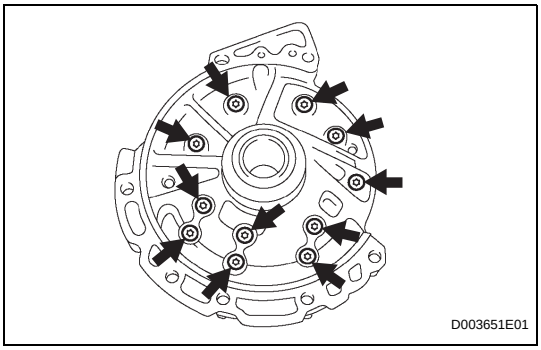

4. **INSPECT CLEARANCE OF OIL PUMP ASSEMBLY (See page AX-219)**

5. **REMOVE FRONT OIL PUMP DRIVE GEAR**
   (a) Remove the front oil pump drive gear.

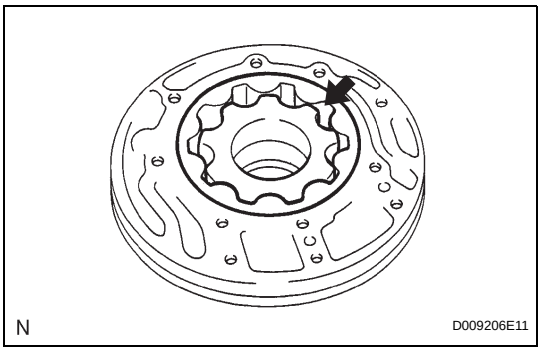

6. **REMOVE FRONT OIL PUMP DRIVEN GEAR**
   (a) Remove the front oil pump driven gear.

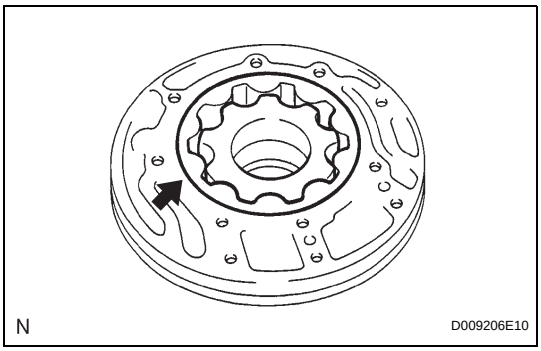

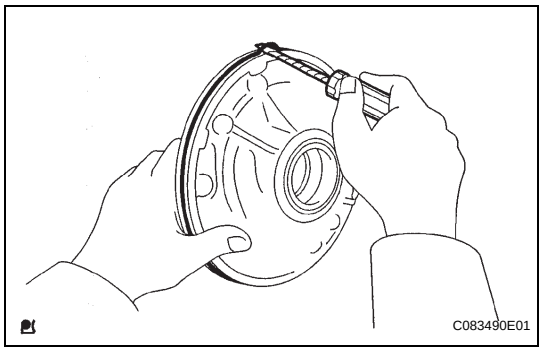

7. REMOVE FRONT OIL PUMP BODY O-RING

(a) Using a screwdriver, pry out the O-ring.
HINT:
Tape the screwdriver before use.

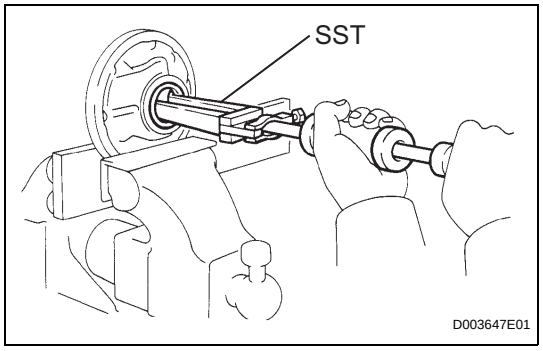

8. REMOVE FRONT OIL PUMP OIL SEAL

(a) Mount the oil pump in a soft jaw vise.
(b) Using SST, tap out the oil seal from the oil pump body.
SST 09308-00010

9. INSPECT FRONT OIL PUMP AND GEAR BODY SUB-ASSEMBLY (See page AX-220)

10. INSPECT STATOR SHAFT ASSEMBLY (See page AX-221)

INSPECTION

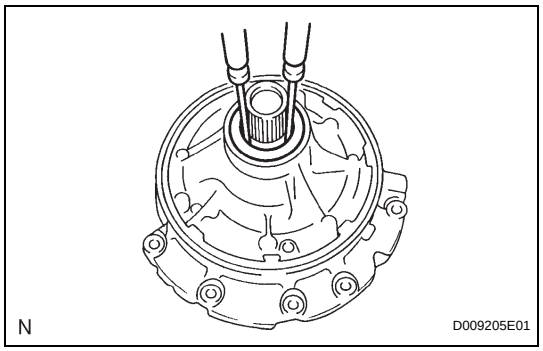

1. INSPECT OIL PUMP ASSEMBLY

(a) Turn the drive gear with 2 screwdrivers and make sure it rotates smoothly.
NOTICE:
Be careful not to damage the oil seal lip.

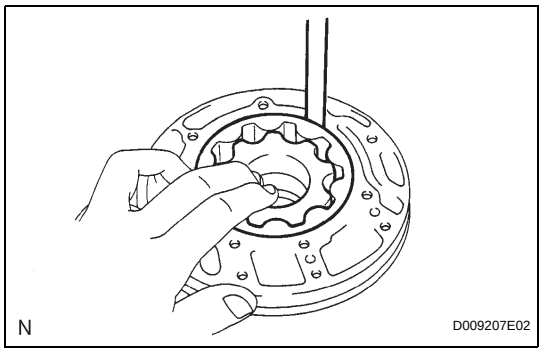

2. INSPECT CLEARANCE OF OIL PUMP ASSEMBLY

(a) Push the driven gear to one side of the body. Using a feeler gauge, measure the clearance.
Standard body clearance:
0.10 to 0.17 mm (0.0039 to 0.0067 in.)
Maximum body clearance:
0.17 mm (0.0067 in.)
If the body clearance is greater than the maximum, replace the oil pump body sub-assembly.

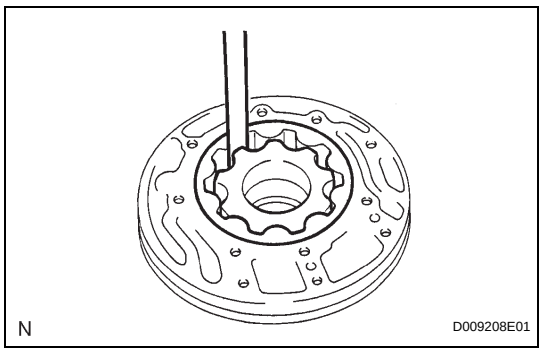

(b) Measure the tip clearance between the driven gear teeth and drive gear teeth.
Standard tip clearance:
0.07 to 0.15 mm (0.0028 to 0.0059 in.)
Maximum tip clearance:
0.15 mm (0.0059 in.)
If the tip clearance is greater than the maximum, replace the oil pump body sub-assembly.

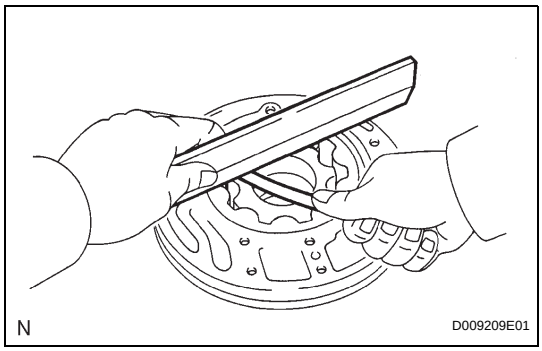

(c) Using a straightedge and feeler gauge, measure the side clearance of both gears.

Standard side clearance:
0.02 to 0.05 mm (0.0008 to 0.0020 in.)
Maximum side clearance:
0.05 mm (0.0020 in.)

Standard drive gear thickness

Mark	Thickness
1	10.690 to 10.699 mm (0.4209 to 0.4212 in.)
2	10.700 to 10.709 mm (0.4213 to 0.4216 in.)
3	10.710 to 10.720 mm (0.4217 to 0.4220 in.)
4	10.721 to 10.730 mm (0.4221 to 0.4224 in.)
5	10.731 to 10.740 mm (0.4225 to 0.4228 in.)

Standard driven gear thickness

Mark	Thickness
1	10.690 to 10.699 mm (0.4209 to 0.4212 in.)
2	10.700 to 10.709 mm (0.4213 to 0.4216 in.)
3	10.710 to 10.720 mm (0.4217 to 0.4220 in.)
4	10.721 to 10.730 mm (0.4221 to 0.4224 in.)
5	10.731 to 10.740 mm (0.4225 to 0.4228 in.)

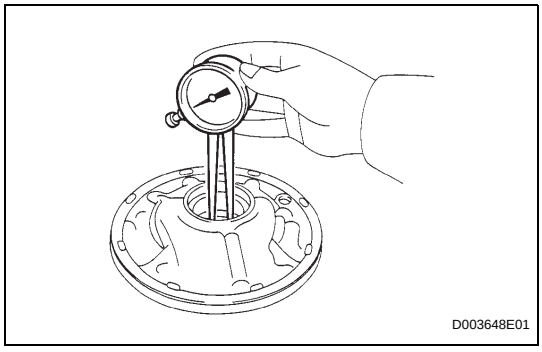

3. INSPECT FRONT OIL PUMP AND GEAR BODY SUB-ASSEMBLY

(a) Using a caliper gauge, measure the inside diameter of the oil pump body bush.

Standard inside diameter:
38.11 to 38.14 mm (1.5005 to 1.5015 in.)
Maximum inside diameter:
38.19 mm (1.5035 in.)

If the inside diameter is greater than the maximum, replace the oil pump body sub-assembly.

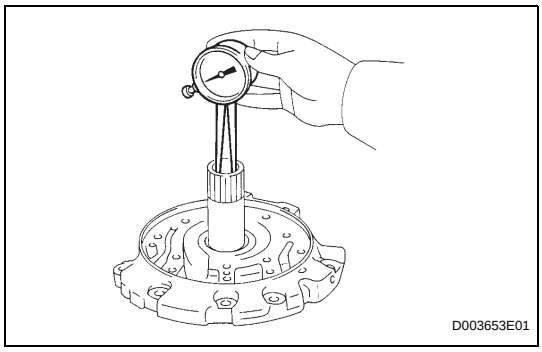

4. INSPECT STATOR SHAFT ASSEMBLY

(a) Using a caliper gauge, measure the inside diameter of the stator shaft bushes.

Standard inside diameter:
20.50 to 21.53 mm (0.8465 to 0.8475 in.)
Maximum inside diameter:
21.57 mm (0.8492 in.)

If the inside diameter is greater than the maximum, replace the stator shaft assembly.

SECOND BRAKE PISTON

COMPONENTS

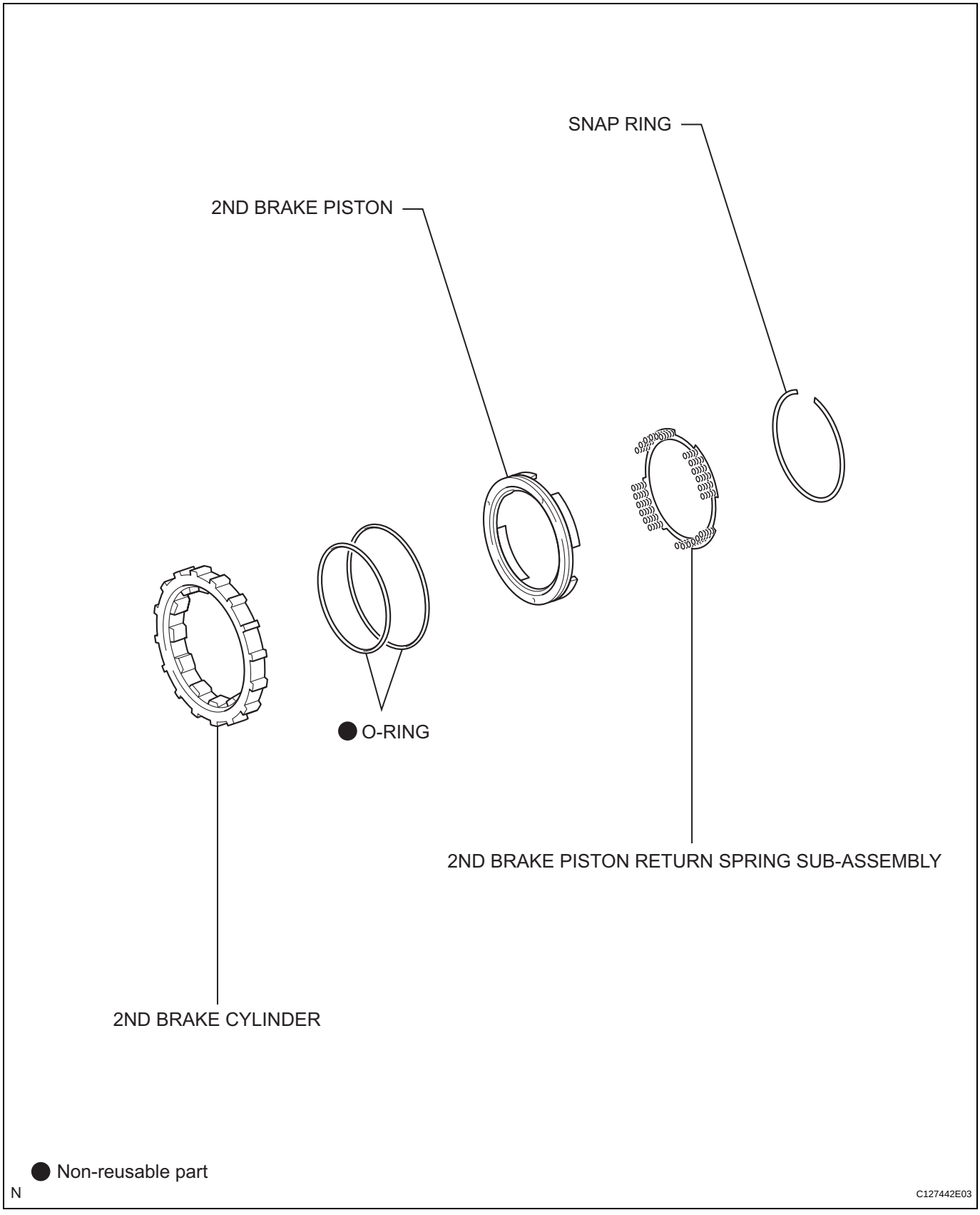

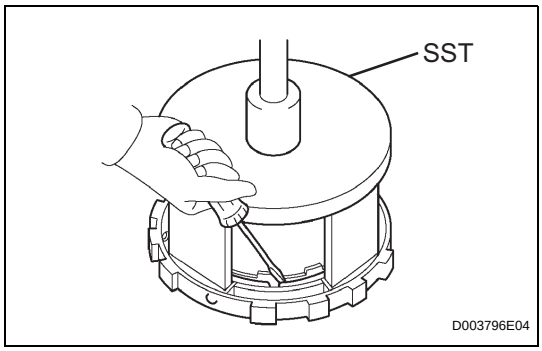

DISASSEMBLY

1. REMOVE 2ND BRAKE PISTON RETURN SPRING SUB-ASSEMBLY

(a) Place SST on the return spring and compress.
SST 09387-00060

(b) Using a screwdriver, pry out the snap ring.

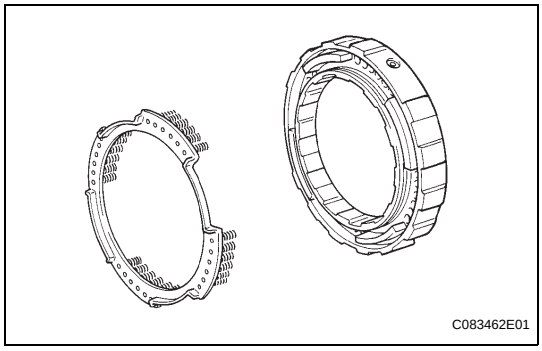

(c) Remove the piston return spring.

2. INSPECT 2ND BRAKE PISTON RETURN SPRING SUB-ASSEMBLY (See page AX-224)

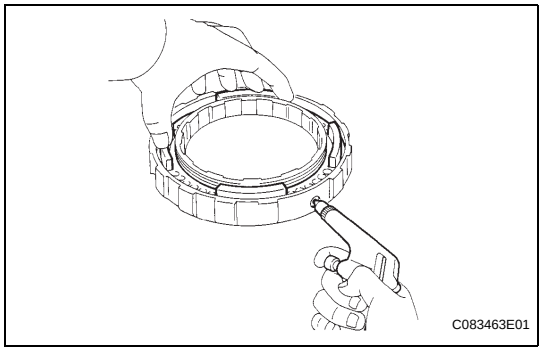

3. REMOVE 2ND BRAKE PISTON

(a) Hold the 2nd brake piston and apply compressed air (392 kPa, 4.0 kgf/cm^2, 57 psi) to the 2nd brake cylinder to remove the 2nd brake piston.

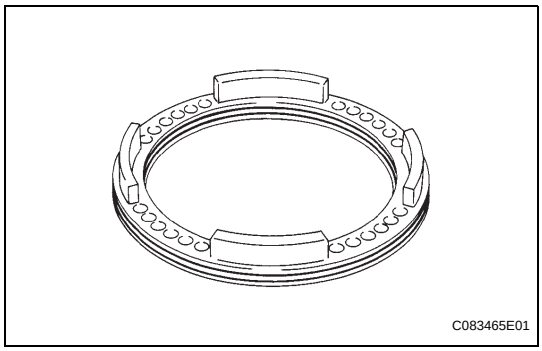

4. REMOVE 2ND BRAKE PISTON O-RING

(a) Remove the 2 O-rings from the 2nd brake piston.

INSPECTION

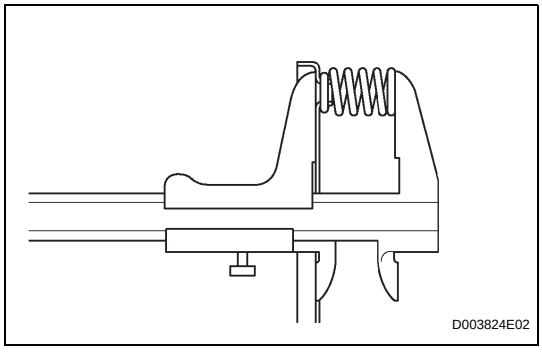

1. INSPECT 2ND BRAKE PISTON RETURN SPRING SUB-ASSEMBLY

(a) Using a vernier caliper, measure the free length of the spring together with the spring seat.
Standard free length:
16.61 mm (0.6539 in.)

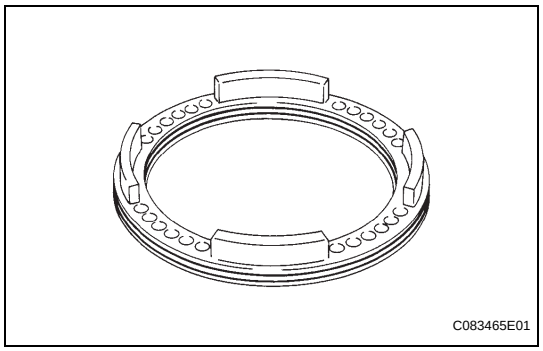

REASSEMBLY

1. INSTALL 2ND BRAKE PISTON O-RING

(a) Coat 2 new O-rings with ATF and install them into the 2nd brake piston.

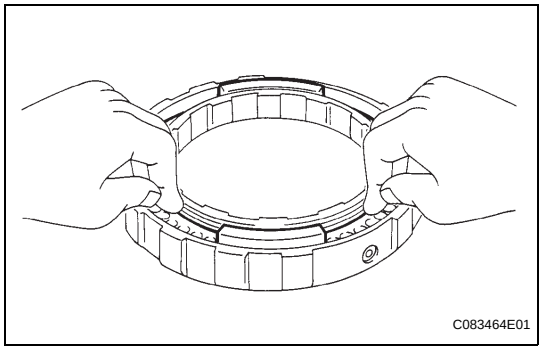

2. INSTALL 2ND BRAKE PISTON

(a) Press in the 2nd brake piston into the 2nd brake cylinder with your hands.

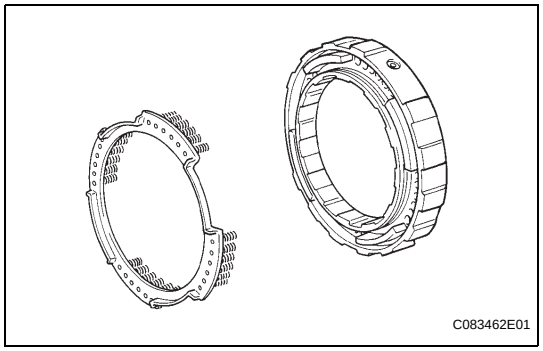

3. INSTALL 2ND BRAKE PISTON RETURN SPRING SUB-ASSEMBLY

(a) Install the piston return spring.

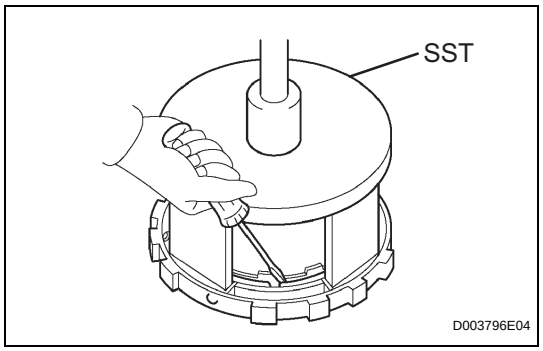

(b) Place SST on the piston return spring, and compress the piston return spring with a press.
SST 09387-00060

(c) Using a screwdriver, install the snap ring.
NOTICE:
Be sure the end gap of the snap ring is not aligned with the piston return spring claw.

AX

ON-VEHICLE INSPECTION

1. CHECK SHIFT LOCK OPERATION

(a) Move the shift lever to P.
(b) Turn the ignition switch OFF.
(c) Check that the shift lever cannot be moved to any position other than P.
(d) Turn the ignition switch ON, depress the brake pedal and check that the shift lever can be moved to other positions.

2. CHECK SHIFT LOCK RELEASE BUTTON OPERATION

(a) When operating the shift lever with the shift lock release button pressed, check that the lever can be moved to any position other than P. If the operation cannot be performed as specified, check the shift lever assembly.

3. REMOVE KEY INTERLOCK OPERATION

(a) Turn the ignition switch ON.
(b) Depress the brake pedal and move the shift lever to any position other than P.
(c) Check that the ignition switch cannot be turned OFF.
(d) Move the shift lever to P, turn the ignition switch OFF and check that the key can be removed. If the results are not as specified, inspect the shift lock control unit.

4. CHECK SHIFT LOCK CONTROL UNIT ASSEMBLY

(a) Measure the voltage of the connector.
HINT:
Do not disconnect the shift lock control ECU connector.
Standard voltage

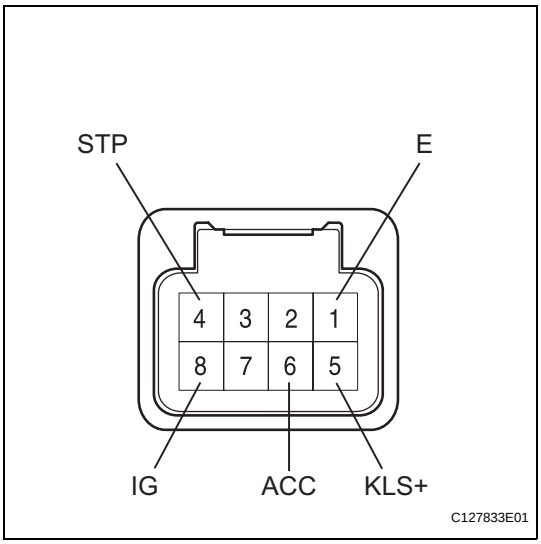

Tester Connection	Condition	Specified Condition
6 (ACC) - 1 (E)	Ignition switch ON	10 to 14 V
6 (ACC) - 1 (E)	Ignition switch ACC	10 to 14 V
6 (ACC) - 1 (E)	Ignition switch OFF	Below 1 V
4 (STP) - 1 (E)	Depress brake pedal	10 to 14 V
4 (STP) - 1 (E)	Release brake pedal	Below 1 V
5 (KLS+) - 1 (E)	Ignition switch ACC and shift lever on P	Below 1 V
5 (KLS+) - 1 (E)	Ignition switch ACC and shift lever not on P	7.5 to 11 V
5 (KLS+) - 1 (E)	Ignition switch ACC and shift lever not on P (after approx. 1 second)	6 to 9 V
8 (IG) - 1 (E)	Ignition switch ON	10 to 14 V
8 (IG) - 1 (E)	Ignition switch OFF	Below 1 V

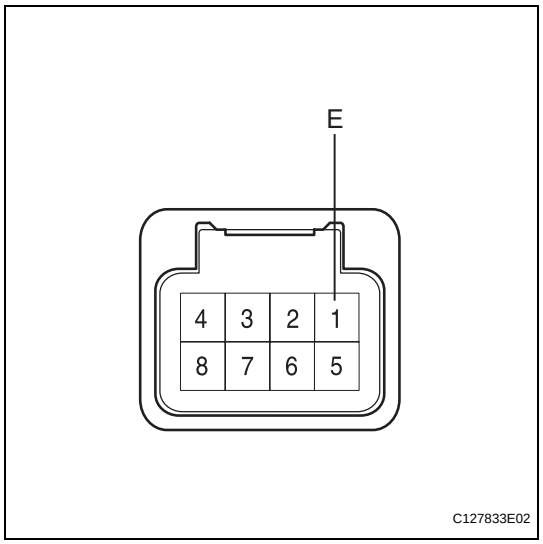

(b) Measure the resistance of the connector.
HINT:
Do not disconnect the shift lock control ECU connector.
Standard resistance

Tester Connection	Measuring Condition	Specified Condition
1 (E) - Body ground	Always	Below 1 Ω

If the result is not as specified, replace the shift lock control ECU.

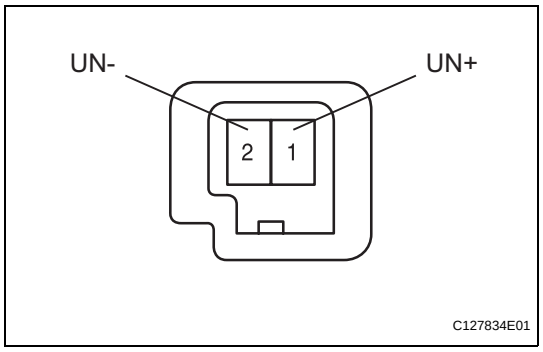

INSPECTION

1. INSPECT KEY INTERLOCK SOLENOID

(a) Disconnect the solenoid connector.

(b) Connect the battery's positive (+) lead to terminal 1 (UN+) and the battery's negative (-) lead to terminal 2 (UN-).
Check that the operating noise of the solenoid can be heard.
If the result is not as specified, replace the solenoid.

SHIFT LOCK SYSTEM

PARTS LOCATION

AX

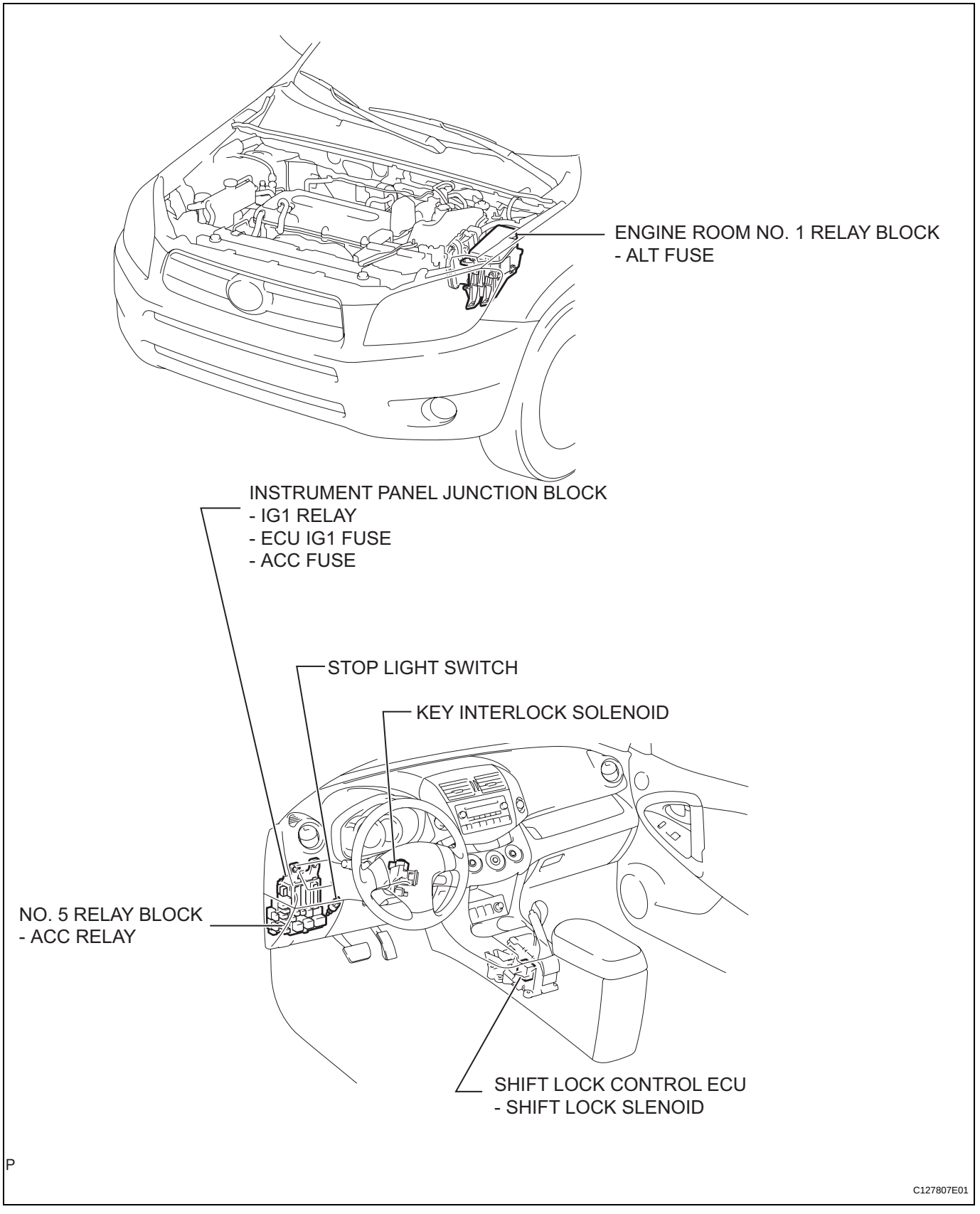

SYSTEM DIAGRAM

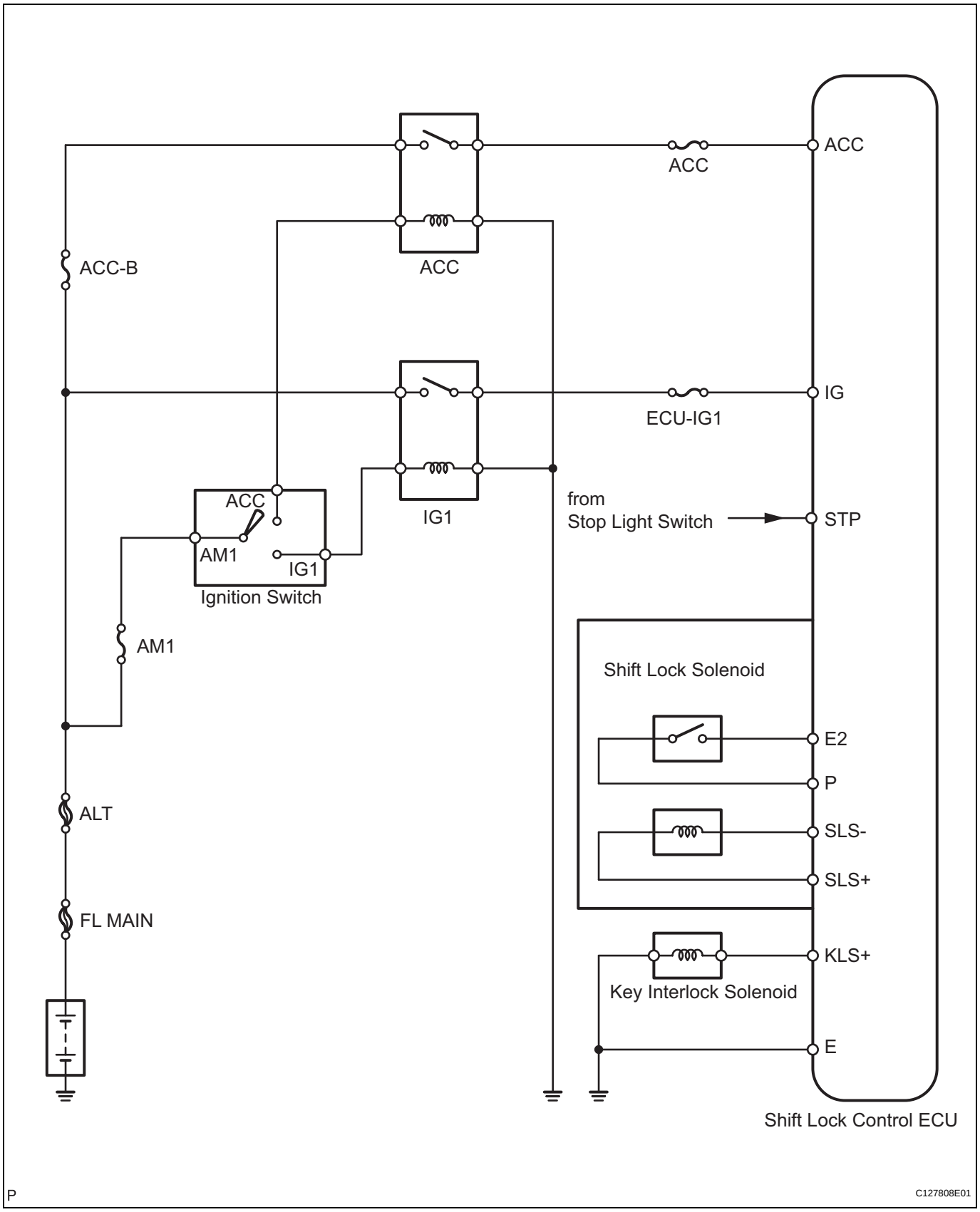

AX

SPEED SENSOR

COMPONENTS

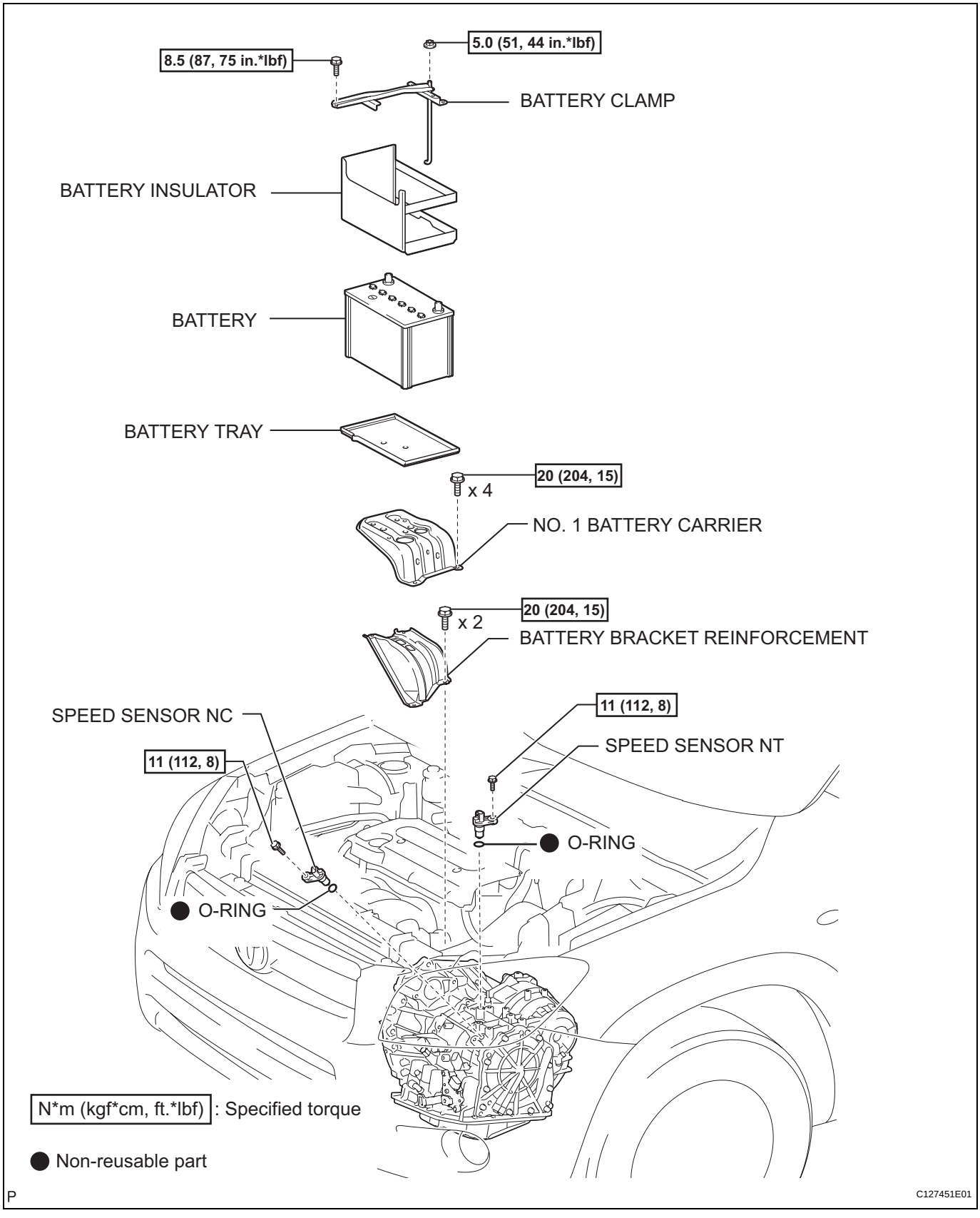

AX

REMOVAL

1. DISCONNECT CABLE FROM NEGATIVE BATTERY TERMINAL

CAUTION:

Wait at least 90 seconds after disconnecting the cable from the negative (-) battery terminal to prevent airbag and seat belt pretensioner activation.

2. REMOVE BATTERY

(a) Loosen the nut and remove the bolt and battery clamp.
(b) Remove the battery.
(c) Remove the battery tray.
(d) Remove the 4 bolts and battery carrier.
(e) Remove the 2 bolts and battery bracket reinforcement.

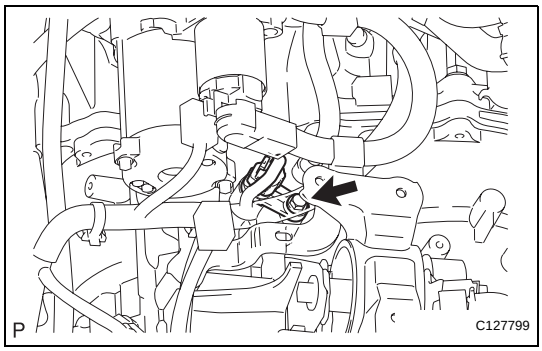

3. REMOVE SPEED SENSOR NT

(a) Disconnect the sensor connector.
(b) Remove the bolt and sensor.
(c) Remove the O-ring from the sensor.

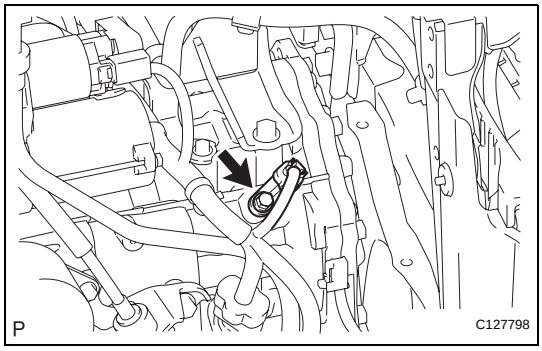

4. REMOVE SPEED SENSOR NC

(a) Disconnect the sensor connector.
(b) Remove the bolt and sensor.
(c) Remove the O-ring from the sensor.

INSPECTION

1. INSPECT SPEED SENSOR NT

Measure the resistance of the sensor.

Standard resistance

Tester Connection	Condition	Specified Condition
1 - 2	20°C (68°F)	560 to 680 Ω

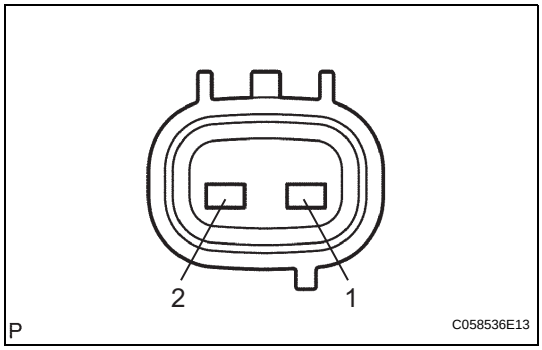

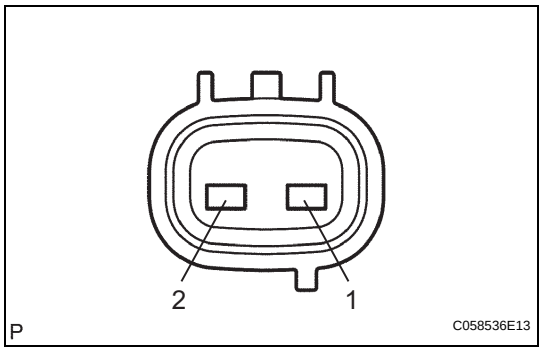

2. INSPECT SPEED SENSOR NC

Measure the resistance of the sensor.

Standard resistance

Tester Connection	Condition	Specified Condition
1 - 2	20°C (68°F)	560 to 680 Ω

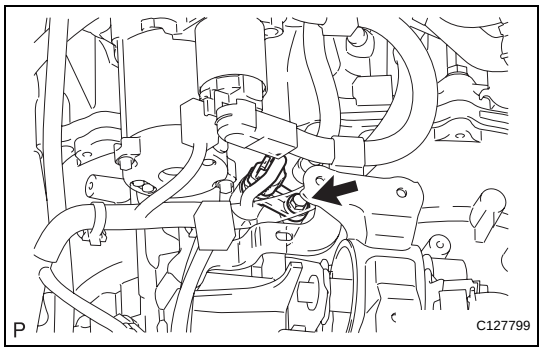

INSTALLATION

1. INSTALL SPEED SENSOR NC

(a) Coat a new O-ring with ATF.
(b) Install the O-ring to the sensor.
(c) Install the sensor with the bolt.
Torque: 11 N*m (112 kgf*cm, 8 ft.*lbf)
(d) Connect the sensor connector.

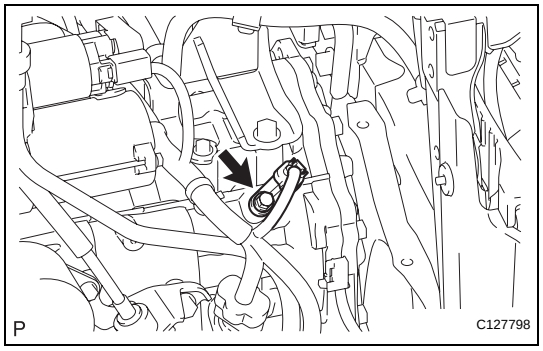

2. INSTALL SPEED SENSOR NT

(a) Coat a new O-ring with ATF.
(b) Install the O-ring to the sensor.
(c) Install the sensor with the bolt.
Torque: 11 N*m (112 kgf*cm, 8 ft.*lbf)
(d) Connect the sensor connector.

3. INSTALL BATTERY

(a) Install the battery bracket reinforcement with the 2 bolts.
Torque: 20 N*m (204 kgf*cm, 15 ft.*lbf)
(b) Install the battery carrier with the 4 bolts.
Torque: 20 N*m (204 kgf*cm, 15 ft.*lbf)
(c) Install the battery tray.
(d) Install the battery with the battery clamp.
Torque: 8.5 N*m (87 kgf*cm, 75 in.*lbf) for bolt
5.0 N*m (51 kgf*cm, 44 in.*lbf) for nut

4. CONNECT CABLE TO NEGATIVE BATTERY TERMINAL

TORQUE CONVERTER AND DRIVE PLATE

INSPECTION

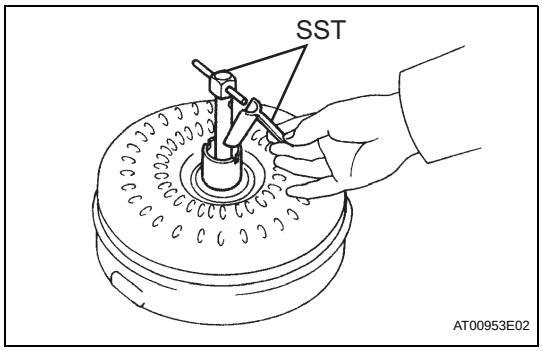

1. INSPECT TORQUE CONVERTER CLUTCH ASSEMBLY

(a) Inspect the one-way clutch.

(1) Install SST to the inner race of the one-way clutch.
SST 09350-32014 (09351-32010)

(2) Set SST so that it fits in the notch of the converter hub and in the outer race of the one-way clutch.
SST 09350-32014 (09351-32020)

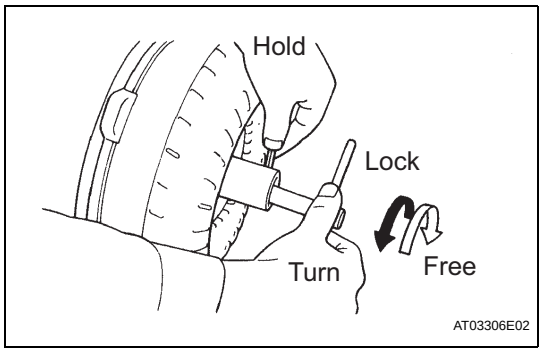

(3) With the torque converter standing on its side, check that the clutch locks when SST is turned counterclockwise and rotates freely and smoothly when turned clockwise. If the results are not as specified, clean the converter and recheck the one-way clutch. If the results still are not as specified, replace the converter.

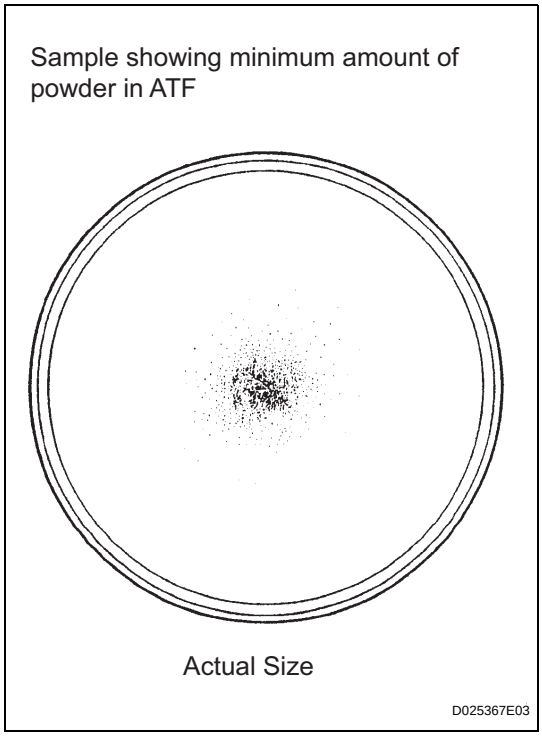

(b) Determine the condition of the torque converter clutch.

(1) Check that the following conditions are met:
- During the stall test or when the shift lever is on N, metallic sounds are not emitted from the torque converter clutch.
- The one-way clutch turns in one direction and locks in the other direction.
- The amount of powder in the ATF is not greater than the sample shown in the illustration.

If the results are not as specified, replace the torque converter clutch assembly.

HINT:
The sample illustration shows approximately 0.25 liters (0.26 US qts, 0.22 Imp. qts) of the ATF taken from a removed torque converter clutch.

(c) Replace the ATF in the torque converter clutch.

(1) If the ATF is discolored and/or has a foul odor, stir the ATF in the torque converter clutch thoroughly and drain the ATF with the torque converter facing upward.

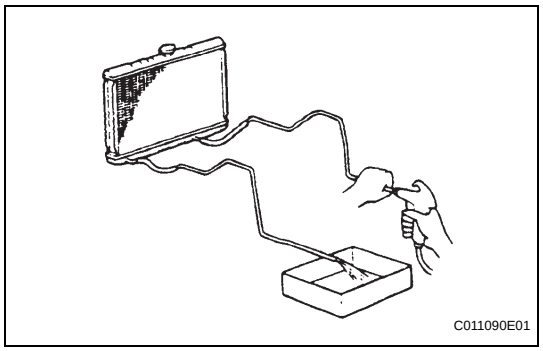

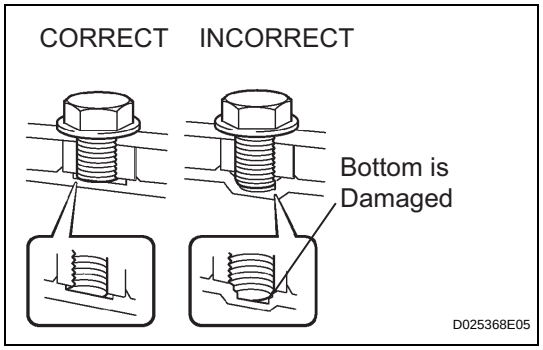

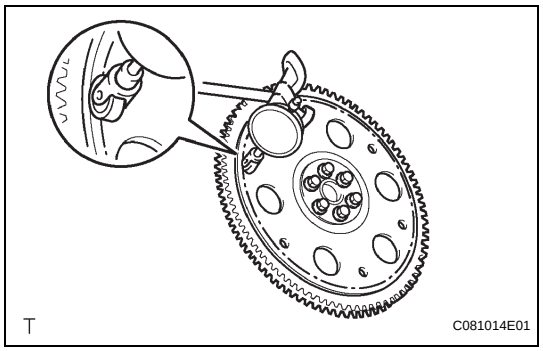

(d) Clean and check the oil cooler and oil pipe line.
  (1) If the torque converter clutch is inspected or the ATF is replaced, clean the oil cooler and oil pipe line.
    • Apply compressed air of 196 kPa (2 kgf/cm^2, 28 psi) into the inlet hose.
    • If a large amount of powder is found in the ATF, add new ATF using a bucket pump and clean the oil cooler and oil pipe line again.
  (2) If the ATF is cloudy, inspect the oil cooler (radiator).

(e) Prevent deformation of the torque converter clutch and damage to the oil pump gear.
  (1) When any marks due to interference are found on the end of the bolt for the torque converter clutch and on the bottom of the bolt hole, replace the bolt and torque converter clutch.
  (2) All of the bolts should be the same length.
  (3) Make sure no spring washers are missing.

2. INSPECT DRIVE PLATE AND RING GEAR SUB-ASSEMBLY

(a) Set up a dial indicator and measure the drive plate runout.
Maximum runout:
0.30 mm (0.0118 in.)
If the runout is greater than the maximum or if the ring gear is damaged, replace the drive plate. If installing a new drive plate, note the orientation of the spacers and tighten the bolts.
Torque: 98 N*m (999 kgf*cm, 72 ft.*lbf)

(b) Check the ring gear for any damage.
If the ring gear is damaged, replace the drive plate.

AX

TRANSMISSION CONTROL CABLE ASSEMBLY

REPLACEMENT

1. **REMOVE REAR CONSOLE BOX SUB-ASSEMBLY**
   (a) Remove the console box (see page IP-20).

2. **DISCONNECT CABLE FROM NEGATIVE BATTERY TERMINAL**
   CAUTION:
   Wait at least 90 seconds after disconnecting the cable from the negative (-) battery terminal to prevent airbag and seat belt pretensioner activation.

3. **REMOVE BATTERY**
   (a) Loosen the nut and remove the bolt and battery clamp.
   (b) Remove the battery.
   (c) Remove the battery tray.
   (d) Remove the 4 bolts and battery carrier.
   (e) Remove the 2 bolts and battery bracket reinforcement.

4. **REMOVE AIR CLEANER ASSEMBLY**
   (a) Disconnect the mass air flow meter connector.
   (b) Remove the 2 clamps of the engine wire.

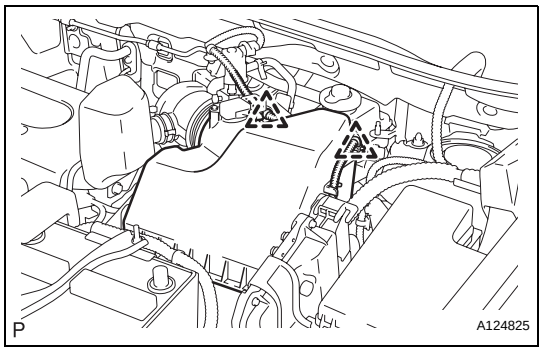

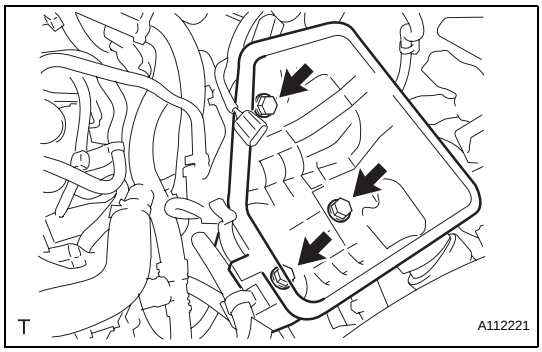

   (c) Remove the 4 bolts from the air cleaner case.
   (d) Disconnect the air cleaner case from the No. 1 air cleaner inlet.

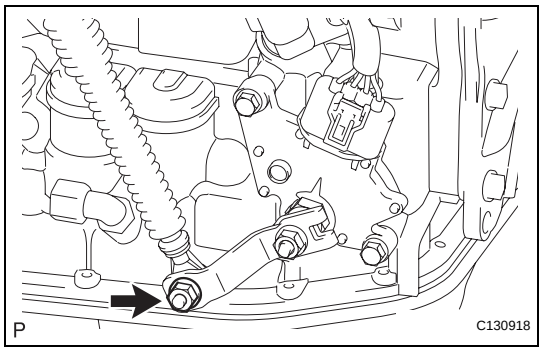

5. REMOVE TRANSAXLE CONTROL CABLE ASSEMBLY

(a) Remove the nut and disconnect the control cable from the control shaft lever.

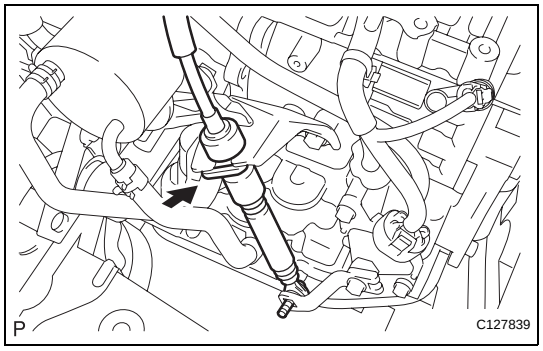

(b) Remove the clip and disconnect the control cable from the control cable bracket.

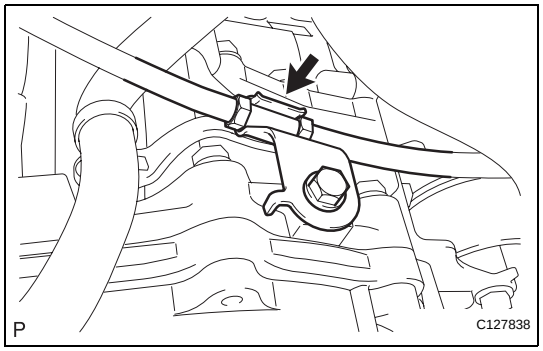

(c) Disconnect the control cable from the control cable support.

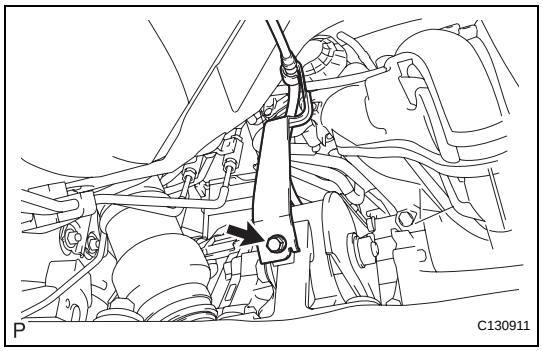

(d) Remove the bolt and disconnect the clamp of the control cable.

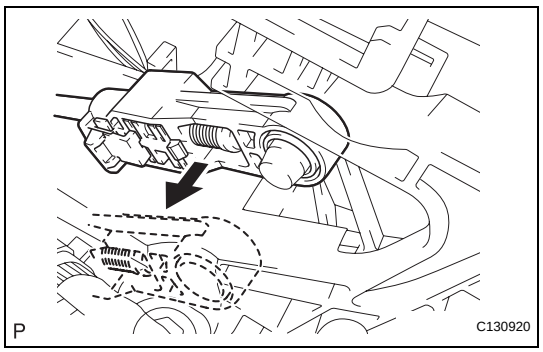

(e) Disconnect the control cable from the shift lever.

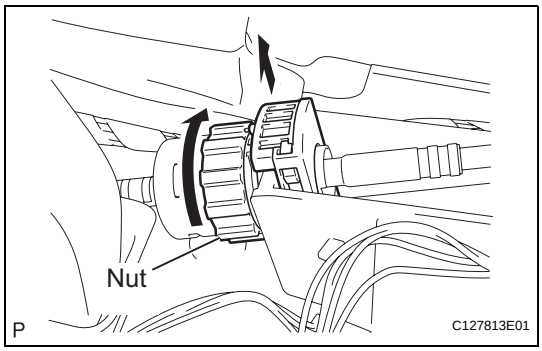

(f) Turn the nut and disconnect the control cable from the shift lever retainer.

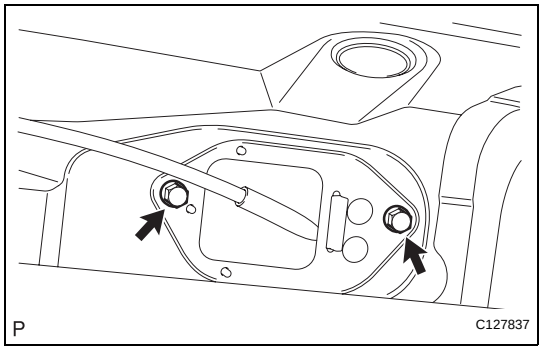

(g) Remove the 2 bolts and control cable.

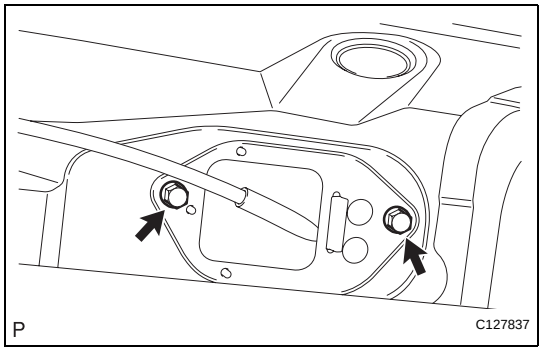

6. INSTALL TRANSAXLE CONTROL CABLE ASSEMBLY

(a) Install the control cable with the 2 bolts.
Torque: 5.0 N*m (51 kgf*cm, 44 in.*lbf)

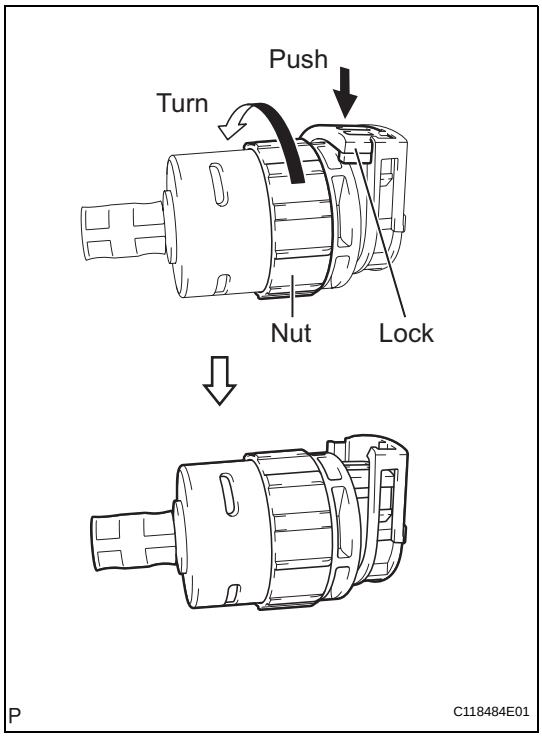

(b) Turn the nut of the control cable and push in the lock.

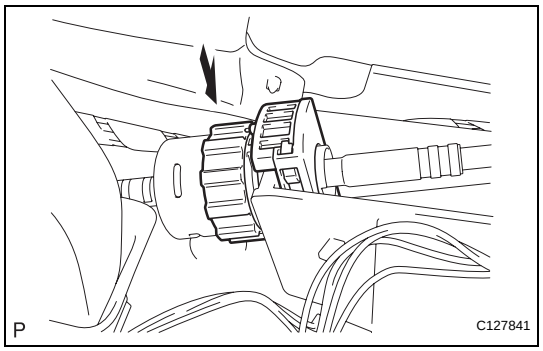

(c) Install the control cable onto the shift lever retainer.

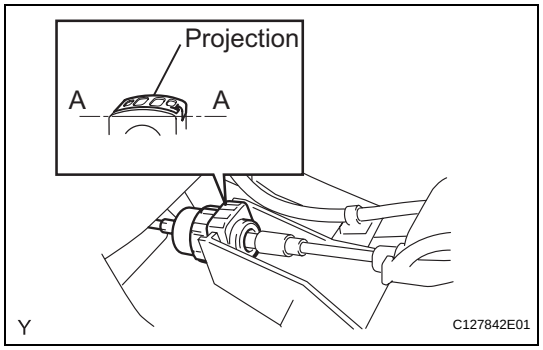

NOTICE:
- **Install the cable with the protruding portion of the cable outer facing upward.**
- **After installing, check that the lock of the cable outer is protruding beyond portion A-A, as shown in the illustration.**

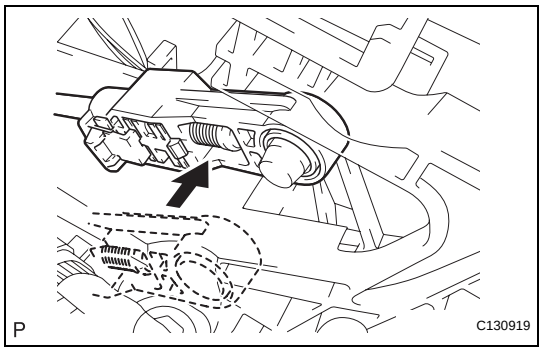

(d) Connect the control cable to the shift lever.
NOTICE:
Connect the control cable so that the adjusting mechanism lock of the control cable is installed on the driver side of the vehicle.

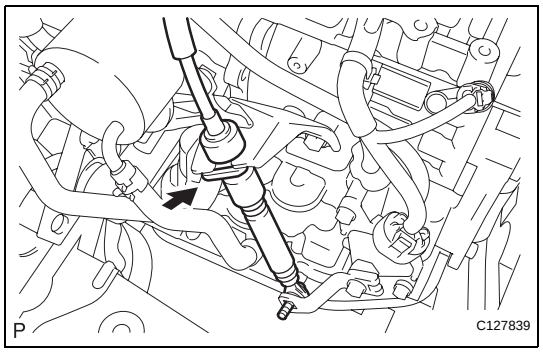

(e) Fix the control cable onto the control cable bracket with the clip.

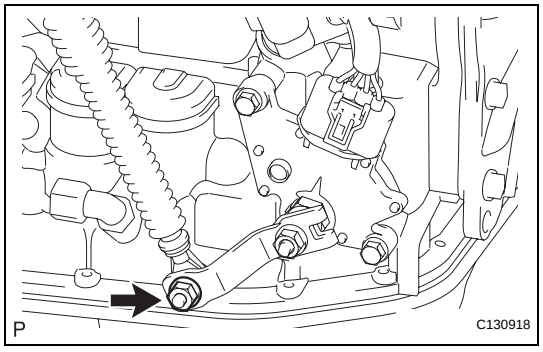

(f) Connect the control cable onto the control shaft lever with the nut.
Torque: 12 N*m (122 kgf*cm, 9 ft.*lbf)

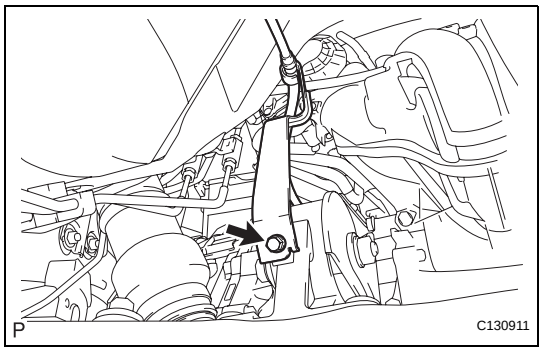

(g) Connect the clamp of the control cable with the bolt.
Torque: 12 N*m (122 kgf*cm, 9 ft.*lbf)

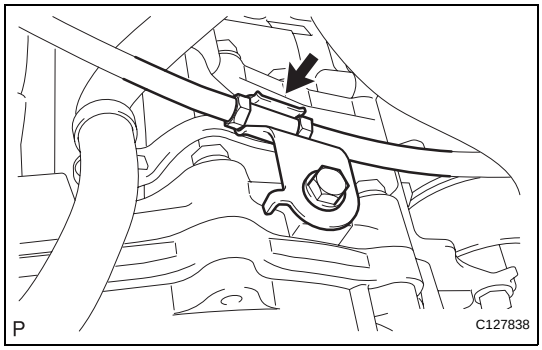

(h) Connect the control cable to the cable support.

7. INSTALL AIR CLEANER ASSEMBLY

(a) Connect the air cleaner case to the No. 1 air cleaner inlet.

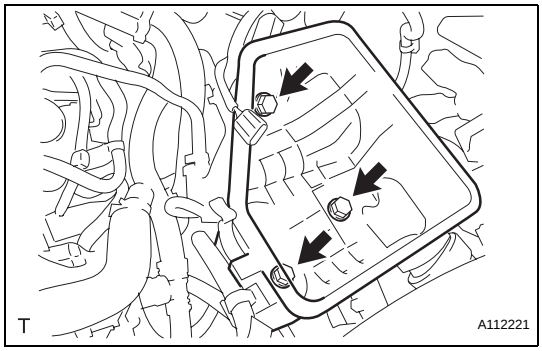

(b) Install the air cleaner case with the 4 bolts.
Torque: 5.0 N*m (51 kgf*cm, 44 in.*lbf)

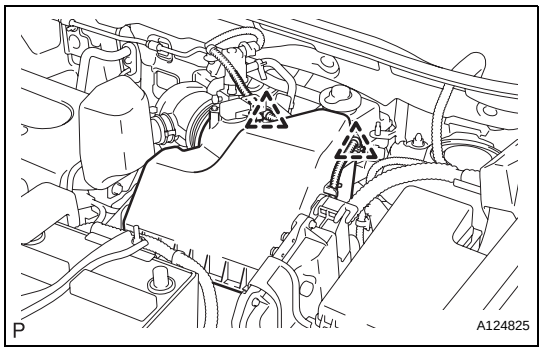

(c) Connect the 2 clamps of the engine wire.
(d) Connect the mass air flow meter connector.

8. INSTALL BATTERY

(a) Install the battery bracket reinforcement with the 2 bolts.
Torque: 20 N*m (204 kgf*cm, 15 ft.*lbf)
(b) Install the battery carrier with the 4 bolts.
Torque: 20 N*m (204 kgf*cm, 15 ft.*lbf)
(c) Install the battery tray.
(d) Connect the 2 clamps of the engine wire.
(e) Install the battery with the battery clamp.
Torque: 8.5 N*m (87 kgf*cm, 75 in.*lbf) for bolt
5.0 N*m (51 kgf*cm, 44 in.*lbf) for nut

9. CONNECT CABLE TO NEGATIVE BATTERY TERMINAL

10. INSPECT SHIFT LEVER POSITION

(a) When shifting the lever from P to the R position with the ignition switch on (IG) and the brake pedal depressed, make sure that the shift lever moves smoothly and moves correctly into position.

(b) Start the engine and make sure that the vehicle moves forward when shifting the lever from N to the D position and moves rearward when shifting the lever to the R position.
If the operation cannot be performed as specified, inspect the park/neutral position switch and check the shift lever installation condition.

11. ADJUST SHIFT LEVER POSITION (See page AX-138)

12. INSTALL REAR CONSOLE BOX SUB-ASSEMBLY

(a) Install the rear console box (see page IP-26).

TRANSMISSION OIL COOLER

COMPONENTS

AX

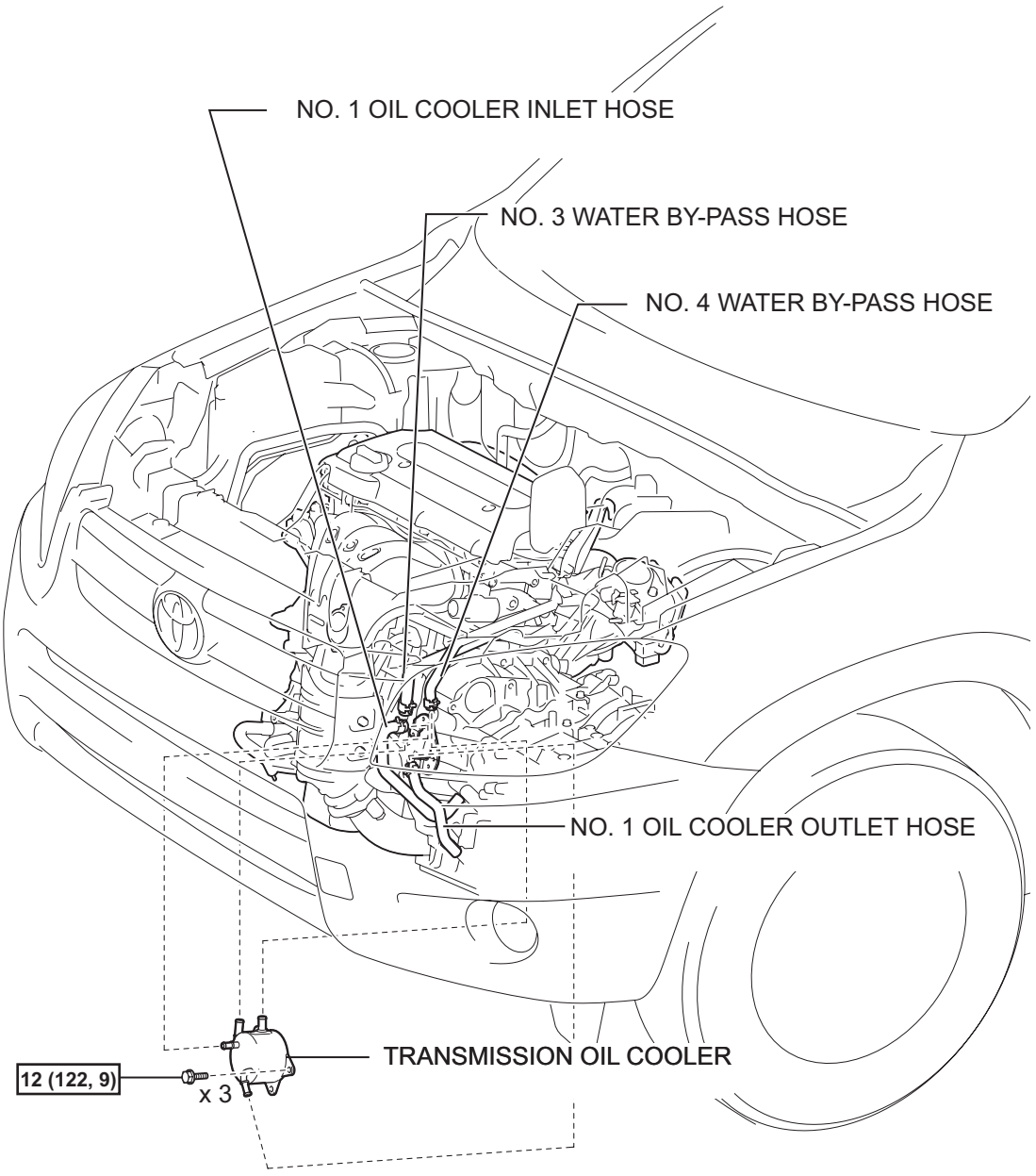

N*m (kgf*cm, ft.*lbf) : Specified torque

P

C130909E01

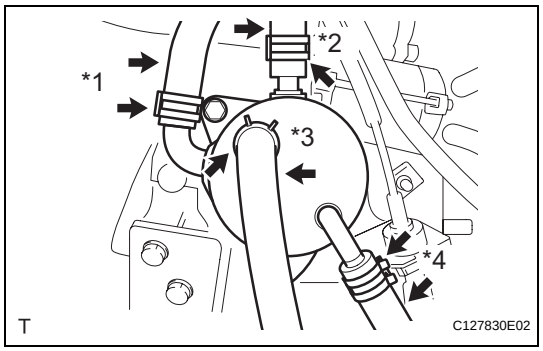

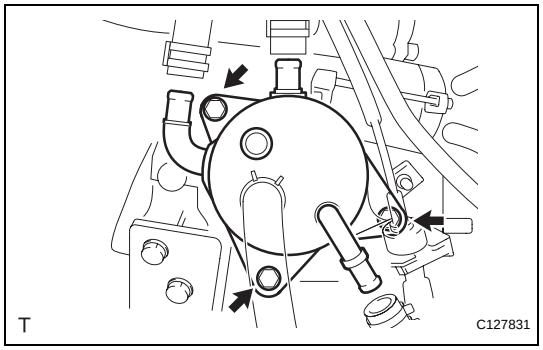

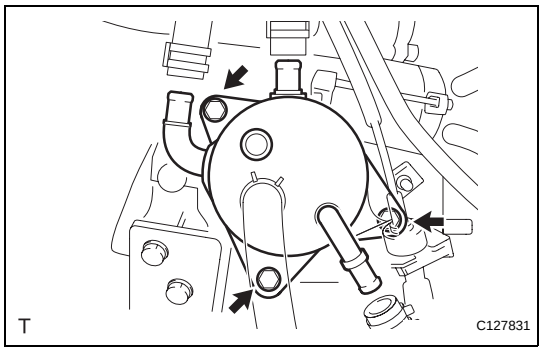

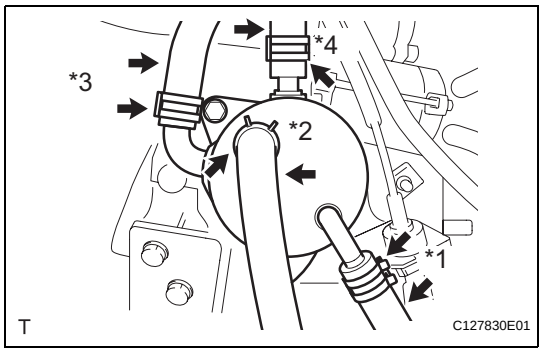

REMOVAL

1. REMOVE TRANSMISSION OIL COOLER

(a) *1: Disconnect the No. 3 water by-pass hose from the transmission oil cooler.

(b) *2: Disconnect the No. 4 water by-pass hose from the transmission oil cooler.

(c) *3: Disconnect the No. 1 oil cooler inlet hose from the transmission oil cooler.

(d) *4: Disconnect the No. 1 oil cooler outlet hose from the transmission oil cooler.

(e) Remove the 3 bolts and oil cooler from the bracket.

INSTALLATION

1. INSTALL TRANSMISSION OIL COOLER

(a) Install the oil cooler to the bracket with the 3 bolts.
Torque: 12 N*m (122 kgf*cm, 9 ft.*lbf)

(b) *1: Connect the No. 1 oil cooler outlet hose to the transmission.

(c) *2: Connect the No. 1 oil cooler inlet hose to the transmission.

(d) *3: Connect the No. 3 water by-pass hose to the transmission.

(e) *4: Connect the No. 4 water by-pass hose to the transmission.

2. ADD AUTOMATIC TRANSAXLE FLUID

3. INSPECT AUTOMATIC TRANSAXLE FLUID

(a) Inspect the automatic transaxle fluid (see page AX-102).

4. ADD COOLANT

(a) Add the coolant (see page CO-6).

REMOVAL

1. DISCONNECT CABLE FROM NEGATIVE BATTERY TERMINAL

CAUTION:

Wait at least 90 seconds after disconnecting the cable from the negative (-) battery terminal to prevent airbag and seat belt pretensioner activation.

2. REMOVE NO. 1 ENGINE UNDER COVER

3. DRAIN AUTOMATIC TRANSAXLE FLUID

(a) Remove the drain plug and gasket, and drain ATF.

(b) Install a new gasket and the drain plug.

Torque: 47 N*m (479 kgf*cm, 35 ft.*lbf)

4. REMOVE AUTOMATIC TRANSAXLE OIL PAN SUB-ASSEMBLY

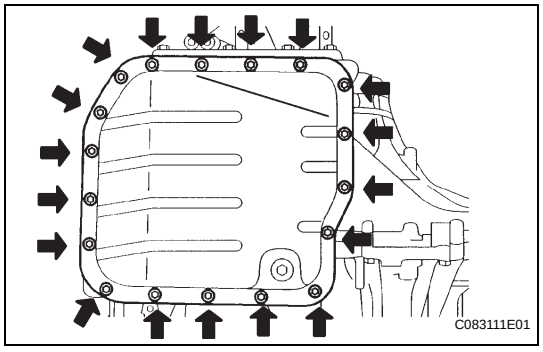

(a) Remove the 18 bolts, oil pan and gasket.

NOTICE:

Some fluid will remain in the oil pan. Carefully remove the oil pan.

(b) Remove the 3 magnets from the oil pan.

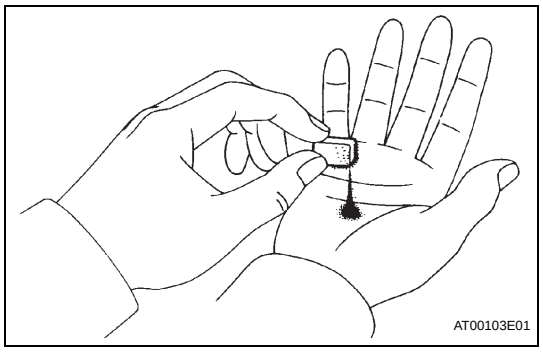

(c) Examine particles in the pan.

(1) Use the removed magnets to collect any steel chips. Look carefully at the chips and particles in the pan and on the magnet to anticipate what type of wear you will find in the transaxle.
Steel (magnetic): bearing, gear and plate wear
Brass (non-magnetic): bush wear

5. REMOVE TRANSMISSION WIRE

(a) Disconnect the 5 shift solenoid valve connectors.

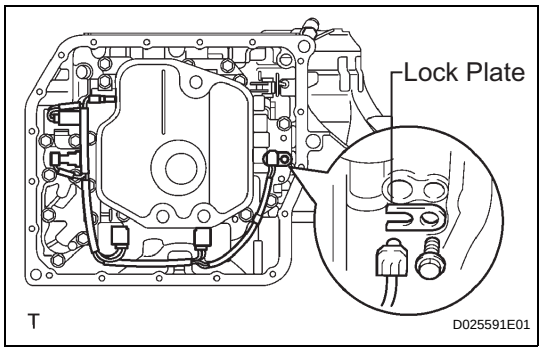

(b) Remove the bolt, lock plate and ATF temperature sensor.

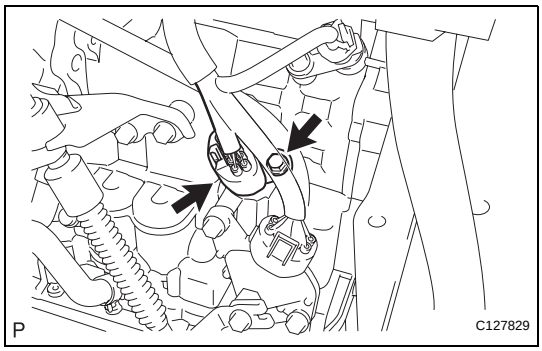

(c) Disconnect the transmission wire connector.
(d) Remove the bolt and transmission wire.

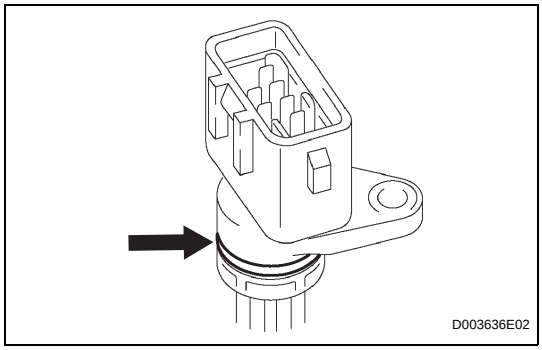

(e) Remove the O-ring from the transmission wire.

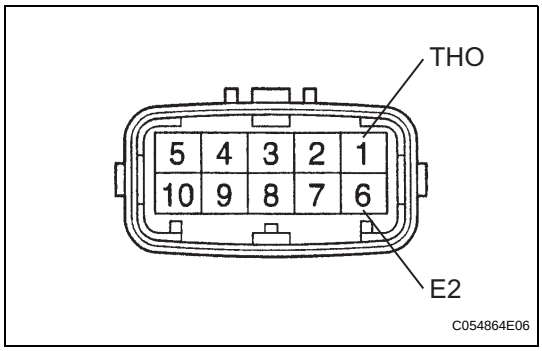

INSPECTION

1. INSPECT TRANSMISSION WIRE

(a) Disconnect the B27 wire connector.
(b) Measure the resistance of the transmission wire.
Standard resistance

Tester Connection	Specified Condition
1 (THO) - 6 (E2)	90 Ω to 156 kΩ
1 (THO) - Body ground	1 MΩ or higher
6 (E2) - Body ground	1 MΩ or higher

HINT:
If the resistance is not as specified for either of the ATF temperatures shown in the table below, the driveability of the vehicle may decrease.
Standard resistance

ATF Temperature	Specified Condition
10°C (68°F)	6.4 kΩ
110°C (230°F)	0.2 kΩ

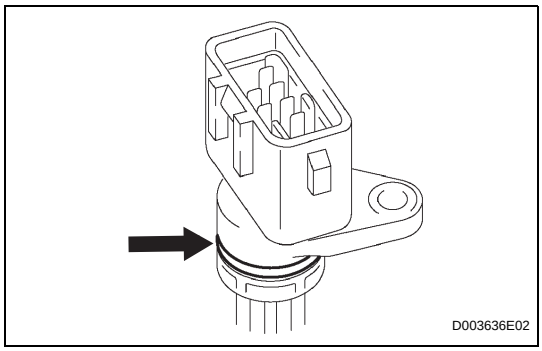

INSTALLATION

1. INSTALL TRANSMISSION WIRE

(a) Coat a new O-ring of the transmission wire connector with ATF.

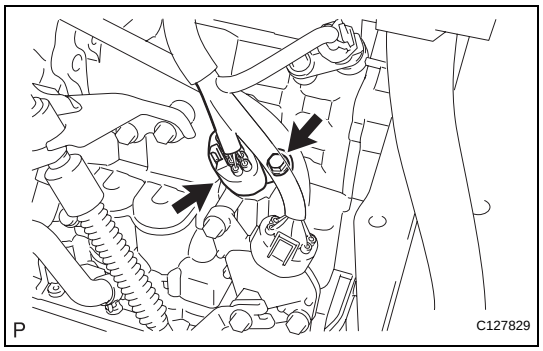

(b) Install the transmission wire.
(c) Install the bolt.
(d) Connect the connector.

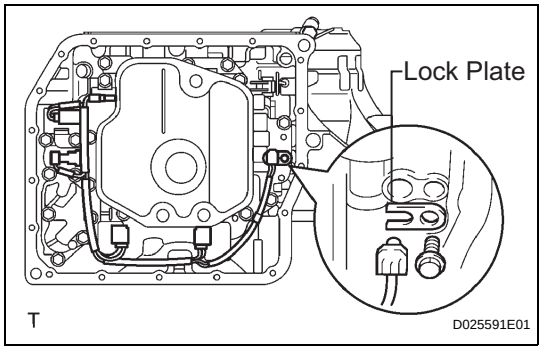

(e) Coat the O-ring of the ATF temperature sensor with ATF.
(f) Install the ATF temperature sensor with the lock plate and bolt.
Torque: 6.6 N*m (67 kgf*cm, 58 in.*lbf)
(g) Connect the 5 shift solenoid valve connectors.

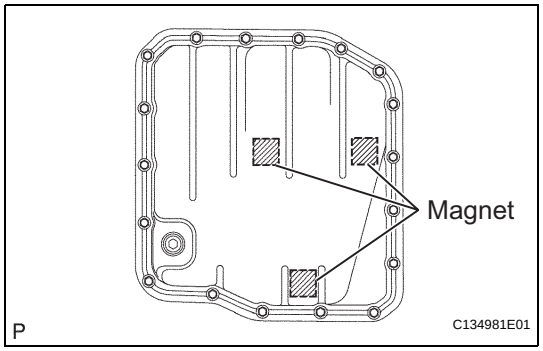

2. INSTALL AUTOMATIC TRANSAXLE OIL PAN SUB-ASSEMBLY
(a) Install the 3 magnets in the oil pan.

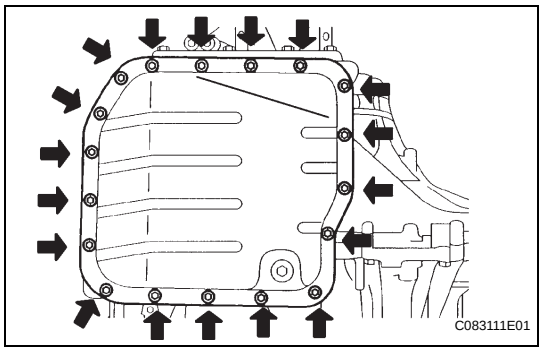

(b) Install a new gasket and the oil pan with the 18 bolts.
Torque: 7.6 N*m (77 kgf*cm, 67 in.*lbf)

3. INSTALL NO. 1 ENGINE UNDER COVER

4. CONNECT CABLE TO NEGATIVE BATTERY TERMINAL

5. ADD AUTOMATIC TRANSAXLE FLUID
Fluid type:
Toyota Genuine ATF WS

6. INSPECT TRANSAXLE FLUID LEVEL
(a) Inspect the fluid level (see page AX-102).

7. PERFORM RESET MEMORY
(a) Perform the RESET MEMORY procedures (A/T initialization) (see page AX-18).

TRANSMISSION WIRE

COMPONENTS

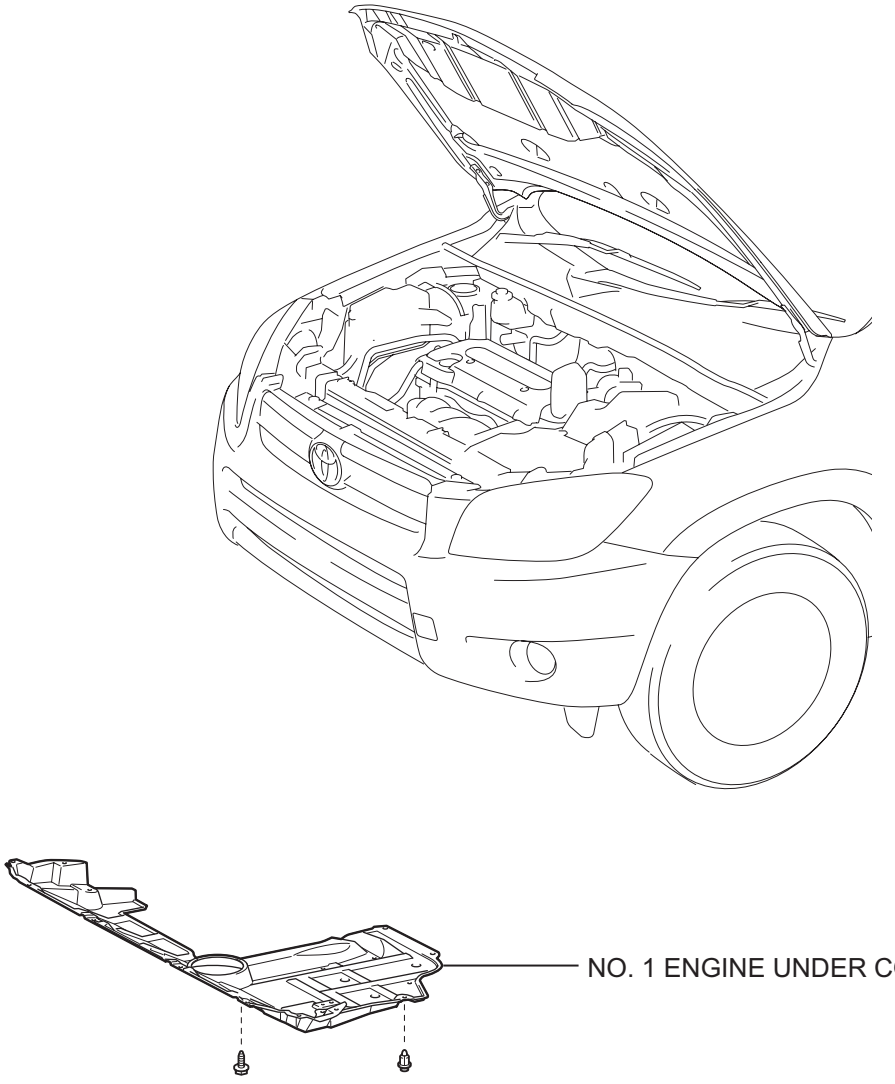

P

C127832E01

AX

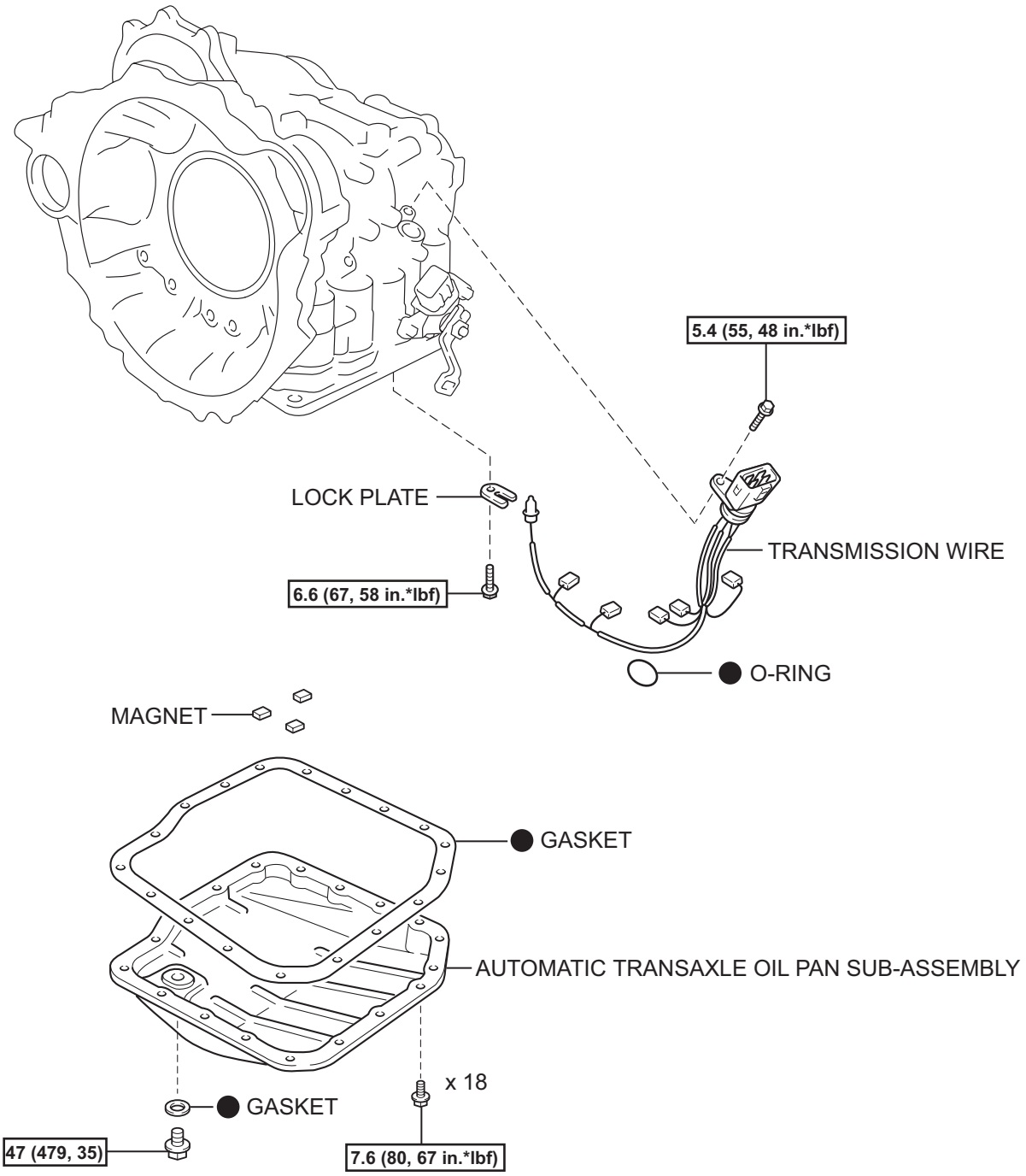

N*m (kgf*cm, ft.*lbf) : Specified torque

● Non-reusable part

N

C129399E01

AX

INSPECTION

1. INSPECT UNDERDRIVE PACK CLEARANCE

(a) Install the underdrive clutch to the transaxle case.
NOTICE:
Be careful not to damage the oil seal rings.

(b) Install a dial indicator as shown in the illustration.

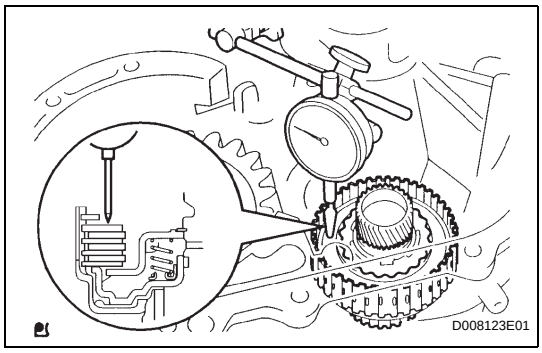

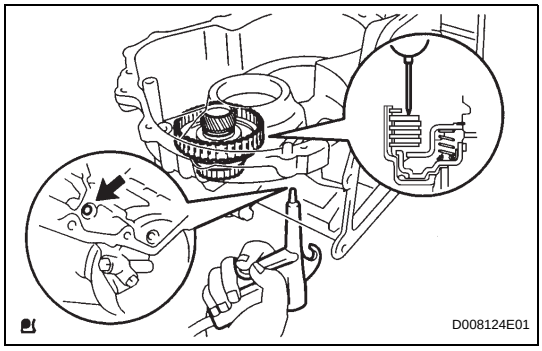

(c) Measure the underdrive clutch pack clearance while applying and releasing compressed air (392 kPa, 4.0 kgf/cm^2, 57 psi).
Standard pack clearance:
1.51 to 1.90 mm (0.0594 to 0.0748 in.)
If the pack clearance is not as specified, inspect the discs, plates and flange.

2. INSPECT NO. 1 UNDERDRIVE CLUTCH DISC

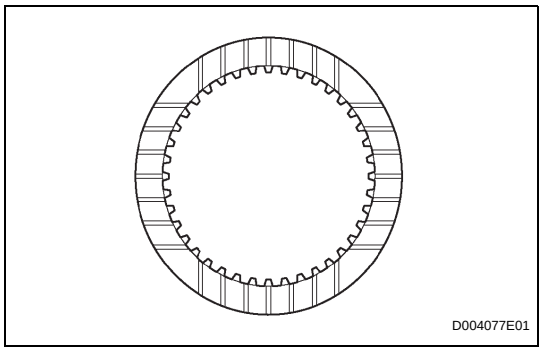

(a) Check to see if the sliding surface of the disc, plate and flange are worn or burnt. If necessary, replace them.
HINT:
- If the lining of the disc is peeling off or discolored, or even if a part of the printed mark is defaced, replace all discs.
- Before assembling new discs, soak them in ATF for at least 15 minutes.

3. INSPECT UNDERDRIVE CLUTCH RETURN SPRING SUB-ASSEMBLY

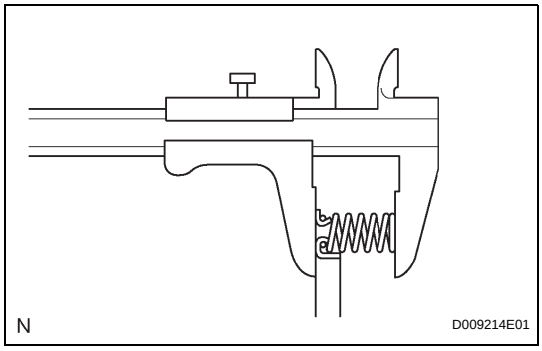

(a) Using a vernier caliper, measure the free length of the spring together with the spring seat.
Standard free length:
17.14 mm (0.6748 in.)

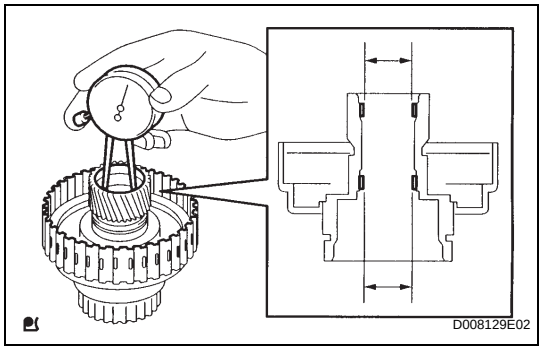

4. INSPECT UNDERDRIVE CLUTCH DRUM SUB-ASSEMBLY

(a) Using a caliper gauge, measure the inside diameter of the underdrive clutch drum bush.

Standard drum bush:
32.56 to 32.58 mm (1.2818 to 1.2826 in.)
Maximum drum bush:
32.63 mm (1.2846 in.)

If the inside diameter is greater than the maximum, replace the underdrive clutch drum sub-assembly.

AX

REASSEMBLY

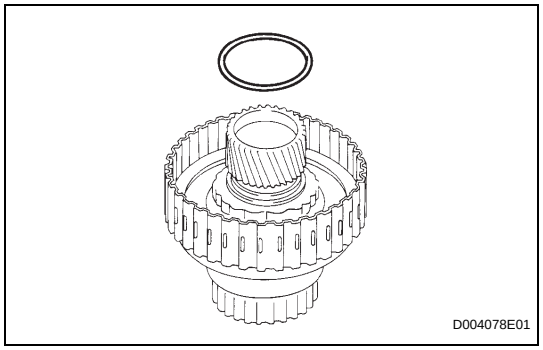

1. INSTALL UNDERDRIVE CLUTCH DRUM O-RING

(a) Coat a new O-ring with ATF and install it to the underdrive clutch drum.

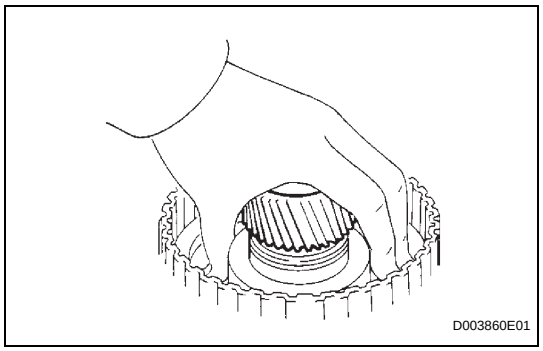

2. INSTALL UNDERDRIVE CLUTCH PISTON SET

(a) Coat the underdrive clutch piston with ATF, and install it to the underdrive clutch piston drum.

NOTICE:
Be careful not to damage the O-ring.

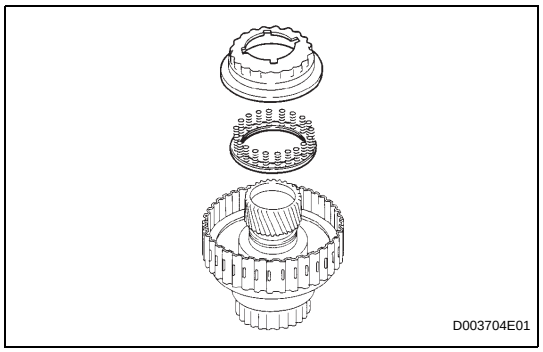

(b) Install the piston return spring and clutch balancer to the underdrive clutch drum.

NOTICE:
Be careful not to damage the lip seal of the clutch balancer.

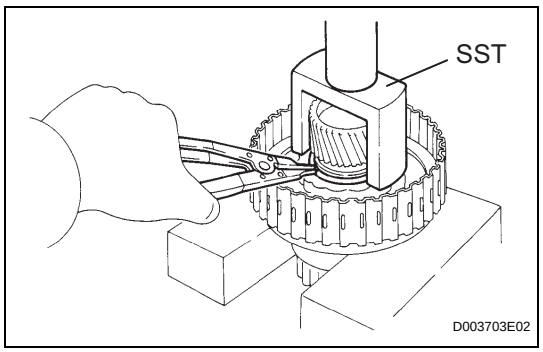

(c) Place SST on the clutch balancer and compress the piston return spring with a press.

SST 09350-32014 (09351-32070)

(d) Using a snap ring expander, install the snap ring to underdrive clutch drum.

NOTICE:
- **Be sure the end gap of the snap ring is not aligned with the clutch balancer's claw.**
- **Stop the press when the spring sheet is lowered to the place 1 to 2 mm (0.039 to 0.078 in.) from the sap ring groove.**

- **This prevents the spring sheet from being deformed.**
- **Do not expand the snap ring excessively.**

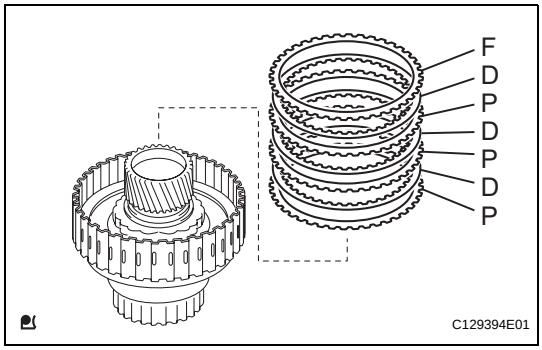

3. INSTALL NO. 1 UNDERDRIVE CLUTCH DISC

(a) Install the 3 plates, 3 discs and flange.
Install in order:
P - D - P - D - P - D - F
HINT:
P = Plate
D = Disc
F = Flange

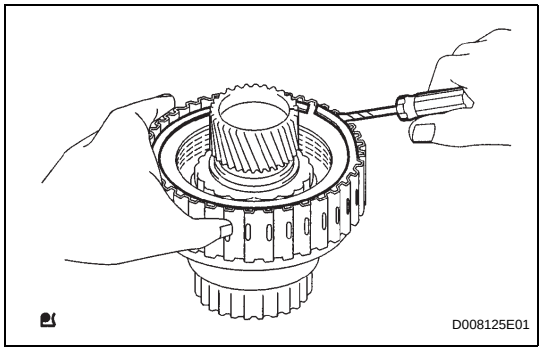

(b) Using a screwdriver, install the snap ring.
(c) Check that the end gap of the snap ring is not aligned with one of the cutouts.

4. INSPECT UNDERDRIVE PACK CLEARANCE

(a) Install the underdrive clutch to the transaxle case.
NOTICE:
Be careful not to damage the oil seal rings.

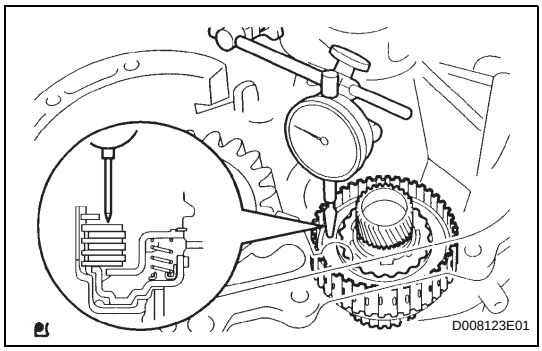

(b) Set a dial indicator as shown in the illustration.

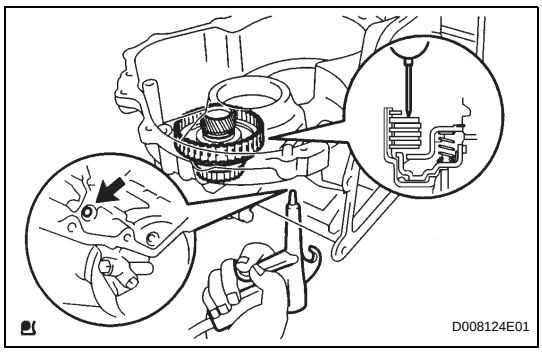

(c) Measure the underdrive clutch piston stroke while applying and releasing compressed air (392 kPa, 4.0 kgf/cm^2, 57 psi).
Standard pack clearance:
1.51 to 1.90 mm (0.0594 to 0.0748 in.)
If the pack clearance is less than the minimum, parts may have been assembled incorrectly, so check and reassemble again.
If the park clearance is not as specified, select another flange.
HINT:
There are 3 flanges in different thickness.
Standard flange thickness

No.	Thickness	No.	Thickness
A	3.0 mm (0.118 in.)	C	3.4 mm (0.134 in.)
B	3.2 mm (0.126 in.)	-	-

UNDERDRIVE CLUTCH

COMPONENTS

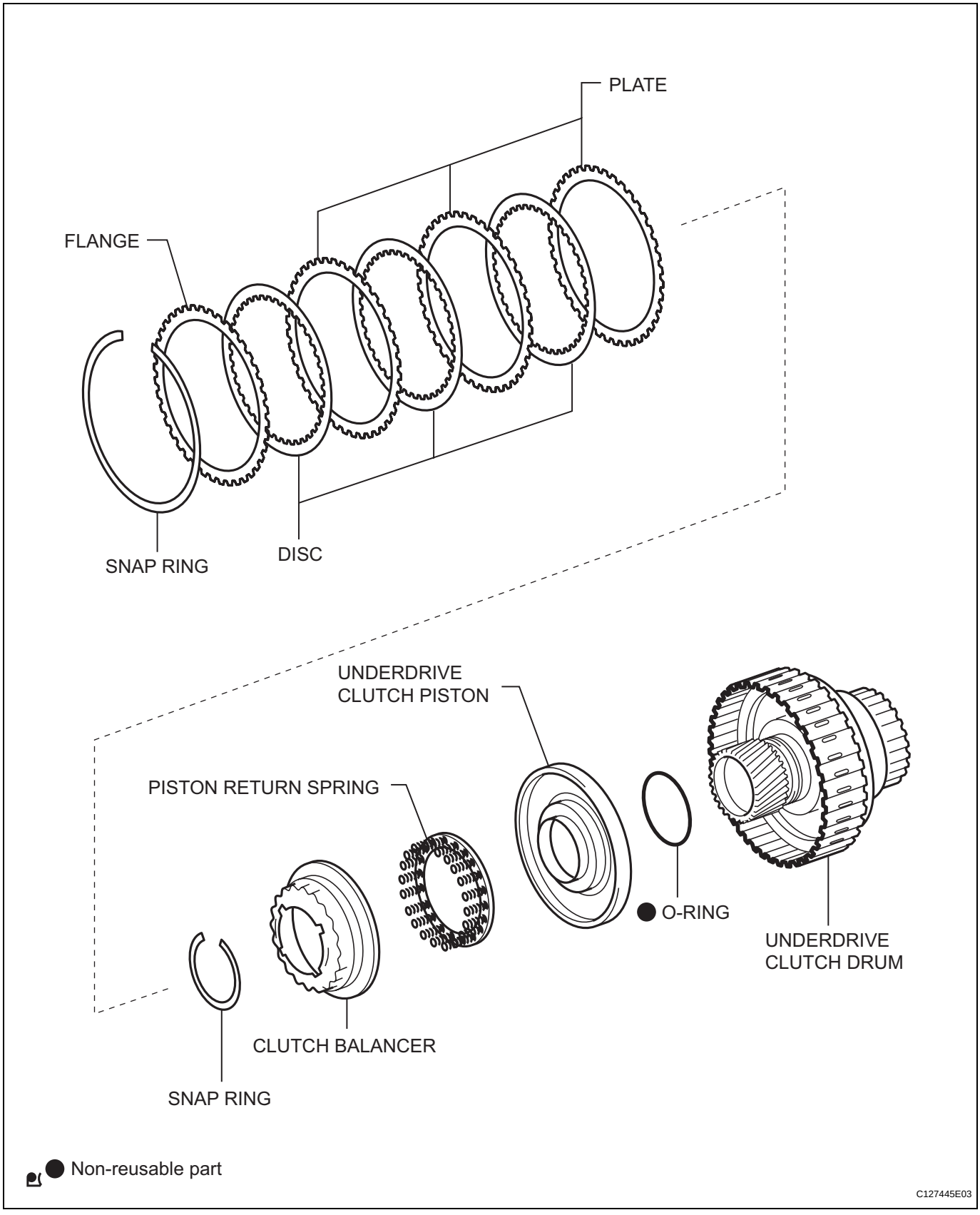

AX

DISASSEMBLY

1. INSPECT UNDERDRIVE PACK CLEARANCE (See page AX-247)

2. REMOVE NO. 1 UNDERDRIVE CLUTCH DISC

(a) Using a screwdriver, pry out the snap ring.

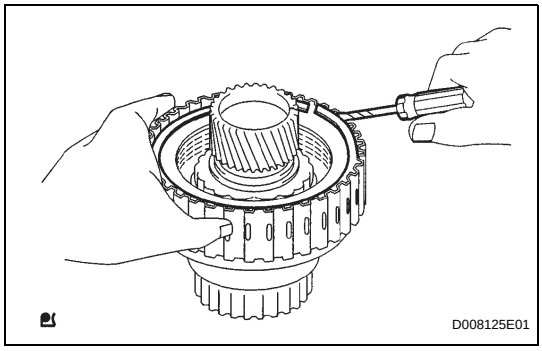

(b) Remove the flange, 3 discs and 3 plates from the underdrive clutch drum.

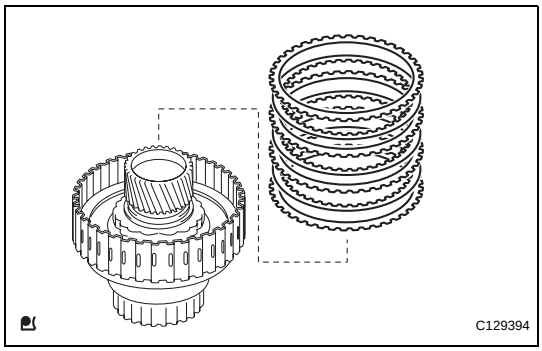

3. INSPECT NO. 1 UNDERDRIVE CLUTCH DISC (See page AX-248)

4. REMOVE UNDERDRIVE CLUTCH PISTON SET

(a) Place SST on the clutch balancer and compress the spring with a press.
SST 09350-32014 (09351-32070)

(b) Using a snap ring expander, remove the snap ring.
NOTICE:
- **Stop the press when the spring sheet is lowered to the place 1 to 2 mm (0.039 to 0.078 in.) from the snap ring groove.**
- **This prevents the spring sheet from being deformed.**
- **Do not expand the snap ring excessively.**

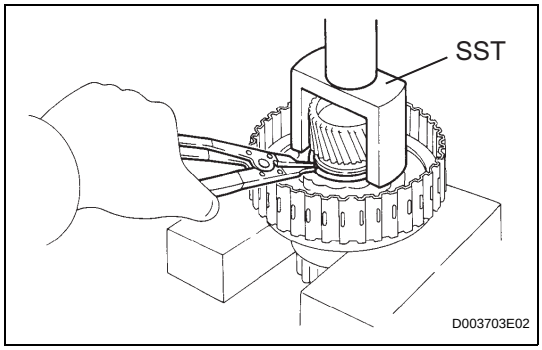

(c) Remove the clutch balancer and piston return spring from the underdrive clutch drum.

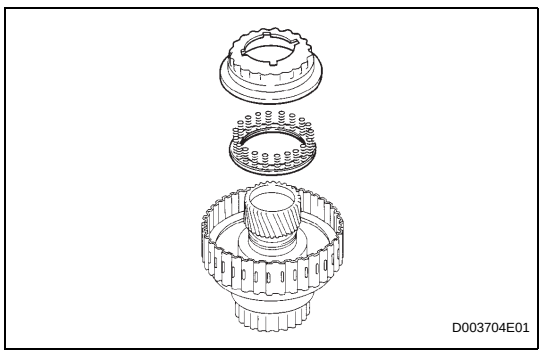

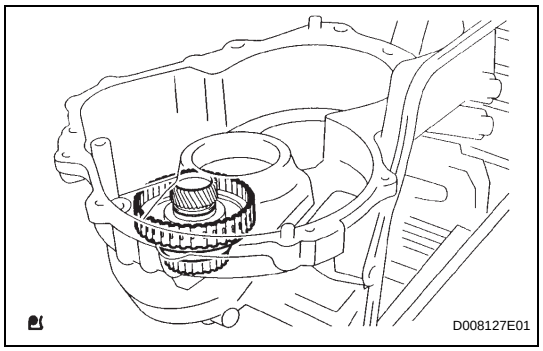

(d) Install the underdrive clutch to the transaxle case.
NOTICE:
Be careful not to damage the oil seal rings.

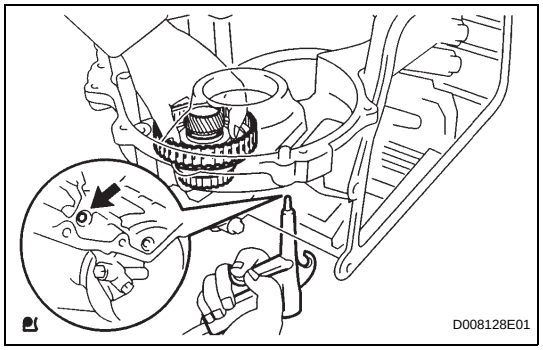

(e) Holding the underdrive clutch piston with your hand, apply compressed air (392 kPa, 4.0 kgf/cm^2, 57 psi) to the transaxle case to remove the underdrive clutch piston.

5. INSPECT UNDERDRIVE CLUTCH RETURN SPRING SUB-ASSEMBLY (See page AX-248)

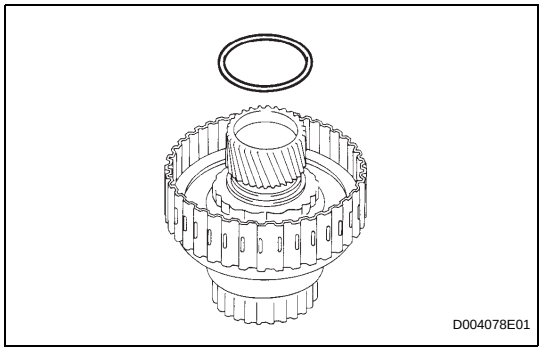

6. REMOVE UNDERDRIVE CLUTCH DRUM O-RING

7. INSPECT UNDERDRIVE CLUTCH DRUM SUB-ASSEMBLY (See page AX-248)

UNDERDRIVE PLANETARY GEAR

COMPONENTS

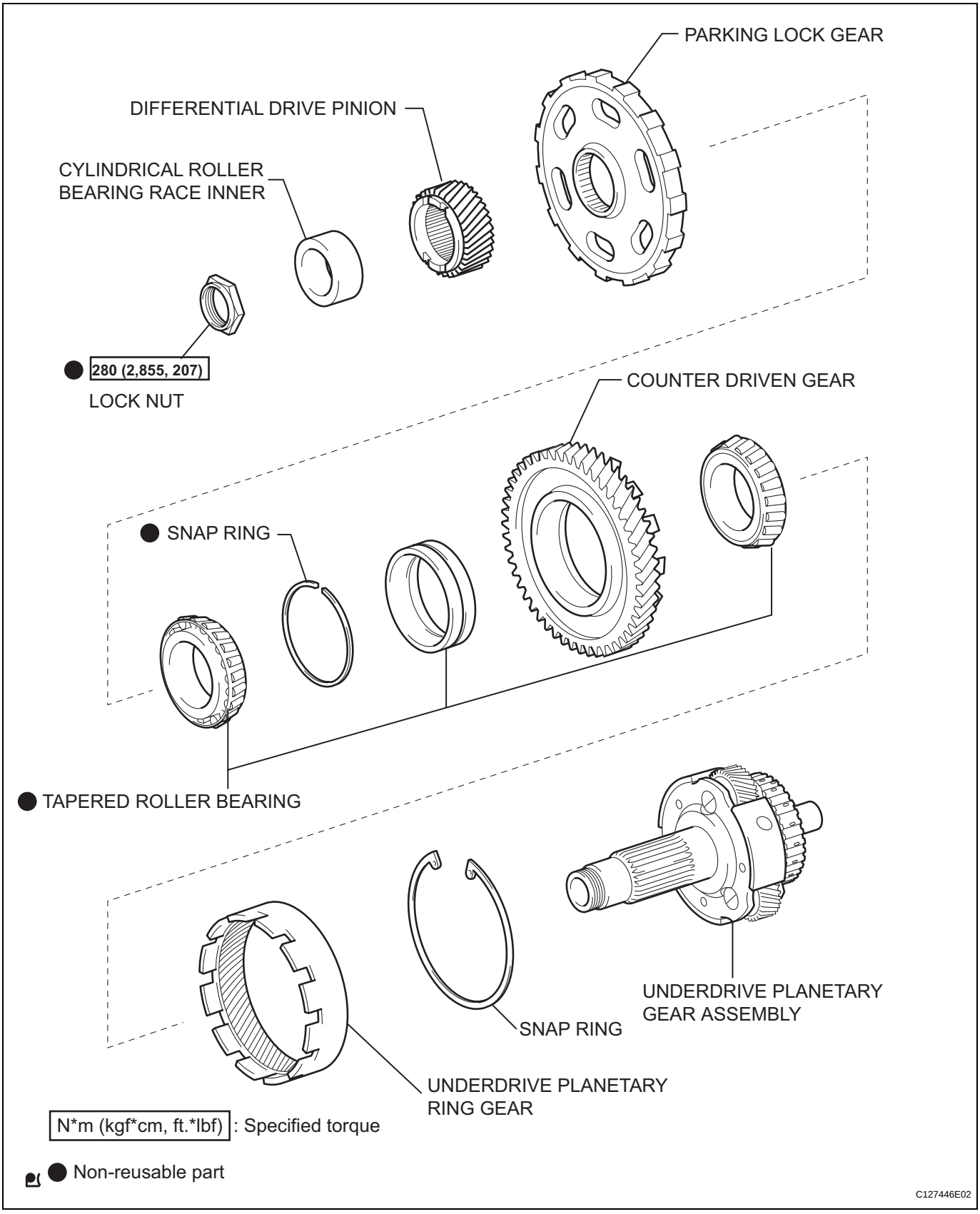

DISASSEMBLY

1. INSPECT UNDERDRIVE PLANETARY GEAR PRELOAD (See page AX-240)

2. REMOVE CYLINDRICAL ROLLER BEARING RACE INNER

(a) Using SST, loosen the staked part of the nut.

SST 09930-00010 (09931-00010, 09931-00020), 09387-00050

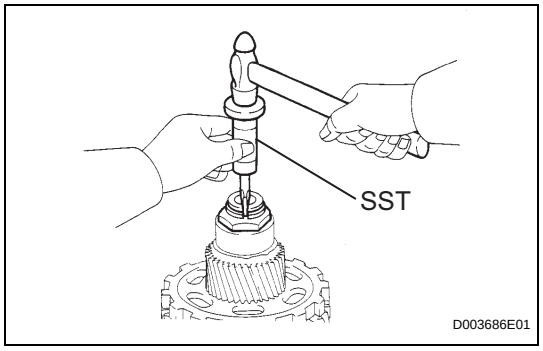

(b) Clamp the underdrive planetary gear in soft jaw vise.

NOTICE:
Be careful not to damage the differential drive pinion.

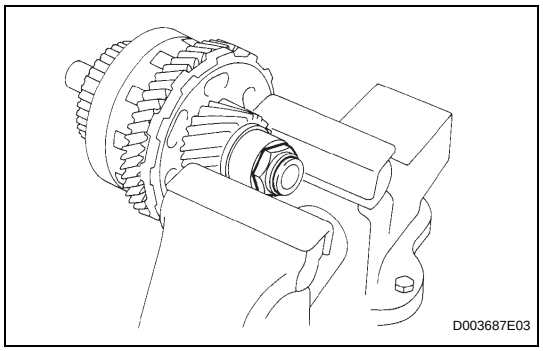

(c) Using SST, remove the lock nut.

SST 09564-16020

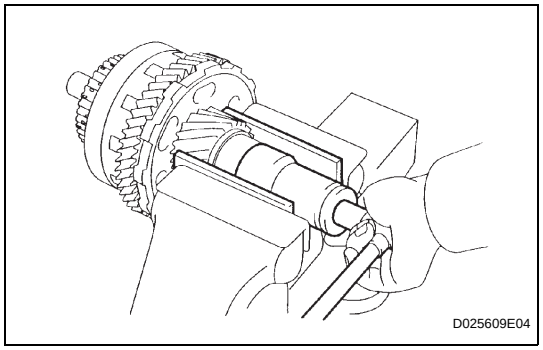

(d) Using SST, remove the cylindrical roller bearing inner race.

SST 09950-00020, 09950-00030, 09950-60010 (09951-00340)

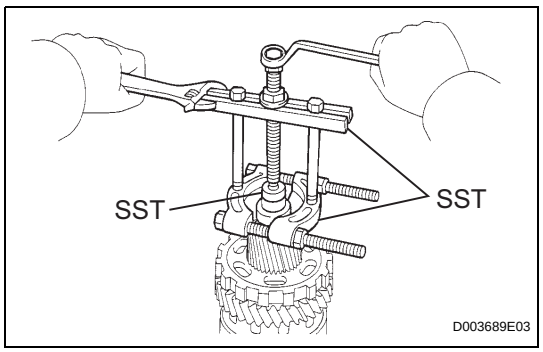

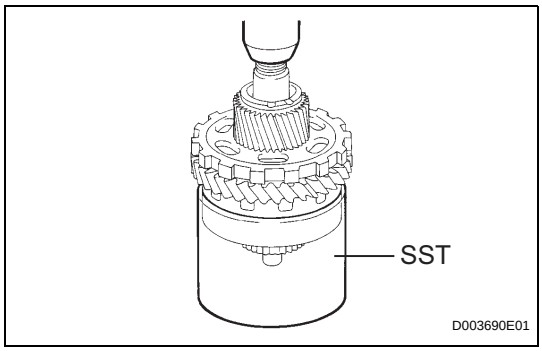

3. REMOVE UNDERDRIVE PLANETARY GEAR ASSEMBLY

(a) Using SST and a press, remove the differential drive pinion, parking lock gear, counter driven gear with underdrive planetary ring gear and front tapered roller bearing.
SST 09387-00050

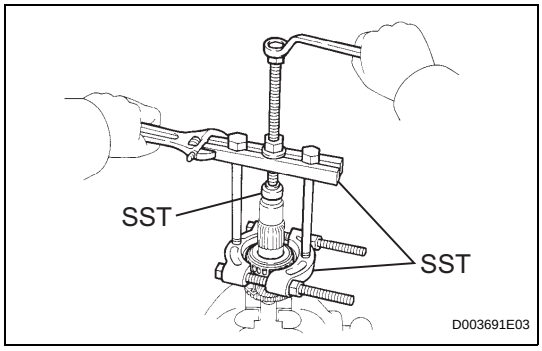

(b) Clamp the underdrive planetary gear in soft jaw vise.

(c) Using SST, remove rear tapered roller bearing from the underdrive planetary gear.
SST 09950-00020, 09950-00030, 09950-60010 (09951-00320)

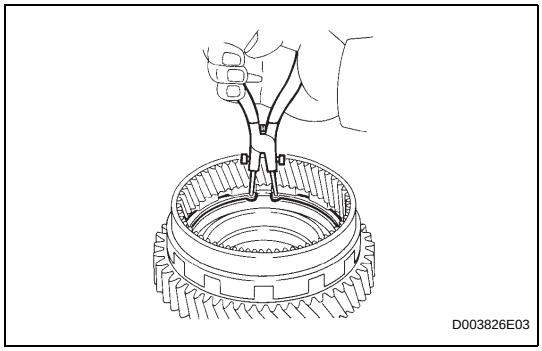

4. REMOVE UNDERDRIVE PLANETARY RING GEAR

(a) Using snap ring pliers, remove the snap ring.

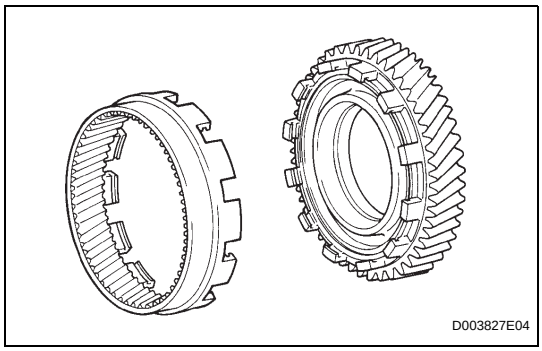

(b) Remove the underdrive planetary ring gear from the counter driven gear.

INSPECTION

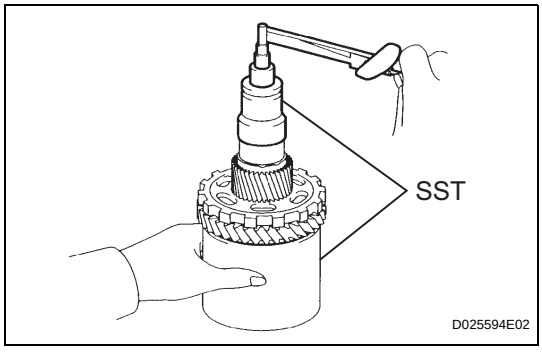

1. INSPECT UNDERDRIVE PLANETARY GEAR PRELOAD

(a) Using SST a torque wrench, measure the turning torque of the underdrive planetary gear assembly while rotating the torque wrench at 60 rpm.
SST 09387-00050, 09564-16020
Torque: Standard turning torque at 60 rpm
0.23 to 5.01 N*m (2 to 51 kgf*cm, 2.0 to 44.3 in.*lbf)

HINT:
Use a torque wrench with a fulcrum length of 160 mm (6.3 in.).

REASSEMBLY

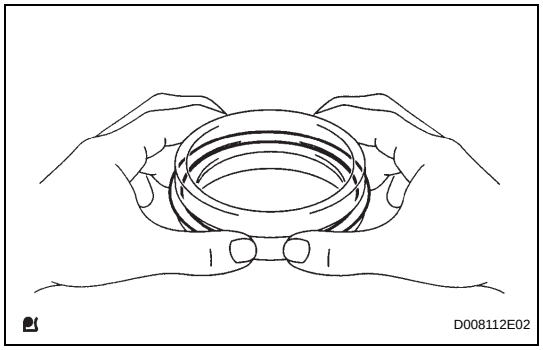

1. INSTALL UNDERDRIVE PLANETARY RING GEAR

(a) Install a new snap ring to the outer race of the tapered roller bearing.

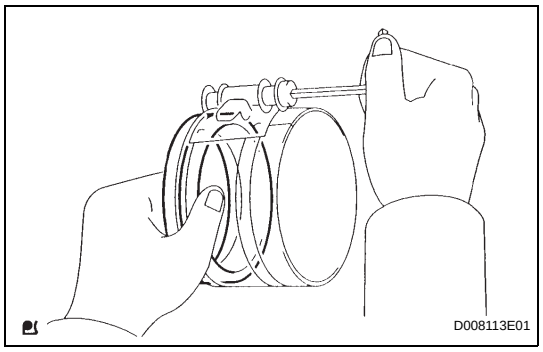

(b) Using a piston ring compressor, squeeze the snap ring.

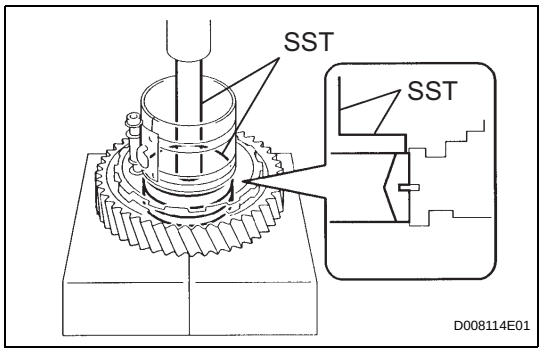

(c) Using SST a press, press in the outer race of the tapered roller bearing.
SST 09950-60020 (09951-00890), 09950-70010 (09951-07100)

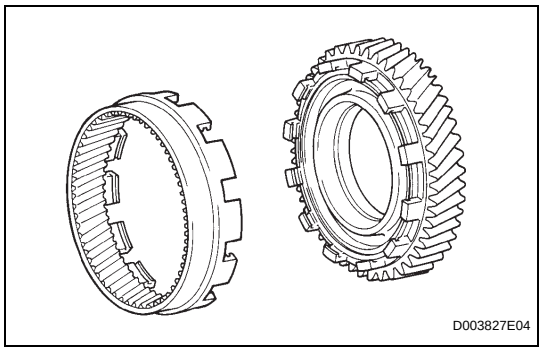

(d) Install the underdrive planetary ring gear to the counter driven gear.

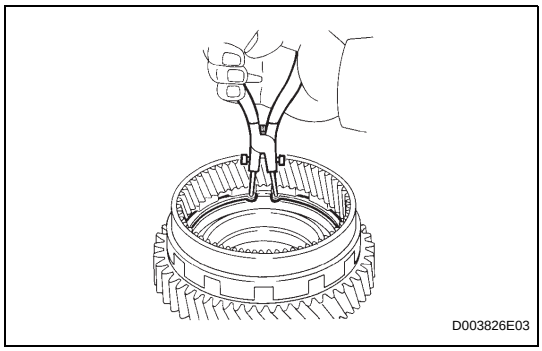

(e) Using snap ring pliers, install the snap ring.

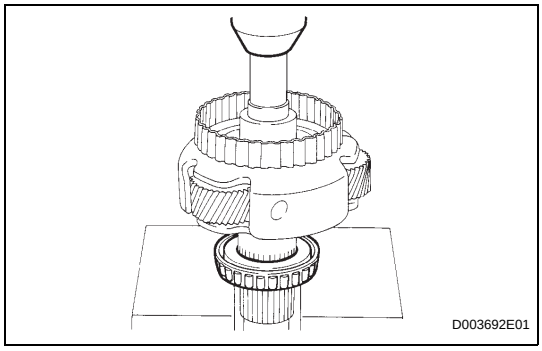

2. INSTALL UNDERDRIVE PLANETARY GEAR ASSEMBLY

(a) Using a press, install the tapered roller bearing.

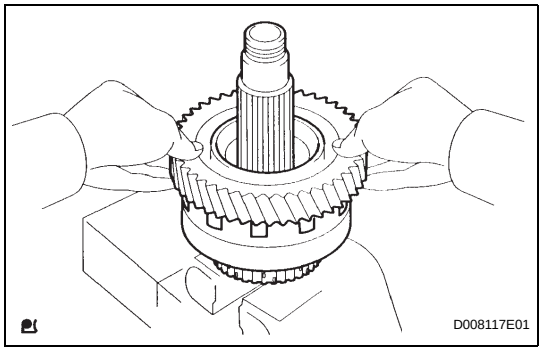

(b) Install the counter driven gear with planetary ring gear to the underdrive planetary gear.

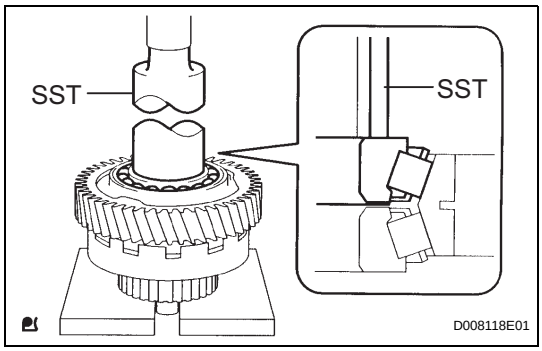

(c) Using SST and a press, press in the tapered roller bearing.
SST 09316-60011 (09316-00011)
NOTICE:
Press in the counter driven gear while rotating it.

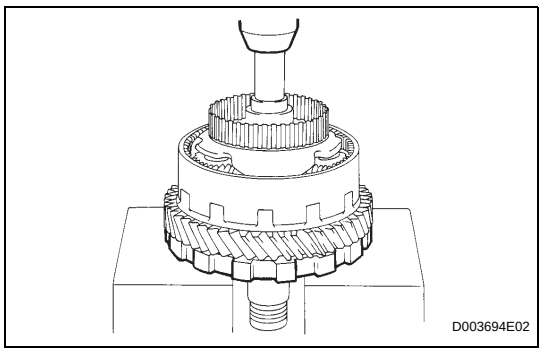

(d) Using a press, press in the parking lock gear.
NOTICE:
Press in the counter driven gear while rotating it.

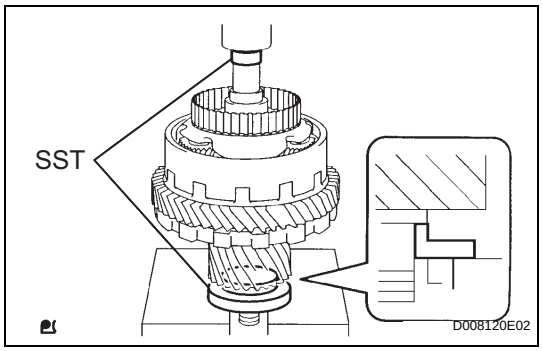

(e) Using SST and a press, press in the differential drive pinion.
NOTICE:
Press in the counter driven gear while rotating it.
SST 09506-35010, 09950-60010 (09951-00250)

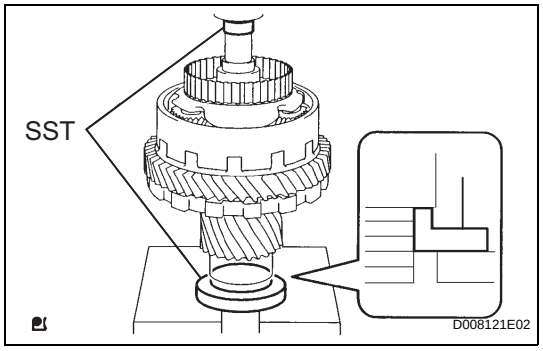

(f) Using SST and a press, press in the cylindrical roller bearing inner race.
NOTICE:
Press in the counter driven gear while rotating it.
SST 09506-35010, 09950-60010 (09951-00250)

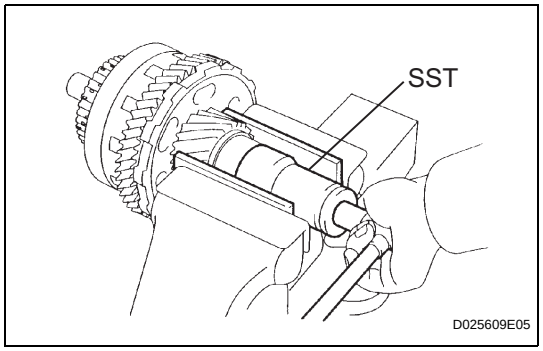

(g) Clamp the underdrive planetary gear in a soft jaw vise.
NOTICE:
Be careful not to damage the differential drive pinion.

(h) Using SST, install a new lock nut.
Torque: 280 N*m (2,855 kgf*cm, 207 in.*lbf)
SST 09564-16020
HINT:
Use a torque wrench with a fulcrum length of 750 mm (29.53 in.)

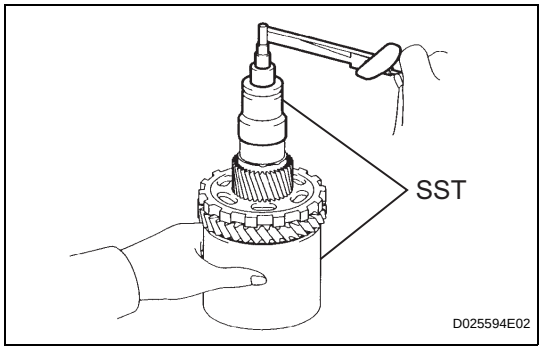

(i) Using SST and a torque wrench, measure the turning torque of underdrive planetary gear assembly while rotating the torque wrench at 60 rpm.
SST 09564-16020, 09387-00050
Torque: Standard turning torque at 60 rpm
0.23 to5.01 N*m (2 to 51 kgf*cm, 2.0 to 44.3 in.*lbf)
HINT:
Use a torque wrench with a fulcrum length of 160 mm (6.30 in.).

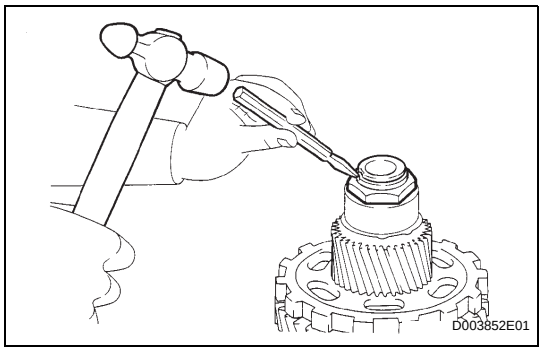

(j) Using a pin punch and hammer, stake the lock nut.
NOTICE:
Make sure that there are no cracks on the nut.

REASSEMBLY

1. INSTALL MANUAL VALVE

(a) Install the manual valve to the valve body.

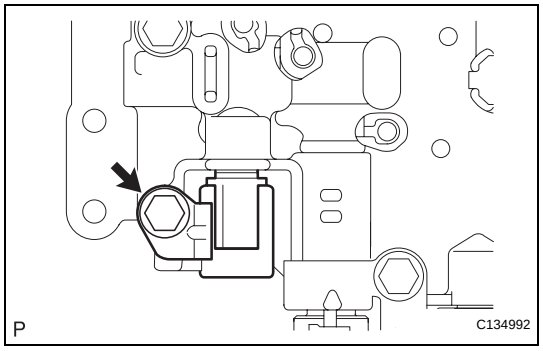

2. INSTALL SHIFT SOLENOID VALVE S4

(a) Install the shift solenoid valve S4 to the valve body with the bolt.
Torque: 11 N*m (112 kgf*cm, 9 ft.*lbf)

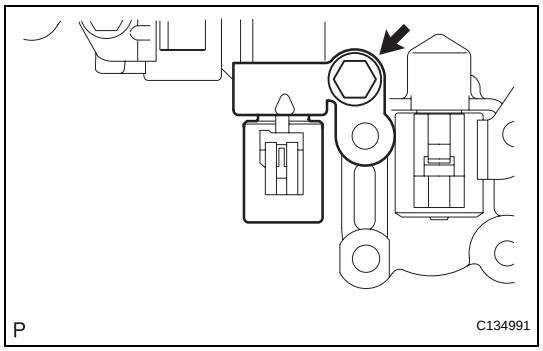

3. INSTALL SHIFT SOLENOID VALVE SL2

(a) Install the shift solenoid valve SL2 to the valve body with the bolt and plate.
Torque: 11 N*m (112 kgf*cm, 8 ft.*lbf)

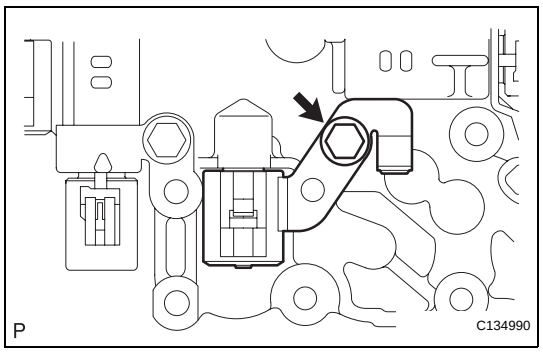

4. INSTALL SHIFT SOLENOID VALVE DSL

(a) Install the shift solenoid valve DSL to the valve body with the bolt.
Torque: 11 N*m (112 kgf*cm, 8 ft.*lbf)

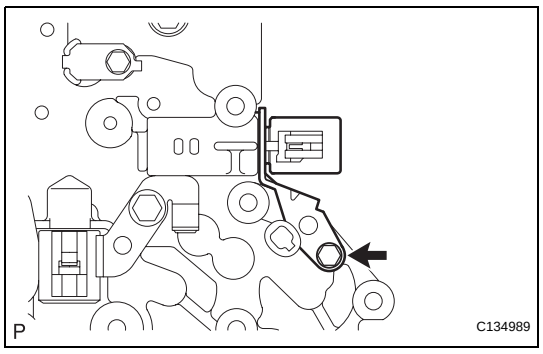

5. INSTALL SHIFT SOLENOID VALVE SL1

(a) Install the shift solenoid valve SL1 to the valve body with the bolt and plate.
Torque: 6.6 N*m (67 kgf*cm, 58 in.*lbf)

AX

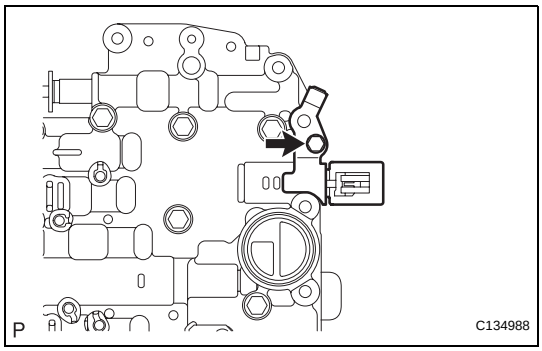

6. INSTALL SHIFT SOLENOID VALVE SLT

(a) Install the shift solenoid valve SLT to the valve body with the bolt and plate.
Torque: 6.6 N*m (67 kgf*cm, 58 in.*lbf)

AX

AX

REMOVAL

1. **DISCONNECT CABLE FROM NEGATIVE BATTERY TERMINAL**
   CAUTION:
   Wait at least 90 seconds after disconnecting the cable from the negative (-) battery terminal to prevent airbag and seat belt pretensioner activation.

2. **REMOVE NO. 1 ENGINE UNDER COVER**

3. **DRAIN AUTOMATIC TRANSAXLE FLUID**
   (a) Remove the drain plug and gasket, and drain ATF.
   (b) Install a new gasket and the drain plug.
   Torque: 47 N*m (479 kgf*cm, 35 ft.*lbf)

4. **REMOVE AUTOMATIC TRANSAXLE OIL PAN SUB-ASSEMBLY**
   (a) Remove the 18 bolts, oil pan and gasket.
   NOTICE:
   Some fluid will remain in the oil pan. Carefully remove the oil pan sub-assembly.
   (b) Remove the 3 magnets from the oil pan.

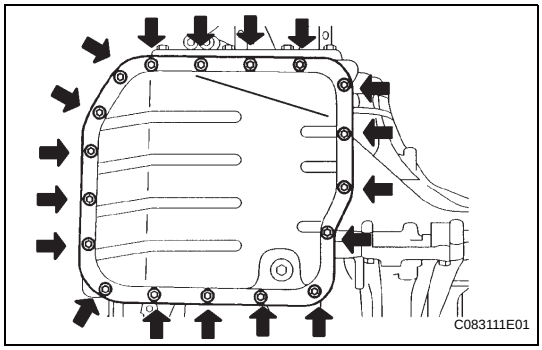

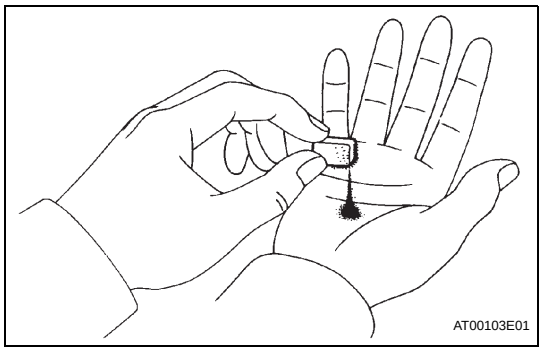

   (c) Examine particles in the pan.
      (1) Use the removed magnets to collect any steel chips. Look carefully at the chips and particles in the pan and on the magnet to anticipate what type of wear you will find in the transaxle.
      Steel (magnetic): bearing, gear and plate wear
      Brass (non-magnetic): bush wear

5. **REMOVE VALVE BODY OIL STRAINER ASSEMBLY**
   (a) Remove the 3 bolts and oil strainer.
   NOTICE:
   Be careful as some fluid will come out with the oil strainer.

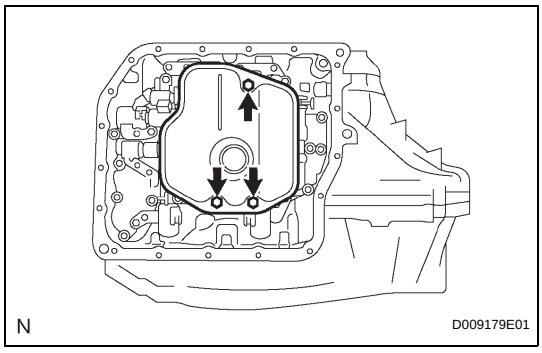

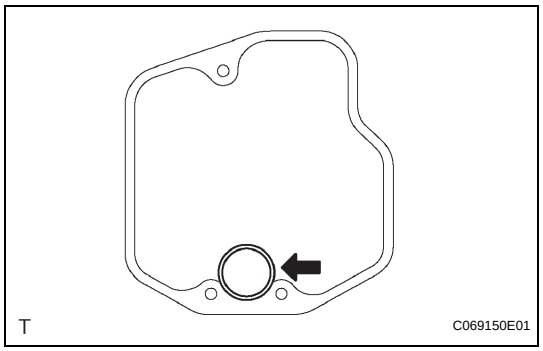

(b) Remove the O-ring from the oil strainer.

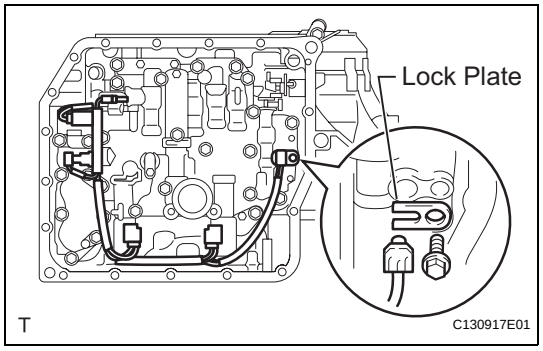

6. DISCONNECT TRANSMISSION WIRE

(a) Disconnect the 5 connectors.

(b) Remove the bolt and lock plate, and remove the ATF temperature sensor.

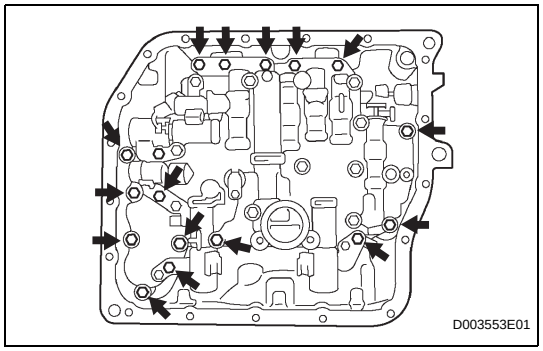

7. REMOVE TRANSMISSION VALVE BODY ASSEMBLY

(a) Support the valve body and remove the 17 bolts and valve body.

NOTICE:

Be careful not to drop the check valve body, spring and accumulator piston.

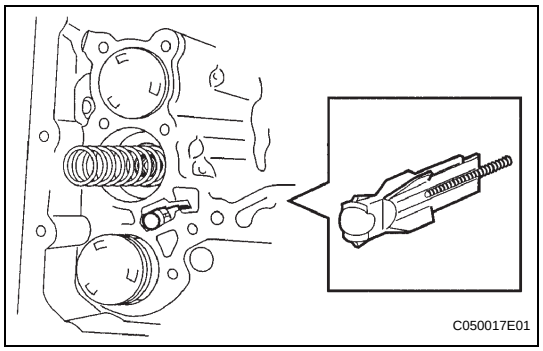

(b) Remove the check ball body and spring.

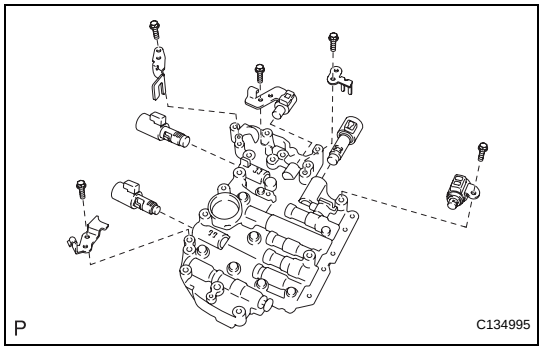

(c) Remove the 5 bolts, 4 plates and 5 shift solenoid valves.

AX

INSTALLATION

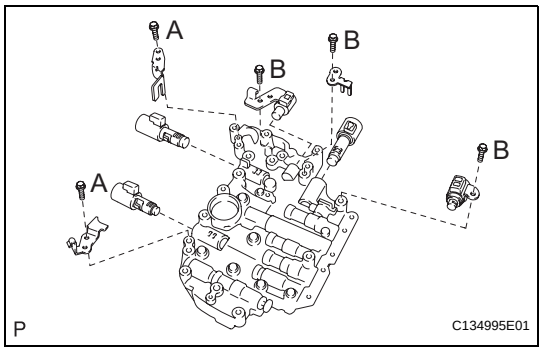

1. INSTALL TRANSMISSION VALVE BODY ASSEMBLY

(a) Install the 5 shift solenoid valves with the 5 bolts and 4 plates.

Torque: 6.6 N*m (67 kgf*cm, 58 in.*lbf) for bolt A
11 N*m (112 kgf*cm, 8 ft.*lbf) for bolt B

HINT:

Each bolt length is indicated below.

Bolt length:
12 mm (0.47 in.) for Bolt A
45 mm (1.77 in.) for Bolt B

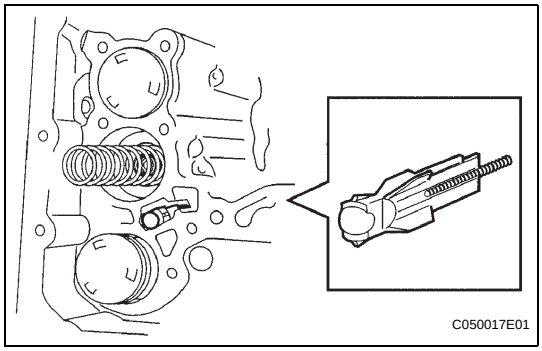

(b) Install the spring and check ball body.

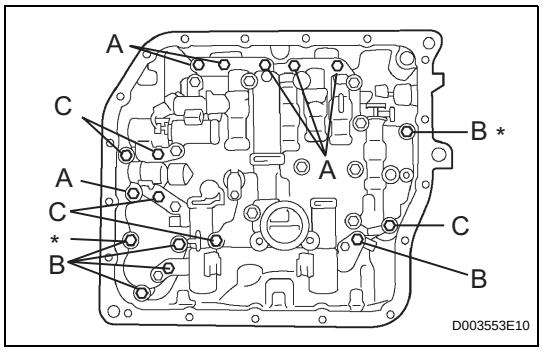

(c) Align the groove of the manual valve with the pin of lever.

(d) Install the 17 bolts.

Torque: 11 N*m (112 kgf*cm, 8 ft.*lbf)

NOTICE:

- **Push the valve body against the accumulator piston spring and the check ball body to install it.**
- **Tighten the bolts marked by * in the illustration first temporarily because they are positioning bolts.**

HINT:

Each bolt length is indicated below.

Bolt length:
25 mm (0.984 in.) for Bolt A
41 mm (1.614 in.) for Bolt B
45 mm (1.771 in.) for Bolt C

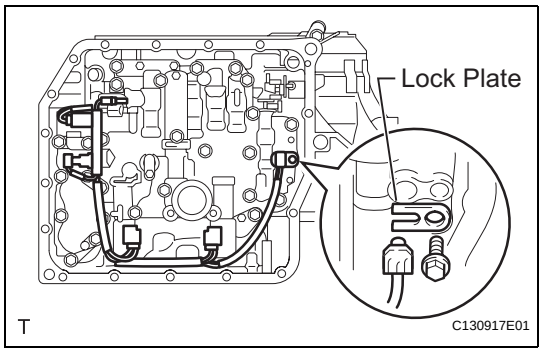

2. INSTALL TRANSMISSION WIRE

(a) Coat the O-ring with ATF.

(b) Install the ATF temperature sensor with the lock plate and bolt.

Torque: 6.6 N*m (67 kgf*cm, 58 in.*lbf)

(c) Connect the 5 shift solenoid valve connectors.

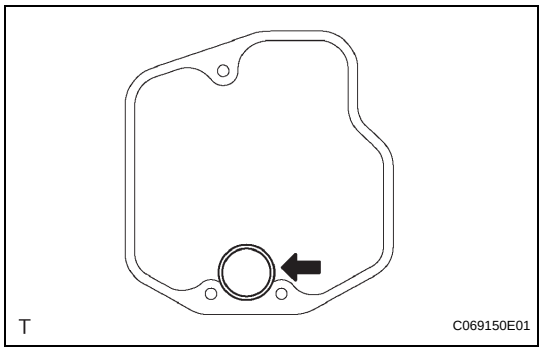

3. INSTALL VALVE BODY OIL STRAINER ASSEMBLY

(a) Coat a new O-ring with ATF.

(b) Install the O-ring to the oil strainer.

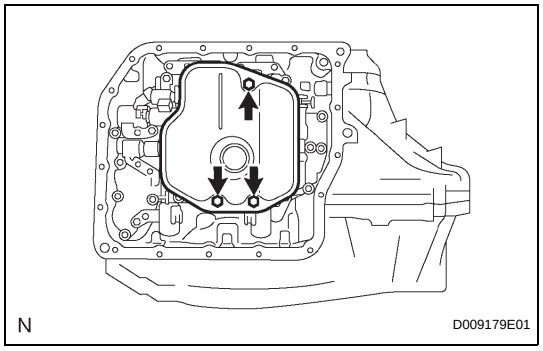

(c) Install the oil strainer with the 3 bolts.
Torque: 11 N*m (112 kgf*cm, 8 ft.*lbf)

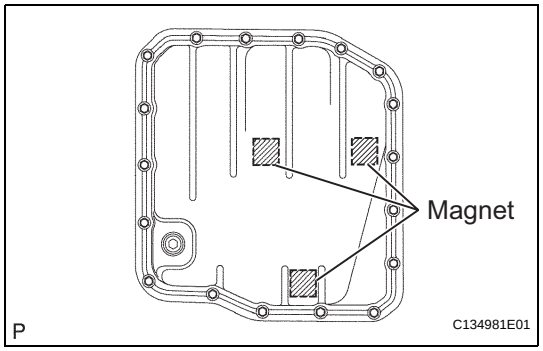

4. INSTALL AUTOMATIC TRANSAXLE OIL PAN SUB-ASSEMBLY

(a) Install the 3 magnets in the oil pan.

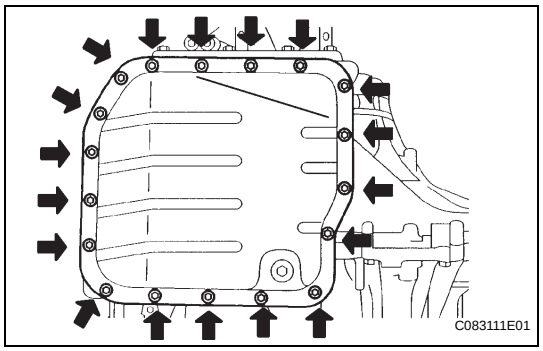

(b) Install a new gasket, oil pan with the 18 bolts.
Torque: 7.6 N*m (77 kgf*cm, 67 in.*lbf)

5. INSTALL NO. 1 ENGINE UNDER COVER

6. CONNECT CABLE TO NEGATIVE BATTERY TERMINAL

7. ADD AUTOMATIC TRANSAXLE FLUID
Fluid type:
Toyota Genuine ATF WS

8. INSPECT TRANSAXLE FLUID LEVEL

(a) Inspect the fluid level (see page AX-102).

9. PERFORM RESET MEMORY

(a) Perform the RESET MEMORY procedures (A/T initialization) (see page AX-18).

VALVE BODY ASSEMBLY

COMPONENTS

AX

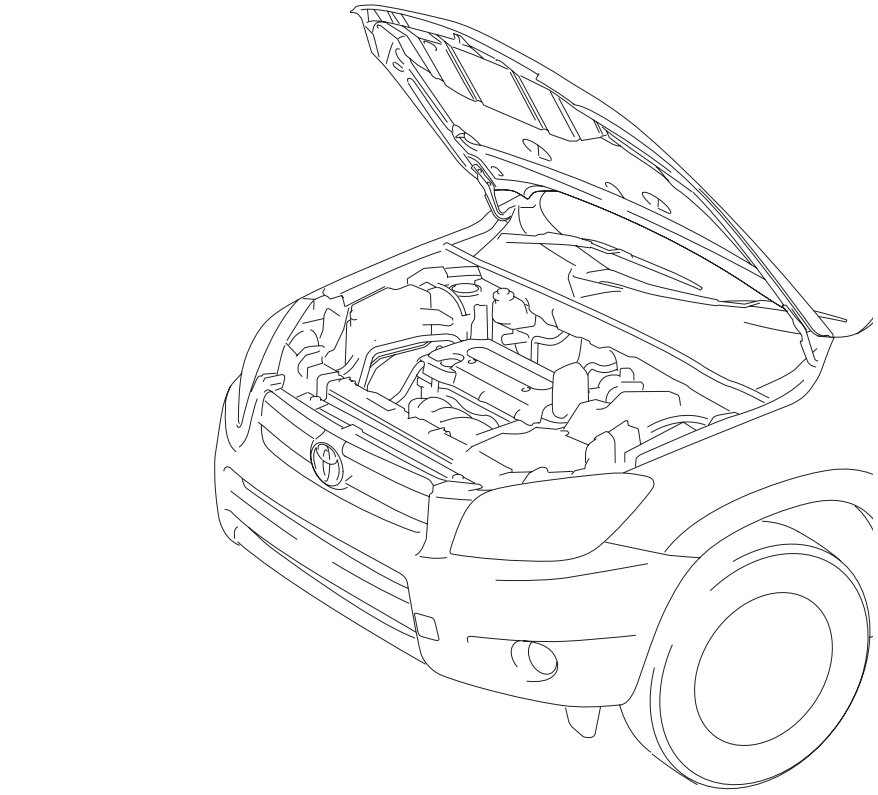

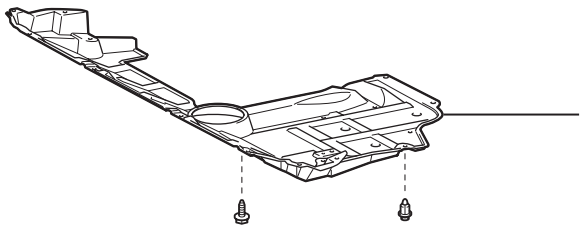

NO. 1 ENGINE UNDER COVER

P

C127832E01

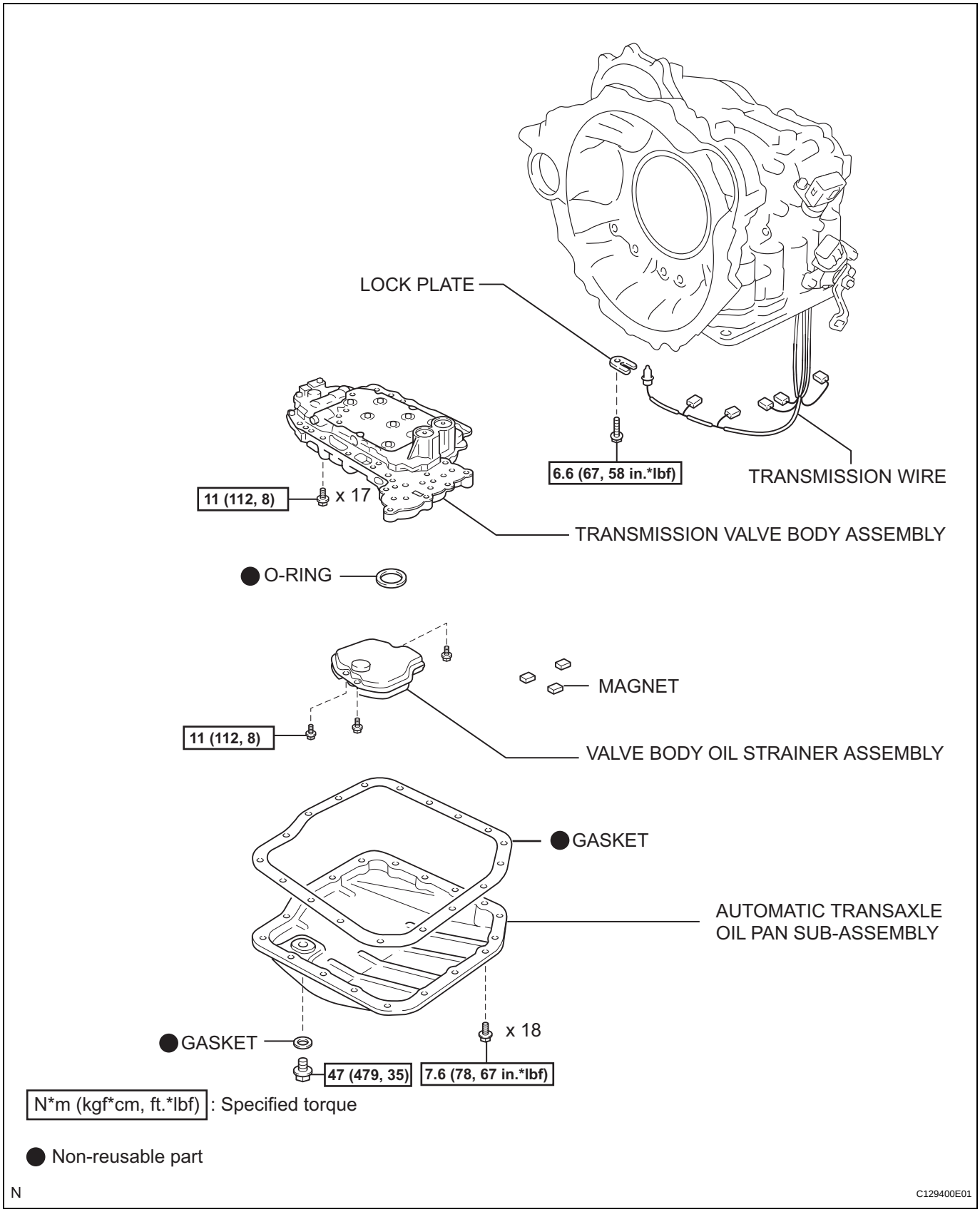
LOCK PLATE
6.6 (67, 58 in.*lbf)
TRANSMISSION WIRE
11 (112, 8)
x 17
TRANSMISSION VALVE BODY ASSEMBLY
● O-RING
MAGNET
11 (112, 8)
VALVE BODY OIL STRAINER ASSEMBLY
● GASKET
AUTOMATIC TRANSAXLE
OIL PAN SUB-ASSEMBLY
● GASKET
x 18
47 (479, 35)
7.6 (78, 67 in.*lbf)
N*m (kgf*cm, ft.*lbf) : Specified torque
● Non-reusable part
N
C129400E01

VALVE BODY

COMPONENTS

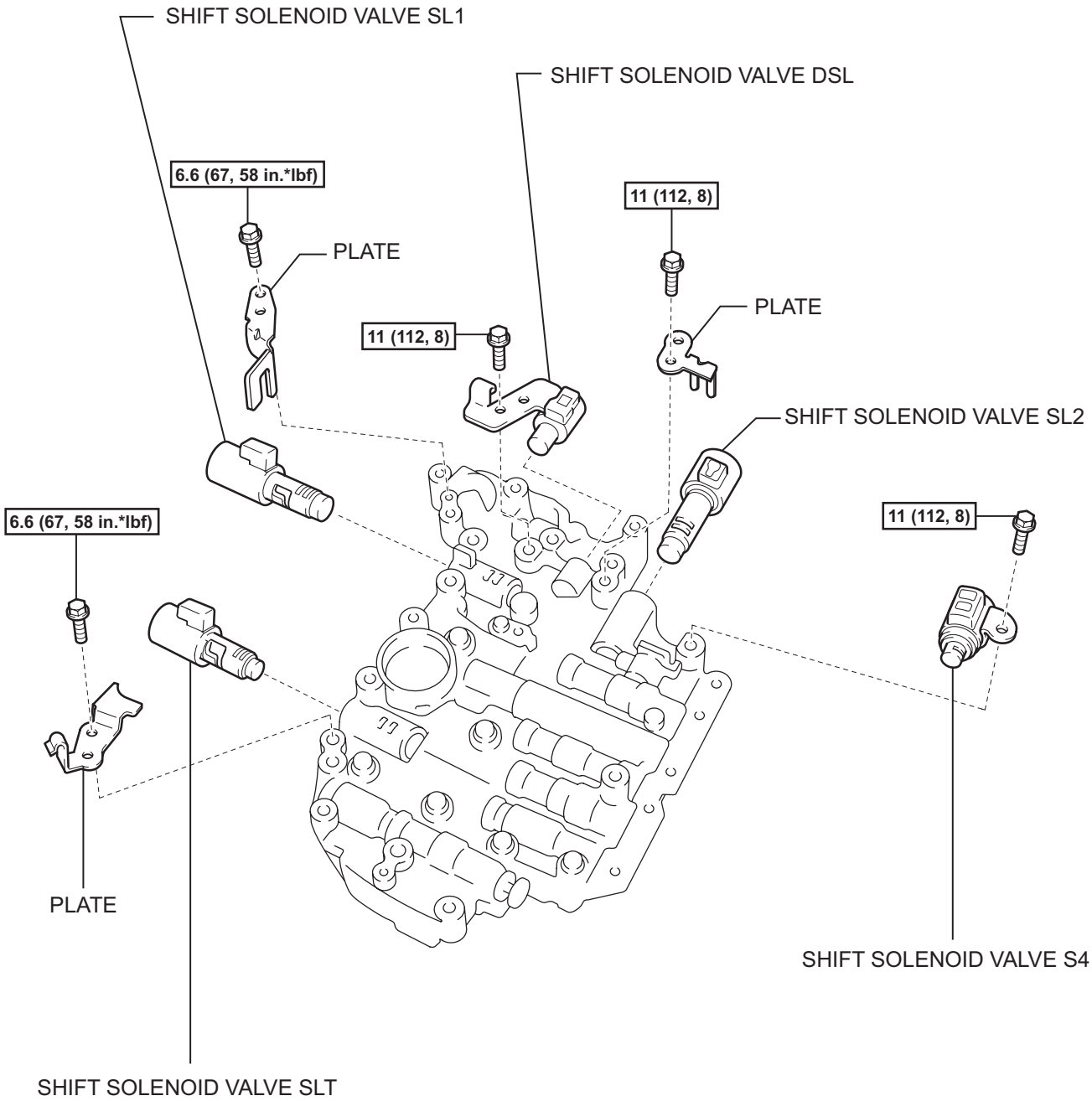

N*m (kgf*cm, ft.*lbf) : Specified torque

P

C134987E01

AX

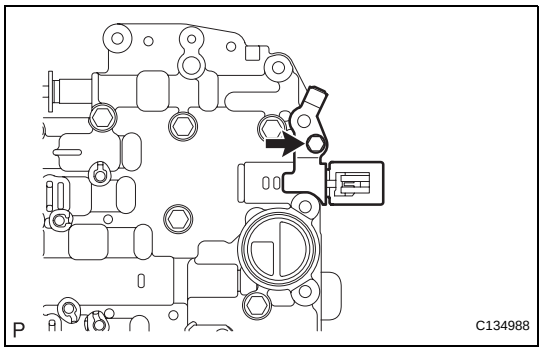

DISASSEMBLY

1. REMOVE SHIFT SOLENOID VALVE SLT

(a) Remove the bolt, plate and shift solenoid valve SLT from the valve body.

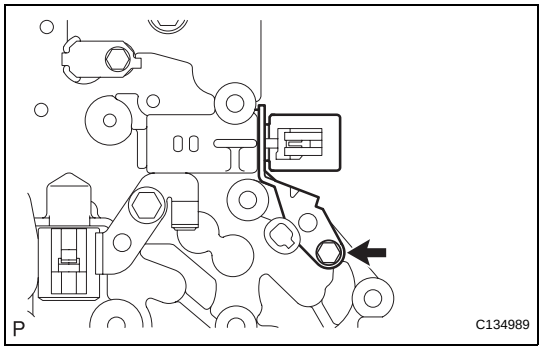

2. REMOVE SHIFT SOLENOID VALVE SL1

(a) Remove the bolt, plate and shift solenoid valve SL1 from the valve body.

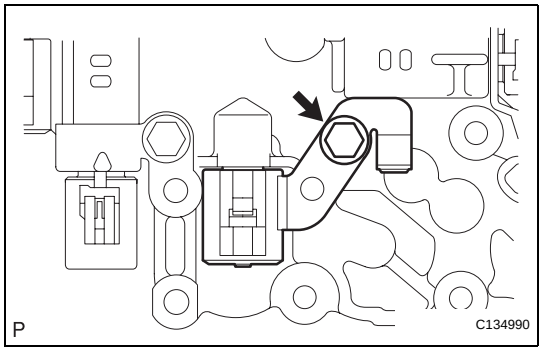

3. REMOVE SHIFT SOLENOID VALVE DSL

(a) Remove the bolt and shift solenoid valve DSL from the valve body.

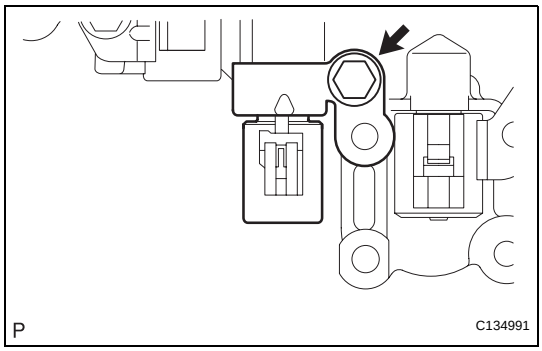

4. REMOVE SHIFT SOLENOID VALVE SL2

(a) Remove the bolt, plate and shift solenoid valve SL2 from the valve body.

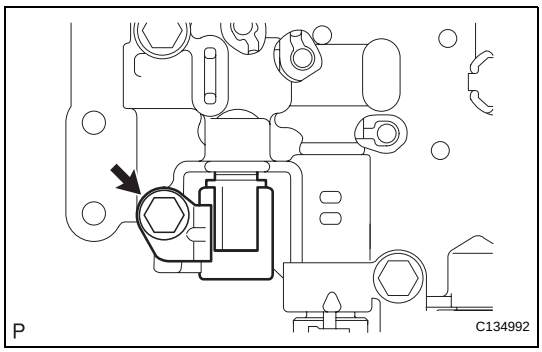

5. REMOVE SHIFT SOLENOID VALVE S4

(a) Remove the bolt and shift solenoid valve S4 from the valve body.

6. REMOVE MANUAL VALVE

(a) Remove the manual valve from the valve body.

AX

REMOVAL

1. **DISCONNECT CABLE FROM NEGATIVE BATTERY TERMINAL**
   CAUTION:
   Wait at least 90 seconds after disconnecting the cable from the negative (-) battery terminal to prevent airbag and seat belt pretensioner activation.

2. **REMOVE NO. 1 ENGINE UNDER COVER**

3. **DRAIN AUTOMATIC TRANSAXLE FLUID**
   (a) Remove the drain plug and gasket, and drain ATF.
   (b) Install a new gasket and the drain plug.
   Torque: 47 N*m (479 kgf*cm, 35 ft.*lbf)

4. **REMOVE AUTOMATIC TRANSAXLE OIL PAN SUB-ASSEMBLY**
   (a) Remove the 18 bolts, oil pan and gasket.
   NOTICE:
   Some fluid will remain in the oil pan. Carefully remove the oil pan sub-assembly.
   (b) Remove the 3 magnets from the oil pan.

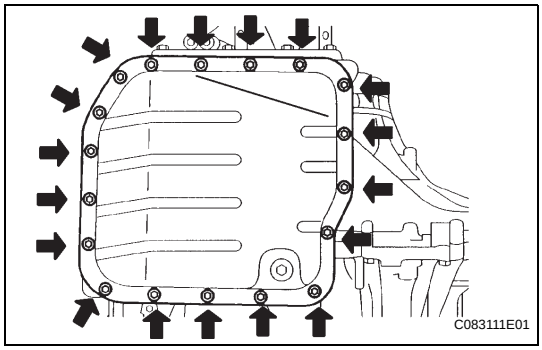

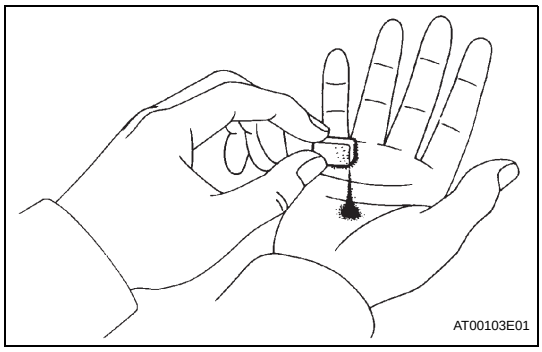

   (c) Examine particles in the pan.
      (1) Use the removed magnets to collect any steel chips. Look carefully at the chips and particles in the pan and on the magnet to anticipate what type of wear you will find in the transaxle.
      Steel (magnetic): bearing, gear and plate wear
      Brass (non-magnetic): bush wear

5. **REMOVE VALVE BODY OIL STRAINER ASSEMBLY**
   (a) Remove the 3 bolts and oil strainer.
   NOTICE:
   Be careful as some fluid will come out with the oil strainer.

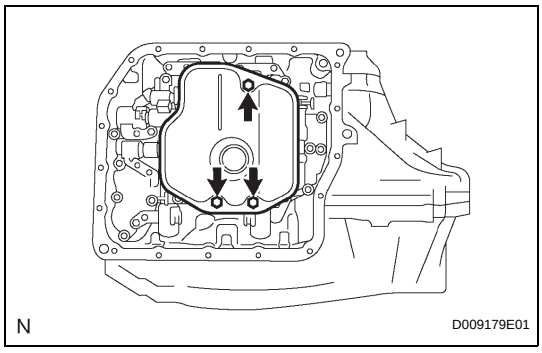

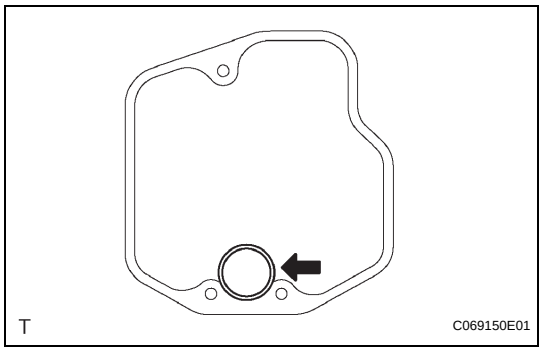

(b) Remove the O-ring from the oil strainer.

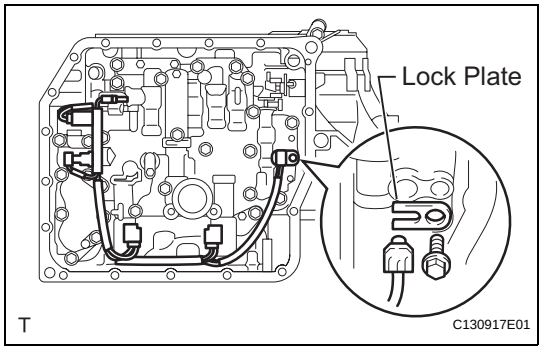

6. DISCONNECT TRANSMISSION WIRE

(a) Disconnect the 5 connectors.

(b) Remove the bolt and lock plate, and remove the ATF temperature sensor.

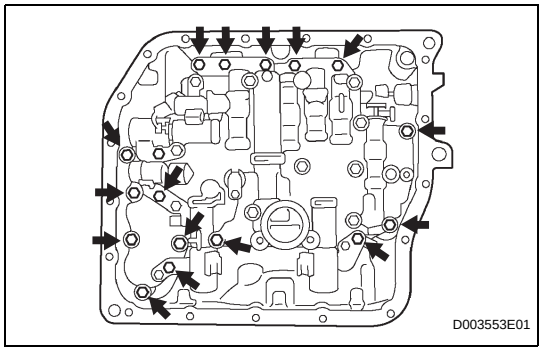

7. REMOVE TRANSMISSION VALVE BODY ASSEMBLY

(a) Support the valve body and remove the 17 bolts and valve body.

NOTICE:

Be careful not to drop the check valve body, spring and accumulator piston.

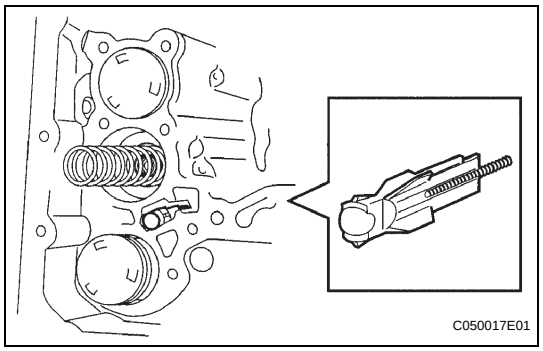

(b) Remove the check ball body and spring.

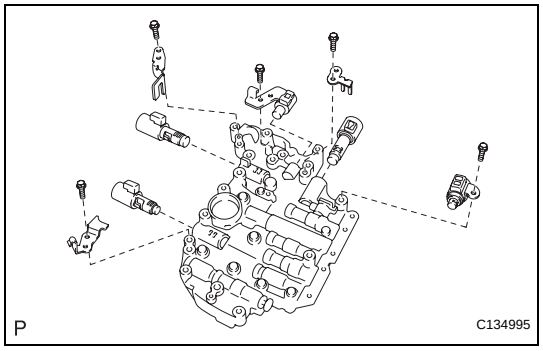

(c) Remove the 5 bolts, 4 plates and 5 shift solenoid valves.

AX

INSTALLATION

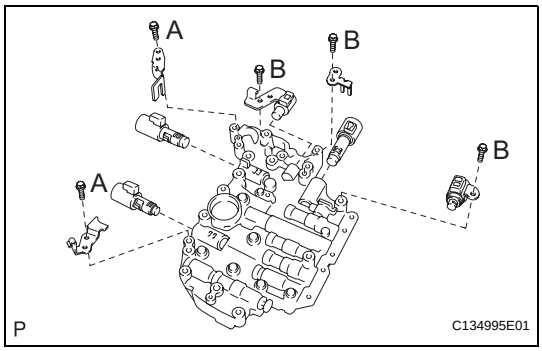

1. INSTALL TRANSMISSION VALVE BODY ASSEMBLY

(a) Install the 5 shift solenoid valves with the 5 bolts and 4 plates.

Torque: 6.6 N*m (67 kgf*cm, 58 in.*lbf) for bolt A
11 N*m (112 kgf*cm, 8 ft.*lbf) for bolt B

HINT:

Each bolt length is indicated below.

Bolt length:
12 mm (0.47 in.) for Bolt A
45 mm (1.77 in.) for Bolt B

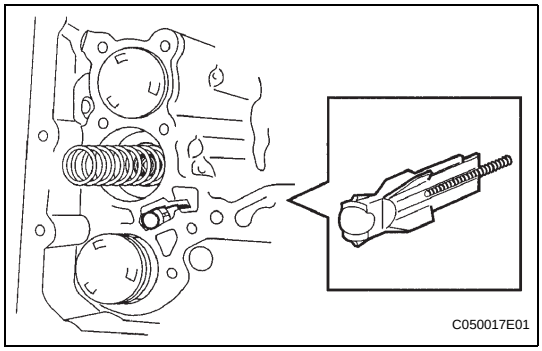

(b) Install the spring and check ball body.

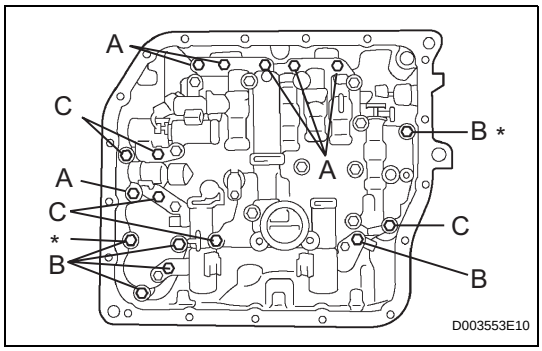

(c) Align the groove of the manual valve with the pin of lever.

(d) Install the 17 bolts.

Torque: 11 N*m (112 kgf*cm, 8 ft.*lbf)

NOTICE:

- **Push the valve body against the accumulator piston spring and the check ball body to install it.**
- **Tighten the bolts marked by * in the illustration first temporarily because they are positioning bolts.**

HINT:

Each bolt length is indicated below.

Bolt length:
25 mm (0.984 in.) for Bolt A
41 mm (1.614 in.) for Bolt B
45 mm (1.771 in.) for Bolt C

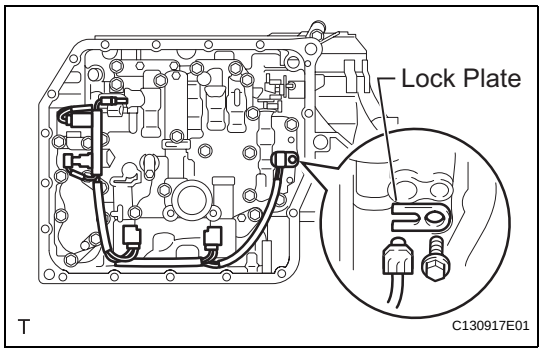

2. INSTALL TRANSMISSION WIRE

(a) Coat the O-ring with ATF.

(b) Install the ATF temperature sensor with the lock plate and bolt.

Torque: 6.6 N*m (67 kgf*cm, 58 in.*lbf)

(c) Connect the 5 shift solenoid valve connectors.

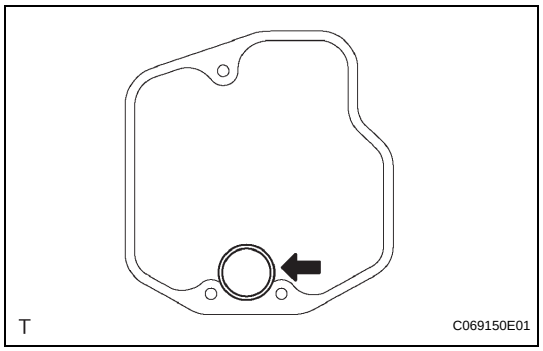

3. INSTALL VALVE BODY OIL STRAINER ASSEMBLY

(a) Coat a new O-ring with ATF.

(b) Install the O-ring to the oil strainer.

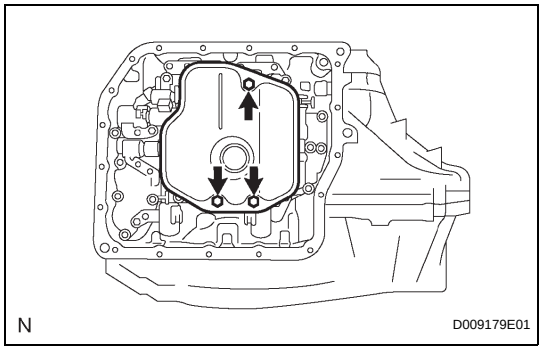

(c) Install the oil strainer with the 3 bolts.
Torque: 11 N*m (112 kgf*cm, 8 ft.*lbf)

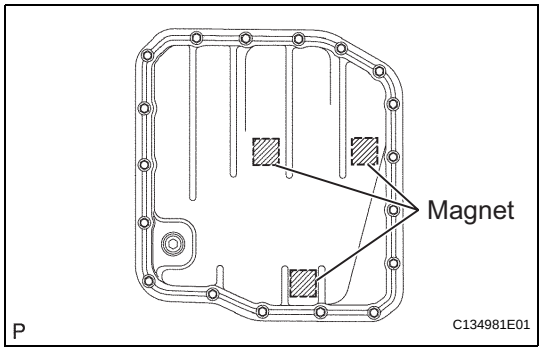

4. INSTALL AUTOMATIC TRANSAXLE OIL PAN SUB-ASSEMBLY

(a) Install the 3 magnets in the oil pan.

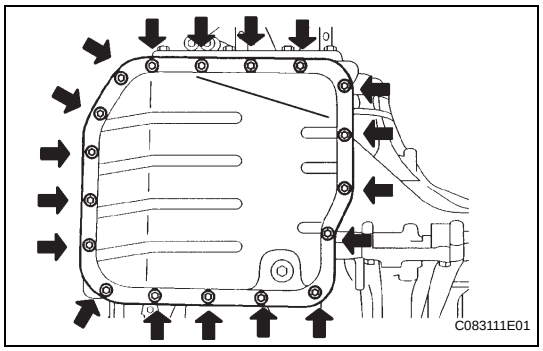

(b) Install a new gasket, oil pan with the 18 bolts.
Torque: 7.6 N*m (77 kgf*cm, 67 in.*lbf)

5. INSTALL NO. 1 ENGINE UNDER COVER

6. CONNECT CABLE TO NEGATIVE BATTERY TERMINAL

7. ADD AUTOMATIC TRANSAXLE FLUID
Fluid type:
Toyota Genuine ATF WS

8. INSPECT TRANSAXLE FLUID LEVEL

(a) Inspect the fluid level (see page AX-102).

9. PERFORM RESET MEMORY

(a) Perform the RESET MEMORY procedures (A/T initialization) (see page AX-18).

VALVE BODY ASSEMBLY

COMPONENTS

AX

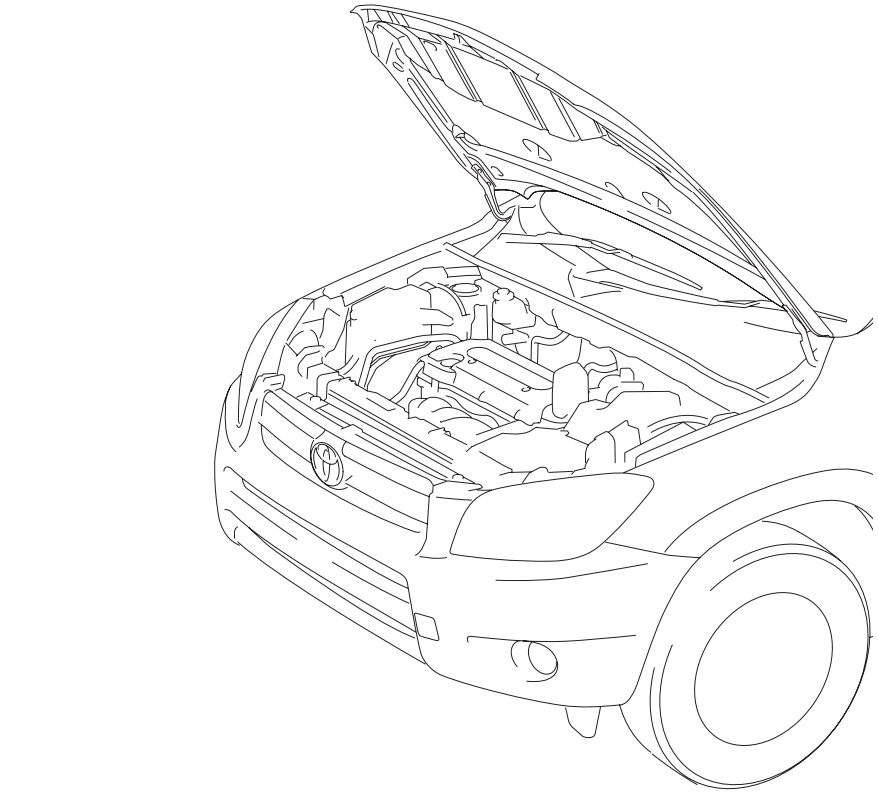

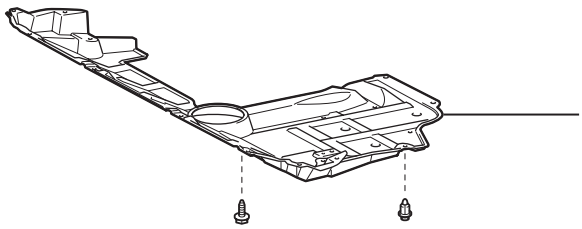

NO. 1 ENGINE UNDER COVER

P

C127832E01

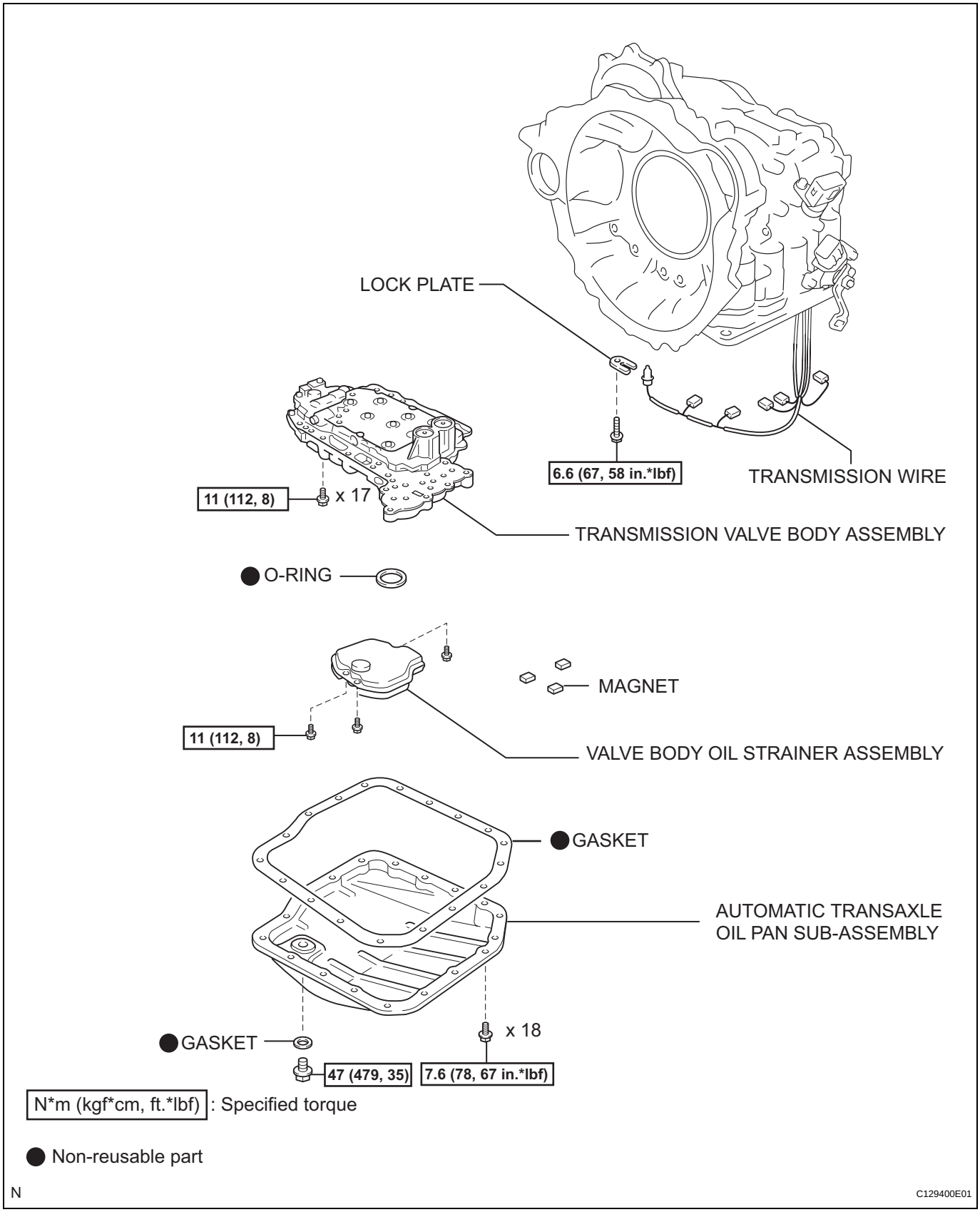
LOCK PLATE
6.6 (67, 58 in.*lbf)
TRANSMISSION WIRE
11 (112, 8)
x 17
TRANSMISSION VALVE BODY ASSEMBLY
● O-RING
MAGNET
11 (112, 8)
VALVE BODY OIL STRAINER ASSEMBLY
● GASKET
AUTOMATIC TRANSAXLE
OIL PAN SUB-ASSEMBLY
● GASKET
x 18
47 (479, 35)
7.6 (78, 67 in.*lbf)
N*m (kgf*cm, ft.*lbf) : Specified torque
● Non-reusable part
N
C129400E01

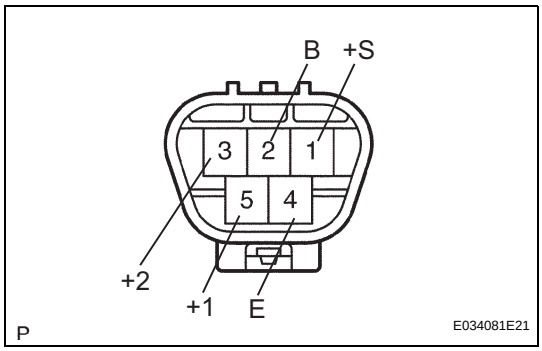

INSPECTION

1. INSPECT WINDSHIELD WIPER MOTOR ASSEMBLY

(a) Check the LO operation.

(1) Connect the battery's positive (+) lead to terminal 5 (+1) and the negative (-) lead to terminal 4 (E), and check that the motor operates at low speed (LO).

OK:

Motor operates at low speed (LO).

(b) Check the HI operation.

(1) Connect the battery's positive (+) lead to terminal 3 (+2) and the negative (-) lead to terminal 4 (E), and check that the motor operates at high speed (HI).

OK:

Motor operates at high speed (HI).

(c) Check the automatic stop operation.

(1) Connect the battery's positive (+) lead to terminal 5 (+1) and the negative (-) lead to terminal 4 (E). With the motor rotating at low speed (LO), disconnect terminal 5 (+1) to stop the wiper motor operation at any position other than the automatic stop position.

(2) Using SST, connect terminals 1 (+S) and 5 (+1). Then connect the battery's positive (+) lead to terminal 2 (B) and the negative (-) lead to terminal 4 (E) to restart the motor operation at low speed (LO).

SST 09843-18040

(3) Check that the motor stops automatically at the automatic stop position.

OK:

Refer to illustration.

If the result is not as specified, replace the motor assembly.

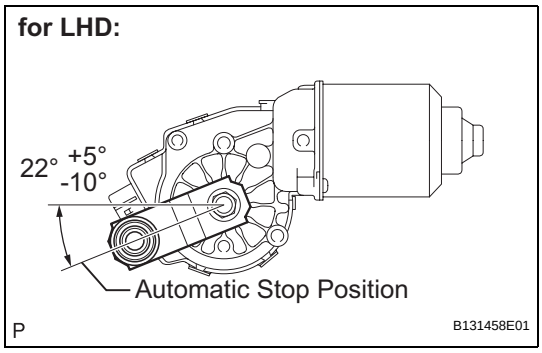

WW

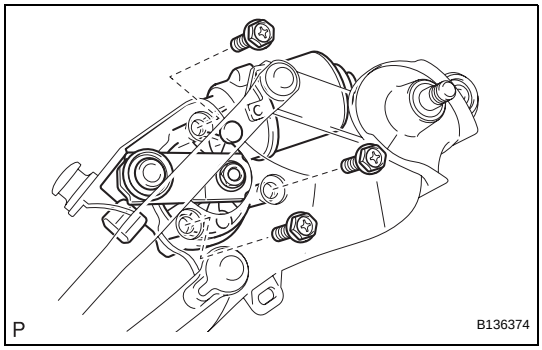

INSTALLATION

1. INSTALL WINDSHIELD WIPER MOTOR ASSEMBLY

(a) Install the wiper motor with the 3 bolts.

Torque: 5.4 N*m (55 kgf*cm, 48 in.*lbf)

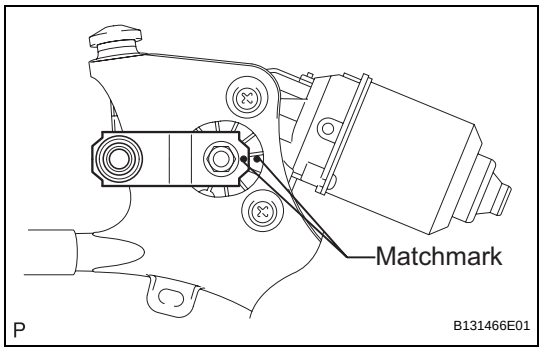

(b) Align the matchmarks on the crank arm and motor.
(c) Apply MP grease to the sliding parts of the wiper motor and the rod of the wiper link.
(d) Connect the rod of the wiper link to the wiper motor.

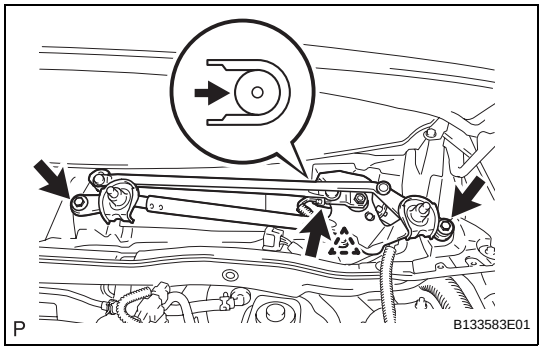

2. INSTALL WINDSHIELD WIPER MOTOR AND LINK ASSEMBLY

(a) Move the wiper motor and link in the direction shown by the arrow in the illustration to attach the wiper cushion to the body, and install the wiper motor and link.
(b) Install the 2 bolts.
Torque: 5.5 N*m (56 kgf*cm, 49 in.*lbf)
(c) Connect the connector.

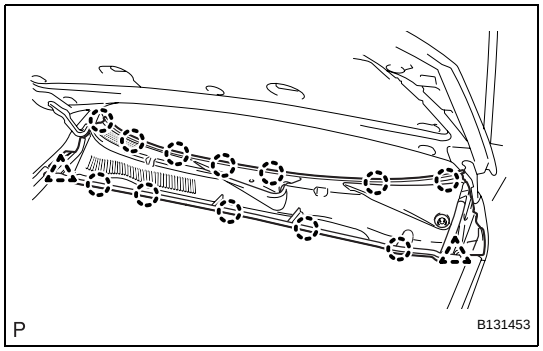

3. INSTALL COWL TOP VENTILATOR LOUVER

(a) Attach the 12 claws to install the louver.
(b) Install the 2 clips.

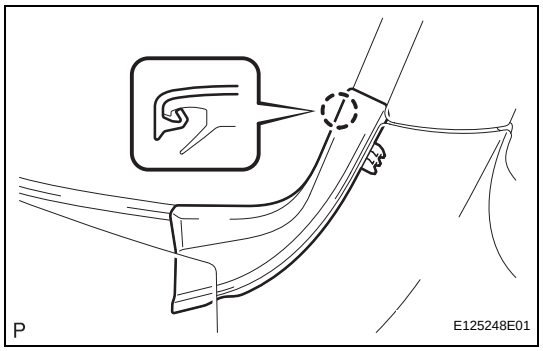

4. INSTALL FRONT FENDER TO COWL SIDE SEAL LH

(a) Attach the claw to install the front fender to cowl side seal.

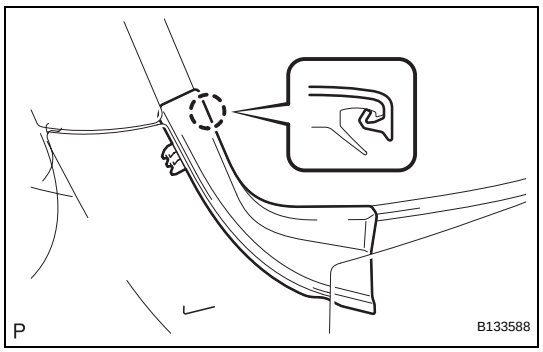

5. INSTALL FRONT FENDER TO COWL SIDE SEAL RH

(a) Attach the claw to install the front fender to cowl side seal.

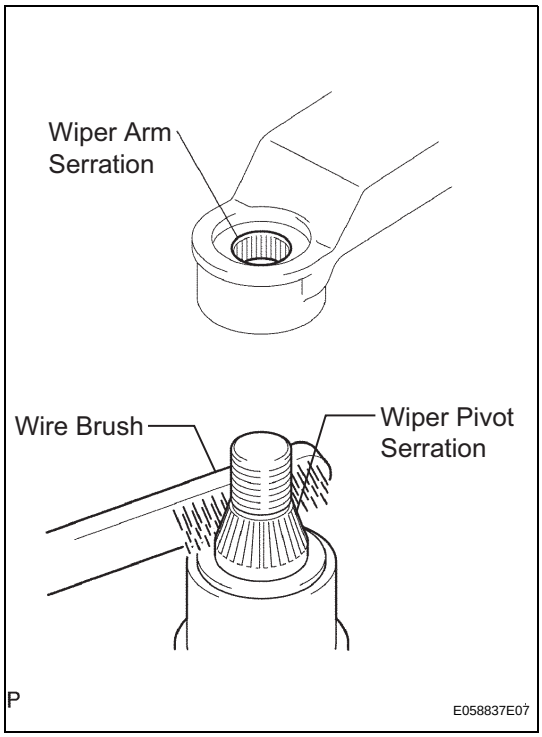

6. INSTALL FRONT WIPER ARM AND BLADE ASSEMBLY RH

(a) Stop the wiper motor at the automatic stop position.

(b) Clean the wiper arm serration with a round file or equivalent.

(c) Clean the wiper pivot serration with a wire brush.

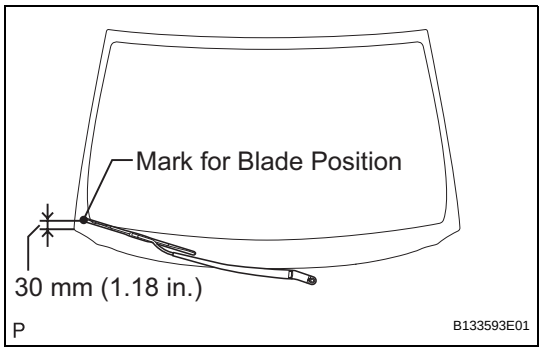

(d) Install the arm and blade with the nut. Make sure that the arm and blade comes to the position shown in the illustration.
Torque: 21 N*m (214 kgf*cm, 23 ft.*lbf)
HINT:
Hold down the arm hinge with your hand while tightening the nut.

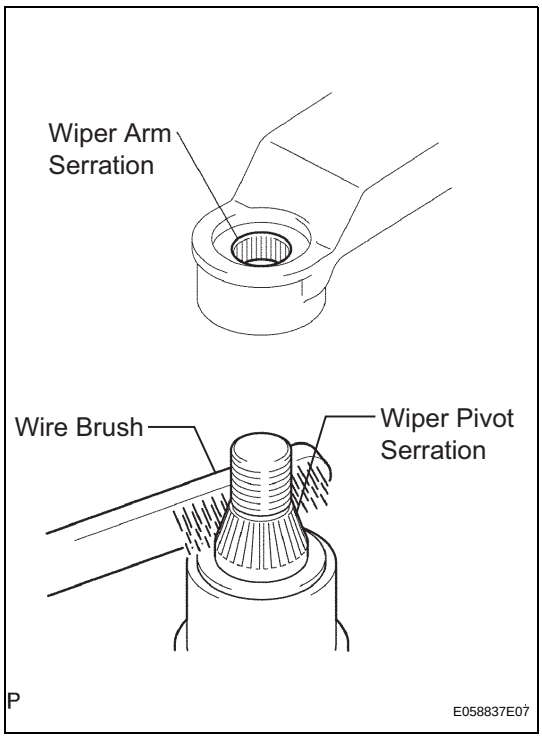

7. INSTALL FRONT WIPER ARM AND BLADE ASSEMBLY LH

(a) Clean the wiper arm serration with a round file or equivalent.

(b) Clean the wiper pivot serration with a wire brush.

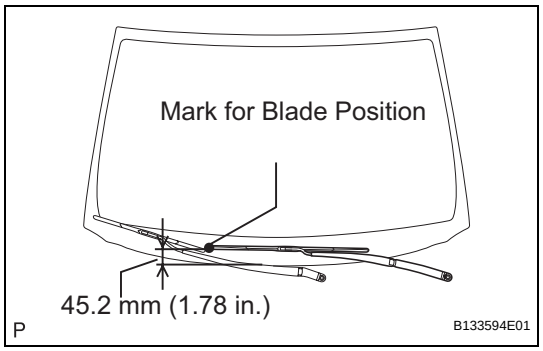

(c) Install the arm and blade with the nut. Make sure that the arm and blade comes to the position shown in the illustration.
Torque: 21 N*m (214 kgf*cm, 23 ft.*lbf)
HINT:
Hold down the arm hinge with your hand while tightening the nut.

(d) Operate the front wipers while spraying water or washer fluid on the windshield. Ensure that there is no interference between the blades and pillar.

8. INSTALL FRONT WIPER ARM HEAD CAP

(a) Install the 2 caps.

9. CONNECT CABLE TO NEGATIVE BATTERY TERMINAL

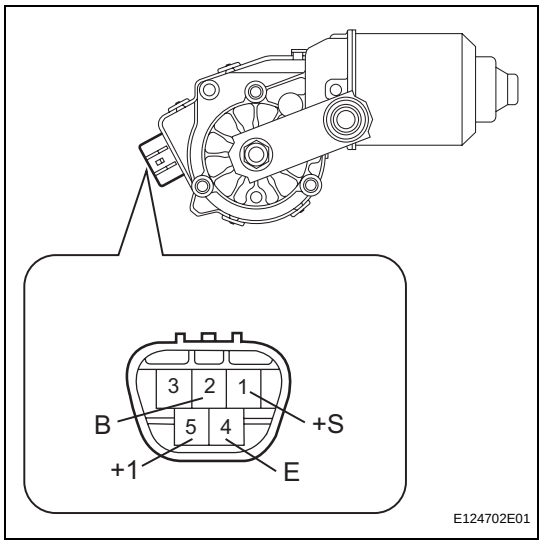

FRONT WIPER MOTOR

INSPECTION

1. INSPECT FRONT WIPER MOTOR

(a) Check the LO operation.

(1) Connect the battery's positive (+) lead to terminal 5 (+1) and the negative (-) lead to terminal 4 (E), and check that the front wiper motor operates at low speed (LO).

OK:

Front wiper motor operates at low speed (LO).

If the result is not as specified, replace the motor.

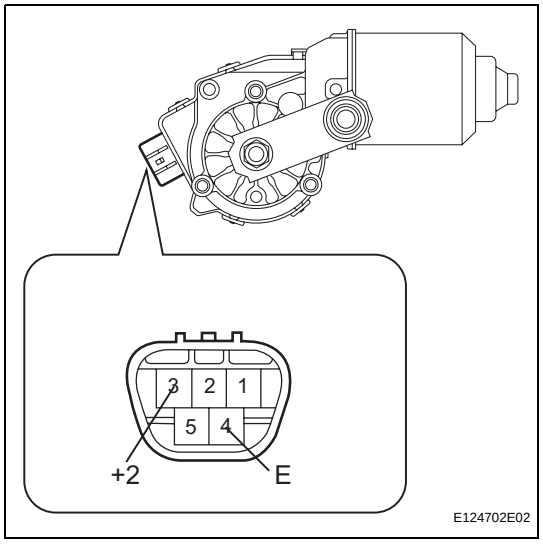

(b) Check the HI operation.

(1) Connect the battery's positive (+) lead to terminal 3 (+2) and the negative battery (-) lead to terminal 4 (E), and check that the front wiper motor operates at high speed (HI).

OK:

Front wiper motor operates at high speed (HI).

If the result is not as specified, replace the motor.

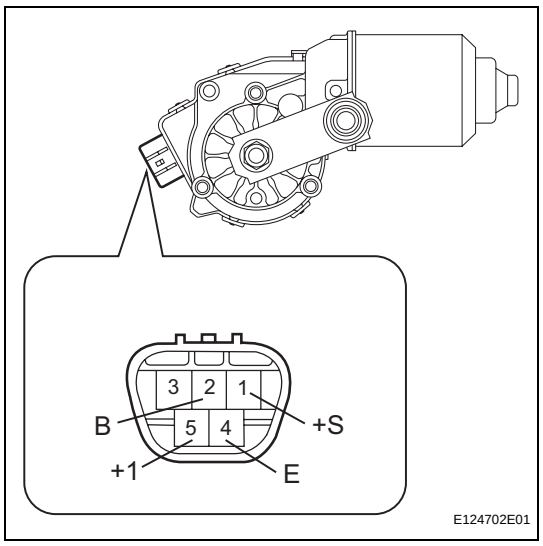

(c) Check the automatic stop operation.

(1) Connect the battery's positive (+) lead to terminal 5 (+1) and the negative (-) lead to terminal 4 (E). With the motor rotating at low speed (LO), disconnect the lead from terminal 5 (+1) to stop the wiper motor operation at any position other than the automatic stop position.

(2) Using SST, connect the terminals 1 (+S) and 5 (+1). Then connect the battery's positive (+) lead to terminal 2 (B) to restart the motor operation at low speed (LO).

WW

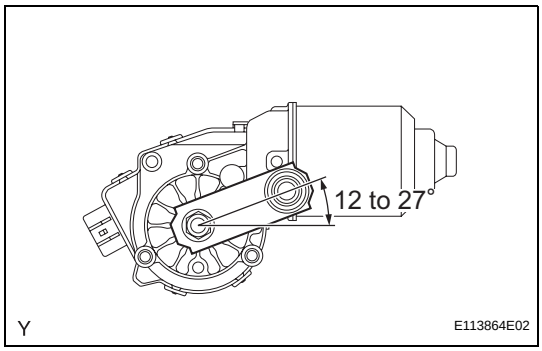

(3) Check that the motor stops automatically at the automatic stop position.
OK:
Refer to the illumination.
If the result is not as specified, replace the motor.

FRONT WIPER MOTOR AND LINK

COMPONENTS

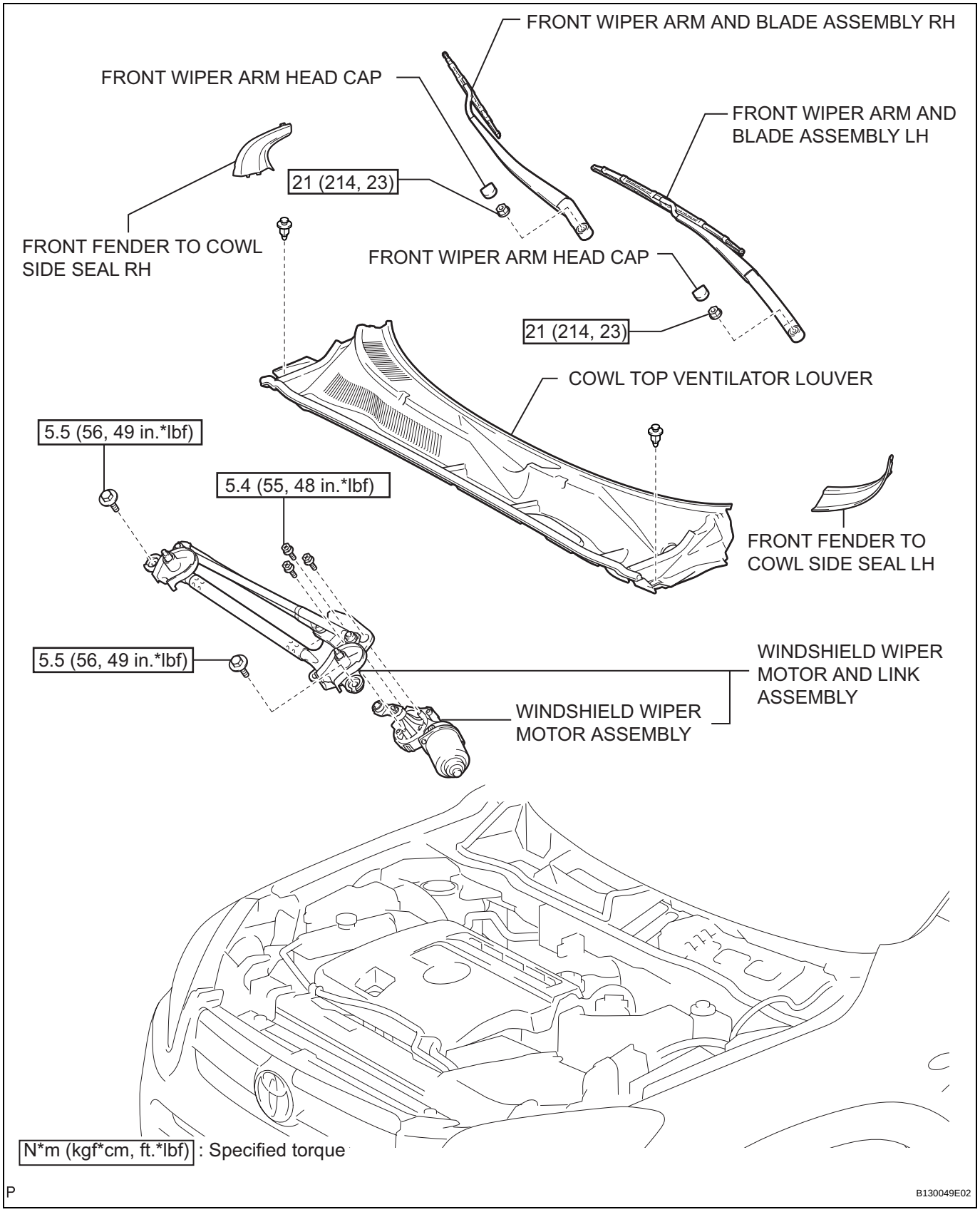

WW

REMOVAL

1. **DISCONNECT CABLE FROM NEGATIVE BATTERY TERMINAL**
   CAUTION:
   Wait at least 90 seconds after disconnecting the cable from the negative (-) battery terminal to prevent airbag and seat belt pretensioner activation.

2. **REMOVE FRONT WIPER ARM HEAD CAP**
   (a) Remove the 2 caps.

3. **REMOVE FRONT WIPER ARM AND BLADE ASSEMBLY LH**
   (a) Remove the nut and arm and blade.

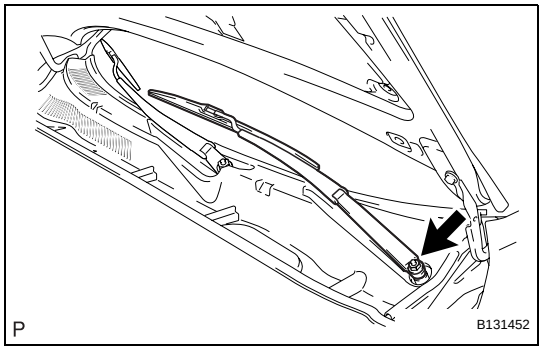

4. **REMOVE FRONT WIPER ARM AND BLADE ASSEMBLY RH**
   (a) Remove the nut and arm and blade.

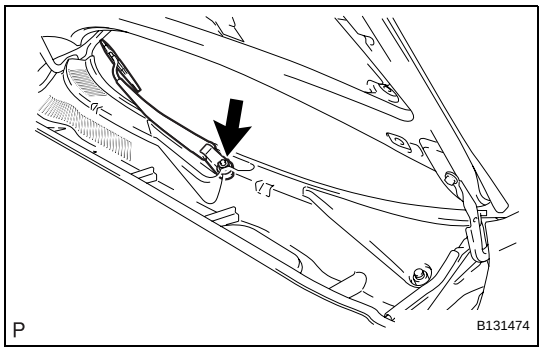

5. **REMOVE FRONT FENDER TO COWL SIDE SEAL LH**
   (a) Detach the claw and remove the front fender to cowl side seal.

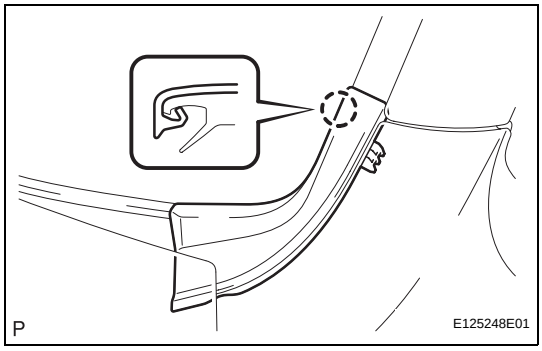

6. **REMOVE FRONT FENDER TO COWL SIDE SEAL RH**
   (a) Detach the claw and remove the front fender to cowl side seal.

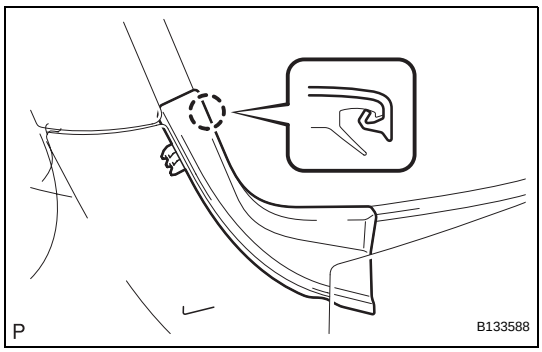

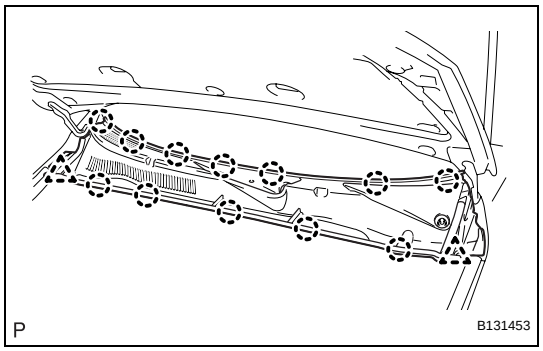

7. REMOVE COWL TOP VENTILATOR LOUVER

(a) Remove the 2 clips.

(b) Detach the 12 claws and remove the louver.

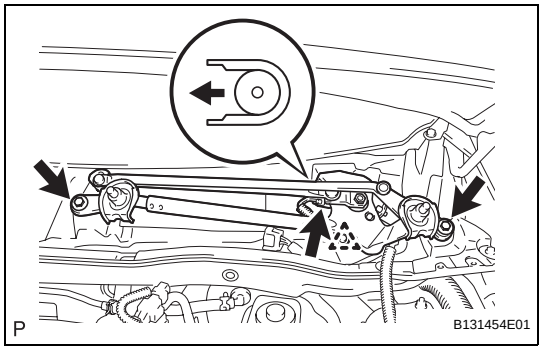

8. REMOVE WINDSHIELD WIPER MOTOR AND LINK ASSEMBLY

(a) Remove the 2 bolts.

(b) Move the wiper cushion in the direction shown by the arrow in the illustration to detach the wiper cushion from the body, and remove the wiper motor and link.

(c) Disconnect the connector and detach the clamp.

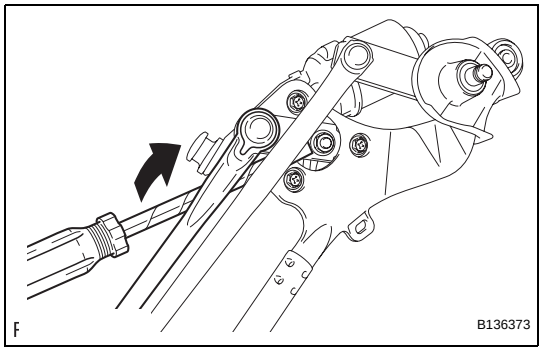

9. REMOVE WINDSHIELD WIPER MOTOR ASSEMBLY

(a) Using a screwdriver, disconnect the rod of the wiper link from the wiper motor as shown in the illustration.
HINT:
Tape the screwdriver tip before use.

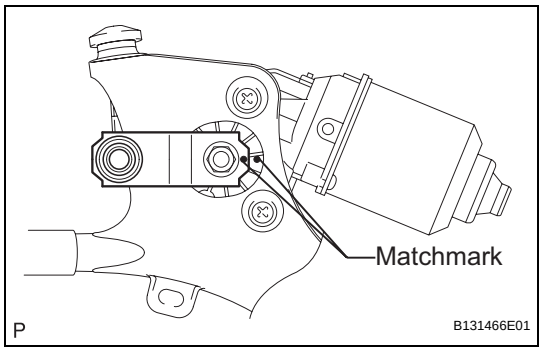

(b) Put matchmarks on the crank arm and motor, as shown in the illustration.

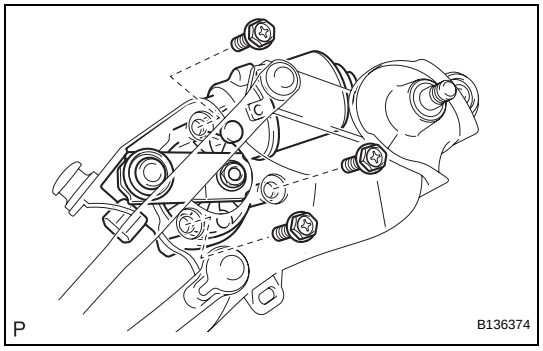

(c) Remove the 3 bolts and wiper motor.

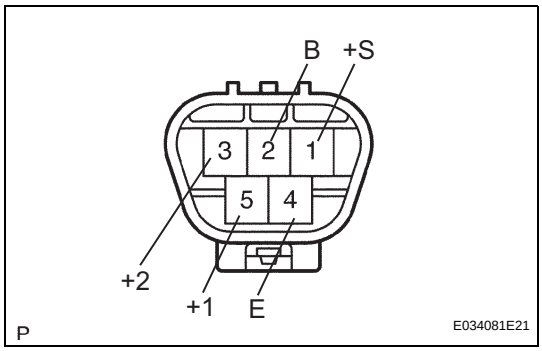

INSPECTION

1. INSPECT WINDSHIELD WIPER MOTOR ASSEMBLY

(a) Check the LO operation.

(1) Connect the battery's positive (+) lead to terminal 5 (+1) and the negative (-) lead to terminal 4 (E), and check that the motor operates at low speed (LO).

OK:

Motor operates at low speed (LO).

(b) Check the HI operation.

(1) Connect the battery's positive (+) lead to terminal 3 (+2) and the negative (-) lead to terminal 4 (E), and check that the motor operates at high speed (HI).

OK:

Motor operates at high speed (HI).

(c) Check the automatic stop operation.

(1) Connect the battery's positive (+) lead to terminal 5 (+1) and the negative (-) lead to terminal 4 (E). With the motor rotating at low speed (LO), disconnect terminal 5 (+1) to stop the wiper motor operation at any position other than the automatic stop position.

(2) Using SST, connect terminals 1 (+S) and 5 (+1). Then connect the battery's positive (+) lead to terminal 2 (B) and the negative (-) lead to terminal 4 (E) to restart the motor operation at low speed (LO).

SST 09843-18040

(3) Check that the motor stops automatically at the automatic stop position.

OK:

Refer to illustration.

If the result is not as specified, replace the motor assembly.

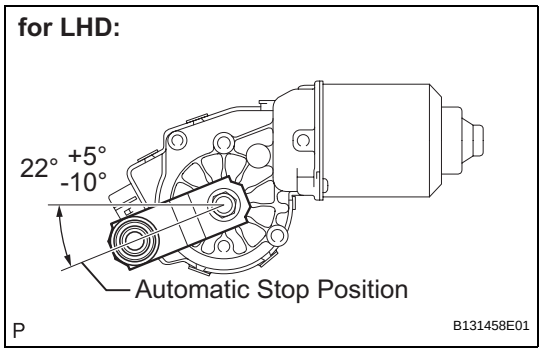

WW

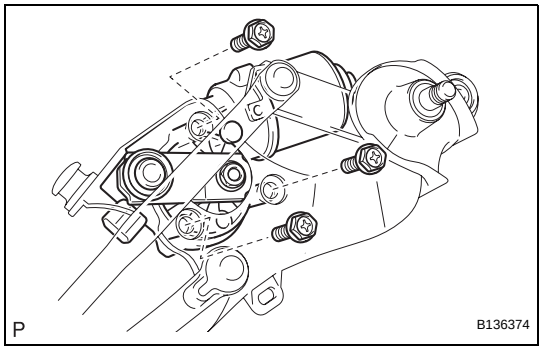

INSTALLATION

1. INSTALL WINDSHIELD WIPER MOTOR ASSEMBLY

(a) Install the wiper motor with the 3 bolts.

Torque: 5.4 N*m (55 kgf*cm, 48 in.*lbf)

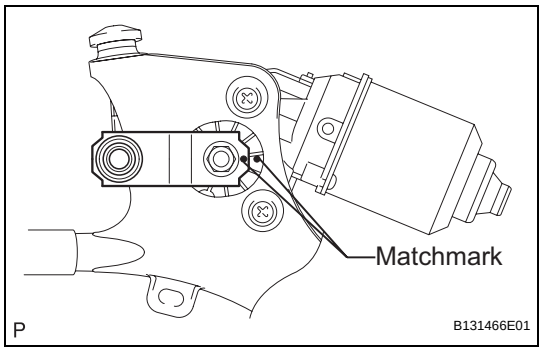

(b) Align the matchmarks on the crank arm and motor.
(c) Apply MP grease to the sliding parts of the wiper motor and the rod of the wiper link.
(d) Connect the rod of the wiper link to the wiper motor.

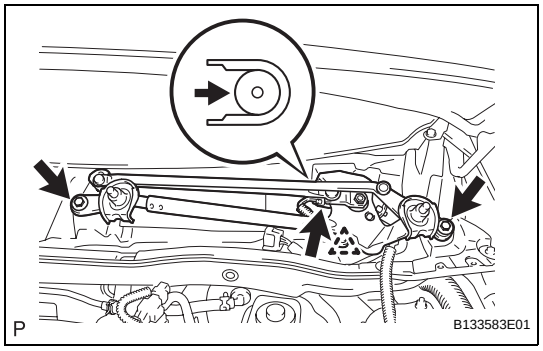

2. INSTALL WINDSHIELD WIPER MOTOR AND LINK ASSEMBLY

(a) Move the wiper motor and link in the direction shown by the arrow in the illustration to attach the wiper cushion to the body, and install the wiper motor and link.
(b) Install the 2 bolts.
Torque: 5.5 N*m (56 kgf*cm, 49 in.*lbf)
(c) Connect the connector.

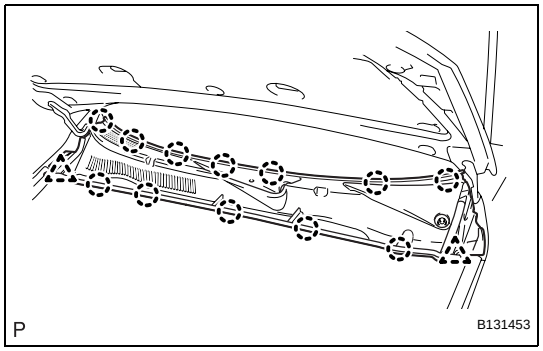

3. INSTALL COWL TOP VENTILATOR LOUVER

(a) Attach the 12 claws to install the louver.
(b) Install the 2 clips.

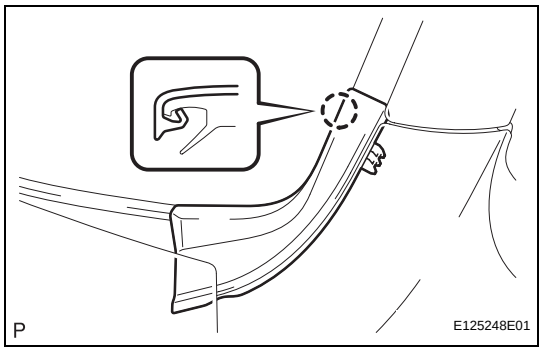

4. INSTALL FRONT FENDER TO COWL SIDE SEAL LH

(a) Attach the claw to install the front fender to cowl side seal.

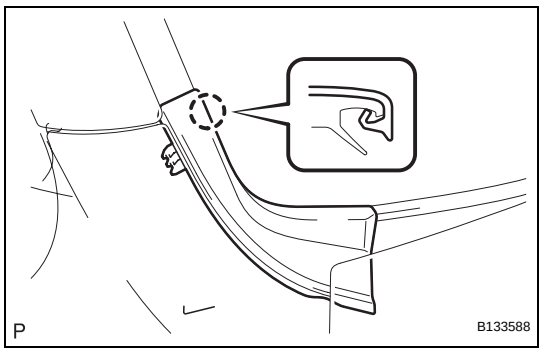

5. INSTALL FRONT FENDER TO COWL SIDE SEAL RH

(a) Attach the claw to install the front fender to cowl side seal.

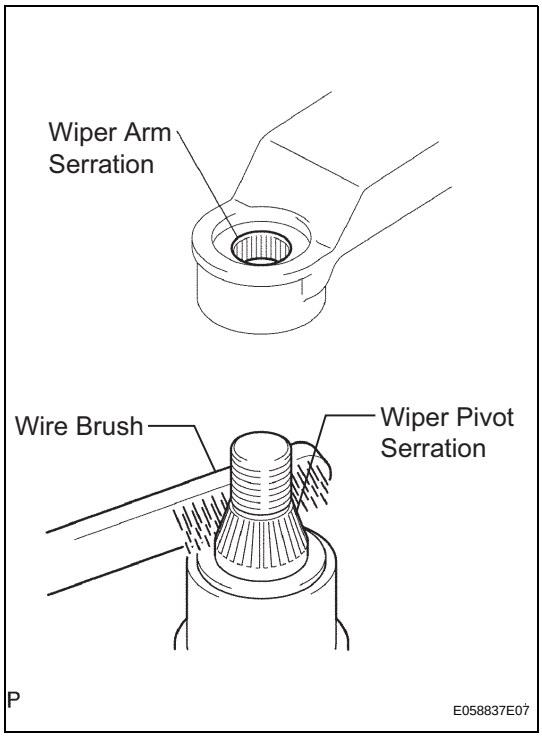

6. INSTALL FRONT WIPER ARM AND BLADE ASSEMBLY RH

(a) Stop the wiper motor at the automatic stop position.

(b) Clean the wiper arm serration with a round file or equivalent.

(c) Clean the wiper pivot serration with a wire brush.

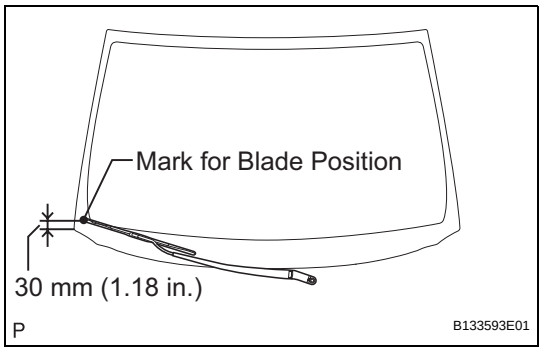

(d) Install the arm and blade with the nut. Make sure that the arm and blade comes to the position shown in the illustration.
Torque: 21 N*m (214 kgf*cm, 23 ft.*lbf)
HINT:
Hold down the arm hinge with your hand while tightening the nut.

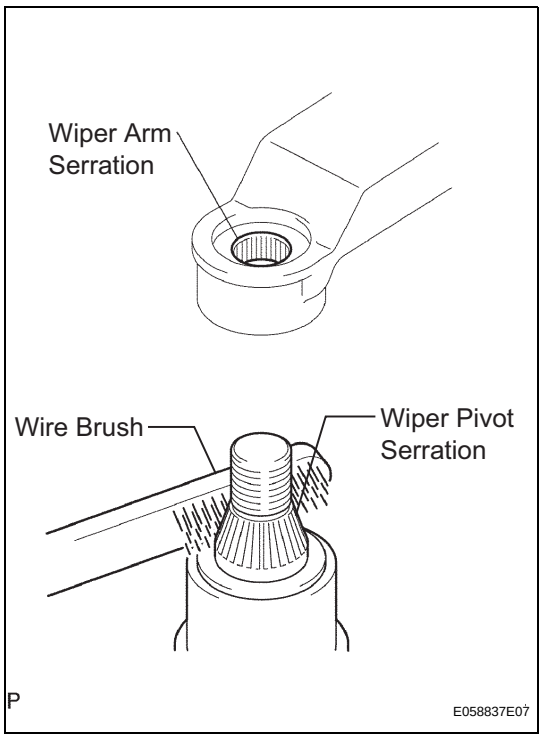

7. INSTALL FRONT WIPER ARM AND BLADE ASSEMBLY LH

(a) Clean the wiper arm serration with a round file or equivalent.

(b) Clean the wiper pivot serration with a wire brush.

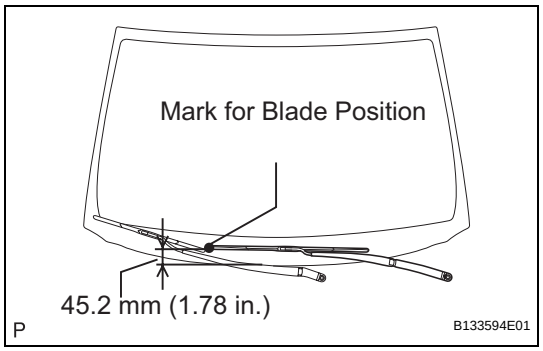

(c) Install the arm and blade with the nut. Make sure that the arm and blade comes to the position shown in the illustration.
Torque: 21 N*m (214 kgf*cm, 23 ft.*lbf)
HINT:
Hold down the arm hinge with your hand while tightening the nut.

(d) Operate the front wipers while spraying water or washer fluid on the windshield. Ensure that there is no interference between the blades and pillar.

8. INSTALL FRONT WIPER ARM HEAD CAP

(a) Install the 2 caps.

9. CONNECT CABLE TO NEGATIVE BATTERY TERMINAL

FRONT WIPER MOTOR AND LINK

COMPONENTS

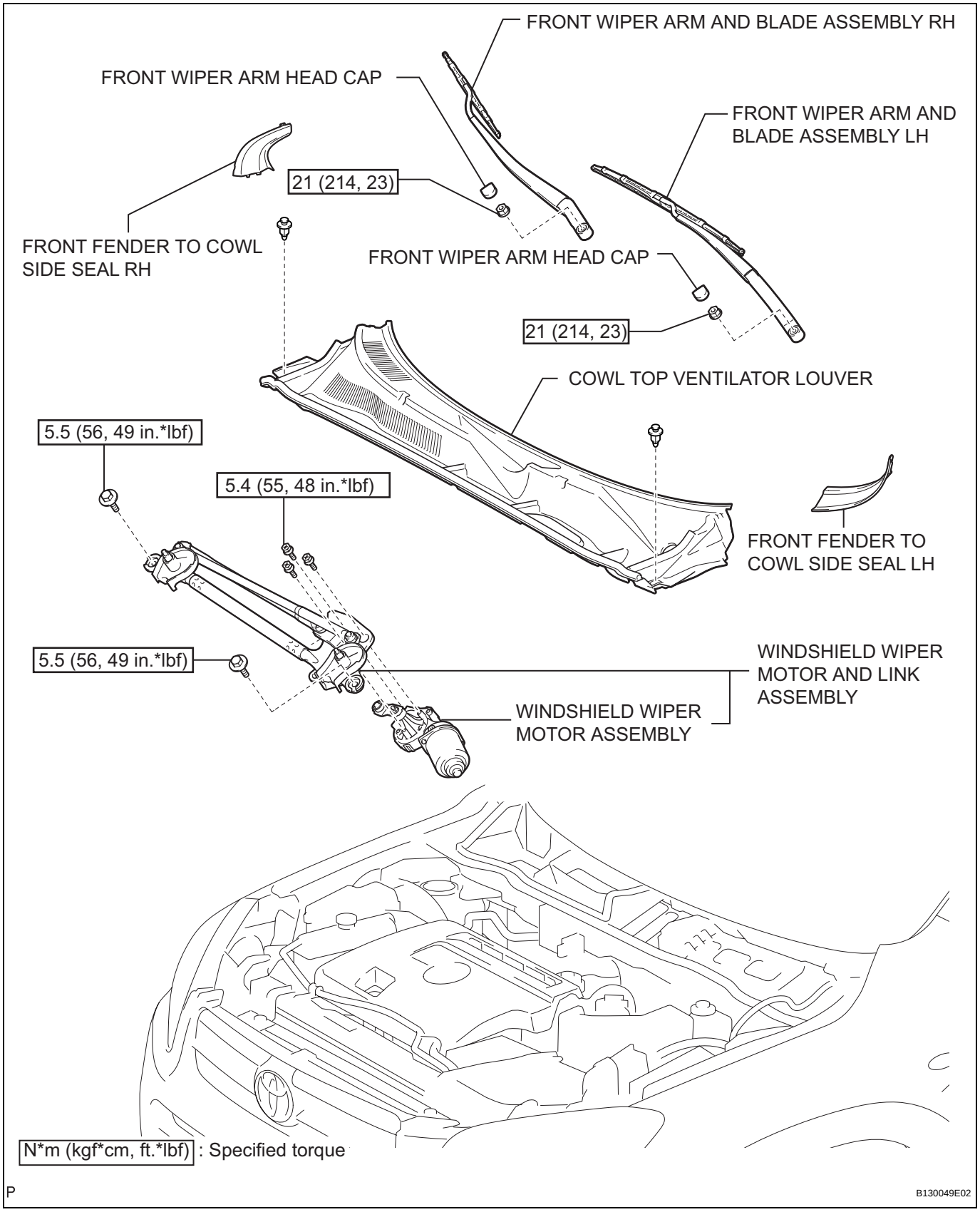

WW

REMOVAL

1. **DISCONNECT CABLE FROM NEGATIVE BATTERY TERMINAL**
   CAUTION:
   Wait at least 90 seconds after disconnecting the cable from the negative (-) battery terminal to prevent airbag and seat belt pretensioner activation.

2. **REMOVE FRONT WIPER ARM HEAD CAP**
   (a) Remove the 2 caps.

3. **REMOVE FRONT WIPER ARM AND BLADE ASSEMBLY LH**
   (a) Remove the nut and arm and blade.

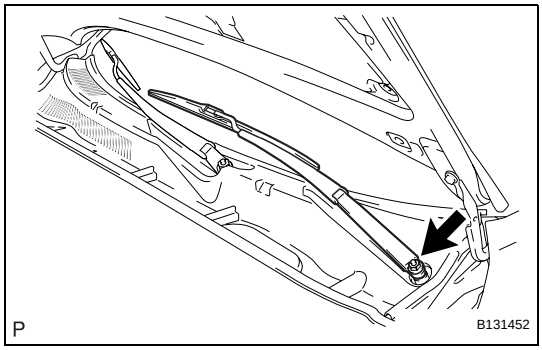

4. **REMOVE FRONT WIPER ARM AND BLADE ASSEMBLY RH**
   (a) Remove the nut and arm and blade.

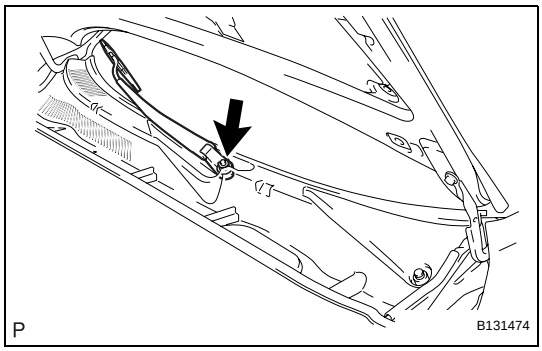

5. **REMOVE FRONT FENDER TO COWL SIDE SEAL LH**
   (a) Detach the claw and remove the front fender to cowl side seal.

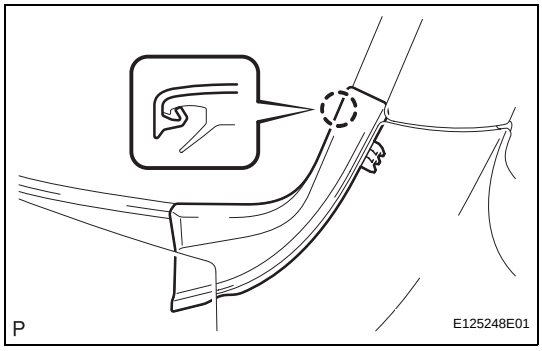

6. **REMOVE FRONT FENDER TO COWL SIDE SEAL RH**
   (a) Detach the claw and remove the front fender to cowl side seal.

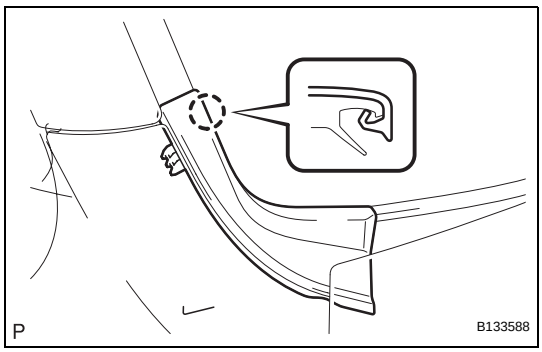

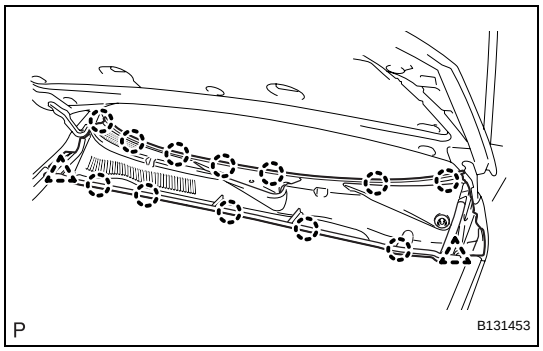

7. REMOVE COWL TOP VENTILATOR LOUVER

(a) Remove the 2 clips.

(b) Detach the 12 claws and remove the louver.

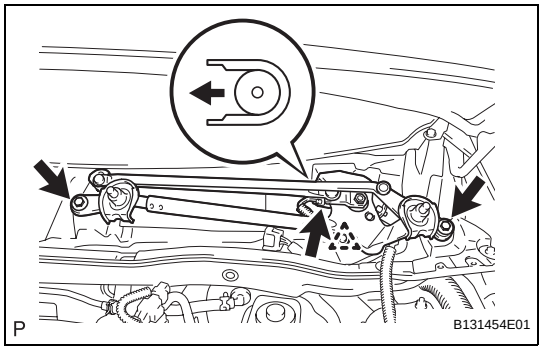

8. REMOVE WINDSHIELD WIPER MOTOR AND LINK ASSEMBLY

(a) Remove the 2 bolts.

(b) Move the wiper cushion in the direction shown by the arrow in the illustration to detach the wiper cushion from the body, and remove the wiper motor and link.

(c) Disconnect the connector and detach the clamp.

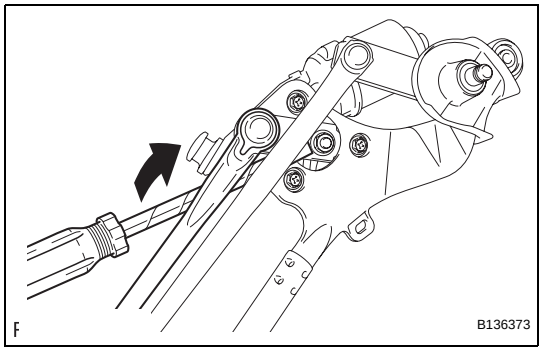

9. REMOVE WINDSHIELD WIPER MOTOR ASSEMBLY

(a) Using a screwdriver, disconnect the rod of the wiper link from the wiper motor as shown in the illustration.
HINT:
Tape the screwdriver tip before use.

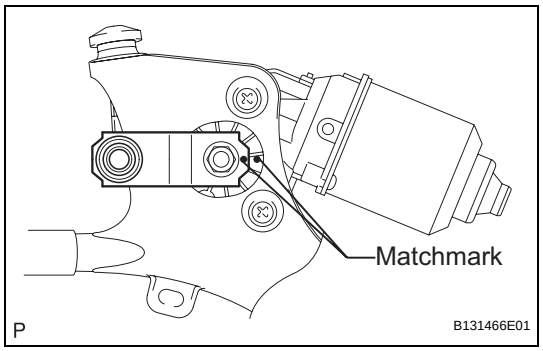

(b) Put matchmarks on the crank arm and motor, as shown in the illustration.

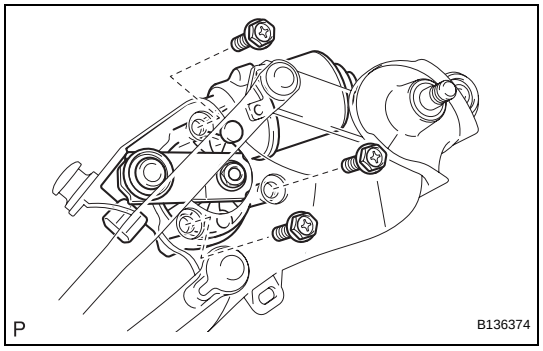

(c) Remove the 3 bolts and wiper motor.

FRONT WIPER RUBBER

COMPONENTS

for LH

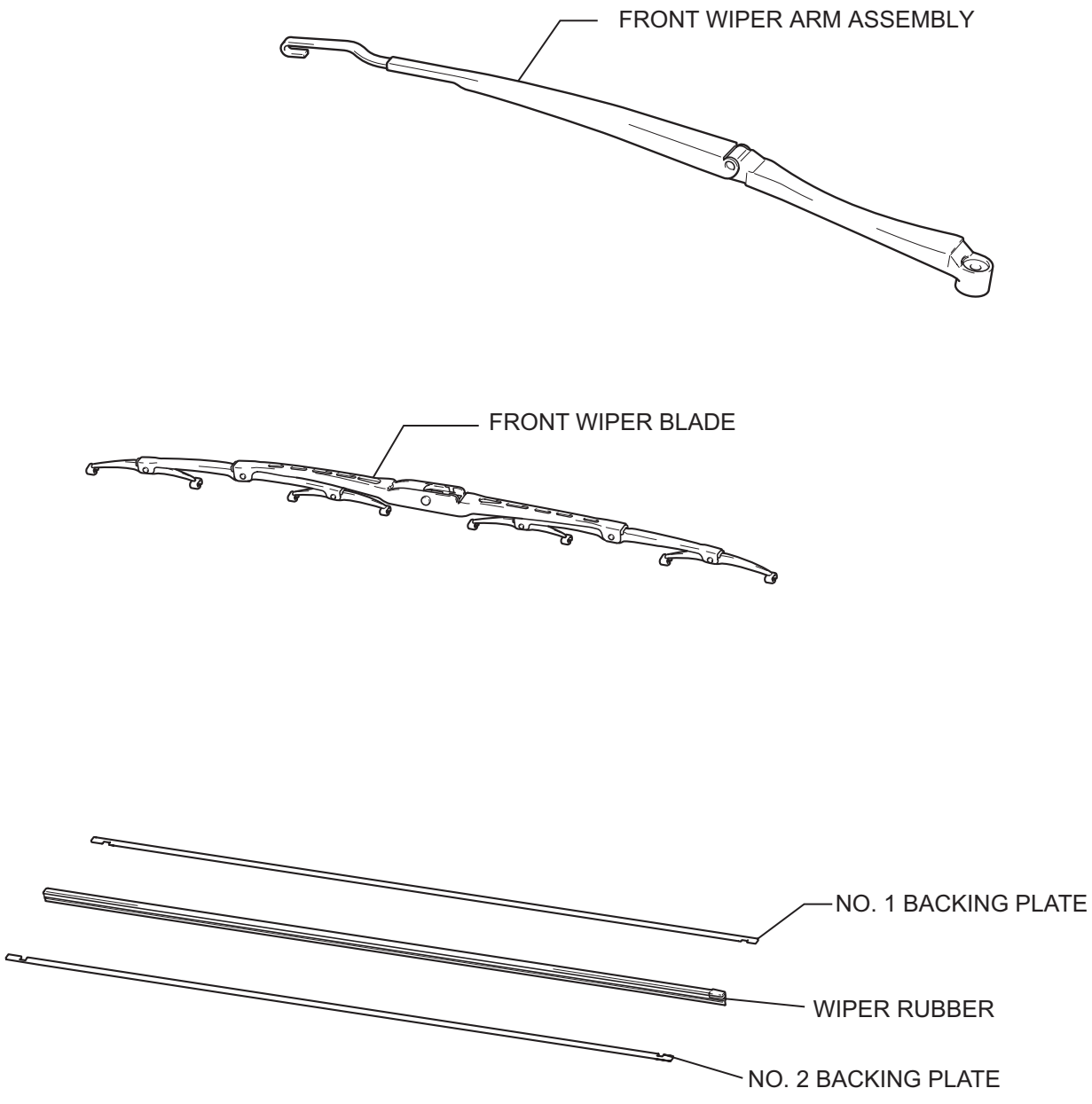

P

B140227E01

WW

for RH

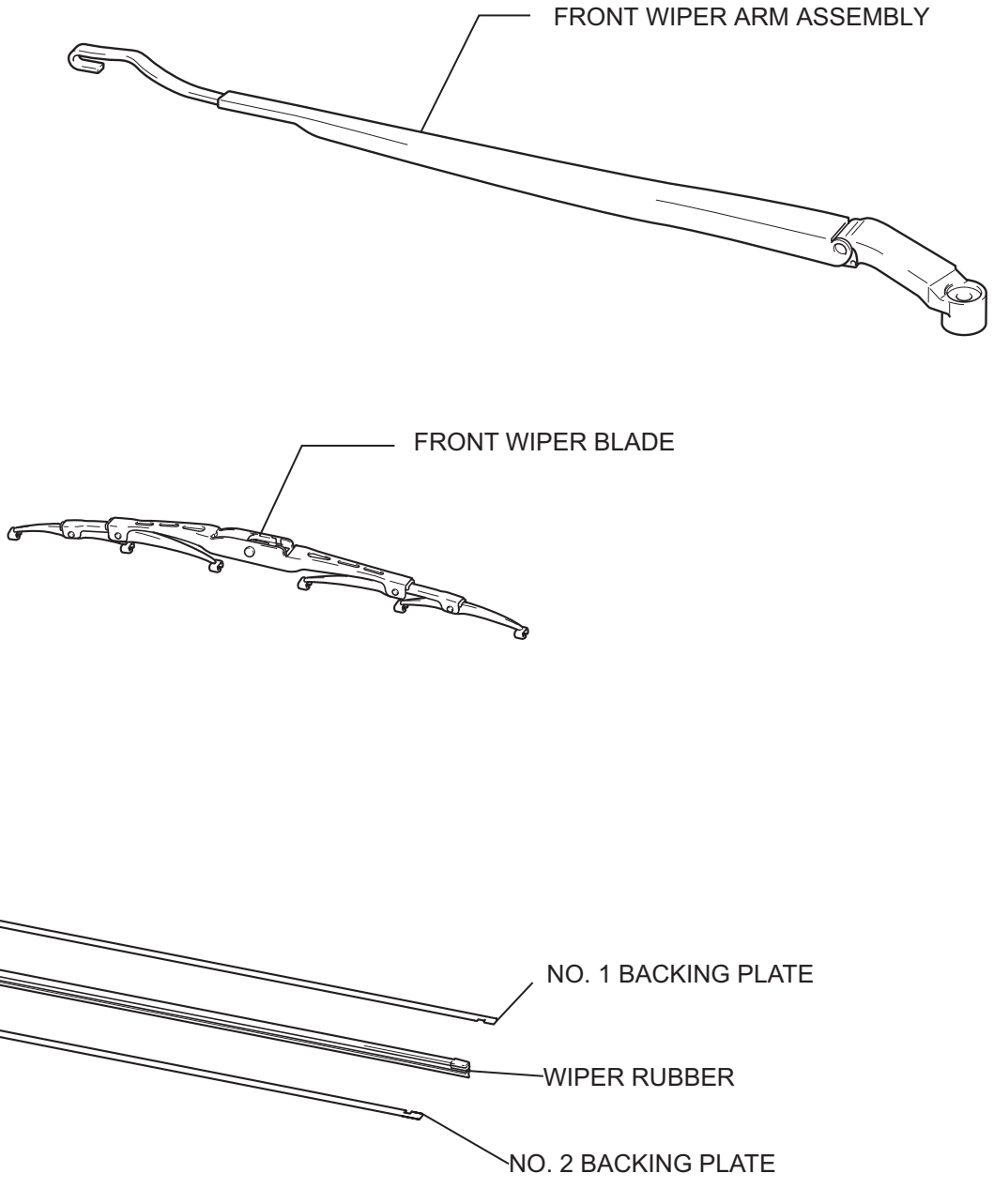

P

B140228E01

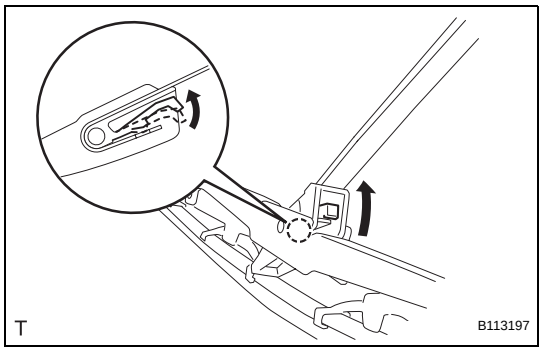

REMOVAL

1. REMOVE FRONT WIPER BLADE

(a) Detach the claw as shown in the illustration.

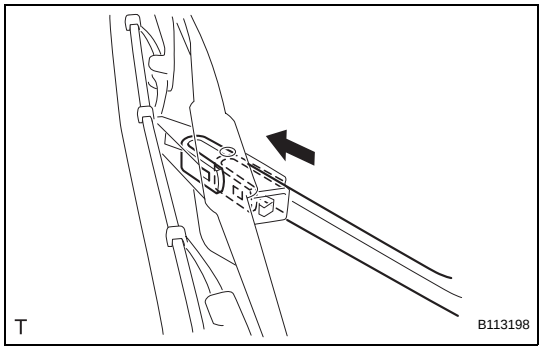

(b) Remove the wiper blade as shown in the illustration.
NOTICE:
Do not fold the wiper arm with the wiper blade removed. The arm tip may damage the windshield surface.

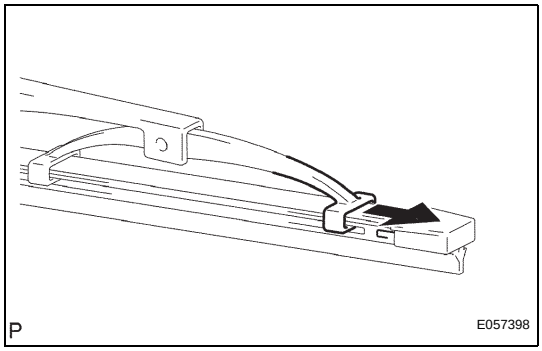

2. REMOVE WIPER RUBBER

(a) Detach the head part (large side) of the wiper rubber from the wiper blade.

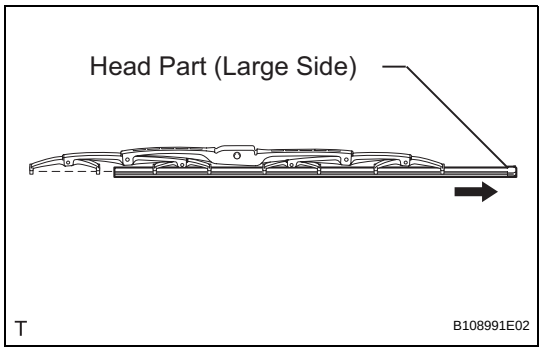

(b) Remove the wiper rubber in the direction indicated by the arrow in the illustration.
NOTICE:
Do not pull out the wiper rubber forcibly. Doing so will deform the backing plate or damage the blade claw.

(c) Remove the 2 wiper rubber backing plates from the wiper rubber.

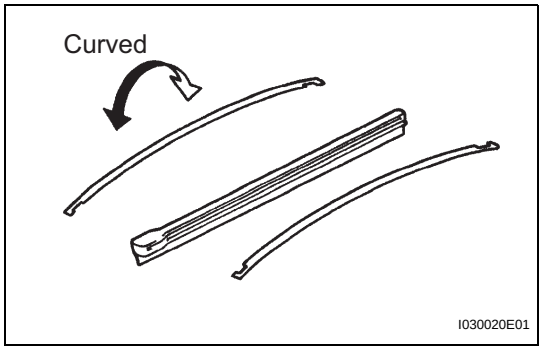

INSTALLATION

1. INSTALL WIPER RUBBER

(a) Install the 2 packing plates to the rubber.
NOTICE:
Install the packing plates facing the proper direction.

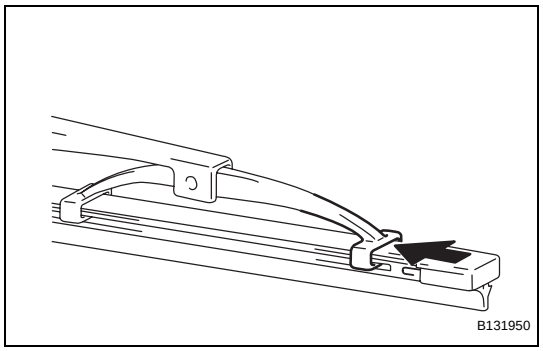

(b) Install the wiper rubber to the claw of the wiper blade in the direction indicated by the arrow in the illustration.
HINT:
Install the wiper rubber so that the head part (large side) of the wiper rubber faces the arm axle side.

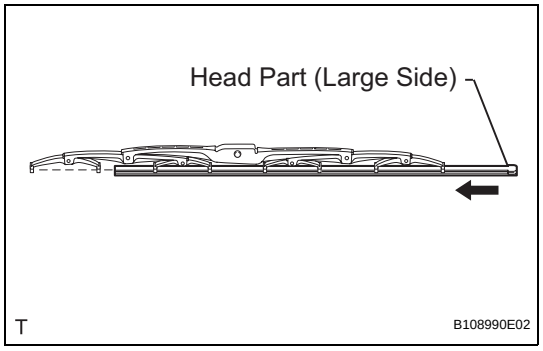

(c) Attach the head part (large side) of the wiper rubber to the rear end side claw of the wiper blade.
NOTICE:
Push the wiper blade into the grooves of the wiper rubber to attach them completely.

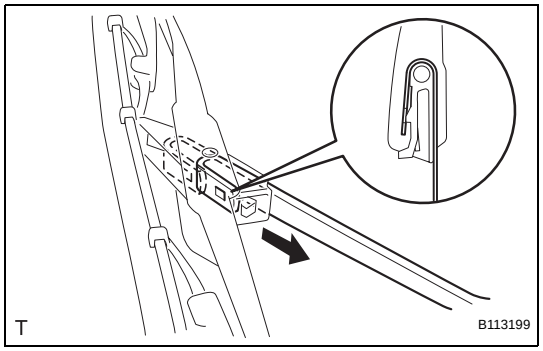

2. INSTALL FRONT WIPER BLADE

(a) Attach the claw to install the wiper blade.

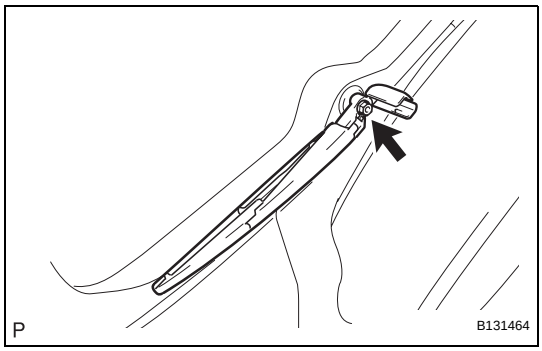

(d) Remove the nut and arm and blade.

7. REMOVE REAR WIPER MOTOR GROMMET

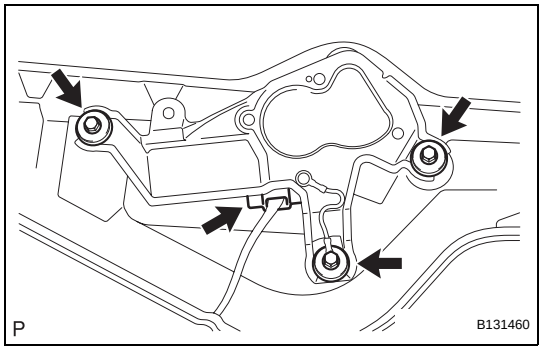

8. REMOVE REAR WIPER MOTOR ASSEMBLY

(a) Disconnect the connector.
(b) Remove the 3 bolts and wiper motor.

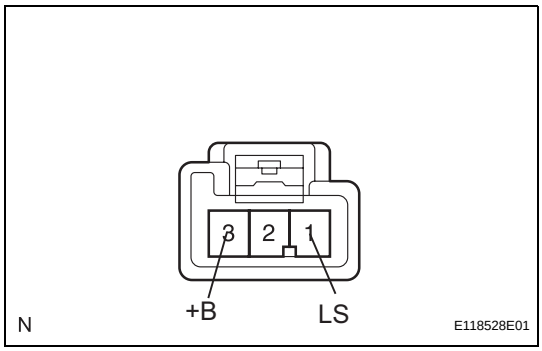

INSPECTION

1. INSPECT REAR WIPER MOTOR

(a) Connect the battery's positive (+) lead to terminal 3 (+B) and the negative (-) lead to terminal 1 (LS).
(b) Check that the rear wiper motor operates.
OK:
Rear wiper motor operates.
NOTICE:
Check that the body ground is connected.
If the result is not as specified, replace the motor.

INSTALLATION

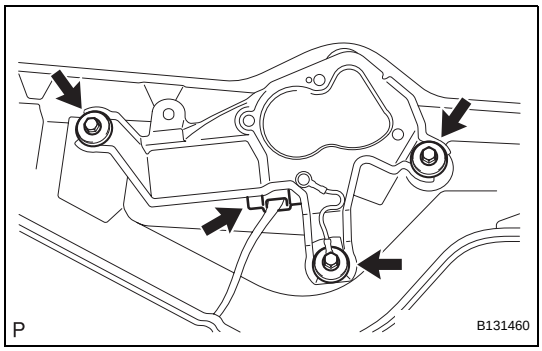

1. INSTALL REAR WIPER MOTOR ASSEMBLY

(a) Install the wiper motor with the 3 bolts.
Torque: 5.5 N*m (56 kgf*cm, 49 in.*lbf)
(b) Connect the connector.

2. INSTALL REAR WIPER MOTOR GROMMET

3. INSTALL REAR WIPER ARM AND BLADE ASSEMBLY

(a) Stop the wiper motor at the automatic stop position.

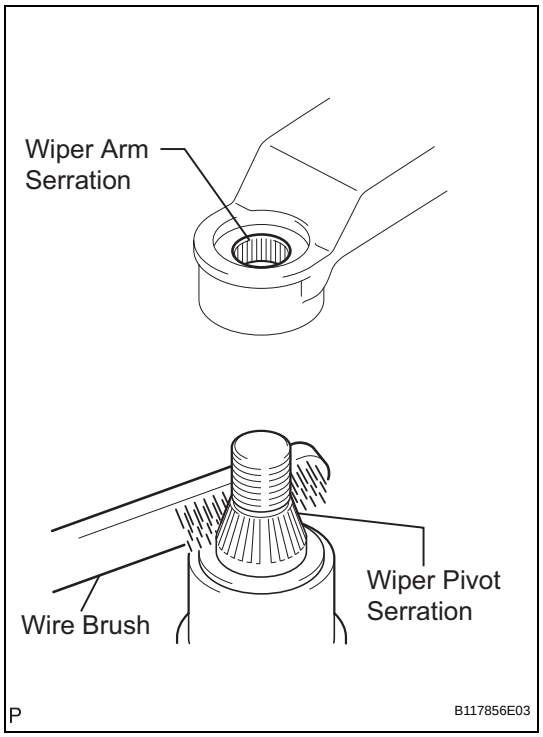

(b) Clean the wiper arm serration with a round file or equivalent.
(c) Clean the wiper pivot serration with a wire brush.

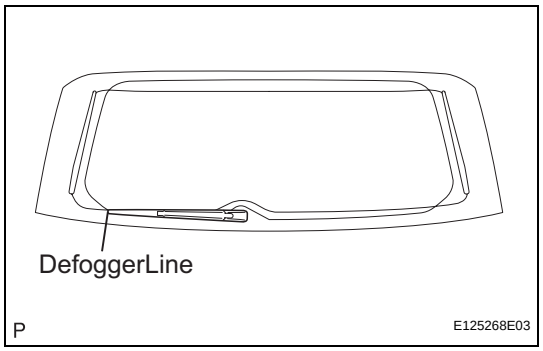

(d) Install the arm and blade with the nut. Make sure that the arm and blade comes to the position shown in the illustration.
Torque: 5.5 N*m (56 kgf*cm, 49 in.*lbf)
HINT:
- Hold down the arm hinge by hand while tightening the nut.
- Install the arm and blade so that the rear wiper blade is aligned with the ceramic line.

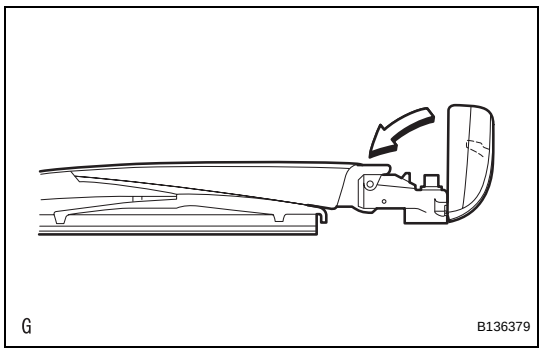

(e) Install the cap.

4. **INSTALL BACK DOOR TRIM BOARD ASSEMBLY (See page ED-66)**
5. **INSTALL BACK DOOR SIDE GARNISH RH (See page ED-67)**
6. **INSTALL BACK DOOR SIDE GARNISH LH (See page ED-67)**
7. **INSTALL BACK DOOR CENTER GARNISH (See page ED-67)**
8. **CONNECT CABLE TO NEGATIVE BATTERY TERMINAL**

REAR WIPER MOTOR

COMPONENTS

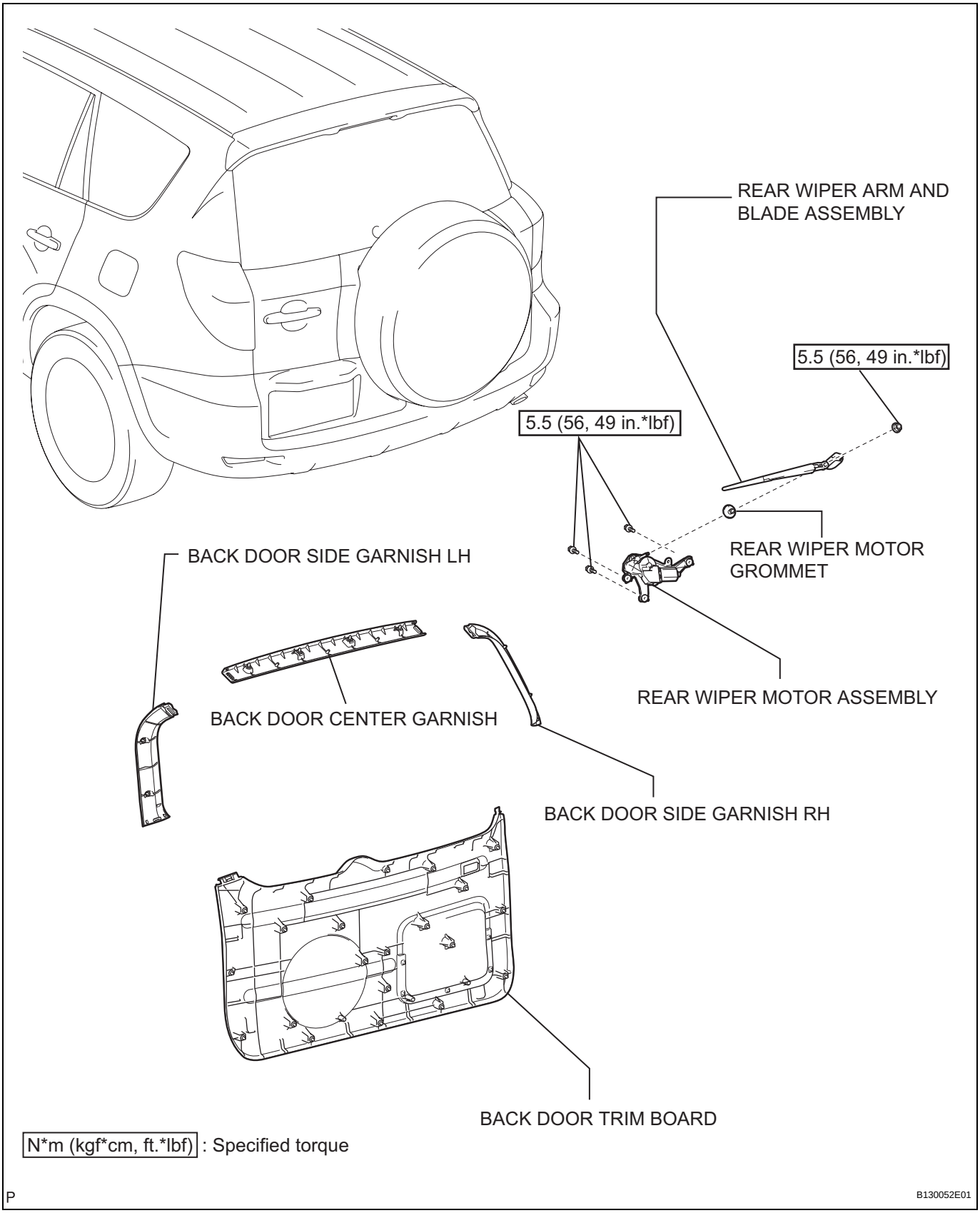

WW

REMOVAL

1. **DISCONNECT CABLE FROM NEGATIVE BATTERY TERMINAL**
   CAUTION:
   Wait at least 90 seconds after disconnecting the cable from the negative (-) battery terminal to prevent airbag and seat belt pretensioner activation.
2. **REMOVE BACK DOOR CENTER GARNISH (See page ED-59)**
3. **REMOVE BACK DOOR SIDE GARNISH LH (See page ED-59)**
4. **REMOVE BACK DOOR SIDE GARNISH RH (See page ED-59)**
5. **REMOVE BACK DOOR TRIM BOARD (See page ED-59)**
6. **REMOVE REAR WIPER ARM AND BLADE ASSEMBLY**
   (a) Widen each end of the cap 5 mm (0.19in).

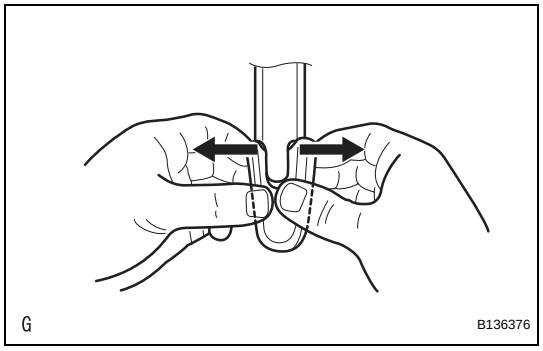

(b) Lift the both widened ends of the cap.

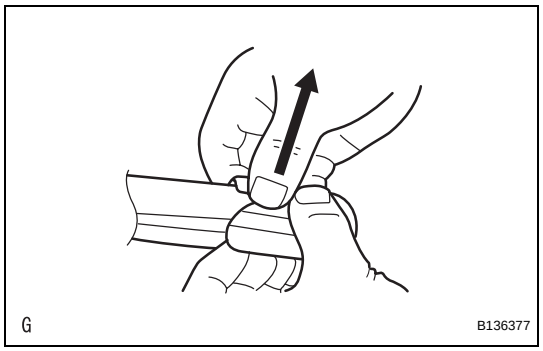

(c) Rotate the cap. Fix the cap in place.

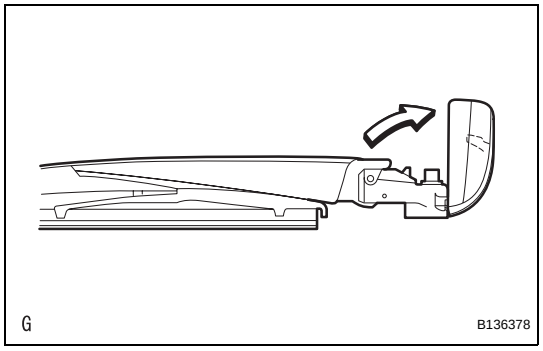

REAR WIPER RUBBER

COMPONENTS

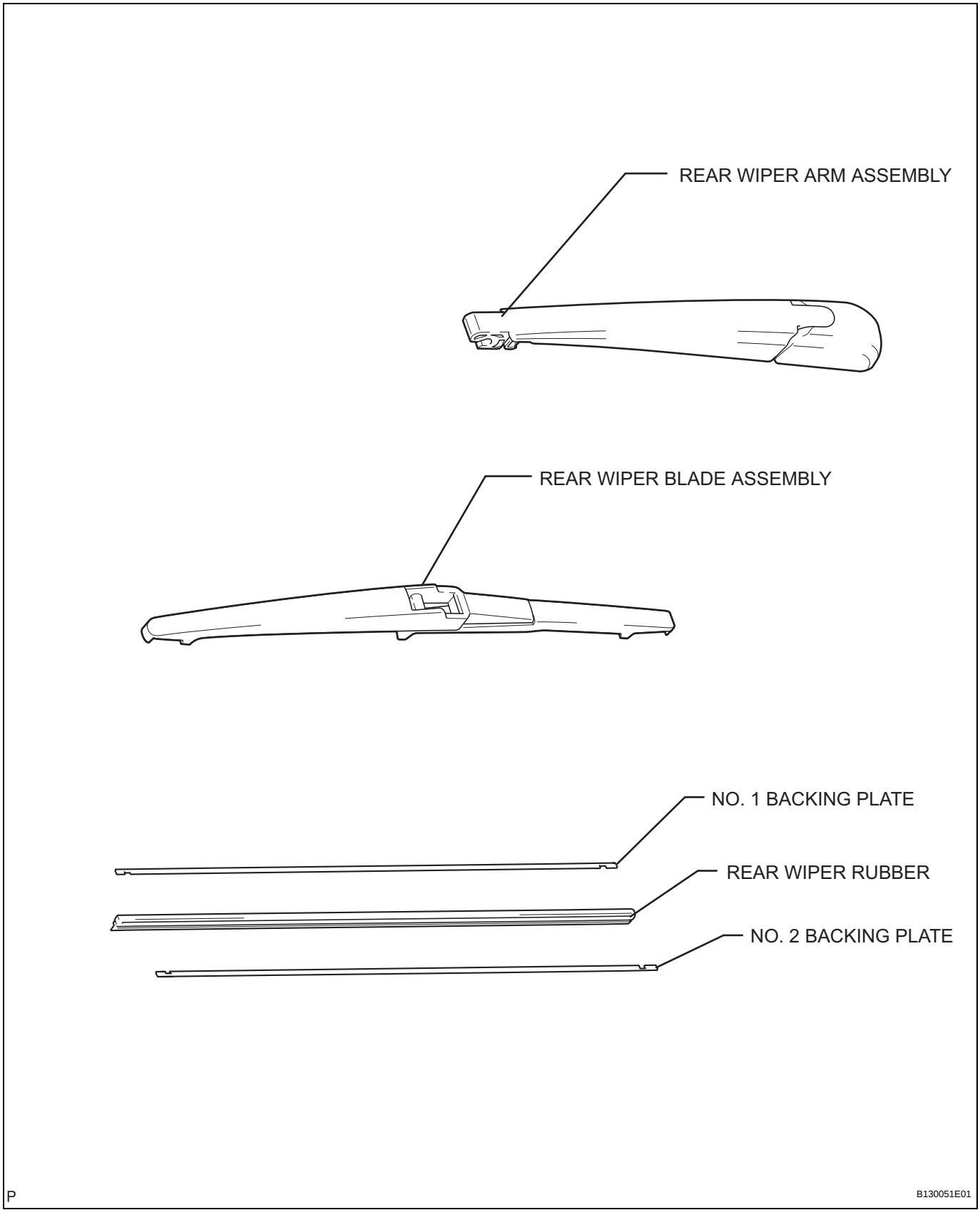

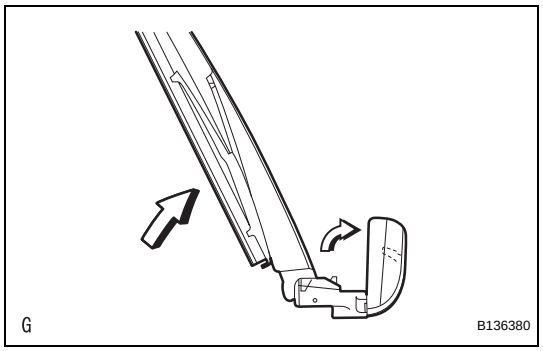

REMOVAL

1. REMOVE REAR WIPER BLADE ASSEMBLY

(a) Rotate and remove the cap as described in the "REMOVE" procedures.

(b) Raise the arm and blade.

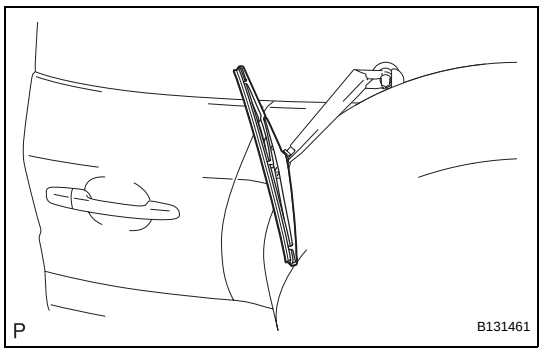

(c) Raise the wiper blade to the position where the claw detach with a "click" sound, as shown in the illustration.
NOTICE:
Be careful not to damage the claw.

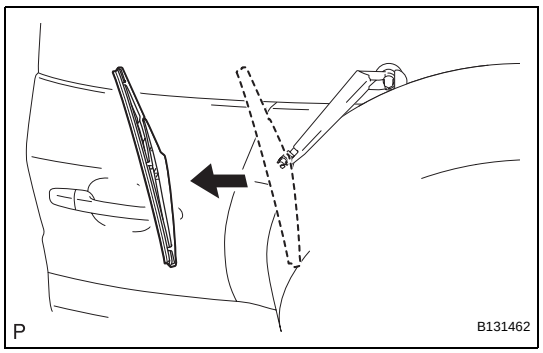

(d) Pull the wiper blade straight toward the left side of the vehicle to remove it from the wiper arm.
NOTICE:
Do not fold the wiper arm with the wiper blade removed. The arm tip may damage the back door glass surface.

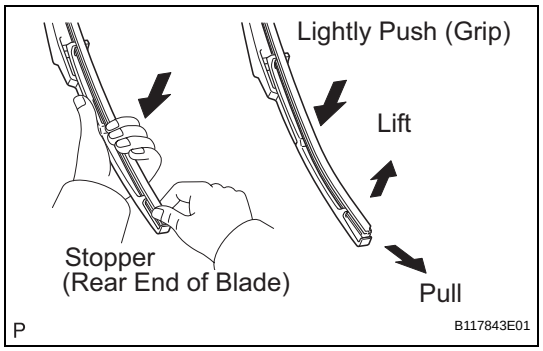

2. REMOVE REAR WIPER RUBBER

(a) Lift and pull the end of the wiper rubber protruding from the blade stopper as shown in the illustration.
NOTICE:
Do not forcibly pull out the wiper rubber. The backing plates will be deformed or the blade claws will be damaged.
HINT:
Lightly pushing the rubber between the ends and middle will allow it to be removed more easily.

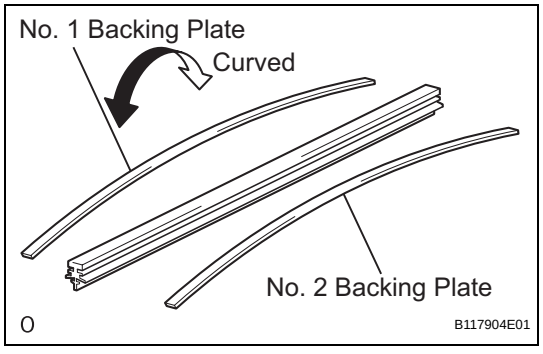

INSTALLATION

1. INSTALL REAR WIPER RUBBER

(a) Install the No. 1 and No. 2 backing plates as shown in the illustration.
NOTICE:
Install the backing plates facing the correct direction.

WW

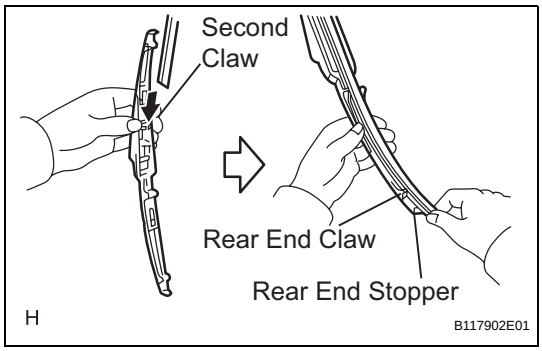

(b) Insert the wiper rubber from the front end of the wiper blade to the rear end through the second claw.
(c) After pushing the wiper rubber through the rear end claw, allow it to stick out from the rear end stopper.

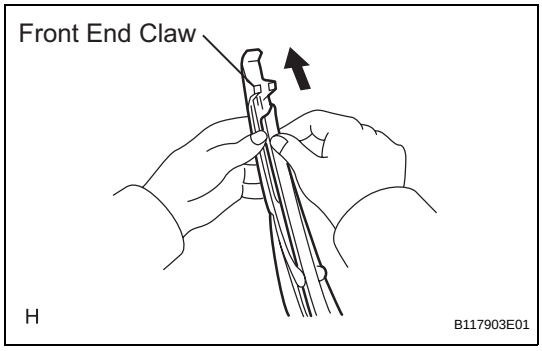

(d) Slide the wiper rubber through the front end claw.

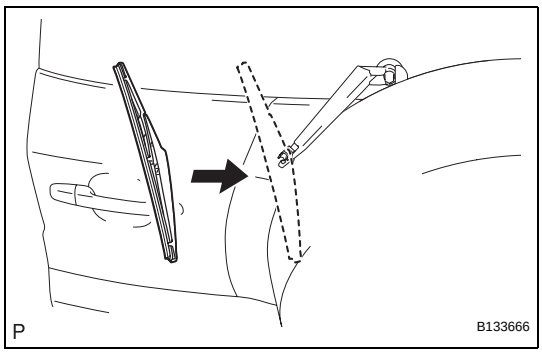

2. INSTALL REAR WIPER BLADE ASSEMBLY

(a) Push the wiper blade straight toward the right side of the vehicle to install it to the wiper arm.

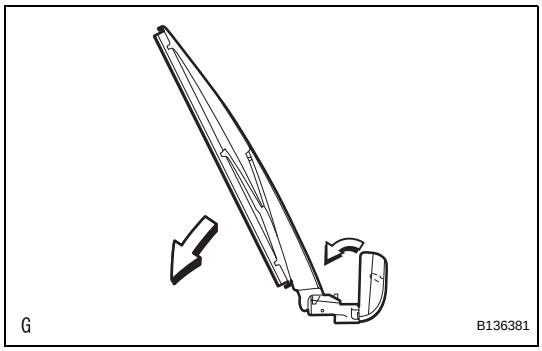

(b) Lower the arm and blade.
(c) Rotate and install the cap.

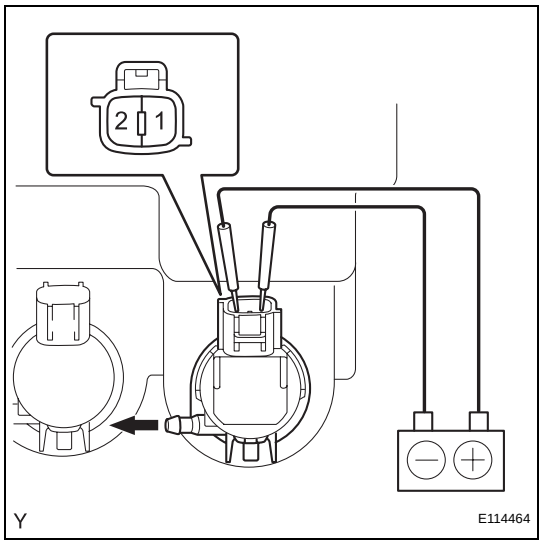

INSPECTION

1. INSPECT WINDSHIELD WASHER MOTOR AND PUMP ASSEMBLY

HINT:

This check should be performed with the windshield washer motor and pump installed to the washer jar.

(a) Fill the washer jar with washer fluid.

(b) Connect the battery's positive (+) lead to terminal 1 of the washer motor and pump, and the negative (-) lead to terminal 2.

(c) Check that washer fluid flows from the washer jar.

OK:

Washer fluid flows from the washer jar.

If the result is not as specified, replace the washer motor and pump assembly.

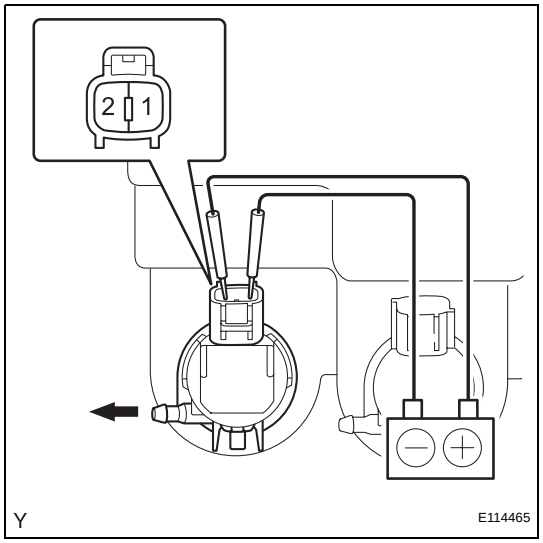

2. INSPECT REAR WASHER MOTOR AND PUMP ASSEMBLY

(a) Fill the washer jar with washer fluid.

(b) Connect the battery's positive (+) lead to terminal 1 of the washer motor and pump, and the negative (-) lead to terminal 2.

(c) Check that washer fluid flows from the washer jar.

OK:

Washer fluid flows from the washer jar.

If the result is not as specified, replace the washer motor and pump assembly.

INSTALLATION

1. INSTALL REAR WASHER MOTOR AND PUMP ASSEMBLY

(a) Install the windshield washer motor and pump to the packing of the washer jar.

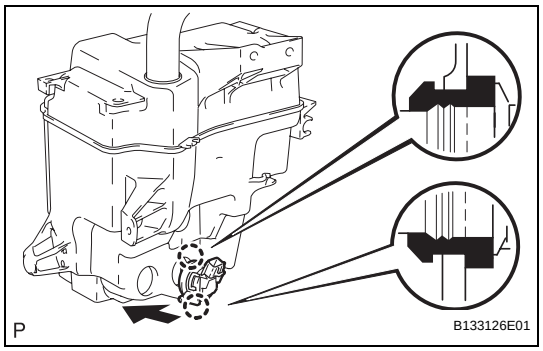

2. INSTALL WINDSHIELD WASHER MOTOR AND PUMP ASSEMBLY

(a) Install the windshield washer motor and pump to the packing of the washer jar.

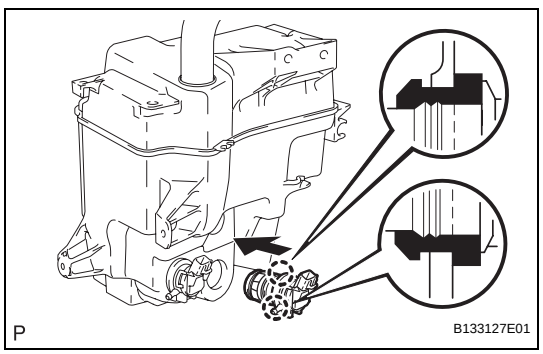

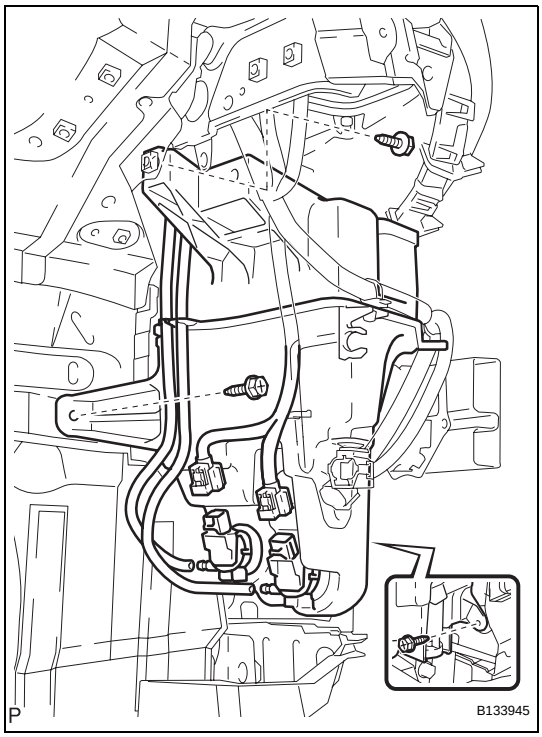

3. **INSTALL WINDSHIELD WASHER JAR ASSEMBLY**
   (a) Install the windshield washer jar and pump with the 3 bolts.
   (b) Connect the connectors.
4. **FILL UP WASHER JAR AND PUMP ASSEMBLY WITH WASHER FLUID**
   (a) Connect the washer hoses to the washer motor and pump, and fill the washer jar with washer fluid.
5. **INSTALL FRONT BUMPER COVER (See page ET-11)**
6. **INSTALL RADIATOR SUPPORT OPENING COVER (See page ET-12)**
7. **INSTALL FRONT FENDER LINER LH (See page ET-12)**
8. **INSTALL FRONT FENDER LINER RH (See page ET-12)**

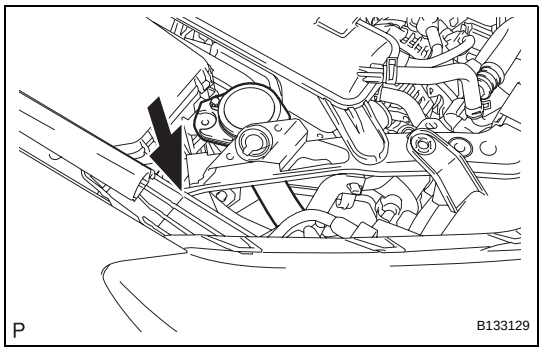

9. **INSTALL WASHER INLET SUB-ASSEMBLY**
   (a) Install the washer inlet of the washer jar and pump to the windshield washer jar and pump.

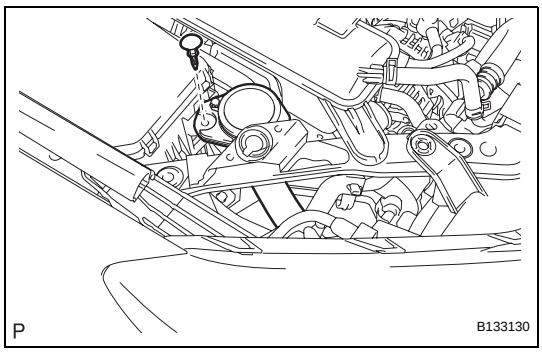

   (b) Install the washer inlet of the washer jar and pump with the clip.
10. **CONNECT CABLE TO NEGATIVE BATTERY TERMINAL**

WASHER MOTOR

COMPONENTS

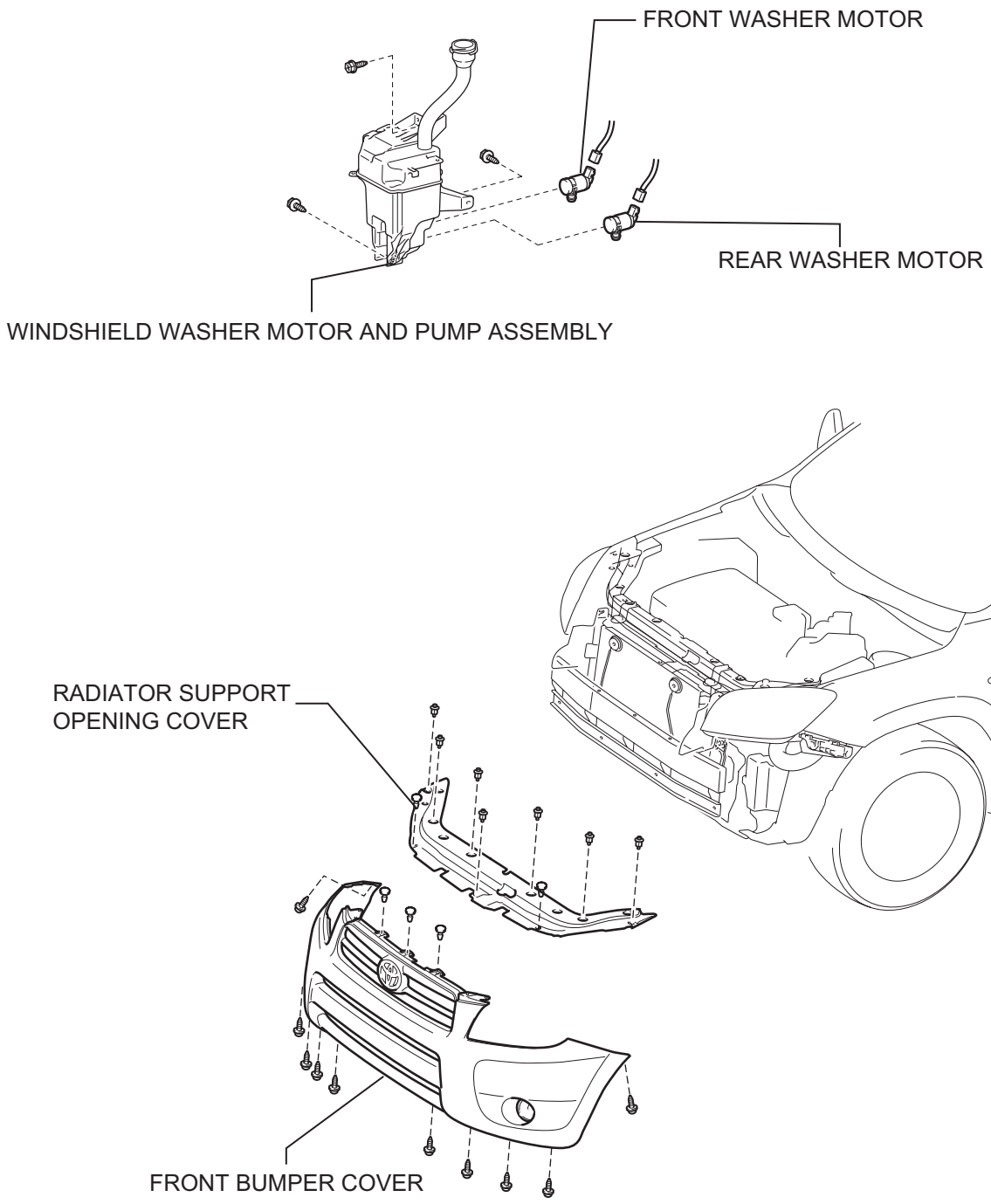

REMOVAL

1. **DISCONNECT CABLE FROM NEGATIVE BATTERY TERMINAL**
   CAUTION:
   Wait at least 90 seconds after disconnecting the cable from the negative (-) battery terminal to prevent airbag and seat belt pretensioner activation.

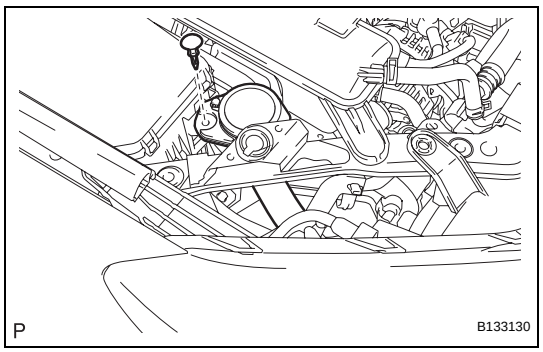

2. **REMOVE WASHER INLET SUB-ASSEMBLY**
   (a) Remove the clip.

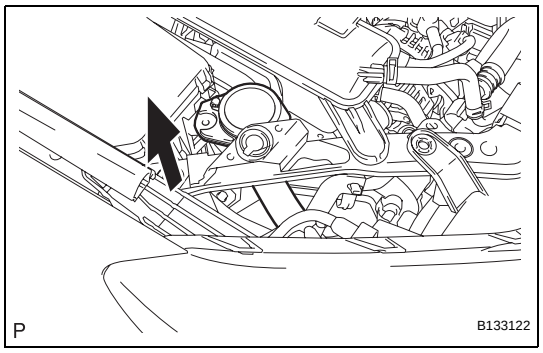

   (b) Pull the washer inlet of the washer jar and pump upward. Then remove it from the windshield washer jar and pump.

3. **REMOVE FRONT FENDER LINER LH (See page ET-4)**
4. **REMOVE FRONT FENDER LINER RH (See page ET-4)**
5. **REMOVE RADIATOR SUPPORT OPENING COVER (See page ET-4)**
6. **REMOVE FRONT BUMPER COVER (See page ET-5)**
7. **DRAIN WASHER FLUID**
   (a) Remove the washer hoses from the windshield washer motor and pump assembly, and drain the washer fluid into a container.

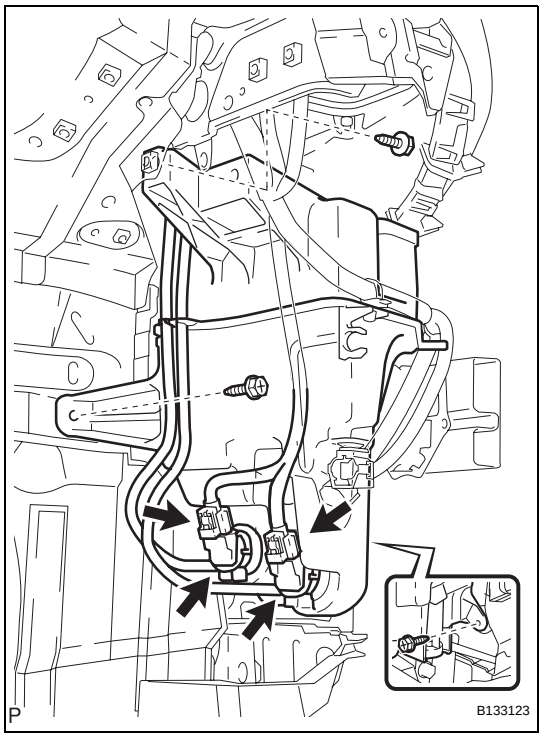

8. REMOVE WINDSHIELD WASHER JAR ASSEMBLY

(a) Disconnect the connectors.

(b) Remove the 3 bolts. Then remove the washer jar and pump.

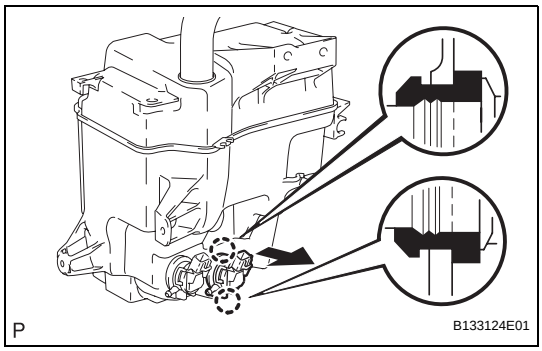

9. REMOVE WINDSHIELD WASHER MOTOR AND PUMP ASSEMBLY

(a) Pull out the washer motor and pump from the packing of the washer jar.

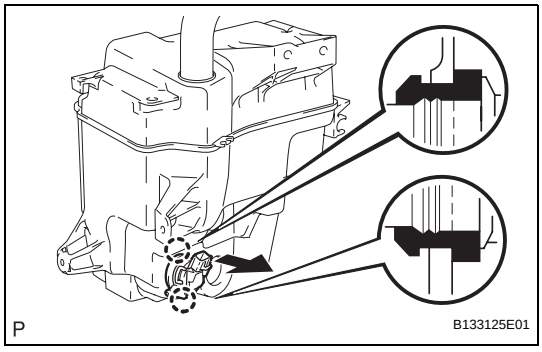

10. REMOVE REAR WASHER MOTOR AND PUMP ASSEMBLY

(a) Pull out the washer motor and pump from the packing of the washer jar.

PROBLEM SYMPTOMS TABLE

HINT:
Use the table below to help determine the cause of the problem symptom. The potential causes of the symptoms are listed in order of probability in the "Suspected area" column of the table. Check each symptom by checking the suspected areas in the order they are listed. Replace parts as necessary.

Wiper and washer system

Symptom	Suspected area	See page
Front wiper and washer system does not operate	1. Windshield wiper switch	WW-27
	2. Wire harness	-
Front wiper system does not operate in LO or HI	1. WIP fuse	WW-1
	2. Windshield wiper switch	WW-27
	3. Front wiper motor	WW-5
	4. Wire harness	-
Front wiper system does not operate in INT	1. WIP fuse	WW-1
	2. Windshield wiper switch	WW-27
	3. Front wiper motor	WW-5
	4. Wire harness	-
Front washer system does not operate	1. WSH fuse	WW-1
	2. Windshield wiper switch	WW-27
	3. Front washer motor	WW-33
	4. Wire harness	-
Front wiper arms do not return to their original positions when wiper switch is turned off	1. Front wiper motor	WW-5
	2. Wire harness	-
Rear wiper and washer system does not operate	1. Windshield wiper switch	WW-27
	2. Wire harness	-
Rear wiper system does not operate	1. RR WIP fuse	WW-1
	2. Windshield wiper switch	WW-27
	3. Rear wiper motor	WW-20
	4. Wire harness	-
Rear washer system does not operate	1. WSH fuse	WW-1
	2. Windshield wiper switch	WW-27
	3. Rear washer motor	WW-33
	4. Wire harness	-
Rear wiper arms do not return to their original positions when wiper switch is turned off	1. Rear wiper motor	WW-20
	2. Wire harness	-

WIPER AND WASHER SYSTEM

PARTS LOCATION

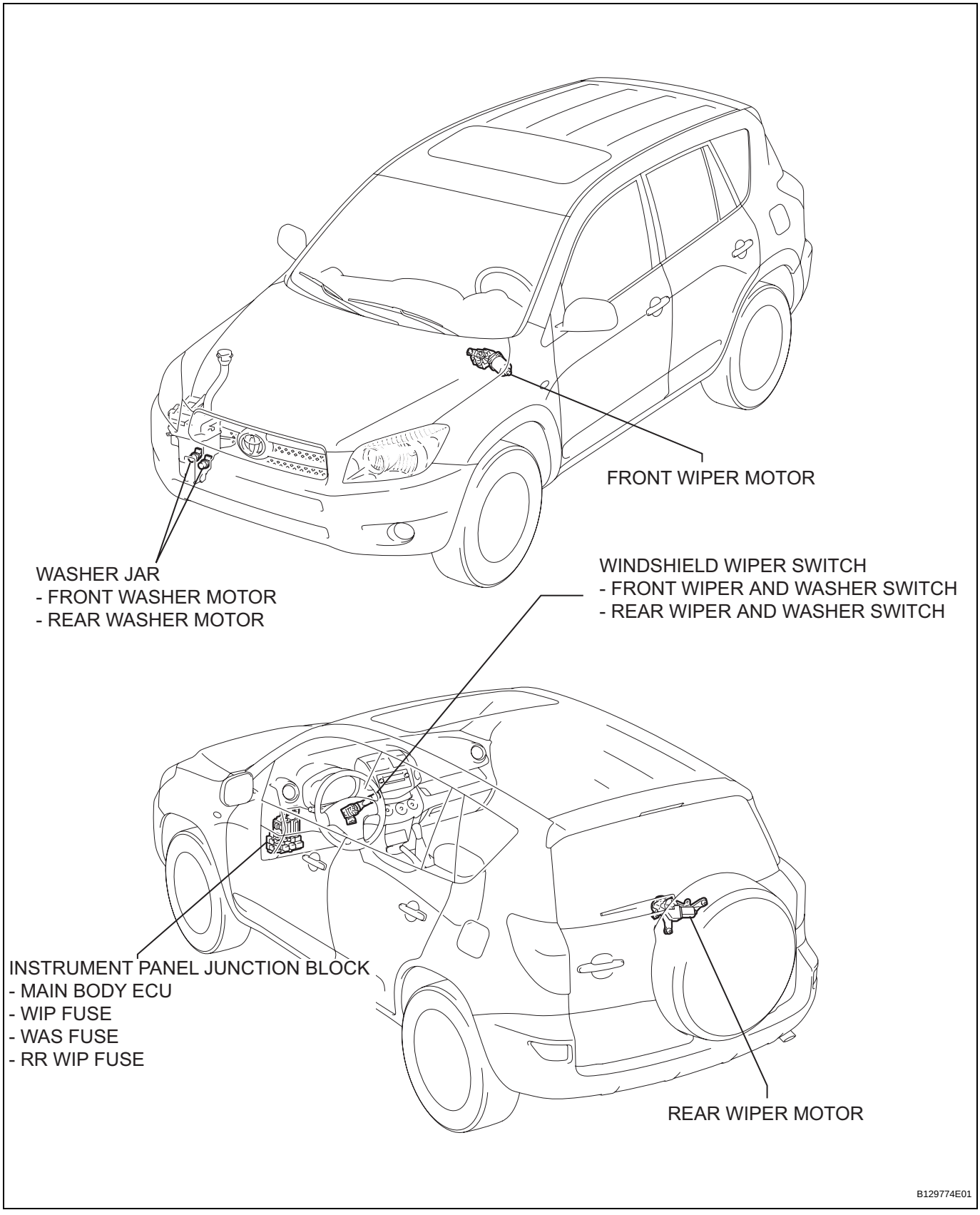

WW

SYSTEM DIAGRAM

Front Wiper and Washer System

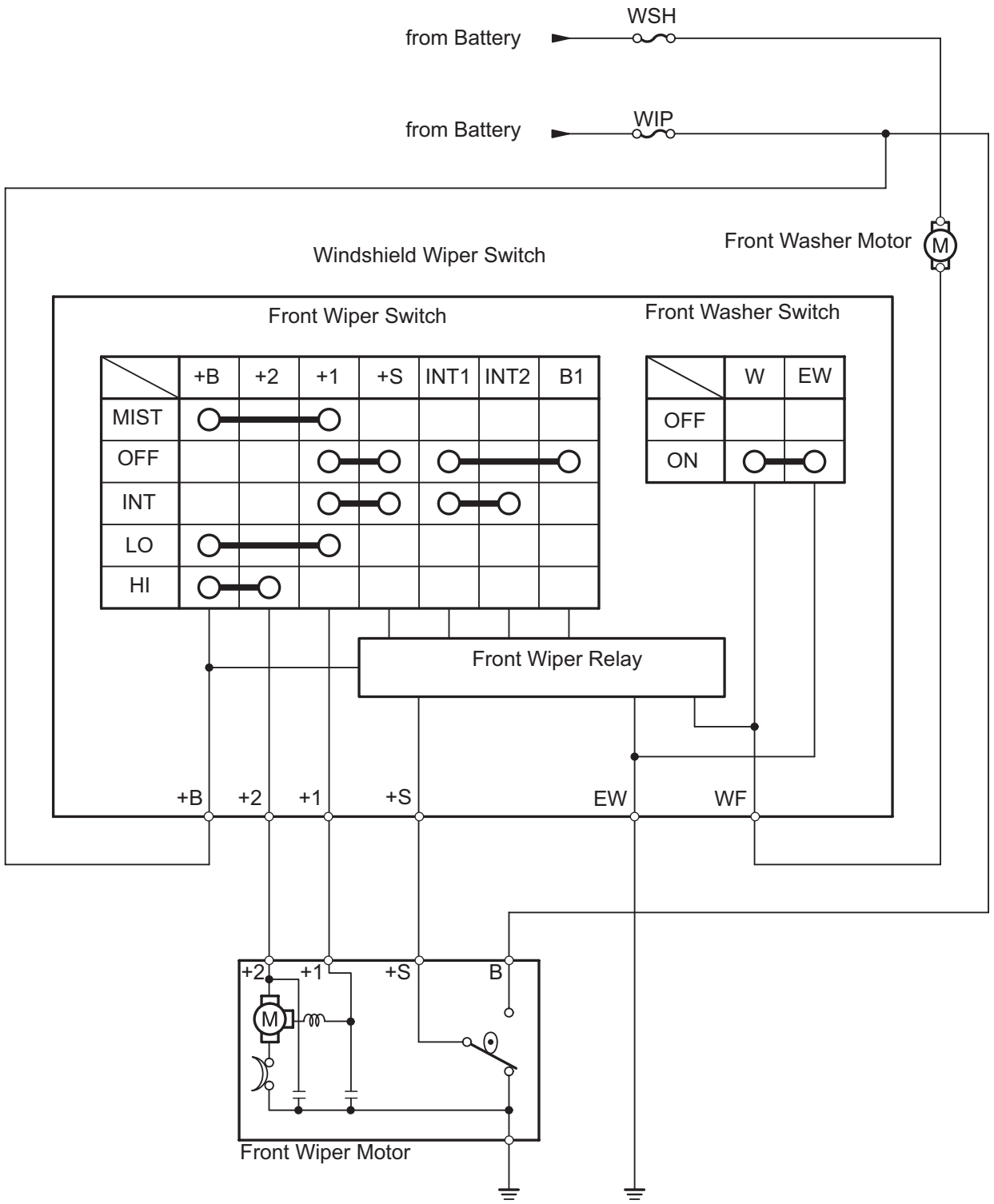

WW

Rear Wiper and Washer System

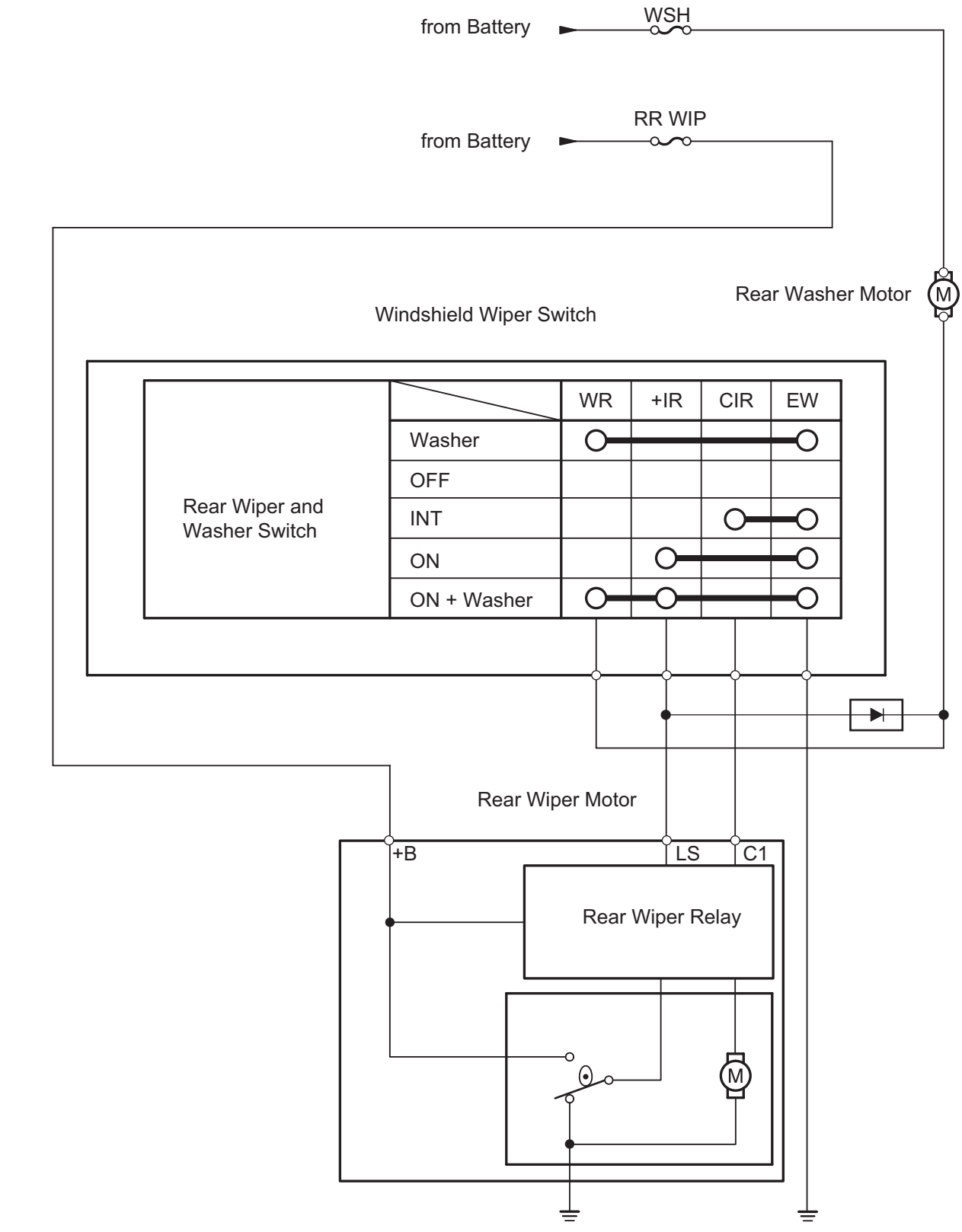

WW

REMOVAL

1. **DISCONNECT CABLE FROM NEGATIVE BATTERY TERMINAL**
   CAUTION:
   Wait at least 90 seconds after disconnecting the cable from the negative (-) battery terminal to prevent airbag and seat belt pretensioner activation.
2. **PLACE FRONT WHEELS FACING STRAIGHT AHEAD**
3. **REMOVE STEERING PAD ASSEMBLY (See page RS-336)**
4. **REMOVE STEERING WHEEL ASSEMBLY (See page SR-12)**
5. **REMOVE STEERING COLUMN COVER UPPER (See page SR-12)**
6. **REMOVE STEERING COLUMN COVER LOWER (See page SR-12)**
7. **REMOVE WIPER AND WASHER SWITCH ASSEMBLY**
   (a) Disconnect the connectors.
   (b) Detach the claw and remove the wiper switch.
   NOTICE:
   Do not push the claw with excessive force as damage may occur.

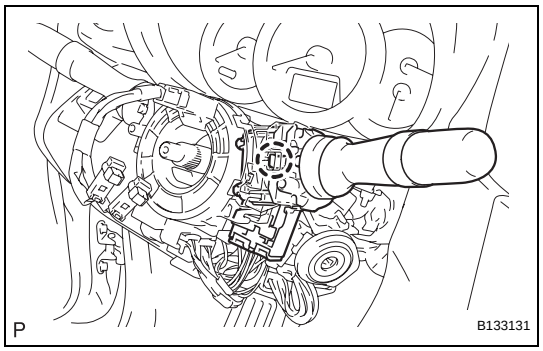

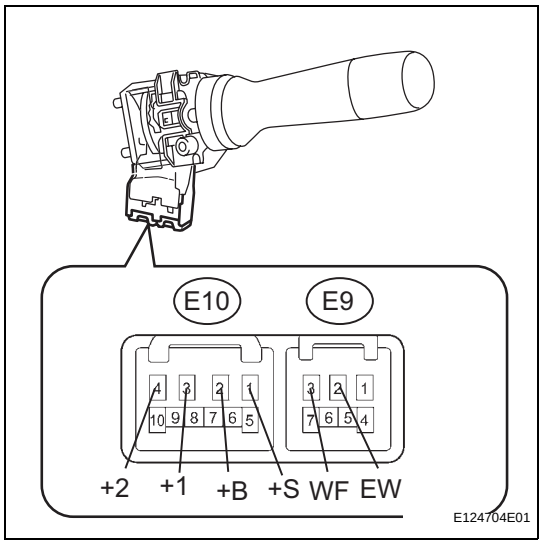

INSPECTION

1. **INSPECT WINDSHIELD WIPER SWITCH ASSEMBLY**
   (a) Check the front wiper switch.
   (1) Measure the resistance of the switch.
   Standard resistance

Tester Connection	Switch Condition	Specified Condition
E10-1 (+S) - E10-3 (+1)	INT	Below 1 Ω
	OFF	
E10-2 (B) - E10-3 (+1)	MIST	
	LO	
E10-2 (B) - E10-4 (+2)	HI	

If the result is not as specified, replace the switch assembly.

   (b) Check the front washer switch assembly.
   (1) Measure the resistance of the switch.
   Standard resistance

Tester Connection	Switch Condition	Specified Condition
E9-2 (EW) - E9-3 (WF)	ON	Below 1 Ω
	OFF	10 kΩ or higher

If the result is not specified, replace the switch assembly.

WW

(c) Check the intermittent operation.
(1) Connect the voltmeter's positive (+) lead to terminal E10-3 (+1) and the negative (-) lead to terminal E9-2 (EW).
(2) Connect the battery's positive (+) lead to terminal E10-2 (+B) and the negative (-) lead to terminal E9-2 (EW) and E10-1 (+S).
(3) Turn the wiper switch to the INT position.
(4) Connect the battery's positive (+) lead to terminal E10-1 (+S) for 5 seconds.
(5) Connect the battery's negative (-) lead to terminal E10-1 (+S). Operate the intermittent wiper relay and check the voltage between terminals E10-3 (+1) and E9-2 (EW).
Standard voltage:
Refer to the illustration below.

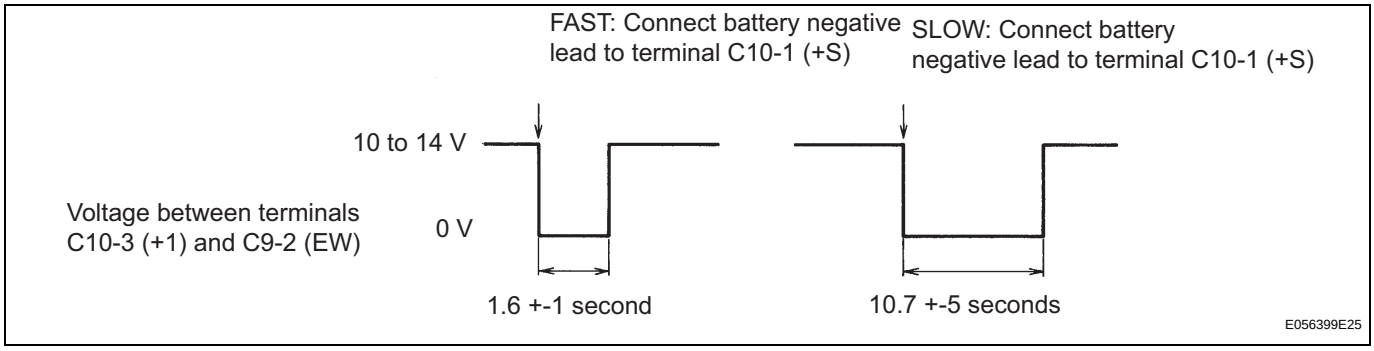

If the result is not as specified, replace the switch assembly.

(d) Check the front washer operation.
(1) Turn the wiper switch OFF.
(2) Connect the battery's positive (+) lead to terminal E10-2 (+B) and the negative (-) lead to terminals E10-4 (+S) and E9-2 (EW).
(3) Connect the voltmeter's positive (+) lead to E10-3 (+1) and the negative (-) lead to terminal E9-2 (EW).
(4) Turn the washer switch ON and OFF, and check the voltage between terminals E10-3 (+1) and E9-2 (EW).
OK:
Refer to the illustration below.

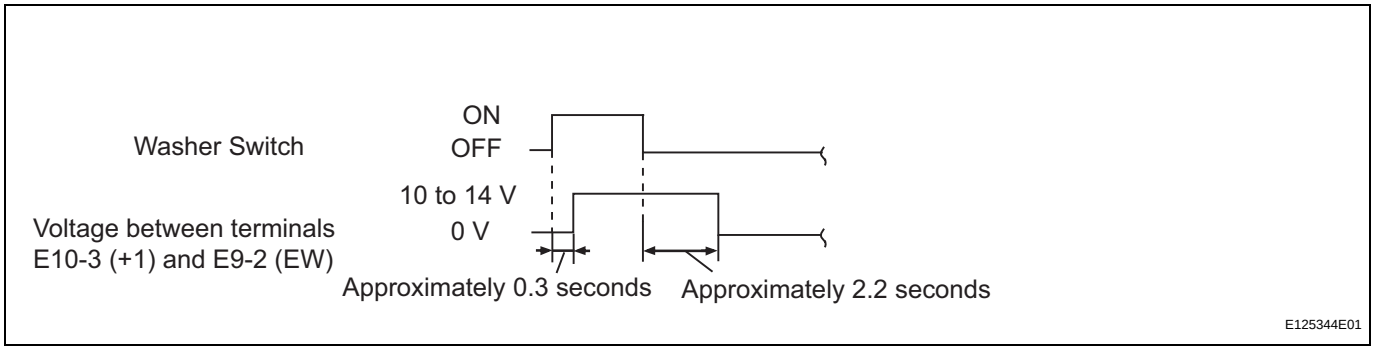

If the result is not as specified, replace the switch assembly.

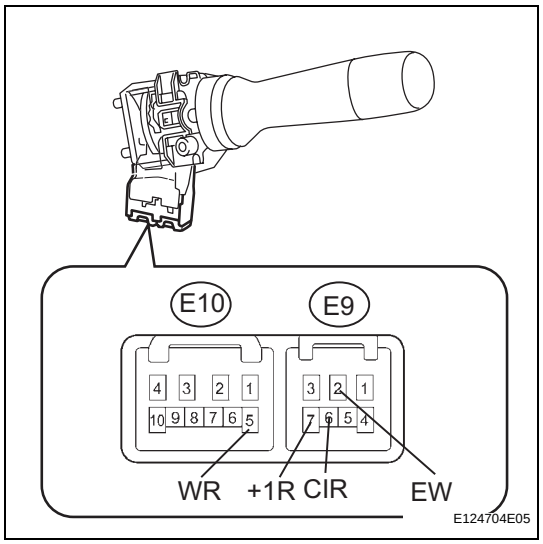

(e) Check the rear wiper switch.
(1) Measure the resistance of the switch.
Standard resistance

Tester Connection	Switch Condition	Specified Condition
E9-2 (EW) - E9-6 (CIR)	INT	Below 1 Ω
E9-2 (EW) - E9-7 (+1R)	ON	
E9-2 (EW) - E9-6 (CIR)	OFF	10 kΩ or higher
E9-2 (EW) - E9-7 (+1R)		

If the result is not as specified, replace the switch assembly.

(f) Check the rear washer switch.
(1) Measure the resistance of the switch.
Standard resistance

Tester Connection	Switch Condition	Specified Condition
E9-2 (EW) - E9-7 (+1R) E9-2 (EW) - E10-5 (WR)	ON	Below 1 Ω
	OFF	10 kΩ or higher

If the result is not as specified, replace the switch assembly.

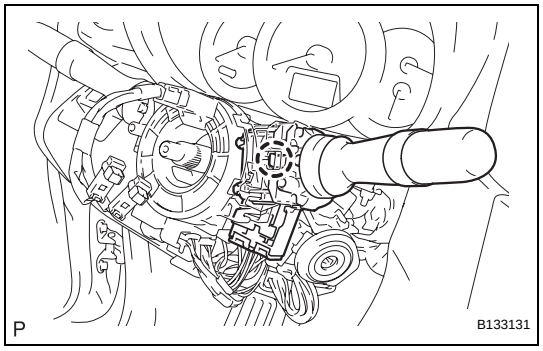

INSTALLATION

1. **INSTALL WIPER AND WASHER SWITCH ASSEMBLY**
   (a) Attach the claw to install the wiper switch.
   (b) Connect the connectors.
   NOTICE:
   Do not push the claw with excessive force as damage may occur.
2. **INSTALL STEERING COLUMN COVER LOWER (See page SR-20)**
3. **INSTALL STEERING COLUMN COVER UPPER (See page SR-20)**
4. **INSTALL STEERING WHEEL ASSEMBLY (See page SR-21)**
5. **PLACE FRONT WHEELS FACING STRAIGHT AHEAD**
6. **INSPECT STEERING WHEEL CENTER POINT**
7. **INSTALL STEERING PAD ASSEMBLY (See page RS-336)**
8. **CONNECT CABLE TO NEGATIVE BATTERY TERMINAL**
9. **INSPECT STEERING PAD ASSEMBLY (See page RS-337)**
10. **CHECK SRS WARNING LIGHT**
    (a) Check the SRS warning light (see page RS-337).

WIPER SWITCH

PRECAUTION

1. PRECAUTION FOR VEHICLE WITH SRS

(a) Some procedures in this section may affect the Supplemental Restraint System (SRS). Prior to performing the procedures, read the SRS section's "Precaution" (see page SS-2).

COMPONENTS

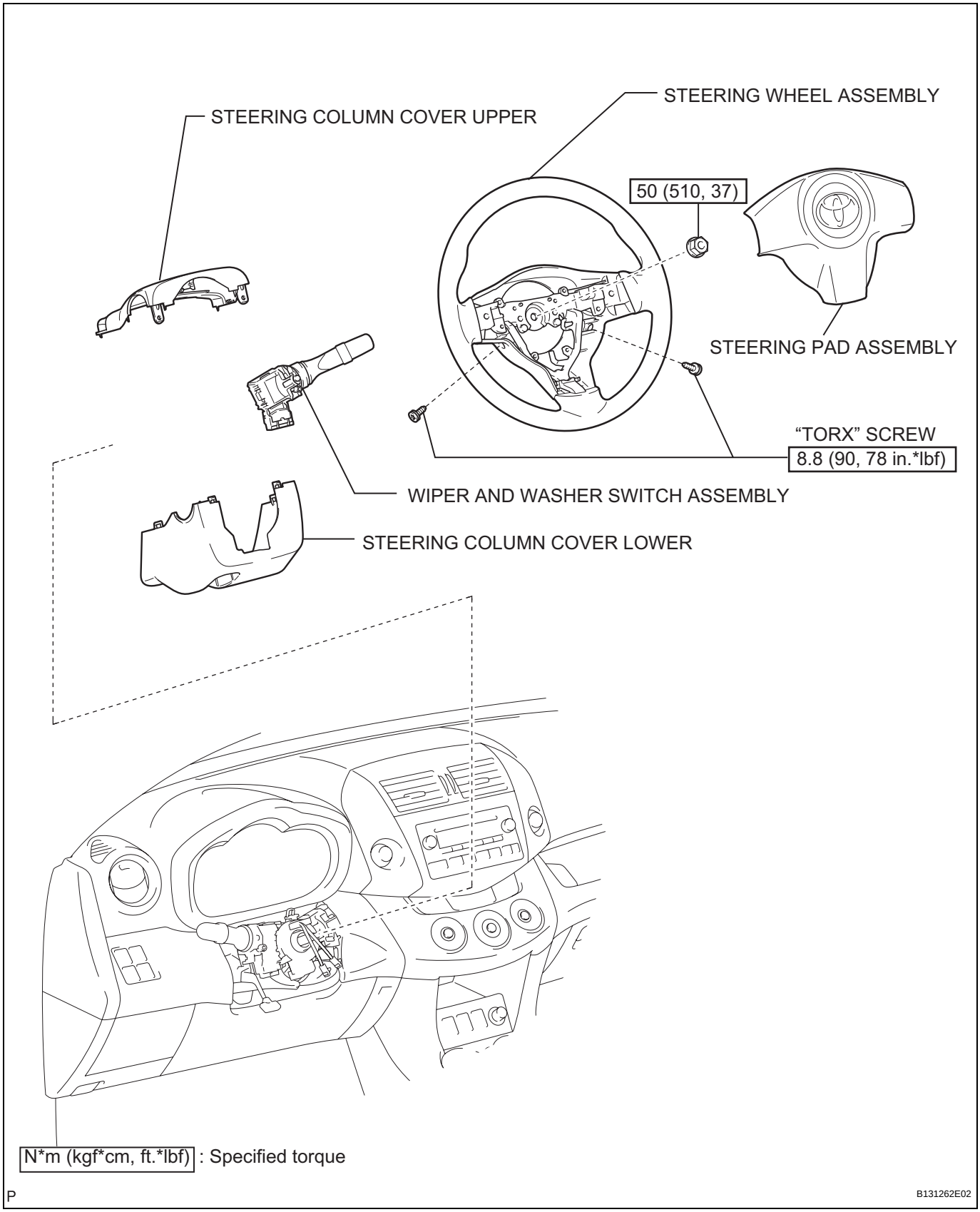

WW